# TABLE OF CONTENTS


| SECTION | | PAGE | |
|---|---|---|---|
| 1 | INTRODUCTION | 3 | 1 |
| 2 | THINGS TO KNOW BEFORE STARTING YOUR VEHICLE | 9 | 2 |
| 3 | UNDERSTANDING THE FEATURES OF YOUR VEHICLE | 75 | 3 |
| 4 | UNDERSTANDING YOUR INSTRUMENT PANEL | 161 | 4 |
| 5 | STARTING AND OPERATING | 255 | 5 |
| 6 | WHAT TO DO IN EMERGENCIES | 317 | 6 |
| 7 | MAINTAINING YOUR VEHICLE | 335 | 7 |
| 8 | MAINTENANCE SCHEDULES | 389 | 8 |
| 9 | IF YOU NEED CONSUMER ASSISTANCE | 413 | 9 |
| 10 | INDEX | 421 | 10 |


Downloaded from www.Manualslib.com manuals search engine

Downloaded from www.Manualslib.com manuals search engine

# INTRODUCTION



## CONTENTS

■ Introduction . . . . . 4
■ How To Use This Manual . . . . . 4
■ Warnings And Cautions . . . . . 6
■ Vehicle Identification Number . . . . . 6
■ Vehicle Modifications / Alterations . . . . . 7

Downloaded from www.Manualslib.com manuals search engine

## INTRODUCTION

This manual has been prepared with the assistance of service and engineering specialists to acquaint you with the operation and maintenance of your new vehicle. It is supplemented by a Warranty Information Booklet and various customer oriented documents. You are urged to read these publications carefully. Following the instructions and recommendations in this manual will help assure safe and enjoyable operation of your vehicle.

**NOTE: After you read the manual, it should be stored in the vehicle for convenient reference and remain with the vehicle when sold, so that the new owner will be aware of all safety warnings.**

When it comes to service, remember that your dealer knows your vehicle best, has the factory-trained technicians and genuine Mopar® parts, and is interested in your satisfaction.

**WARNING!**

**Engine exhaust, some of its constituents, and certain vehicle components contain or emit chemicals known to the State of California to cause cancer and birth defects or other reproductive harm. In addition, certain fluids contained in vehicles and certain products of component wear contain or emit chemicals known to the State of California to cause cancer and birth defects or other reproductive harm.**

## HOW TO USE THIS MANUAL

Consult the table of contents to determine which section contains the information you desire.

The detailed index, at the rear of this manual, contains a complete listing of all subjects.

Consult the following table for a description of the symbols that may be used on your vehicle or throughout this owner's manual:

Downloaded from www.Manualslib.com manuals search engine

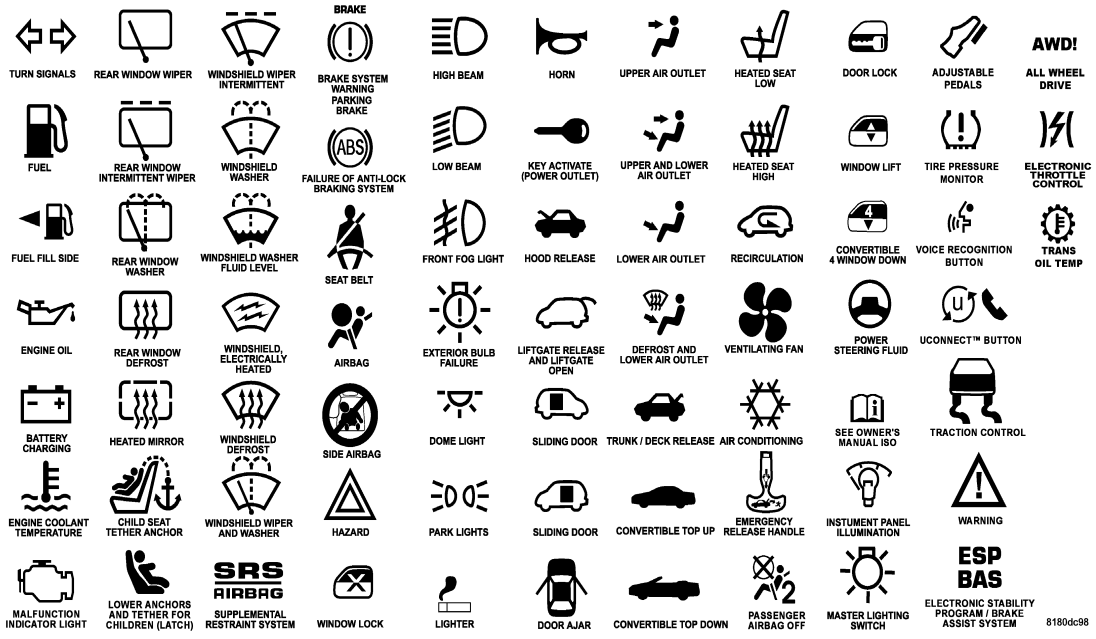


Downloaded from www.Manualslib.com manuals search engine

## WARNINGS AND CAUTIONS

This manual contains **WARNINGS** against operating procedures which could result in an accident or bodily injury. It also contains **CAUTIONS** against procedures which could result in damage to your vehicle. If you do not read this entire manual you may miss important information. Observe all Warnings and Cautions.

## VEHICLE IDENTIFICATION NUMBER

The vehicle identification number (VIN) is found on the left front corner of the instrument panel, visible from outside of the vehicle through the windshield. This number also appears on the Automobile Information Disclosure Label affixed to a window on your vehicle. Save this label for a convenient record of your vehicle identification number and optional equipment.

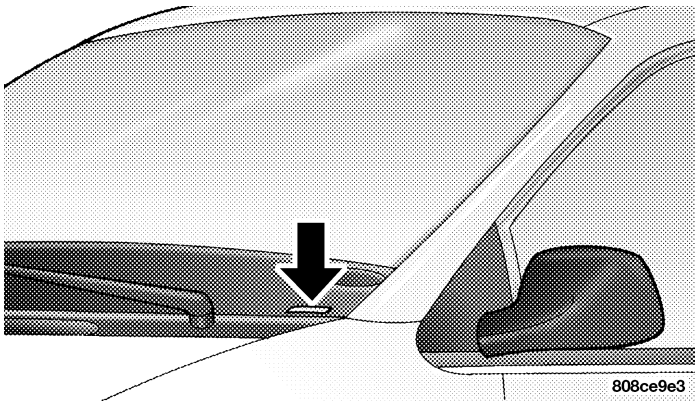


**Vehicle Identification Number**

**NOTE:** It is illegal to remove the VIN plate.

Downloaded from www.Manualslib.com manuals search engine

## VEHICLE MODIFICATIONS / ALTERATIONS

**WARNING!**

**Any modifications or alterations to this vehicle could seriously affect its roadworthiness and safety and may lead to an accident resulting in serious injury or death.**

Downloaded from www.Manualslib.com manuals search engine

Downloaded from www.Manualslib.com manuals search engine

# THINGS TO KNOW BEFORE STARTING YOUR VEHICLE



## CONTENTS


■ A Word About Your Keys . . . . . .11
- □ Ignition Key Removal . . . . . .11
- □ Key-In-Ignition Reminder . . . . . .12

■ Sentry Key . . . . . .12
- □ Replacement Keys . . . . . .14
- □ Customer Key Programming . . . . . .14
- □ General Information . . . . . .15

■ Illuminated Entry System . . . . . .15

■ Door Locks . . . . . .16
- □ Manual Door Locks . . . . . .16
- □ Power Door Locks . . . . . .17
- □ Child Protection Door Lock . . . . . .19

■ Remote Keyless Entry . . . . . .20
- □ To Unlock The Doors And Liftgate . . . . . .21
- □ To Lock The Doors And Liftgate . . . . . .22
- □ Using The Panic Alarm . . . . . .22
- □ To Program Transmitters . . . . . .23
- □ To Open/Close Power Liftgate — If Equipped . .23


Downloaded from www.Manualslib.com manuals search engine

- To Turn Off "Flash Lights On Lock/Unlock" . . .23
- General Information . . . . . .24
- Transmitter Battery Service . . . . . .24

■ Vehicle Theft Alarm . . . . . .26

■ Liftgate . . . . . .28
- Power Liftgate — If Equipped . . . . . .29

■ Windows . . . . . .32
- Power Windows . . . . . .32

■ Occupant Restraints . . . . . .33
- Lap/Shoulder Belts . . . . . .35
- Lap/Shoulder Belt Untwisting Procedure . . . . .41
- Seat Belt Pretensioners . . . . . .42
- Enhanced Seat Belt Use Reminder System (BeltAlert) . . . . . .43
- Seat Belts And Pregnant Women . . . . . .44
- Seat Belt Extender . . . . . .44
- Driver And Front Passenger Supplemental Restraint System - Airbag . . . . . .45
- Child Restraint . . . . . .60

■ Engine Break-In Recommendations . . . . . .71

■ Safety Tips . . . . . .71
- Exhaust Gas . . . . . .71
- Safety Checks You Should Make Inside The Vehicle . . . . . .72
- Periodic Safety Checks You Should Make Outside The Vehicle . . . . . .73


Downloaded from www.Manualslib.com manuals search engine

## A WORD ABOUT YOUR KEYS

You can insert the double sided keys into the locks with either side up.

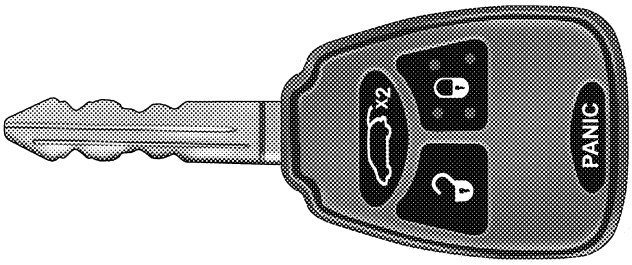


811b8b06

**Vehicle Key**

The dealer that sold you your new vehicle has the key code numbers for your vehicle locks. These numbers can be used to order duplicate keys from your dealer. Ask your dealer for these numbers and keep them in a safe place.

### Ignition Key Removal

The shift lever must be in PARK. Turn the key to the LOCK position, then remove the key.

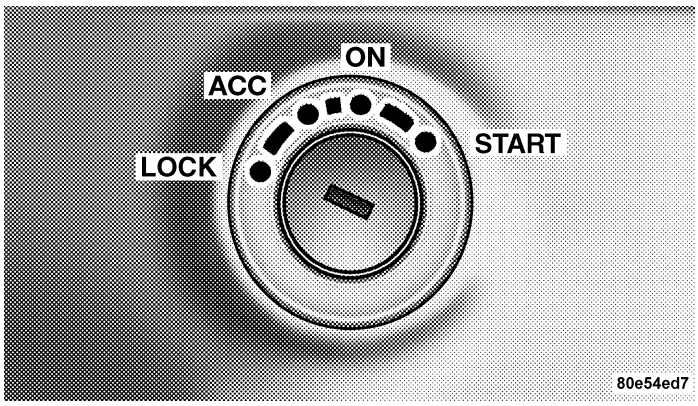


**Ignition Key Positions**



Downloaded from www.Manualslib.com manuals search engine

**NOTE:** The power window switches, radio, power sunroof, and power outlets will remain active for up to 45 seconds after the ignition switch has been turned off. Opening either front door will cancel this feature.

**WARNING!**

**Leaving children in a vehicle unattended is dangerous for a number of reasons. A child or others could be injured. Children should be warned not to touch the parking brake, brake pedal or the gear selector lever. Don't leave the keys in the ignition. A child could operate power windows, other controls, or move the vehicle.**

**CAUTION!**

**An unlocked car is an invitation to thieves. Always remove key from the ignition and lock all doors when leaving the vehicle unattended.**

### Key-In-Ignition Reminder

If you open the driver's door and the key is in the ignition switch, a chime will sound to remind you to remove the key.

## SENTRY KEY

The Sentry Key Immobilizer System prevents unauthorized operation of the vehicle by disabling the engine. The system will shut the engine off after 2 seconds of running if an invalid key is used to start the vehicle. This system utilizes ignition keys which have an electronic

Downloaded from www.Manualslib.com manuals search engine

chip (transponder) embedded into them. Only keys that have been programmed to the vehicle can be used to start and operate the vehicle.

The Sentry Key Immobilizer System does not need to be armed or activated. Operation of the system is automatic regardless of whether or not the vehicle is locked or unlocked. During normal operation, the Theft Alarm/ Immobilizer Light will come on for three (3) seconds immediately after the ignition switch is turned on for a bulb check. Afterwards, if the bulb remains on, this indicates a problem with the electronics.

If the bulb begins to flash after the bulb check, this indicates that an invalid key has been used to start the vehicle. Both of these conditions will result in the engine being shut off after two (2) seconds of running.

Keep in mind that a key which has not been programmed is also considered an invalid key even if it is cut to fit the ignition lock cylinder for that vehicle.

If the Theft Alarm/Immobilizer Light comes on during normal vehicle operation (vehicle has been running for longer than 10 seconds), a fault has been detected in the electronics and the vehicle should be serviced as soon as possible.



**NOTE:**

- The Sentry Key Immobilizer System is not compatible with remote starting systems. Use of these systems may result in vehicle starting problems and loss of security protection.
- Exxon/Mobil Speed Pass,™ additional Sentry Keys, or any other transponder equipped components on the same keychain will **not** cause a key-related (transponder) fault unless the additional part is **physically held against the ignition key** being used when starting the vehicle. Cell phones, pagers, or other RF electronics will not cause interference with this system.

Downloaded from www.Manualslib.com manuals search engine

All of the keys provided with your new vehicle have been programmed to the vehicle electronics.

### Replacement Keys

**NOTE:** Only keys that have been programmed to the vehicle electronics can be used to start the vehicle. Once a Sentry Key has been programmed to a vehicle, it can not be programmed to any other vehicle.

At the time of purchase, the original owner is provided with a four digit PIN number. This number is required for dealer replacement of keys. Duplication of keys may be performed at an authorized dealer or by using the Customer Key Programming procedure. This procedure consists of programming a blank key to the vehicle electronics. A blank key is one which has never been programmed.

**NOTE: When having the Sentry Key Immobilizer System serviced, bring all vehicle keys with you to the dealer.**

### Customer Key Programming

You can program new sentry keys to the system if you have two valid sentry keys by performing the following procedure:

1. Cut the additional Sentry Key Transponder blank(s) to match the ignition switch lock cylinder key code.

2. Insert the first valid key into the ignition switch and turn the ignition switch ON for at least 3 seconds but no longer than 15 seconds. Turn the ignition switch OFF and remove the first key.

3. Insert the second valid key and turn the ignition switch ON within 15 seconds. After ten seconds a chime will sound and the Theft Alarm Light will begin to flash. Turn the ignition switch OFF and remove the second key.

Downloaded from www.Manualslib.com manuals search engine

4. Insert a blank Sentry Key into the ignition switch and turn the ignition switch ON within 60 seconds. After 10 seconds a single chime will sound. The Theft Alarm Light will stop flashing, turn on for 3 seconds; then turn off.

The new Sentry Key has been programmed. **The Keyless Entry Transmitter will also be programmed during this procedure.**

Repeat this procedure to program up to a total of 8 keys. If you do not have a programmed sentry key, contact your dealer for details.

**NOTE:** If a programmed key has been lost, see your dealer to have all remaining keys erased from the systems memory. The remaining keys must then be reprogrammed. This will prevent the lost key from starting your vehicle. All vehicle keys must be taken to the dealer at the time of service to be reprogrammed.

### General Information

The Sentry Key system complies with FCC rules part 15 and with RSS-210 of Industry Canada. Operation is subject to the following conditions:

- This device may not cause harmful interference.
- This device must accept any interference that may be received, including interference that may cause undesired operation.



## ILLUMINATED ENTRY SYSTEM

The courtesy lights will turn on when you use the keyless entry transmitter or open the doors.

The lights will fade to off after about 30 seconds or they will immediately fade to off once the ignition switch is turned on.

**NOTE:** The overhead console, door courtesy, liftgate and reading lights will not operate if the dimmer control is in the “defeat” position (extreme downward position).

Downloaded from www.Manualslib.com manuals search engine

## DOOR LOCKS

### Manual Door Locks

Lock the doors by pushing up on the lock knob on each door trim panel.

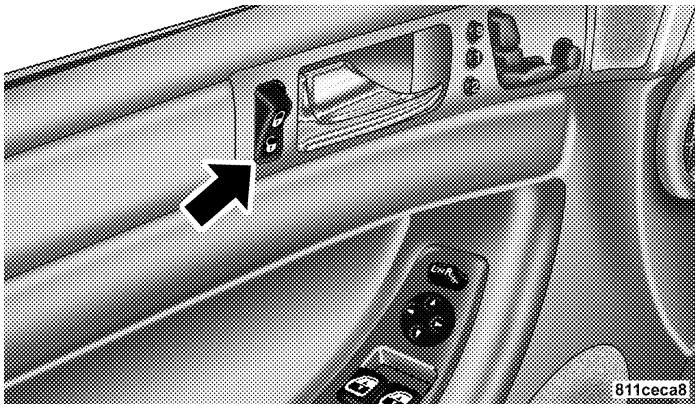


**Door Lock Plunger**

If the lock knob is up when you shut the door, the door will lock. Therefore, make sure the keys are not inside the vehicle before closing the door.

**WARNING!**

- **For personal security and safety in the event of an accident, lock the vehicle doors as you drive as well as when you park and leave the vehicle.**
- **When leaving the vehicle always remove the key from the ignition lock, and lock your vehicle. Do not leave children unattended in the vehicle, or with access to an unlocked vehicle. Unsupervised use of vehicle equipment may cause severe personal injuries and death.**

Downloaded from www.Manualslib.com manuals search engine

## Power Door Locks

A power door lock switch is on each front door trim panel. Use this switch to lock or unlock the doors.

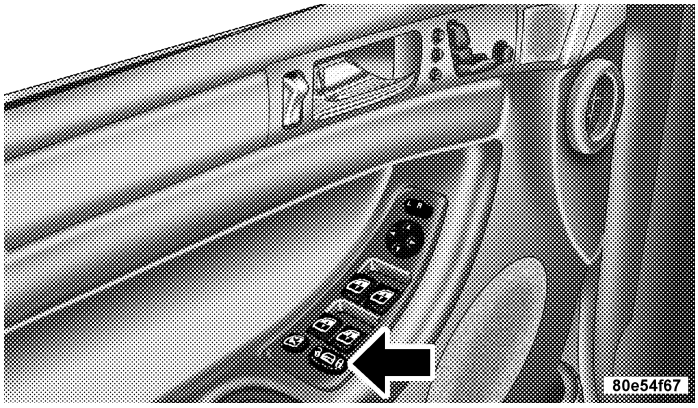


**Power Door Lock Switch**

If you press the power door lock switch while the key is in the ignition, and any front door is open, the power locks will not operate. This prevents you from accidentally locking your keys in the vehicle. Removing the key or closing the door will allow the locks to operate. A chime will sound if the key is in the ignition and a door is open, as a reminder to remove the key.



### Auto Door Locks — If Equipped

The doors will lock automatically on vehicles with power door locks if:

1. The Auto Lock feature is enabled,
2. The transmission is in gear,
3. all doors are closed,
4. the vehicle speed is above 15 mph (24 km/h) and
5. the doors were not previously locked using the power door lock switch or remote keyless entry transmitter.

Downloaded from www.Manualslib.com manuals search engine

The Automatic Door Locks can be enabled or disabled by performing the following procedure:

1. Close all doors and place the key in the ignition switch.

2. Cycle the ignition switch ON/OFF four times ending in the OFF position. (do not start the engine)

3. Within 10 seconds of the final cycle, press the interior driver's door lock switch to the LOCK position.

4. A single chime will sound to signify that you have successfully completed the programming.

You can turn the feature back on by repeating the above mentioned procedure or by performing the procedure in the Electronic Vehicle Information Center (EVIC), Customer Programmable Features section on vehicles so equipped.

**Auto Unlock On Exit— If Equipped**

The doors will unlock automatically on vehicles with power door locks if:

1. The Auto Unlock feature is enabled,

2. the transmission was in gear and the vehicle speed returned to 0 mph (0 km/h),

3. the transmission is in NEUTRAL or PARK,

4. the driver door is opened (excluding liftgate),

5. the doors were not previously unlocked and

6. the vehicle speed is 0 mph (0 km/h).

The Automatic Door Locks can be enabled or disabled by performing the following procedure:

1. Close all doors and place the key in the ignition switch.

Downloaded from www.Manualslib.com manuals search engine

2. Cycle the ignition switch ON/OFF four times ending in the OFF position. (do not start the engine)

3. Within 10 seconds of the final cycle, press the interior driver's door lock switch to the UNLOCK position.

4. A single chime will sound to signify that you have successfully completed the programming.

The Auto Unlock On Exit feature is enabled when your vehicle is shipped from the assembly plant and can be enabled or disabled by performing the procedure in the Electronic Vehicle Information Center (EVIC), Customer Programmable Features section or by repeating the above mentioned procedure.

**NOTE:** Use the Auto Door Locks and Auto Unlock features in accordance with local laws.

### Child Protection Door Lock

To provide a safer environment for small children riding in the rear seats, the rear doors are equipped with a child protection door lock system.



| WARNING! |
| --- |
| **Avoid trapping anyone in the vehicle in a collision. Remember that the rear doors can only be opened from the outside when the child protection locks are engaged.** |

Downloaded from www.Manualslib.com manuals search engine

To activate the system, open the rear door and move the child lock control, located near the door's rear latch, to the ON position.

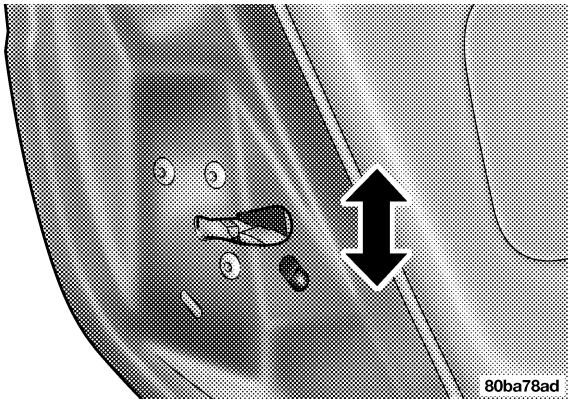


**Child Lock Control**

When the child lock system is engaged the door can be opened only by using the outside door handle even though the inside door lock is in the unlocked position.

## REMOTE KEYLESS ENTRY

This system allows you to lock or unlock the doors and liftgate, and activate the panic alarm from distances up to about 23 feet (7 meters) using a hand held radio transmitter. The transmitter need not be pointed at the vehicle to activate the system.

**NOTE:** If the key is in the ignition switch, then all buttons on that transmitter will be disabled. The buttons on the remaining transmitters will work. If the vehicle is shifted out of PARK, all the transmitter buttons are disabled for all keys.

Downloaded from www.Manualslib.com manuals search engine

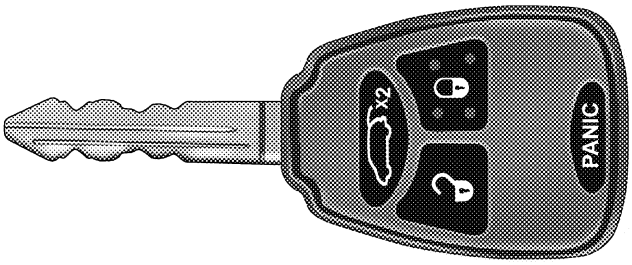


811b8b06

**Keyless Entry Transmitter**

### To unlock the doors and liftgate:

Press and release the UNLOCK button on the transmitter once to unlock the driver's door, or twice to unlock all doors and liftgate. The illuminated entry system also turns on.

**NOTE:** If desired, the "Remote Unlock Driver's Door 1st" feature can be turned on and off by referring to the Customer Programmable Features of the "Electronic Vehicle Information Center (EVIC)" section or by following these steps.

1. Press the UNLOCK button for 4 to 10 seconds.

2. While the UNLOCK button is pressed, (after 4 seconds) press the LOCK button. Release both buttons.

The "Remote Unlock Driver's Door 1st" feature can be reactivated by repeating this procedure.

Downloaded from www.Manualslib.com manuals search engine

### To lock the doors and liftgate:

Press and release the LOCK button on the transmitter to lock all doors and liftgate. The horn will chirp once to acknowledge the signal. If desired, the "Sound Horn On Lock" feature can be turned on and off by referring to the Customer Programmable Features of the "Electronic Vehicle Information Center (EVIC)" section or by following these steps.

1. Press the LOCK button for 4 to 10 seconds.

2. While the LOCK button is pressed (after 4 seconds), press the PANIC button. Release both buttons.

The "Sound Horn On Lock" feature can be reactivated by repeating this procedure.

### Using The Panic Alarm:

To turn the panic alarm feature ON or OFF, press and hold the PANIC button on the transmitter for at least one second and release. When the panic alarm is on, the headlights and park lights will flash, the horn will pulse on and off and the interior lights will turn on.

The panic alarm will stay on for 3 minutes unless you turn it off by pressing the PANIC button a second time or turn the ignition switch to the ON position.

**NOTE:** When you turn off the panic alarm by pressing the PANIC button a second time, you may have to be closer to the vehicle due to the radio frequency noises of the system.

Downloaded from www.Manualslib.com manuals search engine

### To Program Transmitters:

**Refer to SENTRY KEY "Customer Key Programming."**

If you do not have a programmed transmitter, contact your dealer for details.

### To Open/Close Power Liftgate — If Equipped

Press the LIFTGATE button twice within five seconds to open/close the power liftgate. The liftgate will beep for 2 seconds and then open/close. If the button is pushed while the liftgate is being power closed, the liftgate will reverse to the full open position.

If the liftgate is locked and is not equipped with a powered liftgate, pressing the button will result in the liftgate becoming unlocked for 30 seconds allowing you to manually access the liftgate area. The liftgate will re-lock automatically within 10 seconds once the liftgate is closed.

### To Turn Off "Flash Lights On Lock/Unlock"

**NOTE:** If desired, the "Flash Lights On Lock/Unlock" feature can be turned on and off by referring to the Customer Programmable Features of the "Electronic Vehicle Information Center (EVIC)" section or by following these steps.

1. Press the LOCK button for 4 to 10 seconds.

2. While the LOCK button is pressed, (after 4 seconds) press the UNLOCK button. Release both buttons.



Downloaded from www.Manualslib.com manuals search engine

The "Flash Lights On Lock/Unlock" feature can be reactivated by repeating this procedure. The table below explains the Lamp Flash options.

| Function | Which Turn Signal Lamps | Number of Flashes |
|---|---|---|
| Lock | All | 1 |
| Unlock 1st Press | Driver's Side | 2 |
| Unlock All Doors | All | 2 |
| Liftgate | All | 2 |

### General Information

This device complies with part 15 of the FCC rules and RSS 210 of Industry Canada. Operation is subject to the following conditions:

- This device may not cause harmful interference.
- This device must accept any interference received, including interference that may cause undesired operation.

If your Remote Keyless Entry transmitter fails to operate from a normal distance, check for these two conditions.

1. A weak battery in the transmitter. The expected life of the battery is a minimum of three years.

2. Closeness to a radio transmitter such as a radio station tower, airport transmitter, and some mobile or CB radios.

### Transmitter Battery Service

The recommended replacement battery is one CR2032 battery.

**NOTE:** Do not touch the battery terminals that are on the back housing or the printed circuit board.

Downloaded from www.Manualslib.com manuals search engine

1. With the transmitter buttons facing down, use a small screwdriver or similar flat object to pry the two halves of the transmitter apart. Make sure not to damage the rubber gasket during removal.

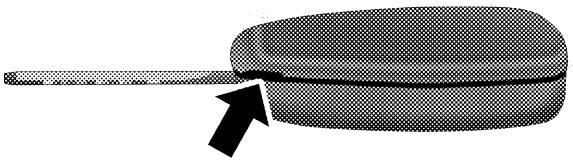

81182c72

**Separating Transmitter Halves**

2. Remove and replace the battery. Avoid touching the new battery with your fingers. Skin oils may cause battery deterioration. If you touch a battery, clean it with rubbing alcohol.

3. To reassemble the transmitter case, snap the two halves together. Make sure there is an even "gap" between the two halves. Test transmitter operation.



Downloaded from www.Manualslib.com manuals search engine

## VEHICLE THEFT ALARM

This system monitors the vehicle doors and ignition switch for unauthorized entry or operation. When the alarm is activated, the system provides both audible and visual signals. The horn will pulse, headlights/park lights will flash, the Vehicle Theft Alarm/Immobilizer light, located above the driver's center instrument panel vent will flash, and the vehicle will not start. If the alarm is triggered and no action is taken to disarm it, the system will turn off the horn after three minutes and after 15 minutes of light only operation the system will then rearm itself.

**To arm the system:** Remove the key from the ignition switch and either:

1. Press a power door lock switch while the driver's or passenger's door is open.

2. Press the LOCK button on the keyless entry transmitter.

After the last door is closed, or if all doors are closed, the system will arm itself in about 16 seconds. During that time, the Vehicle Theft Alarm/Immobilizer light will flash. If it does not illuminate, the system is not arming. If you open a door during this arming period, the system will cancel the arming process. You must repeat one of the previously described arming sequences to rearm the system.

**To disarm the system:** Press the UNLOCK button on the keyless entry transmitter. Also, using a valid sentry key and moving the ignition switch to the ON/START position will disarm the system. If you disarm the system and access the liftgate area, the system must be rearmed, as described previously, when closing the liftgate. If something has triggered the system in your absence, the horn will sound three times when you disarm the system. Check the vehicle for tampering.

Downloaded from www.Manualslib.com manuals search engine

**NOTE:**

- The driver's door key cylinder and the liftgate button on the keyless entry transmitter cannot arm or disarm the system.
- Once the alarm is set, and the liftgate button on the keyless entry transmitter is pressed, on a non-power liftgate vehicle, you have a 30 second one time access into the liftgate area. If the liftgate is not opened within 30 seconds the liftgate will automatically re-lock within 10 seconds.
- The system remains armed during liftgate entry, pressing the liftgate button will not disarm the system, if someone enters the vehicle through the liftgate and opens any door the alarm will sound.
- When the system is armed, the doors can not be unlocked from the interior power door lock switches.

The Vehicle Theft Alarm system is designed to protect your vehicle, however, you can create conditions where the system will give you a false alarm. If one of the previously described arming sequences has occurred, the system will arm regardless of whether you are in the vehicle or not. If you remain in the vehicle and open a door, the alarm will sound. If this occurs, disarm the system.

The alarm system will be activated when the battery is connected if the system was previously armed. The exterior lights will flash, the horn will sound, and the ignition will not start the vehicle. If this occurs, disarm the system.



Downloaded from www.Manualslib.com manuals search engine

## LIFTGATE

The liftgate can be unlocked using the remote keyless entry or by activating the power door lock switches located on the front doors.

Once unlocked, the liftgate can be opened or closed. To open the liftgate, depress the liftgate release switch located in the exterior handle and pull the liftgate open with one fluid motion.

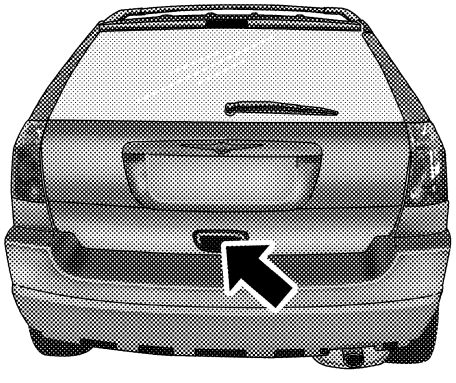


**Liftgate Release**

The liftgate will not manually open if the vehicle is in gear or the vehicle speed is above 0 mph (0 km/h).

**NOTE:**

- In the event of a power malfunction to the liftgate, an emergency liftgate latch release can be used to open

Downloaded from www.Manualslib.com manuals search engine

the liftgate. The emergency liftgate latch release can be accessed through a snap-in cover located on the liftgate trim panel.

- If the liftgate is locked and is not equipped with a powered liftgate, pressing the button on the remote keyless entry transmitter will result in the liftgate becoming unlocked for 30 seconds allowing you to manually access the liftgate area. The liftgate will re-lock automatically within 10 seconds once the liftgate is closed.

### Power Liftgate — If Equipped

The power liftgate may be opened manually or by using the button on the remote keyless entry transmitter. Press the button on the remote keyless entry transmitter twice within five seconds, to open the power liftgate. Once the liftgate is fully open, pressing the button twice within five seconds a second time will close the liftgate.

The power liftgate may also be opened by pressing the switch located on the overhead console.

**Power Liftgate Switch**

A beeping signal will sound two seconds before the liftgate starts to open or close.

Downloaded from www.Manualslib.com manuals search engine

**WARNING!**

**During power operation, personal injury or cargo damage may occur. Ensure the liftgate travel path is clear. Make sure the liftgate is closed and latched before driving away.**

**NOTE:**

- If anything obstructs the power liftgate while it is closing or opening, the liftgate will automatically reverse to the closed or open position, provided it meets sufficient resistance.
- There are also pinch sensors attached to the side of the liftgate. Light pressure anywhere along these strips will cause the liftgate to return to the open position.
- The power liftgate must be in the full open position for any of the close buttons to operate. If the liftgate is not fully open, press the open button to fully open the liftgate and then press close.
- If the liftgate release switch is activated while the power liftgate is closing, the liftgate will reverse to the full open position.
- The power liftgate switches will not operate if the vehicle is in gear or the vehicle speed is above 0 mph (0 km/h).
- The power liftgate will not operate in temperatures below −22° F (−30° C) or temperatures above 150° F (65° C). Be sure to remove any build-up of snow or ice from the liftgate before pressing any of the power liftgate switches.

Downloaded from www.Manualslib.com manuals search engine

- If the power liftgate encounters multiple obstructions within the same cycle, the system will automatically stop and must be opened or closed manually.

**WARNING!**

- **Driving with the liftgate open can allow poisonous exhaust gases into your vehicle. You and your passengers could be injured by these fumes. Keep the liftgate closed when you are operating the vehicle.**
- **If you are required to drive with the liftgate open, make sure that all windows are closed, and the climate control blower switch is set at high speed. DO NOT use the recirculation mode.**

Gas props support the liftgate in the open position. However, because the gas pressure drops with temperature, it may be necessary to assist the props when opening the liftgate in cold weather.



Downloaded from www.Manualslib.com manuals search engine

## WINDOWS

### Power Windows

The window controls on the driver's door control all the door windows.

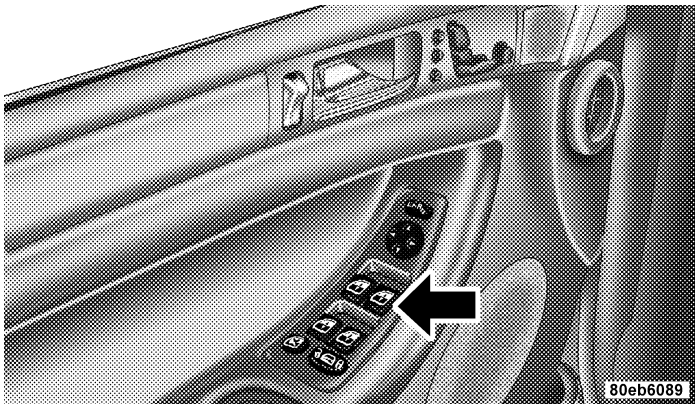


**Power Window Switches**

There are single window controls on each passenger door trim panel which operate the passenger door windows.

The window controls will operate only when the ignition switch is in the ON or ACCESSORY position.

The window lock switch on the driver's door allows you to disable the window controls on the passenger doors. When the lock switch is pressed the window controls on the passenger doors will not illuminate and the passenger windows will be disabled.

**Auto Down Feature**

All the power window switches have an auto down feature. Press the window switch to the second detent, release, and the window will go down automatically.

To open the window part way, press the window switch to the first detent and release it when you want the window to stop.

The power window switches remain active for up to 45 seconds after the ignition switch has been turned off. Opening either front door will cancel this feature.

Downloaded from www.Manualslib.com manuals search engine

### Wind Buffeting

Wind buffeting can be described as the perception of pressure on the ears or a helicopter type sound in the ears. Your vehicle may exhibit wind buffeting with the windows down, or the sunroof (if equipped) in certain open or partially open positions. This is a normal occurrence and can be minimized. If the buffeting occurs with the rear windows open, open the front and rear windows together to minimize the buffeting. If the buffeting occurs with the sunroof open, adjust the sunroof opening to minimize the buffeting.

## OCCUPANT RESTRAINTS

Some of the most important safety features in your vehicle are the restraint systems. These include the front and rear seat belts for the driver and all passengers, front airbags for both the driver and front passenger, and if equipped, left and right window bags for the driver and passengers seated next to a window and a driver inflatable knee blocker. If you will be carrying children too small for adult-size seat belts, your seat belts or the LATCH feature (refer to the Child Restraint section in this manual), can be used to hold infant and child restraint systems.



Downloaded from www.Manualslib.com manuals search engine

If your vehicle is equipped with the Occupant Classification System (OCS) there will be a Passenger Airbag Disabled (PAD) Indicator Light located on the center of the instrument panel.

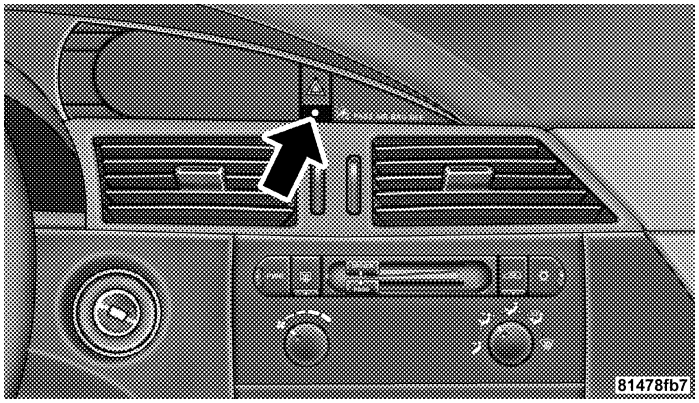


**Passenger Airbag Disabled Light**

**NOTE:** The front airbags have a multi stage inflator design. This allows the airbag to have different rates of inflation that are based on collision severity.

Please pay close attention to the information in this section. It tells you how to use your restraint system properly to keep you and your passengers as safe as possible.

**WARNING!**

**In a collision, you and your passengers can suffer much greater injuries if you are not properly buckled up. You can strike the interior of your vehicle or other passengers, or you can be thrown out of the vehicle. Always be sure you and others in your vehicle are buckled up properly.**

Downloaded from www.Manualslib.com manuals search engine

Buckle up even though you are an excellent driver, even on short trips. Someone on the road may be a poor driver and cause a collision that includes you. This can happen far away from home or on your own street.

Research has shown that seat belts save lives, and they can reduce the seriousness of injuries in a collision. Some of the worst injuries happen when people are thrown from the vehicle. Seat belts reduce the possibility of ejection and the risk of injury caused by striking the inside of the vehicle. **Everyone** in a motor vehicle should be belted at all times.

### Lap/Shoulder Belts

All the seats in your vehicle are equipped with Lap/Shoulder Belts.

The belt webbing retractor is designed to lock during very sudden stops or collisions. This feature allows the shoulder part of the belt to move freely with you under normal conditions. But in a collision, the belt will lock and reduce the risk of your striking the inside of the vehicle or being thrown out.

**WARNING!**

- **It is extremely dangerous to ride in a cargo area, inside or outside of a vehicle. In a collision, people riding in these areas are more likely to be seriously injured or killed.**
- **Do not allow people to ride in any area of your vehicle that is not equipped with seats and seat belts.**
- **Be sure everyone in your vehicle is in a seat and using a seat belt properly.**

Downloaded from www.Manualslib.com manuals search engine

**WARNING!**

- **Wearing a seat belt incorrectly is dangerous. Seat belts are designed to go around the large bones of your body. These are the strongest parts of your body and can take the forces of a collision the best.**
- **Wearing your belt in the wrong place could make your injuries in a collision much worse. You might suffer internal injuries, or you could even slide out of part of the belt. Follow these instructions to wear your seat belt safely and to keep your passengers safe, too.**
- **Two people should never be belted into a single seat belt. People belted together can crash into one another in a collision, hurting one another badly. Never use a lap/shoulder belt or lap belt for more than one person, no matter what their size.**

### Lap/Shoulder Belt Operating Instructions

1. Enter the vehicle and close the door. Sit back and adjust the seat.

2. The seat belt latch plate is near the seatback of the front seats and next to your arm in the rear seats. Grasp the latch plate and pull out the belt. Slide the latch plate up the webbing as far as necessary to allow the belt to go around your lap.

Downloaded from www.Manualslib.com manuals search engine

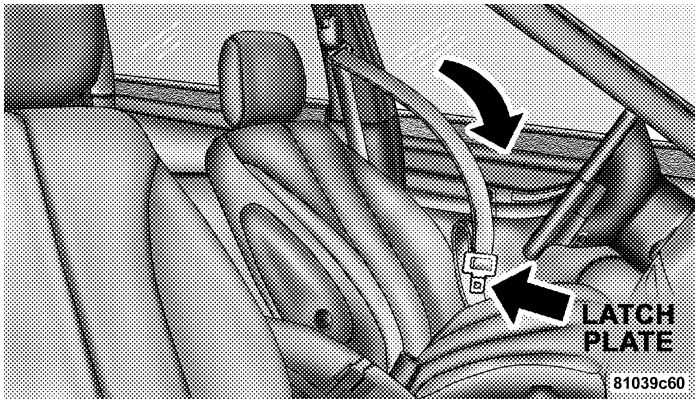


Latch Plate

3. When the belt is long enough to fit, insert the latch plate into the buckle until you hear a “click”.

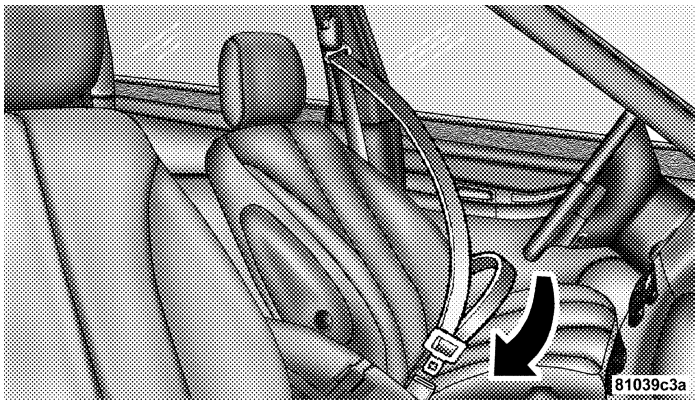


Latch Plate To Buckle



Downloaded from www.Manualslib.com manuals search engine

**WARNING!**

- **A belt that is buckled into the wrong buckle will not protect you properly. The lap portion could ride too high on your body, possibly causing internal injuries. Always buckle your belt into the buckle nearest you.**
- **A belt that is too loose will not protect you as well. In a sudden stop you could move too far forward, increasing the possibility of injury. Wear your seat belt snugly.**
- **A belt that is worn under your arm is very dangerous. Your body could strike the inside surfaces of the vehicle in a collision, increasing head and neck injury. A belt worn under the arm can cause internal injuries. Ribs aren't as strong as shoulder bones. Wear the belt over your shoulder so that your strongest bones will take the force in a collision.**
- **A shoulder belt placed behind you will not protect you from injury during a collision. You are more likely to hit your head in a collision if you do not wear your shoulder belt. The lap and shoulder belt are meant to be used together.**

4. Position the lap belt across your thighs, below your abdomen. To remove slack in the lap belt portion, pull up on the shoulder belt. To loosen the lap belt if it is too tight, tilt the latch plate and pull on the lap belt. A snug belt reduces the risk of sliding under the belt in a collision.

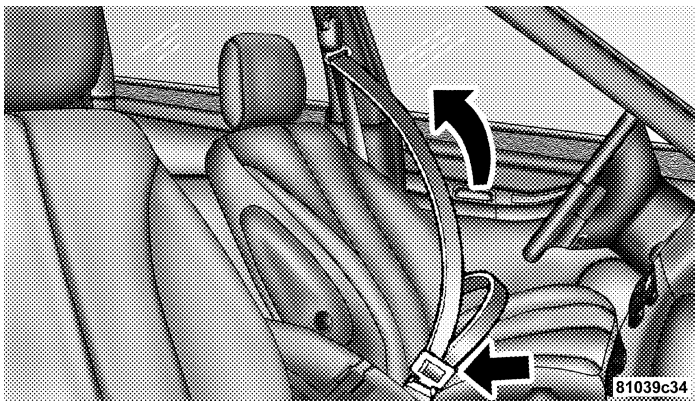


**Removing Slack From Belt**

Downloaded from www.Manualslib.com manuals search engine

**WARNING!**

**• A lap belt worn too high can increase the risk of internal injury in a collision. The belt forces won't be at the strong hip and pelvic bones, but across your abdomen. Always wear the lap belt as low as possible and keep it snug.**

**• A twisted belt can't do its job as well. In a collision it could even cut into you. Be sure the belt is straight. If you can't straighten a belt in your vehicle, take it to your dealer and have it fixed.**

5. Position the shoulder belt on your chest so that it is comfortable and not resting on your neck. The retractor will withdraw any slack in the belt.

6. To release the belt, push the red button on the buckle. The belt will automatically retract to its stowed position. If necessary, slide the latch plate down the webbing to allow the belt to retract fully.



**WARNING!**

**A frayed or torn belt could rip apart in a collision and leave you with no protection. Inspect the belt system periodically, checking for cuts, frays, or loose parts. Damaged parts must be replaced immediately. Do not disassemble or modify the system. Seat belt assemblies must be replaced after a collision if they have been damaged (bent retractor, torn webbing, etc.).**

Downloaded from www.Manualslib.com manuals search engine

**Adjustable Upper Shoulder Belt Anchorage**

In the front seats, the shoulder belt anchorage can be adjusted upward or downward to help position the belt away from your neck. Press the button to release the anchorage, and then move it up or down to the position that serves you best.

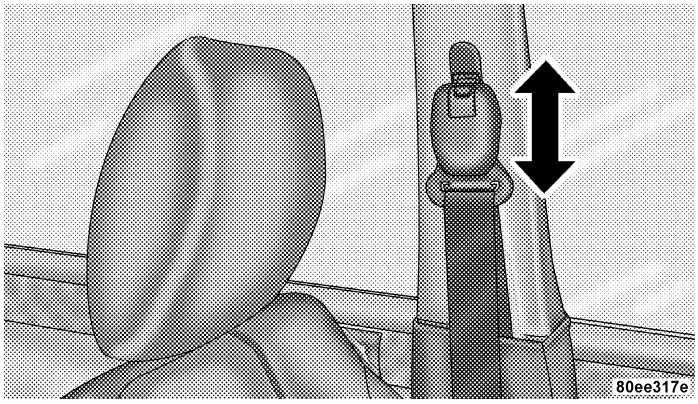


**Adjusting Upper Shoulder Belt**

As a guide, if you are shorter than average, you will prefer a lower position, and if you are taller than average, you'll prefer a higher position. When you release the anchorage, try to move it up or down to make sure that it is locked in position.

Downloaded from www.Manualslib.com manuals search engine

### Lap/Shoulder Belt Untwisting Procedure

Use the following procedure to untwist a twisted lap/shoulder belt.

1. Position the latch plate as close as possible to the anchor point.

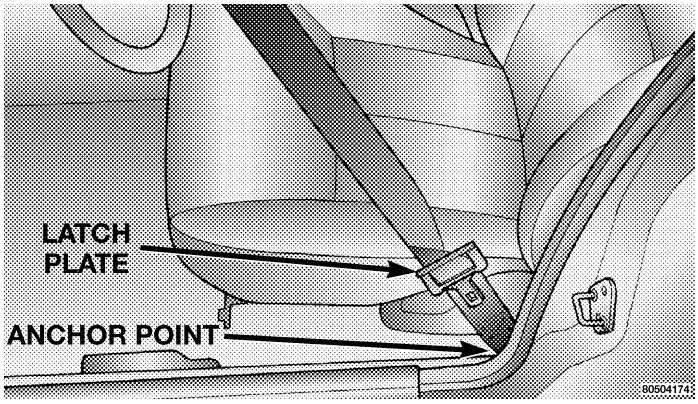


**Positioning Latch Plate**

2. At about 6 to 12 inches (15 to 30 cm) above the latch plate, grasp and twist the belt webbing 180° to create a fold that begins immediately above the latch plate.

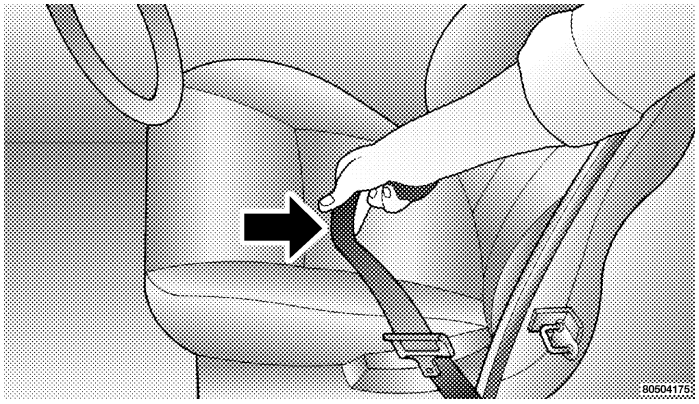


**Creating A Fold**

Downloaded from www.Manualslib.com manuals search engine

3. Slide the latch plate upward over the folded webbing. The folded webbing must enter the slot at the top of the latch plate.

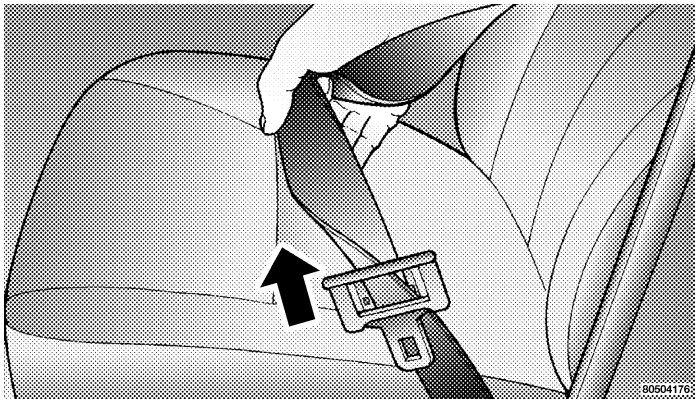


**Sliding The Latch Plate**

4. Continue to slide the latch plate up until it clears the folded webbing.

## Seat Belt Pretensioners

The seat belt buckles for both front seating positions are equipped with pretensioning devices that are designed to remove slack from the seat belt in the event of a collision. These devices improve the performance of the seat belt by assuring that the belt is tight about the occupant early in a collision. Pretensioners are designed to work for all size occupants.

**NOTE:** These devices are not a substitute for proper seat belt placement by the occupant. The seat belt still must be worn snugly and positioned properly.

The pretensioners are triggered by the front airbag control module (see Airbag Section). Like the front airbags, the pretensioners are single use items. After a collision that is severe enough to deploy the airbags and pretensioners, both must be replaced.

Downloaded from www.Manualslib.com manuals search engine

### Enhanced Seat Belt Use Reminder System (BeltAlert)

If the driver's or front passenger's seat belt has not been buckled within 60 seconds of starting the vehicle and if the vehicle speed is greater than 5 mph (8 km/h), the Enhanced Warning System (BeltAlert) will alert the driver or front passenger to buckle their seat belt. The driver should also instruct all other occupants to buckle their seat belts. Once the warning is triggered, the Enhanced Warning System (BeltAlert) will continue to chime and flash the Seat Belt Warning Light for 96 seconds or until the driver's or front passenger's seat belt is buckled.

The Enhanced Warning System (BeltAlert) will be reactivated if the driver's or front passenger's seat belt is unbuckled for more than 10 seconds and the vehicle speed is greater than 5 mph (8 km/h).

The Enhanced Warning System (BeltAlert) can be enabled or disabled by your authorized dealer or by following these steps:

**NOTE:** The following steps must occur within the first 60 seconds of the ignition switch being turned to the ON or RUN position. DaimlerChrysler does not recommend deactivating the Enhanced Warning System (BeltAlert).

1. Turn the ignition switch to the OFF position, and buckle the driver's seat belt.

2. Turn the ignition switch to the RUN position (engine does not need to be running), and wait for the Seat Belt Warning Light to turn off.

3. Within 60 seconds of turning the ignition switch to the RUN position, unbuckle and then re-buckle the driver's seat belt at least three times within 10 seconds, ending with the seat belt buckled.

Downloaded from www.Manualslib.com manuals search engine

**NOTE:** Watch for the Seat Belt Warning Light to turn on while unbuckling and off while re-buckling the seat belt. It may be necessary to retract the seat belt.

4. Turn the ignition switch to the OFF position. A single chime will sound to signify that you have successfully completed the programming.

The Enhanced Warning System (BeltAlert) can be reactivated by repeating this procedure.

**NOTE:** Although the Enhanced Warning System (BeltAlert) has been deactivated, the Seat Belt Warning Light will continue to illuminate while the driver's or front passenger's seat belt remains unbuckled.

### Seat Belts and Pregnant Women

We recommend that pregnant women use the seat belts throughout their pregnancies. Keeping the mother safe is the best way to keep the baby safe.

Pregnant women should wear the lap part of the belt across the thighs and as snug across the hips as possible. Keep the belt low so that it does not come across the abdomen. That way the strong bones of the hips will take the force if there is a collision.

### Seat Belt Extender

If a seat belt is too short, even when fully extended and when the adjustable upper shoulder belt anchorage (if equipped) is in its lowest position, your dealer can provide you with a seat belt extender. This extender should be used only if the existing belt is not long enough. When it is not required, remove the extender and stow it.

Downloaded from www.Manualslib.com manuals search engine

**WARNING!**

**Using a seat belt extender when not needed can increase the risk of injury in a collision. Only use when the lap belt is not long enough when it is worn low and snug, and in the recommended seating positions. Remove and store the extender when not needed.**

### Driver and Front Passenger Supplemental Restraint System - Airbag

This vehicle has airbags for both the driver and front passenger as a supplement to the seat belt restraint systems. The driver's front airbag is mounted in the center of the steering wheel. The passenger's front airbag is mounted in the instrument panel, above the glove compartment. The words SRS AIRBAG are embossed on the airbag covers.

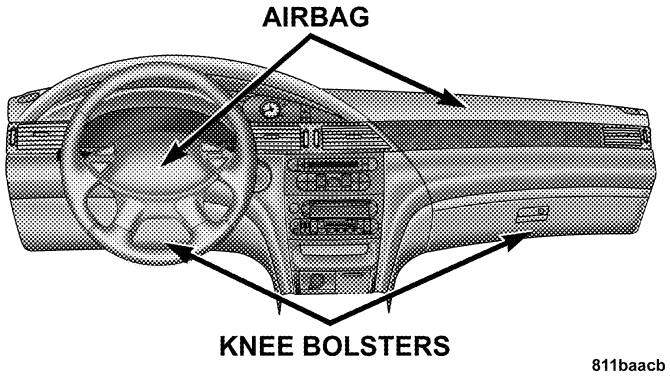


**Front Airbag Components**

**NOTE:** The front airbags are certified to the Federal regulations that allow less forceful deployment in low speed collisions.

The front airbags have a multi stage inflator design. This may allow the airbag to have different rates of inflation that are based on collision severity and occupant size.

Downloaded from www.Manualslib.com manuals search engine

Also, the front passenger airbag is certified to the Federal regulations that define Occupant Classification (Refer to "Occupant Classification System" in this section).

This vehicle may also be equipped with a driver inflatable knee blocker located on the instrument panel below the steering column.

This vehicle may also be equipped with left and right window bags to protect the driver and passengers sitting next to a window. If the vehicle is equipped with window bags, they are located above the side windows. Their covers are also labeled SRS AIRBAG.

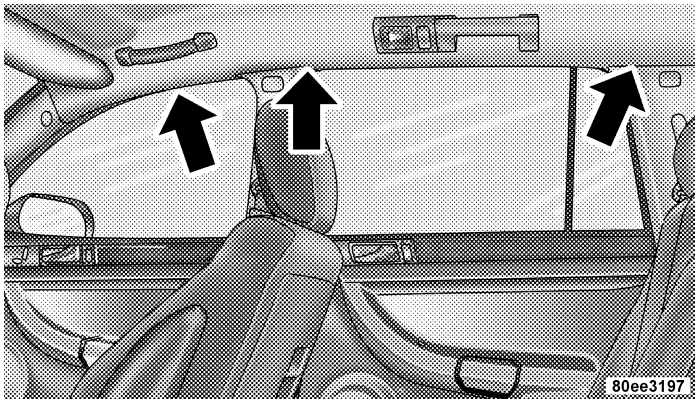


**Side Airbag Location**

**NOTE:** Airbag covers may not be obvious in the interior trim; but they will open to allow airbag deployment.

Downloaded from www.Manualslib.com manuals search engine

**WARNING!**

- **Do not put anything on or around the airbag covers or attempt to manually open them. You may damage the airbags and you could be injured because the airbags are not there to protect you. These protective covers for the airbag cushions are designed to open only when the airbags are inflating.**
- **If your vehicle is equipped with left and right window bags, do not stack luggage or other cargo up high enough to block the location of the side curtain airbag. The area where the side curtain airbag is located should remain free from any obstructions.**
- **If your vehicle is equipped with left and right window bags, do not have any accessory items installed which will alter the roof, including adding a sunroof to your vehicle. Do not add roof racks that require permanent attachments (bolts or screws) for installation on the vehicle roof. Do not drill into the roof of the vehicle for any reason.**

Along with seat belts, and front seat belt buckle pretensioners, front airbags work with the instrument panel knee blockers to provide improved protection for the driver and front passenger. Left and right window bags also work with seat belts to improve occupant protection.

The seat belts are designed to protect you in many types of collisions. The front airbags deploy in moderate to severe frontal collisions.

**NOTE:** The passenger front airbag may not deploy even when the driver front airbag has if the Occupant Classification System (refer to "Occupant Classification System" in this section) has determined the seat is empty or is occupied by a child.

If your vehicle is equipped, the window bag on the crash side of the vehicle is triggered in moderate to severe side collisions. But even in collisions where the airbags inflate, you need the seat belts to keep you in the right position for the airbags to protect you properly.

Downloaded from www.Manualslib.com manuals search engine

Here are some simple steps you can take to minimize the risk of harm from a deploying airbag.

1. **Children 12 years old and under should always ride buckled up in a rear seat.**

Infants in rear facing child restraints should **NEVER** ride in the front seat of a vehicle with a passenger front airbag. An airbag deployment can cause severe injury or death to infants in that position.

Children that are not big enough to properly wear the vehicle seat belt (refer to section on Child Restraint) should be secured in the rear seat, in a child restraint or belt-positioning booster seat appropriate for the size and age of the child. Older children who do not use a child restraint or belt-positioning booster seat should ride properly buckled up in the rear seat. Never allow children to slide the shoulder belt behind them or under their arm.

If a child from 1 to 12 years old must ride in the front passenger seat because the vehicle is crowded, move the seat as far back as possible, and use the proper child restraint. Refer to the section on Child Restraint.

You should read the instructions provided with your child restraint to make sure that you are using it properly.

2. **All occupants should wear their lap and shoulder belts properly.**

3. **The driver and front passenger seats should be moved back as far as practical to allow the front airbags room to inflate.**

4. **If your vehicle has left and right window bags, do not lean against the door, airbags will inflate forcefully into the space between you and the door.**

Downloaded from www.Manualslib.com manuals search engine

**WARNING!**

- **Relying on the airbags alone could lead to more severe injuries in a collision. The airbags work with your seat belt to restrain you properly. In some collisions the airbags won't deploy at all. Always wear your seat belts even though you have airbags.**
- **Being too close to the steering wheel or instrument panel during front airbag deployment could cause serious injury. Airbags need room to inflate. Sit back, comfortably extending your arms to reach the steering wheel or instrument panel.**
- **If the vehicle has left and right window bags, they also need room to inflate. Do not lean against the door or window. Sit upright in the center of the seat.**

**"The Airbag System" consists of the following:**

- Occupant Restraint Controller (ORC)
- AIRBAG Readiness Light
- Driver Airbag
- Front Passenger Airbag
- Window Bags above Side Windows — If Equipped
- Front Impact Sensors
- Side Impact Sensors — If Equipped
- Steering Wheel and Column
- Instrument Panel
- Seat Belt Readiness Light
- Front Seat Belt Buckle Pretensioners
- Interconnecting Wiring

Downloaded from www.Manualslib.com manuals search engine

- Knee Impact Bolster
- Driver Inflatable Knee Blocker
- Front Passenger Seat Occupant Classification System (OCS)
  - Occupant Classification Module
  - Passenger Airbag Disabled (PAD) Indicator Light
  - Interconnecting Wiring
  - Bladder Assembly
  - Belt Tension Sensor

### How The Airbag System Works

- The **Occupant Restraint Controller (ORC)** determines if a frontal collision is severe enough to require the airbags to inflate. Based on the level of collision severity, the front control module determines the proper rate of inflation. The front airbag inflators are designed to provide different rates of airbag inflation.
- The ORC may modify the rate of inflation based on the occupant size provided by the Occupant Classification Module.
- The ORC will not detect side, roll over, or rear impacts.
- The ORC monitors the readiness of the electronic parts of the system whenever the ignition switch is in the START or RUN positions. These include all of the items listed above except the steering wheel and column, instrument panel and passenger knee bolsters. If the key is in the OFF position, in the ACC position, or not in the ignition, the airbags are not on and will not inflate.

- Also, the ORC turns on the AIRBAG warning light and PAD indicator light in the center of the instrument panel for 6 to 8 seconds for a self-check when the ignition is

Downloaded from www.Manualslib.com manuals search engine

first turned on. After the self-check, the AIRBAG warning light will turn off. The PAD indicator light will function normally (Refer to "Passenger Airbag Disable (PAD) Indicator Light" in this section). If the ORC detects a malfunction in any part of the system, it turns on the AIRBAG warning light either momentarily or continuously. A single chime will sound if the light comes on again after initial start up.

**WARNING!**

**Ignoring the AIRBAG warning light in your instrument panel could mean you won't have the airbags to protect you in a collision. If the light does not come on, stays on after you start the vehicle, or if it comes on as you drive, have the airbag system checked right away.**

- The **Driver and Passenger Airbag/Inflator Units** are located in the center of the steering wheel and the right side of the instrument panel. When the ORC and impact sensors detects a collision requiring the airbags, it signals the inflator units. A large quantity of nontoxic gas is generated to inflate the front airbags. Different airbag inflation rates may be possible based on collision severity and occupant size. The steering wheel hub trim cover and the upper right side of the instrument panel separate and fold out of the way as the airbags inflate to their full size. The airbags fully inflate in about 50–70 milliseconds. This is about half of the time it takes to blink your eyes. The airbags then quickly deflate while helping to restrain the driver and front passenger.

  The driver's and passenger's front airbag gas is vented through the airbag material towards the instrument panel. In this way the airbags do not interfere with your control of the vehicle.



Downloaded from www.Manualslib.com manuals search engine

- The **Side Impact SRS Window Bags** are designed to activate only in certain side collisions. When the ORC and the side impact sensors (with side impact option) detects a collision requiring the window bags to inflate, it signals the inflators on the crash side of the vehicle. A quantity of nontoxic gas is generated to inflate the window bag. The inflating window bag pushes the outside edge of the headliner out of the way and covers the window. The airbag inflates in about 30 milliseconds (about one quarter of the time it takes to blink your eyes) with enough force to injure you if you are not belted and seated properly, or if items are positioned in the area where the window bag inflates. This especially applies to children. The window bag is only about 3½ inches (9 cm) thick when it is inflated.
- When the ORC and the impact sensors detect a collision requiring the **Driver Inflatable Knee Blocker,** it signals the inflator unit. A quantity of nontoxic gas is generated to inflate the Driver Inflatable Knee Blocker. The Driver Inflatable Knee Blocker inflates rearward towards the driver's knees to help protect the knees and position you for the best interaction with the front airbag. The Driver Inflatable Knee Blocker fully inflates in about 50 milliseconds, this is only about half of the time it takes you to blink your eyes. It then quickly deflates while helping to protect the driver's knees.
- The **Knee Impact Bolsters** help protect the knees, and position everyone for the best interaction with the front airbag.

Downloaded from www.Manualslib.com manuals search engine

- If your vehicle contains a Passenger Airbag Disable indicator light, it will be equipped with the **Occupant Classification System (OCS).** The OCS system will classify an occupant into a size category based on sensor readings from within the seat cushion. Occupants should try to remain in a normally seated position. If the occupant's weight is transferred to another object in the vehicle (i.e. feet on the dashboard), the OCS may not be able to properly approximate occupant size. Furthermore, the occupant size may appear to increase or decrease due to objects hanging on the seat, other passengers pushing on the seat, or objects lodged underneath the seat.

  If there is a rapid change in temperature or humidity, the OCS may not be able to properly approximate occupant size. If your seat including your trim cover and cushion needs to be serviced in any way (including removal or loosening/tightening of seat attachment bolts), take the vehicle to your authorized dealer. Only manufacturer approved seat accessories may be used.

If there is a fault present in the system, the AIRBAG warning light will illuminate indicating that you should take the vehicle to an authorized dealer. In the presence of an occupant in the passenger seat, if both the PAD indicator light and AIRBAG warning light are illuminated the airbag will be disabled.

The ORC will not allow front airbag deployment in the event of a collision for occupants classified into the empty or child size categories. The PAD indicator light will illuminate indicating that the Passenger Airbag is OFF when the OCS has determined that the occupant size category is a child. Also, when the seat is empty or an object that weighs less than a predetermined threshold is

Downloaded from www.Manualslib.com manuals search engine

placed on the seat, the light will remain OFF. (The PAD indicator light is an amber light located on the center of the instrument panel above the climate controls.)

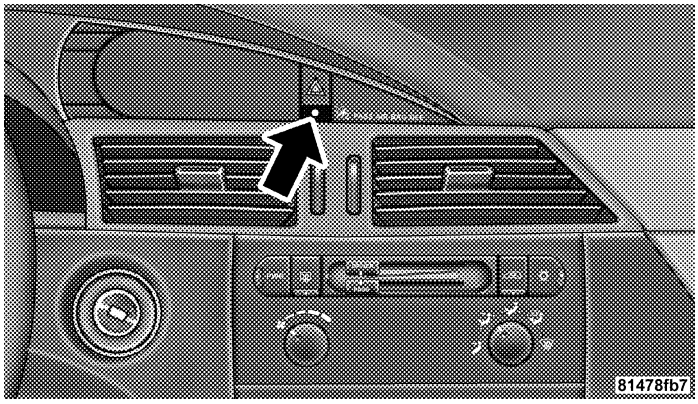


**Passenger Airbag Disabled Light**

For almost all sizes of properly seated adults, the airbag will be enabled in the event of a collision. For small teenagers and some small adults, depending on size, the airbag may or may not be enabled in the event of a collision. Both drivers and passengers should always use the PAD indicator light as an indication if the front passenger is properly positioned or not. If the PAD indicator light comes on when an adult is in the passenger seat, have the passenger re-position themselves in the seat until the light goes out.

Remember, if the PAD indicator light is illuminated the passenger front airbag will not inflate. For properly installed child restraint systems and children properly seated on the front passenger seat, the airbag will be disabled. If at all possible, place children 12 years and younger in a back seat.

- The **Occupant Classification Module (OCM)** is located beneath the front passenger seat. The OCM classifies the occupant into one of three size categories based on the input from the Bladder Assembly and Belt Tension Sensor. The size categories include empty,

Downloaded from www.Manualslib.com manuals search engine

child, and adult. The OCM sends the Occupant Classification to the ORC to identify if a front passenger airbag is allowed. If a fault is present, the AIRBAG warning light is illuminated.

- The **Passenger Airbag Disabled (PAD) Indicator Light** indicates to the driver and passenger when the airbag is turned OFF in the presence of a properly seated occupant. When the PAD indicator light is illuminated, the airbag is OFF. Also, when the Occupant Classification System (OCS) detects either an empty seat of a weight less than the predetermined occupant threshold, the ORC will not illuminate the PAD indicator light even though the airbag is turned off. When the OCS detects an adult the PAD indicator light will be off, and the airbag will be enabled.
- The **Belt Tension Sensor (BTS)** is located at the outboard passenger lap belt anchor. The BTS generates a signal based on outboard lap belt tension. This signal is sent to the OCM to ensure that the resultant bladder pressure increase due to applied lap belt tension does not cause a small occupant to be classified as a larger occupant.
- The **Bladder Assembly** is located beneath the seat cushion foam. The pressure sensor sends a signal to the OCM.

The front passenger seat assembly contains critical components that affect the front passenger airbag deployment. Correctly functioning front passenger seat components are critical for the Occupant Classification System (OCS) to properly classify the front passenger and calculate the proper airbag deployment. Do not make any modifications to the front passenger seat components, assembly, or to the seat cover.

Downloaded from www.Manualslib.com manuals search engine

**WARNING!**

**Unapproved modifications or service procedures to the front passenger seat assembly, its related components, or seat cover may inadvertently change the airbag deployment in case of a frontal crash. This could result in death or serious injury to the front seat passenger if the vehicle is involved in an accident. A modified vehicle may not comply with required Federal Motor Vehicle Safety Standards (FMVSS).**

The following requirements must be strictly adhered to:

- Do not modify the front passenger seat assembly or components in any way.
- Do not modify the front seat center console or center position seat in any way.
- Do not use prior or future model year seat covers not designated for the specific model being repaired. Always use the correct seat cover specified for the vehicle.
- Do not replace the seat cover with an aftermarket seat cover.
- Do not add a secondary seat cover other than those approved by DaimlerChrysler/Mopar.
- At no time should any supplemental restraint system (SRS) component or SRS related component or fastener be modified or replaced with any part except those which are approved by DaimlerChrysler/Mopar.

Downloaded from www.Manualslib.com manuals search engine

**If A Deployment Occurs**

The airbag system is designed to deploy the airbags when the ORC and impact sensors detect a moderate-to-severe collision, to help restrain the vehicle passengers, and then immediately deflate.

**NOTE:** A collision that is not severe enough to need airbag protection will not activate the system. This does not mean something is wrong with the airbag system.

If you do have a collision which deploys the airbags, any or all of the following may occur:

- The nylon airbag material may sometimes cause abrasions and/or skin reddening to the driver and front passenger as the airbags deploy and unfold. The abrasions are similar to friction rope burns or those you might get sliding along a carpet or gymnasium floor. They are not caused by contact with chemicals. They are not permanent and normally heal quickly. However, if you haven't healed significantly within a few days, or if you have any blistering, see your doctor immediately.
- As the airbags deflate you may see some smoke-like particles. The particles are a normal by-product of the process that generates the nontoxic gas used for airbag inflation. These airborne particles may irritate the skin, eyes, nose, or throat. If you have skin or eye irritation, rinse the area with cool water. For nose or throat irritation, move to fresh air. If the irritation continues, see your doctor. If these particles settle on your clothing, follow the garment manufacturer's instructions for cleaning.
- It is not advisable to drive your vehicle after the airbags have deployed. If you are involved in another collision, the airbags will not be in place to protect you.

Downloaded from www.Manualslib.com manuals search engine

**WARNING!**

**Deployed airbags, front seat belt buckle pretensioners and driver inflatable knee blocker cannot protect you in another collision. Have the airbags, front seat belt buckle pretensioners and driver inflatable knee blocker replaced by an authorized dealer as soon as possible. Also, have the Occupant Classification System serviced as well.**

### Enhanced Accident Response

If the airbags and seat belt pretensioners deploy after an impact and the electrical system remains functional, vehicles equipped with power door locks will unlock automatically. In addition, approximately 10 seconds after the vehicle has stopped moving, the interior lights will illuminate until the ignition switch is turned off.

### Maintaining Your Airbag System

**WARNING!**

- **Modifications to any part of the airbag system could cause it to fail when you need it. You could be injured because the airbags are not there to protect you. Do not modify the components or wiring, including adding any kind of badges or stickers to the steering wheel hub trim cover or the upper right side of the instrument panel. Do not modify the front bumper, vehicle body structure, or frame.**
- **Do not attempt to modify any part of your advanced airbag system. The airbag may inflate accidentally or may not function properly if modifications are made. Take your vehicle to an authorized dealer for any advanced airbag system service. If your seat including your trim cover and cushion needs to be serviced in any way (including removal or loosening/tightening of seat attachment bolts), take the vehicle to your authorized dealer. Only manufacturer approved seat accessories may be used. If it is necessary to modify an advanced airbag system for persons with disabilities, contact your authorized dealer.**

Downloaded from www.Manualslib.com manuals search engine

**WARNING!**

- **You need proper knee impact protection in a collision. Do not mount or locate any aftermarket equipment on or behind the knee bolsters.**
- **It is dangerous to try to repair any part of the airbag system yourself. Be sure to tell anyone who works on your vehicle that it has airbags.**

**Airbag Light**

You will want to have the airbags ready to inflate for your protection in a collision. While the airbag system is designed to be maintenance free, if any of the following occurs, have an authorized dealer service the system immediately.

- The AIRBAG light does not come on or flickers during the 6 to 8 seconds when the ignition switch is first turned on.
- The light remains on or flickers after the 6 to 8 second interval.
- The light flickers or comes on and remains on while driving.



Downloaded from www.Manualslib.com manuals search engine

## Child Restraint

Everyone in your vehicle needs to be buckled up at all times — babies and children, too. Every state in the United States and all Canadian provinces require that small children ride in proper restraint systems. This is the law, and you can be prosecuted for ignoring it.

Children 12 years and under should ride properly buckled up in a seat appropriate for their age and size. According to crash statistics, children are safer when properly restrained in the rear seats, rather than in the front.

**WARNING!**

**In a collision, an unrestrained child, even a tiny baby, can become a missile inside the vehicle. The force required to hold even an infant on your lap could become so great that you could not hold the child, no matter how strong you are. The child and others could be badly injured. Any child riding in your vehicle should be in a proper restraint for the child's size.**

Downloaded from www.Manualslib.com manuals search engine

**Lower Anchors and Tether for CHildren (LATCH)**
Each vehicle is equipped with two child restraint anchorage systems called LATCH, which stands for Lower Anchors and Tether for CHildren. The LATCH child restraint anchorage systems are installed on second-row seats only. LATCH child restraint anchorage systems are not provided on the six passenger third row seats.

Six passenger vehicles are equipped with second row fold & tumble seats with lower anchorages that can accommodate rigid mount or flexible webbing-mounted LATCH-compatible child seats. The third row seating positions are not equipped with lower anchorages. However, the third row driver side seating position is equipped with a tether anchor. If you are installing LATCH-compatible child restraints in any third row seating position, you must use the vehicle's seat belt.

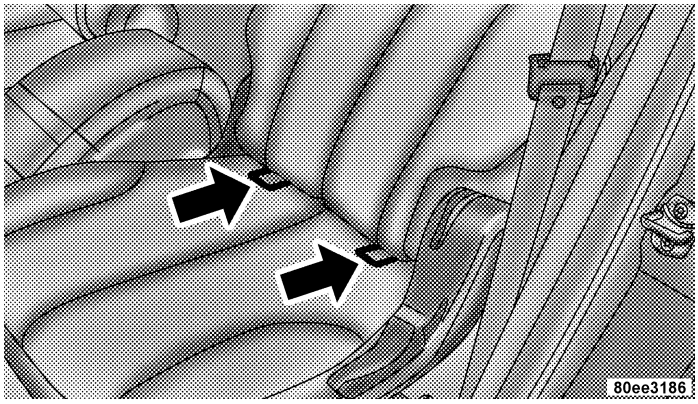


**Fold & Tumble Seat Latch Anchorages**

Downloaded from www.Manualslib.com manuals search engine

Five passenger vehicles are equipped with a second row bench seat only. The two outboard seating positions have lower anchorages that can accommodate rigid mount or flexible webbing-mounted LATCH-compatible child seats. The center seating position of the bench seat can also accommodate a flexible webbing-mounted LATCH-compatible child seat by using the inboard lower anchors of the two outboard seating positions. A rigid mount seat can only be installed at this seating location by using the vehicle's seat belt. Regardless of the specific type of lower attachment, NEVER install LATCH-compatible child seats such that two child seats share a common lower anchorage. If you are installing LATCH-compatible child restraints in adjacent rear seating positions, you can use the LATCH anchors or the vehicle's seat belt for the outboard position, but you must use the vehicle's seat belt at the center position.

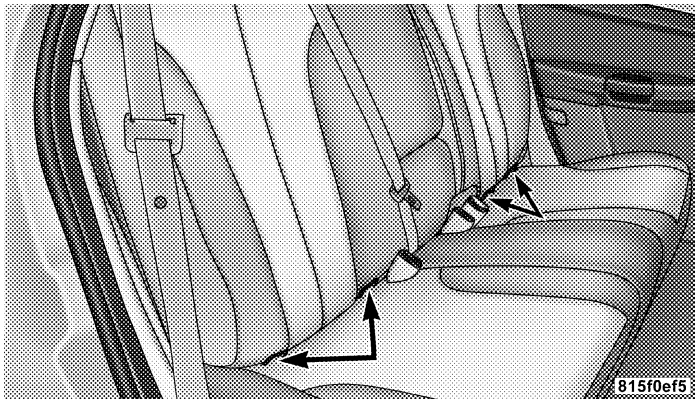


**Bench Seat LATCH Anchors**

The lower anchor bars of the LATCH System are located where the seat back meets the seat cushion. The tether anchors are located on the rear surface of the seat. Child restraint systems designed to be compatible with the vehicles LATCH System are now available. LATCH child restraints make installation into the vehicle simple and

Downloaded from www.Manualslib.com manuals search engine

convenient. When using the LATCH System, always follow the child restraint manufacturer's installation instructions.

**NOTE:** If your child restraint seat is not LATCH compatible, install the restraint using the vehicle seat belts.

**Tether Anchors**

There are tether strap anchorages behind all second row seating positions and for six passenger vehicles on the driver's side third row seating position. The tether anchors are located in the rear surface of the seat. When using the tether anchorages in the second row fold & tumble seating positions and in the outboard second row bench seating positions, ensure that the strap is routed over the top of the seatback and under the head restraint between the head restraint posts.

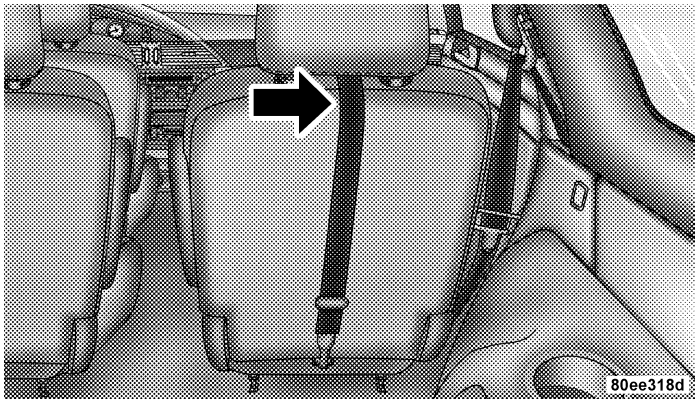


**Fold & Tumble Seat Tether Strap Routing**



Downloaded from www.Manualslib.com manuals search engine

When the tether anchorage is used in the center second row bench seating position or on the third row seating position, where equipped, the strap should be positioned straight over the top of the seatback.

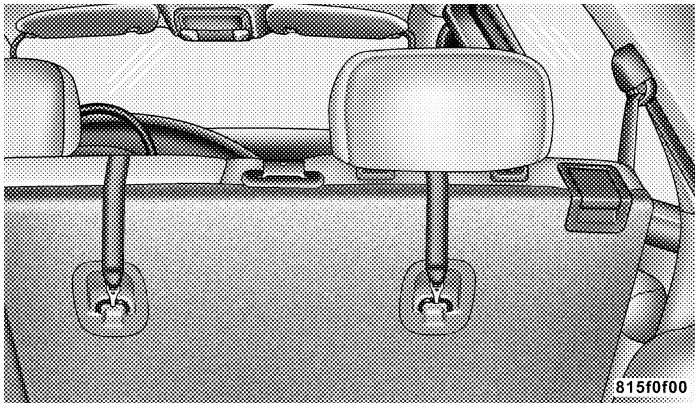


**Bench Seat Tether Strap Routing**

When the tether anchorage is used in the third row seating position, the strap should be positioned straight over the top of the seatback.

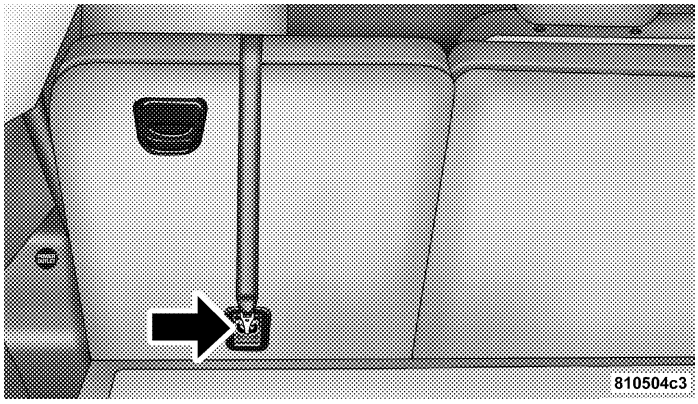


**Third Row Tether Strap Routing**

Downloaded from www.Manualslib.com manuals search engine

**Infants and Children**

There are different sizes and types of restraints for children from newborn size to the child almost large enough for an adult safety belt. Always check the child seat owner's manual to ensure you have the right seat for your child. Use the restraint that is correct for your child:

- Safety experts recommend that children ride rearward-facing in the vehicle until they are at least one year old and weigh at least 9 kg (20 lbs). Two types of child restraints can be used rearward-facing: infant carriers and "convertible" child seats. Both types of child restraints are held in the vehicle by the lap/shoulder belt or the LATCH child restraint anchorage system. Refer to "Lower Anchors and Tether for CHildren (LATCH)" in this section.
- The infant carrier is only used rearward-facing in the vehicle. It is recommended for children who weigh up to about 9 kg (20 lbs). "Convertible" child seats can be used either rearward-facing or forward-facing in the vehicle. Convertible child seats often have a higher weight limit in the rearward-facing direction than infant carriers do, so they can be used rearward-facing by children who weigh more than 9 kg (20 lbs) but are less than one year old.
- Rearward-facing child seats must **NEVER** be used in the front seat of a vehicle with a front passenger airbag. An airbag deployment could cause severe injury or death to infants in this position.
- Children who weigh more than 9 kg (20 lbs) and who are older than one year can ride forward-facing in the vehicle. Forward-facing child seats and convertible child seats used in the forward-facing direction are for children who weigh 9 to 18 kg (20 to 40 lbs) and who are older than one year.

Downloaded from www.Manualslib.com manuals search engine

- The belt-positioning booster seat is for children weighing more than 18 kg (40 lbs), but who are still too small to fit the vehicle's seat belts properly. If the child can not sit with knees bent over the vehicles seat cushion while the child's back is against the seat back, they should use a belt-positioning booster seat. The child and booster seat are held in the vehicle by the lap/shoulder belt. (Some booster seats are equipped with a front shield and are held in the vehicle by the lap portion.)

**NOTE:** For additional information, refer to **www.seatcheck.org or call 1-866-SEATCHECK**.

**WARNING!**

- **Improper installation can lead to failure of an infant or child restraint. It could come loose in a collision. The child could be badly injured or killed. Follow the manufacturer's directions exactly when installing an infant or child restraint.**
- **A rearward facing child restraint should only be used in a rear seat. A rearward facing child restraint in the front seat may be struck by a deploying passenger airbag which may cause severe or fatal injury to the infant.**

Downloaded from www.Manualslib.com manuals search engine

**Here are some tips on getting the most out of your child restraint:**

- Before buying any restraint system, make sure that it has a label certifying that it meets all applicable Safety Standards. We also recommend that you make sure that you can install the child restraint in the vehicle where you will use it, before you buy it.
- The restraint must be appropriate for your child's weight and height. Check the label on the restraint for weight and height limits.
- Carefully follow the instructions that come with the restraint. If you install the restraint improperly, it may not work when you need it.

  On six passenger vehicles and on five passenger bench seat vehicles except for the center seating position, the passenger seat belts are equipped with cinching latch plates, which are designed to keep the lap portion tight around the child restraint so that it is not necessary to use a locking clip. Pulling up on the shoulder portion of the lap/shoulder belt will tighten the belt. The cinching latch plate will keep the belt tight, however, any seat belt system will loosen with time, so check the belt occasionally and pull it tight if necessary. Instead of a cinching latch plate to tighten a child restraint, the five passenger bench seat center seating position is equipped with a seat belt that can be switched to the automatic locking mode. See the next section for more information.
- Buckle the child into the seat according to the child restraint manufacturer's directions.
- When your child restraint is not in use, secure it in the vehicle with the seat belt or remove it from the vehicle. Don't leave it loose in the vehicle. In a sudden stop or collision, it could strike the occupants or seatbacks and cause serious personal injury.

Downloaded from www.Manualslib.com manuals search engine

**Automatic-Locking Retractor (ALR)**

The center seating position on vehicles equipped with a second row bench seat is equipped with an Automatic-Locking Retractor (ALR). Pull the belt from the retractor until there is enough to allow you to pass through the child restraint and slide the latch plate into the buckle. Then pull on the belt until it is all removed from the retractor. Allow the belt to return into the retractor, pulling on the excess webbing to tighten the lap portion about the child restraint. Follow the instructions of the child restraint manufacturer.

**NOTE:** To reset this feature you must let all of the belt webbing return into the retractor. You will not be able to pull out more webbing until all of the webbing has been returned back into the retractor.

**Installing A Child Restraint**

We urge that you carefully follow the directions of the manufacturer when installing your child restraint. Many, but not all, restraint systems will be equipped with separate straps on each side, with each having a hook or connector and a means for adjusting the tension in the strap. Forward-facing toddler restraints and some rearward-facing infant restraints will also be equipped with a tether strap, a hook and means for adjusting the tension in the strap.

In general, you will first loosen the adjusters on the lower straps and tether straps so that you can more easily attach the hook or connector to the lower anchorages and tether anchorages. Then tighten all three straps as you push the child restraint rearward and downward into the seat.

Downloaded from www.Manualslib.com manuals search engine

Child restraint systems having attachments designed to connect to the lower anchorages are now available. Child restraints having tether straps and hooks for connection to the seatback tether anchorage have been available for some time. In fact, many child restraint manufacturer's will provide add-on tether strap kits for some of their older products.

Because the lower anchorages are to be introduced to passenger carrying vehicles over a period of years, child restraint systems having attachments for those anchorages will continue to have features for installation in vehicles using the lap or lap/shoulder belt. They will also have tether straps, and you are urged to take advantage of all of the available attachments provided with your child restraint in any vehicle.

**NOTE:** When using the LATCH attaching system to install a child restraint, please ensure that all seat belts not being used for occupant restraints are stowed and out of reach of children. It is recommended that before installing the child restraint, buckle the seat belt so the seat belt is tucked behind the child restraint and out of reach. If the buckled seat belt interferes with the child restraint installation, instead of tucking the seat belt behind the child restraint, route the seat belt through the child restraint belt path and then buckle it. This should stow the seat belt out of the reach of an inquisitive child. Remind all children in the vehicle that the seat belts are not toys and should not be played with, and never leave your child unattended in the vehicle.

Not all child restraint systems will be installed as we have described here. Again, carefully follow the instructions that come with the child restraint system.

Downloaded from www.Manualslib.com manuals search engine

**WARNING!**

**Improper installation of a child restraint to the LATCH anchorages can lead to failure of an infant or child restraint. The child could be badly injured or killed. Follow the manufacturer's directions exactly when installing an infant or child restraint.**

**Children Too Large For Booster Seats**

Children who are large enough to wear the shoulder belt comfortably, and whose legs are long enough to bend over the front of the seat when their back is against the seatback, should use the lap/shoulder belt in a rear seat.

- Make sure that the child is upright in the seat.
- The lap portion should be low on the hips and as snug as possible.
- Check belt fit periodically. A child's squirming or slouching can move the belt out of position.
- If the shoulder belt contacts the face or neck, move the child closer to the center of the vehicle. Never allow a child to put the shoulder belt under an arm or behind their back.

**Transporting Pets**

Airbags deploying in the front seat could harm your pet. An unrestrained pet could be thrown about and possibly injured, or injure a passenger during panic braking or in a collision.

Pets should be restrained in the rear seat in pet harnesses or pet carriers that are secured by seat belts.

Downloaded from www.Manualslib.com manuals search engine

## ENGINE BREAK-IN RECOMMENDATIONS

A long break-in period is not required for the engine in your new vehicle.

Drive moderately during the first 300 miles (500 km). After the initial 60 miles (100 km), speeds up to 50 or 55 mph (80 or 90 km/h) are desirable.

While cruising, brief full-throttle acceleration, within the limits of local traffic laws, contributes to a good break-in. Wide open throttle acceleration in low gear can be detrimental and should be avoided.

The engine oil installed in the engine at the factory is a high quality energy conserving type lubricant. Oil changes should be consistent with anticipated climate conditions under which vehicle operations will occur. The recommended viscosity and quality grades are shown in Section 7 of this manual. NON-DETERGENT OR STRAIGHT MINERAL OILS MUST NEVER BE USED.

A new engine may consume some oil during its first few thousand miles (kilometers) of operation. This should be considered as a normal part of the break-in and not interpreted as an indication of difficulty.



## SAFETY TIPS

### Exhaust Gas

**WARNING!**

**Exhaust gases can injure or kill. They contain carbon monoxide (CO) which is colorless and odorless. Breathing it can make you unconscious and can eventually poison you. To avoid breathing (CO) follow the safety tips below.**

Do not run the engine in a closed garage or in confined areas any longer than needed to move your vehicle in or out of the area.

Downloaded from www.Manualslib.com manuals search engine

If it is necessary to sit in a parked vehicle with the engine running, adjust your heating or cooling controls to force outside air into the vehicle. Set the blower at high speed.

**WARNING!**

**If you are required to drive with the deck lid/liftgate open, make sure that all windows are closed, and the climate control blower switch is set at high speed. DO NOT use the recirculation mode.**

## Safety Checks You Should Make Inside The Vehicle

### Seat Belts

Inspect the belt system periodically, checking for cuts, frays and loose parts. Damaged parts must be replaced immediately. Do not disassemble or modify the system.

Front seat belt buckle pretensioners must be replaced after a collision. Rear seat belt assemblies must be replaced after a collision if they have been damaged (bent retractor, torn webbing, etc. If there is any question regarding belt or retractor condition, replace the belt.

### Airbag Light

The light should come on and remain on for 6 to 8 seconds as a bulb check when the ignition switch is first turned ON. If the LED is not lit during starting, have it checked. If the light stays on or comes on while driving, have the system checked by an authorized dealer.

### Defroster

Check operation by selecting the defrost mode and place the blower control on high speed. You should be able to feel the air directed against the windshield.

Downloaded from www.Manualslib.com manuals search engine

## Periodic Safety Checks You Should Make Outside The Vehicle

### Tires

Examine tires for excessive tread wear or uneven wear patterns. Check for stones, nails, glass, or other objects lodged in the tread. Inspect tread and sidewall for cuts or cracks. Check wheel nuts for tightness, and tires (including spare) for proper pressure.

### Lights

Have someone observe the operation of exterior lights while you work the controls. Check turn signal and high beam indicator lights on the instrument panel.

### Fluid Leaks

Check area under vehicle after overnight parking for fuel, engine coolant, oil or other fluid leaks. Also, if gasoline fumes are detected or fuel, power steering fluid or brake fluid leaks are suspected, the cause should be located and corrected immediately.



Downloaded from www.Manualslib.com manuals search engine

Downloaded from www.Manualslib.com manuals search engine

# UNDERSTANDING THE FEATURES OF YOUR VEHICLE

## CONTENTS



■ Mirrors . . . . . .79
- □ Inside Day / Night Mirror . . . . . .79
- □ Automatic Dimming Mirror — If Equipped . . . .80
- □ Driver's Side Outside Mirror Auto Dimmer — If Equipped . . . . . .80
- □ Exterior Mirrors Folding Feature . . . . . .80
- □ Outside Mirror — Driver's Side . . . . . .81
- □ Outside Mirror — Passenger's Side . . . . . .81
- □ Power Remote-Control Mirrors . . . . . .82
- □ Heated Remote Control Mirrors . . . . . .82
- □ Illuminated Vanity Mirrors . . . . . .82

■ Hands–Free Communication (UConnect™) — If Equipped . . . . . .83
- □ Operations . . . . . .85
- □ Phone Call Features . . . . . .91
- □ UConnect™ System Features . . . . . .94
- □ Advanced Phone Connectivity . . . . . .98
- □ Things You Should Know About Your UConnect™ System . . . . . .100

Downloaded from www.Manualslib.com manuals search engine

■ Seats . . . . . 106
□ 10–Way Driver's Power Seat — If Equipped . . 106
□ 8–Way Driver's Power Seat — If Equipped . . . 107
□ 4–Way Passenger's Power Seat . . . . . 107
□ Adjustable Head Restraints . . . . . 108
□ Heated Seats — If Equipped . . . . . 108
□ Second Row Manual Seat Recliner — If Equipped . . . . . 110
□ Second Row Manual Seat Adjuster — If Equipped . . . . . 111
□ Second Row Bench Seating — If Equipped . . . 112
□ Second Row Fold & Tumble Seats — If Equipped . . . . . 113
□ Third Row Easy Exit — If Equipped . . . . . 114
□ Third Row Seating — If Equipped . . . . . 116
□ Load Floor — If Equipped . . . . . 117
□ Plastic Grocery Bag Retainer . . . . . 118
■ Driver Memory Seat — If Equipped . . . . . 119
□ Easy Entry/Exit Seat (Available With Memory Seat Only) . . . . . 122
□ Tilt Mirrors In Reverse — If Equipped . . . . . 123
■ To Open And Close The Hood . . . . . 123
■ Lights . . . . . 125
□ Overhead Console Map/Reading Lights . . . . . 125
□ Interior Lights . . . . . 126
□ Multi-Function Lever . . . . . 126
□ Headlights, Parking Lights, Instrument Panel Lights . . . . . 126

Downloaded from www.Manualslib.com manuals search engine

□ Automatic Headlights . . . . . .128
□ Daytime Running Lights (Canada Only) . . . . . .128
□ Lights-On Reminder . . . . . .128
□ Headlight Time Delay . . . . . .128
□ Fog Lights — If Equipped . . . . . .129
□ Turn Signals . . . . . .129
□ Highbeam/Lowbeam Select Switch . . . . . .130
□ Passing Light . . . . . .130
■ Windshield Wipers And Washers . . . . . .130
□ Windshield Washers . . . . . .130
□ Mist Feature . . . . . .131
□ Windshield Wiper Operation . . . . . .131
□ Intermittent Wiper System . . . . . .131
□ Rear Window Wiper/Washer . . . . . .131
■ Tilt Steering Column . . . . . .133
■ Traction Control Switch — If Equipped . . . . . .134
■ Rear Park Assist System — If Equipped . . . . . .135
■ Adjustable Pedals — If Equipped . . . . . .137
■ Electronic Speed Control . . . . . .138
□ To Activate . . . . . .139
□ To Set At A Desired Speed . . . . . .139
□ To Deactivate . . . . . .140
□ To Resume Speed . . . . . .140
□ To Vary The Speed Setting . . . . . .140
□ To Accelerate For Passing . . . . . .140
■ Overhead Console — If Equipped . . . . . .141



Downloaded from www.Manualslib.com manuals search engine

□ Courtesy/Reading Lights . . . . . .142
□ Sunglasses Storage . . . . . .142
■ Garage Door Opener — If Equipped . . . . . .142
□ Programming HomeLink . . . . . .144
□ Canadian Programming/Gate Programming . .146
□ Using HomeLink . . . . . .147
□ Erasing HomeLinkButtons . . . . . .147
□ Reprogramming a Single HomeLinkButton . . .147
□ Security . . . . . .148
■ Power Sunroof — If Equipped . . . . . .149
□ Express Open Feature . . . . . .150
□ Wind Buffeting . . . . . .151
□ Sunroof Maintenance . . . . . .151
■ Electrical Power Outlets . . . . . .152
□ Electrical Outlet Use With Engine Off . . . . . .153
■ Cupholders . . . . . .154
□ Front Seat Cupholders . . . . . .154
□ Second Row Seat Cupholders . . . . . .154
□ Third Row Seat Cupholders — If Equipped . . .155
■ Storage . . . . . .155
□ Console Features . . . . . .155
□ Rear Cargo Storage Bin — If Equipped . . . . . .155
□ Retractable Cargo Area Cover — If Equipped . .156
□ Cargo Tie-Down Hooks . . . . . .157
■ Roof Luggage Rack — If Equipped . . . . . .158
■ Load Leveling System . . . . . .160

Downloaded from www.Manualslib.com manuals search engine

## MIRRORS

### Inside Day / Night Mirror

Adjust the mirror to center on the view through the rear window. A two point pivot system allows for horizontal and vertical adjustment of the mirror.

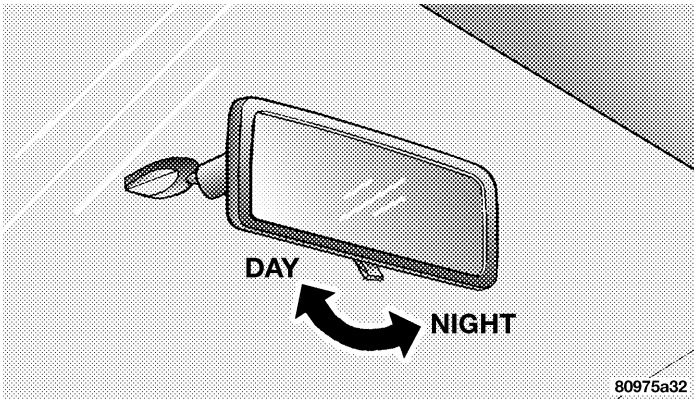


MANUAL REARVIEW MIRROR

Annoying headlight glare can be reduced by moving the small control under the mirror to the night position (toward rear of vehicle). The mirror should be adjusted while set in the day position (toward windshield).



Downloaded from www.Manualslib.com manuals search engine

### Automatic Dimming Mirror — If Equipped

If the switch is in the "Auto" position the mirror will automatically adjust for annoying headlight glare from vehicles behind you. You can turn the feature on or off by pressing the button at the base of the mirror. A light in the mirror will illuminate to indicate when this feature is on.

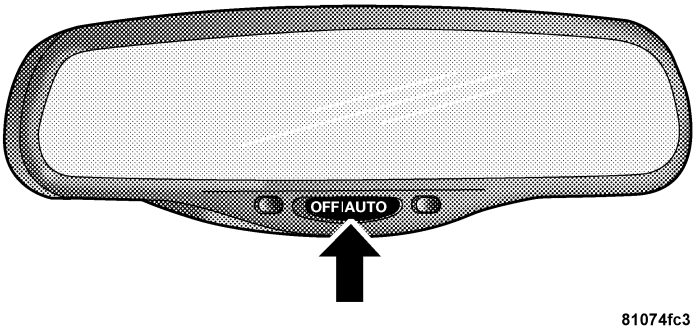


AUTO MIRROR

**CAUTION!**

**To avoid damage to the mirror during cleaning, never spray any cleaning solution directly onto the mirror. Apply the solution onto a clean cloth and wipe the mirror clean.**

### Driver's Side Outside Mirror Auto Dimmer — If Equipped

This mirror automatically adjusts for annoying headlight glare from vehicles behind you. You can turn this feature on or off by pressing the button at the base of the Rearview Mirror.

### Exterior Mirrors Folding Feature

All exterior mirrors are hinged and may be moved either forward or rearward to resist damage. The hinges have three detent positions; full forward, full rearward, and normal.

Downloaded from www.Manualslib.com manuals search engine

### Outside Mirror — Driver's Side

Adjust the outside mirror to center on the adjacent lane of traffic, with a slight overlap of the view obtained on the inside mirror.

### Outside Mirror — Passenger's Side

Adjust the convex outside mirror so you can just see the side of your vehicle in the portion of the mirror closest to the vehicle. This type of mirror will give a much wider view to the rear, and especially of the lane next to your vehicle.

**WARNING!**

**Vehicles and other objects seen in the right side convex mirror will look smaller and farther away than they really are. Relying too much on your right side mirror could cause you to collide with another vehicle or other object.**

**Use your inside mirror when judging the size or distance of a vehicle seen in this convex mirror.**



Downloaded from www.Manualslib.com manuals search engine

## Power Remote-Control Mirrors

Use the mirror select switch, located on the driver's door trim panel above the power window switches, to adjust the view obtained in the outside mirrors.

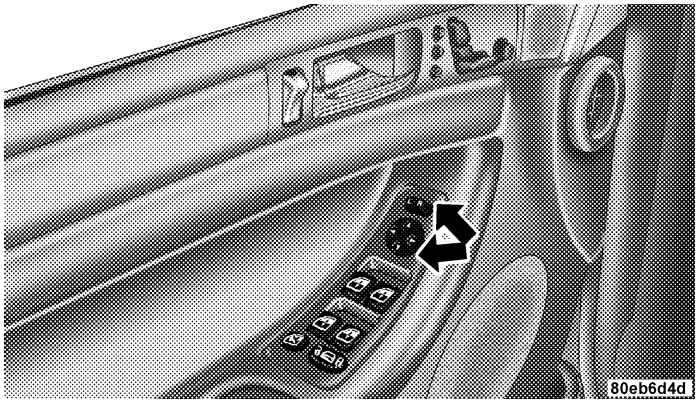


**Power Mirror Switches**

Press the rocker switch to the L or R for Left or Right mirror selection. Use the center off position to guard against accidentally moving a mirror position.

Select a mirror and press one of the four arrows for the direction you want the mirror to move.

Power mirror preselected positions can be controlled by the optional Driver Memory Seat Feature. Refer to "Driver Memory Seat" in section 3 of this manual.

## Heated Remote Control Mirrors

These mirrors are heated to melt frost or ice. This feature is activated whenever you turn on the Rear Window Defrost.

## Illuminated Vanity Mirrors

An illuminated vanity mirror is on the sun visor. To use the mirror, rotate the sun visor down and swing the mirror cover upward. The lights turn on automatically. Closing the mirror cover turns off the lights.

Downloaded from www.Manualslib.com manuals search engine

**Sun Visor Extension**
The sun visors may be pulled out to provide extended coverage of the side glass.

## HANDS–FREE COMMUNICATION (UConnect™) — IF EQUIPPED

UConnect™ is a voice-activated, hands-free, in- vehicle communications system. UConnect™ allows you to dial a phone number with your cellular phone using simple voice commands (e.g., "Call" ... "Mike" ..."Work" or "Dial" ... "248-555-1212"). Your cellular phone's audio is transmitted through your vehicle's audio system; the system will automatically mute your radio when using the UConnect™ system.

**NOTE:** The UConnect™ system use requires a cellular phone equipped with the Bluetooth "Hands-Free Profile," version 0.96 or higher. See www.chrysler.com/uconnect for supported phones.

UConnect™ allows you to transfer calls between the system and your cellular phone as you enter or exit your vehicle, and enables you to mute the system's microphone for private conversation.

The UConnect™ phonebook enables you to store up to 32 names and four numbers per name. Each language has a separate 32 name phonebook accessible only in that language. This system is driven through your Bluetooth™ Hands-Free profile cellular phone. UConnect™ features Bluetooth™ technology - the global standard that enables different electronic devices to connect to each other without wires or a docking station, so UConnect works no matter where you stow your cellular phone (be it your purse, pocket, or briefcase), as long as your phone is turned on and has been paired to the vehicle's UConnect™ system. The UConnect™ system allows up to seven cellular phones to be linked to system. Only one linked (or paired) cellular phone can be used



Downloaded from www.Manualslib.com manuals search engine

with the system at a time. The system is available in English, Spanish, or French languages (as equipped).

The rearview mirror contains the microphone for the system and the control buttons that will enable you to access the system.

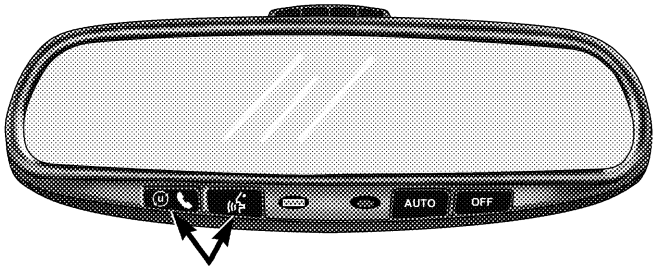


8105b20d

**UConnect™ Switches**

The UConnect™ system can be used with any Hands-Free Profile certified Bluetooth™ cellular phone. See www.chrysler.com/uconnect for supported phones. If your cellular phone supports a different profile (e.g., Headset Profile), you may not be able to use any UConnect™ features. Refer to your cellular service provider or the phone manufacturer for details.

The UConnect™ system is fully integrated with the vehicle's audio system. The volume of the UConnect™ system can either be adjusted from the radio volume control knob, or from the steering wheel radio control (right switch), if so equipped.

The radio display will be used for visual prompts from the UConnect™ system such as "CELL" or caller ID on certain radios.

Downloaded from www.Manualslib.com manuals search engine

## Operations

Voice commands can be used to operate the UConnect™ system and to navigate through the UConnect™ menu structure. Voice commands are required after most UConnect™ system prompts. You will be prompted for a specific command and then guided through the available options.

- Prior to giving a voice command, one must wait for the voice on beep, which follows the "Ready" prompt or another prompt.
- For certain operations, compound commands can be used. For example, instead of saying "Setup" and then "Phone Pairing," the following compound command can be said: "Setup Phone Pairing."
- For each feature explanation in this section, only the combined form of the voice command is given. You can also break the commands into parts and say each part of the command, when you are asked for it. For example, you can either use the combined form voice command "Phonebook New Entry," or you can break the combined form command into two voice commands: "Phonebook" and "New Entry." Please remember, the UConnect™ system works best when you talk in a normal conversational tone, as if speaking to some one sitting eight feet away from you.



### Voice Command Tree

Refer to "Voice Tree" at the end of this section.

### Help Command

If you need assistance at any prompt or if you want to know what your options are at any prompt, say "Help" following the voice on beep. The UConnect™ system will play all the options at any prompt if you ask for help.

To activate the UConnect™ system from idle, simply press the 'Phone' button and follow audible prompts for directions. All UConnect™ system sessions begin with a press of the 'Phone' button on the mirror.

Downloaded from www.Manualslib.com manuals search engine

**Cancel Command**

At any prompt, after the voice on beep, you can say "Cancel" and you will be returned to the main menu. However, in a few instances the system will take you back to the previous menu.

**Pair (Link) UConnect™ System to a Cellular Phone**

To begin using your UConnect™ system, you must pair your compatible Bluetooth™ enabled cellular phone.

**NOTE:** The UConnect™ system use requires a cellular phone equipped with the Bluetooth "Hands-Free Profile," version 0.96 or higher. See www.chrysler.com/uconnect for supported phones.

To complete the pairing process, you will need to reference your cellular phone owner's manual. One of the following vehicle specific websites may also provide detailed instructions for pairing with the brand of phone that you have:

**NOTE:**

- www.chrysler.com/uconnect
- www.dodge.com/uconnect
- www.jeep.com/uconnect

The following are general phone to UConnect™ System pairing instructions:

- Press the 'Phone' button to begin.
- After the "Ready" prompt and the following beep, say "Setup Phone Pairing."
- When prompted, after the voice on beep, say "Pair a Phone."
- You will be asked to say a four-digit pin number which you will later need to enter into your cellular. You can enter any four-digit pin number. You will not need to remember this pin number after the initial pairing process.

Downloaded from www.Manualslib.com manuals search engine

- The UConnect™ system will then prompt you to begin the cellular phone pairing process on your cellular phone. Before attempting to pair phone, please see your cellular phone's user manual (Bluetooth section) for instructions on how to complete this step.
- For identification purposes, you will be prompted to give the UConnect™ system a name for your cellular phone. Each cellular phone that is paired should be given a unique phone name.
- You will then be asked to give your cellular phone a priority level between 1 and 7, 1 being the highest priority. You can pair up to seven cellular phones to your UConnect™ system. However, at any given time, only one cellular phone can be in use, connected to your UConnect™ System. The priority allows the UConnect™ system to know which cellular phone to use if multiple cellular phones are in the vehicle at the same time. For example, if priority 3 and priority 5 phones are present in the vehicle, the UConnect™ system will use the priority 3 cellular phone when you make a call. You can select to use a lower priority cellular phone at any time (refer to "Advanced Phone Connectivity").



**Dial by Saying a Number**

- Press the 'Phone' button to begin.
- After the "Ready" prompt and the following beep, say "Dial."
- System will prompt you to say the number you want call.
- For example, you can say "234-567-8901." The phone number that you enter must be of valid length and combination. The UConnect™ limits the user from dialing invalid combination of numbers. For example,

Downloaded from www.Manualslib.com manuals search engine

234-567-890 is nine digits long, which is not a valid phone number - the closest valid phone number has ten digits.

- The UConnect™ system will confirm the phone number and then dial. The number will appear in the display of certain radios.

### Call by Saying a Name

- Press the "Phone" button to begin.
- After the "Ready" prompt and the following beep, say "Call."
- System will prompt you to say the name of the person you want call.
- After the "Ready" prompt and the following beep, say the name of the person you want to call. For example, you can say "John Doe," where John Doe is a previously stored name entry in the UConnect™ phonebook. Refer to "Add Names to Your UConnect™ Phonebook," to learn how to store a name in the phonebook.
- The UConnect™ system will confirm the name and then dial the corresponding phone number, which may appear in the display of certain radios.

### Add Names to Your UConnect™ Phonebook

**NOTE:** Adding names to phonebook is recommended when vehicle is not in motion.

- Press the "Phone" button to begin.
- After the "Ready" prompt and the following beep, say "Phonebook New Entry."

Downloaded from www.Manualslib.com manuals search engine

- When prompted, say the name of the new entry. Use of long names helps the voice recognition and is recommended. For example, say "Robert Smith" or "Robert" instead of "Bob."
- When prompted, enter the number designation (e.g.: "Home," "Work," "Mobile," or "Pager"). This will allow you to store multiple numbers for each phonebook entry, if desired.
- When prompted, recite the phone number for the phonebook entry that you are adding.

After you are finished adding an entry into the phonebook, you will be given the opportunity to add more phone numbers to the current entry or to return to the main menu.

The UConnect™ system will allow you to enter up to 32 names in the phonebook with each name having up to four associated phone numbers and designations. Each language has a separate 32 name phonebook accessible only in that language.

### Edit Entries in the UConnect™ Phonebook



**NOTE:** Editing phonebook entries is recommended when vehicle is not in motion.

- Press the 'Phone' button to begin.
- After the "Ready" prompt and the following beep, say "Phonebook Edit."
- You will then be asked for the name of the phonebook entry that you wish to edit.
- Next, choose the number designation (home, work, mobile, or pager) that you wish to edit.
- When prompted, recite the new phone number for the phonebook entry that you are editing.

Downloaded from www.Manualslib.com manuals search engine

After you are finished editing an entry in the phonebook, you will be given the opportunities to edit another entry in the phonebook, call the number you just edited, or return to the main menu.

"Phonebook Edit" can be used to add another phone number to a name entry that already exists in the phonebook. For example, the entry John Doe may have a mobile and a home number, but you can add John Doe's work number later using the "Phonebook Edit" feature.

**Delete Entries in the UConnect™ Phonebook**

**NOTE:** Editing phonebook entries is recommended when vehicle is not in motion.

- Press the 'Phone' button to begin.
- After the "Ready" prompt and the following beep, say "Phonebook Delete."
- After you enter the Phonebook Delete menu, you will then be asked for the name of the entry that you wish to delete. You can either say the name of a phonebook entry that you wish to delete or you can say "List Names" to hear a list of the entries in the phonebook from which you choose. To select one of the entries from the list, press the "Voice Recognition" button while the UConnect™ system is playing the desired entry and say "Delete."
- After you enter the name, the UConnect™ system will ask you which designation you wish to delete: home, work, mobile or pager. Say the designation you wish to delete.
- Note that only the phonebook entry in the current language is deleted.

After confirmation, the phonebook entries will be deleted. Note that only the phonebook in the current language is deleted.

Downloaded from www.Manualslib.com manuals search engine

**Delete All Entries in the UConnect™ Phonebook**

- Press the 'Phone' button to begin.
- After the "Ready" prompt and the following beep, say "Phonebook Erase All."
- The UConnect™ system will ask you to verify that you wish to delete all the entries from the phonebook.
- After confirmation, the phonebook entries will be deleted.

**List All Names in the UConnect™ Phonebook**

- Press the 'Phone' button to begin.
- After the "Ready" prompt and the following beep, say "Phonebook List Names."
- The UConnect™ system will play the names of all the phonebook entries.
- To call one of the names in the list, press the "Voice Recognition' button during the playing of the desired name and say "Call." NOTE: the user can also exercise "Edit" or "Delete" operations at this point.
- The UConnect™ system will then prompt you as to number designation you wish to call.
- The selected number will be dialed.



### Phone Call Features

The following features can be accessed through the UConnect™ system if the feature(s) are available on your cellular service plan. For example, if your cellular service plan provides three-way calling, this feature can be accessed through the UConnect™ system. Check with your cellular service provider for the features that you have.

Downloaded from www.Manualslib.com manuals search engine

**Answer or Reject an Incoming Call - No Call Currently in Progress**

When you receive a call on your cellular phone, the UConnect™ system will interrupt the vehicle audio system, if on, and will ask if you would like to answer the call. To reject the call, press and hold the 'Phone' button until you hear a single beep indicating that the incoming call was rejected.

**Answer or Reject an Incoming Call - Call Currently in Progress**

If a call is currently in progress and you have another incoming call, you will hear the same network tones for call waiting that you normally hear when using your cell phone. Press the 'Phone' button to place the current call on hold and answer the incoming call. NOTE: The UConnect™ system compatible phones in market today do not support rejecting an incoming call when another call is in progress. Therefore, the user can only either answer an incoming call or ignore it.

**Making a Second Call while Current Call in Progress**

To make a second call while you are currently in a call, press the 'Voice Recognition' button and say "Dial" or "Call" followed by the phone number or phonebook entry you wish to call. The first call will be on hold while the second call is in progress. To go back to the first call, refer to "Toggling Between Calls." To combine two calls, refer to "Conference Call."

**Place/Retrieve a Call from Hold**

To put a call on hold, press the 'Phone' button until you hear a single beep which will indicate that the call has been placed on hold. To bring the call back from hold, press and hold the 'Phone' button until you hear a single beep.

Downloaded from www.Manualslib.com manuals search engine

### Toggling Between Calls

If two calls are in progress (one active and one on hold), press the 'Phone' button until you hear a single beep indicating that the active and hold status of the two calls have switched. Only one call can be placed on hold at one time.

### Conference Call

When two calls are in progress (one active and one on hold), press and hold the 'Phone' button until you hear a double beep indicating that the two calls have been joined into one conference call.

### Three-Way Calling

To initiate three-way calling, press the 'Voice Recognition' button while a call is in progress and make a second phone call as described under "Making a Second Call while Current Call in Progress." After the second call has established, press and hold the 'Phone' button until you hear a double beep indicating that the two calls have been joined into one conference call.

### Call Termination

To end a call in progress, momentarily press the 'Phone' button. Only the active call(s) will be terminated and if there is a call on hold, it will become the new active call.



### Redial

- Press the 'Phone' button to begin.
- After the "Ready" prompt and the following beep, say "Redial."
- The UConnect™ system will call the last number that was dialed on your cellular phone. Note: this may not be the last number dialed from the UConnect™ system.

Downloaded from www.Manualslib.com manuals search engine

### Call Continuation

Call continuation is progression of a phone call on UConnect™ system after the vehicle ignition key has been switched to off. Call continuation functionality available on the vehicle can be any one of three types:

- After ignition key is switched off, a call can continue on the UConnect™ system either until the call ends or until the vehicle battery condition dictates cessation of the call on the UConnect™ system and transfer of the call to the mobile phone.
- After ignition key is switched to off, a call can continue on the UConnect™ system for certain duration, after which the call is automatically transferred from the UConnect™ system to the mobile phone.
- An active call is automatically transferred to the mobile phone after ignition key is switched to off.

## UConnect™ System Features

### Language Selection

To change the language that the UConnect™ system is using,

- Press the 'Phone' button to begin.
- After the "Ready" prompt and the following beep, say the name of the language you wish to switch to (English, Espanol, or Francais, if so equipped).
- Continue to follow the system prompts to complete language selection.

After selecting one of the languages, all prompts and voice commands will be in that language.

**NOTE:** After every UConnect™ language change operation, only the language specific 32 name phonebook is usable. The paired phone name is not language specific and usable across all languages.

Downloaded from www.Manualslib.com manuals search engine

**Emergency Assistance**
If you are in an emergency and the mobile phone is reachable:

- Pick up the phone and manually dial the emergency number for your area.

If the phone is not reachable and the UConnect™ system is operational, you may reach the emergency number as follows:

- Press the 'Phone' button to begin.
- After the "Ready" prompt and the following beep, say "Emergency" and the UConnect™ system will instruct the paired cellular phone to call the emergency number. This feature is only supported in the USA.

**NOTE:** The emergency number dialed is based on the Country where the vehicle is purchased (911 for USA and Canada and 060 for Mexico). The number dialed may not be applicable with the available cellular service and area.

The UConnect™ system does slightly lower your chances of successfully making a phone call as to that for the cell phone directly.

Your phone must be turned on and paired to the UConnect™ system to allow use of this vehicle feature in emergency situations when the cell phone has network coverage and stays paired to the UConnect™ system.



**Towing Assistance**
If you need towing assistance,

- Press the 'Phone' button to begin.
- After the "Ready" prompt and the following beep, say "Towing Assistance."

**NOTE:** The Towing Assistance number dialed is based on the Country where the vehicle is purchased (1-800-528-2069 for USA, 1-877-213-4525 for Canada, 55-14-3454 for Mexico city and 1-800-712-3040 for outside Mexico city in Mexico).

Downloaded from www.Manualslib.com manuals search engine

Please refer to the 24-Hour "Towing Assistance" coverage details in the Warranty information booklet and on the 24–Hour Towing Assistance Card.

**Paging**

To learn how to page, refer to "Working with Automated Systems." Paging works properly except for pagers of certain companies which time-out a little too soon to work properly with the UConnect™ system.

**Voice Mail Calling**

To learn how to access your voice mail, refer to "Working with Automated Systems."

**Working with Automated Systems**

This method is designed to be used in instances where one generally has to press numbers on the cellular phone keypad while navigating through an automated telephone system.

You can use your UConnect™ system to access a voicemail system or an automated service, such as, paging service or automated customer service. Some services require immediate response selection, in some instances, that may be too quick for use of UConnect™ system.

When calling a number with your UConnect™ system that normally requires you to enter in a touch-tone sequence on your cellular phone keypad, you can push the 'Voice Recognition' button and say the sequence you wish to enter followed by the word "Send." For example, if required to enter your pin number followed with a pound 3 7 4 6 #, you can press the 'Voice Recognition' button and say "3 7 4 6 # Send." Saying a number, or sequence of numbers, followed by "Send" is also to be used to navigate through an automated customer service center menu structure and to leave a number on a pager.

Downloaded from www.Manualslib.com manuals search engine

**Barge In - Overriding Prompts**

The 'Voice Recognition' button can be used when you wish to skip part of a prompt and issue your voice recognition command immediately. For example, if a prompt is playing "Would you like to pair a phone, clear a...," you could press the 'Voice Recognition' button and say "Pair a Phone" to select that option without having to listen to the rest of the voice prompt.

**Turning Confirmation Prompts On/Off**

Turning confirmation prompts off will stop the system from confirming your choices (e.g. the UConnect™ system will not repeat a phone number before you dial it).

- Press the 'Phone' button to begin.
- After the "Ready" prompt and the following beep, say "Setup Confirmations." The UConnect™ system will play the current confirmation prompt status and you will be given the choice to change it.

**Phone and Network Status Indicators**

If available on the radio and/or on a premium display such as the instrument panel cluster, and supported by your cell phone, the UConnect™ system will provide notification to inform you of your phone and network status when you are attempting to make a phone call using UConnect™. The status is given for roaming network signal strength, phone battery strength, etc.

**Dialing Using the Cellular Phone Keypad**

You can dial a phone number with your cellular phone keypad and still use the UConnect™ system (while dialing via the cell phone keypad, the user must exercise caution and take precautionary safety measures). By dialing a number with your paired Bluetooth™ cellular phone, the audio will be played through your vehicle's audio system. The UConnect™ system will work the same as if you dial the number using voice recognition.



Downloaded from www.Manualslib.com manuals search engine

**NOTE:** Certain brands of mobile phones do not send the dial ring to the UConnect™ system to play it on the vehicle audio system, so you will not hear it. Under this situation, after successfully dialing a number, the user may feel that the call did not go through even though the call is in progress. Once your call is answered, you will hear the audio.

**Mute/Un-mute (Mute off)**
When you mute the UConnect™ system, you will still be able to hear the conversation coming from the other party, but the other party will not be able to hear you. In order to mute the UConnect™ system:

- Press the 'Voice Recognition' button.
- After the "Ready" prompt and the following beep, say "Mute."

In order to un-mute the UConnect™ system:

- Press the 'Voice Recognition' button.
- After the "Ready" prompt and the following beep, say "Mute-off."

**Information Service**
When using AT&T Wireless Service, dialing to phone number "#121," you can access voice activated automated system to receive news, weather, stocks, traffic, etc. related information.

## Advanced Phone Connectivity

**Transfer Call to and from Cellular Phone**
The UConnect™ system allows on going calls to be transferred to your cellular phone to the UConnect™ system without terminating the call. To transfer an ongoing call from your UConnect™ paired cellular phone to the UConnect™ system or vice-versa, press the 'Voice Recognition' button and say "Transfer Call."

Downloaded from www.Manualslib.com manuals search engine

**Connect or Disconnect Link Between the UConnect™ System and Cellular Phone**

Your cellular phone can be paired with many different electronic devices, but can only be actively "connected" with one electronic device at a time.

If you would like to connect or disconnect the Bluetooth™ connection between a UConnect™ paired cellular phone and the UConnect™ system, follow the instruction described in your cellular phone user's manual.

**List Paired Cellular Phone Names**

- Press the 'Phone' button to begin.
- After the "Ready" prompt and the following beep, say "Setup Phone pairing".
- When prompted, say "List Phones."
- The UConnect™ system will play the phone names of all paired cellular phones in order from the highest to the lowest priority. To "select" or "delete" a paired phone being announced, press the 'Voice recognition' button and say "Select" or "Delete." Also, see the next two sections for an alternate way to "select" or "delete" a paired phone.



**Select another Cellular Phone**

This feature allows you to select and start using another phone with the UConnect™ system. The phone must have been previously paired to the UConnect™ system that you want to use it with.

- Press the 'Phone' button to begin.
- After the "Ready" prompt and the following beep, say "Setup Select Phone."
- The phone names along with priority numbers will be announced.

Downloaded from www.Manualslib.com manuals search engine

- When prompted say the priority number of the cellular phone you wish to select. You can also press the 'Voice Recognition' button anytime while the list is being played, then say the priority number of the phone that you wish to select.
- The selected phone will be used for the next phone call. If the selected phone is not available, the UConnect™ system will return to using the highest priority phone present in or near (approximately with in 30 feet) the vehicle.

**Delete UConnect™ Paired Cellular Phones**

- Press the 'Phone' button to begin.
- After the "Ready" prompt and the following beep, say "Setup Phone Pairing."
- At the next prompt, say "Delete."
- The phone names along with priority numbers will be announced.
- When prompted say the priority number of the cellular phone you wish to delete. You can also press the 'Voice Recognition' button anytime while the list is being played and say the priority number of the phone you wish to delete.

## Things You Should Know About Your UConnect™ System

**Voice Recognition (VR)**

- Always wait for the beep before speaking.
- Speak normally, without pausing, just as you would speak to a person sitting approximately eight (8) feet away from you.
- Make sure that no one other than you is speaking during a voice recognition period.

Downloaded from www.Manualslib.com manuals search engine

- Performance is maximized under:
  - low-to-medium blower setting,
  - low-to-medium vehicle speed,
  - low road noise,
  - smooth road surface,
  - fully closed windows,
  - dry weather condition.
- Even though the system is designed for users speaking in North American English, French, and Spanish accents, the system may not always work for some.
- When navigating through an automated system, such as, voice mail, or when sending a page, at the end of speaking the digit string, make sure to say "send."
- Storing names in phonebook when vehicle is not in motion is recommended.
- It is not recommended to store similar sounding names in the UConnect™ phonebook.
- UConnect™ phonebook name tag recognition rate is optimized for the voice of the person who stored the name in the phonebook.
- You can say "O" (letter "O") for "0" (zero). "800" must be spoken "eight-zero-zero."
- Even though international dialing for most number combinations is supported, some shortcut dialing number combinations may not be supported.

**Far End Audio Performance**

- Audio quality is maximized under:
  - low-to-medium blower setting,
  - low-to-medium vehicle speed,
  - low road noise,



Downloaded from www.Manualslib.com manuals search engine

- smooth road surface,
- fully closed windows, and
- dry weather condition.
- Operation from driver seat.

- Performance, such as, audio clarity, echo. and loudness to a large degree, rely on the phone and network, and not the UConnect™ system.
- Echo at far end can sometime be reduced by lowering the in-vehicle audio volume.

**Bluetooth Communication Link**

Cellular phones have been found to occasionally lose connection to the UConnect™ system. When this happens, the connection can generally be re-established by switching the phone off/on. Your cell phone is recommended to remain in Bluetooth "on" mode.

**Power-Up**

After switching the ignition key from OFF to either ON or ACC position, or after a reset, you must wait at least five (5) seconds prior to using the system.

Downloaded from www.Manualslib.com manuals search engine

## Voice Command Tree

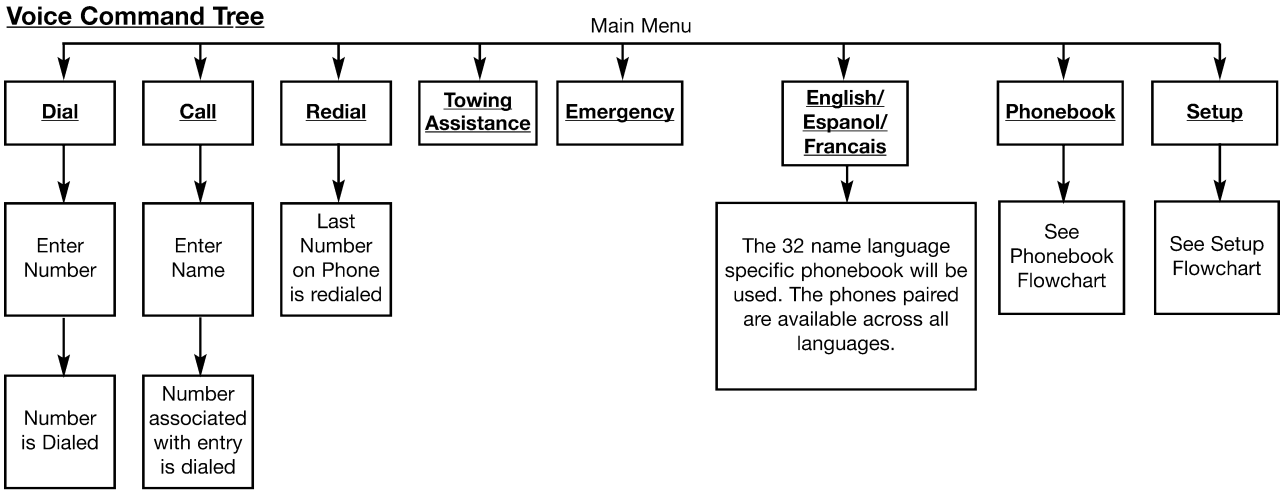


**Note:** **Available Voice commands are shown in bold face and are underlined.**

815a53fc

Downloaded from www.Manualslib.com manuals search engine

## Voice Tree – Phonebook

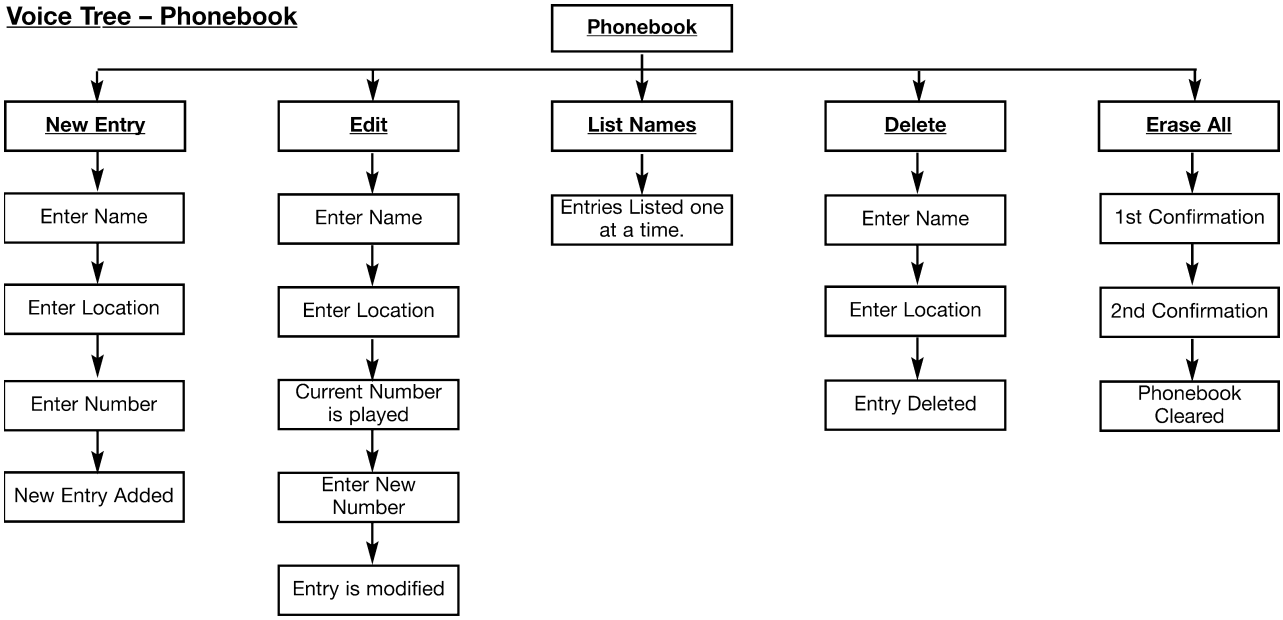


**Note:** **Available Voice commands are shown in bold face and are underlined.**

8131b294

Downloaded from www.Manualslib.com manuals search engine

## Voice Tree – Setup

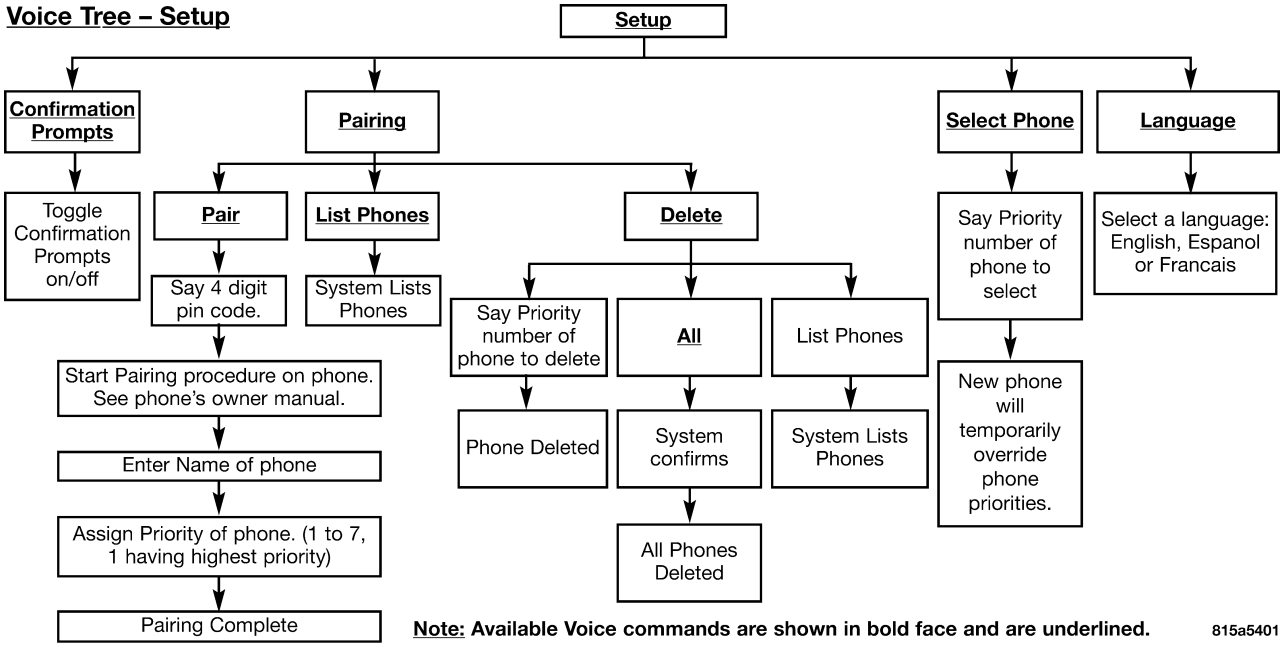


**Note:** **Available Voice commands are shown in bold face and are underlined.**

815a5401

Downloaded from www.Manualslib.com manuals search engine

| North American English | |
|---|---|
| Primary | Alternate(s) |
| Zero | Oh |
| Add location | Add new |
| All | All of them |
| Confirmation prompts | Confirmations prompts |
| Delete a name | Delete |
| Language | Select language |
| List names | List all |
| List paired phones | List phones |
| Pager | Beeper |
| Phone pairing | Pairing |
| Phonebook | Phone book |
| Return to main menu | Return. Main menu |
| Select phone | select |
| Set up | Phone settings phone set up |

## SEATS

### 10–Way Driver's Power Seat — If Equipped

The driver's power seat switches are located on the driver's front door trim panel. The bottom switch controls up/down, forward/rearward, and tilt adjustment. The top switch controls the seatback recline adjustment and the middle switch controls the lumbar adjustment.

Downloaded from www.Manualslib.com manuals search engine

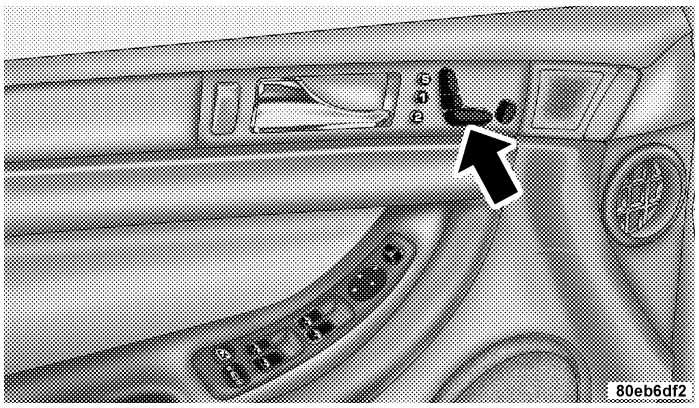


10–Way Driver's Power Seat

**WARNING!**

**Adjust the seat only while the vehicle is parked. Adjusting a seat while the vehicle is moving is dangerous. The sudden movement of the seat could cause you to lose control. The seat belt might not be properly adjusted and you could be injured.**



### 8–Way Driver's Power Seat — If Equipped

The driver's power seat switches are located on the driver's front door trim panel. The bottom switch controls up/down, forward/rearward, and tilt adjustment. The top switch controls the seatback recline adjustment.

### 4–Way Passenger's Power Seat

The front passenger power seat switches are located on the passenger front door trim panel. The bottom switch controls forward and rearward adjustment. The top switch controls the seatback recline adjustment.

Downloaded from www.Manualslib.com manuals search engine

**CAUTION!**

**Do not place any article under a power seat or impede its ability to move as it may cause damage to the seat controls. Seat travel may become limited if movement is stopped by an obstruction in the seat's path.**

## Adjustable Head Restraints

Head restraints can reduce the risk of whiplash injury in the event of impact from the rear. Pull up or push down on the head restraint so that the upper edge is as high as practical. To raise the head restraint, pull up on the head restraint. To lower the head restraint, depress the release tab located at the base of the head restraint and push down on the head restraint.

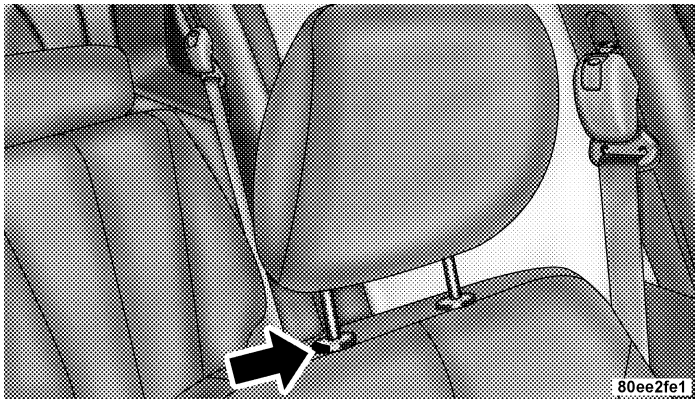


**Adjustable Head Restraints**

## Heated Seats — If Equipped

This feature heats the driver, front passenger and second row seats. The controls for the front heated seats are located on the door trim panel next to the power seat switches.

Downloaded from www.Manualslib.com manuals search engine

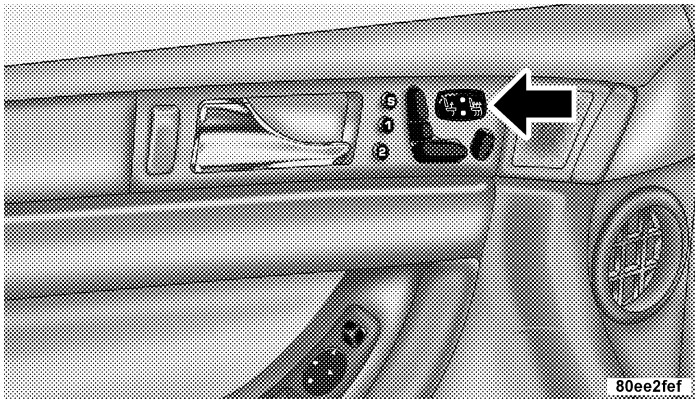


**Front Heated Seat Switch**

Press the switch once to select a heat setting (high or low) and press the switch a second time in the same direction to turn the heated seat off. The indicator light will show when LOW or HIGH heat is ON.

The controls for the second row heated seats are located on the center console between the seats. Press the switch once to select a heat setting (high or low) and press the switch a second time in the same direction to turn the heated seat off. The indicator light will show when LOW or HIGH heat is ON.

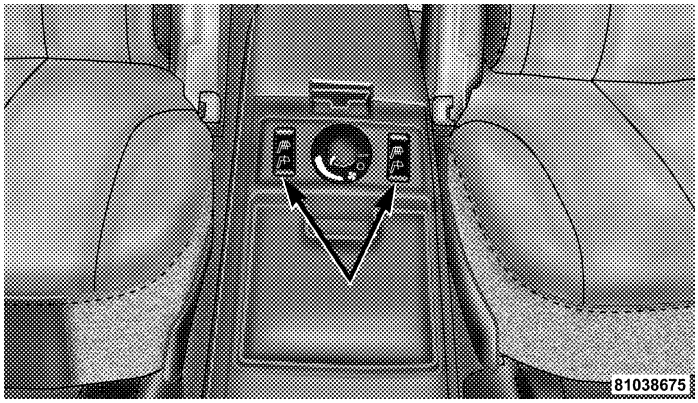


**Rear Heated Seat Switches**



Downloaded from www.Manualslib.com manuals search engine

**NOTE:**

- If the lights in the second row heated seat switch begin to flash when the switch is pressed, it indicates that the heated seat is not functioning properly and that service is required. See your authorized dealer for service.
- Once a heat setting is selected, heat will be felt within 2 to 3 minutes.
- The heated seats will turn off when the ignition switch is turned to the OFF position.

## Second Row Manual Seat Recliner — If Equipped

The recliner mechanism control is on the outboard side of the seat. To recline, lean forward slightly, lift the lever, then push back to the desired position and release the lever. Lean forward and lift the lever to return the seatback to its normal position. Using body pressure, lean forward and rearward on the seat to be sure the seatback has latched.

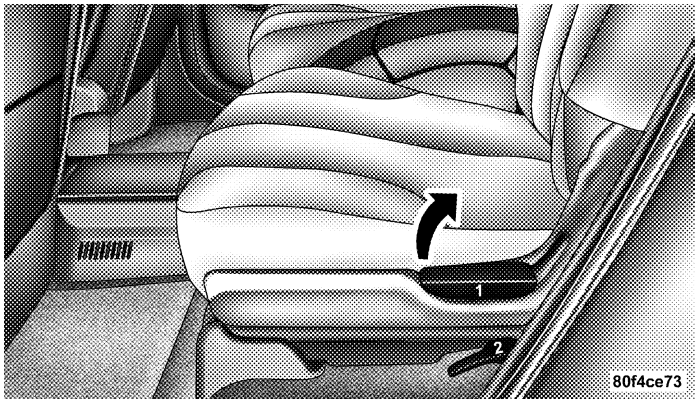


**Seatback Release Lever**

**NOTE:** When using the recliner mechanism with the 3rd row seat folded down, the second row seat may need to be adjusted forward to achieve full recline.

Downloaded from www.Manualslib.com manuals search engine

**WARNING!**

**Do not ride with the seatback reclined so that the shoulder belt is no longer resting against your chest. In a collision you could slide under the seat belt and be seriously or fatally injured. Use the recliner only when the vehicle is parked.**

### Second Row Manual Seat Adjuster — If Equipped

The adjusting bar is located under the front of the seat. Pull the bar up and move the seat to the desired position. Release the bar to lock the seat into position.

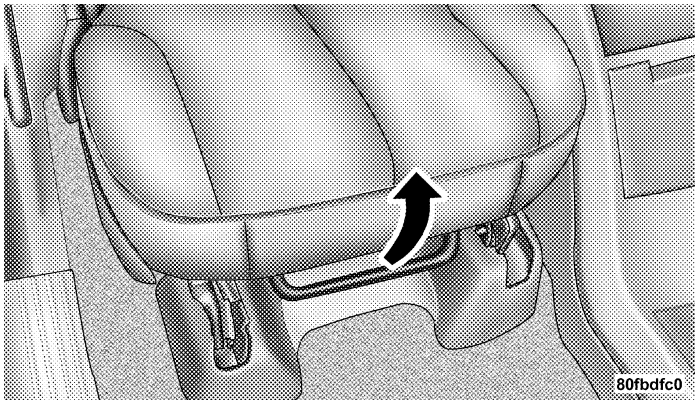


**Second Row Manual Seat Adjuster**

Using body pressure, move forward and rearward on the seat to be sure the seat adjusters have latched.



Downloaded from www.Manualslib.com manuals search engine

**WARNING!**

**Adjust the seat only while the vehicle is parked. Adjusting a seat while the vehicle is moving is dangerous. The seat belt might not be properly adjusted and you could be injured.**

## Second Row Bench Seating — If Equipped

The second row seats may be used with either or both seatbacks folded forward for additional storage space.

To fold the seat, remove any objects from in front of or on the seat. Then pull handle located on the seatback and push the seatback forward.

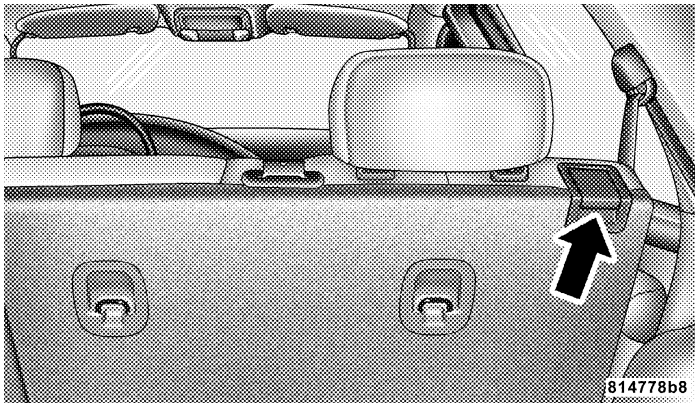


**Seatback Release Handle**

To raise the second row seat, lift up on the seatback and push rearward until the seatback is latched. Move the seatback forward to be sure the seatback is fully latched.

Downloaded from www.Manualslib.com manuals search engine

**CAUTION!**

**Be sure there is nothing in front of the second row seat cushion before folding it down. Damage to the seat may occur.**

### Second Row Fold & Tumble Seats — If Equipped

The second row seats can be folded and tumbled forward for easy access to the third seat or rear cargo area.

To fold and tumble the seat, follow these steps:

1. Remove any obstructions from the floor in front of the seat.

2. Lower the head restraint to its full downward position and rotate the arm rest to the upright position.

3. Move the seat to the full rear position.

4. Pull up on the seatback release lever located on the outboard side of the seat labeled "1" and fold the seatback down.

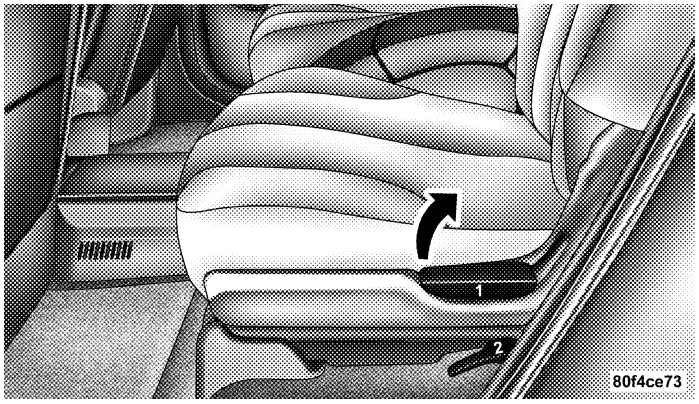


**Seatback Release Lever**

To assure the seatback is latched in the folded position, additional downward pressure on the seatback may be required when folding.



Downloaded from www.Manualslib.com manuals search engine

5. Pull up on the release handle labeled "2" and lift firmly to tumble the seat fully forward. If the seat contacts the rear of the front seat, move the front seat forward.

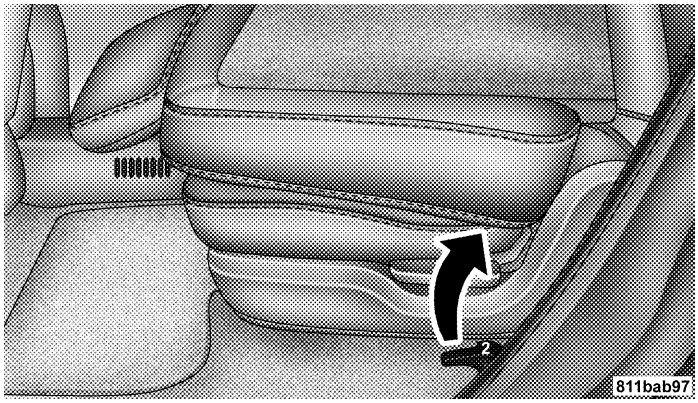


**Seat Release Handle**

To relatch the seat, tilt the seat rearward and push down firmly to engage the rear attachments. Then lift the seatback release lever labeled "1" and pull the seatback up to return it to its full upright position.

| WARNING! |
| --- |
| **In a collision, you or others in your vehicle could be injured if seats are not properly latched to their floor attachments. Always be sure the seats are fully latched.** |

### Third Row Easy Exit — If Equipped

For passengers sitting in the third row seats, the second row seats can be folded and tumbled forward for easy exit.

Downloaded from www.Manualslib.com manuals search engine

To fold and tumble the seat forward, follow these steps:

1. Pull up on the seatback release handle “1” located on the back of the seat to fold the seatback down.

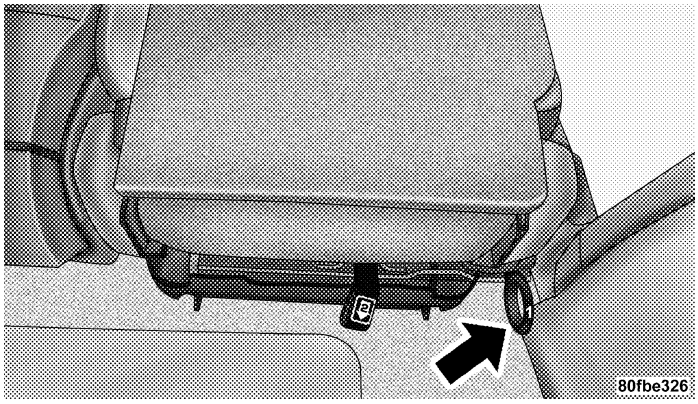


**Release Handle 1 Location**

2. Pull the release strap “2” located at the bottom of the seat to lift and tumble the seat forward.

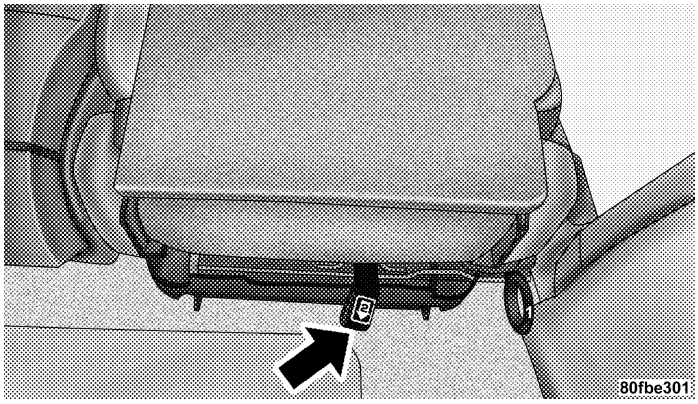


**Release Strap 2 Location**

To relatch the seat, tilt the seat rearward and push down firmly to engage the rear attachments. Then lift the seatback release lever labeled “1” and pull the seatback up to return it to its full upright position.



Downloaded from www.Manualslib.com manuals search engine

## Third Row Seating — If Equipped

The third row seats may be used with either or both seatbacks folded forward for additional storage space.

To fold the seat, remove any objects from in front of or on the seat. Then pull handle located on the seatback and push it forward.

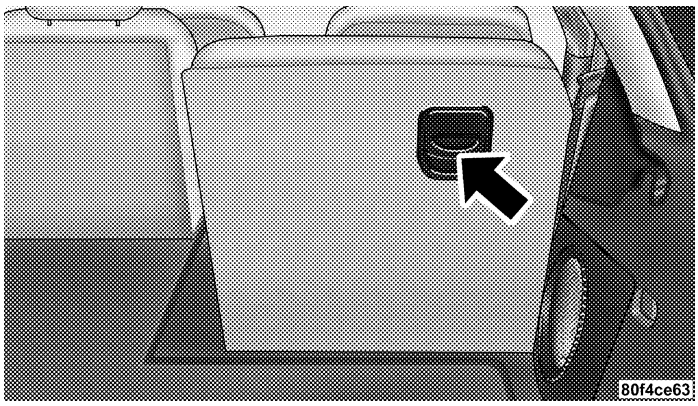


**Seat Release Handle**

**WARNING!**

**Do not sit in the 3rd row seat with the second row seatbacks folded or with the second row seats folded and tumbled. In a collision, you could slide under the seat belt and be seriously or even fatally injured.**

To raise the 3rd row seat, lift up on the seatback and push rearward until the seatback is latched. Move the seatback forward to be sure the seatback is fully latched.

**CAUTION!**

**Be sure there is nothing in front of the 3rd row seat cushion before folding it down. Damage to the seat may occur.**

Downloaded from www.Manualslib.com manuals search engine

**WARNING!**

- **Not all head restraints in this vehicle are the same. Head restraints from one seating position should not be removed and installed in any other seating position. In a collision, serious injury or death may result if the proper head restraint is not installed on each seat.**
- **The cargo area in the rear of the vehicle should not be used as a play area by children. They could be seriously injured in a collision. Children should be seated and using the proper restraint system.**
- **It is extremely dangerous to ride in a cargo area, inside or outside of a vehicle. In a collision, people riding in these areas are more likely to be seriously injured or killed.**
- **Do not allow people to ride in any area of your vehicle that is not equipped with seats and seat belts.**
- **Be sure everyone in your vehicle is in a seat and using a seat belt properly.**

## Load Floor — If Equipped

For additional cargo space, the second and third row seatbacks may be folded forward and the load floor extended to cover the center console.

To extend the load floor, follow these steps:

1. Move the second row seats to the full rear position.
2. Fold the second and third row seatbacks down.



Downloaded from www.Manualslib.com manuals search engine

3. Pull on the load floor strap and lift the panel from the driver's second row seatback over the center console and onto the passenger second row seat.

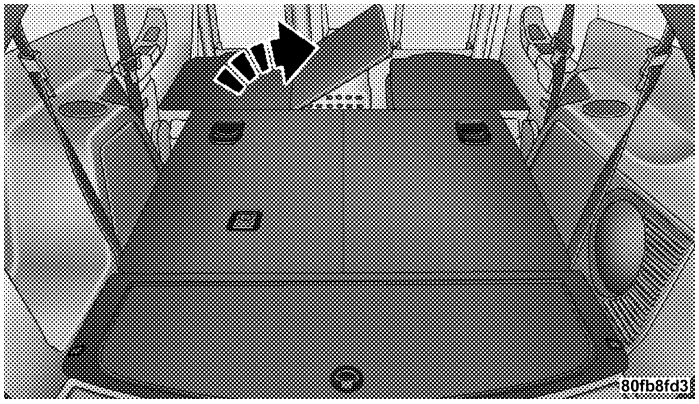


**Load Floor Panel**

**NOTE:** Be sure to reattach the strap to secure the load floor panel when not in use.

## Plastic Grocery Bag Retainer

Retainer hooks which will hold plastic grocery bag handles are built into the seatbacks of all front seats. The floor supports the partial weight of the bagged goods.

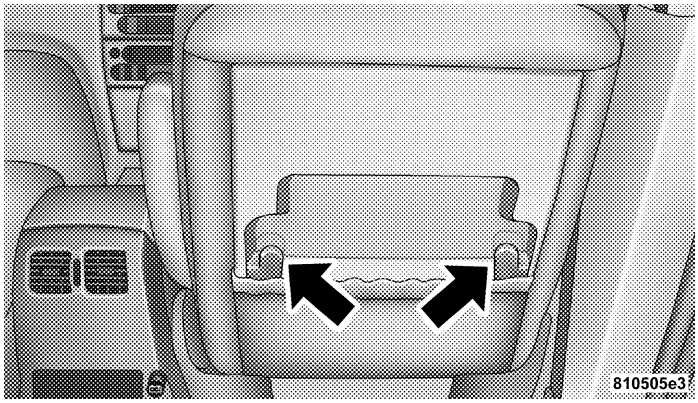


**Grocery Bag Holders**

Downloaded from www.Manualslib.com manuals search engine

## DRIVER MEMORY SEAT — IF EQUIPPED

If your vehicle is equipped with memory systems, your remote keyless entry transmitter or memory seat buttons on the driver's door panel can be used to recall the driver's seat, outside mirrors, adjustable pedals (if equipped) and radio station presets to saved positions.

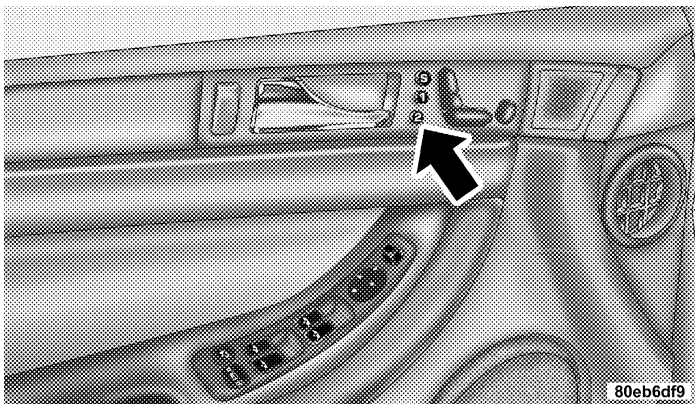


**Driver Memory Switches**

The memory seat buttons located on the driver's door will always recall stored settings. The remote keyless entry transmitter can be programmed to recall positions when the UNLOCK button is pressed. Refer to the following procedure on how to link a remote keyless entry transmitter to a position.

**NOTE:** The vehicle must be in Park to recall memory positions. If a recall is attempted when the vehicle is not in Park, a message will be displayed in the Electronic Vehicle Information Center (EVIC).

To recall memory positions press memory button number 1 if you are recalling the memory position for driver one or press memory button number 2 if you are recalling the memory position for driver two. A recall can be cancelled by pressing any of the memory buttons during a recall. When a recall is cancelled, the seat stops moving and a delay of approximately one second will occur before any other recalls can be selected.



Downloaded from www.Manualslib.com manuals search engine

Your vehicle has been delivered with two remote keyless entry transmitters. One or both transmitters can be linked to either memory position. Up to eight remote keyless entry transmitters can be used with your vehicle. The memory seat system can also accommodate up to eight transmitters linked to either of the two stored seat positions or any combination of the two positions.

***To Program Memory Seat Buttons & RKE Transmitters, Follow These Steps:***

1. Turn the ignition switch to the ON position.

2. Select Remote Linked to Memory from the EVIC and enter "Yes".

3. Use the seat, mirror and adjustable pedal switches to adjust the seat, recliner, side view mirrors and adjustable pedals to the desired positions.

4. Set the radio station presets.

5. Turn the ignition switch to the OFF position and remove the key.

6. Press and release the SET (S) button located on the driver's door. A light in the button will flash telling you that you are in the set memory mode. You have five seconds to complete the next step.

7. Within 5 seconds, press and release button 1 or 2 on the driver's door. A chime will sound signaling you that the driver memory has been set. A message will also be displayed in the Electronic Vehicle Information Center (EVIC), indicating a position has been set.

8. Within 5 seconds, press and release the LOCK button on one of the Remote Keyless Entry Transmitters. A chime will sound signaling you that the transmitter has been successfully linked. A message will also be displayed in the Electronic Vehicle Information Center (EVIC), indicating the transmitter has been linked.

Downloaded from www.Manualslib.com manuals search engine

Repeat the above steps for the second position using the other driver's door numbered button and Remote Keyless Entry Transmitter.

Each time the SET (S) button and a numbered button are pressed, you erase the old memory and store a new one.

***To Disable A Transmitter Link, Follow These Steps:***

1. Select "Remote Linked To Memory" from the Electronic Vehicle Information Center, Customer Programmable features.

2. Turn the ignition switch to the OFF position and remove the key.

3. Press and release the SET (S) button located on the driver's door. A light in the button will flash telling you that you are in the set memory mode. You have five seconds to complete the next step.

4. Within 5 seconds, press and release button 1 or 2 on the driver's door. A chime will sound signaling you that the driver memory has been set. A message will also be displayed in the Electronic Vehicle Information Center (EVIC), indicating a position has been set.

5. Within 5 seconds, press and release the UNLOCK button on the remote keyless entry transmitters. A chime will sound signaling you that the transmitter link has been successfully disabled. A message will also be displayed in the Electronic Vehicle Information Center (EVIC), indicating the transmitter has been disabled.

To disable another transmitter from memory positions 1 or 2, repeat steps 1– 4 for each transmitter.

**NOTE:** This function can be selected using the "Customer Programmable Features" in the Electronic Vehicle Information Center (EVIC) section, Otherwise see your authorized dealer.



Downloaded from www.Manualslib.com manuals search engine

### Easy Entry/Exit Seat (Available with Memory Seat Only)

This feature provides automatic driver's seat positioning which will enhance driver mobility out of and into the vehicle.

There are two possible Easy Exit and Easy Entry adjustments available:

- The seat cushion will move rearward approximately 2.5 inches (60 mm) if the starting position of the seat is greater than or equal to 4.72 inches (120 mm) forward of the rear seat stop when the key is removed from the ignition switch. The seat will then move forward approximately 2.5 inches (60 mm) when the key is placed into the ignition and turned out of the LOCK position.
- The seat shall move to the position located 1 1/8 inches (30 mm) forward of the rear stop if the starting position is between 2.5 inches to 4.72 inches (60 mm to 120 mm) forward of the rear stop when the key is removed from the ignition switch. The seat will move forward to the memory/driving position when the key is placed into the ignition and turned out of the LOCK position.

The Easy Entry and Easy Exit feature will be automatically disabled if the seat is already positioned closer than 2.5 inches (60 mm) forward of the rear stop. At this position there is no benefit to the driver by moving the seat for Easy Exit or Easy Entry.

Each stored memory setting will have an associated Easy Entry and Easy Exit position.

**NOTE:** The Easy Entry Easy Exit feature is not enabled when the vehicle is delivered from the factory. The Easy Entry Easy Exit feature is enabled (or later disabled) through the programmable features in the Electronic Vehicle Information Center (EVIC).

Downloaded from www.Manualslib.com manuals search engine

### Tilt Mirrors in Reverse — If Equipped

This additional feature provides automatic outside mirror positioning which will aid the driver's view of the ground rearward of the front doors. The outside mirrors will move slightly downward from the present position when the vehicle is shifted into the Reverse position. The outside mirrors will then return to the original position when the vehicle is shifted out of Reverse position. Each stored memory setting will have an associated Tilt Mirrors in Reverse position.

**NOTE:** The Tilt Mirrors in Reverse feature is not enabled when delivered from the factory. The Tilt Mirrors in Reverse feature may be enabled (or later disabled) by referring to the Customer Programmable Features of the "Electronic Vehicle Information Center (EVIC)" section.

## TO OPEN AND CLOSE THE HOOD

To open the hood, two latches must be released. First pull the hood release lever located under the left side of the instrument panel.

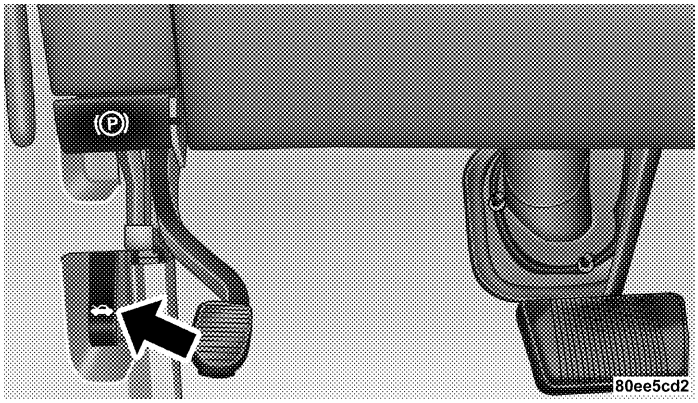


**Hood Release Lever**



Downloaded from www.Manualslib.com manuals search engine

Next, push to the left the safety catch located under the front edge of the hood, near the center.

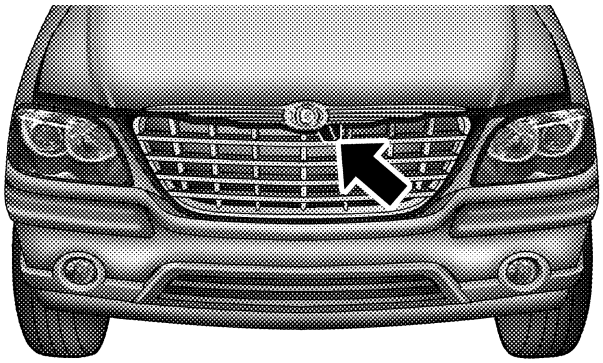

80ee5cdc

**Hood Safety Catch**

Use the hood prop rod to secure the hood in the open position.

To prevent possible damage, do not slam the hood to close it. Lower the hood until it is open approximately 15 cm (6 inches) and then drop it. This should secure both latches. Never drive your vehicle unless the hood is fully closed, with both latches engaged.

**WARNING!**

**If the hood is not fully latched, it could fly up when the vehicle is moving and block your forward vision. You could have a collision. Be sure all hood latches are fully latched before driving.**

Downloaded from www.Manualslib.com manuals search engine

## LIGHTS

### Overhead Console Map/Reading Lights

These lights are mounted between the sun visors on the overhead console. Each light is turned ON by pressing the lens. Press the lens a second time to turn the light OFF. The lights also turn on when a door is opened or the dimmer control is turned fully upward, past the second detent.

**Map/Reading Lights**

**NOTE:** The lights will remain on until the switch is pressed a second time, so be sure they have been turned off before leaving the vehicle.



Downloaded from www.Manualslib.com manuals search engine

## Interior Lights

The interior lights come on when a door is opened.

The interior lights will automatically turn off in about 15 minutes if a door is left open or the dimmer control is left in the Dome light position. Turn the ignition switch ON to restore the interior light operation.

## Multi-Function Lever

The Multi-Function Lever controls the operation of the headlights, parking lights, turn signals, headlight beam selection, instrument panel light dimming, interior lights, the passing lights, and fog lights. The lever is located on the left side of the steering column.

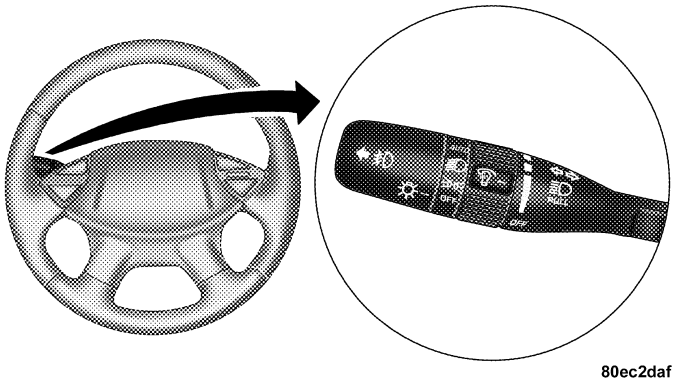


**Multi-Function Control Lever**

## Headlights, Parking Lights, Instrument Panel Lights

Turn the end of the Multi-Function Lever to the first detent for parking light and instrument panel light operation. Turn to the second detent for headlight, park light and instrument panel light operation.

Downloaded from www.Manualslib.com manuals search engine

To change the brightness of the instrument panel lights, rotate the center portion of the Multi-Function Lever up or down.

### Dimmer Control

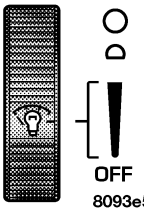


8093e5e9

With the parking lights or headlights on, rotating the dimmer control for the interior lights on the Multi-Function Lever upward will increase the brightness of the instrument panel lights.

### Dome Light Position

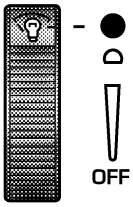


8093e5f6

Rotate the dimmer control completely upward to the second detent to turn on the interior lights. The interior lights will remain on when the dimmer control is in this position.

### Interior light Defeat (OFF)

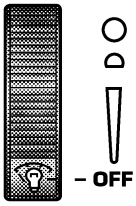


8093e60e

Rotate the dimmer control to the extreme bottom "OFF" position. The interior lights will remain off when the doors are open.

3

Downloaded from www.Manualslib.com manuals search engine

**Parade Mode (Daytime Brightness Feature)**

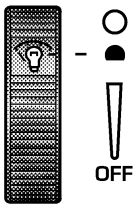


8093e650

Rotate the dimmer control upward to the first detent. This feature brightens the odometer and radio display when the parking lights or headlights are on during daylight conditions.

## Automatic Headlights

This system automatically turns your headlights ON or OFF based on ambient light levels. To turn the system ON, turn the end of the Multi-Function Lever to the third detent position. When the system is ON, the Headlight Time Delay feature is also ON. This means your headlights will stay ON for up to 90 seconds after you turn the ignition switch OFF. To turn the Automatic System OFF, turn the end of the Multi-Function Lever to the OFF position.

**NOTE:** The engine must be running before the headlights will come ON in the Automatic mode.

## Daytime Running Lights (Canada Only)

The high beam headlights will come on as Daytime Running Lights whenever the ignition switch is on, the headlights are off, and the parking brake is off. The headlight switch must be used for normal night time driving.

## Lights-on Reminder

If the headlights or parking lights are on after the ignition is turned OFF, a chime will sound to alert the driver when the driver's door is opened.

## Headlight Time Delay

This feature provides the safety of headlight illumination for up to 90 seconds, when leaving your vehicle in an unlighted area.

Downloaded from www.Manualslib.com manuals search engine

To activate the delay feature, turn off the ignition switch while the headlights are still on. Then turn off the headlights within 45 seconds. The 90 second delay interval begins when headlight switch is turned off. If the headlights or park lights are turned back on or the ignition switch is turned on, the delay will be cancelled.

If the headlights are turned off before the ignition, they will turn off in the normal manner.

**NOTE:** The lights must be turned off within 45 seconds of turning the ignition off to activate this feature

### Fog Lights — If Equipped

The front fog light switch is on the Multi-Function Lever. To activate the front fog lights, turn on the parking lights or the low beam headlights and pull out the end of the Multi-Function Lever.

**NOTE:** The fog lights will only operate with the headlights on low beam. Selecting high beam headlights will turn off the fog lights.

### Turn Signals

Move the Multi-Function Lever up or down and the arrows on each side of the instrument cluster flash to show proper operation of the front and rear turn signal lights. You can signal a lane change by moving the lever partially up or down without moving beyond the detent.

If either light has a very fast flash rate, check for a defective outside light bulb. If an indicator fails to light when the lever is moved, it would suggest that the fuse or indicator bulb is defective.



Downloaded from www.Manualslib.com manuals search engine

### Highbeam/Lowbeam Select Switch

Pull the Multi-Function Lever towards you to switch the headlights to HIGH beam. Pull the Lever a second time to switch the headlights to LOW beam.

### Passing Light

You can signal another vehicle with your headlights by lightly pulling the Multi-Function Lever toward you. This will cause the headlights to turn on at high beam and remain on until the lever is released.

## WINDSHIELD WIPERS AND WASHERS

The wipers and washers are operated by a switch on the control lever. The lever is located on the right side of the steering column. Rotate the end of the control lever to select the desired wiper speed.

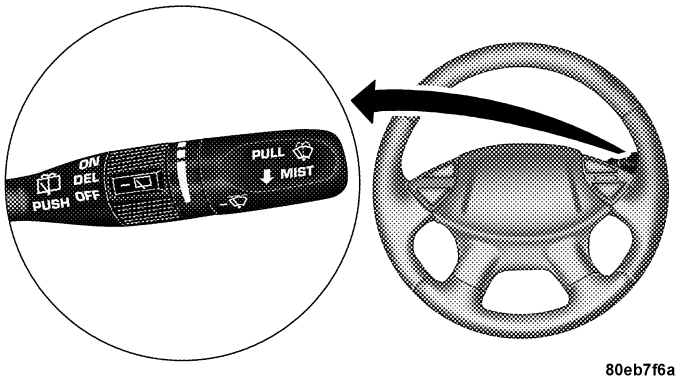


**Windshield Wiper/Washer Control**

### Windshield Washers

To use the front washer, pull the lever toward you and hold while spray is desired. If the lever is pulled while in the delay range, the wiper will operate for two wipe cycles after the lever is released, and then resume the intermittent interval previously selected.

Downloaded from www.Manualslib.com manuals search engine

If the lever is pulled while in the OFF position, the wipers will operate for two wipe cycles, then turn OFF.

### Mist Feature

Push down on the wiper lever to activate a single wipe to clear off road mist or spray from a passing vehicle. As long as the lever is held down, the wipers will continue to operate.

### Windshield Wiper Operation

Rotate the end of the lever to the second detent for Low speed wiper operation, or to the third detent for High speed operation

### Intermittent Wiper System

Use the intermittent wiper when weather conditions make a single wiping cycle, with a variable pause between cycles, desirable. Rotate the end of the lever to the first detent position, then turn the end of the lever to select the desired delay interval. The delay can be regulated from a maximum of approximately 23 seconds between cycles, to a cycle every second.

### Rear Window Wiper/Washer

The switch on the right side of the steering column also controls operation of the rear wiper/washer function.



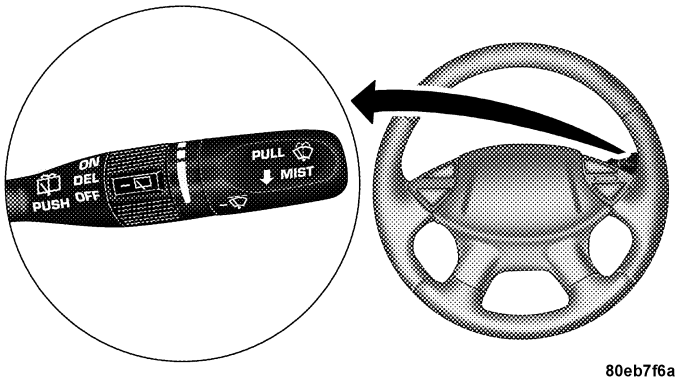


**Windshield Wiper/Washer Control**

Downloaded from www.Manualslib.com manuals search engine

Rotating the center of the switch up to the DEL (Delay) position or the ON position will activate the rear wiper. Push the lever forward to initiate the rear wash function in any of the three positions. The washer pump will continue to operate as long as the lever is pressed. Upon release, the rear wiper will cycle two times before returning to the set position.

### Adding Washer Fluid

The fluid reservoir for the windshield washers and the rear window washer is shared. It is located in the front of the engine compartment on the driver's side and should be checked for fluid level at regular intervals. Fill the reservoir with windshield washer solvent (not radiator antifreeze) and operate the system for a few seconds to flush out the residual water.

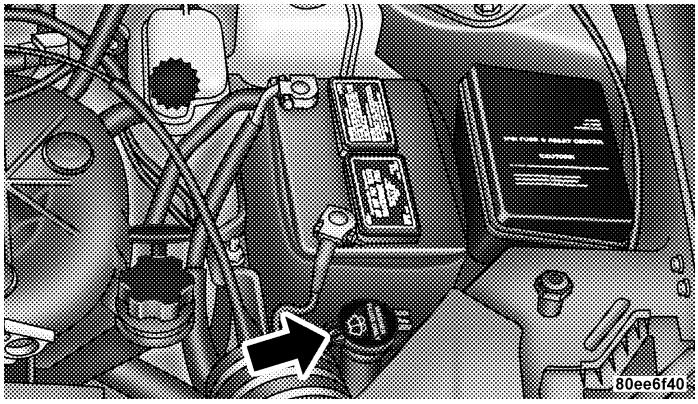


**Washer Fluid Reservoir**

The washer fluid reservoir will hold a full gallon of fluid when Low Washer Fluid illuminates in the Electronic Vehicle Information Center (EVIC).

Downloaded from www.Manualslib.com manuals search engine

## TILT STEERING COLUMN

To tilt the column, pull the lever, located behind the turn signal control, toward you and move the steering wheel up or down, as desired. Release the lever to lock the steering wheel firmly in place.

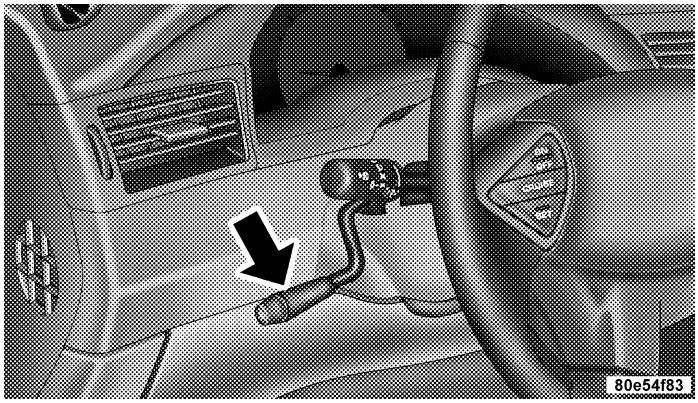


**Tilt Steering Column Control**

**WARNING!**

**Tilting the steering column while the vehicle is moving is dangerous. Without a stable steering column, you could lose control of the vehicle and have an accident. Adjust the column only while the vehicle is stopped. Be sure it is locked before driving.**



Downloaded from www.Manualslib.com manuals search engine

## TRACTION CONTROL SWITCH — IF EQUIPPED

The traction control Indicator, located in the instrument cluster, will light up when the Traction Control is in use.

To turn the system OFF, press the Traction Control switch located on center console next to the ash tray, until the traction control Indicator in the instrument cluster lights up.

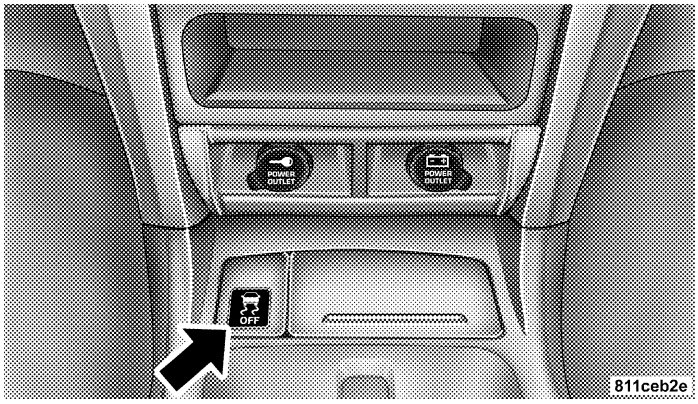


**Traction Control Switch**

Downloaded from www.Manualslib.com manuals search engine

To turn the system back ON, press the switch a second time until the traction control Indicator turns OFF.

**NOTE:**

- The traction control Indicator comes on each time the ignition switch is turned ON. This will occur even if you used the switch to turn the system OFF.
- The Traction Control system will make buzzing or clicking sounds when in operation.

## REAR PARK ASSIST SYSTEM — IF EQUIPPED

This system is used to help drivers determine if an obstacle is in the way of the vehicle while it is backing up in addition to the use of inside rearview and outside mirrors.

When the driver selects Reverse the system scans for objects behind the vehicle using four sensors located in the rear bumper. Objects can be detected from up to 59 inches (150 cm). A warning display above the rear window provides both visible and audible warnings indicating the range of the object.

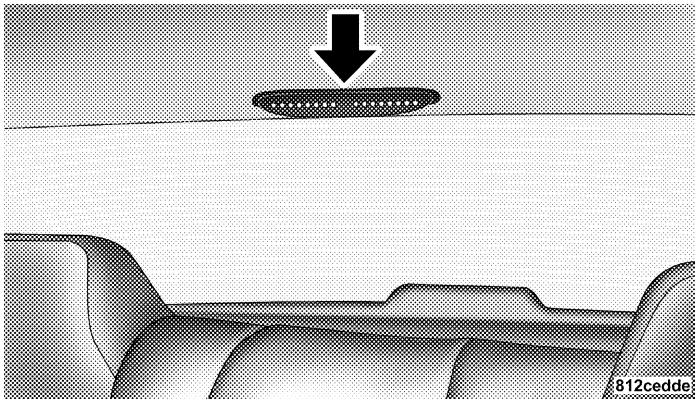


**Rear Park Assist Indicator**



Downloaded from www.Manualslib.com manuals search engine

**WARNING!**

**Drivers must be careful when backing up even when using the Rear Park Assist System. Always check carefully behind your vehicle, look behind you, and be sure to check for pedestrians, other vehicles, obstructions, and blind spots before backing up. Failure to do so can result in serious personal injury or death.**

The display contains two sets of yellow and red LEDs that the driver can see in the rear view mirror. Each side of the vehicle has its own warning LEDs. The system provides a visual warning by illuminating one or more yellow LEDs as the vehicle gets closer to the object. As the vehicle continues to approaches the object, one red LED is illuminated and the system emits a series of short beeps. The tone will remain constant and both red LEDs are illuminated once the vehicle is within 12 inches (30.5 cm) of the object.

The system can be turned on or off through the electronic vehicle information center (EVIC) when the vehicle is in PARK. If the rear park assist system is turned off, a single chime will sound and the EVIC will display the following message "PARK ASSIST DISABLED", when the vehicle is in reverse.

**NOTE:**

- Ensure that the rear bumper is free of dirt and debris to keep the system operating properly.
- Jackhammers, large trucks, and other vibrations could affect the performance of the system.

If Service Park Assist System appears in the EVIC after making sure the rear bumper is clean please see your authorized dealer.

Downloaded from www.Manualslib.com manuals search engine

## ADJUSTABLE PEDALS — IF EQUIPPED

This feature allows both the brake and accelerator pedals to move toward or away from the driver to provide improved position with the steering wheel. The adjustable pedal system is designed to allow a greater range of driver comfort for steering wheel tilt and seat position. The switch is located on the drivers door trim panel next to the power seat switches.

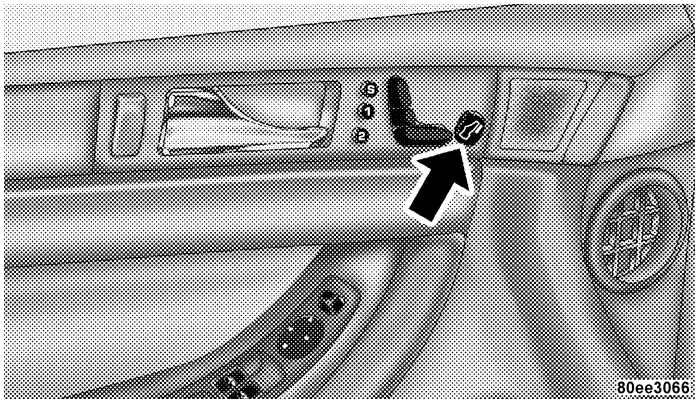


**Adjustable Pedal Switch**

Press the switch forward to move the pedals forward (toward the front of the vehicle).

Press the switch rearward to move the pedals rearward (toward the driver).

- The pedals can be adjusted with the ignition OFF.



Downloaded from www.Manualslib.com manuals search engine

- The pedals can be adjusted while driving.
- The pedals **cannot** be adjusted when the vehicle is in R (Reverse) or when the Speed Control is ON. A message will be displayed in the Electronic Vehicle Information Center (EVIC) if the pedals are attempted to be adjusted when the system is locked out ("Adjustable Pedal Disabled — Cruise Control Engaged" or "Adjustable Pedal Disabled — Vehicle In Reverse").

**NOTE:** If your vehicle is equipped with memory seat feature, your remote keyless entry transmitter or memory seat buttons on the driver's door panel can be used to recall the adjustable pedals to saved positions.

**CAUTION!**

**Do not place any article under the adjustable pedals or impede its ability to move as it may cause damage to the pedal controls. Pedal travel may become limited if movement is stopped by an obstruction in the adjustable pedal's path.**

## ELECTRONIC SPEED CONTROL

When engaged, this device takes over the accelerator operation at speeds greater than 30 mph (50 km/h). The speed control switches are located on the steering wheel.

Downloaded from www.Manualslib.com manuals search engine

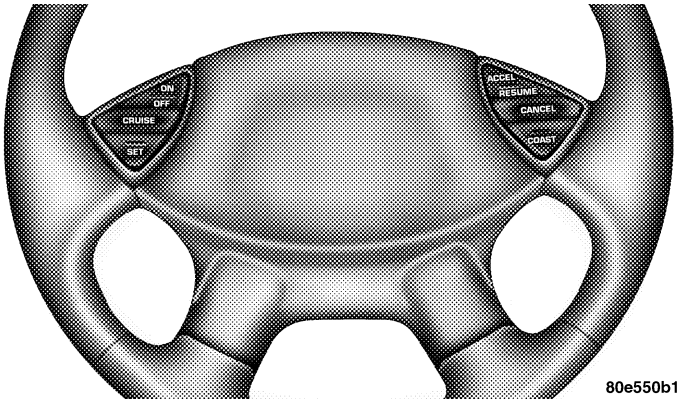


**Speed Control Switches**

### To Activate:

Push the "ON/OFF" button once and the CRUISE indicator located near the instrument cluster odometer will illuminate showing the electronic speed control system is on. To turn the system OFF, push the "ON/OFF" button again and the system and indicator will turn off.

**WARNING!**

**Leaving the Electronic Speed Control system on when not in use is dangerous. You could accidently set the system or cause it to go faster than you want. You could lose control and have an accident. Always leave the system OFF when you aren't using it.**

### To Set At A Desired Speed:

When the vehicle has reached the desired speed, press and release the "SET" button. Release the accelerator and the vehicle will operate at the selected speed. The CRUISE SET indicator located near the instrument cluster odometer will illuminate showing the electronic speed control is set.

**NOTE:** While in the AutoStick mode, Speed Control will only function in third or fourth gear.

3

Downloaded from www.Manualslib.com manuals search engine

### To Deactivate:

A soft tap on the brake pedal, pushing the "CANCEL" button or normal braking while slowing the vehicle will deactivate the speed control without erasing the memory. Pushing the "ON/OFF" button to the OFF position or turning off the ignition erases the speed memory.

### To Resume Speed:

To resume a previously set speed, push and release the "ACCEL/RESUME" button. Resume can be used at any speed above 25 mph (40 km/h).

### To Vary the Speed Setting:

When the speed control is set, speed can be increased by pressing and holding the "ACCEL/RESUME" button. When the button is released, a new set speed will be established.

Tapping the "ACCEL/RESUME" button once will result in a 2 mph (3 km/h) speed increase. Each time the button is tapped, speed increases so that tapping the button three times will increase speed by 6 mph (10 km/h), etc.

To decrease speed while speed control is set, press and hold the "COAST" button. Release the button when the desired speed is reached, and the new speed will be set.

Tapping the "COAST" button once will result in a 1 mph (2 km/h) speed decrease. Each time the button is tapped, speed decreases.

### To Accelerate For Passing:

Depress the accelerator as you would normally. When the pedal is released, the vehicle will return to the set speed.

**NOTE:** The speed control system maintains speed up and down hills. A slight speed change on moderate hills is normal.

Downloaded from www.Manualslib.com manuals search engine

Four speed automatic transmissions will experience a downshift to 3rd gear while climbing uphill or descending downhill. This downshift to 3rd gear is necessary to maintain vehicle set speed.

On steep hills a greater speed loss or gain may occur so it may be preferable to drive without speed control.

**WARNING!**

**Speed Control can be dangerous where the system can't maintain a constant speed. Your vehicle could go too fast for the conditions, and you could lose control. An accident could be the result. Don't use Speed Control in heavy traffic or on roads that are winding, icy, snow-covered, or slippery.**

## OVERHEAD CONSOLE — IF EQUIPPED

The overhead console can contain courtesy/reading lights, an optional universal garage door opener (HomeLink®), storage for sunglasses, optional power sunroof switches and an optional power liftgate switch.

**Overhead Console**

Downloaded from www.Manualslib.com manuals search engine

### Courtesy/Reading Lights

At the forward end of the console are two courtesy/reading lights.

Press the lens to turn these lights on. Press a second time to turn the lights off.

The lights also turn on when a front door, a rear door or the liftgate is opened. The lights will also turn on when the unlock button on the remote keyless entry transmitter is pressed.

### Sunglasses Storage

At the rear of the overhead console, a compartment is provided for the storage of a pair of sunglasses.

Press the door latch to open the compartment. The door will slowly rotate to an open position.

## GARAGE DOOR OPENER — IF EQUIPPED

The HomeLink® Universal Transceiver replaces up to three remote controls (hand held transmitters) that operate devices such as garage door openers, motorized gates, or home lighting. It triggers these devices at the push of a button. The Universal Transceiver operates off your vehicle's battery and charging system; no batteries are needed.

For additional information on HomeLink®, call 1–800–355–3515, or on the internet at www.homelink.com.

Downloaded from www.Manualslib.com manuals search engine

**WARNING!**

**A moving garage door can cause injury to people and pets in the path of the door. People or pets could be seriously or fatally injured. Only use this transceiver with a garage door opener that has a "stop and reverse" feature as required by federal safety standards. This includes most garage door opener models manufactured after 1982. Do not use a garage door opener without these safety features it could cause injury or death. Call toll-free 1–800–355–3515 or, on the Internet at www.homelink.com for safety information or assistance.**

**WARNING!**

**Vehicle exhaust contains carbon monoxide, a dangerous gas. Do not run the vehicle's exhaust while training the transceiver. Exhaust gas can cause serious injury or death.**

**WARNING!**

**Your motorized door or gate will open and close while you are training the Universal Transceiver. Do not train the transceiver if people or pets are in the path of the door or gate. A moving door or gate can cause serious injury or death to people and pets or damage to objects.**



Downloaded from www.Manualslib.com manuals search engine

## Programming HomeLink

**NOTE:** When programming a garage door opener, it is advised to park outside the garage. Some vehicles may require the ignition switch to be turned to the second (or "accessories") position for programming and/or operation of HomeLink. It is also recommended that a new battery be placed in the hand-held transmitter of the device being programmed to HomeLink for quicker training and accurate transmission of the radio-frequency signal.

1. Press and hold the two outer HomeLink buttons, and release only when the indicator light begins to flash or the EVIC display shows "Channels Cleared" (after 20 seconds). **Do not** hold the buttons for longer than 30 seconds and **do not** repeat step one to program a second and/or third hand-held transmitter to the remaining two HomeLink buttons.

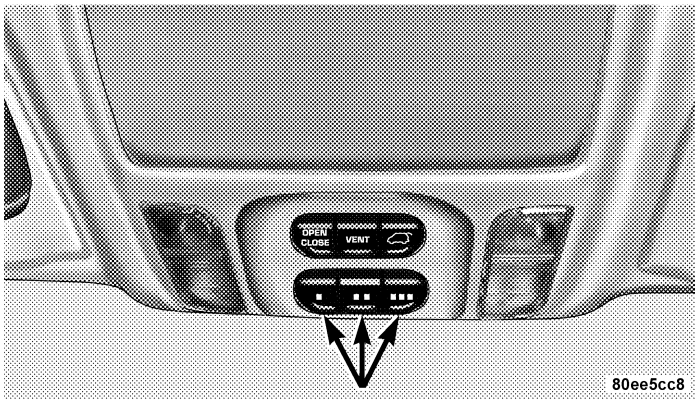


**Homelink Buttons**

2. Position the end of your hand-held transmitter 1-3 inches (3-8 cm) away from the HomeLink buttons while keeping the indicator light in view.

Downloaded from www.Manualslib.com manuals search engine

3. Simultaneously press and hold both the HomeLink button that you want to train and the hand-held transmitter buttons. **Do not release the buttons until step 4 has been completed.**

**NOTE:** Some gate operators and garage door openers may require you to replace this Programming Step 3 with procedures noted in the "Gate Operator/Canadian Programming" section.

4. The HomeLink indicator light will flash slowly and then rapidly after HomeLink successfully receives the frequency signal from the hand-held transmitter and the EVIC display will show "Channel X Training" (where X is Channel 1, 2, or 3). Release both buttons after the indicator light changes from the slow to the rapid flash or the EVIC display shows "Channel X Trained".

**NOTE:** If the EVIC display shows "Did Not Train" repeat steps 2–4.

5. Press and hold the just trained HomeLink button and observe the indicator light or the EVIC display. If the indicator light **stays on constantly, programming is complete** and your device should activate when the HomeLink button is pressed and released. If the EVIC display shows "Channel X Transmit" (where X is Channel 1, 2, or 3), programming is complete and your device should activate when the HomeLink button is pressed and released.



**NOTE:** To program the remaining two HomeLink buttons, begin with "Programming" **step two. Do not repeat step one.**

If the indicator light blinks **rapidly for two seconds and then turns to a constant light continue with "Programming" steps 6-8** to complete the programming of a rolling code equipped device (most commonly a garage door opener).

Downloaded from www.Manualslib.com manuals search engine

6. At the garage door opener receiver (motor-head unit) in the garage, locate the "learn" or "smart" button. This can usually be found where the hanging antenna wire is attached to the motor-head unit.

7. Firmly press and release the "learn" or "smart" button. (The name and color of the button may vary by manufacturer.)

**NOTE:** There are 30 seconds in which to initiate step eight.

8. Return to the vehicle and firmly **press, hold for two seconds and release** the programmed HomeLink button. Repeat the **"press/hold/release"** sequence a second time, and, depending on the brand of the garage door opener (or other rolling code equipped device), repeat this sequence a third time to complete the programming.

HomeLink should now activate your rolling code equipped device.

**NOTE:** To program the remaining two HomeLink buttons, begin with "Programming" **step two. Do not repeat step one**. For questions or comments, please contact HomeLink at **www.homelink.com or 1-800-355-3515**.

### Canadian Programming/Gate Programming

Canadian radio-frequency laws require transmitter signals to "time-out" (or quit) after several seconds of transmission which may not be long enough for HomeLink to pick up the signal during programming. Similar to this Canadian law, some U.S. gate operators are designed to "time-out" in the same manner.

If you live in Canada or you are having difficulties programming a gate operator by using the "Programming" procedures (regardless of where you live), **replace "Programming HomeLink" step 3** with the following:

**NOTE:** If programming a garage door opener or gate operator, it is advised to unplug the device during the "cycling" process to prevent possible overheating.

Downloaded from www.Manualslib.com manuals search engine

3. Continue to press and hold the HomeLink button while you **press and release every two seconds** (″cycle″) your hand-held transmitter until the frequency signal has successfully been accepted by HomeLink. The indicator light will flash slowly and then rapidly and the EVIC display will show "Channel X Trained" (where X is Channel 1, 2, or 3). Proceed with ″Programming″ step four to complete.

### Using HomeLink

To operate, simply press and release the programmed HomeLink button. Activation will now occur for the trained device (i.e. garage door opener, gate operator, security system, entry door lock, home/office lighting, etc.). For convenience, the hand-held transmitter of the device may also be used at any time. In the event that there are still programming difficulties or questions, contact HomeLink at: **www.homelink.com or 1-800-355-3515**.

### Erasing HomeLink Buttons

To erase programming from the three buttons (individual buttons cannot be erased but can be ″reprogrammed″ - note below), follow the step noted:

- Press and hold the two outer HomeLink buttons until the indicator light begins to flash and the EVIC display shows "Channels Cleared" (after 20 seconds). Release both buttons. Do not hold for longer that 30 seconds. HomeLink is now in the train (or learning) mode and can be programmed at any time beginning with ″Programming″ - step 2.

### Reprogramming a Single HomeLink Button

To program a device to HomeLink using a HomeLink button previously trained, follow these steps:

1. Press and hold the desired HomeLink button. **Do NOT** release the button.



Downloaded from www.Manualslib.com manuals search engine

2. The indicator light will begin to flash after 20 seconds and the EVIC display will show "Channel X Transmit" (where X is Channel 1, 2, or 3) for 20 seconds and then change to "Channel X Training". Without releasing the HomeLink button, proceed with "Programming" step 2

For questions or comments, contact HomeLink at: **www.homelink.com or 1-800-355-3515**.

### Security

If you sell your vehicle, be sure to erase the frequencies by following the "Erasing HomeLink Buttons" instructions in this section.

This device complies with part 15 of FCC rules and with RSS-210 of Industry Canada. Operation is subject to the following conditions:

- This device may not cause harmful interference.
- This device must accept any interference that may be received including interference that may cause undesired operation.

**NOTE:** Changes or modifications not expressly approved by the party responsible for compliance could void the user's authority to operate the equipment.

HomeLink® is a trademark owned by Johnson Controls, Inc.

Downloaded from www.Manualslib.com manuals search engine

## POWER SUNROOF — IF EQUIPPED

The power sunroof buttons are located between the sun visors on the overhead console.

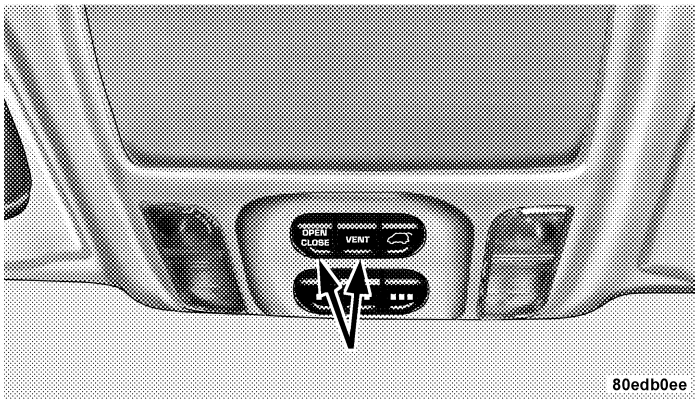


**Power Sunroof buttons**

Press and hold the "OPEN" button rearward to fully open the sunroof. The sunroof can be stopped at any position between closed and full open. Momentarily pressing the "OPEN" button rearward will activate the Express Open Feature, causing the sunroof to open automatically.

Press and hold the "VENT" button to open the vent. The sunroof can be stopped at any position between closed and full vent. To close the sunroof from the vent position, press and hold the "CLOSE" button forward. Releasing the button will stop the movement of the sunroof and the sunroof will remain in the partial vent position until the button is pushed forward again.

**NOTE:** The power sunroof buttons remain active for up to 45 seconds after the ignition button has been turned off. Opening either front door will cancel this feature.



Downloaded from www.Manualslib.com manuals search engine

### Express Open Feature

The sunroof is equipped with an intermediate stop or comfort stop position. This feature is designed to eliminate wind buffeting at vehicle speeds between 20-40 mph (32-64 km/h). To operate this feature, momentarily press the "OPEN" button rearward to activate the Express Open Feature and the glass will automatically stop at the comfort stop position. Pressing the button rearward again will fully open the sunroof.

During the Express Open operation, any movement of the button will stop the sunroof and it will remain in a partial open position. Again, momentarily pressing the button rearward will activate the Express Open Feature.

To close the sunroof, press and hold the "CLOSE" button forward. Again, any release of the button will stop the movement and the sunroof will remain in a partial open condition until the button is pushed forward again.

The sunshade can be opened manually. It will also open as the sunroof opens. The sunshade cannot be closed if the sunroof is open.

Downloaded from www.Manualslib.com manuals search engine

**WARNING!**

- **Never leave children in a vehicle, with the keys in the ignition switch. Occupants, particularly unattended children, can become entrapped by the power sunroof while operating the power sunroof buttons. Such entrapment may result in serious injury or death.**
- **In an accident, there is a greater risk of being thrown from a vehicle with an open sunroof. You could also be seriously injured or killed. Always fasten your seat belt properly and make sure all passengers are properly secured too.**
- **Do not allow small children to operate the sunroof. Never allow fingers or other body parts, or any object to project through the sunroof opening. Injury may result.**

### Wind Buffeting

Wind buffeting can be described as the perception of pressure on the ears or a helicopter type sound in the ears. Your vehicle may exhibit wind buffeting with the windows down, or the sunroof (if equipped) in certain open or partially open positions. This is a normal occurrence and can be minimized. If the buffeting occurs with the rear windows open, open the front and rear windows together to minimize the buffeting. If the buffeting occurs with the sunroof open, adjust the sunroof opening to minimize the buffeting or open any window.

### Sunroof Maintenance

Use only a non-abrasive cleaner and a soft cloth to clean the glass panel.



Downloaded from www.Manualslib.com manuals search engine

## ELECTRICAL POWER OUTLETS

There are two 12 volt power outlets located on the instrument panel below the radio. The driver's side outlet is controlled by the ignition switch and the passenger side outlet is connected directly to the battery. The driver's side outlet will also operate a conventional cigar lighter unit (if equipped with an optional Smoker's Package).

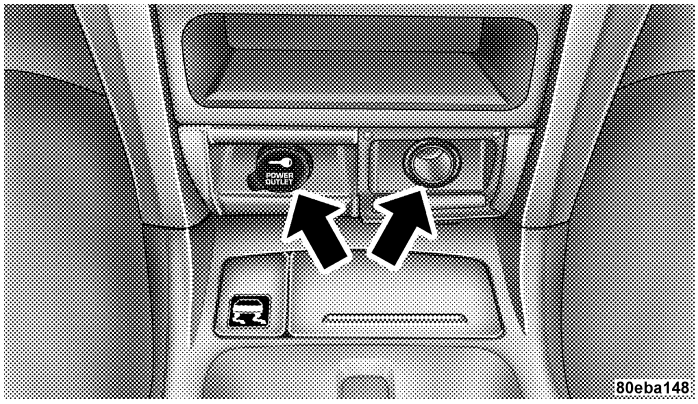


**Front Power Outlets**

Downloaded from www.Manualslib.com manuals search engine

A third outlet is located on the back of the front center console near the floor, and is also controlled by the ignition switch.

A fourth outlet is located on the driver's side, in the rear cargo area and is also controlled by the ignition switch.

The outlets include tethered caps labeled with a key or battery symbol indicating the power source. The passenger side instrument panel and center console outlets are powered directly from the battery, items plugged into these outlets may discharge the battery and/or prevent engine starting.

The passenger side and center console outlets are protected by an automatic reset circuit breaker. The automatic circuit breaker restores power when the overload is removed.

**NOTE:** If desired, the fourth power outlet in the rear cargo area can be converted by your authorized dealer to provide power with the ignition switch in the OFF position.

### Electrical Outlet Use With Engine Off

**CAUTION!**

- **Many accessories that can be plugged in draw power from the vehicle's battery, even when not in use (i.e. cellular phones, etc.). Eventually, if plugged in long enough, the vehicle's battery will discharge sufficiently to degrade battery life and/or prevent engine starting.**
- **Accessories that draw higher power (i.e. coolers, vacuum cleaners, lights, etc.), will degrade the battery even more quickly. Only use these intermittently and with greater caution.**
- **After the use of high power draw accessories, or long periods of the vehicle not being started (with accessories still plugged in), the vehicle must be driven a sufficient length of time to allow the alternator to recharge the vehicle's battery.**
- **Power outlets are designed for accessory plugs only. Do not hang any type of accessory or accessory bracket from the plug. Improper use of the power outlet can cause damage.**



Downloaded from www.Manualslib.com manuals search engine

## CUPHOLDERS

### Front Seat Cupholders

The cupholders are located in the forward edge of the center console. Push down on the forward edge of the console to release the cupholders. Press the cover up when the cupholders are no longer needed.

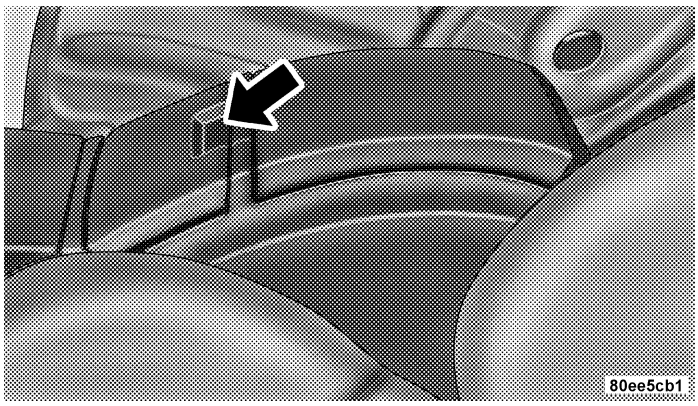


**Six Passenger Seating Cupholders**

### Second Row Seat Cupholders

On vehicles equipped with five passenger seating the second row seat cupholders are located in middle of the seatback armrest. Pull down on the armrest to access the cupholders. Push the armrest up when the cupholders are no longer needed.

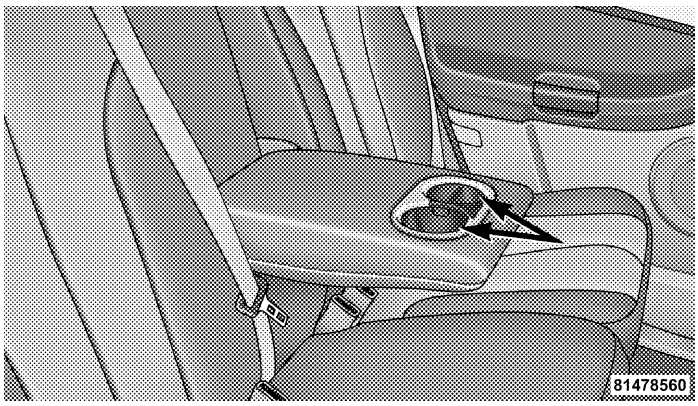


**Five Passenger Seating Cupholders**

Downloaded from www.Manualslib.com manuals search engine

On vehicles equipped with six passenger seating the second row seat cupholders are located in the forward edge of the center console located between the second row seats. Push down on the forward edge of the console to release the cupholders. Press the cover up when the cupholders are no longer needed.

### Third Row Seat Cupholders — If Equipped

There are cupholders located in each rear trim panel for the third row seat passengers.

## STORAGE

### Console Features

The center consoles may be equipped with a tissue holder mounted on the underside of the cover. The bottom of the console bins may also have built in holders for compact discs or cassette tapes.

### Rear Cargo Storage Bin — If Equipped

The storage bin is located in the floor of the rear cargo area. To open lift up on the handle.

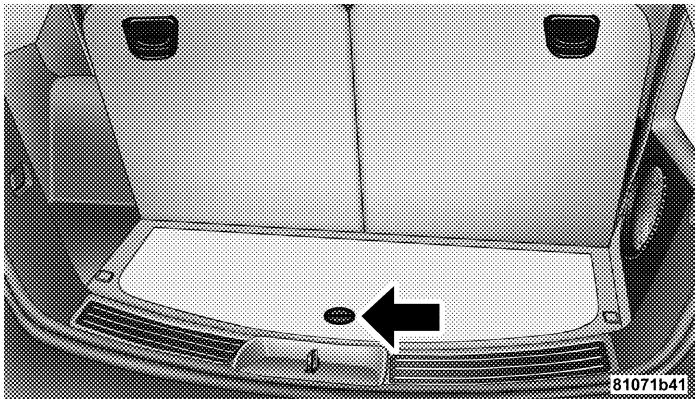


**Rear Storage Bin**



Downloaded from www.Manualslib.com manuals search engine

## Retractable Cargo Area Cover — If Equipped

To cover the cargo area:

1. Fold down the third row seatbacks.

2. Unfold the cargo cover extensions and lock into place.

3. Insert the pins on the ends of the cover into the slots located on the trim panel behind the second row seatbacks.

4. Grasp the center portion of the cover flap. Pull it over the cargo area.

5. Insert the pins on the ends of the cover flap into the slots on the rear trim panel.

6. The liftgate may be opened or closed with the cargo cover in place.

**WARNING!**

**In an accident a cargo cover loose in the vehicle could cause injury. It could fly around in a sudden stop and strike someone in the vehicle. Do not store the cargo cover on the cargo floor or in the passenger compartment. Remove the cover from the vehicle when taken from its mounting. Do not store in the vehicle.**

### Stowed Position

1. Fold down the third row seatbacks.

2. Fold the cargo cover extensions to their stowed position and lock into place.

3. Insert the pins on the ends of the cover into the slots located on the trim panel behind the third row seatbacks.

Downloaded from www.Manualslib.com manuals search engine

4. Grasp the center portion of the cover flap. Pull it over the cargo area.

5. Insert the pins on the ends of the cover flap into the slots on the rear trim panel.

6. The liftgate may be opened or closed with the cargo cover in place.

### Cargo Tie-Down Hooks

The tie-downs located on cargo area floor and on the rear trim panels should be used to safely secure loads when vehicle is moving.

**WARNING!**

- **Cargo tie-down hooks are not safe anchors for a child seat tether strap. In a sudden stop or collision a hook could pull loose and allow the child seat to come loose. A child could be badly injured. Use only the anchors provided for child seat tethers.**
- **The weight and position of cargo and passengers can change the vehicle center of gravity and vehicle handling. To avoid loss of control resulting in personal injury, follow these guidelines for loading your vehicle:**

- Always place cargo evenly on the cargo floor. Put heavier objects as low and as far forward as possible.



Downloaded from www.Manualslib.com manuals search engine

- Place as much cargo as possible in front of the rear axle. Too much weight or improperly placed weight over or behind the rear axle can cause the rear of the vehicle to sway.
- Do not pile luggage or cargo higher than the top of the seatback. This could impair visibility or become a dangerous projectile in a sudden stop or collision.

**WARNING!**

**To help protect against personal injury, passengers should not be seated in the rear cargo area. The rear cargo space is intended for load carrying purposes only, not for passengers, who should sit in seats and use seat belts.**

## ROOF LUGGAGE RACK — IF EQUIPPED

The crossbars and siderails are designed to carry the weight on vehicles equipped with a luggage rack. The load must not exceed 150 lbs (68 kg), and should be uniformly distributed over the luggage rack crossbars.

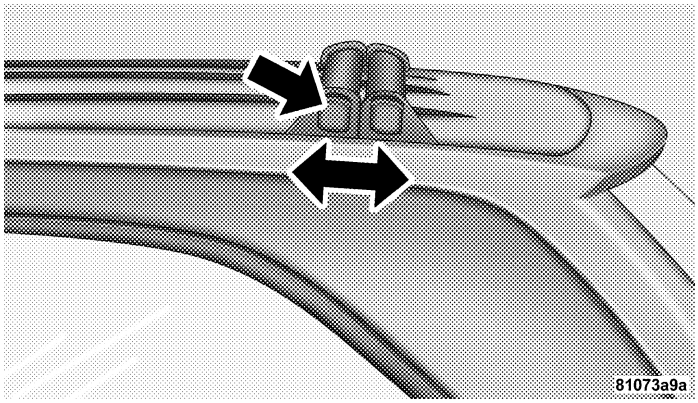


**Roof Rack**

Downloaded from www.Manualslib.com manuals search engine

Distribute cargo weight evenly on the roof rack crossbars. The roof rack does not increase the total load carrying capacity of the vehicle. Be sure the total load of cargo inside the vehicle plus that on the external rack does not exceed the maximum vehicle load capacity.

To move the cross bars, press the upper edge of each cross bar button, then move the cross bar to the desired position, keeping the crossbars parallel to the rack frame. This is can be done with one person standing on each side of the vehicle, moving the cross bar at the same time. Once the cross bar is in place, press the lower edge of the cross bar button to lock it into position.

Attempt to move the crossbar again to ensure that it has properly locked into position.

**NOTE:** To reduce the amount of wind noise when the cross bars are not in use, move both cross bars next to each other towards the rear of the vehicle in the rear most position.



The tie down holes on the cross bar ends should always be used to tie down the load. Check the straps frequently to be sure that the load remains securely attached.

Downloaded from www.Manualslib.com manuals search engine

**CAUTION!**

- **Crossbars should remain equally spaced or parallel at any luggage rack position for proper function. Noncompliance could result in damage to the luggage rack, cargo and/or vehicle.**
- **To avoid damage to the roof rack and vehicle, do not exceed the maximum roof rack load capacity of 150 lbs (68 kg). Always distribute heavy loads as evenly as possible and secure the load appropriately.**
- **Long loads which extend over the windshield, such as wood panels or surfboards, or loads with large frontal area should be secured to both the front and rear of the vehicle.**
- **Travel at reduced speeds and turn corners carefully when carrying large or heavy loads on the roof rack. Wind forces, due to natural causes or nearby truck traffic, can add sudden upward lift to loads. This is especially true on large flat loads and may result in damage to the cargo or your vehicle.**

**WARNING!**

**Cargo must be securely tied before driving your vehicle. Improperly secured loads can fly off the vehicle, particularly at high speeds, resulting in personal injury or property damage. Follow the Roof Rack Cautions when carrying cargo on your roof rack.**

## LOAD LEVELING SYSTEM

The automatic load leveling system will provide a level riding vehicle under most passenger and cargo loading conditions.

A hydraulic pump contained within the shock absorbers raises the rear of the vehicle to the correct height. It takes approximately 1 mile (1.6 km) of driving for the leveling to complete depending on road surface conditions.

If the leveled vehicle is not moved for approximately 15 hours, the leveling system will bleed itself down. The vehicle must be driven to reset the system.

Downloaded from www.Manualslib.com manuals search engine

# UNDERSTANDING YOUR INSTRUMENT PANEL

## CONTENTS


■ Instruments And Controls . . . . . .165

■ Base Instrument Cluster . . . . . .166

■ Premium Instrument Cluster . . . . . .167

■ Instrument Cluster Descriptions . . . . . .168

■ Electronic Vehicle Information Center (EVIC) — If Equipped . . . . . .176

- □ Customer Programmable Features — If Equipped . . . . . .179
- □ Tilt Mirrors In Reverse? (Available With Memory Seat Only) . . . . . .183
- □ Compass Display — If Equipped . . . . . .183
- □ Mini-Trip Functions — If Equipped . . . . . .185

■ Setting The Analog Clock . . . . . .186

■ Electronic Digital Clock . . . . . .186

- □ Clock Setting Procedure . . . . . .186

■ Sales Code RAH—AM & FM Stereo Radio With CD Player And CD/DVD Changer Controls . . . .187

- □ Radio Operation . . . . . .187
- □ CD Player Operation . . . . . .191




Downloaded from www.Manualslib.com manuals search engine

- □ CD/DVD Changer Operation . . . . . .193
- □ Notes On Playing MP3 Files . . . . . .193
- □ Operation Instructions - (CD Mode For MP3 Audio Play) . . . . . .195

■ Sales Code Rev AM & FM Stereo Radio With CD Player And CD/DVD Changer Controls . . . .197

- □ Radio Operation . . . . . .197
- □ CD Player Operation . . . . . .201
- □ CD/DVD Changer Operation . . . . . .203
- □ Notes On Playing MP3 Files . . . . . .203
- □ Operation Instructions - (CD Mode For MP3 Audio Play) . . . . . .205

■ Sales Code RBP—AM & FM Stereo Radio With Cassette Tape Player, CD Player, And Optional CD/DVD Changer Controls . . . . . .207

- □ Radio Operation . . . . . .207
- □ Tape Player Operation . . . . . .211
- □ CD Player Operation . . . . . .213
- □ CD/DVD Changer Operation — If Equipped . .215

■ Remote Control Operating Instructions . . . . . .216

- □ Headphone Transmitter Button (1) . . . . . .218
- □ Arrow Buttons (2, 3, 15, 16) . . . . . .218
- □ Rtn Button (4) . . . . . .218
- □ Setup Button (5) . . . . . .218
- □ Pause/Play Button (6) . . . . . .219
- □ Mute Button (7) . . . . . .219
- □ Disp Button (8) . . . . . .219
- □ Mode Button (9) . . . . . .219


Downloaded from www.Manualslib.com manuals search engine

□ Prog Up/Down Buttons (10, 11) . . . . . .219
□ Slow Button (12) . . . . . .219
□ Stop Button (13) . . . . . .219
□ Menu Button (14) . . . . . .219
□ Next/Prev Buttons (2, 15) . . . . . .220
□ FF/RW Buttons (3, 16) . . . . . .220
□ Enter Button (17) . . . . . .220
□ Light Button (18) . . . . . .220
□ Remote Control Battery Service . . . . . .220
□ Operating Instructions — Video Screen . . . . . .221
□ Operating Instructions — Headphones . . . . . .222
□ Operating Instructions — MP3 Player, Portable Walkman . . . . . .224
□ Operating Instructions — Video Games/Camcorders . . . . . .225
■ Satellite Radio — If Equipped . . . . . .225
□ System Activation . . . . . .225
□ Electronic Serial Number/Sirius Identification Number (ENS/SID) . . . . . .226
□ Selecting Satellite Mode In RBB, Rev And RBK Radios . . . . . .226
□ Selecting Satellite Mode In RBP, RBU, RAZ, RB1 And RBQ Radios . . . . . .227
□ Selecting a Channel . . . . . .227
□ Storing And Selecting Pre-Set Channels . . . . . .228
□ Using The PTY (Program Type) Button (If Equipped) . . . . . .228
□ PTY Button "Scan" . . . . . .228



Downloaded from www.Manualslib.com manuals search engine

□ PTY Button "Seek" . . . . . .228
□ Satellite Antenna . . . . . .228
□ Reception Quality . . . . . .229
■ Remote Sound System Controls . . . . . .229
□ Radio Operation . . . . . .230
□ Tape Player . . . . . .230
□ CD Player . . . . . .230
■ Radio General Information . . . . . .231
□ Radio Broadcast Signals . . . . . .231
□ Two Types Of Signals . . . . . .231
□ Electrical Disturbances . . . . . .231
□ AM Reception . . . . . .231
□ FM Reception . . . . . .231
■ Cassette Tape And Player Maintenance . . . . . .232
■ CD/DVD Disc Maintenance . . . . . .233
■ Radio Operation And Cellular Phones . . . . . .233
■ Navigation System — If Equipped . . . . . .233
■ Climate Controls . . . . . .234
□ Manual Air Conditioning And Heating System . . . . . .235
□ Mode Control . . . . . .236
□ Manual Air Conditioning Operation . . . . . .240
□ Dual-Zone Automatic Temperature Control . . .243
□ Electric Rear Window Defroster . . . . . .253

Downloaded from www.Manualslib.com manuals search engine

## INSTRUMENTS AND CONTROLS

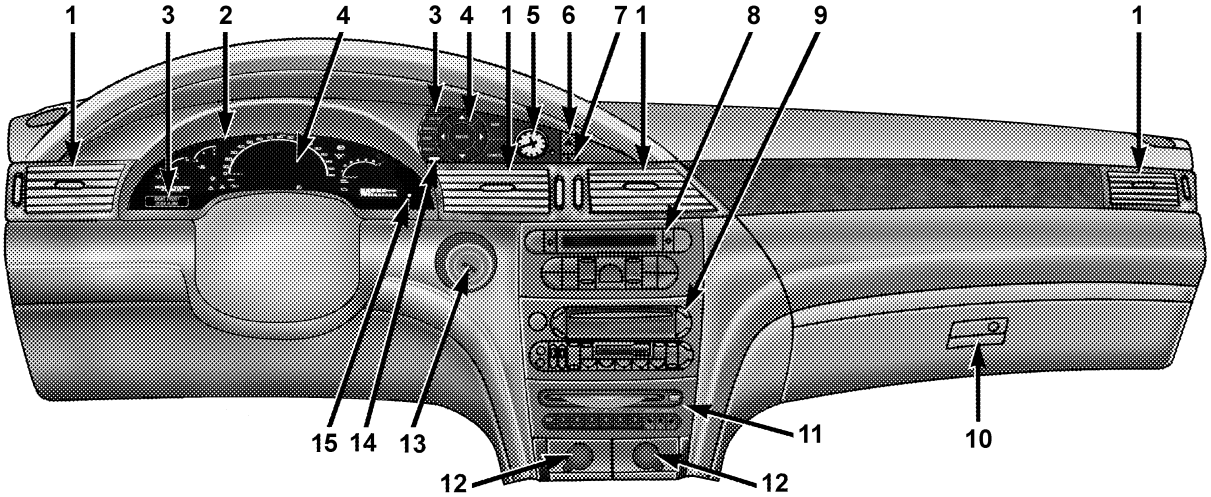


1. Air Outlets
2. Instrument Cluster
3. Electronic Vehicle Information Center*
4. Navigation System*
5. Analog Clock*
6. Hazard Switch
7. Passenger Airbag Disable Light
8. Climate Controls
9. Radio
10. Glove Box
11. CD/DVD Player*
12. Power Outlets
13. Ignition Switch
14. Theft Alarm / Immobilizer Light
15. Trip Odometer Button

* If Equipped

8158bd19



Downloaded from www.Manualslib.com manuals search engine

## BASE INSTRUMENT CLUSTER

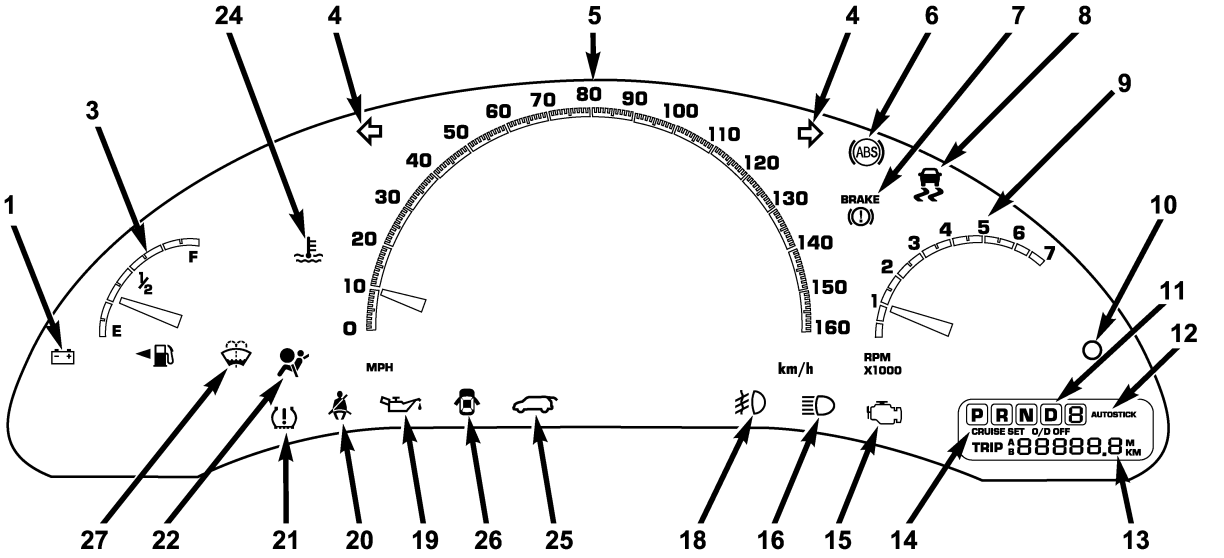


814790ab

Downloaded from www.Manualslib.com manuals search engine

## PREMIUM INSTRUMENT CLUSTER

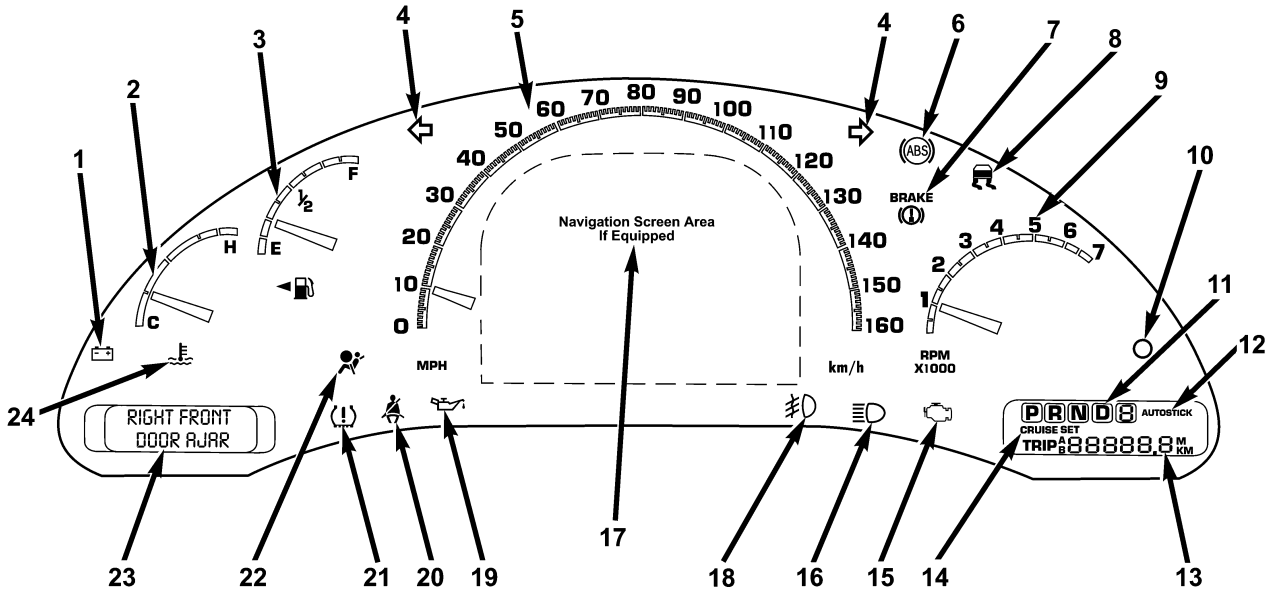


811b8bb8

Downloaded from www.Manualslib.com manuals search engine

## INSTRUMENT CLUSTER DESCRIPTIONS

*1. Voltage Light*

This light monitors the electrical system voltage. The light should turn on momentarily as the engine is started. If the light stays on or turns on while driving, it indicates a problem with the charging system. Immediate service should be obtained.

*2. Temperature Gauge*

The temperature gauge shows engine coolant temperature. Any reading within the normal range indicates that the engine cooling system is operating satisfactorily.

The gauge pointer will likely indicate a higher temperature when driving in hot weather, up mountain grades, or when towing a trailer. It should not be allowed to exceed the upper limits of the normal operating range.

**CAUTION!**

**Driving with a hot engine cooling system could damage your vehicle. If temperature gauge reads (H), Pull over in a safe area as soon as possible and stop the vehicle. Idle the vehicle with the air conditioner turned off until the pointer drops back into the normal range. If the pointer remains on the "H", and you hear continuous chimes, turn the engine off immediately, and call for service.**

Downloaded from www.Manualslib.com manuals search engine

**WARNING!**

**A hot engine cooling system is dangerous. You or others could be badly burned by steam or boiling coolant. You may want to call a service center if your vehicle overheats. If you decide to look under the hood yourself, see Section 7 of this manual. Follow the warnings under the Cooling System Pressure Cap paragraph.**

*3. Fuel Gauge*

The pointer shows the level of fuel in the fuel tank when the ignition switch is in the ON position.

The Low Fuel Light will turn on when the fuel level reaches approximately 2 to 4 gallons (7 to 15 liters) this light will remain on until fuel is added.

*4. Turn Signal Indicators*

The arrow will flash with the exterior turn signal when the turn signal lever is operated.

If the vehicle electronics sense that the vehicle has traveled about one mile with the turn signals on, a chime will sound to alert you to turn the signals off. If either indicator flashes at a rapid rate, check for a defective outside light bulb.



*5. Speedometer*

Indicates vehicle speed.

*6. Anti-Lock Light*

This light monitors the Anti-Lock Brake System. The light will turn on when the ignition switch is turned to the ON position and may stay on for as long as four seconds.

If the ABS light remains on or turns on while driving, it indicates that the Anti-Lock portion of the brake system

Downloaded from www.Manualslib.com manuals search engine

is not functioning and that service is required. However, the conventional brake system will continue to operate normally if the BRAKE warning light is not on.

If the ABS light is on, the brake system should be serviced as soon as possible to restore the benefits of Anti-Lock brakes. If the ABS light does not turn on when the Ignition switch is turned to the ON position, have the light inspected by an authorized dealer.

*7. Brake System Warning Light*

BRAKE

This light monitors various brake functions, including brake fluid level and parking brake application. If the brake light turns on, it may indicate that the parking brake is applied, there is a low brake fluid level or there is a problem with the anit-lock brake system.

The dual brake system provides a reserve braking capacity in the event of a failure to a portion of the hydraulic system. Failure of either half of the dual brake system is indicated by the Brake Warning Light which will turn on when the brake fluid level in the master cylinder has dropped below a specified level.

The light will remain on until the cause is corrected.

**NOTE:** The light may flash momentarily during sharp cornering maneuvers which change fluid level conditions. The vehicle should have service performed.

If brake failure is indicated, immediate repair is necessary.

**WARNING!**

**Driving a vehicle with the brake light on is dangerous. Part of the brake system may have failed. It will take longer to stop the vehicle. You could have an accident. Have the vehicle checked immediately.**

Downloaded from www.Manualslib.com manuals search engine

Vehicles equipped with Anti-Lock brakes (ABS), are also equipped with Electronic Brake Force Distribution (EBD). In the event of an EBD failure, the Brake Warning Light will turn on along with the ABS Light. Immediate repair to the ABS system is required.

The operation of the Brake Warning Light can be checked by turning the ignition switch from the OFF position to the ON position. The light should illuminate for approximately two seconds. The light should then turn off unless the parking brake is applied or a brake fault is detected. If the light does not illuminate, have the light inspected by an authorized dealer.

The light also will turn on when the parking brake is applied with the ignition switch in the ON position.

**NOTE:** This light shows only that the parking brake is applied. It does not show the degree of brake application.

*8. Traction Control Indicator — If Equipped*

This display indicator illuminates momentarily as a bulb check when the ignition switch is first turned ON.

The traction control Indicator will turn on if:

- The traction control system is in use.
- The Traction Control switch has been used to turn the system OFF.
- There is a Traction Control System malfunction.
- The system has been deactivated to prevent damage to the brake system due to overheated brake temperatures.

**NOTE:** Extended heavy use of Traction Control may cause the system to deactivate and turn on the Traction Control Light. This is to prevent overheating of the brake system and is a normal condition. The system will remain



Downloaded from www.Manualslib.com manuals search engine

disabled for about 4 minutes until the brakes have cooled. The system will automatically reactivate and turn off the Traction Control Light.

***9. Tachometer***
The red segments indicate the maximum permissible engine revolutions-per-minute (r.p.m. x 1000) for each gear range. Before reaching the red area, ease up on the accelerator.

***10. Trip Odometer Button***
Press this button to change the display from odometer to either of the two trip odometer settings. The word TRIP and either "A" or "B" will appear when in the trip odometer mode. Push in and hold the button for two seconds to reset the trip odometer to 0 miles or kilometers. The odometer must be in trip mode to reset.

***11. Transmission Range Indicator***
This display indicator shows the automatic transmission gear selection.

***12. AutoStick Light***
This display indicator illuminates when the gearshift lever is moved to the AutoStick position.

***13. Odometer/Trip Odometer***
The odometer shows the total distance the vehicle has been driven.

U.S. federal regulations require that upon transfer of vehicle ownership, the seller certify to the purchaser the correct mileage that the vehicle has been driven. Therefore, if the odometer reading is changed during repair or replacement, be sure to keep a record of the reading before and after the service so that the correct mileage can be determined.

Downloaded from www.Manualslib.com manuals search engine

The two trip odometers show individual trip mileage. To switch from odometer to trip odometers, press and release the Trip Odometer button. To reset a trip odometer, display the desired trip odometer to be reset then push and hold the button until the display resets (approximately 2 seconds).

***Loose Fuel Filler Cap***

If the vehicle diagnostic system determines that the fuel filler cap is loose, improperly installed, or damaged, GASCAP will be displayed in the instrument cluster odometer. Tighten the fuel filler cap properly and press the odometer reset button to turn the GASCAP message off. If the problem continues, the message will appear the next time the vehicle is started. See Section 7 of this manual for more information.

***14. Cruise Indicator***

This display indicator shows that the Speed Control System is ON.

***15. Malfunction Indicator Light***

This light is part of an onboard diagnostic system called OBD that monitors engine and automatic transmission control systems. The light will illuminate when the key is in the ON position before engine start. If the bulb does not come on when turning the key from OFF to ON, have the condition checked promptly.

Certain conditions such as a loose or missing gas cap, poor fuel quality, etc. may illuminate the light after engine start. The vehicle should be serviced if the light stays on through several of your typical driving cycles. In most situations the vehicle will drive normally and will not require towing.

The Malfunction Indicator Light flashes to alert you to serious conditions that could lead to immediate loss of power or severe catalytic converter damage. The vehicle should be serviced as soon as possible if this occurs.



Downloaded from www.Manualslib.com manuals search engine

*16. High Beam Light*

This light shows that the headlights are on high beam. Pull the Multi-Function lever towards the steering wheel to switch the headlights from high or low beam.

*17. Navigation Screen — If Equipped*

The navigation system provides maps, turn identification, selection menus and instructions for selecting a variety of destinations and routes. Refer to your "Navigation User's Manual" for detailed operating instructions.

*18. Front Fog Light Indicator — If Equipped*

This light shows the front fog lights are ON.

*19. Oil Pressure Warning Light*

This light shows low engine oil pressure. The light should turn on momentarily when the engine is started. If the light turns on while driving, stop the vehicle and shut off the engine as soon as possible. A continuous chime will sound when this light turns on.

Do not operate the vehicle until the cause is corrected. This light does not show how much oil is in the engine. The engine oil level must be checked under the hood.

*20. Seat Belt Reminder Light*

When the ignition switch is first turned ON, this light will turn on for 5 to 8 seconds as a bulb check. During the bulb check, if the driver's seat belt is unbuckled, a chime will sound. After the bulb check or when driving, if the driver seat belt remains unbuckled, the Seat Belt Warning Light will flash or remain on continuously. Refer to "Enhanced Driver Seat Belt Reminder System (BeltAlert™)" in the Occupant Restraints section for more information.

Downloaded from www.Manualslib.com manuals search engine

*21. Tire Pressure Monitoring Telltale Lamp — If Equipped*

Each tire, including the spare (if provided), should be checked monthly when cold and inflated to the inflation pressure recommended by the vehicle manufacturer on the vehicle placard or tire inflation pressure label. (If your vehicle has tires of a different size than the size indicated on the vehicle placard or tire inflation pressure label, you should determine the proper tire inflation pressure for those tires.)

As an added safety feature, your vehicle has been equipped with a tire pressure monitoring system (TPMS) that illuminates a low tire pressure telltale when one or more of your tires is significantly under-inflated. Accordingly, when the low tire pressure telltale illuminates, you should stop and check your tires as soon as possible, and inflate them to the proper pressure. Driving on a significantly under-inflated tire causes the tire to overheat and can lead to tire failure. Under-inflation also reduces fuel efficiency and tire tread life, and may affect the vehicle's handling and stopping ability.

Please note that the TPMS is not a substitute for proper tire maintenance, and it is the driver's responsibility to maintain correct tire pressure, even if under-inflation has not reached the level to trigger illumination of the TPMS low tire pressure telltale.



*22. Airbag Light*

This light turns on and remains on for 6 to 8 seconds as a bulb check when the ignition switch is first turned ON. If the light is not on during starting, stays on, or turns on while driving, have the system inspected by an authorized dealer as soon as possible.

Downloaded from www.Manualslib.com manuals search engine

*23. Electronic Vehicle Information Center Display — If Equipped*

When the appropriate conditions exist, this display shows the Electronic Vehicle Information Center (EVIC) messages.

*24. Engine Temperature Warning Light*

This light warns of an overheated engine condition. If this light is accompanied by a continuous chime, the engine temperature is critically hot, and the vehicle should be turned off immediately. The vehicle should be serviced as soon as possible.

*25. Liftgate Ajar — If Equipped*

This light turns on if the liftgate is not completely closed.

*26. Door Ajar Light — If Equipped*

This light turns on if a door is not completely closed.

*27. Washer Fluid Light — If Equipped*

This light turns on when the washer fluid level falls below approximately 1/4 filled. The light will remain on until fluid is added.

## ELECTRONIC VEHICLE INFORMATION CENTER (EVIC) — IF EQUIPPED

The Electronic Vehicle Information Center (EVIC) consists of the following:

- Vehicle information warning message displays
- Tire Pressure Monitor System — If Equipped
- Customer programmable features
- Compass display
- Mini-Trip functions

Downloaded from www.Manualslib.com manuals search engine

Pressing the MENU button will change the displayed programming features. Pressing the STEP button will display the available choices. Pressing the MENU button a second time accepts a selected choice.

When the appropriate conditions exist, the Electronic Vehicle Information Center (EVIC) displays the following messages.

- LEFT/RIGHT TURN SIGNAL ON (with a continuous warning chime)
- INVALID KEY & FOB (with a single chime)
- PARK ASSIST DISABLED
- SERVICE PARK ASSIST SYSTEM
- SERVICE IMMOBILIZER (with a single chime)
- KEY FOB BATTERY LOW (with a single chime)
- KEY & FOB PROGRAMMED (with a single chime)
- PROGRAM KEY & FOB
- MEMORY #1/#2 POSITION SET (with a single chime)
- MEMORY #1/#2 POS SELECTED
- MEMORY SYSTEM DISABLED VEHICLE NOT IN PARK (with a single chime)
- SET INHIBITED DUE TO MOTION (with a single chime)
- FOB LINKED (with a single chime)
- FOB UNLINKED (with a single chime)
- PARK BRAKE ENGAGED (with a single chime)
- LOW BRAKE FLUID (with a single chime)
- LOW FUEL (with a single chime)
- MENU IN PARK ONLY
- LIST # ALERT MESSAGES



Downloaded from www.Manualslib.com manuals search engine

- UNLOCK TO OPEN LIFTGATE (with a single chime)
- PUT IN PARK FOR LIFTGATE (with a single chime)
- TOO COLD FOR PWR LIFTGATE (with a single chime)
- TOO HOT FOR PWR LIFTGATE (with a single chime)
- PERFORM SERVICE (with a single chime)
- LEFT/RIGHT FRONT DOOR AJAR (one or more, with a single chime if speed is above 1 mph)
- LEFT/RIGHT REAR DOOR AJAR (one or more, with a single chime if speed is above 1 mph)
- DOOR(S) AJAR (with a single chime)
- DOOR(S) AND GATE AJAR (with a single chime)
- LIFT GATE AJAR (with a single chime if speed is above 1 mph)
- WASHER FLUID LOW (with a single chime)
- PEDAL ADJUST DISABLED CRUISE ENGAGED
- PEDAL ADJUST DISABLED VEHICLE IN REVERSE
- CHANNEL 1, 2, OR 3 TRANSMIT (with a single chime)
- CHANNEL 1, 2, OR 3 TRAINING (with a single chime)
- CHANNEL 1, 2, OR 3 TRAINED (with a single chime)
- CLEARING CHANNELS
- CHANNELS CLEARED
- CHANNELS DEFAULTED
- DID NOT TRAIN

Downloaded from www.Manualslib.com manuals search engine

- 1,2,3 OR 4 TIRE(S) LOW PRESSURE (Refer to "Tire Pressure Monitor System" in the "Starting And Operating, Tire Section")
- CHECK TPM SYSTEM (Refer to "Tire Pressure Monitor System" in the "Starting And Operating, Tire Section")
- TCS SUSPENDED (Traction Control System, with a graphic and single chime)
- TCS ACTIVE (Traction Control System, with a graphic)
- SERVICE TCS SYSTEM (Traction Control System, with a graphic and single chime)

## Customer Programmable Features — If Equipped

Press the MENU button until one of the following display choices appears:

**Language?**

When in this display you may select one of three languages for all display nomenclature, including the trip computer functions and navigation system. Press the STEP button while in this display selects English, Francais, or Espanol. As you continue the displayed information will be shown in the selected language.

**Park Assist System? ON/OFF**

When this feature is selected the system scans for objects behind the vehicle using four sensors located in the rear bumper. Objects can be detected from up to 71 inches (180 cm). Pressing the "STEP" button while in this display will disable/enable the Rear Park Assist System. The EVIC will display the following message: PARK



Downloaded from www.Manualslib.com manuals search engine

ASSIST DISABLED after the feature has been disabled and SERVICE PARK ASSIST SYSTEM if there is a problem with the system.

**Display U.S. or Metric?**
Pressing the US/M button will change the EVIC, odometer, navigation system and A/C Control units from US to Metric.

**Use factory Settings?**
When in this display you may select to use the factory settings and no programmable features will be offered.

**Auto Door Locks?**
When this feature is selected, all doors and the liftgate lock automatically when the speed of the vehicle reaches 15 mph (25 km/h). Pressing the STEP button when in this display will select "Yes" or "No."

**Auto Unlock On Exit?**
When this feature is selected all the vehicle's doors will unlock when the driver's door is opened if the vehicle is stopped and the transmission is in P (Park) or N (Neutral) position. Pressing the STEP button when in this display will select "Yes" or "No."

**Remote Unlock Driver's Door 1st?**
When this feature is selected only the driver's door will unlock on the first press of the remote keyless entry unlock button and require a second press to unlock the remaining locked doors and liftgate. When **REMOTE UNLOCK ALL DOORS** is selected all of the doors and the liftgate will unlock at the first press of the remote keyless entry unlock button. Pressing the STEP button when in this display will select DRIVER'S DOOR 1ST or ALL DOORS.

Downloaded from www.Manualslib.com manuals search engine

**Remote Linked To Memory? (Available with Memory Seat Only)**
When this feature is selected the memory seat, mirror, and radio settings will return to the memory set position when the remote keyless entry "Unlock" button is pressed. If this feature is not selected then the memory seat, mirror, and radio settings can only return to the memory set position using the door mounted switch. Pressing the STEP button when in this display will select "Yes" or "No."

**Sound Horn On Lock?**
When this feature is selected a short horn sound will occur when the remote keyless entry "Lock" button is pressed. This feature may be selected with or without the flash lights on lock/unlock feature. Pressing the STEP button when in this display will select "Yes" or "No."

**Flash Lights On Lock/Unlock?**
When this feature is selected, the front and rear turn signals will flash when the doors are locked or unlocked using the remote keyless entry transmitter. This feature may be selected with or without the sound horn on lock feature selected. Pressing the STEP button when in this display will select "Yes" or "No."



**Headlamp Delay**
When this feature is selected the driver can choose, when exiting the vehicle, to have the headlamps remain on for 30, 60, or 90 seconds, or not remain on. Pressing the STEP button when in this display will select 30, 60, 90, or OFF.

**Headlamp On With Wipers? (Available with Auto Headlights Only)**
When this feature is selected and the headlight switch has at least once been moved to the AUTO position, the headlights will turn on in approximately 10 seconds when the wipers are turned on. The headlights will also

Downloaded from www.Manualslib.com manuals search engine

turn off when the wipers are turned off if they were turned on in this way. Pressing the STEP button when in this display will select "Yes" or "No."

**NOTE:** Turning the headlights on during the daytime causes the instrument panel lights to dim. To increase the brightness, refer to "Lights" in this section.

**Service Interval**
When this feature is selected a service interval between 2,000 miles (3 200 km) and 6, 000 miles (10 000 km) in 500 mile (800 km) increments may be selected. Pressing the STEP button when in this display will select distances between 2,000 miles (3 200 km) and 6, 000 miles (10 000 km) in 500 mile (800 km) increments.

**Reset Service Distance (Displays Only if Service Interval was Changed)**
When this feature is selected the current accumulated service distance can be reset to the newly selected service interval. Pressing the STEP button when in this display will select "Yes" or "No."

**Power Accessory Delay?**
When this feature is selected, the power window switches, radio, hands–free system, DVD video system, power sunroof, and power outlets will remain active for up to 45 seconds after the ignition switch has been turned off. Opening a vehicle door or liftgate will cancel this feature.

**Easy Exit Seat? (Available with Memory Seat Only)**
This feature provides automatic driver's seat positioning which will enhance driver mobility out of and into the vehicle.

Downloaded from www.Manualslib.com manuals search engine

The Easy Entry Easy Exit feature is not enabled when the vehicle is delivered from the factory. The Easy Entry Easy Exit feature is enabled (or later disabled) through the programmable features in the Electronic Vehicle Information Center (EVIC). Pressing the STEP button when in this display will select "Yes" or "No." The seat will return to the memorized seat location (if REMOTE LINK TO MEMORY is set to YES) when the remote keyless entry transmitter is used to unlock the door. For more information refer to "Easy Entry/Exit Seat in the Driver Memory Seat section.

### Tilt Mirrors in Reverse? (Available with Memory Seat Only)

When this feature is selected the outside mirrors will move slightly downward from the present position when the vehicle is shifted into the Reverse position. The outside mirrors will then return to the original position when the vehicle is shifted out of Reverse position. Pressing the STEP button when in this display will select ″Yes″ or ″No″.

### Compass Display — If Equipped

This display provides one of eight compass readings to indicate the direction the vehicle is facing.



#### Automatic Compass Calibration

This compass is self calibrating which eliminates the need to manually set the compass. When the vehicle is new, the compass may appear erratic and the EVIC will display "COMPASS CALIBRATING" until the compass is calibrated. The compass will calibrate automatically after approximately 40 seconds if no buttons are pressed and the vehicle is in Park. You may also calibrate the compass by completing one 360° turn in an area free from large metal or metallic objects, the "COMPASS CALIBRATING" EVIC message will turn off and the compass will function normally.

Downloaded from www.Manualslib.com manuals search engine

**Manual Compass Calibration**

If the compass appears erratic and the "COMPASS CALIBRATING" message does not appear in the EVIC display, you must put the compass into the Calibration Mode manually.

**To put into a Calibration Mode:** Turn on the ignition switch and set the display to Compass. Press the RESET button for at least 10 seconds until the "COMPASS CALIBRATING" message appears. Release the RESET button and complete one 360° turn in an area free from large metal objects. The "COMPASS CALIBRATING" message will turn off and the compass will function normally.

**Compass Variance**

Compass Variance is the difference between magnetic North and Geographic North. In some areas of the country, the difference between magnetic and geographic North is great enough to cause the compass to give false readings. If this occurs, the compass variance must be set.

**NOTE:** Magnetic materials should be kept away from the overhead console.

Downloaded from www.Manualslib.com manuals search engine

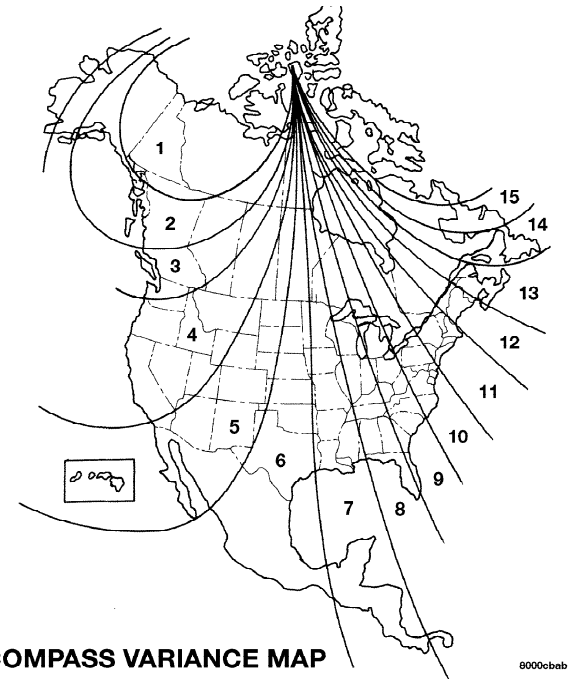


COMPASS VARIANCE MAP

**To set the variance:** Turn the ignition switch ON and set the display to Compass. Press the RESET button for approximately 5 seconds but no more than 10 seconds. The "COMPASS VARIANCE" message and the last variance zone number will be displayed. Press the STEP button to select the proper variance zone as shown in the map. Press the RESET button to set the new variance zone and resume normal operation.



## Mini-Trip Functions — If Equipped

This displays information on the following:

- *Average Fuel Economy (ECO AVG)*

Shows the average fuel economy since the last reset. The minimum average fuel economy that will be displayed on reset is 0.3 mpg.

- *Distance To Empty (DTE)*

Shows the estimated distance that can be travelled with the fuel remaining in the tank. This estimated distance is determined using the MPG for the last few minutes.

Downloaded from www.Manualslib.com manuals search engine

- *Off Mode*

Shows a blank display.

- *Step Button*

Push this button to cycle through all the Mini-trip functions.

**To Reset The Display**

Pressing and releasing the Reset button once will clear the resettable function currently being displayed. The resettable function is average fuel economy. Reset will only occur if the resettable function is currently being displayed.

## SETTING THE ANALOG CLOCK

To set the analog clock at the top center of the instrument panel, press and hold the button until the setting is correct.

## ELECTRONIC DIGITAL CLOCK

The clock and radio each use the display panel built into the radio. A digital readout shows the time in hours and minutes whenever the ignition switch is in the ON or ACC position and the time button is pressed.

When the ignition switch is in the OFF position, or when the radio frequency is being displayed, time keeping is accurately maintained.

### Clock Setting Procedure

1. Turn the ignition switch to the ON or ACC position and press the time button. Using the tip of a ballpoint pen or similar object, press either the hour (H) or minute (M) buttons on the radio.

2. Press the H button to set hours or the M button to set minutes. The time setting will increase each time you press a button.

Downloaded from www.Manualslib.com manuals search engine

## SALES CODE RAH—AM & FM STEREO RADIO WITH CD PLAYER AND CD/DVD CHANGER CONTROLS

**NOTE:** The radio sales code is located on the lower left side of your radio faceplate.

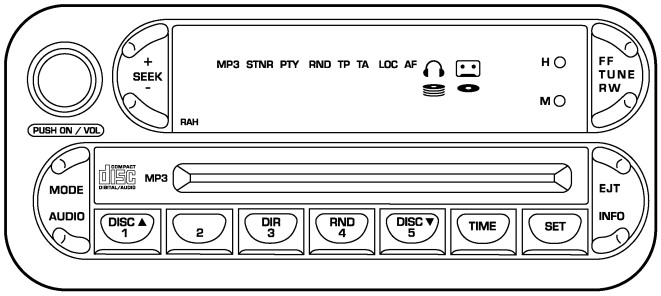


8141b8a1

**RAH radio**

## Radio Operation

### Power/Volume Control

Press the ON/VOL control to turn the radio on. Turn the volume control clockwise to increase the volume.

**NOTE:** Power to operate the radio is supplied through the ignition switch. It must be in the ON or ACC position to operate the radio.

### PTY (Program Type)

Pressing the INFO button once while in FM mode will turn on the PTY mode for 5 seconds. If no action is taken during the 5 second time out, the PTY icon will turn off. Pressing the TUNE button within 5 seconds will allow the program format type to be selected. Many radio stations do not currently broadcast PTY information.



Downloaded from www.Manualslib.com manuals search engine

Toggle the TUNE button to select the following format types:

| Program Type | Radio Display |
|---|---|
| Adult Hits | Adlt Hit |
| Classical | Classicl |
| Classic Rock | Cls Rock |
| College | College |
| Country | Country |
| Information | Inform |
| Jazz | Jazz |
| Foreign Language | Language |
| News | News |
| Nostalgia | Nostalga |
| Oldies | Oldies |
| Personality | Persnlty |
| Public | Public |
| Rhythm and Blues | R & B |
| Religious Music | Rel Musc |
| Religious Talk | Rel Talk |
| Rock | Rock |
| Soft | Soft |
| Soft Rock | Soft Rck |
| Soft Rhythm and Blues | Soft R&B |
| Sports | Sports |
| Talk | Talk |
| Top 40 | Top 40 |
| Weather | Weather |

By pressing the SEEK button when the PTY icon is displayed, the radio will be tuned to the next frequency station with the same selected PTY name. The PTY function only operates when in the FM and Satellite (if equipped) modes.

Downloaded from www.Manualslib.com manuals search engine

The radio display will flash "SEEK" and the selected PTY program type when searching for the next PTY station. If no station is found with the selected PTY program type, the radio will return to the last preset station.

If a preset button is activated while in the PTY (Program Type) mode, the PTY mode will be exited and the radio will tune to the preset station.

**Mode**
Press the MODE button to select between, AM, FM, CD, CD/DVD changer or the Satellite Radio (if equipped). When the Satellite Radio (if equipped) is selected "SA" will appear in your radio display.

A disc may remain in the radio while in the Satellite or radio mode.

**Seek**
Press and release the SEEK button to search for the next station in either the AM, FM or Satellite mode. Press the top of the button to seek up and the bottom to seek down. The radio will remain tuned to the new station until you make another selection. Holding the button in will bypass stations without stopping until you release it.

**Tuning**
Press the TUNE control up or down to increase or decrease the frequency. If you press and hold the button, the radio will continue to tune until you release the button. The frequency will be displayed and continuously updated while the button is pressed.

**Balance**
The Balance control adjusts the left-to-right speaker balance. Press the AUDIO button, select BALANCE, then press SEEK + or SEEK − to adjust the balance.

**Fade**
The Fade control provides for balance between the front and rear speakers. Press the AUDIO button, select FADE, then press SEEK + or SEEK − to adjust the fade balance.



Downloaded from www.Manualslib.com manuals search engine

**Tone Control**
The Bass and/or Treble controls sound for the desired tone. Press the AUDIO button, select Bass or TREBLE, then press SEEK + or SEEK − to increase or decrease amplification of the band.

**To Set The Radio Push-Button Memory**
When you are receiving a station that you wish to commit to push-button memory, press the SET button. SET 1 will show in the display window. Select the push-button you wish to lock onto this station and press and release that button. If a station is not selected within 5 seconds after pressing the SET button, the station will continue to play but will not be locked into push-button memory.

You may add a second station to each push-button by repeating the above procedure with this exception: Press the SET button twice and SET 2 will show in the display window. Each button can be set for SET 1 and SET 2 in both AM and FM. This allows a total of 10 AM and 10 FM stations to be locked into memory. You can recall the stations stored in SET 2 memory by pressing the push-button twice.

**To Change From Clock To Radio Mode**
Press the TIME button to change the display between radio frequency and time.

**General Information**
This radio complies with Part 15 of FCC rules and with RSS-210 of Industry Canada. Operation is subject to the following conditions:

1. This device may not cause harmful interference,

2. This device must accept any interference received, including interference that may cause undesired operation.

Downloaded from www.Manualslib.com manuals search engine

**NOTE:** Changes or modifications not expressively approved by the party responsible for compliance could void the user's authority to operate the equipment.

## CD Player Operation

**NOTE:**

- The ignition switch must be in the ON or ACC position and the volume control ON before the CD player will operate.
- This Radio is capable of playing compact discs (CD), recordable compact discs (CD-R), rewritable compact discs (CD-RW) compact discs with MP3 tracks and multisession compact discs with CD and MP3 tracks.

### Inserting The Compact Disc

**CAUTION!**

**This CD player will accept only 4–3/4 inch (12cm) discs only. The use of other sized discs may damage the CD player mechanism.**



You may either insert or eject a disc with the radio OFF.

If you insert a disc with the ignition ON and the radio OFF, the display will show the time of day. If you insert a disc with the ignition OFF, the display will show the time of day for about 5 seconds, then go out.

If the power is ON, the unit will switch from radio to CD mode and begin to play when you insert the disc. The display will show the track number and index time in minutes and seconds. Play will begin at the start of track one.

Downloaded from www.Manualslib.com manuals search engine

**Seek**
Press the top of the SEEK button for the next selection on the CD. Press the bottom of the button to return to the beginning of the current selection, or return to the beginning of the previous selection if the CD is within the first 10 seconds of the current selection.

**EJT — Eject**
Press the EJT button and the disc will unload and move to the entrance for easy removal. The unit will switch to the radio mode.

If you do not remove the disc within 15 seconds, it will be reloaded. The radio mode will continue to appear.

The disc can be ejected with the radio OFF.

**FF/TUNE/RW**
Press FF (Fast Forward) and the CD player will begin to fast forward until FF is released. The RW ( Reverse) button works in a similar manner.

**RND — Random Play**
Press the RND button while the CD is playing to activate Random Play. This feature plays the selections on the compact disc in random order to provide an interesting change of pace.

Press the SEEK button to move to the next randomly selected track.

Press TUNE FF to fast forward through the tracks. Press the FF button a second time to stop the fast forward feature. If TUNE RW is pressed, the current track will reverse to the beginning of the track and begin playing.

Press the RND button a second time to stop Random Play.

Downloaded from www.Manualslib.com manuals search engine

## CD/DVD Changer Operation

Press the MODE button to select between the CD player and the optional remote CD/DVD changer.

### Time

Press the TIME button to change the display from elapsed CD or DVD playing time to time of day.

## Notes On Playing MP3 Files

The radio can play MP3 files, however, acceptable MP3 file recording media and formats are limited. When writing MP3 files, pay attention to the following restrictions.

### Supported media (disc types)

The MP3 file recording media supported by the radio are CD-ROM, CD-R and CD-RW.

### Supported medium formats (file systems)

The medium formats supported by the radio are ISO 9660 Level 1 and Level 2 and includes the Joliet extension. When reading discs recorded using formats other than ISO 9660 Level 1 and Level 2, the radio may fail to read files properly and may be unable to play the file normally. UDF and Apple HFS formats are not supported.

The radio uses the following limits for file systems:

- Maximum number of directory levels: 15
- Maximum number of files: 255
- Maximum number of folders: 100
- Maximum number of characters in file/folder names:
  - Level 1: 12 (including a separator "." and a 3-character extension)
  - Level 2: 31 (including a separator "." and a 3-character extension)



Downloaded from www.Manualslib.com manuals search engine

Multisession disc formats are supported by the radio. Multisession discs may contain combinations of normal CD audio tracks and computer files (including MP3 files). Discs created with an option such as "keep disc open after writing" are most likely multisession discs. The use of multisession for CD audio or MP3 playback may result in longer disc loading times.

**Supported MP3 file formats**

The radio will recognize only files with the *.mp3 extension as MP3 files. Non-MP3 files named with the *.mp3 extension may cause playback problems. The radio is designed to recognize the file as an invalid MP3 and will not play the file.

When using the MP3 encoder to compress audio data to an MP3 file, the bit rate and sampling frequencies in the following table are supported. In addition, variable bit rates (VBR) are also supported. The majority of MP3 files use a 44.1 kHz sampling rate and a 192, 160, 128, 96 or VBR bit rates.

| MPEG Specification | Sampling Frequency (kHz) | Bit rate (kbps) |
|---|---|---|
| MPEG-1 Audio Layer 3 | 48, 44.1, 32 | 320, 256, 224, 192, 160, 128, 112, 96, 80, 64, 56, 48, 40, 32 |
| MPEG-2 Audio Layer 3 | 24, 22.05, 16 | 160, 128, 144, 112, 96, 80, 64, 56, 48, 40, 32, 24, 16, 8 |

ID3 Tag information for artist, song title and album title are supported for version 1 ID3 tags. ID3 version 2 is not supported by the radios.

Playlist files are not supported. MP3 Pro files are not supported.

Downloaded from www.Manualslib.com manuals search engine

**Playback of MP3 files**

When a medium containing MP3 data is loaded, the radio checks all files on the medium. If the medium contains a lot of folders or files, the radio will take more time to start playing the MP3 files.

Loading times for playback of MP3 files may be affected by the following:

- Media - CD-RW media may take longer to load than CD-R media
- Medium formats - Multisession discs may take longer to load than non-multisession discs
- Number of files and folders - Loading times will increase with more files and folders

To increase the speed of disc loading, it is recommended to use CD-R media and single-session discs. To create a single-session disc, enable the Disc at Once option before writing to the disc.

## Operation Instructions - (CD Mode For MP3 Audio Play)

**SEEK Button (CD Mode For MP3 Play)**

Pressing the SEEK + button plays the next MP3 File. Pressing the SEEK − button plays the beginning of the MP3 file. Pressing the button within the first ten seconds plays the previous file.

**INFO Button (CD Mode For MP3 Play)**

Press and INFO button while playing MP3 disc. The radio scrolls through the following TAG information: Song Title, Artist, File Name, and Folder Name (if available).

Press the INFO button once more to return to ″elapsed time″ priority mode.



Downloaded from www.Manualslib.com manuals search engine

**RW/FF (CD Mode For MP3 Play)**
Press the FF side of the button to move forward through the MP3 selection. Press the RW side of the button to move back through the MP3 selection.

**AM/FM Button (CD Mode For MP3 Play)**
Switches back to Radio mode.

**RND Button (CD Mode For MP3 Play)**
Pressing this button plays files randomly.

**DIR Button (CD Mode For MP3 Play)**
Press the DIR Button to display folders, when playing an MP3 discs that have a file/folder structure. Press DISC up (button 1) or DISC down (button 5) to move through the folders. Press the SET button to select a folder

**Operating Instructions - Hands Free Phone (If Equipped)**
Refer to Hands Free Phone section of the Owner's Manual.

**Operating Instructions - Satellite Radio Mode (If Equipped)**
Refer to the Satellite Radio section of the Owner's Manual.

**Operating Instructions - Video Entertainment System (VES®) (If Equipped)**
Refer to 6 Disc CD/DVD Changer (RDV) section of the Owner's Manual.

Downloaded from www.Manualslib.com manuals search engine

## SALES CODE REV AM & FM STEREO RADIO WITH CD PLAYER AND CD/DVD CHANGER CONTROLS

**NOTE:** The radio sales code is located on the lower left side of your radio faceplate.

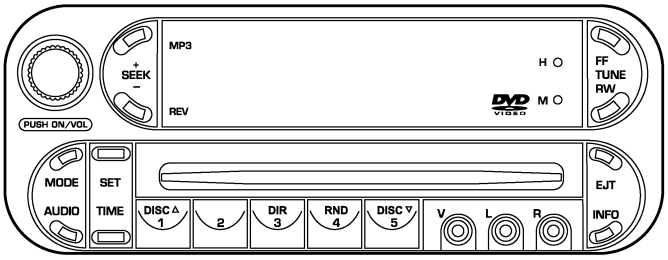


817a88ea

**REV Radio**

## Radio Operation

### Power/Volume Control

Press the ON/VOL control to turn the radio on. Turn the volume control clockwise to increase the volume.

**NOTE:** Power to operate the radio is supplied through the ignition switch. It must be in the ON or ACC position to operate the radio.

### PTY (Program Type)

Pressing the INFO button once while in FM mode will turn on the PTY mode for 5 seconds. If no action is taken during the 5 second time out, the PTY icon will turn off. Pressing the TUNE button within 5 seconds will allow the program format type to be selected. Many radio stations do not currently broadcast PTY information.



Downloaded from www.Manualslib.com manuals search engine

Toggle the TUNE button to select the following format types:

| Program Type | Radio Display |
|---|---|
| Adult Hits | Adlt Hit |
| Classical | Classicl |
| Classic Rock | Cls Rock |
| College | College |
| Country | Country |
| Information | Inform |
| Jazz | Jazz |
| Foreign Language | Language |
| News | News |
| Nostalgia | Nostalga |
| Oldies | Oldies |
| Personality | Persnlty |
| Public | Public |
| Rhythm and Blues | R & B |
| Religious Music | Rel Musc |
| Religious Talk | Rel Talk |
| Rock | Rock |
| Soft | Soft |
| Soft Rock | Soft Rck |
| Soft Rhythm and Blues | Soft R&B |
| Sports | Sports |
| Talk | Talk |
| Top 40 | Top 40 |
| Weather | Weather |

By pressing the SEEK button when the PTY icon is displayed, the radio will be tuned to the next frequency station with the same selected PTY name. The PTY function only operates when in the FM and Satellite (if equipped) modes.

Downloaded from www.Manualslib.com manuals search engine

The radio display will flash "SEEK" and the selected PTY program type when searching for the next PTY station. If no station is found with the selected PTY program type, the radio will return to the last preset station.

If a preset button is activated while in the PTY (Program Type) mode, the PTY mode will be exited and the radio will tune to the preset station.

**Mode**
Press the MODE button to select between, AM, FM, CD, CD/DVD changer or the Satellite Radio (if equipped). When the Satellite Radio (if equipped) is selected "SA" will appear in your radio display.

A disc may remain in the radio while in the Satellite or radio mode.

**Seek**
Press and release the SEEK button to search for the next station in either the AM, FM or Satellite mode. Press the top of the button to seek up and the bottom to seek down. The radio will remain tuned to the new station until you make another selection. Holding the button in will bypass stations without stopping until you release it.

**Tuning**
Press the TUNE control up or down to increase or decrease the frequency. If you press and hold the button, the radio will continue to tune until you release the button. The frequency will be displayed and continuously updated while the button is pressed.

**Balance**
The Balance control adjusts the left-to-right speaker balance. Press the AUDIO button, select BALANCE, then press SEEK + or SEEK − to adjust the balance.

**Fade**
The Fade control provides for balance between the front and rear speakers. Press the AUDIO button, select FADE, then press SEEK + or SEEK − to adjust the fade balance.



Downloaded from www.Manualslib.com manuals search engine

**Tone Control**
The Bass and/or Treble controls sound for the desired tone. Press the AUDIO button, select Bass or TREBLE, then press SEEK + or SEEK − to increase or decrease amplification of the band.

**To Set The Radio Push-Button Memory**
When you are receiving a station that you wish to commit to push-button memory, press the SET button. SET 1 will show in the display window. Select the push-button you wish to lock onto this station and press and release that button. If a station is not selected within 5 seconds after pressing the SET button, the station will continue to play but will not be locked into push-button memory.

You may add a second station to each push-button by repeating the above procedure with this exception: Press the SET button twice and SET 2 will show in the display window. Each button can be set for SET 1 and SET 2 in both AM and FM. This allows a total of 10 AM and 10 FM stations to be locked into memory. You can recall the stations stored in SET 2 memory by pressing the push-button twice.

**To Change From Clock To Radio Mode**
Press the TIME button to change the display between radio frequency and time.

**General Information**
This radio complies with Part 15 of FCC rules and with RSS-210 of Industry Canada. Operation is subject to the following conditions:

1. This device may not cause harmful interference,

2. This device must accept any interference received, including interference that may cause undesired operation.

Downloaded from www.Manualslib.com manuals search engine

**NOTE:** Changes or modifications not expressively approved by the party responsible for compliance could void the user's authority to operate the equipment.

## CD Player Operation

**NOTE:**

- The ignition switch must be in the ON or ACC position and the volume control ON before the CD player will operate.
- This Radio is capable of playing compact discs (CD), recordable compact discs (CD-R), rewritable compact discs (CD-RW) compact discs with MP3 tracks and multisession compact discs with CD and MP3 tracks.

### Inserting The Compact Disc

**CAUTION!**

**This CD player will accept only 4–3/4 inch (12cm) discs only. The use of other sized discs may damage the CD player mechanism.**



You may either insert or eject a disc with the radio OFF.

If you insert a disc with the ignition ON and the radio OFF, the display will show the time of day. If you insert a disc with the ignition OFF, the display will show the time of day for about 5 seconds, then go out.

If the power is ON, the unit will switch from radio to CD mode and begin to play when you insert the disc. The display will show the track number and index time in minutes and seconds. Play will begin at the start of track one.

Downloaded from www.Manualslib.com manuals search engine

**Seek**
Press the top of the SEEK button for the next selection on the CD. Press the bottom of the button to return to the beginning of the current selection, or return to the beginning of the previous selection if the CD is within the first 10 seconds of the current selection.

**EJT — Eject**
Press the EJT button and the disc will unload and move to the entrance for easy removal. The unit will switch to the radio mode.

If you do not remove the disc within 15 seconds, it will be reloaded. The radio mode will continue to appear.

The disc can be ejected with the radio OFF.

**FF/TUNE/RW**
Press FF (Fast Forward) and the CD player will begin to fast forward until FF is released. The RW ( Reverse) button works in a similar manner.

**RND — Random Play**
Press the RND button while the CD is playing to activate Random Play. This feature plays the selections on the compact disc in random order to provide an interesting change of pace.

Press the SEEK button to move to the next randomly selected track.

Press TUNE FF to fast forward through the tracks. Press the FF button a second time to stop the fast forward feature. If TUNE RW is pressed, the current track will reverse to the beginning of the track and begin playing.

Press the RND button a second time to stop Random Play.

Downloaded from www.Manualslib.com manuals search engine

### CD/DVD Changer Operation

Press the MODE button to select between the CD player and the optional remote CD/DVD changer.

**Time**

Press the TIME button to change the display from elapsed CD or DVD playing time to time of day.

### Notes On Playing MP3 Files

The radio can play MP3 files, however, acceptable MP3 file recording media and formats are limited. When writing MP3 files, pay attention to the following restrictions.

**Supported media (disc types)**

The MP3 file recording media supported by the radio are CD-ROM, CD-R and CD-RW.

**Supported medium formats (file systems)**

The medium formats supported by the radio are ISO 9660 Level 1 and Level 2 and includes the Joliet extension. When reading discs recorded using formats other than ISO 9660 Level 1 and Level 2, the radio may fail to read files properly and may be unable to play the file normally. UDF and Apple HFS formats are not supported.

The radio uses the following limits for file systems:

- Maximum number of directory levels: 15
- Maximum number of files: 255
- Maximum number of folders: 100
- Maximum number of characters in file/folder names:
  - Level 1: 12 (including a separator "." and a 3-character extension)
  - Level 2: 31 (including a separator "." and a 3-character extension)



Downloaded from www.Manualslib.com manuals search engine

Multisession disc formats are supported by the radio. Multisession discs may contain combinations of normal CD audio tracks and computer files (including MP3 files). Discs created with an option such as "keep disc open after writing" are most likely multisession discs. The use of multisession for CD audio or MP3 playback may result in longer disc loading times.

**Supported MP3 file formats**

The radio will recognize only files with the *.mp3 extension as MP3 files. Non-MP3 files named with the *.mp3 extension may cause playback problems. The radio is designed to recognize the file as an invalid MP3 and will not play the file.

When using the MP3 encoder to compress audio data to an MP3 file, the bit rate and sampling frequencies in the following table are supported. In addition, variable bit rates (VBR) are also supported. The majority of MP3 files use a 44.1 kHz sampling rate and a 192, 160, 128, 96 or VBR bit rates.

| MPEG Specification | Sampling Frequency (kHz) | Bit rate (kbps) |
|---|---|---|
| MPEG-1 Audio Layer 3 | 48, 44.1, 32 | 320, 256, 224, 192, 160, 128, 112, 96, 80, 64, 56, 48, 40, 32 |
| MPEG-2 Audio Layer 3 | 24, 22.05, 16 | 160, 128, 144, 112, 96, 80, 64, 56, 48, 40, 32, 24, 16, 8 |

ID3 Tag information for artist, song title and album title are supported for version 1 ID3 tags. ID3 version 2 is not supported by the radios.

Playlist files are not supported. MP3 Pro files are not supported.

Downloaded from www.Manualslib.com manuals search engine

**Playback of MP3 files**

When a medium containing MP3 data is loaded, the radio checks all files on the medium. If the medium contains a lot of folders or files, the radio will take more time to start playing the MP3 files.

Loading times for playback of MP3 files may be affected by the following:

- Media - CD-RW media may take longer to load than CD-R media
- Medium formats - Multisession discs may take longer to load than non-multisession discs
- Number of files and folders - Loading times will increase with more files and folders

To increase the speed of disc loading, it is recommended to use CD-R media and single-session discs. To create a single-session disc, enable the Disc at Once option before writing to the disc.

## Operation Instructions - (CD Mode For MP3 Audio Play)

**SEEK Button (CD Mode For MP3 Play)**

Pressing the SEEK + button plays the next MP3 File. Pressing the SEEK − button plays the beginning of the MP3 file. Pressing the button within the first ten seconds plays the previous file.

**INFO Button (CD Mode For MP3 Play)**

Press and INFO button while playing MP3 disc. The radio scrolls through the following TAG information: Song Title, Artist, File Name, and Folder Name (if available).

Press the INFO button once more to return to ″elapsed time″ priority mode.



Downloaded from www.Manualslib.com manuals search engine

**RW/FF (CD Mode For MP3 Play)**
Press the FF side of the button to move forward through the MP3 selection. Press the RW side of the button to move back through the MP3 selection.

**AM/FM Button (CD Mode For MP3 Play)**
Switches back to Radio mode.

**RND Button (CD Mode For MP3 Play)**
Pressing this button plays files randomly.

**DIR Button (CD Mode For MP3 Play)**
Press the DIR Button to display folders, when playing an MP3 discs that have a file/folder structure. Press DISC up (button 1) or DISC down (button 5) to move through the folders. Press the SET button to select a folder

**Operating Instructions - Hands Free Phone (If Equipped)**
Refer to Hands Free Phone section of the Owner's Manual.

**Operating Instructions - Satellite Radio Mode (If Equipped)**
Refer to the Satellite Radio section of the Owner's Manual.

**Operating Instructions - Video Entertainment System (VES®) (If Equipped)**
Refer to 6 Disc CD/DVD Changer Manual.

Downloaded from www.Manualslib.com manuals search engine

## SALES CODE RBP—AM & FM STEREO RADIO WITH CASSETTE TAPE PLAYER, CD PLAYER, AND OPTIONAL CD/DVD CHANGER CONTROLS

**NOTE:** The radio sales code is located on the lower left side of your radio faceplate.

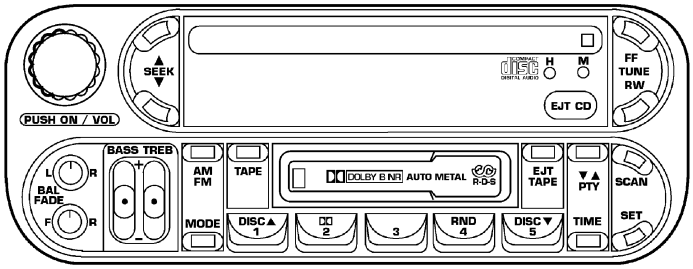


80e7c9a0

**RBP Radio**

### Radio Operation

**Power/Volume Control**

Press the ON/VOL control to turn the radio on. Turn the volume control to the right to increase the volume.

**NOTE:** Power to operate the radio is supplied through the ignition switch. It must be in the ON or ACC position to operate the radio.

**PTY (Program Type) Button**

Pressing this button once will turn on the PTY mode for 5 seconds. If no action is taken during the 5 second time out the PTY icon will turn off. Pressing the PTY button within 5 seconds will allow the program format type to be selected. Many radio stations do not currently broadcast PTY information.



Downloaded from www.Manualslib.com manuals search engine

Toggle the PTY button to select the following format types:

| Program Type | Radio Display |
|---|---|
| Adult Hits | Adlt Hit |
| Classical | Classicl |
| Classic Rock | Cls Rock |
| College | College |
| Country | Country |
| Information | Inform |
| Jazz | Jazz |
| Foreign Language | Language |
| News | News |
| Nostalgia | Nostalga |
| Oldies | Oldies |
| Personality | Persnlty |
| Public | Public |
| Rhythm and Blues | R & B |
| Religious Music | Rel Musc |
| Religious Talk | Rel Talk |
| Rock | Rock |
| Soft | Soft |
| Soft Rock | Soft Rck |
| Soft Rhythm and Blues | Soft R&B |
| Sports | Sports |
| Talk | Talk |
| Top 40 | Top 40 |
| Weather | Weather |

By pressing the SEEK button when the PTY icon is displayed, the radio will be tuned to the next frequency station with the same selected PTY name. The PTY function only operates when in the FM and Satellite (if equipped) modes.

Downloaded from www.Manualslib.com manuals search engine

The radio display will flash "SEEK" and the selected PTY program type when searching for the next PTY station. If no station is found with the selected PTY program type, the radio will return to the last preset station.

If a preset button is activated while in the PTY (Program Type) mode, the PTY mode will be exited and the radio will tune to the preset station.

Pressing PTY, then SCAN will scan the FM Band and stop at all RDS stations that broadcast the station type. Each RDS station will be played for a 5 second scan once around the FM Band and stop at the last station. The PTY icon will then turn off.

**Seek**

Press and release the SEEK button to search for the next station in either the AM or FM mode. Press the top of the button to seek up and the bottom to seek down. The radio will remain tuned to the new station until you make another selection. Holding the button in will by-pass stations without stopping until you release it.

**Scan**

Press and release the SCAN button to search for the next station in either the AM or FM mode. The radio will pause for 5 seconds at each listenable station before continuing to the next. To stop the search, press the SCAN button a second time.



**Tune**

Press the TUNE control up or down to increase or decrease the frequency. If you press and hold the button, the radio will continue to tune until you release the button. The frequency will be displayed and continuously updated while the button is pressed.

**Balance — BAL**

The Balance control adjusts the left-to-right speaker balance. Press the BAL button in and it will pop out. Adjust the balance and push the button back in.

Downloaded from www.Manualslib.com manuals search engine

**Fade**
The Fade control provides for balance between the front and rear speakers. Press the FADE button in and it will pop out. Adjust the balance and push the button back in.

**Tone Control**
The tone controls affect the BASS and TREBLE frequency bands. Each is controlled by a slider control with a detent at the mid position. Moving a control up or down increases or decreases amplification of the band. The mid position provides a balanced output.

**AM/FM Selection**
Press the AM/FM button to toggle between AM and FM mode. The operating mode will be displayed next to the station frequency. The display will show "ST" when a stereo station is received (FM only).

**To Set The Radio Push-Button Memory**
When you are receiving a station that you wish to commit to push-button memory, press the SET button. SET 1 will now show in the display window. Select the "1–5" button you wish to lock onto this station and press and release that button. If a button is not selected within 5 seconds after pressing the SET button, the station will continue to play but will not be locked into push-button memory.

You may add a second station to each push-button by repeating the above procedure with this exception: Press the SET button twice and SET 2 will show in the display window. Each button can be set for SET 1 and SET 2 in both AM and FM. This allows a total of 10 AM and 10 FM stations to be locked into push-button memory. The stations stored in SET 2 memory can be selected by pressing the push-button twice.

**Time**
Press the TIME button to change the display between radio frequency and time.

Downloaded from www.Manualslib.com manuals search engine

To set the clock, use a ballpoint pen or similar object to press the hour (H) or minute (M) buttons on the radio, The time setting will increase each time you press the button. Press any other button to exit from the clock setting mode.

**General Information**

This radio complies with Part 15 of FCC rules and with RSS-210 of Industry Canada. Operation is subject to the following conditions:

1. This device may not cause harmful interference,

2. This device must accept any interference received, including interference that may cause undesired operation.

**NOTE:** Changes or modifications not expressively approved by the party responsible for compliance could void the user's authority to operate the equipment.

## Tape Player Operation

Insert the cassette with the exposed tape side toward the right and the mechanical action of the player will gently pull the cassette into the play position.

**NOTE:** When subjected to extremely cold temperatures, the tape mechanism may require a few minutes to warm up for proper operation. Sometimes poor playback may be experienced due to a defective cassette tape. Clean and demagnetize the tape heads at least twice a year.



**Tape Side — ∇Δ/PTY**

Pressing the ∇Δ button during tape mode will cause the other side of the tape to be played. The display will confirm the selected tape play direction. The time is always displayed.

**Tape**

Press the TAPE button to select the Tape mode.

Downloaded from www.Manualslib.com manuals search engine

**Seek**
Press the SEEK button up for the next selection on the tape and down to return to the beginning of the current selection.

Press the SEEK button up or down to move the track number to skip forward or backward 1 to 7 selections. Press the SEEK button once to move 1 selection, twice to move 2 selections, etc. the display will show the total number of times the SEEK button was pushed. The SEEK function will be cancelled by pressing either the FF/RW or AM/FM button.

**Fast Forward — FF**
Press the FF button up momentarily to advance the tape in the direction that it is playing. The tape will advance until the button is pressed again or the end of the tape is reached. At the end of the tape, the tape will play in the opposite direction.

**Rewind — RW**
Press the RW button down momentarily to reverse the tape direction. The tape will rewind until the button is pressed again or until the beginning of the tape is reached. At the beginning of the tape, the tape will play in the opposite direction.

**EJT Tape**
Press the EJT TAPE button and the cassette will disengage and eject from the radio.

**Metal Tape Selection (70µs)**
If a standard 70 µ (metal) tape is inserted into the player, the player will automatically select the correct equalization.

Downloaded from www.Manualslib.com manuals search engine

**Pinch Roller Release**
If ignition power or the radio ON/OFF switch are turned off, the pinch roller will automatically retract to protect the tape from any damage. When power is restored to the tape player, the pinch roller will automatically reengage and the tape will resume play.

**Dolby Noise Reduction**
The Dolby Noise Reduction System* is on whenever the tape player is on, but may be switched on/off.

To turn the Dolby Noise Reduction System on/off: Press the Dolby NR button (button 2) after you insert the tape. The NR light in the display will go off when the Dolby System is off.

* "Dolby" noise reduction manufactured under license from Dolby Laboratories Licensing Corporation. Dolby and the double-D symbol are trademarks of Dolby Laboratories Licensing Corporation.

## CD Player Operation

**NOTE:** The ignition switch must be in the ON or ACC position and the volume control ON before the CD player will operate.

**Inserting The Compact Disc**
You may either insert or eject a disc with the radio OFF.



If you insert a disc with the ignition ON and the radio off, the display will show CD and the time of day will be displayed.

If the power is on, the unit will switch from radio to CD mode and begin to play when you insert the disc. The display will show the track number and index time in minutes and seconds. Play will begin at the start of track one.

Downloaded from www.Manualslib.com manuals search engine

**Seek**
Press the top of the SEEK button for the next selection on the CD. Press the bottom of the button to return to the beginning of the current selection, or return to the beginning of the previous selection if the CD is within the first second of the current selection.

**Scan**
Press the SCAN button to play 10 seconds of each selection. Press the SCAN button a second time to cancel this feature.

**EJT CD**
Press the EJT CD button and the disc will unload and move to the entrance for easy removal. The unit will switch to the radio mode.

If you do not remove the disc within 15 seconds, it will be reloaded. The unit will continue in radio mode.

The disc can be ejected with the radio and ignition off.

**FF/TUNE/RW**
Press FF (Fast Forward) and the CD player will begin to fast forward until FF is released. The RW (Reverse) button works in a similar manner.

**Random Play — RND/Program Button 4**
Press the RND (button 4) button while the CD is playing to activate Random Play. This feature plays the selections on the compact disc in random order to provide an interesting change of pace.

Press the top of the SEEK button to move to the next randomly selected track.

Press the RND (button 4) button a second time to stop Random Play.

**MODE**
Press the MODE button to select between the CD player, remote CD/DVD changer (if equipped), or satellite radio (if equipped).

Downloaded from www.Manualslib.com manuals search engine

To select Satellite Radio (if equipped), press the MODE button until the word SIRIUS™ appears. The following will be displayed in this order: After three seconds, the current channel name and number will be displayed for five seconds. The current program type and channel number will then be displayed for five seconds. The current channel name and number will then be displayed until an action occurs. A CD or tape may remain in the player while in the Satellite Radio mode.

**Time**
Press the TIME button to change the display from elapsed CD playing time to time of day.

### CD/DVD Changer Operation — If Equipped

**MODE**
Press the MODE button to select between the CD player, and the CD/DVD changer (if equipped).

**Disc Up/Program Button 1**
Press the DISC (button 1) button to play the next available disc.

**Random Play — RND/Program Button 4**
Press the RND (button 4) button while the CD is playing to activate Random Play. This feature plays the selections on the currently playing compact disc in random order to provide an interesting change of pace.

Press the top of the SEEK button to move to the next randomly selected track.

Press the RND (button 4) button a second time to stop Random Play.

**FF/RW — TUNE**
Press and hold the FF button for fast forward. Press and hold the RW button for fast reverse. The audio output can be heard when fast forward and fast reverse are activated.



Downloaded from www.Manualslib.com manuals search engine

**Disc Down/Program Button 5**
Press the DISC (button 5) button to play the previous disc.

**Seek**
Press the top of the SEEK button for the next selection on the CD. Press the bottom of the button to return to the beginning of the current selection, or return to the beginning of the previous selection if the CD is within the first second of the current selection.

**Time**
Press the TIME button to switch between time of day and CD track time.

**Scan**
Press the SCAN button to play 10 seconds of each track. Press the SCAN button a second time to cancel the feature.

## Remote Control Operating Instructions

**NOTE:** Aim the remote control at the radio located on the center of the instrument panel and press the desired button. Direct sunlight or objects blocking the line of sight may affect the function of the remote control.

Downloaded from www.Manualslib.com manuals search engine

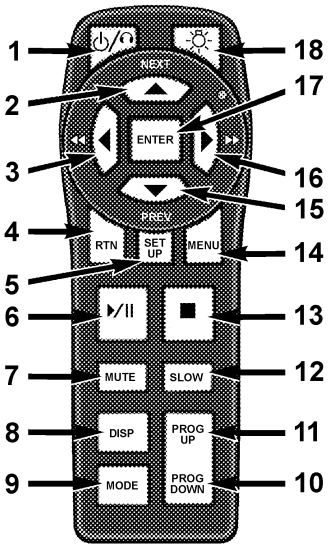


812cd578

**Remote Control**

| Remote Control Buttons |
|---|
| 1. Headphone Transmitter |
| 2. Menu Up/Next Track/Chapter |
| 3. Menu Left/Fast Rewind |
| 4. Return |
| 5. Setup |
| 6. Pause/Play |
| 7. Mute |
| 8. Display |
| 9. Mode |
| 10. Program Down - Previous Disc |
| 11. Program Up - Next Disc |
| 12. Slow |
| 13. Stop |
| 14. Menu |
| 15. Menu Down/Previous Track/Chapter |
| 16. Menu Right/Fast Forward |

4

Downloaded from www.Manualslib.com manuals search engine

| Remote Control Buttons |
| --- |
| 17. Enter |
| 18. Light |

### Headphone Transmitter Button (1)

The headphone transmitter button on the remote control and the power button on the headphones must be turned ON before sound can be heard from the headphones. On some radios the headphone symbol will flash for approximately 5 seconds in the radio display, indicating the headphones are in use.

### ARROW Buttons (2, 3, 15, 16)

These arrow buttons only function in CD/ DVD mode. Use the arrow buttons to toggle through the disc menu screen options.

### RTN Button (4)

This button only functions in CD/DVD mode. Press this button to return to the previous menu when in the disc menu mode.

### SETUP Button (5)

This button only functions in CD/DVD mode. Press the button after pressing the STOP button to access the set up menu. Use the right and left arrows to move between tabs for language, rating, mark, audio and aspect. Use the up and down arrows to move between options within each tab.

To change an item highlighted in blue, press ENTER. This should cause the highlight to turn yellow. Again, using the up and down arrows will cause the arrow to move up or down. Once the arrow is on the desired selection, press ENTER. When finished, press setup or play to return to playing the CD/DVD or Menu to return to the disc menu.

Downloaded from www.Manualslib.com manuals search engine

### PAUSE/PLAY Button (6)
This button only functions in DVD video mode. Press this button once to pause the video, press a second time to play the video.

### MUTE Button (7)
No function.

### DISP Button (8)
This button only functions in DVD video mode. When a DVD video is playing, press this button to display the play menu options.

### MODE Button (9)
This button changes between available modes and can be heard in the headphones.

### PROG UP/DOWN Buttons (10, 11)
PROG UP selects the next disc loaded in the changer. PROG DOWN selects the previous disc loaded in the changer.

### SLOW Button (12)
This button only functions in DVD video mode. Press this button to advance the video. If the DVD is paused, pressing this button will advance the video frame by frame.

### STOP Button (13)
This button only functions in DVD video mode. Press this button to stop the DVD.

### MENU Button (14)
This button only functions in DVD video mode. Press this button to select the DVD disc menu.



Downloaded from www.Manualslib.com manuals search engine

### NEXT/PREV Buttons (2, 15)

Press the up arrow or the NEXT button for the next chapter or track on the disc. Press the down arrow or PREV button to return to the beginning of the current chapter or track. Press the down arrow or PREV button twice within two seconds to return to the previous chapter or track. Each press of the NEXT/PREV button up or down will toggle through the chapters or tracks.

### FF/RW Buttons (3, 16)

Press and hold FF (Fast Forward) once and the CD/DVD changer will begin to fast forward until the FF button is released. The RW (Reverse) button works in a similar manner.

### ENTER Button (17)

This button only functions in DVD video mode. Use the ENTER button to enter selections from the menu screens. Use the arrow buttons to toggle through the menu screen options.

### Light Button (18)

Pressing this button illuminates the buttons on the remote control.

### Remote Control Battery Service

- To replace the batteries for the remote control slide the cover rearward.

The replacement batteries for the remote control are two AAA batteries.

Downloaded from www.Manualslib.com manuals search engine

## Operating Instructions — Video Screen

Push up on the release button to lower the video screen.

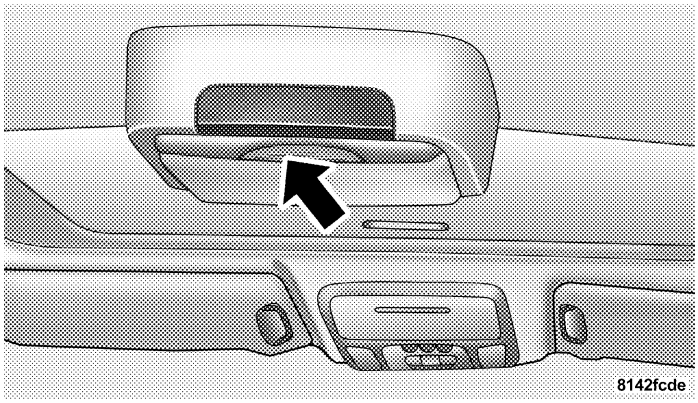


**Screen handle**

**1. Screen Width Button**

Changes the width of the screen picture.

**2. Enter Button**

This button will enter the selection from the on-screen menu.



Downloaded from www.Manualslib.com manuals search engine

**3. Brightness Button**

Changes the brightness of the screen picture.

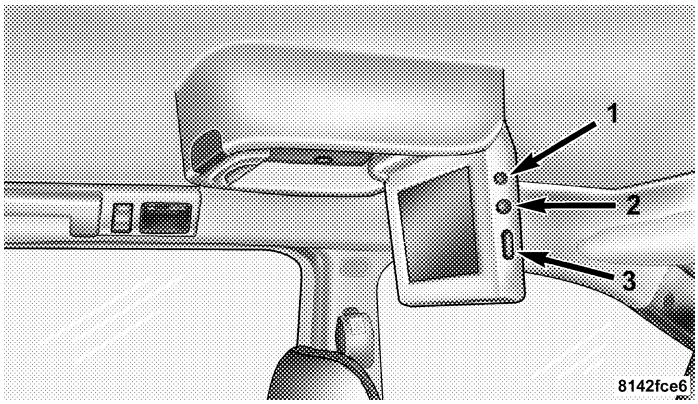


**Screen Button**

## Operating Instructions — Headphones

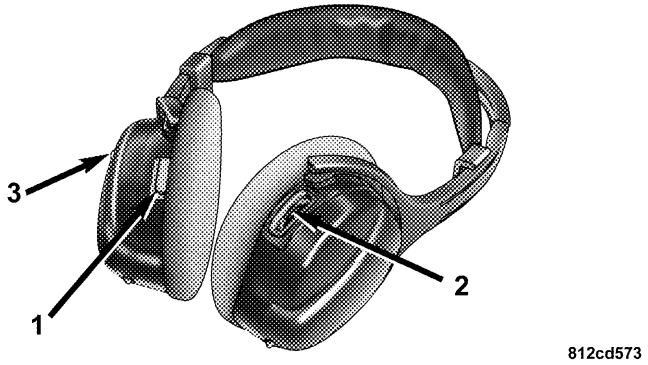


**Rear Headphones**

1. Power Button
2. Volume Control
3. Power Indicator

Downloaded from www.Manualslib.com manuals search engine

**Power Button**
Pressing the power button will turn the headphones ON/OFF. An indicator light will illuminate on the headphone earpiece to indicate the headphones are ON.

**NOTE:**
- The headphones will turn off automatically in approximately 3 minutes if they lose the signal form the system or when the radio or rear audio/video system is turned off.

**Volume Control**
Rotate the volume control to adjust the volume to the desired listening level.

**Headphone Battery Service**

- Press the button at the bottom of each headphone earpiece and lift the cover upward.

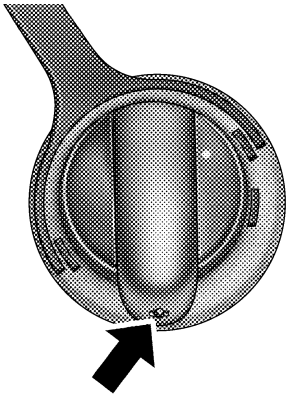


**Headphone Battery Service**

- Replace the battery in each earpiece and reinstall the cover. The headphones require two AAA batteries.



Downloaded from www.Manualslib.com manuals search engine

**General Information**

This device complies with part 15 of the FCC rules and RSS 210 of Industry Canada. Operation is subject to the following two conditions: (1) This device may not cause harmful interference and (2) This device must accept any interference received, including interference that may cause undesired operation.

If you do not hear sound coming from the headphones, check for the following conditions:

1. Rear Seat Audio/Video System and headphones are on. Press the headphone transmitter button (1) on the remote control and the power button on the headphones. An indicator light will illuminate on the headphone earpiece to indicate the headphones are ON.

2. Weak batteries in the headphones.

3. Direct sunlight or objects blocking the line of sight between the headphone transmitter on the video screen and the headphones.

### Operating Instructions — MP3 Player, Portable Walkman

An MP3 player can be connected to the audio system. Connect the cables to the RCA jacks located on the front of the CD/DVD changer.

**NOTE:** Follow the manufactures instructions for the correct colors when connecting the RCA cables.

Downloaded from www.Manualslib.com manuals search engine

### Operating Instructions — Video Games/Camcorders

A video game unit or camcorder can be connected to the rear audio/video system. Connect the cables to the RCA jacks located on the front of the CD/DVD changer.

**NOTE:** To operate a video game unit a DC to AC adapter may be required, plug the adapter into any power outlet.

Follow the manufactures instructions for the correct colors when connecting the RCA cables.

**NOTE:** MP3 player's, video game systems, camcorders connected to the RCA jacks and CD's or DVD's inserted into the radio, can be heard through the headphones or the cabin when AUX Mode is selected.

## SATELLITE RADIO — IF EQUIPPED

Satellite radio uses direct satellite to receiver broadcasting technology to provide clear digital sound, coast to coast. The subscription service provider is Sirius™ Satellite Radio. This service offers up to 100 channels of music, sports, news, entertainment, and programming for children, directly from its satellites and broadcasting studios.



### System Activation

To activate your Sirius Satellite Radio service, call the toll-free number 888-539-7474, or visit the Sirius web site at www.sirius.com. Please have the following information available when activating your system:

1. The Electronic Serial Number/Sirius Identification Number (ESN/SID).
2. Credit card information.
3. Your Vehicle Identification Number.

Downloaded from www.Manualslib.com manuals search engine

## Electronic Serial Number/Sirius Identification Number (ENS/SID)

The Electronic Serial Number/Sirius Identification Number is needed to activate your Sirius Satellite Radio system. To access the ESN/SID, refer to the following steps:

### ESN/SID Access With RBB, REV and RBK Radios

With the ignition switch in the ACCESSORY position and the radio OFF, press the Tape Eject or CD Eject (depending on the radio type) and Time buttons simultaneously for 3 seconds. The first four digits of the twelve-digit ESN/SID number will be displayed. Press the SEEK UP button to display the next four digits. Continue to press the SEEK UP button until all twelve ESN/SID digits have been displayed. The SEEK DOWN will page down until the first four digits are displayed. The radio will exit the ESN/SID mode when any other button is pushed, the ignition is turned OFF, or 5 minutes has passed since any button was pushed.

### ESN/SID Access With RBP, RBU, RAZ, RB1 and RBQ Radios

With the ignition switch in the ACCESSORY position and the radio OFF, press the CD Eject and TIME buttons simultaneously for 3 seconds. All twelve ESN/SID numbers will be displayed. The radio will exit the ESN/SID mode when any other button is pushed, the ignition is turned OFF, or 5 minutes has passed since any button was pushed.

## Selecting Satellite Mode in RBB, REV and RBK Radios

Press the MODE button repeatedly until ″S A″ appears in the display. A CD or tape may remain in the radio while in the Satellite radio mode.

Downloaded from www.Manualslib.com manuals search engine

### Selecting Satellite Mode in RBP, RBU, RAZ, RB1 and RBQ Radios

Press the MODE button repeatedly until the word "SIRIUS" appears in the display. These radios will also display the following:

- After 3 seconds, the current channel name and channel number will be displayed for 5 seconds.
- The current program type and channel number will then be displayed for 5 seconds.
- The current channel number will then be displayed until an action occurs.

A CD or tape may remain in the radio while in the Satellite radio mode.

### Selecting a Channel

Press and release the SEEK or TUNE buttons to search for the next channel. Press the top of the button to search up and the bottom of the button to search down. Holding the TUNE button causes the radio to bypass channels until the button is released.

Press and release the SCAN button (if equipped) to automatically change channels every 7 seconds. The radio will pause on each channel for 7 seconds before moving on to the next channel. The word "SCAN" will appear in the display between each channel change. Press the SCAN button a second time to stop the search.

**NOTE:** Channels that may contain objectionable content can be blocked. Contact Sirius Customer Care at 888-539-7474 to discuss options for channel blocking or unblocking. Please have your ESN/SID information available.



Downloaded from www.Manualslib.com manuals search engine

### Storing and Selecting Pre-Set Channels

In addition to the 10 AM and 10 FM pre-set stations, you may also commit 10 satellite stations to push button memory. These satellite channel pre-set stations will not erase any AM or FM pre-set memory stations. Follow the memory pre-set procedures that apply to your radio.

### Using the PTY (Program Type) Button (If Equipped)

Follow the PTY button instructions that apply to your radio.

### PTY Button "SCAN"

When the desired program type is obtained, press the "SCAN" button within five seconds. The radio will play 7 seconds of the selected channel before moving to the next channel of the selected program type. Press the "SCAN" button a second time to stop the search.

**NOTE:** Pressing the "SEEK" or "SCAN" button while performing a music type scan will change the channel by one and stop the search. Pressing a pre-set memory button during a music type scan, will call up the memory channel and stop the search.

### PTY Button "SEEK"

When the desired program is obtained, press the "SEEK" button within five seconds. The channel will change to the next channel that matches the program type selected.

### Satellite Antenna

To ensure optimum reception, do not place items on the roof around the rooftop antenna location. Metal objects placed within the line of sight of the antenna will cause decreased performance. Larger luggage items should be placed as far forward as possible. Do not place items directly on or above the antenna.

Downloaded from www.Manualslib.com manuals search engine

### Reception Quality

Satellite reception may be interrupted due to one of the following reasons.

- The vehicle is parked in an underground parking structure or under a physical obstacle.
- Dense tree coverage may interrupt reception in the form of short audio mutes.
- Driving under wide bridges or along tall buildings can cause intermittent reception.
- Placing objects over or too close to the antenna can cause signal blockage.

## REMOTE SOUND SYSTEM CONTROLS

The remote sound system controls are located on the rear surface of the steering wheel at the 3 and 9 o'clock positions.

The right hand rocker switch has a push button in the center and controls the volume and mode of the sound system. Pressing the top of the rocker switch will increase the volume and pressing the bottom of the rocker switch will decrease the volume. Pressing the center button changes the operation of the radio from AM to FM to Tape or CD mode depending on which radio is in the vehicle.

The left hand rocker switch has a push button in the center. The function of the left hand switch is different depending on which mode you are in.



Downloaded from www.Manualslib.com manuals search engine

The following describes the left hand rocker switch operation in each mode:

### Radio Operation

Pressing the top of the switch will SEEK up for the next listenable station and pressing the bottom of the switch will SEEK down for the next listenable station.

The button located in the center of the left hand switch will tune to the next pre-set station that you have programmed in the radio pre-set push-button.

### Tape Player

Pressing the top of the switch once will go to the next selection on the cassette. Pressing the bottom of the switch once will go to the beginning of the current selection or to the beginning of the previous selection if it is within the first 5 seconds of the current selection.

If you press the switch up or down twice it plays the second selection, three times, it will play the third, etc.

The button in the center of the left hand switch has no function in this mode.

### CD Player

Pressing the top of the switch once will go to the next track on the CD. Pressing the bottom of the switch once will go to the beginning of the current track or to the beginning of the previous track if it is within one second after the current track begins to play.

If you press the switch up or down twice it plays the second track, three times, it will play the third, etc.

The button in the center of the left hand switch has no function in this mode.

Downloaded from www.Manualslib.com manuals search engine

## RADIO GENERAL INFORMATION

### Radio Broadcast Signals

Your new radio will provide excellent reception under most operating conditions. Like any system, however, car radios have performance limitations, due to mobile operation and natural phenomena, which might lead you to believe your sound system is malfunctioning. To help you understand and save you concern about these "apparent" malfunctions, you must understand a point or two about the transmission and reception of radio signals.

### Two Types of Signals

There are two basic types of radio signals... AM or Amplitude Modulation, in which the transmitted sound causes the amplitude, or height, of the radio waves to vary... and FM or Frequency Modulation, in which the frequency of the wave is varied to carry the sound.

### Electrical Disturbances

Radio waves may pick up electrical disturbances during transmission. They mainly affect the wave amplitude, and thus remain a part of the AM reception. They interfere very little with the frequency variations that carry the FM signal.

### AM Reception

AM sound is based on wave amplitude, so AM reception can be disrupted by such things as lightning, power lines and neon signs.

### FM Reception

Because FM transmission is based on frequency variations, interference that consists of amplitude variations can be filtered out, leaving the reception relatively clear, which is the major feature of FM radio.

**NOTE:** On vehicles so equipped the radio, steering wheel radio controls and 6 disc CD/DVD changer will



Downloaded from www.Manualslib.com manuals search engine

remain active for up to 45 seconds after the ignition switch has been turned off. Opening a vehicle front door will cancel this feature.

## CASSETTE TAPE AND PLAYER MAINTENANCE

To keep the cassette tapes and player in good condition, take the following precautions:

1. Do not use cassette tapes longer than C-90; otherwise, sound quality and tape durability will be greatly diminished.

2. Keep the cassette tape in its case to protect from slackness and dust when it is not in use.

3. Keep the cassette tape away from direct sunlight, heat and magnetic fields such as the radio speakers.

4. Before inserting a tape, make sure that the label is adhering flat to the cassette.

5. A loose tape should be corrected before use. To rewind a loose tape, insert the eraser end of a pencil into the tape drive gear and twist the pencil in the required directions.

Maintain your cassette tape player. The head and capstan shaft in the cassette player can pick up dirt or tape deposits each time a cassette is played. The result of deposits on the capstan shaft may cause the tape to wrap around and become lodged in the tape transport. The other adverse condition is low or "muddy" sound from one or both channels, as if the treble tone control were turned all the way down. To prevent this, you should periodically clean the head with a commercially available WET cleaning cassette.

As preventive maintenance, clean the head about every 30 hours of use. If you wait until the head becomes very dirty (noticeably poor sound), it may not be possible to remove all deposits with a simple WET cleaning cassette.

Downloaded from www.Manualslib.com manuals search engine

## CD/DVD DISC MAINTENANCE

To keep the CD/DVD discs in good condition, take the following precautions:

1. Handle the disc by its edge; avoid touching the surface.

2. If the disc is stained, clean the surface with a soft cloth, wiping from center to edge.

3. Do not apply paper, paper CD labels, or tape to the disc; avoid scratching the disc.

4. Do not use solvents such as benzine, thinner, cleaners, or antistatic sprays.

5. Store the disc in its case after playing.

6. Do not expose the disc to direct sunlight.

7. Do not store the disc where temperatures may become too high.

## RADIO OPERATION AND CELLULAR PHONES

Under certain conditions, the cellular phone being On in your vehicle can cause erratic or noisy performance from your radio. This condition may be lessened or eliminated by relocating the cellular phone antenna. This condition is not harmful to the radio. If your radio performance does not satisfactorily "clear" by the repositioning of the antenna, it is recommended that the radio volume be turned down or off during cellular phone operation.



## NAVIGATION SYSTEM — IF EQUIPPED

The navigation system provides maps, turn identification, selection menus and instructions for selecting a variety of destinations and routes. The buttons to operate the system are located on the instrument panel next to the analog clock.

**Refer to your Navigation User's Manual for detailed operating instructions.**

Downloaded from www.Manualslib.com manuals search engine

The navigation DVD unit is located in the underfloor storage compartment in the rear cargo area. A single disc containing map information for the entire United States and parts of Canada is stored in the DVD unit. Updated DVD's are available from your authorized dealer.

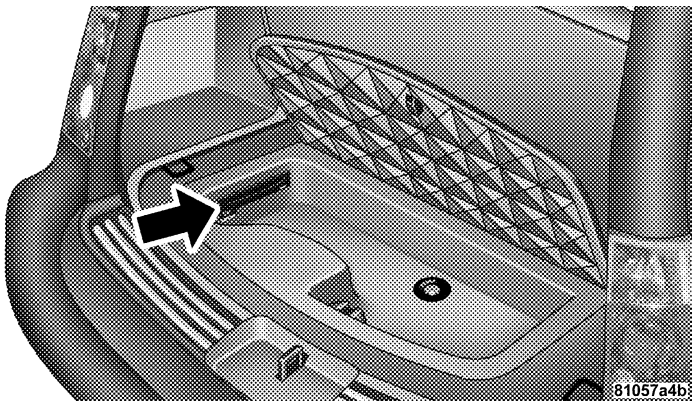


**Navigation DVD Location**

To replace the navigation map DVD lift the storage bin cover and liner in the rear cargo area, press the eject button and the disc will eject. Gently insert the new disc into the DVD unit with the label facing up. The disc will automatically be pulled into the DVD unit.

## CLIMATE CONTROLS

The Air Conditioning and Heating System is designed to make you comfortable in all types of weather.

Downloaded from www.Manualslib.com manuals search engine

## Manual Air Conditioning and Heating System

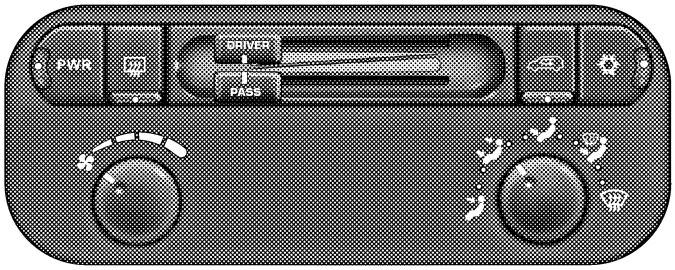


81477aba

**Manual Heating and A/C Controls**

### Power Button

When the "POWER" button is pressed the indicator will illuminate and the blower will run at the speed selected by the front blower control. When the button is pressed a second time the indicator light turns off, the blower will turn off and the system will be positioned in the recirculation mode.

### Blower Control

The Blower controls the amount of air delivered to the passenger compartment. There are four blower speeds.

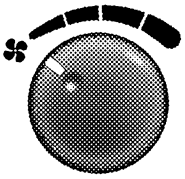

81477abe

The fan speed increases as you move the control clockwise.

4

Downloaded from www.Manualslib.com manuals search engine

**Dual Zone Temperature Control — If Equipped**

With the Dual Zone Temperature Control System, each front seat occupant can independently control the temperature of air coming from the outlets on their side of the vehicle.

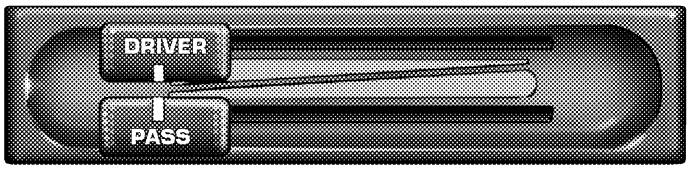


8096321c

**Dual Zone Temperature Control**

This is accomplished by having a separate temperature control lever for both the driver and front seat passenger. The blue area of the scale indicates cooler temperatures while the red area indicates warmer temperatures.

## Mode Control

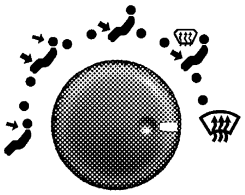

809630dd

The mode control allows you to choose from several patterns of air distribution.

**NOTE:** To improve your selection choices, the system allows you to operate at intermediate positions between the major modes. These intermediate positions are identified by the small dots.

Downloaded from www.Manualslib.com manuals search engine

## Panel Mode

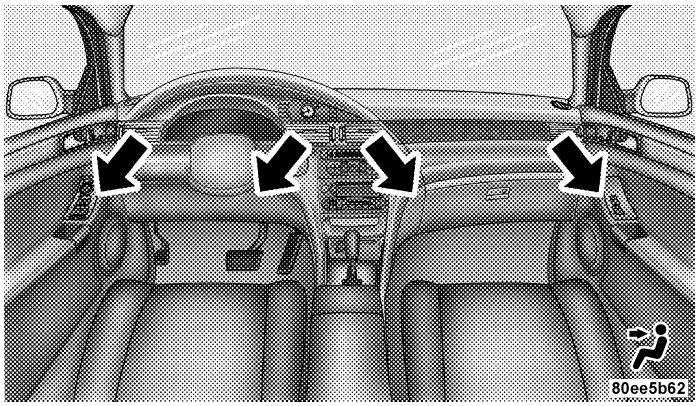


**Panel Outlets**

Air comes from the outlets in the instrument panel. Each of these outlets can be individually adjusted to direct the flow of air. Moving the air vane knob on the center outlets down, will close off the air flow from the center outlets. The thumbwheel next to the outboard outlets can be rotated to regulate or shut off the air flow from these outlets.



Downloaded from www.Manualslib.com manuals search engine

## Bi-Level Mode

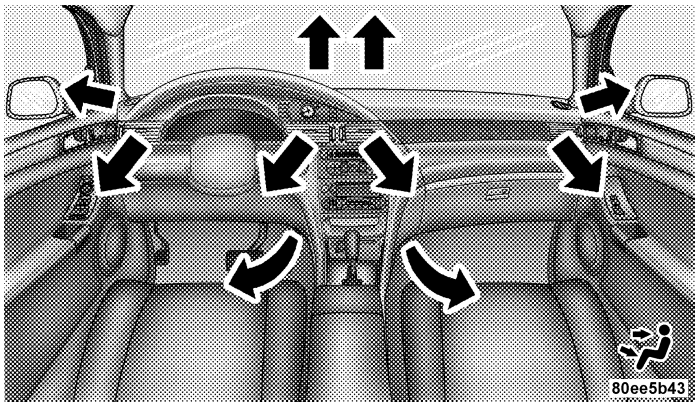


**Bi-Level Outlets**

Air comes from both the instrument panel outlets, floor outlets and defrost. A slight amount of air is also directed through the side window demister outlets.

**NOTE:** In many temperature lever positions, the bi-level mode is designed to provide cooler air out of the panel outlets and warmer air from the floor outlets.

Downloaded from www.Manualslib.com manuals search engine

### Floor Mode

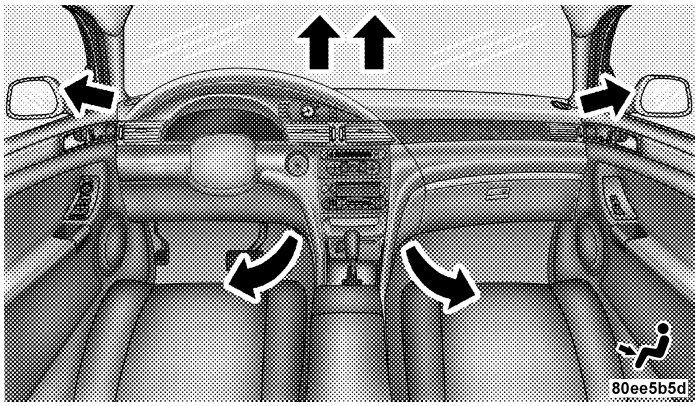


**Floor Outlets**

Air comes from the floor outlets. A slight amount of air is directed through the defrost and side window demister outlets.

### Mix Mode

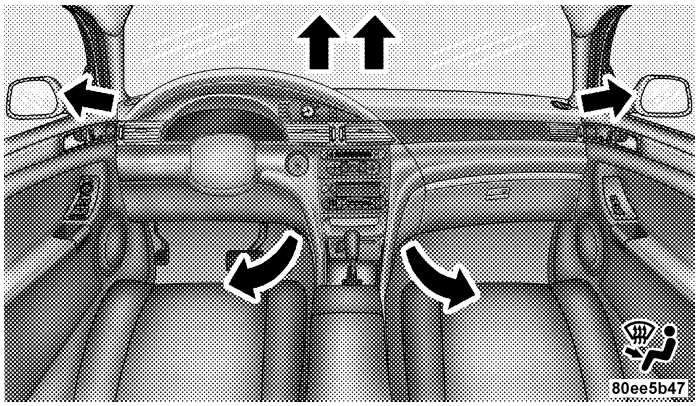


**Mix Outlets**

Air comes from the floor, defrost and side window demist outlets. This mode works best in cold or snowy conditions. It allows you to stay comfortable while keeping the windshield clear.



Downloaded from www.Manualslib.com manuals search engine

### Defrost Mode

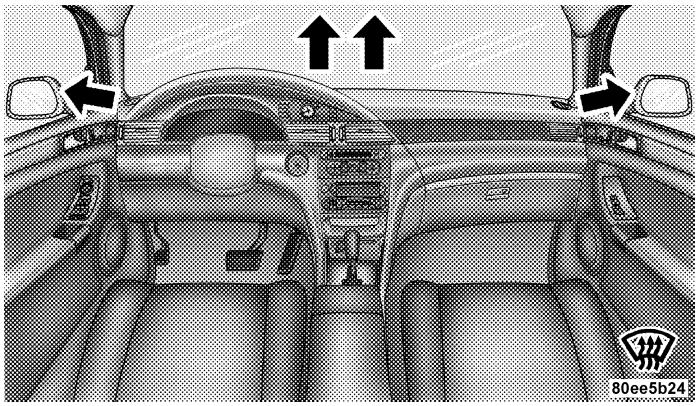


**Defrost Outlets**

Air comes from the windshield and side window demist outlets. Use this setting when necessary to defrost your windshield and side windows.

**NOTE:** For improved safety, the compressor is activated and the recirculation mode is deactivated when Mix or Defrost modes are selected. This is done to assist in drying the air and it will help in keeping the windows from fogging.

### Manual Air Conditioning Operation

To turn on the air conditioning, set the front blower control to any speed and press the A/C button which is located next to the recirculation button. An indicator light on the A/C button shows that the air conditioning is on.

**NOTE:** The indicator light in the "POWER" button must be on for the climate control system to operate.

Cool dehumidified air comes through the outlets selected by the Mode Control. To turn off the air conditioning, press the A/C button a second time. The indicator light will turn off.

Downloaded from www.Manualslib.com manuals search engine

**NOTE:**

- The compressor will not engage until the engine has been running for a few seconds.
- If your air conditioning performance seems lower than expected, check the A/C air filter (ATC equipped vehicles only) and the front of the A/C condenser for an accumulation of dirt or insects. The A/C condenser is located in front of the radiator. The A/C air filter is located under the instrument panel on the passenger side.
- Fabric type fascia protectors tend to block the amount of air to the condenser and may reduce air conditioning performance.

**Economy Mode**

If economy mode is desired, press the A/C button to turn off the indicator light, and the A/C compressor. Move the temperature control lever to the desired temperature.

**Recirculation Control**

Press the recirculation button to recirculate the air inside the vehicle. This is located next to the A/C button. An indicator light on the button shows that air is being recirculated. Use the recirculation mode to rapidly cool the inside of the vehicle. The recirculation mode can also be used to temporarily block out outside odors, smoke, and dust.



**NOTE:**

- When the ignition switch is turned OFF, the recirculation feature will be cancelled.
- In cold weather, use of the Recirculation mode may lead to excessive window fogging. The Recirculation mode is not allowed in the Mix and Defrost modes to improve window clearing operation. Recirculation will be disabled automatically if these modes are selected.

Downloaded from www.Manualslib.com manuals search engine

- If the recirculation button is pressed while in the Mix or Defrost mode, the indicator light in the recirculation button will flash 3 times indicating that recirculation is not allowed.

**A/C Recirculation Programming**

The recirculation control is programmed to cancel the recirculation mode when the ignition key is turned OFF and will reset to outside air mode when the ignition key is turned ON. The frequent use of outside air will help keep odors from building up within the air conditioner-heater housing. It is recommended that the recirculation mode be used as little as possible, especially in humid climates.

For hot and dry climates, or people who are allergic to pollen and find frequent use of the recirculation mode necessary, the recirculation mode can be programmed to not automatically reset to the outside mode by using the following procedures:

- Turn the ignition switch to the OFF position.
- Set the mode control to "PANEL".
- Depress and hold in the "POWER" button.
- Start the engine, and continue to hold in the "POWER" button until the indicator light starts flashing repeatedly.
- Press the recirculation button until the indicator light remains lit.
- The selection will be stored when the ignition switch is turned OFF or if the "POWER" button is pressed.

If the recirculation indicator light is lit, the recirculation mode will not reset when the engine is started. If the recirculation indicator light is not lit, the recirculation mode will reset to the outside air mode when the engine is started. The programmed status can be changed back and forth by following the above mentioned procedure.

Downloaded from www.Manualslib.com manuals search engine

## Dual-Zone Automatic Temperature Control

The Dual Zone Automatic Temperature Control (ATC) System automatically maintains the interior comfort level desired by the driver and front seat passenger. This is accomplished by using two infrared sensors located in the center of the instrument panel. The two infrared sensors independently measure the surface temperature of the driver and front seat passenger. Based on the sensor input, the system automatically adjusts the air temperature, the airflow volume, the airflow distribution, and amount of inside air recirculation to maintain front seat occupant comfort, even under changing outside weather conditions.

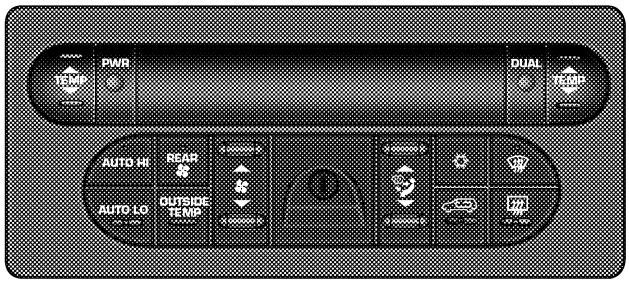


80e550c0

**Dual-Zone Automatic Temperature Control**

To operate the system, press either the "AUTO HI" or "AUTO LO" buttons. The system now automatically regulates the heating and air conditioning system including blower speed, outlet air temperature, and airflow distribution through the various outlets within the instrument panel. Using the "TEMP" buttons, adjust the

4

Downloaded from www.Manualslib.com manuals search engine

temperature you would like the system to maintain. When the system is set to your comfort level, it is not necessary to change the settings. You will experience the greatest efficiency by allowing the system to function automatically. The system will operate fully automatically in either ″AUTO HI″ or ″AUTO LO″. The ″AUTO LO″ setting will limit the maximum fan speed and should be used when more quiet operation is desired. Use the ″AUTO HI″ setting when the quickest cool-down or warm-up performance is desired.

**NOTE:**

- It is not necessary to move the temperature settings for cold or hot vehicles. The system automatically adjusts the temperature, mode and fan speed to provide comfort as quickly as possible.
- The temperature can be displayed in U.S. or Metric by selecting the US/M customer programmable feature. Refer to the "Electronic Vehicle Information Center-Customer Programmable Features" in Section 3 of this manual.

To provide you with maximum comfort in the automatic mode, during cold start-ups the blower fan will remain off and "DELAY" will appear in the display until the engine warms up. An estimate of the time remaining until the "DELAY" is complete will appear periodically in the display. However, the fan will engage immediately if the defrost mode is selected or by pushing the blower switch and manually adjusting the fan speed.

This feature may be disabled using the following procedure:

- Press and hold the Heated Rear Window and Auto LO buttons for 5 seconds.
- The "DELAY" symbol will flash to indicate that the feature as been disabled.

Downloaded from www.Manualslib.com manuals search engine

This feature may be enabled using the following procedure:

- Press and hold the Heated Rear Window and Auto HI buttons for 5 seconds.
- The "DELAY" symbol will flash to indicate that the feature as been enabled.

**Power Button**
This button turns the entire system ON/OFF. When the system is turned on it will return to the previous settings.

**Dual/Single Zone Operation**
When "DUAL" is displayed in the ATC control unit, the driver and passenger air outlet temperatures can be individually adjusted from the two independent "TEMP" buttons. When a front seat passenger is not present, pressing the "DUAL" button will match the passenger's temperature setting to the driver's temperature setting. This will help equalize air outlet temperatures across the left and right side of the instrument panel. The outside temperature will replace the passenger's temperature setting in the display. Pressing the "DUAL" button a second time or adjusting the passenger's "TEMP" button will return the system to dual independent temperature operation.

**Manual Operation**
This system offers a full complement of manual override features. The indicator light in both the "AUTO HI" or "AUTO LO" buttons will turn off when the system is being used in the manual mode. The fan speed, airflow distribution, and outside air/recirculated air can be manually adjusted.

**NOTE:** Each of these features operate independently from each other. If any one feature is controlled manually, the remaining features will continue to operate automatically.



Downloaded from www.Manualslib.com manuals search engine

The front blower control can be set to any fixed blower speed by pressing the rocker switch up or down. This allows the front occupants to control the volume of air circulated in the vehicle and cancel the auto mode. The fan will now operate at a fixed speed until additional speeds are selected or until either the "AUTO HI" or "AUTO LO" buttons are pressed. The system will continue to automatically adjust air temperature and airflow distribution.

The operator can also select the direction of the air by pressing the mode control rocker switch located to the left of the A/C button and selecting one of the following positions.

*Panel Mode*

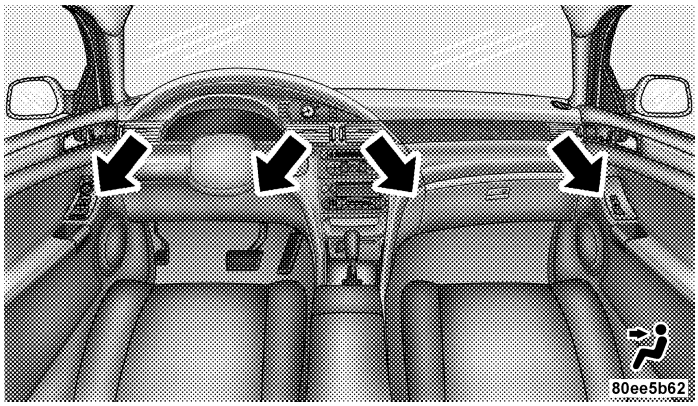


**Panel Outlets**

Air comes from the outlets in the instrument panel. Each of these outlets can be individually adjusted to direct the flow of air. Moving the knob up, down, left, or right will direct the air accordingly. The thumbwheel next to each outlet can be rotated to reduce or shut off the air flow from these outlets.

Downloaded from www.Manualslib.com manuals search engine

*Bi-Level Mode*

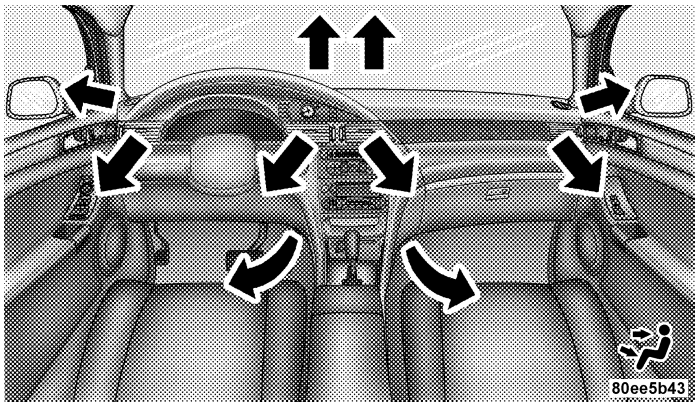


**Bi-Level Outlets**

Air comes from both the instrument panel outlets and floor outlets. A slight amount of air is also directed through the defrost and side window demister outlets.

**NOTE:** In many temperature positions, the bi-level mode is designed to provide cooler air out of the panel outlets and warmer air from the floor outlets.



Downloaded from www.Manualslib.com manuals search engine

*Floor Mode*

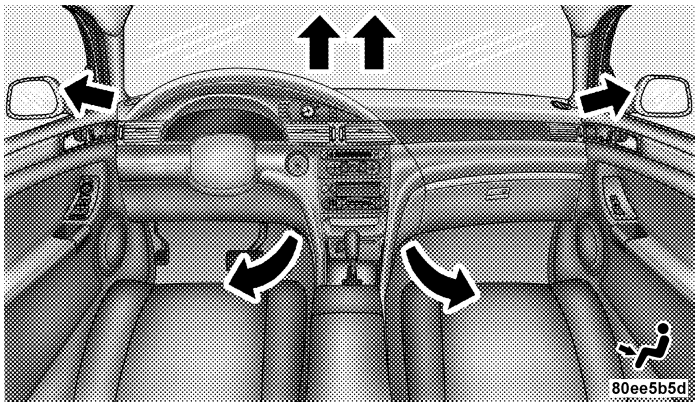


**Floor Outlets**

Air comes from the floor outlets. A slight amount of air is directed through the defrost and side window demister outlets.

*Mix Mode*

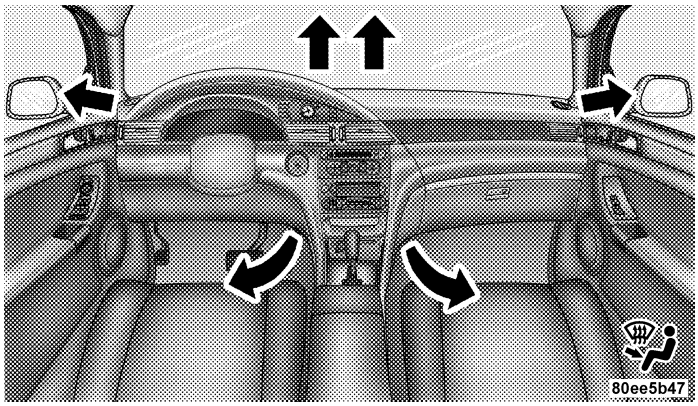


**Mix Outlets**

Air comes from the floor, defrost and side window demist outlets. This mode is not used when operating in either "AUTO HI" or "AUTO LO". This mode should be used when airflow to the floor and windshield is desired.

Downloaded from www.Manualslib.com manuals search engine

*Defrost Mode*

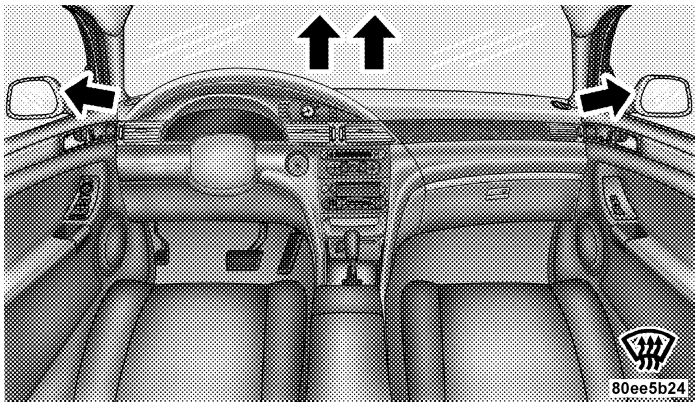


**Defrost Outlets**

Air comes from the windshield and side window demist outlets. Use this setting when necessary to defrost your windshield and side windows. If a fog or mist on the windshield or side glass starts to impair visibility, press the front blower button and increase the fan speed to maximum.

**NOTE:** While operating in "AUTO HI" or "AUTO LO", the system will not automatically sense the presence fog, mist, or ice on the windshield. The defrost button must be pressed to clear the windshield and side glass.



Depress the "A/C" button to turn on and off the air conditioning during manual operation only. Cool dehumidified air comes through the outlets selected by the Mode Control. To turn off the air conditioning, press the A/C button a second time. The A/C symbol in the display will turn off.

**NOTE:** If a fog or mist appears on the windshield or side glass, press the "A/C" button to engage the compressor or press the defrost button. If a fog or mist on the

Downloaded from www.Manualslib.com manuals search engine

windshield or side glass starts to impair visibility, press the front blower button and increase the fan speed to maximum.

**Recirculation Control**

When the outside air contains smoke, odors, high humidity, or if rapid cooling is desired you may wish to recirculate interior air by pressing the recirculation button. The recirculation mode should only be used temporarily. The recirculate symbol will illuminate in the display when this button is selected. Push the button a second time to allow outside air into the vehicle.

**NOTE:** In cold weather, use of the recirculation mode may lead to excessive window fogging. The recirculation mode is not allowed in the Mix and Defrost modes to improve window clearing operation. Recirculation will be disabled automatically if these modes are selected.

**A/C Recirculation Programming**

The recirculation control is programmed to cancel the recirculation mode when the ignition key is turned OFF and will reset to the outside air mode when the ignition key is turned "ON". The frequent use of outside air will help keep odors from building up within the air conditioner-heater housing. It is recommended that the recirculation mode be used as little as possible, especially in humid climates.

For hot and dry climates, or people who are allergic to pollen and find frequent use of the recirculation mode necessary, the recirculation mode can be programmed to not automatically reset to the outside mode by using the following procedures:

- Turn the ignition switch to the OFF position.
- Press and hold the recirculation button.

Downloaded from www.Manualslib.com manuals search engine

- While holding the recirculation button, turn the ignition switch to the "RUN" position.
- Continue holding the recirculation button for 4 seconds, then release.

The recirculation control is now programmed so that the recirculation mode will **not** reset to the outside air mode when the engine is restarted. The recirculation programming can be changed back by repeating this procedure.

**Rear Fan Operation**

To operate the rear fan, press the "REAR" button. The first time this button is pressed the "REAR AUTO" display will illuminate indicating that the rear fan speed is automatically controlled. To manually control the rear fan speed, press the "REAR" button again and only "REAR" will illuminate in the display. This allows the rear seat occupants to control the rear fan speed using the switch located in the center console between the second row seats. By pressing the "REAR" button a third time, the rear fan will shut off.

When the ATC display reads "REAR AUTO" or when the rear fan is off, the switch located in the center console between the second row seats is not functional. When the ATC display reads "REAR", only the rear seat occupants can control the rear fan speed from the rear switch. When in the "REAR" mode, the rear occupants can set the rear switch to any fan speed including "OFF", or "AUTO". While in the "AUTO" position, the rear fan speed will be automatically controlled.



**Summer Operation**

The engine cooling system in air conditioned vehicles must be protected with a high-quality antifreeze coolant to provide proper corrosion protection and to protect against engine overheating. A 50% solution of ethylene

Downloaded from www.Manualslib.com manuals search engine

glycol antifreeze coolant in water is recommended. Refer to section 7, Maintenance Procedures, of this manual for proper coolant selection.

**Winter Operation**

To insure the best possible heater and defroster performance, make sure the engine cooling system is functioning properly and the proper amount, type, and concentration of coolant is used. Refer to section 7, Maintenance Procedures, of this manual for proper coolant selection. Use of the air Recirculation mode during winter months is not recommended because it may cause window fogging.

**Vacation Storage**

Anytime you store your vehicle, or keep it out of service (i.e. vacation) for two weeks or more, run the air conditioning system at idle for about five minutes in the fresh air and high blower setting. This will insure adequate system lubrication to minimize the possibility of compressor damage when the system is started again.

**Window Fogging**

Vehicle windows tend to fog on the inside in mild rainy or humid weather. To clear the windows, use the A/C button to reduce the humidity inside the vehicle.

Fogging on the inside of the windshield can be quickly removed by pressing the defrost button and increasing the blower speed.

Do not use the Recirculation mode without the A/C button for long periods as fogging may occur.

**Outside Air Intake**

Before driving, always make sure the air intake located directly in front of the windshield is free of obstructions such as leaves, ice, or snow, which could reduce airflow and/or plug the water drain tube inside the plenum.

Downloaded from www.Manualslib.com manuals search engine

### A/C Air Filter — If Equipped

On vehicles equipped with Automatic Temperature Control (ATC), the climate control system filters out dust, pollen and some odors from the air. Strong odors can not be totally filtered out. Refer to section 7 "Air Conditioning" for filter replacement instructions.

### Outside Temperature Display

The outside temperature can be shown in the ATC display by pressing the "OUTSIDE TEMP" button. After pressing this button, the front seat passenger's temperature setting display will be replaced with the current outside temperature. Press the "OUTSIDE TEMP" button again or press the passenger's "TEMP" button to return the display to the passenger's temperature setting.

## Electric Rear Window Defroster

Press this button to turn on the rear window defroster and the heated side mirrors. A light in the button will illuminate to indicate the rear window defroster is ON. The defroster automatically turns off after about 10 minutes of operation.



**CAUTION!**

**To avoid damaging the electrical conductors of the rear window defroster, do not use scrapers, sharp instruments, or abrasive window cleaners on the interior surface of the window.**

**Labels can be peeled off after soaking with warm water.**

Downloaded from www.Manualslib.com manuals search engine

Downloaded from www.Manualslib.com manuals search engine

# STARTING AND OPERATING

## CONTENTS


■ Starting Procedures . . . . . .258
- □ Normal Starting . . . . . .258

■ Engine Block Heater — If Equipped . . . . . .260

■ Automatic Transmission . . . . . .261
- □ Brake/Transmission Interlock System . . . . . .261
- □ Automatic Transmission Ignition Interlock System . . . . . .262
- □ Four Speed Automatic Transmission . . . . . .262

■ AutoStick . . . . . .264
- □ AutoStick Operation . . . . . .264
- □ AutoStick General Information . . . . . .265

■ All Wheel Drive — If Equipped . . . . . .266

■ Parking Brake . . . . . .266

■ Brake System . . . . . .268
- □ Anti-Lock Brake System . . . . . .269

■ Power Steering . . . . . .271

■ Traction Control — If Equipped . . . . . .272

■ Tire Safety Information . . . . . .274




Downloaded from www.Manualslib.com manuals search engine

□ Tire Markings . . . . . .274
□ Tire Identification Number (TIN) . . . . . .277
□ Tire Loading And Tire Pressure . . . . . .278
■ Tires—General Information . . . . . .282
□ Tire Pressure . . . . . .282
□ Tire Inflation Pressures . . . . . .283
□ Radial-Ply Tires . . . . . .285
□ Compact Spare Tire — If Equipped . . . . . .286
□ Limited Use Spare — If Equipped . . . . . .287
□ Tire Spinning . . . . . .287
□ Tread Wear Indicators . . . . . .288
□ Life Of Tire . . . . . .289
□ Replacement Tires . . . . . .289
□ Alignment And Balance . . . . . .290
■ All Wheel Drive (AWD) — If Equipped . . . . . .291
■ Tire Pressure Monitor System — If Equipped . . .291
□ 1,2,3, Or 4 Tire(s) Low Pressure . . . . . .292
□ Check TPM System . . . . . .292
□ General Information . . . . . .293
■ Tire Chains . . . . . .294
■ Snow Tires . . . . . .295
■ Tire Rotation Recommendations . . . . . .295
■ Fuel Requirements . . . . . .296
□ Reformulated Gasoline . . . . . .297
□ Gasoline/Oxygenate Blends . . . . . .297
□ MMT In Gasoline . . . . . .298

Downloaded from www.Manualslib.com manuals search engine

□ Materials Added To Fuel . . . . . .298
□ Fuel System Cautions . . . . . .298
□ Carbon Monoxide Warnings . . . . . .299
■ Adding Fuel . . . . . .300
□ Fuel Filler Cap (Gas Cap) . . . . . .300
■ Vehicle Loading . . . . . .302
□ Vehicle Certification Label . . . . . .302
□ Gross Vehicle Weight Rating (GVWR) . . . . . .302
□ Gross Axle Weight Rating (GAWR) . . . . . .302
□ Overloading . . . . . .303
□ Loading . . . . . .303
■ Trailer Towing . . . . . .304
□ Common Towing Definitions . . . . . .305
□ Trailer Hitch Classification . . . . . .307
□ Trailer Towing Weights (Maximum Trailer Weight Ratings) . . . . . .307
□ Trailer And Tongue Weight . . . . . .308
□ Towing Requirements . . . . . .310
□ Towing Tips . . . . . .314
■ Recreational Towing (Behind Motorhome, Etc.) . .315
□ Towing This Vehicle Behind Another Vehicle (Flat Towing With All Four Wheels On The Ground) . . . . . .315



Downloaded from www.Manualslib.com manuals search engine

## STARTING PROCEDURES

**CAUTION!**

**Long periods of engine idling, especially at high engine speeds, can cause excessive exhaust temperatures which can damage your vehicle. Do not leave your vehicle unattended with the engine running.**

**WARNING!**

**Do not leave animals or children inside parked vehicles in hot weather; interior heat build up may cause serious injury or death.**

The gear selector must be in the NEUTRAL or PARK position before you can start the engine. Apply the brakes before shifting into any driving gear.

### Normal Starting

**Normal Starting** of either a cold or a warm engine is obtained without pumping or depressing the accelerator pedal. Turn the key to the "START" position and release when the engine starts. If the engine has not started within 3 seconds, slightly depress the accelerator pedal while continuing to crank. If the engine fails to start within 15 seconds, turn the key to the "OFF" position, wait 10 to 15 seconds, then repeat the normal starting procedure.

**Extremely Cold Weather** (below −29° C or −20° F). To insure reliable starting at these temperatures, use of an externally powered electric engine block heater (available from your dealer) is recommended.

Downloaded from www.Manualslib.com manuals search engine

**WARNING!**

- **Do not attempt to push or tow your vehicle to get it started. Vehicles equipped with an automatic transmission cannot be started this way. Unburned fuel could enter the catalytic converter and once the engine has started, ignite and damage the converter and vehicle. If the vehicle has a discharged battery, booster cables may be used to obtain a start from a booster battery or the battery in another vehicle. This type of start can be dangerous if done improperly. See section 6 of this manual for the proper jump starting procedures and follow them carefully.**
- **Never pour fuel or other flammable liquid into the throttle body air inlet opening in an attempt to start the vehicle. This could result in flash fire causing serious personal injury.**

**If Engine Fails to Start**

If the engine fails to start after you have followed the "NORMAL STARTING" procedure, it may be flooded. Push the accelerator pedal all the way to the floor and hold it there while cranking the engine. This should clear any excess fuel in case the engine is flooded.

**CAUTION!**

**To prevent damage to the starter, do not crank the engine for more than 15 seconds at a time. Wait 10 to 15 seconds before trying again.**



Downloaded from www.Manualslib.com manuals search engine

If the engine has been flooded, it may start to run, but not have enough power to continue running when the key is released. If this occurs, continue cranking up to 15 seconds with the accelerator pedal pushed all the way to the floor. Release the accelerator pedal and the key once the engine is running smoothly. Do not overspeed engine.

If the engine shows no sign of starting after two 15 second periods of cranking with the accelerator pedal held to the floor, the "NORMAL STARTING" procedure should be repeated.

**After Starting**

The idle speed will automatically decrease as the engine warms up.

## ENGINE BLOCK HEATER — IF EQUIPPED

The engine block heater warms engine coolant and permits quicker starts in cold weather. Connect the cord to a standard 110-115 volt AC electrical outlet with a grounded, three-wire extension cord.

The engine block heater cord is routed under the hood on the driver side of the vehicle. It has a removable cap that is located on the driver side of the Integrated Power Module.

**WARNING!**

**Remember to disconnect the cord before driving. Damage to the 110-115 volt electrical cord could cause electrocution.**

Downloaded from www.Manualslib.com manuals search engine

## AUTOMATIC TRANSMISSION

**CAUTION!**

**Damage to the transmission may occur if the following precautions are not observed:**

- **Shift into PARK only after the vehicle has come to a complete stop.**
- **Shift into or out of REVERSE only after the vehicle has come to a complete stop and the engine is at idle speed.**
- **Do not shift from REVERSE, PARK, or NEUTRAL into any forward gear when the engine is above idle speed.**
- **Before shifting into any gear, make sure your foot is firmly on the brake pedal.**

**WARNING!**

**It is dangerous to shift the selector lever out of "P" or "N" if the engine speed is higher than idle speed. If your foot is not firmly on the brake pedal, the vehicle could accelerate quickly forward or in reverse. You could lose control of the vehicle and hit someone or something. Only shift into gear when the engine is idling normally and when your right foot is firmly on the brake pedal.**



### Brake/Transmission Interlock System

This system prevents you from moving the gear shift out of PARK and into any gear unless the brake pedal is pressed. This system is active only while the ignition switch is in the ACCESSORY or ON position. Always depress the **brake pedal first,** before moving the gear selector out of PARK.

Downloaded from www.Manualslib.com manuals search engine

## Automatic Transmission Ignition Interlock System

This system prevents the key from being removed unless the shift lever is in PARK. It also prevents shifting out of PARK unless the key is in the ACCESSORY or ON position.

**NOTE:** If a malfunction occurs, the system will trap the key in the ignition cylinder to warn you that this safety feature is inoperable. The engine can be started and stopped but the key cannot be removed until you obtain service.

## Four Speed Automatic Transmission

The electronically controlled transmission provides a precise shift schedule. The transmission electronics are self-calibrating; therefore, the first few shifts on a new vehicle, may be somewhat abrupt. This is a normal condition, and precision shifts will develop within a few hundred miles.

### Reset Mode - Electronic Transmission

The transmission is monitored electronically for abnormal conditions. If a condition is detected that could cause damage, the transmission automatically shifts into second gear. The transmission remains in second gear despite the forward gear selected. Park (P), Reverse (R), and Neutral (N) will continue to operate. This Reset feature allows the vehicle to be driven to a dealer for service without damaging the transmission.

In the event that the problem has been momentary, the transmission can be reset to regain all forward gears.

- Stop the vehicle and shift into Park (P).
- Turn the key to OFF then restart the engine.
- Shift into the desired range and resume driving.

**NOTE:** Even if the transmission can be reset, it is recommended that you visit a dealer at your earliest

Downloaded from www.Manualslib.com manuals search engine

possible convenience. Your dealer has diagnostic equipment to determine if the problem could recur.

If the transmission cannot be reset, dealer service is required.

**Gear Ranges**

DO NOT race the engine when shifting from PARK or NEUTRAL positions into another gear range.

***"P" Park***

Supplements the parking brake by locking the transmission. The engine can be started in this range. Never attempt to use PARK while vehicle is in motion.

Apply parking brake when leaving vehicle in this range.

For electrical system malfunctions there is an override for the interlock system. In order to override this system the key must be in the ignition with the switch in the ACC or ON positions. Pull up and rearward on the shifter bezel ring.

The override can be activated by pressing the pink-colored tab, which can be accessed through the lower right corner of the shifter bezel ring. While the override is pressed, the shifter can be moved out of the park position without pressing the brake. After operation return the shifter bezel ring to its original position.

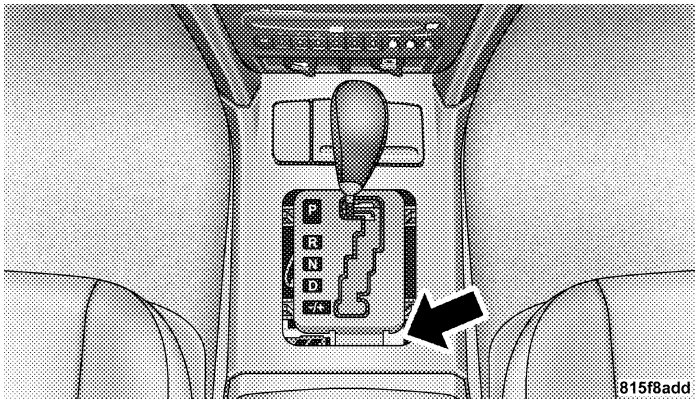


**Brake Interlock Override**

5

Downloaded from www.Manualslib.com manuals search engine

*"R" Reverse*
Shift into this range only after the vehicle has come to a complete stop.

*"N" Neutral*
Engine may be started in this range.

*"D" Overdrive*
To be used for most city and highway driving, it provides smoothest upshifts and downshifts and best fuel economy. When frequent transmission shifting occurs while using the "D" Overdrive position, such as when operating the vehicle under heavy loading conditions, (i.e. in hilly terrain, traveling into strong head winds or while towing heavy trailers), use the AutoStick mode and select the "3" range.

**NOTE:** Using the "3" range in the AutoStick mode while operating the vehicle under heavy operating conditions will improve performance and extend transmission life by reducing excessive shifting and heat build up.

## AUTOSTICK

AutoStick is a driver-interactive transmission that offers manual gear shifting capability to provide you with more control. AutoStick allows you to maximize engine braking, eliminate undesirable upshifts and downshifts, and improve overall vehicle performance. This system can also provide you with more control during passing, city driving, cold slippery conditions, mountain driving, trailer towing, and many other situations.

### AutoStick Operation

The AutoStick position is just below the Overdrive position and is identified by the word "AUTOSTICK". When you place the shift lever in the AutoStick position, it can be moved from side to side. Moving the lever to the left (-) triggers a downshift and to the right (+) an upshift. The gear position will be shown in the transmission gear display, located in the instrument cluster.

Downloaded from www.Manualslib.com manuals search engine

You can shift in or out of the AutoStick mode at any time without taking your foot off the accelerator pedal. If you choose the Overdrive mode, the transmission will operate automatically; shifting between the four available gears. When you wish to engage AutoStick, simply move the shift lever to the AUTOSTICK position. The transmission will remain in the current gear until an upshift or downshift is chosen.

Move the lever back to the Overdrive position to shift out of the AutoStick mode.

### AutoStick General Information

- The transmission will automatically upshift from first to second gear and from second to third gear when engine speed reaches about 6300 RPM.
- Downshifts from third to second gear above 74 mph (119 km/h) and from second to first gear above 41 mph (66 km/h) will be ignored.
- You can start out in first, second, or third gear. Shifting into fourth gear can occur only after vehicle speed reaches 15 mph (24 km/h).
- The transmission will automatically downshift to first gear when coming to a stop.
- Starting out in third gear is helpful in snowy or icy conditions.
- While in the AutoStick mode, Speed Control will only function in third or fourth gear.

  Downshifting out of third gear will turn off the speed control.
- If the system detects powertrain overheating, the transmission will revert to the automatic shift mode and remain in that mode until the powertrain cools off.



Downloaded from www.Manualslib.com manuals search engine

- If the system detects a problem it will disable the AutoStick mode and the transmission will return to the automatic mode until the problem is corrected.

## ALL WHEEL DRIVE — IF EQUIPPED

This feature provides full time, on-demand, All Wheel Drive (AWD). The system is automatic with no driver inputs or additional driving skills required. Under normal driving conditions, the front wheels provide most of the traction. If the front wheels begin to lose traction, power is shifted automatically to the rear wheels. The greater the front wheel traction loss, the greater the power transfer to the rear wheels.

**CAUTION!**

**All wheels must have the same size and type tires. Unequal tire sizes must not be used. Unequal tire size may cause failure of the power transfer unit and/or the viscous coupling.**

## PARKING BRAKE

When the parking brake is applied with the ignition switch on, the brake light in the instrument cluster will turn on.

**NOTE:** This light only shows that the parking brake is applied. It does not show the degree of brake application.

Downloaded from www.Manualslib.com manuals search engine

Before leaving the vehicle, make sure that the parking brake is fully applied and place the gear selector in the Park position. To release the parking brake, pull out on the parking brake release located on the left side of the instrument panel.

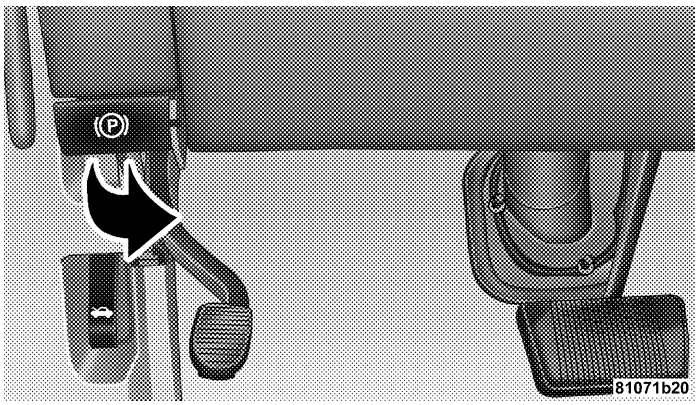


**Parking Brake Release**

When parking on a hill, it is important to set the parking brake before placing the gear selector in Park, otherwise the load on the transmission locking mechanism may make it difficult to move the selector out of park. As an added precaution, turn the front wheels toward the curb on a downhill grade and away from the curb on a uphill grade.

The parking brake should always be applied when the driver is not in the vehicle.



Downloaded from www.Manualslib.com manuals search engine

**WARNING!**

- **Leaving children in a vehicle unattended is dangerous for a number of reasons. A child or others could be injured. Children should be warned not to touch the parking brake, brake pedal or the gear selector lever. Don't leave the keys in the ignition. A child could operate power windows, other controls, or move the vehicle.**
- **Be sure the parking brake is fully disengaged before driving: failure to do so can lead to brake failure, and an accident.**

## BRAKE SYSTEM

In the event power assist is lost for any reason (for example, repeated brake applications with the engine off), the brakes will still function. The effort required to brake the vehicle will be much greater than that required with the power system operating.

Your vehicle is equipped with dual hydraulic brake systems. If either of the two hydraulic systems lose normal capability, the remaining system will still function. There will be some loss of overall braking effectiveness. This may be evident by increased pedal travel during application, greater pedal force required to slow or stop, and potential activation of the Brake Warning Lamp.

Downloaded from www.Manualslib.com manuals search engine

## Anti-Lock Brake System

The Anti-Lock Brake System provides increased vehicle stability and brake performance under most braking conditions. The system automatically "pumps" the brakes during severe braking conditions to prevent wheel lock-up.

**WARNING!**

**Pumping of the Anti-Lock Brakes will diminish their effectiveness and may lead to an accident. Pumping makes the stopping distance longer. Just press firmly on your brake pedal when you need to slow down or stop.**

**WARNING!**

- **Anti-lock system (ABS) cannot prevent the natural laws of physics from acting on the vehicle, nor can it increase braking or steering efficiency beyond that afforded by the condition of the vehicle brakes and tires or the traction afforded.**
- **The ABS cannot prevent accidents, including those resulting from excessive speed in turns, following another vehicle too closely, or hydroplaning. Only a safe, attentive, and skillful driver can prevent accidents.**
- **The capabilities of an ABS equipped vehicle must never be exploited in a reckless or dangerous manner which could jeopardize the user's safety or the safety of others.**



Downloaded from www.Manualslib.com manuals search engine

The ABS light monitors the Anti-Lock Brake System. The light will come on when the ignition switch is turned to the ON position and may stay on for as long as four seconds.

If the ABS light remains on or comes on while driving, it indicates that the Anti-Lock portion of the brake system is not functioning and that service is required. However, the conventional brake system will continue to operate normally if the BRAKE warning light is not on.

If the ABS light is on, the brake system should be serviced as soon as possible to restore the benefits of Anti-Lock brakes. If the ABS light does not come on when the Ignition switch is turned to the ON position, have the bulb repaired as soon as possible.

If both the Brake Warning Light and the ABS Light remain on, the Anti-Lock brakes (ABS) and Electronic Brake Force Distribution (EBD) systems are not functioning. Immediate repair to the ABS system is required.

When the vehicle is driven over 7 mph (11 km/h), you may also hear a slight clicking sound as well as some related motor noises. These noises are the system performing its self check cycle to ensure that the ABS system is working properly. This self check occurs each time the vehicle is started and accelerated past 7 mph (11 km/h).

ABS is activated during braking under certain road or stopping conditions. ABS-inducing conditions can include ice, snow, gravel, bumps, railroad tracks, loose debris, or panic stops.

You also may experience the following when the brake system goes into Anti-lock:

- The ABS motor running (it may continue to run for a short time after the stop),
- the clicking sound of solenoid valves,
- brake pedal pulsations,

Downloaded from www.Manualslib.com manuals search engine

- and a slight drop or fall away of the brake pedal at the end of the stop.

These are all normal characteristics of ABS.

**WARNING!**

**The Anti-Lock Brake System contains sophisticated electronic equipment that may be susceptible to interference caused by improperly installed or high output radio transmitting equipment. This interference can cause possible loss of anti-lock braking capability. Installation of such equipment should be performed by qualified professionals.**

All vehicle wheels and tires must be the same size and type and tires must be properly inflated to produce accurate signals for the computer.

## POWER STEERING

The standard power steering system will give you good vehicle response and increased ease of maneuverability in tight spaces. The system will provide mechanical steering capability if power assist is lost.

If for some reason, the power assist is interrupted, it will still be possible to steer your vehicle. Under these conditions you will observe a substantial increase in steering effort, especially at very low vehicle speeds and during parking maneuvers.

**NOTE:** Increased noise levels at the end of the steering wheel travel are considered normal and does not indicate that there is a problem with the power steering system.

Upon initial start-up in cold weather, the power steering pump may make noise for a short period of time. This is due to the cold, thick fluid in the steering system. This noise should be considered normal, and does not in any way damage the steering system.



Downloaded from www.Manualslib.com manuals search engine

**WARNING!**

**Continued operation with reduced power steering assist could pose a safety risk to yourself and others. Service should be obtained as soon as possible.**

**CAUTION!**

**Prolong operation of the steering system at the end of the steering wheel travel will increase the steering fluid temperature and should be avoided when possible. Damage to the power steering pump may occur.**

## TRACTION CONTROL — IF EQUIPPED

The Traction Control System reduces wheel slip and maintains traction at the driving (front) wheels. The system reduces wheel slip by engaging the brake on the wheel that is losing traction (spinning). The system will operate at speeds below 35 mph (56 km/h).

The system is always in the "stand by" mode unless,

- The Traction Control Switch has been used to turn the system OFF

Downloaded from www.Manualslib.com manuals search engine

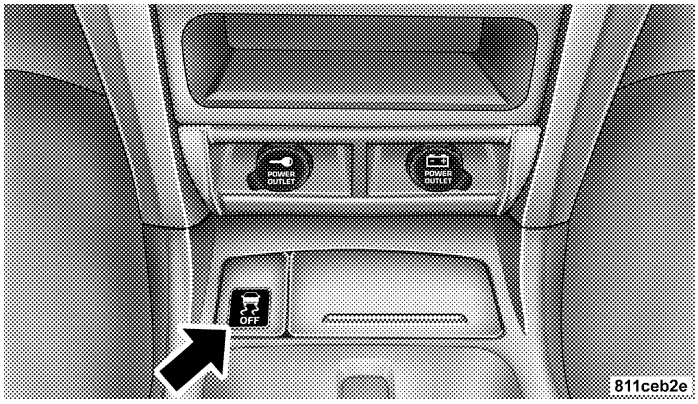


**Traction Control Switch**

- There is a Traction Control System malfunction
- The system has been deactivated to prevent damage to the brake system due to overheated brake temperatures

**NOTE:**

- The Traction Control system will make buzzing or clicking sounds when in operation.
- Extended heavy use of Traction Control may cause the system to deactivate and turn on the traction control indicator located in the instrument cluster.

  This is to prevent overheating of the brake system and is a normal condition. The system will remain disabled for about 4 minutes until the brakes have cooled. The system will automatically reactivate and turn off the traction control indicator.

  - If your vehicle becomes stuck in mud, ice, or snow, turn the Traction Control System OFF before attempting to "rock" the vehicle free.



Downloaded from www.Manualslib.com manuals search engine

## TIRE SAFETY INFORMATION

### Tire Markings

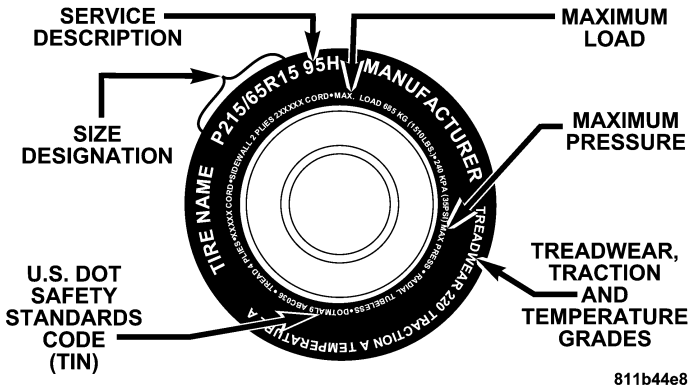


**NOTE:**

- P (Passenger)-Metric tire sizing is based on U.S. design standards. P-Metric tires have the letter "P" molded into the sidewall preceding the size designation. Example: P215/65R15 95H.
- European Metric tire sizing is based on European design standards. Tires designed to this standard have the tire size molded into the sidewall beginning with the section width. The letter "P" is absent from this tire size designation. Example: 215/65R15 96H
- LT (Light Truck)-Metric tire sizing is based on U.S. design standards. The size designation for LT-Metric tires is the same as for P-Metric tires except for the letters "LT" that are molded into the sidewall preceding the size designation. Example: LT235/85R16.
- Temporary Spare tires are high pressure compact spares designed for temporary emergency use only. Tires designed to this standard have the letter "T" molded into the sidewall preceding the size designation. Example: T145/80D18 103M.
- High Flotation tire sizing is based on U.S. design standards and begins with the tire diameter molded into the sidewall. Example: 31x10.5 R15 LT.

Downloaded from www.Manualslib.com manuals search engine

**Tire Sizing Chart**

| EXAMPLE: |
|---|
| **Size Designation:**<br>**P** = Passenger car tire size based on U.S. design standards<br>**"....blank...."** = Passenger car tire based on European design standards<br>**LT** = Light Truck tire based on U.S. design standards<br>**T** = Temporary Spare tire<br>**31** = Overall Diameter in Inches (in) |
| **215** = Section Width in Millimeters (mm) |
| **65** = Aspect Ratio in Percent (%)<br>—Ratio of section height to section width of tire.<br>**10.5** = Section Width in Inches (in) |
| **R** = Construction Code<br>—"R" means Radial Construction.<br>—"D" means Diagonal or Bias Construction. |
| **15** = Rim Diameter in Inches (in) |



Downloaded from www.Manualslib.com manuals search engine

| EXAMPLE: |
|---|
| **Service Description:** |
| **95** = Load Index<br>—A numerical code associated with the maximum load a tire can carry. |
| **H** = Speed Symbol<br>—A symbol indicating the range of speeds at which a tire can carry a load corresponding to its load index under certain operating conditions.<br>—The maximum speed corresponding to the Speed Symbol should only be achieved under specified operating conditions. (i.e. tire pressure, vehicle loading, road conditions and posted speed limits). |
| **Load Identification:** |
| **"....blank...."** = Absence of any text on sidewall of the tire indicates a Standard Load (SL) Tire |
| **Extra Load (XL)** = Extra Load (or Reinforced) Tire |
| **Light Load** = Light Load Tire |
| **C,D,E** = Load range associated with the maximum load a tire can carry at a specified pressure |
| **Maximum Load** — Maximum Load indicates the maximum load this tire is designed to carry. |
| **Maximum Pressure** — Maximum Pressure indicates the maximum permissible cold tire inflation pressure for this tire. |

Downloaded from www.Manualslib.com manuals search engine

### Tire Identification Number (TIN)

The TIN may be found on one or both sides of the tire however the date code may only be on one side. Tires with white sidewalls will have the full TIN including date code located on the white sidewall side of the tire. Look for the TIN on the outboard side of black sidewall tires as mounted on the vehicle. If the TIN is not found on the outboard side then you will find it on the inboard side of the tire.

| EXAMPLE: |
|---|
| **DOT MA L9 ABCD 0301** |
| **DOT** = Department of Transportation<br>—This symbol certifies that the tire is in compliance with the U.S. Department of Transportation tire safety standards, and is approved for highway use. |
| **MA** = Code representing the tire manufacturing location. (2 digits) |
| **L9** = Code representing the tire size. (2 digits) |
| **ABCD** = Code used by tire manufacturer. (1 to 4 digits) |
| **03** = Number representing the week in which the tire was manufactured. (2 digits)<br>—03 means the 3rd week. |
| **01** = Number representing the year in which the tire was manufactured. (2 digits)<br>—01 means the year 2001.<br>—Prior to July 2000, tire manufacturers were only required to have 1 number to represent the year in which the tire was manufactured. Example: 031 could represent the 3rd week of 1981 or 1991. |



Downloaded from www.Manualslib.com manuals search engine

## Tire Loading and Tire Pressure

### Tire Placard Location

**NOTE:** The proper cold tire inflation pressure is listed on either the face of the driver's door or the driver's side "B" pillar.

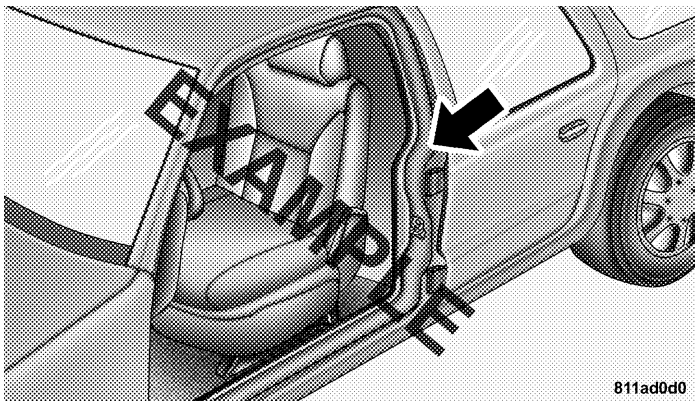


**Tire Placard Location**

### Tire and Loading Information Placard

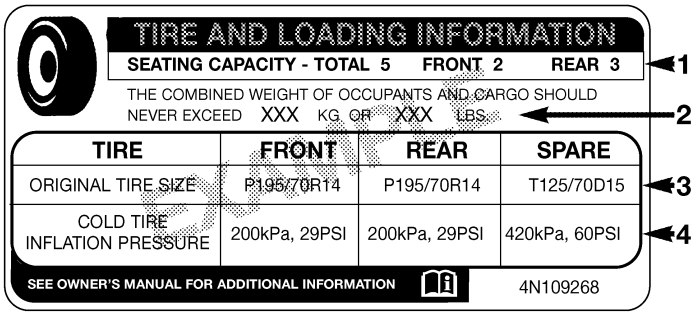


**Tire and Loading Information**

This placard tells you important information about the:

1) number of people that can be carried in the vehicle
2) the total weight your vehicle can carry

Downloaded from www.Manualslib.com manuals search engine

3) the tire size designed for your vehicle

4) the cold tire inflation pressures for the front, rear and spare tires.

**Loading**

The vehicle maximum load on the tire must not exceed the load carrying capacity of the tire on your vehicle. You will not exceed the tire's load carrying capacity if you adhere to the loading conditions, tire size, and cold tire inflation pressures specified on the "Tire and Loading Information" placard and in the "Vehicle Loading" section of this manual.

**NOTE:** Under a maximum loaded vehicle condition, gross axle weight ratings (GAWR's) for the front and rear axles must not be exceeded. For further information on GAWR's, vehicle loading, and trailer towing, refer to the "Vehicle Loading" section of this manual.

To determine the maximum loading conditions of your vehicle, locate the statement "The combined weight of occupants and cargo should never exceed XXX kg or XXX lbs." on the Tire and Loading Information placard. The combined weight of occupants, cargo/luggage and trailer tongue weight (if applicable) should never exceed the weight referenced here.

***Steps for Determining Correct Load Limit***



1. Locate the statement "The combined weight of occupants and cargo should never exceed XXX pounds" on your vehicle's placard.

2. Determine the combined weight of the driver and passengers that will be riding in your vehicle.

3. Subtract the combined weight of the driver and passengers from XXX kilograms or XXX pounds.

Downloaded from www.Manualslib.com manuals search engine

4. The resulting figure equals the available amount of cargo and luggage load capacity. For example, if "XXX" amount equals 1400 lbs. and there will be five 150 lb. passengers in your vehicle, the amount of available cargo and luggage load capacity is 650 lb. (since 5 x 150 = 750, and 1400 – 750 = 650 lb.)

5. Determine the combined weight of luggage and cargo being loaded on the vehicle. That weight may not safely exceed the available cargo and luggage load capacity calculated in Step 4.

6. If your vehicle will be towing a trailer, load from your trailer will be transferred to your vehicle. Consult this manual to determine how this reduces the available cargo and luggage load capacity of your vehicle.

**NOTE:** The following table shows examples on how to calculate total load, cargo/luggage and towing capacities of your vehicle with varying seating configurations and number and size of occupants. This table is for illustration purposes only and may not be accurate for the seating and load carry capacity of your vehicle.

**NOTE:** For the following example the combined weight of occupants and cargo should never exceed 865 lbs. (392 Kg).

Downloaded from www.Manualslib.com manuals search engine

| Occupants | | | Combined weight of occupants and cargo from Tire Placard | MINUS | Combined Occupant's weight | = | AVAILABLE Cargo/Luggage and Trailer Tongue Weight |
|---|---|---|---|---|---|---|---|
| TOTAL | FRONT | REAR | | | | | |
| EXAMPLE 1 | | | | | | | |
| 5 | 2 | 3 | 865 lbs | minus | Occupant 1: 200 lbs<br>Occupant 2: 130 lbs<br>Occupant 3: 160 lbs<br>Occupant 4: 100 lbs<br>Occupant 5: 80 lbs<br>TOTAL WEIGHT: 670 lbs | = | 195 lbs |
| EXAMPLE 2 | | | | | | | |
| 3 | 2 | 1 | 865 lbs | minus | Occupant 1: 210 lbs<br>Occupant 2: 180 lbs<br>Occupant 3: 150 lbs<br>TOTAL WEIGHT: 540 lbs | = | 325 lbs |
| EXAMPLE 3 | | | | | | | |
| 2 | 2 | 0 | 865 lbs | minus | Occupant 1: 200 lbs<br>Occupant 2: 200 lbs<br>TOTAL WEIGHT: 400 lbs | = | 465 lbs |

EXAMPLE

811a4d11

5

Downloaded from www.Manualslib.com manuals search engine

**WARNING!**

**Overloading of your tires is dangerous. Overloading can cause tire failure, affect vehicle handling, and increase your stopping distance. Use tires of the recommended load capacity for your vehicle. Never overload them.**

## TIRES—GENERAL INFORMATION

### Tire Pressure

Proper tire inflation pressure is essential to the safe and satisfactory operation of your vehicle. Three primary areas are affected by improper tire pressure:

*1. Safety—*

**WARNING!**

**Improperly inflated tires are dangerous and can cause accidents.**

**• Under inflation increases tire flexing and can result in tire failure.**

**• Over inflation reduces a tire's ability to cushion shock. Objects on the road and chuck holes can cause damage that results in tire failure.**

**• Unequal tire pressures can cause steering problems. You could lose control of your vehicle.**

**• Over inflated or under inflated tires can affect vehicle handling and can fail suddenly, resulting in loss of vehicle control.**

**• Unequal tire pressures from one side of the vehicle to the other can cause the vehicle to drift to the right or left.**

**Always drive with each tire inflated to the recommended cold tire inflation pressure.**

Downloaded from www.Manualslib.com manuals search engine

*2. Economy—*
Improper inflation pressures can cause uneven wear patterns to develop across the tire tread. These abnormal wear patterns will reduce tread life resulting in a need for earlier tire replacement. Underinflation also increases tire rolling resistance and results in higher fuel consumption.

*3. Ride Comfort and Vehicle Stability—*
Proper tire inflation contributes to a comfortable ride. Overinflation produces a jarring and uncomfortable ride.

## Tire Inflation Pressures

The proper cold tire inflation pressure is listed on either the face of the driver's door or the driver's side "B" pillar.

Some vehicles may have Supplemental Tire Pressure Information for vehicle loads that are less than the maximum loaded vehicle condition. These pressure conditions will be found in the "Supplemental Tire Pressure Information" section of this manual.

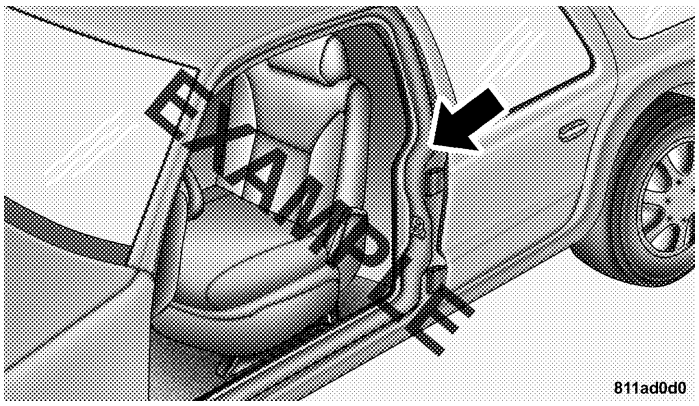


**Tire Placard Location**

The pressure should be checked and adjusted as well as inspecting for signs of tire wear or visible damage at least once a month. Use a good quality pocket-type gauge to check tire pressure. Do not make a visual judgement when determining proper inflation. Radial tires may look properly inflated even when they are under inflated.



Downloaded from www.Manualslib.com manuals search engine

**CAUTION!**

**After inspecting or adjusting the tire pressure, always reinstall the valve stem cap–if equipped. This will prevent moisture and dirt from entering the valve stem, which could damage the valve stem.**

Inflation pressures specified on the placard are always "cold tire inflation pressure". Cold tire inflation pressure is defined as the tire pressure after the vehicle has not been driven for at least 3 hours, or driven less than 1 mile (1 km) after a 3 hour period. The cold tire inflation pressure must not exceed the maximum inflation pressure molded into the tire side wall.

Check tire pressures more often if subject to a wide range of outdoor temperatures, as tire pressures vary with temperature changes.

Tire pressures change by approximately 1 psi (7 kPa) per 12° F (7° C) of air temperature change. Keep this in mind when checking tire pressure inside a garage, especially in the winter.

Example: If garage temperature = 68° F (20° C) and the outside temperature = 32° F (0° C) then the cold tire inflation pressure should be increased by 3 psi (21 kPa), which equals 1 psi (7 kPa) for every 12° F (7° C) for this outside temperature condition.

Tire pressure may increase from 2 to 6 psi (13 to 40 kPa) during operation. DO NOT reduce this normal pressure build up or your tire pressure will be too low.

**Tire Pressures for High Speed Operation**

The manufacturer advocates driving at safe speeds within posted speed limits. Where speed limits or conditions are such that the vehicle can be driven at high speeds, maintaining correct tire inflation pressure is very important. Increased tire pressure and reduced vehicle

Downloaded from www.Manualslib.com manuals search engine

loading may be required for high speed vehicle operation. Refer to original equipment or an authorized tire dealer for recommended safe operating speeds, loading and cold tire inflation pressures.

**WARNING!**

**High speed driving with your vehicle under maximum load is dangerous. The added strain on your tires could cause them to fail. You could have a serious accident. Don't drive a vehicle loaded to the maximum capacity at continuous speeds above 75 mph (120 km/h).**

### Radial-Ply Tires

**WARNING!**

**Combining radial ply tires with other types of tires on your vehicle will cause your vehicle to handle poorly. The instability could cause an accident. Always use radial ply tires in sets of four (or 6, in case of trucks with dual rear wheels). Never combine them with other types of tires.**

Cuts and punctures in radial tires are repairable only in the tread area because of sidewall flexing. Consult your authorized tire dealer for radial tire repairs.



Downloaded from www.Manualslib.com manuals search engine

## Compact Spare Tire — If Equipped

The compact spare is for temporary emergency use with radial tires. It is engineered to be used on your style vehicle only. Since this tire has limited tread life, the original tire should be repaired (or replaced) and reinstalled at the first opportunity.

**WARNING!**

**Temporary use spare tires are for emergency use only. With these tires, do not drive more than 50 mph (80 km/h). Temporary-use spare tires have limited tread life. When the tread is worn to the tread wear indicators, the temporary use spare tire needs to be replaced. Be sure to follow the warnings which apply to your spare. Failure to do so could result in spare tire failure and loss of vehicle control.**

Do not install a wheel cover or attempt to mount a conventional tire on the compact spare wheel, since the wheel is designed specifically for the compact spare.

Do not install more than one compact spare tire/wheel on the vehicle at any given time.

**CAUTION!**

**Because of the reduced ground clearance, do not take your vehicle through an automatic car wash with the compact spare installed. Damage to the vehicle may result.**

Downloaded from www.Manualslib.com manuals search engine

### Limited Use Spare — If Equipped

The limited use spare tire is for temporary emergency use on your vehicle. This tire is identified by a limited use spare tire warning label located on the limited use spare tire and wheel assembly. This tire may look like the original equipped tire on the front or rear axle of your vehicle, but it is not. Installation of this limited use spare tire affects vehicle handling. Since it is not the same tire, replace (or repair) the original tire and reinstall on the vehicle at the first opportunity.

**WARNING!**

**The limited use spare tires are for emergency use only. Installation of this limited use spare tire affects vehicle handling. With this tire, do not drive more than 60 mph (100 km/h). Keep inflated to the cold tire inflation pressure listed on either your tire placard or limited use spare tire and wheel assembly. Replace (or repair) the original tire at the first opportunity and reinstall it on your vehicle. Failure to do so could result in loss of vehicle control.**



### Tire Spinning

When stuck in mud, sand, snow, or ice conditions, do not spin your vehicle's wheels above 35 mph (55 km/h).

See the paragraph on Freeing A Stuck Vehicle in Section 6 of this manual.

Downloaded from www.Manualslib.com manuals search engine

**WARNING!**

**Fast spinning tires can be dangerous. Forces generated by excessive wheel speeds may cause tire damage or failure. A tire could explode and injure someone. Do not spin your vehicle's wheels faster than 35 mph (55 km/h) when you are stuck. And don't let anyone near a spinning wheel, no matter what the speed.**

### Tread Wear Indicators

Tread wear indicators are in the original equipment tires to help you in determining when your tires should be replaced.

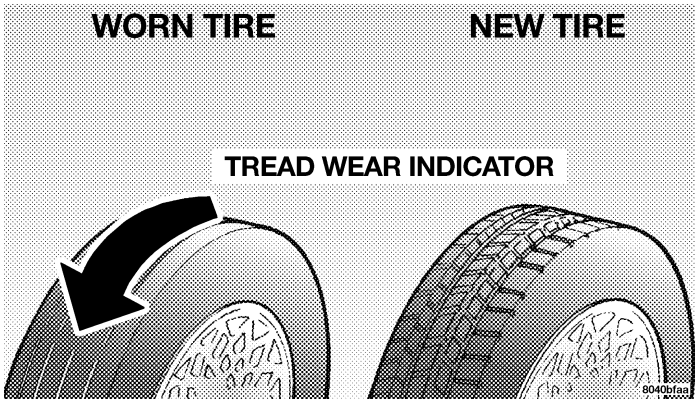


These indicators are molded into the bottom of the tread grooves and will appear as bands when the tread depth becomes 1/16 inch (2 mm). When the tread is worn to the tread wear indicators, the tire should be replaced.

Many states have laws requiring tire replacement at this point.

Downloaded from www.Manualslib.com manuals search engine

### Life of Tire

The service life of a tire is dependent upon varying factors including but not limited to:

- Driving style
- Tire pressure
- Distance driven

**WARNING!**

**Tires and spare tire should be replaced after six years, regardless of the remaining tread. Failure to follow this warning can result in sudden tire failure. You could lose control and have an accident resulting in serious injury or death.**

Keep unmounted tires in a cool, dry place with as little exposure to light as possible. Protect tires from contact with oil, grease and gasoline.

### Replacement Tires

The tires on your new vehicle provide a balance of many characteristics. They should be inspected regularly for wear and correct cold tire inflation pressure. The manufacturer strongly recommends that you use tires equivalent to the originals in size, quality and performance when replacement is needed (see the paragraph on tread wear indicators). Refer to the Tire and Loading Information placard for the size designation of your tire. The service description and load identification will be found on the original equipment tire. Failure to use equivalent replacement tires may adversely affect the safety, handling, and ride of your vehicle. We recommend that you contact your original equipment or an authorized tire dealer with any questions you may have on tire specifications or capability.



Downloaded from www.Manualslib.com manuals search engine

**WARNING!**

- **Do not use a tire, wheel size or rating other than that specified for your vehicle. Some combinations of unapproved tires and wheels may change suspension dimensions and performance characteristics, resulting in changes to steering, handling, and braking of your vehicle. This can cause unpredictable handling and stress to steering and suspension components. You could lose control and have an accident resulting in serious injury or death. Use only the tire and wheel sizes with load ratings approved for your vehicle.**
- **Never use a tire with a smaller load index or capacity, other than what was originally equipped on your vehicle. Using a tire with a smaller load index could result in tire overloading and failure. You could lose control and have an accident.**
- **Failure to equip your vehicle with tires having adequate speed capability can result in sudden tire failure and loss of vehicle control.**

**CAUTION!**

**Replacing original tires with tires of a different size may result in false speedometer and odometer readings.**

### Alignment And Balance

Poor suspension alignment may result in:

- Fast tire wear.
- Uneven tire wear, such as feathering and one-sided wear.
- Vehicle pull to right or left.

Tires may also cause the vehicle to pull to the left or right. Alignment will not correct this condition. See your dealer for proper diagnosis.

Downloaded from www.Manualslib.com manuals search engine

Improper alignment will not cause vehicle vibration. Vibration may be a result of tire and wheel out-of-balance. Proper balancing will reduce vibration and avoid tire cupping and spotty wear.

## ALL WHEEL DRIVE (AWD) — IF EQUIPPED

**CAUTION!**

**All Wheel Drive (AWD) vehicles must have the same size and type tires on all wheel positions. Unequal tire sizes must not be used. Unequal tire size may cause failure of the power transfer unit and/or the viscous coupling.**

## TIRE PRESSURE MONITOR SYSTEM — IF EQUIPPED

The Tire Pressure Monitor System (TPMS) system uses wireless technology with wheel rim mounted electronic sensors to monitor tire pressure levels (EXCLUDING THE SPARE TIRE). Sensors, mounted to each wheel as part of the valve stem, transmit tire pressure readings to the Electronic Vehicle Information Center (EVIC) display in the instrument cluster.



**NOTE:** It is particularly important, for you to check the tire pressure in all of your tires regularly and too maintain the proper pressure.

When the appropriate conditions exist, the Electronic Vehicle Information Center (EVIC) displays the following messages.

Downloaded from www.Manualslib.com manuals search engine

### 1,2,3, OR 4 TIRE(S) LOW PRESSURE

Low tire pressure levels of 26 psi [1.79 bars] (179 kPa) or less detected in one or more tires.

Inspect all tires for proper inflation pressure, once the proper tire pressure has been set, the TPMS system warning will reset automatically when the vehicle has been driven for at least 2 minutes at or above 20 mph (32 km/h).

### CHECK TPM SYSTEM

The Tire Pressure Monitor System (TPMS) system requires service.

See your authorized dealer for service.

**CAUTION!**

**The TPMS system has been optimized for the original equipment tires and wheels. TPMS system pressures have been established for the tire size equipped on your vehicle. Undesirable system operation or sensor damage may result when using replacement equipment that is not of the same size, type, and/or style. After-market wheels can cause sensor damage. Do not use tire sealant or balance beads if your vehicle is equipped with a TPMS system, as damage to the sensors may result.**

**NOTE:**

- The TPMS system can inform the driver of a low tire pressure condition of 26 psi [1.79 bars] (179 kPa) or less.

Downloaded from www.Manualslib.com manuals search engine

- The TPMS system is not intended to replace normal tire care and maintenance, nor to provide warning of a tire failure or condition.
- The TPMS system should not be used as a tire pressure gauge while adjusting your tire pressure.

**CAUTION!**

**After inspecting or adjusting the tire pressure always reinstall the valve stem cap, if equipped. This will prevent moisture and dirt from entering the valve stem, which could damage the wheel rim sensor.**

### General Information

This device complies with part 15 of the FCC rules and RSS 210 of Industry Canada. Operation is subject to the following conditions:

- This device may not cause harmful interference.
- This device must accept any interference received, including interference that may cause undesired operation.

The tire pressure sensors are covered under one of the following licenses:

United States . . . . . KR5S120123
Canada . . . . . 2671-S120123



Downloaded from www.Manualslib.com manuals search engine

## TIRE CHAINS

Use only compact chains, or other traction aids that meet SAE type "Class S" specifications. Chains must be the proper size for the vehicle, as recommended by the chain manufacturer.

**NOTE:** Do not use tire chains on a compact spare tire.

### CAUTION!

**To avoid damage to your vehicle or tires, observe the following precautions:**

- **Because of restricted chain clearance between tires and other suspension components, it is important that only chains in good condition are used. Broken chains can cause serious damage. Stop the vehicle immediately if noise occurs that could indicate chain breakage. Remove the damaged parts of the chain before further use.**
- **Install chains on the front wheels as tightly as possible and then retighten after driving about ½ mile (0.8 km).**
- **Do not exceed 45 mph (70 km/h).**
- **Drive cautiously and avoid severe turns and large bumps, especially with a loaded vehicle.**
- **Do not use on rear wheels of All Wheel Drive (AWD) vehicles.**
- **Do not drive for prolonged period on dry pavement.**
- **Observe the tire chain manufacturer's instructions on the method of installation, operating speed, and conditions for use. Always use the lower suggested operating speed of the chain manufacturer if different than the speed recommended by the manufacture.**

Downloaded from www.Manualslib.com manuals search engine

**NOTE:** In order to avoid damage to tires, chains, and your vehicle do not drive for a prolonged period of time on dry pavement. Observe the tire chain manufacturer's instructions on method of installation, operating speed, and conditions for usage.

Always use the lower suggested operating speed if both the chain manufacturer and vehicle manufacture suggest a maximum speed. This notice applies to all chain traction devices, including link and cable (radial) chains.

## SNOW TIRES

Some areas of the country require the use of snow tires during winter. Standard tires are of the all season type and satisfy this requirement as indicated by the M+S designation on the tire side wall.

If you need snow tires, select tires equivalent in size and type to the original equipment tires. Use snow tires only in sets of 4, failure to do so may adversely affect the safety and handling of your vehicle.

Snow tires generally have lower speed ratings than what was originally equipped with your vehicle and should not be operated at sustained speeds over 75 mph (120 km/h).

## TIRE ROTATION RECOMMENDATIONS

Tires on the front and rear axles of vehicles operate at different loads and perform different steering, driving, and braking functions. For these reasons, they wear at unequal rates, and tend to develop irregular wear patterns.



These effects can be reduced by timely rotation of tires. The benefits of rotation are especially worthwhile with aggressive tread designs such as those on all season type tires. Rotation will increase tread life, help to maintain mud, snow, and wet traction levels, and contribute to a smooth, quiet ride.

Downloaded from www.Manualslib.com manuals search engine

Follow the recommended tire rotation frequency for your type of driving found in the "Maintenance Schedules" Section of this manual. More frequent rotation is permissible if desired. The reasons for any rapid or unusual wear should be corrected prior to rotation being performed.

The suggested rotation method is the "forward-cross" shown in the following diagram.

**TIRE ROTATION PATTERN**

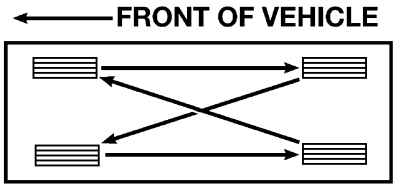


**4 TIRE ROTATION**

80ba79fe

## FUEL REQUIREMENTS

800dfab7

Your vehicle is designed to meet all emissions regulations and provide satisfactory fuel economy and performance when using high quality unleaded gasoline having an octane range of 87 to 89 or higher. The manufacturer recommends the use of 89 octane for optimum performance.

Light spark knock at low engine speeds is not harmful to your engine. However, continued heavy spark knock at high speeds can cause damage and immediate service is required.

Poor quality gasoline can cause problems such as hard starting, stalling and hesitations. If you experience these symptoms, try another brand of gasoline before considering service for the vehicle.

Downloaded from www.Manualslib.com manuals search engine

Over 40 automobile manufacturers around the world have issued and endorsed consistent gasoline specifications (the World Wide Fuel Charter, WWFC) to define fuel properties necessary to deliver enhanced emissions, engine performance, and durability for your vehicle. The manufacturer recommends the use of gasolines that meet the WWFC specifications if they are available.

### Reformulated Gasoline

Many areas of the country require the use of cleaner burning gasoline referred to as "Reformulated Gasoline".

Reformulated gasolines contain oxygenates, and are specifically blended to reduce vehicle emissions and improve air quality.

The manufacturer supports the use of reformulated gasolines. Properly blended reformulated gasolines will provide excellent performance and durability of engine and fuel system components.

### Gasoline/Oxygenate Blends

Some fuel suppliers blend unleaded gasoline with oxygenates such as 10% ethanol, MTBE, and ETBE. Oxygenates are required in some areas of the country during the winter months to reduce carbon monoxide emissions. Fuels blended with these oxygenates may be used in your vehicle.

**CAUTION!**

**DO NOT use gasolines containing Methanol. Use of these blends may result in starting and driveability problems and may damage critical fuel system components.**

Problems that result from using methanol/gasoline blends are not the responsibility of the manufacturer. While MTBE is an oxygenate made from Methanol, it does not have the negative effects of Methanol.



Downloaded from www.Manualslib.com manuals search engine

### MMT In Gasoline

MMT is a manganese containing metallic additive that is blended into some gasoline to increase the octane number. Gasolines blended with MMT offer no performance advantage beyond gasolines of the same octane number without MMT. Gasolines blended with MMT have shown to reduce spark plug life and reduce emission system performance in some vehicles. The manufacturer recommends using gasolines without MMT. Since the MMT content of gasoline may not be indicated on the pump, you should ask your gasoline retailer whether or not his/her gasoline contains MMT.

It is even more important to look for gasolines without MMT in Canada, because MMT can be used at levels higher than those allowed in the United States.

MMT is prohibited in Federal and California reformulated gasolines.

### Materials Added to Fuel

All gasoline sold in the United States is required to contain effective detergent additives. Use of additional detergents or other additives are not needed under normal conditions and would result in additional cost. Therefore you should not have to add anything to the fuel.

### Fuel System Cautions

**CAUTION!**

**Follow these guidelines to maintain your vehicle's performance:**

- The use of leaded gas is prohibited by Federal law. Using leaded gasoline can impair engine performance, damage the emission control system.

Downloaded from www.Manualslib.com manuals search engine

- An out-of-tune engine, or certain fuel or ignition malfunctions, can cause the catalytic converter to overheat. If you notice a pungent burning odor or some light smoke, your engine may be out of tune or malfunctioning and may require immediate service. Contact your dealer for service assistance.
- The use of fuel additives which are now being sold as octane enhancers is not recommended. Most of these products contain high concentrations of methanol. Fuel system damage or vehicle performance problems resulting from the use of such fuels or additives is not the responsibility of the manufacturer.

**NOTE:** Intentional tampering with emissions control systems can result in civil penalties being assessed against you.

## Carbon Monoxide Warnings

**WARNING!**

**Carbon monoxide (CO) in exhaust gases is deadly. Follow the precautions below to prevent carbon monoxide poisoning:**

- Do not inhale exhaust gases. They contain carbon monoxide, a colorless and odorless gas which can kill. Never run the engine in a closed area, such as a garage, and never sit in a parked vehicle with the engine running for an extended period. If the vehicle is stopped in an open area with the engine running for more than a short period, adjust the ventilation system to force fresh, outside air into the vehicle.



Downloaded from www.Manualslib.com manuals search engine

- Guard against carbon monoxide with proper maintenance. Have the exhaust system inspected every time the vehicle is raised. Have any abnormal conditions repaired promptly. Until repaired, drive with all side windows fully open.
- Keep the liftgate closed when driving your vehicle to prevent carbon monoxide and other poisonous exhaust gases from entering the vehicle.

## ADDING FUEL

### Fuel Filler Cap (Gas Cap)

The gas cap is located behind the fuel filler door on the left side of the vehicle. If the gas cap is lost or damaged, be sure the replacement cap is for use with this vehicle.

**CAUTION!**

**Damage to the fuel system or emission control system could result from using an improper fuel tank filler tube cap (gas cap). A poorly fitting cap could let impurities into the fuel system.**

**CAUTION!**

**To avoid fuel spillage and overfilling, do not "top off" the fuel tank after filling. When the fuel nozzle "clicks" or shuts off, the fuel tank is full.**

Downloaded from www.Manualslib.com manuals search engine

**NOTE:**

- Tighten the fuel filler cap until you hear a "clicking" sound. This is an indication that the fuel filler cap is properly tightened. If the vehicle diagnostic system determines that the fuel filler cap is loose, improperly installed, or damaged, GASCAP will be displayed in the instrument cluster odometer. Tighten the fuel filler cap properly and press the odometer reset button to turn the GASCAP message off. If the problem continues, the message will appear the next time the vehicle is started. See Section 7 of this manual for more information. Make sure that the fuel filler cap is tightened each time the vehicle is refueled.
- When the fuel nozzle "clicks" or shuts off, the fuel tank is full.

**WARNING!**

- **Never have any smoking materials lit in or near the vehicle when the gas cap is removed or the tank filled.**
- **Never add fuel to the vehicle when the engine is running.**
- **A fire may result if gasoline is pumped into a portable container that is inside of a vehicle. You could be burned. Always place gas containers on the ground while filling.**



Downloaded from www.Manualslib.com manuals search engine

## VEHICLE LOADING

The load carrying capacity of your vehicle is shown in the charts that follow. This information should be used for passenger and luggage loading as indicated.

If the seatbacks are folded for carrying cargo, do not exceed the specified GVWR and GAWR.

### Vehicle Certification Label

Your vehicle has a certification label attached to the rear of the driver's door.

The label contains the following information:

- Name of manufacturer
- Month and year of manufacture
- Gross Vehicle Weight Rating (GVWR)
- Gross Axle Weight Rating (GAWR) front
- Gross Axle Weight Rating (GAWR) rear
- Vehicle Identification Number (VIN)
- Type of Vehicle
- Month Day and Hour of Manufacture (MDH)

The bar code allows a computer scanner to read the Vehicle Identification Number (VIN).

### Gross Vehicle Weight Rating (GVWR)

The GVWR is the total allowable weight of your vehicle. This includes driver, passengers, and cargo. The total load must be limited so that you do not exceed the GVWR.

### Gross Axle Weight Rating (GAWR)

The GAWR is the maximum capacity of the front and rear axles. Distribute the load over the front and rear axles evenly. Make sure that you do not exceed either front or rear GAWR.

Downloaded from www.Manualslib.com manuals search engine

**WARNING!**

**Because the front wheels drive and steer the vehicle, it is important that you do not exceed the maximum front or rear GAWR. A dangerous driving condition can result if either rating is exceeded. You could lose control of the vehicle and have an accident.**

### Overloading

The load carrying components (axle, springs, tires, wheels, etc.) of your vehicle will provide satisfactory service as long as you do not exceed the GVWR and front and rear GAWR.

The best way to figure out the total weight of your vehicle is to weigh it when it is fully loaded and ready for operation. Weigh it on a commercial scale to insure that it is not over the GVWR.

Figure out the weight on the front and rear of the vehicle separately. It is important that you distribute the load evenly over the front and rear axles.

Overloading can cause potential safety hazards and shorten useful service life. Heavier axles or suspension components do not necessarily increase the vehicle's GVWR.

### Loading



To load your vehicle properly, first figure out its empty weight, axle by axle and side by side. Store heavier items down low and be sure you distribute their weight as evenly as possible. Stow all loose items securely before driving. If weighing the loaded vehicle shows that you have exceeded either GAWR, but the total load is within the specified GVWR, you must redistribute the weight. Improper weight distribution can have an adverse effect on the way your vehicle steers and handles and the way the brakes operate.

Downloaded from www.Manualslib.com manuals search engine

A loaded vehicle is shown in the illustration. Note that neither the GVWR or the GAWR capacities have been exceeded.

GROSS VEHICLE WEIGHT RATING (GVWR) 2630 KG (5800 LBS)
(Example Only)

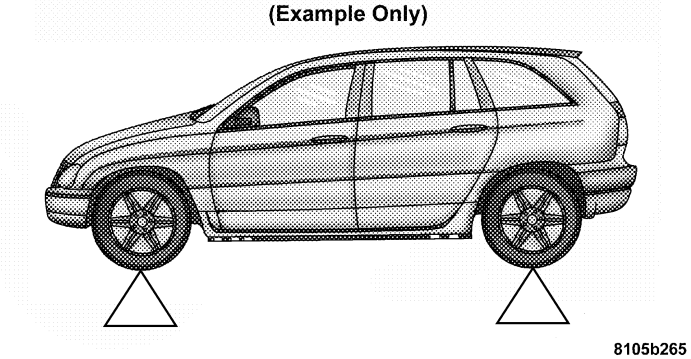


| Example Only | Front Axle | Rear Axle |
|---|---|---|
| Empty Weight | 2538 lbs (1151 kg) | 2076 lbs (942 kg ) |
| Load (Including driver, passengers and cargo) | 223 lbs (101 kg) | 890 lbs (404 kg) |
| Total | 2762 lbs (1253 kg) | 2968 lbs (1346 kg) |
| GAWR | 2826 lbs (1282 kg) | 3035 lbs (1377 kg) |

## TRAILER TOWING

In this section you will find safety tips and information on limits to the type of towing you can reasonably do with your vehicle. Before towing a trailer carefully review this information to tow your load as efficiently and safely as possible.

To maintain warranty coverage, follow the requirements and recommendations in this manual concerning vehicles used for trailer towing.

Downloaded from www.Manualslib.com manuals search engine

## Common Towing Definitions

The following trailer towing related definitions will assist you in understanding the following information:

**Gross Vehicle Weight Rating (GVWR)**

The GVWR is the total allowable weight of your vehicle. This includes driver, passengers, cargo and tongue weight. The total load must be limited so that you do not exceed the GVWR.

**Gross Trailer Weight (GTW)**

The gross trailer weight (GTW) is the weight of the trailer plus the weight of all cargo, consumables and equipment (permanent or temporary) loaded in or on the trailer in its "loaded and ready for operation" condition. The recommended way to measure GTW is to put your fully loaded trailer on a vehicle scale. The entire weight of the trailer must be supported by the scale.

**Gross Combination Weight Rating (GCWR)**

The gross combination weight rating (GCWR) is the total permissible weight of your vehicle and trailer when weighed in combination. (Note that GCWR ratings include a 150 lbs (68 kg) allowance for the presence of a driver).

**Gross Axle Weight Rating (GAWR)**

The GAWR is the maximum capacity of the front and rear axles. Distribute the load over the front and rear axles evenly. Make sure that you do not exceed either front or rear GAWR.



Downloaded from www.Manualslib.com manuals search engine

**WARNING!**

**It is important that you do not exceed the maximum front or rear GAWR. A dangerous driving condition can result if either rating is exceeded. You could lose control of the vehicle and have an accident.**

**Tongue Weight (TW)**
The downward force exerted on the hitch ball by the trailer. In most cases it should not be less than 10% or more than 15% of the trailer load. You must consider this as part of the load on your vehicle.

**Frontal Area**
The maximum height and maximum width of the front of a trailer.

**Trailer Sway Control**
The trailer sway control is a telescoping link that can be installed between the hitch receiver and the trailer tongue that typically provides adjustable friction associated with the telescoping motion to dampen any unwanted trailer swaying motions while traveling.

**Weight-Carrying Hitch**
A weight-carrying hitch supports the trailer tongue weight, just as if it were luggage located at a hitch ball or some other connecting point of the vehicle. These kind of hitches are the most popular on the market today and they're commonly used to tow small- and medium-sized trailers.

**Weight-Distributing Hitch**
A weight-distributing hitch includes a receiver attached to the tow vehicle, plus a removable hitch head and spring bar assembly that fits into the receiver opening and hook up brackets that connect the spring bars to the trailer frame.

Downloaded from www.Manualslib.com manuals search engine

### Trailer Hitch Classification

Your vehicle may be factory equipped for safe towing of trailers weighing over 2,000 lbs (907 kg) with the optional Trailer Tow Prep Package. See your dealer for package content.

The following chart provides the industry standard for the maximum trailer weight a given trailer hitch class can tow and should be used to assist you in selecting the correct trailer hitch for your intended towing condition. Refer to the Trailer Towing Weights (Maximum Trailer Weight Ratings) chart for the Max. GTW towable for your given drivetrain.

| Trailer Hitch Classification | |
|---|---|
| **Class** | **Max. GTW (Gross Trailer Wt.)** |
| Class I - Light Duty | 2,000 lbs (907 kg) |
| Class II - Medium Duty | 3,500 lbs (1587 kg) |
| Class III - Heavy Duty | 5,000 lbs (2268 kg) |
| Class IV - Extra Heavy Duty | 10,000 lbs (4540 kg) |

All trailer hitches should be professionally installed on your vehicle.

### Trailer Towing Weights (Maximum Trailer Weight Ratings)

The following chart provides the maximum trailer weight ratings towable for your given drivetrain.



Downloaded from www.Manualslib.com manuals search engine

| Engine/Transmission | GCWR (Gross Combined Wt. Rating) | Frontal Area | Max. GTW (Gross Trailer Wt.) | Max. Tongue Wt. |
|---|---|---|---|---|
| **3.5L & 3.8L Automatic** | 8,600 lbs (3900 kg) | 40 SQ. FT. | Up to 2 persons & Luggage 3,500 lbs (1600 kg) | 350 lbs (158 kg) |
| | 8,600 lbs (3900 kg) | 40 SQ. FT. | 3 to 4 persons & Luggage 3,000 lbs (1360 kg) | 300 lbs (136 kg) |
| | 8,600 lbs (3900 kg) | 40 SQ. FT. | 5 to 6 persons & Luggage 1,000 lbs (454 kg) | 100 lbs (45 kg) |
| Refer to local laws for maximum trailer towing speeds. | | | | |

**NOTE:** The trailer tongue weight must be considered as part of the combined weight of occupants and cargo, and should never exceed the weight referenced on the Tire and Loading Information placard. Refer to the Tire–Safety Information Section in this manual.

### Trailer and Tongue Weight

Always load a trailer with 60% to 65% of the weight in the front of the trailer. This places 10% to 15% of the Gross Trailer Weight (GTW) on the tow hitch of your vehicle. Loads balanced over the wheels or heavier in the rear can cause the trailer to sway **severely** side to side

Downloaded from www.Manualslib.com manuals search engine

which will cause loss of control of the vehicle and trailer. Failure to load trailers heavier in front is the cause of many trailer accidents.

Never exceed the maximum tongue weight stamped on your bumper or trailer hitch.

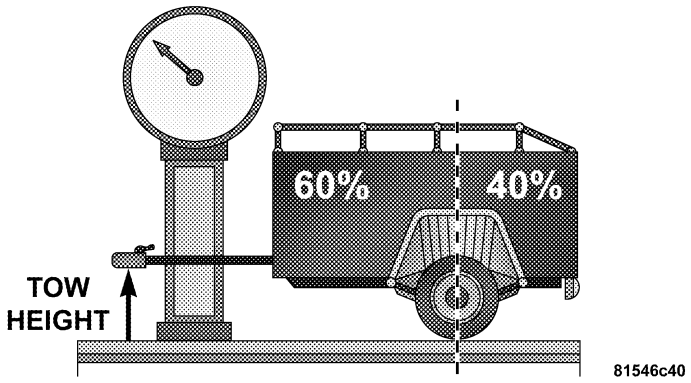


Consider the following items when computing the weight on the rear axle of the vehicle:

- The tongue weight of the trailer.
- The weight of any other type of cargo or equipment put in or on your vehicle.
- The weight of the driver and all passengers.

**NOTE:** Remember that everything put into or on the trailer adds to the load on your vehicle. Also, additional factory-installed options, or dealer-installed options, must be considered as part of the total load on your vehicle. Refer to the Tire and Loading Information placard in the Tire Safety Information Section of this manual for the maximum combined weight of occupants and cargo for your vehicle.



Downloaded from www.Manualslib.com manuals search engine

## Towing Requirements

To promote proper break-in of your new vehicle drivetrain components the following guidelines are recommended:

**CAUTION!**

- **Avoid towing a trailer for the first 500 miles (805 km) of vehicle operation. Doing so may damage your vehicle.**
- **During the first 500 miles (805 km) of trailer towing, limit your speed to 50 mph (80 km/h).**

Perform the maintenance listed in Section 8 of this manual. When towing a trailer, never exceed the GAWR, or GCWR, ratings.

**WARNING!**

**Improper towing can lead to an injury accident. Follow these guidelines to make your trailer towing as safe as possible:**

**Make certain that the load is secured in the trailer and will not shift during travel. When trailering cargo that is not fully secured, dynamic load shifts can occur that may be difficult for the driver to control. You could lose control of your vehicle and have an accident.**

- When hauling cargo or towing a trailer, do not overload your vehicle or trailer. Overloading can cause a loss of control, poor performance or damage to brakes, axle, engine, transmission, steering, suspension, chassis structure or tires.

Downloaded from www.Manualslib.com manuals search engine

- Safety chains must always be used between your vehicle and trailer. Always connect the chains to the frame or hook retainers of the vehicle hitch. Cross the chains under the trailer tongue and allow enough slack for turning corners.
- Vehicles with trailers should not be parked on a grade. When parking, apply the parking brake on the tow vehicle. Put the tow vehicle automatic transmission in P for Park. Always, block or "chock" the trailer wheels.
- GCWR must not be exceeded.
- **Total weight must be distributed between the tow vehicle and the trailer such that the following four ratings are not exceeded:**

  1. GVWR
  2. GTW
  3. GAWR
  4. Tongue weight rating for the trailer hitch utilized (This requirement may limit the ability to always achieve the 10% to 15% range of tongue weight as a percentage of total trailer weight).

**Towing Requirements — Tires**

– Do not attempt to tow a trailer while using a compact spare tire.

– Proper tire inflation pressures are essential to the safe and satisfactory operation of your vehicle. Refer to the Tires–General Information section of this manual on Tire Pressures for proper tire inflation procedures.

– Also, check the trailer tires for proper tire inflation pressures before trailer usage.

– Check for signs of tire wear or visible tire damage before towing a trailer. Refer to the Tires–General Information section of this manual on Tread Wear Indicators for the proper inspection procedure.



Downloaded from www.Manualslib.com manuals search engine

– When replacing tires refer to the Tires–General Information section of this manual on Replacement Tires for proper tire replacement procedures. Replacing tires with a higher load carrying capacity will not increase the vehicle's GVWR and GAWR limits.

**Towing Requirements — Trailer Brakes**

– Do **not** interconnect the hydraulic brake system or vacuum system of your vehicle with that of the trailer. This could cause inadequate braking and possible personal injury.

– An electronically actuated trailer brake controller is required when towing a trailer with electronically actuated brakes. When towing a trailer equipped with a hydraulic surge actuated brake system, an electronic brake controller is not required.

– Trailer brakes are recommended for trailers over 1,000 lbs (454 kg) and required for trailers in excess of 2,000 lbs (907 kg).

**CAUTION!**

**If the trailer weighs more than 1,000 lbs (454 kg) loaded, it should have its own brakes and they should be of adequate capacity. Failure to do this could lead to accelerated brake lining wear, higher brake pedal effort, and longer stopping distances.**

Downloaded from www.Manualslib.com manuals search engine

**WARNING!**

**Do not connect trailer brakes to your vehicle's hydraulic brake lines. It can overload your brake system and cause it to fail. You might not have brakes when you need them and could have an accident.**

**Towing any trailer will increase your stopping distance. When towing you should allow for additional space between your vehicle and the vehicle in front of you. Failure to do so could result in an accident.**

**Towing Requirements — Trailer Lights & Wiring**
Whenever you pull a trailer, regardless of the trailer size, stop lights and turn signals on the trailer are required for motoring safety.

The Trailer Tow Package may include a 4 and 7 pin wiring harness. Use a factory approved trailer harness and connector.

**NOTE:** Do not cut or splice wiring into the vehicles wiring harness.

The electrical connections are all complete to the vehicle but you must mate the harness to a trailer connector. Refer to the following illustrations.

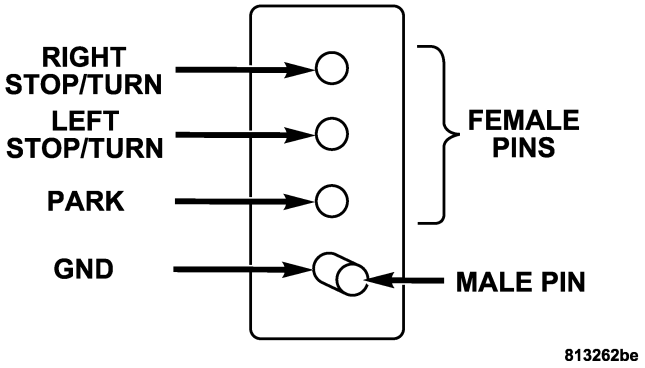


**4 - Pin Connector**



Downloaded from www.Manualslib.com manuals search engine

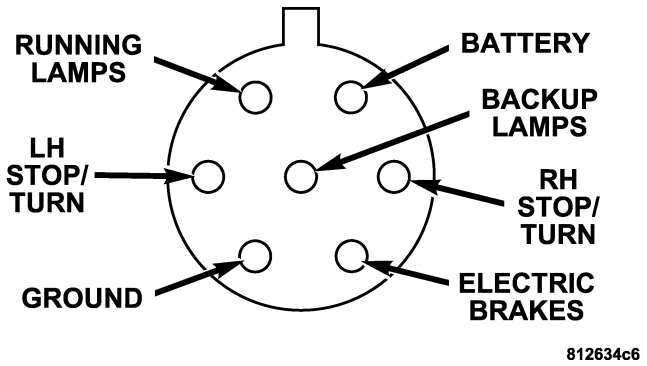


**7- Pin Connector**

## Towing Tips

Before setting out on a trip, practice turning, stopping and backing the trailer in an area away from heavy traffic.

### Towing Tips — Automatic Transmission

The "D" range can be selected when towing. However, if frequent shifting occurs while in this range, the "3" range should be selected.

**NOTE:** Using the "3" range while operating the vehicle under heavy operating conditions will improve performance and extend transmission life by reducing excessive shifting and heat build up. This action will also provide better engine braking.

The automatic transmission fluid and filter should be changed if you REGULARLY tow a trailer for more than 45 minutes of continuous operation. See Schedule "B" in section 8 of this manual for transmission fluid change intervals.

**NOTE:** Check the automatic transmission fluid level before towing.

Downloaded from www.Manualslib.com manuals search engine

**Towing Tips — Electronic Speed Control (If Equipped)**

– Don't use in hilly terrain or with heavy loads.

– When using the speed control, if you experience speed drops greater than 10 mph (16 km/h), disengage until you can get back to cruising speed.

– Use speed control in flat terrain and with light loads to maximize fuel efficiency.

**Towing Tips — Cooling System**
To reduce potential for engine and transmission overheating, take the following actions:

– *City Driving*
When stopped for short periods of time, put transmission in neutral but do not increase engine idle speed.

– *Highway Driving*
Reduce speed.

– *Air Conditioning*
Turn off temporarily.

– refer to Cooling System Operating information in the Maintenance section of this manual for more information.

## RECREATIONAL TOWING (BEHIND MOTORHOME, ETC.)

### TOWING THIS VEHICLE BEHIND ANOTHER VEHICLE (Flat towing with all four wheels on the ground)

Recreational towing for this vehicle is not recommended.

**NOTE:** If the vehicle requires towing make sure all four wheels are off the ground.



Downloaded from www.Manualslib.com manuals search engine

Downloaded from www.Manualslib.com manuals search engine

# WHAT TO DO IN EMERGENCIES

## CONTENTS


■ Hazard Warning Flasher . . . . . .318
■ If Your Engine Overheats . . . . . .319
■ Jacking And Tire Changing . . . . . .320
□ Jack Location . . . . . .321
□ Spare Tire Stowage . . . . . .322
□ Preparations For Jacking . . . . . .323
□ Jacking Instructions . . . . . .324
■ Jump-Starting Procedures If Battery Is Low . . . .327
■ Driving On Slippery Surfaces . . . . . .329
□ Acceleration . . . . . .329
□ Traction . . . . . .329
■ Freeing A Stuck Vehicle . . . . . .330
■ Towing A Disabled Vehicle . . . . . .331
□ With Ignition Key . . . . . .331
□ Without The Ignition Key . . . . . .332
□ Towing This Vehicle Behind Another Vehicle (Flat Towing With All Four Wheels On The Ground) .332
□ Towing This Vehicle Behind Another Vehicle With A Tow Dolly . . . . . .333




Downloaded from www.Manualslib.com manuals search engine

## HAZARD WARNING FLASHER

The hazard flasher switch is located in the center of the instrument panel above the center air outlets.

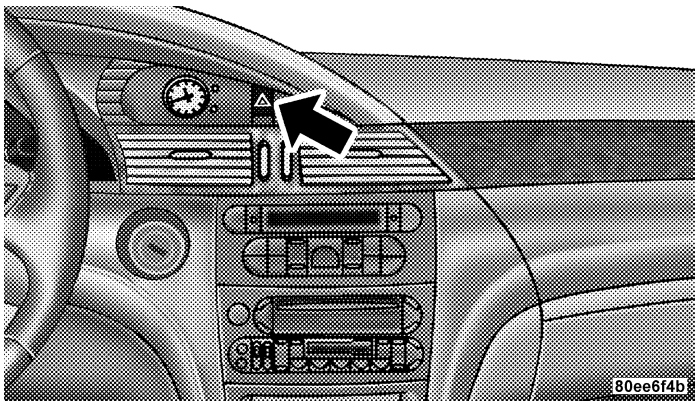


**Hazard Flasher Switch**

To engage the Hazard Warning Flashers, depress the switch on the instrument panel. When the Hazard Warning Switch is activated, all directional turn signals will flash on and off to warn oncoming traffic of an emergency. Push the switch a second time to turn off the flashers.

This is an emergency warning system and should not be used when the vehicle is in motion. Use it when your vehicle is disabled and is creating a safety hazard for other motorists.

When you must leave the vehicle to seek assistance, the Hazard Warning Flashers will continue to operate even though the ignition switch is OFF.

**NOTE:** With extended use, the Hazard Warning Flashers may wear down your battery.

Downloaded from www.Manualslib.com manuals search engine

## IF YOUR ENGINE OVERHEATS

In any of the following situations, you can reduce the potential for overheating by taking the appropriate action.

- On the highways — Slow down.
- In city traffic — While stopped, put transmission in neutral, but do not increase engine idle speed.

**NOTE:** There are steps that you can take to slow down an impending overheat condition. If your air conditioner is on, turn it off. The air conditioning system adds heat to the engine cooling system and turning off the A/C removes this heat. You can also turn the Temperature control to maximum heat, the Mode control to floor, and the fan control to High. This allows the heater core to act as a supplement to the radiator and aids in removing heat from the engine cooling system.

**CAUTION!**

**Driving with a hot cooling system could damage your vehicle. If temperature gauge reads "H", pull over and stop the vehicle. Idle the vehicle with the air conditioner turned off until the pointer drops back into the normal range. If the pointer remains on the "H", turn the engine off immediately, and call for service.**



Downloaded from www.Manualslib.com manuals search engine

**WARNING!**

**A hot engine cooling system is dangerous. You or others could be badly burned by steam or boiling coolant. You may want to call a service center if your vehicle overheats. If you decide to look under the hood yourself, see Section 7, Maintenance, of this manual. Follow the warnings under the Cooling System Pressure Cap paragraph.**

## JACKING AND TIRE CHANGING

**WARNING!**

- **Getting under a jacked-up vehicle is dangerous. The vehicle could slip off the jack and fall on you. You could be crushed. Never get any part of your body under a vehicle that is on a jack. If you need to get under a raised vehicle, take it to a service center where it can be raised on a lift.**
- **The jack is designed to use as a tool for changing tires only. The jack should not be used to lift the vehicle for service purposes. The vehicle should be jacked on a firm level surface only. Avoid ice or slippery areas.**

Downloaded from www.Manualslib.com manuals search engine

## Jack Location

### Five Passenger Seating

The jack and jack-handle are stowed in the rear storage bin located behind the second row bench seat. Pull up on the storage bin cover to access the jack and jack tools.

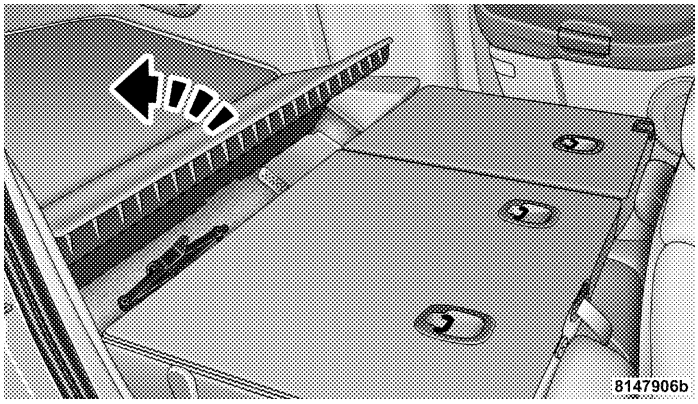


**Jack Location**

Remove the scissors jack and jack handle by rotating the small wing nut to the left.

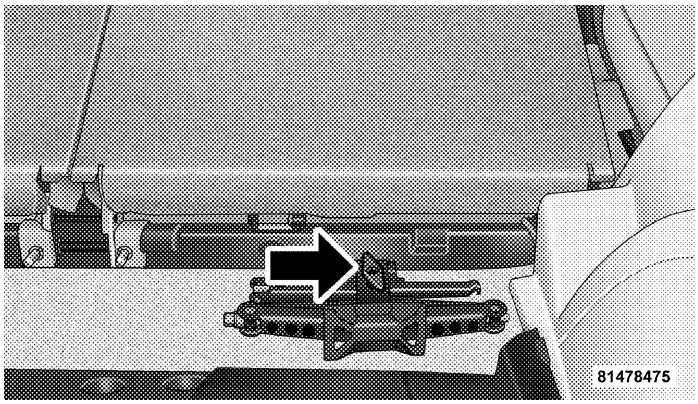


**Jack Wing Nut**



Downloaded from www.Manualslib.com manuals search engine

**Six Passenger Seating**

The jack and jack-handle are stowed in the rear storage bin located in the rear cargo floor. Pull up on the storage bin cover and liner to access the jack and jack tools.

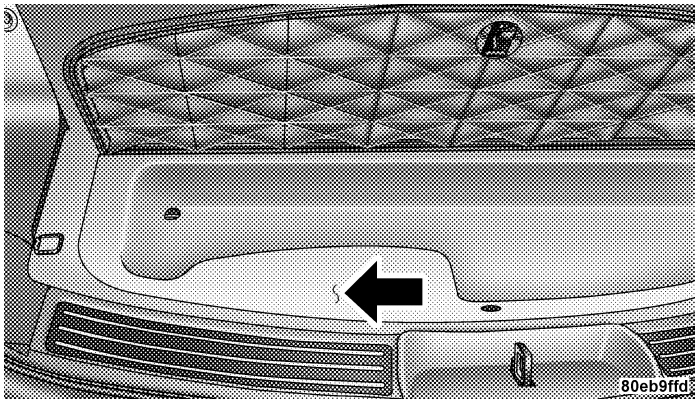


**Jack Location**

## Spare Tire Stowage

**Five Passenger Seating**

The spare tire is stowed under the rear of the vehicle by means of a cable winch mechanism. To remove or stow the spare, use the jack handle to rotate the "spare tire drive" nut. The nut is located under the plastic cover at the center rear of the cargo floor area, just inside the liftgate opening.

**Six Passenger Seating**

The spare tire is stowed under the rear of the vehicle by means of a cable winch mechanism. To remove or stow the spare, use the jack handle to rotate the "spare tire drive" nut. The nut is located under the trim cover at the center of the rear storage bin in the rear cargo floor.

Downloaded from www.Manualslib.com manuals search engine

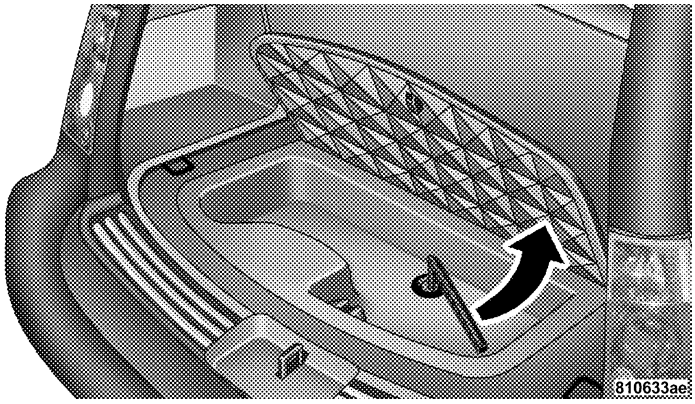


Lowering Spare Tire

### Spare Tire Removal

Fit the jack-handle over the drive nut. Rotate the nut to the left until the spare is on the ground with enough slack cable to allow you to pull the tire out from under the vehicle.

**CAUTION!**

**The winch mechanism is designed for use with the jack handle only. Use of an air wrench or other power tools is not recommended and can damage the winch.**

When the spare is clear, tilt the retainer at the end of the cable and pull it through the center of the wheel.

### Preparations For Jacking

Park the vehicle on a firm level surface, avoid ice or slippery areas, **set the parking brake** and place the gear selector in PARK. Turn OFF the ignition.



Downloaded from www.Manualslib.com manuals search engine

**WARNING!**

**Do not attempt to change a tire on the side of the vehicle close to moving traffic. Pull far enough off the road to avoid the danger of being hit when operating the jack or changing the wheel.**

- Turn on the Hazard Warning Flasher.

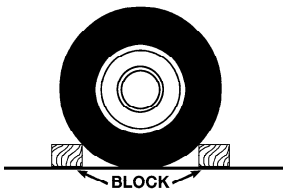


- Block both the front and rear of the wheel diagonally opposite the jacking position. For example, if changing the right front tire, block the left rear wheel.
- Passengers should not remain in the vehicle when the vehicle is being jacked.

### Jacking Instructions

1. Remove the spare wheel, scissors jack and jack-handle from stowage.

2. Carefully pry off the wheel center cap if equipped, using the tip of the jack handle.

3. Loosen (but do not remove) the wheel lug nuts by turning them to the left one turn while the wheel is still on the ground.

4. There are two jack engagement locations on each side of the body — refer to the following illustration.

Downloaded from www.Manualslib.com manuals search engine

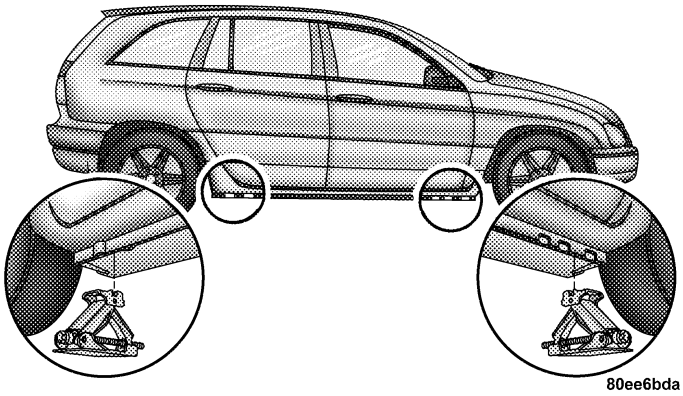


**Jack Engagement Locations**

5. These locations are on the sill flange on the underside of the body. The jack is to be located, engaging the flanges, 20 cm (8 inches) inward from the edge of the wheel opening closest to the wheel to be changed. Place the wrench on the jack screw and turn to the right until the jack head is properly engaged in the described location. **Do not raise the vehicle until you are sure the jack is securely engaged. Never jack up the vehicle using any suspension components.**

6. Raise the vehicle by turning the jack screw to the right, using the swivel wrench. Raise the vehicle only until the tire just clears the surface and enough clearance is obtained to install the spare tire. Minimum tire lift provides maximum stability.

**WARNING!**

**Raising the vehicle higher than necessary can make the vehicle less stable. It could slip off the jack and hurt someone near it. Raise the vehicle only enough to remove the tire.**



Downloaded from www.Manualslib.com manuals search engine

7. Remove the wheel lug nuts, for vehicles with wheel covers, remove the cover from the wheel by hand. Do not pry the wheel cover off. Then pull the wheel off the hub.

8. Install the spare wheel, for vehicles with wheel covers, align the notch in the wheel cover with the valve stem on the wheel. Install the cover on the wheel by hand only and install the wheel lug nuts with the cone shaped end of the nut toward the wheel. Lightly tighten the lug nuts. To avoid the risk of forcing the vehicle off the jack, do not tighten the lug nuts fully until the vehicle has been lowered.

**NOTE:** Do not install the wheel cover on the compact spare.

Do not use a hammer or force to install the wheel covers.

9. Lower the vehicle by turning the jack screw to the left.

10. Finish tightening the lug nuts. Push down on the wrench while tightening for increased leverage. Alternate lug nuts until each nut has been tightened twice. Correct wheel nut tightness is 130 N·m (95 ft. lbs). If in doubt about the correct tightness, have them checked with a torque wrench by your dealer or at a service station.

11. Lower the jack to its fully closed position.

**WARNING!**

**A loose tire or jack, thrown forward in a collision or hard stop could endanger the occupants of the vehicle. Always stow the jack parts and the spare tire in the places provided.**

12. Secure the flat or spare tire as follows:

- If your vehicle is equipped with cast aluminum wheels, the center cap of the wheel must be removed prior to flat tire stowage. Store the center cap inside the glove box or other storage compartment.

Downloaded from www.Manualslib.com manuals search engine

- Turn the wheel so that the valve-stem is down. Slide the wheel retainer through the center of the wheel and position it properly across the wheel opening.
- For convenience in checking the spare tire inflation, stow with the valve-stem toward the rear of the vehicle.
- Using the jack-handle, rotate the drive nut to the right until the wheel is drawn into place against the underside of the vehicle.
- Continue to rotate the nut until you hear the mechanism click three times. It cannot be overtightened. Push against the tire several times to be sure it is securely in place.

13. Stow the jack and jack handle.
14. Check the tire pressure as soon as possible. Correct pressure as required.

**NOTE:** When reinstalling the wheel center cap, insure that the valve stem symbol on the back of the cap is pointed toward the wheel valve stem. Install the center cap using hand pressure only. Do not use a hammer.

## JUMP-STARTING PROCEDURES IF BATTERY IS LOW

| WARNING! |
| --- |
| **Take care to avoid the radiator cooling fan whenever the hood is raised. It can start anytime the ignition switch is on. You can be hurt by the fan.** |



Downloaded from www.Manualslib.com manuals search engine

**WARNING!**

- **Do not attempt to push or tow your vehicle to get it started. Vehicles equipped with an automatic transmission cannot be started this way. Unburned fuel could enter the catalytic converter and once the engine has started, ignite and damage the converter and vehicle. If the vehicle has a discharged battery, booster cables may be used to obtain a start from another vehicle. This type of start can be dangerous if done improperly, so follow this procedure carefully.**
- **Battery fluid is a corrosive acid solution; do not allow battery fluid to contact eyes, skin or clothing. Don't lean over battery when attaching clamps or allow the clamps to touch each other. If acid splashes in eyes or on skin, flush contaminated area immediately with large quantities of water.**
- **A battery generates hydrogen gas which is flammable and explosive. Keep flame or spark away from the vent holes. Do not use a booster battery or any other booster source with an output that exceeds 12 volts.**

1. Wear eye protection and remove any metal jewelry such as watch bands or bracelets that might make an inadvertent electrical contact.

2. When boost is provided by a battery in another vehicle, park that vehicle within booster cable reach and without letting the vehicles touch. Set the parking brake, place the automatic transmission in PARK and turn the ignition switch to the OFF position for both vehicles.

3. Turn off the heater, radio and all unnecessary electrical loads.

4. Connect one end of a jumper cable to the positive terminal of the discharged battery. Connect the other end of the same cable to the positive terminal of the booster battery.

Downloaded from www.Manualslib.com manuals search engine

5. Connect the other cable, first to the negative terminal of the booster battery and **then to the engine of the vehicle with the discharged battery.** Make sure you have a good contact on the engine.

6. Start the engine in the vehicle which has the booster battery, let the engine idle a few minutes, then start the engine in the vehicle with the discharged battery.

7. When removing the jumper cables, reverse the above sequence exactly. Be careful of the moving belts and fan.

## DRIVING ON SLIPPERY SURFACES

### Acceleration

Rapid acceleration on snow covered, wet, or other slippery surfaces may cause the front wheels to pull erratically to the right or left. This phenomenon occurs when there is a difference in the surface traction under the front (driving) wheels.

**WARNING!**

**Rapid acceleration on slippery surfaces is dangerous. Unequal traction can cause sudden pulling of the front wheels. You could lose control of the vehicle and possibly have an accident. Accelerate slowly and carefully whenever there is likely to be poor traction (ice, snow, wet mud, loose sand, etc.).**

### Traction

When driving on wet or slushy roads, it is possible for a wedge of water to build up between the tire and road surface. This is known as hydroplaning and may cause partial or complete loss of vehicle control and stopping ability. To reduce this possibility, the following precautions should be observed:

1. Slow down during rainstorms or when roads are slushy.



Downloaded from www.Manualslib.com manuals search engine

2. Slow down if road has standing water or puddles.

3. Replace tires when tread wear indicators first become visible.

4. Keep tires properly inflated.

5. Maintain sufficient distance between your vehicle and the vehicle in front to avoid a collision in a sudden stop.

## FREEING A STUCK VEHICLE

If your vehicle becomes stuck in mud, sand or snow, it can often be moved by a rocking motion. Turn your steering wheel right and left to clear the area around the front wheels. Then shift back and forth between Reverse and Drive. Usually the least accelerator pedal pressure to maintain the rocking motion without spinning the wheels is most effective.

**WARNING!**

**Fast spinning tires can be dangerous. Forces generated by excessive wheel speeds may cause tire damage or failure. A tire could explode and injure someone. Do not spin your vehicle's wheels faster than 35 mph (55 km/h) when you are stuck. And don't let anyone near a spinning wheel, no matter what the speed.**

**CAUTION!**

**Racing the engine or spinning the wheels too fast may lead to transmission overheating and failure. It can also damage the tires. Do not spin the wheels above 35 mph (55 km/h).**

Downloaded from www.Manualslib.com manuals search engine

## TOWING A DISABLED VEHICLE

### With Ignition Key

**Front Wheel Drive**

Your vehicle may be towed under the following conditions: The gear selector must be in NEUTRAL, the distance to be traveled must not exceed 100 miles (160 km), the towing speed must not exceed 44 mph (72 km/h), and both front and rear wheels must be on the ground. Exceeding these towing limits may cause a transmission geartrain failure. If the transmission is not operative, or if the vehicle is to be towed more than 100 miles (160 km), the vehicle must be towed with the front wheels off the ground.

**All Wheel Drive**

Your vehicle may be towed under the following conditions: The gear selector must be in NEUTRAL, the distance to be traveled must not exceed 100 miles (160 km), the towing speed must not exceed 44 mph (72 km/h), and both front and rear wheels must be on the ground. If your vehicle must be towed farther or at a higher rate of speed, it must be transported on a flat bed truck.



Downloaded from www.Manualslib.com manuals search engine

**All Transmissions**

**CAUTION!**

- **Do not attempt to tow this vehicle from the front with sling type towing equipment. Damage to the front fascia will result.**
- **Always use wheel lift equipment when towing from the front. The only other approved method of towing is with a flat bed truck.**
- **Do not tow the vehicle from the rear. Damage to the rear sheet metal, liftgate and fascia will occur.**
- **Do not push or tow this vehicle with another vehicle as damage to the bumper fascia and transmission may result.**

If it is necessary to use the accessories while being towed (wipers, defrosters, etc.), the key must be in the ON position, not the ACCESSORY position. Make certain the transmission remains in NEUTRAL.

### Without The Ignition Key

Special care must be taken when the vehicle is towed with the ignition in the LOCK position. The only approved method of towing with out the ignition key is with a flat bed truck. Proper towing equipment is necessary to prevent damage to the vehicle.

## TOWING THIS VEHICLE BEHIND ANOTHER VEHICLE (Flat towing with all four wheels on the ground)

Flat towing of vehicles equipped with an automatic transmission, is only permitted within the limitations described in this section.

Downloaded from www.Manualslib.com manuals search engine

## TOWING THIS VEHICLE BEHIND ANOTHER VEHICLE WITH A TOW DOLLY

The manufacturer **does not recommend** that you tow an All-Wheel Drive (AWD) or front wheel drive vehicle on a tow dolly. Vehicle damage may occur.



Downloaded from www.Manualslib.com manuals search engine

Downloaded from www.Manualslib.com manuals search engine

# MAINTAINING YOUR VEHICLE

## CONTENTS


■ 3.5L Engines . . . . . .338
■ 3.8L Engines . . . . . .339
■ Onboard Diagnostic System — OBD II . . . . . .340
□ Loose Fuel Filler Cap Message . . . . . .341
■ Emissions Inspection And Maintenance Programs . . . . . .341
■ Replacement Parts . . . . . .343
■ Dealer Service . . . . . .343
■ Maintenance Procedures . . . . . .344
□ Engine Oil . . . . . .344
□ Engine Oil Filter . . . . . .348
□ Drive Belts — Check Condition And Tension . .348
□ Spark Plugs . . . . . .349
□ Engine Air Cleaner Filter . . . . . .349
□ Catalytic Converter . . . . . .350
□ Maintenance-Free Battery . . . . . .351
□ Air Conditioner Maintenance . . . . . .353
□ Power Steering — Fluid Check . . . . . .354




Downloaded from www.Manualslib.com manuals search engine

- □ Front & Rear Suspension Ball Joints . . . . . .355
- □ Steering Shaft Seal . . . . . .355
- □ Steering Linkage . . . . . .355
- □ Drive Shaft Universal Joints . . . . . .355
- □ Body Lubrication . . . . . .356
- □ Windshield Wiper Blades . . . . . .356
- □ Windshield And Rear Window Washers . . . . .357
- □ Exhaust System . . . . . .357
- □ Cooling System . . . . . .358
- □ Hoses And Vacuum/Vapor Harnesses . . . . . .363
- □ Brakes . . . . . .364
- □ Master Cylinder — Brake Fluid Level Check . .365
- □ Fuel System Hoses . . . . . .367
- □ Automatic Transmission . . . . . .367
- □ All Wheel Drive (AWD) — If Equipped . . . . .370
- □ Front And Rear Wheel Bearings . . . . . .372
- □ Appearance Care And Protection From Corrosion . . . . . .372
- □ Cleaning The Center Console Cup Holders . . .376

■ Integrated Power Module (IPM) . . . . . .377

■ Vehicle Storage . . . . . .380

■ Replacement Light Bulbs . . . . . .381

■ Bulb Replacement . . . . . .382

- □ Standard Quad Headlights . . . . . .382
- □ High Intensity Discharge Headlights (HID) — If Equipped . . . . . .383


Downloaded from www.Manualslib.com manuals search engine

□ Front Park/Turn Signal And Sidemarker Lights . . . . . .384
□ Front Fog Light . . . . . .384
□ Rear Tail, Stop, Turn Signal, Side Marker And Back-Up Lights . . . . . .385
□ License Light . . . . . .385
■ Fluids And Capacities . . . . . .386
■ Fluids, Lubricants And Genuine Parts . . . . . .387
□ Engine . . . . . .387
□ Chassis . . . . . .388



Downloaded from www.Manualslib.com manuals search engine

## 3.5L ENGINES

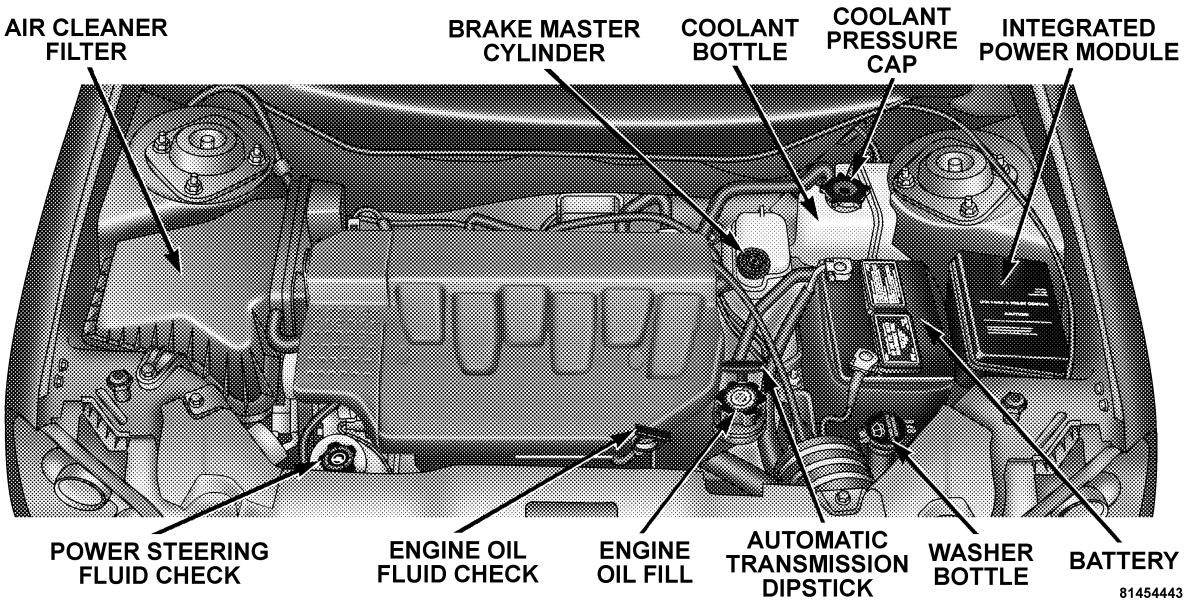


**Engine Compartment 3.5L Engines**

Downloaded from www.Manualslib.com manuals search engine

## 3.8L ENGINES

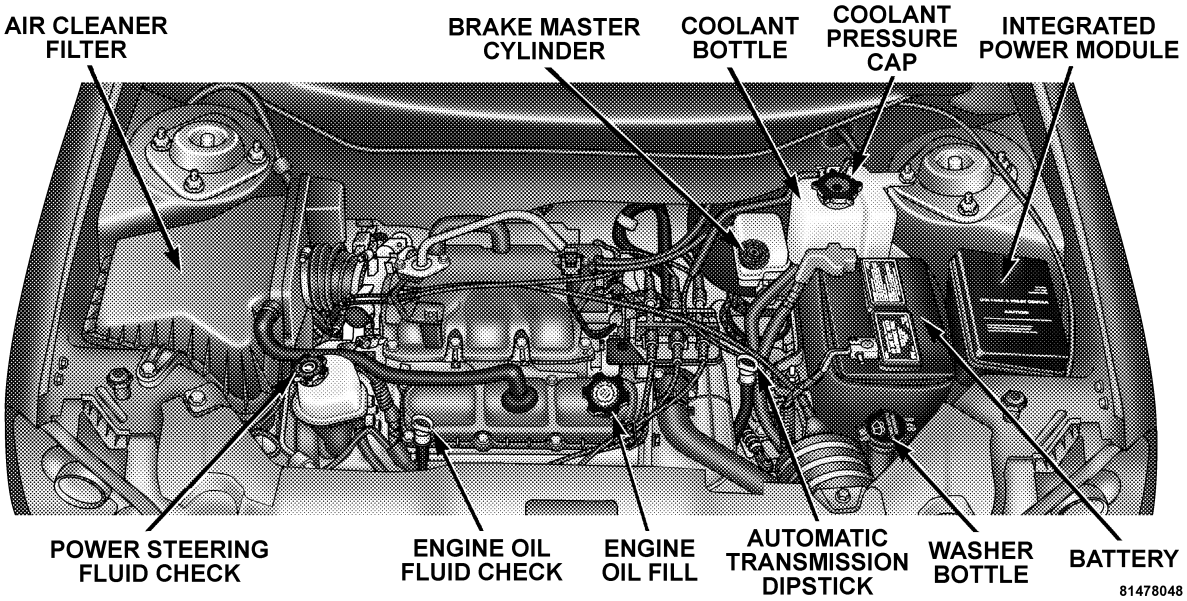


Engine Compartment 3.8L Engines



Downloaded from www.Manualslib.com manuals search engine

## ONBOARD DIAGNOSTIC SYSTEM — OBD II

Your vehicle is equipped with a sophisticated onboard diagnostic system called OBD II. This system monitors the performance of the emissions, engine, and automatic transmission control systems. When these systems are operating properly, your vehicle will provide excellent performance and fuel economy, as well as engine emissions well within current government regulations.

If any of these systems require service, the OBD II system will turn on the "Malfunction Indicator Light." It will also store diagnostic codes and other information to assist your service technician in making repairs. Although your vehicle will usually be drivable and not need towing, see your dealer for service as soon as possible.

**CAUTION!**

- **Prolonged driving with the "Malfunction Indicator Light" on could cause further damage to the emission control system. It could also affect fuel economy and driveability. The vehicle must be serviced before any emissions tests can be performed.**
- **If the "Malfunction Indicator Light" is flashing while the engine is running, severe catalytic converter damage and power loss will soon occur. Immediate service is required.**

Downloaded from www.Manualslib.com manuals search engine

### Loose Fuel Filler Cap Message

After fuel is added, the vehicle diagnostic system can determine if the fuel filler cap is loose, improperly installed, or damaged. A loose fuel filler cap message will be displayed in the instrument cluster. Tighten the gas cap until a "clicking" sound is heard. This is an indication that the gas cap is properly tightened. Press the odometer reset button to turn the message off. If the problem persists, the message will appear the next time the vehicle is started. This might indicate a damaged cap. If the problem is detected twice in a row, the system will turn on the Malfunction Indicator Light (MIL). Resolving the problem will turn the MIL light off.

## EMISSIONS INSPECTION AND MAINTENANCE PROGRAMS

In some localities, it may be a legal requirement to pass an inspection of your vehicle's emissions control system. Failure to pass could prevent vehicle registration.

For states which have an I/M (Inspection and Maintenance) requirement, this check verifies the following: the MIL (Malfunction Indicator Lamp) is functioning and is not on when the engine is running, and that the OBD (On Board Diagnostic) system is ready for testing.

Normally, the OBD system will be ready. The OBD system may **not** be ready if your vehicle was recently serviced, if you recently had a dead battery, or a battery replacement. If the OBD system should be determined not ready for the I/M test, your vehicle may fail the test.



Downloaded from www.Manualslib.com manuals search engine

Your vehicle has a simple ignition key actuated test which you can use prior to going to the test station. To check if your vehicle's OBD system is ready, you must do the following:

1. Insert your ignition key into the ignition switch.

2. Turn the ignition to the ON position, but do not crank or start the engine.

3. If you crank or start the engine, you will have to start this test over.

4. As soon as you turn your key to the ON position, you will see your MIL symbol come on as part of a normal bulb check.

5. Approximately 15 seconds later, one of two things will happen:

a. The MIL will flash for about 10 seconds and then return to being fully illuminated until you turn off the ignition key or start the engine. This means that your vehicle's OBD system is **not ready** and you should **not** proceed to the I/M station.

b. The MIL will not flash at all and will remain fully illuminated until you turn off the ignition key or start the engine. This means that your vehicle's OBD system is **ready** and you can proceed to the I/M station.

If your OBD system is **not ready,** you should see your authorized dealer or repair facility. If your vehicle was recently serviced or had a battery failure or replacement, you may need to do nothing more than drive your vehicle as you normally would in order for your OBD system to update. A recheck with the above test routine may then indicate that the system is now ready.

Regardless of whether your vehicle's OBD system is ready or not ready, if the MIL symbol is illuminated during normal vehicle operation, you should have your

Downloaded from www.Manualslib.com manuals search engine

vehicle serviced before going to the I/M station. The I/M station can fail your vehicle because the MIL symbol is on with the engine running.

## REPLACEMENT PARTS

Use of genuine Mopar® parts for normal/scheduled maintenance and repairs is highly recommended to insure the designed performance. Damage or failures caused by the use of non-Mopar® parts for maintenance and repairs will not be covered by the manufacturer's warranty.

## DEALER SERVICE

Your dealer has the qualified service personnel, special tools and equipment to perform all service operations in an expert manner. Service Manuals are available which include detailed service information for your vehicle. Refer to these manuals before attempting any procedure yourself.

**NOTE:** Intentional tampering with emissions control systems can result in civil penalties being assessed against you.

**WARNING!**

**You can be badly injured working on or around a motor vehicle. Do only that service work for which you have the knowledge and the proper equipment. If you have any doubt about your ability to perform a service job, take your vehicle to a competent mechanic.**



Downloaded from www.Manualslib.com manuals search engine

## MAINTENANCE PROCEDURES

The pages that follow contain the **required** maintenance services determined by the engineers who designed your vehicle.

Besides the maintenance items for which there are fixed maintenance intervals, there are other items that should operate satisfactorily without periodic maintenance. However, if a malfunction of these items does occur, it could adversely affect the engine or vehicle performance. These items should be inspected if a malfunction is observed or suspected.

## Engine Oil

### Checking Oil Level

To assure proper engine lubrication, the engine oil must be maintained at the correct level. Check the oil level at regular intervals, such as every fuel stop.

The best time to check the engine oil level is about 5 minutes after a fully warmed engine is shut off or before starting the engine after it has sat overnight.

Checking the oil while the vehicle is on level ground will improve the accuracy of the oil level readings. Maintain the oil level between the MIN and MAX markings on the dipstick. Adding one quart of oil when the reading is at the MIN mark will result in a MAX reading on these engines.

Downloaded from www.Manualslib.com manuals search engine

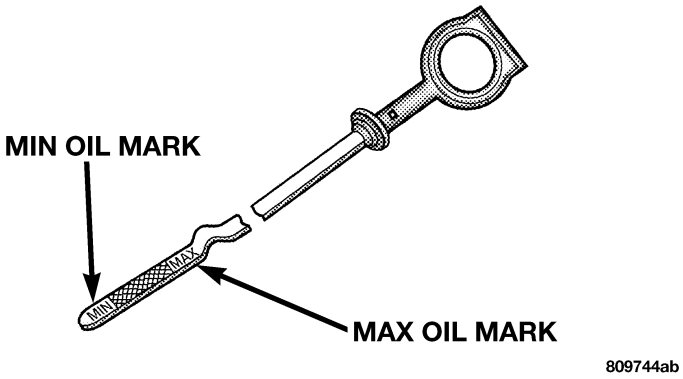


Engine Oil Dipstick

| CAUTION! |
| --- |
| **Overfilling or underfilling will cause oil aeration or loss of oil pressure. This could damage your engine.** |

**Change Engine Oil**

Road conditions and your kind of driving affects the interval at which your oil should be changed. Check the following list to see if any apply to you.

- Day or night temperatures are below 32°F (0°C).
- Stop and Go driving.
- Extensive engine idling.
- Driving in dusty conditions.
- Short trips of less than 10 miles (16 km).
- More than 50% of your driving is at sustained high speeds during hot weather, above 90°F (32°C).
- Trailer towing.
- Taxi, Police or delivery service (commercial service).
- Off-Road or desert operation.



Downloaded from www.Manualslib.com manuals search engine

**NOTE:** If **ANY** of these apply to you then change your engine oil every 3,000 miles (5 000 km) or 3 months, whichever comes first and follow schedule "B" of the "Maintenance Schedules" section of this manual.

If none of these apply to you, then change your engine oil at every interval shown on schedule "A" of the "Maintenance Schedules" section of this manual.

**NOTE:** Under no circumstances should oil change intervals exceed 6000 miles (10 000 km) or 6 months whichever comes first.

**Engine Oil Selection**

For best performance and maximum protection under all types of operating conditions, the manufacturer only recommends engine oils that are API certified and meet the requirements of DaimlerChrysler Material Standard MS-6395.

**American Petroleum Institute (API) Engine Oil Identification Symbol**

This symbol means that the oil has been certified by the American Petroleum Institute (API). The manufacturer only recommends API Certified engine oils.

**Engine Oil Viscosity (SAE Grade) — 3.5 Liter Engines**

The proper SAE viscosity grade of engine oil should be selected based on the following recommendation and be within the operating temperature shown in the engine oil viscosity chart.

Downloaded from www.Manualslib.com manuals search engine

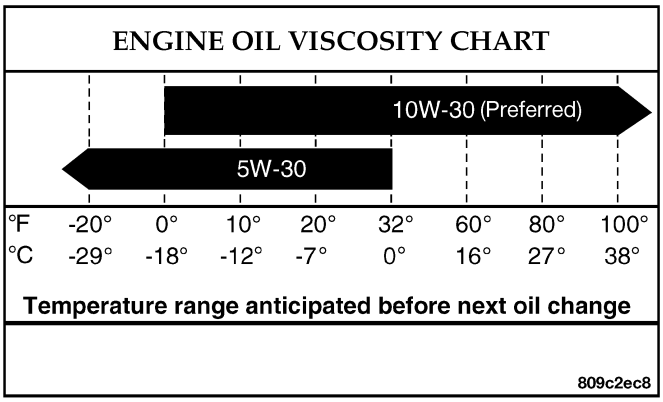


- **SAE 10W-30** engine oil is preferred. SAE 5W-30 engine oil is allowed during cold weather only to improve cold weather starting.

Lubricants which do not have both, the engine oil certification mark and the correct SAE viscosity grade number should not be used.

**Engine Oil Viscosity (SAE Grade) — 3.8 Liter Engines**

SAE 5W-20 engine oil is recommended for all operating temperatures. This engine oil improves low temperature starting and vehicle fuel economy. Your engine oil filler cap also shows the recommended engine oil viscosity for your vehicle.

For information on engine oil filler cap location, refer to the Engine Compartment illustration in this section.

Lubricants which do not have both, the engine oil certification mark and the correct SAE viscosity grade number should not be used.



Downloaded from www.Manualslib.com manuals search engine

**Synthetic Engine Oils**
There are a number of engine oils being promoted as either synthetic or semi-synthetic. If you chose to use such a product, use **only** those oils that are American Petroleum Institute (API) Certified and have the recommended SAE viscosity grade. Follow the maintenance schedule that describes your driving type.

**Materials Added to Engine Oil**
The manufacture strongly recommends against the addition of any additives (other than leak detection dyes) to the engine oil. Engine oil is an engineered product and it's performance may be impaired by supplemental additives.

**Disposing of Used Engine Oil And Oil Filters**
Care should be taken in disposing of used engine oil and oil filters from your vehicle. Used oil and oil filters, indiscriminately discarded, can present a problem to the environment. Contact your dealer, service station, or governmental agency for advice on how and where used oil and oil filters can be safely discarded in your area.

## Engine Oil Filter
The engine oil filter should be replaced at every engine oil change.

**Engine Oil Filter Selection**
This manufacture's engines have a full-flow type oil filter. Use a filter of this type for replacement. The quality of replacement filters varies considerably. Only high quality filters should be used to assure most efficient service. Mopar Engine Oil Filters are a high quality oil filter and are recommended.

## Drive Belts — Check Condition and Tension
At the mileage indicated in the maintenance schedule, all belts should be checked for condition and proper tension. Improper belt tension can cause belt slippage and failure.

Downloaded from www.Manualslib.com manuals search engine

Belts should be inspected for evidence of cuts, cracks, or glazing, and replaced if there is indication of damage which could result in belt failure. Low generator belt tension can cause battery failure.

Also check belt routing to make sure there is no interference between the belts and other engine components.

### Spark Plugs

Spark plugs must fire properly to assure engine performance and emission control. New plugs should be installed at the specified mileage. The entire set should be replaced if there is any malfunction due to a faulty spark plug. Malfunctioning spark plugs can damage the catalytic converter. For proper type of replacement spark plugs, refer to the "Vehicle Emission Control Information" label in the engine compartment.

### Engine Air Cleaner Filter

Under normal driving conditions, replace the air filter at the intervals shown on Schedule "A". If, however, you drive the vehicle frequently under dusty or severe conditions, the filter element should be inspected periodically and replaced if necessary at the intervals shown on Schedule "B".

**WARNING!**

**The air cleaner can provide a measure of protection in the case of engine backfire. Do not remove the air cleaner unless such removal is necessary for repair or maintenance. Make sure that no one is near the engine compartment before starting the vehicle with the air cleaner removed. Failure to do so can result in serious personal injury.**



Downloaded from www.Manualslib.com manuals search engine

## Catalytic Converter

The catalytic converter requires the use of unleaded fuel only. Leaded gasoline will destroy the effectiveness of the catalyst as an emission control device.

Under normal operating conditions, the catalytic converter will not require maintenance. However, it is important to keep the engine properly tuned to assure proper catalyst operation and prevent possible catalyst damage.

**CAUTION!**

**Damage to the catalytic converter can result if your vehicle is not kept in proper operating condition. In the event of engine malfunction, particularly involving engine misfire or other apparent loss of performance, have your vehicle serviced promptly. Continued operation of your vehicle with a severe malfunction could cause the converter to overheat, resulting in possible damage to the converter and the vehicle.**

**NOTE:** Intentional tampering with emissions control systems can result in civil penalties being assessed against you.

Downloaded from www.Manualslib.com manuals search engine

**WARNING!**

**A hot exhaust system can start a fire if you park over materials that can burn. Such materials might be grass or leaves coming into contact with your exhaust system. Do not park or operate your vehicle in areas where your exhaust system can contact anything that can burn.**

In unusual situations involving grossly malfunctioning engine operation, a scorching odor may indicate severe and abnormal catalyst overheating. If this occurs, the vehicle should be stopped, the engine shut off and the vehicle allowed to cool. Thereafter, service, including a tune-up to manufacturer's specifications, should be obtained immediately.

To minimize the possibility of catalyst damage:

- Do not shut off the engine or interrupt the ignition when the transmission is in gear and the vehicle is in motion.
- Do not try to start engine by pushing or towing the vehicle.
- Do not idle the engine with any spark plug wires disconnected or removed, such as when diagnostic testing, or for prolonged periods during very rough idling or malfunctioning operating conditions.

### Maintenance-Free Battery

The top of the MAINTENANCE-FREE battery is permanently sealed. You will never have to add water, nor is periodic maintenance required.



Downloaded from www.Manualslib.com manuals search engine

**WARNING!**

- **Battery fluid is a corrosive acid solution and can burn or even blind you. Don't allow battery fluid to contact your eyes, skin or clothing. Don't lean over a battery when attaching clamps. If acid splashes in eyes or on skin, flush the area immediately with large amounts of water.**
- **Battery gas is flammable and explosive. Keep flame or sparks away from the battery. Don't use a booster battery or any other booster source with an output greater than 12 volts. Don't allow cable clamps to touch each other.**
- **Battery posts, terminals and related accessories contain lead and lead compounds. Wash hands after handling.**

**CAUTION!**

- **It is essential when replacing the cables on the battery that the positive cable is attached to the positive post and the negative cable is attached to the negative post. Battery posts are marked positive (+) and negative (-) and identified on the battery case. Cable clamps should be tight on the terminal posts and free of corrosion.**
- **If a "fast charger" is used while battery is in vehicle, disconnect both vehicle battery cables before connecting the charger to battery. Do not use a "fast charger" to provide starting voltage.**

Downloaded from www.Manualslib.com manuals search engine

### Air Conditioner Maintenance

For best possible performance, your air conditioner should be checked and serviced by an Authorized Dealer at the start of each warm season. This service should include cleaning of the condenser fins and a system performance check. Drive belt tension should also be checked at this time.

**WARNING!**

- **Use only refrigerants and compressor lubricants approved by the manufacturer for your air conditioning system. Some unapproved refrigerants are flammable and can explode, injuring you. Other unapproved refrigerants or lubricants can cause the system to fail, requiring costly repairs. Refer to Section 3 of the Warranty Information book for further warranty information.**
- **The air conditioning system contains refrigerant under high pressure. To avoid risk of personal injury or damage to the system, adding refrigerant or any repair requiring lines to be disconnected should be done by an experienced repairman.**



Downloaded from www.Manualslib.com manuals search engine

**Refrigerant Recovery And Recycling**
R-134a Air Conditioning Refrigerant is a hydrofluorocarbon (HFC) that is endorsed by the Environmental Protection Agency and is an ozone-saving product. However, the manufacturer recommends that air conditioning service be performed by dealers or other service facilities using recovery and recycling equipment.

**NOTE:** Use only manufacturer approved A/C System Sealers, Stop Leak Products, Seal Conditioners, Compressor Oil, or Refrigerants.

**A/C Air Filter**
The filter access door is located under the instrument panel on the passenger side. To replace the filter slide the lock toward the rear of the vehicle (unlock position). Remove the access door and pull the filter downward. When installing a new filter, ensure its proper orientation. Align the black arrow on the bottom of the filter frame with the direction of airflow (away from the blower motor and towards the center of the car).

**Refer to the "Maintenance Schedules" section of this manual for the recommended air conditioning filter replacement intervals.**

## Power Steering — Fluid Check
Checking the power steering fluid level at a defined service interval is not required. The fluid should only be checked if a leak is suspected, abnormal noises are apparent, and/or the system is not functioning as anticipated. Coordinate inspection efforts through a certified DaimlerChrysler Dealership."

Downloaded from www.Manualslib.com manuals search engine

**WARNING!**

**Fluid level should be checked on a level surface and with the engine off to prevent injury from moving parts and to insure accurate fluid level reading. Do not overfill. Use only manufacturers recommended power steering fluid.**

If necessary, add fluid to restore to the proper indicated level. With a clean cloth, wipe any spilled fluid from all surfaces. Refer to Fluids, Lubricants, and Genuine Parts for correct fluid type.

### Front & Rear Suspension Ball Joints

The suspension ball joints are permanently sealed. No regular maintenance is required for these components.

### Steering Shaft Seal

The steering shaft seal, at the point where the shaft passes through the bulkhead, is lubricated when it is installed. If the seal becomes noisy when the steering shaft is turned, it should be lubricated with a multi-purpose grease. Mopar multi-purpose lubricant is recommended.

### Steering Linkage

The tie rod end ball joints are permanently lubricated and do not require periodic maintenance.

### Drive Shaft Universal Joints

Your vehicle has constant velocity universal joints. Periodic lubrication of these joints is not required. However, the joint boots should be inspected for external leakage or damage when other maintenance is performed. If leakage or damage is evident, the universal joint boot and grease should be replaced immediately.



Downloaded from www.Manualslib.com manuals search engine

Continued operation could result in failure of the universal joint due to water and dirt contamination of the grease. This would require complete replacement of the joint assembly.

### Body Lubrication

Locks and all body pivot points, including such items as seat tracks, doors, liftgate and hood hinges, should be lubricated periodically to assure quiet, easy operation and to protect against rust and wear. Prior to the application of any lubricant, the parts concerned should be wiped clean to remove dust and grit; after lubricating excess oil and grease should be removed. Particular attention should also be given to hood latching components to insure proper function. When performing other underhood services, the hood latch, release mechanism and safety catch should be cleaned and lubricated.

The external lock cylinders should be lubricated twice a year, preferably in the fall and spring. Apply a small amount of a high quality lubricant such as Mopar® Lock Cylinder Lubricant directly into the lock cylinder.

### Windshield Wiper Blades

The rubber edges of the wiper blades and the windshield should be cleaned periodically with a sponge or soft cloth and a mild nonabrasive cleaner. This will remove accumulations of salt or road film.

Operation of the wipers on dry glass for long periods may cause deterioration of the wiper blades. Always use washer fluid when using the wipers to remove salt or dirt from a dry windshield.

Avoid using the wiper blades to remove frost or ice from the windshield. Keep the blade rubber out of contact with petroleum products such as engine oil, gasoline, etc.

Downloaded from www.Manualslib.com manuals search engine

## Windshield and Rear Window Washers

The fluid reservoir for the windshield washers and the rear window washer is shared. It is located in the engine compartment and should be checked for fluid level at regular intervals. Fill the reservoir with windshield washer solvent (not radiator antifreeze) and operate the system for a few seconds to flush out the residual water.

The washer fluid reservoir will hold a full gallon of fluid when the Low Washer Fluid Light illuminates.

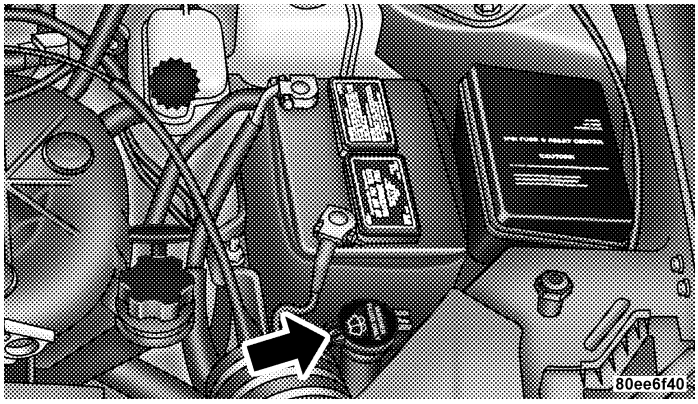


**Washer Fluid Reservoir**



## Exhaust System

The best protection against carbon monoxide entry into the vehicle body is a properly maintained engine exhaust system.

Whenever a change is noticed in the sound of the exhaust system, when exhaust fumes can be detected inside the

Downloaded from www.Manualslib.com manuals search engine

vehicle, or when the underside or rear of the vehicle is damaged, have a competent mechanic inspect the complete exhaust system and adjacent body areas for broken, damaged, deteriorated, or mispositioned parts. Open seams or loose connections could permit exhaust fumes to seep into the passenger compartment. In addition, inspect the exhaust system each time the vehicle is raised for lubrication or oil change. Replace as required.

**WARNING!**

**Exhaust gases can injure or kill. They contain carbon monoxide (CO) which is colorless and odorless. Breathing it can make you unconscious and can eventually poison you. To avoid breathing CO, refer to "Exhaust Gas" in the Safety Tips section of this manual.**

## Cooling System

**WARNING!**

- **When working near the radiator cooling fan, disconnect the fan motor lead or turn the ignition switch to the OFF position. The fan is temperature controlled and can start at any time the ignition switch is in the ON position.**
- **You or others can be badly burned by hot coolant or steam from your radiator. If you see or hear steam coming from under the hood, don't open the hood until the radiator has had time to cool. Never try to open a cooling system pressure cap when the radiator is hot.**

Downloaded from www.Manualslib.com manuals search engine

**Engine Coolant Checks**
Check the engine coolant (antifreeze) protection every 12 months (before the onset of freezing weather, where applicable). If coolant is dirty or rusty in appearance, the system should be drained, flushed and refilled with fresh coolant. Check the front of the A/C condenser for any accumulation of bugs, leaves, etc. If dirty, clean by gently spraying water from a garden hose vertically down the face of the condenser.

Check the coolant recovery bottle tubing for brittle rubber, cracking, tears, cuts and tightness of the connection at the bottle and radiator. Inspect the entire system for leaks.

With the engine at normal operating temperature (but not running), check the cooling system pressure cap for proper vacuum sealing by draining a small amount of coolant from the radiator drain cock. If the cap is sealing properly, the engine coolant (antifreeze) will begin to drain from the coolant recovery bottle. DO NOT REMOVE THE COOLANT PRESSURE CAP WHEN THE COOLING SYSTEM IS HOT.

**Cooling System — Drain, Flush and Refill**
At the intervals shown on the Maintenance Schedules, the system should be drained, flushed and refilled.

If the solution is dirty or contains a considerable amount of sediment, clean and flush with a reliable cooling system cleaner. Follow with a thorough rinsing to remove all deposits and chemicals. Properly dispose of old antifreeze solution.

**Selection Of Engine Coolant**
Use only the manufacturers recommended coolant, refer to Fluids, Lubricants and Genuine Parts for correct coolant type.



Downloaded from www.Manualslib.com manuals search engine

**CAUTION!**

**Mixing of coolants other than specified HOAT engine coolants, may result in engine damage and may decrease corrosion protection. If a non-HOAT coolant is introduced into the cooling system in an emergency, it should be replaced with the specified coolant as soon as possible.**

**Do not use plain water alone or alcohol base engine coolant (antifreeze) products. Do not use additional rust inhibitors or antirust products, as they may not be compatible with the radiator engine coolant and may plug the radiator.**

**This vehicle has not been designed for use with Propylene Glycol based coolants. Use of Propylene Glycol based coolants is not recommended.**

**Adding Engine Coolant**

Your vehicle has been built with an improved engine coolant that allows extended maintenance intervals. This coolant can be used up to 5 Years or 100,000 miles before replacement. To prevent reducing this extended maintenance period, it is important that you use the same coolant throughout the life of your vehicle. Please review these recommendations for using Hybrid Organic Additive Technology (HOAT) coolant.

When adding coolant, a minimum solution of 50% recommended Mopar Antifreeze/ Coolant 5 Year/100,000 Mile Formula HOAT (Hybrid Organic Additive Technology), or equivalent, in water should be used. Use higher concentrations (not to exceed 70%) if temperatures below −34°F (−37°C ) are anticipated.

Use only high purity water such as distilled or deionized water when mixing the water/engine coolant solution.

Downloaded from www.Manualslib.com manuals search engine

The use of lower quality water will reduce the amount of corrosion protection in the engine cooling system.

Please note that it is the owner's responsibility to maintain the proper level of protection against freezing according to the temperatures occurring in the area where the vehicle is operated.

**NOTE:** Mixing coolant types will decrease the life of the engine coolant and will require more frequent coolant changes.

**Cooling System Pressure Cap**

The cap must be fully tightened to prevent loss of coolant, and to insure that coolant will return to the radiator from the coolant recovery bottle.

The cap should be inspected and cleaned if there is any accumulation of foreign material on the sealing surfaces.

**WARNING!**

- **The warning words "DO NOT OPEN HOT" on the cooling system pressure cap are a safety precaution. Never add coolant when the engine is overheated. Do not loosen or remove the cap to cool an overheated engine. Heat causes pressure to build up in the cooling system. To prevent scalding or injury, do not remove the pressure cap while the system is hot or under pressure.**
- **Do not use a pressure cap other than the one specified for your vehicle. Personal injury or engine damage may result.**



Downloaded from www.Manualslib.com manuals search engine

**Disposal of Used Engine Coolant**
Used ethylene glycol based engine coolant is a regulated substance requiring proper disposal. Check with your local authorities to determine the disposal rules for your community. To prevent ingestion by animals or children do not store ethylene glycol based engine coolant in open containers or allow it to remain in puddles on the ground. If ingested by a child, contact a physician immediately. Clean up any ground spills immediately.

**Engine Coolant Level**
The coolant bottle provides a quick visual method for determining that the coolant level is adequate. With the engine off and cold, the coolant level in the coolant recovery bottle should be between the ranges indicated on the bottle.

The radiator normally remains completely full, so there is no need to remove the radiator cap unless checking for coolant freeze point or replacing coolant. Advise your service attendant of this. As long as the engine operating temperature is satisfactory, the coolant bottle need only be checked once a month.

When additional coolant is needed to maintain the proper level, it should be added to the coolant bottle. Do not overfill.

**Points To Remember**

**NOTE:** When the vehicle is stopped after a few miles (a few kilometers) of operation, you may observe vapor coming from the front of the engine compartment. This is normally a result of moisture from rain, snow, or high humidity accumulating on the radiator and being vaporized when the thermostat opens, allowing hot coolant to enter the radiator.

Downloaded from www.Manualslib.com manuals search engine

If an examination of your engine compartment shows no evidence of radiator or hose leaks, the vehicle may be safely driven. The vapor will soon dissipate.

- Do not overfill the coolant recovery bottle.
- Check coolant freeze point in the radiator and in the coolant recovery bottle. If antifreeze needs to be added, contents of coolant recovery bottle must also be protected against freezing.
- If frequent coolant additions are required, or if the level in the coolant recovery bottle does not drop when the engine cools, the cooling system should be pressure tested for leaks.
- Maintain coolant concentration at 50% HOAT engine coolant (minimum) and distilled water for proper corrosion protection of your engine which contains aluminum components.
- Make sure that the radiator and coolant recovery bottle overflow hoses are not kinked or obstructed.
- Keep the front of the radiator clean. If your vehicle is equipped with air conditioning, keep the front of the condenser clean, also.
- Do not change the thermostat for summer or winter operation. If replacement is ever necessary, install ONLY the correct type thermostat. Other designs may result in unsatisfactory coolant performance, poor gas mileage, and increased emissions.

### Hoses And Vacuum/Vapor Harnesses

Inspect surfaces of hoses and nylon tubing for evidence of heat and mechanical damage. Hard or soft spots, brittle rubber, cracking, tears, cuts, abrasions, and excessive swelling indicate deterioration of the rubber.



Downloaded from www.Manualslib.com manuals search engine

Pay particular attention to those hoses nearest to high heat sources such as the exhaust manifold. Inspect hose routing to be sure hoses do not come in contact with any heat source or moving component which may cause heat damage or mechanical wear.

Insure nylon tubing in these areas has not melted or collapsed.

Inspect all hose connections such as clamps and couplings to make sure they are secure and no leaks are present.

Components should be replaced immediately if there is any evidence of wear or damage that could cause failure.

## Brakes

In order to assure brake system performance, all brake system components should be inspected periodically. Suggested service intervals can be found in the Maintenance Schedules.

**WARNING!**

**Riding the brakes can lead to brake failure and possibly an accident. Driving with your foot resting or riding on the brake pedal can result in abnormally high brake temperatures, excessive lining wear, and possible brake damage. You wouldn't have your full braking capacity in an emergency.**

### Brake And Power Steering Hoses

When the vehicle is serviced for scheduled maintenance, inspect surface of hoses and nylon tubing for evidence of heat and mechanical damage. Hard and brittle rubber, cracking, tears, cuts, abrasion, and excessive swelling indicate deterioration of the rubber. Particular attention should be made to examining those hose surfaces nearest to high heat sources, such as the exhaust manifold.

Downloaded from www.Manualslib.com manuals search engine

Insure nylon tubing in these areas has not melted or collapsed.

Inspect all hose connections such as clamps and couplings to make sure they are secure and no leaks are present.

**NOTE:** Often, fluid such as oil, power steering fluid, and brake fluid are used during assembly plant operations to facilitate the assembly of hoses to couplings. Therefore, oil wetness at the hose-coupling area is not necessarily an indication of leakage. Actual dripping of hot fluid when systems are under pressure (during vehicle operation), should be noted before a hose is replaced based on leakage.

**NOTE:** Inspection of brake hoses should be performed whenever the brake system is serviced and at every engine oil change. Inspect hydraulic brake hoses for surface cracking, scuffing, or worn spots. If there is any evidence of cracking, scuffing, or worn spots, the hose should be replaced immediately! Eventual deterioration of the hose can take place resulting in a possibility of a burst failure.

**WARNING!**

**Worn brake hoses can burst and cause brake failure. You could have an accident. If you see any signs of cracking, scuffing, or worn spots, have the brake hoses replaced immediately.**

### Master Cylinder — Brake Fluid Level Check

The fluid level in the master cylinder should be checked when performing underhood services, or immediately if the brake system warning light indicates system failure.

Clean the top of the master cylinder area before removing the cap. Add fluid to bring the level up to the top of the "FULL" mark on the side of the master cylinder reservoir.



Downloaded from www.Manualslib.com manuals search engine

Overfilling of fluid is not recommended because it may cause leaking in the system.

Add enough fluid to bring the level up to the requirements described on the brake fluid reservoir. With disc brakes, fluid level can be expected to fall as the brake pads wear. However, low fluid level may be caused by a leak and a checkup may be needed.

Use only manufacturers recommended brake fluid, refer to Fluids, Lubricants and Genuine Parts for correct fluid type.

**WARNING!**

- **Overfilling the brake fluid reservoir can result in spilling brake fluid on hot engine parts and the brake fluid catching fire.**
- **Use of brake fluid that may have a lower initial boiling point or unidentified as to specification, may result in sudden brake failure during hard prolonged braking. You could have an accident.**

Use only brake fluid that has been in a tightly closed container to avoid contamination from foreign matter or moisture.

Downloaded from www.Manualslib.com manuals search engine

**CAUTION!**

**Do not allow petroleum base fluid to contaminate the brake fluid, all brake seal components could be damaged causing partial or complete brake failure.**

### Fuel System Hoses

Electronic Fuel Injection high pressure fuel systems are designed with hoses and quick connect fittings which have unique material characteristics to provide adequate sealing and resist attack by deteriorated gasoline.

You are urged to use only the manufacture specified hoses with quick connect fittings, or their equivalent in material and specification, in any fuel system servicing. It is mandatory to replace any damaged hoses or quick connect fittings that have been removed during service. Care should be taken in installing quick connect fittings to insure they are properly installed and fully connected. See your authorized dealer for service.

### Automatic Transmission

The automatic transmission and differential assembly are contained within a single housing.

All automatic transmissions are equipped with a conventional filler tube and dipstick. If fluid is added, it should be added through the dipstick hole in the case.

The dipstick is located just behind the radiator, lower right side.

**Selection of Lubricant**

It is important that the proper lubricant is used in the transmission to assure optimum transmission performance. Use only manufacturers recommended transmission fluid, refer to Fluids, Lubricants and Genuine Parts



Downloaded from www.Manualslib.com manuals search engine

for correct fluid type. It is important that the transmission fluid be maintained at the prescribed level using the recommended fluid.

**CAUTION!**

**Using a transmission fluid other than the manufacturers recommended fluid may cause deterioration in transmission shift quality and/or torque converter shudder. Using a transmission fluid other than the manufacturers recommended fluid will result in more frequent fluid and filter changes. Refer to Fluids, Lubricants and Genuine Parts for correct fluid type.**

**4 SPEED DIPSTICK**

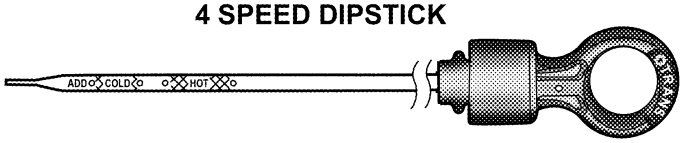


80f34e48

**Procedure For Checking Fluid Level**

The fluid level in the automatic transmission should be checked whenever the vehicle is serviced. Operation with an improper fluid level will greatly reduce the life of the transmission and of the fluid.

To properly check the automatic transmission fluid level, the following procedure must be used:

1. The vehicle must be on level ground.

2. The engine should be running at curb idle speed for a minimum of 60 seconds.

3. Fully apply parking brake.

Downloaded from www.Manualslib.com manuals search engine

4. Place the gear selector momentarily in each gear position ending with the lever in P (PARK). Wipe the area around the dipstick clean to eliminate the possibility of dirt entering the transmission.

5. Remove the dipstick and determine if the fluid is hot or warm. Hot fluid is approximately 180°F (82°C), which is the normal operating temperature after the vehicle has been driven at least 15 miles (24 km). The fluid cannot be comfortably held between the finger tips. Cold is when the fluid is below 80°F (27°C).

6. Wipe the dipstick clean and reinsert until seated. Remove dipstick and note reading.

a. If the fluid is hot, the reading should be in the crosshatched area marked "HOT" (between the upper two holes in the dipstick).

b. If the fluid is cold, the fluid level should be between the lower two holes in the area marked "COLD".

If the fluid level indicates low, add sufficient fluid to bring to the proper level.

**CAUTION!**

**Do not overfill. Dirt and water in the transmission can cause serious damage. To prevent dirt and water from entering the transmission after checking or replenishing fluid, make certain that the dipstick cap is reseated properly.**

**Fluid and Filter Changes**

Automatic transmission fluid should be changed on all transmissions as follows:

Normal Usage — No change necessary

Severe Usage (fluid and filter) — Refer to Maintenance Schedule "B"



Downloaded from www.Manualslib.com manuals search engine

Severe Usage is defined as:

- Police, taxi, limousine, commercial type operation, or trailer towing where the vehicle driven regularly for more than 45 minutes of continuous operation.

**NOTE:** Refer to Section 8 of this manual for Maintenance Schedules.

If the transmission is disassembled for any reason, the fluid and filter should be changed.

**Special Additives**

Do not add any fluid additives to the transmission. The only exception to this policy is the use of special dyes to aid in detecting fluid leaks. The use of transmission sealers should be avoided as they may adversely affect seals.

## All Wheel Drive (AWD) — If Equipped

Under normal operating conditions, periodic fluid level checks and lubricant changes for the Power Transfer Unit, Overrunning Clutch and Rear Carrier, are not required. However when the vehicle is serviced for other reasons, the exterior surface of these components should be inspected for evidence of fluid leaks. Confirmed leaks should be repaired as soon as possible.

**Power Transfer Unit**

The fill plug is located on the side of the power transfer unit housing. The fluid should be maintained at a level even with the bottom of the fill plug hole when the vehicle is parked on a level surface. If it becomes necessary to add or replace the fluid, use only the manufacturers recommended fluid, refer to Fluids, Lubricants and Genuine Parts for correct fluid type.

Downloaded from www.Manualslib.com manuals search engine

**Overrunning Clutch**

The fill plug is located on the side of the overrunning clutch housing. The fluid should be maintained at a level even with the bottom of the fill plug hole when the vehicle is parked on a level surface. If it becomes necessary to add or replace the fluid, use only the manufacturers recommended transmission fluid, refer to Fluids, Lubricants and Genuine Parts for correct fluid type. To assure performance, it is important that the proper lubricant be used.

**Rear Carrier**

The fill plug is located on the side of the rear carrier housing. The fluid should be maintained at a level even with the bottom of the fill plug hole when the vehicle is parked on a level surface. if it becomes necessary to add or replace the fluid, use only the manufacturers recommended fluid, refer to Fluids, Lubricants and Genuine Parts for correct fluid type.

**Fluid Changes**

The fluid should be changed as follows:

| | |
|---|---|
| **Normal Usage** | No Service Required |
| **Severe Usage** | |
| Power Transfer Unit | Refer to Maintenance Schedule "B" |
| Overrunning Clutch | Refer to Maintenance Schedule "B" |
| Rear Carrier | Refer to Maintenance Schedule "B" |

Severe Usage is defined as:

1. More than 50% of vehicle operation in stop and go traffic where vehicle is driven regularly for more than 45 minutes of continuous operation, such as in heavy city or in construction zone traffic,

2. Police, taxi, limousine, commercial type operation, or trailer towing where the vehicle driven regularly for more than 45 minutes of continuous operation.



Downloaded from www.Manualslib.com manuals search engine

**NOTE:** Refer to Section 8 of this manual for Maintenance Schedules.

## Front And Rear Wheel Bearings

Front and rear wheel bearings are permanently sealed. No regular maintenance is required for these components.

## Appearance Care and Protection from Corrosion

### Protection of Body and Paint from Corrosion

Vehicle body care requirements vary according to geographic locations and usage. Chemicals that make roads passable in snow and ice, and those that are sprayed on trees and road surfaces during other seasons, are highly corrosive to the metal in your vehicle. Outside parking, which exposes your vehicle to airborne contaminants, road surfaces on which the vehicle is operated, extreme hot or cold weather and other extreme conditions will have an adverse effect on paint, metal trim, and underbody protection.

The following maintenance recommendations will enable you to obtain maximum benefit from the corrosion resistance built into your vehicle.

### What Causes Corrosion?

Corrosion is the result of deterioration or removal of paint and protective coatings from your vehicle.

The most common causes are:

- Road salt, dirt and moisture accumulation.
- Stone and gravel impact.
- Insects, tree sap and tar.
- Salt in the air near seacoast localities.
- Atmospheric fallout/industrial pollutants.

Downloaded from www.Manualslib.com manuals search engine

### Washing

- Wash your vehicle regularly. Always wash your vehicle in the shade using Mopar Car Wash or a mild car wash soap, and rinse the panels completely with clear water.
- If insects, tar or other similar deposits have accumulated on your vehicle, use Mopar Super Kleen Bug and Tar Remover to remove.
- Use Mopar Cleaner Wax to remove road film, stains and to protect your paint finish. Take care never to scratch the paint.
- Avoid using abrasive compounds and power buffing that may diminish the gloss or thin out the paint finish.

**CAUTION!**

**Do not use abrasive or strong cleaning materials such as steel wool or scouring powder, which will scratch metal and painted surfaces.**

### Special Care

- If you drive on salted or dusty roads or if you drive near the ocean, hose off the undercarriage at least once a month.
- It is important that the drain holes in the lower edges of the doors, rocker panels and trunk be kept clear and open.
- If you detect any stone chips or scratches in the paint, touch them up immediately. The cost of such repairs is considered the responsibility of the owner.



Downloaded from www.Manualslib.com manuals search engine

- If your vehicle is damaged due to an accident or similar cause which destroys the paint and protective coating, have your vehicle repaired as soon as possible. The cost of such repairs is considered the responsibility of the owner.
- All wheels and wheel trim, especially aluminum and chrome plated wheels should be cleaned regularly with a mild soap and water to prevent corrosion. To remove heavy soil, use Mopar Wheel Cleaner or select a nonabrasive, non-acidic cleaner. Do not use scouring pads, steel wool, a bristle brush or metal polishes. Only Mopar cleaners are recommended. Do not use oven cleaner. Avoid automatic car washes that use acidic solutions or harsh brushes that may damage the wheels' protective finish.
- If you carry special cargo such as chemicals, fertilizers, de-icer salt, etc., be sure that such materials are well packaged and sealed.
- If a lot of driving is done on gravel roads, consider mud or stone shields behind each wheel.
- Use Mopar touch up paint on scratches as soon as possible. Your dealer has touch up paint to match the color of your vehicle.

**Interior Care**

Use Mopar Total Clean to clean fabric upholstery and carpeting.

Interior Trim should be cleaned starting with a damp cloth, a damp cloth with Mopar Total Clean, then Mopar Spot & Stain Remover if absolutely necessary. Do not use harsh cleaners or Armorall. Use Mopar Total Clean to clean vinyl upholstery

Mopar Total Clean is specifically recommended for leather upholstery.

Downloaded from www.Manualslib.com manuals search engine

Your leather upholstery can be best preserved by regular cleaning with a damp soft cloth. Small particles of dirt can act as an abrasive and damage the leather upholstery and should be removed promptly with a damp cloth. Stubborn soils can be removed easily with a soft cloth and Mopar Total Clean. Care should be taken to avoid soaking your leather upholstery with any liquid. Please do not use polishes, oils, cleaning fluids, solvents, detergents, or ammonia based cleaners to clean your leather upholstery. Application of a leather conditioner is not required to maintain the original condition.

**WARNING!**

**Do not use volatile solvents for cleaning purposes. Many are potentially flammable, and if used in closed areas they may cause respiratory harm.**

**Glass Surfaces**

All glass surfaces should be cleaned on a regular basis with Mopar Glass Cleaner or any commercial household-type glass cleaner. Never use an abrasive type cleaner. Use caution when cleaning the inside rear window equipped with electric defrosters or the right rear quarter window equipped with the radio antenna. Do not use scrapers or other sharp instruments which may scratch the elements.

When cleaning the rear view mirror, spray cleaner on the towel or rag that you are using. Do not spray cleaner directly on the mirror.

**Cleaning Plastic Instrument Cluster Lenses**

The lenses in front of the instruments in this vehicle are molded in clear plastic. When cleaning the lenses, care must be taken to avoid scratching the plastic.



Downloaded from www.Manualslib.com manuals search engine

1. Clean with a wet soft rag. A mild soap solution may be used, but do not use high alcohol content or abrasive cleaners. If soap is used, wipe clean with a clean damp rag.

2. Dry with a soft tissue.

**Seat Belt Maintenance**
Do not bleach, dye or clean the belts with chemical solvents or abrasive cleaners. This will weaken the fabric. Sun damage can also weaken the fabric.

If the belts need cleaning, use a mild soap solution or lukewarm water. Do not remove the belts from the car to wash them.

Replace the belts if they appear frayed or worn or if the buckles do not work properly.

## Cleaning The Center Console Cup Holders

**Removal**
Grab the center of the rubber portion of the cupholder and lift upward.

**Cleaning**
Soak the rubber cupholder liner in a mixture of medium hot tap water and one teaspoon of mild liquid dish soap. Let soak for approximately one hour. After one hour pull the liner from the water and dip it back into the water about six times. This will loosen any remaining debris. Rinse the liner thoroughly under warm running water. Shake the excess water from the liner and dry the outer surfaces with a clean soft cloth.

**Installation**
Align the liner in the cupholder and press down firmly.

Downloaded from www.Manualslib.com manuals search engine

## INTEGRATED POWER MODULE (IPM)

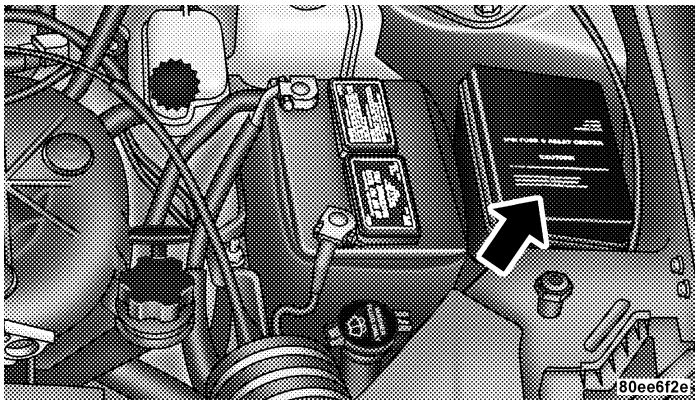


**Integrated Power Module (IPM)**

An Integrated Power Module is located in the engine compartment near the battery. This center contains maxi fuses, mini fuses and relays. A label that identifies each component is printed on the inside of the cover.

| Cavity | Maxi Fuse | Description |
|---|---|---|
| 1 | 40 Amp Green | Anti-Lock Brake System (ABS) Pump |
| 2 | Spare | |
| 3 | 30 Amp Pink | Ignition Off Draw (IOD) |
| 4 | 40 Amp Green | Body Control Module (BCM) Feed 1 |
| 5 | 40 Amp Green | Electronic Back Light (EBL) |
| 6 | 30 Amp Pink | Front Wipers |
| 7 | 40 Amp Green | Starter |
| 8 | 40 Amp Green | Power Seat C/B |
| 9 | 40 Amp Green | Power Sunroof |



Downloaded from www.Manualslib.com manuals search engine

| Cavity | Maxi Fuse | Description |
|---|---|---|
| 10 | Spare | |
| 11 | 40 Amp Green | Headlight Washer, Power Liftgate |
| 12 | Spare | |
| 13 | 40 Amp Green | Radiator Fan 1 |
| 14 | Spare | |
| 15 | 40 Amp Green | Anti-Lock Brake System (ABS) Module |
| 40 | 40 Amp Green | Driver Door Node |
| 41 | 40 Amp Green | Passenger Door Node |
| 42 | 40 Amp Green | Front Blower |

| Cavity | Mini Fuse | Description |
|---|---|---|
| 24 | 20 Amp Yellow | Power Outlet (Selectable) |
| 25 | 15 Amp Blue | Radio, Amplifier, Navigation, Hands-Free Phone (HFM), Electronic Vehicle Information Center (EVIC), EC, SNRF, Mirror |
| 26 | 20 Amp Yellow | Power Outlet |
| 27 | Spare | |
| 28 | 25 Amp Natural | Horn |
| 29 | 20 Amp Yellow | Cluster, CHMSL, Stop Lights, Anti-Lock Brake System (ABS) |
| 30 | 10 Amp Red | Ignition Switch |
| 31 | 20 Amp Yellow | Hazard |

Downloaded from www.Manualslib.com manuals search engine

| Cavity | Mini Fuse | Description |
|---|---|---|
| 34 | Spare | |
| 35 | Spare | |
| 36 | 20 Amp Yellow | Electronic Automatic Transaxle (EATX) Solenoid |
| 37 | 25 Amp Natural | ASD |
| 38 | 20 Amp Yellow | Fuel Pump |
| 39 | 20 Amp Yellow | A/C Clutch, MTV |
| 44 | 25 Amp Natural | Rear Heated Seats |
| 45 | 10 Amp Red | Anti-Lock Brake System (ABS) Ignition Run |
| 46 | 20 Amp Yellow | Passenger Door |

| Cavity | Mini Fuse | Description |
|---|---|---|
| 47 | 20 Amp Yellow | Driver Door |
| 48 | 15 Amp Blue | PLG, OHC, Body Control Module (BCM), Navigation, Hands-Free Phone (HFM) |
| 49 | 25 Amp Natural | Amplifier |
| 50 | 15 Amp Blue | HVAC, DVD, RAD, CLK, SKREEM |



Downloaded from www.Manualslib.com manuals search engine

**CAUTION!**

- **When installing the Integrated Power Module cover, it is important to ensure the cover is properly positioned and fully latched. Failure to do so may allow water to get into the Integrated Power Module, and possibly result in a electrical system failure.**
- **When replacing a blown fuse, it is important to use only a fuse having the correct amperage rating. The use of a fuse with a rating other than indicated may result in a dangerous electrical system overload. If a properly rated fuse continues to blow, it indicates a problem in the circuit that must be corrected.**

## VEHICLE STORAGE

If you are leaving your vehicle dormant for more than 21 days you may want to take steps to protect your battery. You may:

- Disconnect the negative cable from the battery.
- Anytime you store your vehicle, or keep it out of service (i.e. vacation) for two weeks or more, run the air conditioning system at idle for about five minutes in the fresh air and high blower setting. This will insure adequate system lubrication to minimize the possibility of compressor damage when the system is started again.

Downloaded from www.Manualslib.com manuals search engine

## REPLACEMENT LIGHT BULBS

| LIGHT BULBS — Interior | Bulb Number |
|---|---|
| Center & Rear Reading Lights | 578 |
| Front Door Courtesy Light | 578 |
| Liftgate Light(s) | 578 |
| Overhead Console Reading Lights | 212–2 |
| Visor Vanity Lights | V26377 |

**NOTE:** For lighted switches, see your dealer for replacement instructions.

All of the interior bulbs are glass wedge base or glass cartridge types. Aluminum base bulbs are not approved and should not be used for replacement.

| LIGHT BULBS — Exterior | Bulb Number |
|---|---|
| Back-up | 921 |
| Rear Stop, Turn Signal | 3157 |
| Rear Sidemarker | 168 |
| Fog Light | 9145 |
| Front Turn Signal | 3157A |
| Front Sidemarker | 194 |
| Standard Headlight | H7 |
| License | 168 |



Downloaded from www.Manualslib.com manuals search engine

## BULB REPLACEMENT

### Standard Quad Headlights

1. Remove the two screws securing the headlight module to the vehicle and pull the headlight module forward away from the vehicle, disengaging the assembly from the lower attachment clip.

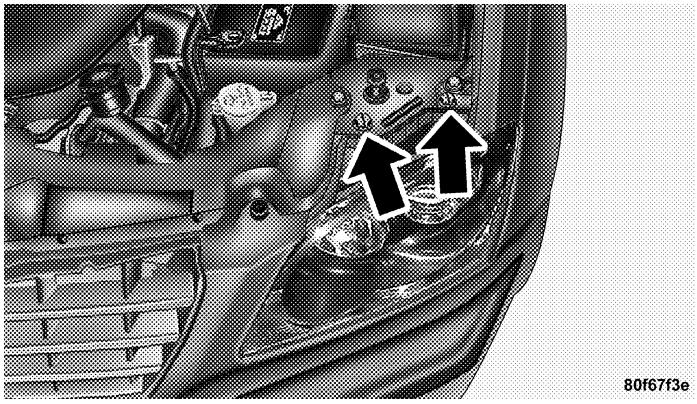


2. Remove the rubber boot seals.

3. Disconnect the electrical connector.

4. Rotate the bulb to the left and replace the bulb. Reinstall the rubber boot seals and then the headlight module.

**CAUTION!**

**Do not touch the new bulb with your fingers. Oil contamination will severely shorten bulb life. If the bulb comes in contact with an oily surface, clean the bulb with rubbing alcohol.**

Downloaded from www.Manualslib.com manuals search engine

### High Intensity Discharge Headlights (HID) — If Equipped

The headlights are a type of high voltage discharge tube. High voltage can remain in the circuit even with the headlight switch off and the key removed. **Because of this, you should not attempt to service a headlight bulb yourself. If a headlight bulb fails, take your vehicle to an authorized dealer for service.**

| WARNING! |
| --- |
| **A transient high tension occurs at the bulb sockets of High Intensity Discharge (HID) headlights when the headlight switch is turned ON. It may cause serious electrical shock or electrocution if not serviced properly. See your authorized dealer for service.** |

**NOTE:** On vehicles equipped with High Intensity Discharge Headlights (HID), when the headlights are turned on there is a blue hue to the lights. This diminishes and becomes more white after approximately 10 seconds, as the system charges.



Downloaded from www.Manualslib.com manuals search engine

### Front Park/Turn Signal and Sidemarker Lights

1. Remove the two screws securing the headlight module to the vehicle and pull the headlight module forward away from the vehicle, disengaging the assembly from the lower attachment clip.

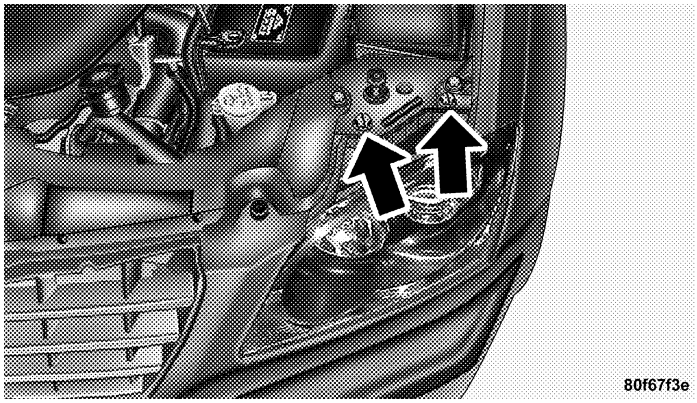


2. Twist the bulb socket to remove from the headlight module and pull the bulb from socket.

3. Replace the bulb, reinstall the socket and then reinstall the headlight module.

### Front Fog Light

1. Reach under the front fascia and grasp the front fog light bulb.

2. Twist the front fog light bulb to remove from the fog light module.

3. Disconnect the electrical connector and replace the bulb.

| CAUTION! |
| --- |
| **Do not touch the new bulb with your fingers. Oil contamination will severely shorten bulb life. If the bulb comes in contact with an oily surface, clean the bulb with rubbing alcohol.** |

Downloaded from www.Manualslib.com manuals search engine

### Rear Tail, Stop, Turn Signal, Side Marker and Back-up Lights

1. Raise the liftgate.

2. Remove the two tail light assembly screws and rotate the assembly outward to remove the ball stud form the attaching grommet.

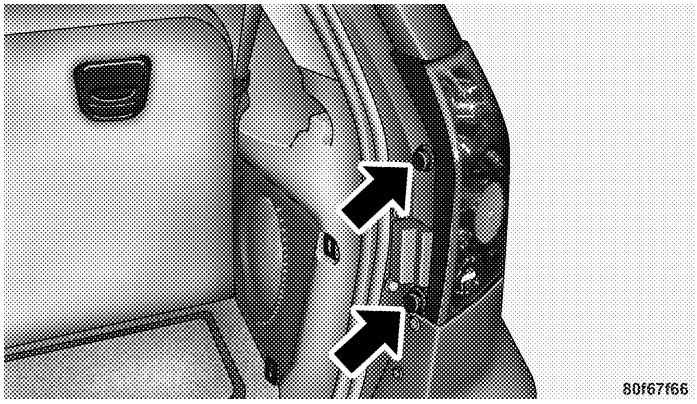


3. Twist the socket assembly to remove it from the housing.

4. Pull the bulb out of the socket.

5. Replace the bulb, reinstall the socket, and reattach the tail light assembly.

### License Light

1. Place a screwdriver in the slot next to the release tab and push on the release tab to remove the lens.

2. Pull the bulb out of the socket. Replace the bulb and push on the lens until it snaps into place.



Downloaded from www.Manualslib.com manuals search engine

## FLUIDS AND CAPACITIES

| | U.S. | Metric |
|---|---|---|
| Fuel (approximate) 89 Octane | 23 gallons | 87 liters |
| Engine Oil-With Filter | | |
| 3.5 Liter Engines (SAE 10W-30, API Certified) | 5.5 qts | 5.2 liters |
| 3.8 Liter Engines (SAE 5W-20, API Certified) | 5.0 qts | 4.7 liters |
| Cooling System * | | |
| 3.5 Liter Engines (Mopar® Antifreeze/Coolant 5 Year/ 100,000 Mile Formula or equivalent) | 10.7 qts | 10.1 liters |
| 3.8 Liter Engines (Mopar® Antifreeze/Coolant 5 Year/ 100,000 Mile Formula or equivalent) | 11.8 qts | 11.2 liters |
| * Includes heater and coolant recovery bottle filled to MAX level. | | |

Downloaded from www.Manualslib.com manuals search engine

## FLUIDS, LUBRICANTS AND GENUINE PARTS

### Engine

| Component | Fluids, Lubricants and Genuine Parts |
|---|---|
| Engine Coolant | Mopar® Antifreeze/Coolant 5 Year/100,000 Mile Formula HOAT (Hybrid Organic Additive Technology) or equivalent |
| 3.5 Liter Engine Oil | Use API Certified SAE 10W-30 engine oil, refer to oil viscosity chart for correct SAE grade meeting DaimlerChrysler Material Standard MS-6395. |
| 3.8 Liter Engine Oil | Use API Certified SAE 5W-20 engine oil. Refer to your oil filler cap for correct SAE grade, meeting DaimlerChrysler Material Standard MS-6395. |
| Spark Plugs | Refer to the Vehicle Emission Control Information label in the engine compartment. |
| Oil Filter, 3.5/3.8 Liter Engines | Mopar® 5281090 or equiv. |
| Fuel Selection | 89 Octane |



Downloaded from www.Manualslib.com manuals search engine

## Chassis

| Component | Fluids, Lubricants and Genuine Parts |
|---|---|
| Automatic Transmission | Mopar® ATF+4 Automatic Transmission Fluid. |
| AWD Power Transfer Unit | Mopar® Gear Lubricant 75W-90 or equivalent. |
| AWD Overrunning Clutch | Mopar® ATF+4 Automatic Transmission Fluid. |
| AWD Rear Carrier | Mopar® Gear Lubricant 75W-90 or equivalent. |
| Brake Master Cylinder | Mopar® DOT 3 and SAE J1703 should be used. If DOT 3 brake fluid is not available, then DOT 4 or DOT 4+ is acceptable. Use only recommended brake fluids. |
| Power Steering Reservoir | Mopar® ATF+4 Automatic Transmission Fluid. |

Downloaded from www.Manualslib.com manuals search engine

# MAINTENANCE SCHEDULES

## CONTENTS

■ Emission Control System Maintenance . . . . . .390
■ Maintenance Schedules . . . . . .390
□ Schedule “B” . . . . . .393
□ Schedule “A” . . . . . .406



Downloaded from www.Manualslib.com manuals search engine

## EMISSION CONTROL SYSTEM MAINTENANCE

The "Scheduled" maintenance services, listed in **bold type** must be done at the times or mileages specified to assure the continued proper functioning of the emission control system. These, and all other maintenance services included in this manual, should be done to provide best vehicle performance and reliability. More frequent maintenance may be needed for vehicles in severe operating conditions such as dusty areas and very short trip driving.

Inspection and service also should be done any time a malfunction is suspected.

**NOTE:** Maintenance, replacement, or repair of the emission control devices and systems on your vehicle may be performed by any automotive repair establishment or individual using any automotive part which has been certified pursuant to U.S. EPA or, in the State of California, California Air Resources Board regulations.

## MAINTENANCE SCHEDULES

There are two maintenance schedules that show the **required** service for your vehicle.

First is Schedule **"B"**. It is for vehicles that are operated under the conditions that are listed below and at the beginning of the schedule.

- Day or night temperatures are below 32° F (0° C).
- Stop and go driving.
- Extensive engine idling.
- Driving in dusty conditions.
- Short trips of less than 10 miles (16 km).
- More than 50% of your driving is at sustained high speeds during hot weather, above 90° F (32° C).
- Trailer towing. ◊

Downloaded from www.Manualslib.com manuals search engine

- Taxi, police, or delivery service (commercial service). ◊
- Off-road or desert operation.

**NOTE:** If **ANY** of these apply to you then change your engine oil every 3,000 miles (5 000 km) or 3 months, whichever comes first and follow schedule "B" of the "Maintenance Schedules" section of this manual.

**NOTE:** Most vehicles are operated under the conditions listed for Schedule "B".

Second is Schedule **"A"**. It is for vehicles that are not operated under any of the conditions listed under Schedule "B".

Use the schedule that best describes your driving conditions. Where time and mileage are listed, follow the interval that occurs first.

**NOTE:** Under no circumstances should oil change intervals exceed 6000 miles (10 000 km) or 6 months whichever comes first.

| CAUTION! |
| --- |
| **Failure to perform the required maintenance items may result in damage to the vehicle.** |

*At Each Stop for Fuel*

- Check the engine oil level about 5 minutes after a fully warmed engine is shut off. Checking the oil level while the vehicle is on level ground will improve the accuracy of the oil level reading. Add oil only when the level is at or below the ADD or MIN mark.
- Check the windshield washer solvent and add if required.

Downloaded from www.Manualslib.com manuals search engine

*Once a Month*

- Check tire pressure and look for unusual wear or damage.
- Inspect the battery and clean and tighten the terminals as required.
- Check the fluid levels of coolant bottle, brake master cylinder and transmission, add as needed.
- Check all lights and all other electrical items for correct operation.

*At Each Oil Change*

- Change the engine oil filter.
- Inspect the exhaust system.
- Inspect the brake hoses.
- Inspect the CV joints and front suspension components.
- Check the automatic transmission fluid level.
- Check the coolant level, hoses, and clamps.

Downloaded from www.Manualslib.com manuals search engine

## SCHEDULE "B"

Follow schedule "B" if you usually operate your vehicle under one or more of the following conditions. Change the automatic transmission fluid and filter every 60,000 miles (96 000 km) if the vehicle is usually operated under one or more of the conditions marked with an ◊.

- Day or night temperatures are below 32° F (0° C).
- Stop and go driving.
- Extensive engine idling.
- Driving in dusty conditions.
- Short trips of less than 10 miles (16 km).
- More than 50% of your driving is at sustained high speeds during hot weather, above 90° F (32° C).
- Trailer towing. ◊
- Taxi, police, or delivery service (commercial service). ◊
- Off-road or desert operation.

**NOTE:** If **ANY** of these apply to you then change your engine oil every 3,000 miles (5 000 km) or 3 months, whichever comes first and follow schedule "B" of the "Maintenance Schedules" section of this manual.

If none of these apply to you, then change your engine oil at every interval shown on schedule "A" of the "Maintenance Schedules" section of this manual.

Downloaded from www.Manualslib.com manuals search engine

| **Miles (Kilometers)** | **3, 000 (5 000 )** | **6, 000 (10 000 )** | **9, 000 (15 000)** | **12, 000 (20 000)** | **15, 000 (25 000)** | **18, 000 (30 000)** |
|---|---|---|---|---|---|---|
| Change engine oil and engine oil filter. | X | X | X | X | X | X |
| Rotate Tires | | X | | X | | X |
| Inspect the brake linings. | | | X | | | X |
| Inspect the engine air cleaner filter, replace if necessary. * | X | X | X | X | | X |
| Replace the **engine air cleaner filter.** * | | | | | X | |
| Change the All Wheel Drive (AWD) power transfer unit fluid. (See note at the end of this chart) | | | | | X | |
| Replace the air conditioning filter. | | | | X | | |

Downloaded from www.Manualslib.com manuals search engine

| **Miles (Kilometers)** | **21, 000 (35 000)** | **24, 000 (40 000)** | **27, 000 (45 000)** | **30, 000 (50 000)** | **33, 000 (55 000)** | **36, 000 (60 000)** |
|---|---|---|---|---|---|---|
| Change engine oil and engine oil filter. | X | X | X | X | X | X |
| Rotate Tires | | X | | X | | X |
| Inspect the brake linings. | | | X | | | X |
| Inspect the engine air cleaner filter, replace if necessary. * | X | X | X | | X | X |
| Replace the **engine air cleaner filter.** | | | | X | | |
| Inspect the tie rod ends and boot seals. (Front & Rear) | | | | X | | |
| Inspect the **PCV valve** and replace as necessary.* | | | | X | | |
| Change the All Wheel Drive (AWD) power transfer unit fluid. (See note at the end of this chart) | | | | X | | |
| Change the All Wheel Drive (AWD) overrunning clutch and rear carrier fluid. (See the note at the end of this chart) | X | | | | | |
| Replace the air conditioning filter. | | X | | | | X |

Downloaded from www.Manualslib.com manuals search engine

| **Miles (Kilometers)** | **39, 000 (65 000)** | **42, 000 (70 000)** | **45, 000 (75 000)** | **48, 000 (80 000)** | **51, 000 (85 000)** | **54, 000 (90 000)** |
|---|---|---|---|---|---|---|
| Change engine oil and engine oil filter. | X | X | X | X | X | X |
| Rotate Tires | | X | | X | | X |
| Inspect the brake linings. | | | X | | | X |
| Inspect the engine air cleaner filter, replace if necessary. * | X | X | | X | X | X |
| Replace the **engine air cleaner filter.** * | | | X | | | |
| Change the All Wheel Drive power transfer unit fluid. (See the note at the end of this chart.) | | | X | | | |
| Change the All Wheel Drive (AWD) overrunning clutch and rear carrier fluid. (See note at the end of this chart) | | X | | | | |
| Replace the air conditioning filter. | | | | X | | |

Downloaded from www.Manualslib.com manuals search engine

| **Miles (Kilometers)** | **57, 000 (95 000)** | **60, 000 (100 000)** | **63, 000 (105 000)** | **66, 000 (110 000)** | **69, 000 (115 000)** | **72, 000 (120 000)** |
|---|---|---|---|---|---|---|
| Change engine oil and engine oil filter. | X | X | X | X | X | X |
| Rotate Tires | | X | | X | | X |
| Inspect the brake linings. | | | X | | | X |
| Inspect the engine air cleaner filter, replace if necessary. * | X | | X | X | X | X |
| Replace the **engine air cleaner filter.** | | X | | | | |
| Inspect the tie rod ends and boot seals. (Front & Rear) | | X | | | | |
| Inspect the **PCV valve** and replace if necessary.* | | X | | | | |
| Inspect the serpentine drive belt, replace if necessary. ‡ | | X | | | | |
| Change the automatic transmission fluid and filter. | | X | | | | |

Downloaded from www.Manualslib.com manuals search engine

| **Miles (Kilometers)** | **57, 000 (95 000)** | **60, 000 (100 000)** | **63, 000 (105 000)** | **66, 000 (110 000)** | **69, 000 (115 000)** | **72, 000 (120 000)** |
|---|---|---|---|---|---|---|
| Change the All Wheel Drive (AWD) power transfer unit fluid. (See note at the end of this chart) | | X | | X | | |
| Change the All Wheel Drive (AWD) overrunning clutch and rear carrier fluid. (See note at the end of this chart) | | | X | | | |
| Replace the air conditioning filter. | | X | | | | X |

Downloaded from www.Manualslib.com manuals search engine

| **Miles (Kilometers)** | **75, 000 (125 000)** | **78, 000 (130 000)** | **81, 000 (135 000)** | **84, 000 (140 000)** | **87, 000 (145 000)** | **90, 000 (150 000)** |
|---|---|---|---|---|---|---|
| Change engine oil and engine oil filter. | X | X | X | X | X | X |
| Rotate Tires | | X | | X | | X |
| Inspect the brake linings. | | | X | | | X |
| Inspect the engine air cleaner filter, replace if necessary. * | | X | X | X | X | |
| Replace the **engine air cleaner filter** | X | | | | | X |
| Replace the **spark plugs.** | X | | | | | |
| Inspect the tie rod ends and boot seals. (Front & Rear) | | | | | | X |
| Check the **PCV valve** and replace if necessary. Not required if previously changed.* | | | | | | X |
| Inspect the serpentine drive belt, replace if necessary. ‡ | X | | | | | X |

Downloaded from www.Manualslib.com manuals search engine

| **Miles (Kilometers)** | **75, 000 (125 000)** | **78, 000 (130 000)** | **81, 000 (135 000)** | **84, 000 (140 000)** | **87, 000 (145 000)** | **90, 000 (150 000)** |
|---|---|---|---|---|---|---|
| Change the All Wheel Drive power transfer unit fluid. (See the note at the end of this chart.) | X | | | | | X |
| Change the All Wheel Drive (AWD) overrunning clutch and rear carrier fluid. (See note at the end of this chart) | | | | X | | |
| Replace the air conditioning filter. | | | | X | | |

Downloaded from www.Manualslib.com manuals search engine

| **Miles (Kilometers)** | **93, 000 (155 000)** | **96, 000 (160 000)** | **99, 000 (165 000)** | **102, 000 (170 000)** | **105, 000 (175 000)** |
|---|---|---|---|---|---|
| Change engine oil and engine oil filter. | X | X | X | X | X |
| Rotate Tires | | X | | X | |
| Inspect the brake linings. | | | X | | |
| Inspect the engine air cleaner filter, replace if necessary. * | X | X | X | X | |
| Replace the **engine air cleaner filter** * | | | | | X |
| Replace engine timing belt. | | | | | X |
| Change the All Wheel Drive (AWD) power transfer unit fluid. (See note at the end of this chart) | | | | | X |
| Change the All Wheel Drive (AWD) overrunning clutch and rear carrier fluid. (See note at the end of this chart) | | | | | X |
| Inspect the serpentine drive belt, replace if necessary. ‡ | | | | | X |
| Flush and replace the engine coolant. | | | | X | |
| Replace the air conditioning filter. | | X | | | |

Downloaded from www.Manualslib.com manuals search engine

| **Miles (Kilometers)** | **108, 000 (180 000)** | **111, 000 (185 000)** | **114, 000 (190 000)** | **117, 000 (195 000)** | **120, 000 (200 000)** |
|---|---|---|---|---|---|
| Change engine oil and engine oil filter. | X | X | X | X | X |
| Rotate Tires | X | | X | | X |
| Inspect the brake linings. | X | | | X | |
| Inspect the engine air cleaner filter, replace if necessary. * | X | X | X | X | |
| Replace the **engine air cleaner filter.** | | | | | X |
| Inspect the tie rod ends and boot seals. (Front & Rear) | | | | | X |
| Inspect the **PCV valve** and replace as necessary.* | | | | | X |
| Inspect the serpentine drive belt, replace if necessary. ‡ | | | | | X |
| Change the automatic transmission fluid and filter. | | | | | X |
| Change the All Wheel Drive (AWD) power transfer unit fluid. (See note at the end of this chart) | | | | | X |
| Replace the air conditioning filter. | X | | | | X |

Downloaded from www.Manualslib.com manuals search engine

| **Miles (Kilometers)** | **123, 000 (205 000)** | **126, 000 (210 000)** | **129, 000 (215 000)** | **132, 000 (220 000)** | **135, 000 (225 000)** |
|---|---|---|---|---|---|
| Change engine oil and engine oil filter. | X | X | X | X | X |
| Rotate Tires | | X | | X | |
| Inspect the brake linings. | | X | | | X |
| Inspect the engine air cleaner filter, replace if necessary. * | X | X | X | X | |
| Replace the **engine air cleaner filter.** | | | | | X |
| Inspect the serpentine drive belt, replace if necessary. ‡ | | | | | X |
| Change the All Wheel Drive (AWD) power transfer unit fluid. (See note at the end of this chart) | | | | | X |
| Change the All Wheel Drive (AWD) overrunning clutch and rear carrier fluid. (See note at the end of this chart) | | X | | | |
| Replace the air conditioning filter. | | | | X | |

Downloaded from www.Manualslib.com manuals search engine

| **Miles (Kilometers)** | **138, 000 (230 000)** | **141, 000 (235 000)** | **144, 000 (240 000)** | **147, 000 (245 000)** | **150, 000 (250 000)** |
|---|---|---|---|---|---|
| Change engine oil and engine oil filter. | X | X | X | X | X |
| Rotate Tires | X | | X | | X |
| Inspect the brake linings. | | | X | | |
| Inspect the engine air cleaner filter, replace if necessary. * | X | X | X | X | |
| Replace the **engine air cleaner filter.** | | | | | X |
| Replace the **spark plugs.** | | | | | X |
| Inspect the serpentine drive belt, replace if necessary. ‡ | | | | | X |
| Inspect the tie rod ends and boot seals. (Front & Rear) | | | | | X |
| Inspect the **PCV valve** and replace as necessary.* | | | | | X |
| Change the All Wheel Drive (AWD) power transfer unit fluid. (See note at the end of this chart) | | | | | X |

Downloaded from www.Manualslib.com manuals search engine

| **Miles (Kilometers)** | **138, 000 (230 000)** | **141, 000 (235 000)** | **144, 000 (240 000)** | **147, 000 (245 000)** | **150, 000 (250 000)** |
|---|---|---|---|---|---|
| Change the All Wheel Drive (AWD) overrunning clutch and rear carrier fluid. (See note at the end of this chart) | | | | X | |
| Replace the air conditioning filter. | | | X | | |

* This maintenance is recommended by the manufacture to the owner but is not required to maintain the emissions warranty.

‡ This maintenance is not required if previously replaced.

Inspection and service should also be performed anytime a malfunction is observed or suspected. Retain all receipts.

**NOTE:** The AWD power transfer unit fluid and the AWD overrunning clutch/ rear carrier fluid must be changed at the more frequent intervals shown in schedule B if the vehicle is operated under any of the conditions noted by a diamond (◊) at the beginning of the schedule.

Downloaded from www.Manualslib.com manuals search engine

## SCHEDULE "A"

| **Miles**<br>**(Kilometers)**<br>**[Months]** | **6, 000**<br>**(10 000)**<br>**[6]** | **12, 000**<br>**(20 000)**<br>**[12]** | **18, 000**<br>**(30 000)**<br>**[18]** | **24, 000**<br>**(40 000 )**<br>**[24]** | **30, 000**<br>**(50 000)**<br>**[30]** | **36, 000**<br>**(60 000)**<br>**[36]** |
|---|---|---|---|---|---|---|
| Change engine oil and engine oil filter. | X | X | X | X | X | X |
| Rotate Tires | X | X | X | X | X | X |
| Inspect the brake linings. | | | X | | | X |
| Inspect the engine air cleaner filter, replace if necessary. * | X | X | X | X | | X |
| Replace the **engine air cleaner filter.** | | | | | X | |
| Inspect the tie rod ends and boot seals. (Front & Rear) | | | | | X | |
| Replace the air conditioning filter. | | X | | X | | X |

Downloaded from www.Manualslib.com manuals search engine

| **Miles (Kilometers) [Months]** | **42, 000 (70 000) [42]** | **48, 000 (80 000) [48]** | **54, 000 (90 000) [54]** | **60, 000 (100 000) [60]** | **66, 000 (110 000) [66]** | **72, 000 (120 000) [72]** |
|---|---|---|---|---|---|---|
| Change engine oil and engine oil filter. | X | X | X | X | X | X |
| Rotate Tires | X | X | X | X | X | X |
| Inspect the brake linings. | | | X | | | X |
| Inspect the engine air cleaner filter, replace if necessary. * | X | X | X | | X | X |
| Replace the **engine air cleaner filter.** | | | | X | | |
| Inspect the tie rod ends and boot seals. (Front & Rear) | | | | X | | |
| Check the **PCV valve** and replace, if necessary.* | | | | X | | |
| Inspect the serpentine drive belt, replace if necessary. ‡ | | | | X | | X |
| Flush and replace the engine coolant at 60 months or 100,000 miles, whichever comes first. | | | | X | | |
| Replace the air conditioning filter. | | X | | X | | X |

Downloaded from www.Manualslib.com manuals search engine

| **Miles**<br>**(Kilometers)**<br>**[Months]** | **78, 000**<br>**(130 000)**<br>**[78]** | **84, 000**<br>**(140 000)**<br>**[84]** | **90, 000**<br>**(150 000)**<br>**[90]** | **96, 000**<br>**(160 000)**<br>**[96]** | **100, 000**<br>**(165 000)** |
|---|---|---|---|---|---|
| Change engine oil and engine oil filter. | X | X | X | X | |
| Rotate Tires | X | X | X | X | |
| Inspect the brake linings. | | | X | | |
| Inspect the engine air cleaner filter, replace if necessary. * | X | X | | X | X |
| Replace the **engine air cleaner filter.** | | | X | | |
| Inspect the tie rod ends and boot seals. (Front & Rear) | | | X | | |
| Check and replace the **PCV valve** , if necessary.* | | | X | | |
| Inspect the serpentine drive belt, replace if necessary. ‡ | | | X | | |
| Replace the **spark plugs.** | | | | | X |
| Flush and replace the engine coolant at 60 months or 100,000 miles, whichever comes first. | | | | | X |
| Replace the air conditioning filter. | | X | | X | |

Downloaded from www.Manualslib.com manuals search engine

| **Miles (Kilometers) [Months]** | **102, 000 (170 000) [102]** | **108, 000 (180 000) [108]** | **114, 000 (190 000) [114]** | **120, 000 (200 000) [120]** |
|---|---|---|---|---|
| Change engine oil and engine oil filter. | X | X | X | X |
| Rotate Tires | X | X | X | X |
| Inspect the brake linings. | | X | | |
| Inspect the engine air cleaner filter, replace if necessary. * | X | X | X | |
| Replace the **engine air cleaner filter.** | | | | X |
| Replace engine timing belt. | X | | | |
| Inspect the tie rod ends and boot seals. (Front & Rear) | | | | X |
| Check the **PCV valve** and replace, if necessary.* | | | | X |
| Inspect the serpentine drive belt, replace if necessary. ‡ | X | | | X |
| Flush and replace the engine coolant at 120 months, if not done at 100,000 miles (160 000 km). | | | | X |
| Replace the air conditioning filter. | | X | | X |

Downloaded from www.Manualslib.com manuals search engine

| **Miles (Kilometers) [Months]** | **126, 000 (210 000) [126]** | **132, 000 (220 000) [132]** | **138, 000 (230 000) [138]** | **144, 000 (240 000) [144]** | **150, 000 (250, 000) [150]** |
|---|---|---|---|---|---|
| Change engine oil and engine oil filter. | X | X | X | X | X |
| Rotate Tires | X | X | X | X | X |
| Inspect the brake linings. | X | | | X | |
| Inspect the engine air cleaner filter, replace if necessary. * | X | X | X | X | |
| Replace the **engine air cleaner filter.** | | | | | X |
| Inspect the tie rod ends and boot seals. (Front & Rear) | | | | | X |
| Check the **PCV valve** and replace, if necessary.* | | | | | X |
| Inspect the serpentine drive belt, replace if necessary. ‡ | | X | | X | |
| Replace the air conditioning filter. | | X | | X | |

* This maintenance is recommended by the manufacture to the owner but is not required to maintain the emissions warranty.

‡ This maintenance is not required if previously replaced.

Inspection and service should also be performed anytime a malfunction is observed or suspected. Retain all receipts.

Downloaded from www.Manualslib.com manuals search engine

**WARNING!**

**You can be badly injured working on or around a motor vehicle. Do only that service work for which you have the knowledge and the right equipment. If you have any doubt about your ability to perform a service job, take your vehicle to a competent mechanic.**

Downloaded from www.Manualslib.com manuals search engine

Downloaded from www.Manualslib.com manuals search engine

# IF YOU NEED CONSUMER ASSISTANCE

## CONTENTS


- Suggestions For Obtaining Service For Your Vehicle . . . . . 414
  - Prepare For The Appointment . . . . . 414
  - Prepare A List . . . . . 414
  - Be Reasonable With Requests . . . . . 414
- If You Need Assistance . . . . . 414
- Warranty Information (U.S. Vehicles Only) . . . . . 417
- Mopar® Parts . . . . . 417
- Reporting Safety Defects . . . . . 417
  - In Canada . . . . . 417
- Publication Order Forms . . . . . 418
- Department Of Transportation Uniform Tire Quality Grades . . . . . 419
  - Treadwear . . . . . 419
  - Traction Grades . . . . . 420
  - Temperature Grades . . . . . 420




Downloaded from www.Manualslib.com manuals search engine

## SUGGESTIONS FOR OBTAINING SERVICE FOR YOUR VEHICLE

### Prepare For The Appointment

If you're having warranty work done, be sure to have the right papers with you. Take your warranty folder. All work to be performed may not be covered by the warranty, discuss additional charges with the service manager. Keep a maintenance log of your vehicle's service history. This can often provide a clue to the current problem.

### Prepare A List

Make a written list of your vehicle's problems or the specific work you want done. If you've had an accident, or work done that is not on your maintenance log, let the service advisor know.

### Be Reasonable With Requests

If you list a number of items, and you must have your vehicle by the end of the day, discuss the situation with the service advisor and list the items in order of priority. At many dealers you may obtain a rental vehicle at a minimal daily charge. If you need a rental, it is advisable to make these arrangements when you call for an appointment.

## IF YOU NEED ASSISTANCE

The manufacturer and its dealers are vitally interested in your satisfaction. We want you to be happy with our products and services.

Warranty service must be done by an authorized Chrysler, Dodge, or Jeep dealer. We strongly recommend that you take your vehicle to your selling dealer. They know you and your vehicle best, and are most concerned that you get prompt and high quality service. The manufacturer's dealers have the facilities, factory-trained

Downloaded from www.Manualslib.com manuals search engine

technicians, special tools, and the latest information to assure your vehicle is fixed correctly and in a timely manner.

This is why you should always talk to your dealer's service manager first. Most matters can be resolved with this process.

- If for some reason you are still not satisfied, talk to the general manager or owner of the dealership. They want to know if you need assistance.
- If your dealership is unable to resolve the concern, you may contact the Manufacturer's Customer Center.

Any communication to the Manufacturer's Customer Center should include the following information:

- Owner's name and address
- Owner's telephone number (home and office)
- Dealership name
- Vehicle identification number
- Vehicle delivery date and mileage

***DaimlerChrysler Motors Corporation Customer Center***
P.O. Box 21–8004
Auburn Hills, MI 48321–8004
Phone: (800) 992-1997

***DaimlerChrysler Canada Inc. Customer Center***
P.O. Box 1621
Windsor, Ontario N9A 4H6
Phone —(800) 465–2001

***In Mexico contact:***
Av. Prolongacion Paseo de la Reforma, 1240
Sante Fe C.P. 05109
Mexico, D. F.
In Mexico (915) 729–1248 or 729–1240
Outside Mexico (525) 729–1248 or 729–1240



Downloaded from www.Manualslib.com manuals search engine

***Customer Assistance For The Hearing Or Speech Impaired (TDD/TTY)***

To assist customers who have hearing difficulties, the manufacturer has installed special TDD (Telecommunication Devices for the Deaf) equipment at its Customer Center. Any hearing or speech impaired customer who has access to a TDD or a conventional teletypewriter (TTY) in the United States can communicate with the manufacturer by dialing 1–800–380–CHRY.

***Service Contract***

You may have purchased a service contract for your vehicle to help protect you from the high cost of unexpected repairs after your manufacturer's new vehicle limited warranty expires. The manufacturer stands behind only the manufacturer's Service Contracts. If you purchased a manufacturer's Service Contract, you will receive Plan Provisions and an Owner Identification Card in the mail within three weeks of your vehicle delivery date. If you have any questions about your service contract, call the manufacturer's Service Contract National Customer Hotline at 1-800-521-9922.

The manufacturer will not stand behind any service contract that is not the manufacturer's Service Contract. It is not responsible for any service contract other than the manufacturer's Service Contract. If you purchased a service contract that is not a manufacturer's Service Contract, and you require service after your manufacturer's new vehicle limited warranty expires, please refer to your contract documents, and contact the person listed in those documents.

We appreciate that you have made a major investment when you purchased your new vehicle. Your dealer has also made a major investment in facilities, tools, and training to assure that you are absolutely delighted with your ownership experience. You'll be pleased with their sincere efforts to resolve any warranty issues or related concerns.

Downloaded from www.Manualslib.com manuals search engine

## WARRANTY INFORMATION (U.S. Vehicles Only)

See the Warranty Information Booklet for the terms and provisions of DaimlerChrysler's warranties applicable to this vehicle.

## MOPAR® PARTS

Mopar® fluids, lubricants, parts, and accessories are available from your dealer. They will help you keep your vehicle operating at its best.

## REPORTING SAFETY DEFECTS

In the 50 United States and Washington D.C.: If you believe that your vehicle has a defect which could cause a crash or cause injury or death, you should immediately inform the National Highway Traffic Safety Administration (NHTSA) in addition to notifying the manufacturer.

If NHTSA receives similar complaints, it may open an investigation, and if it finds that a safety defect exists in a group of vehicles, it may order a recall and remedy campaign. However, NHTSA cannot become involved in individual problems between you, your dealer, and the manufacturer.

To contact NHTSA, you may either call the Auto Safety Hotline toll free at 1–888–327–4236 (TTY: 1–800–424–9153), or go to http://www.NHTSA.gov. or write to: NHTSA, U.S. Dept. of Transportation, Washington DC 20590. You can also obtain other information about motor vehicle safety from the Hotline.

### In Canada:

If you believe that your vehicle has a safety defect, you should contact the Customer Service Department immediately. Canadian customers who wish to report a safety defect to the Canadian government should write to Transport Canada, Motor Vehicle Defect Investigations and Recalls, 2780 Sheffield Road, Ottawa, Ontario K1B 3V9.



Downloaded from www.Manualslib.com manuals search engine

## PUBLICATION ORDER FORMS

To order the following manuals, you may use either the website or the phone numbers listed below. Visa, Mastercard, American Express, and Discover orders are accepted. If you prefer mailing your payment, please call for an order form.

**NOTE:** A street address is required when ordering manuals. (No P.O. Boxes).

- *Service Manuals.*

  These comprehensive service manuals provide the information that students and professional technicians need in diagnosing/troubleshooting, problem solving, maintaining, servicing and repairing DaimlerChrysler Corporation vehicles. A complete working knowledge of the vehicle, system and/or components is written in straightforward language with illustrations, diagrams and charts.

- *Diagnostic Procedure Manuals.*

  Filled with diagrams, charts and detailed illustrations, these practical manuals make it easy for students and technicians to find and fix problems on computer-controlled vehicle systems and features. They show exactly how to find and correct problems the first time, using step-by-step troubleshooting and driveability procedures, proven diagnostic tests and a complete list of all tools and equipment.

- *Owner's Manuals.*

  These manuals have been prepared with the assistance of service and engineering specialists to acquaint you with specific Chrysler group vehicles. Included are starting, operating, emergency and maintenance procedures as well as specifications, capabilities and safety tips.

Downloaded from www.Manualslib.com manuals search engine

*Call Toll Free at:*

- **1–800–890–4038 (U.S.)**
- **1–800–387–1143 (Canada)**

Or

*Visit us on the World Wide Web at:*

- **www.techauthority.daimlerchrysler.com**
- **www.daimlerchrysler.ca/manuals**

## DEPARTMENT OF TRANSPORTATION UNIFORM TIRE QUALITY GRADES

The following describes the tire grading categories established by the National highway Traffic Safety Administration. The specific grade rating assigned by the tire's manufacturer in each category is shown on the sidewall of the tires on your car.

All Passenger Car Tires Must Conform to Federal Safety Requirements in Addition to These Grades.

### Treadwear

The treadwear grade is a comparative rating based on the wear rate of the tire when tested under controlled conditions on a specified government test course. For example, a tire graded 150 would wear one and a half (1 1/2) times as well on the government course as a tire graded 100. The relative performance of tires depends upon the actual conditions of their use, however, and may depart significantly from the norm due to variations in driving habits, service practices and differences in road characteristics and climate.



Downloaded from www.Manualslib.com manuals search engine

### Traction Grades

The traction grades, from highest to lowest, are AA, A, B, and C. Those grades represent the tire's ability to stop on wet pavement as measured under controlled conditions on specified government test surfaces of asphalt and concrete. A tire marked C may have poor traction performance.

**WARNING!**

**The traction grade assigned to this tire is based on straight-ahead braking traction tests, and does not include acceleration, cornering, hydroplaning, or peak traction characteristics.**

### Temperature Grades

The temperature grades are A (the highest), B, and C, representing the tire's resistance to the generation of heat and its ability to dissipate heat when tested under controlled conditions on a specified indoor laboratory test wheel. Sustained high temperature can cause the material of the tire to degenerate and reduce tire life, and excessive temperature can lead to sudden tire failure. The grade C corresponds to a level of performance which all passenger car tires must meet under the Federal Motor Vehicle Safety Standard No. 109. Grades B and A represent higher levels of performance on the laboratory test wheel than the minimum required by law.

**WARNING!**

**The temperature grade for this tire is established for a tire that is properly inflated and not overloaded. Excessive speed, underinflation, or excessive loading, either separately or in combination, can cause heat buildup and possible tire failure.**

Downloaded from www.Manualslib.com manuals search engine

# INDEX



Downloaded from www.Manualslib.com manuals search engine

Adding Fuel . . . . . 300
Adding Washer Fluid . . . . . 132,357
Additives, Fuel . . . . . 298
Adjustable Pedals . . . . . 137
Air Conditioner Maintenance . . . . . 353
Air Conditioning . . . . . 235,240
Air Conditioning Controls . . . . . 235
Air Conditioning Filter . . . . . 253,354
Air Conditioning Refrigerant . . . . . 353
Air Conditioning System . . . . . 235,240,243,353
Air Conditioning System, Zone Control . . . . . 236
Air Pressure, Tires . . . . . 283
Airbag . . . . . 45
Airbag Deployment . . . . . 57
Airbag Light . . . . . 49,50,59,72,175
Airbag Maintenance . . . . . 58
Airbag, Window (Side Curtain) . . . . . 46
Alarm System (Security Alarm) . . . . . 26
Alignment and Balance . . . . . 290
All Wheel Drive (AWD) . . . . . 266,291,370
Alterations/Modifications, Vehicle . . . . . 7
Antenna, Satellite Radio . . . . . 228
Antifreeze (Engine Coolant) . . . . . 359,360,386
  Disposal . . . . . 362
Anti-Lock Brake System (ABS) . . . . . 269
Anti-Lock Warning Light . . . . . 169
Anti-Theft Security Alarm (Theft Alarm) . . . . . 26
Appearance Care . . . . . 372
Arming Theft System (Security Alarm) . . . . . 26
Auto Down Power Windows . . . . . 32
Automatic Dimming Mirror . . . . . 80
Automatic Door Locks . . . . . 17,18
Automatic Headlights . . . . . 128
Automatic Temperature Control (ATC) . . . . . 243
Automatic Transaxle . . . . . 261
  Adding Fluid . . . . . 388
  Interlock System . . . . . 262
  Reset Mode . . . . . 262

Downloaded from www.Manualslib.com manuals search engine

Selection Of Lubricant . . . . . 367,388
Shifting . . . . . 263
Special Additives . . . . . 370
Automatic Transmission . . . . . 367
Adding Fluid . . . . . 368
Fluid and Filter Changes . . . . . 369
Fluid Change . . . . . 369
Fluid Level Check . . . . . 368
Fluid Type . . . . . 367
Autostick . . . . . 139,264

Ball Joints . . . . . 355
Battery . . . . . 351
Gas Caution . . . . . 352
Jump Starting . . . . . 327
Keyless Transmitter Replacement (RKE) . . . . . 24
Bearings . . . . . 372
Belts, Drive . . . . . 348
Body Mechanism Lubrication . . . . . 356
B-Pillar Location . . . . . 278
Brake, Parking . . . . . 266
Brake System . . . . . 268,364
Anti-Lock (ABS) . . . . . 269
Fluid Check . . . . . 365,388
Hoses . . . . . 364
Warning Light . . . . . 170
Brakes . . . . . 268,364
Brake/Transmission Interlock . . . . . 261
Break-In Recommendations, New Vehicle . . . . . 71
Bulb Replacement . . . . . 382
Bulbs, Light . . . . . 381

Calibration, Compass . . . . . 184
Capacities, Fluid . . . . . 386
Caps, Filler
Fuel . . . . . 300
Oil (Engine) . . . . . 346,347
Radiator (Coolant Pressure) . . . . . 361



Downloaded from www.Manualslib.com manuals search engine

Car Washes . . . . . 373
Carbon Monoxide Warning . . . . . 299
Cargo Area Cover . . . . . 156
Cargo Compartment
Luggage Carrier . . . . . 158
Cargo Tie-Downs . . . . . 157
Cassette Tape and Player Maintenance . . . . . 232
Cassette Tape Player . . . . . 207,211
Catalytic Converter . . . . . 350
Caution, Exhaust Gas . . . . . 71,357
CD (Compact Disc) Changer . . . . . 193,203,215
CD (Compact Disc) Player . . . 187,191,197,201,207,213
CD (Compact Disc) Player Maintenance . . . . . 233
Cellular Phone . . . . . 83,233
Chains, Tire . . . . . 294
Changing A Flat Tire . . . . . 320
Chart, Tire Sizing . . . . . 275
Check Engine Light
(Malfunction Indicator Light) . . . . . 173,341
Child Restraint . . . . . 60
Child Restraint Tether Anchors . . . . . 61,63
Child Safety Locks . . . . . 19
Child Seat . . . . . 68
Clean Air Gasoline . . . . . 297
Climate Control . . . . . 234
Clock . . . . . 186
Compact Disc (CD) Maintenance . . . . . 233
Compact Spare Tire . . . . . 286
Compass . . . . . 183
Compass Calibration . . . . . 184
Compass Variance . . . . . 184
Computer, Trip/Travel . . . . . 185
Console . . . . . 155
Console, Floor . . . . . 155
Console, Overhead . . . . . 141
Contract, Service . . . . . 416
Coolant Pressure Cap . . . . . 361
Cooling System . . . . . 358

Downloaded from www.Manualslib.com manuals search engine

Adding Coolant (Antifreeze) . . . . . 360
Coolant Capacity . . . . . 386
Coolant Level . . . . . 359,362
Disposal of Used Coolant . . . . . 362
Drain, Flush, and Refill . . . . . 359
Inspection . . . . . 362
Points to Remember . . . . . 362
Pressure Cap . . . . . 361
Radiator Cap . . . . . 361
Selection of Coolant (Antifreeze) . . . . . 359,386,387
Cruise Control (Speed Control) . . . . . 138
Cruise Light . . . . . 173
Cup Holder . . . . . 154,376
Customer Assistance . . . . . 414

Dealer Service . . . . . 343
Defroster, Rear Window . . . . . 253
Defroster, Windshield . . . . . 72,240,249
Delay (Intermittent) Wipers . . . . . 131
Diagnostic System, Onboard . . . . . 340
Dimmer Switch, Headlight . . . . . 130
Dipsticks
Automatic Transmission . . . . . 368
Oil (Engine) . . . . . 344
Disabled Vehicle Towing . . . . . 331
Disarming, Theft System . . . . . 26
Disposal
Antifreeze (Engine Coolant) . . . . . 362
Engine Oil . . . . . 348
Door Ajar Light . . . . . 176
Door Locks . . . . . 16
Door Locks, Automatic . . . . . 17
Door Opener, Garage . . . . . 142
Drive Belts . . . . . 348
Drive Shaft Universal Joints . . . . . 355
Driving
On Slippery Surfaces . . . . . 329



Downloaded from www.Manualslib.com manuals search engine

Electric Remote Mirrors . . . . . 82
Electrical Power Outlets . . . . . 152
Electronic Speed Control (Cruise Control) . . . . . 138
Electronic Vehicle Information Center (EVIC) . . . . 176
Emergency, In Case of
  Hazard Warning Flasher . . . . . 318
  Jacking . . . . . 320
  Jump Starting . . . . . 327
  Overheating . . . . . 319
Emission Control System Maintenance . . . . . 341,390
Engine . . . . . 338,339
  Air Cleaner . . . . . 349
  Air Cleaner Filter . . . . . 349
  Block Heater . . . . . 260
  Break-In Recommendations . . . . . 71
  Checking Oil Level . . . . . 344
  Compartment . . . . . 338,339
  Coolant (Antifreeze) . . . . . 387
  Cooling . . . . . 358
  Exhaust Gas Caution . . . . . 31,299
  Fails to Start . . . . . 259
  Fuel Requirements . . . . . 296,386
  Oil . . . . . 344,386,387
  Oil Change Interval . . . . . 345
  Oil Disposal . . . . . 348
  Oil Filler Cap . . . . . 346,347
  Oil Filter Disposal . . . . . 348
  Oil Selection . . . . . 346,386
  Oil Synthetic . . . . . 348
  Overheating . . . . . 319
  Temperature Gauge . . . . . 168
Exhaust Gas Caution . . . . . 31,71,299,358
Exhaust System . . . . . 357
Extender, Seat Belt . . . . . 44
Exterior Folding Mirrors . . . . . 80

Filters
  Air Cleaner . . . . . 349

Downloaded from www.Manualslib.com manuals search engine

Air Conditioning . . . . . 253,354
Automatic Transaxle . . . . . 369
Engine Oil . . . . . 348,387
Engine Oil Disposal . . . . . 348
Flashers
Hazard Warning . . . . . 318
Turn Signal . . . . . 169,384,385
Floor Console . . . . . 155
Fluid Capacities . . . . . 386
Fluid Leaks . . . . . 73
Fluid Level Checks
Automatic Transmission . . . . . 368
Brake . . . . . 365,388
Power Steering . . . . . 354,388
Fluids . . . . . 387
Fluids, Lubricants and Genuine Parts . . . . . 387
Fog Light Service . . . . . 384
Fog Lights . . . . . 129,174,384
Folding Rear Seat . . . . . 116
Freeing A Stuck Vehicle . . . . . 330
Fuel . . . . . 296
Adding . . . . . 300
Additives . . . . . 298
Clean Air . . . . . 297
Filler Cap (Gas Cap) . . . . . 300
Gasoline . . . . . 296
Gauge . . . . . 169
Hoses . . . . . 367
Octane Rating . . . . . 296,387
Requirements . . . . . 296,386
Tank Capacity . . . . . 386
Fuel System Caution . . . . . 298
Fueling . . . . . 300
Fuses . . . . . 377

Garage Door Opener (HomeLink®) . . . . . 142
Gas Cap (Fuel Filler Cap) . . . . . 300,341
Gasoline, Clean Air . . . . . 297



Downloaded from www.Manualslib.com manuals search engine

Gasoline (Fuel) . . . . . 296
Gasoline, Reformulated . . . . . 297
Gauges
  Coolant Temperature . . . . . 168
  Fuel . . . . . 169
  Speedometer . . . . . 169
  Tachometer . . . . . 172
Gearshift . . . . . 263
General Information . . . . . 15,24,293
Glass Cleaning . . . . . 375
Grocery Bag Retainer . . . . . 118
Gross Axle Weight Rating . . . . . 302,305
Gross Vehicle Weight Rating . . . . . 302,305

Hands-Free Phone (UConnect™) . . . . . 83
Hazard Warning Flasher . . . . . 318
Head Phones . . . . . 222
Head Restraints . . . . . 108
Headlights . . . . . 383
  Bulb Replacement . . . . . 382
  High Beam . . . . . 130
  High Beam/Low Beam Select Switch . . . . . 130
  Passing . . . . . 130
  Replacing . . . . . 382
  Switch . . . . . 126
  Time Delay . . . . . 128
Heated Seats . . . . . 108
Heater . . . . . 235
Heater, Engine Block . . . . . 260
Hitches
  Trailer Towing . . . . . 307
Holder, Cup . . . . . 154
HomeLink® (Garage Door Opener) Transmitter . . . 142
Hood Release . . . . . 123
Hoses . . . . . 363,367

Ignition
  Key . . . . . 11

Downloaded from www.Manualslib.com manuals search engine

Illuminated Entry . . . . . 15
Immobilizer (Sentry Key) . . . . . 12
Indicator, Traction Control . . . . . 171
Infant Restraint . . . . . 65
Information Center, Vehicle . . . . . 176
Instrument Cluster . . . . . 166,167,168
Instrument Panel and Controls . . . . . 165
Instrument Panel Lens Cleaning . . . . . 375
Integrated Power Module . . . . . 377
Interior Appearance Care . . . . . 374
Interior Lights . . . . . 126,127
Intermittent Wipers (Delay Wipers) . . . . . 131
Introduction . . . . . 4

Jack Location . . . . . 321
Jack Operation . . . . . 320,324
Jacking Instructions . . . . . 324
Jump Starting . . . . . 327

Key, Programming . . . . . 14
Key, Replacement . . . . . 14
Key, Sentry (Immobilizer) . . . . . 12
Key-In Reminder . . . . . 12
Keyless Entry System . . . . . 20
Keys . . . . . 11
Knee Bolster . . . . . 50

Lap/Shoulder Belts . . . . . 35
LATCH
(Lower Anchors and Tether for CHildren) . . . . . 61,63
Latches
  Hood . . . . . 123
Lead Free Gasoline . . . . . 296
Life of Tires . . . . . 289
Liftgate . . . . . 28
Lights . . . . . 73,125
  Airbag . . . . . 49,59,72,175
  Anti-Lock . . . . . 169



Downloaded from www.Manualslib.com manuals search engine

Automatic Headlights . . . . . 128
Back-Up . . . . . 385
Brake Warning . . . . . 170
Bulb Replacement . . . . . 381,382
Courtesy/Reading . . . . . 125
Cruise . . . . . 173
Daytime Running . . . . . 128
Dimmer Switch, Headlight . . . . . 126
Door Ajar . . . . . 176
Engine Temperature Warning . . . . . 176
Fog . . . . . 129,174,384
Hazard Warning Flasher . . . . . 318
Headlight Switch . . . . . 126
Headlights . . . . . 126,382,383
High Beam Indicator . . . . . 174
Illuminated Entry . . . . . 15
Instrument Cluster . . . . . 126
Interior . . . . . 127
License . . . . . 385
Liftgate Ajar . . . . . 176
Lights On Reminder . . . . . 128
Malfunction Indicator (Check Engine) . . . . . 173
Oil Pressure . . . . . 174
Park . . . . . 384
Reading . . . . . 142
Rear Servicing . . . . . 385
Rear Tail . . . . . 385
Seat Belt Reminder . . . . . 174
Service . . . . . 381,382
Service Engine Soon (Malfunction Indicator) . . . 173
Side Marker . . . . . 385
Turn Signal . . . . . 126,129,384,385
Voltage . . . . . 168
Warning (Instrument Cluster Description) . . . . . 168
Washer Fluid . . . . . 176
Load Leveling System . . . . . 160
Loading Vehicle . . . . . 302,303
Capacities . . . . . 303

Downloaded from www.Manualslib.com manuals search engine

Tires . . . . . 278
Locks
Door . . . . . 16
Lower Anchors and Tether for CHildren (LATCH) . . . . . 61,63
Lubrication, Body . . . . . 356
Luggage Rack (Roof Rack) . . . . . 158

Maintenance, Airbag . . . . . 58
Maintenance Free Battery . . . . . 351
Maintenance Procedures . . . . . 344
Maintenance Schedule . . . . . 390
Schedule "A" . . . . . 406
Schedule "B" . . . . . 393
Maintenance, Sunroof . . . . . 151
Malfunction Indicator Light (Check Engine) . . 173,341
Manual, Service . . . . . 418
Map/Reading Lights . . . . . 142
Memory Feature (Memory Seat) . . . . . 119
Memory Seat . . . . . 82,119
Mini-Trip Computer . . . . . 185
Mirrors . . . . . 79
Automatic Dimming . . . . . 80
Electric Remote . . . . . 82
Exterior Folding . . . . . 80
Heated . . . . . 82
Memory . . . . . 119
Outside . . . . . 81
Rearview . . . . . 79
Vanity . . . . . 82
Modifications/Alterations, Vehicle . . . . . 7
Monitor, Tire Pressure System . . . . . 291
Mopar Parts . . . . . 343,417
Multi-Function Control Lever . . . . . 126

Navigation System . . . . . 233
New Vehicle Break-In Period . . . . . 71



Downloaded from www.Manualslib.com manuals search engine

Occupant Restraints . . . . . 33
Octane Rating, Gasoline (Fuel) . . . . . 296
Odometer . . . . . 172
Oil, Engine . . . . . 344,387
  Capacity . . . . . 386
  Change Interval . . . . . 345
  Checking . . . . . 344
  Disposal . . . . . 348
  Filter . . . . . 348,387
  Filter Disposal . . . . . 348
  Identification Logo . . . . . 346
  Materials Added to . . . . . 348
  Recommendation . . . . . 346,386
  Synthetic . . . . . 348
  Viscosity . . . . . 346,347,386
Onboard Diagnostic System . . . . . 340,341
Opener, Garage Door (HomeLink®) . . . . . 142
Operator Manual (Owner's Manual) . . . . . 4
Overdrive . . . . . 264
Overhead Console . . . . . 141
Overhead Travel Information Center . . . . . 141
Overheating, Engine . . . . . 168,319
Owner's Manual (Operator Manual) . . . . . 4,418

Panic Alarm . . . . . 22
Parking Brake . . . . . 266
Parking On Hill . . . . . 267
Passing Light . . . . . 130
Pedals, Adjustable . . . . . 137
Pets, Transporting . . . . . 70
Phone, Cellular . . . . . 83
Phone, Hands-Free (UConnect™) . . . . . 83
Placard, Tire and Loading Information . . . . . 278
Power
  Brakes . . . . . 268
  Distribution Center . . . . . 377
  Door Locks . . . . . 17
  Lift Gate . . . . . 29

Downloaded from www.Manualslib.com manuals search engine

Mirrors . . . . . 82
Outlet (Auxiliary Electrical Outlet) . . . . . 152
Seats . . . . . 106,107
Steering . . . . . 271
Steering, Checking . . . . . 354
Sunroof . . . . . 149
Windows . . . . . 32
Pregnant Women and Seat Belts . . . . . 44
Preparation for Jacking . . . . . 323
Pretensioners
Seat Belts . . . . . 42
Programmable Electronic Features . . . . . 144,147,179
Programming Transmitters
(Remote Keyless Entry) . . . . . 23,144,147

Radial Ply Tires . . . . . 285
Radiator Cap (Coolant Pressure Cap) . . . . . 359,361
Radio Broadcast Signals . . . . . 231
Radio Operation . . . . . 207,233
Radio Remote Controls . . . . . 216,229
Radio, Satellite . . . . . 225
Radio (Sound Systems) . . . . . 187,197,207
Rear Liftgate . . . . . 28
Rear Seating Flexibility . . . . . 116
Rear Window Defroster . . . . . 253
Rear Window Features . . . . . 131
Rear Wiper/Washer . . . . . 131
Rearview Mirrors . . . . . 79
Reclining Front Seats . . . . . 110
Recreational Towing . . . . . 315,332
Reminder, Seat Belt . . . . . 43
Remote Control . . . . . 216
Remote Keyless Entry (RKE) . . . . . 20
Remote Sound System (Radio) Controls . . . . . 229
Replacement Keys . . . . . 14
Replacement Parts . . . . . 343
Replacement Tires . . . . . 289,291
Reporting Safety Defects . . . . . 417



Downloaded from www.Manualslib.com manuals search engine

Restraint, Head . . . . . 108
Restraints, Child . . . . . 60,68
Restraints, Infant . . . . . 65
Retractable Cargo Area Cover . . . . . 156
Rocking Vehicle When Stuck . . . . . 330
Roof Rack (Luggage Rack) . . . . . 158
Rotation, Tires . . . . . 295

Safety Checks Inside Vehicle . . . . . 72
Safety Checks Outside Vehicle . . . . . 73
Safety Defects, Reporting . . . . . 417
Safety, Exhaust Gas . . . . . 31
Safety Information, Tire . . . . . 274
Safety Tips . . . . . 71
Satellite Radio . . . . . 225
Satellite Radio Antenna . . . . . 228
Schedule, Maintenance . . . . . 390
Seat Belt Maintenance . . . . . 376
Seat Belt Reminder . . . . . 43
Seat Belts . . . . . 33
  Adjustable Shoulder Belt . . . . . 40
  Adjustable Upper Shoulder Anchorage . . . . . 40
  And Pregnant Women . . . . . 44
  Child Restraint . . . . . 60
  Extender . . . . . 44
  Front Seat . . . . . 35
  Pretensioners . . . . . 42
  Rear Seat . . . . . 35
  Reminder . . . . . 174
  Untwisting Procedure . . . . . 41
Seats . . . . . 106
  Adjustment . . . . . 111
  Easy Entry . . . . . 113,122
  Heated . . . . . 108
  Memory . . . . . 119
  Power . . . . . 106,107
  Reclining . . . . . 110
  Tilting . . . . . 113

Downloaded from www.Manualslib.com manuals search engine

Security Alarm (Theft Alarm) . . . . . 26
Selection of Coolant (Antifreeze) . . . . . 359,387
Sentry Key (Immobilizer) . . . . . 12
Sentry Key Programming . . . . . 14
Service Assistance . . . . . 414
Service Contract . . . . . 416
Service Engine Soon Light (Malfunction Indicator) . 173
Service Manuals . . . . . 418
Setting the Clock . . . . . 186
Shoulder Belts . . . . . 35
Signals, Turn . . . . . 169,384,385
Slippery Surfaces, Driving On . . . . . 329
Snow Chains (Tire Chains) . . . . . 294
Snow Tires . . . . . 295
Spare Tire . . . . . 286,287,322
Spark Plugs . . . . . 349
Speed Control (Cruise Control) . . . . . 138
Speedometer . . . . . 169
Starting . . . . . 258
  Engine Fails to Start . . . . . 259
Starting and Operating . . . . . 258
Starting Procedures . . . . . 258
Steering
  Linkage . . . . . 355
  Power . . . . . 271,354
  Shaft Seal . . . . . 355
  Tilt Column . . . . . 133
Steering Wheel Mounted Sound System
  Controls . . . . . 229
Storage . . . . . 155,380
Storage, Vehicle . . . . . 252,380
Storing Your Vehicle . . . . . 380
Sun Roof . . . . . 149
Sun Visor Extension . . . . . 83
Sunglasses Storage . . . . . 142
Sunroof Maintenance . . . . . 151
Supplemental Restraint System - Airbag . . . . . 45
Synthetic Engine Oil . . . . . 348



Downloaded from www.Manualslib.com manuals search engine

System, Navigation . . . . . 233

Tachometer . . . . . 172
Tape Player . . . . . 211
Temperature Control, Automatic (ATC) . . . . . 243
Temperature Gauge, Engine Coolant . . . . . 168,319
Tether Anchor, Child Restraint . . . . . 61,63
Theft Alarm (Security Alarm) . . . . . 26
Theft System Arming . . . . . 26
Theft System Disarming . . . . . 26
Theft System (Security Alarm) . . . . . 26
Tie Down Hooks, Cargo . . . . . 157
Tilt Steering Column . . . . . 133
Tire and Loading Information Placard . . . . . 278
Tire Identification Number (TIN) . . . . . 277
Tire Markings . . . . . 274
Tire Safety Information . . . . . 274
Tires . . . . . 73,282,419
  Aging (Life of Tires) . . . . . 289
  Air Pressure . . . . . 282
  Alignment . . . . . 290
  Chains . . . . . 294
  Changing . . . . . 320
  Compact Spare . . . . . 286
  General Information . . . . . 282
  High Speed . . . . . 284
  Inflation Pressures . . . . . 283
  Jacking . . . . . 320
  Life of Tires . . . . . 289
  Load Capacity . . . . . 278,279
  Pressure Monitor System (TPMS) . . . . . 291
  Quality Grading . . . . . 419
  Radial . . . . . 285
  Replacement . . . . . 289,291
  Rotation . . . . . 295
  Safety . . . . . 274,282
  Sizes . . . . . 275
  Snow Tires . . . . . 295

Downloaded from www.Manualslib.com manuals search engine

Spare Tire . . . . . 322
Spinning . . . . . 287
Tread Wear Indicators . . . . . 288
Tongue Weight/Trailer Weight . . . . . 308
Towing . . . . . 304
Disabled Vehicle . . . . . 331
Guide . . . . . 307
Recreational . . . . . 315,332
Weight . . . . . 307
Traction Control . . . . . 134,171,272
Traction Control Switch . . . . . 134,272
Trailer Towing . . . . . 304
Cooling System Tips . . . . . 315
Hitches . . . . . 307
Minimum Requirements . . . . . 310
Trailer and Tongue Weight . . . . . 308
Wiring . . . . . 313
Trailer Towing Guide . . . . . 307
Trailer Weight . . . . . 307
Transaxle . . . . . 261
Automatic . . . . . 261
Autostick . . . . . 139,264
Operation . . . . . 261
Overdrive . . . . . 264
Selection of Lubricant . . . . . 367,388
Transmission . . . . . 367
Automatic . . . . . 367
Filter . . . . . 369
Fluid . . . . . 367
Transmitter Battery Service (Remote Keyless Entry) . 24
Transmitter, Garage Door Opener (HomeLink®) . . 142
Transmitter Programming (Remote Keyless Entry) . 23
Transmitter, Remote Keyless Entry (RKE) . . . . . 20
Transporting Pets . . . . . 70
Tread Wear Indicators . . . . . 288
Trip Odometer . . . . . 172
Trip Odometer Reset Button . . . . . 172
Turn Signals . . . . . 129,169,384,385



Downloaded from www.Manualslib.com manuals search engine

Uniform Tire Quality Grades . . . . . 419
Universal Joints . . . . . 355
Universal Transmitter . . . . . 142
Unleaded Gasoline . . . . . 296
Untwisting Procedure, Seat Belt . . . . . 41

Vanity Mirrors . . . . . 82
Variance, Compass . . . . . 184
Vehicle Certification Label . . . . . 302
Vehicle Identification Number (VIN) . . . . . 6
Vehicle Loading . . . . . 279,302,303
Vehicle Modifications/Alterations . . . . . 7
Vehicle Storage . . . . . 252,380
Vehicle Theft Alarm (Security Alarm) . . . . . 26

Warning Flasher, Hazard . . . . . 318
Warning Lights (Instrument Cluster Description) . 168
Warnings and Cautions . . . . . 6
Warranty Information . . . . . 417
Washer, Adding Fluid . . . . . 132,357
Washers, Windshield . . . . . 130
Washing Vehicle . . . . . 373
Wheel Alignment and Balance . . . . . 290
Wheel and Wheel Trim . . . . . 374
Wheel Bearings . . . . . 372
Wind Buffeting . . . . . 33,151
Window Fogging . . . . . 252
Windows . . . . . 32
  Power . . . . . 32
Windshield Washers . . . . . 130,357
Windshield Wiper Blades . . . . . 356
Windshield Wipers . . . . . 130
Wiper Blade Replacement . . . . . 356
Wiper, Rear . . . . . 131
Wipers, Intermittent . . . . . 131

Zone Control (Temperature Control) . . . . . 236

Downloaded from www.Manualslib.com manuals search engine

# NOTES

Downloaded from www.Manualslib.com manuals search engine

# NOTES

Downloaded from www.Manualslib.com manuals search engine