OPEL Combo

Owner's Manual

OPEL Combo

Operation, Safety, Maintenance

Data specific to your vehicle

Please enter your vehicle's data here to keep it easily accessible. This information is available in the sections "Service and maintenance" and "Technical data" as well as on the identification plate.

Fuel

Designation	

Engine oil

Grade	
Viscosity	

Tyre pressure

	Tyre size	**Front**	**Rear**
Summer tyres			
Winter tyres			

Weights

	Gross vehicle weight rating	
–	**EC kerb weight**	
=	**Payload**	

Introduction

Your vehicle is an intelligent combination of forward-looking technology, impressive safety, environmental friendliness and economy.

It now lies with you to drive your vehicle safely and to see it performs perfectly. This Owner's Manual provides you with all the necessary information to that end.

Make sure your passengers are aware of the possible risk of accident and injury which may result from improper use of the vehicle.

You must always follow the specific laws of the country in which you are located. These could differ from the information in this Owner's Manual.

When this Manual refers to a workshop visit, we recommend your Opel Service Partner.

All Opel Service Partners provide first-class service at reasonable prices. Experienced mechanics trained by Opel work according to specific Opel instructions.

The Owner's Manual, infotainment system instructions and vehicle service and warranty booklet should always be kept ready to hand in the vehicle glove compartment.

Make use of the Owner's Manual

- The "In Brief" section will give you an initial overview.
- The table of contents at the beginning of the owner's manual and within the individual chapters will show you where everything is.
- Its index will help you find what you want.
- Yellow arrows in the illustrations serve as points of reference or indicate some action to be performed.
- Black arrows in the illustrations indicate a reaction or a second action to be performed.
- This Owner's Manual depicts left-hand drive vehicles. Operation is similar for right-hand drive vehicles.
- The Owner's Manual uses the internal engine codes. The corresponding sales designations are found in the chapter "Technical data".
- Direction references such as left or right, forwards or backwards in the descriptions always indicate the direction of travel.

Symbols

► Continue reading on next page.

❇ signifies equipment not fitted to all vehicles (model variants, engine options, models specific to one country, optional equipment, Genuine Opel Parts and Accessories).

Page references are indicated with ⇨ . ⇨ means "see page".

⚠ Danger, ⚠Warning, Caution

⚠ Danger
Text marked ⚠ **Danger** provides information on risk of endangering life. Failure to comply with the instructions could endanger life.

⚠Warning
Text marked ⚠**Warning** provides information on risk of accident or injury. Failure to comply with the instructions could lead to injury.

Caution
Text marked **Caution** provides information on possible damage to the vehicle Failure to comply with the instructions could lead to vehicle damage.

We wish you many hours of pleasurable driving

Adam Opel GmbH

Contents

In Brief 2
Keys, doors, windows 20
Seats, Interior 38
Instruments 66
Lighting 84
Infotainment system 90
Climate control 92
Driving and operation 100
Self-help, vehicle care 128
Opel Service, maintenance 164
Technical data 182
Index 198

In Brief

Unlocking the vehicle: Turn the key in the lock forwards or press the button on the radio remote control ✻

Pull on the door handle and open the door or slide open the sliding door ✻.

Sliding door ✻ ➪ 27. Key ➪ 20,
Electronic immobiliser ➪ 21,
Remote control ✻ ➪ 23,
Central locking system ✻ ➪ 24,
Anti-theft alarm system ✻ ➪ 31,
Child locks ✻ ➪ 27.

Unlocking the tailgate ✻: Turn the key to the horizontal position or press the button on the remote control ✻

Press the button to open the tailgate.

When using the remote control, the tailgate is only unlocked if the key slot in the button is in the horizontal position.

If the key slot is in the vertical position, the tailgate is always locked.

Remote control ✻ ➪ 23,
Central locking system ✻ ➪ 24,
Anti-theft alarm system ✻ ➪ 31,
Tailgate ✻ ➪ 28.

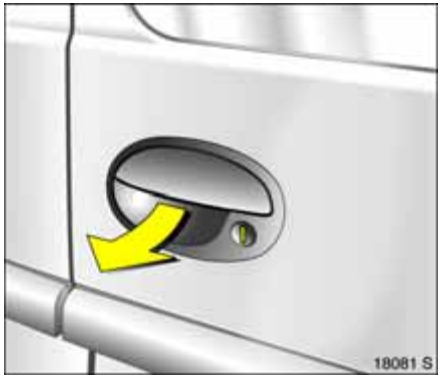

Unlocking the leaf doors ✻: Turn the key to the vertical position or press the button on the remote control ✻

To open the right leaf door, pull on the handle and pull open the door. To open the left leaf door, turn the handle on the inside.

When using the remote control, the leaf doors are only unlocked if the key slot in the lock is in the vertical position.

If the key slot is in the horizontal position, the leaf doors are always locked.

Remote control ✻ ➪ 23,
Central locking system ✻ ➪ 24,
Anti-theft alarm system ✻ ➪ 31,
Leaf doors ✻ ➪ 29.

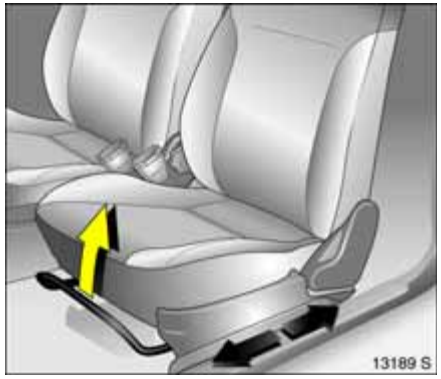

To adjust front seat leg room ✻: Pull handle, slide seat, release handle

After adjusting, move the seat until you can feel it engage.

Seats ➪ 38, Seat position ➪ 39.

To adjust front seat backrests: Turn handwheel

Do not lean on seat backrest whilst adjusting it.

Seats ➪ 38, Seat position ➪ 39.

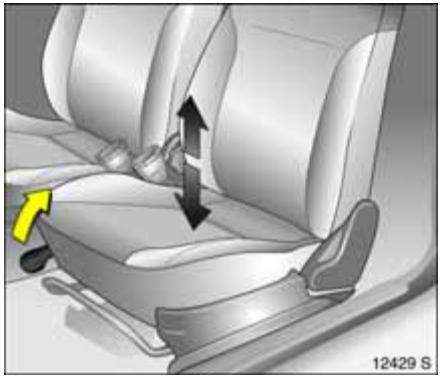

Front seat height ✻: Pull lever at side

Lift lever and relieve some weight from seat to raise it or press down on seat with body weight to lower it.

Never adjust the driver's seat whilst driving. It could move in an uncontrolled manner when the lever has been pulled.

Seats ➪ 38, Seat position ➪ 39.

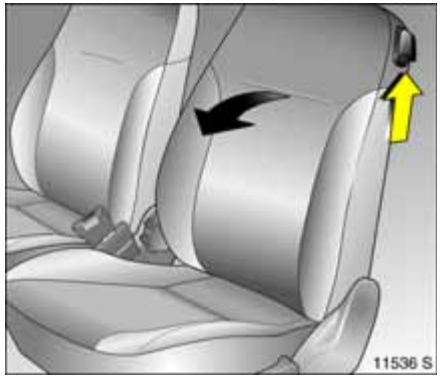

To fold front seat backrest forward ✻: Raise release lever

Seats ➪ 38, Seat position ➪ 39.

Adjust head restraint height ✻ of front and rear outboard seats: Tilt forward to release, hold in place, adjust height and release again

Head restraint ➪ 40, Head restraint position ➪ 41, Rear, centre head restraint ✻ ➪ 41.

Pull out the seat belt and engage it in the belt buckle

The seat belt must not be twisted and must lie snugly against the body. The backrest must not be tilted back too far (maximum approx. 25□).

To release belt, press red button on belt buckle.

Three-point seat belts ➪ 48,
Airbag system ✻ ➪ 56, Seat position ➪ 39.

Adjust the exterior mirror manually using the handle

Mirrors ➪ 34, Aspherical exterior mirrors ➪ 34, Folding the exterior mirrors ➪ 34.

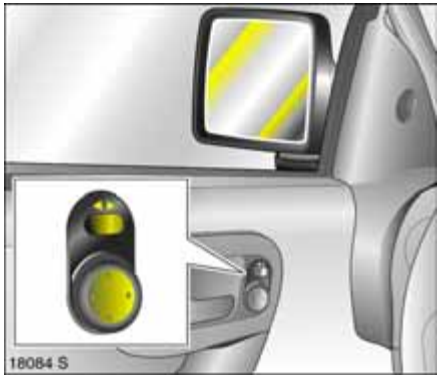

Electrical exterior mirror adjustment ✻

Select the corresponding exterior mirror with the rocker switch and adjust with the four-way switch.

Mirrors ➪ 34, Aspherical exterior mirrors ➪ 34, Folding the exterior mirrors ➪ 34, Heated exterior mirrors ➪ 35.

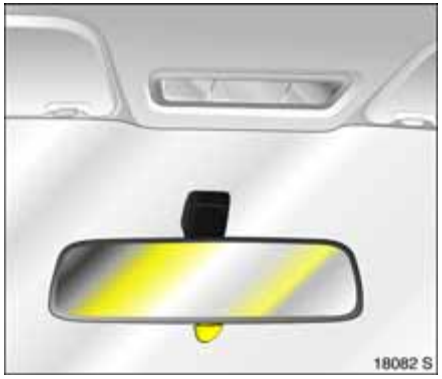

To adjust interior mirror by swivelling

Swivel lever on underside of mirror housing to reduce dazzle at night.

Mirrors ➪ 35.

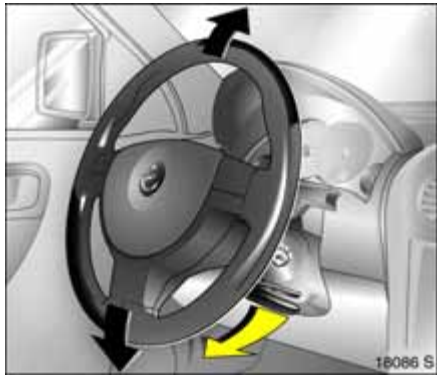

Steering wheel adjustment ✻: Swivel lever down, adjust height, swivel lever up, engage

Adjust steering wheel only when vehicle is stationary and steering column lock is released.

Airbag systems ✻ ➪ 56.

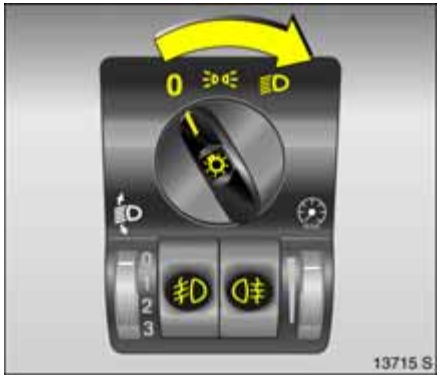

Exterior lights

Turn light switch

0	=	Off
≣D	=	Parking lamps
≣D	=	Dipped beam or main beam

Press light switch

☼	=	Courtesy lamp

Push button

≣D	=	Fog lamps ✻
D≡	=	Fog tail lamp

Lighting ➪ 84, Headlamp-warning device ➪ 17.

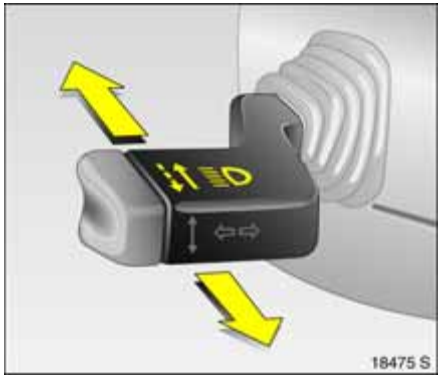

Headlamp flash, main beam and dipped beam

Headlamp flash	=	Pull stalk towards steering wheel
Main beam	=	Push stalk forwards
Dipped beam	=	Push stalk forwards again

Main beam, headlamp flash ⇨ 85.

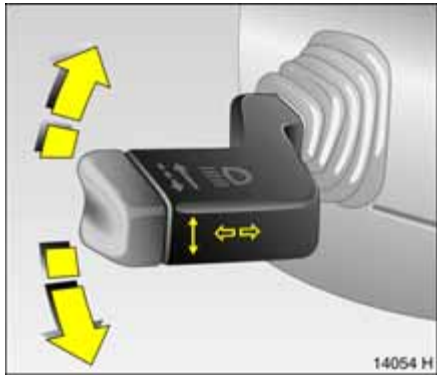

Switch turn signal on

Right	=	Lever upwards
Left	=	Lever downwards

Turn signals ⇨ 85.

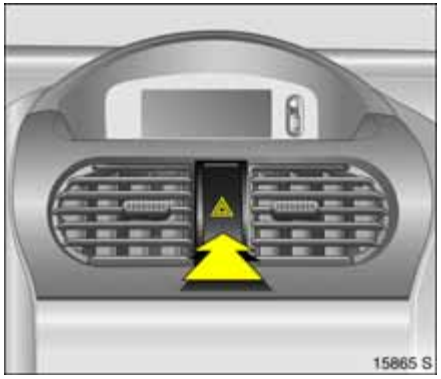

Hazard warning lamps

Operated with the button.

Hazard warning flashers ⇨ 86.

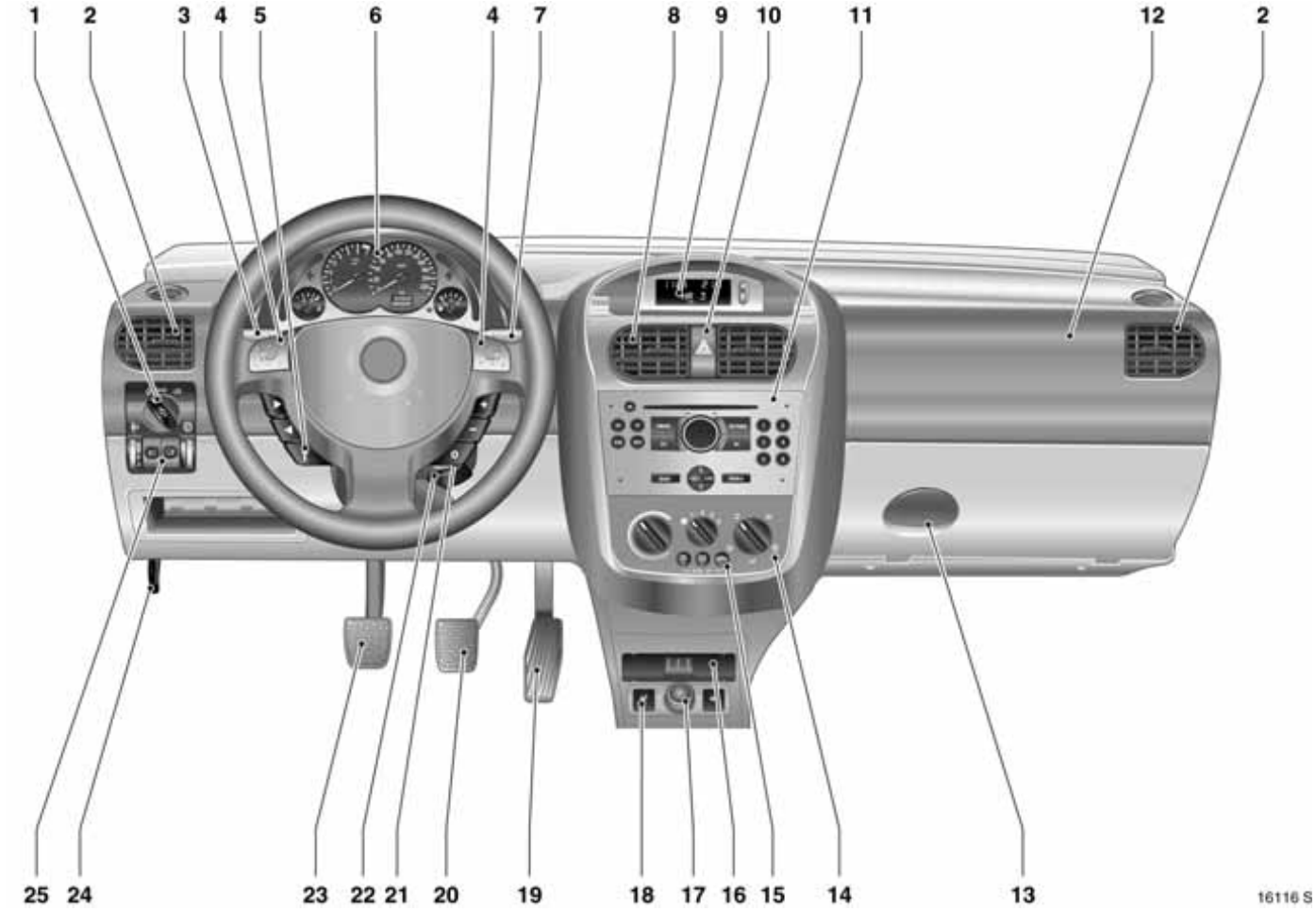
1
2
3
4
5
6
4
7
8
9
10
11
12
2
25
24
23
22
21
20
19
18
17
16
15
14
13
16116 S

		Page
1	Light switch	⇨ 6, ⇨ 84
2	Side air vents	⇨ 93
3	Turn signals, headlamp flash, dipped beam, main beam	⇨ 6, ⇨ 84
4	Horn	⇨ 13
5	Steering wheel remote control ✻	⇨ 90
6	Instruments	⇨ 66
7	Windscreen wipers, windscreen washer system, rear window washer system ✻	⇨ 82
8	Centre air vents	⇨ 93
9	Display ✻ for time, date, outside temperature, infotainment system ✻	⇨ 77
10	Hazard warning lamps	⇨ 7
	LED for anti-theft alarm system ✻	⇨ 32
11	Infotainment system ✻	⇨ 90
12	Front passenger airbag ✻	⇨ 56
13	Glove compartment	⇨ 63
14	Heating and ventilation system	⇨ 92
15	Air conditioning system ✻	⇨ 96
	Heated rear window ✻	⇨ 14, ⇨ 37
	Air recirculation system ✻	⇨ 97
16	Ashtray ✻	⇨ 62
17	Accessory socket or cigarette lighter	⇨ 61
18	Seat heating ✻	⇨ 40
	Fuel selection switch (natural gas/petrol) ✻	⇨ 113
19	Accelerator pedal	⇨ 106, ⇨ 108
20	Brake pedal	⇨ 106, ⇨ 118
21	Ignition switch with steering wheel lock	⇨ 16
22	Steering wheel adjustment ✻	⇨ 6
23	Clutch pedal ✻	⇨ 106
24	Bonnet release lever	⇨ 128
25	Headlamp range adjustment ✻	⇨ 87
	Fog tail lamp	⇨ 86
	Fog lamps ✻	⇨ 86
	Instrument illumination	⇨ 87

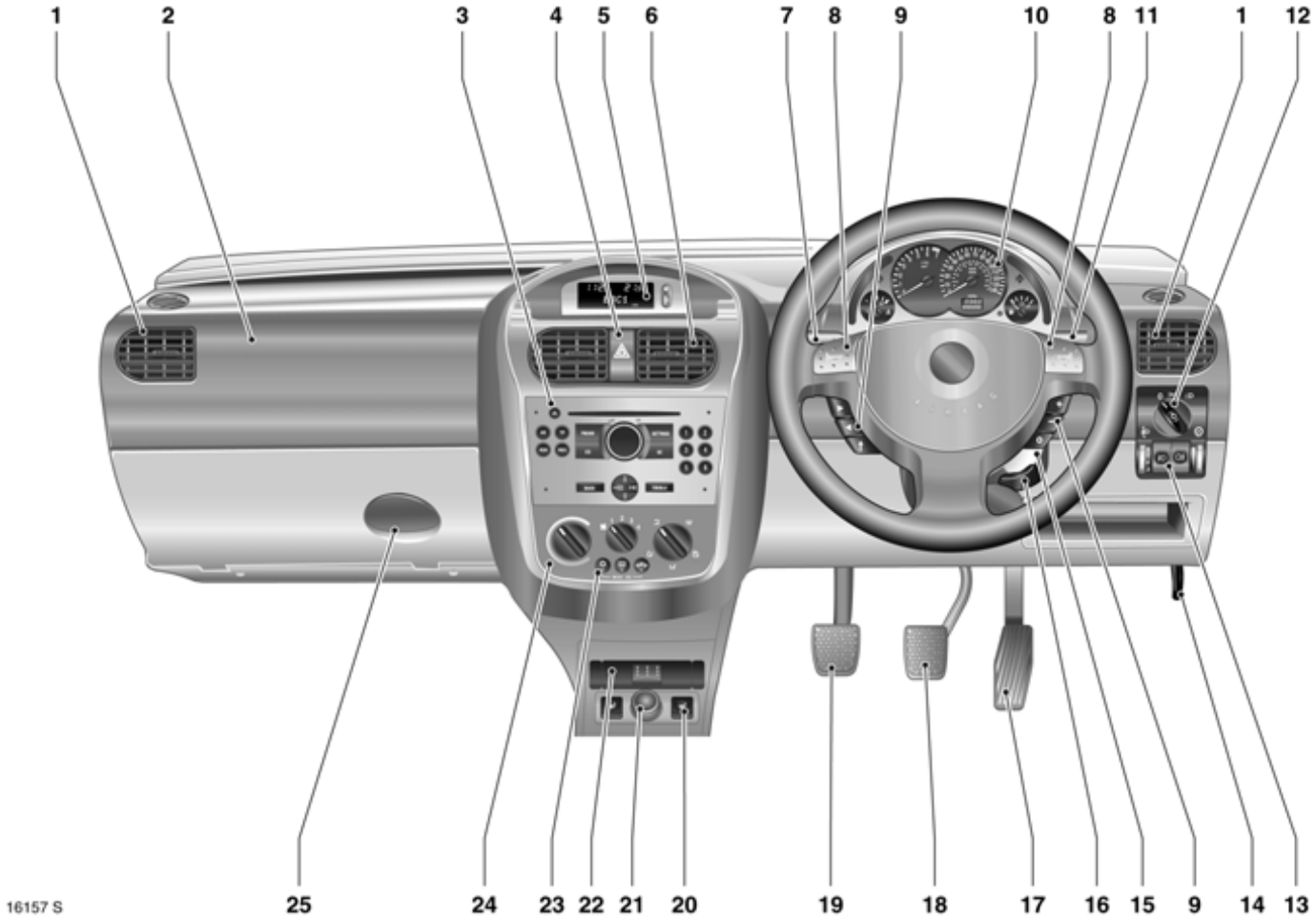
1
2
3
4
5
6
7
8
9
10
8
11
1
12
25
24
23
22
21
20
19
18
17
16
15
9
14
13
16157 S

		Page
1	Side air vents	⇨ 93
2	Front passenger airbag ✻	⇨ 56
3	Infotainment system ✻	⇨ 90
4	Hazard warning lamps	⇨ 7
	LED for anti-theft alarm system ✻	⇨ 32
5	Display ✻ for time, date, outside temperature, infotainment system ✻	⇨ 77
6	Centre air vents	⇨ 93
7	Turn signals, headlamp flash, dipped beam, main beam	⇨ 6, ⇨ 84
8	Horn	⇨ 13
9	Steering wheel remote control ✻	⇨ 90
10	Instruments	⇨ 66
11	Windscreen wipers, windscreen washer system, rear window washer system ✻	⇨ 82
12	Light switch	⇨ 6, ⇨ 84
13	Headlamp range adjustment ✻	⇨ 87
	Fog tail lamp	⇨ 86
	Fog lamps ✻	⇨ 86
	Instrument illumination	⇨ 87
14	Bonnet release lever	⇨ 128
15	Ignition switch with steering wheel lock	⇨ 16
16	Steering wheel adjustment ✻	⇨ 6
17	Accelerator pedal	⇨ 106, ⇨ 108
18	Brake pedal	⇨ 106, ⇨ 118
19	Clutch pedal ✻	⇨ 106
20	Seat heating ✻	⇨ 40
	Fuel selection switch (natural gas/petrol) ✻	⇨ 113
21	Accessory socket or cigarette lighter	⇨ 61
22	Ashtray ✻	⇨ 62
23	Air conditioning system ✻	⇨ 96
	Heated rear window ✻	⇨ 14, ⇨ 37
	Air recirculation system ✻	⇨ 97
24	Heating and ventilation system	⇨ 92
25	Glove compartment	⇨ 63

Control indicators

Fog lamps ✻,
⇨ 66, ⇨ 86.

Engine electronics, Immobiliser ✻, Manual transmission automated ✻, Fault,
⇨ 21, ⇨ 66, ⇨ 116.

Exhaust gases ✻,
⇨ 67, ⇨ 115.

Airbag systems ✻, Belt tensioners,
⇨ 67, ⇨ 50, ⇨ 59.

Engine oil pressure,
⇨ 67.

Turn signal lamps,
⇨ 68, ⇨ 85.

Main beam,
⇨ 68, ⇨ 85.

Preheating ✻, diesel particle filter ✻,
⇨ 68, ⇨ 116.

Winter programme of the manual transmission automated ✻,
⇨ 103.

Fog tail lamp,
⇨ 69, ⇨ 86.

Alternator,
⇨ 69.

Brake system, clutch system ✻,
⇨ 69, ⇨ 179.

Anti-lock Braking System ✻,
⇨ 119.

Engine oil level ✻,
⇨ 70, ⇨ 175.

EPS **Electric power steering ✻,**
⇨ 70.

Fuel level,
⇨ 70, ⇨ 111.

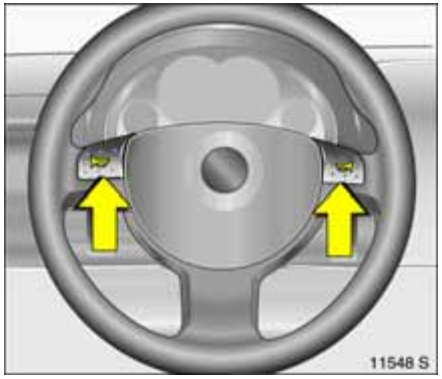

Operate horn: Press right or left

Airbag system ✻ ⇨ 56, Remote control on steering wheel ✻ ⇨ 90.

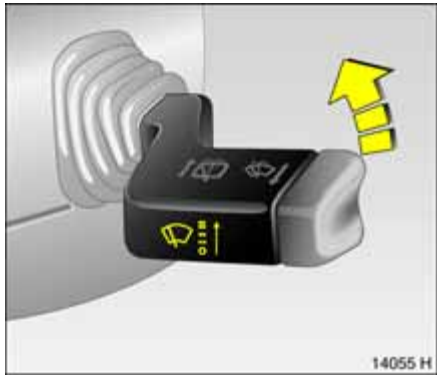

Windscreen wiper: Move lever upwards

═	=	Fast
—	=	Slow
- -	=	Adjustable interval switching
O	=	Off

Windscreen wiper ⇨ 82, Adjustable wiper interval ✻ ⇨ 83, Further information ⇨ 160, ⇨ 179.

Operating windscreen washer system: Lever toward steering wheel

Windscreen washer system ⇨ 82, Further information ⇨ 180, ⇨ 195.

Rear window wiper ✻ and Rear window washer system ✻ operation

Wiper on	=	Push stalk forwards
Wiper off	=	Lever toward steering wheel
Washing	=	Push lever forward and hold

Rear window wipers and rear window washer system ⇨ 82, Further information ⇨ 179, ⇨ 180.

Heated rear window ✻, heated exterior mirrors ✻

Operated with the button.

Climate control system ⇨ 92, Heated rear window ⇨ 37.

To clear fogged or icy windows

Turn the rotary switches for temperature and air flow clockwise. Set air distribution to . Air conditioning system ✻: Also press button .

Climate control ✻ ⇨ 92.

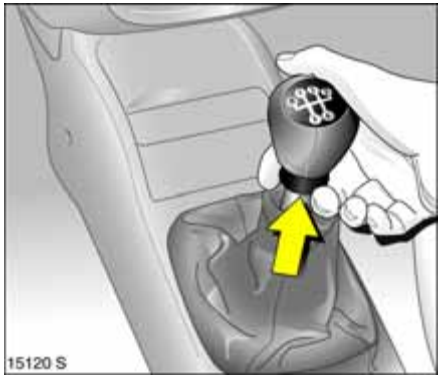

Manual transmission

Reverse gear: With the vehicle stationary, lift the ring under the gear-lever knob 3 seconds after depressing the clutch, and then engage the gear.

If the gear does not engage, put the lever into neutral, release the clutch pedal and depress again; then repeat gear selection.

Manual transmission ➪ 105.

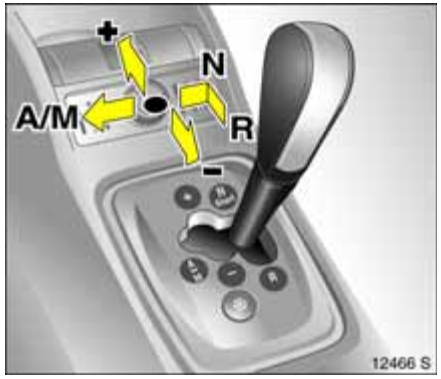

Manual transmission automated ✻

N	=	Idle speed/start position
●	=	Drive position (centre position)
+	=	Higher gear
-	=	Lower gear
A/M	=	Switch between Automatic and Manual mode
R	=	Reverse gear (with selector lever lock)

To move the selector lever from **N** to **R** press the button on the lever.

Only start in **N** with foot brake applied.

Manual transmission automated ✻ ➪ 100.

Before starting off, check

- Tyre pressure and tyre condition ➪ 121, ➪ 191,
- Engine oil level and fluid levels in engine compartment ➪ 174 to ➪ 180,
- All windows, mirrors, exterior lighting and number plates are free from dirt, snow and ice and operational,
- Seats, seat belts and mirrors are correctly adjusted ➪ 38, ➪ 48, ➪ 34,
- Check brake function at low speed, particularly if the brakes are wet.

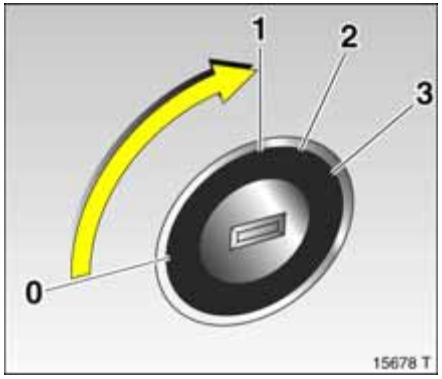

Steering wheel lock and ignition

Turn key to position 1. Move the steering wheel slightly to release the steering wheel lock.

0 = Ignition off
1 = Steering free, ignition off
2 = Ignition on,
with diesel engine: pre-heating
3 = Starting

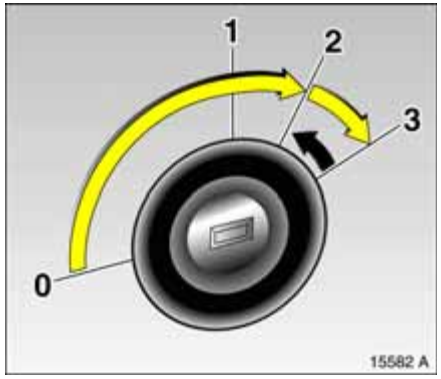

Starting the engine

Depress the clutch and brake pedals, manual transmission automated ✻ in N, do not accelerate; for diesel engine, turn key to position 2; when control indicator ➿ goes out turn the key to position 3 and release it when the engine is running.

To repeat the start procedure or switch off the engine, turn the key back to **0**.

To switch on the ignition, turn the key to 2.

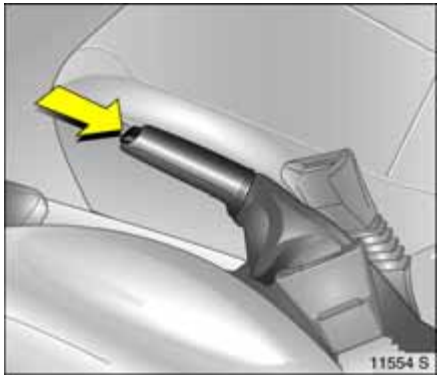

To release the hand brake: Raise lever slightly, press release button, lower lever fully

Hand brake ⇨ 69, ⇨ 120.

Parking the vehicle

- Always apply handbrake firmly without operating the release button, and apply as firmly as possible on a downhill or uphill slope.
- Switch off the engine and ignition by turning the ignition key to 0 and removing it. Turn the steering wheel until you can feel its lock engage (anti-theft protection).

  On vehicles with manual transmission automated ✻, control indicator (!) flashes for a few seconds after the ignition is switched off if the hand brake has not been applied.
- If the vehicle is parked on a level surface or an uphill slope, with a manual gearbox select first gear or with manual transmission automated ✻ move the selector lever to the centre position before switching off the ignition. Also turn the front wheels away from the kerb if the vehicle is on an uphill slope.

  If the vehicle is on a downhill slope, with manual gearbox or manual transmission automated ✻ select reverse gear before switching off the ignition. Also turn the front wheels towards the kerb.
- Lock the vehicle with the key in the lock or the ═ button on the remote control.

  Activate the anti-theft locking system ✻ and anti-theft alarm system ✻ by pressing the ═ button twice.

Advice when parking

- Do not park vehicle on easily ignitable surfaces as the hot exhaust system temperatures could cause the surface to ignite.
- Close windows.
- The engine cooling fans may run after the engine has been switched off, ⇨ 174.

Locking doors ⇨ 22, Remote control ✻ ⇨ 23, Central locking system ✻ ⇨ 24, Anti-theft alarm system ✻ ⇨ 31, Vehicle decommissioning ⇨ 181.

Interesting functions

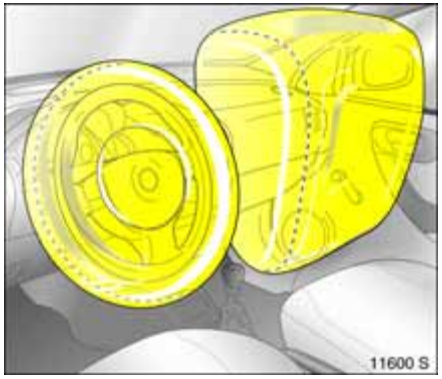

Airbag system

The airbag system consists of several internal systems.

Front airbag system ✻
The front airbag system will be triggered in the event of a serious accident involving a frontal impact and forms safety cushions for the driver and front passenger. The forward movement of the driver and front passenger is checked and the risk of injuries to the upper body and head thereby substantially reduced.

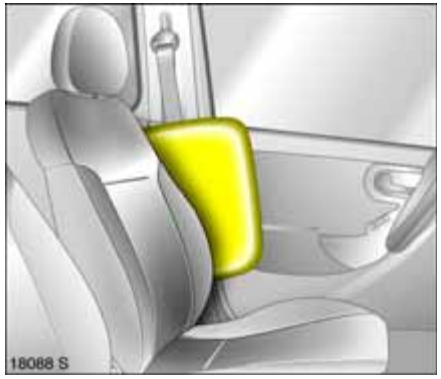

Side airbag system ✻
The side airbag system triggers when a side-on collision occurs and provides a safety barrier for the driver and/or passenger in the respective front door area. This reduces the risk of injury to the upper body considerably in case of a side impact.

Airbag System ⇨ 56.

Operating via the information display menus

The menu options are selected via the menus and with the button/four-way button or the multifunction button of the infotainment system ✻ or via the buttons ✻ on the steering wheel. The menu options appear on the display.

To select with four-way button:
Press four-way button up, down, right or left.

Selecting with the multifunction button (adjuster wheel via the four-way rocker switch ⇨ 78):
Press and turn multifunction button.

To exit a menu, turn the multifunction button left or right to **Return** or **Main** and select.

To select with steering wheel buttons ✻:
Select menu options via the menus using the buttons.

Information display ⇨ 77.

Diesel particle filter ✻

The diesel particle filter system filters harmful soot particles out of the exhaust gases. The system includes a self-cleaning function that run automatically during driving. The filter is cleaned by burning off the soot particles at high temperature. This process takes place automatically under set driving conditions and may take up to 25 minutes. Fuel consumption may be higher during this period. The emission of smells and smoke during this process is normal.

Under certain driving conditions, e.g. short distances, the system cannot clean itself automatically.

If the filter requires cleaning and previous driving conditions did not enable automatic cleaning, control indicator ⚯ flashes.

Further instructions ⇨ 116.

Keys, doors, windows

Replacement keys 20
Key with retractable key blade ✻ 20
Car Pass..... 20
Electronic immobiliser..... 21
Mechanical unlocking or locking of individual doors..... 22
Remote control ✻..... 23
Central locking system ✻ 24
Fault in the remote control 26
Malfunction in central locking system 26
Sliding doors ✻..... 27
Child safety locks ✻..... 27
Tailgate ✻ 28
Leaf doors ✻ 29
Anti-theft alarm system ✻ 31
Exterior mirrors..... 34
Interior mirror 35
Manual window operation, front doors 35
Window in the sliding doors ✻..... 36
Electric windows ✻..... 36
Heated rear window ✻..... 37

Replacement keys

The key number is specified in the Car Pass ✻.

The key is part of the electronic immobiliser.

Locks ⇨ 22, ⇨ 162.

Key with retractable key blade ✻

Press button to extend. To retract, press button and audibly engage key blade.

Car Pass

The Car Pass contains safety-related vehicle data and should therefore be kept in a safe place.

When the car is taken to a workshop, the Car Pass data is needed in order to perform certain operations.

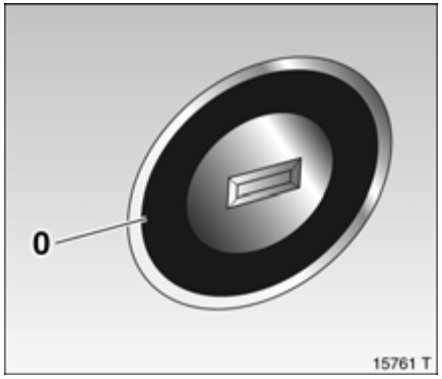

Electronic immobiliser

The system checks whether the vehicle is allowed to start with the key used. Once the transponder in the key is recognised, the vehicle can be started.

The electronic immobiliser activates automatically when the key is removed from the ignition switch.

Control indicator for immobilizer
Control indicator illuminates briefly after the ignition is switched on.

If the control indicator flashes when the ignition is on, there is a fault in the system; the engine cannot be started. Switch off the ignition and then repeat the start attempt.

If the control indicator continues to flash, please try to start the engine using the second key and contact a workshop.

If control indicator lights up after the engine has started, there is a fault in the engine electronics or the manual transmission automated ⇨ 104.

Note
The immobiliser does not lock the doors. You should always lock the vehicle after leaving it and switch on the anti-theft alarm system ❇, ⇨ 22, ⇨ 24, ⇨ 31.

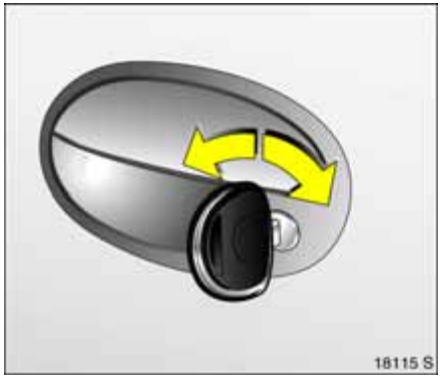

Mechanical unlocking or locking of individual doors

(versions without remote control ✻ and central locking system ✻)

Front doors and sliding doors ✻

To unlock

Turn key in lock towards front of vehicle as far as it will go. Return key to the vertical position and remove. Pull door handle.

To lock

With door or sliding door closed, turn key towards rear of vehicle as far as it will go. Turn key back to vertical position and remove.

Operating from the inside

Pull or press the interior lock button.

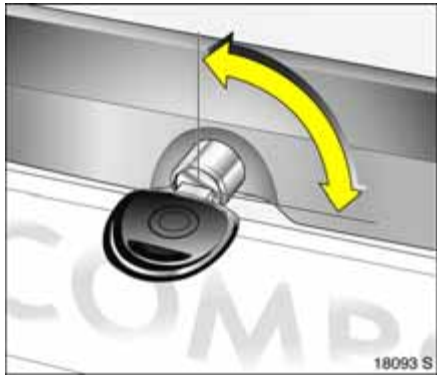

Tailgate ✻

To unlock

Turn key in lock to horizontal position and remove. Press button.

To lock

With tailgate closed, turn key in lock to vertical position and remove.

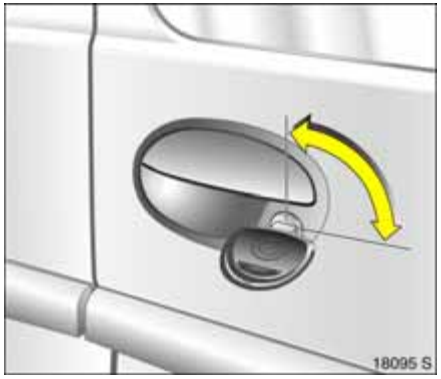

Leaf door ✻

To unlock

Turn key in lock to vertical position and remove. Pull door handle.

To lock

Close first left and then right leaf door. Turn key in lock to horizontal position and remove.

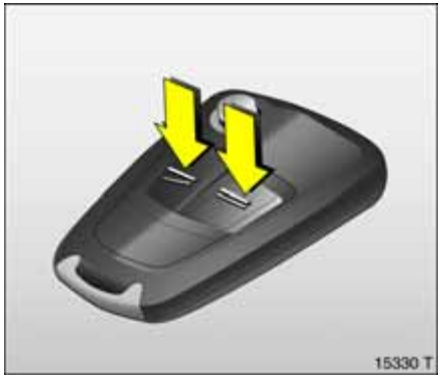

Remote control ✻

Depending on the equipment of the vehicle, one of the remote controls depicted on this page will be used.

The remote control is integrated in the key.

Used to operate:
- Central locking system ✻,
- mechanical anti-theft locking system ✻,
- anti-theft alarm system ✻.

On vehicles with electronic windows ✻, the windows can be closed from the outside using the remote control ⇨ 37.

The remote control has a range of approx. 5 metres. This range can be affected by outside influences. Aim the remote control at the vehicle to operate. The hazard warning lamps flash to confirm remote control operation.

Handle the remote control with care, protect it from moisture and high temperatures and avoid unnecessary operation.

Fault

If the central locking system cannot be operated with the remote control, it may be due to the following:

- Range exceeded.
- Battery voltage of the radio remote control too low, change battery.
- Frequent, repeated operation of the remote control outside the reception range of the vehicle (e.g. too far from vehicle, remote control is then no longer recognised). Synchronise the remote control.
- If the central locking system is overloaded as a result of repeated operation at short intervals. The power supply is cut off for a brief period.
- Interference from higher-power radio waves from other sources.

Manual unlocking or locking with the vehicle key ⇨ 26.

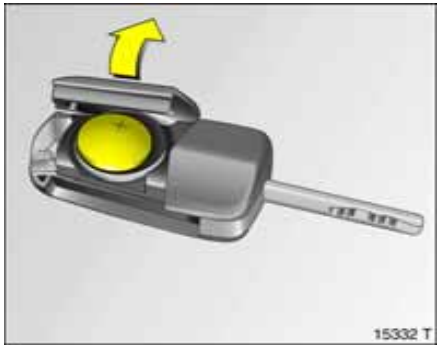

Remote control battery replacement
Replace the battery as soon as the range of the remote control begins to shrink.

Batteries do not belong in household waste. They must be disposed of at an appropriate recycling collection point.

Key with foldaway key section
Extend the key ⇨ 20. Open the remote control. Replace the battery (battery type CR 20 32), noting installation position. Close the remote control and synchronise.

Key with fixed key section
Have the battery changed in a workshop.

Radio remote control synchronisation
After changing the battery, unlock the door with the key in the lock ⇨ 26. Inserting the key in the ignition synchronises the remote control.

Central locking system ✻

Used to unlock and lock doors, sliding door ✻, luggage compartment and tank flap ✻.

To unlock
Press button ⊼ on the remote control
– or from the inside –
Pull lock button on driver's door.

When the mechanical anti-theft locking system ✻ is enabled, the doors cannot be unlocked by pulling up the lock buttons.

Country-specific version ✻: Pressing the button once will unlock the driver's door. Pressing the button twice will unlock the entire vehicle.

To lock
Close doors, sliding door ✻, luggage compartment and tank flap.

Press button ═ on the remote control
– or from the inside –
Push the lock button on the driver's door when the doors are closed.

Mechanical anti-theft locking system ✻

⚠Warning
Do not use the system if there are people in the vehicle! The doors cannot be unlocked from the inside.

All doors must be closed.

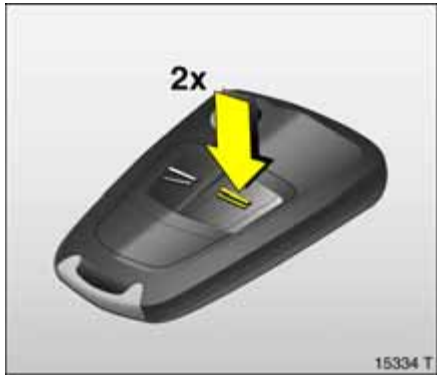

If the ignition was on, the driver's door must be opened and closed once so that the vehicle can be secured.

All doors are secured against opening.

Within 10 seconds of locking,
press the ═ button on the remote control again

The mechanical anti-theft locking system switches off when the vehicle is unlocked.

Note

- To prevent the driver from being inadvertently locked out, the button on the driver's door cannot be depressed when the door is open.
- If the driver's door is not closed properly, the central locking system will unlock again immediately after locking.
- A short time after unlocking with the remote control, the doors lock again automatically if no door is opened.
- To lock the doors from inside (e. g. to prevent unwanted entry from outside), push down lock button on driver's door.
- Locked doors unlock automatically in the event of an accident of a certain severity (to permit outside assistance). For this reason, the ignition must not be switched off.
- If a sliding door ✻ is open when the vehicle is being locked, it is locked a few seconds after it has been closed.

Fault
If the central locking system cannot be operated, the problem may be as follows:

- If the central locking system is overloaded as a result of repeated operation at short intervals. The power supply is cut off for a brief period.
- Defective fuse in the fuse box ⇨ 147.

Please contact a workshop to have the cause of the fault remedied.

Operate the driver's door with the key.

Fault in the remote control

To unlock
Turn key in driver's door lock towards front of vehicle, turn back to vertical position and remove. The entire vehicle is unlocked. Switch on ignition to deactivate anti-theft alarm system ✻.

To lock
With the driver's door closed, turn key in lock towards rear of vehicle, turn back to vertical position and remove. The entire vehicle is locked.

Malfunction in central locking system

To unlock
Turn the key in the driver's door lock towards the front of vehicle, turn it back to the vertical position and remove. The driver's door is unlocked. The other doors can be opened by pulling the lock button (unless the anti-theft locking system ✻ is active). The luggage compartment and tank flap remain locked. Switch on the ignition to deactivate the anti-theft alarm system ✻.

To lock
With the driver's door open, press the lock button of one of the other doors. Close the driver's door and turn the key in the driver's door lock toward the rear of the vehicle, turn it back to the vertical position and remove. The unlocked fuel filler flap ✻ cannot be locked.

Note

- The mechanical anti-theft locking system ✻ and the anti-theft alarm system ✻ cannot be activated with the key.
- To deactivate the anti-theft alarm system ✻ alarm, switch on the ignition after opening a door.

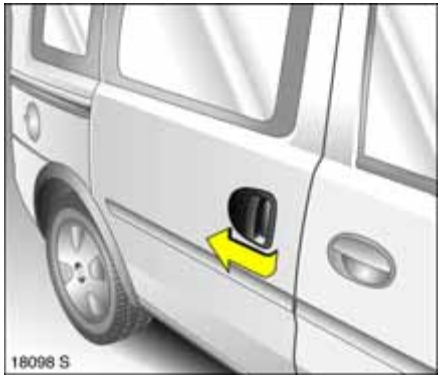

Sliding doors ✻

⚠Warning
If the vehicle is parked facing down a slope, open sliding doors may move accidentally on account of their weight. Close the sliding doors before driving off.

Opening from outside
Unlock the door with the key by turning it forwards in the lock or pressing the button on the remote control.

To open the sliding doors, pull the handle and slide the door towards the rear of the vehicle.

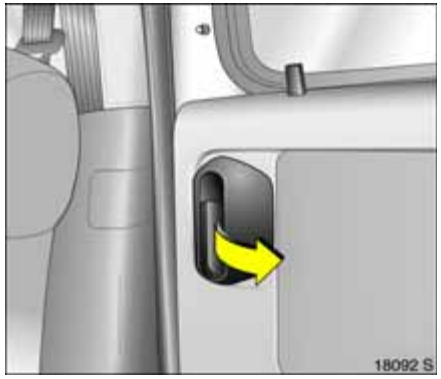

Opening from inside
To open the unlocked sliding door, pivot the handle and slide the door towards the rear of the vehicle.

To prevent damage, the right-hand sliding door cannot be fully opened if the tank flap is open.

To close
Slide the sliding door until it engages. To lock the door, turn the key in the lock towards the rear of the vehicle, press button on the remote control or press the interior lock button.

Child safety locks ✻

⚠Warning
Use the child safety lock whenever children are occupying the rear seats.

With the sliding door open, use the key to turn the rotary knob at the door lock from the vertical position: the door cannot be opened from the inside.

Tailgate ✻

To open
Turn the key in the lock to the vertical position or press the button on the remote control.

Press the button to open the tailgate.

To close
Close the tailgate and turn the key in the lock to a horizontal position or press the button on the remote control.

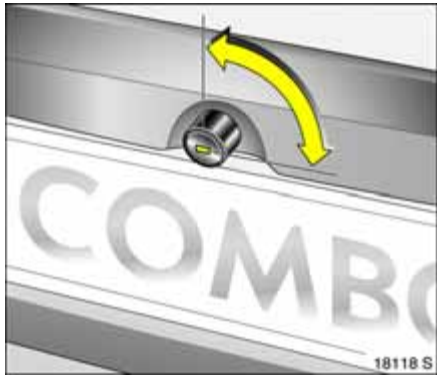

Central locking ✻ and the tailgate
The central locking system and anti-theft locking system ✻ for the doors cannot be operated via the tailgate lock.

Key slot horizontal in lock
When the central locking system is operated, the tailgate is locked or unlocked together with the doors.

If the key is turned to the vertical position after unlocking via the central locking system, the tailgate remains locked.

Key slot vertical in lock
The tailgate remains locked when the doors are locked or unlocked via the central locking system. Choose this position if the tailgate is to always remain locked.

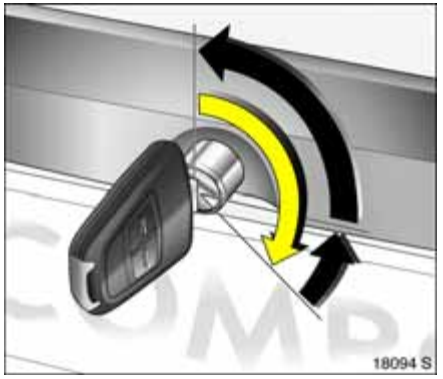

Unlocking the tailgate with the key with centrally locked doors ✻
Turn the key clockwise as far as possible beyond the resistance point from the vertical or horizontal position. To safeguard against being locked out, the key cannot be removed when in this position.

Relock the tailgate by closing it and turning the key to the horizontal or vertical position.

In the horizontal position, the tailgate will be unlocked the next time the vehicle is unlocked via the central locking system.

Leaf doors ✻

To open

Turn the key in the lock to the vertical position or press the button on the remote control.

Open right-hand leaf door from outside by raising door handle or from inside by pivoting handle.

Unlock and open the left-hand leaf door from inside by pivoting the handle.

The doors engage at a 90□ position.

Both doors can be opened up to 180□: Close the door slightly from the 90□ position, disengage the stop lug from the guide rail and open the door completely.

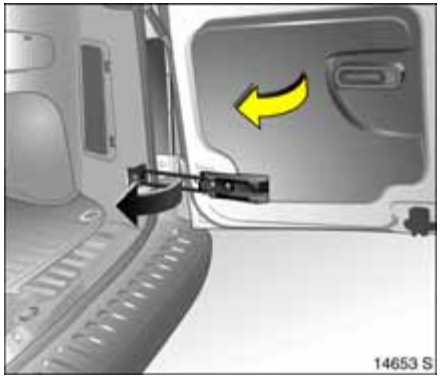

When the doors are open 180□, the rear exterior lighting is covered. Therefore, only open the doors until they engage when it is dark outside.

When closing, make sure that the stop lug properly engages in the guide rail.

To close

Push first the left and then the right leaf door past slight resistance. Turn the key in the lock to the horizontal position and remove or press the button on the remote control.

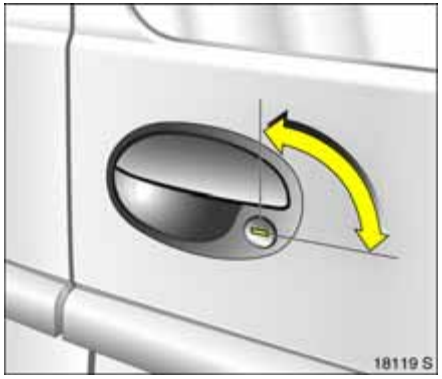

Central locking ✻ and the leaf doors
The central locking system and anti-theft locking system ✻ for the doors cannot be operated via the leaf door lock.

Key slot vertical in lock
When the central locking system is operated, the leaf doors are locked or unlocked together with the side doors.

If the key is turned to the vertical position after unlocking via the central locking system, the leaf doors remain locked.

Key slot horizontal in lock
The leaf doors remain locked when the side doors are locked or unlocked via the central locking system. Choose this position if the leaf doors are to always remain locked.

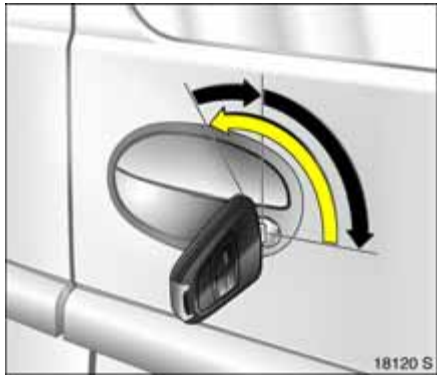

Unlocking the leaf doors with the key with centrally locked side doors ✻
Turn the key anticlockwise as far as possible beyond the resistance point from the vertical or horizontal position and pull the handle of the leaf door. To safeguard against being locked out, the key cannot be removed when in this position.

Relock the leaf doors by closing them and turning the key to the horizontal or vertical position.

In the vertical position, the leaf doors will be unlocked the next time the vehicle is unlocked via the central locking system.

Notes on tailgate or leaf doors

- After fitting certain accessories, it might not be possible to keep the tailgate in the open position.
- The number plate can only be seen when the tailgate or rear doors are closed. Do not drive with an open tailgate or open leaf doors.

⚠Warning

Do not drive with luggage compartment open when transporting bulky objects, for example, since toxic exhaust fumes could penetrate the interior.

Anti-theft alarm system ✻

monitors

- the doors, luggage compartment, bonnet,
- the passenger compartment,
- vehicle tilt, e. g. if it is raised,
- the ignition.

⚠Warning
Do not activate the system if there are people in the vehicle! The doors cannot be unlocked from inside.

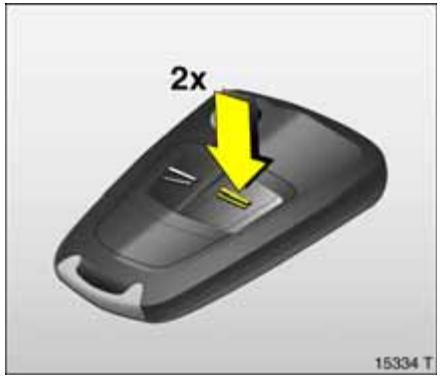

To activate

All doors, windows and the bonnet must be closed. Press the ⚌ button on the remote control again within 10 seconds of locking.

If the ignition was on, the driver's door must be opened and closed in order to activate the anti-theft alarm system.

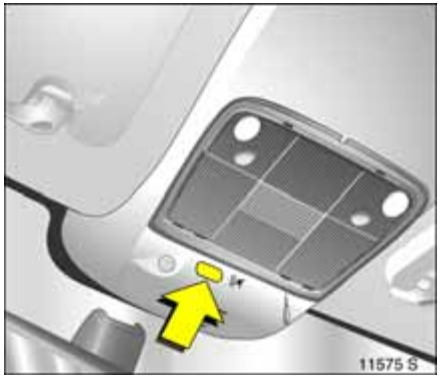

Activation without monitoring of passenger compartment and vehicle tilt

Switch on if, for example, you wish to leave animals in the vehicle.

1. Close luggage compartment and bonnet.
2. Press button in front of the courtesy lamp (with ignition off); LED in the hazard warning lamp button flashes a maximum of 10 seconds.
3. Close doors.
4. Switch on anti-theft alarm system. LED illuminates. After approx. 10 seconds, the system is activated without monitoring of the passenger compartment or vehicle tilt. The LED flashes until the system is switched off.

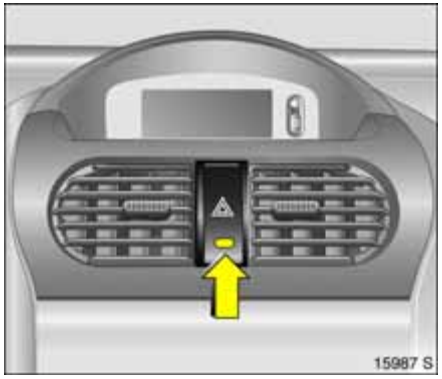

Light emitting diode (LED)
During the first 10 seconds of anti-theft alarm system activation:

- LED comes on = Test, delayed switch-on,
- LED flashes rapidly = Door, luggage compartment or bonnet open or system fault.

After the first 10 seconds of anti-theft alarm system activation:

- LED flashes slowly = System switched on,
- LED illuminates for approx. 1 second = Switch-off function.

Contact a workshop for assistance if problems are encountered.

To deactivate
Press button ⊼ on radio remote control.
– or –
Switch on ignition.

If there is a fault in remote control, turn key in driver's door lock toward front of vehicle as far as it will go. Then turn key back to vertical position and remove.

If the alarm is triggered when the driver's door is opened, deactivate the anti-theft alarm system by switching on the ignition.

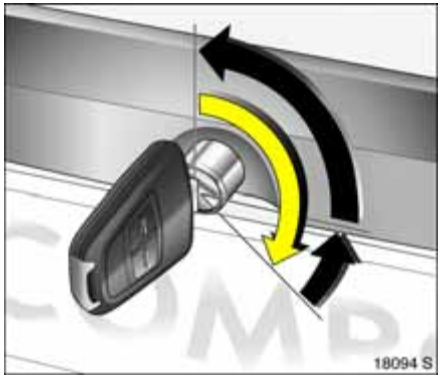

Opening and closing the luggage compartment ✻ when the anti-theft alarm system is enabled

1. To unlock:

   Tailgate: Turn key clockwise all the way past the horizontal position. The tailgate is unlocked and monitoring of the passenger compartment and vehicle tilt are disabled.

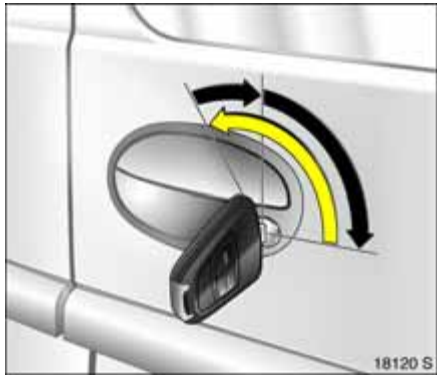

   Leaf doors: Turn key anticlockwise all the way past the vertical position. The leaf doors are unlocked and monitoring of the passenger compartment and vehicle tilt are disabled.

2. Open the tailgate or leaf doors.
3. Close the tailgate or leaf doors.
4. To lock: Turn key back to horizontal or vertical position. Monitoring of the interior and vehicle tilt is enabled after approx. 10 seconds.

Note

- Modifications to the passenger compartment, such as fitting seat covers, could hinder the function of passenger compartment monitoring.
- Switch off passenger compartment monitoring of the interior of the parked vehicle is being heated.

Alarm

When triggered, the alarm gives off an acoustic signal (horn) and a visual signal (hazard warning flashers). The number and duration of the alarms are stipulated by legislation.

The alarm can be silenced by pressing a button on the remote control or by switching on the ignition. The anti-theft alarm system is deactivated at the same time.

Exterior mirrors

Adjust manually using handles in the front doors or electrically ✻ using switches in the driver's door console.

Manual exterior mirror adjustment
Adjust the exterior mirror using the handle.

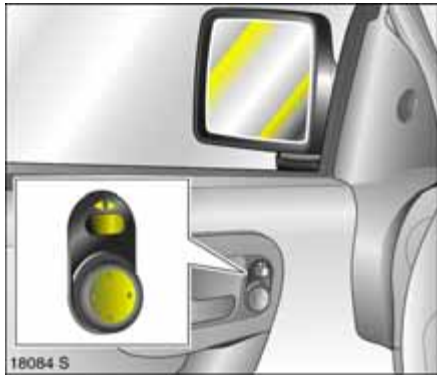

Electrical exterior mirror adjustment ✻
Select the corresponding exterior mirror with the rocker switch and adjust with the four-way switch.

Aspherical exterior mirror ✻
The aspherical mirror glass makes the blind angle smaller. The curvature makes objects look smaller, making it more difficult to estimate how far away following vehicles are.

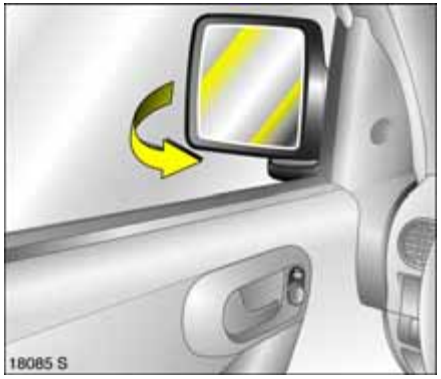

To retract exterior mirrors
The exterior mirrors can be folded in by pressing gently on the outer edge of the housing.

Return the mirrors to the driving position before starting off.

For the safety of pedestrians, the exterior mirrors will swing out of their normal mounting position if they are bumped with sufficient force. Reposition the mirror by applying slight pressure to the mirror housing.

Heated exterior mirrors ❄
Heating is activated or deactivated by pressing the button.

Heating is operable when the ignition is switched on.

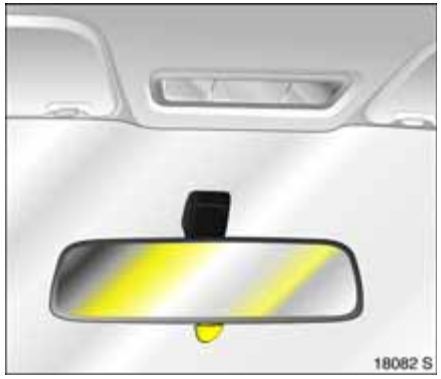

Interior mirror

Swivel mirror housing to adjust.

To reduce dazzle, swivel the lever on the underside of the mirror housing.

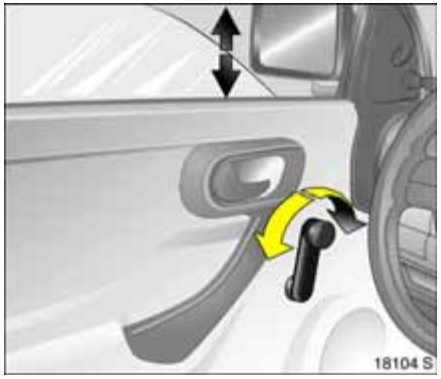

Manual window operation, front doors

The door windows can be operated using window winders.

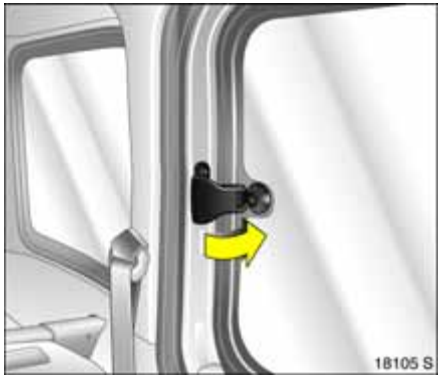

Window in the sliding doors ✻

- To open = Release joint and push outwards.
- To close = Pull joint and engage.

Electric windows ✻

⚠Warning

Exercise care when operating electric windows. Risk of injury, especially for children.

Keep a close watch on the windows when closing them. Ensure that nothing becomes trapped in them as they move.

Operational readiness
Operational when the ignition key is in position 1 in the ignition switch.

Illumination of the rocker switches indicates operational readiness.

Operational readiness ceases when the driver's door is open.

Operation
To operate the window in stages, tap the rocker switch. For automatic opening or closing, hold the switch pressed for slightly longer; to stop window movement, tap rocker switch again.

Safety function
If the window glass encounters resistance above the middle of the window during automatic closing, it is immediately stopped and the window opened again.

If the windows do not move easily (e.g. due to frost), repeatedly tap the rocker switch for the window in question repeatedly until the window has been closed in stages.

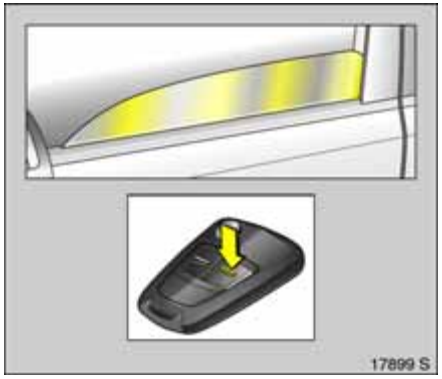

Closing windows from the outside ✻
The windows can be closed from the outside using the remote control.

Hold the button on the remote control depressed until the front windows are closed.

Overload
If the windows are repeatedly operated at short intervals, the power supply is briefly cut off.

Fault
If the windows cannot be opened and closed automatically, activate the window electronics as follows:

1. Close doors.
2. Switch on ignition.
3. Close the window completely and hold the rocker switch depressed for at least another 5 seconds.
4. Open the window completely and hold the rocker switch depressed for at least another 1 second.
5. Repeat for each window.

Heated rear window ✻

Heating is activated or deactivated by pressing the button.

Heating is operable when the ignition is switched on.

The heated rear window automatically switches on when the diesel particle filter is being cleaned ✻ depending on the engine.

Seats, Interior

Front seats 38
Head restraints 40
Luggage compartment extension 42
Lashing eyes ✻ 44
Luggage compartment cover ✻..... 44
Safety net ✻ 45
Load compartment grille ✻ 46
Notes on loading the vehicle 47
Three-stage safety system..... 48
Three-point seat belts 48
Belt tensioners..... 50
Operation of the seat belts..... 52
Child restraint system ✻..... 53
Mounting clips ✻ for ISOFIX child restraint systems 55
Airbag system..... 56
Use of child restraint systems ✻..... 61
Cigarette lighter ✻..... 61
Accessory socket ✻..... 61
Ashtray ✻ 62
Stowage compartments..... 63
Extendable stowage trays ✻ 64
Coin holder ✻ 65
Sun visors..... 65

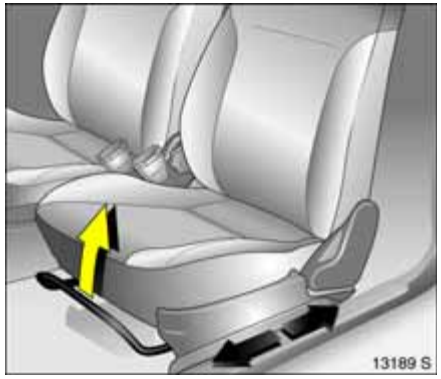

Front seats

⚠Warning

Never adjust seats while driving. They may make uncontrolled movements.

Adjust longitudinal seat position
Pull the handle at the front of the seat, move the seat and then release the handle

Adjusting the backrests
Take the pressure off the backrest and turn the hand wheel on the side.

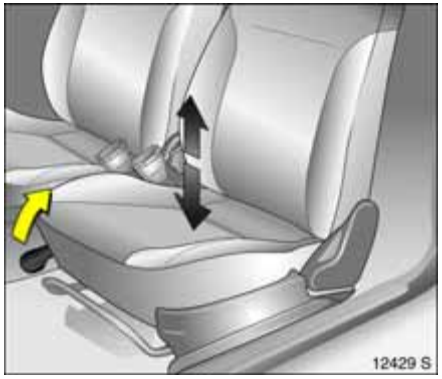

Adjust height of seat
Lift lever and relieve some weight from seat to raise it or press down on seat with body weight to lower it.

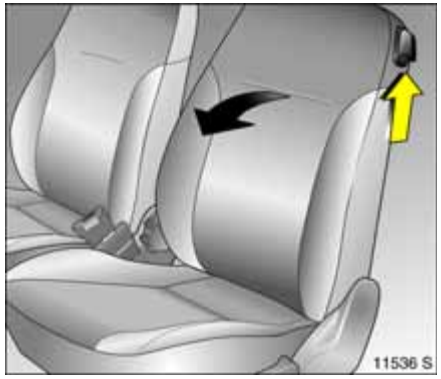

Tilting the backrests forward
In order to fold the backrest forwards, lift the release lever.

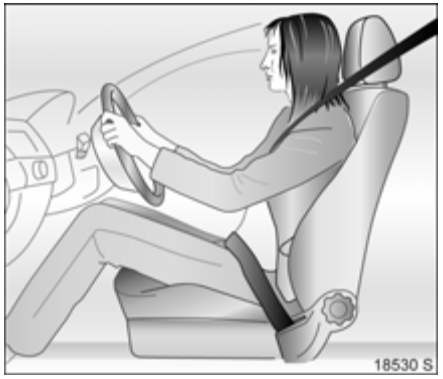

Seat position

⚠Warning
Only drive with the seat correctly adjusted.

- Sit with your buttocks as far back against the backrest as possible. Adjust the distance between your feet and the pedals so that your legs are slightly angled when pressing the pedals. Slide the passenger seat as far back as possible.

- Sit with your shoulders as far back against the backrest as possible. Set the backrest rake so that you can easily reach the steering wheel with your arms slightly bent. Maintain contact between your shoulders and the backrest when turning the steering wheel. Do not angle the backrest too far back. We recommend a maximum rake of approx. 25□.
- Adjust the steering wheel ⇨ 6.
- Set seat height ✻ high enough to have a clear field of vision on all sides and of all display instruments. There should be at least six inches of clearance between your head and the headlining. Your thighs should rest lightly on the seat without pressing into it.
- Adjust the head restraint.
- Adjust the height of the seat belt ⇨ 52.

Heated front seats ✻
Two pushbuttons in centre console.

With the ignition switched on, the heating of the relevant front seat is activated by pressing the button .

LED on: the relevant front seat is heated.

LED off: heating of relevant front seat is switched off.

For vehicles with natural gas operation ✻, only switch is available. Operation for both front seats when the ignition is on.

Head restraints

Adjusting the front and outboard rear seat headrestraints ✻
To adjust, hold head restraint at side, tilt forward, hold and adjust height.

To improve visibility when the rear seats are unoccupied or to fold down a rear seat or the front passenger seat, push the head restraint all the way down or remove.

If the rear seats are occupied, adjust the rear head restraints to the appropriate level for the occupant's body size.

The open frame head restraint on the Combo Van cannot be adjusted.

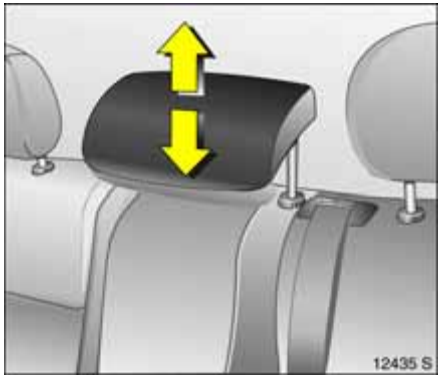

Adjusting the centre rear head restraint ✻
To improve visibility when the centre rear seat is not occupied or to fold the backrest, press the detent springs on the guide sleeves to release the head restraint and push it all the way down.

If the centre seat is occupied, set the head restraint to the first or second position according to the height of the passenger.

Head restraint position

⚠Warning
Only drive with the head restraint set to the proper position.

The middle of the head restraint should be at eye level. If this is not possible for extremely tall persons, set to the highest position. Set to the lowest position for short persons.

Removal - see page ⇨ 41.

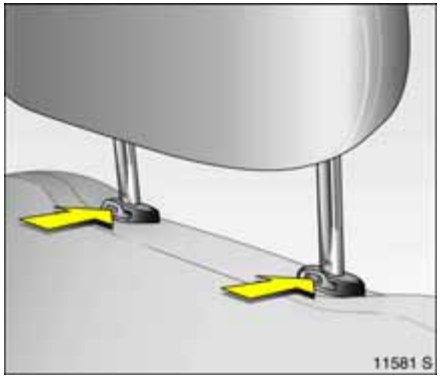

Removing the head restraint
Release both catches by pressing and withdraw head restraint.

The rear, centre head restraint ✻ cannot be removed.

Note
Only approved objects or components must be attached to the head restraint of the unoccupied front passenger seat.

Luggage compartment extension

Remove the luggage compartment cover ✻ if necessary ⇨ 44.

Pull out the push-in collars ✻ for the ISOFIX child-restraint system mounting.

Closely follow the installation instructions accompanying the ISOFIX child restraint system.

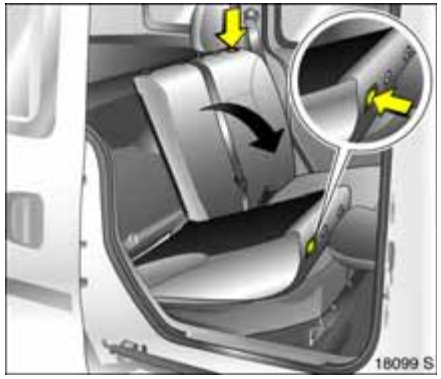

Folding down the rear seat backrests
Push the rear, outer head restraint ✻ down completely or remove it ⇨ 40. Push the rear, centre head restraint ✻ down completely ⇨ 41.

To fold one or both of the rear seat backrests, press the button at the top to release the backrest and fold it onto the seat cushion.

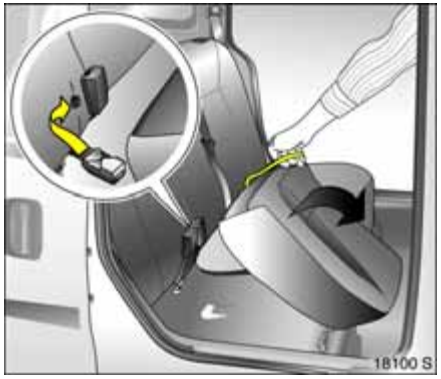

– or –
Remove the rear, outer head restraints ✻ ⇨ 40. Push the rear, centre head restraint ✻ down completely ⇨ 41.

Hook seat belt buckles on rear seat backrests.

Pull up one or both rear seat cushions using the straps provided.

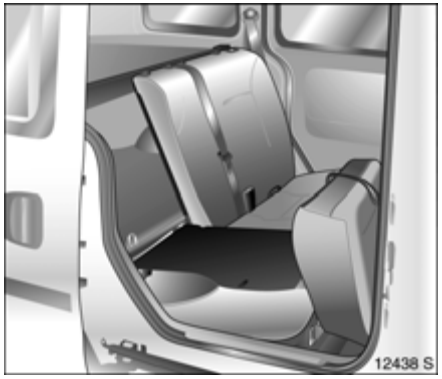

To fold one or both of the rear seat backrests, press the button at the top to release the backrest (Fig. 18099 S) and fold it forward.

Repositioning the rear seats
Pull the seat belt slightly forward so that it does not get damaged and audibly engage the backrests.

Reposition the seat cushions.

Insert outer rear head restraints ✻.

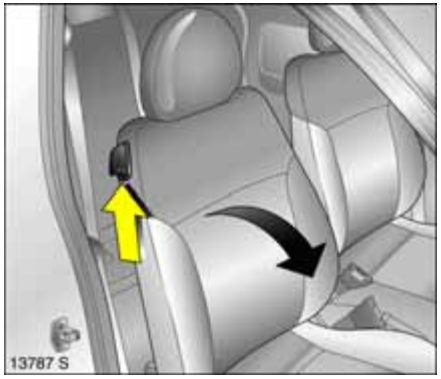

Folding down the front passenger seat ✻
Push the passenger seat head restraint down or remove it ⇨ 40.

Slide the front passenger seat back.

Fold front passenger seat forward by raising release lever.

Restoring the front passenger seat to an upright position ✻
Press the release lever forward, fold up the front passenger seat and audibly engage.

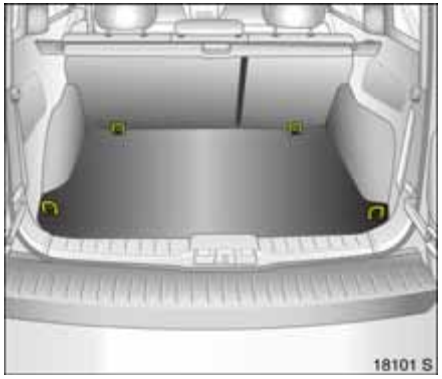

Lashing eyes ✻

The four lashing eyes in the luggage compartment that are shown in the illustration are used to secure objects that are being transported so that they do not slide around.

The brackets on the floor between the front seats are only used to secure the safety net ✻ ⇨ 45. They must not be used as lashing eyes.

Luggage compartment cover ✻

Do not place any heavy or sharp-edged objects on the cover.

To close
Pull cover towards rear of vehicle using handle and hook into side retainers.

To open
Unhooked the closed cover at the rear. It rolls up automatically.

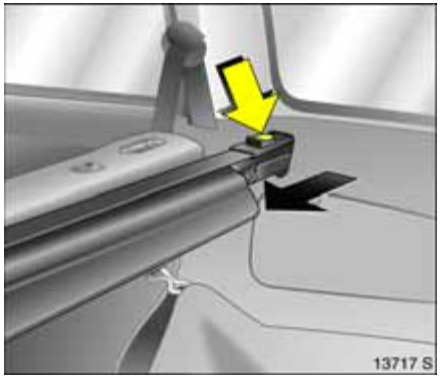

Removing
Open cover.

Press button at right side of cartridge and engage by pushing right-hand end piece to the left. Pull right side of cartridge out of retainers, followed by left side.

Fitting
With cover rolled up, push the left side of the cartridge into the retainer, followed by the right side.

Push button at right end piece of cartridge, and cartridge engages.

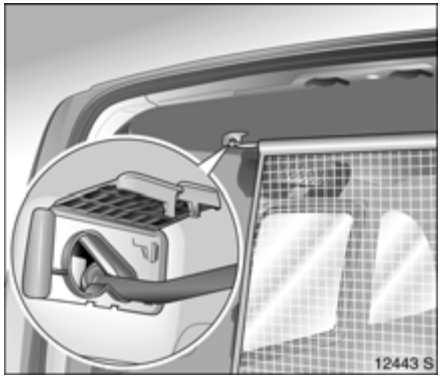

Safety net ✻

Passengers must not be carried behind the safety net.

The safety net can be fitted behind the rear seats or, with the rear seat backrest folded down, behind the front seats.

Remove the luggage compartment cover as necessary ⇨ 44.

Unroll the safety net.

Fitting behind the rear seats
There are two installation apertures in the roof frame above the rear seats: Open the cover. Engage one side of the upper net rod in one side, extend the rod and engage in the other side. Close the cover.

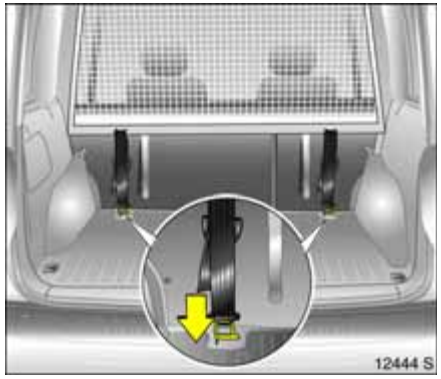

Fold down both rear seat backrests.

Hook tensioning straps into lashing eyes in floor and tighten by pulling on the loose end of the strap.

Reposition and engage the backrests.

Fitting behind front seats
Pull up both rear seat cushions and fold down rear seat backrests.

Open the cover of the installation apertures in the roof frame above the front seats. Engage the net rod in one side, extend the rod and engage in the other side. Close the cover.

Hook tensioning straps into brackets in floor and tighten by pulling on the loose end of the strap.

⚠Warning

The brackets must not be used as lashing eyes to prevent objects that are being transported from sliding around ⇨ 44.

Removing
Swivel tensioning strap length adjusters upward and unhook straps. Open the cover. Unhook upper net rod and close cover.

Roll the safety net.

Load compartment grille ✻

To prevent vehicle occupants from being injuried by loose cargo, a load compartment grille can be installed behind the front seats.

Split load compartment grille ✻
To enlarge the load compartment, the grille can be moved forwards on the front passenger's side.

Push the head restraint of the front passenger seat down as far as it will go ⇨ 40.

Tilt front passenger's seat backrest forward by raising release lever and push down to lock in position.

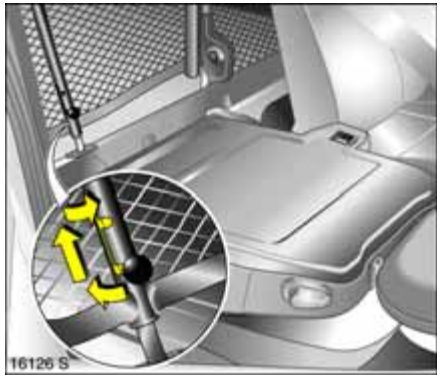

Engage lever on load compartment grille at top position, as shown in illustration.

Engaging the lever prevents damage to the front passenger's seat.

Position load compartment grille above retainer in front passenger's seat backrest.

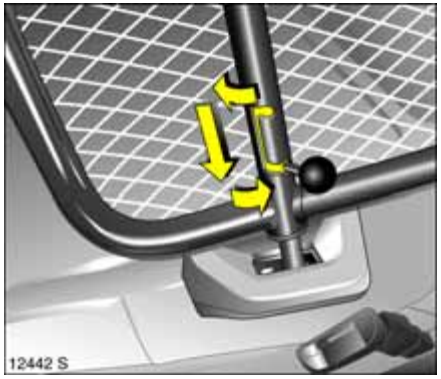

Lock load compartment grille in retainer. To do so, engage lever at bottom position, as shown in illustration.

⚠Warning
The load compartment grille must always be locked in one of the retainers when the vehicle is in use, and the lever must be engaged at its bottom position.

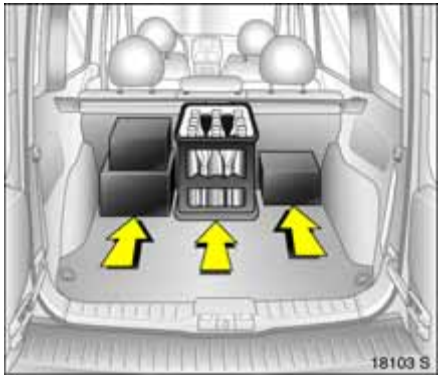

Notes on loading the vehicle

- Heavy objects in the luggage compartment should be placed as far forward as possible against the rear seat backrests or, if the rear seat backrests are folded down, against the front seat backrests. If objects are to be stacked, the heavier objects should be placed at the bottom.
- Secure heavy objects with lashing straps ✻ attached to lashing eyes ✻ ⇨ 44.
- When transporting objects with the backrests folded down, install the safety net ✻ ⇨ 45.
- Close the luggage compartment cover ✻.
- If the seat backrests are not folded down when transporting objects in the luggage compartment, the backrests must be fully upright and engaged in position ⇨ 42.
- Do not allow the load to protrude above the upper edge of the backrests.
- The warning triangle ✻ and first-aid kit (cushion) ✻ must always be freely accessible.
- Do not place any objects in front of the rear window or on the instrument panel.
- No objects must be placed in the area in which the airbags inflate, as they could cause injury when the systems are deployed.
- The load must not obstruct the operation of the pedals, handbrake and gear selector, or hinder the freedom of movement of the driver. Do not place any unsecured objects in the interior.
- Do not drive with luggage compartment open when transporting bulky objects, for example, since toxic exhaust fumes could penetrate the interior.
- The payload is the difference between the permitted gross vehicle weight (identification plate ⇨ 182) and the EC kerb weight.
- To calculate the EC kerb weight, enter the data for your vehicle on page 189.
- The EC kerb weight includes allowances for the driver (68 kg), luggage (7 kg) and all fluids (tank 90 % full).
- Optional equipment and accessories increase the kerb weight.
- Weights and payload ⇨ 189.
- Driving with a roof load increases the sensitivity of the vehicle to cross-winds and has a detrimental effect on vehicle handling due to the vehicle's higher centre of gravity. Distribute the load evenly and secure it properly with retaining straps. Adjust the tyre pressure to the load conditions. Do not drive faster than 120 km/h. Check and retighten the straps frequently. Observe country-specific regulations.
- The permissible roof load is 100 kg. The roof load consists of the weight of the roof rack plus the load carried.
- If objects are transported in the load compartment, the split load compartment grille ✻ must always be locked in one of the retainers and the lever must be engaged at its bottom position ⇨ 46.
- When stowing objects in the stowage compartment above the front seats, secure against falling out.

Three-stage safety system

Comprising:

- three-point seat belts,
- belt tensioners at the front seats,
- airbag systems for driver and front passenger ❇.

The three stages are activated in sequence depending on the severity of the accident:

- The automatic seat belt locking devices prevent the belt strap from being pulled out and thus ensure that the vehicle occupants are retained in their seats.
- The seat belts of the front seats are pulled downwards at the belt buckles. This tightens the seat belt, the occupants are slowed down at an early stage of vehicle deceleration and stress on the body is reduced.
- The airbag systems are also triggered in the event of severe accidents and form a safety cushion for the occupants.

⚠Warning

The airbag systems serve to supplement the three-point seat belts and belt tensioners. The seat belts must therefore always be worn. Disregard of these instructions may lead to injuries or endanger life. Vehicle passengers should be informed accordingly.

Carefully follow the instructions accompanying the child restraint system.

Three-point seat belts

The seat belts have an automatic retractor, so that the belt is spring tensioned and always lies against the body.

Information on the correct seat position ➪ 39.

The belts are locked during heavy acceleration or deceleration of the vehicle. This prevents the seat belt from extending, keeping the occupant in his or her seat.

⚠Warning

Fasten your seat belt before each trip.

In the event of an accident, persons not wearing seat belts endanger their fellow occupants and themselves.

Seat belts are only designed for use by one person at a time. They are not suitable for persons younger than 12 years of age or smaller than 150 cm.

For children up to 12 years of age, we recommend the Opel child restraint system ⇨ 53.

Checking the seat belts

From time to time, check the functionality of all seat belt system components and check for damage. Have damaged components replaced. Have seat belts and deployed belt tensioners replaced in a workshop after an accident.

Make sure that seat belts are not damaged or trapped by sharp objects.

Belt tensioners

In the event of a head-on or rear-end collision of a certain severity, the front seat belts are pulled down at the buckles and thereby tightened.

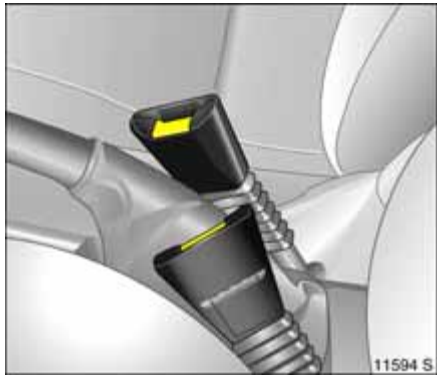

Actuation of belt tensioners
is indicated by illumination of control indicator ⚠; see next column.

Triggered belt tensioners must be replaced by a workshop. Belt tensioners can only be triggered once.

Control indicator ⚠ for belt tensioners
The functionality of the belt tensioner system is monitored electronically together with the airbag systems and indicated via control indicator ⚠. When the ignition is switched on, the control indicator comes on for approx. 4 seconds. If it does not come on, does not go out after 4 seconds or comes on while driving, there is a fault in the belt tensioner system or the airbag systems ⇨ 59. The systems may fail to deploy in the event of an accident.

Triggered belt tensioners are indicated by steady illumination of ⚠.

⚠Warning

Have cause of fault remedied immediately by a workshop.

The system's integrated self-diagnostics allows faults to be quickly remedied.

Important

- Do not affix or place accessories or other objects within the deployment zone of the belt tensioners (in the area of the belt buckle). Do not make any modifications to belt tensioner components and the inertia real device because this will invalidate the vehicle type approval.

⚠Warning

Incorrect handling (e.g. removal or fitting of seat belts or belt buckles) can cause the belt tensioners to deploy, with risk of injury.

- The belt tensioner and airbag system control electronics can be found in the centre console area. In order to avoid malfunctions, do not store magnetic objects in this area.
- When using the rear seat, make sure that the components of the front seat belt are not damaged by shoes or other objects. Not dirt must get into the inertia reel of the seat belt.
- We recommend that you have the seats removed by a workshop.
- The belt tensioners only deploy once, which can be detected by illumination of the control indicator . Have deployed belt tensioners replaced by a workshop.
- The applicable safety regulations must be adhered to when the vehicle is disposed of. The vehicle should therefore be disposed of by a recycling company.

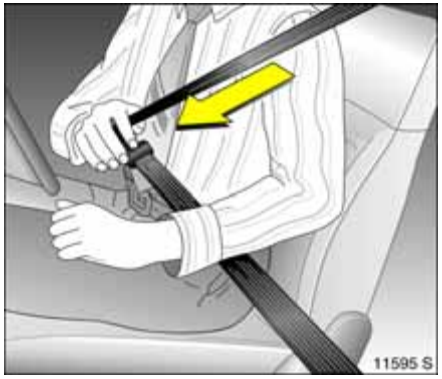

Operation of the seat belts

Fitting seat belts

The seat belt must not be twisted and must lie snugly against the body. The backrest must not be tilted back too far (maximum approx. 25□).

Adjust the height so that the belt lies across the shoulder. It must not lie across the throat or upper arm.

Pull the belt out of the reel, guide it across the body (making certain it is not twisted) and engage the latch plate in the buckle. Tension the lap belt frequently whilst driving by tugging the shoulder belt.

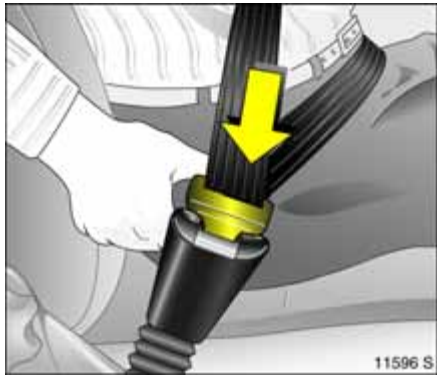

⚠Warning

On pregnant women in particular, the lap belt must be positioned as low as possible across the pelvis so as not to put too much pressure on the abdomen.

Loose or bulky clothing prevents the seat belt from fitting snugly. Do not place objects such as handbags or mobile phones between the belt and your body.

⚠Warning

The seat belt must not rest against hard or fragile objects in the pockets of your clothing.

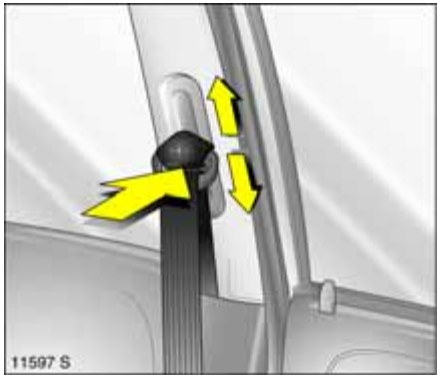

Height adjustment

Adjusting the height of the upper anchorage point of the front seat belts:

1. Pull out the seat belt somewhat.
2. Press belt guide or, in 5-door saloon, push button down.
3. Set desired height.
4. Allow to lock audibly into position.

Do not adjust height while driving.

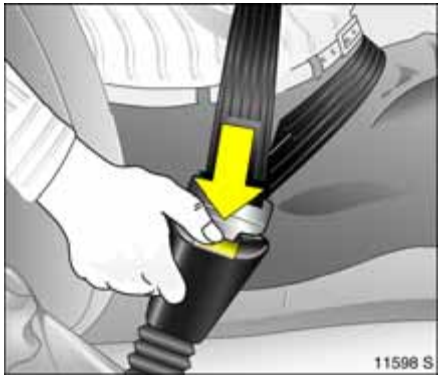

Removing the belt
To release the seat belt, press the red button on the belt buckle.

Child restraint system ✻

Follow the usage instructions for the child restraint system.

Always comply with local or national regulations. In some countries, the use of child restraint systems is forbidden on certain seats.

Selecting the right system
Your child should be transported facing the rear in the vehicle for as long as possible. The very weak cervical vertebrae of a child will be under less stress in an accident if your child is facing the rear and semi-horizontal, than when he is sitting upright.

⚠Warning
Child restaint systems must not be carried on a passenger's lap. Danger to life.

Permissible options for fitting a child safety seat

Weight and age class[1]	On front passenger seat	On an outboard seat in the rear row of seats	On middle seat[2] in the rear row of seats
Group 0: **up to 10 kg** or approx. 10 months **Group 0+:** **up to 13 kg** or approx. 2 years	X	U+	U
Group I: **9 to18 kg** or approx. 8 months to 4 years	X	U+	U
Group II: **15 to 25 kg** or approx. 3 to 7 years **Group III:** **22 to 36 kg** or approx. 6 to 12 years	X	U	U

[1] We recommend the use of each system until the child reaches the upper weight limit.
[2] For reasons of safety, we recommend that the child safety seat be installed on one of the outer rear seats.

X = Child restraint systems are not to be used on the front passenger seat.

U = universally suitable in conjunction with three-point seat belt.

\+ = Vehicle seat with ISOFIX mounting available. Only the ISOFIX child restraint systems that are approved for the vehicle must be used when mounting with ISOFIX.

Note

- Children under 12 years of age or 150 cm must only travel in an appropriate child restraint system on the seats in the rear row ✻.
- When transporting children, use the child restraint systems suitable for the child's weight.
- Be sure that child restraint systems are properly installed - see the instructions accompanying the child restraint system.
- The covers of the Opel child restraint system can be wiped clean.
- Do not stick anything on the child restraint systems and do not cover them with any other materials.
- Only allow the child to enter and exit on the side of the vehicle facing away from the road.
- A child restraint system which has been subjected to stress in an accident must be replaced.
- Secure or remove child restraint systems that are in the vehicle but not in use.

Mounting clips ✻ for ISOFIX child restraint systems

The mounting eyes for the ISOFIX child restraint system are located on the rear, outer seats ✻ between the seat back and the seat cushion.

Fasten permitted ISOFIX child restraint systems to the mounting brackets.

Closely follow the installation instructions accompanying the ISOFIX child restraint system.

Airbag system

Front airbag

The front airbag system consists of one airbag in the steering wheel and one in the instrument panel. These can be identified by the word **AIRBAG**.

The front airbag system comprises:

- an airbag with inflator in the steering wheel and a second one in the instrument panel ✻,
- the control electronics with impact sensor,
- the control indicator for airbag systems in the instrument,

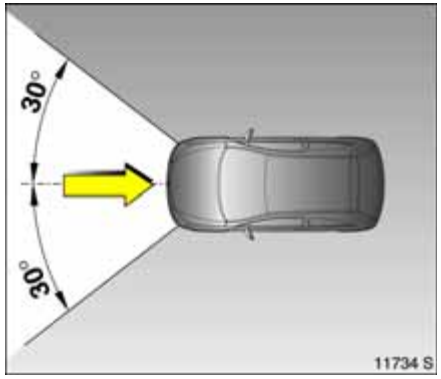

The front airbag system will be triggered:

- depending on the severity of the accident,
- depending on the type of impact,
- within the range shown in the illustration,
- independently of the side airbag system ✻.

The ignition must be switched on.

Examples of events triggering the front airbag system:

- Impact against a non-yielding obstacle: the front airbags are triggered at low vehicle speed.
- Impact against a yielding obstacle: (such as another vehicle): the front airbags are only triggered at a higher vehicle speed.

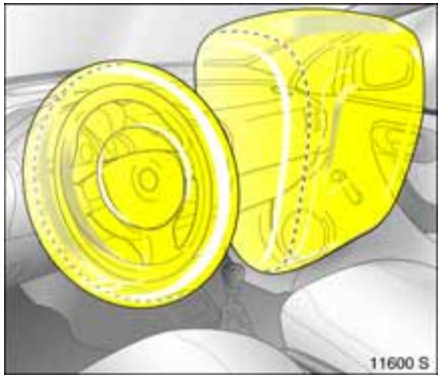

When triggered, the front airbags inflate in milliseconds to form a safety cushion for the driver and front passenger. The forward movement of the front seat occupants is checked, thereby substantially reducing the risk of injury to the upper body and head.

No impairment of view will occur, because the airbags inflate and deflate so quickly that it is often not even noticed in an accident.

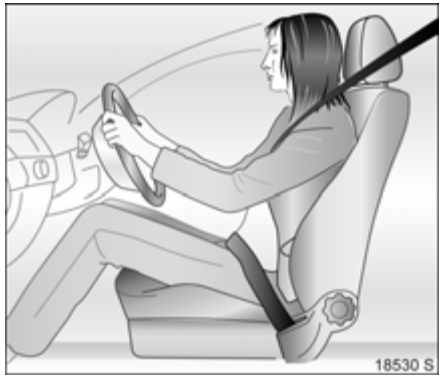

⚠Warning

Optimum protection is only provided with the seat in the proper position ⇨ 39.

Keep the area in which the airbag inflates clear of obstructions.

Wear the three-point seat belt properly fastened. The front airbag system is an additional safety device, not a replacement for your seat belt.

The front airbag system will not be triggered in the event of

- the ignition is switched off,
- minor frontal collisions,
- accidents in which the vehicle overturns,
- collisions involving a side or rear impact,

that is to say, if it would not be of benefit to the occupants.

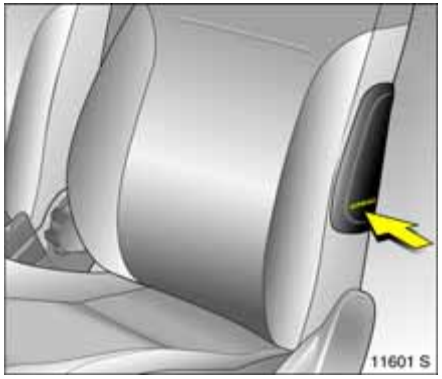

Side airbag ✻
The side airbag system consists of an airbag in each front seat backrest. This can be identified by the word **AIRBAG**.

The side airbag system comprises:

- an airbag with inflator in the back of the driver's and front passenger seat respectively,
- the control electronics,
- the side impact sensors,
- the control indicator for airbag systems in the instrument.

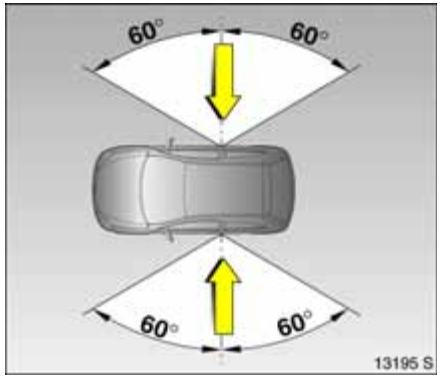

The side airbag system will be triggered:

- depending on the severity of the accident,
- depending on the type of impact,
- within the range shown in the illustration on the centre door pillar of the driver's or front passenger side,
- independently of the front airbag system.

The ignition must be switched on.

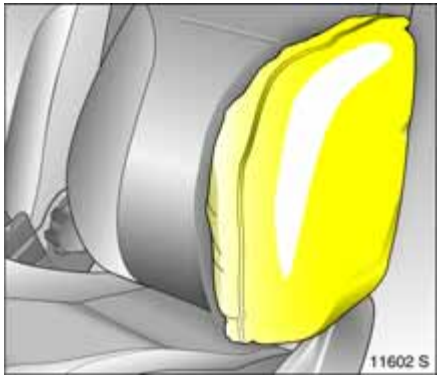

When triggered, the side airbag inflates in milliseconds to form a safety cushion for the driver or front passenger in the respective door area. This substantially reduces the risk of injury to the upper body in the event of a side-on collision.

⚠Warning

Keep the area in which the airbag inflates clear of obstructions.

The side airbags will not be triggered in the event of

- the ignition is switched off,
- frontal collisions,
- accidents in which the vehicle overturns,
- collisions involving a rear impact,
- collisions involving a side impact outside the passenger cell.

Control indicator for airbag systems
The functionality of the airbag systems is monitored electronically together with the belt tensioner system and indicated via control indicator. When the ignition is switched on, the control indicator comes on for approx. 4 seconds. If it does not come on, does not go out after 4 seconds, or it comes on while driving, there is a fault in the airbag tensioner system or in the belt tensioner systems ⇨ 50. The systems may fail to deploy in the event of an accident.

Triggered airbag systems are indicated by steady illumination of.

⚠Warning

Have cause of fault remedied immediately by a workshop.

The system's integrated self-diagnostics allows faults to be quickly remedied.

Important

- No objects or accessories must be placed in the area in which the airbags inflate, as they could cause injury when the components are deployed.
- Do not place any objects between the airbag systems and the vehicle occupants. Danger of injury. Do not install a child restraint system ❇ on the front passenger seat. Danger to life.

⚠Warning

As with any other object, child restaint systems must not be carried on a passenger's lap. Danger to life.

- Use the hooks in the roof frame only to hang up light articles of clothing or coat hangers. Do not place any objects in the pockets of the hanging items – risk of injury.
- The airbag systems and belt tensioner control electronics can be found in the centre console area. In order to avoid malfunctions, do not store magnetic objects in this area.
- Do not stick anything on the steering wheel, instrumnet panel or front seat backrests in the vicinity of the airbags. Do not cover any of these areas with other materials.
- Use only a dry cloth or interior cleaner to clean the steering wheel, instrument panel and front seat backrests. Do not use any aggressive cleaning agents.
- Only protective covers which are approved for your vehicle with side airbag may be fitted on the front seats. When fitting the protective covers, make sure that the airbag units on the outboard sides of the front seat backrests are not covered.
- The airbag systems are triggered independently of one another depending on the severity of the accident and type of impact.
- Each airbag is only deployed once. Have deployed airbags replaced by a workshop immediately.
- The speeds, directions of movement and deformation properties of the vehicles, and the properties of the obstacle concerned, determine the severity of the accident and triggering of the airbags. The degree of damage to your vehicle and the resulting repair costs alone are not indicative that the criteria for triggering of the airbags were met.
- Do not perform any alterations on the components of the airbag system, as this would render the vehicle unroadworthy.

⚠Warning

If handled improperly the airbag systems can be triggered in an explosive manner – risk of injury!

- We recommend having the steering wheel, the instrument panel, all panelling parts, the door seals, the handles and the seats removed by a workshop.
- The applicable safety regulations must be adhered to when the vehicle is disposed of. The vehicle should therefore be disposed of by a recycling company.
- Anyone weighing less than 35 kg should seat in the rear seat.

Use of child restraint systems ✻

⚠Warning
No child restraint system ✻ may be installed on front passenger seat. Danger to life. Child restraint systems must only be installed on the seats of the rear row ✻. On versions without rear row of seats, no child restraint system may be installed on the front passenger seat.

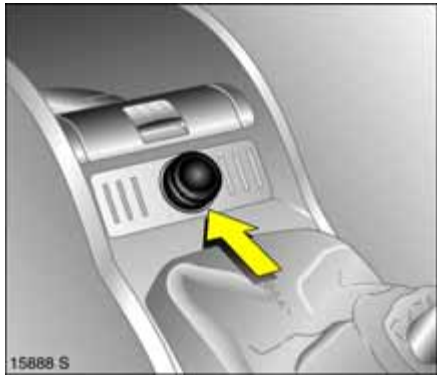

Cigarette lighter ✻

The cigarette lighter is in the centre console.

With the ignition on, press in the cigarette lighter. It switches off automatically when element is hot. Pull out the cigarette lighter.

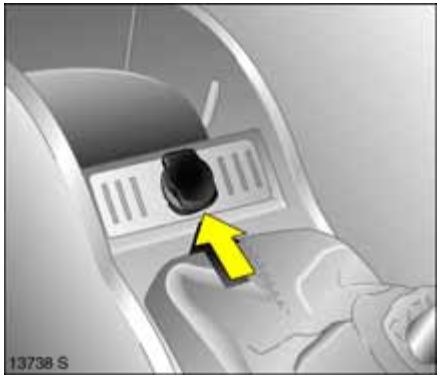

Accessory socket ✻

The accessory socket is in the centre console.

The accessory socket or cigarette lighter socket can be used to connect electrical accessories.

The socket is operational when the ignition is switched on. Use of the socket discharges the battery if the engine is not running.

Caution
Do not damage the sockets by using unsuitable plugs.

Do not exceed the maximum power consumption of 120 watts.

Electrical accessories connected to the socket must comply with the electromagnetic compatibility requirements laid down in DIN VDE 40 839, otherwise vehicle malfunctions may occur.

Do not connect any current-delivering accessories, e.g. electrical charging devices or batteries.

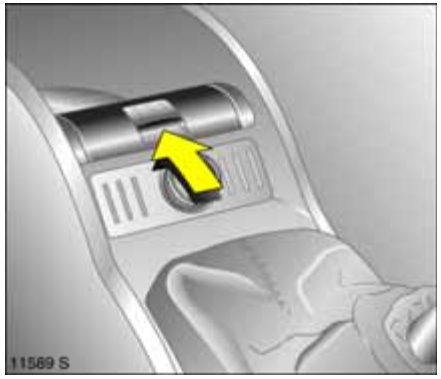

Ashtray ✻

Caution
To be used only for ash and not for combustible rubbish.

Front ashtray ✻
Open the ashtray cover to the resistance point.

To empty, open the ashtray cover fully beyond its resistance point, causing the insert to lift. Grip both sides of the ashtray insert and pull upwards.

To enlarge the storage compartment remove the ashtray completely.

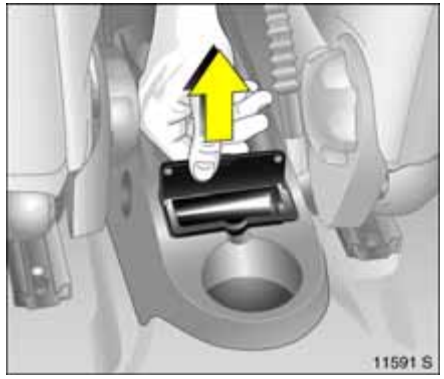

Rear ashtray ✻
In the rear centre console.

To open, swivel the cover upwards.

To empty, lift the cover and pull the ashtray out upwards by its cover.

Stowage compartments

Glove compartment
To open, pull handle.

On the inside of the glove compartment cover there is a pen holder.

In vehicles with Infotainment system ✻, the telematics unit ✻ can be housed in the glove compartment.

The glove compartment should remain closed while driving.

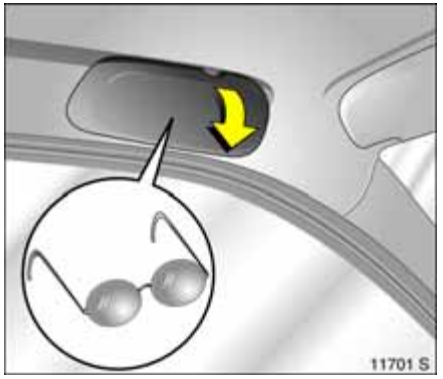

Stowage compartment for glasses ✻
On driver's side: fold down to open.

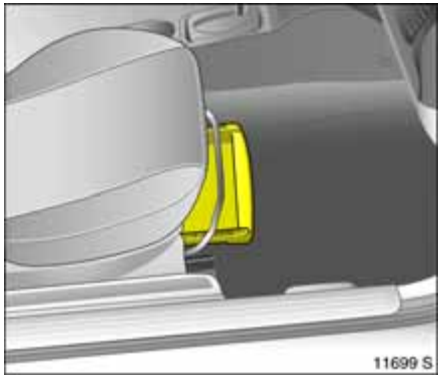

Stowage compartment ✻ beneath passenger seat
Lift stowage compartment by grasping the recessed edge and pull it out. Maximum load: 1 kg. To close the stowage compartment, push it in and engage.

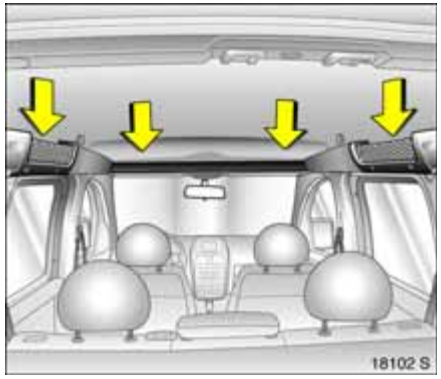

Stowage compartment in roof above the front seats and side mesh pockets above the sliding doors ✻
The stowage compartment above the front seats can hold a maximum load of 15 kg.

The mesh packets above the doors can only hold light objects.

⚠Warning
Secure objects to prevent them from falling out and causing injury.

Extendable stowage trays ✻

The extendable stowage trays are located in the front seat backrests.

To unfold, pull upwards until it engages.

To fold away, press downwards past the resistance.

Do not play heavy objects on the tray.

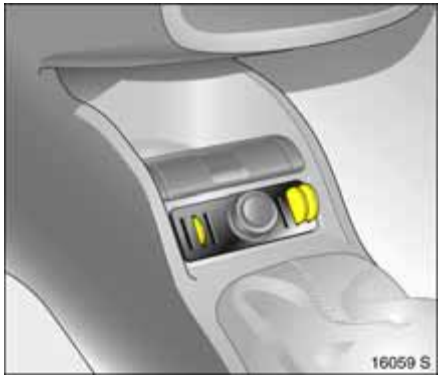

Coin holder ❊

In the centre console.

Sun visors

Use the sun visor to protect from glare by pulling it down and swivelling it to the side.

Instruments

Control indicators 66
Instrument display 71
Information display 76
Warning buzzers 82
Windscreen wipers 82

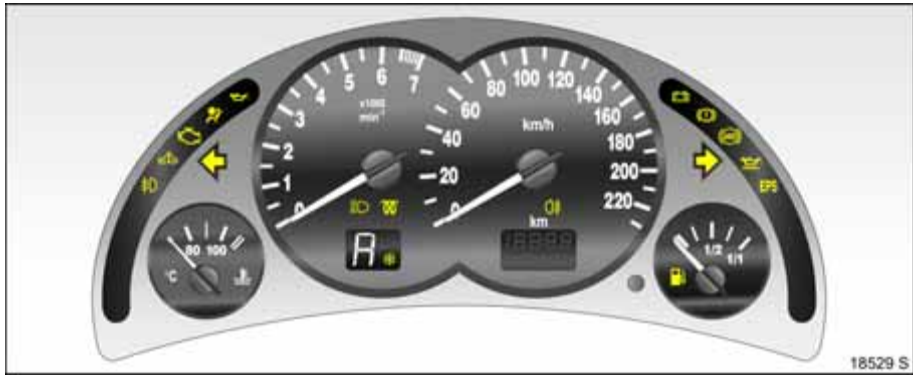

Control indicators

The control indicators described here are not present in all vehicles. The description applies to all instrument versions.

The colours of the control indicators mean:

- Red — Danger, important reminder,
- Yellow — Warning, information, fault,
- Green — Switch-on confirmation,
- Blue — Switch-on confirmation.

Fog lamps ✻
Control indicator lights up green

Illuminates when the fog lamps are on ⇨ 86.

Engine electronics, transmission electronics ✻, immobiliser, diesel fuel filter ✻
Control indicator lights up and/or flashes yellow

It illuminates for a few seconds when the ignition is switched on.

Illuminates when the engine is running
Fault in engine electronics or transmission electronics. Electronics switch to emergency running programme, fuel consumption may increase and driveability of vehicle may be impaired ⇨ 116. If the fault is not remedied by re-starting, contact a workshop for assistance immediately.

In vehicles with diesel engines, it may be necessary to drain the diesel fuel filter ⇨ 177.

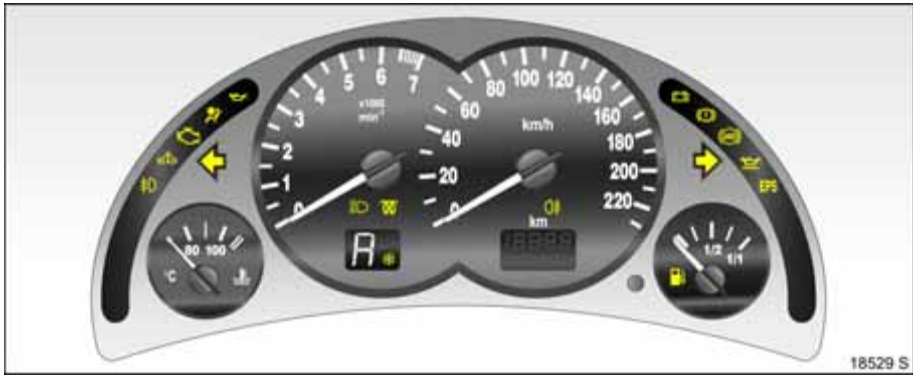

Flashes when the ignition is on
Fault in the electronic immobiliser system; the engine cannot be started ⇨ 21.

Exhaust emission
Control indicator lights up and/or flashes yellow

It illuminates when the ignition is switched on and goes out shortly after the engine starts.

Illuminates when the engine is running
Fault in emission control system. The permissible emission limits may be exceeded. Contact a workshop for assistance immediately.

If it flashes when the engine is running:
Fault that could lead to catalytic converter damage. Ease up on the throttle until the flashing stops ⇨ 115. Seek the immediate assistance of a workshop.

Airbag systems ✻, Belt tensioners
Control indicator lights up red

Illuminates when the engine is running
Fault in the airbag or belt tensioner system ⇨ 50, ⇨ 59.

Engine oil pressure
Control indicator lights up red

It illuminates when the ignition is switched on and goes out shortly after the engine starts.

Illuminates when the engine is running

Caution
Engine lubrication may be interrupted. This may result in damage to the engine and/or locking of the drive wheels.

1. Depress clutch ✻.
2. Set manual transmission to neutral, or with manual transmission automated ✻ place selector lever in **N**.
3. Move out of the flow of traffic as quickly as possible without impeding other vehicles.
4. Switch off ignition.

⚠Warning
When the engine is off, considerably more force is needed to brake and steer. Do not remove key until vehicle has come to a standstill, otherwise the steering column lock could engage unexpectedly.

Contact a workshop for assistance.

Turn signal lamps
Control indicator flashes green.

The control indicator flashes if a turn signal or the hazard warning flashers are activated.

Rapid flashing: lamp or associated fuse has failed.

Replacing bulbs ⇨ 151. Fuses ⇨ 145.

Main beam
Control indicator lights up blue.

It is illuminated when main beam is on and during headlamp flash ⇨ 85.

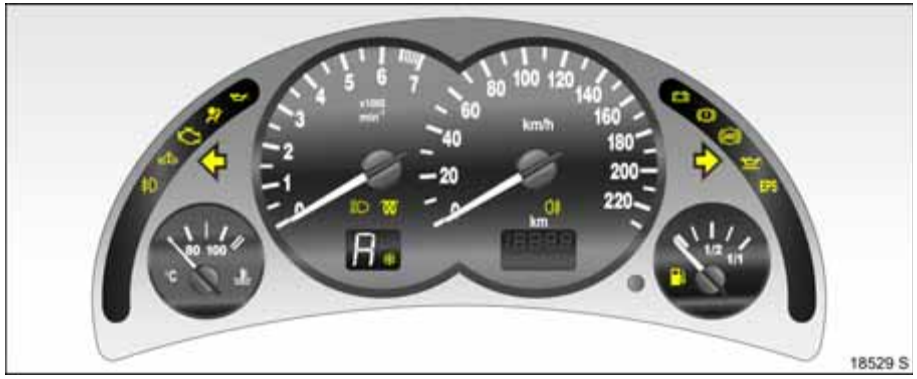

Preheating ❄, diesel particle filter ❄
Control indicator lights up and/or flashes yellow

Illuminated
Preheating activated. Only activates when outside temperatures are low.

Flashes
(in vehicles with diesel particle filter)

Control indicator flashes if the filter requires cleaning and previous driving conditions did not permit automatic cleaning. Continue driving and if possible do not allow engine speed to drop below 2000 rpm.

The control indicator goes off as soon as the self-cleaning operation is complete.

Diesel particle filter ⇨ 116.

Winter programme of the manual transmission automated ❄
Symbol is lit in the transmission display if the Winter programme is activated ⇨ 103.

Fog tail lamp
Control indicator lights up yellow.

Illuminates when the fog tail lamp is on ⇨ 86.

Alternator
Control indicator lights up red

It illuminates when the ignition is switched on and goes out shortly after the engine starts.

Illuminates when the engine is running
Stop and turn engine off. battery is not charged. Engine cooling may be interrupted. Contact a workshop.

Brake system, clutch system ✻
Control indicator lights up or flashes red.

Illuminated
Illuminates when the ignition is switched on if the hand brake is applied ⇨ 120.

Illuminates when the hand brake is released if the fluid level for the brake or clutch system ✻ is low ⇨ 179.

⚠Warning
Stop. Do not continue your journey. Consult a workshop.

Flashes
On vehicles with manual transmission automated ✻, control indicator flashes for a few seconds after the ignition is switched off if the hand brake has not been applied.

Anti-lock Braking System ✻
Control indicator lights up red

Illuminates while driving
Fault in the anti-lock braking system ⇨ 119.

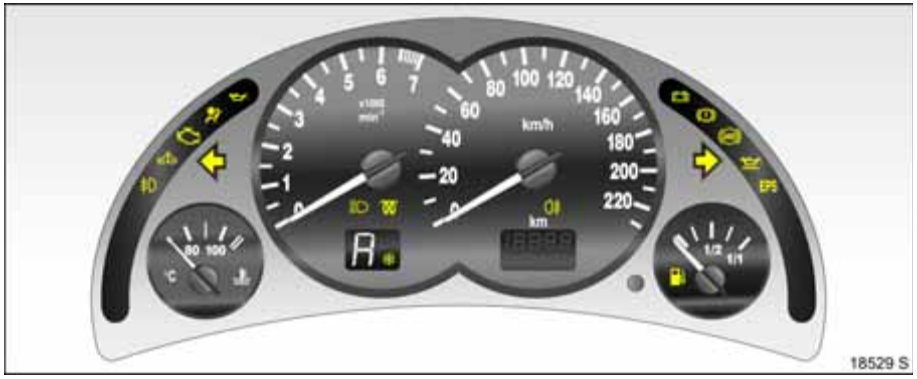

Engine oil level ✻
Control indicator lights up yellow.

The engine oil level is checked automatically.

Illuminates when the engine is running
Engine oil level too low. Check engine oil level and top up engine oil if necessary ⇨ 175.

EPS[1]
Electric power steering ✻
Control indicator lights up yellow.

Fault in the electric power steering. It is still possible to drive. Although it is still possible to steer the vehicle, it is significantly more difficult. Contact a workshop for assistance.

[1] **EPS** = **E**lectric **P**ower **S**teering.

Fuel level ✻
Control indicator lights up and/or flashes yellow

Lamps
Level in fuel tank too low.

Flashes
Fuel level is used up, fuel immediately.

Never let the tank run dry!

Erratic fuel supply can cause the catalytic converter to overheat ⇨ 114.

Diesel engines: Bleed the fuel system if the fuel tank is allowed to run dry ⇨ 128.

Instrument display

Tachometer
Displays the engine rpm.

Drive in a low engine speed range for each gear as much as possible.

Caution
If the pointer is in the warning zone, the maximum permitted engine speed is exceeded. Engine at risk.

Speedometer
Speed display.

Kilometre display
With the ignition switched off, briefly press the reset knob to display the number of kilometres driven for approx. 15 seconds.

Top line:
Trip odometer

Displays the number of kilometres since the gauge was reset.

To reset, press button with ignition switched on and trip odometer activated and hold down for approximately one second.

Vehicles with clock in odometer
To reset, press button with ignition switched on and trip odometer activated and hold down for approximately 2 seconds.

To switch between trip odometer and clock display ✻ give reset knob a brief press – see next page.

Bottom line:
Odometer

Records the number of kilometres

Service interval display ⇨ 173.

Time display in odometer ✻
To switch between trip odometer and time display ✻ give reset knob a short press.

When the vehicle lights are on, the brightness of the display can be adjusted using the right-hand adjuster wheel below the light switch ⇨ 87.

Setting the time
On the clock display, press the setting knob on the instrument for approx. 2 seconds. The flashing value is set by pressing briefly. Press for about 2 seconds again to switch to the next setting and at the end to exit setting mode.

Coolant temperature display
Coolant temperature gauge.

Pointer in zone at left	=	Engine operating temperature not yet reached
Pointer between the zones	=	Normal operating temperature
Pointer in right zone (warning zone)	=	Temperature too high: Stop the vehicle and switch off the engine. Danger to engine. Check coolant level immediately ⇨ 177.

For physical reasons, the engine temperature gauge shows the coolant temperature only if the coolant level is adequate.

During operation the system is pressurised. The temperature may therefore rise briefly to over 100 □C.

Fuel gauge
Control indicator ⛽ illuminates when the level is low. Refuel immediately if the control indicator begins to flash.

Never run the tank dry!

Because of the fuel remaining in the tank, the amount of fuel required to fill the tank may be less than the specified tank capacity.

Natural gas fuel gauge ✻
The display indicates tank pressure or petrol level, depending on operating mode.

Natural gas operation:

Pointer in left warning zone or ⛽ illuminated	=	Reserve level.
Pointer in left warning zone or ⛽ flashing	=	Lower reserve area; vehicle shifts automatically into petrol operation after a slight delay ⇨ 113.

Display:

1/1 - Tank pressure approx. 200 bar

3/4 - Tank pressure approx. 150 bar

1/2 - Tank pressure approx. 100 bar

1/4 - Tank pressure approx. 50 bar

In order to achieve the maximum range in natural gas operation, we recommend that you make use of the entire reserve area.

Petrol operation:

Display:

1/1 - Tank content approx. 14 litres

When the petrol level is getting low, the engine may sputter when taking curves. Refuel immediately if control indicator ⛽ begins to flash!

Never allow the petrol tank to run dry!

On vehicles with auxiliary heating ✻, regularly check the petrol level as it consumes petrol even during natural gas operation.

Fuel selector switch ⇨ 113.

Transmission display ✻
Display of current gear or mode with manual transmission automated ✻.

R	Reverse gear
N	Neutral
A	Automatic mode for manual transmission automated
1-5	Manual mode, current gear with manual transmission automated

Manual transmission automated ✻ ⇨ 100.

Service display ✻
If it illuminates in the odometer display, book vehicle into a workshop as soon as possible for a service with maintenance.

Maintenance, inspection system ⇨ 173.

Information display

Triple information display ❄

Display of time, outside temperature and date/infotainment system (when it is on).

When the ignition is off, the time, date and outside temperature can be displayed by briefly pressing one of the two buttons adjacent to the display.

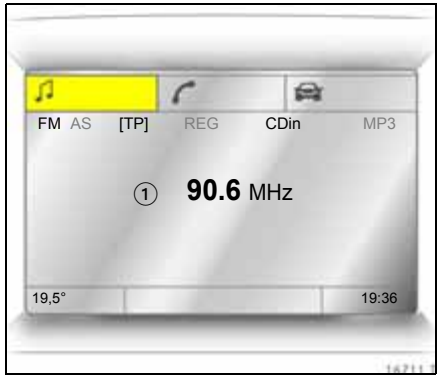

Graphical Information Display ❄

Display of time, outside temperature and date/infotainment system (when it is on).

The type of information and how it is displayed depend on the equipment of the vehicle and the settings made.

Some information appears in the display in an abbreviated form.

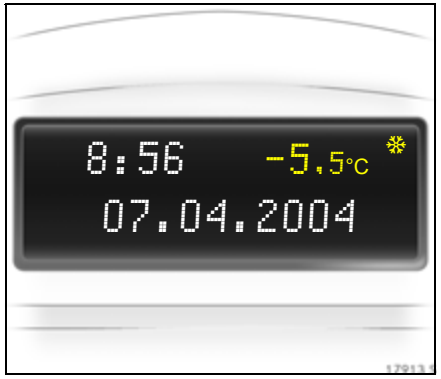

Outside temperature

A fall in temperature is indicated immediately and a rise in temperature after a time delay.

If outside temperature drops below 3 □C, the symbol ❄ appears in the triple information display as a warning for icy road conditions. When temperature increases to at least 5 □C, the ❄ symbol goes out.

In vehicles with graphical information display ✻, **Slippery road** is shown in the display as a warning for icy road surfaces. There is no message below -5 □C.

⚠Warning
Caution: The road surface may already be icy even though the display indicates a few degrees above 0 □C.

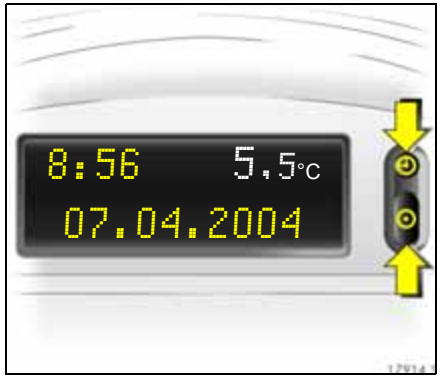

Triple information display

Set date and time

The infotainment system ✻ must be off. Activate setting mode by holding the ◴ button depressed for about 2 seconds. The flashing value is adjusted using the ⊙ button. The ◴ button is used to switch to the next unit and to exit setting mode.

Automatic time synchronisation ✻

The RDS signal of most VHF transmitters automatically sets the time. This can be identified by ◴ in the display.

Some transmitters do not send a correct time signal. In such cases, we recommend that you switch off automatic time synchronisation.

Activate setting mode and set it to year setting. Hold the ◴ button depressed about 3 seconds until ◴ flashes in the display and “RDS TIME" appears. The function is activated (RDS TIME 1) or deactivated (RDS TIME 0) with the ⊙ button. Exit setting mode using the ◴ button.

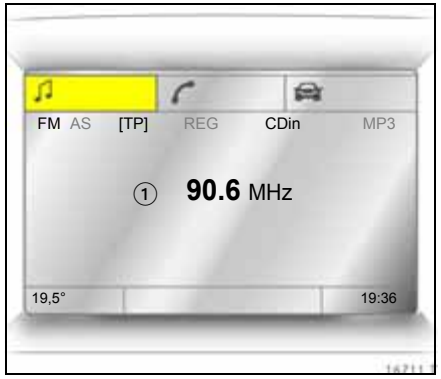

Graphical information display ✻, selecting functions

The graphical information display depicts functions and their menus.

Functions are selected and executed in the menu on the display using the four-way button, the multifunction button ✻ on the infotainment system or the buttons ✻ on the steering wheel.

To select with four-way button
Select menu items via menus and with the buttons/four-way button of the infotainment system.

To select with multifunction button ✻
Turn the multifunction button to highlight menu items or commands and to select function areas.

Press the multifunction button to select the highlighted item or confirm a command.

To exit a menu, turn the multifunction button left or right to **Return** or **Main** and select.

To select with steering wheel buttons ✻
Select menu options via the menus using the buttons.

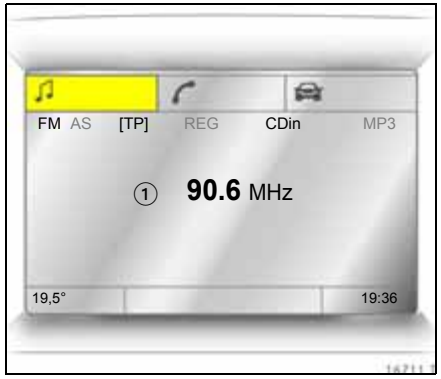

Function ranges
Each function has a main page, which is selected from the upper row of the display (not in Infotainment system CD 30):

- Audio,
- Navigation ✻,
- Telephone ✻.

For audio, navigation ✻ and telephone functions ✻, see infotainment system instructions.

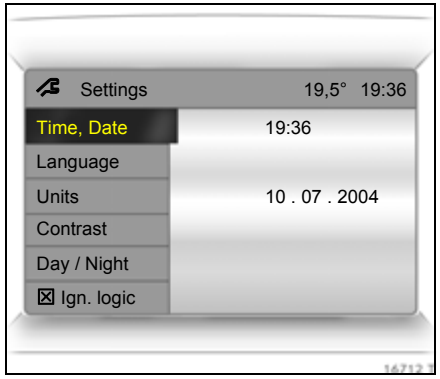

System settings
The settings are accessed via the **Settings** menu.

Press the **Main** button ✻ (not found on all infotainment systems) on the infotainment system (call up main display).

Press the **Settings** button on the infotainment system. For Infotainment system CD 30, no menu may be selected.

The **Settings** menu opens.

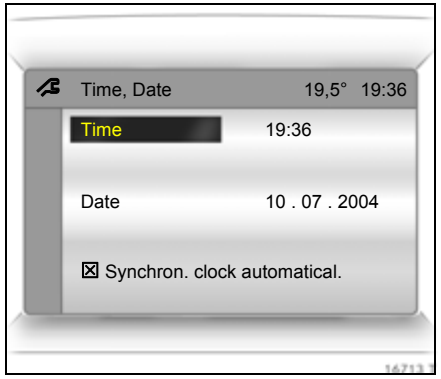

Setting date and time
Select menu item **Time, Date,** from the **Settings** menu.

The menu for **Time, Date** is displayed.

Select the required menu item and make setting.

Automatic time synchronisation ✻
The RDS signal of most VHF transmitters automatically sets the time.

Some transmitters do not send a correct time signal. In such cases, we recommend that you switch off automatic time synchronisation.

On infotainment systems with navigation ✻, time and date are also harmonised upon receipt of a GPS satellite signal.

The function is activated by ticking the field in front of **Synchron. clock automatical.** in the **Time, Date** menu.

Language selection
You can select the display language for some functions.

Select menu item **Language** from the **Settings** menu.

The available languages are displayed.

Select the desired language.

Selections are indicated by a ▶ in front of the menu item.

In systems with language version ✻, when the language setting of the display is changed, the system will ask if the message language should also be changed - see infotainment system instructions.

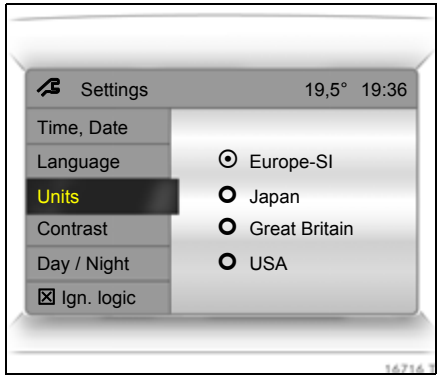

Setting units of measure
Select menu item **Units** from the **Settings** menu.

The available units are displayed.

Select the desired unit.

Selections are indicated by a ● in front of the menu item.

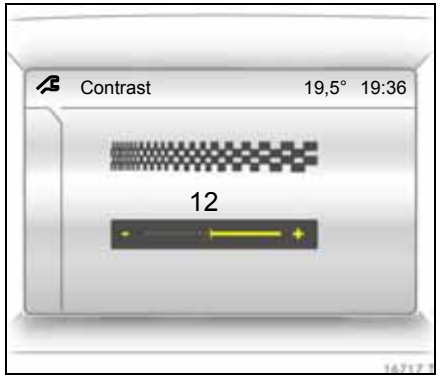

Adjust contrast ✻
Select menu item **Contrast** from the **Settings** menu.

The menu for **Contrast** is displayed.

Confirm the required setting.

Setting display mode ✻
Display brightness is independent of vehicle lighting. Settings are made as follows:

Select menu item **Day / Night** from the **Settings** menu.

The options are displayed.

Automatic: Adapted based on vehicle lighting.

Always day design: Black text on light background.

Always night design: White text on dark background.

Selections are indicated by a ● in front of the menu item.

Ignition logic ✻
Setting, see infotainment system instructions.

Warning buzzers

When starting the engine or while driving:

- if seat belt ✻ is not fastened.
- If the speed programmed at the factory ✻ is exceeded.
- If the car has automated manual transmission ✻ and the driver's door is opened when the engine is running, a gear is engaged and the foot brake is not depressed.

When parking the vehicle and opening the driver's door:

- when the ignition key is in the ignition switch.
- with parking lamps or dipped beam on.
- if the turn signal lever is engaged.

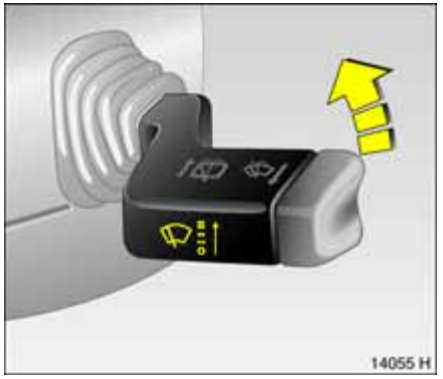

Windscreen wipers

Move lever upwards to switch on.

═ = Fast
— = Slow
– – = Adjustable interval switching
O = Off

Adjustable wiper interval
To set the wiper interval to a value between 2 and 15 seconds:
Lever to interval operation – –, lever to O, wait for required interval delay, Level to interval operation again – –.

The selected interval will remain stored until the next time it is changed or until the ignition is switched off.

After switching on the ignition and moving the lever up, – – the interval is set to 7 seconds.

Windscreen washer system
Pull the lever towards the steering wheel. Washer fluid sprays onto the windscreen and the windscreen wipers switch on for a few sweep movements.

Rear window wiper ✻ and rear window washer system ✻
Push the lever forwards. The rear window wiper swipes in timed interval mode. Switch off by pulling the lever towards the steering wheel.

If the stalk is held forwards, washer fluid is sprayed on the rear window.

Lighting

Exterior lights 84
Main beam, headlamp flash 85
Turn signal lamps 85
Reversing lamps..... 85
Fog lamps ✻..... 86
Fog tail lamp 86
Hazard warning lamps 86
Headlamp range adjustment ✻..... 87
Instrument illumination 87
Information display illumination ✻..... 87
Courtesy lamp 88
Battery discharge protection ✻..... 89
Misted light covers..... 89
Headlamps when driving abroad 89

Exterior lights

Turn light switch:

0 = Off

= Parking lamps

D = Dipped beam or main beam

In positions and D, the tail lamps and number plate lamps are also on.

If the ignition is switched off when main beam or dipped beam is on, the parking lamps ✻ come on.

Versions with daytime running lights ✻
If the light switch is set to **0**, dipped beam is activated without instrument illumination when the ignition is switched on.

The daytime running lights switched off when the ignition is switched off.

Follow the regulations of the country in which you are driving when using daytime running lights and fog lamps ✻.

Driving abroad ⇨ 89.

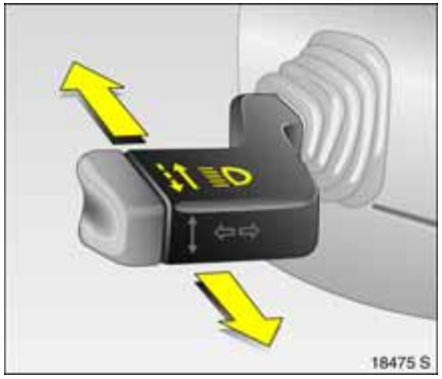

Main beam, headlamp flash

Push stalk forward to switch from dipped beam to main beam.

To switch to dipped beam, push lever down again.

To operate the headlamp flash, pull stalk towards steering wheel. The main beam is switched on for as long as the the stalk is held in this position.

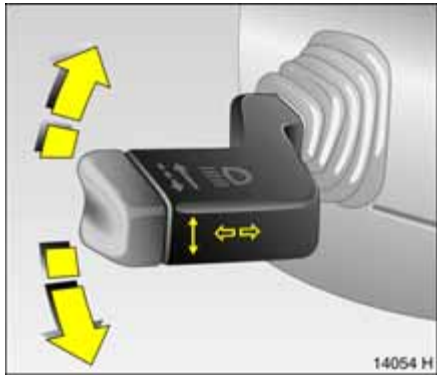

Turn signal lamps

Lever upwards	=	Right turn signal
Lever downwards	=	Left turn signal

If the stalk is moved past the resistance point, the turn signal lamp remains on. When the steering wheel moves back toward the straight-ahead position, the turn signal lamp is automatically deactivated.

Touch turn signal operation: press lever until resistance can be felt and release again.

The turn signal lamps are switched off manually by moving the lever back to the middle position.

Reversing lamps

The reversing lamps come on when the ignition is on and reverse gear is engaged.

Fog lamps

The fog lamps can only be switched on if both the ignition and lights are on.

Operated with the button.

Fog tail lamp

The fog tail lamp can only be switched on if both the ignition and dipped beam/ parking lamps are on.

Operated with the button.

The fog tail lamp of the vehicle is deactivated when towing a caravan/ trailer.

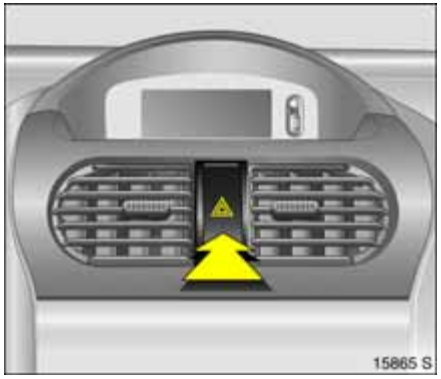

Hazard warning lamps

Operated with the button.

To make the button easier to find, the red surface is illuminated when the ignition switched on. When the button is pressed, its control indicator flashes in time with the hazard warning lamps.

Headlamp range adjustment ✻

Rotate the adjuster wheel to the required position to adjust the dipped beam range to vehicle loading and prevent dazzling.

Combo

0	=	Front seats occupied
1	=	All seats occupied
2	=	All seats occupied and luggage compartment load
3	=	Driver's seat occupied and luggage compartment load

Combo van

0	=	Seats occupied
1	=	Seats occupied and half load in load compartment
2	=	Seats occupied and full load in load compartment
3	=	Driver's seat occupied and full load in load compartment

Instrument illumination

Illumination comes on with the exterior lights. Brightness can be adjusted using the adjuster wheel.

Information display illumination ✻

Information display illumination comes on when the ignition or infotainment system is switched on. Brightness can be adjusted using the adjuster wheel.

Courtesy lamp

Automatic interior light
Comes on automatically when the vehicle is unlocked with the remote control or when a door is opened.

Goes off automatically after a delay when the doors are closed or immediately when the ignition is switched on or the doors are locked.

Front courtesy lamp
Manual operation from within when doors are closed:

On = Press light switch
Off = Press light switch again

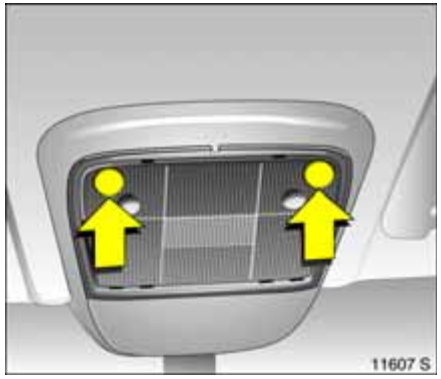

Front reading lamps ✻
Operable with the button when the ignition is on.

Luggage compartment and loading area lighting ✻
The luggage compartment lighting comes on when the luggage compartment is opened.

Automatically regulated centre console lighting ✻
Spotlight in housing of interior mirror.

Daylight-dependent, automatically regulated centre console lighting with ignition switched on.

Battery discharge protection ❇

Some consumers such as the interior lighting switch themselves off after approx. 30 minutes if the ignition is off in order to protect the battery charge.

Misted light covers

The inside of the lamp bezels may mist briefly when subjected to adverse wet and cold winter conditions, strong rain or after the vehicle is washed. The misting will clear up on its own after a brief period. This can be facilitated by switching on the lights.

Headlamps when driving abroad

The asymmetrical dipped beam increases the field of vision on the passenger side of the lane.

This causes glare for oncoming traffic if the vehicle is driven in countries where traffic drives on the opposite side of the road.

To avoid glare, have headlamps adjusted in a workshop or have covers fitted to both headlamps.

Infotainment system

Radio reception ✻..... 90
Infotainment system ✻..... 90
Steering wheel remote control ✻..... 90
AUX input ✻..... 91
Mobile telephones and radio equipment (CB) ✻ 91

Radio reception ✻

Radio reception may be disrupted by static, noise, distortion or loss of reception due to

- Changes in distance from the transmitter,
- multi-path reception due to reflection and
- shadowing.

Infotainment system ✻

The infotainment system is operated as described in the operating instructions.

Steering wheel remote control ✻

The functions of the infotainment system ✻ and the information display can be operated on the steering wheel.

Further information ⇨ 78 and the infotainment system instructions.

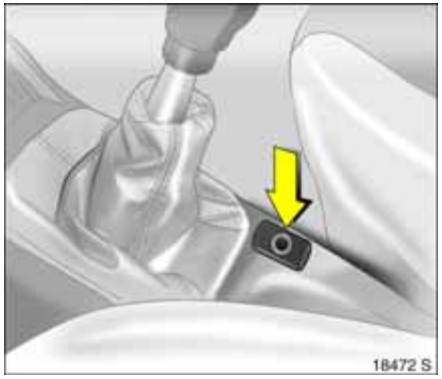

AUX input ✻

The AUX input is located on the centre console, between the seats.

An external audio source such as a portable CD player can be connected via the AUX input with a 3.5 mm jack plug.

Keep AUX input clean and dry at all times.

Further information is found in the infotainment system instructions.

Mobile telephones and radio equipment (CB) ✻

The Opel installation instructions and the operating guidelines provided by the telephone manufacturer must be observed when fitting and operating a mobile telephone. Failure to do so could invalidate the vehicle's operating permit (EU Directive 95/54/EC).

Recommended prerequisites for fault-free operation:

- Professionally installed exterior antenna to obtain the maximum range possible
- Maximum transmission power 10 Watt,
- Installation of the telephone in a suitable spot (see information ⇨ 60).

Seek advice on predetermined installation points for the external antenna or equipment holder and ways of using devices with a transmission power exceeding 10 watts.

We recommend that you consult your Opel Service Partner, which stocks accessories, brackets and various mounting kits and will install them correctly.

Use of a handsfree attachment without external antenna with mobile telephone standards GSM 900/1800/1900 and UMTS is only permitted if the maximum transmission power of the mobile telephone is 2 watts for GSM 900 or 1 watt for the other types.

For reasons of safety, we recommend that you avoid using the phone while driving. Even the use of the handsfree attachment could be a distraction from the traffic situation. Be sure to follow the laws of the country in which you are driving.

⚠Warning

Operate radio equipment and mobile telephones which fail to meet current mobile telephone standards only using an antenna located outside of the vehicle.

Caution

Mobile phones and radio equipment may cause malfunctions in the vehicle electronics if they are operated in the vehicle without the external antenna unless the above-mentioned regulations are complied with.

Climate control

Heating, ventilation and air conditioning system ✻ 92
Air vents 93
Heating and ventilation system 94
Air conditioning system ✻ 96
Air intake 99
Air outlet 99
Pollen filter 99
Regular operation 99
Service 99

Heating, ventilation and air conditioning system ✻

Ventilation, heating and cooling ✻ are combined into one unit that is designed to provide comfort regardless of the season, weather or outside temperature.

When cooling ✻ is activated, the air is cooled and dried.

The heating unit heats the air as required in all operating modes depending on the position of the temperature switch. The air supply can be adjusted to suit requirements by means of the fan.

The buttons for cooling ✻ and air recirculation are only found on versions with optional air conditioning system ✻.

Air conditioning system ⇨ 96.

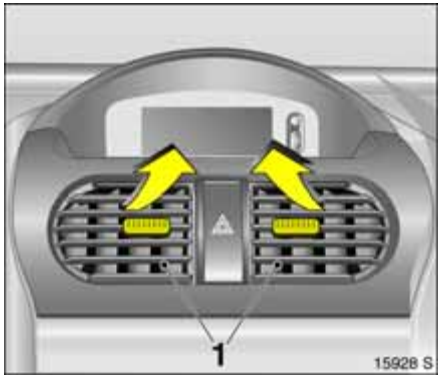

Air vents

At least one air vent must be open while cooling ✻ (air conditioning compressor) is on in order to prevent the evaporator from icing up due to lack of air movement.

Comfortable ventilation of the interior is based on the position of the temperature switch.

To increase the air supply, set the fan to a higher speed and set the air distribution switch to ⇄ or ⇄.

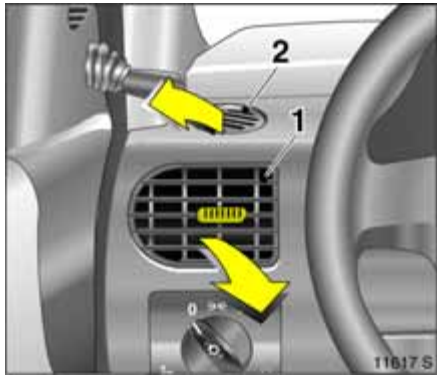

Centre and side (1) air vents
The air flow can be directed as desired by tilting and swivelling the slats.

Temperature switch in centre area: Air from the centre vents is cooler than the air from the side air vents.

To close the vents, push the slider towards the centre of the vehicle.

Windscreen defroster nozzles (2)
Air distribution switch set to ⌂ or ⇄: Air is directed onto the windscreen and the door windows.

Additional vents
Located in front of the windscreen, in front of the door mirrors and in the front foot wells.

Heating and ventilation system

Temperature
Adjusted using left-hand rotary switch.

Red area	=	warm
Blue area	=	cold

The amount of heat is dependent on the coolant temperature and is thus not fully attained until the engine is warm.

Air flow
Adjusted using centre rotary switch.

✱	off
1-4	selected fan speed

The rate of air flow is determined by the fan. The fan should therefore also be switched on during a journey.

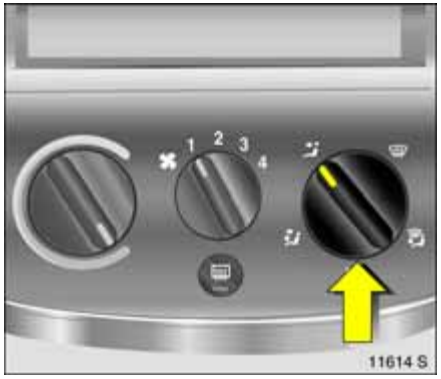

Air distribution
Adjusted using right-hand rotary switch.

	to windscreen and front side windows
	to windscreen, front side windows and footwell
	to footwell
	to headroom and footwell
	to headroom

Open the air vents when the switch is set to or .

Ventilation

- Set the temperature to the desired setting.
- Switch fan on, select fan setting according to requirements.
- For maximum ventilation in headroom: move air distribution switch to , open all ventilation nozzles.
- For ventilation to foot well: Set air distribution switch to .
- For simultaneous ventilation to the head area and the foot well: Set air distribution switch to .

Heating

For rapid warming of the passenger compartment:

- Turn the temperature switch clockwise as far as it will go (warm).
- Set the fan to speed **3**.
- Set the air distribution switch to the desired position, preferably position ⇨ 94.

The comfort and general well-being of the vehicle occupants are to a large extent dependent on a suitable ventilation and heating setting.

To achieve temperature stratification with the pleasant effect of "cool head and warm feet", move rotary air distribution switch to , , or and move rotary temperature switch to any position (in central area with temperature stratification effect).

Heating the foot well

- Set the temperature switch in the right-hand zone.
- Switch on fan.
- Set air distribution switch to .

Demisting and defrosting the windows

⚠Warning
Failure to follow the description could lead to misting or icing of the windows, which in turn could lead an accident stemming from lack of visibility.

Misted or icy windows, e. g. due to damp weather, damp clothing or low outside temperatures:

- Turn the temperature switch clockwise as far as it will go (warm).
- Set fan to **3** or **4**.
- Set air distribution switch to .
- Activate heated rear window .
- Open side air vents as required and direct them towards side windows.
- For simultaneous warming of the foot well, set air distribution switch to .

Air conditioning system ❄

In addition to the effects of the heating and ventilation system, the air conditioning system cools and dehumidified (dries) the inflowing air.

If no cooling or dehumidification is required, switch off cooling to save fuel.

Cooling switches off automatically at low outside temperatures.

Cooling
Only operate with the engine and fan running. Activate and deactivate with the button.

When cooling (air-conditioning compressor) is on, the air is cooled and dried. If no cooling or drying is required, switch off cooling to save fuel.

Cooling switches off automatically at low outside temperatures.

When cooling operates, condensation forms and drips from the underside of the vehicle.

Air recirculation system
The air recirculation mode of the ventilation system is activated and deactivated by pressing the button.

If fumes or unpleasant odours penetrate from outside: temporarily switch on air recirculation system .

To increase cooling at high outside temperatures, switch on the air recirculation system briefly.

⚠Warning

The air recirculation system minimises the entry of outside air. The humidity increases, and the windows can mist up. The quality of the passenger compartment air deteriorates which may cause vehicle occupants to feel drowsy.

Air distribution to : the air recirculation system is automatically switched off to speed up window demisting and prevent fogging.

Comfort setting

- Set cooling as desired.
- Air recirculation system off.
- Set temperature switch as desired.
- Switch on fan at desired speed.
- Set air distribution switch to or .
- Open vents as required.

Temperature switch in centre of adjustment range: warmer air will flow into the foot well and cooler air into the upper zone, with warmer air coming from the side air vents and cooler air from the centre vents.

Maximum cooling
(**Max**imum **A**ir **C**onditioning)
Open windows for a short time so that the heated air can dissipate quickly.

- Cooling on.
- Air circulation system on.
- Turn the temperature switch anticlockwise as far as it will go (cold).
- Set fan to **4**.
- Set air distribution switch to .
- Open all vents.

Demisting and defrosting windows

⚠Warning
Failure to follow the description could lead to misting or icing of the windows, which in turn could lead an accident stemming from lack of visibility.

Misting or icing of the windows, such as from damp weather conditions, wet clothes or low outside temperatures:

- Cooling ❄ on, the air conditioning compressor automatically switches off in low outdoor temperatures (ice formation),
- Turn the temperature switch clockwise.
- Set fan to **3** or **4**.
- Air distribution switch to ⊞, air recirculation system switches off automatically.

  – or –

  If there is still moisture in the system after previous air conditioning operation, the windows may mist up. To prevent this, set air distribution to before starting engine and set to ⊞ approx. 5 seconds after starting.
- Activate heated rear window ⊟.
- Open side air vents as required and direct them towards side windows.

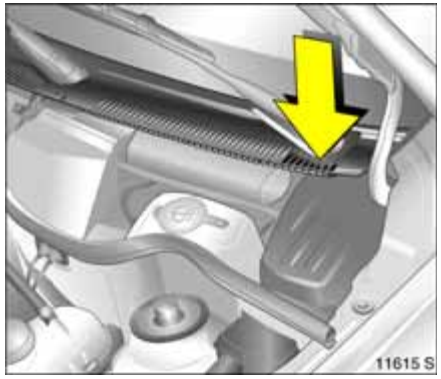

Air intake

The air intakes in front of the windscreen on the far left and right-hand sides of the engine compartment must be kept free of leaves, dirt and snow so as not to obstruct the air supply.

Air outlet

Do not cover the air outlets when stowing objects in the luggage compartment.

Pollen filter

The pollen filter cleans dust, soot, pollen and spores from the air entering from outside. The active carbon layer ✻ eliminates most odours and noxious environmental gases from the air.

Regular operation

To make sure that the AC compressor is constantly working well, the cooling system ✻ must be switched on several minutes once a month regardless of the weather or season. It is not possible to activate cooling when outside temperatures are low.

Service

For optimal cooling performance, we recommend that the climate control system be checked annually, starting three years after initial vehicle registration.

- Functionality and pressure test
- Heating functionality
- Leakage check
- Check of drive belts
- Cleaning of condenser and evaporator drainage
- Performance check

Driving and operation

Manual transmission automated ✻ ... 100
Manual transmission 105
Driving hints 106
Saving Fuel, Protecting the Environment 108
Fuels, refuelling 110
Catalytic converter, engine exhaust .. 114
Hydraulic brake system 118
Anti-lock Braking System (ABS) ✻ 119
Hand brake 120
Brake assist 120
Wheels, tyres 121
Roof racks ✻..... 125
Towing equipment ✻..... 126
Caravan/trailer towing 126

Manual transmission automated ✻

The Easytronic transmission permits manual (**manual mode**) or automatic gear shifting (**automatic mode**), both with automatic clutch control.

Transmission display
Shows the mode and current gear.

If the Winter programme is activated, ❄ is illuminated.

Starting the engine
Briefly operate foot brake when starting the engine. The engine can now be started in position **N** and with the foot brake operated. N appears in the gear display. If the foot brake is not operated, "N" flashes in the gear display and the engine cannot be started.

If no brake lights are operational, the engine will not start.

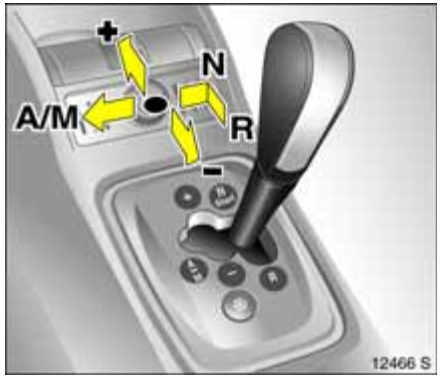

Operation of the manual transmission automated using the selector lever
Always move the selector lever all the way in the chosen direction. Observe the gear or mode indicator in the transmission display.

Selector lever in N
Neutral.

Selector lever in ● (centre position)
Moving the selector lever from **N** to ● (centre position) while depressing the foot brake time switches the manual transmission automated to automatic mode and engages first gear (second gear if winter programme is enabled). "A" appears in the gear display.

When the foot brake is released the vehicle starts to "creep". If the foot brake is not operated, "A" starts to flash. Start off by immediately pressing the accelerator pedal or move selector lever back to **N** and repeat procedure with foot brake operated.

In automatic mode, the transmission shifts into other gears automatically based on driving conditions.

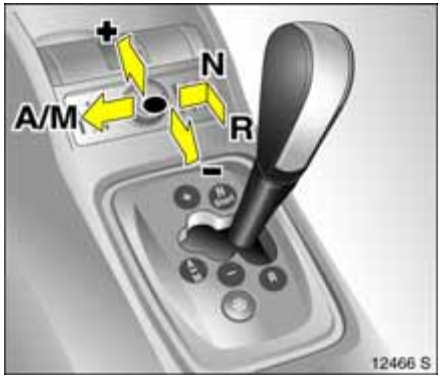

Selector lever in A/M
Switch between Automatic and Manual mode.

In manual mode, a gear can be selected manually by tapping the selector lever to the **+** or **-** position. The transmission display indicates the current gear.

If the engine speed is too low the manual transmission automated will automatically shift to a lower gear even in Manual mode. This prevents the engine from stalling.

Selector lever in + or -

+ Shift to a higher gear.

- Shift to a lower gear.

If a higher gear is selected when the running speed is too low, or a lower gear when the speed is too high, no shift is carried out. This prevents the engine from running at too low or too high revs.

Gears can be skipped by jogging the selector lever repeatedly at short intervals.

When the vehicle is in automatic mode, manual transmission automated switches to manual mode when the selector lever is tapped to position **+** or **-**. The transmission display indicates the current gear.

Selector lever in R
Reverse gear. Engage only when vehicle is stationary.

Press knob on selector lever, select **R**, "R" appears in gear display.

If **R** is selected when the vehicle is in motion, "R" flashes in the transmission display and no gear is engaged.

Stopping the vehicle
In automatic or manual mode, first gear is automatically engaged (second gear if the Winter programme is engaged) and the clutch is released when the vehicle is stationary. In **R**, reverse gear remains engaged.

If a warning signal sounds when the driver's door is opened (foot brake not depressed), move the selector lever to **N** and apply the hand brake.

When stopping on gradients, engage the hand brake or depress the brake pedal. To prevent overheating of the clutch, do not increase engine speed to ensure smooth idling when in gear.

Switch off engine if stopping for a lengthy period, e.g. in traffic jams or at level crossings.

Electronically controlled driving programmes in automatic mode

- Following a cold start, the operating temperature programme keeps engine speed high to quickly and automatically bring the catalytic converter to the required temperature.
- Adaptive programmes automatically change to other gears to suit the driving conditions, such as if the vehicle is towing a caravan/trailer, has a high payload, or is being driven on inclines.

Winter programme ❄
In the event of difficulties starting off on slippery roads, press the ❄ button ("A" and ❄ appear in the transmission display). The manual transmission automated switches to automatic mode and the vehicle sets off in second gear.

The Winter programme is switched off by:

- pressing the ❄ button again,
- turning off the ignition,
- switching to Manual mode,
- when clutch temperature is too high.

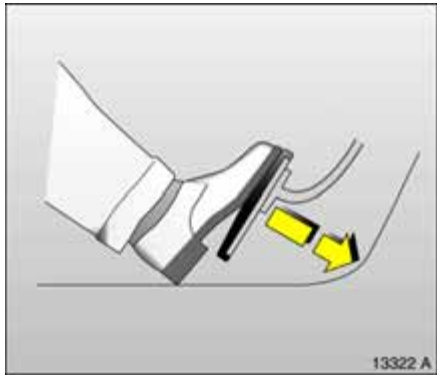

Kickdown
If the accelerator pedal is pressed past the pressure point, the transmission shifts to a lower gear depending on engine speed.

During kickdown no manual gear shifting is possible.

When the engine speed approaches its upper limit, the transmission shifts to a higher gear during kickdown even in Manual mode.

Without kickdown this automatic shift is not effected in Manual mode.

Engine braking
Automatic mode
When driving downhill, the manual transmission automated does not shift into higher gears until a fairly high engine speed has been reached. When braking, the transmission shifts down in good time.

Manual mode
To utilise the engine braking effect, select a lower gear in good time when driving downhill.

"Rocking the car"
To rock a vehicle that is stuck in sand, mud, snow or a rut only, alternate the selector lever between ● (centre position) and **R** positions and depress the accelerator pedal slightly. Keep the engine speed as low as possible and avoid rapid acceleration.

Manoeuvring the vehicle
To manoeuvre the vehicle back and forth during attempts to park or in garage entrances the creeping movement can be utilised by releasing the foot brake.

Never actuate accelerator and brake pedals simultaneously.

To prevent damage, the manual transmission automated disengages the "creep function" at extremely high automatic clutch temperatures.

Vehicle storage
Apply the handbrake and remove the key from the ignition. The previously selected gear (shown on the transmission display) remains selected. No gear is selected in selector lever position **N**.

When the ignition is switched off, the manual transmission automated no longer responds to movement of the selector lever.

If the ignition key is not removed, the battery may be discharged if the vehicle is then left to stand for a lengthy period of time.

If the hand brake has not been applied, the control indicator (!) flashes for a few seconds after the ignition is switched off.

Fault
To prevent damage to the automated manual transmission, the clutch is closed automatically at high clutch temperatures.

Control indicator illuminates in the event of a fault. Continued driving is possible. Manual mode cannot be used for shifting.

If an "F" is also shown in the transmission display, it is not possible to continue driving.

Have cause of fault remedied by a workshop. The system's integrated self diagnostics allow faults to be quickly remedied.

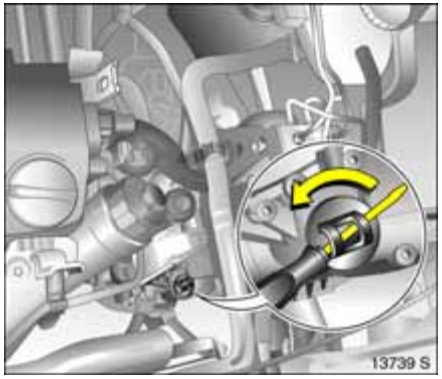

Interruption of power supply
The clutch is not disengaged if there is an interruption of the power supply when a gear is engaged. The vehicle cannot move.

If the battery is discharged, start the vehicle using jump leads ⇨ 129.

If the cause is not a flat battery, contact a workshop for assistance. If the vehicle has to be moved out of flowing traffic, disengage clutch as follows:

1. Apply hand brake and switch off ignition.
2. Open bonnet and engage support.
3. Clean the transmission around the cap (see figure) so that no dirt can get into the opening when the cap is removed.
4. Rotate cap to slacken and remove by lifting upwards – see figure.
5. Turn the adjusting screw clockwise using a flat-head screwdriver (vehicle tools ❇ ⇨ 136) until clear resistance can be felt. The clutch has now been disengaged.

Caution
Do not turn beyond the resistance, since this can damage the manual transmission automated.

6. Fit cleaned cap again. The cap must be in full contact with the housing.

Caution
Towing the vehicle and starting the engine is not permitted when the clutch has been released in this way, although the vehicle can be moved a short distance.

Contact a workshop for assistance immediately.

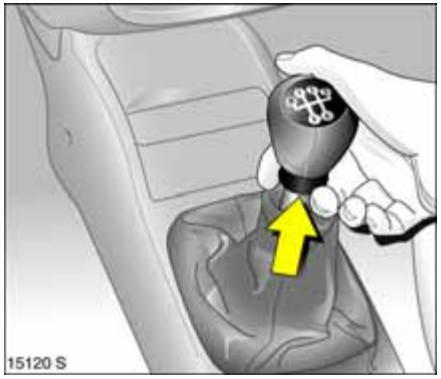

Manual transmission

To engage reverse, with the vehicle stationary wait 3 seconds after declutching and then pull up the button on the selector lever and engage the gear.

If the gear does not engage, set the lever in neutral, release the clutch pedal and depress again; then repeat gear selection.

Do not grind the clutch unnecessarily.

When operating, depress the clutch pedal completely. Do not use the pedal as a foot rest (increases clutch wear).

Driving hints

The first 1000 km
Drive your vehicle at various speeds. Do not use full throttle. Never allow the engine to labour at low revs.

Change gear frequently. Do not press the accelerator pedal more than approx. $^{3}/_{4}$ in all gears.

Do not drive faster than three quarters of maximum speed.

Do not brake unnecessarily hard for the first 200 km.

During the first drive, smoke may develop because of wax and oil evaporating off the exhaust system. Park the vehicle in the open for a while after the first drive and avoid inhaling the fumes.

Fuel and engine oil consumption is higher than normal during the running-in period.

Never coast with engine not running
Many units will not function in this situation (e.g. brake servo unit, power steering ❇). Driving in this manner is a danger to yourself and others.

Brake servo unit
When the engine is not running, the brake servo unit is no longer effective once the brake pedal has been depressed once or twice. Braking effect is not reduced, but significantly greater force is required for braking.

Electric power steering ❇
If the power-assisted steering fails when being towed with the engine switched off – the vehicle can still be steered, but considerably more force is required.

Driving in mountainous terrain or with a trailer/caravan
The cooling fan is electrically operated. Its cooling power is therefore independent of the engine speed.

Since a considerable amount of heat is generated at high engine speeds and less at slower speeds, do not shift down when climbing hills whilst the vehicle is still coping with the gradient in the higher gear.

Diesel engines: On gradients of 10 % or more, do not drive faster than 30 km/h in first gear or 50 km/h in second gear.

Driving with a roof load
Do not exceed the permissible roof load, ⇨ 189. For reasons of safety, distribute the load evenly and strap it down firmly using retaining straps so that it cannot slip. Check the tyre pressure when the vehicle is loaded. Do not travel faster than 120 km/h. Check and re-tighten the straps frequently. Observe country-specific regulations.

Switching off the engine
When you switch off, fans in the engine compartment may continue running for a time to cool the engine.

If the engine temperature is very high, e.g. after driving in mountainous terrain: allow the engine to idle for approximately two minutes in order to prevent heat accumulation.

Vehicles with turbocharged engine
After running at high engine speeds or high engine loads, operate the engine briefly at a low load or run in neutral for approx. 30 seconds before switching off in order to protect the turbocharger.

Save energy – more kilometres
Please observe the running-in hints on the previous page and the tips for saving energy on the following pages.

Good, technically correct and economical driving ensures maximum durability and performance for your vehicle.

Overrun cut-off
The fuel supply is automatically cut off during overrun, e.g. when the vehicle is driven with a gear engaged but no throttle application. Overrun cut-off is deactivated if catalytic converter temperature is high.

Vehicles with turbocharged engine
Flow-generated noises may be audible if the accelerator is released quickly on account of air flow in the turbocharger.

Engine speed
Drive in a low engine speed range for each gear as much as possible.

Warming up
Allow the engine to warm up while driving. Do not warm it up by letting it run at idling speed. Do not apply full throttle until the engine has reached operating temperature.

In automatic mode, the manual transmission automated ❇ does not shift to the higher gears after a cold start until higher engine speeds are reached. This allows the catalytic converter to quickly reach the temperature that is required for optimum pollutant reduction.

Correct gear selection
Do not race your engine whilst in neutral or with a low gear selected. Driving too fast in individual gears as well as stop-and-go traffic increases engine wear and fuel consumption.

Change down
When decreasing speed, shift down into the next lowest gear. Do not slip the clutch with a high-revving engine. This is especially important when hill climbing.

Cooling fan
The cooling fan is controlled via a thermoswitch and therefore only runs if necessary.

The cooling fan automatically switches on when the diesel particle filter is being cleaned ❇ depending on the engine.

Pedals
Do not place any objects in the foot well which could slip under the pedals and inhibit the pedal travel.

To ensure the pedal travel is uninhibited, there must be no mats in the area of the pedals.

Battery care
When driving slowly or when the vehicle is stationary, e.g. in slow urban traffic, stop-and-go traffic or traffic jams, turn off all unnecessary electrical loads where possible (e.g. heated rear window, heated front seats, etc.).

Declutch when starting in order to relieve the strain on the starter and the battery.

Saving Fuel, Protecting the Environment

Trend-setting technology
Environmentally friendly and mainly recyclable materials were used when your vehicle was being developed and manufactured. The production methods used to make your vehicle are also environmentally-compatible.

Recycling of production wastes keeps the circulation of material closed. Reduction of energy and water requirements also helps to conserve natural resources.

A highly advanced design means that your vehicle can be easily disassembled at the end of its working life, and the individual materials separated for subsequent re-use.

Materials such as asbestos and cadmium are not used. The refrigerant in the air conditioning system ❄ is CFC-free.

New painting techniques employ water as a solvent.

End-of-life vehicle recovery
Information on end-of-life vehicle recovery centres and the recycling of end-of-life vehicles is available at www.opel.com.

Energy and environment-conscious driving

- High noise levels and exhaust emissions are often a result of driving without due attention to saving energy and protecting the environment.
- You should therefore drive with energy in mind: "more kilometres – less fuel".

  Reduce the noise level and exhaust emissions by adopting an environment-conscious driving style. This is extremely worthwhile and improves the quality of life.

  Fuel consumption depends to a great extent on your own personal driving style. The following hints are intended to help you consume fuel at a rate that is as close as possible to the specified levels ⇨ 186.

  Check your vehicle's fuel consumption every time you refuel. This facilitates early detection of any irregularities causing increased fuel consumption.

Warming up

- Full throttle and warming up at idle speed increase wear, fuel consumption, exhaust emission, the amount of pollutant in the exhaust and the amount of noise.
- Drive off immediately after starting. Warm up the engine by running it at moderate engine speeds.

Uniform speed

- Hectic driving significantly increases fuel consumption, the exhaust emissions, the proportion of pollutant in the exhaust gas and the noise level.
- Do not accelerate and brake unnecessarily. Drive at uniform speed, watching the road.

  Avoid frequent starting off and stopping e.g. at traffic lights, in short distance traffic and in queues of traffic by means of clever planning. Select roads with good traffic flow.

Idling

- The engine also consumes fuel when idling.
- If you have to wait for more than one minute, it is worthwhile switching off the engine. Five minutes of idling corresponds to approximately one kilometre of driving.

Overrun

- The fuel supply is automatically shut off during overrun, e.g. when the vehicle is being driven down long gradients or when braking ⇨ 107.
- To enable the overrun cut-off to come into action and save fuel, do not accelerate or declutch during overrun.

Correct gear selection

- High revs increase engine wear and fuel consumption.
- Do not race your engine. Avoid driving at high engine speeds.

  Making use of the tachometer helps to save fuel. Drive in a low engine speed range for each gear as much as possible with uniform engine speeds. Drive as often as possible in top gear, select the next higher gear as soon as possible, and only change down when the engine is no longer running perfectly smoothly.

High speed

- The higher the speed, the higher the consumption and the noise level. At top speed, you consume a great deal of fuel and produce excessive noise and exhaust emissions.
- Slightly releasing the accelerator pedal results in distinct fuel savings with no major loss of speed.

  Drive at no more than around three quarters of maximum speed and you will use up to 50 % less fuel, without losing a great deal of time.

Tyre pressure

- Inadequate tyre pressure, leading to higher road resistance, costs money in two ways: for more fuel and increased tyre wear.
- Regular checks (every 14 days) pay off.

Electrical loads

- The power consumption of electrical equipment increases fuel consumption.
- Switch off all auxiliary electrical loads (e.g. air conditioning ❇, heated rear window) when not needed.

Roof racks

- Due to air resistance, a roof load can increase fuel consumption by approx. 1 l/100 km.
- Remove them if they are not being used.

Repair and maintenance

- Improper repairs or adjustment and maintenance work can increase fuel consumption. Do not carry out work on the engine yourself.

  You may out of ignorance infringe environmental laws by not disposing of materials properly.

  Appropriate parts might not be recycled.

  Contact with some of the materials involved may pose a health hazard.
- We recommend that repair and maintenance be entrusted to your Opel Partner.

Extreme driving conditions

- Going up steep slopes, cornering, driving on poor roads and winter driving all increase fuel consumption.

  Fuel consumption increases dramatically in urban traffic and at winter temperatures, especially on short trips when the engine operating temperature is not reached.
- Following the instructions given above will minimise consumption under these conditions.

Fuels, refuelling

Fuel consumption

Fuel consumption is determined under specific driving conditions ⇨ 186.

Special equipment increases the weight of the vehicle. As a result, they can increase fuel consumption and reduce the specified maximum speed.

There is increased friction between engine and transmission parts during the first 1000 kilometres. This increases fuel consumption.

Fuel for petrol engines

Only use unleaded fuel that complies with DIN EN 228.

Fuels with ethanol content greater than 5 % may only be used if the vehicle has been specifically developed and approved for these fuels.

Use fuel with the recommended octane rating (value in bold ⇨ 184). Use of fuel with too low an octane rating can reduce engine power and torque and slightly increases fuel consumption.

Caution
Use of fuel with too low an octane rating could lead to uncontrolled combustion and engine damage.

Fuel for diesel engines

Only use diesel fuel that complies with DIN EN 590. The fuel must have low sulphur content (max. 50 ppm).

Do not use marine diesel oils, heating oils or entirely or partially plant-based diesel fuels, such as rape seed oil or bio diesel, Aquazole and similar diesel-water emulsions. Diesel fuels must not be diluted with fuels for petrol engines.

The flow and filterability of diesel fuel are temperature-dependent. When temperatures are low, refuel with diesel fuel with guaranteed winter properties.

Fuel for natural gas operation

Use natural gas with a methane content of approx. 78-99 %. L-gas (low) has approx. 78-87 % and H-gas (high) has approx. 87-99 %. Biogas with the same methane content can also be used if it has been chemically prepared and desulphurised.

Liquid gas or LPG must not be used.

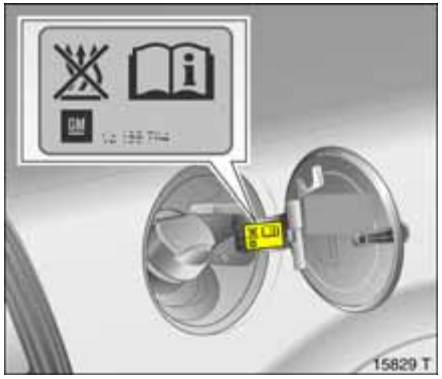

Fuel filler cap
Only a Opel Genuine fuel filler cap provides full functionality. Diesel-engined vehicles have special fuel filler caps.

Refuelling

⚠Warning

Before refuelling, switch off engine and any external heaters with combustion chambers ✻ (identified by sticker on tank flap). Switch off any mobile phones.

Follow the operating and safety instructions of the filling station when refueling.

⚠Warning

Fuel is flammable and explosive. No smoking. No naked flames or sparks.

If you can smell fuel in your vehicle, have the cause of this rectified immediately by a workshop.

Fuel filler neck at right rear side of vehicle.

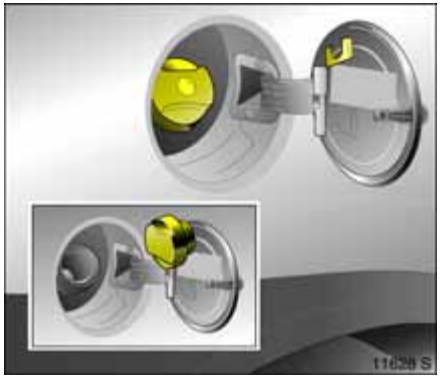

With the central locking system ✻, the tank flap is unlocked together with the doors ✻ ⇨ 24.

Open the tank flap. To prevent damage, the right-hand sliding door cannot be fully opened if the tank flap is open.

Unlock the fuel filler cap with the ignition key ✻, unscrew and suspend from tank flap.

The fuel tank has a limiting system which prevents overfilling of the tank.

►

Correct filling depends to a large extent on proper operation of the fuel dispensing pump:

1. Fully insert the pump nozzle and switch it on.
2. After the automatic cut-off, the nominal capacity of the fuel tank can be obtained by topping up with two doses of fuel. Make sure the nozzle is fully inserted.

To close, place fuel filler cap in position and turn, overcoming the resistance until the ratchet on the cap engages audibly. Lock the fuel filler cap with the ignition key ✻.

Close fuel tank cover.

Caution

Wipe off any overflowing fuel immediately.

Refuelling, natural gas ✻

⚠Warning

Care must be taken when handling natural gas!

Before refuelling, be sure to switch off the engine and any auxiliary heater with combustion chamber.

Natural gas is flammable and explosive. Therefore, avoid naked flames and sparks when handling or in the vicinity of natural gas. Do not smoke! This also applies where natural gas can only be detected by its characteristic smell.

If there is a smell of natural gas in the vehicle, have cause established immediately by a workshop that is authorised to maintain natural gas vehicles and have the problem remedied.

The fuel tank filler neck for natural gas and petrol is located on the right rear side of the vehicle.

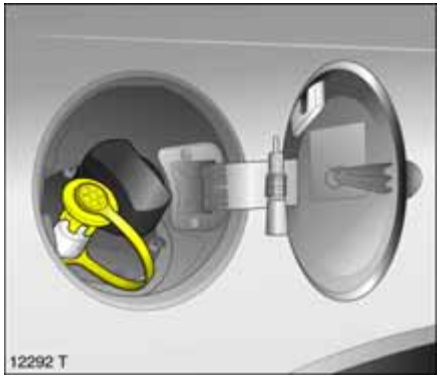

Remove the cap from the natural gas filler neck.

⚠Warning

When refuelling vehicles with natural gas, be sure to follow the operational and safety regulations of the filling station.

The gas tank must only be replenished at filling stations that refuel with temperature compensation with a maximum output pressure of 250 bar.

The tank action must be fully completed, e.g. bleeding the filler neck.

After refuelling, refit the cap.

Refuelling when driving abroad
When refuelling in another country, please note that country-specific expressions are used for natural gas vehicles.

German	Erdgasfahrzeuge	Erdgas als Kraftstoff
English	NGVs = Natural Gas Vehicles	CNG = Compressed Natural Gas
French	Véhicules au gaz naturel – or – Véhicules GNV	GNV = Gaz Naturel (pour) Véhicules – or – CGN = carburant gaz naturel
Italian	Metano auto	Metano (per auto)

Fuel selector switch, natural gas ✻
Switch ⛽ can be used to switch between petrol and natural gas operation. A changeover is not possible during a high load, such as powerful acceleration or full throttle. The status of the LED indicates which type of fuel is in use.

Natural gas operation = LED off.

Petrol operation = LED comes on.

As soon as the natural gas tank is empty, the vehicle automatically switches to petrol operation until the ignition is switched off. This is indicated by prolonged flashing of the LED.

▶

If the natural gas tank is then not refilled, petrol operation must be manually selected the next time the engine is started. This is necessary in order to prevent damage to the catalytic converter (overheating due to irregular fuel supply).

If the switch is pressed several times within a brief period of time, a changeover inhibitor is activated. The engine continues with the current type of fuel. The inhibitor remains active until the ignition is switched off.

Minor power and torque losses are to be expected during petrol operation, therefore adjust driving style (e.g. overtaking) and vehicle load (e.g. through trailer load) accordingly.

Every 6 months, run the petrol tank down to the reserve zone before refuelling. This is necessary for petrol operation to obtain the required system functionality and fuel quality.

Note:
Refuel and operate only with fuel of at least 95 octane (RON). Upon accidental refuelling with petrol of an octane rating (RON) less than 95, avoid driving with fuel load (e.g. heavy acceleration, full throttle), allow the tank to reach the reserve zone and refuel with the correct petrol.

In order to prevent corrosion in the tank, please refuel the vehicle to the maximum level at regular intervals.

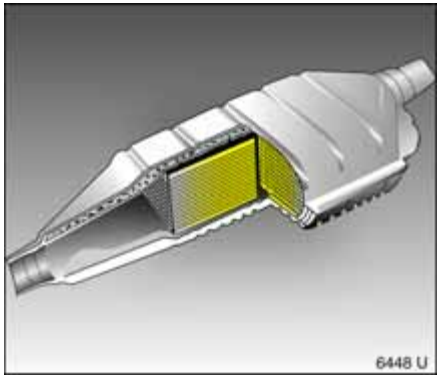

Catalytic converter, engine exhaust

Catalytic converter
The catalytic converter reduces the amount of harmful substances in the exhaust gas, such as carbon monoxide (CO), hydrocarbons, (CH) and nitrous oxide (NO_x).

Fuel grades other than those listed on ⇨ 110, 184 (e. g. LRP = Lead Replacement Petrol or leaded fuel) could damage the catalytic converter or electronic components.

Caution
Damage to the catalytic converter or the vehicle may result if the following points are not observed.

- In the event of misfiring, uneven engine running, a clear reduction in engine performance or other unusual problems, have the cause of the fault rectified by a workshop as soon as possible. In an emergency, driving can be continued for a short period, keeping vehicle speed and engine speed low.
- If unburnt fuel enters the catalytic converter of a petrol engine, this may result in overheating and irreparable damage to the catalytic converter.

  You should therefore avoid unnecessarily long use of the starter when starting off, running the tank dry and starting the engine by pushing or towing.

Controlling exhaust emission
Design measures, primarily in the fuel injection system and ignition system zones in combination with the catalytic converter, the amount of hazardous substances in the exhaust emissions, such as carbon monoxide (CO), hydrocarbons (CH) and nitrogen oxides (NO_x), are reduced to a minimum.

Exhaust gas control indicator
Illuminates when the ignition is switched on and during the start attempt. Goes off shortly after the engine starts running.

Illumination whilst the engine is running indicates a fault in the emission control system. The permissible emission limits may be exceeded. Contact a workshop for assistance immediately.

Illumination with the engine running indicates a fault that can cause damage to the catalytic converter. It is possible to continue driving without causing damage by slowing down until the flashing stops and the control indicator illuminates. Contact a workshop for assistance immediately.

Control indicator for engine electronics
Illuminates for a few seconds when ignition is switched on.

If it comes on when the engine is running, there is a fault in the engine or transmission electronics. The electronics switch to the emergency running programme, fuel consumption may increase and the driveability of the vehicle may be affected.

In some cases the fault can be remedied by switching the engine off and starting it again. If the control indicator continues to illuminate whilst the engine is running, contact a workshop for assistance in remedying the cause of the fault.

If it illuminates briefly, but does not recur, it is of no significance.

If illuminates, there may be water in the diesel fuel filter ✻. Have the fuel filter checked for water residue by a workshop ⇨ 177.

If it flashes after the ignition is switched on, there is a fault in the immobiliser system. The engine cannot be started ⇨ 21.

Engine exhaust

⚠Warning

Engine exhaust gases contain poisonous carbon monoxide, which is colourless and odourless and could be fatal if inhaled.

If exhaust gases penetrate the vehicle, open windows and contact a workshop for assistance.

Avoid driving with an open tailgate. Otherwise, exhaust gases could get into the interior.

Diesel particle filter ✻
The diesel particle filter system filters harmful soot particles out of the exhaust gases. The system includes a self-cleaning function that run automatically during driving. The filter is cleaned by burning off the soot particles at high temperature. This process takes place automatically under set driving conditions and may take up to 25 minutes. Fuel consumption may be higher during this period. The emission of smells and smoke during this process is normal.

Under certain driving conditions, e.g. short distances, the system cannot clean itself automatically.

If the filter requires cleaning and previous driving conditions did not enable automatic cleaning, control indicator flashes. Continue driving, keeping engine speed above 2000 rpm^{-1}. Shift down if necessary. Diesel particle filter cleaning is then initiated.

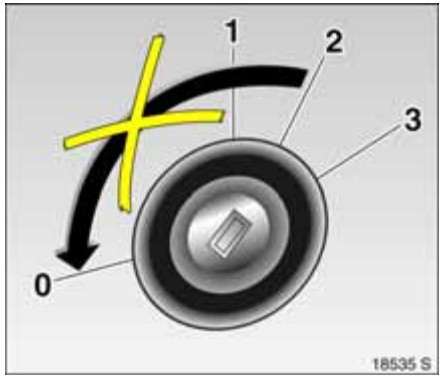

We recommend that you do not stop your journey or switch off the ignition during cleaning. Cleaning takes place most quickly at high engine speeds and high loads.

The control indicator goes off as soon as the self-cleaning operation is complete.

Maintenance
Have all maintenance work carried out at the specified intervals. We recommend that you entrust this work to your Opel Partner, who has proper equipment and trained personnel available. Electronic testing systems permit rapid diagnosis and remedy of faults. This way you can be certain that all components of the vehicle's electrical, injection and ignition systems operate correctly, that your vehicle has a low level of pollutant emission and that the catalytic converter system will have a long service life.

You are thereby making an important contribution towards keeping the air clean and compliance with emissions legislation.

Checking and adjustment of the fuel-injection and ignition systems is part of the scope of inspection. For this reason you should have all maintenance work carried out at the intervals specified in your Service and Warranty Booklet.

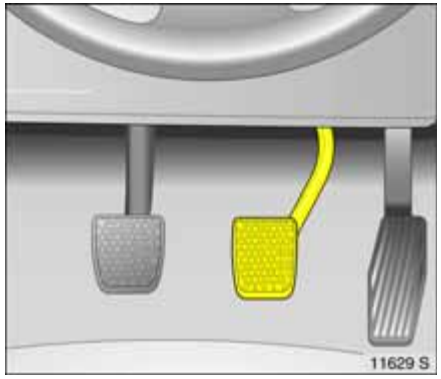

Hydraulic brake system

The foot brake comprises two independent brake circuits.

If a brake circuit fails, the vehicle can still be braked using the other brake circuit. However, the brake pedal must be depressed a considerable way before any braking effect occurs, and much more force is required. The braking distance is longer. Contact a workshop for assistance before continuing to drive.

To ensure the full pedal travel can be utilised, especially in case of a fault in one of the brake circuits, there must be no mats in the vicinity of the pedals ⇨ 107.

When the engine is not running, the support of the brake servo unit disappears once the brake pedal has been depressed once or twice. Braking effect is not reduced, but braking requires significantly greater force. This is especially important to bear in mind when towing.

The brake fluid level should be checked regularly. If the brake fluid level is too low and the hand brake is not applied, control indicator (!) on the instrument panel lights up ⇨ 69.

Brake system control indicator ⓘ
The control indicator illuminates when the ignition is switched on if the hand brake is applied or if the brake or clutch fluid level is too low. Brake fluid ⇨ 179.

⚠Warning
If the control indicator illuminates when the handbrake is released, stop driving immediately. Contact a workshop for assistance.

For vehicles with manual transmission automated ✻, the control indicator flashes for a few seconds when the ignition is turned off if the hand brake is not applied.

Anti-lock Braking System (ABS ⓐ) ✻

ABS prevents the wheels from locking.

ABS starts to regulate brake pressure as soon as a wheel shows a tendency to lock. The vehicle remains steerable, even during hard braking.

ABS control is made apparent though a pulse in the brake pedal and the noise of the regulation process.

For optimum braking, keep the brake pedal fully depressed throughout the braking process, despite the fact that the pedal is pulsating. Do not reduce the pressure on the pedal.

Control indicator ⓐ for ABS
It illuminates for a few seconds when ignition is switched on. Once the control indicator goes out, the system is ready for operation.

If the control indicator does not go out after a few seconds, or if it illuminates while driving, there is a fault in the ABS. The brake system remains operational without ABS regulation.

Self testing
When the engine is started and the vehicle starts off, the system performs a self-check, which may be audible.

Fault

⚠Warning
If there is a fault in the ABS, the wheels may be liable to lock due to braking that is heavier than normal. The advantages of ABS are no longer available. During hard braking, the vehicle can no longer be steered and may swerve.

Have cause of fault remedied by a workshop. The system's integrated self diagnostics allow faults to be quickly remedied.

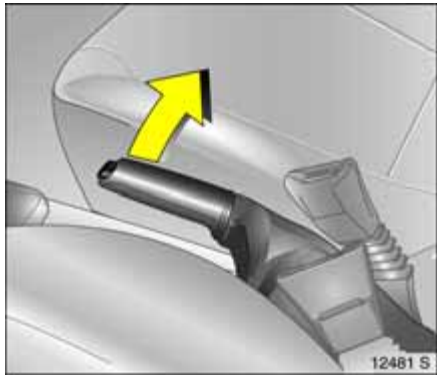

Hand brake

Always apply handbrake firmly without operating the release button, and apply as firmly as possible on a downhill or uphill slope.

To release the hand brake pull the lever up slightly, press the ratchet knob, and fully lower the lever.

In order to reduce the hand brake operational forces, depress the foot brake at the same time.

Brake assist

When the brake pedal is rapidly and forcefully depressed, the vehicle is automatically braked with maximum brake force amplification in order to obtain the shortest possible braking distance during full-on braking (brake assist).

Maintain steady pressure on the brake pedal for as long as full-on braking is to continue. When the brake pedal is released, the maximum brake force amplification is taken away.

Wheels, tyres

Suitable tyres or limitations ⇨ 191.

Tyres fitted in the factory are adapted to the chassis and provide optimum driving comfort and safety.

Changing tyre/wheel type
If tyres of a different size than those fitted at the factory are used, it may be necessary to reprogram the electronic speedometer and make other vehicle modifications.

After converting to a different tyre size, have the adhesive label with tyre pressures replaced.

⚠Warning
Use of unsuitable tyres or wheels may lead to accidents and render the vehicle unroadworthy.

Fitting new tyres
Fit tyres in pairs or in sets, which is even better. Ensure that tyres on one axle are
- the same size,
- the same design,
- the same make,
- and have the same tread pattern.

Fit directional tyres such that they roll in the direction of travel. The rolling direction is indicated by a symbol (e.g. an arrow) on the sidewall.

Tyres fitted opposing the rolling direction (such as when changing a tyre) should be refitted as soon as possible. This is the only way to benefit fully from the design properties of the tyre.

Pay attention to legal requirements when disposing of tyres.

Tyre pressure
Check tyre pressure at least every 14 days and prior to any long journey; the tyres should be checked when cold. Don't forget to check the spare ✻.

Remove the valve cap key from the tank flap and use it to unscrew the valve cap.

Tyre pressure ⇨ 191, ⇨ 192 and on the adhesive label on the inside of the tank flap.

The tyre pressure data is for cold tyres. It applies to both summer and winter tyres.

Always inflate the spare wheel ❇ to the pressure specified for full load.

Do not reduce tyre pressure when the tyres are warm. Otherwise the pressure may drop below the permissible minimum when the tyres cool down.

After having checked the tyre pressure, tighten the valve caps using the valve cap key.

Incorrect inflation pressures will impair safety, vehicle handling, comfort and fuel economy and will increase tyre wear.

⚠Warning

If the pressure is too low, this can result in considerable tyre warm-up and internal damage, leading to tread separation and even to tyre blow-out at high speeds.

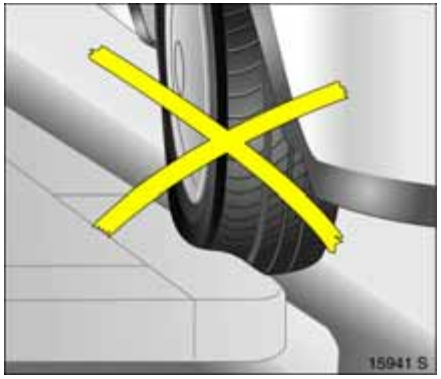

Tyre condition, wheel condition
Drive over edges slowly and at right angles if possible. Driving over sharp edges can cause tyre and wheel damage. Do not trap tyres on the kerb when parking.

Regularly check the wheels for damage. Seek the assistance of a workshop in the event of damage or unusual wear.

Tread depth
Check tread depth regularly.

For reasons of safety, tyres should be replaced when their tread depth has worn down to 2 to 3 mm (winter tyres: 4 mm).

The legally permissible minimum tread depth (1.6 mm) has been reached when the tread has worn down as far as one of the wear indicators (TWI[1]). A number of wear indicators are spaced at equal intervals around the tyre within the tread. Their position is indicated by markings on the tyre sidewall.

[1] **TWI** = **T**read **W**ear **I**ndicator.

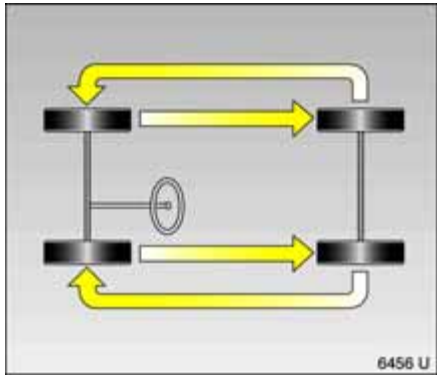

If wear in the front is greater than that in the rear, switch the front wheels with the rear ones.

Correct tyre pressure.

General information

- The danger of aquaplaning is greater if the tyres are worn.
- Tyres age, even if they are little used or not used at all. We recommend tyre replacement no later than every 6 years.
- Never fit used tyres the previous history and use of which you do not know.

Tyre designations
Meanings:

e.g. **175/70 R 14 79 T**

175 = Tyre width in mm

70 = Cross-section ratio (tyre height to tyre width in %)

R = Belt type **R**adial

14 = Rim diameter in inches

79 = Load index e. g.: 79 corresponds to 437 kg

T = Speed code letter

Speed code letters:

Q = up to 160 km/h
S = up to 180 km/h
T = up to 190 km/h
H = up to 210 km/h
V = up to 240 km/h
W = up to 270 km/h

Winter tyres ✻
Instructions on fitting new tyres ⇨ 121.

Limitations ⇨ 191.

Winter tyres improve driving safety at temperatures below 7 □C.

The design of summer tyres means they have limited qualities for winter driving.

In accordance with country-specific regulations, affix the speed sticker ✻ in the driver's field of view.

Use of a spare wheel fitted with a summer tyre may affect the vehicle's driveability, especially on slippery road surfaces. Obtain a replacement for the faulty tyre as soon as possible, and have the wheel balanced and fitted to the vehicle.

Wheel trims ✻
The use of wheel trims and tyres that Opel has approved for the vehicle and therefore fulfill all requirements for the relevant combination of wheels and tyres.

If the wheel trims and tyres used are not Opel-approved, the tyres must not have a beaded edge.

Wheel trims must not impair brake cooling.

Remove the wheel trims if fitting tyre chains ✻.

⚠Warning

Use of unsuitable tyres or wheel trims could lead to sudden loss of air and thereby accidents.

Tyre chains ✻
Limitations ⇨ 191.

Tyre chains are only permitted on the driven wheels (front axle). They must be fitted to the tyres symmetrically in order to achieve a concentric fit.

Always use fine mesh chains that add no more than 10 mm to the tyre tread and the inboard sides (including chain lock).

Remove the wheel trims when using tyre chains ⇨ 137.

Tyre chains may only be used at speeds up to 50 km/h. When travelling on roads that are free of snow, they may only be used for brief periods.

⚠Warning
Damage may lead to tyre blowout.

Tyre chains must not be used on the temporary spare wheel. If you need to use tyre chains after suffering a flat front tyre, fit the temporary spare on the rear axle and transfer one of the rear wheels to the front axle.

Roof racks ✻

For safety reasons and to avoid roof damage we recommend using the Opel roof rack system that is approved for your vehicle.

Follow the usage instructions for the roof rack.

Remove the roof rack when not in use.

Remove the covers from the roof rack mounting apertures.

Driving hints ⇨ 106.

Towing equipment ✻

Only use towing equipment that has been approved for your vehicle. Entrust retrofitting of towing equipment to a workshop. It may be necessary to make changes that affect the cooling system, heat shields or other equipment.

Installation dimensions of towing equipment ⇨ 197.

Towing equipment with fixed coupling ball bar ✻
In the case of trailers/caravans with brake, attach break-away stopping cable to eye to right of coupling ball bar.

Caravan/trailer towing

Caravan and trailer loads[1)]
The permissible caravan/trailer loads are vehicle and engine-dependent maximum values which must not be exceeded. The actual caravan/trailer load is the difference between the actual gross weight of the caravan/trailer and the actual coupling socket load with the caravan/trailer coupled.

The permissible caravan/trailer loads are specified in the vehicle documents. In general, they are valid for gradients up to max. 12 %.

The permitted caravan/trailer load applies up to the specified incline and up to an altitude of 1000 metres above sea level. Since engine power decreases as altitude increases because of the air becoming thinner, therefore reducing climbing ability, the permitted towing weight also decreases by 10 % for every 1000 metres of additional altitude. The towing weight does not have to be reduced when driving on roads with slight inclines (less than 8 %, e. g. motorways).

The permissible gross train weight must not be exceeded. This weight is specified on the identification plate ⇨ 182.

Coupling socket load
The coupling socket load is the load exerted by the trailer/caravan on the coupling ball. It can be varied by changing the weight distribution when loading the trailer/caravan.

The maximum permissible coupling socket load (50 kg) is specified on the towing equipment identification plate and in the vehicle documents. Always aim for the maximum load, especially in the case of heavy caravans/trailers. The coupling socket load should never fall below 25 kg.

When measuring the coupling socket load, make sure that the drawbar of the loaded trailer/caravan is at the same height as it will be when the trailer/caravan is coupled with the towing vehicle loaded. Particularly important for trailers/caravans with tandem axle.

Rear axle load during towing
The permissible axle loads must not be exceeded.

[1)] Observe national regulations.

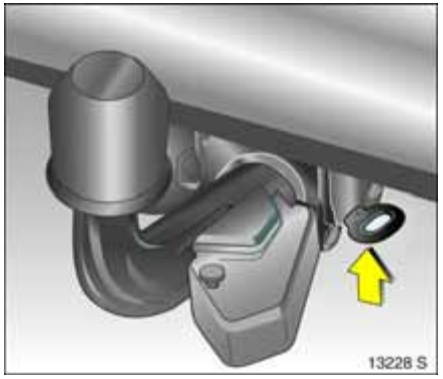

Driving characteristics, towing tips
In the case of trailers/caravans with brakes, attach breakaway stopping cable to eye.

Before attaching the trailer/caravan, lubricate the ball of the trailer/caravan towing device. However, do not lubricate the ball if a stabiliser, which acts on the coupling ball, is being used to damp hunting.

Check caravan/trailer lighting before starting to drive. The fog tail lamps on the vehicle are deactivated when towing a caravan or trailer.

Caravans/trailers with LED turn signals require a provision that make bulb replacement as with standard bulbs possible.

Handling is greatly influenced by the loading of the trailer/caravan. Loads should therefore be secured so that they cannot slip and be placed in the centre of the trailer/caravan if possible, i.e. above the axle.

In the case of trailers with low driving stability, do not exceed a speed of 80 km/h; the use of a friction-type stabiliser is highly recommended.

If the trailer/caravan starts to sway, drive more slowly, do not attempt to correct the steering and brake sharply if necessary.

If it is necessary to apply the brakes fully, depress the brake pedal as hard as possible.

Remember that the braking distance for vehicles towing caravans/trailers with and without brake is always greater than that for vehicles not towing a caravan/trailer.

When driving downhill, drive in the same gear as if driving uphill and drive at a similar speed.

Adjust tyre pressure to the value specified for full load ⇨ 121, ⇨ 191.

Self-help, vehicle care

Diesel fuel system, bleeding 128
Bonnet 128
Starting the engine with jump leads ✻ 129
Towing 131
Warning triangle ⚠ ✻ and first-aid kit (cushion) ⊕ ✻ 133
Spare wheel ✻..... 134
Jack ✻ and vehicle tools ✻..... 136
Changing wheels 137
Tyre repair kit ✻..... 142
Electrical system 145
Fuses and the most important circuits they protect 147
Bulb replacement 151
Vehicle care..... 160

Diesel fuel system, bleeding

If the tank is allowed to run dry, the diesel fuel system must be bled. Turn over the ignition three times for 15 seconds at a time. Then start the engine for a maximum of 40 seconds[1]. Repeat this process after no less than 5 seconds. If the engine fails to start, seek the assistance of a workshop.

[1] For technical reasons, only 30 seconds is possible for engine Z 17 DTH. Sales designation ⇨ 184.

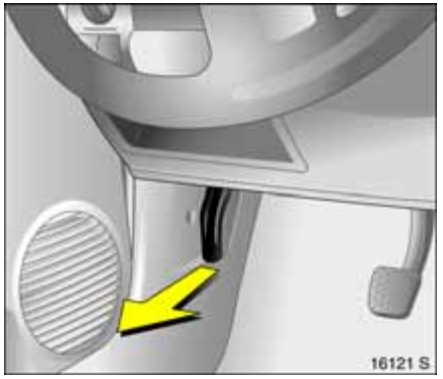

Bonnet

Pull the release lever located on the driver's side below the instrument panel. Return the release lever to its original position.

Lift the safety catch and open the bonnet.

Dirt or snow on the bonnet may drop onto the windscreen when the bonnet is opened and block the air intake. Air intake ⇨ 99.

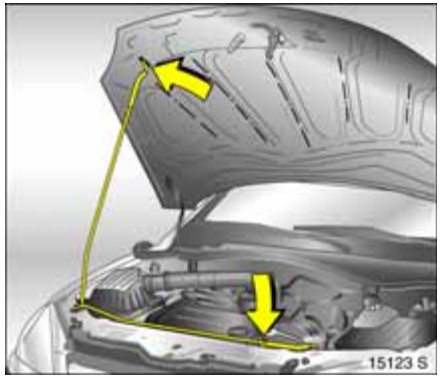

Secure the bonnet support. Before closing the bonnet, press the support into the holder.

Lower the bonnet and allow it to drop into the catch. Check that the bonnet is engaged.

Starting the engine with jump leads ✻

Do not start by quick charger or by pushing or towing.

A vehicle with a discharged battery can be started using jump leads and the battery of another vehicle.

⚠Warning
Starting the engine with jump leads must be carried out with the utmost caution. Any deviation from the following instruction may lead to injury or damage due to the explosion of the batteries and to damage of the electrics in both vehicles.

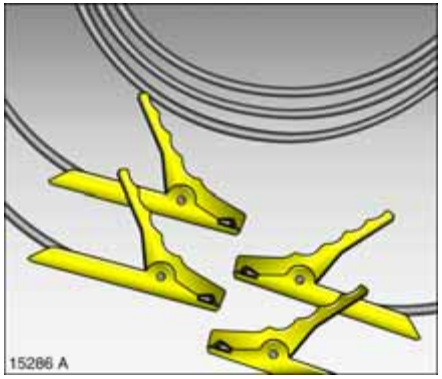

- Never expose the battery to naked flames or sparks.
- A flat battery can freeze even at temperatures around 0 ☐C. Thaw out a frozen battery before connecting jump leads.
- Do not allow battery fluid to come into contact with eyes, skin, fabrics or painted surfaces. The fluid contains sulphuric acid which can cause injuries and damage in the event of direct contact.
- Wear eye protection and protective clothing when handling a battery.
- Use a booster battery with the same voltage (12 volts). Its capacity (Ah) must not be much less than that of the discharged battery.
- Use jump leads with insulated terminals and a cross section of at least 16 mm^2 (25 mm^2 for diesel engines).
- Do not disconnect the discharged battery from the vehicle.
- Switch off all unnecessary electrical consumers.
- Do not lean over the battery during jump starting.
- Do not allow the terminals of one lead to touch those of the other lead.
- Do not touch the vehicles while jump starting.
- Apply the hand brake and engage neutral gear.

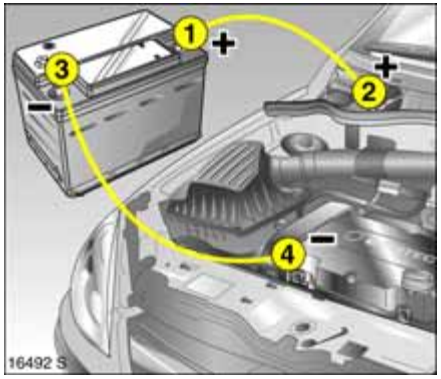

Lead connection order:

1. Connect the red lead to the positive terminal **1** of the booster battery.
2. Connect the other red lead to the positive terminal **2** of the discharged battery.
3. Connect the black lead to the negative terminal **3** of the booster battery.
4. Connect the other end of the black lead **4** to a vehicle grounding point, such as the engine block or a screw connection in the engine suspension. Connect the lead as far away from the discharged battery as possible.

Route the leads so that they cannot catch on rotating parts in the engine compartment.

To start the engine:

1. Start the engine of the vehicle providing the jump start.
2. After 5 minutes, start the other engine. Start attempts should be made at intervals of 1 minute not last longer than 15 seconds.
3. Allow both engines to idle for approx. 3 minutes with the leads connected.
4. Switch on electric loads (e.g. light, heated rear window) of the vehicle receiving the jump start.
5. Reverse above sequence exactly when removing leads.

Towing

Towing your own vehicle

Disengage cap at bottom and remove downwards.

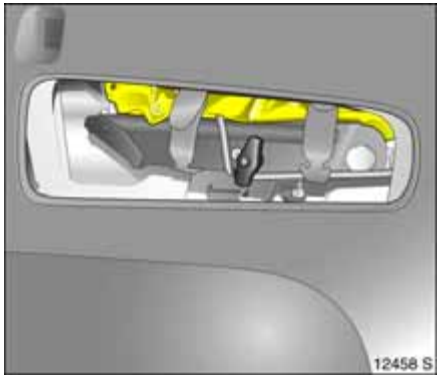

The towing eye is located in the bag for vehicle tools ✻, behind the cover on the right side of the luggage compartment or in the compartment for the tyre repair kit behind the cover on the left side of the luggage compartment.

Jack ✻ and vehicle tools ✻ ⇨ 136.

Screw in the towing eye anticlockwise as far as it will go until it stops in a horizontal position.

Attach a tow rope ✻ – or better still a tow rod ✻ – to the eye.

The towing eye is only to be used for towing and not for vehicle recovery.

Switch on ignition to release steering column lock and to permit operation of brake lamps, horn and windscreen wipers.

Manual transmission in neutral; manual transmission automated ✻ in **N**.

Caution
Drive slowly. Do not drive jerkily. Excessive tractive force can damage the vehicle.

When the engine is not running, considerably more force is needed to brake and steer.

To prevent the entry of exhaust fumes from the towing vehicle, switch on the air recirculation ✻ and close the windows.

Contact a workshop for assistance.

If the automatic clutch has been manually disengaged on a vehicle with manual transmission automated ✻ towing is not permitted ⇨ 105. In this case, contact a workshop for assistance immediately.

After towing, unscrew the towing eye clockwise and refit the cover.

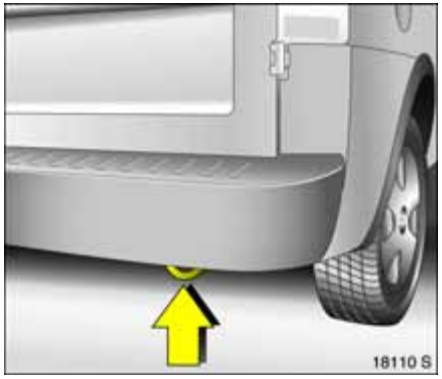

Towing another vehicle
Attach a tow rope ✻ – or better still a tow rod ✻ – to the rear towing eye on the right side of the vehicle underbody, but never to the rear axle.

The towing eye is only to be used for towing and not for vehicle recovery.

Caution
Drive slowly. Do not drive jerkily. Excessive tractive force can damage the vehicle.

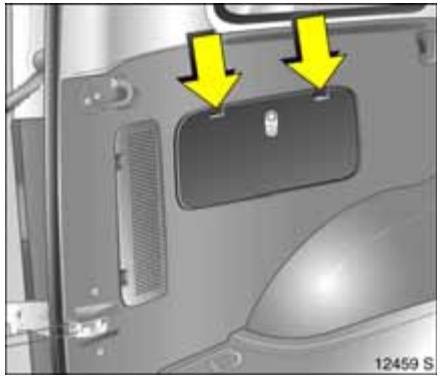

Warning triangle ⚠✻ and first-aid kit (cushion) ⊕✻

Combo
The warning triangle and first-aid kit (cushion) are stowed in a compartment in the side panel trim on the left-hand side.

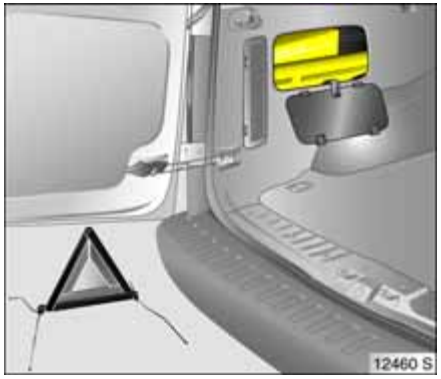

Release flap by pressing retaining lugs.

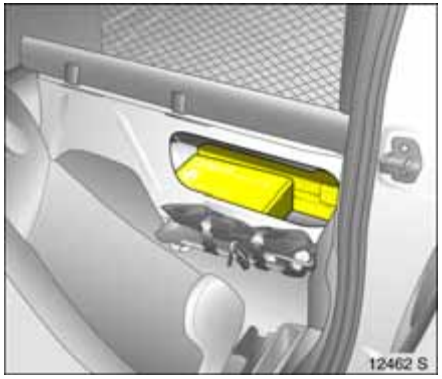

Combo van
The warning triangle and the first aid cushion or box are kept in the compartment behind the driver's seat. When the vehicle is being loaded, please ensure that nothing protrudes over the bottom edge of the opening. Disengage flap ✻ by pressing retaining lug and remove.

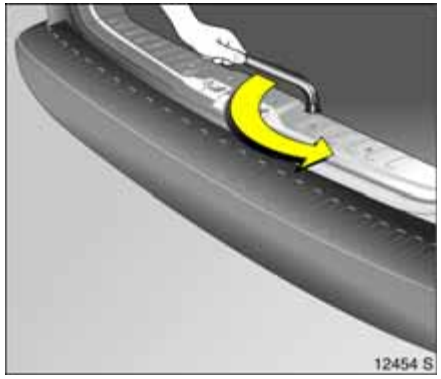

Spare wheel ✻

The spare wheel is stored beneath the floor.

1. Fully release the hexagon bolt in the luggage compartment floor using the wheel bolt wrench. Vehicle tools ⇨ 136.
2. Lift the spare wheel holder.

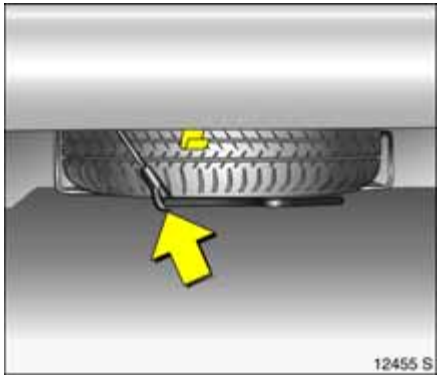

3. Unhook the catch and lower the spare wheel holder.
4. Detach the safety cable.
5. Lower the holder fully and take out the spare wheel.

   Vehicles with a temporary spare wheel ✻ have a spacer ring between the temporary spare and the vehicle underbody.
6. Changing wheels ⇨ 137.

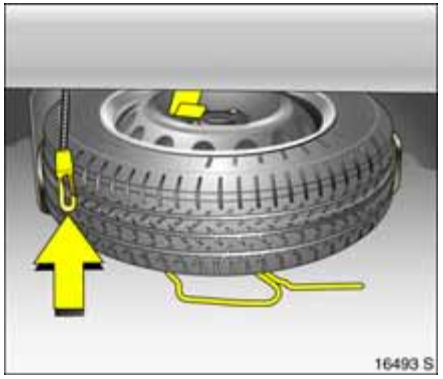

7. Place the replaced wheel in the spare wheel holder with the outside of the wheel facing upwards.

   If a full specification wheel is stowed, do not fit the spacer ring between the wheel and the vehicle underbody.

8. Lift the spare wheel holder, insert the safety cable.
9. Lift the spare wheel holder and engage in the catch. The open side of the catch must point towards the rear.
10. Turn the hexagon bolt in the luggage compartment floor with the wheel bolt wrench to raise the spare wheel holder all the way up.

General information

Depending on the version, the spare wheel may be designed for use as a temporary spare ✻. The temporary spare is designated by a sticker on the rim. Follow the instructions on this page and on ⇨ 125, ⇨ 191.

On vehicles with alloy wheels ✻ the spare wheel may have a steel rim.

Use of a spare wheel together with winter tyres could alter driving conditions. Have the defective tyre replaced as soon as possible.

Use of a spare wheel that is smaller than the other wheels could alter driving conditions. In many countries, it is only permitted as a temporary spare wheel. Have the defective tyre replaced as soon as possible.

Advice to aid in an emergencywheel ✻

- Using a temporary spare wheel may change the driving behaviour of the vehicle, particularly if using winter tyres ✻. Replace defective tyre as quickly as possible, balance wheel and fit to vehicle.
- Fit only one temporary spare wheel.
- Do not drive faster than 80 km/h.
- Take curves slowly.
- Do not use the temporary spare wheel for a lengthy period.
- Replace temporary spare wheel with full specification wheel without delay.
- Do not use tyre chains. If tyre chains must be used when one of the front tyres has a flat, mount the temporary spare wheel on the rear axle and transfer one of the rear wheels to the front axle. Check the tyre pressure and correct if necessary ⇨ 121, ⇨ 191.
- Follow "Notes on temporary spare wheel" ⇨ 125, ⇨ 191.

Information on directional tyres ✻
Fit directional tyres such that they roll in the direction of travel. The rolling direction is indicated by a symbol (e.g. an arrow) on the sidewall.

The following applies to tyres fitted opposing the rolling direction:

- Driving conditions may be altered. Have the defective tyre replaced as soon as possible.
- Do not drive faster than 80 km/h.
- Drive especially carefully in wet and snowy weather.

Further information on directional tyres ⇨ 121.

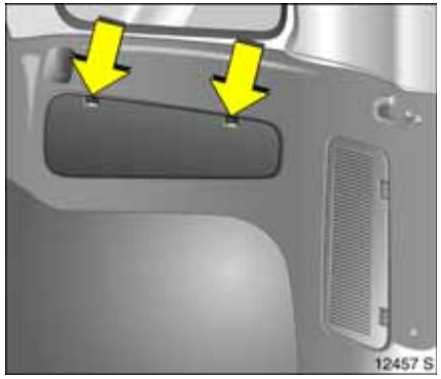

Jack ✻ and vehicle tools ✻

The jack and the vehicle tools have been specially developed for your vehicle and must only be used on that vehicle. Only use jack for changing wheels.

Combo
The jack and the vehicle tools are located in a stowage compartment in the side panel trim on the right-hand side.

Release the flap by pressing the retaining lugs. See Figure.

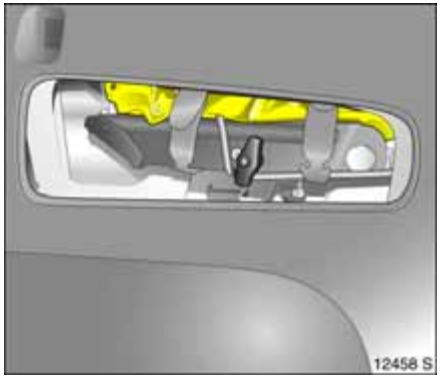

The jack is secured in place by a wing screw. The vehicle tools are secured to the jack ✻ with rubber bands.

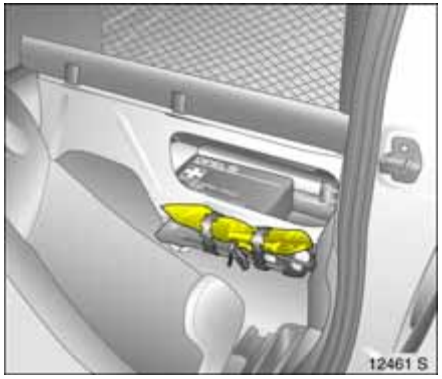

Combo van
The jack and the vehicle tools are secured behind the driver's seat.

The jack is secured in place by a wing screw. The vehicle tools are secured to the jack with rubber bands.

Changing wheels

There may be a tyre repair kit instead of a spare wheel ⇨ 142.

Make the following preparations and observe the following information:

- Park the vehicle on a level, firm and non-skid surface. The front wheels must be in the straight-ahead position.
- Switch on the hazard warning flashers, apply the hand brake, engage first gear or reverse.
- Set up the warning triangle correctly. Warning triangle ⇨ 133.
- Remove the spare wheel from beneath the vehicle floor ⇨ 134.
- Never change more than one wheel at once.
- Use the jack only to change wheels.
- If the ground on which the vehicle is standing is soft, a solid board (max. 1 cm thick) should be placed under the jack.
- Block the wheel diagonally opposite the wheel to be changed by placing wedge blocks or equivalent in front and behind the wheel.
- No people or animals may be in the vehicle when it is jacked up.
- Never crawl under a jacked-up vehicle.
- Do not start the vehicle when it is raised on the jack.
- Before screwing in the wheel bolts, clean them and lightly coat the taper of each wheel bolt with commercially available grease.

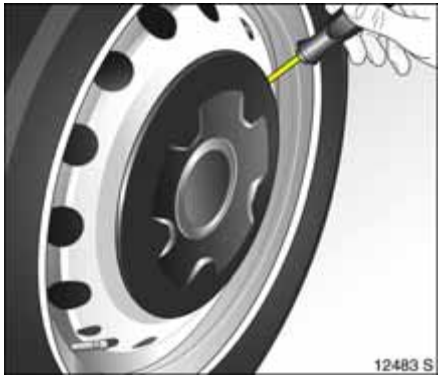

1. Prise off the hub cap using a screwdriver, positioning the screwdriver at the recess at the side of the hub cap. Vehicle tools ⇨ 136.

Pull off the wheel trim with the hook ✻. Vehicle tools ⇨ 136.

On some versions, the wheel trim is removed together with the wheel bolts.

For wheel trims with visible wheel bolts ✻, the trim can remain on the wheel. The retaining rings ✻ at the wheel bolts must not be removed.

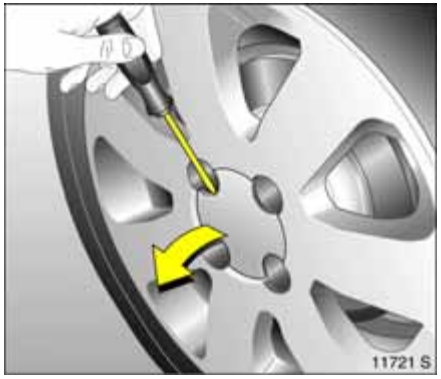

Alloy wheels ✻: Prise off the hub cap using a screwdriver, positioning the screwdriver at the recess at the side of the hub cap. Protect the rim by placing a soft cloth between the screwdriver and rim.

Remove wheel bolt caps ✻ from wheel bolts.

Alloy wheels with anti-theft lock ❇: unscrew the hub cap with anti-theft key and remove it. Vehicle tools ⇨ 136.

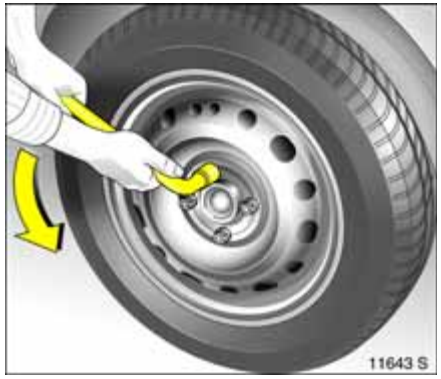

2. Push the wheel bolt wrench ❇ on as far as possible and slacken the wheel bolts half a turn.

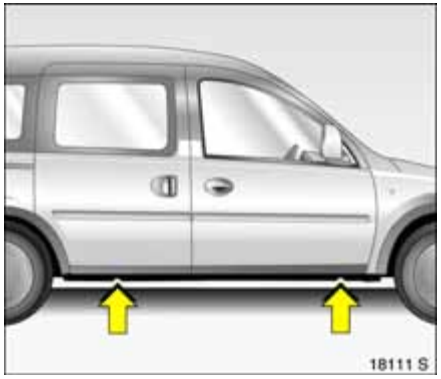

3. The jacking points are marked.

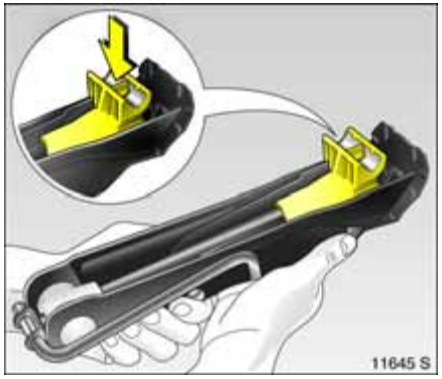

4. Pre-adjust the jack ✻ to the required height. Position the jack arm in the front or rear so that the jack claw (arrow in picture) grips the vertical web in the recess. Make sure that it is correctly seated.

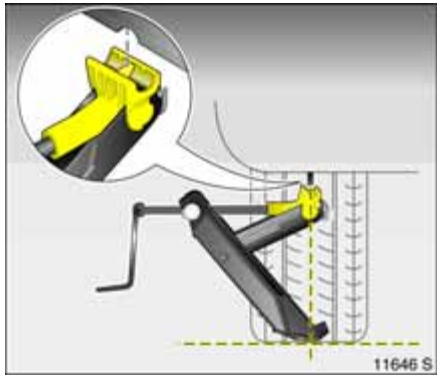

The edge of the jack base must be planted firmly and vertically in line with the contact point.

Raise vehicle by turning crank handle.

If this is not the case, carefully lower the vehicle immediately and reposition the jack.

5. Unscrew the wheel bolts.

   On some versions, the wheel trim is removed together with the wheel bolts.

   If there are lock washers ✻ on the wheel bolts, these must not be removed.

6. Changing wheels. Notes on spare wheel ➪ 134. Notes on temporary spare wheel ➪ 125, ➪ 135, ➪ 191.

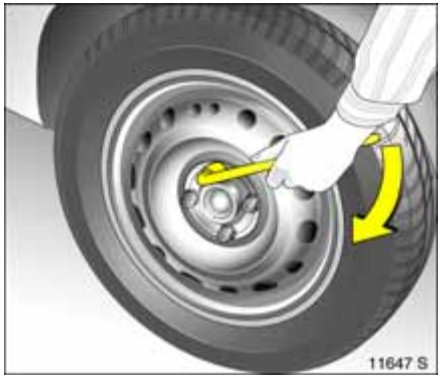

7. Screw in the wheel bolts. Push the wheel bolt wrench ✻ on as far as possible and tighten the wheel bolts slightly.

   On some versions, the wheel trim must be positioned before the wheel bolts are tightened.

8. Lower vehicle.

9. Push the wheel bolt wrench ✻ on as far as possible and tighten crosswise. Tightening torque is 110 Nm.

   Alloy wheels ✻: put hub cap on and engage, inserting pin on rear of hub cap into relevant hole in wheel.

   Alloy wheels with anti-theft lock ✻: Put hub cap on. Insert and tighten anti-theft lock ✻.

10. Before refitting the wheel trim, clean the wheel around the retaining clips. Valve symbol ✻ on back of wheel trim must point towards valve on wheel.

    Align and engage hub cap or wheel trim ✻ and wheel bolt caps ✻.

11. Stow the replaced wheel, tools and warning triangle ⇨ 133, ⇨ 136.

12. Check the tyre pressure of the newly mounted wheel.

13. Have the wheel bolt tightening torque (110 Nm) checked.

14. Replace the faulty tyre on the wheel that was removed.

Tyre repair kit ✻

Minor damage to the tyre tread or sidewall can be repaired with the tyre repair kit.

Do not remove the foreign body from the tyre.

Tyre damage exceeding 4 mm or that is on the rim cannot be repaired with the tyre repair kit.

⚠Warning
Do not drive faster than 80 km/h. Do not use the temporary spare wheel for a lengthy period. Steering and handling may be affected.

Important information ⇨ 145.

In the event of a flat tyre:

- Switch on the hazard warning flashers, apply the hand brake, engage first gear or reverse.
- Set up the warning triangle correctly. Warning triangle ⇨ 133.

On the Combo, the tyre repair kit is located behind a cover on the left in the side trim of the luggage compartment. On the Combo Van, it is located in a compartment behind the driver's seat.

To open the cover ✻, press to release the retaining lugs.

1. Remove bag containing tyre repair kit from compartment. Carefully remove parts from bag.
2. Remove the compressor.

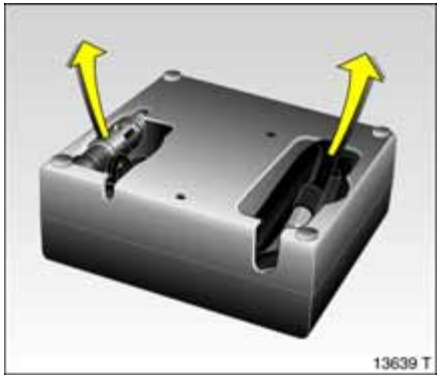

3. Remove the electrical connection cable and air hose from the stowage compartments on the underside of the compressor.

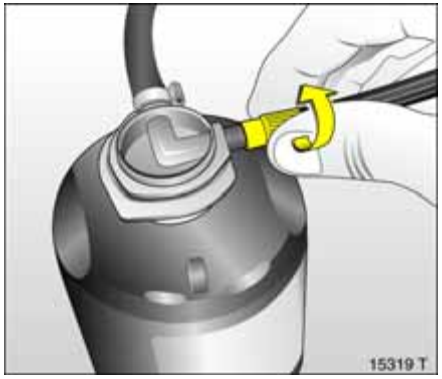

4. Screw the compressor air hose to the connection on the sealant bottle.
5. Fit the sealant bottle in the retainer on the compressor.

   Set the compressor near the tyre in such a way that the sealant bottle is upright.
6. Remove the valve cap from the defective tyre.

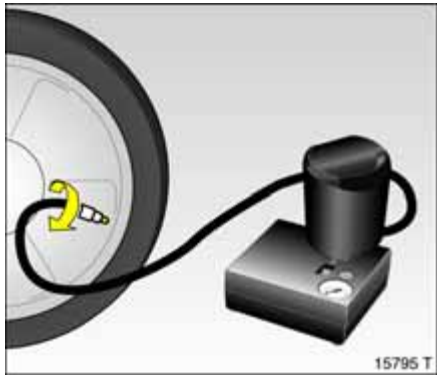

7. Screw the filler hose to the tyre valve.
8. The switch on the compressor must be set to **O**.
9. Plug the compressor connector into the accessory socket or the cigarette lighter socket. Accessory socket ⇨ 61.
10. Switch on ignition.

    To prevent battery discharge, we recommend that you leave the engine running.

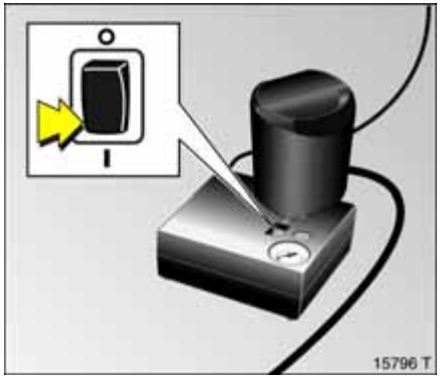

11. Set the rocker switch on the compressor to **I**. The tyre is filled with sealant.
12. While the sealant bottle drains (approx. 30 seconds) the pressure indicator on the compressor briefly points to 6 bar. Pressure then sinks again.
13. All of the sealant is pumped into the tyre. Afterwards, the tyre is filled with air.
14. The prescribed tyre pressure should be reached within 10 minutes. Tyre pressure ⇨ 121, ⇨ 191. Switch off the compressor when the correct pressure is obtained.

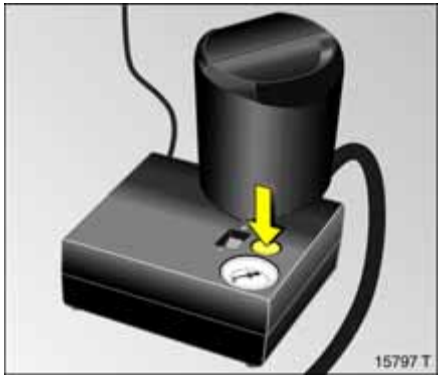

If the prescribed tyre pressure is not reached within 10 minutes, remove the tyre repair kit. Move the vehicle by one tyre rotation. Attach the tyre repair kit again and continue the filling procedure for 10 minutes. If the prescribed tyre pressure is still not reached, the tyre is too damaged to repair. Contact a workshop.

Drain excess tyre pressure with the button over the pressure indicator.

Do not run the compressor for more than 10 minutes - see "Important information" ⇨ 145.

15. Detach the tyre repair kit. Screw the filler hose to the free connection on the sealant bottle. This prevents sealant leakage. Stow the tyre repair kit in the luggage compartment.
16. Wipe away any sealant spill with a cloth.
17. Collapse the warning triangle and stow it in the luggage compartment or stowage compartment ⇨ 133.
18. Take the supplied sticker indicating maximum permitted speed and affix it in the driver's field of view.
19. Continue driving immediately to allow the sealant to distribute evenly throughout the tyre. Stop after approx. 10 km (no more than 10 minutes) and check tyre pressure. Screw the compressor air hose directly onto the tyre valve (see Fig. 15798 T).

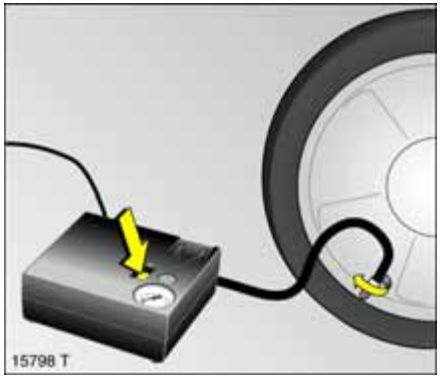

If tyre pressure is more than 1.3 bar, adjust to the prescribed value. Repeat the procedure until there is no more pressure loss.

If the tyre pressure has dropped below 1.3 bar, the vehicle must not be used. Contact a workshop for assistance.

20. Stow the tyre repair kit ⇨ 142.

Important

The driving comfort of the repaired tyre is greatly lessened. Have such tyres replaced.

If the compressor makes abnormal noises or heats up greatly, switch it off for at least 30 minutes.

The integrated safety valve opens at a pressure of 7 bar.

Protect the compressor from moisture and rain.

The sealant can only be stored for approx. 4 years. After this time, the sealing properties can no longer be guaranteed. Heed the expiration date on the sealant bottle.

Replace the used sealant bottle. Dispose of the bottle as prescribed by applicable laws.

The compressor and the sealant can be used from approximately -30 □C.

The adaptor which is located on the underside of the compressor can be used to inflate other items such as balls, air beds and inflatable boats. To remove, screw on the compressor air hose and pull out the adaptor.

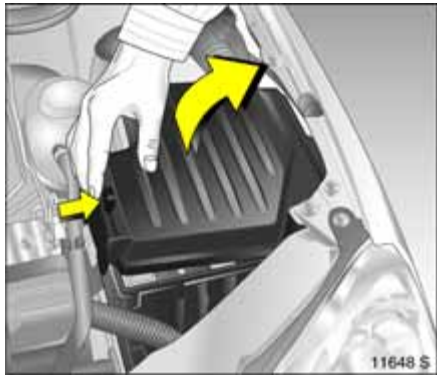

Electrical system

Fuses

Data on the replacement fuse must match the data on the defective fuse.

The fuse box is located in the engine compartment next to the coolant expansion tank.

Disengage cover of fuse box from lug and lift off.

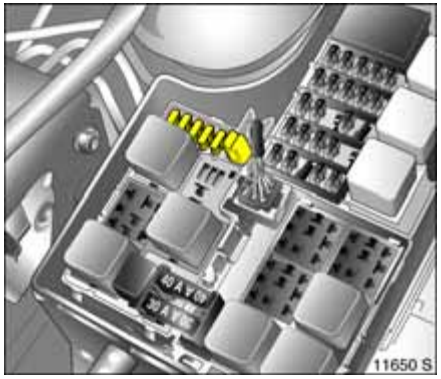

Store spare fuses in the place provided in the fuse box, to the right of which there is a fuse extractor which facilitates fuse replacement (spare fuses and the fuse extractor are marked in yellow in the figure).

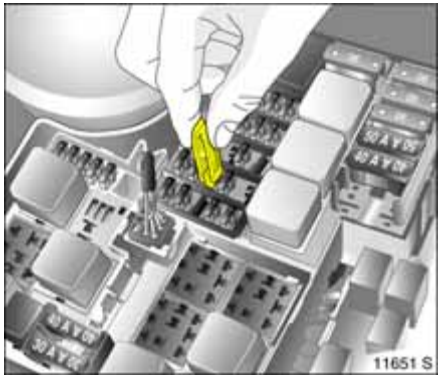

Before replacing a fuse, turn off the respective switch and the ignition.

Slot fuse-gripping tool onto fuse and withdraw it.

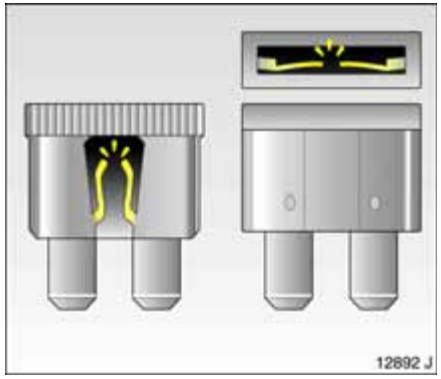

A defective fuse can be recognized by its melted wire. A new fuse should only be installed after the cause of the trouble has been rectified.

Always use fuses with the correct current value. This is shown on each fuse, and is also indicated by the fuse colour and the plug-in location in the fuse box.

Different versions of fuses are used.

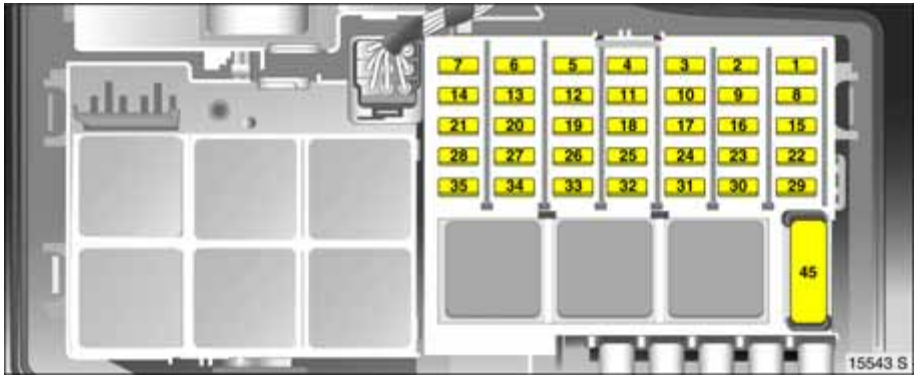

Fuses and the most important circuits they protect

Some circuits may be protected by several fuses.

The figures on pages 147, 148 depict the fuse boxes of vehicles with engine Z 13 DTJ[1]. Fuse boxes of other engines are depicted on pages 149, 150.

No.	Circuit
1	Central control unit
2	Engine control unit
3	Instruments, information display, light switch, horn, hazard warning lamps, electronic immobiliser
4	Towing equipment, number plate lamps
5	Electric window (left)
6	–
7	–
8	Starter
9	Fuel injection system, fuel pump, stationary heater
10	Horn
11	Central control unit
12	Information display, infotainment system
13	Anti-theft alarm system
14	Exterior mirrors
15	Windscreen washer system
16	Courtesy lamp
17	Central control unit
18	–

[1] Sales designation ⇨ 184.

No.	Circuit
19	Electric window (right)
20	–
21	–
22	Central control unit, immobilizer
23	Windscreen wipers
24	Infotainment system, information display, light switch, courtesy lamp, instruments, EPS

No.	Circuit
25	Reversing lamps, cigarette lighter, accessory socket

No.	Circuit
26	Seat heater (right)

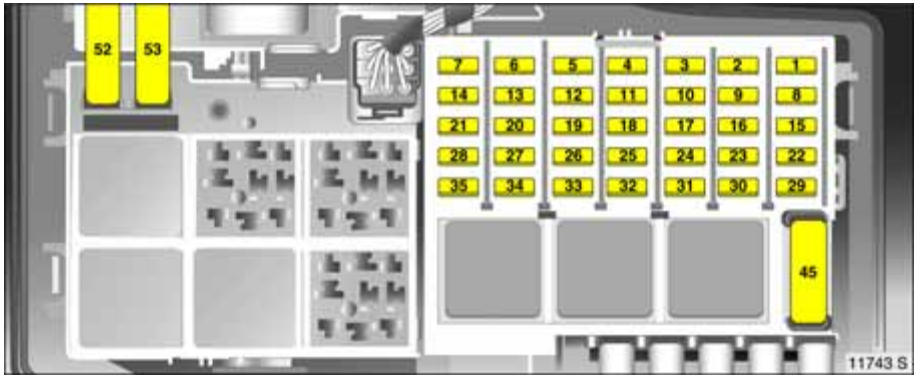

No.	Circuit
27	Seat heater (left)
28	ABS
29	Rear window wiper
30	Engine control unit
31	Air conditioning system
32	ABS, manual transmission automated, airbag
33	Engine control
34	Diesel filter heater
35	Power windows, Infotainment system
36	Dipped beam (left)
37	Dipped beam (right)

No.	Circuit
38	Left tail lamp, left parking lamp
39	Right tail lamp, right parking lamp
40	Brake lamps
41	Fog lamps
42	Fog tail lamp
43	Main beam (left)
44	Main beam (right)
45	Ventilation fan
46	Engine control unit
47	Heated rear window
48	Starter
49	EPS
50	ABS
51	Petrol engine: manual transmission automated Diesel engine: engine control unit

No.	Circuit
52	Radiator fan

No.	Circuit
53	Cooling fan, air conditioning system
54	Manual transmission automated

Bulb replacement

Switch off the ignition and switch off the relevant switch or close the doors.

Only hold a new bulb at the base! Do not touch the bulb glass with your bare hands.

The replacement bulb must be in accordance with the data on the base of the defective bulb. Do not exceed wattage given on bulb base.

To change the bulbs on the left side, open the fuse box cover. With the Z 13 DTJ engine[1], also pull the relay box in front of the fuse box upwards out of the guides. Pull off the air hose on the air filter on the right.

[1] Sales designation ⇨ 184.

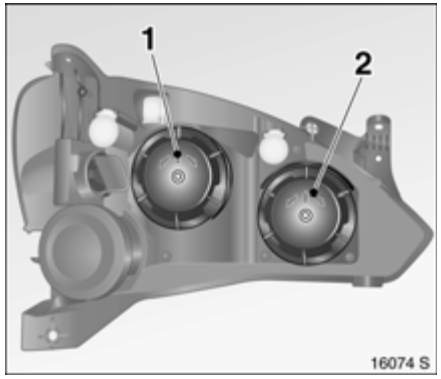

Halogen headlamp system, dipped and main beam

The headlamp system has separate systems for dipped beam **1** (outer bulbs) and main beam **2** (inner bulbs).

Dipped beam

1. Open bonnet and engage support.

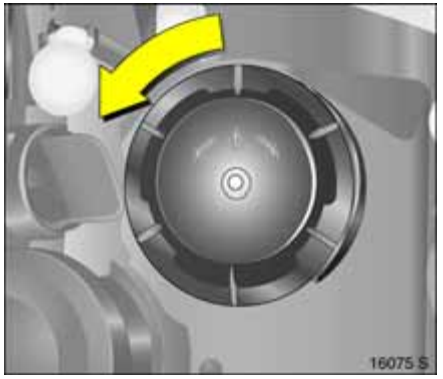

2. Rotate the cap anticlockwise and remove.

►

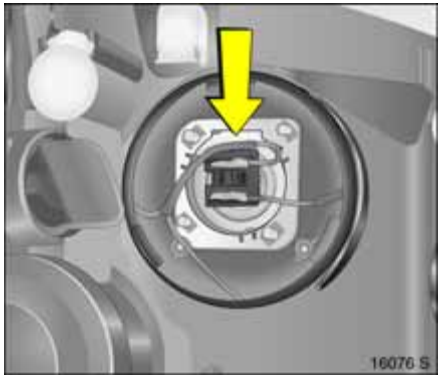

3. Push bulb on plug connector downward.
4. Remove bulb with connector from reflector housing.

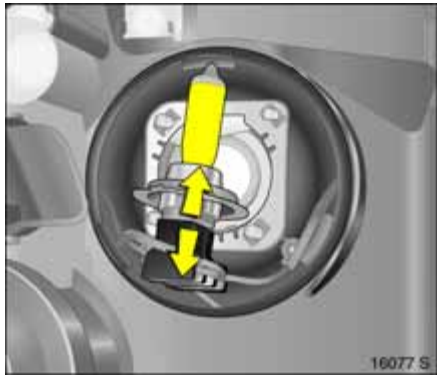

5. Detach plug connector from bulb base.
6. Plug the plug onto the new bulb.
7. Insert the bulb with connector so that the lug engages in the recess in the reflector.
8. Place headlamp protective cover in position and close.

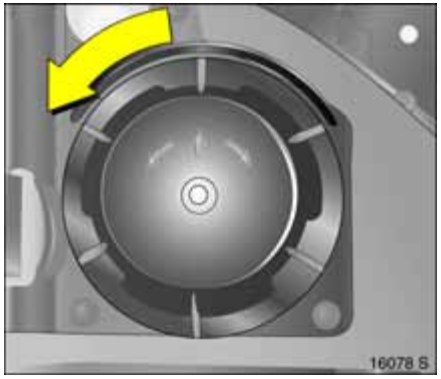

Main beam

1. Open bonnet and engage support.
2. Rotate the cap anticlockwise and remove.

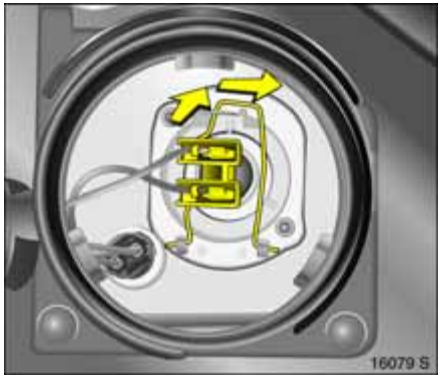

3. Detach plug connector from bulb.
4. Disengage spring wire clip from retaining lugs by moving it forward and swivelling it to the side.

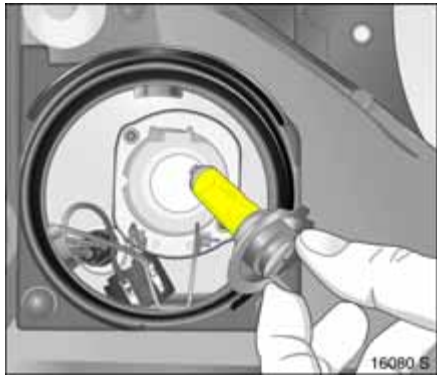

5. Remove bulb from reflector housing.
6. When fitting the new bulb, insert lugs in the reflector recesses.
7. Engage spring wire clip, plug connector onto bulb.
8. Place headlamp protective cover in position and close.

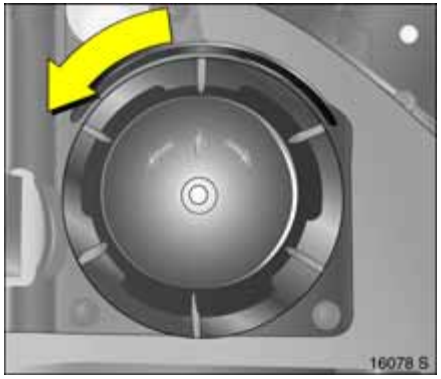

Parking lamps

1. Open bonnet and engage support.
2. Rotate the main beam headlamp cap anticlockwise and remove.
3. Detach plug connector from main beam bulb.

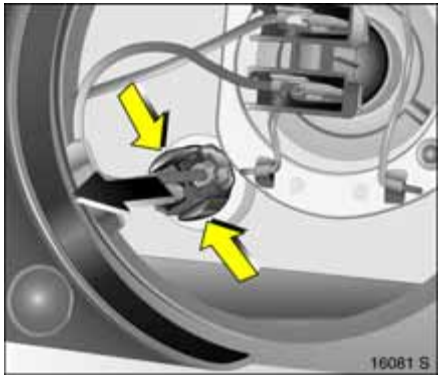

4. Remove side light bulb mounting from reflector.
5. Remove bulb from socket.
6. Insert new bulb.

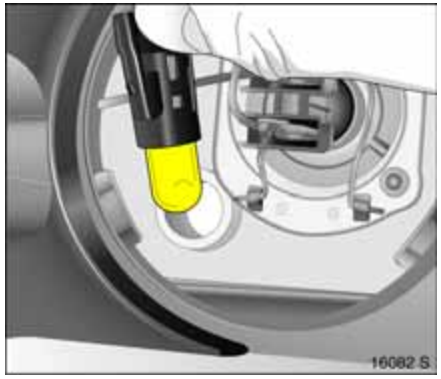

7. Insert bulb socket in reflector.
8. Attach connector to main beam bulb.
9. Place headlamp protective cover in position and close.

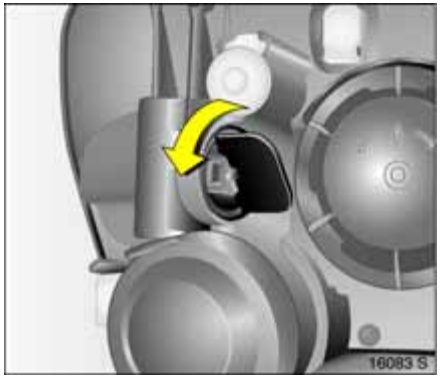

Front indicator lamps

1. Open bonnet and engage support.
2. Rotate bulb holder to left and disengage.

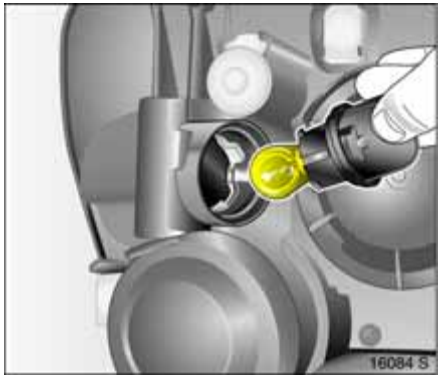

3. Push bulb into holder a little, rotate left and remove.
4. Insert new bulb.
5. Engage holder into reflector by rotating to the right.

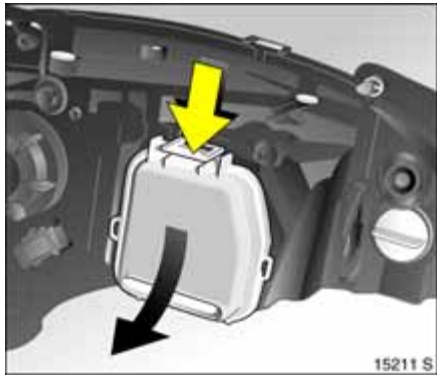

Ellipsoidal headlamp system

Dipped beam

Headlamp system with separate bulbs for dipped beam (inner bulbs) and main beam (outer bulbs).

1. Open bonnet and engage support.
2. Remove the headlamp protective cover by pressing the catch and pulling the cover downward and off.

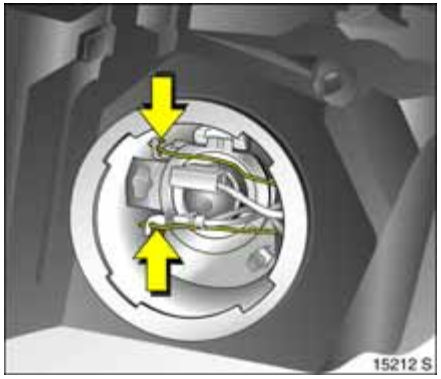

3. Detach plug connector from bulb.
4. Disengage the spring wire clip from the lugs and swivel it aside.
5. Remove bulb from reflector housing.
6. When fitting the new bulb, insert lugs in the reflector recesses.
7. Engage spring wire clip, plug connector onto bulb.
8. Place headlamp protective cover in position and close.

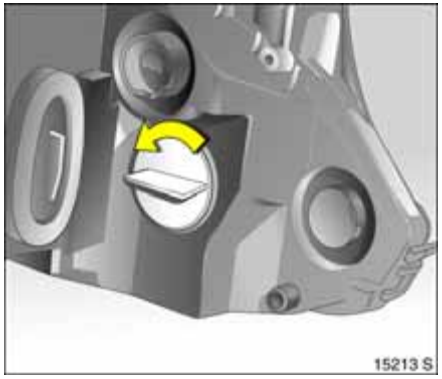

Front indicator lamps

1. Open bonnet and engage support.
2. Rotate bulb holder to left and disengage.

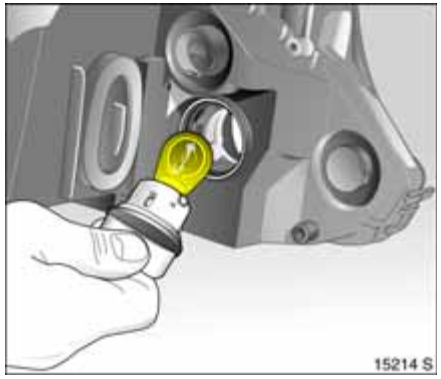

3. Push bulb into holder a little, rotate left and remove.
4. Insert new bulb.
5. Engage holder into reflector by rotating to the right.

Main beam, parking lamps

Have bulb replacement carried out by a workshop.

Side turn signal lamps

Have bulb replacement carried out by a workshop.

Fog lamps ❊

Have bulb replacement carried out by a workshop.

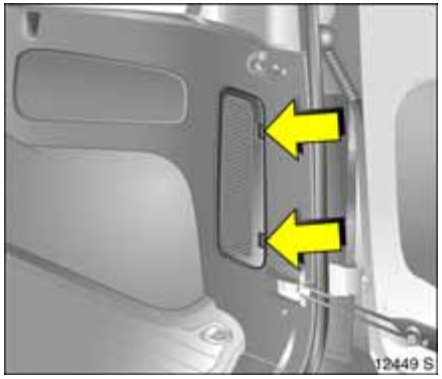

Tail lamps

1. Disengage cover by pressing retaining lugs and remove.

2. Detach plug connector from bulb mounting.
3. Grip the bulb housing from the outside, slacken the two knurled nuts using the wheel bolt spanner ✻ and unscrew by hand.
4. Detach bulb housing.
5. Press retaining lugs on bulb mounting together and remove bulb mounting, as shown in illustration 13726 S.

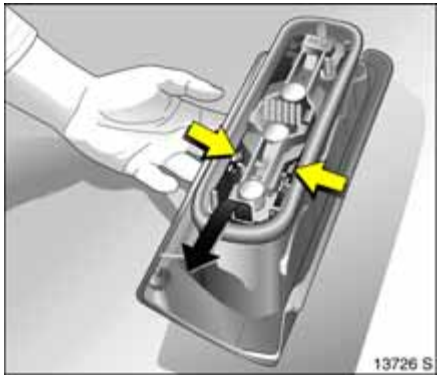

Lamps from top to bottom:

Reversing light/brake light

Turn signal lamp

Reversing light

Fog tail lamp (country-specific version: fog tail lamp at one side only).

6. Remove bulb from socket.
7. Insert a new bulb. Engage the bulb mounting in the bulb housing. Insert the bulb housing into the vehicle body. Screw the fixing nuts onto setscrews by hand and tighten. Engage the plug connector. Place the cover in position and close.

Number plate lamps

1. Unscrew both screws. Remove lamp insert.

2. Press bulb slightly towards spring clip and remove.
3. Insert new bulb.
4. Insert lamp insert and secure using a screwdriver.

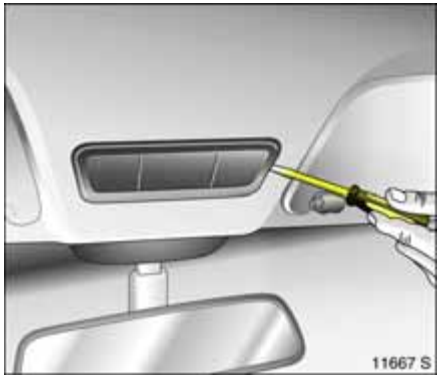

Courtesy lamps

Front courtesy lamp

1. Prise lamp out of recess using a screwdriver.

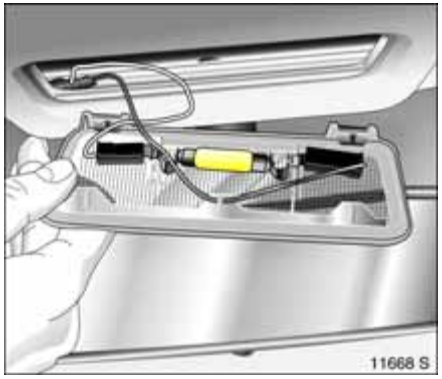

2. Press bulb slightly towards spring clip and remove.
3. Insert new bulb.
4. Insert lamp in opening and engage in position.

Front courtesy lamp with reading lamps ✻

1. Disengage and remove lens at the position located in the illustration using a screwdriver.
2. Remove bulb from socket.

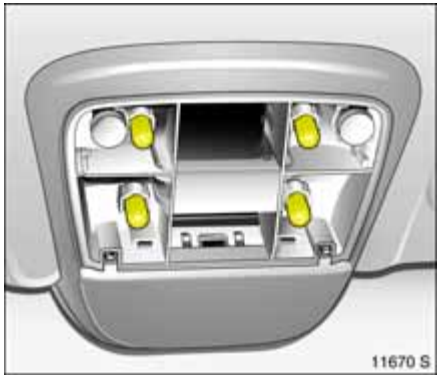

3. Insert new bulb.
4. Mount lens and engage in position.

Luggage compartment lamp ✻

1. Prise lamp out of recess using a screwdriver.
2. Press bulb slightly towards spring clip and remove.
3. Insert new bulb.
4. Insert lamp in opening and engage in position.

Instrument illumination, Information display illumination ✻

Have bulb replacement carried out by a workshop.

Vehicle care

When caring for your vehicle, observe all national environmental regulations, particularly when washing it.

Regular, thorough care helps to improve the appearance of your vehicle and maintain its value over the years. It is also prerequisite for warranty claims for any paint or corrosion damage. The following pages contain tips for vehicle care which, if used properly, will help combat the unavoidable damaging effects of the environment.

Washing
The paintwork of your vehicle is exposed to environmental influences. Wash and wax your vehicle regularly. When using automatic car washes, select a programme that includes waxing.

Bird droppings, dead insects, resin, pollen and the like should be cleaned off immediately, as they contain aggressive constituents which can cause paint damage.

When using a car wash, follow the car-wash manufacturer's instructions. Switch off the windscreen wipers ✻. Unscrew the antenna ✻ and remove the roof rack ✻.

If you wash your vehicle by hand, make sure that the insides of the wings are also thoroughly rinsed out.

Clean edges and folds on opened doors and flaps as well as the areas they cover.

Thoroughly rinse off and leather-off the vehicle. Rinse leather frequently. Use separate leathers for paint and window surfaces: remnants of wax on the windows will impair vision.

Do not use hard objects to remove spots of tar. Use tar removal spray on painted surfaces.

Polishing and waxing
Wax the vehicle regularly (at the latest when water no longer beads). Otherwise, the paintwork will dry out.

Polishing is necessary only if the paint has become dull or if solid deposits have become attached to it.

Paintwork polish with silicone forms a protective film, making waxing unnecessary.

Plastic body parts should not be treated with wax and polish.

Wheels and tyres
Do not use high-pressure jet cleaners.

Clean wheels with a pH-neutral wheel cleaner.

Wheels are painted and can be treated with the same agents as the body.

Paintwork damage
Rectify minor paintwork damage with a touch-up pen before rust forms. Have more extensive damage or rust areas repaired by a workshop.

Exterior lights
Headlamp and other lamp lens are made of plastic. Do not use any abrasive or caustic agents, do not use an ice scraper, and do not clean them dry.

Plastic and rubber parts
Plastic and rubber parts can be cleaned with the same cleaner as used to clean the body. Use interior cleaner if necessary. Do not use any other agent. Avoid solvents and petrol in particular. Do not use high-pressure jet cleaners.

Interior and upholstery
Clean the vehicle interior, including the instrument panel fascia, using interior cleaner.

The instrument panel is only to be cleaned with a soft, damp cloth.

Clean the fabric upholstery with a vacuum cleaner and brush. Remove stains with an upholstery cleaner.

Clean seat belts with lukewarm water or interior cleaner.

Caution
Close Velcro fasteners as open Velcro fasteners on clothing could damage seat upholstery.

Windows and windscreen wiper blades
Use a soft lint-free cloth or chamois leather together with window cleaner and insect remover.

When cleaning the rear window, make sure the heating element inside the window is not damaged.

For mechanical removal of ice, use a sharp-edged ice scraper. Press the scraper firmly against the glass so that no dirt can get under it and scratch the glass.

Clean smearing wiper blades with a soft cloth and window cleaner.

Locks
The locks are lubricated at the factory using a high quality lock cylinder grease. Use de-icing agent only where absolutely necessary, as this removes grease and impairs lock function. After using de-icing agent, have the locks regreased by a workshop.

Engine compartment
Clean painted surfaces in the engine compartment like any other painted surface.

For best results, wash and wax the engine compartment before and after winter. Before washing the engine, cover the alternator and brake fluid reservoir with plastic sheeting.

When washing the engine with a steam-jet cleaner, do not direct the steam jet at components of the Anti-lock Braking System ✻, the automatic air conditioning system ✻ or the belt drive and its components.

After an engine wash, have all engine room components preserved thoroughly by a workshop using protective wax.

Do not use high-pressure jet cleaners.

Underbody
Some areas of the vehicle underbody have a PVC undercoating while other critical areas have a durable protective wax coating.

After the underbody is washed, check the underbody and have more protective wax applied if necessary.

Bitumen/rubber materials could damage the PVC coating. Have underbody work carried out by a workshop.

Before and after winter, wash the underbody and have the protective wax coating checked.

Natural gas system ❇
When cleaning the engine or underbody with a steam jet or high pressure jet cleaner, do not aim the jet at components of the natural gas system. In particular, the natural gas tanks and the pressure valves at the vehicle underbody and bulkhead in the engine compartment must be protected from the pressurised spray.

In addition, these components must not be treated with chemical cleaners or waxes.

Have natural gas system components cleaned by a workshop that is authorised to maintain natural gas vehicles.

Towing equipment
Do not clean the coupling ball bar with a steam-jet or high-pressure jet cleaner.

Opel Service, maintenance

Scheduled maintenance 164
Service plan 164
Additional service work 171
Recommended fluids and lubricants . 171
Inspection system 173
Genuine Opel Parts and Accessories . 174
Performing work 174
Engine oil 175
Diesel fuel filter 177
Coolant 177
Brakes 178
Brake fluid 179
Windscreen wiper replacement 179
Windscreen washer system 180
Battery 180
Protecting electronic components 180
Laying the vehicle up for a long period of time 181
Putting the vehicle back into service . 181

Scheduled maintenance

The service intervals apply to normal operating conditions. For extreme operating conditions, ⇨ 171.

Service interval display ⇨ 173.

European service intervals
Every 30,000 km or annually, whichever occurs first.

International service intervals
Every 15,000 km or annually, whichever occurs first.

Confirmations
Service is confirmed in the boxes provided for such purposes in the Service and Warranty Booklet. The workshop confirms the date and mileage of service through a stamp and signature.

Make sure that the Service and Warranty Booklet has been correctly filled in as proof of uninterrupted service is essential to the granting of warranty or goodwill claims and is a benefit when selling the vehicle.

Service plan

The European service plan applies to the following countries: Andorra, Austria, Belgium, Cyprus, Czech Republic, Denmark, Estonia, Finland, France, Germany, Greece, Greenland, Hungary, Iceland, Ireland, Italy, Latvia, Lithuania, Luxembourg, Malta, the Netherlands, Norway, Poland, Portugal, Slovakia, Slovenia, Spain, Sweden, Switzerland, Great Britain.

The International service plan applies to all other countries.

European service plan

	Service work after year[1)] km (x 1000)[1)]	1 30	2 60	3 90	4 120	5 150
	Visually inspect control, lighting and signal devices as well as airbags; check steering column lock and ignition switch	x	x	x	x	x
	Remote control: replace batteries (don't forget the spare key)	every 2 years				
	Check and correct windscreen wipers, windscreen washer system and headlamp washer system	x	x	x	x	x
	Check and correct coolant level and frost protection (pale orange)[2)] Note freeze protection temperature in the Service and Warranty Booklet (confirmation box)	x	x	x	x	x
	Check water hoses for leaks and check to make sure they are firmly seated	x	x	x	x	x
	Check and correct brake fluid level[2)]	x		x		x
	Check battery clamps to make sure they are firmly seated and check the battery eye	x	x	x	x	x
	Vehicle System Check with TECH 2	x	x	x	x	x
	Replace pollen filter or active charcoal filter		x		x	
⊕●	if the air is heavily polluted or there are high levels of airborne dust, sand or pollen, the air-conditioning system will produce an odour	Verbal arrangement between the customer and Opel Partner				
	Replace the air filter element	every 4 years/60,000 km				
⊕	Replace spark plugs	every 4 years/60,000 km				
	Z 16 YNG	every 2 years/30,000 km				
	Visually inspect the ribbed V-belt	every 2 years/60,000 km				
⊕	Replace ribbed V-belt Y 13 DTJ, Z 13 DTJ, Y 13 DT, Z 13 DT, Z 17 DTH	every 10 years/150,000 km				
⊕	Check valve play and adjust Z16 XEP, Z 17 DTH	every 10 years/150,000 km				

1) Whichever occurs first.
2) If loss is great/leaks are present, carry out follow-up work with customer consent.

⊕ Additional work.
● Intervals are shorter under extreme operating conditions and when such is necessary due to conditions specific to the country.

	Service work after year[1)] km (x 1000)[1)]	1 30	2 60	3 90	4 120	5 150
⊕	Replace toothed belt and tension roller					
	Z 16 YNG	every 6 years/90,000 km				
	Z 17 DTH	every 10 years/90,000 km				
	Z 16 XEP	every 10 years/150,000 km				
	Change engine oil and oil filter	x	x	x	x	x
⊕●	Drain water from diesel fuel filter (with high humidity and/or low fuel grade)	x	x	x	x	x
	Empty oil separator, Z 16 YNG	every 4 years/60,000 km				
	Replace and drain water from fuel filter, Z 13 DTJ, Z 17 DTH	every 2 years/60,000 km				
	Replace fuel filter, Z 16 YNG	every 4 years/60,000 km				
	Check and adjust parking brake (wheels unladen); visually inspect wheel suspension and spring suspension front and back, brake pipes, brake pressure hoses, fuel pipes, gas lines on natural-gas powered vehicles and exhaust system		x		x	
	Check external bodywork/underbody corrosion protection; note damage in the Service and Warranty Booklet	x	x	x	x	x
⊕●	Visually inspect front and rear wheel brakes[2)]		x		x	
	Annual service check when the annual mileage is more than 20,000 km					
	Visually inspect engine, transmission (AT, MT), air conditioning compressor for leaks[2)]	x	x	x	x	x
⊕●	Remove, clean and visually inspect brake drum	every 4 years/60,000 km				

[1)] Whichever occurs first.
[2)] If loss is great/leaks are present, carry out follow-up work with customer consent.
⊕ Additional work.
● Intervals are shorter under extreme operating conditions and when such is necessary due to conditions specific to the country.

	Service work after year[1)] km (x 1000)[1)]	1 30	2 60	3 90	4 120	5 150
	Visually inspect steering bellows, track rods and axle drive	x	x	x	x	x
	Check track-rod ends and suspension ball joints	x	x	x	x	x
⊕	Change brake and clutch fluid (manual transmission automated)	every 2 years				
	Undo wheel mounting and tighten to 110 Nm torque					
	During assembly, lightly lubricate wheel bolt tapers with grease or oil					
	Check tyre condition; check and correct tyre pressures (including the spare wheel)		x		x	
	With tyre inflation system, check the set to make sure that it is complete and not out of date. Replace sealant bottle every 4 years					
⊕	Annual service check when the annual mileage is more than 20,000 km					
	Visually inspect the first-aid kit (present and stowed in the right place, intact and not out of date), lashing eyes and warning triangle	every 2 years				
	Check and correct headlamp aiming (including auxiliary headlamps)		x		x	
⊕●	Lubricate door hinges, door brakes, lock cylinders, strikers, bonnet closure and tailgate hinges.		x		x	
	Road test, final inspection (check steering column lock, ignition switch, instruments and control indicators, entire brake system, steering, air conditioning system, engine, body and chassis), reset service interval display using TECH 2	x	x	x	x	x
⊕	For Germany only: carry out emissions inspection (AU), general inspection (HU)	First after 3 years and then every 2 years thereafter				
	With commercial passenger transport, taxis, ambulances, hired vehicles, etc.	annually				
⊕	Carry out gas system test (GAP) and note it in the Service and Warranty Booklet	First after 3 years and then every 2 years thereafter				
	With commercial passenger transport, taxis, ambulances, hired vehicles, etc.	annually				

[1)] Whichever occurs first.
⊕ Additional work.
● Intervals are shorter under extreme operating conditions and when such is necessary due to conditions specific to the country.

International service plan

	Service work after year[1)] km (x 1000)[1)]	1 15	2 30	3 45	4 60	5 75
	Visually inspect control, lighting and signal devices as well as airbags; check steering column lock and ignition switch	x	x	x	x	x
	Remote control: replace batteries (don't forget the spare key)	every 2 years				
	Check and correct windscreen wipers, windscreen washer system and headlamp washer system	x	x	x	x	x
	Check and correct coolant level and frost protection (pale orange)[2)] Note freeze protection temperature in the Service and Warranty Booklet (confirmation box)	x	x	x	x	x
	Check water hoses for leaks and check to make sure they are firmly seated	x	x	x	x	x
	Check and correct brake fluid level[2)]	x		x		x
	Check battery clamps to make sure they are firmly seated and check the battery eye	x	x	x	x	x
	Vehicle System Check with TECH 2	x	x	x	x	x
	Replace pollen filter or active charcoal filter		x		x	
⊕●	if the air is heavily polluted or there are high levels of airborne dust, sand or pollen, the air-conditioning system will produce an odour	Verbal arrangement between the customer and Opel Partner				
	Replace the air filter element	every 4 years/60,000 km				
⊕	Replace spark plugs	every 4 years/60,000 km				
	Z 16 YNG	every 2 years/30,000 km				
	Visually inspect the ribbed V-belt	every 2 years/60,000 km				
⊕	Replace ribbed V-belt Y 13 DTJ, Z 13 DTJ, Y 13 DT, Z 13 DT, Z 17 DTH	every 10 years/150,000 km				
⊕	Check valve play and adjust Z16 XEP, Z 17 DTH	every 10 years/150,000 km				

1) Whichever occurs first.
2) If loss is great/leaks are present, carry out follow-up work with customer consent.

⊕ Additional work.
● Intervals are shorter under extreme operating conditions and when such is necessary due to conditions specific to the country.

	Service work after year[1)] km (x 1000)[1)]	1 15	2 30	3 45	4 60	5 75
⊕	Replace toothed belt and tension roller					
	Z 16 YNG	every 6 years/90,000 km				
	Z 17 DTH	every 10 years/90,000 km				
	Z 16 XEP	every 10 years/150,000 km				
	Change engine oil and oil filter	x	x	x	x	x
⊕●	Drain water from diesel fuel filter (with high humidity and/or low fuel grade)	x	x	x	x	x
	Empty oil separator, Z 16 YNG	every 4 years/60,000 km				
	Replace and drain water from fuel filter, Z 13 DTJ, Z 17 DTH	every 2 years/60,000 km				
	Replace fuel filter, Z 16 YNG	every 4 years/60,000 km				
	Check and adjust parking brake (wheels unladen); visually inspect wheel suspension and spring suspension front and back, brake pipes, brake pressure hoses, fuel pipes, gas lines on natural-gas powered vehicles and exhaust system		x		x	
	Check external bodywork/underbody corrosion protection; note damage in the Service and Warranty Booklet	x	x	x	x	x
⊕●	Visually inspect front and rear wheel brakes[2)]		x		x	
	Annual service check when the annual mileage is more than 20,000 km					
	Visually inspect engine, transmission (AT, MT), air conditioning compressor for leaks[2)]	x	x	x	x	x
⊕●	Remove, clean and visually inspect brake drum	every 4 years/60,000 km				

[1)] Whichever occurs first.
[2)] If loss is great/leaks are present, carry out follow-up work with customer consent.
⊕ Additional work.
● Intervals are shorter under extreme operating conditions and when such is necessary due to conditions specific to the country.

	Service work after year[1)] km (x 1000)[1)]	1 15	2 30	3 45	4 60	5 75
	Visually inspect steering bellows, track rods and axle drive	x	x	x	x	x
	Check track-rod ends and suspension ball joints	x	x	x	x	x
⊕	Change brake and clutch fluid (manual transmission automated)	every 2 years				
	Undo wheel mounting and tighten to 110 Nm torque					
	During assembly, lightly lubricate wheel bolt tapers with grease or oil					
	Check tyre condition; check and correct tyre pressures (including the spare wheel)		x		x	
	With tyre inflation system, check the set to make sure that it is complete and not out of date. Replace sealant bottle every 4 years					
⊕	Annual service check when the annual mileage is more than 20,000 km					
	Visually inspect the first-aid kit (present and stowed in the right place, intact and not out of date), lashing eyes and warning triangle	every 2 years				
	Check and correct headlamp aiming (including auxiliary headlamps)		x		x	
⊕●	Lubricate door hinges, door brakes, lock cylinders, strikers, bonnet closure and tailgate hinges.		x		x	
	Road test, final inspection (check steering column lock, ignition switch, instruments and control indicators, entire brake system, steering, air conditioning system, engine, body and chassis), reset service interval display using TECH 2	x	x	x	x	x
⊕	Carry out gas system test (GAP) and note it in the Service and Warranty Booklet	First after 3 years and then every 2 years thereafter				
	With commercial passenger transport, taxis, ambulances, hired vehicles, etc.	annually				

[1)] Whichever occurs first.
⊕ Additional work.
● Intervals are shorter under extreme operating conditions and when such is necessary due to conditions specific to the country.

Additional service work

Additional work ⊕
Additional work is work which is not required for every service but can be carried out along with a regular service.

Time allowances for such work are not included within the scope of a regular service and must be accounted for separately. However, it is more cost effective to carry out this work as part of a planned service than to have it done separately.

Extreme operating conditions ●
Operating conditions are considered extreme when one or more of the following occur frequently:

- Cold starts,
- Stop-and-go,
- Caravan/trailer towing,
- Driving on inclines and/or in high altitudes,
- Poor road conditions,
- Sand and dust,
- Extreme temperature fluctuations.

Police vehicles, taxis and driving school vehicles are also classified as operating under extreme conditions.

When operating conditions are extreme, it may be necessary to have certain service work carried out more frequently than the planned service intervals.

We recommend obtaining technical advice for the service requirements of your vehicle based on the special conditions of use.

Recommended fluids and lubricants

Only use products which have been tested and approved. Damage caused by using non-approved operating materials is not covered by the warranty.

⚠Warning

Fuels are dangerous and require appropriate care when handling. If swallowed, immediately call a doctor. Do not inhale fumes and avoid contact with the skin. Keep out of the reach of children. Fuels must not be allowed to contaminate wastewater, groundwater or soils. Dispose of empty containers properly. Always keep in mind that fuels are hazardous to health.

Engine oil
Engine oil is identified by its grade and viscosity. When choosing which engine oil to use, grade is more important than viscosity.

The new GM-Dexos 2 engine oil grade is currently the highest grade. If it is not available, the other engine oil grades that are listed must be used.

Engine oil grade for the European service plan

GM-Dexos 2	=	Petrol and diesel engines
GM-LL-A-025	=	Petrol engines
GM-LL-B-025	=	Diesel engines

Engine oil grade for the International service plan

GM-Dexos 2	=	Petrol and diesel engines
GM-LL-A-025	=	Petrol engines
GM-LL-B-025	=	Diesel engines
ACEA-A3	=	Petrol engines
ACEA-B4	=	Diesel engines without diesel particle filter (DPF)
ACEA-C3	=	Diesel engines with DPF

Topping up engine oil
Oil from different manufacturers and of different brands can be mixed providing they meet the specified engine oil criteria (grade and viscosity).

Not every engine oil available on the market satisfies the quality requirements, so always check whether the required specifications and classifications are written on the container.

If an engine oil of the required grade is not available, a maximum of 1 litre of ACEA A3/B4 or A3/B3 oil may be used (just once between oil changes). The viscosity must comply with the requirements.

Using category ACEA A1/B1 and A5/B5 engine oil is expressly forbidden because it can cause long-term damage to the engine under certain operating conditions.

Engine oil additives
The use of engine oil additives can cause damage and void the warranty.

Engine oil viscosity
Only use engine oils of viscosity 0W-30, 0W-40, 5W-30 or 5W-40.

The SAE viscosity classification defines the fluidity of the oil: the oil is more viscous when cold than when hot.

Multigrade oil is indicated by two numbers. The first number followed by a W gives the viscosity at low temperature and the second number gives the viscosity at high temperature.

Inspection system

In order to ensure economical and safe vehicle operation and to maintain the value of your vehicle, it is of vital importance that all maintenance work is carried out at the proper intervals as specified.

Fixed service interval
When service is due, **InSP** appears in the odometer display for approximately 10 seconds when the ignition is switched on. Have the next service performed by a workshop within one week or 500 km (whichever occurs first).

The service interval display takes account of off-the-road periods during which the battery is disconnected.

Flexible service interval ❇
The length of the service intervals is based on several parameters stemming from usage. For this reason, various engine-specific data is continually gathered and is used to calculate the remaining distance until the next service.

If the remaining distance is less than 1500 km, **InSP** is displayed with a remaining distance of 1000 km when the ignition is switched on and off. If less than 1000 km remains, **InSP** is displayed for several seconds. Have the next service performed by a workshop within one week or 500 km (whichever occurs first).

Display of remaining distance:

1. Switch off ignition.
2. Briefly press the trip odometer reset button. The odometer reading is shown.
3. Press and hold the reset button for about 2 seconds. **InSP** and the remaining distance are displayed.

Further information on maintenance and the inspection system can be found in the Service and Warranty Booklet, which is located in the glove compartment.

Have maintenance work – and repair work on the body and the equipment – carried out professionally by a workshop. We recommend using your Opel Partner, who has excellent knowledge of Opel vehicles and has the necessary special tools and up-to-date service instructions from Opel. It is particularly advisable to use an Opel Partner during the warranty period in order to prevent invalidation of the warranty. Further information can be found in the Service and Warranty Booklet.

Separate anti-corrosion service
Carry out according to the intervals specified in the Service and Warranty Booklet.

Genuine Opel Parts and Accessories

We recommend that you use "Genuine Opel Parts and Accessories" and conversion parts approved expressly for your vehicle type. These parts have undergone special tests to establish their reliability, safety and specific suitability for Opel vehicles. Despite continuous market monitoring, we cannot assess or guarantee these attributes for other products, even if they have been granted approval by the relevant authorities or in some other form.

"Genuine Opel Parts and Accessories" and conversion parts approved by Opel can be obtained from your Opel Partner, who can provide comprehensive advice on permitted technical changes and ensure correct installation.

Performing work

To avoid injury from moving parts and cables conducting ignition voltage, only carry out engine compartment checks (e. g. checking brake fluid or engine oil level) when the ignition is switched off.

⚠Warning

Only perform engine compartment checks when the ignition is off.

The cooling fan may start operating even if the ignition is off.

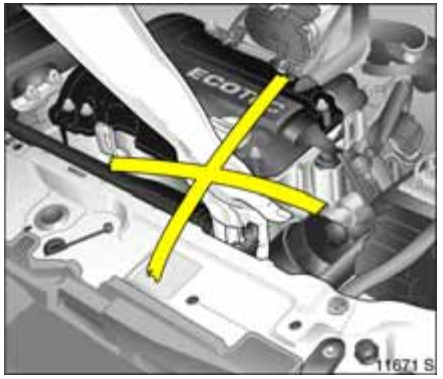

⚠Warning

The ignition system ✻ and Xenon headlamps ✻ use extremely high voltage. Do not touch.

To aid identification, the caps used when topping up engine oil, coolant and washer fluid as well as the oil dipstick are coloured yellow.

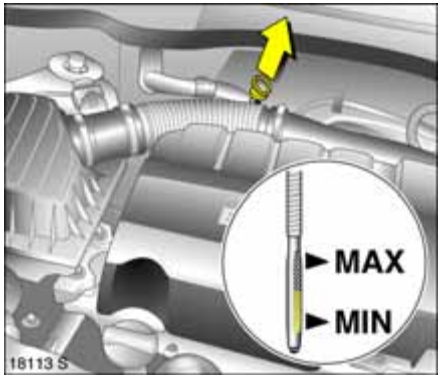

Engine oil

On vehicles with engine oil level check ✻, the engine oil level is monitored automatically ⇨ 70. We recommend that you check the engine oil level before starting a long journey.

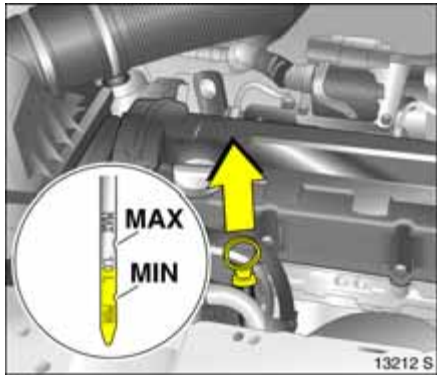

Check with the vehicle on a level surface. The engine must be at operating temperature and switched off for at least 5 minutes.

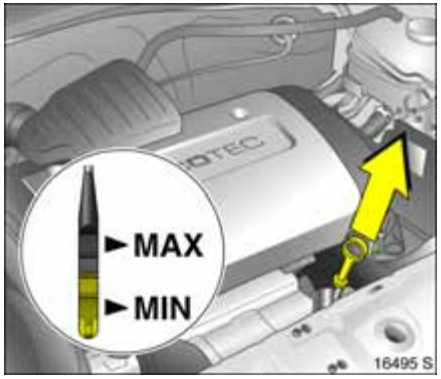

Pull out the dipstick, wipe it clean, insert it to the stop on the handle, pull out and read the engine oil level.

Push in the oil dipstick up to the stop on the handle and give it half a turn.

Different dipsticks are used depending on engine variant.

When the engine oil level has dropped to the **MIN** mark, top up engine oil.

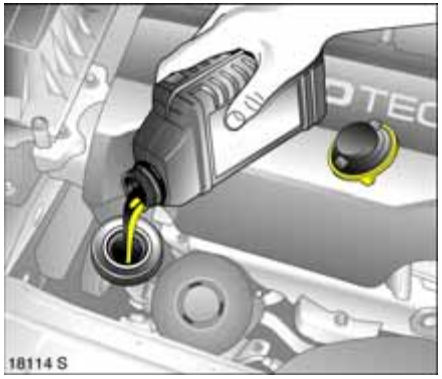

We recommend that you use the same engine oil as was used the last time it was topped up.

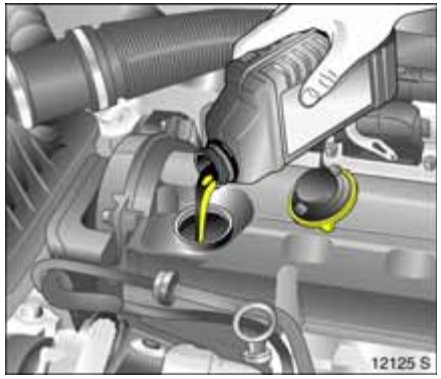

The engine oil level must not exceed the **MAX** mark on the dipstick.

Caution
If there is too much engine oil, the excess must be drained or suctioned out.

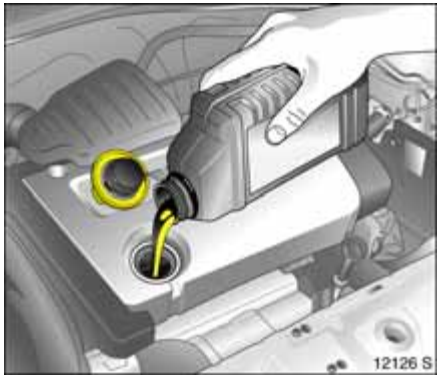

The amount must be between the **MIN** and **MAX** marks ⇨ 195.

Fit the cap on straight and tighten it.

Diesel fuel filter

On the event of engine oil change, have fuel filter checked for possible water residue by a workshop.

Illumination of ⚠ indicates water in the fuel filter ❄.

Have fuel filter checked at shorter intervals if the vehicle is subjected to extreme operating conditions such as high humidity (primarily in coastal areas), extremely high or low outside temperatures and substantially varying daytime and night-time temperatures.

Coolant

The coolant provides anti-freeze protection down to approx. -28 □C.

Caution
Only use approved anti-freeze. Coolant additives for additional corrosion protection and sealing small leaks can cause operation problems. No liability is accepted for damage caused by using coolant additives.

⚠Warning
Antifreeze is a danger to health; it must therefore be kept in the original container and out of the reach of children.

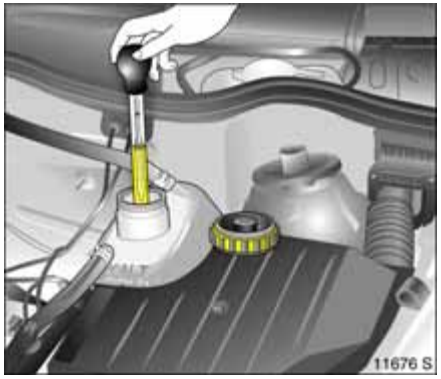

Antifreeze and corrosion protection
Have the concentration of the radiator contents tested by a workshop before winter starts. The amount of antifreeze must provide protection down to approx. -28 □C. A lower antifreeze concentration will reduce the amount of protection from frost and corrosion. Add antifreeze if necessary.

If coolant loss is topped up with water, have concentration checked and add antifreeze if necessary.

Coolant level
In a closed cooling system, there is hardly any loss.

When the cooling system is cold, the level of coolant should lie above the **KALT/COLD** mark. Top up if the level is low.

⚠Warning
Allow the engine to cool before opening the cap. Carefully open the cap, relieving the overpressure slowly.

Top up with anti-freeze. If no anti-freeze is available, fill with clean tap water or distilled water. Have the anti-freeze concentration checked.

Have the cause of coolant loss rectified by a workshop.

Caution
Too low a coolant level can cause engine damage.

Fit the cap on straight and tighten it.

Brakes

A screeching noise indicates that the brake lining is at its minimum thickness. Continued driving is possible. Have the brake lining replace as soon as possible.

Once new brake lining is fitted, do not brake unnecessarily hard for the first 200 km.

Brake fluid

⚠Warning

Brake fluid is poisonous and corrosive. Do not allow it to come into contact with eyes, skin, fabrics or painted surfaces.

Changing brake fluid
Brake fluid is hygroscopic, i. e. it absorbs water. If the brakes become hot, such as when driving on long downhill stretches, vapour bubbles can form in the water, which can have an extremely adverse effect on braking power (depending on the proportion of water).

Therefore, keep to the specified change intervals.

⚠Warning

Have the brake fluid change performed by a workshop. Please comply with the legal environmental and health regulations – concerning the disposal of brake fluid.

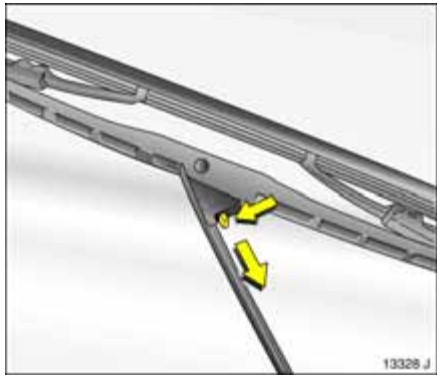

Windscreen wiper replacement

Wiper blades on the windscreen
Lift wiper arm. Move release lever and detach wiper blade.

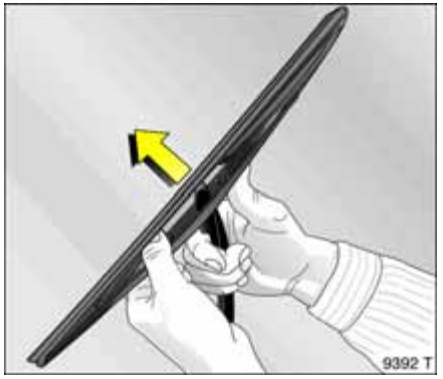

Wiper blades ✻ on the rear window
Lift wiper arm. Disengage wiper blade as shown in illustration and remove.

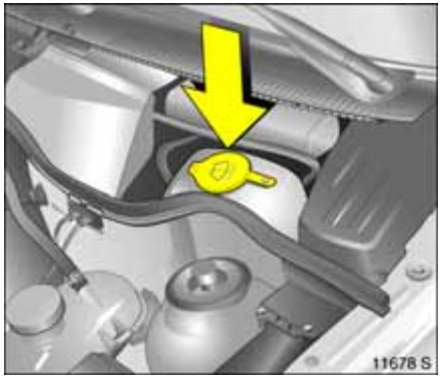

Windscreen washer system

Reservoir for windscreen washer and rear windscreen washer at driver's side in engine compartment.

Fill with clean water mixed with cleaner and anti-freeze.

Make sure there is sufficient anti-freeze protection.

When closing the reservoir, press the lid firmly over the beaded edge all the way round.

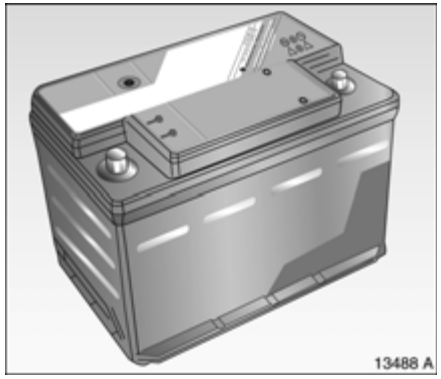

Battery

The vehicle battery is maintenance-free.

Batteries do not belong in household waste. They must be disposed of at an appropriate recycling collection point.

The retrofitting of electrical or electronic accessories may subject the battery to additional loading and cause it to become discharged. Please seek advice concerning the technical options, such as installing a more powerful battery.

Laying up the vehicle for more than 4 weeks can lead to battery discharge. Disconnect the negative terminal of the vehicle battery.

Ensure the ignition is switched off before connecting or disconnecting the vehicle battery.

Protecting electronic components

In order to prevent faults in electronic components in the electrical system, never connect or disconnect battery with engine running or ignition switched on. Never start engine with battery disconnected, e.g. when starting using jump leads.

To avoid damaging the vehicle, do not make any modifications to the electrical system, e. g. connecting additional consumers or tampering with electronic control units (chip tuning).

⚠Warning
Electronic ignition systems generate very high voltages. Do not touch the ignition system; high voltage can be fatal.

Laying the vehicle up for a long period of time

If the vehicle is to be laid up for several months, the following work should be undertaken to prevent damage.

- Wash and wax the vehicle ⇨ 161.
- Have the wax in the engine compartment and underbody checked.
- Clean and preserve rubber seals.
- Change engine oil.
- Check anti-freeze and corrosion protection ⇨ 177.
- Check the coolant level; top up anti-freeze if necessary ⇨ 178.
- Drain the windscreen washer system.
- Increase tyre pressure to the value specified for full load ⇨ 121, ⇨ 191.
- Park the vehicle in dry and well-ventilated place. With manual transmission select first or reverse gear; with manual transmission automated ❇ move the selector lever to the centre position before switching the ignition off. Use chocks or the like to prevent the vehicle from rolling.
- Do not apply hand brake.
- Disconnect the clamp from the negative terminal of the vehicle battery.

Putting the vehicle back into service

Perform the following work before recommissioning the vehicle:

- Connect the clamp to the negative terminal of the vehicle battery.
- Check tyre pressure ⇨ 121, ⇨ 191.
- Top up the windscreen washer system ⇨ 180.
- Check engine oil level ⇨ 175.
- Check coolant level ⇨ 178.
- Fit the number plate if necessary.

Technical data

Vehicle data 182
Engine data 184
Performance 185
Fuel consumption, CO_2-emissions 186
Fuel consumption, natural gas 186
Weights, payload and roof load 189
Tyres 191
Capacities 195
Dimensions 196
Mounting dimensions of towing equipment with fixed coupling ball bar 197

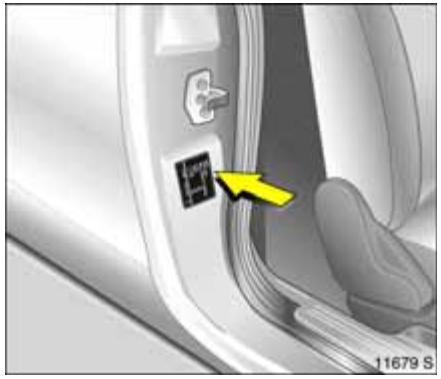

Vehicle data

The technical data is determined in accordance with European Community standards. We reserve the right to make modifications. Specifications in the vehicle documents always have priority over those given in this Owner's Manual.

The identification plate is affixed to the front right door frame.

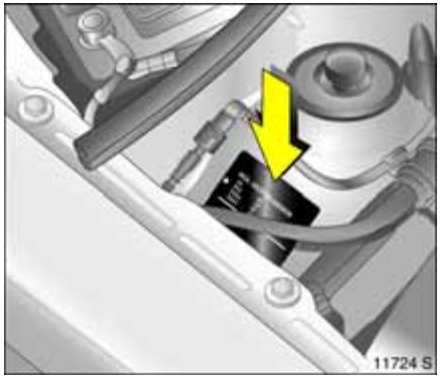

In other versions the type plate is attached to the right spring strut dome in the engine compartment.

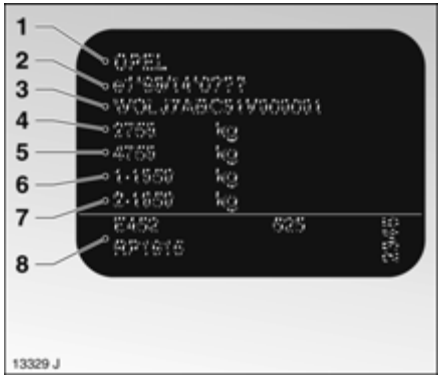

Information on identification plate

1 Manufacturer
2 Type approval number
3 Vehicle identification number
4 Gross vehicle weight rating
5 Permissible gross train weight
6 Maximum permissible front axle load
7 Maximum permissible rear axle load
8 Vehicle-specific or country-specific data

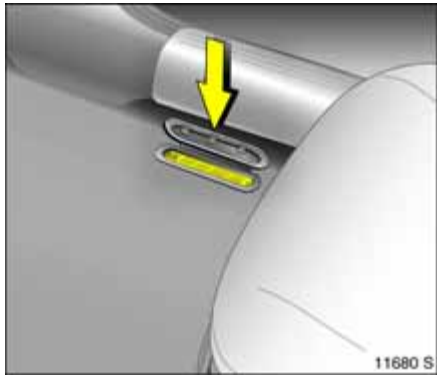

The vehicle identification number is stamped on the identification plate and in the vehicle floor on the right-hand side under a cover between the front passenger door and seat.

The vehicle identification number may be attached to the instrument panel.

Engine code and engine number. Marked on engine block at left side of engine in petrol engines, and beneath diesel injection pump at right side of engine in diesel engines.

Engine data

Sales designation **Engine identifier code**	1.4 TWINPORT **Z 14 XEP**	CNG **Z 16 YNG**	1.3 CDTI **Z 13 DTJ**	1.7 CDTI **Z 17 DTH**
Number of cylinders	4	4	4	4
Piston displacement [cm^3]	1364	1598	1248	1686
Brake horse power [kW/bhp] at rpm	66 5600	69 6200	55 4000	74 4400
Torque [Nm] at rpm	125 4000	133 4200	170 1750 to 2500	240 2300
Fuel type[1)]	Petrol	Natural gas/petrol	Diesel	Diesel
Octane requirement [RON][2)] recommended possible possible Cetane requirement [CN][2)]	 **95 (P)**[3)] 98 (PP)[3)] 91 (R)[3)4)] –	 **95 (P)**[3)] 98 (PP)[3)] – –	 – – – 49 (D)[5)]	 – – – 49 (D)[5)]
Max. permissible engine speed, continuous operation approx. [rpm].	6200	6400	5020 to 5180	5000 to 5200
Oil consumption [l/1000 km]	0.6	0.6	0.6	0.6

1) Standard high-quality fuels, unleaded DIN EN 228, diesel DIN EN 590. Any commercially available natural gas containing methane can be used for natural gas operation.
2) Standard high-quality fuels: R = Regular, P = Premium, PP = Premium Plus, D = Diesel. Value printed in bold: recommended fuel.
3) Knock control system automatically adjusts ignition timing according to type of fuel used (octane number).
4) Slight reduction in engine output and torque if 91 RON is used.
5) A lower value is possible with winter diesel fuels.

Performance

Engine	Z 14 XEP	Z 16 YNG	Z 13 DTJ	Z 17 DTH
Maximum speed[1] [km/h]				
5-speed manual transmission	164	165	152[2]	170
Manual transmission automated	–	–	152[2]	–

[1] The maximum speed is achievable with a maximum of half payload. Optional equipment may reduce the specified maximum speed of the vehicle.
[2] Specific version with electronic speed limitation at 125 km/h.

Fuel consumption, CO_2-emissions

Directive 80/1268/EEC (last changed by 2004/3/EC) has applied for the measurement of fuel consumption since 1996.

The directive is oriented to actual driving practices: Urban driving is rated at approx. $^1/_3$ and off-road driving with approx. $^2/_3$ (urban and extra-urban consumption). Cold starts and acceleration phases are also taken into consideration.

The specification of CO_2 emission is also a constituent of the directive.

The figures given must not be taken as a guarantee for the actual fuel consumption of a particular vehicle.

All values stem from the EU base model with standard equipment.

The calculation of fuel consumption as specified by directive 2004/3/EC takes account of the vehicle's kerb weight, ascertained in accordance with the said regulation. Optional extras may result in slightly higher fuel consumption and CO_2 emission levels than those quoted.

Saving Fuel, Protecting the Environment ⇨ 108.

Fuel consumption, natural gas

The data on fuel consumption has been ascertained with reference fuel G20 (methane content 99 - 100 mol%) under prescribed driving conditions (see previous columns). The fuel consumption values will deviate from those specified if natural gas with a lower methane content is used.

All values stem from the EU base model with standard equipment. The consumption calculated according to the 1999/100/EC directive takes into consideration the kerb weight laid down in agreement with this regulation. Additional equipment as well as the gas condition, filling station pressure, mode of driving and the road and traffic conditions can lead to higher consumptions and CO_2 values than those specified.

Fuel consumption, CO_2 emissions (up to tyre width of 185 mm)

Engine	Z 14 XEP	Z 13 DTJ	Z 17 DTH
Manual/manual transmission automated			
urban [l/100 km]	7.9/–	6.1/ 5.9	6.6/–
extra-urban [l/100 km]	5.2/–	4.5/ 4.5	4.4/–
altogether [l/100 km]	6.2/–	5.1/ 5.0	5.2/–
CO_2 [g/km]	148/–	134/135	140/–

Fuel consumption, CO_2 emissions (up to tyre width of 205 mm)

Engine	Z 14 XEP	Z 13 DTJ	Z 17 DTH
Manual/manual transmission automated			
urban [l/100 km]	8.1/–	6.3/ 6.1	6.8/–
extra-urban [l/100 km]	5.4/–	4.7/ 4.7	4.6/–
altogether [l/100 km]	6.4/–	5.3/ 5.2	5.4/–
CO_2 [g/km]	153/–	139/140	146/–

Fuel consumption (H gas)[1)]

Engine	Z 16 YNG
Manual transmission	
urban [m^3/100 km]	10.1
extra-urban [m^3/100 km]	5.9
altogether [m^3/100 km]	7.5

Fuel consumption (H gas)[1)]

Engine	Z 16 YNG
Manual transmission	
urban [kg/100 km]	6.6
extra-urban [kg/100 km]	3.9
altogether [kg/100 km]	4.9

CO_2 emissions[2)](natural gas operation, g/km according to 80/1268/EEC)

Engine	Z 16 YNG
CO_2 altogether [g/km]	133

1) These values relate to the use of test gas G20 (H gas) in compliance with calculation method 1999/100/EC.
2) Emission reduction as per Euro4.

Weights, payload and roof load

The payload is the difference between the permitted gross vehicle weight (see identification plate ⇨ 182) and the EC kerb weight.

To calculate the kerb weight, enter the data for your vehicle below:

- Kerb weight from Table 1 ⇨ 190 +..... kg
- Weight of heavy accessories from Table 2 ⇨ 190 +..... kg

Total =..... kg

is the EC kerb weight.

Optional equipment and accessories increase the kerb weight, which means that the payload will also change slightly.

Note the weights given in the vehicle documents and the identification plate.

The combined total of front and rear axle loads must not exceed the permissible gross vehicle weight. For example, if the front axle is bearing its maximum permissible load, the rear axle can only bear a load that is equal to the gross vehicle weight minus the front axle load.

The permissible axle loads must not be exceeded.

See the identification plate or vehicle documents for permissible axle loads.

Caravan/trailer towing ⇨ 126.

Roof load

The permissible roof load is 100 kg. The roof load consists of the weight of the roof rack plus the load carried.

Driving hints ⇨ 106. Roof rack ⇨ 125.

Weights (kg), Table 1, kerb weight[1)]

Combo van	Engine	Manual transmission	Manual transmission automated
without/with air conditioning [kg]	Z 14 XEP	1190/1350	–
	Z 16 YNG	1322/1352	–
	Z 13 DTJ	1285/1420	1285/1420
	Z 17 DTH	1320/1455	–

Weights (kg), Table 1, kerb weight

Combo	Engine	Manual transmission	manual transmission automated
without/with air conditioning [kg]	Z 14 XEP	1235/1265	–
	Z 16 YNG	1367/1397	–
	Z 13 DTJ	1325/1355	1325/1355
	Z 17 DTH	1365/1395	–

Weights, Table 2, heavy accessories

Accessories	Folding sun roof	Towing equipment	Anti-lock braking system (ABS)	Sliding door (front passenger's side)	Rear vent windows	Load compartment grille	Split load compartment grille
Weight [kg]	18	18	7	23	9	8	10

[1)] According to EC Directive 70/156/EC, including assumed weights for driver (68 kg), luggage (7 kg) and all fluids (tank 90 % full).

Tyres

Not all tyres available on the market currently meet the structural requirements. We recommend that you consult an Opel Partner concerning suitable tyre makes.

These tyres have undergone special tests to establish their reliability, safety and specific suitability for Opel vehicles. Despite continuous market monitoring, we are unable to assess these attributes for other tyres, even if they have been granted approval by the relevant authorities or in some other form.

Further information ⇨ 121.

Winter tyres ✻

Tyre sizes 185/60 R 15, 185/65 R 15, 195/45 R 16 and 195/50 R 16 are not permitted for winter driving.

Exception: Tyres of size 185/60 R 15 may be used as winter tyres on the Combo Tramp/Arizona.

If winter tyres are in use, the spare wheel may still be fitted with a summer tyre. Use of the spare wheel may alter vehicle handling. Obtain a replacement for the faulty tyre as soon as possible, and have the wheel balanced and fitted to the vehicle.

Further information ⇨ 124.

Tyre chains ✻

Tyre chains may be used on the front wheels only.

We recommend the use of tyre chains with a fine mesh that add no more than 10 mm to the running surface and the insides of the tyres (including chain lock).

Tyre chains are not permitted on the spare wheel and tyres sizes 185/60 R 15, 185/65 R 15, 195/45 R 16 and 195/50 R 16.

Exception: Tyre chains on tyres of size 185/60 R 15 are permitted on Combo Tramp/Arizona.

Tyre chains are generally permitted on tyres of size 185/55 R 15.

Further information ⇨ 125.

Wheels

Wheel bolt tightening torque: 110 Nm.

Spare wheel ✻

Depending on the version, the spare wheel is designed for use as a temporary spare wheel ✻: the handling of the vehicle may change if the spare wheel is used. Replace a defective tyre as soon as possible, balance the wheel and fit it to vehicle. Pay attention to notes on this page and on ⇨ 125, ⇨ 135.

On vehicles with alloy wheels ✻ the spare wheel may have a steel rim.

The spare wheel can be fitted with a smaller tyre[1)] and a smaller rim than the wheels fitted on the vehicle.

Tyre pressure (overpressure)

The specified tyre pressure are valid for cold tyres. The increased tyre pressure resulting from extensive driving must not be reduced. The tyre pressure specified on the following pages apply to both summer and winter tyres.

The spare wheel must always be filled with the tyre pressure for a full load - see tables on following pages.

Temporary spare wheel tyre pressure ✻ – see tables on the following pages.

Further information ⇨ 121 to ⇨ 125.

[1)] Country-specific version: The spare wheel is only permitted for use as a temporary spare.

Tyre pressure (overpressure)

Combo van		Comfort when loaded with up to 2 persons and 100 kg luggage [kPa/bar]		Fully loaded [kPa/bar]	
Engine	Tyres	Front	Rear	Front	Rear
Z 14 XEP	175/70 R 14[1)2)], 175/65 R 14[2)], 185/55 R 15[3)4)], 185/60 R 15	240/2.4	240/2.4	240/2.4	350/3.5
Z 13 DTJ	175/70 R 14[1)2)], 175/65 R 14[2)], 185/55 R 15[3)4)], 185/60 R 15	240/2.4	240/2.4	240/2.4	350/3.5
Z 17 DTH	185/60 R 15, 185/55 R 15[4)]	240/2.4	240/2.4	240/2.4	350/3.5
Z 16 YNG	185/60 R 15, 185/55 R 15[4)]	240/2.4	240/2.4	240/2.4	350/3.5
all	T 115/70 R 16 (Temporary spare wheel)[5)]	420/4.2	420/4.2	420/4.2	420/4.2

1) Recommendation: Dunlop SP 10, Firestone F 580, Pirelli P 3000.
2) Not permitted in version with "increased payload".
3) Only permitted in version with "increased payload".
4) Recommended winter tyres: Conti Vanco Winter C90Q.
5) Notes on temporary spare wheel ⇨ 125, ⇨ 135.

Tyre pressure (overpressure)

Combo		Comfort when loaded with up to 3 persons [kPa/bar]		Fully loaded [kPa/bar]	
Engine	Tyres	Front	Rear	Front	Rear
Z 14 XEP	175/70 R 14[1], 175/65 R 14, 185/55 R 15[2)3)], 185/60 R 15[4], 185/65 R 15, 195/45 R 16, 195/50 R 16	240/2.4	240/2.4	240/2.4	350/3.5
Z 13 DTJ	175/70 R 14[1], 175/65 R 14, 185/55 R 15[2)3)], 185/60 R 15[4], 185/65 R 15	240/2.4	240/2.4	240/2.4	350/3.5
Z 17 DTH	185/60 R 15, 185/55 R 15[3], 185/65 R 15, 195/50 R 16	240/2.4	240/2.4	240/2.4	350/3.5
Z 16 YNG	185/60 R 15, 185/55 R 15[3], 185/65 R 15	240/2.4	240/2.4	240/2.4	350/3.5
all	T 115/70 R 16 (Temporary spare wheel)[5]	420/4.2	420/4.2	420/4.2	420/4.2

[1] Recommendation: Michelin Agilis 41, Continental VancoContact.
[2] Only permitted in version with "increased payload".
[3] Recommended: Conti C90Q.
[4] Recommended: Pirelli P 6000, Continental CPC, Goodyear NCT5, Dunlop SP 01.
[5] Notes on temporary spare wheel ⇨ 125, ⇨ 135.

Tyre pressure (overpressure)

Combo Tramp/Arizona		Comfort when loaded with up to 3 persons [kPa/bar]		Fully loaded [kPa/bar]	
Engine	Tyres	Front	Rear	Front	Rear
Z 14 XEP, Z 16 YNG, Z 13 DTJ, Z 17 DTH	185/60 R 15, 185/65 R 15[1)]	240/2.4	240/2.4	240/2.4	350/3.5

[1)] Recommended: Goodyear Eagle Hydragrip.

Capacities

Engine oil

Engine	Z 14 XEP	Z 13 DTJ	Z 17 DTH
Incl. filter [l]	3.5	3.5	5.0
Between MIN and MAX [l]	1.0	1.0	1.0

Fuel tank

Engine	Z 14 XEP	Z 13 DTJ	Z 17 DTH
Petrol/diesel, nominal capacity [l]	52	52	52

Engine oil

Engine	Z 16 YNG
Incl. filter [l]	3.5
Between MIN and MAX [l]	1.0

Fuel tank

Engine	Z 16 YNG
Natural gas, nominal capacity [kg]	17.5[1)]
petrol, nominal capacity [l]	14

[1)] 17.5 kg (average fill limit), corresponding to a tank volume of 108 l. Fill weight in kg is dependent on outside temperature, filling pressure and type of tank system.

Dimensions

	Combo van	Combo
Overall length [mm]	4322	4322
Overall width [mm]	1684	1684
Width with two exterior mirrors [mm]	1892	1892
Height at kerb weight [mm]	1801	1801
Length of luggage compartment [mm]	1787[1)]/2700[2)]	1020[3)]/1664[4)]/2700[2)]
Width of luggage compartment [mm] without/with 1/with 2 sliding doors min. width between wheel housings	 1348/1399/1449 1107	 –/1399/1449 1107
Max. height of luggage compartment [mm]	1190	1190
Height of luggage compartment sill [mm]	550	550
Opening width, tailgate min./max. [mm]	1030/1210	1030/1210
Opening height, tailgate min./max. [mm]	1120/1139	1120/1139
Opening width of sliding door [mm]	620	620
Opening height of sliding door [mm]	913	1023
Wheelbase [mm]	2716	2716
Turning circle diameter [m]	11.25	11.25

1) behind the front seats
2) with front passenger seat folded down
3) behind the rear seats
4) with the backrests folded down.

Mounting dimensions of towing equipment with fixed coupling ball bar

All dimensions relate to trailer towing equipment approved by Opel.

Dimension	mm
A	71
B	929
C	515
D	506.3
E	274.3
F	149
G	401.7
H	384
I	398

⚠Warning

Only use towing equipment approved for your vehicle. We recommend entrusting retrofitting of towing equipment to your workshop.

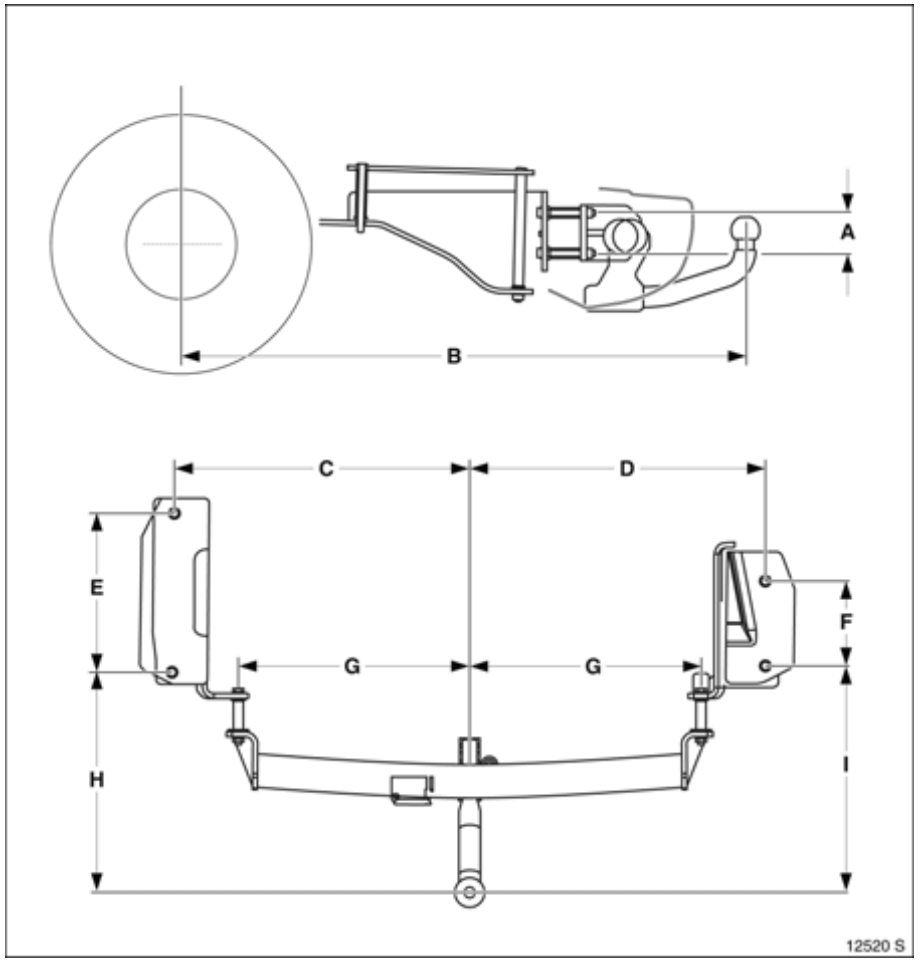

Index

A

ABS (Anti-lock Braking System) 119
Accessories 133
Accessory socket 61
Air intake 99
Air recirculation system 97
Air vents 93
Airbags 56
Alarm 33
Alternator 69
Antenna 90, 161
Anti-corrosion service 173
Antifreeze 177
Antifreeze protection 177, 180
Anti-knock quality of fuel
  Octane number 184
Anti-theft alarm system 31
Anti-theft lock
  Alloy wheels 139
Anti-theft protection 17
Aquaplaning 123
Ashtray 62

B

Battery 107, 180
  Interruption of power supply 37, 105
Before starting off 15
Belt tensioners 49
Bleeding, diesel fuel system 128
Bonnet 128
Boot, see Luggage
 compartment 28, 29, 42
Brake assist 120
Brake lamps 157
Brake system 118
Brakes
  ABS 119
  Brake assist 120
  Brake lamps 157
  Brake servo unit 106
  Hand brake 120
Bulb replacement 151
Bulbs 151

C

Capacities 195
Car Pass 20
Caravan/trailer towing 106, 125
Care 160
Catalytic converter 114, 118, 129
Central locking system 23, 24
Centre console lighting 88
Changeover inhibitor 114
Changing the remote control battery 24
Changing tyre/wheel type 121
Changing wheels 137
Child restraint system 53
Child safety locks 27
Cigarette lighter 61
Clock 72
Clutch operation 105, 107
CO_2 emissions 186
Coin holder 65
Cold start 107
Contrast 81
Control indicator
  ABS (Anti-lock Braking System) 119
  Airbag 59
  Engine electronics 116
  Exhaust 115
  Immobiliser 21
Control indicators 12, 66
  Belt tensioners 50
  EPS (Electric Power Steering) 70
Coolant 177
Coolant level 178
Coolant temperature display 73
Coolant thermometer 73
Correcting time 80
Coupling socket load 126
Courtesy lamp 88
Courtesy lamps
  Bulb replacement 158, 159

D

Dashboard, see Instrument panel 9
Data 20, 182
Date 77
Daytime running lights 84
Decommissioning 181
Demisting and defrosting
  Windows 96
  With the air conditioning system 98
Diesel fuel filter 177
Diesel fuel system 128
Diesel particle filter 37, 68, 107, 116
Dimensions 196
Dipped beam 7
  Bulb replacement 151, 155
Display 76, 100
Display instruments 71
Display mode 82
Door locks 20, 162
Driving abroad 110, 164
  Headlamps 89
Driving hints 106

E

Easytronic 15
  Driving programmes 102
  Fault 104
  Interruption of power supply 105
  Kickdown 103
  Selector lever 15
  Winter programme 103
Economical driving 108
Electric power steering 70, 106
  Towing 131
Electric windows 36
Electrical system 145, 180, 195
Electronic components 180
Electronic immobiliser 21
Ellipsoidal headlamp system 155
Engine code 184
Engine control indicator 116
Engine oil 172, 175
  Additives 172
  Topping up 172
  Viscosity 172
Engine oil consumption 106, 175, 184
Engine oil level 175
Engine speed 107
Engine wash 162, 163
Environmental protection 160
EPS 70, 106
Exhaust control indicator 115
Exhaust gases 116
Exhaust system 106
Exterior mirrors 5, 34, 35, 37

F

Fan ... 94
Fault ... 37
Filling station
  Capacities ... 195
  Engine oil level ... 175
  Fuel ... 110, 184
  Opening the bonnet ... 128
  Tyre pressure ... 191
  Vehicle data ... 182, 183
  Windscreen washer system ... 180
First-aid kit ... 133
Flat tyre ... 142
Fog lamps ... 86
  Bulb replacement ... 156
Fog tail lamp ... 86
  Bulb replacement ... 157
Foot brake ... 118, 120
Front passenger airbag ... 56
Fuel ... 110, 184
Fuel consumption ... 108, 110, 185, 186
Fuel filter ... 177
Fuel gauge ... 73, 74
Fuel level ... 73
Fuel selection button ... 113
Fuel system, diesel ... 128
Fuse remover ... 145
Fuses ... 145

G

Gas type
  H gas ... 110, 188
  L gas ... 110
Gears ... 15, 105
Generator, see Alternator ... 69
Genuine Opel Parts and Accessories ... 174
Glasses compartment ... 63
Glove compartment ... 63
Graphical information display ... 76
Gross vehicle weight ... 189
Gross vehicle weight rating ... 189

H

Halogen headlamp system ... 151
Hand brake ... 16, 17, 120
Hazard warning lamps ... 86
Head restraints ... 40, 41
Headlamp flash ... 85
Headlamp range adjustment ... 87
Headlamp switch ... 6, 84
Headlamp washer system ... 13, 83, 180
Headlamps ... 6
  Daytime running lights ... 84
  Driving abroad ... 89
  Fog lamps ... 86
  Reversing lamps ... 85
  Warning device ... 82
Headlights
  Changing bulbs ... 151, 155
Heated exterior mirrors ... 14, 35, 37
Heated front seats ... 40
Heated rear window ... 14, 37
Heating ... 92, 95
  Seats ... 40
  With the air conditioning system ... 92
Height adjustment
  Seat belts ... 52
  Steering wheel ... 6
High pressure jet cleaner ... 163
Horn ... 13

I

Identification plate ... 182, 183
Idling ... 105
Ignition logic ... 82
Ignition switch ... 16
Ignition system ... 174, 180
Immobiliser ... 21
Information display ... 76
Infotainment system ... 76, 90
Instrument illumination ... 87
  Bulb replacement ... 159
Instrument panel ... 9
Instruments ... 9, 66, 71, 72
Interior mirror ... 6, 35
Interruption of power supply
  Easytronic ... 105
  Electric windows ... 37

J

Jack ... 136, 139
Jump leads ... 129

K

Key
Extending ... 20
Ignition lock ... 16
Locking doors ... 20, 23, 24
Remove ... 17
Starting ... 16, 21
Starting the engine ... 16
Keys ... 2, 20

L

Language selection ... 80
Lashing eyes ... 44
Leaf doors ... 3, 22, 29
Light switch ... 6
Lighting ... 6, 84
Driving abroad ... 89
Load compartment
Loading ... 47
Load compartment grille ... 46
Loading ... 47, 126
Loading the vehicle ... 47
Locking doors ... 20, 23, 24
Locking from the inside ... 22, 25
Locking the doors ... 2, 22, 24
Locks ... 162
Lubricants ... 175
Luggage compartment ... 28
Bulb replacement ... 158
Cover ... 44
Extension ... 42
Lashing eyes ... 44
Lighting ... 88
Loading ... 47, 126, 189
Locking ... 28
Luggage compartment cover ... 44

M

Main beam ... 7, 85
Bulb replacement ... 152
Control indicator ... 68
Maintenance
Air conditioning system ... 99
Antifreeze protection ... 177
Brake fluid ... 179
Brakes ... 178
Catalytic converter ... 118
Engine oil ... 175
Fuel consumption ... 109
Tyre pressure ... 121
Tyres ... 122, 123
Manual transmission ... 105
Manual transmission, see Transmission 15
Mirrors ... 6, 34, 35
Misted windows ... 96, 98
Mobile telephone ... 91
Muffler, see Exhaust system ... 116

N

Natural gas ... 74, 110, 113
Number plate lamps
Bulb replacement ... 158
Number plate lighting ... 158

O

Octane numbers ... 184
Odometer ... 71
Oil ... 172
Additives ... 172
Topping up ... 172
Viscosity ... 172
Oil consumption ... 175, 184
Oil level ... 175
Oil pressure ... 67
Opel Service ... 164
Operating temperature ... 107
Outside temperature gauge ... 76
Overrun ... 107, 109

P

Paintwork damage 161
Parking 17
Parking lamps 6
  Bulb replacement 153
Parking the vehicle 17
Parts 174
Pedals 107
Performance 185, 186
Petrol 184
Pollen filter 99
Power steering,
  see electric power steering 70, 106
Power-assisted steering,
  see electric power steering 70, 106
Preheater start switch 16
Preheating 68
Pushing, towing 129

R

Radio 90
Radio equipment (CB) 91
Radio reception 90
Rear lamp cluster 84
  Bulb replacement 157
Rear seat backrests 42
Rear window
  washer system 14, 83, 161, 180
Rear window wiper 14, 83
Refuelling
  Fuel filler cap 111
  Fuel gauge 73, 74
Relays 145
Remote control 23
  Central locking system 23
  Steering wheel 90
Replacement keys 20
Reversing lamps 85
  Bulb replacement 157
Roof load 47, 106, 109
Roof rack 47, 109, 125
Roof racks 47, 109, 125
Running-in 106
  Brakes 178

S

Safeguard against
  Unauthorised use 16, 17, 20, 21
Safety accessories 133
Safety net 45
Saving energy 108
Seat adjustment 38
Seat belts 52, 162
Seat height adjustment 4, 39
Seat position 39
Seats 3, 38
  Heated 40
Self-diagnosis 51, 60, 120
Self-help 128
  Central locking 26
  Electric windows 36
  Information display 77
  Radio remote control 23
Service interval display 173
Service intervals 164
  Additional work 171
  Extreme operating conditions 171
  Main service 164
Service work 173
Side airbags 58

Signal system 13
Sliding doors 27
Spare fuses 145
Spare keys 20
Spare wheel 134, 137
Speed 108, 109
  Fuel consumption 108, 109
Speedometer 71
Starter switch 16
Starting the engine 16, 21, 129
  Self-help 129
Steam jet cleaner 163
Steering column lock 16, 17
Steering wheel adjustment 6
Steering wheel remote control 19, 90
Stowage compartments 39, 63, 64
Sun visors 65
System settings 79

T

Tachometer 71
Tail lamps 84
  Bulb replacement 157
Tailgate 2, 28
Technical data 182
Telephone, see Mobile telephone 91
Temperature regulation 94
Temporary spare wheel 125, 135
The first 1000 km 106
Tightening torque 141, 191
Time 77
Tools 136
Towing 131
Towing equipment 126
Towing eye 131, 133
Transmission, Easytronic
  Driving programmes 102
  Fault 104
  Interruption of power supply 105
  Kickdown 103
  Selector lever 15
  Winter programme 103
Transmission, manual 15, 105
Tread depth 123
Trip odometer 72
Triple information display 76
Turn signal lamps 7, 85
Turn signals
  Bulb replacement 154, 156, 157
Tyre chains 125
Tyre condition 122
Tyre pressure 121, 191
Tyre repair kit 142

U

Underbody wash 163
Units of measure 81
Unleaded fuel 114, 184

V

Valve cap key 121
Vehicle care 160
Vehicle decommissioning 181
Vehicle identification number 183
Vehicle keys, see Keys 20
Vehicle recommissioning 181
Vehicle tools 136
Ventilation 92
VIN,
  see Vehicle Identification Number 182

W

Warning buzzers 82
Warning triangle 133
Washer fluid reservoir,
windscreen washer system 180
Wheel trim 124
Wheels 121
Wheels, tyres 121
Windows
Demisting and defrosting 96, 98
Windscreen washer system 13, 83, 180
Antifreeze protection 180
Washer fluid reservoir 180
Windscreen wipers 13, 82, 179
Winter mode
Starting-off aid 103
Winter operation
Battery 107
Coolant, antifreeze 177
Fuel consumption 109
Fuel for diesel engines 110
Heating 92
Locks 162
Tyre chains 125
Window demisting
and defrosting 96, 98
Windscreen washer system,
antifreeze protection 180
Winter programme 103
Winter tyres 124, 191

Copyright by ADAM OPEL GmbH, Rüsselsheim, Germany.

The information contained in this publication is valid as of the date indicated below.
Adam Opel GmbH reserves the right to make changes to the technical specifications, features and design of the vehicles relative to the information contained in this publication, as well as changes to the publication itself.

Edition: August 2009, ADAM OPEL GmbH, Rüsselsheim.

Printed on chlorine-free bleached paper.

KTA-2387/13-en 24 439 257 Art.-Nr. 09 927 0413 08/2009