TOYOTA

Owner's Manual

For your safety and comfort,
read carefully and keep in the vehicle.

COASTER

NOT FOR REPRODUCTION

Foreword

Welcome to the growing group of value–conscious people who drive Toyotas. We are proud of the advanced engineering and quality construction of each vehicle we build.

This Owner's Manual explains the operation of your new Toyota. Please read it thoroughly and have all the occupants follow the instructions carefully. Doing so will help you enjoy many years of safe and trouble–free motoring. For important information about this manual and your Toyota, read the following pages carefully.

When it comes to service, remember that your Toyota dealer knows your vehicle very well and is interested in your complete satisfaction. Your Toyota dealer will provide quality maintenance and any other assistance you may require.

Please leave this Owner's Manual in this vehicle at the time of resale. The next owner will need this information also.

All information and specifications in this manual are current at the time of printing. However, because of Toyota's policy of continual product improvement, we reserve the right to make changes at any time without notice.

Please note that this manual applies to all models and explains all equipment, including options. Therefore, you may find some explanations for equipment not installed on your vehicle.

TOYOTA MOTOR CORPORATION

© 2015 TOYOTA MOTOR CORPORATION

All rights reserved. This material may not be reproduced or copied, in whole or in part, without the written permission of Toyota Motor Corporation.

NOT FOR REPRODUCTION

Important information about this manual

Safety and vehicle damage warnings

Throughout this manual, you will see safety and vehicle damage warnings. You must follow these warnings carefully to avoid possible injury or damage.

The types of warnings, what they look like, and how they are used in this manual are explained as follows:

⚠ CAUTION

This is a warning against anything which may cause injury to people if the warning is ignored. You are informed about what you must or must not do in order to reduce the risk of injury to yourself and others.

NOTICE

This is a warning against anything which may cause damage to the vehicle or its equipment if the warning is ignored. You are informed about what you must or must not do in order to avoid or reduce the risk of damage to your vehicle and its equipment.

Safety symbol

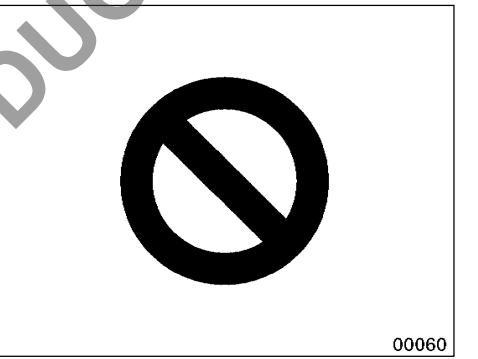

When you see the safety symbol shown above, it means: “Do not...”; “Do not do this”; or “Do not let this happen”.

NOT FOR REPRODUCTION

Important information about your Toyota

Accessories, spare parts and modification of your Toyota

A wide variety of non–genuine spare parts and accessories for Toyota vehicles are currently available in the market. Using these spare parts and accessories which are not genuine Toyota products may adversely affect the safety of your vehicle, even though these parts may be approved by certain authorities in your country. Toyota therefore cannot accept any liability or guarantee spare parts and accessories which are not genuine Toyota products, nor for replacement or installation involving such parts.

This vehicle should not be modified with non–genuine Toyota products. Modification with non–genuine Toyota products could affect its performance, safety or durability, and may even violate governmental regulations. In addition, damage or performance problems resulting from the modification may not be covered under warranty.

Fuel information

Use only low sulphur diesel fuel (50 ppm or less of sulphur contents). See “Fuel” in Section 2 for details.

Installation of an RF–transmitter system

As the installation of an RF–transmitter system in your vehicle could affect electronic systems such as multiport fuel injection system/sequential multiport fuel injection system, electronic engine control system and anti–lock brake system, be sure to check with your Toyota dealer for precautionary measures or special instructions regarding installation.

NOT FOR REPRODUCTION

Maintenance schedule

Please refer to the separate “Warranty and Service Booklet”.

Operation of the power steering

When the steering wheel is turned to the extreme right or left position, reduce the force applied and do not attempt to turn it further. Applying excessive force to the steering wheel may cause damage to its power steering mechanism.

NOT FOR REPRODUCTION

Table of contents

1 OPERATION OF INSTRUMENTS AND CONTROLS Page

1 Overview of instruments and controls 1
2 Keys and Doors 7
3 Seats, Seat belts, Steering wheel and Mirrors 21
4 Lights, Wipers and Defogger 33
5 Gauges, Meters and Service reminder indicators 39
6 Engine (ignition) switch, Transmission and Parking brake 49
7 Air conditioning system 57
8 Other equipment 69

2 INFORMATION BEFORE DRIVING YOUR TOYOTA 75
3 STARTING AND DRIVING 87
4 IN CASE OF AN EMERGENCY 101
5 CORROSION PREVENTION AND APPEARANCE CARE 125
6 MAINTENANCE REQUIREMENTS 131
7 DO–IT–YOURSELF MAINTENANCE

1 Introduction 135
2 Engine and Chassis 141
3 Electrical components 153

8 SPECIFICATIONS 165
9 INDEX 173

NOT FOR REPRODUCTION

NOT FOR REPRODUCTION

OPERATION OF INSTRUMENTS AND CONTROLS

Overview of instruments and controls

Instrument panel overview 2
Instrument cluster overview 4
Indicator symbols on the instrument panel 5

NOT FOR REPRODUCTION

Instrument panel overview

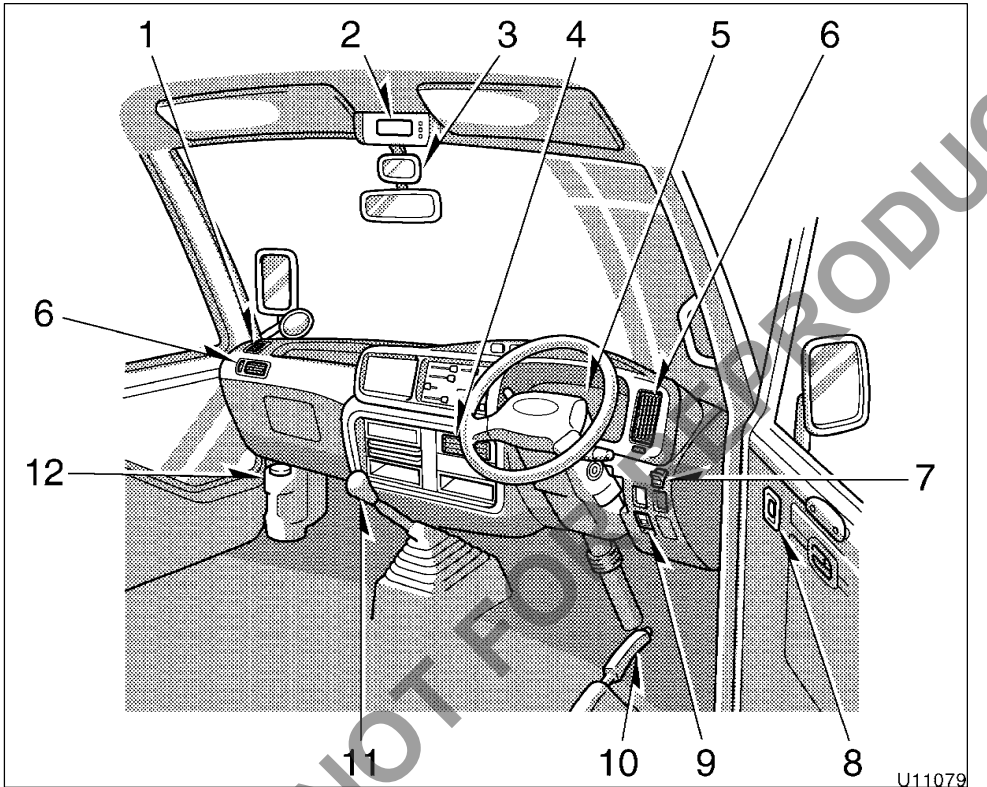

1. Side defroster outlet
2. Clock
3. Passengers' door check mirror
4. Center vent
5. Instrument cluster
6. Side vents
7. Passengers' door control switch
8. Power door lock switch
9. Fuel filler door opener
10. Parking brake lever
11. Manual transmission gear shift lever or automatic transmission shift lever
12. Windshield washer fluid tank

NOT FOR REPRODUCTION

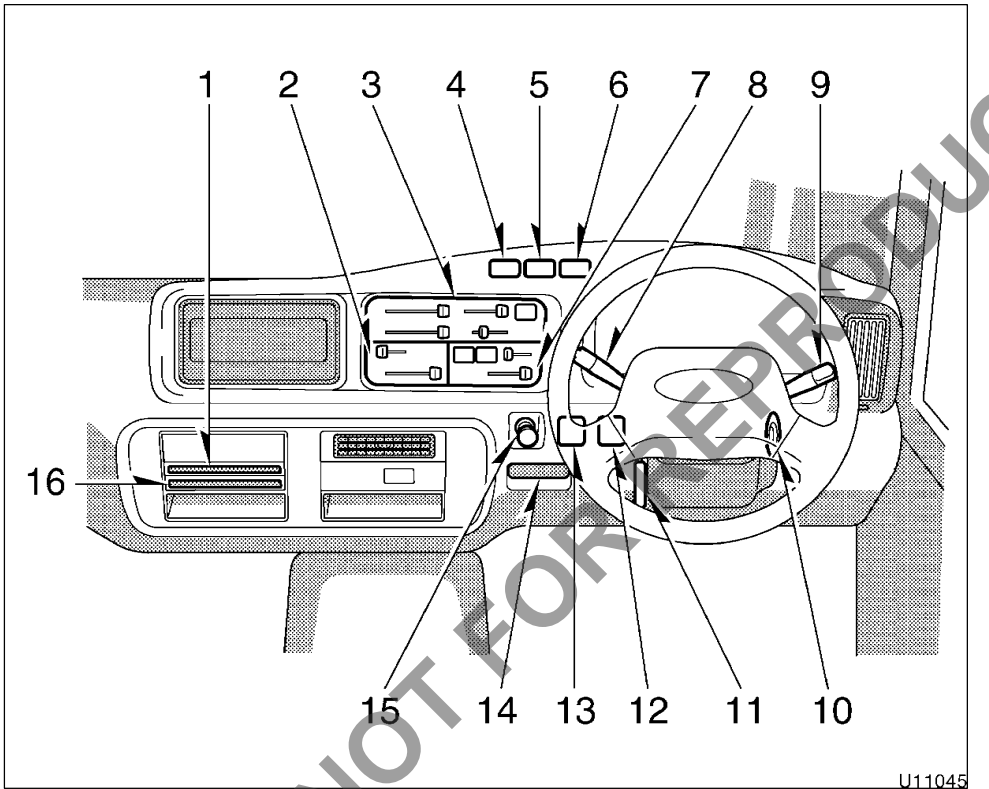

1. Auxiliary box
2. Rear heater controls
3. Front heater controls
4. Emergency flasher switch
5. Front interior light switch
6. Rear interior light switch
7. Cooler controls
8. Wiper, washer and exhaust retarder switches
9. Headlight and turn signal switches
10. Engine switch
11. Tilt and telescopic steering lock release lever
12. DPF (Diesel Particulate Filter) system manual regeneration switch
13. Rear window defogger switch
14. Ashtray
15. Cigarette lighter
16. Cup holder

NOT FOR REPRODUCTION

Instrument cluster overview

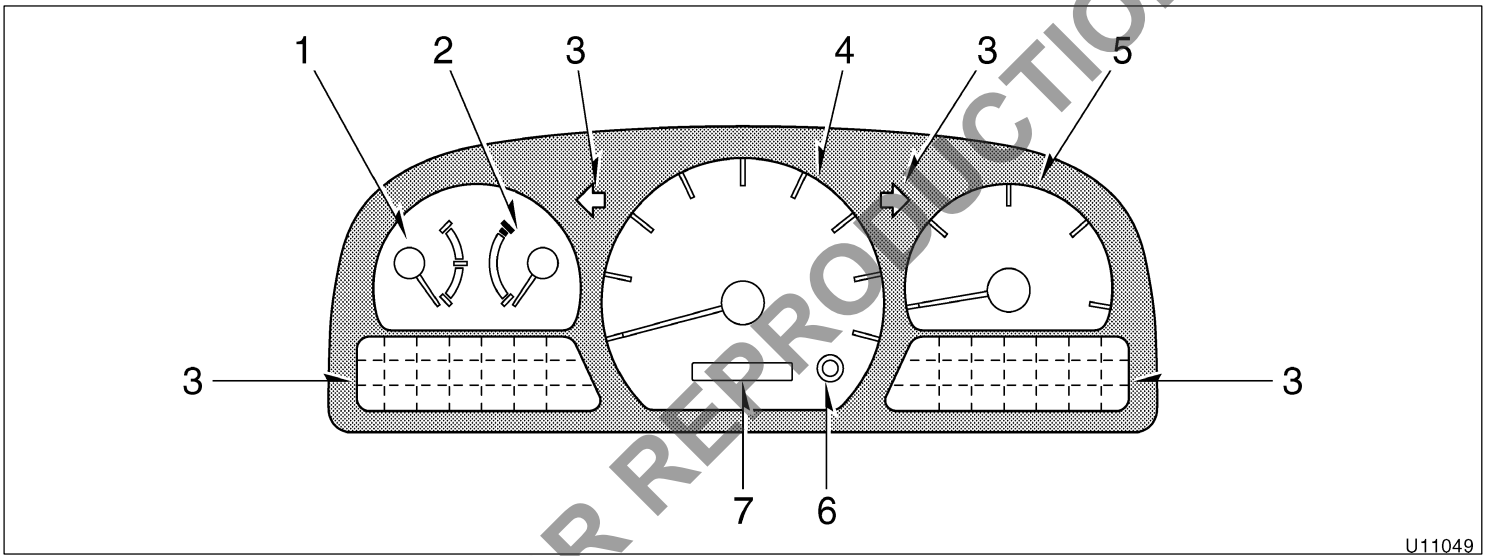

1. Fuel gauge
2. Engine coolant temperature gauge
3. Service reminder indicators and indicator lights
4. Speedometer
5. Tachometer
6. Odometer, trip meter and meter light control knob
7. Odometer, two trip meters and meter light control display

NOT FOR REPRODUCTION

Indicator symbols on the instrument panel

	Brake system warning light*
	Driver's seat belt reminder light*
	Charging system warning light*
	Low engine oil pressure warning light*
	Low engine oil level warning light*
	Malfunction indicator lamp*
	Low fuel level warning light*
	Fuel filter warning light*

	Fuel filter replacement warning light*
	DPF (Diesel Particulate Filter) system indicator light*
ABS	Anti–lock brake system warning light*
EXIT	Emergency door warning light*
	Open passengers' door warning light*
AUTO OFF	Passengers' door indicator light
	Turn signal indicator lights
	Headlight high beam indicator light

NOT FOR REPRODUCTION

O/D OFF	Overdrive–off indicator light
	Exhaust retarder indicator light

The indicators marked with * are service reminder indicators. For details, see “Service reminder indicators and warning buzzers” in Section 1–5.

NOT FOR REPRODUCTION

OPERATION OF INSTRUMENTS AND CONTROLS

Keys and Doors

Keys 8
Driver's door 8
Passengers' door 9
Side windows 17
Engine access hole covers 18
Fuel tank cap 19

NOT FOR REPRODUCTION

Keys

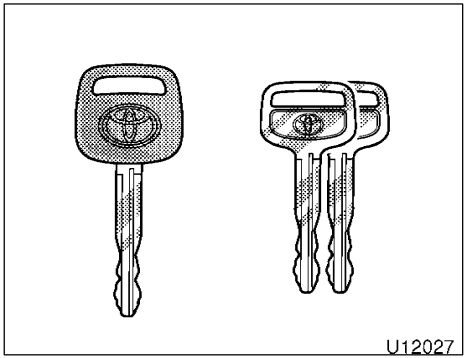

These keys work in every lock.

Since the doors can be locked without a key, you should always carry a spare key in case you accidentally lock your key inside the vehicle.

Driver's door

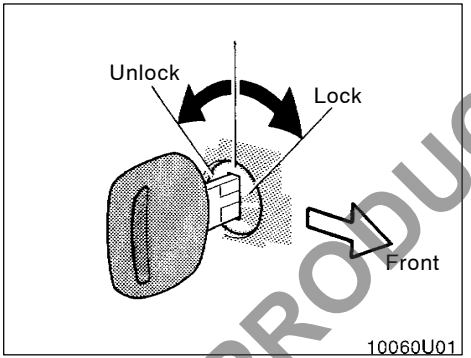

LOCKING AND UNLOCKING WITH KEY

Turn the key towards the front of the vehicle to lock and towards the back to unlock.

Vehicles with a power door lock system—The driver's door and glide type passengers' door and/or emergency door depending on the vehicle's equipment lock or unlock simultaneously.

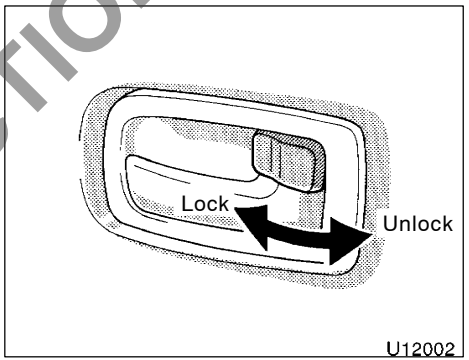

LOCKING AND UNLOCKING WITH INSIDE LOCK KNOB

Turn the lock knob forward to lock and backward to unlock.

If you want to lock the door from the outside, set the knob in the locked position before closing the door. The outside door handle must be held up while the door is being closed. Be careful not to lock your keys in the vehicle.

NOT FOR REPRODUCTION

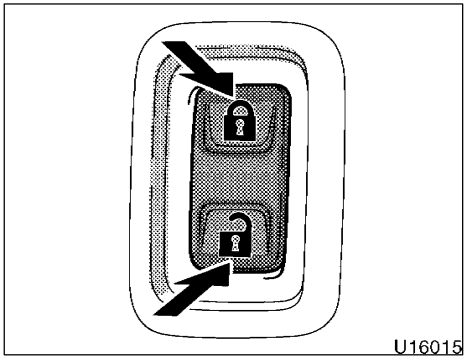

LOCKING AND UNLOCKING WITH POWER DOOR LOCK SWITCH

Push the switch.

To lock: Push the switch on the upper side.

To unlock: Push the switch on the lower side.

The driver's door and glide type passengers' door and/or emergency door depending on the vehicle's equipment lock and unlock simultaneously.

⚠ CAUTION

Before driving, be sure that the door is closed and locked, especially when small children are in the vehicle. Along with the proper use of seat belts, locking the door helps prevent the driver from being thrown out from the vehicle in an accident. It also helps prevent the door from being opened unintentionally.

⚠ CAUTION

Observe the following precautions while driving. Failure to do so may cause the door to open unexpectedly and occupant to fall out of the vehicle, resulting in death or serious injury.

- **Ensure that the door is properly closed.**
- **Always lock the door.**
- **Do not operate the inside handle of the door while driving.**

When children are in the vehicle, observe the following precautions. Failure to do so may result in death or serious injury.

- **Do not allow children to play in the vehicle. If a child is accidentally locked in the vehicle, they could have heat exhaustion or other injuries.**

NOT FOR REPRODUCTION

- **Do not allow a child to open or close the passengers' door. Doing so may cause the passengers' door to move unexpectedly, or cause the child's hands, head, or neck to be caught by the closing passengers' door.**

—Manual operation

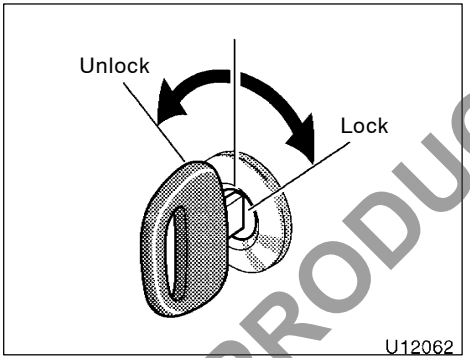

LOCKING AND UNLOCKING WITH KEY

Turn the key counterclockwise to lock and clockwise to unlock.

The key can be removed only at the center position.

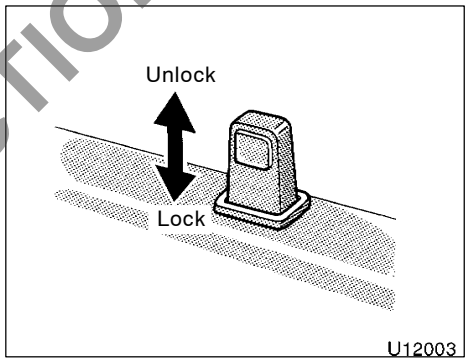

LOCKING AND UNLOCKING WITH INSIDE LOCK BUTTON

Push in the lock button to lock and pull it out to unlock.

If you want to lock the door from the outside, push in the button before closing the door. Be careful not to lock your keys in the vehicle.

NOT FOR REPRODUCTION

⚠ CAUTION

Before driving, be sure that the door is closed and locked, especially when small children are in the vehicle. Along with the proper use of seat belts, locking the door helps prevent the passengers from being thrown out from the vehicle in an accident. It also helps prevent the door from being opened unintentionally.

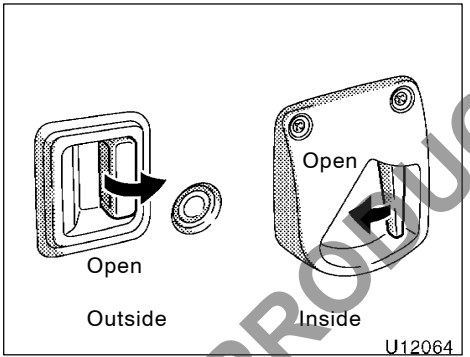

OPENING FROM INSIDE AND OUTSIDE

The door can be opened as shown.

⚠ CAUTION

When operating the passengers' door, observe the following precautions. Failure to do so may cause parts of the body to be caught, resulting in death or serious injury.

- **When opening or closing the passengers' door, thoroughly check to make sure the surrounding area is safe.**
- **Do not leave the passengers' door at half–opened position because the passengers' door is not latched at this position. The passengers' door may move unexpectedly on an incline.**

NOT FOR REPRODUCTION

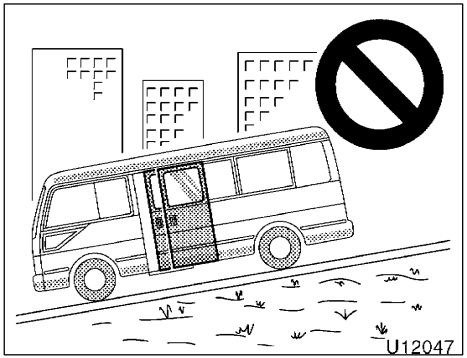

- **When the vehicle is stopped on a slope, the door will slide faster when opening or closing, so be especially careful that the passengers do not get hit or pinched by the door.**
- **Open the passengers' door fully while passengers are getting on or off on a downward slope. Do not operate the outside handle or inside handle while the door is open as the door could suddenly close by itself causing injury.**

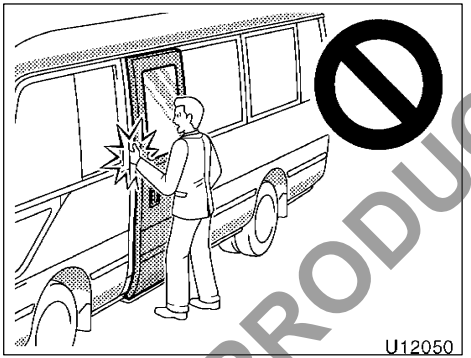

- **When closing the passengers' door, take extra care to prevent your fingers etc. from being caught.**

NOTICE

- ***Do not hold any part other than the grip.***
- ***Do not close the door by applying the brakes. Doing so could cause the door to be damaged.***

—Automatic operation

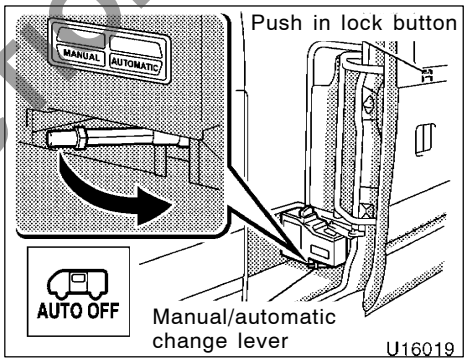

SETTING FOR ELECTRICAL OPERATION

Push in the door lock button and place the manual/automatic change lever in the "AUTOMATIC" position.

If manual operation is needed, move the manual/automatic change lever to the "MANUAL" position and lift the lock button up. The passengers' door indicator light ("AUTO OFF" light) on the instrument cluster comes on when the engine switch is turned to the "ON" position, indicating that the manual/automatic change lever is in the "MANUAL" position.

NOT FOR REPRODUCTION

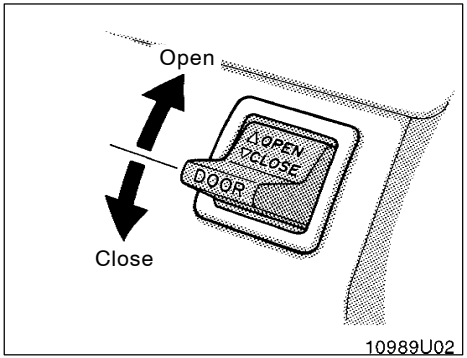

OPERATING PASSENGERS' DOOR CONTROL SWITCH

Push the switch to the "OPEN" position to open the door and to the "CLOSE" to close.

The engine switch must be in the "ON" position.

The door will move while the switch is being operated and stop when released.

A buzzer will briefly sound when the door starts opening or closing.

If the door will not be locked when it is closed, try again with the engine running and all other electrical components off.

The accelerator pedal cannot be pressed while the door is open.

- If the door still does not operate, check the circuit breaker. See "Checking the circuit breaker" in Section 7–3.
- If the passengers' door control switch is released partway through the door closing operation, the door will stop moving. After this the door may not close completely, even if the switch is pressed to the "CLOSE" position again. In that case, open the door fully and then attempt the close operation again.

⚠ CAUTION

Observe the following precautions when the automatic passengers' door system is on. Failure to do so may cause death or serious injury.

- **Before operating the control switch, make sure the vehicle is completely stopped and that the parking brake is firmly applied.**
- **Check the safety of the surrounding area to make sure there are no obstacles or anything that could cause any of your belongings to get caught.**
- **If anyone is in the vicinity, make sure they are safe and let them know that the passengers' door is about to open or close.**

NOTICE

Do not let passengers ride or put their feet on the door arm or link. It may damage the door–opening mechanism.

NOT FOR REPRODUCTION

Passengers' door (folding type)—
—Passengers' door precautions

LEAVING THE VEHICLE UNATTENDED

When the passengers' door is set to automatic operation, the passengers' door can be opened from the outside by pushing the emergency open button. To prevent unwanted entry while the vehicle is left unattended, we recommend setting the passengers' door to manual operation and locking the passengers' door. Set the passengers' door to automatic operation again before driving the vehicle.

⚠ CAUTION

Observe the following precautions while driving. Failure to do so may cause the door to open unexpectedly and occupant to fall out of the vehicle, resulting in death or serious injury.

- **Ensure that the door is properly closed.**
- **Always lock the door.**
- **Do not operate the inside handle of the door while driving.**

When children are in the vehicle, observe the following precautions. Failure to do so may result in death or serious injury.

- **Do not allow children to play in the vehicle. If a child is accidentally locked in the vehicle, they could have heat exhaustion or other injuries.**
- **Do not allow a child to open or close the passengers' door. Doing so may cause the passengers' door to move unexpectedly, or cause the child's hands, head, or neck to be caught by the closing passengers' door.**

NOT FOR REPRODUCTION

—Manual operation

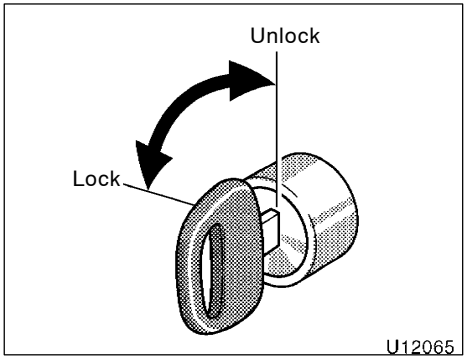

LOCKING AND UNLOCKING WITH KEY

Turn the key counterclockwise to lock and clockwise to unlock.

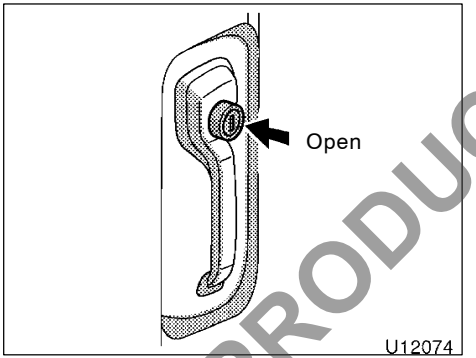

OPENING FROM OUTSIDE

The door can be opened by pushing the lock release button.

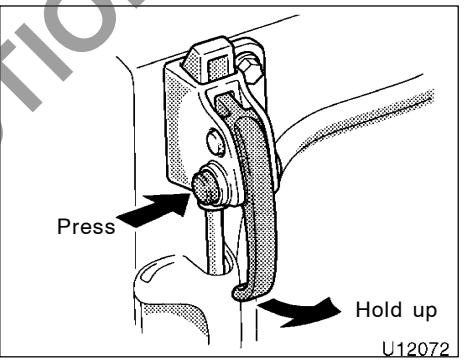

OPENING FROM INSIDE

The door can be opened by pulling the lever while pressing the button.

NOT FOR REPRODUCTION

—Automatic operation

CAUTION

When operating the passengers' door, observe the following precautions. Failure to do so may cause parts of the body to be caught, resulting in death or serious injury.

- **When opening or closing the passengers' door, thoroughly check to make sure the surrounding area is safe.**
- **If anyone is in the vicinity, make sure they are safe and let them know that the passengers' door is about to open or close.**
- **When closing the passengers' door, take extra care to prevent your fingers etc. from being caught.**

NOTICE

Do not hold any part other than the grip.

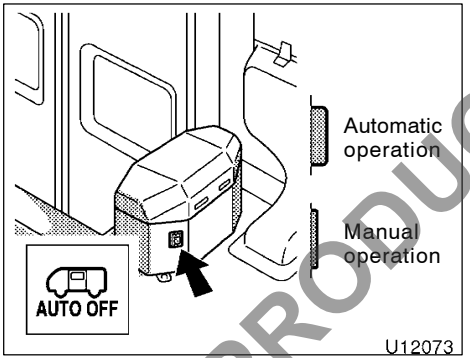

SETTING FOR AUTOMATIC OPERATION

Push the cancel switch.

If manual operation is needed, push the cancel switch. The passengers' door indicator light ("AUTO OFF" light) on the instrument cluster comes on when the engine switch is turned to the "ON" position, indicating that manual operation is selected.

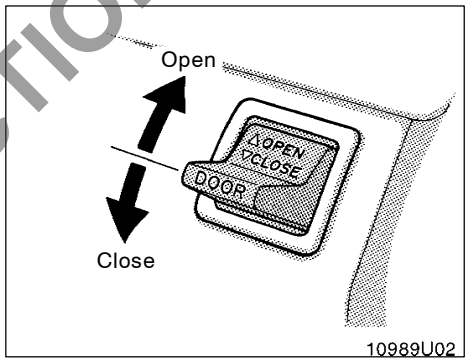

OPERATING PASSENGERS' DOOR CONTROL SWITCH

Push the switch to the "OPEN" position to open the door and to the "CLOSE" to close.

The engine switch must be in the "ON" position.

The door will move while the switch is being operated and stop when released.

A buzzer will briefly sound when the door starts opening or closing.

If the door will not be locked when it is closed, try again with the engine running and all other electrical components off.

NOT FOR REPRODUCTION

The accelerator pedal cannot be pressed while the door is open.

If the door does not operate, wait a few minutes until the circuit breaker resets automatically. If the door still does not operate, have the electrical system checked by your Toyota dealer as soon as possible.

⚠ CAUTION

Observe the following precautions when the automatic passengers' door system is on. Failure to do so may cause death or serious injury.

- **Before operating the control switch, make sure the vehicle is completely stopped and that the parking brake is firmly applied.**
- **Check the safety of the surrounding area to make sure there are no obstacles or anything that could cause any of your belongings to get caught.**

NOTICE

Do not let passengers ride or put their feet on the door arm or link. It may damage the door–opening mechanism.

LEAVING THE VEHICLE UNATTENDED

When the passengers' door is set to automatic operation, the passengers' door can be opened from the outside by pushing the emergency open button. To prevent unwanted entry while the vehicle is left unattended, we recommend setting the passengers' door to manual operation and locking the passengers' door. Set the passengers' door to automatic operation again before driving the vehicle.

Side windows

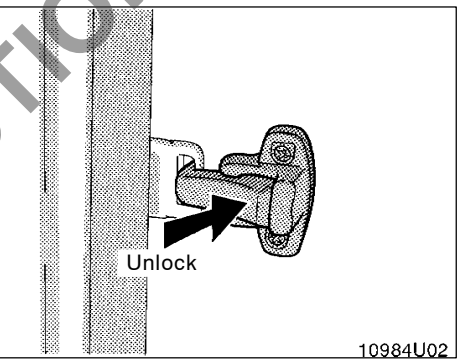

Push the lever to unlock and slide the window.

Make sure the window is locked into place after closing.

NOT FOR REPRODUCTION

Engine access hole covers

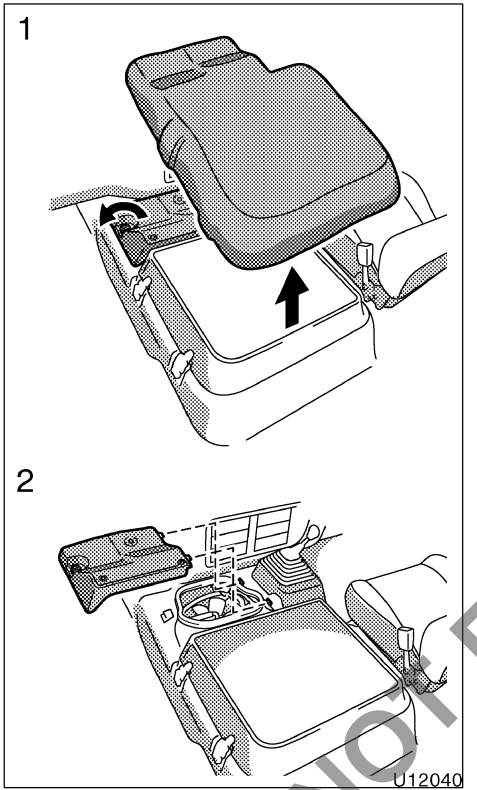

ENGINE ACCESS HOLE COVER (front)

To open the front engine access hole cover:

1. **Remove the carpet and turn the knob counterclockwise.**
2. **Remove the cover.**

Before closing the front engine access hole cover, check that you have not forgotten any tools, rags, etc.

When closing the front engine access hole cover, hook the cover edge into the hole and turn the knob clockwise.

⚠ CAUTION
After closing the cover, make sure it is securely locked.

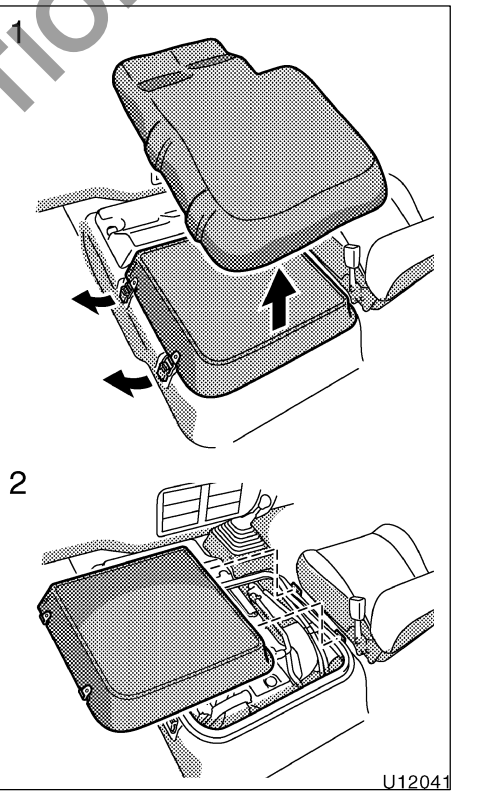

NOT FOR REPRODUCTION

ENGINE ACCESS HOLE COVER (rear)

To open the rear engine access hole cover:

1. **Remove the carpet and release the latches.**
2. **Remove the cover.**

Before closing the engine access hole cover, check that you have not forgotten any tools, rags, etc. When closing the rear engine access hole cover, hook the cover edge into the hole and lock the latches.

CAUTION

After closing the cover, make sure that it is securely locked.

Fuel tank cap (with fuel filler door opener)

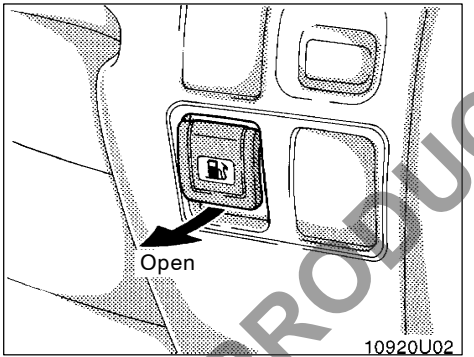

1. **To open the fuel filler door, pull the lever.**

   When refueling, turn off the engine.

CAUTION

- **Do not smoke, cause sparks or allow open flames when refueling. The fumes are flammable.**
- **When opening the cap, do not remove the cap quickly. In hot weather, fuel under pressure could cause injury by spraying out of the filler neck if the cap is suddenly removed.**

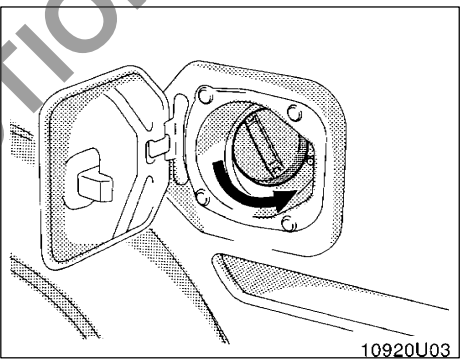

2. **To remove the fuel tank cap, turn the cap slowly counterclockwise, then pause slightly before removing it.**

It is not unusual to hear a slight swoosh when the cap is opened. When installing, turn the cap clockwise till you hear a click.

NOT FOR REPRODUCTION

Fuel tank cap (without fuel filler door opener)

CAUTION

- **Make sure the cap is tightened securely to prevent fuel spillage in case of an accident.**
- **Use only a genuine Toyota fuel tank cap for replacement. It has a built–in check valve.**

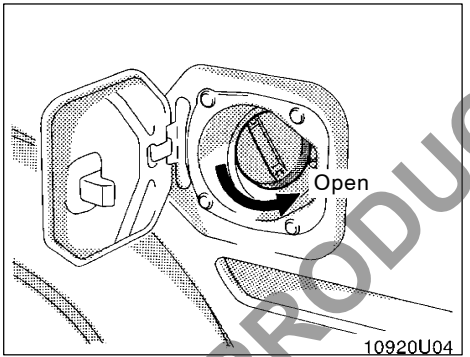

To remove the fuel tank cap, open the fuel filler door, turn the cap slowly counterclockwise, then pause slightly before removing it.

When refueling, turn off the engine.

It is not unusual to hear a slight swoosh when the cap is opened. When installing, turn the cap clockwise till you hear a click.

CAUTION

- **Do not smoke, cause sparks or allow open flames when refueling. The fumes are flammable.**
- **When opening the cap, do not remove the cap quickly. In hot weather, fuel under pressure could cause injury by spraying out of the filler neck if the cap is suddenly removed.**
- **Make sure the cap is tightened securely to prevent fuel spillage in case of an accident.**
- **Use only a genuine Toyota fuel tank cap for replacement. It is designed to regulate fuel tank pressure.**

NOT FOR REPRODUCTION

OPERATION OF INSTRUMENTS AND CONTROLS

Seats, Seat belts, Steering wheel and Mirrors

Seats 22
Driver's seat 22
Driver's head restraint 24
Seat belts 24
Child restraint 28
Tilt and telescopic steering wheel 31
Outside rear view mirrors 31

NOT FOR REPRODUCTION

Seats

While the vehicle is being driven, all vehicle occupants should have the seatback upright, sit well back in the seat and properly wear the seat belts provided.

CAUTION

- **Do not drive the vehicle unless the occupants are properly seated. Do not allow any occupants to sit on top of a folded–down seatback, or in the luggage compartment or cargo area. If the occupants are improperly seated or restrainted by seat belts, death or serious injury could result in the event of emergency braking, sudden swerving or an accident.**
- **During driving, do not allow any passengers to stand up or move around between seats. Otherwise, death or serious injuries can occur in the event of emergency braking, sudden swerving or an accident.**

Driver's seat—
—Seat adjustment precautions

Adjust the driver's seat so that the foot pedals, steering wheel and instrument panel controls are within easy reach of the driver.

CAUTION

- **Do not adjust the seat while the vehicle is moving as the seat may unexpectedly move and cause the driver to lose control of the vehicle.**
- **After adjusting the seat position, release the lever and try sliding the seat forward and backward to make sure it is locked in position.**
- **Make sure the seatback is securely locked by pushing forward and rearward on the top of the seatback. Failure to do so will prevent the seat belt from operating properly.**
- **Do not put objects under the seats except for putting them in the auxiliary box. Otherwise, the objects may interfere with the seat–lock mechanism or unexpectedly push up the seat position adjusting lever and the seat may suddenly move, causing the driver to lose control of the vehicle.**

- **While adjusting the seat, do not put your hands under the seat or near the moving parts. Otherwise, your hands or fingers may be caught and injured.**

NOT FOR REPRODUCTION

—Adjusting driver's seat

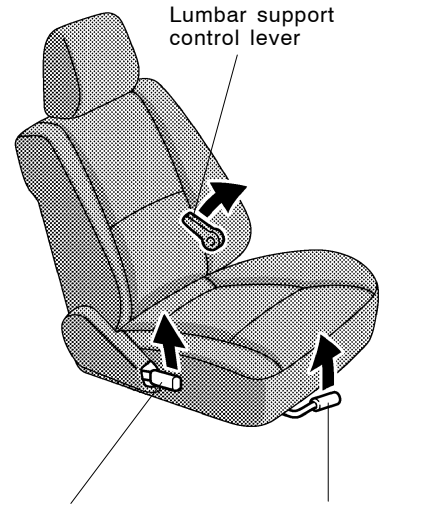

U13041

ADJUSTING SEAT POSITION

Pull the lock release lever up. Then slide the seat to the desired position with slight body pressure and release the lever.

ADJUSTING SEATBACK ANGLE

Lean forward and pull the lock release lever. Then lean back to the desired angle and release the lever.

⚠ CAUTION

Avoid reclining the seatback any more than needed. The seat belts provide maximum protection in a frontal or rear collision when you are sitting up straight and well back in the seat. If you are reclined, the lap belt may slide past your hips and apply restraint forces directly to the abdomen or your neck may contact the shoulder belt. In the event of a frontal collision, the more the seat is reclined, the greater the risk of death or serious injury.

ADJUSTING SEAT LUMBAR SUPPORT

Pull the lever forward or backward.

Pulling the lever forward will increase the amount of your lower back.

NOT FOR REPRODUCTION

Driver's head restraint

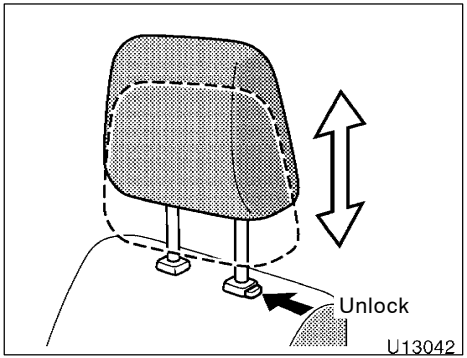

For your safety and comfort, adjust the head restraint before driving.

To raise: Pull it up.
To lower: Push it down while pressing the lock release button.

To remove: Pull it up while pressing the lock release button.

The head restraint is most effective when it is close to your head. Therefore, using a cushion on the seatback is not recommended.

CAUTION

- **Adjust the center of the head restraint so that it is closest to the top of your ears.**
- **Use the head restraint designed for the driver's seat.**
- **After adjusting the head restraint, make sure it is locked in position.**
- **Do not drive with the head restraint removed.**

Seat belts—
—Seat belt precautions

Toyota strongly urges that the driver and passengers in the vehicle be properly restrained at all times with the seat belts provided. Failure to do so could increase the chance of injury and/or the severity of injury in accidents.

The seat belts provided for your vehicle are designed for people of adult size, large enough to properly wear them.

Child. Use a child restraint system appropriate for the child until the child becomes large enough to properly wear the vehicle's seat belts.

If a child is too large for a child restraint system, the child should sit in the rear seat adjacent to the passengers' door and must be restrained using the vehicle's seat belt. According to accident statistics, the child is safer when properly restrained in the rear seat than in the front seat.

Do not allow any children to stand up or kneel on either rear or front seats. An unrestrained child could suffer serious injury or death during emergency braking or a collision. Also, do not let the child sit on your lap. Holding a child in your arms does not provide sufficient restraint.

NOT FOR REPRODUCTION

Pregnant woman. Toyota recommends the use of a seat belt. Ask your doctor for specific recommendations. The lap belt should be worn securely and as low as possible over the hips and not on the waist.

Injured person. Toyota recommends the use of a seat belt. Depending on the injury, first check with your doctor for specific recommendations.

If seat belt regulations exist in the country where you reside, please contact your Toyota dealer for seat belt replacement or installation.

⚠ CAUTION

Persons should ride in their seats properly wearing their seat belts whenever the vehicle is moving. Otherwise, they are much more likely to suffer serious bodily injury or death in the event of sudden braking or a collision.

When using the seat belts, observe the following:

- **Use the belt for only one person at a time. Do not use a single belt for two or more people—even children.**
- **Avoid reclining the seatback any more than needed. The seat belts provide maximum protection in a frontal or rear collision when you are sitting up straight and well back in the seat. If you are reclined, the lap belt may slide past your hips and apply restraint forces directly to the abdomen or your neck may contact the shoulder belt. In the event of a frontal collision, the more the seat is reclined, the greater the risk of death or serious injury.**
- **Be careful not to damage the belt webbing or hardware, and take care that they do not get caught or pinched in the seat or doors.**
- **Inspect the belt system periodically. Check for cuts, frays, and loose parts. Damaged parts should be replaced. Do not disassemble or modify the system.**
- **Keep the belts clean and dry. If they need cleaning, use a mild soap solution or lukewarm water. Never use bleach, dye, or abrasive cleaners, or allow them to come into contact with the belts—they may severely weaken the belts.**
- **Replace the belt assembly (including bolts) if it has been used in a severe impact. The entire assembly should be replaced even if damage is not obvious.**

NOT FOR REPRODUCTION

- **Australian owners: Observe the following additional WARNINGS.**

  WARNING: Seatbelts are designed to bear upon the bony structure of the body, and should be worn low across the front of the pelvis or the pelvis, chest and shoulders, as applicable; wearing the lap section of the belt across the abdominal area must be avoided.

  Seatbelts should be adjusted as firmly as possible, consistent with comfort, to provide the protection for which they have been designed. A slack belt will greatly reduce the protection afforded to the wearer.

  Care should be taken to avoid contamination of the webbing with polishes, oils and chemicals, and particularly battery acid. Cleaning may safely be carried out using mild soap and water. The belt should be replaced if webbing becomes frayed, contaminated or damaged.

  It is essential to replace the entire assembly after it has been worn in a severe impact even if damage to the assembly is not obvious.

  Belts should not be worn with straps twisted.

  Each belt assembly must only be used by one occupant; it is dangerous to put a belt around a child being carried on the occupant's lap.

  WARNING: No modifications or additions should be made by the user which will either prevent the seat belt adjusting devices from operating to remove slack, or prevent the seat belt assembly from being adjusted to remove slack.

- **Do not allow children to play with the seat belt. If the belt becomes twisted around a child's neck, it may lead to choking or other serious injuries that could result in death. If this occurs and the buckle cannot be unfastened, scissors should be used to cut the belt.**

—Fastening seat belt

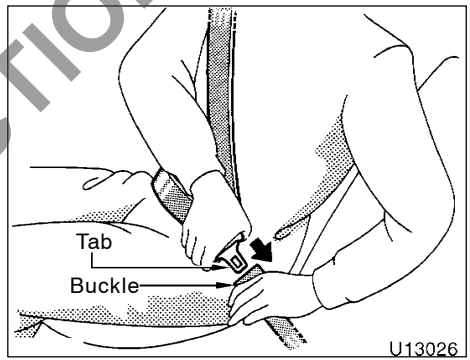

Adjust the seat as needed (driver's seat only) and sit up straight and well back in the seat. To fasten your belt, pull it out of the retractor and insert the tab into the buckle.

You will hear a click when the tab locks into the buckle.

The seat belt length automatically adjusts to your size and the seat position.

The retractor will lock the belt during a sudden stop or on impact. It also may lock if you lean forward too quickly. A slow, easy motion will allow the belt to extend, and you can move around freely.

NOT FOR REPRODUCTION

If the seat belt cannot be pulled out of the retractor, firmly pull the belt and release it. You will then be able to smoothly pull the belt out of the retractor.

⚠ CAUTION

- **After inserting the tab, make sure the tab and buckle are locked and that the belt is not twisted.**
- **Do not insert coins, clips, etc. in the buckle as this may prevent you from properly latching the tab and buckle.**
- **If the seat belt does not function normally, immediately contact your Toyota dealer. Do not use the seat until the seat belt is fixed, because it cannot protect an adult occupant or your child from death or serious injury.**

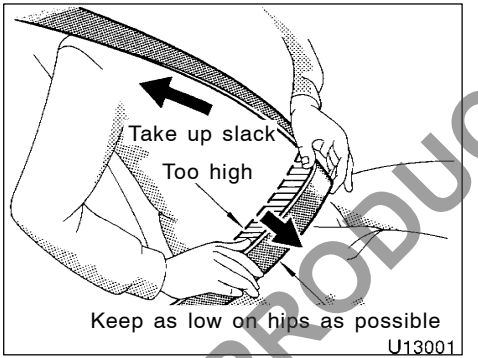

Adjust the position of the lap and shoulder belts.

Position the lap belt as low as possible on your hips—not on your waist, then adjust it to a snug fit by pulling the shoulder portion upward through the latch plate.

⚠ CAUTION

- **Both high–positioned lap belts and loose–fitting belts could cause death or serious injuries due to sliding under the lap belt during a collision or other unintended event. Keep the lap belt positioned as low on hips as possible.**
- **Do not place the shoulder belt under your arm.**

NOT FOR REPRODUCTION

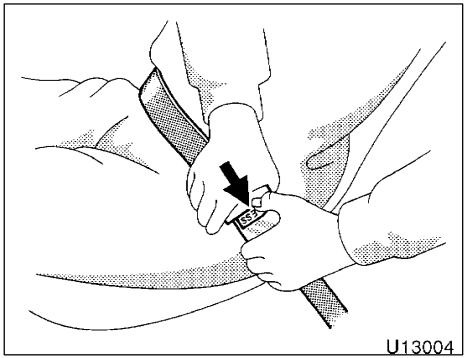

To release the belt, press the buckle release button and allow the belt to retract.

If the belt does not retract smoothly, pull it out and check for kinks or twists. Then make sure it remains untwisted as it retracts.

Child restraint—
—Child restraint precautions

Toyota strongly urges the use of child restraint systems for children small enough to use them.

If a child is too large for a child restraint system, the child should sit in the rear seat and must be restrained using the vehicle's seat belt. See "Seat belts" in this Section for details.

⚠ CAUTION

- **For effective protection in automobile accidents and sudden stops, a child must be properly restrained, using a seat belt or child restraint system depending on the age and size of the child. Holding a child in your arms is not a substitute for a child restraint system. In an accident, the child can be crushed against the windshield, or between you and the vehicle's interior.**
- **Toyota strongly urges use of a proper child restraint system which conforms to the size of the child, installed on the rear seat. According to accident statistics, the child is safer when properly restrained in the rear seat than in the front seat.**
- **If child restraint system regulations exist in the country where you reside, please contact your Toyota dealer for the installation of the child restraint system.**
- **Make sure you have complied with all installation instructions provided by the child restraint manufacturer and that the system is properly secured. If it is not secured properly, it may cause death or serious injury to the child in the event of a sudden stop, sudden swerve or accident.**

NOT FOR REPRODUCTION

—Child restraint system

A child restraint system for a small child or baby must itself be properly restrained on the seat with the lap portion of the lap/shoulder belt. You must carefully consult the manufacturer's instructions which accompany the child restraint system.

To provide proper restraint, use a child restraint system following the manufacturer's instructions about the appropriate age and size of the child for the child restraint system.

Install the child restraint system correctly following the instructions provided by its manufacturer.

The child restraint system should be installed on the rear seat. According to accident statistics, the child is safer when properly restrained in the rear seat than in the front seat.

CAUTION

When the child restraint system is not in use:

- **Keep the child restraint system properly secured on the seat even if it is not in use. Do not store the restraint unsecured in the passenger compartment.**
- **If it is necessary to detach the child restraint system, remove it from the vehicle or store it securely in the luggage compartment. This will prevent it from injuring passengers in the event of a sudden stop, sudden swerve or accident.**

When installing a child restraint system securely, you will need a locking clip.

If your child restraint system does not provide a locking clip, you can purchase the following item from your Toyota dealer.

Locking clip for child restraint system (Part No. 73119–22010)

—Child restraint anchor fittings

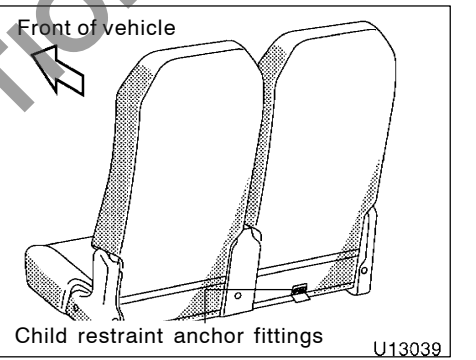

For easy installation of child restraints, your vehicle is equipped with a child restraint anchor fitting on the back of each outer seat on the two seat side.

When installing a child restraint, follow both the instructions here and those provided by the manufacturer of your child restraint.

NOT FOR REPRODUCTION

⚠ CAUTION

WARNING: child restraint anchorages are designed to withstand only those loads imposed by correctly fitted child restraints. Under no circumstances are they to be used for adult seatbelts, harnesses, or for attaching other items or equipment to the vehicle.

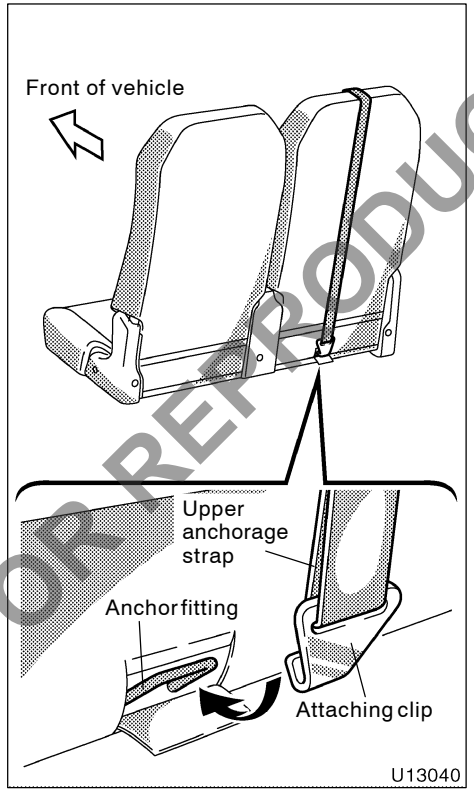

TO USE THE CHILD RESTRAINT ANCHOR FITTING:

Fix the child restraint system with the seat belt.

Attach the child restraint anchor attaching clip to the child restraint anchor fitting. Make sure the clip is securely attached and tighten the upper anchorage strap.

⚠ CAUTION

Make sure the seat belt is securely locked, and check that the child restraint system is secure by pushing and pulling it in different directions. Follow all the installation instructions provided by its manufacturer.

NOT FOR REPRODUCTION

Tilt and telescopic steering wheel

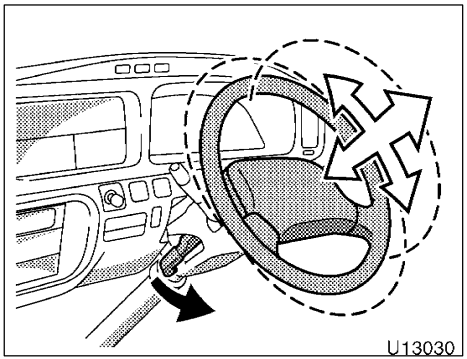

To adjust the steering wheel position, pull up the lock release lever. Then tilt the steering wheel to the desired angle, push or pull it to the desired steering column length and return the lever to its original position.

CAUTION

- Do not adjust the steering wheel while the vehicle is moving. Doing so may cause the driver to mishandle the vehicle and an accident may occur resulting in death or serious injuries.

- After adjusting the steering wheel, try moving it up and down or forward and rearward to make sure it is locked in position.

Outside rear view mirrors—

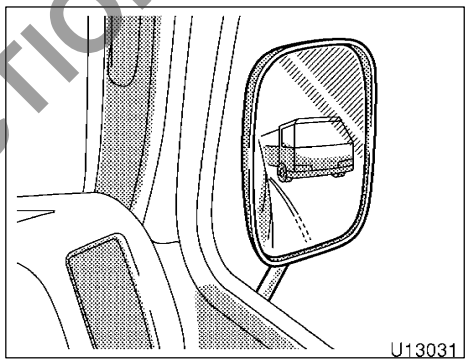

Adjust the mirror so that you can just see the side of your vehicle in the mirror.

CAUTION

Do not adjust the mirror while the vehicle is moving. Doing so may cause the driver to mishandle the vehicle and an accident may occur resulting in death or serious injuries.

NOT FOR REPRODUCTION

—Folding drivers side rear view mirror

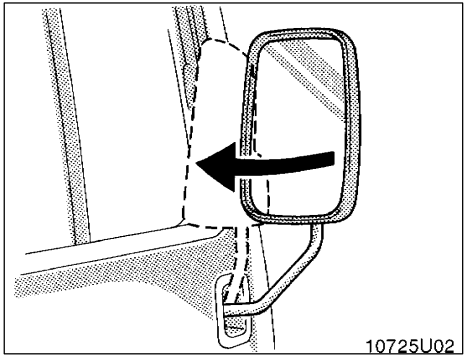

To fold the driver's side rear view mirror, push backward.

The driver's side rear view mirror can be folded backward for parking in compact areas.

⚠ CAUTION

Do not drive with the mirror folded backward. The driver's side rear view mirror must be extended and properly adjusted before driving.

NOT FOR REPRODUCTION

OPERATION OF INSTRUMENTS AND CONTROLS

Lights, Wipers and Defogger

Headlights and turn signals 34
Emergency flashers 35
Interior lights 35
Windshield wipers and washer 36
Rear window defogger 37

NOT FOR REPRODUCTION

Headlights and turn signals

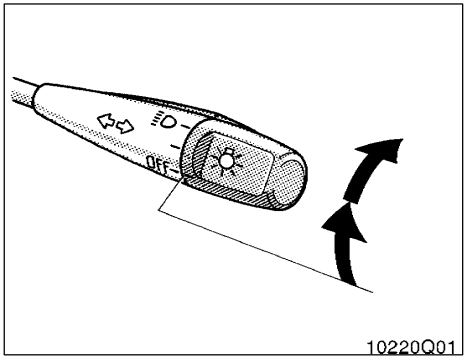

To turn the lights on, twist the knob on the end of the lever.

FIRST CLICKSTOP: Only the parking, tail, license plate and instrument panel lights turn on.

SECOND CLICKSTOP: The headlights also turn on.

NOTICE
To prevent the battery from being discharged, do not leave the lights on for a long period when the engine is not running.

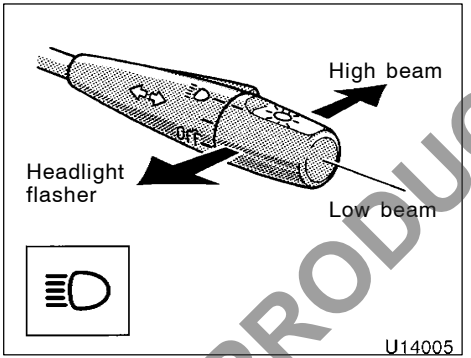

For high beam, push the lever away from you. Pull it toward you for low beam. For the headlight flasher, pull the lever all the way back and release.

A blue light in the instrument panel indicates high beam is on.

The headlight flasher works even when the headlight switch is off.

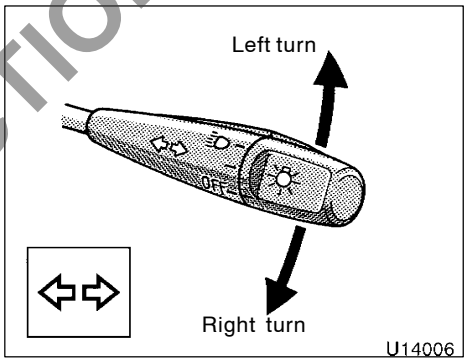

For signaling turns, move the lever up or down in the conventional manner.

The engine switch must be in the “ON” position.

The turn signal is self–cancelling after a turn, but after a lane change, you may have to cancel it by hand. If the green light in the instrument panel flashes faster than normal, it indicates that the front or rear turn signal bulb has burned out.

NOT FOR REPRODUCTION

Emergency flashers

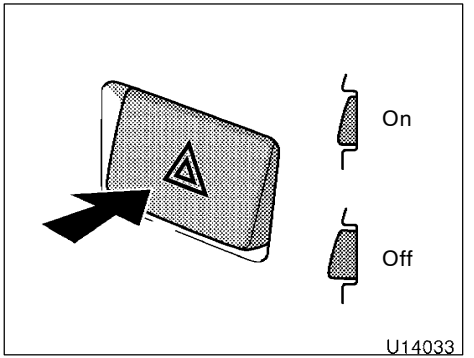

To turn on the emergency flashers, push the switch.

All the turn signal lights will flash.

Turn on the emergency flashers to warn other drivers if your vehicle must be stopped where it might be a traffic hazard.

Always pull as far off the road as possible.

The turn signal light switch will not work when the emergency flashers are operating.

NOTICE

To prevent the battery from being discharged, do not leave the switch on longer than necessary when the engine is not running.

Interior lights

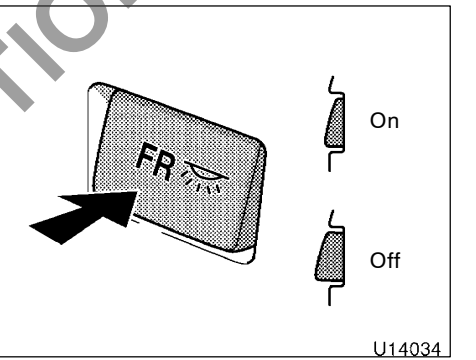

Front

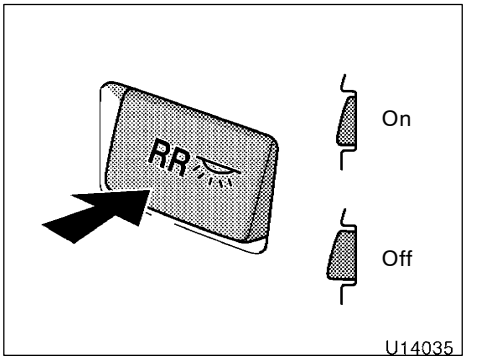

Rear

NOT FOR REPRODUCTION

To turn on the interior lights, push the switch in.

Windshield wipers and washer

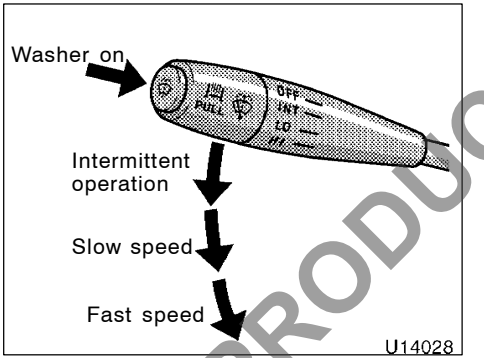

To turn the wipers on, move the lever. To make the washer squirt, push the button on the end of the lever.

The engine switch must be in the “ON” position.

The wipers will operate at intervals when the lever is in the “INT” position.

If the washer does not work, check to see whether the washer tank is empty. For information on adding washer fluid, see “Adding washer fluid” in Section 7–3.

In cold weather, warm the windshield with the defroster before using the washer. This will help prevent icing, which could block your vision.

NOTICE

Do not operate the wipers if the windshield is dry. It may scratch the glass.

NOT FOR REPRODUCTION

Rear window defogger

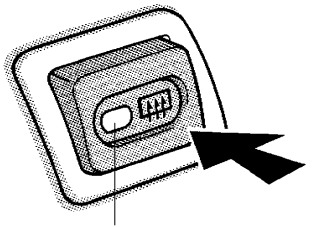

To defog or defrost the rear window, push the switch.

The engine switch must be in the “ON” position.

The thin heater wires on the inside of the rear window will quickly clear the window surface. An indicator light will illuminate to indicate the defogger is operating.

Push the switch once again to turn the defoggers off.

The system will automatically shut off after the defogger has operated about 15 minutes.

Make sure you turn the defogger off when the window is clear. Leaving the defogger on for a long time could cause the battery to discharge, especially during stop–and–go driving. The defogger is not designed for drying rain water or for melting snow.

NOTICE
When cleaning the inside of the rear window, be careful not to scratch or damage the heater wires.

NOT FOR REPRODUCTION

NOT FOR REPRODUCTION

OPERATION OF INSTRUMENTS AND CONTROLS

Gauges, Meters and Service reminder indicators

Fuel gauge 40
Engine coolant temperature gauge 40
Tachometer 41
Odometer, two trip meters and meter light control display 41
Service reminder indicators and warning buzzers 43

NOT FOR REPRODUCTION

Fuel gauge

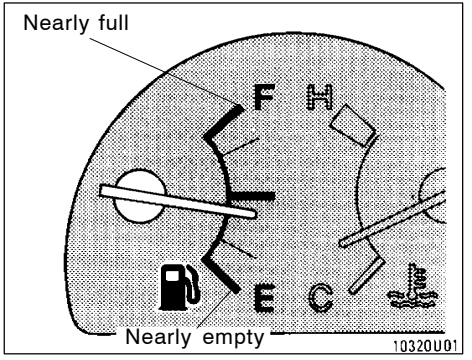

The gauge indicates the approximate quantity of fuel remaining in the tank when the engine switch is on.

It is a good idea to keep the tank over 1/4 full.

If the fuel level approaches “E”, fill the fuel tank as soon as possible.

On inclines or curves, due to the movement of fuel in the tank, the fuel gauge needle may fluctuate.

Engine coolant temperature gauge

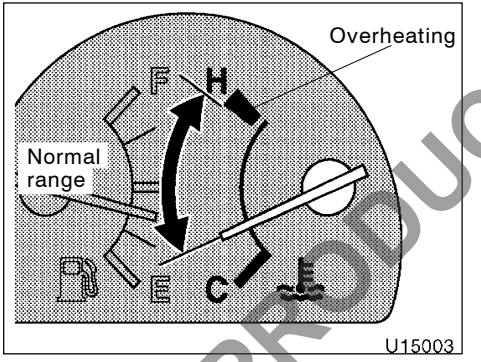

The gauge indicates the engine coolant temperature when the engine switch is on. The engine operating temperature will vary with changes in weather and engine load.

If the needle points to the red zone or higher, stop your vehicle and allow the engine to cool.

Your vehicle may overheat during severe operating conditions, such as:

- Driving up a long hill on a hot day.
- Reducing speed or stopping after high speed driving.
- Idling for a long period with the cooler on in stop–and–go traffic.
- Towing a trailer.

NOTICE

- ***Do not remove the thermostat in the engine cooling system as this may cause the engine to overheat. The thermostat is designed to control the flow of coolant to keep the temperature of the engine within the specified operating range.***
- ***Do not continue driving with an overheated engine. See “If your vehicle overheats” in Section 4.***

NOT FOR REPRODUCTION

Tachometer

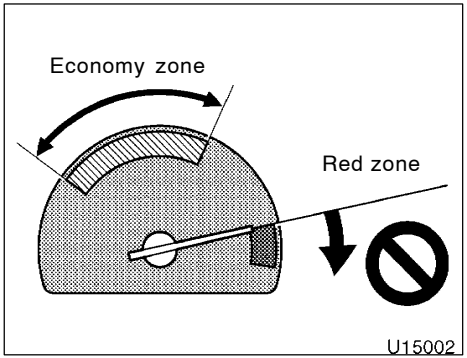

The tachometer indicates engine speed in thousands of rpm (revolutions per minute). Use it while driving to select correct shift points and to prevent engine lugging and over–revving.

For better fuel economy, keep the needle within the economy zone. Driving with the engine running too fast causes excessive engine wear and poor fuel economy.

NOTICE
Do not let the indicator needle get into the red zone. This may cause severe engine damage.

Odometer, two trip meters and meter light control display

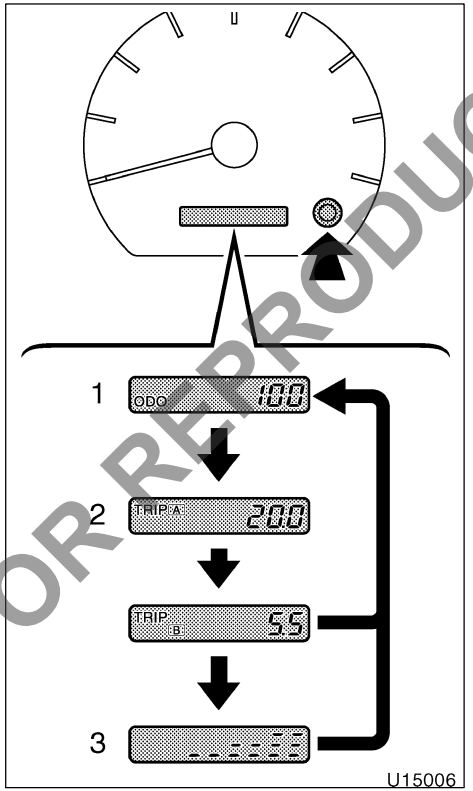

The display contains the odometer, two trip meters and meter brightness indicator that appears when the tail lights/headlights are on. You can adjust the brightness when displayed.

The engine switch must be in the “ON” position.

To change the meter display, quickly push and release the knob. The meter display changes in the order from the odometer to trip meter A to trip meter B to meter light control (when tail lights/headlights are turned on), then back to the odometer each time you push it.

1. Odometer: It shows the total distance the vehicle has been driven.
2. Two trip meters: They show two different distances independently driven since the last time each trip meter was set to zero.

   You can use one trip meter to calculate the fuel economy and the other to measure the distance on each trip. All trip meter data is cancelled if the electrical power source is disconnected.

   To reset trip meter A to zero, display the meter A reading, then push and hold the knob until the meter is set to zero. The same process can be applied for resetting trip meter B.

NOT FOR REPRODUCTION

3. Meter light control display: You can adjust the brightness by 4 levels.

   To adjust the brightness, push and hold the knob until the desired brightness is obtained. If no operation is made for 10 seconds, the display changes to the odometer.

NOT FOR REPRODUCTION

Service reminder indicators and warning buzzers

If the indicator or buzzer comes on...		Do this.
(a)	(indicator and buzzer)	If parking brake is off, stop immediately and contact Toyota dealer.
(b)	(indicator and buzzer)	Fasten seat belt.
(c)		Stop immediately and contact Toyota dealer.
(d)		Stop and check.
(e)		Add engine oil.
(f)		Take vehicle to Toyota dealer.
(g)		Fill up tank.

NOT FOR REPRODUCTION

If the indicator or buzzer comes on...		Do this.
(h)	(indicator and buzzer)	Drain water.
(i)		Take vehicle to Toyota dealer.
(j)	(indicator and buzzer)	Perform manual regeneration.
(k)	ABS	Take vehicle to Toyota dealer.
(l)	**EXIT** (indicator and buzzer)	When engine switch is “ON”, close emergency door but keep it unlocked and close door lever cover.
(m)		Close passengers’ door.
(n)	Low vacuum warning buzzer	Stop and check.

NOT FOR REPRODUCTION

(a) Brake System Warning Light and Buzzer

This light comes on in the following cases when the engine switch is in the “ON” position.

- **When the parking brake is applied...**

If the vehicle speed rises above 5 km/h (3 mph) with the parking brake applied, a buzzer sounds.

- **When the brake fluid level is low...**

CAUTION

It is dangerous to continue driving normally when the brake fluid level is low.

- **When there is a problem in the ABS computer...**
- **When vacuum is low...**

Have your vehicle checked at your Toyota dealer in the following case:

- The light does not come on even if the parking brake is applied when the engine switch is in the “ON” position.
- The light does not come on even if the engine switch is turned on with the parking brake released.

If the brake system warning light turns on while the engine is running (even if there is sufficient brake fluid and the parking brake has been released), stop the vehicle in a safe place and contact a Toyota dealer.

CAUTION

If either of the following conditions occurs, immediately stop your vehicle at a safe place and contact your Toyota dealer.

- **The light does not turn off even after the parking brake is released while the engine is running.**
- **The low vacuum warning buzzer remains on together with the warning light.**

In either case, this can indicate that the brakes may not work properly and your stopping distance will become longer. Depress the brake pedal firmly and bring the vehicle to an immediate stop.

(b) Driver’s Seat Belt Reminder Light and Buzzer

The light and buzzer act as a reminder to buckle up the driver’s seat belt.

Once the engine switch is turned to “ON”, the reminder light and buzzer come on if the driver’s seat belt is not fastened. Unless the driver fastens the belt, the light remain on and the buzzer stops after about 4 to 8 seconds.

(c) Charging System Warning Light

This warning light comes on when the engine switch is turned to the “ON” position, and goes off when the engine is started.

When there are problems in the charging system while the engine is running, the warning light comes on.

NOTICE

When the charging system warning light comes on while the engine is running, malfunctions such as the engine drive belt being broken may have occurred. If the warning light comes on, immediately stop the vehicle in a safe place and contact your Toyota dealer.

NOT FOR REPRODUCTION

(d) Low Engine Oil Pressure Warning Light

This light warns that the engine oil pressure is too low.

If it flickers or stays on while you are driving, pull off the road to a safe place and stop the engine immediately. Call a Toyota dealer or qualified repair shop for assistance.

The light may occasionally flicker when the engine is idling or it may come on briefly after a hard stop. There is no cause for concern if it then goes out when the engine is accelerated slightly.

The light may come on when the oil level is extremely low. It is not designed to indicate low oil level, and the oil level must be checked using the level dipstick.

NOTICE
Do not drive the vehicle with the warning light on—even for one block. It may ruin the engine.

(e) Low Engine Oil Level Warning Light

The light warns that the engine oil level is too low. Add oil as soon as possible. (For instructions, see “Checking the engine oil level” in Section 7–2.)

While driving on steep inclines or rough roads which causes the vehicle to substantially sway or on curves, this light may come on due to the movement of engine oil in the engine.

In normal conditions, due to engine oil consumption, this light may come on earlier than the specified service interval of the scheduled maintenance. This is because the engine oil is consumed to the low level within the scheduled maintenance interval and does not indicate a problem. (For detailed information, see “Facts about engine oil consumption” in Section 2.)

NOTICE
Continued engine operation with low engine oil will damage the engine.

(f) Malfunction Indicator Lamp

This lamp warns that there is a problem somewhere in your engine electrical system, electronic engine control system, engine emission control system or automatic transmission electrical system.

If it comes on or flashes while you are driving, have your vehicle checked/repaired by your Toyota dealer as soon as possible.

If engine speed does not increase when the accelerator pedal is depressed, there may be a problem somewhere in the electronic engine control system. Stop the vehicle and contact your Toyota dealer or take your vehicle carefully, since the vehicle performance will be lower than normal, to your Toyota dealer as soon as possible.

Even if the abnormality in the electronic engine control system is corrected during low speed driving, the system may not recover until the engine is stopped and the engine switch is turned to the “ACC” or “LOCK” position.

NOT FOR REPRODUCTION

The lamp flashes when the engine emission control system is not functioning correctly. If the engine is run for more than 50 hours with the lamp flashing, the system will automatically reduce engine performance until the malfunction is corrected.

(g) Low Fuel Level Warning Light

This light comes on when the fuel level in the tank becomes nearly empty. Fill up the tank as soon as possible.

On inclines or curves, due to the movement of fuel in the tank, the low fuel level warning light may come on earlier than usual.

(h) Fuel Filter Warning Light and Buzzer

The light and buzzer warn you that the amount of accumulated water in the fuel filter has reached the specified level.

If they come on, drain the water immediately. (See Section 7–2 for instructions for how to drain the water.)

NOTICE

Never drive the vehicle with the warning light and buzzer on. Continued driving with water accumulated in the fuel filter will damage the fuel injection pump.

(i) Fuel Filter Replacement Warning Light

This light warns that the fuel filter needs replacement. If it comes on while you are driving, have the fuel filter replaced by your Toyota dealer as soon as possible.

NOTICE

Continued driving without the fuel filter replaced will result in engine damage.

(j) DPF (Diesel Particulate Filter) System Indicator Light and Buzzer

If this light keeps flashing for more than 10 seconds, perform manual regeneration as soon as possible. For details, see “DPF system” in Section 2.

If you do not perform manual regeneration and continue driving with the indicator light flashing, a buzzer will sound until you stop the vehicle and apply the parking brake.

NOTICE

Continuing to drive with the light flashing will cause the malfunction indicator light to come on. If the malfunction indicator light comes on, have your vehicle checked immediately by your Toyota dealer.

(k) “ABS” Warning Light

The light comes on when the engine switch is turned to the “ON” position. If the anti–lock brake system works properly, the light turns off after a few seconds. Thereafter, if the system malfunctions, the light comes on again.

When the “ABS” warning light is on (and the brake system warning light is off), the anti–lock brake system does not operate, but the brake system still operates conventionally.

NOT FOR REPRODUCTION

When the “ABS” warning light is on (and the brake system warning light is off), the anti–lock brake system does not operate so that the wheels could lock up during a sudden braking or braking on slippery road surfaces.

If either of the following conditions occurs, this indicates a malfunction somewhere in the components monitored by the warning light system. Contact your Toyota dealer as soon as possible to service the vehicle.

- The light does not come on when the engine switch is turned to the “ON” position, or remains on.
- The light comes on while you are driving.

A warning light turning on briefly during operation does not indicate a problem.

(l) Emergency Door Warning Light and Buzzer

The light and buzzer come on if the emergency door is not completely closed or the door lever cover is opened when the engine switch is turned to the “ON” or “START” position.

They also come on if the emergency door is locked when the engine switch is “ON”.

(m) Open Passengers’ Door Warning Light

This light remains on until the passengers’ door is completely closed.

(n) Low Vacuum Warning Buzzer

This buzzer warns that there may be a problem in the brake booster.

If this buzzer comes on and stays on while you are driving, slow down and pull off the road. Then stop the vehicle carefully. Remember that stopping distance and pedal effort may be increased.

The brake booster may not be working adequately or there may be a problem in the warning system. Have them checked by your Toyota dealer. (Your vehicle needs to be towed. For towing information, see Section 4.)

⚠ CAUTION

Continued driving with an inoperative brake booster is dangerous.

CHECKING SERVICE REMINDER INDICATORS

1. Apply the parking brake.
2. Turn the engine switch to “ON”, but do not start the engine.
   All the service reminder indicators except the low fuel level warning light, open passenger’s door warning light and emergency door warning light should come on. The “ABS” warning light goes off after a few seconds.
3. Open the passengers’ door.
   The open passengers’ door warning light should come on.
4. Close the passengers’ door.
   The open passengers’ door warning light should go off.

If any service reminder indicator or warning buzzer does not function as described above, have it checked by your Toyota dealer as soon as possible.

NOT FOR REPRODUCTION

OPERATION OF INSTRUMENTS AND CONTROLS

Engine (ignition) switch, Transmission and Parking brake

Engine (ignition) switch 50
Automatic transmission 51
Manual transmission 54
Exhaust retarder (exhaust brake) switch 55
Parking brake 56

NOT FOR REPRODUCTION

Engine (ignition) switch

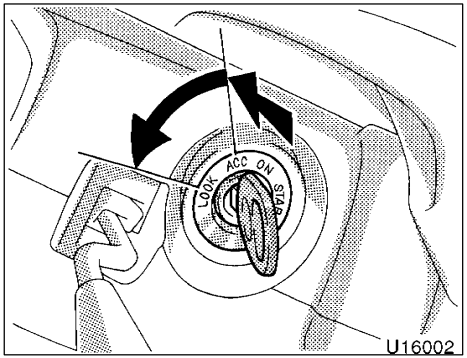

"START"—Starter motor on. The key will return to the "ON" position when released.

For starting tips, see Section 3.

"ON"—Engine on and all accessories on.

This is the normal driving position.

"ACC"—Accessories such as the cigarette lighter operate, but the engine is off.

"LOCK"—Engine is off and the steering wheel is locked. The key can be removed only at this position.

You must push in the key to turn the engine switch to the "LOCK" position. On vehicles with an automatic transmission, the shift lever must be put in the "P" position before pushing the key.

When starting the engine, the engine switch may seem stuck at the "LOCK" position. To free it, first be sure the key is pushed all the way in, and then rock the steering wheel slightly while turning the key gently.

⚠ CAUTION

For manual transmission:

Never remove the key when the vehicle is moving, as this will lock the steering wheel and result in loss of steering control.

NOTICE

- ***Do not leave the engine switch in the "ON" position if the engine is not running. The battery will discharge.***
- ***Do not put the engine in high–speed rotation immediately after starting the engine. If the turbocharger is driven in insufficient condition, which is inevitable immediately after starting the engine, failure such as bearing seizing may be caused.***

NOT FOR REPRODUCTION

Automatic transmission

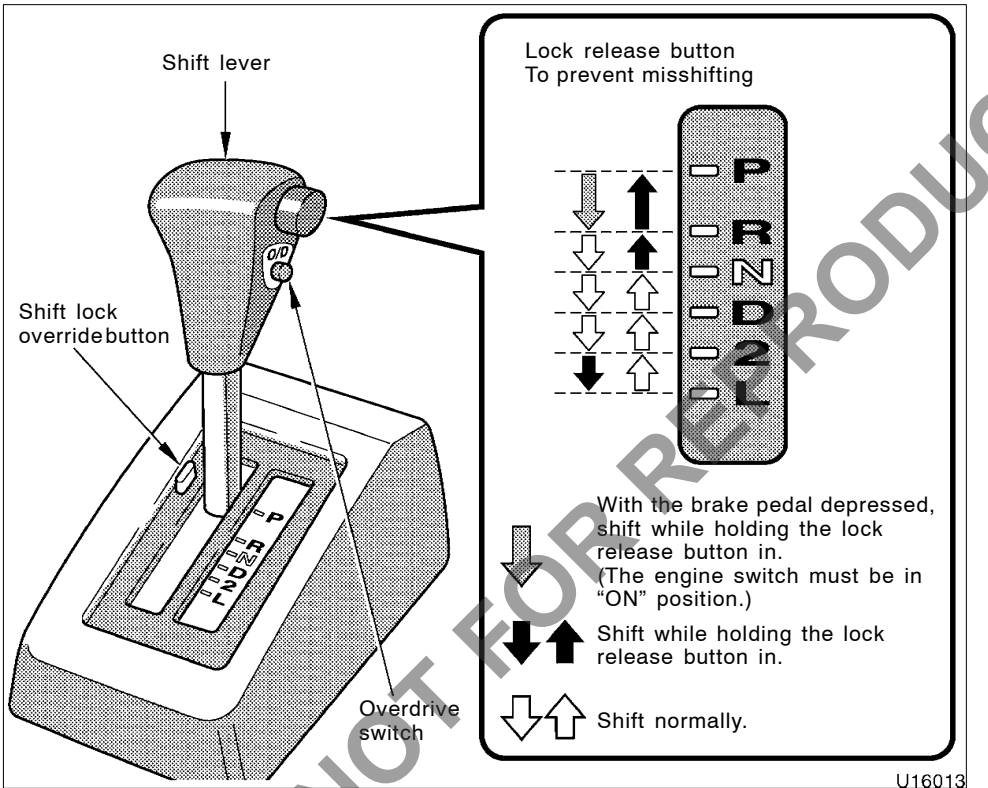

Your automatic transmission has a shift lock system to minimize the possibility of incorrect operation. This means you can only shift out of "P" position when the brake pedal is depressed (with the engine switch in "ON" position and the lock release button depressed).

(a) Shift lever

P: Parking, engine starting and key removal

R: Reverse

N: Neutral

D: Normal driving (with overdrive on)

2: Stronger engine braking

L: Maximum engine braking

NOT FOR REPRODUCTION

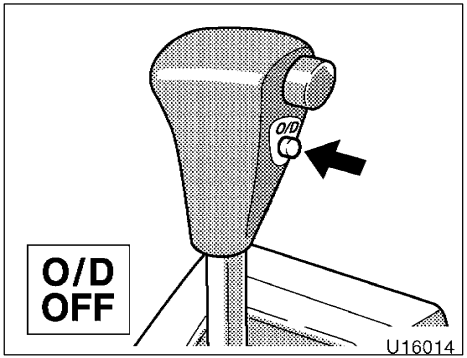

(b) Overdrive switch

You can select either third gear (with overdrive off) or fourth gear (with overdrive on) by pushing this switch.

To turn the overdrive off, push the switch. The “O/D OFF” indicator light should come on. To turn the overdrive on again, push the switch again. The “O/D OFF” indicator light should go off.

Always drive your vehicle with the overdrive on for better fuel economy and quieter driving.

If the engine is turned off when the overdrive is off and restarted, the overdrive will be on automatically.

(c) Normal driving

1. Start the engine as instructed in “How to start the engine” in Section 3. The transmission must be in “P” or “N”.
2. With your foot holding down the brake pedal, shift the shift lever to “D”.

When the lever is in the “D” position, the automatic transmission system will select the most suitable gear for running conditions such as normal cruising, hill climbing, hard towing, etc.

Always turn the overdrive on for better fuel economy and quieter driving. If the engine coolant temperature is low, the transmission will not shift into the overdrive gear even with the overdrive on.

⚠ CAUTION

Never put your foot on the accelerator pedal while shifting.

3. Release the parking brake and brake pedal. Depress the accelerator pedal slowly for smooth starting.

(d) Using engine braking

To use engine braking, you can downshift the transmission as follows:

- Push the overdrive switch. The “O/D OFF” indicator light will come on and the transmission will downshift to third gear.
- Shift into the “2” position when the vehicle speed is lower than 55 km/h (34 mph). The transmission will downshift to second gear and more stronger engine braking will be enabled.
- Shift into the “L” position when the vehicle speed is lower than 20 km/h (12 mph). The transmission will downshift to first gear and maximum engine braking will be enabled.

⚠ CAUTION

Be careful when downshifting on a slippery surface. Abrupt shifting could cause the vehicle to skid or spin.

NOT FOR REPRODUCTION

(e) Using the “2” and “L” positions

The “2” and “L” positions are used for strong engine braking as described previously.

With the shift lever in “2” or “L”, you can start the vehicle in motion as with the lever in “D”.

With the shift lever in “2”, the vehicle will start in first gear and automatically shift to second gear.

With the shift lever in “L”, the transmission is engaged in first gear.

NOTICE

- ***Be careful not to over–rev the engine. Watch the tachometer to keep engine rpm from going into the red zone. The approximate maximum allowable speed for each position is given below for your reference:***

  “2” ..... 60 km/h (37 mph)
  “L” ..... 30 km/h (18 mph)

- ***Do not continue hill climbing or hard towing for a long time in the “2” or “L” position. This may cause severe automatic transmission damage from overheating. To prevent such damage, “D” position should be used in hill climbing or hard towing.***

(f) Backing up

1. Bring the vehicle to a complete stop.
2. With the brake pedal held down with your foot, shift the shift lever to the “R” position.

NOTICE

Never shift into reverse while the vehicle is moving.

(g) Parking

1. Bring the vehicle to a complete stop.
2. Pull the parking brake lever up fully to securely apply the parking brake.
3. With the brake pedal pressed down, shift the shift lever to the “P” position.

⚠ CAUTION

Never attempt to move the shift lever into “P” position under any circumstances while the vehicle is moving. Serious mechanical damage and loss of vehicle control may result.

NOT FOR REPRODUCTION

(h) Good driving practice

- If the transmission repeatedly shifts up and down between third gear and overdrive when climbing a gentle slope, the overdrive switch should be turned off. Be sure to turn the switch on immediately afterward.
- When towing a trailer, in order to maintain engine braking efficiency, do not use overdrive.

⚠ CAUTION

Always keep your foot on the brake pedal while stopped with the engine running. This prevents the vehicle from creeping.

NOTICE

Always use the brake pedal or the parking brake to hold the vehicle on an upgrade. Do not attempt to hold the vehicle using the accelerator pedal, as this can cause the transmission to overheat.

(i) If you cannot shift out of "P" position

If you cannot shift the shift lever from the "P" position even though the brake pedal is depressed, use the shift lock override button. For instructions, see "If you cannot shift automatic transmission shift lever" in Section 4.

Manual transmission

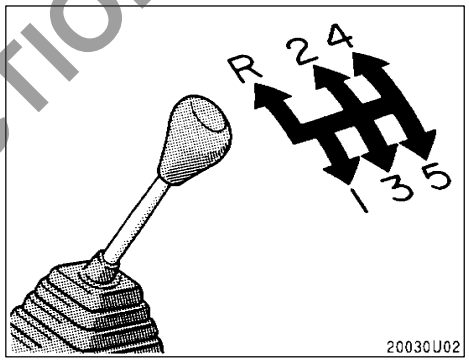

The shift pattern is as shown above.

Press the clutch pedal down fully while shifting, and then release it slowly. Do not rest your foot on the pedal while driving, because it will cause clutch trouble. Do not use the clutch to hold the vehicle when stopped on an uphill grade—use the parking brake.

Upshifting too soon or downshifting too late will cause lugging, and possibly pinging. Regularly revving the engine to maximum speed in each gear will cause excessive engine wear and high fuel consumption.

NOT FOR REPRODUCTION

Maximum allowable speeds

To get on a highway or to pass slower traffic, maximum acceleration may be necessary. Make sure you observe the following maximum allowable speeds in each gear:

gear	km/h (mph)
1	15 (9)
2	30 (19)
3	50 (31)
4	85 (53)

NOTICE

Do not downshift if you are going faster than the maximum allowable speed for the next lower gear.

Good driving practice

- If it is difficult to shift into reverse, put the transmission in neutral, release the clutch pedal momentarily, and then try again.
- When towing a trailer, in order to maintain engine braking efficiency, do not use fifth gear.

CAUTION

Be careful when downshifting on a slippery surface. Abrupt shifting could cause the vehicle to skid or spin.

NOTICE

- ***Make sure the vehicle is completely stopped before shifting into reverse.***
- ***Do not use any gears other than first gear when starting off and moving forward. Doing so may damage the clutch.***

Exhaust retarder (exhaust brake) switch

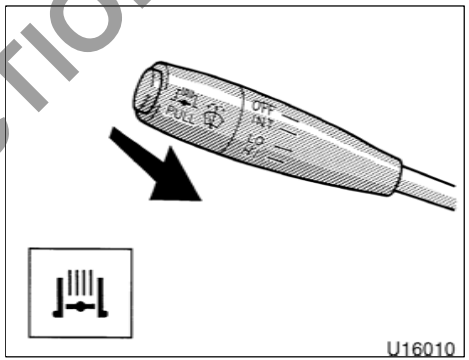

To operate the exhaust retarder (exhaust brake), pull the lever toward you. This will give a braking as long as the accelerator pedal is released.

The indicator light on the instrument cluster shows that the exhaust retarder (exhaust brake) is ready for operation.

The exhaust retarder (exhaust brake) enhances the normal engine braking effect and help reduce foot brake applications. Use it when driving down a steep or long grade with heavy loads or driving in heavy traffic.

NOT FOR REPRODUCTION

Parking brake

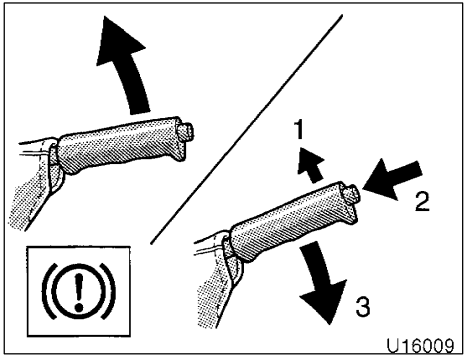

When parking, firmly apply the parking brake to avoid inadvertent creeping.

To set: Pull up the lever. For better holding power, first depress the brake pedal and hold it while setting the parking brake.
To release: Pull up the lever slightly (1), press the lock release button (2), and lower (3).

To remind you that the parking brake is set, the parking brake reminder light in the instrument panel remains on until you release the parking brake.

⚠ CAUTION

Before driving, be sure the parking brake is fully released and the parking brake reminder light is off.

NOT FOR REPRODUCTION

OPERATION OF INSTRUMENTS AND CONTROLS

Air conditioning system

Front heater system
- Controls 58
- Air flow selector settings 61
- Operating tips 61
- Instrument panel vents 63

Cooler system
- Controls 64
- Operating tips 65
- Side roof vents 66

Rear heater controls 67

Front roof vents 68

NOT FOR REPRODUCTION

Front heater system—
—Controls

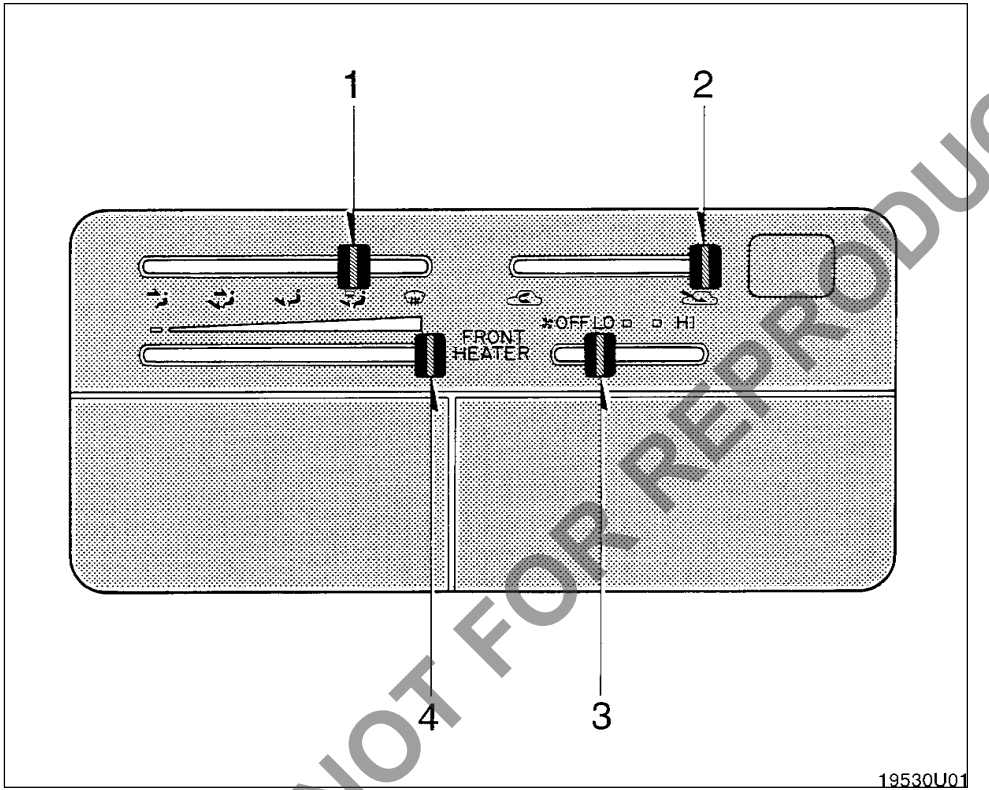

1. Air flow selector
2. Air intake selector
3. Fan speed selector
4. Temperature selector

NOT FOR REPRODUCTION

Fan speed selector

Move the lever to adjust the fan speed—to the right to increase, to the left to decrease.

Temperature selector

This lever is used to adjust the temperature of the heated air.

Move the lever to adjust the temperature—move it right for higher temperature, left for lower temperature, and leftmost for no heat position.

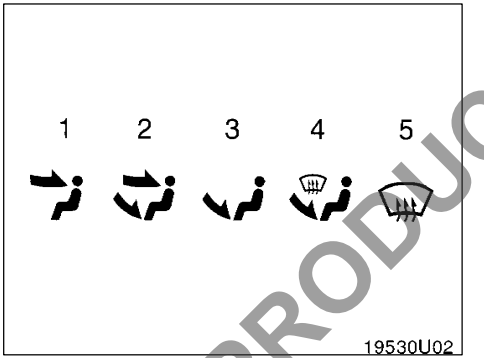

Air flow selector

Move the lever to select the vents used for air flow.

1. **Panel—**Air flows mainly from the instrument panel vents.
2. **Bi-level—**Air flows from both the floor vents and the instrument panel vents.
3. **Floor—**Air flows mainly from the floor vents.
4. **Floor/Windshield—**Air flows mainly from the floor vents and windshield vents.
5. **Windshield—**Air flows mainly from the windshield vents.

For details about air flow selector settings, see "—Air flow selector settings" described below.

NOT FOR REPRODUCTION

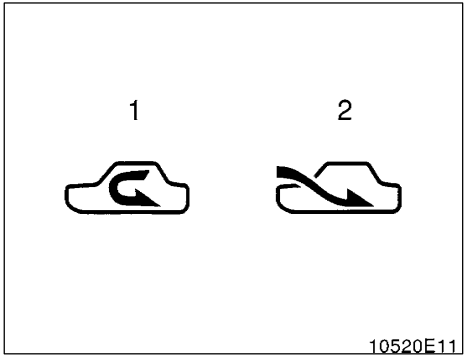

Air intake selector

Move the lever to select the air source.

1. **Recirculate—**Recirculates the air inside the vehicle.
2. **Fresh—**Draws outside air into the system.

NOT FOR REPRODUCTION

—Air flow selector settings

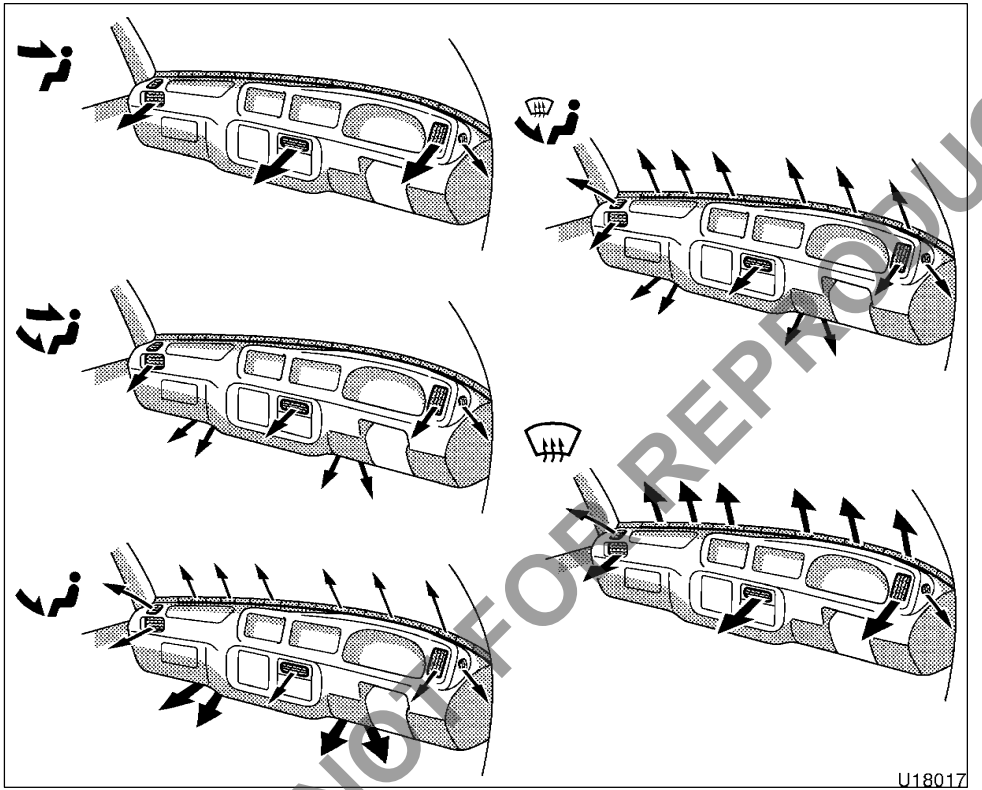

—Operating tips

- To cool off your Toyota after it has been parked in the hot sun, drive with the windows open for a few minutes.
- Make sure the air intake grilles above the windshield are not blocked (by leaves or snow, for example).
- On cold days, set the fan speed to high for a minute to help clear the intake ducts of snow or moisture. This can reduce the amount of fogging on the windows.
- When driving on dusty roads, close all windows. If dust thrown up by the vehicle is still drawn into the vehicle after closing the windows, it is recommended that the air intake selector be set to FRESH and the fan speed selector to any setting except “OFF”.
- If following another vehicle on a dusty road, or driving in windy and dusty conditions, it is recommended that the air intake selector be temporarily set to RECIRCULATE, which will close off the outside passage and prevent outside air and dust from entering the vehicle interior.

NOT FOR REPRODUCTION

- To let fresh air in, set the air conditioning system to the outside air mode.
- During use, various odors from inside and outside the vehicle may enter into and accumulate in the air conditioning system. This may then cause odor to be emitted from the vents.
- To reduce potential odors from occurring:
  It is recommended that the air conditioning system be set to outside air mode prior to turning the vehicle off.

⚠ CAUTION

To prevent the windshield from fogging up, do not select the windshield air outlets during cool air operation in extremely humid weather. The difference between the temperature of the outside air and that of the windshield can cause the outer surface of the windshield to fog up, blocking your vision.

NOTICE

To prevent battery discharge, do not leave the air conditioning system on longer than necessary when the engine is stopped.

Heating

For best results, set controls to:

Fan speed—Any setting except "OFF"
Temperature—Any setting except no heat position
Air intake—FRESH (outside air)
Air flow—FLOOR

- For quick heating, select recirculated air for a few minutes. To keep the windows from fogging, select fresh after the vehicle interior has been warmed.
- Move the cooler fan speed selector anywhere except the "OFF" position for dehumidified heating.
- Choose floor/windshield air flow to heat the vehicle interior while defrosting or defogging the windshield.

Ventilation

For best results, set controls to:

Fan speed—Any setting except "OFF"
Temperature—No heat position
Air intake—FRESH (outside air)
Air flow—PANEL

Defogging and defrosting

For best results, set controls to:

Fan speed—Any setting except "OFF"
Temperature—Full heating position
Air intake—FRESH (outside air)
Air flow—WINDSHIELD

- On humid days, do not blow cold air on the windshield—the difference between the outside and inside temperatures could make the fogging worse.
- To heat the vehicle interior while defrosting the windshield, choose floor/windshield air flow.

NOT FOR REPRODUCTION

—Instrument panel vents

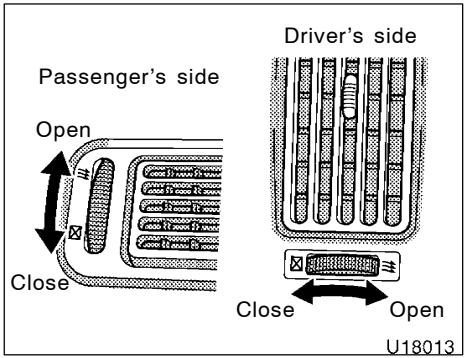

If air flow control is not satisfactory, check the instrument panel vents. The instrument panel vents may be opened or closed as shown.

NOT FOR REPRODUCTION

Cooler system —Controls

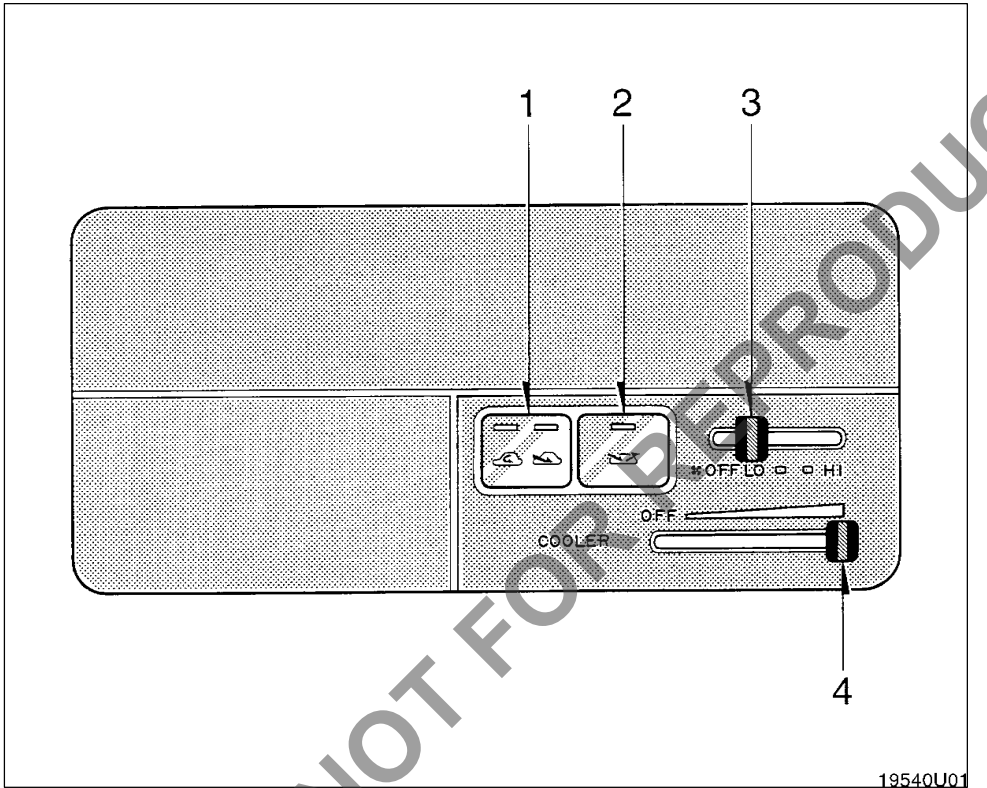

1. Air intake selector
2. Ram air ventilation button
3. Fan speed selector
4. Temperature selector

NOT FOR REPRODUCTION

Fan speed selector

Move the lever to adjust the fan speed—to the right to increase, to the left to decrease.

Temperature selector

This lever is used to adjust the temperature of the cooled air.

Move the lever to the right to lower the temperature. Moving the lever to the "OFF" position turns off the cooler.

Ram air ventilation button

This button is used to increase the intake of fresh outside air for ventilation.

Press in the button when the air in the vehicle is unclean.

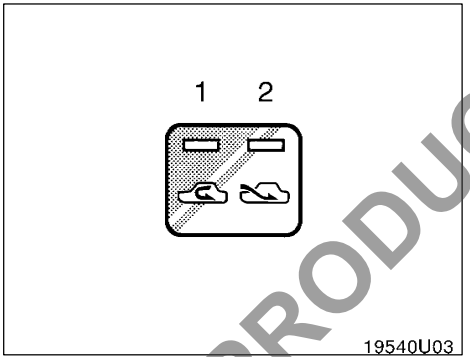

Air intake selector

Press the button to select the air source.

1. **Recirculate**—Recirculates the air inside the vehicle.
2. **Fresh**—Draws outside air into the system.

—Operating tips

- To cool off your Toyota after it has been parked in the hot sun, drive with the windows open for a few minutes. This vents the hot air, allowing the cooler to cool the interior more quickly.
- Make sure the air intake grilles above the windshield are not blocked (by leaves or snow, for example).
- On humid days, do not blow cold air on the windshield. The windshield could fog up because of the difference in air temperature on the inside and outside of the windshield.
- When driving on dusty roads, close all windows. If dust thrown up by the vehicle is still drawn into the vehicle after closing the windows, it is recommended that the air intake selector be set to FRESH and the fan speed selector to any setting except "OFF".
- If following another vehicle on a dusty road, or driving in windy and dusty conditions, it is recommended that the air intake selector be temporarily set to RECIRCULATE, which will close off the outside passage and prevent outside air and dust from entering the vehicle interior.

NOT FOR REPRODUCTION

- During use, various odors from inside and outside the vehicle may enter into and accumulate in the air conditioning system. This may then cause odor to be emitted from the vents.
- To reduce potential odors from occurring:
  It is recommended that the air conditioning system be set to outside air mode prior to turning the vehicle off.

Cooling

For best results, set controls to:

Fan speed—Any setting except “OFF” **Temperature—**Any setting except “OFF” **Air intake—FRESH** (outside air)

- For quick cooling, move the air intake selector to recirculate for a few minutes.

Ventilation

For best results, set controls to:

Fan speed—Any setting except “OFF” **Temperature—**“OFF” position **Air intake—FRESH** (outside air)

- If the ventilation is still not satisfactory, use the ram air ventilation button.

—Side roof vents

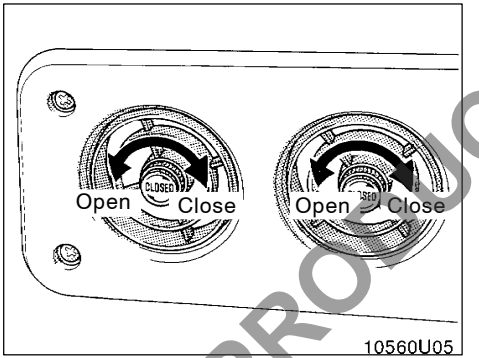

The side roof vents may be opened or closed as shown.

NOT FOR REPRODUCTION

Rear heater controls

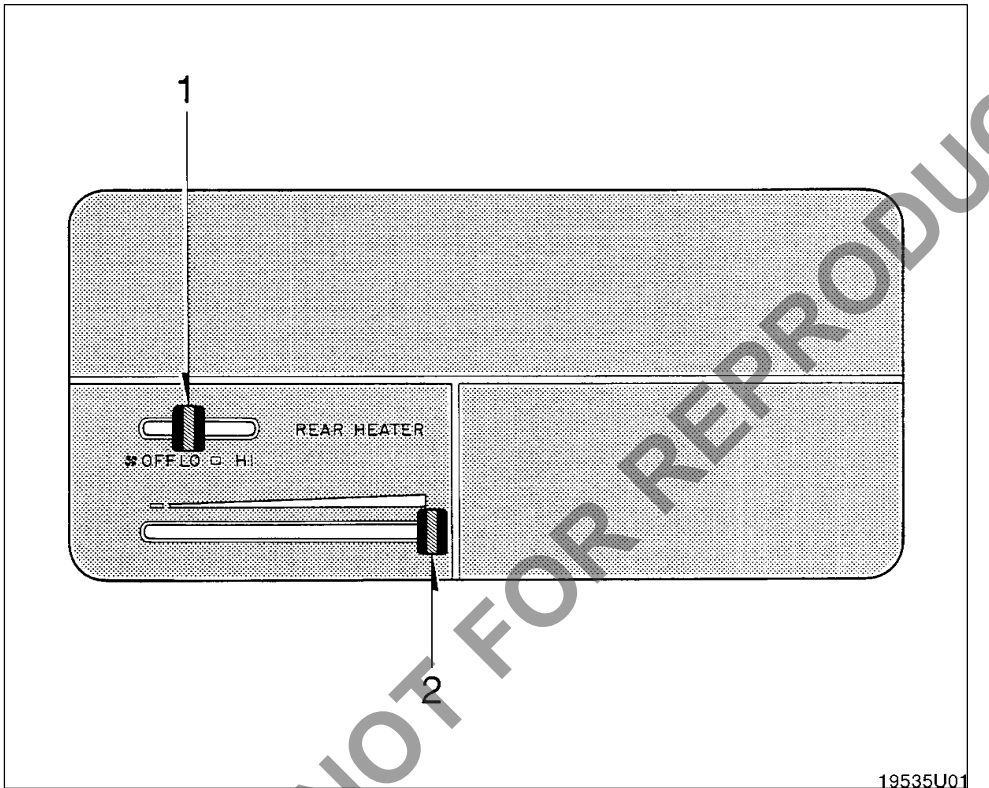

1. Fan speed selector
2. Temperature selector

NOT FOR REPRODUCTION

Fan speed selector

Move the lever to adjust the fan speed—to the right to increase, to the left to decrease.

Temperature selector

This lever is used to adjust the temperature of the heated air.

Move the lever to adjust the temperature—move it right for higher temperature, left for lower temperature, and leftmost for no heat position.

Front roof vents

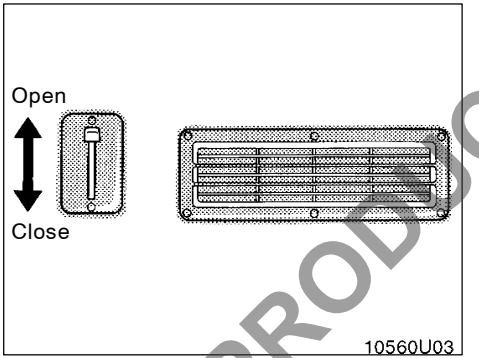

The front roof vents may be opened or closed as shown.

They allow fresh outside air to flow directly into the vehicle. The amount of air entering the vehicle through these vent depends on vehicle speed.

NOT FOR REPRODUCTION

OPERATION OF INSTRUMENTS AND CONTROLS

Other equipment

Clock 70
Cigarette lighter and ashtrays 70
Cup holder 71
Storage precautions 72
Auxiliary box 72
Floor mat 73

NOT FOR REPRODUCTION

Clock

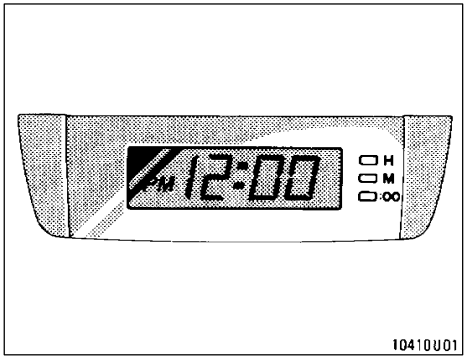

To reset the hour, depress the "H" button. To reset the minutes, depress the "M" button. To adjust the time to a full hour, depress the ":00" button.

For example, if the ":00" button is depressed when the time is between 1:01—1:29, the time will change to 1:00. If the time is between 1:30—1:59, the time will change to 2:00.

If the electrical power source has been disconnected from the clock, the time display will automatically be set to 1:00 (one o'clock).

Cigarette lighter and ashtray

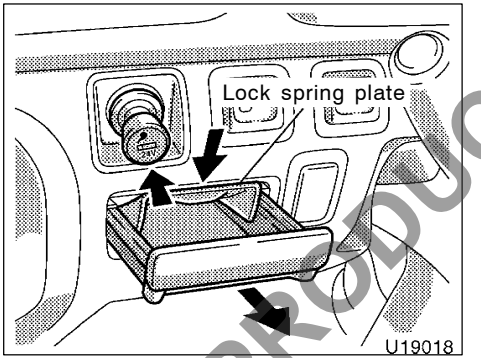

CIGARETTE LIGHTER

To use the cigarette lighter, press it in. After it finishes heating up, it automatically pops out ready for use.

If the engine is not running, the engine switch must be in the "ACC" position.

Do not hold the cigarette lighter pressed in.

Use a Toyota genuine cigarette lighter or equivalent for replacement.

ASHTRAY

To use the ashtray, pull it out.

When finished with your cigarette, thoroughly extinguish it in the ashtray to prevent other cigarette butts from catching fire. After using the ashtray, close it completely.

To remove the ashtray:

Press down on the lock spring plate and pull out.

NOT FOR REPRODUCTION

⚠ CAUTION

To reduce the chance of injury in case of an accident or sudden stop while driving, always completely close the ashtray after use.

Cup holder

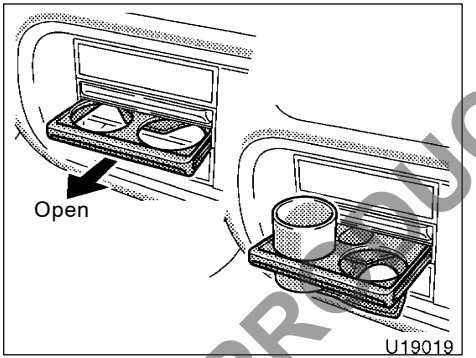

The cup holder is designed for holding cups or drink–cans fit securely.

To use the cup holder, pull it out completely.

⚠ CAUTION

- **Do not place anything else other than cups or drink–cans in the cup holder, as such items may be thrown about in the compartment and possibly injure people in the vehicle during sudden braking or in an accident. If possible, cover hot drinks to prevent burns.**
- **To reduce the chance of injury in case of an accident or sudden stop while driving, keep the cup holder closed when it is not in use.**

NOT FOR REPRODUCTION

Storage precautions

CAUTION

Do not leave glasses, lighters or spray cans in the storage spaces, as this may cause the following when cabin temperature becomes high:

- **Glasses may be deformed by heat or cracked if they come into contact with other stored items.**
- **Lighters or spray cans may explode. If they come into contact with other stored items, the lighter may catch fire or the spray can may release gas, causing a fire hazard.**

Auxiliary box (type A)

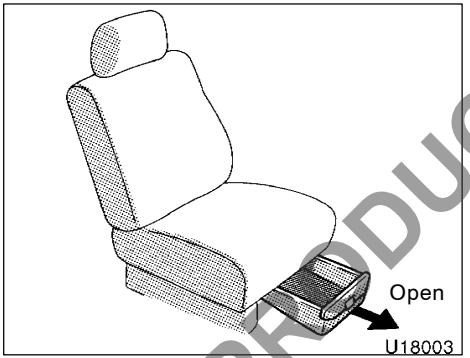

Driver's seat only—

To open the box, pull the lever up first, then pull the box forward.

CAUTION

To reduce the chance of injury in case of an accident or a sudden stop, always keep the auxiliary box closed while driving.

Auxiliary box (type B)

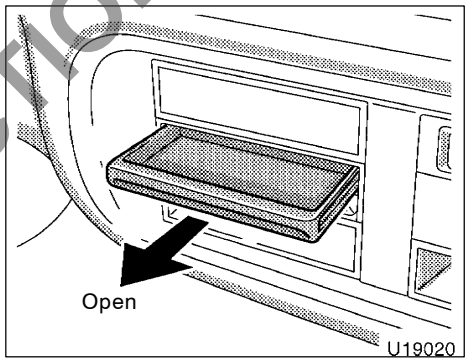

To use the box, pull it out completely.

CAUTION

To reduce the chance of injury in case of an accident or a sudden stop, always keep the auxiliary box closed while driving.

NOT FOR REPRODUCTION

Floor mat

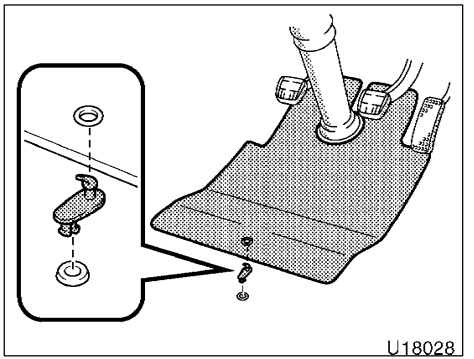

Use only floor mats designed specifically for vehicles of the same model and model year as your vehicle. Fix them securely in place onto the carpet.

Fix the floor mat in place using the retaining clip provided.

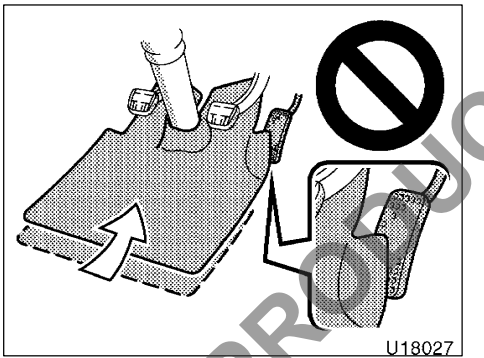

CAUTION

Observe the following precautions. Failure to do so may cause the driver's floor mat to slip, possibly interfering with the pedals while driving. An unexpectedly high speed may result or it may become difficult to stop the vehicle. This could lead to an accident, resulting in death or serious injury.

When installing the driver's floor mat:

- **Do not use floor mats designed for other models or different model year vehicles, even if they are Toyota Genuine floor mats.**
- **Only use floor mats designed for the driver's seat.**
- **Always install the floor mat securely using the retaining clip provided.**
- **Do not use two or more floor mats on top of each other.**
- **Do not place the floor mat bottom–side up or upside–down.**

NOT FOR REPRODUCTION

Before driving:

- **Check that the floor mat is securely fixed in the correct place with the provided retaining clip. Be especially careful to perform this check after cleaning the floor.**
- **With the engine stopped and the shift lever in P (automatic transmission) or neutral (manual transmission), fully depress each pedal to the floor to make sure it does not interfere with the floor mat.**

NOT FOR REPRODUCTION

SECTION 2

INFORMATION BEFORE DRIVING YOUR TOYOTA

Break–in period 76
Fuel 76
Operation in foreign countries 77
DPF system 77
Engine exhaust cautions 80
Facts about engine oil consumption 81
Brake system 82
Brake pad wear indicators 84
Luggage stowage precautions 85
Your Toyota's identification 85
Suspension and chassis 86

NOT FOR REPRODUCTION

Break–in period

Drive gently and avoid high speeds.

Your vehicle does not need an elaborate break–in. But following a few simple tips for the first 1000 km (600 miles) can add to the future economy and long life of your vehicle:

- Avoid full throttle acceleration when starting and driving.
- Avoid racing the engine.
- Try to avoid hard stops during the first 300 km (200 miles).
- Do not drive slowly with the manual transmission in a high gear.
- Do not drive for a long time at any single speed, either fast or slow.
- Do not tow a trailer during the first 800 km (500 miles).

Fuel

Selecting the proper fuel is essential for satisfactory engine performance.

Engine damage caused by use of improper fuels is not covered under Toyota's new vehicle warranty.

NOTICE

- ***Do not use improper fuels. If improper fuels are used, the engine will be damaged.***
- ***Do not use a fuel that contains more than 50 ppm of sulphur. Use of such a high sulphur fuel may damage the engine.***
- ***FAME (Fatty Acid Methyl Ester) fuel sold under names such as "B30" or "B100" and fuel containing a large amount of FAME should not be used. Your vehicle can use diesel mixed with 5% max biodiesel FAME (B5). The use of fuel with more than 5% FAME content (B5) will damage the vehicle's fuel system. You must ensure that refueling is carried out only from a source where fuel specification and quality can be guaranteed. In case of any doubt, ask your Toyota dealer.***

FUEL TYPE

Use only diesel fuel that contains 50 ppm or less of sulphur.

If you plan to drive in foreign countries, low sulphur diesel fuel may not be available, so please confirm the availability with your distributor.

CETANE NUMBER

Select cetane number 50 (cetane index 45) or higher.

Use of fuel with a cetane number lower than stated will cause persistent heavy knocking. If severe, this will lead to engine damage.

If your engine knocks...

If you detect heavy knocking even when using the recommended fuel, or if you hear steady knocking while holding a steady speed on level roads, consult your Toyota dealer.

However, occasionally, you may notice light knocking for a short time while accelerating or driving up hills. This is normal and there is no need for concern.

FUEL TANK CAPACITY

95 L (25.1 gal., 20.9 Imp. gal.)

NOT FOR REPRODUCTION

Operation in foreign countries

If you plan to drive your Toyota in another country...

First, comply with the vehicle registration laws.

Second, confirm the availability of the correct fuel.

DPF system

The DPF (Diesel Particulate Filter) system is designed to reduce the particulate matter in diesel engine exhaust gases by absorbing the particulate matter in the catalytic converter (oxidation catalyst). The system performs automatic regeneration to burn off the particulate matter absorbed in the catalytic converter. To allow the system to perform automatic regeneration, shift the transmission into "P" (automatic) or neutral (manual) when the vehicle is parked with the engine running.

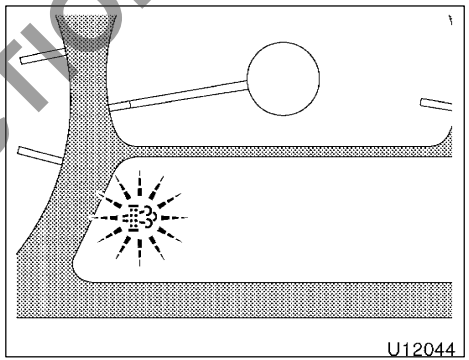

DPF system indicator light

If particulate matter builds up in the catalytic converter, the indicator lights on the instrument cluster and the manual regeneration switch on the instrument panel will flash when the engine switch is turned on. The indicator lights will go off within 10 seconds if automatic regeneration is sufficient. If the indicator lights keep flashing for more than 10 seconds, the system requires manual regeneration.

If you do not perform manual regeneration and continue driving with the indicator light flashing, a buzzer will sound.

NOT FOR REPRODUCTION

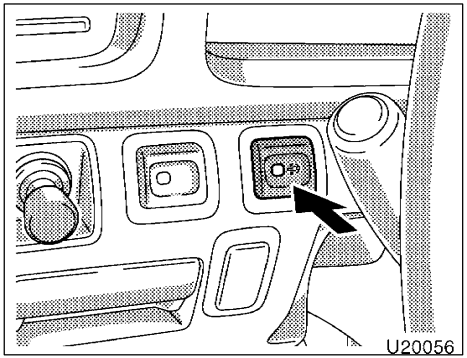

Manual regeneration switch

To start manual regeneration:

1. **Stop the vehicle in a safe place with the engine running.**
2. **Shift the transmission into "P" (automatic) or neutral (manual) and apply the parking brake.**
3. **Push the manual regeneration switch.**

The DPF system indicator light and the indicator light on the switch will stay on. The engine idle speed will increase.

In 15 to 20 minutes, manual regeneration will be completed and the lights will go off. The engine idle speed will be reduced.

If the engine and exhaust system are hot, such as after driving, manual regeneration will take less time.

Perform manual regeneration as soon as possible if the indicator lights are flashing. Driving over 150 km (93 miles) with the indicator lights flashing will cause the malfunction indicator light to come on. If the malfunction indicator light comes on, have your vehicle checked immediately by your Toyota dealer.

ENGINE OIL CONDITION

The system injects some amount of fuel into the engine to burn the particulate matter from the catalytic converter. When the vehicle is used for short trips or used in cold weather, there is the possibility that there will be a significant amount of fuel in the engine oil. If it appears that fuel is present in the engine oil, change the oil as soon as possible.

CAUTION

- **Be careful not to touch the hot exhaust system and stay away from exhaust gases. During manual regeneration, the exhaust gases become hotter than usual. Never leave flammable items near the exhaust system.**
- **Do not drive, idle or park your vehicle over anything that might burn easily such as grass, leaves, paper or rags.**

NOT FOR REPRODUCTION

NOTICE

To prevent damage to the system and a fire hazard, observe the following precautions:

- ***Use only diesel fuel that contains 50 ppm or less sulphur.***
- ***Do not stop the engine during manual regeneration.***
- ***Do not move the vehicle before manual regeneration is completed.***
- ***Continuing to drive with the DPF system indicator light and the indicator light on the manual regeneration switch flashing will cause the malfunction indicator light to come on. Perform manual regeneration as soon as possible if the indicator lights are flashing.***
- ***Operating the vehicle when the engine oil contains a significant amount of diesel fuel may result in damage to the engine. If a significant amount of fuel is present, change the oil as soon as possible.***
- ***Do not drive with an extremely low fuel level; running out of fuel could cause the engine to misfire, creating an excessive load on the catalytic converter.***
- ***Do not allow the engine to run at idle speed for more than 20 minutes except when performing manual regeneration.***
- ***Do not push–start or pull–start your vehicle.***
- ***Do not turn off the engine switch while the vehicle is moving.***
- ***Keep your engine in good running order. Malfunctions in the engine electrical system or fuel system could cause an extremely high catalytic converter temperature.***
- ***If the engine becomes difficult to start or stalls frequently, take your vehicle in for a check–up to your Toyota dealer.***
- ***To ensure that the catalytic converter and the entire emission control system operate properly, your vehicle must receive the periodic inspections required by the Toyota Maintenance Schedule. (See Section 6.)***

NOT FOR REPRODUCTION

Engine exhaust cautions

CAUTION

- Exhaust gases include harmful carbon monoxide (CO) that is colorless and odorless. Inhaling exhaust gases may lead to death or a serious health hazard.
- The exhaust should be checked occasionally. If there is a hole or crack caused by corrosion, damage to a joint or abnormal exhaust noise, be sure to have the vehicle inspected and repaired by your Toyota dealer. Failure to do so may allow exhaust gases to enter the vehicle, resulting in death or a serious health hazard.
- If the vehicle is in a poorly ventilated area, turn the engine off. In a closed area, such as a garage, exhaust gases may collect and enter the vehicle. This may lead to death or a serious health hazard.

- Do not remain for a long time in a parked vehicle with the engine running. If it is unavoidable, however, do so only in an unconfined area and adjust the heating or cooling system to force outside air into the vehicle.
- If the smell of exhaust is noticed inside the vehicle, open the windows. Large amounts of exhaust in the vehicle can cause driver drowsiness and an accident, resulting in death or a serious health hazard. Have the vehicle inspected by your Toyota dealer immediately.
- Do not leave the engine running in an area with snow build–up, or where it is snowing. If snowbanks build up around the vehicle while the engine is running, exhaust gases may collect and enter the vehicle. This may lead to death or a serious health hazard.

- When taking a nap in the vehicle, always turn the engine off. Otherwise, you may accidentally move the shift lever or depress the accelerator pedal, which could cause an accident or fire due to engine overheating. Additionally, if the vehicle is parked in a poorly ventilated area, exhaust gases may collect and enter the vehicle, leading to death or a serious health hazard.

NOT FOR REPRODUCTION

Facts about engine oil consumption

FUNCTIONS OF ENGINE OIL

Engine oil has the primary functions of lubricating and cooling the inside of the engine, and plays a major role in maintaining the engine in proper working order.

ENGINE OIL CONSUMPTION

It is normal that an engine should consume some engine oil during normal engine operation. The causes of oil consumption in a normal engine are as follows.

- Oil is used to lubricate pistons, piston rings and cylinders. A thin film of oil is left on the cylinder wall when a piston moves downwards in the cylinder. High negative pressure generated when the vehicle is decelerating sucks some of this oil into the combustion chamber. This oil as well as some part of the oil film left on the cylinder wall is burned by the high temperature combustion gases during the combustion process.
- Oil is also used to lubricate the stems of the intake valves. Some of this oil is sucked into the combustion chamber together with the intake air and is burned along with the fuel. High temperature exhaust gases also burn the oil used to lubricate the exhaust valve stems.

A certain amount of engine oil will be consumed while driving. In the following situations, oil consumption may increase, and engine oil may need to be refilled in between oil maintenance intervals.

- When the engine is new, for example directly after purchasing the vehicle or after replacing the engine
- If low quality oil or oil of an inappropriate viscosity is used
- When driving at high engine speeds or with a heavy load, when towing or when driving while accelerating or decelerating frequently
- When leaving the engine idling for a long time, or when driving frequently through heavy traffic

IMPORTANCE OF ENGINE OIL LEVEL CHECK

One of the most important points in proper vehicle maintenance is to keep the engine oil at the optimum level so that oil function will not be impaired. Therefore, it is essential that the oil level be checked regularly. Toyota recommends that the oil level be checked every time you refuel the vehicle.

NOTICE
Failure to check the oil level regularly could lead to serious engine trouble due to insufficient oil.

For detailed information on oil level check, see “Checking the engine oil level” in Section 7–2.

NOT FOR REPRODUCTION

Brake system

The tandem master cylinder brake system is a hydraulic system with two separate sub–systems. If either sub–system should fail, the other will still work. However, the pedal will be harder to press, and your stopping distance will increase. Also, the brake system warning light may come on.

⚠ CAUTION

Do not drive your vehicle with only a single brake system. Have your brakes fixed immediately.

BRAKE BOOSTER

The brake booster uses engine vacuum to power–assist the brakes. If the engine should quit while you are driving, you can bring the vehicle to a stop with normal pedal pressure. There is enough reserved vacuum for one or two stops—but no more!

⚠ CAUTION

- **Do not pump the brake pedal if the engine stalls. Each push on the pedal uses up your reserved vacuum.**
- **Even if the power assist is completely lost, the brakes will still work. But you will have to push the pedal hard, much harder than normal. And your braking distance will increase. Have your brakes fixed immediately.**

ANTI–LOCK BRAKE SYSTEM

The anti–lock brake system is designed to help prevent lock–up of the wheels during a sudden braking or braking on slippery road surfaces. This assists in providing directional stability and steering performance of the vehicle under these circumstances.

Effective way to press the ABS brake pedal: When the anti–lock brake system function is in action, you may feel the brake pedal pulsating and hear a noise. In this situation, to let the anti–lock brake system work for you, just hold the brake pedal down more firmly. Do not pump the brake in a panic stop. This will result in reduced braking performance.

The anti–lock brake system becomes operative after the vehicle has accelerated to a speed in excess of approximately 10 km/h (6 mph). It stops operating when the vehicle decelerates to a speed below approximately 5 km/h (3 mph).

Depressing the brake pedal on slippery road surfaces such as on a manhole cover, a steel plate at a construction site, joints in a bridge, etc. on a rainy day tends to activate the anti–lock brake system.

You may hear a click or motor sound in the engine compartment for a few seconds when the engine is started or just after the vehicle begins to move. This means that the anti–lock brake system is in the self–check mode, and does not indicate a malfunction.

NOT FOR REPRODUCTION

When the anti–lock brake system is activated, the following conditions may occur. They do not indicate a malfunction of the system:

- You may hear the anti–lock brake system operating and feel the brake pedal pulsating and the vibrations of the vehicle body and steering wheel. You may also hear the motor sound in the engine compartment even after the vehicle is stopped.
- At the end of the anti–lock brake system activation, the brake pedal may move a little forward.

⚠ CAUTION

Do not overestimate the anti–lock brake system: Although the anti–lock brake system assists in providing vehicle control, it is still important to drive with all due care and maintain a moderate speed and safe distance from the vehicle in front of you, because there are limits to the vehicle stability and effectiveness of steering wheel operation even with the anti–lock brake system on.

If tire grip performance exceeds its capability, or if hydroplaning occurs during high speed driving in the rain, the anti–lock brake system does not provide vehicle control.

Anti–lock brake system is not designed to shorten the stopping distance: Always drive at the moderate speed and maintain a safe distance from the vehicle in front of you. Compared with vehicles without an anti–lock brake system, your vehicle may require a longer stopping distance in the following cases:

- **Driving on rough, gravel or snow–covered roads.**
- **Driving with tire chains installed.**
- **Driving over the steps such as the joints on the road.**
- **Driving on roads where the road surface is pitted or has other differences in surface height.**

Install all 4 tires of specified size at appropriate pressure: The anti–lock brake system detects vehicle speeds using the speed sensors for respective wheels' turning speeds. The use of tires other than specified may fail to detect the accurate turning speed resulting in a longer stopping distance.

NOT FOR REPRODUCTION

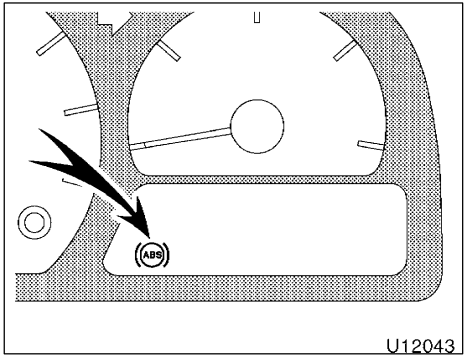

“ABS” warning light

The light comes on when the engine switch is turned to the “ON” position. If the anti–lock brake system works properly, the light turns off after a few seconds. Thereafter, if the system malfunctions, the light comes on again.

When the “ABS” warning light is on (and the brake system warning light is off), the anti–lock brake system does not operate, but the brake system still operates conventionally.

When the “ABS” warning light is on (and the brake system warning light is off), the anti–lock brake system does not operate so that the wheels could lock up during a sudden braking or braking on slippery road surfaces.

If either of the following conditions occurs, this indicates a malfunction somewhere in the components monitored by the warning light system. Contact your Toyota dealer as soon as possible to service the vehicle.

- The light does not come on when the engine switch is turned to the “ON” position, or remains on.
- The light comes on while you are driving.

A warning light turning on briefly during operation does not indicate a problem.

PARKING BRAKE SYSTEM

Your vehicle has a parking brake system. This type of brake system needs bedding–down of the brake shoes periodically or whenever the parking brake shoes and/or drums are replaced.

Have your Toyota dealer perform the bedding–down.

Brake pad wear indicators

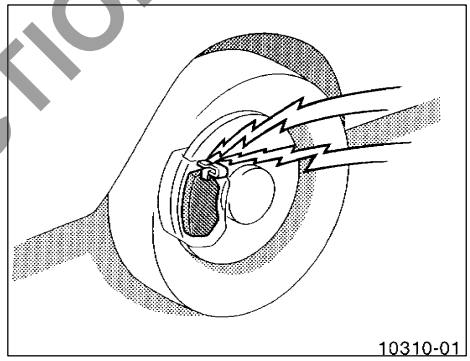

The brake pad wear indicators on your disc brakes give a warning noise when the brake pads are worn to where replacement is required.

If you hear a squealing or scraping noise while driving, have the brake pads checked and replaced by your nearest Toyota dealer immediately.

Avoid continuous driving with the warning noise.

Continuous driving without replacing the brake pads will cause expensive rotor damage and increasing brake pedal effort to get the same stopping distance.

NOT FOR REPRODUCTION

Luggage stowage precautions

When stowing cargo and luggage in the vehicle, observe the following:

- Put cargo and luggage in the luggage compartment when at all possible. Be sure all items are secured in place.
- Be careful to keep the vehicle balanced. Locating the weight as far forward as possible helps maintain balance.
- For better fuel economy, do not carry unneeded weight.

⚠ CAUTION

- **To prevent cargo and luggage from sliding forward during braking, do not stack anything in the luggage compartment higher than the seatbacks. Keep cargo and luggage low, as close to the floor as possible.**
- **Never allow anyone to ride in the luggage compartment. It is not designed for passengers. They should ride in their seats with their seat belts properly fastened. Otherwise, they are much more likely to suffer death or serious bodily injury, in the event of sudden braking or a collision.**

- **Do not drive with objects left on top of the instrument panel. They may interfere with the driver's field of view. Or they may move during sharp vehicle acceleration or turning, and impair the driver's control of the vehicle. In an accident they may injure the vehicle occupants.**

Your Toyota's identification——Vehicle identification number

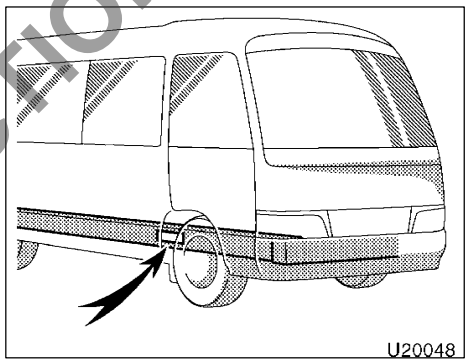

The vehicle identification number (VIN) is the legal identifier for your vehicle. This number is stamped on the front right frame as shown.

This is the primary identification number for your Toyota. It is used in registering the ownership of your vehicle.

NOT FOR REPRODUCTION

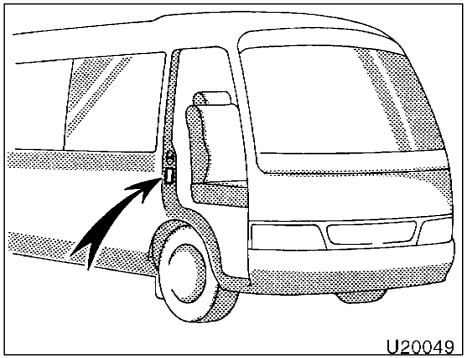

The vehicle identification number (VIN) is also on the manufacturer's plate.

—Engine number

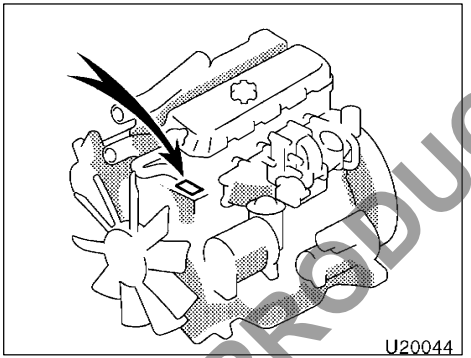

The engine number is stamped on the engine block as shown.

Suspension and chassis

CAUTION

Do not modify the suspension/chassis with lift kits, spacers, springs, etc. It can cause dangerous handling characteristics, resulting in loss of control.

NOT FOR REPRODUCTION

SECTION 3

STARTING AND DRIVING

Before starting the engine 88
How to start the engine 88
Precautions for turning off an engine with turbocharger 89
Pre–trip safety check 89
Tips for driving in various conditions 90
Driving in the rain 91
Winter driving tips 92
Trailer towing 93
How to save fuel and make your vehicle last longer 98

NOT FOR REPRODUCTION

Before starting the engine

1. Check the area around the vehicle before entering it.
2. Adjust seat position, seatback angle, head restraint height and steering wheel angle.
3. Adjust the inside and outside rear view mirrors.
4. Lock the driver's door and close the passengers' door to release the accelerator pedal lock.
5. Fasten seat belts.

How to start the engine—
(a) Before cranking

1. Apply the parking brake firmly.
2. Turn off unnecessary lights and accessories.
3. **Manual transmission:** Press the clutch pedal to the floor and shift the transmission into neutral. Hold the clutch pedal to the floor until the engine is started.

   Automatic transmission: Put the shift lever in "P". If you need to restart the engine while the vehicle is moving, put the shift lever in "N". A starter safety device will prevent the starter from operating if the shift lever is in any drive position.
4. **Automatic transmission only:** Depress the brake pedal and hold it to the floor until driving off.

(b) Starting the engine

Before starting the engine, be sure to follow the instructions in "(a) Before cranking".

Normal starting procedure

With your foot off the accelerator pedal, crank the engine by turning the key to "START". Release it when the engine starts.

Engine should be warmed up by driving, not in idle. For warming up, drive with smoothly turning engine until engine coolant temperature is within normal range.

If the engine stalls...

Simply restart it, using the correct procedure given in normal starting.

If the engine will not start...

See "If your vehicle will not start" in Section 4.

NOTICE

- ***Do not crank for more than 30 seconds at a time. This may overheat the starter and wiring systems.***
- ***Do not race a cold engine.***
- ***If the engine becomes difficult to start or stalls frequently, have the engine checked immediately.***

NOT FOR REPRODUCTION

Precautions for turning off an engine with turbocharger

How to stop the engine

1. Apply the parking brake firmly and place the selector lever in “P” position.
2. Idle the engine for 5 minutes before stopping the engine. Then turn the key to the “ACC” position to shut off the engine.
3. Turn the key while pushing to set it at the “LOCK” position. Then pull out the key.

NOTICE

Before stopping the engine, idle the engine approximately for 5 minutes. If the engine is stopped suddenly without idling, the turbocharger is forced to rotate without oil pressure. This may eliminate the necessary oil film and cause the bearing wear.

Pre–trip safety check

It is a good idea to do a safety check before starting out on a trip. A few minutes of checking can help ensure safe and pleasant driving. Just a basic familiarity with your vehicle is required and a careful eye! Or, if you would like, your Toyota dealer will be pleased to make this check for you at a nominal cost.

CAUTION

If you make this check in an enclosed garage, make sure there is adequate ventilation. Engine exhaust is poisonous.

BEFORE STARTING THE ENGINE

Outside the vehicle

Tires (spare included). Check the pressure with a gauge and look carefully for cuts, damage, or excessive wear.

Wheel nuts. Make sure no nuts are missing or loose.

Fluid leaks. After the vehicle has been parked for a while, check underneath for leaking fuel, oil, water, or fluid. (Water dripping from the cooler after use is normal.)

Lights. Make sure the headlights, stop lights, tail lights, turn signal lights and other lights are all working. Check the headlight aim.

Inside the vehicle

Jack and wheel nut wrench. Make sure you have your jack and wheel nut wrench.

Seat belts. Check that the buckles lock securely. Make sure the belts are not worn or frayed.

Instruments and controls. Especially make sure the service reminder indicators, instrument lights, and defroster are working.

Brakes. Make sure the pedal has enough clearance.

Spare fuses. Make sure you have spare fuses. They should cover all the amperage ratings designated on the fuse box lid.

Battery and cables. All the battery cells should be filled to the proper level with distilled water. Look for corroded or loose terminals and a cracked case. Check the cables for good condition and connections.

In the engine compartment

Coolant level. Make sure the coolant level is correct. (See Section 7–2 for instructions.)

NOT FOR REPRODUCTION

Wiring. Look for damaged, loose, or disconnected wires.

Fuel lines. Check the lines for leaks or loose connections.

AFTER STARTING THE ENGINE

Exhaust system. Listen for any leakage. Have any leaks fixed immediately. (See "Engine exhaust cautions" in Section 2.)

Engine oil level. Stop the engine and check the dipstick with the vehicle parked on a level spot. (See Section 7–2 for instructions.)

WHILE DRIVING

Instruments. Make sure the speedometer and gauges are working.

Brakes. In a safe place, check that the brakes do not pull to one side when applied.

Anything unusual? Look for loose parts and leaks. Listen for abnormal noises.

If everything looks O.K., set your mind at ease and enjoy your trip!

Tips for driving in various conditions

- Always slow down in gusty crosswinds. This will allow you much better control.
- Drive slowly onto curbs and, if possible, at a right angle. Avoid driving onto high, sharp–edged objects and other road hazards. Failure to do so can lead to severe tire damage such as a tire burst.

  Drive slowly when passing over bumps or travelling on a bumpy road. Otherwise, the impact could cause severe damage to the tires and/or wheels.
- When parking on a hill, turn the front wheels until they touch the curb so that the vehicle will not roll. Apply the parking brake, and place the transmission in "P" (automatic) or first or reverse (manual). If necessary, block the wheels.
- Washing your vehicle or driving through deep water may get the brakes wet. To see whether they are wet, check that there is no traffic near you, and then press the pedal lightly. If you do not feel a normal braking force, the brakes are probably wet. To dry them, drive the vehicle cautiously while lightly pressing the brake pedal with the parking brake applied. If they still do not work safely, pull to the side of the road and call a Toyota dealer for assistance.

⚠ CAUTION

- **Before driving off, make sure the parking brake is fully released and the parking brake reminder light is off.**
- **Do not leave your vehicle unattended while the engine is running.**
- **Do not rest your foot on the brake pedal while driving. It can cause dangerous overheating, needless wear, and poor fuel economy.**
- **To drive down a long or steep hill, reduce your speed and downshift. Remember, if you ride the brakes excessively, they may overheat and not work properly.**

NOT FOR REPRODUCTION

- **Be careful when accelerating, upshifting, downshifting or braking on a slippery surface. Sudden acceleration or engine braking could cause the vehicle to skid or spin.**
- **Do not continue normal driving when the brakes are wet. If they are wet, your vehicle will require a longer stopping distance, and it may pull to one side when the brakes are applied. Also, the parking brake will not hold the vehicle securely.**

NOTICE

- ***Do not depress the accelerator and brake pedals at the same time during driving. If the brake pedal is depressed while driving with the accelerator pedal depressed, driving torque may be restrained.***
- ***Do not use the accelerator pedal or depress the accelerator and brake pedals at the same time to hold the vehicle on a hill.***

Driving in the rain

Driving on a slippery road surface

Drive carefully when it is raining, because visibility will be reduced, the windows may become fogged–up, and the road will be slippery.

- Drive carefully when it starts to rain, because the road surface will be especially slippery.
- Refrain from high speeds when driving on an expressway in the rain, because there may be a layer of water between the tires and the road surface, preventing the steering and brakes from operating properly.

CAUTION

- **Sudden braking, acceleration and steering when driving on a slippery road surface may cause tire slippage and reduce your ability to control the vehicle, resulting in an accident.**
- **Sudden changes in engine speed, such as sudden engine braking, may cause the vehicle to skid, resulting in an accident.**
- **After driving through a puddle, lightly depress the brake pedal to make sure that the brakes are functioning properly. Wet brake pads may prevent the brakes from functioning properly. If the brakes on only one side are wet and not functioning properly, steering control may be affected, resulting in an accident.**

NOT FOR REPRODUCTION

When encountering flooded roads

Do not drive on a road that has flooded after heavy rain etc. Doing so may cause serious damage to the vehicle.

NOTICE
Driving on a flooded road may cause the engine to stall as well as cause serious vehicle malfunctions such as shorts in electrical components and engine damage from water immersion. In the event that you drive on a flooded road and the vehicle is flooded, be sure to have your Toyota dealer check brake function, changes in quantity and quality of oil and fluid used for the engine, transmission, differential, etc. and lubricant condition for the propeller shaft, bearings and suspension joints (where possible) and the function of all joints and bearings, etc.

Winter driving tips

Make sure your coolant is properly protected against freezing.

Only use "Toyota Super Long Life Coolant" or similar high quality ethylene glycol based non–silicate, non–amine, non–nitrite, and non–borate coolant with long–life hybrid organic acid technology. (Coolant with long–life hybrid organic acid technology is a combination of low phosphates and organic acids.)

See "Checking the engine coolant level" in Section 7–2 for details of coolant type selection.

"Toyota Super Long Life Coolant" is a mixture of 50% coolant and 50% deionized water. This coolant provides protection down to about –35°C (–31°F).

NOTICE
Do not use plain water alone.

Check the condition of the battery and cables.

Cold temperatures reduce the capacity of any battery, so it must be in top shape to provide enough power for winter starting. Section 7–3 tells you how to visually inspect the battery. Your Toyota dealer and most service stations will be pleased to check the level of charge.

Make sure the engine oil viscosity is suitable for the cold weather.

See Section 7–2 for recommended viscosity. Leaving a heavy summer oil in your vehicle during winter months may cause harder starting. If you are not sure about which oil to use, call your Toyota dealer—they will be pleased to help.

Keep the door locks from freezing.

Squirt lock de–icer or glycerine into the locks to keep them from freezing. To open a frozen lock, try heating the key before inserting it.

Use a washer fluid containing an anti-freeze solution.

This product is available at your Toyota dealer and most auto parts stores. Follow the manufacturer's directions for how much to mix with water.

NOT FOR REPRODUCTION

NOTICE

Do not use engine antifreeze or any other substitute because it may damage your vehicle's paint.

Do not use your parking brake when there is a possibility it could freeze.

When parking, put the transmission into "P" (automatic) or into first or reverse (manual) and block the front wheels. Do not use the parking brake, or snow or water accumulated in and around the parking brake mechanism may freeze, making it hard to release.

Keep ice and snow from accumulating under the fenders.

Ice and snow built up under your fenders can make steering difficult. During bad winter driving, stop and check under the fenders occasionally.

Depending on where you are driving, we recommend you carry some emergency equipment.

Some of the things you might put in the vehicle are tire chains, window scraper, bag of sand or salt, flares, small shovel, jumper cables, etc.

Trailer towing

Your vehicle is designed primarily as a passenger–and–load–carrying vehicle. Towing a trailer will have an adverse effect on handling, performance, braking, durability and driving economy (fuel consumption, etc.). Your safety and satisfaction depend on the proper use of correct equipment and cautious driving habits. For your safety and the safety of others, you must not overload your vehicle or trailer. Ask your local Toyota dealer for further details before towing, as there are additional legal requirements in some countries.

For towing purposes, when the total trailer weight is greater than the vehicle weight, we recommend use of a sway control device.

NOTICE

When towing a trailer, be sure to consult your Toyota dealer for further information on additional requirements such as a towing kit, etc.

WEIGHT LIMITS

Before towing, make sure the total trailer weight, gross vehicle weight, gross axle weight and trailer tongue load are all within the limits.

The total trailer weight and tongue load can be measured with platform scales found at a public weighbridge, building supply company, trucking company, junk yard, etc.

NOT FOR REPRODUCTION

⚠ CAUTION

- **The total trailer weight (trailer weight plus its cargo load) must not exceed 2000 kg (4409 lb.). Exceeding this weight is dangerous.**
- **Trailer hitch assemblies have different weight capacities established by the hitch manufacturer. Even though the vehicle may be physically capable of towing a higher weight, the operator must determine the maximum weight rating of the particular hitch assembly and never exceed the maximum weight rating specified for the trailer–hitch. Exceeding the maximum weight rating set by the trailer hitch manufacturer can cause an accident resulting in serious personal injuries.**

- **The gross vehicle weight must not exceed 5440 kg (11993 lb.). The gross vehicle weight is the sum of weights of the unloaded vehicle, driver, passengers, luggage, hitch and trailer tongue load. It also includes the weight of any special equipment installed on your vehicle.**
- **The gross combined weight (sum of your vehicle weight plus its load and the total trailer weight) must not exceed 6940 kg (15302 lb.). Exceeding this weight is dangerous.**
- **The load on either the front or rear axle resulting from distribution of the gross vehicle weight on both axles must not exceed the following.**

Front	**2330 kg (5137 lb.)**
Rear	**3080 kg (6790 lb.)**

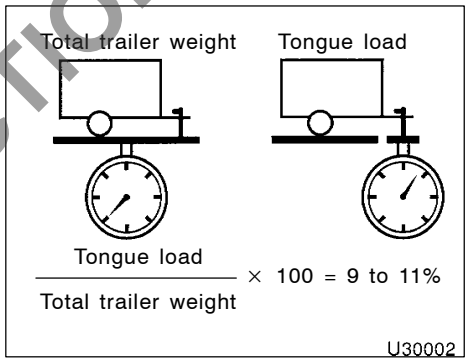

- **The trailer cargo load should be distributed so that the tongue load is 9 to 11% of the total trailer weight, not exceeding 200 kg (440 lb.).**

  Never load the trailer with more weight in the back than in the front. About 60% of the trailer load should be in the front half of the trailer and the remaining 40% in the rear.

NOT FOR REPRODUCTION

HITCHES

- Use only a hitch which is recommended by the hitch manufacturer and conforms to the total trailer weight requirement.
- Follow the directions supplied by the hitch manufacturer, and bolt the hitch securely to the vehicle. Lubricate the hitch ball with a light coat of grease.
- Toyota recommends removing the tongue whenever you are not towing a trailer to reduce the possibility of additional damage caused if your vehicle is struck from behind.
- If removing the hitch assembly, seal any mounting holes in the vehicle body to prevent entry of pollutants such as exhaust fumes, dirt, water, etc.

NOTICE

Do not use axle–mounted hitches as they can cause damage to the axle housing, wheel bearings, wheels or tires.

BRAKES AND SAFETY CHAINS

- **Toyota recommends trailers with brakes that conform to any applicable state law.**
- **Safety chains must always be used between the towing vehicle and the trailer. Leave sufficient slack in the chains for turns. The chains should cross under the trailer tongue to prevent the tongue from dropping to the ground in case it becomes damaged or the trailer separates from the vehicle. For correct safety chains procedures, follow the hitch or trailer manufacturer's recommendations.**

⚠ CAUTION

- **If the total trailer weight exceeds 680 kg (1499 lb.), trailer brakes are required.**
- **Never tap into your vehicle's hydraulic system as it would lower its braking effectiveness.**
- **Never tow a trailer without using safety chains securely attached to both the trailer and the vehicle. If damage occurs to the coupling unit or hitch ball, there is danger of the trailer wandering over into another lane.**

NOT FOR REPRODUCTION

TIRES

- Ensure that your vehicle's tires are properly inflated. See Section 7–2 and Section 8 for instructions.
- The trailer tires should be inflated to the pressure recommended by the trailer manufacturer in respect to the total trailer weight.

TRAILER LIGHTS

- Trailer lights must comply with state law. See your local recreational vehicle dealer or rental agency for the correct type of wiring and relays for your trailer. Check for correct operation of the turn signals and stop lights each time you hitch up. Direct splicing may damage your vehicle's electrical system and cause a malfunction of your lights.

BREAK–IN SCHEDULE

- Toyota recommends that you do not tow a trailer with a new vehicle or a vehicle with any new power train component (engine, transmission, differential, wheel bearing, etc.) for the first 800 km (500 miles) of driving.

MAINTENANCE

- If you tow a trailer, your vehicle will require more frequent maintenance due to the additional load. For this information, please refer to the scheduled maintenance information in the "Warranty and Service Booklet".
- Retighten all fixing bolts of the towing ball and bracket after approximately 1000 km (600 miles) of trailer driving.

PRE–TOWING SAFETY CHECK

- The trailer is level when it is hitched. Do not drive if the trailer is not level, and check for improper tongue weight, overloading, worn suspension, or other possible causes.
- Make sure the trailer cargo is securely loaded so that it cannot shift.
- Check that your rear view mirrors conform to any applicable state law. If not, install the rear view mirrors required for towing purpose.

TRAILER TOWING TIPS

When towing a trailer, your vehicle will handle differently than when not towing. The three main causes of vehicle–trailer accidents are driver error, excessive speed and improper trailer loading. Keep these in mind when towing:

- Before starting out, check operation of the lights and all vehicle–trailer connections. After driving a short distance, stop and recheck the lights and connections. Before actually towing a trailer, practice turning, stopping and backing with a trailer in an area away from traffic until you learn the feel.
- Backing with a trailer is difficult and requires practice. Grip the bottom of the steering wheel and move your hand to the left to move the trailer to the left. Move your hand to the right to move the trailer to the right. (This procedure is generally opposite to that when backing without a trailer). Also, just turn the steering wheel a little at a time, avoiding sharp or prolonged turning. Have someone guide you when backing to reduce the risk of an accident.

NOT FOR REPRODUCTION

- Because stopping distance may be increased, vehicle–to–vehicle distance should be increased when towing a trailer. For each 10 km/h (6 mph) of speed, allow at least one vehicle and trailer length between you and the vehicle ahead. Avoid sudden braking as you may skid, resulting in jackknifing and loss of control. This is especially true on wet or slippery surfaces.
- Avoid jerky starts or sudden acceleration. If your vehicle has a manual transmission, prevent excessive clutch slippage by keeping engine rpm low and not racing the engine. Always start out in first gear.
- Avoid jerky steering and sharp turns. The trailer could hit your vehicle in a tight turn. Slow down before making a turn to avoid the necessity of sudden braking.
- Remember that when making a turn, the trailer wheels will be closer than the vehicle wheels to the inside of the turn. Therefore,compensate for this by making a larger than normal turning radius with your vehicle.
- Crosswinds and rough roads will adversely affect handling of your vehicle and trailer, causing sway. Pay attention to the rear from time to time to prepare yourself for being passed by large trucks or buses, which may cause your vehicle and trailer to sway. If swaying happens,firmly grip the steering wheel and reduce speed immediately but gradually. Never increase speed. If it is necessary to reduce speed, brake slowly. Steer straight ahead. If you make no extreme correction with the steering or brakes, the vehicle and trailer will stabilize.
- Be careful when passing other vehicles. Passing requires considerable distance. After passing a vehicle, do not forget the length of your trailer and be sure you have plenty of room before changing lanes.
- To maintain engine braking efficiency and charging system performance when using engine braking, do not use fifth gear (manual transmission) or overdrive (automatic transmission).
- Because of the added load of the trailer, your vehicle's engine may overheat on hot days (at temperatures over 30°C [85°F]) when going up a long or steep grade with a trailer. If the engine coolant temperature gauge indicates overheating, immediately turn off the air conditioning (if in use), pull off the road and stop in a safe spot. Refer to "If your vehicle overheats" in Section 4.
- Always place wheel blocks under both the vehicle and trailer wheels when parking. Apply the parking brake firmly. Put the transmission in "P" (automatic) or in first or reverse (manual). Avoid parking on a slope with a trailer, but if it cannot be avoided, do so only after performing the following:

1. Apply the brakes and hold.
2. Have someone place wheel blocks under both the vehicle and trailer wheels.
3. When the wheel blocks are in place, release your brakes slowly until the blocks absorb the load.
4. Apply the parking brake firmly.
5. Shift into first or reverse (manual) or "P" (automatic) and turn off the engine.

NOT FOR REPRODUCTION

When restarting out after parking on a slope:

1. With the transmission in “P” position (automatic) or the clutch pedal depressed (manual), start the engine. (With an automatic transmission, be sure to keep the brake pedal depressed.)
2. Shift into gear.
3. Release the parking brake (also foot brake on automatic transmission vehicles) and slowly pull or back away from the wheel blocks. Stop and apply your brakes.
4. Have someone retrieve the blocks.

CAUTION

- **Observe the legal maximum speeds for trailer towing.**
- **Slow down and shift down before descending steep or long downhill grades. Do not make sudden downshifts while descending steep or long downhill grades.**
- **Avoid holding the brake pedal down too long or too frequently. This could cause the brakes to overheat and result in reduced braking efficiency.**

How to save fuel and make your vehicle last longer

Improving fuel economy is easy—just take it easy. It will help make your vehicle last longer, too. Here are some specific tips on how to save money on both fuel and repairs:

- **Keep your tires inflated at the correct pressure.** Underinflation causes tire wear and wastes fuel. See Section 7–2 for instructions.
- **Do not carry unneeded weight in your vehicle.** Excess weight puts a heavier load on the engine, causing greater fuel consumption.
- **Avoid lengthy warm–up idling.** Once the engine is running smoothly, begin driving—but gently. Remember, however, that on cold winter days this may take a little longer.
- **Automatic transmission—Put the shift lever into “D” when engine braking is not required.** Driving with the shift lever in a position other than “D” will reduce the fuel economy. (For details, see “Automatic transmission” in Section 1–6.)
- **Accelerate slowly and smoothly.** Avoid jackrabbit starts. Get into high gear as quickly as possible.

NOT FOR REPRODUCTION

- **Avoid long engine idling.** If you have a long wait and you are not in traffic, it is better to turn off the engine and start again later.
- **Avoid engine lugging or over–revving.** Use a gear position suitable for the road on which you are travelling.
- **Avoid continuous speeding up and slowing down.** Stop–and–go driving wastes fuel.
- **Avoid unnecessary stopping and braking.** Maintain a steady pace. Try to time the traffic signals so you only need to stop as little as possible or take advantage of through streets to avoid traffic lights. Keep a proper distance from other vehicles to avoid sudden braking. This will also reduce wear on your brakes.
- **Avoid heavy traffic or traffic jams whenever possible.**
- **Do not rest your foot on the clutch or brake pedal.** This causes premature wear, overheating and poor fuel economy.
- **Maintain a moderate speed on highways.** The faster you drive, the greater the fuel consumption. By reducing your speed, you will cut down on fuel consumption.
- **Keep the front wheels in proper alignment.** Avoid hitting the curb and slow down on rough roads. Improper alignment not only causes faster tire wear but also puts an extra load on the engine, which, in turn, wastes fuel.
- **Keep the bottom of your vehicle free from mud, etc.** This not only lessens weight but also helps prevent corrosion.
- **Keep your vehicle tuned–up and in top shape.** A dirty air cleaner, improper valve clearance, dirty oil and grease, brakes not adjusted, etc. all lower engine performance and contribute to poor fuel economy. For longer life of all parts and lower operating costs, keep all maintenance work on schedule, and if you often drive under severe conditions, see that your vehicle receives more frequent maintenance.

⚠ CAUTION

Never turn off the engine to coast down hills. Your power steering and brake booster will not function without the engine running. Also, the emission control system operates properly only when the engine is running.

NOT FOR REPRODUCTION

NOT FOR REPRODUCTION

SECTION 4

IN CASE OF AN EMERGENCY

If your vehicle will not start 102
If your engine stalls while driving 105
If you cannot increase engine speed 106
If your vehicle overheats 106
If the passengers' automatic door needs to be opened from outside 107
If you have a flat tire 107
If your vehicle becomes stuck 118
If your vehicle needs to be towed 119
If you cannot shift automatic transmission shift lever 121
If you must escape from the emergency door 121
If you must escape from the side rear window 122
If your vehicle has to be stopped in an emergency 122

NOT FOR REPRODUCTION

If your vehicle will not start—
(a) Simple checks

Before making these checks, make sure you have followed the correct starting procedure given in “How to start the engine” in Section 3 and that you have sufficient fuel.

If the engine is not turning over or is turning over too slowly—

1. Check that the battery terminals are tight and clean.
2. If the battery terminals are O.K., switch on the interior light.
3. If the light is out, dim or goes out when the starter is cranked, the battery is discharged. You may try jump starting. See “(c) Jump starting” for further instructions.

If the light is O.K., but the engine still will not start, it needs adjustment or repair. Call a Toyota dealer or qualified repair shop.

NOTICE
Do not pull– or push–start the vehicle. Your vehicle may suddenly move when the engine starts, and may damage itself or cause a collision. Also the catalytic converter may overheat and become a fire hazard.

If the engine turns over at its normal speed but will not start—

1. If you are starting the engine that has died from an empty tank, you may have needed to bleed the fuel system before cranking the engine. See “(b) Bleeding the fuel system” for further instructions.
2. If the fuel system is O.K., but the engine still will not start, it needs adjustment or repair. Call a Toyota dealer or qualified repair shop for assistance.

(b) Bleeding the fuel system

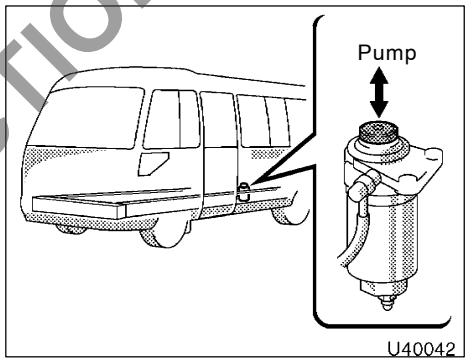

If you run out of fuel and the engine dies, the engine may not restart after refueling. In such case, operate the priming pump until you feel more resistance.

NOT FOR REPRODUCTION

(c) Jump starting

To avoid serious personal injury and damage to your vehicle which might result from battery explosion, acid burns, electrical burns, or damaged electronic components, these instructions must be followed precisely.

If you are unsure about how to follow this procedure, we strongly recommend that you seek the help of a competent mechanic or towing service.

⚠ CAUTION

- **Batteries contain sulfuric acid which is poisonous and corrosive. Wear protective safety glasses when jump starting, and avoid spilling acid on your skin, clothing, or vehicle.**
- **If you should accidentally get acid on yourself or in your eyes, remove any contaminated clothing and flush the affected area with water immediately. Then get immediate medical attention. If possible, continue to apply water with a sponge or cloth while en route to the medical office.**
- **The gas normally produced by a battery will explode if a flame or spark is brought near. Use only standardized jumper cables and do not smoke or light a match while jump starting.**

NOTICE

The battery used for boosting must be 12 V. Do not jump start unless you are sure that the booster battery is correct.

JUMP STARTING PROCEDURE

1. If the booster battery is installed in another vehicle, make sure the vehicles are not touching. Turn off all unnecessary lights and accessories.

   When boosting, use the battery of matching or higher quality. Any other battery may be difficult to jump start with.

   If jump starting is difficult, charge the battery for several minutes.
2. If required, remove all the vent plugs from the booster and discharged batteries. Lay a cloth over the open vents on the batteries. (This helps reduce the explosion hazard, personal injuries and burns.)
3. If the engine in the vehicle with the booster battery is not running, start it and let it run for a few minutes. During jump starting, run the engine at about 2000 rpm with the accelerator pedal lightly depressed.

NOT FOR REPRODUCTION

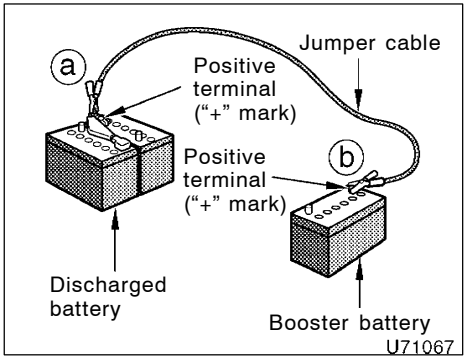

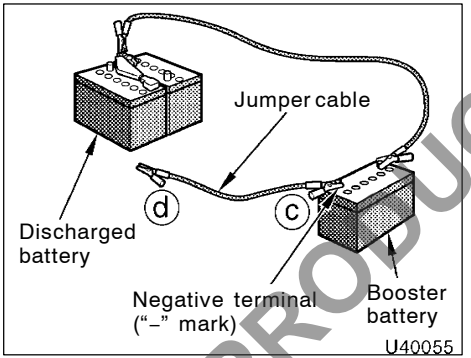

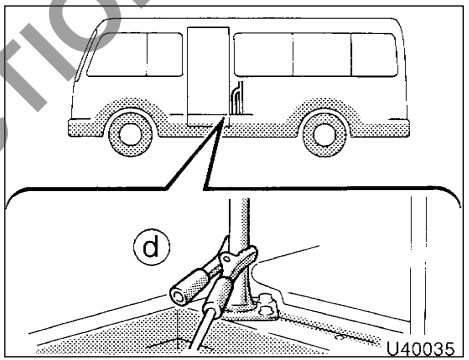

Connecting point

4. Make the cable connections in the order a, b, c, d.

   a. Connect the clamp of the positive (red) jumper cable to the positive (+) terminal on the discharged battery.

   b. Connect the clamp at the other end of the positive (red) jumper cable to the positive (+) terminal on the booster battery.

   c. Connect the clamp of the negative (black) jumper cable to the negative (–) terminal on the booster battery.

   d. Connect the clamp at the other end of the negative (black) jumper cable to a solid, stationary, unpainted, metallic point of the vehicle with the discharged battery.

   The recommended connecting point is shown in the following illustration:

   Do not connect the cable to or near any part that moves when the engine is cranked.

⚠ CAUTION

When making the connections, to avoid death or serious injury, do not lean over the battery or accidentally let the jumper cables or clamps touch anything except the correct battery terminals or the ground.

NOT FOR REPRODUCTION

5. Charge the discharged battery with the jumper cable connected for approximately 5 minutes. At this time, run the engine in the vehicle with the booster battery at about 2000 rpm with the accelerator pedal lightly depressed.
6. Start your engine in the normal way. After starting, run it at about 2000 rpm for several minutes with the accelerator pedal lightly depressed.
7. Carefully disconnect the cables in the exact reverse order: the negative cable and then the positive cable.
8. Carefully dispose of the battery cover cloths—they may now contain sulfuric acid.
9. If removed, replace all the battery vent plugs.

If the cause of your battery discharging is not apparent (for example, lights left on), you should have it checked at your Toyota dealer.

If the first start attempt is not successful...

Check that the clamp on the jumper cables are tight. Recharge the discharged battery with the jumper cables connected for several minutes and restart your engine in the normal way.

If the second attempt is not successful, the battery may be depleted. Have it checked at your Toyota dealer.

If your engine stalls while driving

If your engine stalls while driving...

1. Reduce your speed gradually, keeping a straight line. Move cautiously off the road to a safe place.
2. Turn on your emergency flashers.
3. Try starting the engine again.

If the engine will not start, see “If your vehicle will not start”.

CAUTION

If the engine is not running, the power assist for the brakes and steering will not work so steering and braking will be much harder than usual.

NOT FOR REPRODUCTION

If you cannot increase engine speed

If engine speed does not increase when the accelerator pedal is depressed, there may be a problem somewhere in the electronic engine control system. Stop the vehicle and contact your Toyota dealer or take your vehicle carefully, since the vehicle performance will be lower than normal, to your Toyota dealer as soon as possible.

Even if the abnormality in the electronic engine control system is corrected during low speed driving, the system may not recover until the engine is stopped and the engine switch is turned to the “ACC” or “LOCK” position.

If your vehicle overheats

If your engine coolant temperature gauge indicates over heating, if you experience a loss of power, or if you hear a loud knocking or pinging noise, the engine has probably overheated. You should follow this procedure...

1. Pull safely off the road, stop the vehicle and turn on your emergency flashers. Put the transmission in “P” (automatic) or neutral (manual) and apply the parking brake. Turn off the cooler if it is being used.
2. If coolant or steam is boiling out of the radiator or reservoir, stop the engine. Wait until the steam subsides before opening the engine access hole cover. If there is no coolant boiling over or steam, leave the engine running.

⚠ CAUTION

To help avoid personal injury, keep the engine access hole cover closed until there is no steam. Escaping steam or coolant is a sign of very high pressure.

3. Visually check to see if the engine drive belt (fan belt) is broken or loose. Look for obvious coolant leaks from the radiator, hoses, and under the vehicle. However, note that water draining from the cooler is normal if it has been used.

⚠ CAUTION

When the engine is running, keep hands and clothing away from the moving fan and engine drive belts.

4. If the engine drive belt is broken or the coolant is leaking, stop the engine immediately. Call a Toyota dealer for assistance.
5. If the engine drive belt is O.K. and there are no obvious leaks, you may help the engine cool down more quickly by running it at about 1500 rpm for a few minutes with the accelerator pedal lightly depressed.
6. Check the coolant reservoir. If it is dry, add coolant to the reservoir while the engine is running. Fill it about half full. For the coolant type, see “Coolant type selection” in Section 7–2.

NOT FOR REPRODUCTION

CAUTION

Do not attempt to remove the radiator cap when the engine and radiator are hot. Serious injury could result from scalding hot fluid and steam blown out under pressure.

7. After the engine coolant temperature has cooled to normal, again check the coolant level in the reservoir. If necessary, bring it up to half full again. Serious coolant loss indicates a leak in the system. You should have it checked as soon as possible at your Toyota dealer.

If the passengers' automatic door needs to be opened from outside

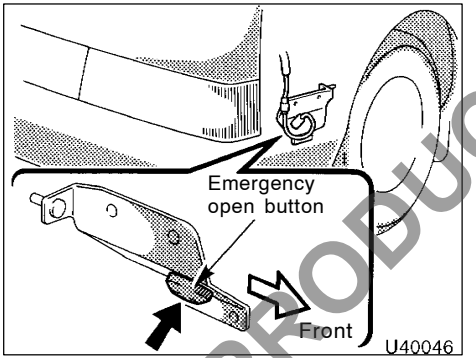

With the vehicle fully immobilized, reach under the vehicle and press the button.

The door stays open only while the button is pressed in.

Use the button only in an emergency.

If you have a flat tire—

Your vehicle is equipped with a spare tire. The flat tire can be replaced with the spare tire.

1. Reduce your speed gradually, keeping a straight line. Move cautiously off the road to a safe place well away from the traffic. Avoid stopping on the center divider of a highway. Park on a level spot with firm ground.
2. Stop the engine and turn on your emergency flashers.
3. Firmly set the parking brake and put the transmission in "P" (automatic) or reverse (manual).
4. Have everyone get out of the vehicle on the side away from traffic.
5. Read the following instructions thoroughly.

NOT FOR REPRODUCTION

CAUTION

When jacking, be sure to observe the following to reduce the possibility of death or serious injury:

- **Follow jacking instructions.**
- **Do not put any part of your body under the vehicle supported by the jack. Otherwise, death or serious injury may occur.**
- **Do not start or run the engine while your vehicle is supported by the jack.**
- **Stop the vehicle on a level firm ground, firmly set the parking brake and put the transmission in "P" (automatic) or reverse (manual). Block the wheel diagonally opposite to the one being changed if necessary.**
- **Make sure to set the jack properly in the jack point. Raising the vehicle with jack improperly positioned will damage the vehicle or may allow the vehicle to fall off the jack and cause death or serious injury.**
- **Never get under the vehicle when the vehicle is supported by the jack alone; use vehicle support stands.**
- **Use the jack only for lifting your vehicle during wheel changing.**
- **Do not raise the vehicle with someone in the vehicle.**
- **When raising the vehicle, do not place any objects on top of or underneath the jack.**
- **Raise the vehicle only high enough to remove and change the tire.**

NOTICE

Do not continue driving with a deflated tire. Driving even a short distance can damage a tire and wheel beyond repair.

—Front tire replacement precautions

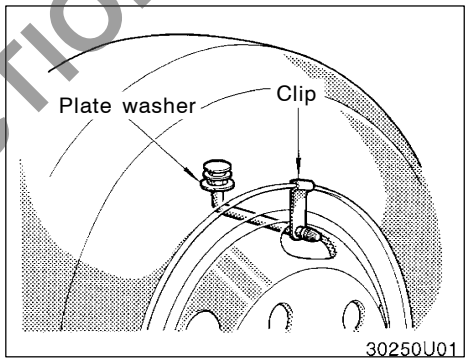

Your front tires are equipped with a special clip and plate washer designed to retain the inflation valve stem.

If your front tire gets flat, replace it with the spare tire originally installed. It has the same clip and washer, and can be used as a complete replacement for the flat tire. If you must use any tire other than the spare, be sure to move the clip and washer to the new tire.

NOTICE

Do not drive with the clip or washer removed. It may result in tire damage.

NOT FOR REPRODUCTION

—Required tools and spare tire

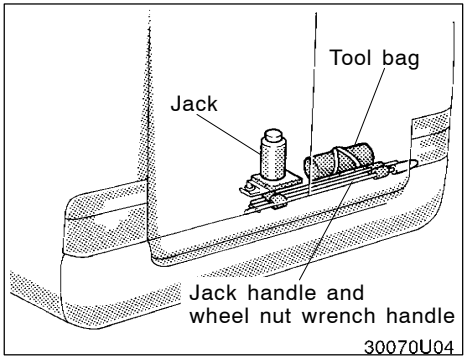

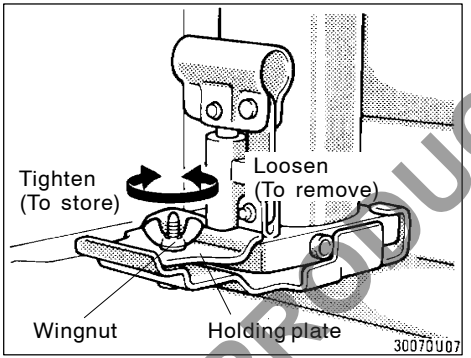

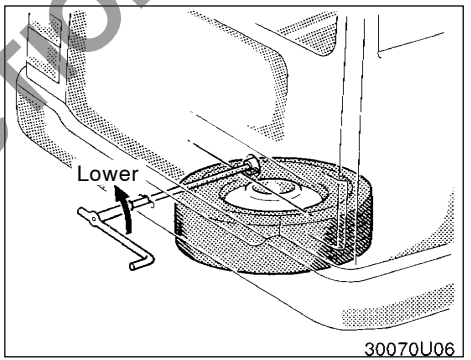

1. **Get the tool bag, wheel nut wrench handle, jack, jack handle and spare tire.**

To prepare yourself for an emergency, you should familiarize yourself with the use of the jack, each of the tools and their storage locations.

When removing the jack, loosen the wingnut and place the holding plate out of the way. When storing, place the jack in position and secure it by tightening the wingnut while holding the plate against the jack. This will prevent the jack from flying forward during a collision or sudden braking.

To remove the spare tire:

1. Insert the end of the jack handle extension into the lowering screw and turn it counterclockwise with the handle.
2. After the tire is lowered completely to the ground, remove the holding bracket.

When storing the spare tire, put it in place with the outer side of the wheel facing up. Then secure the tire, taking care that the tire goes straight up without catching on any other part, to prevent it from flying forward during a collision or sudden braking.

NOT FOR REPRODUCTION

—Blocking the wheel

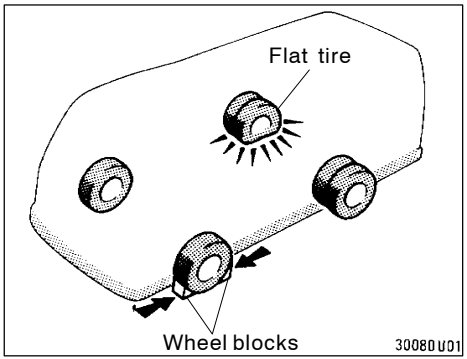

2. Block the wheel diagonally opposite the flat tire to keep the vehicle from rolling when it is jacked up.

Place wheel blocks in front of and behind the wheel.

—Removing wheel ornament

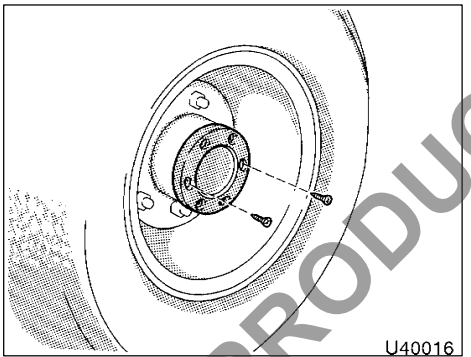

Center ornament

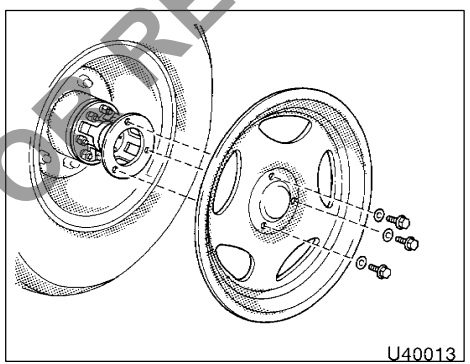

Full-wheel ornament

3. Remove the wheel ornament.

Center ornament—Remove the screws.

Full-wheel ornament—Remove the bolts and washers.

⚠ CAUTION

Do not try to pull off the ornament by hand. Take due care in handling the ornament to avoid unexpected personal injury.

NOT FOR REPRODUCTION

—Loosening wheel nuts

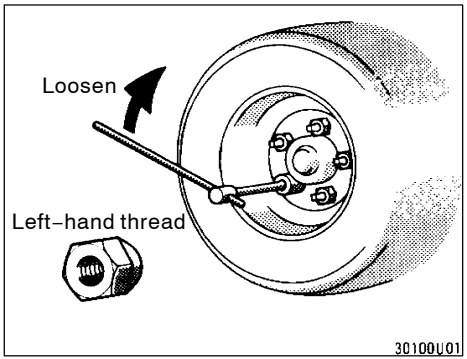

Left–side wheels

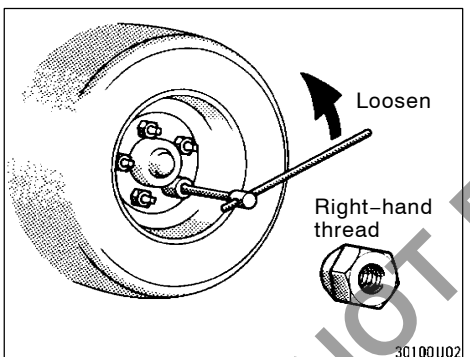

Right–side wheels

4. Loosen all the wheel nuts.

Always loosen the wheel nuts before raising the vehicle.

To loosen the nuts, use the large end of the wheel nut wrench. Turn the left–side wheel nuts clockwise and the right–side wheel nuts counterclockwise.

To get maximum leverage, fit the wrench to the nut so that the handle points to the front of the vehicle. Grab the wrench near the end of the handle and pull up on the handle. Be careful that the wrench does not slip off the nut.

Do not remove the nuts yet—just unscrew them about one–half turn.

—Positioning the jack

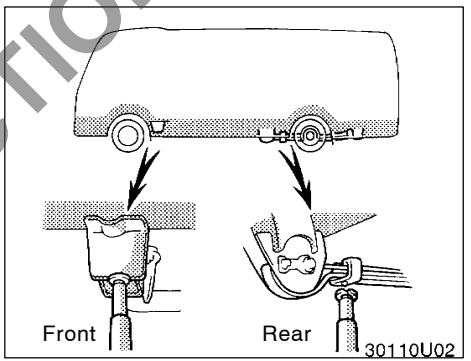

5. Position the jack at the correct jack point as shown.

Make sure the jack is positioned on a level and solid place.

NOT FOR REPRODUCTION

—Raising your vehicle

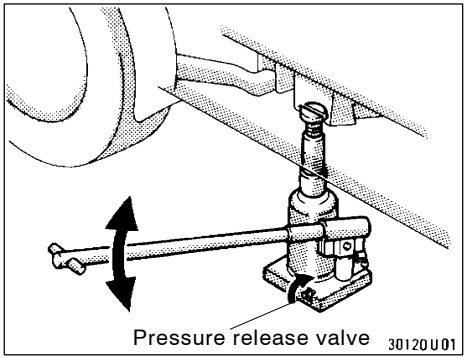

6. After making sure that no one is in the vehicle, raise it high enough so that the spare tire can be installed.

Remember you will need more ground clearance when putting on the spare tire than when removing the flat tire.

To raise the vehicle, insert the handle into the jack (it is a loose fit) and move it up and down. Make sure the pressure release valve in the jack is tightly screwed in. As the jack touches the vehicle and begins to lift, double–check that it is properly positioned.

⚠ CAUTION

Never get under the vehicle when the vehicle is supported by the jack alone; use vehicle support stands.

—Replacing front and outer rear wheels

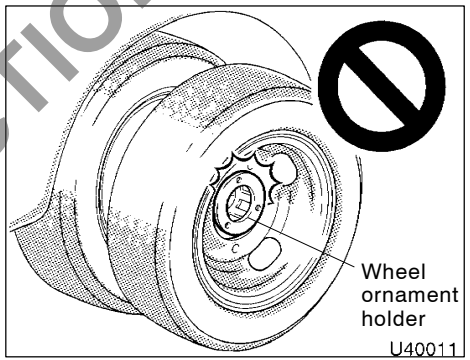

7. Remove the tire and wheel by pulling it toward you.

NOTICE

Outer rear wheel:
To prevent damaging the wheel ornament holder, remove the wheel without touching the wheel and its holder.

NOT FOR REPRODUCTION

—Replacing inner rear wheel

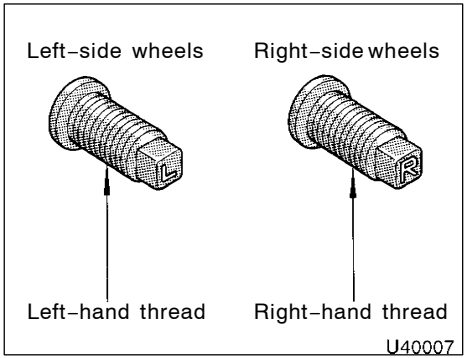

8. Remove the stop bolts, change tires, reinstall the stop bolts and tighten them.

Skip this step to the next unless the inner rear tire is flat.

Use the small end of the wheel nut wrench to loosen the stop bolts. Note that both the stop bolts and the wheel nuts on the right and left side of the vehicle have different threads.

Lift the flat tire straight off and put it aside.

Roll the spare wheel into position and align the holes in the wheel with the bolts. Then lift up the wheel and get at least the top bolt started through its hole. Wiggle the tire and press it back over the other bolts.

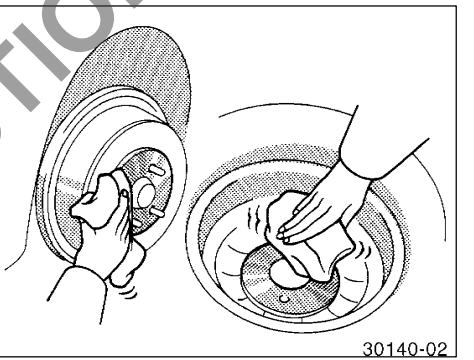

Before putting on wheels, remove any corrosion on the mounting surfaces with a wire brush or such. Installation of wheels without good metal–to–metal contact at the mounting surface can cause wheel nuts to loosen and eventually cause a wheel to come off while driving.

NOT FOR REPRODUCTION

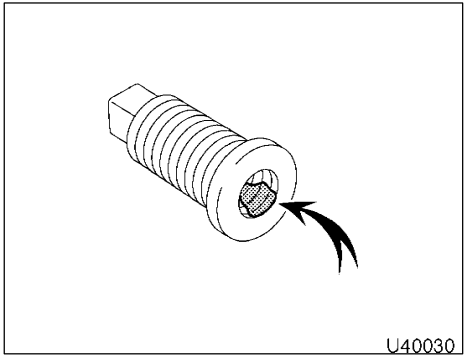

Apply small amount of engine oil to the grooves of the inside of the stop bolts.

Be careful that engine oil is not applied to any other part of the bolt, as it may cause the wrench to slip off when you tighten the bolts.

⚠ CAUTION

To avoid a serious accident, apply engine oil to the grooves of the stop bolts and the wheel nuts. No matter how much you try to tighten them, the nuts may not be securely tightened and the wheels may fall off.

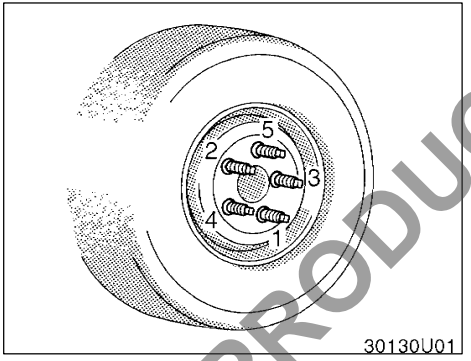

Reinstall the stop bolts and tighten each bolt a little at a time in the order shown. Repeat the process until all the bolts are tight.

Use only the wheel nut wrench to tighten the bolts. Do not use other tools or any additional leverage other than your hands, such as a hammer, pipe or your foot. Make sure the wrench is securely engaged over the bolt.

—Installing wheel

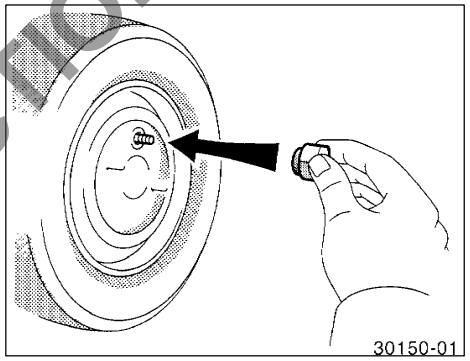

9. Install the tire, reinstall all the wheel nuts and tighten them.

When installing outer rear wheels, make sure the stop bolts are securely tightened.

Roll the spare wheel into position and align the holes in the wheel with the bolts. Then lift up the wheel and get at least the top bolt started through its hole. Wiggle the tire and press it back over the other bolts.

With full–wheel ornament—place the front wheel ornament over the wheel.

NOT FOR REPRODUCTION

When reinstalling the nuts;

- Left side of the vehicle: Use the nuts marked “L”.
  Right side of the vehicle: Use the nuts marked “R”.
- Set the nuts with the tapered end inside.

Tighten the nuts as much as you can by hand. Press back on the tire and see if you can tighten them more.

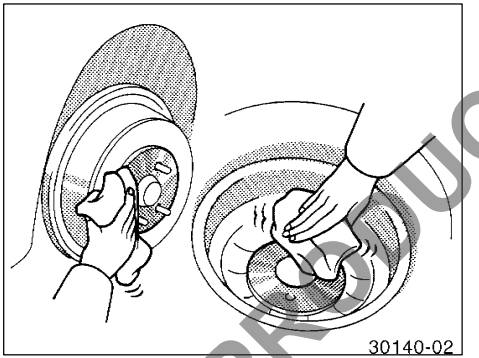

Before putting on wheels, remove any corrosion on the mounting surfaces with a wire brush or such. Installation of wheels without good metal–to–metal contact at the mounting surface can cause wheel nuts to loosen and eventually cause a wheel to come off while driving.

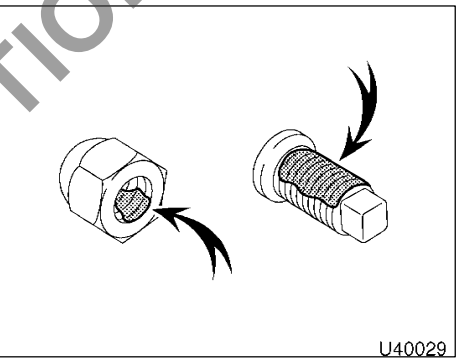

Apply small amount of engine oil to the grooves of the stop bolts and wheel nuts.

Be careful that engine oil is not applied to any other part of the bolt and nut, as it may cause the wrench to slip off when you tighten the nuts.

⚠ CAUTION

To avoid a serious accident, apply engine oil to the grooves of the stop bolts and the wheels nuts. No matter how much you try to tighten them, the nuts may not be securely tightened and the wheels may fall off.

NOT FOR REPRODUCTION

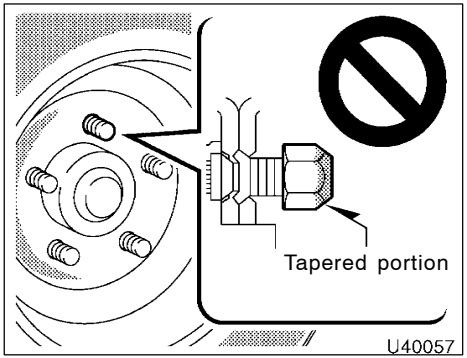

CAUTION

Be sure to install the wheel nuts with the tapered end facing inward. Installing the nuts with the tapered end facing outward can cause wheel to break and eventually cause a wheel to come off while driving, which could lead to an accident resulting in death or serious injury.

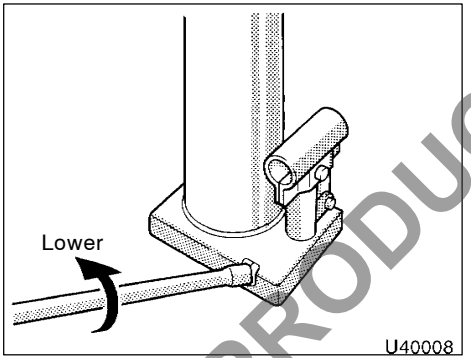

10. Lower the vehicle completely.

Using the small end of the jack handle, slightly unscrew the pressure release valve. After removing the jack from under the vehicle, completely screw in the pressure release valve.

CAUTION

When lowering the vehicle, make sure all portions of your body and all other persons around will not be injured as the vehicle is lowered to the ground.

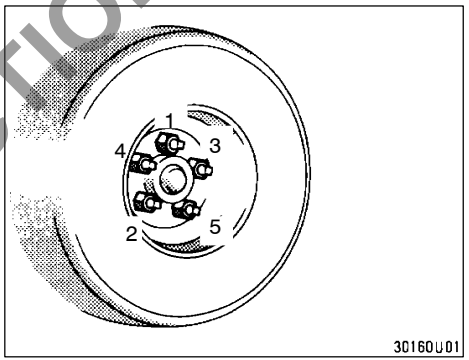

Tighten each nut a little at a time in the order shown. Repeat the process until all the nuts are tight.

Use only the wheel nut wrench to tighten the nuts. Do not use other tools or any additional leverage other than your hands, such as a hammer, pipe or your foot. Make sure the wrench is securely engaged over the nut.

NOT FOR REPRODUCTION

—Reinstalling wheel ornament

CAUTION

Have the wheel nuts tightened by torque wrench to 515 N·m (52.5 kgf·m, 380 ft·lbf), as soon as possible after changing wheels. Otherwise, the nuts may loosen and the wheels may fall off, which could cause a serious accident.

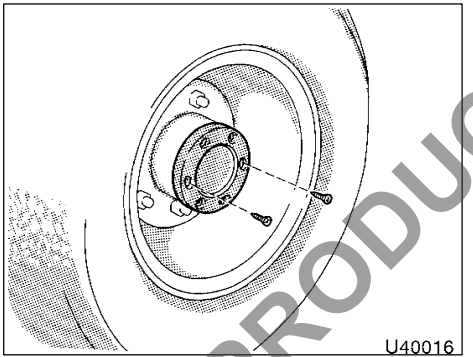

Center ornament

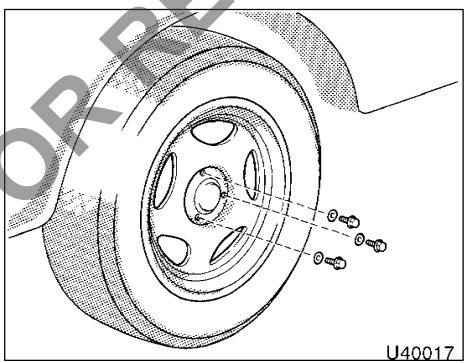

Full–wheel ornament

11. Reinstall the wheel ornament.

Center ornament—Attach the ornament with screws.

Full–wheel ornament—Attach the ornament with bolts and washers.

CAUTION

Take due care in handling the ornament to avoid unexpected personal injury.

NOT FOR REPRODUCTION

—After changing wheels

12. Check the air pressure of the replaced tire.

Adjust the air pressure to the specification designated in Section 8. If the pressure is lower, drive slowly to the nearest service station and fill to the correct pressure.

Do not forget to reinstall the tire inflation valve cap as dirt and moisture could get into the valve core and possibly cause air leakage. If the cap is missing, have a new one put on as soon as possible.

13. Restow all the tools, jack and flat tire securely.

As soon as possible after changing wheels, tighten the wheel nuts to the torque specified in Section 8 with a torque wrench and have a technician repair the flat tire.

This is the same procedure for changing or rotating your tires.

⚠ CAUTION

Before driving, make sure all the tools, jack and flat tire are securely in place in their storage location to reduce the possibility of death or serious injury during sudden braking, sudden swerving or a collision.

If your vehicle becomes stuck

If your vehicle becomes stuck in snow, mud, sand, etc., then you may attempt to rock the vehicle free by moving it forward and backward.

⚠ CAUTION

Do not attempt to rock the vehicle free by moving it forward and backward if people or objects are anywhere near the vehicle. During the rocking operation the vehicle may suddenly move forward or backward as it becomes unstuck, causing injury or damage to nearby people or objects.

NOTICE

If you rock your vehicle, observe the following precautions to prevent damage to the transmission and other parts.

- ***Do not depress the accelerator pedal while shifting the shift lever or before the transmission is completely shifted to forward or reverse gear.***
- ***Do not race the engine and avoid spinning the wheels.***
- ***If your vehicle remains stuck after rocking the vehicle several times, consider other ways such as towing.***

NOT FOR REPRODUCTION

If your vehicle needs to be towed—

If towing is necessary, we recommend you have it done by your Toyota dealer or a commercial tow truck service.

Proper equipment will help ensure that your vehicle is not damaged while being towed. Commercial operators are generally aware of the state/provincial and local laws pertaining to towing.

Your vehicle can be damaged if it is towed incorrectly. Although most operators know the correct procedure, it is possible to make a mistake. To avoid damage to your vehicle, make sure the following precautions are observed. If necessary, show this page to the tow truck driver.

TOWING PRECAUTIONS:

Use a safety chain system for all towing, and abide by the state/provincial and local laws. The wheels and axle on the ground must be in good condition. If they are damaged, use a towing dolly.

(a) Using flat bed truck

(b) Towing with wheel lift type truck

From front—

- Manual transmission:

  We recommend using a towing dolly under the rear wheels. If you do not use a towing dolly, release the parking brake and put the transmission in neutral.

- Automatic transmission:

  Use a towing dolly under the rear wheels.

> ***NOTICE***
>
> ***Never tow a vehicle with an automatic transmission from the front with the rear wheels on the ground, as this may cause serious damage to the transmission.***

From rear—Place the engine switch in the "ACC" position.

> ***NOTICE***
>
> ◆ ***When lifting wheels, take care to ensure adequate ground clearance for towing at the opposite end of the raised vehicle. Otherwise, the bumper and/or underbody of the towed vehicle will be damaged during towing.***
>
> ◆ ***Do not tow with the key removed or in the "LOCK" position, as the steering lock mechanism is not strong enough to hold the front wheels straight while towing.***

(c) Towing with sling type truck

> ***NOTICE***
>
> ***Do not tow with sling type truck, either from the front or rear. This may cause body damage.***

NOT FOR REPRODUCTION

—Emergency towing

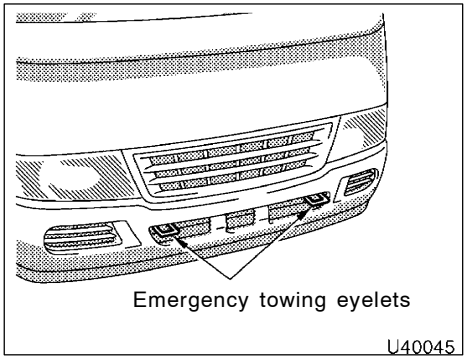

If towing is necessary, we recommend you to have it done by your Toyota dealer or a commercial tow truck service.

If towing service is not available in an emergency, your vehicle may be temporarily towed by a cable or chain secured to one of the emergency towing eyelets under the front of the vehicle. Use extreme caution when towing the vehicle.

NOTICE

Only use specified towing eyelet; otherwise your vehicle may be damaged.

A driver must be in the vehicle to steer it and operate the brakes.

Towing in this manner may be done only on hard–surfaced roads for a short distance and at low speeds. Also, the wheels, axles, drive train, steering and brakes must all be in good condition.

CAUTION

Use extreme caution when towing the vehicle. Avoid sudden starts or erratic driving maneuvers which would place excessive stress on the emergency towing eyelet and towing cable or chain. The eyelet and towing cable or chain may break and cause serious injury or damage.

NOTICE

Use only a cable or chain specifically intended for use in towing vehicles. Securely fasten the cable or chain to the towing eyelet provided.

Before towing, release the parking brake and put the transmission in “N” (automatic) or neutral (manual). The engine switch must be in “ACC” (engine off) or “ON” (engine running).

CAUTION

If the engine is not running, the power assist for the brakes and steering will not work so steering and braking will be much harder than usual.

NOT FOR REPRODUCTION

If you cannot shift automatic transmission shift lever

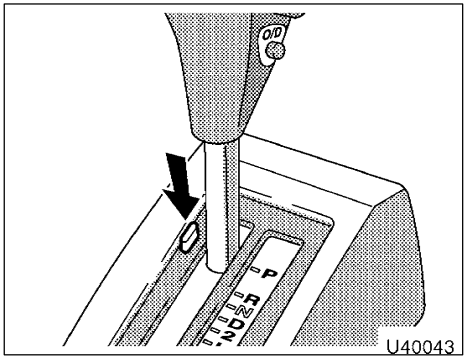

If you cannot shift the shift lever out of "P" position to other positions even though the brake pedal is depressed, use the shift lock override button as follows:

1. **Turn the engine switch to the "LOCK" position. Make sure the parking brake is applied.**
2. **Push the shift lock override button. You can shift out of the "P" position only while pushing the button.**
3. **Shift into the "N" position.**
4. **Start the engine. For your safety, keep the brake pedal depressed.**

Be sure to have the system checked by your Toyota dealer as soon as possible.

If you must escape from the emergency door

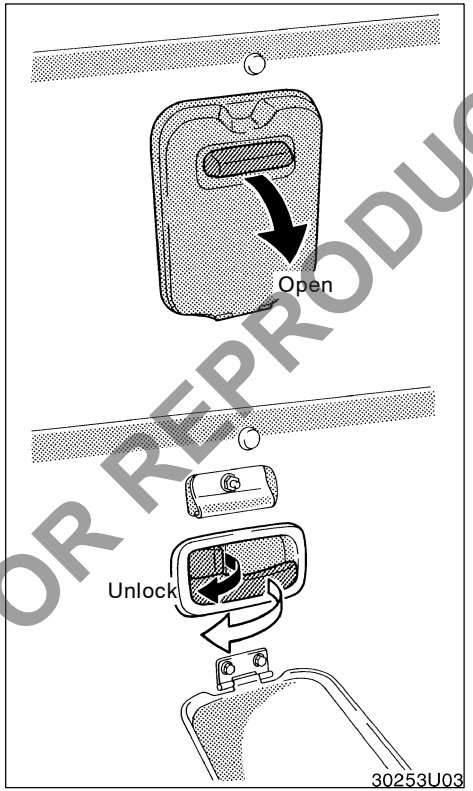

From inside

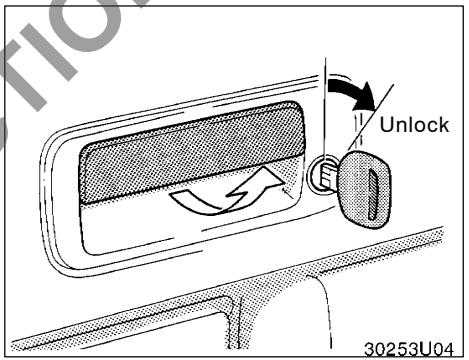

From outside

OPENING THE DOOR FOR EMERGENCY ESCAPE

From inside—Pull open the cover, unlock the lock knob (pull the knob leftward.), and pull the handle toward you.

From outside—Pull up the emergency door handle. If it is locked, insert the key into the keyhole and turn the key clockwise.

NOT FOR REPRODUCTION

CAUTION

- **Do not open the emergency door while the vehicle is moving.**
- **If the open emergency door hides the stop and tail lights, rear turn signal lights or rear retro–reflectors while you are parked, other road users must be warned of the presence of your vehicle by a warning triangle or other device.**

The emergency door has a power door lock. When the engine switch is turned to the “ON” position, the emergency door is automatically unlocked. It is locked again when the engine switch is turned off.

From inside—If the lock knob is turned to the lock side while the engine switch is “ON”, the lock knob will not return to the unlock side automatically. (The emergency door warning light and buzzer come on.)

If you must escape from the side rear window

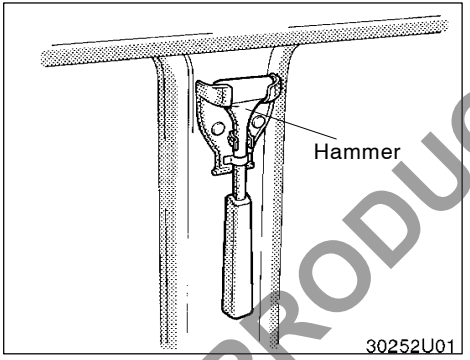

Tap the side window glass with the hammer from the inside until the glass breaks off.

Use the hammer only for this purpose.

CAUTION

- **Avoid using your hands.**
- **Do not use this system while the vehicle is moving.**

If your vehicle has to be stopped in an emergency

Only in an emergency, such as if it becomes impossible to stop the vehicle in the normal way, stop the vehicle using the following procedure:

1. Steadily step on the brake pedal with both feet and firmly depress it. Do not pump the brake pedal repeatedly as this will increase the effort required to slow the vehicle.
2. Shift the shift lever to N or neutral.

If the shift lever is shifted to N or neutral:

3. After slowing down, stop the vehicle in a safe place by the road.
4. Stop the engine.

If the shift lever cannot be shifted to N or neutral:

3. Keep depressing the brake pedal with both feet to reduce vehicle speed as much as possible.

NOT FOR REPRODUCTION

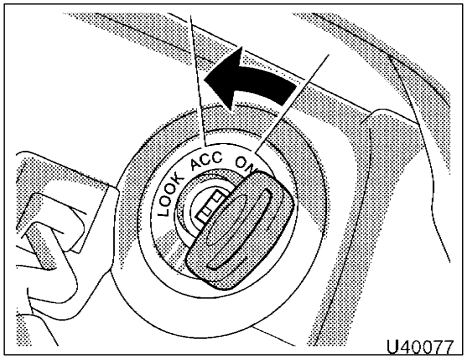

4. Stop the engine by turning the engine switch to the “ACC” position.
5. Stop the vehicle in a safe place by the road.

⚠ CAUTION

If the engine has to be turned off while driving:

- **Power assist for the brakes and steering wheel will be lost, making the brake pedal harder to depress and the steering wheel heavier to turn. Decelerate as much as possible before turning off the engine.**
- **Never attempt to remove the key, as doing so will lock the steering wheel.**

NOT FOR REPRODUCTION

NOT FOR REPRODUCTION

SECTION 5

CORROSION PREVENTION AND APPEARANCE CARE

Protecting your Toyota from corrosion 126
Washing and waxing your Toyota 127
Cleaning the interior 129

NOT FOR REPRODUCTION

Protecting your Toyota from corrosion

Toyota, through the diligent research, design and use of the most advanced technology available, helps prevent corrosion and provides you with the finest quality vehicle construction. Now, it is up to you. Proper care of your Toyota can help ensure long–term corrosion prevention.

The most common causes of corrosion to your vehicle are:

- The accumulation of road salt, dirt and moisture in hard–to–reach areas under the vehicle.
- Chipping of paint, or undercoating caused by minor accidents or by stones and gravel.

Care is especially important if you live in particular areas or operate your vehicle under certain environmental conditions:

- Road salt or dust control chemicals will accelerate corrosion, as will the presence of salt in the air near the sea–coast or in areas of industrial pollution.
- High humidity accelerates corrosion especially when temperatures range just above the freezing point.
- Wetness or dampness to certain parts of your vehicle for an extended period of time, may cause corrosion even though other parts of the vehicle may be dry.
- High ambient temperatures can cause corrosion to those components of the vehicle which do not dry quickly due to lack of proper ventilation.

The above signifies the necessity to keep your vehicle, particularly the underside, as clean as possible and to repair any damage to paint or protective coatings as soon as possible.

To help prevent corrosion on your Toyota, follow these guidelines:

Wash your vehicle frequently. It is, of course, necessary to keep your vehicle clean by regular washing, but to prevent corrosion, the following points should be observed:

- If you drive on salted roads in the winter or if you live near the ocean, you should hose off the undercarriage at least once a month to minimize corrosion.
- High pressure water or steam is effective for cleaning the vehicle's underside and wheel housings. Pay particular attention to these areas as it is difficult to see all the mud and dirt. It will do more harm than good to simply wet the mud and debris without removing. The lower edge of doors, rocker panels and frame members have drain holes which should not be allowed to clog with dirt as trapped water in these areas can cause corrosion.
- Wash the underside of the vehicle thoroughly when winter is over.

See "Washing and waxing your Toyota" for more tips.

Check the condition of your vehicle's paint and trim. If you find any chips or scratches in the paint, touch them up immediately to prevent corrosion from starting. If the chips or scratches have gone through the bare metal, have a qualified body shop make the repair.

NOT FOR REPRODUCTION

Check the interior of your vehicle. Water and dirt can accumulate under the floor mats and could cause corrosion. Occasionally check under the mats to make sure the area is dry. Be particularly careful when transporting chemicals, cleansers, fertilizers, salt, etc.; these should be transported in proper containers. If a spill or leak should occur, immediately clean and dry the area.

Use mud shields on your wheels. If you drive on salted or gravel roads, mud shields help protect your vehicle. Full–size shields, which come as near to the ground as possible, are the best. We recommend that the fittings and the area where the shields are installed be treated to resist corrosion. Your Toyota dealer will be happy to assist in supplying and installing the shields if they are recommended for your area.

Keep your vehicle in a well ventilated garage or a roofed place. Do not park your vehicle in a damp, poorly ventilated garage. If you wash your vehicle in the garage, or if you drive it covered with water or snow, your garage may be so damp as to cause corrosion. Even if your garage is heated, a wet vehicle can corrode if the ventilation is poor.

Washing and waxing your Toyota

Washing your Toyota

Keep your vehicle clean by regular washing.

The following cases may cause weakness to the paint or corrosion to the body and parts. Wash your vehicle as soon as possible.

- When driving in a coastal area
- When driving on a road sprinkled with antifreeze
- When exposed to coal tar, tree sap, bird droppings and carcass of an insect
- When driving in areas where there is a lot of smoke, soot, dust, iron dust or chemical substances
- When the vehicle becomes remarkably dirty with dust and mud

NOTICE

When using a high pressure car wash, do not bring the nozzle tip close to joining parts, boots (rubber or plastic covers), or connectors of the following as they may be damaged if they come into contact with high pressure water.

- ***Drivetrain***
- ***Steering***
- ***Suspension***
- ***Brakes***

NOT FOR REPRODUCTION

Hand–washing your Toyota

Work in the shade and wait until the vehicle body is not warm to the touch.

⚠ CAUTION

- **When cleaning under the floor or chassis, be careful not to injure your hands.**
- **Exhaust gases cause the exhaust pipe to become quite hot. When washing the vehicle, be careful not to touch the pipe until it has cooled sufficiently, as touching a hot exhaust pipe can cause burns.**

1. Rinse off loose dirt with a hose. Remove any mud or road salt from the underside of the vehicle or the wheel wells.
2. Wash with a mild car–wash soap, mixed according to the manufacturer's instructions. Use a soft cotton mitt and keep it wet by dipping it frequently into the wash water. Do not rub hard—let the soap and water remove the dirt.

Exterior lights: Wash carefully. Do not use organic substances or scrub them with a hard brush. This may damage the surfaces of the lights.

Road tar: Remove with turpentine or cleaners that are marked safe for painted surfaces.

3. Rinse thoroughly–dried soap can cause streaking. In hot weather you may need to rinse each section right after you wash it.
4. To prevent water spots, dry the vehicle using a clean soft cotton towel. Do not rub or press hard—you might scratch the paint.

NOTICE

- ***Do not use organic substances (gasoline, kerosene, benzine or strong solvents), which may be toxic or cause damage.***
- ***Do not scrub any part of the vehicle with a hard brush, which may cause damage.***

Waxing your Toyota

Polishing and waxing is recommended to maintain the original beauty of your Toyota's finish.

Apply wax once a month or if the vehicle surface does not repel water well.

1. Always wash and dry the vehicle before you begin waxing, even if you are using a combined cleaner and wax.
2. Use a good quality polish and wax. If the finish has become extremely weathered, use a car–cleaning polish, followed by a separate wax. Carefully follow the manufacturer's instructions and precautions. Be sure to polish and wax the chrome trim as well as the paint.

Exterior lights: Do not apply wax on the surfaces of the lights. Wax may cause damage to the lenses. If you accidentally put wax on the light surfaces, wipe or wash it off.

3. Wax the vehicle again when water does not bead but remains on the surface in large patches.

NOT FOR REPRODUCTION

Cleaning the interior

⚠ CAUTION

- **Do not splash or spill liquid in the vehicle. Doing so may cause electrical components etc. to malfunction or catch fire.**
- **When cleaning the interior (especially instrument panel), do not use polish wax or polish cleaner. The instrument panel may reflect off the windshield, obstructing the driver's view and leading to an accident, resulting in death or serious injury.**

NOTICE

- ***Do not wash the vehicle floor with water, or allow water to get onto the floor when cleaning the vehicle interior or exterior. Water may get into audio components or other electrical components above or under the floor carpet (or mat) and cause a malfunction; and it may cause body corrosion.***
- ***When cleaning the interior, do not use polish wax or polish cleaner. The instrument panel's or other interior part's painted surface may be damaged.***

Vinyl interior

The vinyl upholstery may be easily cleaned with a mild soap or detergent and water.

First vacuum over the upholstery to remove loose dirt. Then, using a sponge or soft cloth, apply the soap solution to the vinyl. After allowing it to soak in for a few minutes to loosen the dirt, remove the dirt and wipe off the soap with a clean damp cloth. If all the dirt do not come off, repeat the procedure. Commercial foaming–type vinyl cleaners are also available which work well. Follow the manufacturer's instructions.

NOTICE

Do not use solvent, thinner, gasoline or window cleaner on the interior.

NOT FOR REPRODUCTION

Seat belts

The seat belts may be cleaned with mild soap and water or with lukewarm water.

Use a cloth or sponge. As you are cleaning, check the belts for excessive wear, fraying, or cuts.

NOTICE

- ***Do not use dye or bleach on the belts—it may weaken them.***
- ***Do not use the belts until they become dry.***

Windows

NOTICE

- ***Do not use glass cleaner to clean the inside of the rear window, as this may cause damage to the rear window defogger heater wires. Use a cloth dampened with lukewarm water to gently wipe the window clean. Wipe the window in strokes running parallel to the heater wires.***
- ***When cleaning the inside of the rear window, be careful not to scratch or damage the heater wires.***

Air conditioning control panel, audio panel, instrument panel, console panel, door switch panels, and switches

Use a soft damp cloth for cleaning.

Soak a clean soft cloth in water or lukewarm water then lightly wipe off dirt.

NOTICE

- ***Do not use organic substances (solvents, kerosene, alcohol, gasoline, etc.) or alkaline or acidic solutions. These chemicals can cause discoloring, staining or peeling of the surface.***
- ***If you use cleaners or polishing agents, make sure their ingredients do not include the substances mentioned above.***
- ***If you use a liquid car freshener, do not spill the liquid onto the vehicle's interior surfaces. It may contain the ingredients mentioned above. Immediately clean any spill using the method mentioned above.***

If you have any questions about the cleaning of your Toyota, your local Toyota dealer will be pleased to answer them.

NOT FOR REPRODUCTION

SECTION 6

MAINTENANCE REQUIREMENTS

Maintenance facts 132
Does your vehicle need repairing? 133

NOT FOR REPRODUCTION

Maintenance facts

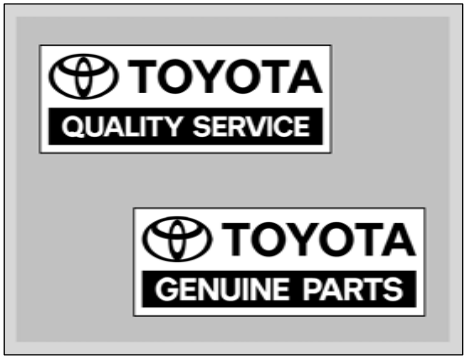

Regular maintenance is essential.

We urge you to protect your new vehicle by having your Toyota serviced according to the maintenance schedule given in the separate booklet. Regular maintenance will aid:

- Good fuel economy
- Long vehicle life
- Driving enjoyment
- Safety
- Reliability
- Warranty coverage
- Compliance with government regulations

Your Toyota has been designed for economical driving and economical maintenance. Many formerly required maintenance items are no longer required or are not required as often. To make sure your vehicle runs at peak efficiency, follow the maintenance schedule.

For full details of your maintenance schedule, read the separate "Warranty and Service Booklet".

Where to go for maintenance service?

It makes good sense to take your vehicle to your local Toyota dealer for maintenance service as well as other inspections and repairs.

Toyota technicians are well–trained specialists. And they are receiving the latest service information through technical bulletins, service tips, and in–dealership training programs. They learn to work on Toyotas before they work on your vehicle, rather than while they are working on it. Doesn't that seem like the best way?

Your Toyota dealer has invested a lot of money in special Toyota tools and service equipment. It helps do the job better and at less cost.

Your Toyota dealer's service department will perform all of the scheduled maintenance on your vehicle—reliably and economically.

What about do–it–yourself maintenance?

Many of the maintenance items are easy to do yourself if you have a little mechanical ability and a few basic automotive tools. Simple instructions for how to perform them are presented in Section 7.

Note, however, that some maintenance tasks require special tools and skills. These are best performed by qualified technicians. Even if you are an experienced do–it–yourself mechanic, we recommend that repairs and maintenance be conducted by your Toyota dealer who will keep a record of maintenance on your Toyota. This record could be helpful should you ever require Warranty Service.

The service interval for scheduled maintenance is determined by the odometer reading or time interval, whichever comes first, shown in the schedule.

Rubber hoses (for cooling and heater system, brake system and fuel system) should be inspected by a qualified technician in accordance with the Toyota maintenance schedule.

NOT FOR REPRODUCTION

They are particularly important maintenance items. Have any deteriorated or damaged hoses replaced immediately. Note that rubber hoses will deteriorate with age, resulting in swelling, chafing or cracks.

Does your vehicle need repairing?

Be on the alert for changes in performance, sounds, and visual tip–offs that indicate service is needed. Some important clues are as follows:

- Engine missing, stumbling, or pinging
- Appreciable loss of power
- Strange engine noises
- A leak under the vehicle (however, water dripping from the cooler after use is normal.)
- Change in exhaust sound (This may indicate a dangerous carbon monoxide leak. Drive with the windows open and have the exhaust system checked immediately.)
- Flat–looking tire; excessive tire squeal when cornering; uneven tire wear
- Vehicle pulls to one side when driving straight on a level road
- Strange noises related to suspension movement
- Loss of brake effectiveness; spongy feeling brake or clutch pedal; pedal almost touches floor; vehicle pulls to one side when braking
- Engine coolant temperature continually higher than normal

If you notice any of these clues, take your vehicle to your Toyota dealer as soon as possible. It probably needs adjustment or repair.

⚠ CAUTION

Do not continue driving with the vehicle unchecked. It could result in serious vehicle damage and possibly personal injury.

NOT FOR REPRODUCTION

NOT FOR REPRODUCTION

SECTION 7 – 1

DO–IT–YOURSELF MAINTENANCE

Introduction

Engine and battery compartment overview 136
Radiator, condenser and intercooler locations 137
Battery location 137
Fuse and circuit breaker locations 138
Do–it–yourself service precautions 139

NOT FOR REPRODUCTION

Engine and battery compartment overview

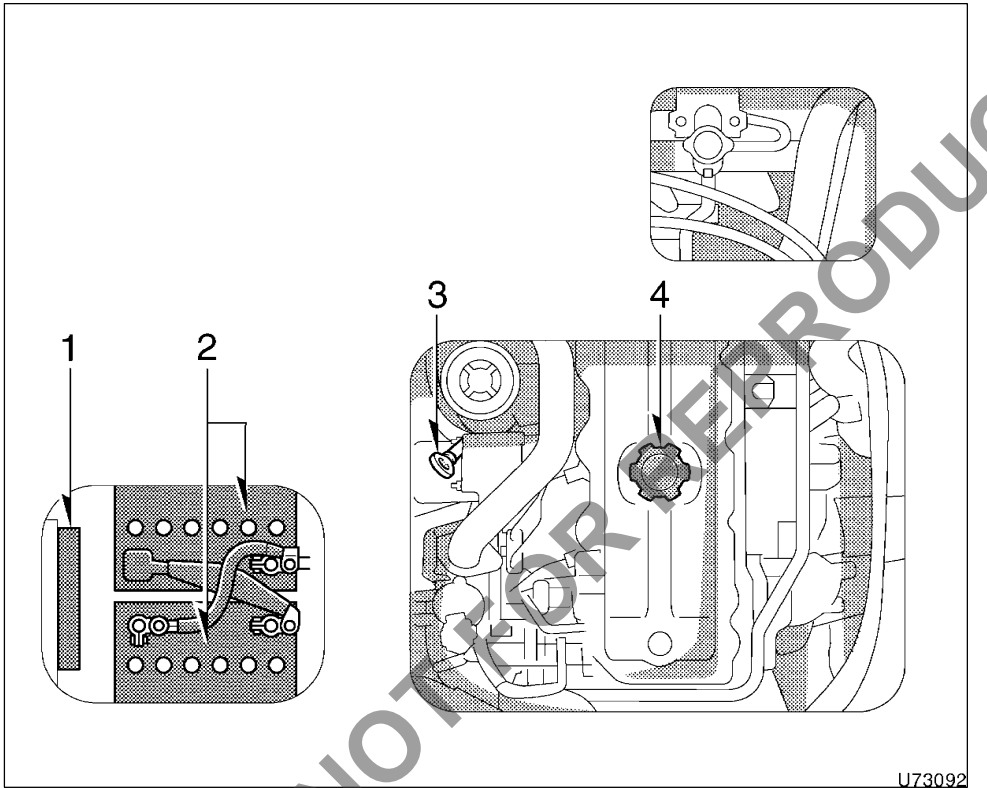

1. Fuse block
2. Batteries
3. Engine oil level dipstick
4. Engine oil filler cap

NOT FOR REPRODUCTION

Radiator, condenser and intercooler locations

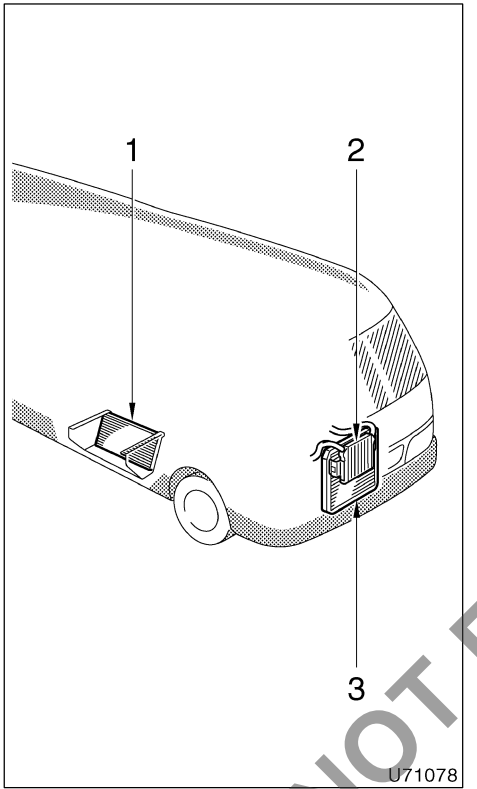

The radiator, condenser and intercooler are located as shown.

1. Condenser
2. Intercooler
3. Radiator

Battery location

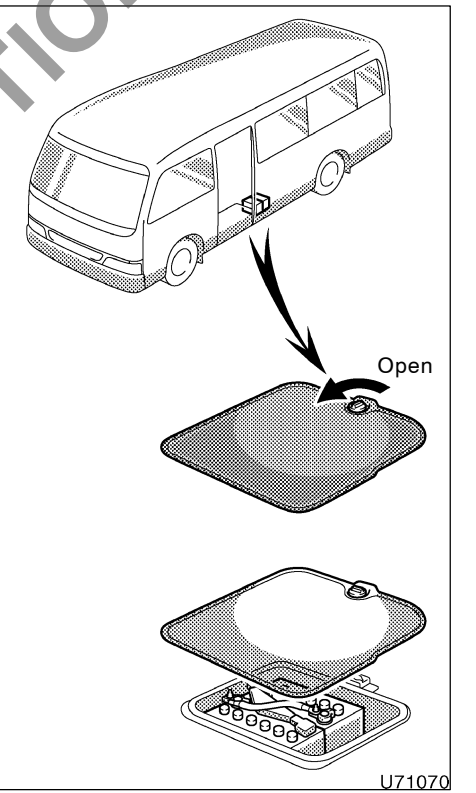

NOT FOR REPRODUCTION

Fuse and circuit breaker locations

The batteries are located as shown.

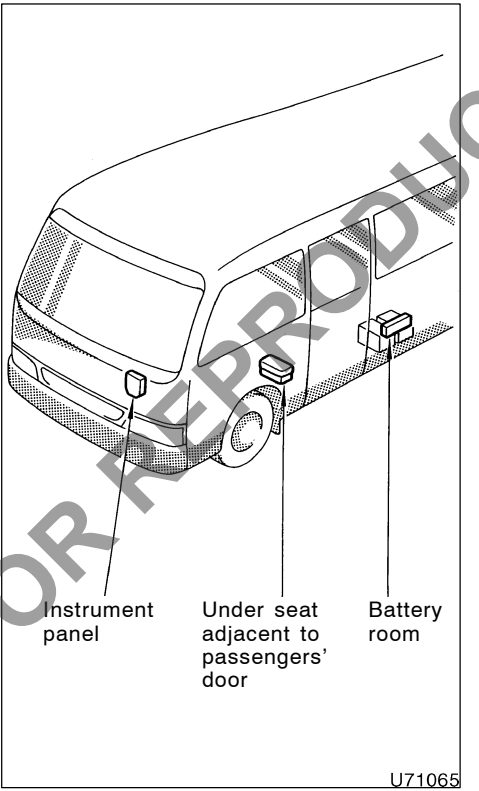

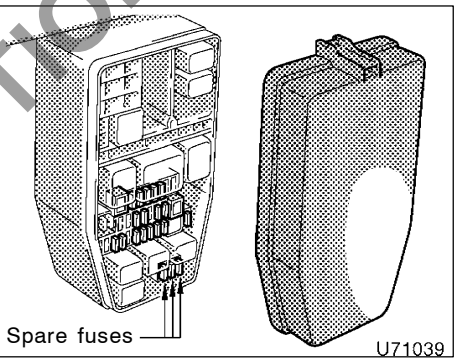

Instrument panel

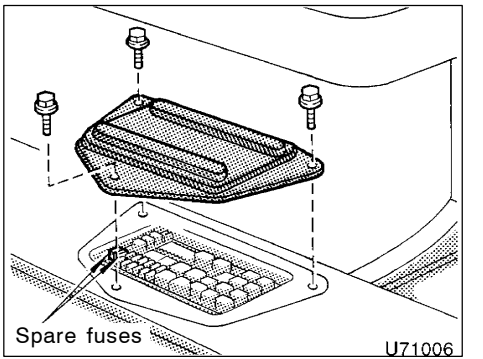

Under seat adjacent to passengers' door

NOT FOR REPRODUCTION

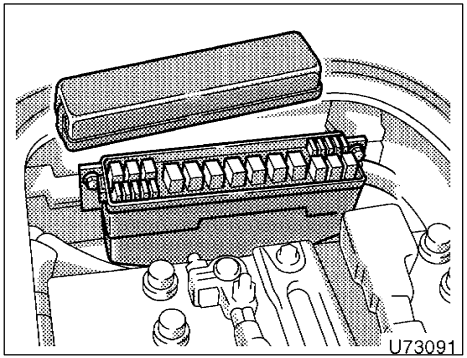

Battery room

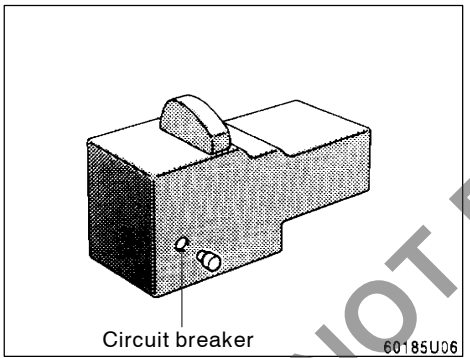

On glide type passengers' automatic door control unit

Do–it–yourself service precautions

If you perform maintenance by yourself, be sure to follow the correct procedure given in this Section.

You should be aware that improper or incomplete servicing may result in operating problems.

This Section gives instructions only for those items that are relatively easy for an owner to perform. As explained in Section 6, there are still a number of items that must be done by a qualified technician with special tools.

Utmost care should be taken when working on your vehicle to prevent accidental injury. Here are a few precautions that you should be especially careful to observe:

⚠ CAUTION

- **When the engine is running, keep hands, clothing, and tools away from the moving fan and engine drive belts. (Removing rings, watches, and ties is advisable.)**
- **Right after driving, the engine compartment—the engine, radiator, exhaust manifold and power steering fluid reservoir, etc.—will be hot. So be careful not to touch them. Oil and fluids may also be hot.**
- **If the engine is hot, do not remove the radiator cap or loosen the drain plugs to prevent burning yourself.**
- **Do not leave anything that may burn easily, such as paper or rags, in the engine compartment.**
- **Do not smoke, cause sparks or allow open flames around fuel or the battery. Their fumes are flammable.**
- **Be extremely cautious when working on the battery. It contains poisonous and corrosive sulfuric acid.**
- **Do not get under your vehicle with just the body jack supporting it. Always use automotive jack stands or other solid supports.**
- **Use eye protection whenever you work on or under your vehicle where you may be exposed to flying or falling material, fluid spray, etc.**

NOT FOR REPRODUCTION

- **Used engine oil contains potentially harmful contaminants which may cause skin disorders such as inflammation or skin cancer, so care should be taken to avoid prolonged and repeated contact with it. To remove used engine oil from your skin, wash thoroughly with soap and water.**
- **Do not leave used oil within the reach of children.**
- **Dispose of used oil and filter only in a safe and acceptable manner. Do not dispose of used oil and filter in household trash, in sewers or onto the ground. Call your dealer or a service station for information concerning recycling or disposal.**
- **Take care when filling the brake and clutch fluid reservoirs because brake fluid can harm your hands or eyes. If fluid gets on your hands or in your eyes, flush the affected area with clean water immediately. If you still feel uncomfortable with your hands or eyes, go to the doctor.**

NOTICE

- ***Remember that battery cables carry high currents. Be careful of accidentally causing a short circuit.***
- ***Add only "Toyota Super Long Life Coolant" or similar high quality ethylene glycol based non–silicate, non–amine, non–nitrite, and non–borate coolant with long–life hybrid organic acid technology to fill the radiator. "Toyota Super Long Life Coolant" is a mixture of 50% coolant and 50% deionized water.***
- ***If you spill some of the coolant, be sure to wash it off with water to prevent it from damaging the parts or paint.***
- ***Do not overfill automatic transmission fluid and power steering fluid—the transmission and the power steering could be damaged.***
- ***If you spill brake fluid, be sure to wash it off with water to prevent it from damaging the parts or paint.***
- ***Do not drive with the air cleaner filter removed, or excessive engine wear could result. Also backfiring could cause a fire in the engine compartment.***
- ***Be careful not to scratch the glass surface with the wiper frame.***
- ***When closing the engine access hole cover, check to see that you have not forgotten any tools, rags, etc.***

NOT FOR REPRODUCTION

SECTION 7 – 2

DO–IT–YOURSELF MAINTENANCE

Engine and Chassis

Checking the engine oil level 142
Checking the engine coolant level 144
Checking the radiator, condenser and intercooler 145
Draining fuel filter water 145
Checking the air filters and condenser 146
Checking tire inflation pressure 146
Checking and replacing tires 147
Rotating tires 149
Front tire replacement precautions 149
Installing snow tires and chains 149
Replacing wheels 151

NOT FOR REPRODUCTION

Checking the engine oil level

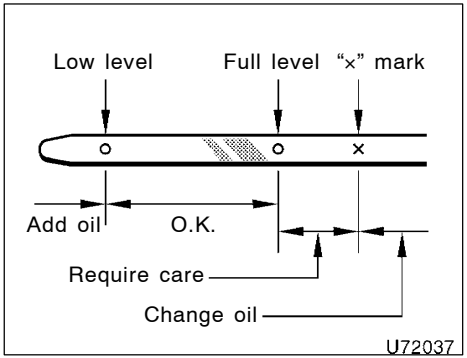

With the engine at operating temperature and turned off, check the oil level on the dipstick.

1. To get a correct reading, the vehicle should be on level ground. After warning up the engine and turning if off, wait more than five minutes for the oil to drain back into the bottom of the engine.
2. Pull the dipstick out, hold a rag under the end and wipe it clean.
3. Reinsert the dipstick—push it in as far as it will go, or the reading will not be correct.
4. Pull the dipstick out and look at the oil level while holding a rag under the end.

NOTICE
Be careful not to drop engine oil on the vehicle components.

If the engine oil level is above the full level—

If the level is between the full level and the “x” mark, operation of the vehicle can continue. However, the oil level will need to be checked more often.

As your vehicle is equipped with the DPF (diesel particulate filter) system, the oil may contain some fuel. The oil level is therefore likely to exceed the full level. For details, see “DPF system” in Section 2.

If the level is over the “x” mark, the oil may contain a significant amount of fuel. To avoid engine damage, change the oil as soon as possible.

NOTICE
Operating the vehicle when the engine oil contains a significant amount of diesel fuel may result in damage to the engine. If a significant amount of fuel is present, change the oil as soon as possible.

If the oil level is below or only slightly above the low level, add engine oil of the same type as already in the engine.

Remove the oil filler cap and add engine oil in small quantities at a time, checking the dipstick. We recommend that you use a funnel when adding oil.

The approximate quantity of oil needed to raise the level between low and full on the dipstick is indicated as follows:

1.1 L (1.2 qt., 1.0 Imp. qt.)

For the engine oil capacity, see “Service specifications” in Section 8.

When the level reaches within the correct range, install the filler cap hand–tight.

NOT FOR REPRODUCTION

NOTICE

- ***Be careful not to spill engine oil on the vehicle components.***
- ***Avoid overfilling, or the engine could be damaged.***
- ***Check the oil level on the dipstick once again after adding the oil.***

ENGINE OIL SELECTION

"Toyota Genuine Motor Oil" is used in your Toyota vehicle. Use Toyota approved "Toyota Genuine Motor Oil" or equivalent to satisfy the following grade and viscosity.

Oil grade:

API CD, CE, CF, CH–4, CI–4 or CJ–4
ACEA E–3, E–4, E–5, E–6 or E–9

API CJ–4, ACEA E–6 or E–9 is preferred.

Recommended viscosity (SAE):

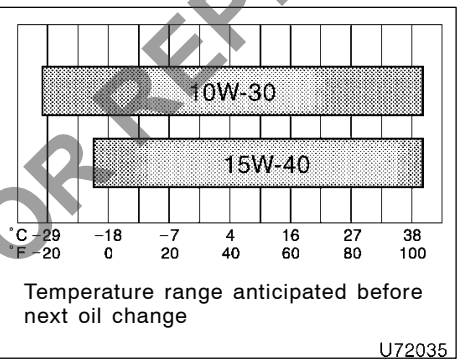

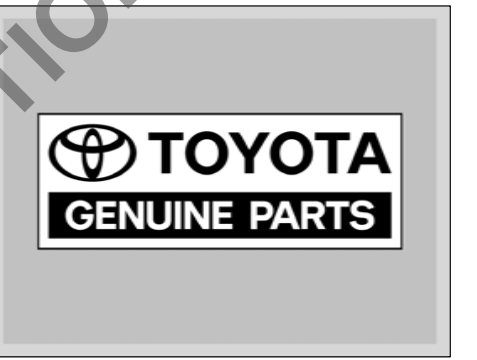

To ensure excellent lubrication performance for your engine, "Toyota Genuine Motor Oil" is available, which has been specifically tested and approved for all Toyota engines.

Please contact your Toyota dealer for further details about "Toyota Genuine Motor Oil".

NOT FOR REPRODUCTION

Checking the engine coolant level

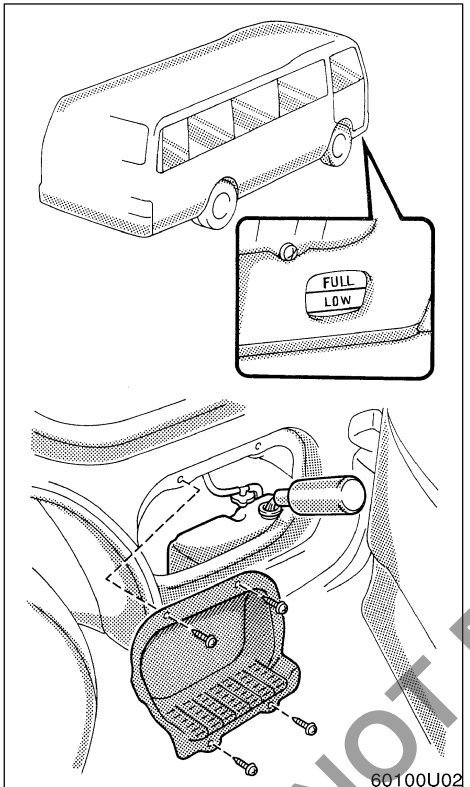

Look at the see–through coolant reservoir when the engine is cold. The coolant level is satisfactory if it is between the "FULL" and "LOW" lines on the reservoir. If the level is low, add the coolant. (For the coolant type, see "Coolant type selection" described below.)

The coolant level in the reservoir will vary with engine temperature. However, if the level is on or below the "LOW" line, add coolant. Bring the level up to the "FULL" line.

If the coolant level drops within a short time after replenishing, there may be a leak in the system. Visually check the radiator, hoses, radiator cap and drain cock and water pump.

If you can find no leak, have your Toyota dealer test the cap pressure and check for leaks in the cooling system.

⚠ CAUTION

To prevent burning yourself, do not remove the radiator cap when the engine is hot.

Coolant type selection

Use of improper coolants may damage your engine cooling system.

Only use "Toyota Super Long Life Coolant" or similar high quality ethylene glycol based non–silicate, non–amine, non–nitrite, and non–borate coolant with long–life hybrid organic acid technology. (Coolant with long–life hybrid organic acid technology is a combination of low phosphates and organic acids.)

"Toyota Super Long Life Coolant" is a mixture of 50% coolant and 50% deionized water. This coolant provides protection down to about –35°C (–31°F).

NOTICE

Do not use plain water alone.

NOT FOR REPRODUCTION

Toyota recommends “Toyota Super Long Life Coolant”, which has been tested to ensure that it will not cause corrosion nor result in malfunction of your engine coolant system with proper usage. “Toyota Super Long Life Coolant” is formulated with long–life hybrid organic acid technology and has been specifically designed to avoid engine cooling system malfunction on Toyota vehicles.

Please contact your Toyota dealer for further details.

Checking the radiator, condenser and intercooler

If any of the above parts are extremely dirty or you are not sure of their condition, take your vehicle to a Toyota dealer.

⚠ CAUTION

To prevent burning yourself, be careful not to touch the radiator, condenser or intercooler when the engine is hot.

NOTICE

To prevent damage to the radiator, condenser and intercooler, do not perform the work by yourself.

Draining fuel filter water

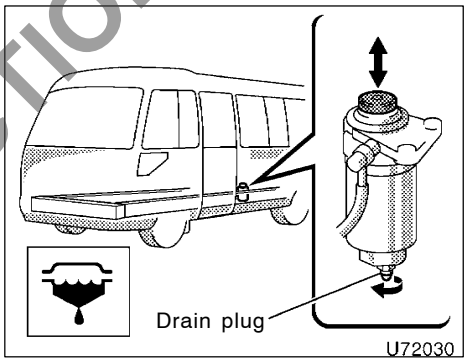

When the fuel filter warning light and buzzer come on, the water in the fuel filter must be drained immediately.

a. Place a small tray under the drain plug to catch the water.

b. Turn the drain plug about 2—2–1/2 turns, as shown above. (Loosening more than this will cause water oozing from around the drain plug.)

c. Operate the priming pump until fuel begins to run out.

d. Retighten the drain plug. Do not use a tool.

NOT FOR REPRODUCTION

Checking the air filters and condenser

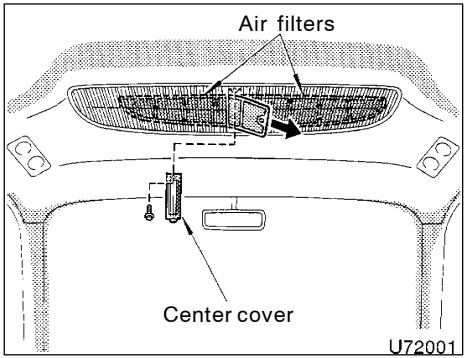

Keep the air filters and condenser free of dirt.

To check and clean the air filters:

a. Loosen a center cover retaining screw and the center cover will come off.

b. Pull the air filters out of the center cover hole. If they are dirty, clean the dirt off with compressed air or water.

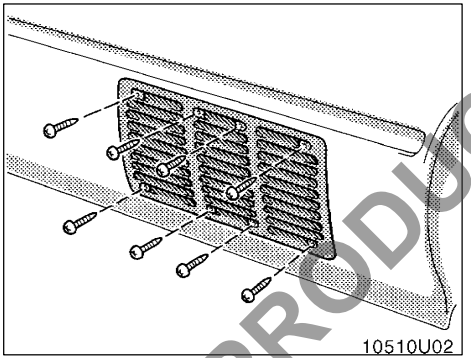

To check and clean the condenser:

Loosen the condenser cover retaining screw. If the condenser is dirty, wash the dirt off with a high pressure hose.

Checking tire inflation pressure

Keep your tire inflation pressures at the proper level.

The recommended cold tire inflation pressures and tire sizes are given in Section 8.

You should check the tire inflation pressure every two weeks, or at least once a month. And do not forget the spare!

Incorrect tire inflation pressure may waste fuel, reduce the comfort of driving, reduce tire life and make your vehicle less safe to drive.

If a tire frequently needs refilling, have it checked by your Toyota dealer.

NOT FOR REPRODUCTION

The following instructions for checking tire inflation pressure should be observed:

- **The pressure should be checked only when the tires are cold.** If your vehicle has been parked for at least 3 hours and has not been driven for more than 1.5 km or 1 mile since, you will get an accurate cold tire inflation pressure reading.
- **Always use a tire pressure gauge.** The appearance of a tire can be misleading. Besides, tire inflation pressures that are even just a few pounds off can degrade ride and handling.
- **Do not bleed or reduce tire inflation pressure after driving.** It is normal for the tire inflation pressure to be higher after driving.
- **Be sure to reinstall the tire valve caps.** Without the valve caps, dirt or moisture could get into the valve core and cause air leakage. If the caps have been lost, have new ones put on as soon as possible.

CAUTION

Keep your tires properly inflated. Otherwise, the following conditions may occur and cause an accident resulting in death or serious injuries.

Low tire pressure (underinflation)—

- **Excessive wear**
- **Uneven wear**
- **Poor handling**
- **Possibility of blowouts from an overheated tire**
- **Poor sealing of the tire bead**
- **Wheel deformation and/or tire separation**
- **A greater possibility of tire damage from road hazards**

High tire pressure (overinflation)—

- **Poor handling**
- **Excessive wear**
- **Uneven wear**
- **A greater possibility of tire damage from road hazards**

Checking and replacing tires

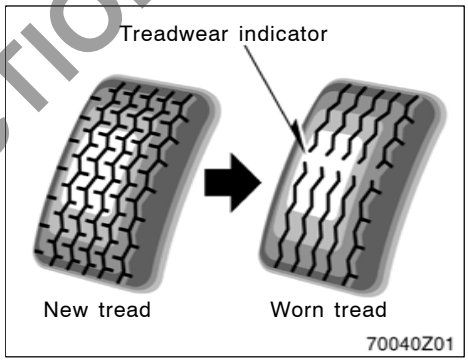

CHECKING YOUR TIRES

Check the tire's tread for treadwear indicators. If the indicators show, replace the tires. The location of treadwear indicators is shown by the "TWI" or "Δ" marks, etc., molded on the sidewall of each tire.

The tires on your Toyota have built–in treadwear indicators to help you know when the tires need replacement. When the tread depth wears to 1.6 mm (0.06 in.) or less, the indicators will appear. If you can see the indicators in two or more adjacent grooves, the tire should be replaced. The lower the tread, the higher the risk of skidding.

NOT FOR REPRODUCTION

The effectiveness of snow tires is lost if the tread wears down below 4 mm (0.16 in.).

If you have tire damage such as cuts, splits, cracks deep enough to expose the fabric, or bulges indicating internal damage, the tire should be replaced.

If a tire often goes flat or cannot be properly repaired due to the size or location of a cut or other damage, it should be replaced. If you are not sure, consult with your Toyota dealer.

If air loss occurs while driving, do not continue driving. Driving even a short distance can damage a tire beyond repair.

Any tires which are over 6 years old must be checked by a qualified technician even if damage is not obvious.

Tires deteriorate with age even if they have never or seldom been used.

This applies also to the spare tire and tires stored for future use.

REPLACING YOUR TIRES

When replacing a tire, use a tire of the same size and construction, and the same or greater load capacity as the originally installed tires.

Using any other size or type of tire may seriously affect handling, ride, speedometer/odometer calibration, ground clearance, and clearance between the body and tires or snow chains.

⚠ CAUTION

Observe the following instructions. Otherwise, an accident may occur resulting in death or serious injuries.

- **Do not mix radial, bias belted, or bias–ply tires on your vehicle, as this may cause dangerous handling characteristics resulting in loss of control.**
- **Do not use tires other than the manufacturer's recommended size, as this may cause dangerous handling characteristics resulting in loss of control.**
- **Do not mix tires of different makes, models or tread patterns, and do not mix tires of remarkably different treadwear. This may cause dangerous handling characteristics resulting in loss of control.**

Never use second–hand tires on your Toyota.

Using tires whose previous history is unknown is a risk.

Toyota recommends all four tires, or at least both front or rear tires be replaced at a time as a set.

See "If you have a flat tire" in Section 4 for tire change procedure.

When a tire is replaced, the wheel should always be balanced.

An unbalanced wheel may affect vehicle handling and tire life. Wheels can get out of balance with regular use and should therefore be balanced occasionally.

When replacing a tubeless tire, the air valve should also be replaced with a new one.

NOT FOR REPRODUCTION

Rotating tires

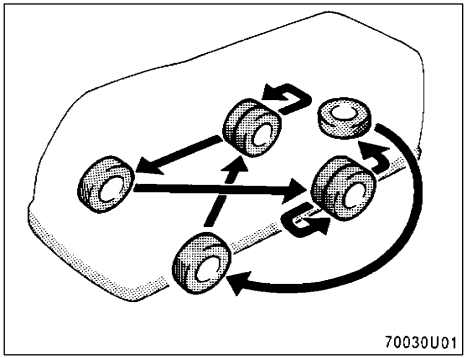

To equalize tire wear and help extend tire life, Toyota recommends that you rotate your tires approximately every 5000 km (3100 miles). However, the most appropriate timing for tire rotation may vary according to your driving habits and road surface conditions.

See “If you have a flat tire” in Section 4 for tire change procedure.

When rotating tires, check for uneven wear and damage. Abnormal wear is usually caused by incorrect tire pressure, improper wheel alignment, out–of–balance wheels, or severe braking.

Front tire replacement precautions

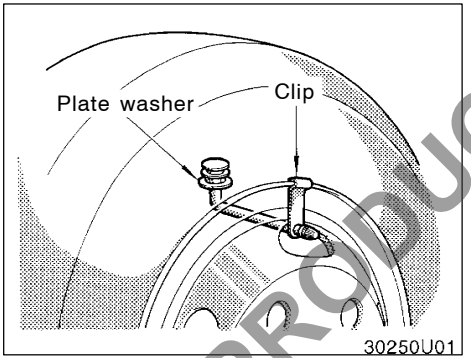

Your front tires are equipped with a special clip and plate washer designed to retain the inflation valve stem.

When replacing a front tire, be sure to move the clip and washer to the new tire.

The spare tire originally installed has the same clip and washer in case it replaces a flat front tire.

NOTICE

Do not drive with the clip or washer removed. It may result in tire damage.

Installing snow tires and chains

WHEN TO USE SNOW TIRES OR CHAINS

Snow tires or chains are recommended when driving on snow or ice.

On wet or dry roads, conventional tires provide better traction than snow tires.

SNOW TIRE SELECTION

If you need snow tires, select tires of the same size, construction and load capacity as the originally installed tires.

Do not use tires other than those mentioned above. Do not install studded tires without first checking local regulations for possible restrictions.

⚠ CAUTION

Do not use snow tires other than the manufacturer’s recommended size, as this may cause dangerous handling characteristics resulting in loss of control. Otherwise, an accident may occur resulting in death or serious injuries.

NOT FOR REPRODUCTION

SNOW TIRE INSTALLATION

Snow tires should be installed on all wheels.

Installing snow tires on the rear wheels only can lead to an excessive difference in road grip capability between the front and rear tires which could cause loss of vehicle control.

When storing removed tires, you should store them in a cool dry place.

Mark the direction of rotation and be sure to install them in the same direction when replacing.

⚠ CAUTION

- **Do not drive with the snow tires incorrectly inflated.**
- **Observe permissible maximum speed for your snow tires and the legal speed limit.**

TIRE CHAIN SELECTION

Use tire chains of the correct size for your rear tires.

Use only genuine Toyota tire chains, designed exclusively for use on the COASTER, or their equivalent.

NOTICE

Using tire chains other than COASTER genuine tire chains or their equivalent could damage the vehicle body.

COASTER genuine tire chains
(Part No. 08323–43020)

Laws about using tire chains vary according to locality and type of road, so always check the local laws before you install tire chains.

CHAIN INSTALLATION

Do not use tire chains on the front tires. Install chains on the rear double tires—simultaneously over both the outer and inner tires—as tightly as possible. Make sure the chains are not off–center towards either the outer or inner side. Fully pull out the chains to secure the outer chain connections. Retighten chains after driving 0.5—1.0 km (1/4—1/2 miles).

When installing chains on your tires, carefully follow the instructions of the chain manufacturer.

If wheel covers are used, they will be scratched by the chain band, so remove the covers before putting on the chains.

⚠ CAUTION

- **Do not exceed 50 km/h (30 mph) or the chain manufacturer's recommended speed limit, whichever is lower.**
- **Do not use tire chains on the outer tires only.**
- **Drive carefully avoiding bumps, holes, and sharp turns, which may cause the vehicle to bounce.**
- **Avoid sharp turns or locked–wheel braking as use of chains may adversely affect vehicle handling.**
- **When driving with chains installed, be sure to drive carefully. Slow down before entering curves to avoid losing control of the vehicle. Otherwise an accident may occur.**

CHAIN REMOVAL

When removing the tire chains, loosen the outer chains and then disengage the center, inner and outer chain connections in this order. Otherwise, the chains will be caught between the tires, making them difficult to remove.

NOT FOR REPRODUCTION

Replacing wheels

WHEN TO REPLACE YOUR WHEELS

If you have wheel damage such as bending, cracks or heavy corrosion, the wheel should be replaced.

If you fail to replace a damaged wheel, the tire may slip off the wheel or cause loss of handling control.

WHEEL SELECTION

When replacing wheels, care should be taken to ensure that the wheels are replaced by ones with the same load capacity, diameter, rim width, and inset* (single wheels) or offset (dual wheels).

Correct replacement wheels are available at your Toyota dealer.

*: Conventionally referred to as “offset”.

A wheel of a different size or type may adversely affect handling, wheel and bearing life, brake cooling, speedometer/odometer calibration, stopping ability, headlight aim, bumper height, vehicle ground clearance, and tire or snow chain clearance to the body and chassis.

Replacement with used wheels is not recommended as they may have been subjected to rough treatment or high mileage and could fail without warning. Also, bent wheels which have been straightened may have structural damage and therefore should not be used. Never use an inner tube in a leaking wheel which is designed for a tubeless tire.

⚠ CAUTION

Observe the following instructions. Otherwise, an accident may occur resulting in death or serious injuries.

- **Do not use wheels other than the manufacturer’s recommended size, as this may cause dangerous handling characteristics resulting in loss of control.**
- **Be sure to install the wheel nuts with the tapered end facing inward, see “—Installing wheel” in Section 4.**

NOT FOR REPRODUCTION

NOT FOR REPRODUCTION

DO–IT–YOURSELF MAINTENANCE

Electrical components

Checking battery condition 154
Battery recharging precautions 156
Checking and replacing fuses 156
Checking the circuit breaker 158
Adding washer fluid 158
Replacing light bulbs 159

NOT FOR REPRODUCTION

Checking battery condition—
—Precautions

⚠ CAUTION

BATTERY PRECAUTIONS

The battery produces flammable and explosive hydrogen gas.

- **Do not cause a spark from the battery with tools.**
- **Do not smoke or light a match near the battery.**

The electrolyte contains poisonous and corrosive sulfuric acid.

- **Avoid contact with eyes, skin or clothes.**
- **Never ingest electrolyte.**
- **Wear protective safety glasses when working near the battery.**
- **Keep children away from the battery.**

EMERGENCY MEASURES

- **If electrolyte gets in your eyes, flush your eyes with clean water immediately and get immediate medical attention. If possible, continue to apply water with a sponge or cloth while en route to the medical office.**
- **If electrolyte gets on your skin, thoroughly wash the contact area. If you feel pain or burning, get medical attention immediately.**
- **If electrolyte gets on your clothes, there is a possibility of its soaking through to your skin, so immediately take off the exposed clothing and follow the procedure above, if necessary.**
- **If you accidentally swallow electrolyte, drink a large quantity of water or milk. Get emergency medical attention immediately.**

The electricity stored in the battery will discharge gradually even when the vehicle is not in use, due to natural discharge and the draining effects of certain electrical appliances. If the vehicle is left for a long time, the battery may discharge, and the engine may be unable to start. (The battery recharges automatically during driving.)

—Checking battery exterior

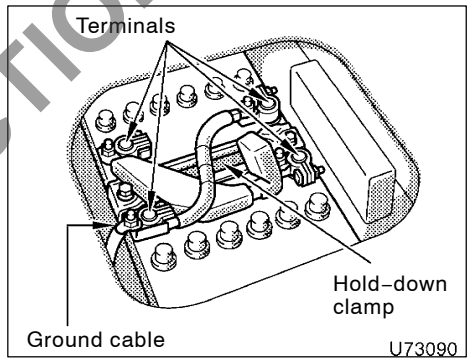

Check the battery for corroded or loose terminal connections, cracks, or loose hold–down clamp.

a. If the battery is corroded, wash it off with a solution of warm water and baking soda. Coat the outside of the terminals with grease to prevent further corrosion.

b. If the terminal connections are loose, tighten their clamp nuts—but do not overtighten.

c. Tighten the hold–down clamp only enough to keep the battery firmly in place. Overtightening may damage the battery case.

NOT FOR REPRODUCTION

—Checking battery fluid

NOTICE

- ***Be sure the engine and all accessories are off before performing maintenance.***
- ***When checking the battery, remove the ground cable from the negative terminal ("–" mark) first and reinstall it last.***
- ***Be careful not to cause a short circuit with tools.***
- ***Take care no solution gets into the battery when washing it.***

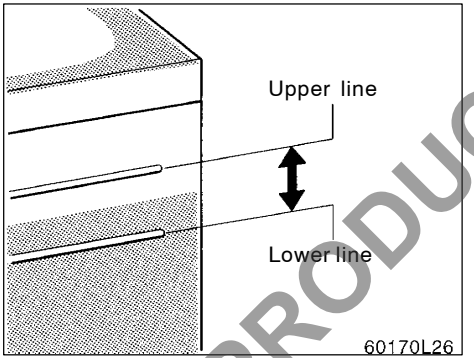

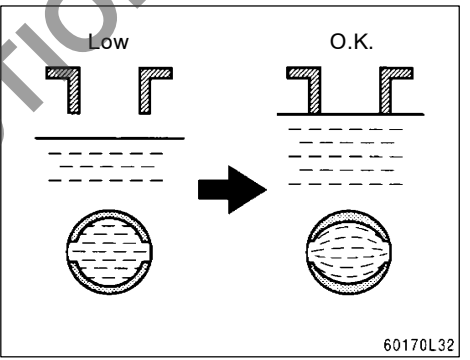

CHECKING BY FLUID LEVEL LINES

The fluid (electrolyte) level must be between the upper and lower lines.

When checking the fluid level, look at all six cells, not just one or two.

If the level is lower than the lower line, add distilled water. (See "ADDING DISTILLED WATER".)

ADDING DISTILLED WATER

1. Remove the vent plugs.
2. Add distilled water to cells needing fluid.

If the side of your battery is covered, check the water level by looking down directly above the cell as illustrated above.

3. Retighten the vent plugs securely.

NOT FOR REPRODUCTION

NOTICE

Do not overfill the cells. Excess electrolyte could squirt out of the battery during heavy charging, causing corrosion or damage.

Battery recharging precautions

During recharging, the battery is producing hydrogen gas.

Therefore, before recharging:

1. If recharging with the battery installed on the vehicle, be sure to disconnect the ground cable.
2. Be sure the power switch on the recharger is off when connecting the charger cables to the battery and when disconnecting them.

⚠ CAUTION

Always charge the battery in an unconfined area. Do not charge the battery in a garage or closed room where there is not sufficient ventilation.

NOTICE

Never recharge the battery while the engine is running. Also, be sure all accessories are turned off.

Checking and replacing fuses

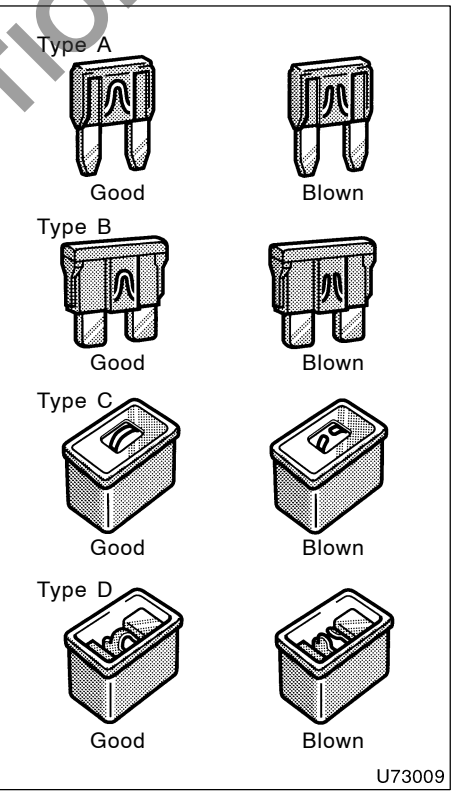

NOT FOR REPRODUCTION

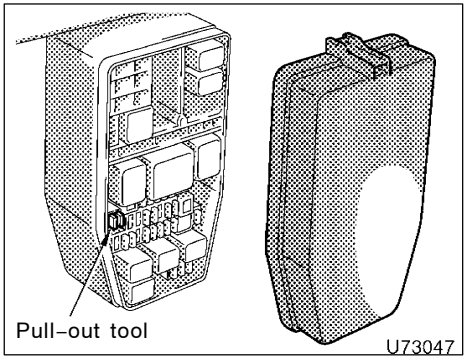

Instrument panel

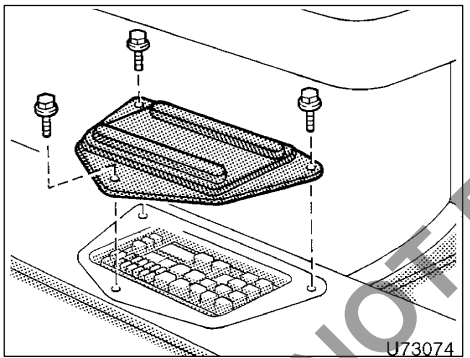

Under seat adjacent to passengers' door

If the headlights or other electrical components do not work, check the fuses. If any of the fuses are blown, they must be replaced.

See "Fuse and circuit breaker locations" in Section 7–1 for locations of the fuses.

Turn the engine switch and inoperative component off. Pull the suspected fuse straight out and check it.

Determine which fuse may be causing the problem. The lid of the fuse box shows the name of the circuit for each fuse. See Section 8 for the functions controlled by each circuit.

Type A and Type B fuses can be pulled out by the pull–out tool. The location of the pull–out tool is shown in the illustration.

If you are not sure whether the fuse has blown, try replacing the suspected fuse with one that you know is good.

If the fuse has blown, push a new fuse into the clip.

Only install a fuse with the amperage rating designated on the fuse box lid.

If you do not have a spare fuse, in an emergency you can pull out the "DOME" or "A.C" fuse, which may be dispensable for normal driving, and use it if its amperage rating is the same.

If you cannot use one of the same amperage, use one that is lower, but as close to the rating as possible. If the amperage is lower than that specified, the fuse might blow out again but this does not indicate anything wrong. Be sure to get the correct fuse as soon as possible and return the substitute to its original clip.

It is a good idea to purchase a set of spare fuses and keep them in your vehicle for emergencies.

If the new fuse immediately blows out, there is a problem with the electrical system. Have your Toyota dealer correct it as soon as possible.

⚠ CAUTION

Never use a fuse with a higher amperage rating, or any other object, in place of a fuse.

NOT FOR REPRODUCTION

Checking the circuit breaker (glide door)

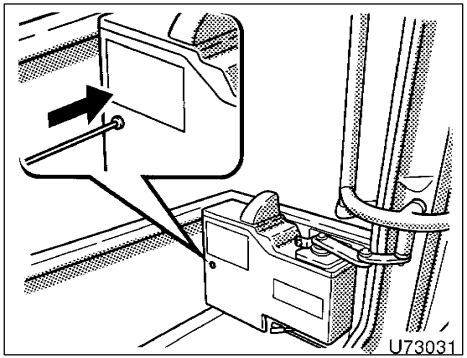

In the event that the automatic passengers' door does not operate, check the circuit breaker (C.B.).

To reset the circuit breaker, turn the engine switch to "OFF" and disconnect the ground cable on the battery. Then carefully insert a thin object, such as a toothpick, needle or safety pin, into the hole in the circuit breaker until you hear a click. The automatic passenger's door should now operate.

If the circuit breaker immediately goes off again or the automatic passengers' door does not operate, have the electrical system checked by your Toyota dealer as soon as possible.

Adding washer fluid

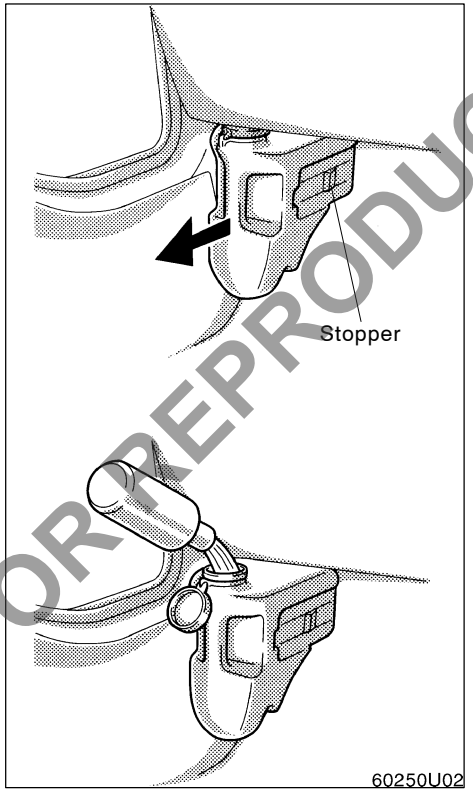

If the washer does not work, the washer tank may be empty. Add washer fluid.

You may use plain water as washer fluid. However, in cold areas where temperatures range below the freezing point, use washer fluid containing antifreeze. This product is available at your Toyota dealer and most auto parts stores. Follow the manufacturer's directions for how much to mix with water.

NOTICE
Do not use engine antifreeze or any other substitute because it may damage your vehicle's paint.

NOT FOR REPRODUCTION

Replacing light bulbs—

The following illustrations show how to gain access to the bulbs. When replacing a bulb, make sure the engine switch and light switch are off. Use bulbs with the wattage ratings given in the table.

CAUTION

- **To prevent burning yourself, do not replace the light bulbs while they are hot.**
- **Halogen bulbs have pressurized gas inside and require special handling. They can burst or shatter if scratched or dropped. Hold a bulb only by its plastic or metal case. Do not touch the glass part of a bulb with bare hands.**

NOTICE

- ***Only use a bulb of the listed type.***
- ***Use bulbs for the 12 V system.***

The inside of the lens of exterior lights such as headlights may temporarily fog up when the lens becomes wet in the rain or in a car wash. This is not a problem because the fogging is caused by the temperature difference between the outside and inside of the lens, just like the windshield fogs up in the rain. However, if there is a large drop of water on the inside of the lens, or if there is water pooled inside the light, contact your Toyota dealer.

Light bulbs	W	Type
Headlights		
For high beam	55	A
For low beam	55	A
Parking lights	5	D
Front turn signal lights	21	B
Side turn signal lights	21	B
Rear turn signal lights	21	B
Stop/tail lights	21/5	B
Tail lights	5	D
Back–up lights	21	B
License plate lights	5	B
Interior light	10	B
Door courtesy light	5	C
Step light	5	D

A: H7 halogen bulbs
B: Single end bulbs
C: Double end bulbs
D: Wedge base bulbs

NOT FOR REPRODUCTION

—Headlights

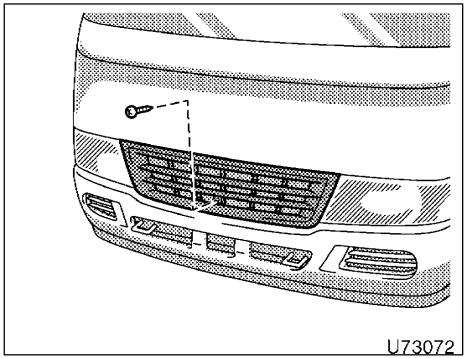

1. **Remove the retaining screw and pull the radiator grille toward you to remove it.**

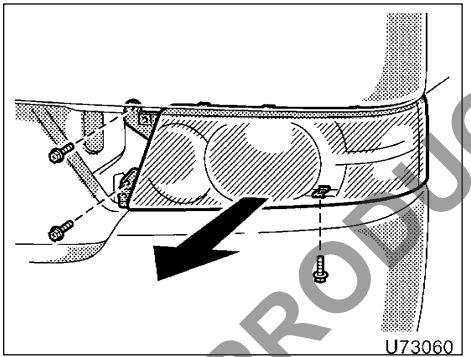

2. **Remove the 3 retaining screws and pull the combination lamp assembly toward you.**

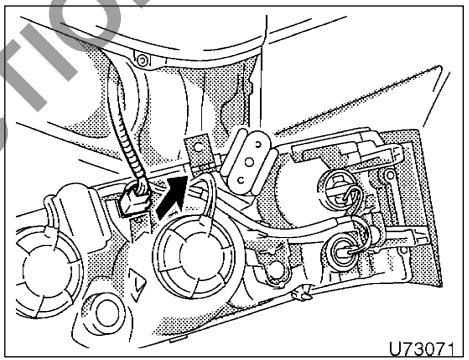

3. **Disconnect the connector while holding the lamp assembly to free it.**

NOT FOR REPRODUCTION

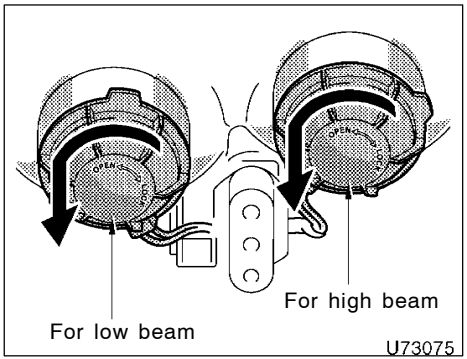

4. **Turn the cover counterclockwise and remove it.**

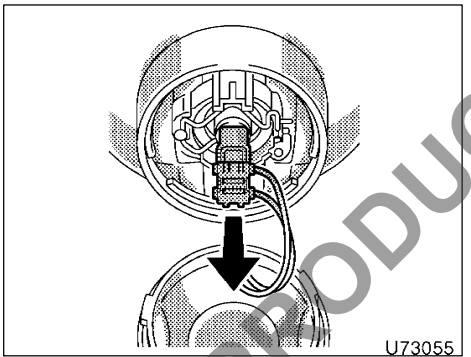

5. **Disconnect the connector by pulling it straight out.**

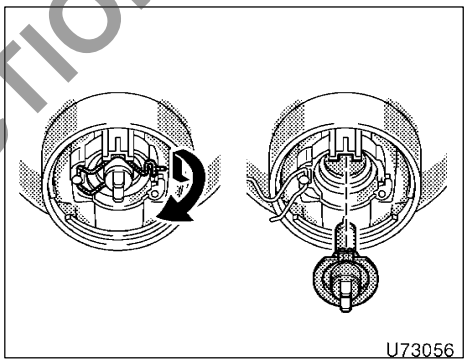

6. **Release the bulb retaining spring and remove the bulb. Install a new bulb and the bulb retaining spring. Connect the connector.**

NOT FOR REPRODUCTION

—Front turn signal and parking lights

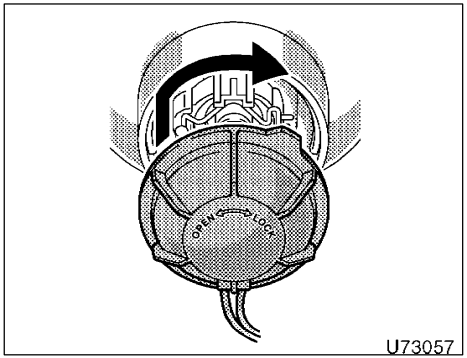

7. Install the cover by turning it clockwise.

Connect the connector and install the combination lamp assembly and the radiator grille in reverse order.

When aiming adjustment is necessary, contact your Toyota dealer.

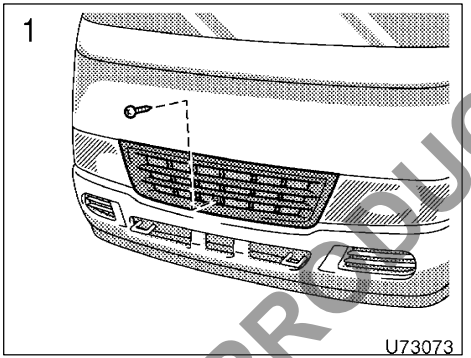

Remove the radiator grille.

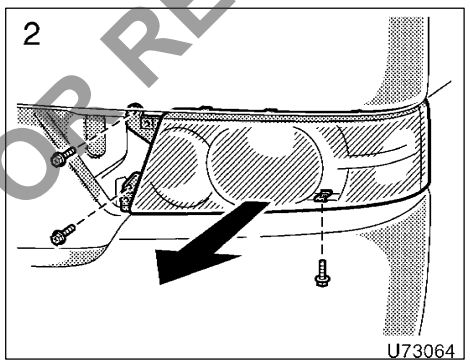

Remove the combination lamp assembly.

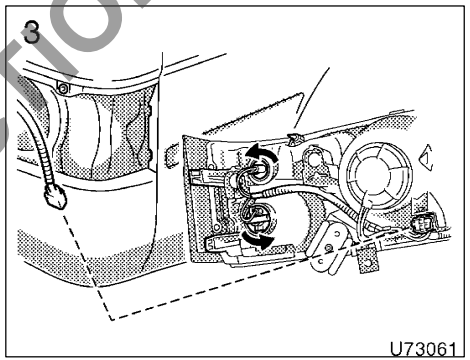

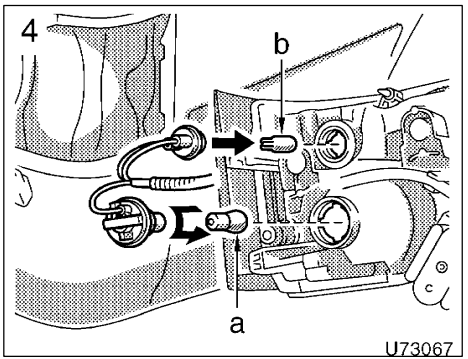

a: Front turn signal light
b: Parking light

NOT FOR REPRODUCTION

—Side turn signal lights

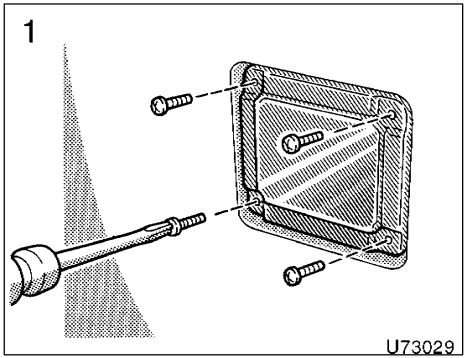

Use a Phillips-head screwdriver.

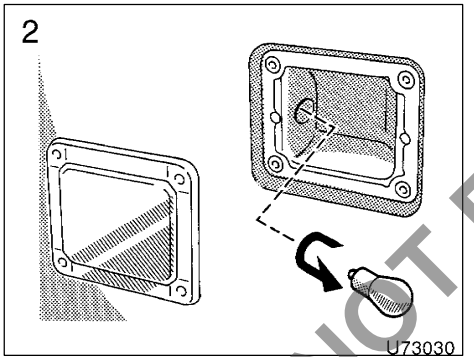

—Rear turn signal, stop/tail, tail and back-up lights

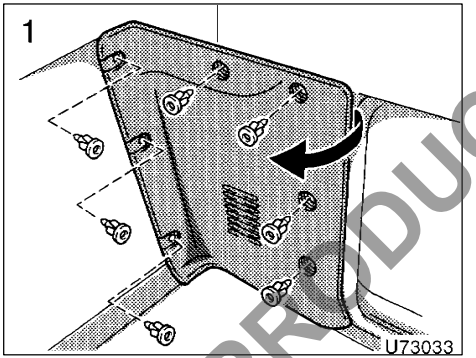

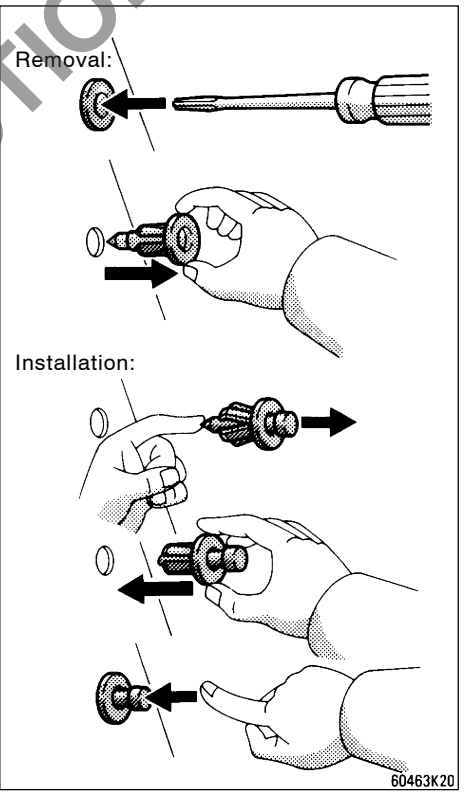

Removing and installing rear light cover clips

NOT FOR REPRODUCTION

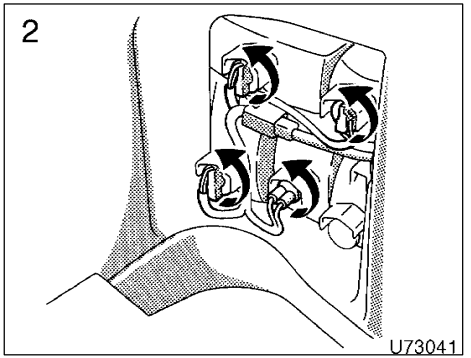

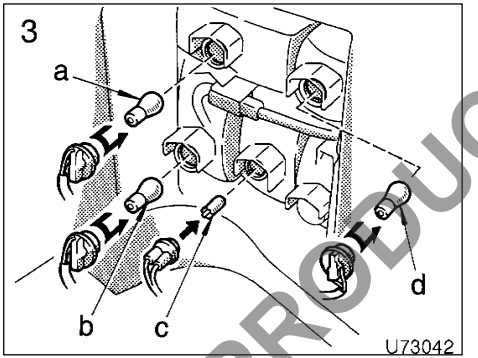

a: Rear turn signal light
b: Stop/tail light
c: Tail light
d: Back-up light

—License plate lights

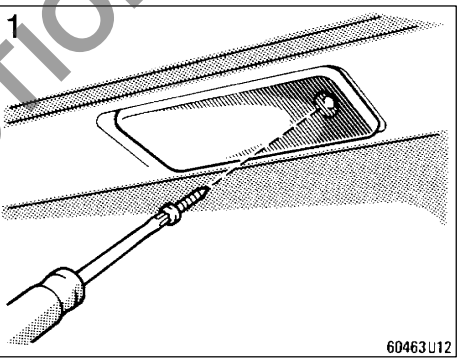

Use a Phillips-head screwdriver.

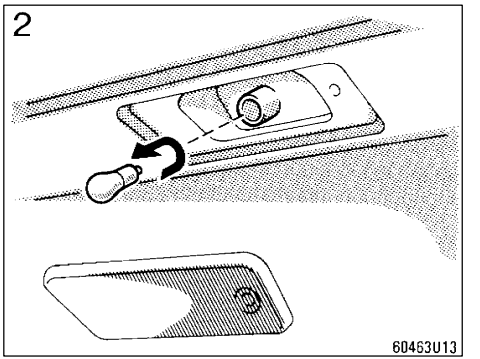

NOT FOR REPRODUCTION

SECTION 8

SPECIFICATIONS

Dimensions 166
Engine 166
Fuel 166
Service specifications 167
Tires 169
Fuses and circuit breaker 170

NOT FOR REPRODUCTION

Dimensions

	mm (in.)
Overall length	6990 (275.2)
Overall width	2095 (82.5)
Overall height	2600 (102.4)
Wheelbase	3935 (154.9)
Front tread	1690 (66.5)
Rear tread	1490 (58.7)

Engine

Model:
N04C–UH

Type:
4 cylinder in line, 4 cycle, diesel (with turbocharger)

Bore and stroke, mm (in.):
104.0 × 118.0 (4.09 × 4.65)

Displacement, cm^3 (cu. in.):
4009 (244.5)

SPEED LIMIT

Maximum vehicle speed, km/h (mph):
100 (62)

Fuel

Fuel type:
Diesel fuel that contains 50 ppm or less of sulphur, cetane number 50 (cetane index 45) or higher

Fuel tank capacity, L (gal., Imp. gal.):
95 (25.1, 20.9)

NOTICE

FAME (Fatty Acid Methyl Ester) fuel sold under names such as "B30" or "B100" and fuel containing a large amount of FAME should not be used. Your vehicle can use diesel mixed with 5% max biodiesel FAME (B5). The use of fuel with more than 5% FAME content (B5) will damage the vehicle's fuel system. You must ensure that refueling is carried out only from a source where fuel specification and quality can be guaranteed. In case of any doubt, ask your Toyota dealer.

NOT FOR REPRODUCTION

Service specifications

ENGINE

Valve clearance (engine cold), mm (in.):

Intake	0.30 (0.012)
Exhaust	0.45 (0.018)

Drive belt deflection with 98 N (10 kgf, 22 lbf) thumb force (used belt), mm (in.):

1. 12—13 (0.47—0.51)
2. 10.7—12.1 (0.42—0.48)

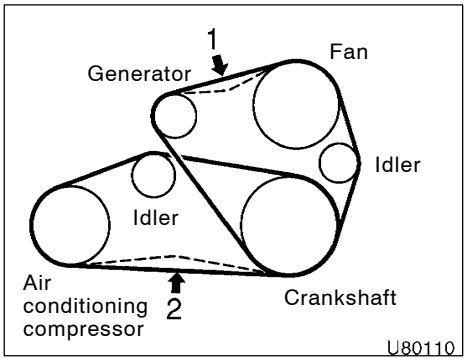

ENGINE LUBRICATION

Oil capacity (drain and refill—reference*), L (qt., Imp. qt.):

With filter	7.3 (7.7, 6.4)
Without filter	6.1 (6.4, 5.4)

*: The engine oil capacity is a reference quantity to be used when exchanging. Warm up and turn off the engine, wait more than 5 minutes, and check the oil level on the dipstick.

"Toyota Genuine Motor Oil" is used in your Toyota vehicle. Use Toyota approved "Toyota Genuine Motor Oil" or equivalent to satisfy the following grade and viscosity.

Oil grade:

API CD, CE, CF, CH–4, CI–4 or CJ–4
ACEA E–3, E–4, E–5, E–6 or E–9

API CJ–4, ACEA E–6 or E–9 is preferred.

Recommended oil viscosity (SAE):

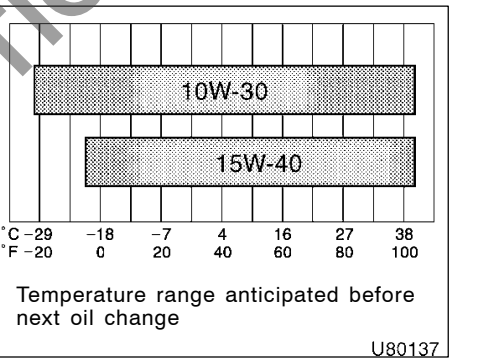

Please contact your Toyota dealer for further details.

NOT FOR REPRODUCTION

COOLING SYSTEM

Total capacity, L (qt., Imp. qt.):
14.1 (14.9, 12.4)

Coolant type:

Your Toyota vehicle is filled with “Toyota Super Long Life Coolant” at the factory. In order to avoid technical problems, only use “Toyota Super Long Life Coolant” or similar high quality ethylene glycol based non–silicate, non–amine, non–nitrite, and non–borate coolant with long–life hybrid organic acid technology. (Coolant with long–life hybrid organic acid technology is a combination of low phosphates and organic acids.)

Do not use plain water alone.

Please contact your Toyota dealer for further details.

BATTERY

Specific gravity reading at 20°C (68°F):

1.250—1.290	Fully charged
1.160—1.200	Half charged
1.060—1.100	Discharged

Charging rates:

Quick charge	15 A max.
Slow charge	5 A max.

CLUTCH

Pedal free play, mm (in.):
5—20 (0.2—0.8)

Fluid type:
SAE J1703 or FMVSS No.116 DOT 3

MANUAL TRANSMISSION

Oil capacity, L (qt., Imp. qt.):
3.0 (3.2, 2.6)

Oil type:
Gear oil API GL–3 (GL–4)

Recommended oil viscosity:
SAE 75W–90

AUTOMATIC TRANSMISSION

Fluid capacity, L (qt., Imp. qt.):
13.9 (14.7, 12.2)

Fluid type:
Toyota Genuine ATF D–II

Change automatic transmission fluid only as necessary.

Please contact your Toyota dealer for further details.

DIFFERENTIAL

Oil capacity, L (qt., Imp. qt.):
3.8 (4.0, 3.3)

Your Toyota vehicle is filled with “Toyota Genuine Differential Gear Oil” at the factory. Use Toyota approved “Toyota Genuine Differential Gear Oil” or equivalent to satisfy the following specification.

Oil type:
Hypoid gear oil API GL–5

Recommended oil viscosity:
Above –18°C (0°F)
SAE 90
Below –18°C (0°F)
SAE 80W or 80W–90

Please contact your Toyota dealer for further details.

NOT FOR REPRODUCTION

CHASSIS LUBRICATION

Wheel bearings:
Lithium base wheel bearing grease, NLGI No.2

Ball joints:
Molybdenum–disulfide lithium base chassis grease, NLGI No.2

Upper arm bushings:
Molybdenum–disulfide lithium base chassis grease, NLGI No.2

Center and Idler arm brackets:
Molybdenum–disulfide lithium base chassis grease, NLGI No.2

Spiders of propeller shafts:
Lithium base chassis grease, NLGI No.2

Slide yoke of propeller shafts:
Molybdenum–disulfide lithium base chassis grease, NLGI No.2 or lithium base chassis grease, NLGI No.2

BRAKES

Minimum pedal clearance when depressed with the force of 490 N (50 kgf, 110 lbf) with the engine running, mm (in.):
45 (1.8)

Pedal free play, mm (in.):
1—6 (0.04—0.24)

Parking brake adjustment when pulled with the force of 245 N (25 kgf, 55 lbf):
6—8 clicks

Fluid type:
SAE J1703 or FMVSS No.116 DOT 3

STEERING

Wheel free play:
Less than 40 mm (1.6 in.)

Power steering fluid type:
Automatic transmission fluid DEXRON®II or III

Tires

Tire size and cold tire inflation pressure, kPa (kgf/cm^2 or bar, psi):

Front 7.00R16–12 550 (5.50, 80)

Rear 7.00R16–12 325 (3.25, 47)

Wheel nut torque, N·m (kgf·m, ft·lbf):

515 (52.5, 380)

NOTE: For a complete information on tires (e.g. replacing tires or replacing wheels), see “Checking tire inflation pressure” through “Replacing wheels” in Section 7–2.

NOT FOR REPRODUCTION

Fuses and circuit breaker

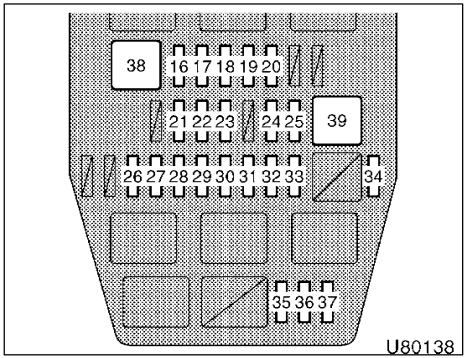

Instrument panel

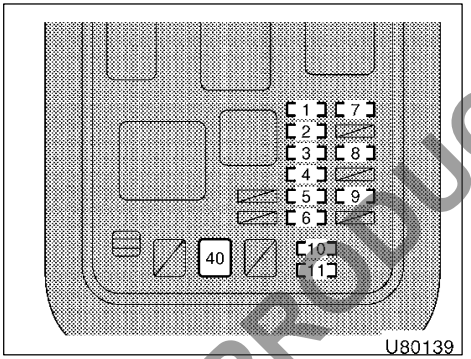

Under seat adjacent to passengers' door

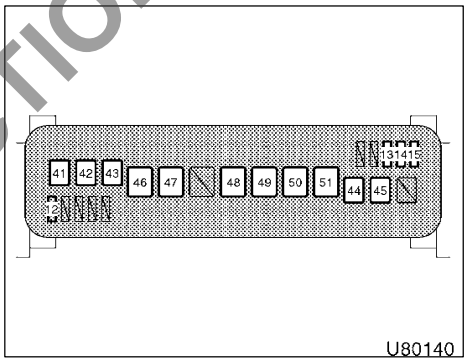

Battery room

Fuses (type A)

1. **CDS FAN NO.2 30 A:** Air conditioning system
2. **CDS FAN NO.1 30 A:** Air conditioning system
3. **A.C FAN NO.3 20 A:** Air conditioning system
4. **A.C FAN NO.2 20 A:** Air conditioning system
5. **A.C FAN NO.1 20 A:** Air conditioning system
6. **RADI FAN 20 A:** No circuit
7. **DEFOG 20 A:** Rear window defogger
8. **ABS SUB 30 A:** Anti–lock brake system
9. **WATER PUMP 10 A:** No circuit
10. **SPARE 10 A:** Spare fuse
11. **SPARE 20 A:** Spare fuse
12. **ECD 15 A:** Multiport fuel injection system/sequential multiport fuel injection system
13. **ALT–S 7.5 A:** Charging system
14. **STEP 15 A:** No circuit
15. **EM–DR 15 A:** Emergency door

Fuses (type B)

16. **WIPER 20 A:** Windshield wipers and washer
17. **ECU–IG 15 A:** Passengers' automatic door, exhaust retarder, service reminder indicators and warning buzzers, charging system, accelerator interlock system
18. **A.C 15 A:** Air conditioning system
19. **GAUGE 10 A:** Back–up lights, rear window defogger, air conditioning system
20. **TURN 10 A:** Emergency flashers, turn signal lights

NOT FOR REPRODUCTION

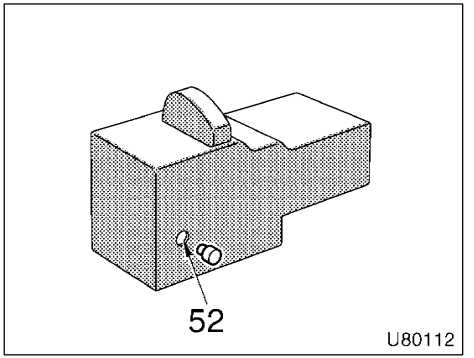

On glide type passengers' automatic door control unit

21. **OBDII 7.5 A:** On–board diagnosis system
22. **ECU–B 10 A:** Passengers' automatic door
23. **DOME 15 A:** Interior lights
24. **STOP 15 A:** Stop lights
25. **FOG 15 A:** No circuit
26. **HEAD (LH) 15 A:** Left–hand headlight
27. **HEAD (RH) 15 A:** Right–hand headlight
28. **MET–IGN 7.5 A:** Gauges and meters, service reminder indicators and warning buzzers, back buzzer
29. **HAZ–HORN 15 A:** Emergency flashers, horn
30. **CIG–RADIO 15 A:** Cigarette lighter, digital clock display
31. **TAIL 15 A:** Tail lights, parking lights, license plate lights, instrument panel lights, interior lights, air conditioning system
32. **IGN 10 A:** Fuel cut system, engine stop system, engine glow system
33. **ST 7.5 A:** Engine starter, exhaust retarder, air conditioning system, engine glow system
34. **D/L 20 A:** Power door lock
35. **SPARE 7.5 A:** Spare fuse
36. **SPARE 10 A:** Spare fuses
37. **SPARE 15 A:** Spare fuses

Fuses (type C)

38. **FUEL–HEATER 30 A:** No circuit
39. **FR–HEATER 30 A:** Air conditioning system
40. **RR–HEATER 30 A:** Air conditioning system
41. **STA 50 A:** Engine starter
42. **AM2 30 A:** Starting system, "IGN" fuse
43. **MAIN 40 A:** "HEAD (RH)", "HEAD (LH)" and "HAZ–HORN" fuses
44. **AM FR 50 A:** "ECU–B", "STOP," "DOME" and "FR–HEATER" fuses
45. **DOOR 40 A:** Passengers' automatic door

Fuses (type D)

46. **A/C FAN 60 A:** "A.C FAN NO.3", "A.C FAN NO.2" and "A.C FAN NO.1" fuses
47. **CDS FAN 50 A:** Air conditioning system, "CDS FAN NO.2" and "CDS FAN NO.1" fuses
48. **ALT 140 A:** Starting system, "AM1", "AM FR" and "AM RR" fuses
49. **AM1 60 A:** "TAIL", "GAUGE", "TURN", "ECU–IG", "WIPER", "A.C", "ST", "FUEL–HEATER" and "CIG–RADIO" fuses
50. **ABS 60 A:** Anti–lock brake system
51. **AM RR 60 A:** "DEFOG", "RR HEATER", "RADI FAN" fuses

Circuit breaker

52. **10 A:** Passengers' automatic door

NOT FOR REPRODUCTION

NOT FOR REPRODUCTION

INDEX

NOT FOR REPRODUCTION

A

"ABS" warning light 43
Adding washer fluid 158
Adjustment
  Driver's seat 23
  Seat belt 24
Air bleeding 102
Air filter
  Checking the air filter 146
Anti–lock brake system
  warning light 43
Anti–theft steering column lock 50
Appearance care
  Cleaning the interior 129
  Protecting your Toyota from
    corrosion 126
  Washing and waxing 127
Automatic transmission
  Driving with an automatic
    transmission 51
  Shift lock override button 121
  Shift pattern 51
  Shifting speed 51
Auxiliary box 72

B

Battery
  Access 137
  Checking battery condition 154
  Gas caution 154
  Handling safety 154
  Recharging precautions 156
  Winter driving tips 92
Before starting the engine 88
Brake pad wear indicators 84
Brake system 82
Brake system warning light 43
Brakes
  Pad wear indicators 84
  Parking 56
Break–in tips 76
Brightness control 41

C

Carbon monoxide caution 80
Charging system warning light 43
Checking and replacing fuses 156
Checking the air filters and
  condenser 146
Checking the engine oil level 142
Checking the radiator, condenser and
  intercooler 145
Child restraint
  Child restraint system 29
  Precautions 28
Child restraint anchor fittings 29
Cigarette lighter and ashtrays 70
Circuit breaker 158
Circuit breaker locations 138
Cleaning the interior 129
Clock 70
Cold weather
  Operation 92
Condenser
  Checking the condenser 145,146
  Condenser location 137
Controls, Instrument panel 2,4
Cooler system 64
Cooling system
  Coolant level 144
  Engine overheating 106
  Radiator and reservoir 144
  Radiator cap 106
  Winter driving tips 92
Corrosion prevention 126
Cup holder 71

NOT FOR REPRODUCTION

D

Defogger, Rear window 37
Diesel particulate filter system 77
Diesel particulate filter system
  indicator light 43
Diesel particulate filter system
  warning buzzer 43
Dimmer switch, Headlight 34
Directional signals 34
Do–it–yourself maintenance
  Service precautions 139
Does your vehicle need repairing? 133
Door
  Driver's door 8
  Passengers' door 9,14,15
DPF system 77
Driver's door lock 8
Driver's head restraint 24
Driver's seat 22,23
Driving
  Automatic transmission 51
  Driving tips 88
  Manual transmission 54
Driving in the rain 91
Driving tips
  Driving in the rain 91
  Driving tips in various conditions 90
  Driving with a manual
    transmission 54
  Driving with an automatic
    transmission 51
  Economical driving 98
  Good driving practice 51,54
  Pre–trip safety check 89
  Winter driving tips 92
During
  Break–in 76

E

Economical driving
  Saving money on both fuel and
    repairs 98
Electrical system
  Access to the battery 137
  Battery 154,156
  Circuit breaker 158
  Fuse and circuit breaker 138
  Fuses 156
  Locations 138
Emergency door 121
Emergency door warning buzzer 43
Emergency door warning light 43
Emergency flasher switch 35
Emergency, In case of
  Bleeding the fuel system 102
  Blown fuse 156
  Emergency flasher switch 35
  Flat tire 107
  If the passengers' automatic door
    needs to be opened from
    outside 107
  If you cannot increase
    engine speed 106
  If you cannot shift automatic
    transmission shift lever 121
  If you must escape from
    the emergency door 121
  If you must escape from
    the side rear window 122
  If your engine stalls while
    driving 105
  If your vehicle becomes stuck 118
  If your vehicle has to be stopped
    in an emergency 122
  If your vehicle needs
    to be towed 119
  If your vehicle will not start 102
  Jump starting 103
  Overheating 106
  Towing 119

NOT FOR REPRODUCTION

Engine
Access hole cover 18
Before starting the engine 88
Checking the coolant level 144
Engine and battery compartment 136
Exhaust gas caution 80
Identification number 86
Oil consumption 81
Oil level 142
Overheating 106
Starting procedure 88
Turning off an engine with turbocharger 89
Engine coolant
Temperature gauge 40
Winter driving tips 92
Engine coolant temperature gauge 40
Engine oil
Winter driving tips 92
Engine switch 50
Exhaust gas caution 80
Exhaust retarder switch 55

F

Facts about engine oil consumption 81
Flasher, Headlight 34
Flat tire
After changing wheels 118
Front tire replacement 108
If you have a flat tire 107
Installing wheel 114
Jack point 111
Jacking precautions 107
Jacking up 112
Loosening wheel nuts 111
Lowering vehicle 116
Reinstalling wheel ornament 117
Removing wheel ornament 110
Replacing front and outer rear wheels 112
Replacing inner rear wheel 113
Wheel block 110
Floor mat 73
Fluid level
Washer fluid 158
Foreign countries, Operation in 77
Front heater system 58
Front tire replacement precautions 149
Fuel
Bleeding the fuel system 102
Draining fuel filter water 145
Filler door opener 19
Fuel economy 98
Gauge 40
Operation in foreign countries 77
Tank cap 19,20
Fuel filter
Draining fuel filter water 145
Fuel filter replacement warning light 43
Fuel filter warning buzzer 43
Fuel filter warning light 43
Fuel information 76
Fuse
Fuse box 156
Fuse locations 138

G

Gauge
Engine coolant temperature 40
Fuel 40
Good driving practice 51,54

NOT FOR REPRODUCTION

H

Hazard switch 35
Headlight switch 34
High speed operation
  During break–in 76
How to start the engine 88

I

Identification
  Engine 86
  Vehicle 85
Ignition switch 50
Indicator symbols 5
Instrument panel
  Cigarette lighter and ashtrays 70
  Clock 70
  Fuel gauge 40
  Indicator symbols 5
  Tachometer 41
Instrument panel overview 2,4
Intercooler
  Checking the intercooler 145

J

Jack
  Location 109
Jump starting 103

K

Keys 8

L

Light bulbs
  Back–up light 163
  Front turn signal light 162
  Headlight 160
  License plate light 164
  Parking light 162
  Rear turn signal light 163
  Side turn signal light 163
  Stop light 163
  Tail light 163
Light bulbs, Replacing 159
Light, Interior
  Interior light 35
Lock
  Driver's door 8
  Passengers' door 9,14,15
  Steering column 50
Low engine oil level warning light 43
Low engine oil pressure
  warning light 43
Low fuel level warning light 43
Low vacuum warning buzzer 43
Luggage stowage precautions 85

M

Maintenance
  Do–it–yourself maintenance 139
  Does your vehicle need
    repairing? 133
  Maintenance requirements 132
  Where to go for service 132
Malfunction indicator lamp 43
Manual regeneration switch,
  Diesel particulate filter system 77
Manual transmission
  Driving with a manual
    transmission 54
  Shift pattern 54
Maximum allowable speed
  Automatic transmission 51
  Manual transmission 54
Meter light control 41
Mirrors
  Folding rear view 32
  Outside rear view 31

N

New vehicle break–in 76

NOT FOR REPRODUCTION

O

Odometer 41
Oil
  Consumption 81
  Viscosity and grade 142
Oil consumption 81
Open passengers' door
  warning light 43
Operation in foreign countries 77
Overdrive switch 51
Overheating, Engine 106
Overheating, Engine coolant 40
Overview
  Engine and battery
    compartment 136

P

Parking brake
  Operation 56
  Reminder light 56
Passengers' door
  If the passengers' automatic door
    needs to be opened from
    outside 107
Passengers' door automatic
  operation 12,16
Passengers' door lock 9,14,15
Polishing 127
Pre–trip safety check 89
Precautions for turning off an engine
  with turbocharger 89
Protecting your Toyota from
  corrosion 126

R

Radiator
  Checking the radiator 145
  Coolant, Engine 144
  Radiator location 137
Rear heater system 67
Rear view mirrors
  Folding 32
  Outside 31
Rear window defogger switch 37

S

Safety check, Pre–trip 89
Seat adjustment precautions
  Driver's seat 22
Seat belt reminder buzzer 43
Seat belt reminder light 43
Seat belts
  Child restraint anchor fittings 29
  Cleaning 129
  Fastening 24
  Seat belt precautions 24
Seats 22
Service and maintenance 132
Side rear window 122
Side windows 17
Spare fuse 156
Spare tire 109
Specifications 166
Starting
  Cold weather 88
  Engine 88
  Jump starting 103
Steering
  Adjusting steering wheel 31
Storage precautions 72
Suspension and chassis 86
Switch
  Emergency flasher 35
  Engine 50
  Headlight, dimmer and
    turn signal 34
  Ignition 50
  Overdrive 51
  Passengers' door operating
    control 12,16
  Rear window defogger 37
  Windshield wiper and washer 36

NOT FOR REPRODUCTION

T

Tachometer 41
Telescopic steering column 31
Tilt steering wheel 31
Tires
  Changing 107
  Flat tire 107
  Inflation pressure 146
  Rotation 149
  Spare 109
  Tire information 147,149,151
Tools 109
Towing
  Emergency towing 120
  If your vehicle needs
    to be towed 119
  Trailer 93
Trailer towing 93
Trip meter 41
Turn signals 34

V

Vehicle identification number 85

W

Warning buzzer 43
Warning light 43
Washer fluid
  Adding washer fluid 158
Washing and waxing 127
Windshield wiper and
  washer switch 36
Winter driving tips 92

NOT FOR REPRODUCTION

Quick index

- If a service reminder indicator or warning buzzer comes on 43
- If your vehicle will not start 102
- If your engine stalls while driving 105
- If your vehicle overheats 106
- If you have a flat tire 107
- If your vehicle needs to be towed 119
- Tips for driving during break–in period 76
- How to start the engine 88
- Pre–trip safety check 89
- Complete index 173

Gas station information

Fuel type:

Diesel fuel that contains 50 ppm or less of sulphur, cetane number 50 (cetane index 45) or higher

See page 76 for detailed information.

Fuel tank capacity: 95 L (25.1 gal., 20.9 Imp. gal.)

Engine oil:

API CD, CE, CF, CH-4, CI-4 or CJ-4
ACEA E-3, E-4, E-5, E-6 or E-9
API CJ-4, ACEA E-6 or E-9 is preferred.

See page 143 for detailed information.

Tire information: See pages146 through 151.

Tire inflation pressure: See page 169.

NOT FOR REPRODUCTION

Publication No. OM36689E
Part No. 01999-36689
Printed in Japan 01–1501–00 Z
コースター (豪州E)