OPEL ZAFIRA TOURER

Owner's Manual

Wir leben Autos.

Contents

Introduction 2
In brief 6
Keys, doors and windows 21
Seats, restraints 37
Storage 63
Instruments and controls 94
Lighting 133
Climate control 145
Driving and operating 154
Vehicle care 214
Service and maintenance 257
Technical data 260
Customer information 276
Index 278

Introduction

Fuel	Designation			
Engine oil	Grade			
	Viscosity			
Tyre pressure		Tyre size	Front	Rear
	Summer tyres			
	Winter tyres			
Weights				
	Gross vehicle weight rating			
	- Kerb weight, basic model			
	= Loading			

Vehicle specific data

Please enter your vehicle's data on the previous page to keep it easily accessible. This information is available in the sections "Service and maintenance" and "Technical data" as well as on the identification plate.

Introduction

Your vehicle is a designed combination of advanced technology, safety, environmental friendliness and economy.

This Owner's Manual provides you with all the necessary information to enable you to drive your vehicle safely and efficiently.

Make sure your passengers are aware of the possible risk of accident and injury which may result from improper use of the vehicle.

You must always comply with the specific laws and regulations of the country that you are in. These laws may differ from the information in this Owner's Manual.

When this Owner's Manual refers to a workshop visit, we recommend your Opel Service Partner. For gas vehicles we recommend an Opel Repairer authorised for servicing gas vehicles.

All Opel Service Partners provide first-class service at reasonable prices. Experienced mechanics trained by Opel work according to specific Opel instructions.

The customer literature pack should always be kept ready to hand in the vehicle.

Using this manual

- This manual describes all options and features available for this model. **Certain descriptions, including those for display and menu functions, may not apply to your vehicle due to model variant, country specifications, special equipment or accessories.**
- The "In brief" section will give you an initial overview.
- The table of contents at the beginning of this manual and within each section shows where the information is located.
- The index will enable you to search for specific information.
- This Owner's Manual depicts left-hand drive vehicles. Operation is similar for right-hand drive vehicles.
- The Owner's Manual uses the factory engine designations. The corresponding sales designations can be found in the section "Technical data".
- Directional data, e.g. left or right, or front or back, always relate to the direction of travel.
- The vehicle display screens may not support your specific language.
- Display messages and interior labelling are written in **bold** letters.

Danger, Warnings and Cautions

⚠ Danger

Text marked ⚠ **Danger** provides information on risk of fatal injury. Disregarding this information may endanger life.

⚠ Warning

Text marked ⚠ **Warning** provides information on risk of accident or injury. Disregarding this information may lead to injury.

Caution

Text marked **Caution** provides information on possible damage to the vehicle. Disregarding this information may lead to vehicle damage.

Symbols

Page references are indicated with ⇨.
⇨ means "see page".

We wish you many hours of pleasurable driving.

Adam Opel AG

In brief

Initial drive information

Vehicle unlocking

Press button to unlock the doors and load compartment. Open the doors by pulling the handles. To open the tailgate, push the touchpad switch below the handle.

Radio remote control ⇨ 21, Central locking system ⇨ 23, Load compartment ⇨ 26.

Seat adjustment

Seat positioning

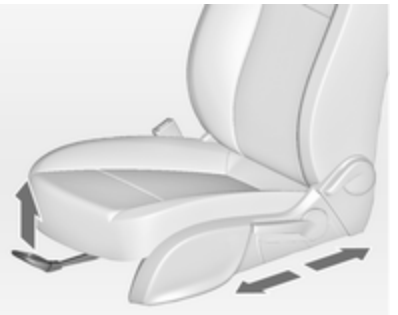

Pull handle, slide seat, release handle.

Seat position ⇨ 39, Seat adjustment ⇨ 39.

⚠ Danger

Do not sit nearer than 25 cm from the steering wheel, to permit safe airbag deployment.

Seat backrests

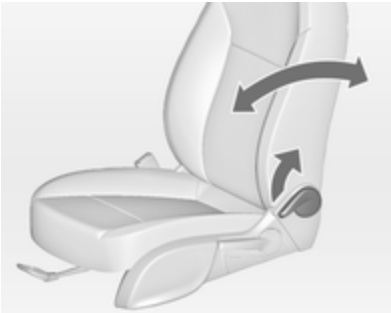

Pull lever, adjust inclination and release lever. Allow the seat to engage audibly.

Seat position ⇨ 39, Seat adjustment ⇨ 39.

Seat height

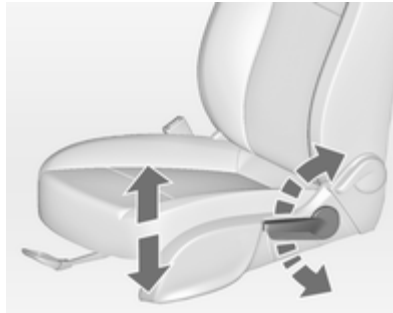

Lever pumping motion

up = seat higher
down = seat lower

Seat position ⇨ 39, Seat adjustment ⇨ 39.

Seat inclination

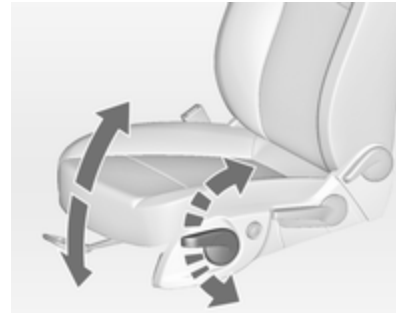

Lever pumping motion

up = front end higher
down = front end lower

Seat position ⇨ 39, Seat adjustment ⇨ 39.

Head restraint adjustment

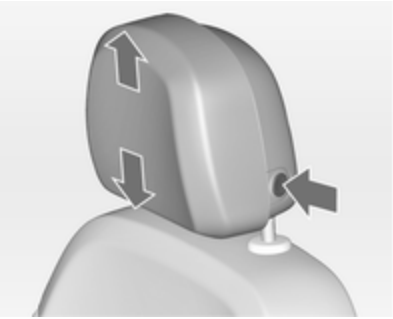

Press release button, adjust height, engage.

Head restraints ⇨ 37.

Seat belt

Pull out the seat belt and engage in belt buckle. The seat belt must not be twisted and must fit close against the body. The backrest must not be tilted back too far (maximum approx. 25 °).

To release belt, press red button on belt buckle.

Seat position ⇨ 39, Seat belts ⇨ 49, Airbag system ⇨ 53.

Mirror adjustment

Interior mirror

To reduce dazzle, adjust the lever on the underside of the mirror housing.

Interior mirror ⇨ 31, Automatic anti-dazzle interior mirror ⇨ 31.

Exterior mirrors

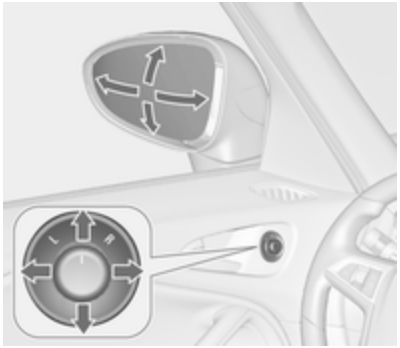

Select the relevant exterior mirror and adjust it.

Convex exterior mirrors ⇨ 30, Electric adjustment ⇨ 30, Folding exterior mirrors ⇨ 30, Heated exterior mirrors ⇨ 31.

Steering wheel adjustment

Unlock the lever, adjust the steering wheel, then engage the lever and ensure it is fully locked.

Do not adjust the steering wheel unless the vehicle is stationary and the steering wheel lock has been released.

Airbag system ⇨ 53, Ignition positions ⇨ 155.

Instrument panel overview

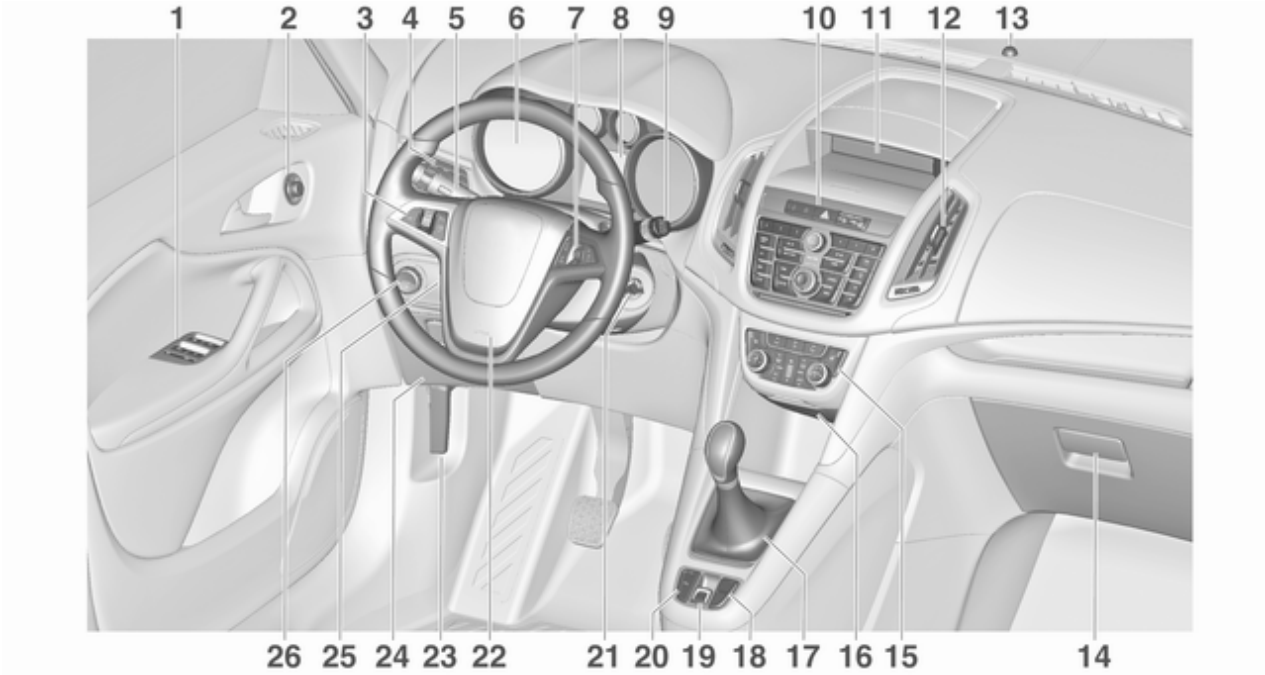

1 Power windows 32
2 Exterior mirrors 30
3 Cruise control 171
Speed limiter 173
Adaptive cruise control 174
Forward collision alert 181
4 Side air vents 151
5 Turn and lane-change signals, headlight flash, low beam and high beam, high beam assist 140
Exit lighting 143
Parking lights 141
Buttons for Driver Information Centre 114
6 Instruments 101
7 Steering wheel controls 94
8 Driver Information Centre 114
9 Windscreen wiper, windscreen washer system, headlight washer system, rear wiper, rear washer system 96
10 Central locking system 23
Hazard warning flashers 140
Sport mode 169
Tour mode 169
Fuel selector 103
Control indicator for airbag deactivation 108
Control indicator for front passenger seat belt 107
11 Info-Display 118
12 Centre air vents 151
13 Anti-theft alarm system status LED 27
14 Glovebox 63
15 Climate control system 145
16 AUX input, USB input, SD card slot 10
Power outlet 100
17 Selector lever, manual transmission 164
Automatic transmission 161
18 Traction Control system 168
Electronic Stability Control . 169
Lane departure warning 199
19 Electrical parking brake 166
20 Parking assist 186
Advanced parking assist 189
Eco button for stop-start system 157
21 Ignition switch with steering wheel lock 155
22 Horn 95
Driver airbag 53
23 Bonnet release lever 216
24 Fuse box 234
Storage compartment 65
25 Steering wheel adjustment . . 94
26 Light switch 133
Headlight range adjustment 135
Front fog lights 140

Rear fog light 141
Instrument illumination 142

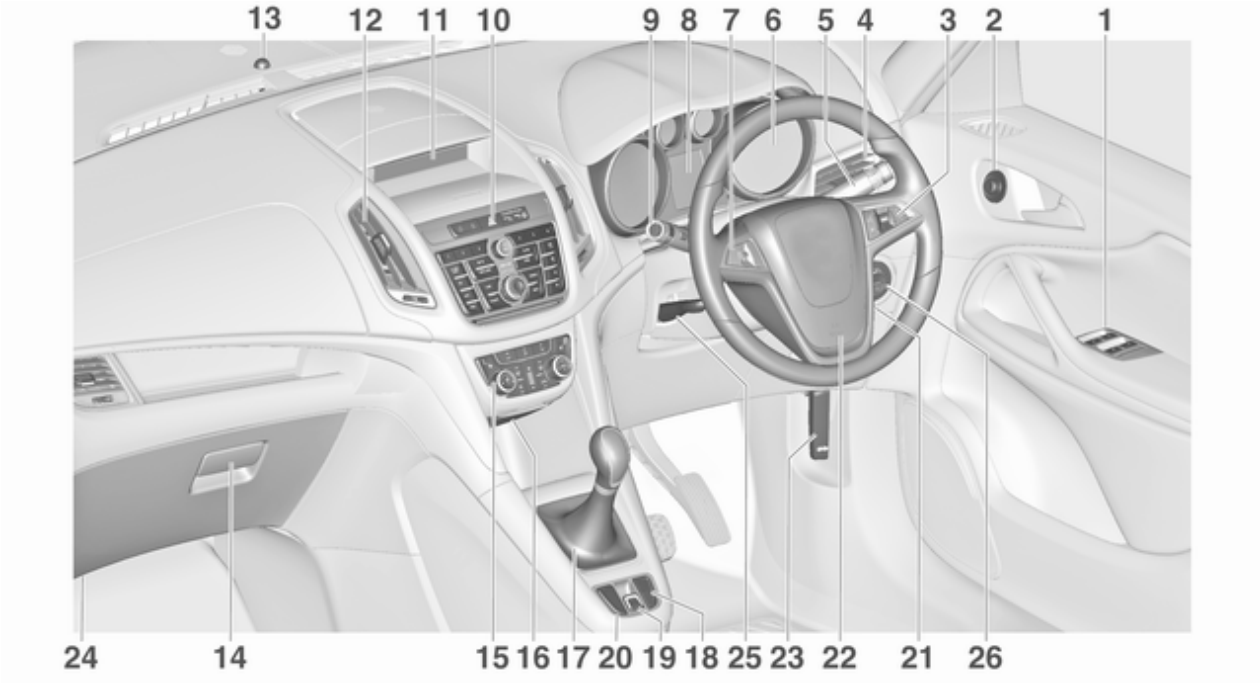
13
12
11
10
9
8
7
6
5
4
3
2
1
24
14
15
16
17
20
19
18
25
23
22
21
26

Exterior lighting

Turn light switch:

0 = lights off
⇶ = sidelights
≡D = low beam

Automatic light control

AUTO = automatic light control: exterior lighting is switched on and off automatically
⏻ = activation or deactivation of the automatic light control
⇶ = sidelights
≡D = low beam

Fog lights

Press light switch:

≡D = front fog lights
D≡ = rear fog light

Lighting ⇨ 133.

Headlight flash, high beam and low beam

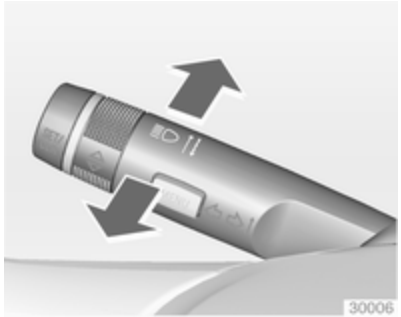

headlight flash = pull lever
high beam = push lever
low beam = push or pull lever

Automatic light control ⇨ 134, High beam ⇨ 134, High beam assist ⇨ 134, Headlight flash ⇨ 135, Adaptive forward lighting ⇨ 136.

Turn and lane-change signals

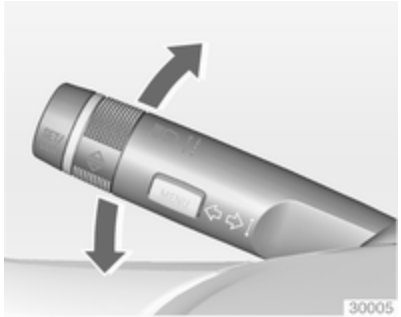

lever up = right turn signal
lever down = left turn signal

Turn and lane-change signals ⇨ 140, Parking lights ⇨ 141.

Hazard warning flashers

Operated with the ⚠ button.

Hazard warning flashers ⇨ 140.

Horn

Press 📯.

Washer and wiper systems

Windscreen wiper

2 = fast
1 = slow
⊘ = timed interval wiping or automatic wiping with rain sensor
O = off

For a single wipe when the windscreen wiper is off, press the lever down.

Windscreen wiper ⇨ 96, Wiper blade replacement ⇨ 221.

Windscreen and headlight washer

Pull lever.

Windscreen and headlight washer system ⇨ 96, Washer fluid ⇨ 218.

Rear window wiper

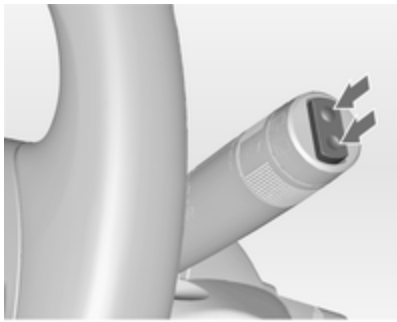

Press the rocker switch to activate the rear window wiper:

upper switch	=	continuous operation
lower switch	=	intermittent operation
middle position	=	off

Rear window washer

Push lever.

Washer fluid is sprayed on the rear window and the wiper wipes a few times.

Rear window wiper/washer ⇨ 98.

Climate control

Heated rear window, heated exterior mirrors

The heating is operated by pressing the button.

Heated rear window ⇨ 34.

Demisting and defrosting the windows

Press button .

Set the temperature control to the highest level.

Cooling on.

Heated rear window on.

Climate control system ⇨ 145.

Transmission

Manual transmission

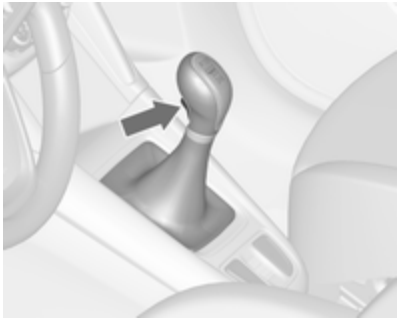

Reverse: with the vehicle stationary, wait 3 seconds after depressing clutch pedal and then press the release button on the selector lever and engage the gear.

If the gear does not engage, set the lever to neutral, release the clutch pedal and depress again; then repeat gear selection.

Manual transmission ⇨ 164.

Automatic transmission

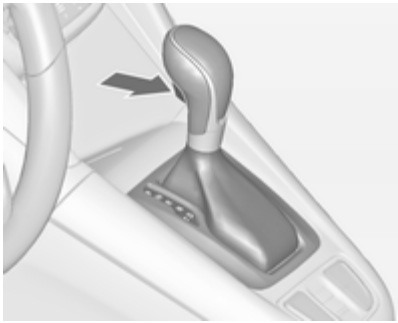

P = park
R = reverse
N = neutral
D = drive

Manual mode: move selector lever from **D** to the left.

+ = higher gear
− = lower gear

The selector lever can only be moved out of **P** when the ignition is on and the brake pedal is applied. To engage **P** or **R**, press the release button.

Automatic transmission ⇨ 161.

Starting off

Check before starting off

- Tyre pressure and condition ⇨ 237, ⇨ 272.
- Engine oil level and fluid levels ⇨ 216.
- All windows, mirrors, exterior lighting and number plates are free from dirt, snow and ice and are operational.
- Proper position of mirrors, seats, and seat belts ⇨ 30, ⇨ 39, ⇨ 50.
- Brake function at low speed, particularly if the brakes are wet.

Starting the engine

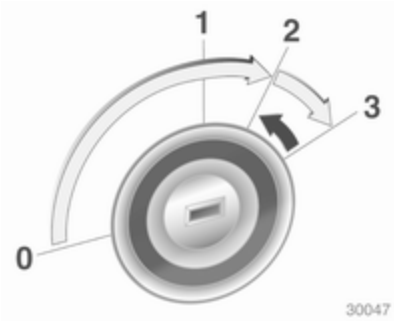

- Turn key to position **1**
- move the steering wheel slightly to release the steering wheel lock
- operate clutch and brake
- automatic transmission in **P** or **N**
- do not operate accelerator pedal
- diesel engines: turn the key to position **2** for preheating and wait until control indicator extinguishes
- turn key to position **3** and release

Starting the engine ⇨ 155.

Stop-start system

If the vehicle is at a low speed or at a standstill and certain conditions are fulfilled, activate an Autostop as follows:

- Depress the clutch pedal
- shift the selector lever to **N**
- release the clutch pedal

An Autostop is indicated by the needle at the **AUTOSTOP** position in the tachometer.

To restart the engine, depress the clutch pedal again.

Stop-start system ⇨ 157.

Parking

- Always apply the parking brake. Activate the manual parking brake without pressing the release button. Apply as firmly as possible on a downhill slope or uphill slope. Depress foot brake at the same time to reduce operating force.

  For vehicles with electrical parking brake, pull switch Ⓟ for approx. one second.
- Switch off the engine. Turn the ignition key to position **0** and remove it. Turn the steering wheel until the steering wheel lock is felt to engage.

  For vehicles with automatic transmission, the key can only be removed when the selector lever is in the **P** position.
- If the vehicle is on a level surface or uphill slope, engage first gear or set the selector lever to **P** before switching off the ignition. On an uphill slope, turn the front wheels away from the kerb.

If the vehicle is on a downhill slope, engage reverse gear or set the selector lever to **P** before switching off the ignition. Turn the front wheels towards the kerb.

- Lock the vehicle with button 🔒 on the radio remote control.

  Activate the anti-theft alarm system ⇨ 27.
- Do not park the vehicle on an easily ignitable surface. The high temperature of the exhaust system could ignite the surface.
- Close the windows.
- The engine cooling fans may run after the engine has been switched off ⇨ 215.
- After running at high engine speeds or with high engine loads, operate the engine briefly at a low load or run in neutral for approx. 30 seconds before switching off, in order to protect the turbocharger.

Keys, locks ⇨ 21, Laying the vehicle up for a long period of time ⇨ 214.

Keys, doors and windows

Keys, locks 21
Doors 26
Vehicle security 27
Exterior mirrors 30
Interior mirrors 31
Windows 32
Roof 35

Keys, locks

Keys

Replacement keys

The key number is specified in the Car Pass or on a detachable tag.

The key number must be quoted when ordering replacement keys as it is a component of the immobiliser system.

Locks ⇨ 254.

Key with foldaway key section

Press button to extend. To fold the key, first press the button.

Car Pass

The Car Pass contains security related vehicle data and should therefore be kept in a safe place.

When the vehicle is taken to a workshop, this vehicle data is needed in order to perform certain operations.

Radio remote control

Used to operate:

- Central locking system
- Anti-theft locking system
- Anti-theft alarm system
- Power windows

The radio remote control has an approximate range of up to 20 metres. It can be restricted by external influences. The hazard warning flashers confirm operation.

Handle with care, protect from moisture and high temperatures and avoid unnecessary operation.

Fault

If the central locking system cannot be operated with the radio remote control, it may be due to the following:

- Range exceeded
- Battery voltage too low
- Frequent, repeated operation of the radio remote control while not in range, which will require re-synchronisation
- Overload of the central locking system by operating at frequent intervals, the power supply is interrupted for a short time
- Interference from higher-power radio waves from other sources

Unlocking ⇨ 23.

Basic settings

Some settings can be changed in the menu **Settings** in the Info-Display. Vehicle personalisation ⇨ 127.

Radio remote control battery replacement

Replace the battery as soon as the range reduces.

Batteries do not belong in household waste. They must be disposed of at an appropriate recycling collection point.

Key with foldaway key section

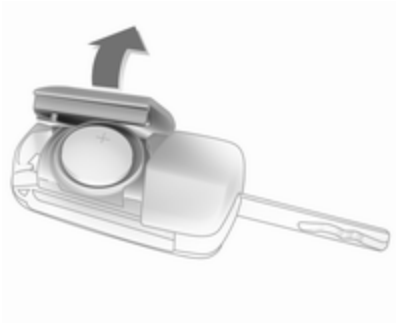

Extend the key and open the unit. Replace the battery (battery type CR 2032), paying attention to the installation position. Close the unit and synchronise.

Radio remote control synchronisation

After replacing the battery, unlock the door with the key in the driver's door lock. The radio remote control will be synchronised when you switch on the ignition.

Memorised settings

Whenever the key is removed from the ignition switch, the following settings are automatically memorised by the key:

- Lighting
- Infotainment system
- Central locking system
- Sport mode settings
- Comfort settings

The saved settings are automatically used the next time the memorised key is inserted into the ignition switch and turned to position **1** ⇨ 155.

A precondition is that **Personalization by driver** is activated in the personal settings of the Graphic-Info-Display. This must be set for each key used. On vehicles equipped with Colour-Info-Display, the personalisation is permanently activated.

Vehicle personalisation ⇨ 127.

Central locking system

Unlocks and locks doors, load compartment and fuel filler flap.

A pull on an interior door handle unlocks the respective door. Pulling the handle once more opens the door.

Note
In the event of an accident in which airbags or belt pretensioners are deployed, the vehicle is automatically unlocked.

Note
A short time after unlocking with the remote control the doors are locked automatically if no door has been opened.

Unlocking

Press button 🔒.

Two settings are selectable:

- To unlock only the driver's door, load compartment and fuel filler flap, press button 🔒 once. To unlock all doors, press button 🔒 twice

  or

- press button 🔓 once to unlock all doors, load compartment and fuel filler flap

The setting can be changed in the menu **Settings** in the Info-Display. Vehicle personalisation ⇨ 127.

The setting can be saved for the key being used. Memorised settings ⇨ 23.

Locking

Close doors, load compartment and fuel filler flap.

Press button 🔒.

If the driver's door is not closed properly, the central locking system will not work.

Unlocking and opening the tailgate

Press button 🔓 when the ignition is off. The tailgate is released to be unlocked and opened by pushing the touchpad switch below the handle.

Central locking buttons

Locks or unlocks all doors, the load compartment and fuel filler flap from the passenger compartment.

Press the 🔒 button to lock.

Press the 🔓 button to unlock.

Fault in radio remote control system

Unlocking

Manually unlock the driver's door by turning the key in the lock. Switch on the ignition and press the central locking button 🔓 to unlock all doors, load compartment and fuel filler flap. By switching on the ignition, the anti-theft locking system is deactivated.

Locking

Manually lock the driver's door by turning the key in the lock.

Fault in central locking system

Unlocking

Manually unlock the driver's door by turning the key in the lock. The other doors can be opened by pulling the interior handle twice. The load compartment and fuel filler flap cannot be opened. To deactivate the anti-theft locking system, switch on the ignition ⇨ 27.

Locking

Push inside locking knob of all doors except driver's door. Then close the driver's door and lock it from the outside with the key. The fuel filler flap and tailgate cannot be locked.

Automatic locking

This security feature can be configured to automatically lock all doors, load compartment and fuel filler flap as soon as a certain speed is exceeded.

Additionally it is configurable to unlock the driver's door or all doors after the ignition is switched off and the ignition key is removed (manual transmission) or the selector lever is moved to **P** position (automatic transmission).

Settings can be changed in the menu **Settings** in the Info-Display. Vehicle personalisation ⇨ 127.

The settings can be saved for the key being used ⇨ 23.

Child locks

⚠Warning

Use the child locks whenever children are occupying the rear seats.

Using a key or suitable screwdriver, turn the child lock in the rear door to the horizontal position. The door cannot be opened from the inside. For deactivation turn the child lock to the vertical position.

Doors

Load compartment

Tailgate

Opening

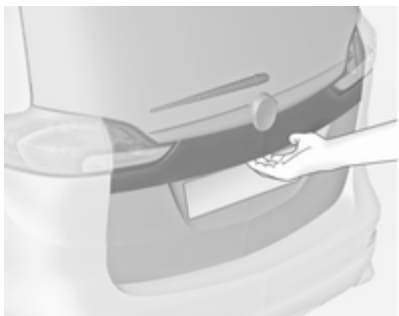

After unlocking, push the touchpad switch under the tailgate moulding and open the tailgate.

Central locking system ⇨ 23.

Closing

Use the interior handle.

Do not push the touchpad switch under the tailgate moulding whilst closing as this will unlock the tailgate again.

Central locking system ⇨ 23.

General hints for operating tailgate

⚠Warning

Do not drive with the tailgate open or ajar, e.g. when transporting bulky objects, since toxic exhaust gases, which can not be seen or smelled, could enter the vehicle. This can cause unconsciousness and even death.

Caution

Before opening the tailgate check overhead obstructions, such as a garage door, to avoid damage to the tailgate. Always check the moving area above and behind the tailgate.

Note
The installation of certain heavy accessories onto the tailgate may affect its ability to remain open.

Vehicle security

Anti-theft locking system

⚠Warning

Do not use the system if there are people in the vehicle! The doors cannot be unlocked from the inside.

The system deadlocks all the doors. All doors must be closed otherwise the system cannot be activated.

If the ignition was on, the driver's door must be opened and closed once so that the vehicle can be secured.

Unlocking the vehicle disables the mechanical anti-theft locking system. This is not possible with the central locking button.

Activating

Press 🔒 on the radio remote control twice within 15 seconds.

Anti-theft alarm system

The anti-theft alarm system is combined with the anti-theft locking system.

It monitors:

- Doors, tailgate, bonnet
- Passenger compartment including adjoining load compartment
- Vehicle inclination, e.g. if it is raised
- Ignition

Activation

- Self-activated 30 seconds after locking the vehicle (initialisation of the system)

- Directly by pressing on the radio remote control once more after locking

Note
Changes to the vehicle interior such as the use of seat covers, and open windows or sunroof, could impair the function of passenger compartment monitoring.

Activation without monitoring of passenger compartment and vehicle inclination

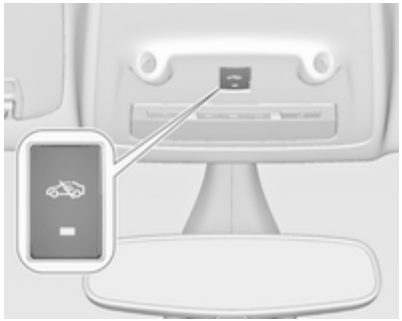

Switch off the monitoring of passenger compartment and vehicle inclination when animals are being left in the vehicle, because of high volume ultrasonic signals or movements triggering the alarm. Also switch off when the vehicle is on a ferry or train.

1. Close tailgate, bonnet and windows.
2. Press button . LED in the button illuminates for a maximum of 10 minutes.
3. Close doors.
4. Activate the anti-theft alarm system.

Status message is displayed in the Driver Information Centre.

Status LED

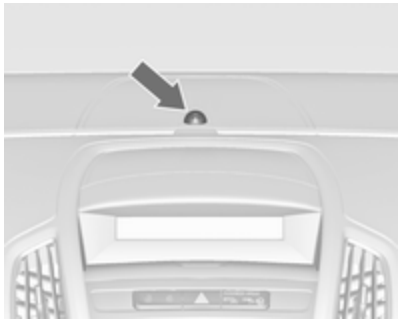

Status LED is integrated in the sensor on top of the instrument panel.

Status during the first 30 seconds of anti-theft alarm system activation:

LED illuminates	=	test, arming delay.
LED flashes quickly	=	doors, tailgate or bonnet not completely closed, or system fault.

Status after system is armed:

LED flashes slowly	=	system is armed.

Seek the assistance of a workshop in the event of faults.

Deactivation

Unlocking the vehicle deactivates the anti-theft alarm system.

Alarm

When triggered, the alarm sounds via a separate battery-backed power sounder, and the hazard warning lights flash simultaneously. The number and duration of alarm signals are stipulated by legislation.

The alarm can be silenced by pressing any button on the radio remote control or by switching on the ignition.

The anti-theft alarm system can be deactivated only by pressing button 🔓 or by switching on the ignition.

A triggered alarm, which has not been interrupted by the driver, will be indicated by the hazard warning lights. They will flash quickly three times when the vehicle is unlocked next time with the radio remote control. Additionally a warning message or a warning code is displayed in the Driver Information Centre after switching on the ignition.

Vehicle messages ⇨ 120.

Immobiliser

The system is part of the ignition switch and checks whether the vehicle is allowed to be started with the key being used.

The immobiliser is activated automatically after the key has been removed from the ignition switch.

If the control indicator 🚗 flashes when the ignition is on, there is a fault in the system; the engine cannot be started. Switch off the ignition and repeat the start attempt.

If the control indicator continues flashing, attempt to start the engine using the spare key and seek the assistance of a workshop.

Note
The immobiliser does not lock the doors. You should always lock the vehicle after leaving it and switch on the anti-theft alarm system ⇨ 23, ⇨ 27.

Control indicator 🚗 ⇨ 112.

Exterior mirrors

Convex shape

The convex exterior mirror contains an aspherical area and reduces blind spots. The shape of the mirror makes objects appear smaller, which will affect the ability to estimate distances.

Side blind spot alert ⇨ 193.

Electric adjustment

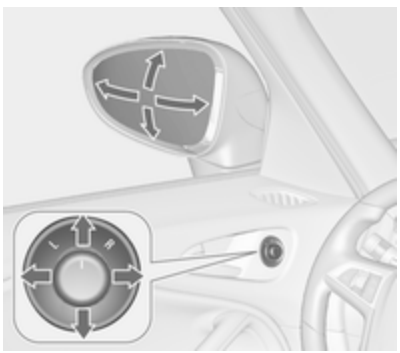

Select the relevant exterior mirror by turning the control to left **(L)** or right **(R)**. Then swivel the control to adjust the mirror.

In position **0** no mirror is selected.

Folding

For pedestrian safety, the exterior mirrors will swing out of their normal mounting position if they are struck with sufficient force. Reposition the mirror by applying slight pressure to the mirror housing.

Electric folding

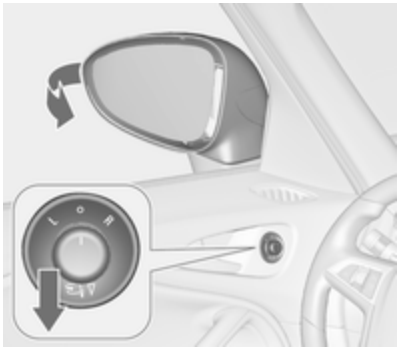

Turn control to **0**, then push the control down. Both exterior mirrors will fold.

Push the control down again - both exterior mirrors return to their original position.

If an electrically folded mirror is manually extended, pressing down the control will only electrically extend the other mirror.

Heated

Operated by pressing the button.

Heating works with the engine running and is switched off automatically after a short time.

Interior mirrors

Manual anti-dazzle

To reduce dazzle, adjust the lever on the underside of the mirror housing.

Automatic anti-dazzle

Dazzle from following vehicles at night is automatically reduced.

Windows

Windscreen

Heat-reflecting windscreen

The heat-reflecting windscreen has a coating which reflects solar radiation. Also data signals, e.g. from toll stations, might be reflected.

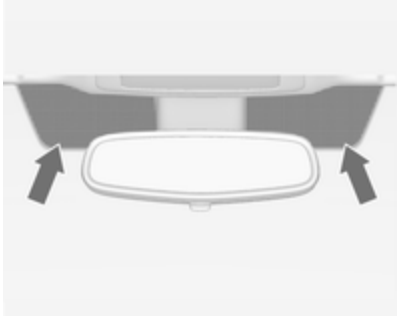

The marked areas on the windscreen are not covered with the coating. Devices for electronic data recording and fee payment must be attached in these areas. Otherwise data recording malfunctions may occur.

Windscreen stickers

Do not attach stickers such as toll road stickers or similar on the windscreen in the area of the interior mirror. Otherwise the detection zone of the sensor and the view area of the camera in the mirror housing could be restricted.

Manual windows

The door windows can be opened or closed with the window winders.

Power windows

⚠ Warning

Take care when operating the power windows. Risk of injury, particularly to children.

If there are children on the rear seats, switch on the child safety system for the power windows.

Keep a close watch on the windows when closing them. Ensure that nothing becomes trapped in them as they move.

Switch on ignition to operate power windows. Retained power off ⇨ 155.

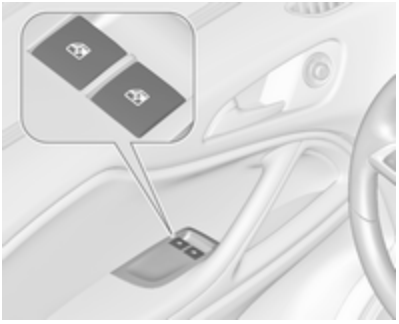

Operate the switch for the respective window by pushing to open or pulling to close.

Pushing or pulling gently to the first detent: window moves up or down as long as the switch is operated.

Pushing or pulling firmly to the second detent and then releasing: window moves up or down automatically with safety function enabled. To stop movement, operate the switch once more in the same direction.

Safety function

If the window glass encounters resistance above the middle of the window during automatic closing, it is immediately stopped and opened again.

Override safety function

In the event of closing difficulties due to frost or the like, switch on the ignition, then pull the switch to the first detent and hold. The window moves up without safety function enabled. To stop movement, release the switch.

Child safety system for rear windows

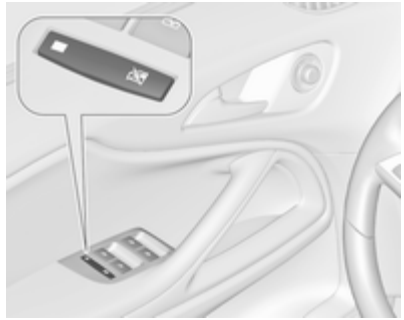

Press switch to deactivate rear door power windows, the LED illuminates. To activate, press again.

Operating windows from outside

The windows can be operated remotely from outside the vehicle.

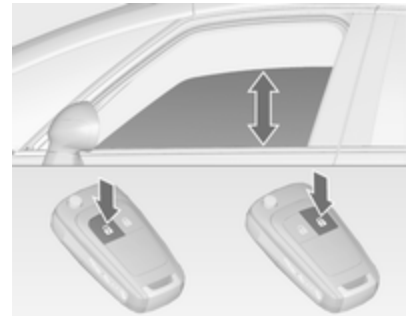

Press and hold button to open windows.

Press and hold button to close windows.

Release button to stop window movement.

If the windows are fully opened or closed, the hazard warning lights will flash two times.

Overload

If the windows are repeatedly operated within short intervals, the window operation is disabled for some time.

Initialising the power windows

If the windows cannot be closed automatically (e.g. after disconnecting the vehicle battery), a warning message or a warning code is displayed in the Driver Information Centre.

Vehicle messages ⇨ 120.

Activate the window electronics as follows:

1. Close doors.
2. Switch on ignition.
3. Pull switch until the window is closed and keep pulling for additional 2 seconds.
4. Repeat for each window.

Heated rear window

Operated by pressing the button.

Heating works with the engine running and is switched off automatically after a short time.

Depending on the engine type, the heated rear window comes on automatically when the diesel particle filter is being cleaned.

Sun visors

The sun visors can be folded down or swivelled to the side to prevent dazzling.

If the sun visors have integral mirrors, the mirror covers should be closed when driving.

A ticket holder is located on the backside of the sun visor.

Roller blinds

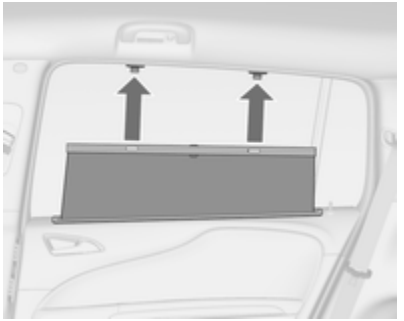

To reduce sunlight at the second row seats, pull the blind upwards using the grip and engage it at the top of the door frame.

Roof

Glass panel

Panorama roof

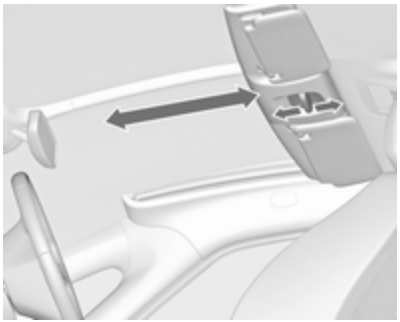

Pull the slider to open the cover of the panorama roof.

Push the slider to cover the panorama roof.

Sunblind

The sunblind above the rear seats is electrically operated.

Button

⊼ = open
⊽ = close

Press button ⊼ or ⊽ gently to the first detent: the sunblind is opened or closed as long as the switch is operated.

Press button ⊼ or ⊽ firmly to the second detent and then release: the sunblind is opened or closed automatically. To stop movement, operate the switch once more.

Safety function

If the sunblind encounters resistance during automatic closing, it is immediately stopped and opened again.

Function standby

In ignition switch position **1** the sunblind is operational ⇨ 155.

Initialising after a power failure

After a power failure, it may only be possible to operate the sunblind to a limited extent. Initialise the system as follows:

1. Turn key in ignition switch to position **1**.
2. Press button ⊼ (open) twice gently to the first detent, the sunblind opens slightly.
3. Immediately press button ⊽ (close) twice gently to the first detent, the sunblind closes slightly.

   After step 3 the sunblind is in initialising mode without safety function.

4. Press button (open) gently to the first detent until the sunblind is completely opened.
5. Press button (close) gently to the first detent until the sunblind is completely closed.

After this procedure, the sunblind is initialised with safety function activated.

When or is pressed firmly to the second detent during initialising, the procedure is cancelled.

Seats, restraints

Head restraints 37
Front seats 39
Rear seats 43
Seat belts 49
Airbag system 53
Child restraints 57

Head restraints

Position

⚠Warning

Only drive with the head restraint set to the proper position.

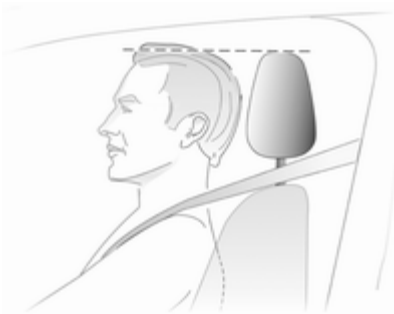

The upper edge of the head restraint should be at upper head level. If this is not possible for extremely tall people, set to highest position, and set to lowest position for small people.

Adjustment

Head restraints on front seats

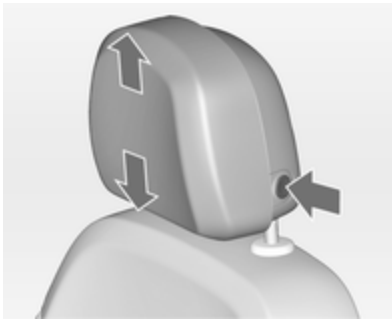

Height adjustment
Press release button, adjust height, engage.

Horizontal adjustment

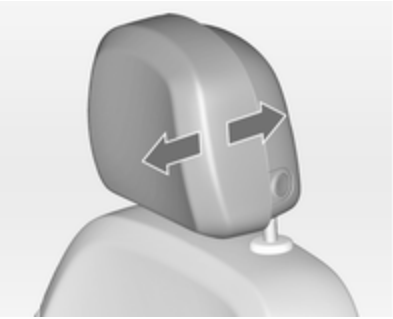

To adjust horizontally, pull the head restraint forwards. It engages in several positions.

To return to its rearmost position, pull fully forwards and release.

Head restraints on rear seats

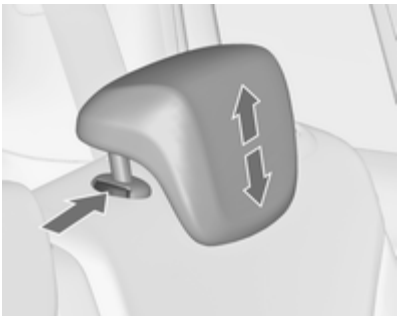

Height adjustment

Pull the head restraint upwards or press the catch to release and push the head restraint downwards.

Removal

Press both catches, pull the head restraint upwards and remove.

Active head restraints

In the event of a rear-end impact, the front parts of the active head restraints are moved slightly forwards. Thus the head is supported so that the risk of whiplash injury is reduced.

Note
Approved accessories may only be attached if the seat is not in use.

Front seats

Seat position

⚠ Warning

Only drive with the seat correctly adjusted.

- Sit with buttocks as far back against the backrest as possible. Adjust the distance between the seat and the pedals so that legs are slightly angled when pressing the pedals. Slide the front passenger seat as far back as possible.
- Sit with shoulders as far back against the backrest as possible. Set the backrest rake so that it is possible to easily reach the steering wheel with arms slightly bent. Maintain contact between shoulders and the backrest when turning the steering wheel. Do not angle the backrest too far back. We recommend a maximum rake of approx. 25°.
- Adjust the steering wheel ⇨ 94.
- Set seat height high enough to have a clear field of vision on all sides and of all display instruments. There should be at least one hand of clearance between head and the roof frame. Your thighs should rest lightly on the seat without pressing into it.
- Adjust the head restraint ⇨ 37.
- Adjust the height of the seat belt ⇨ 50.
- Adjust the thigh support so that there is a space approx. two fingers wide between the edge of the seat and the hollow of the knee.
- Adjust the lumbar support so that it supports the natural shape of the spine.

Seat adjustment

Drive only with engaged seats and backrests.

⚠ Danger

Do not sit nearer than 25 cm from the steering wheel, to permit safe airbag deployment.

⚠ Warning

Never adjust seats while driving as they could move uncontrollably.

⚠ Warning

Never store any subjects under the seats.

Seat positioning

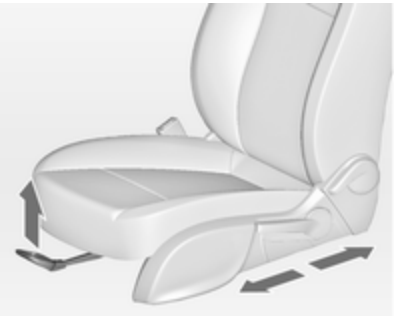

Pull handle, slide seat, release handle.

Seat backrests

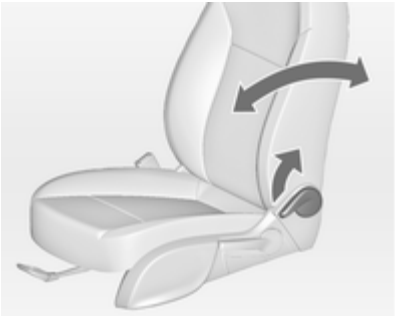

Pull lever, adjust inclination and release lever. Allow the backrest to engage audibly.

Folding passenger seat backrest ⇨ 76.

Seat height

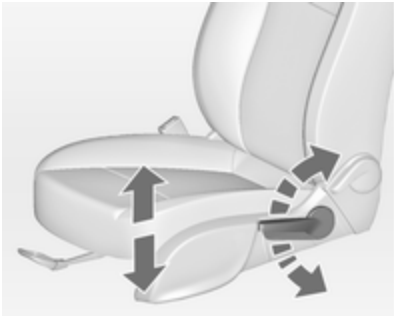

Lever pumping motion

up = seat higher
down = seat lower

Seat inclination

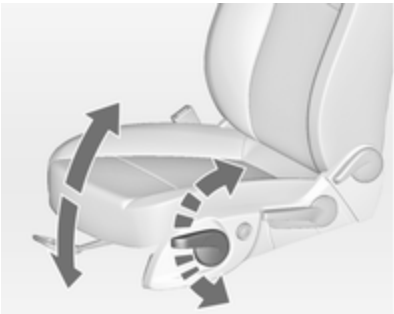

Lever pumping motion

up = front end higher
down = front end lower

Lumbar support

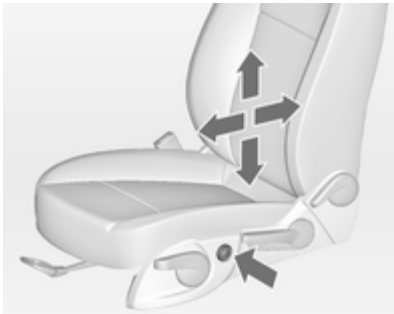

Adjust lumbar support using the four-way switch to suit personal requirements.

Moving support up and down: push switch up or down.

Increasing and decreasing support: push switch forwards or backwards.

Adjustable thigh support

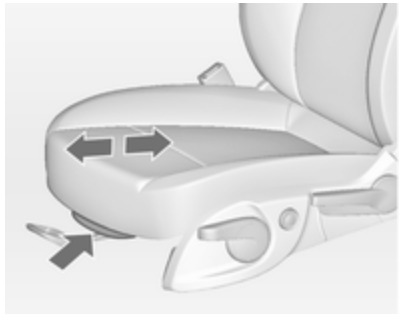

Pull the lever and slide the thigh support.

Armrest

Base armrest

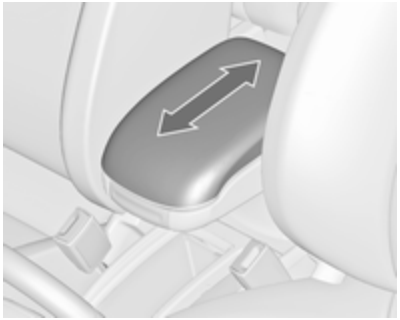

The armrest can be slid forwards. Under the armrest there is a storage drawer.

Armrest storage ⇨ 66.

FlexConsole armrest

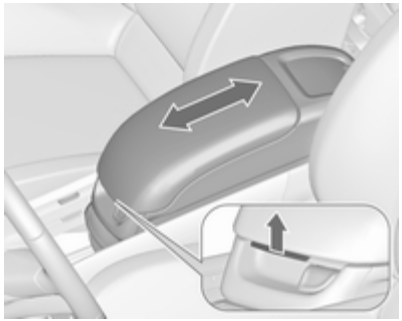

The armrest can be moved in a centre console. Pull the handle to slide the armrest.

There are two storages, a storage drawer and a movable cupholder in the armrest console.

Armrest storage ⇨ 66.

Removing the armrest

Flex console armrest can be removed.

Press fastenings inward and fold down locking mechanism at the rear end of the armrest.

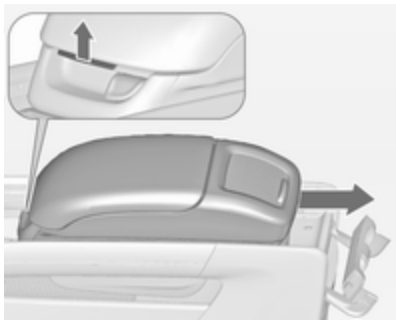

Pull the handle in front of the armrest and slide armrest rearwards out of the console.

Installation in reverse order.

Heating

Adjust heating to the desired setting by pressing the button for the respective seat one or more times. The control indicator in the button indicates the setting.

Prolonged use of the highest setting for people with sensitive skin is not recommended.

Seat heating is operational when engine is running and during an Autostop.

Stop-start system ⇨ 157.

Rear seats

Second row seats

⚠Warning

When seats or backrests of second and third seat row are being adjusted or folded, keep hands and feet away from the moving area.

Never store objects under the seats.

Never adjust seats while driving as they could move uncontrollably.

Drive only with engaged seats and backrests.

Base seats

Seat positioning

Each seat of the second seat row can be individually moved forward or backward.

Pull handle, slide seat, release handle and allow seat to engage.

The seats can be engaged in intermediate positions.

Seat backrests

The backrest inclination of each seat can be individually adjusted in three positions.

Pull the strap, adjust inclination, release strap and allow backrest to engage.

⚠ Warning
Use vertical position of the backrest only for increased luggage volume and not as seating position.

Load compartment, folding down the backrests ⇨ 76.

Easy entry function

To permit an easy entrance to the seats of the third row, the outer seats of the second row can be tilted.

Pull release lever, fold backrest and move the seat to the front.

Folding back easy entry

First move seat to desired position and then raise backrest.

Ensure that the seat is engaged in position.

Lounge seats

Two types of use are possible:

Normal seats, all three seats are usable and individually adjustable.

Lounge seats, only outer seats are usable but with most comfortable adjustment.

Seat positioning

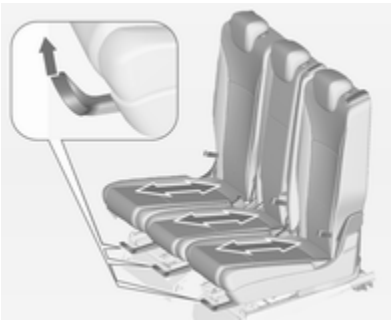

In normal position the three seats of the second seat row can be individually moved in longitudinal direction.

Pull handle under the seat, slide seat, release handle and allow seat to engage.

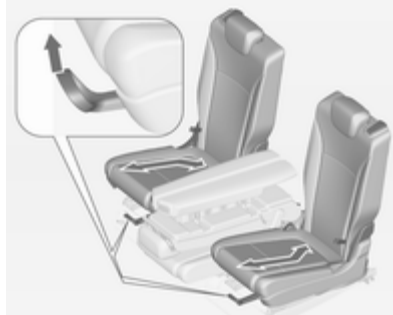

In lounge position, the outer seats are additionally movable in transverse direction when the centre seat backrest is folded to an armrest.

The seats can be engaged in intermediate positions.

Change from normal seat position to lounge seat position

- Push down head restraint of centre seat by pressing the catch ⇨ 37.

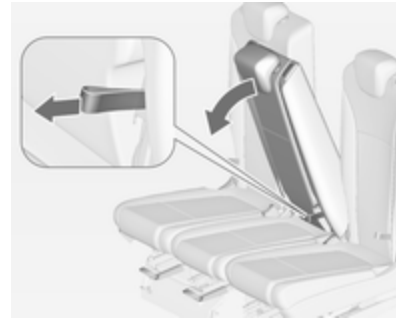

- Fold down the centre backrest by pulling the strap.

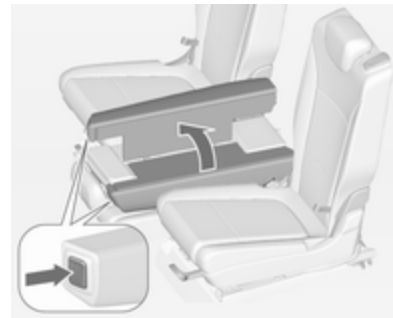

- Push the left and right buttons near the centre head restraint and fold in the outer backrest parts, to be used as an armrest. Engage backrest parts in armrest position.
- Pull the handle under each outer seat and slide seats backwards. In the rear area the seats move in transverse direction. Allow seat to engage.

  This is the most comfortable seating position for the outer seats.

Caution

With seats in lounge position:
- Do not use easy entry function ⇨ 43.
- Do not fold down backrests of the outer seats.
- Do not fold up centre backrest.
- Do not fold up or down the seats in the third row ⇨ 47.

This would damage the seats.

⚠Warning

Move seats only to lounge position if seats in the third row are not occupied.

Change from lounge seat position to normal seat position

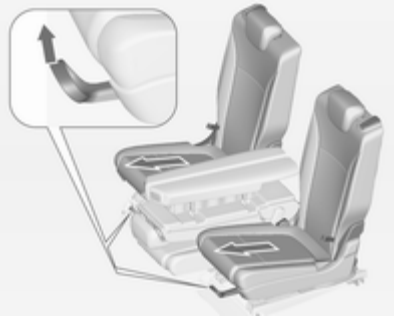

- Pull the handle under each outer seat and slide seats to forward position.

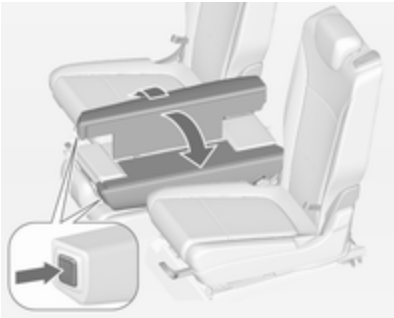

- Push the left and right buttons near the centre head restraint and fold back both armrest parts to the centre backrest.
- Fold up centre backrest. Adjust position by pulling the strap.

Caution

Before folding up the centre seat backrest make sure that the armrest parts are folded down.

Ensure that all positions are engaged correctly.

Seat backrests

The backrest inclination can be individually adjusted to three positions.

Pull the strap, adjust inclination, release strap and allow backrest to engage.

⚠Warning

Use vertical position of the backrest only for increased luggage volume and not as seating position.

Load compartment, folding down the backrests ⇨ 76.

Easy entry function

To permit an easy entrance to the seats of the third row, the outer seats of the second row can be tilted.

Pull release lever, fold backrest and move the seat to the front.

Caution

With seats in lounge position:

- Do not use easy entry function.
- Do not pull strap to adjust backrest inclination.

This would damage the seats.

Folding back easy entry

First move seat to desired position and then raise backrest.

Ensure that the seat is engaged in position.

Third row seats

⚠Warning

When seats or backrests of second and third seat row are being adjusted or folded, keep hands and feet away from the moving area.

Never store objects under the seats.

Never adjust seats while driving as they could move uncontrollably.

Drive only with engaged seats and backrests.

Caution

Before setting up or folding down seats, all components must be removed from the side rails and from the lashing eyes.

Lashing eyes must be in stored position.

The seats in the third row can be folded down to the vehicle floor if they are not required, or for increasing the size of the load compartment.

The seats in the third row can only be used if the second seat row is not in the lounge position.

Setting up the seats

- Fold in interior protection mat ⇨ 81 and remove load compartment cover ⇨ 79.

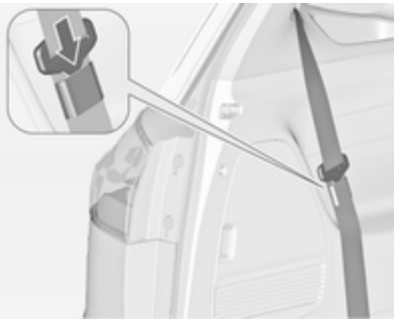

- Insert the latch plate of the seat belt on each side into the pocket that is mounted at the belt.

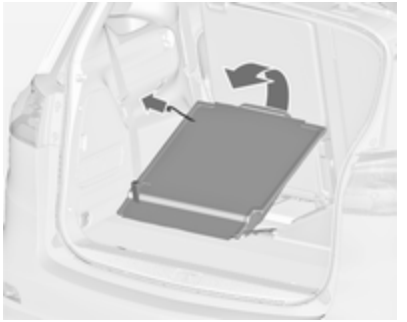

- Pull up the seat by the upper strap, fold out and allow seat to engage in upright position.

Folding down the seats in the vehicle floor

- Push down head restraint by pressing the catch ⇨ 37.
- Insert the latch plate of the seat belt on each side into the pocket that is mounted at the belt.

- Pull the lower strap, simultaneously swing the backrest forwards until the seat is lowered into the vehicle floor.
- Install the interior protection mat ⇨ 81 and load compartment cover ⇨ 79.

Seat belts

The seat belts are locked during heavy acceleration or deceleration of the vehicle holding the occupants in the sitting position. Therefore the risk of injury is considerably reduced.

⚠ Warning

Fasten seat belt before each trip.

In the event of an accident, people not wearing seat belts endanger their fellow occupants and themselves.

Seat belts are designed to be used by only one person at a time. Child restraint system ⇨ 57.

Periodically check all parts of the belt system for damage, pollution and proper functionality.

Have damaged components replaced. After an accident, have the belts and triggered belt pretensioners replaced by a workshop.

Note
Make sure that the belts are not damaged by shoes or sharp-edged objects or trapped. Prevent dirt from getting into the belt retractors.

Seat belt reminder

Each seat is equipped with a seat belt reminder, indicated for front seats by control indicator in the tachometer ⇨ 107, or for rear seats by symbols or in the Driver Information Centre ⇨ 114.

Belt force limiters

On the front seats, stress on the body is reduced by the gradual release of the belt during a collision.

Belt pretensioners

In the event of a head-on or rear-end collision of a certain severity, the front seat belts are tightened.

⚠ Warning

Incorrect handling (e.g. removal or fitting of belts) can trigger the belt pretensioners.

Deployment of the belt pretensioners is indicated by continuous illumination of control indicator ⇨ 108.

Triggered belt pretensioners must be replaced by a workshop. Belt pretensioners can only be triggered once.

Note

Do not affix or install accessories or other objects that may interfere with the operation of the belt pretensioners. Do not make any modifications to belt pretensioner components as this will invalidate the vehicle type approval.

Three-point seat belt

Fastening

Withdraw the belt from the retractor, guide it untwisted across the body and insert the latch plate into the buckle. Tighten the lap belt regularly whilst driving by pulling the shoulder belt.

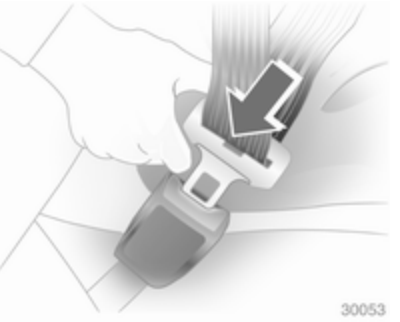

Loose or bulky clothing prevents the belt from fitting snugly. Do not place objects such as handbags or mobile phones between the belt and your body.

⚠ Warning

The belt must not rest against hard or fragile objects in the pockets of your clothing.

Seat belt reminder, ⇨ 107 and ⇨ 114

Height adjustment

1. Pull belt out slightly.
2. Press button.
3. Adjust height and engage.

Adjust the height so that the belt lies across the shoulder. It must not lie across the throat or upper arm.

Do not adjust while driving.

Removing

To release belt, press red button on belt buckle.

Centre seat belt of the second seat row

The centre seat is equipped with a particular three-point seat belt.

Pull latch plates with the belt out of belt holder in the roof.

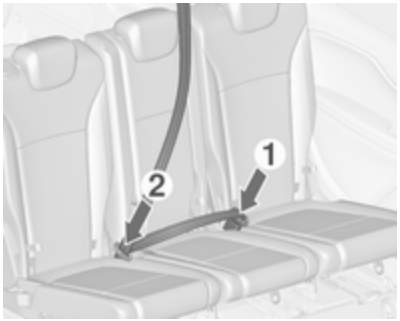

Remove lower latch plate from retainer and click it into left-hand buckle (**1**) at the centre seat. Guide the upper latch plate with the belt over the lap area and the shoulder (do not twist) and click into right-hand buckle (**2**) at centre seat.

To remove the seat belt, first press the button on the right-hand buckle (**2**) and remove upper latch plate. Then press the button on the left-hand buckle (**1**) and remove lower latch plate. The seat belt retracts automatically.

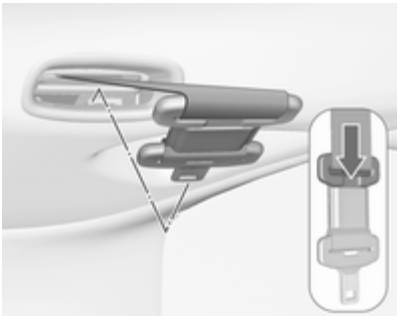

Push the top latch plate into the retainer. Fold over locked together latch plates against the seat belt.

Insert in the seat belt holder in the roof with the lower latch plate pointing forward.

Seat belts on the third seat row

The seat belts on the third seat row are equipped with three point seat belts.

When seat belts are not used or when folding the seats, insert the latch plate of the seat belt on each side into the pocket that is mounted at the belt.

If the centre seat of the second seat row is occupied and the seat belt is fastened, only persons with a body

height up to max. 150 cm are allowed to use the left seat of the third seat row.

There is a warning label on the back side of the centre belt, when it is pulled out, to inform the passenger on the left seat of the third seat row.

Using seat belts while pregnant

⚠ Warning

The lap belt must be positioned as low as possible across the pelvis to prevent pressure on the abdomen.

Airbag system

The airbag system consists of a number of individual systems depending on the scope of equipment.

When triggered the airbags inflate within milliseconds. They also deflate so quickly that it is often unnoticeable during the collision.

⚠ Warning

If handled improperly the airbag systems can be triggered in an explosive manner.

Note
The airbag systems and belt pretensioner control electronics are located in the centre console area. Do not put any magnetic objects in this area.

Do not stick anything on the airbag covers and do not cover them with other materials.

Each airbag is triggered only once. Have deployed airbags replaced by a workshop. Furthermore, it might be necessary to have the steering wheel, the instrument panel, parts of the panelling, the door seals, handles and the seats replaced.

Do not make any modifications to the airbag system as this will invalidate the vehicle type approval.

When the airbags inflate escaping hot gases may cause burns.

Control indicator for airbag systems ⇨ 108.

Front airbag system

The front airbag system consists of one airbag in the steering wheel and one in the instrument panel on the front passenger side. These can be identified by the word **AIRBAG**.

Additionally there is a warning label on the side of the instrument panel, visible when the front passenger door is open, or on the front passenger sun visor.

The front airbag system is triggered in the event of a front-end impact of a certain severity. The ignition must be switched on.

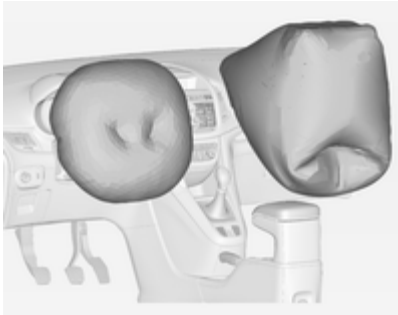

The inflated airbags cushion the impact, thereby reducing the risk of injury to the upper body and head of the front seat occupants considerably.

⚠ Warning

Optimum protection is only provided when the seat is in the proper position ⇨ 39.

Keep the area in which the airbag inflates clear of obstructions.

Fit the seat belt correctly and engage securely. Only then the airbag is able to protect.

Side airbag system

The side airbag system consists of an airbag in each front seat backrest. This can be identified by the word **AIRBAG**.

The side airbag system is triggered in the event of a side impact of a certain severity. The ignition must be switched on.

The inflated airbags cushion the impact, thereby reducing the risk of injury to the upper body and pelvis in the event of a side-on collision considerably.

⚠Warning

Keep the area in which the airbag inflates clear of obstructions.

Note
Only use protective seat covers that have been approved for the vehicle. Be careful not to cover the airbags.

Curtain airbag system

The curtain airbag system consists of an airbag in the roof frame on each side. This can be identified by the word **AIRBAG** on the roof pillars.

The curtain airbag system is triggered in the event of a side-on impact of a certain severity. The ignition must be switched on.

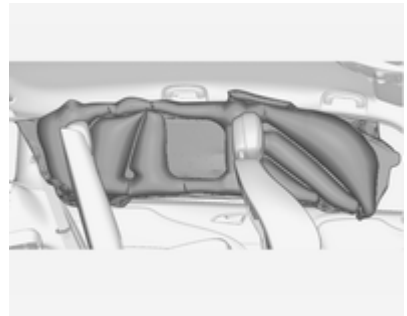

The inflated airbags cushion the impact, thereby reducing the risk of injury to the head in the event of a side-on impact considerably.

The curtain airbag system does not protect passengers on the third seat row.

⚠Warning

Keep the area in which the airbag inflates clear of obstructions.

The hooks on the handles in the roof frame are only suitable for hanging up light articles of clothing, without coat hangers. Do not keep any items in these clothes.

Airbag deactivation

The front passenger airbag system has to be deactivated if a child restraint system is to be fitted on this seat. The side airbag and curtain airbag systems, the belt pretensioners and all driver airbag systems will remain active.

The front passenger airbag system can be deactivated via a key-operated switch on the right side of the instrument panel.

Use the ignition key to choose the position:

OFF = front passenger airbag is deactivated and will not inflate in the event of a collision. Control indicator OFF illuminates continuously in the centre console. A child restraint system can be installed in accordance with the chart **Child restraint installation locations** ⇨ 59. No adult person is allowed to occupy the front passenger seat.

ON = front passenger airbag is active. A child restraint system must not be installed.

⚠ Danger

Risk of fatal injury for a child using a child restraint system on a seat with activated front passenger airbag.

Risk of fatal injury for an adult person on a seat with deactivated front passenger airbag.

If the control indicator ON illuminates for approx. 60 seconds after the ignition is switched on, the front passenger airbag system will inflate in the event of a collision.

If both control indicators are illuminated at the same time, there is a system failure. The status of the system is not discernible, therefore no person is allowed to occupy the front passenger seat. Contact a workshop immediately.

Change status only when the vehicle is stopped with the ignition off.

Status remains until the next change.

Control indicator for airbag deactivation ⇨ 108.

Child restraints

Child restraint systems

We recommend the Opel child restraint system which is tailored specifically to the vehicle.

When a child restraint system is being used, pay attention to the following usage and installation instructions and also those supplied with the child restraint system.

Always comply with local or national regulations. In some countries, the use of child restraint systems is forbidden on certain seats.

⚠Warning

When using a child restraint system on the front passenger seat, the airbag systems for the front passenger seat must be deactivated; if not, the triggering of the airbags poses a risk of fatal injury to the child.

This is especially the case if rear-facing child restraint systems are used on the front passenger seat.

Airbag deactivation ⇨ 55.

Selecting the right system

The rear seats are the most convenient location to fasten a child restraint system.

Children should travel facing rearwards in the vehicle as long as possible. This makes sure that the child's backbone, which is still very weak, is under less strain in the event of an accident.

Suitable are restraint systems that comply with ECE 44-03 or ECE 44-04. Check local laws and regulations for mandatory use of child restraint systems.

Ensure that the child restraint system to be installed is compatible with the vehicle type.

Ensure that the mounting location of the child restraint system within the vehicle is correct.

Allow children to enter and exit the vehicle only on the side facing away from the traffic.

When the child restraint system is not in use, secure the seat with a seat belt or remove it from the vehicle.

Note
Do not stick anything on the child restraint systems and do not cover them with any other materials.

A child restraint system which has been subjected to stress in an accident must be replaced.

Child restraint installation locations

Permissible options for fitting a child restraint system

Weight and age class	On front passenger seat activated airbag	On front passenger seat deactivated airbag	On outboard seats in the second row	On centre seat in the second row	On seats in the third row
Group 0: up to 10 kg or approx. 10 months	X	U[1]	U[2]	X	U
Group 0+: up to 13 kg or approx. 2 years	X	U[1]	U[2]	X	U
Group I: 9 to 18 kg or approx. 8 months to 4 years	X	U[1]	U[2]	X	U
Group II: 15 to 25 kg or approx. 3 to 7 years	X	X	U	X	U
Group III: 22 to 36 kg or approx. 6 to 12 years	X	X	U	X	U

[1] = Only if front passenger seat airbag system is deactivated. If the child restraint system is being secured using a three-point seat belt, move seat height adjustment to uppermost position and ensure that vehicle safety belt runs forwards from the upper anchorage point. Adjust seat backrest inclination as far as necessary to a vertical position to ensure that the belt is tight on the buckle side.

[2] = Seat available with ISOFIX and Top-Tether mounting brackets ⇨ 62.

U = Universal suitability in conjunction with three-point seat belt.

X = No child restraint system permitted in this weight class.

Permissible options for fitting an ISOFIX child restraint system

Weight class	Size class	Fixture	On front passenger seat	On outboard seats in the second row	On centre seat in the second row	On the seats in the third row
Group 0: up to 10 kg	E	ISO/R1	X	IL	X	X
Group 0+: up to 13 kg	E	ISO/R1	X	IL	X	X
	D	ISO/R2	X	IL	X	X
	C	ISO/R3	X	IL	X	X
Group I: 9 to 18 kg	D	ISO/R2	X	IL	X	X
	C	ISO/R3	X	IL	X	X
	B	ISO/F2	X	IL, IUF	X	X
	B1	ISO/F2X	X	IL, IUF	X	X
	A	ISO/F3	X	IL, IUF	X	X

IL = Suitable for particular ISOFIX restraint systems of the 'specific-vehicle', 'restricted' or 'semi-universal' categories. The ISOFIX restraint system must be approved for the specific vehicle type.
IUF = Suitable for ISOFIX forward-facing child restraint systems of universal category approved for use in this weight class.
X = No ISOFIX child restraint system approved in this weight class.

ISOFIX size class and seat device

A – ISO/F3	=	Forward-facing child restraint system for children of maximum size in the weight class 9 to 18 kg.
B – ISO/F2	=	Forward-facing child restraint system for smaller children in the weight class 9 to 18 kg.
B1 – ISO/F2X	=	Forward-facing child restraint system for smaller children in the weight class 9 to 18 kg.
C – ISO/R3	=	Rear-facing child restraint system for children of maximum size in the weight class up to 13 kg.
D – ISO/R2	=	Rear-facing child restraint system for smaller children in the weight class up to 13 kg.
E – ISO/R1	=	Rear-facing child restraint system for young children in the weight class up to 13 kg.

ISOFIX child restraint systems

Fasten vehicle-approved ISOFIX child restraint systems to the ISOFIX mounting brackets. Specific vehicle ISOFIX child restraint system positions are marked in the table by IL.

ISOFIX mounting brackets are indicated by a label on the backrest.

Before fastening a child seat adjust the head restraint to use position ⇨ 37.

When using ISOFIX fastened child restraint systems on the second seat row, we recommend to adjust the accordant outer seat in third notch from rear end position, regarding to base seats. Lounge seat, if equipped, must be in normal position ⇨ 43.

Top-tether fastening eyes

Top-Tether fastening eyes are marked with the symbol for a child seat.

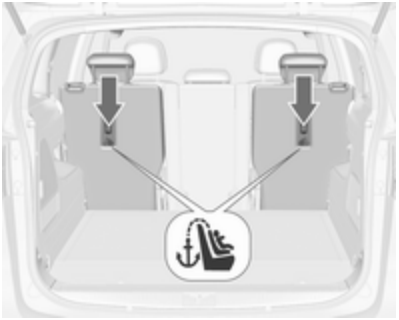

Depending on country-specific equipment, the vehicle might have two or three fastening eyes.

In addition to the ISOFIX mounting, fasten the Top-Tether strap to the Top-Tether fastening eyes. The strap must run between the two guide rods of the head restraint.

ISOFIX child restraint systems of universal category positions are marked in the table by IUF.

Storage

Storage compartments 63
Load compartment 76
Roof rack system 91
Loading information 92

Storage compartments

Instrument panel storage

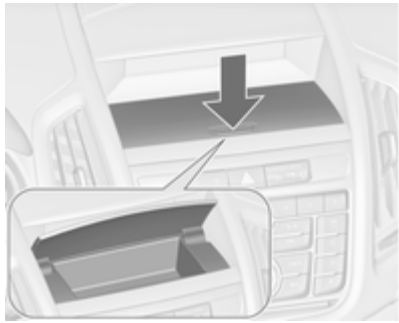

In the instrument panel in front of the Info-Display is a storage compartment. Push to open the lid.

Glovebox

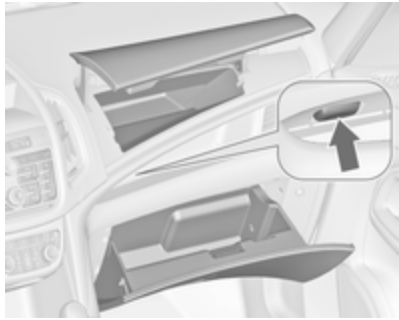

There are two gloveboxes on the passenger side.

To open the upper glovebox, press button on the left side in the open storage.

To open the lower glovebox, pull the handle.

The gloveboxes should be closed whilst driving.

Cupholders

Front cupholder

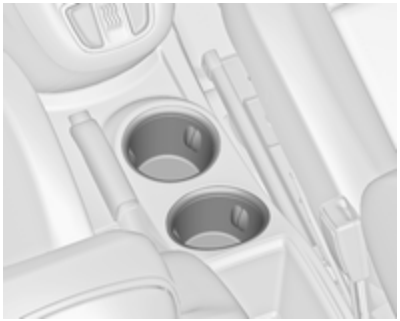

Cupholders are located in the centre console between the front seats.

Slidable cupholder in FlexConsole armrest

The cupholder can be moved in guide rails in the FlexConsole armrest or completely removed.

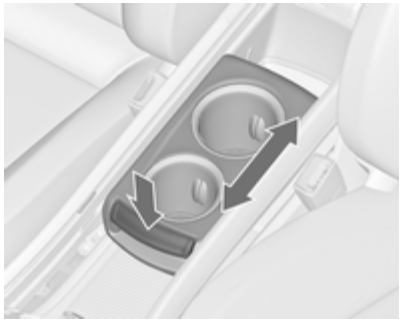

Push the handle in front of cupholder to slide.

Armrest ⇨ 42.

Remove cupholder

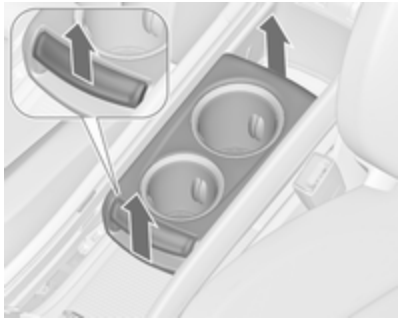

Pull the handle in front of cupholder and remove it vertically out of the console.

Installation in reverse order.

Note
Install the cupholder in the direction as shown in the illustration. Otherwise the cupholder may not engage properly.

Rear cupholder

Additional cupholder are located between the seats in the third row.

Bottleholder

The door pockets of front and rear doors are designed to carry bottles.

Front storage

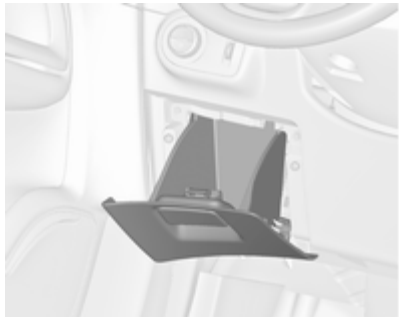

A storage compartment is located next to the steering wheel.

Door panel storage

On front door trim there are small pockets for e. g. mobile phones.

Overhead console

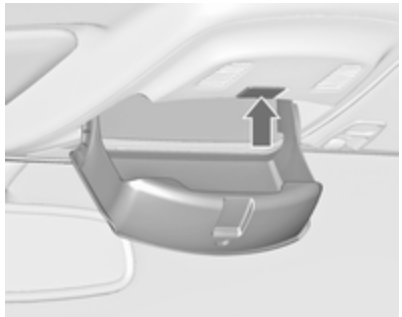

Press button to open storage box.

The box may be loaded with max. 0.2 kg.

Underseat storage

Storage box

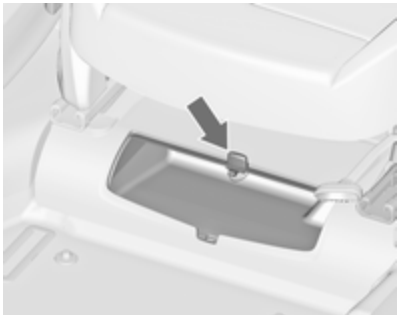

There is a storage box under the passenger's seat. Slide the rollo to open or close the box. Maximum load: 1.5 kg.

Underseat drawer

Press button in the recess and pull out drawer. Maximum load: 3 kg. To close, push in and engage.

Armrest storage

Storage in base armrest

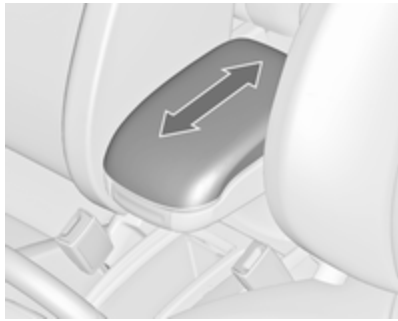

The armrest console contains a storage compartment. To open slide armrest forward.

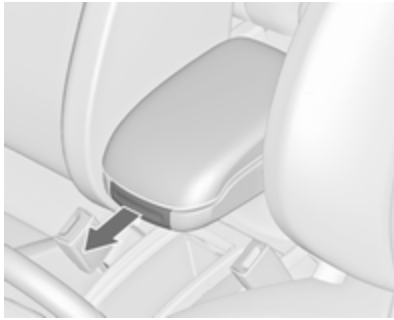

There is a storage drawer underneath the armrest. Pull out to open.

Storage in FlexConsole armrest

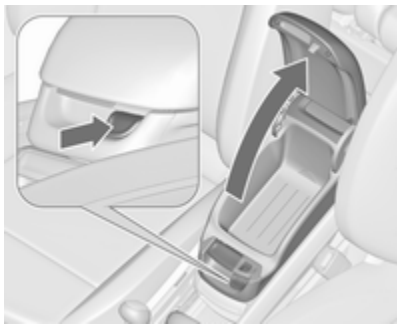

Press button to open storage in the armrest.

Behind the armrest there is another storage. Slide the lid to open.

Centre console storage

Centre console

The storage container can be used to store small items.

Slide cover backwards to open.

Rear console

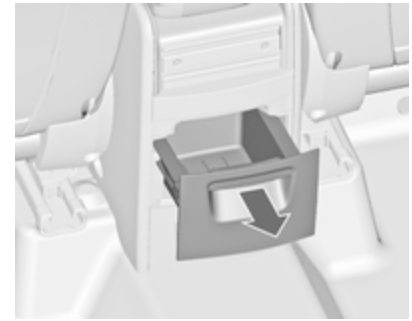

At the rear side of the FlexConsole there is a storage drawer. Pull out to open.

Caution
Do not use for ashes or for other glowing items.

Rear carrier system

Rear carrier system for four bicycles

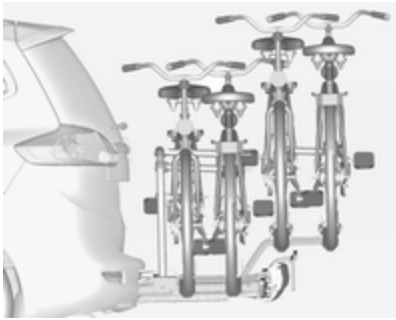

The rear carrier system (Flex-Fix system) allows two bicycles to be attached to a pull-out carrier integrated into the vehicle floor. It is possible to attach two further bicycles on an adapter. The transportation of other objects is not permitted.

The maximum load of the rear carrier system is 80 kg with attached adapter and 60 kg without attached adapter. The maximum load per bicycle on the pull-out carrier is 30 kg. This allows the attachment of electrically-powered bicycles to the pull-out carrier. The maximum load per bicycle on the adapter is 20 kg.

If not in use, the carrier system must be slid back into the vehicle floor.

There must not be any objects on the bicycles that could become loose during transportation.

Caution

If the rear carrier system is extended and the vehicle is fully loaded, the chassis clearance will be reduced.

Drive carefully whenever the road has a steep inclination or when driving over a ramp, bump, etc.

Caution

Consult your bicycle dealer before attaching bicycles with carbon frames. The bicycles might get damaged.

Extending

Open the tailgate.

⚠ Warning

No-one should be in the extension zone of the rear carrier system, risk of injury.

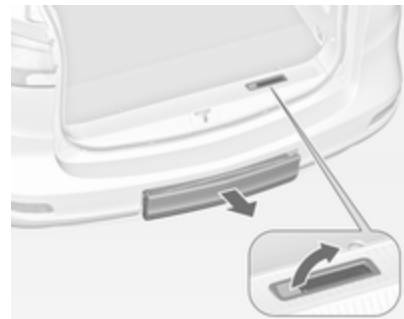

Pull release lever up. The system disengages and travels quickly out of the bumper.

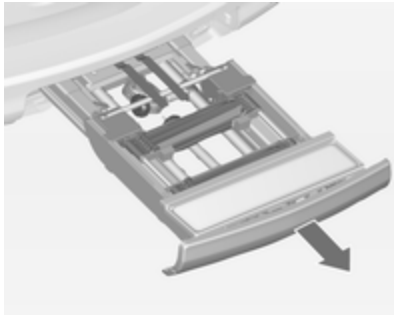

Completely pull out the rear carrier system until you hear it engage.

Ensure that it is not possible to push in the rear carrier system without pulling the release lever again.

⚠Warning

It is only permissible to fit objects to the rear carrier system if the system has been correctly engaged. If the rear carrier system will not engage correctly, do not fit objects to the system and slide the system back. Seek the assistance of a workshop.

Unfold number plate holder

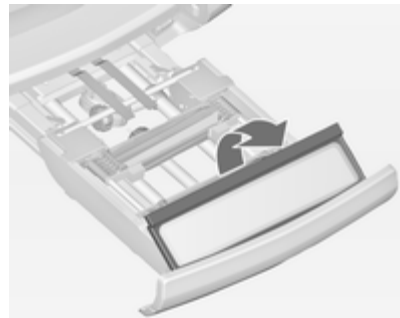

Lift the number plate holder and fold it backwards.

Fold out tail lamps

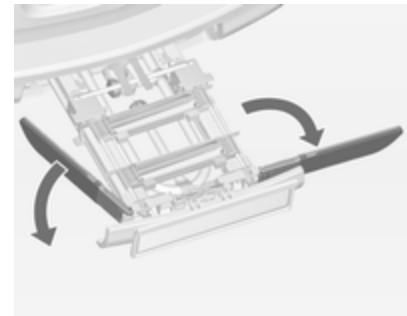

Fold out both tail lamps.

Lock the rear carrier system

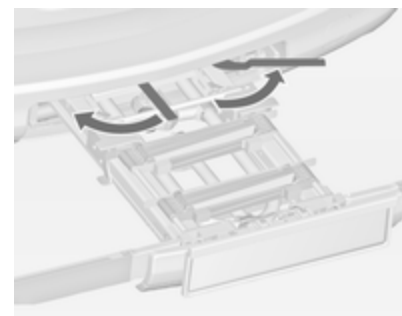

Swivel both clamping levers sidewards as far as they will go.

Otherwise safe functionality is not guaranteed.

Fold out wheel recesses

Fold out both wheel recesses.

Assembling the bicycle rack

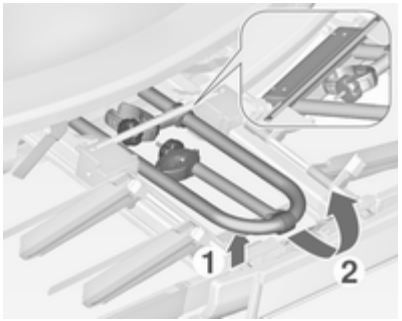

Lift the rack at the rear (1) and pull it backwards.

Fold up the rack (2).

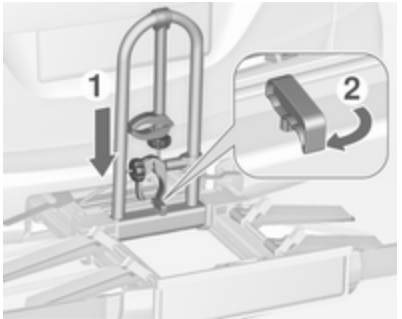

Push down the rack (1) and swivel handle (2) backwards to engage.

Attaching the first bicycle

1. Rotate the pedals into position as shown in the illustration and put the bicycle on the foremost wheel recess.

   Make sure that the bicycle stands centrally on the wheel recesses.

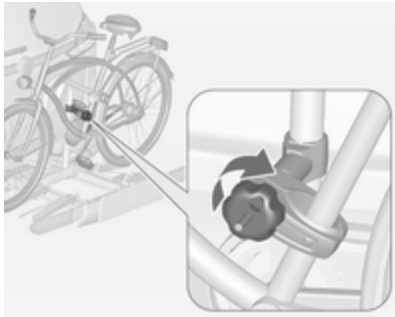

2. Attach the short mounting bracket to the bicycle frame. Turn the knob clockwise to fasten.

3. Secure both bicycle wheels to the wheel recesses using the strap retainers.
4. Check the bicycle to make sure it is secure.

Caution
Ensure gap between bicycle and vehicle is at least 5 cm. If necessary, loosen handlebar and swivel sideways.

Attaching the adapter

When carrying more than two bicycles, the adapter must be fixed before the second bicycle is attached.

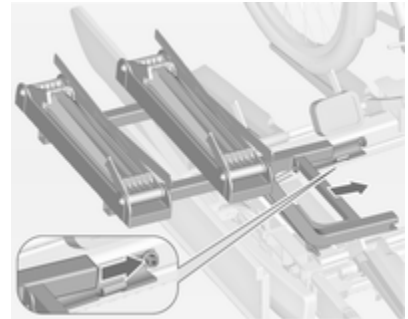

1. Apply the adapter to the rear carrier system as shown in the illustration.

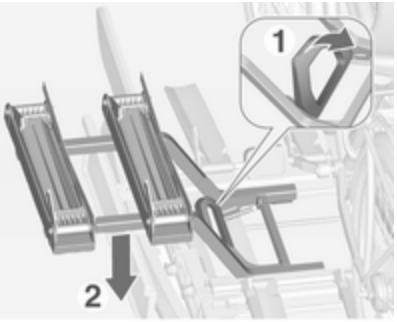

2. Turn the lever (1) forwards and hold, then lower the adapter (2) at the rear.
3. Release lever and check if the adapter is engaged securely.

4. Guide the strap attached to the adapter underneath the lever for folding back the rear carrier system. Fasten the strap.

Attaching further bicycles

The attachment of further bicycles is similar to the attachment of the first bicycle. Additionally some steps must be considered:

1. Before putting on the bicycle, always unfold the wheel recesses for the next bicycle if necessary.
2. Always rotate the pedals into an appropriate position before putting on the bicycle.

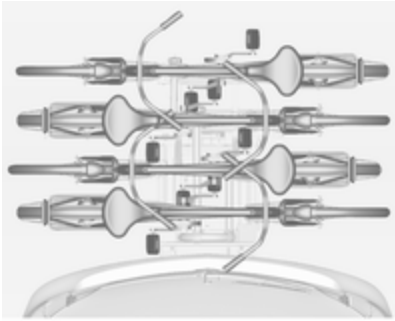

3. Position the bicycles on the rear carrier system alternately aligned to the left and to the right.
4. Align the bicycles to the one attached before. The wheel hubs of the bicycles must not touch each other.
5. Attach the bicycles with mounting brackets and strap retainers as described for the first bicycle. The mounting brackets should be fixed in parallel.

   Use the long mounting bracket to attach the second bicycle to the rack.

Use the longer accessory mounting bracket to attach the third bicycle to the rack.

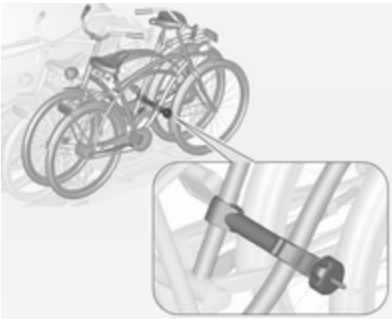

Use the short accessory mounting bracket to attach the fourth bicycle. The bracket must be fixed between the frames of the third and fourth bicycle.

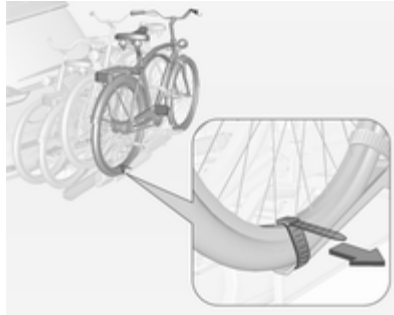

6. Additionally secure both bicycle wheels of the fourth bicycle to the wheel recesses using the tensioning straps.

It is recommended to attach a warning sign at the rearmost bicycle to increase visibility.

Fold the rear carrier system backwards

The rear carrier system can be folded backwards to get access to the load compartment.

- Without attached adapter:

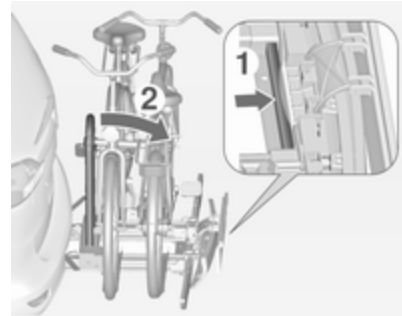

Push the lever (1) to disengage and hold.

Pull the rack (2) backwards to fold the rear carrier system.

- With attached adapter:

⚠ Warning

Take care when disengaging the rear carrier system as it will tilt backwards. Risk of injury.

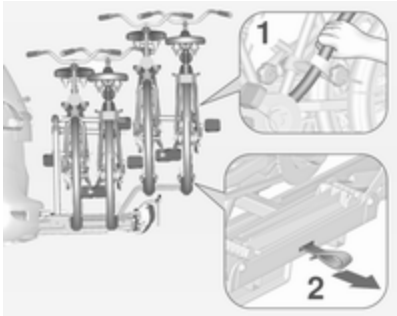

Hold frame (1) of rearmost bicycle with one hand and pull the loop (2) to disengage.

Hold rearmost bicycle with both hands and fold the rear carrier system backwards.

To increase visibility, the tail lights of the vehicle are activated when the rear carrier system is folded back.

⚠Warning

When folding the rear carrier system forwards again, take care that the system is engaged securely.

Removing bicycles

Undo strap retainers on both bicycle tyres.

Turn knob anti-clockwise and remove mounting brackets.

Detaching adapter

Detach the adapter before removing the last bicycle left on the rear carrier system.

1. Fold in wheel recesses.

2. Unbutton the strap.

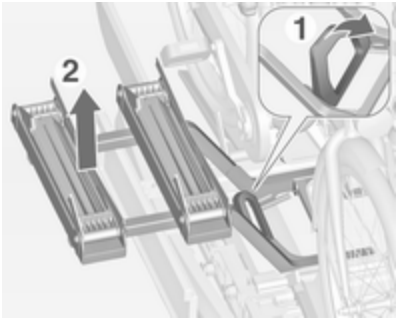

3. Turn the lever (1) forwards and hold.
4. Lift the adapter (2) at the rear and remove.

Disassembling the bicycle rack

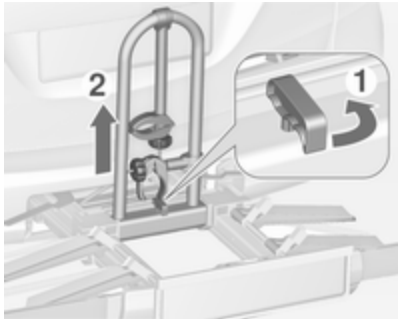

Arrange mounting brackets as shown in the illustration.

Swivel handle (1) forwards to disengage and lift the rack (2).

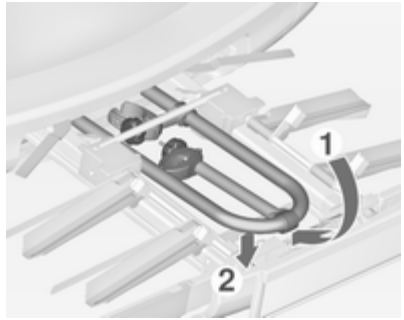

Fold the rack backwards, then push forwards until it stops (1).

Press the rack down at the rear (2).

Fold in wheel recesses

Fold in both wheel recesses.

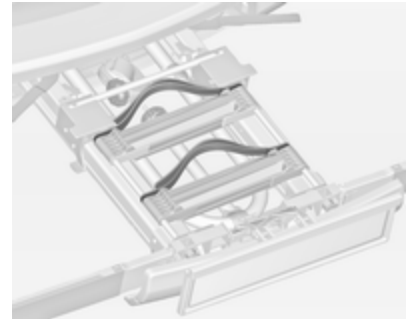

Stow the strap retainers accurately.

Unlock the rear carrier system

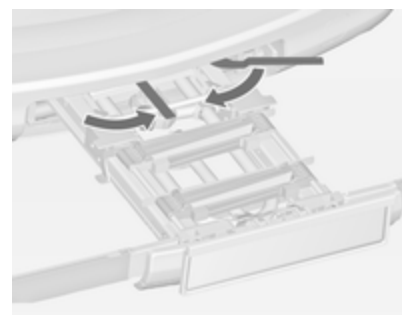

Swivel both clamping levers inwards as far as they will go.

Fold in tail lamps
Swivel in both tail lamps.

Fold in number plate holder
Lift the number plate holder and fold it forwards.

Retracting the rear carrier system

Caution
Take care that all foldable parts, e.g. wheel recesses or mounting brackets, are stowed accurately. Otherwise the rear carrier system might get damaged when trying to retract it.

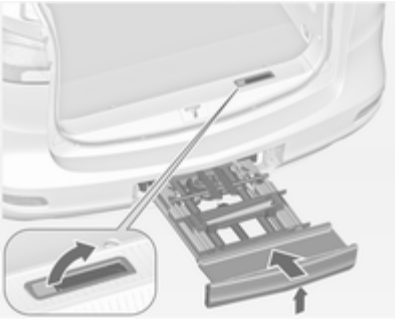

Push the release lever up and hold. Lift the rear carrier system slightly and push it into the bumper until it engages.

Release lever must return to original position.

⚠ Warning
If the system cannot be correctly engaged, please seek the assistance of a workshop.

Load compartment

The seats in the third row can be folded down separately into the vehicle floor. The seat backrests of the second row can be folded forward separately. Additionally the backrest of the passenger seat can be folded.

A completely flat load bay is created if all rear seats and backrests and passenger backrest are folded down. Depending on the loading, only single seats or backrests can be folded.

Rear floor storage cover ⇨ 81.

⚠ Warning
When seats or backrests are being adjusted or folded, keep hands and feet away from the moving area. Never store objects under the seats. Drive only with engaged seats and backrests.

Caution

Before setting up or folding down seats, all components must be removed from the side rails and from the lashing eyes.

Lashing eyes must be in stored position.

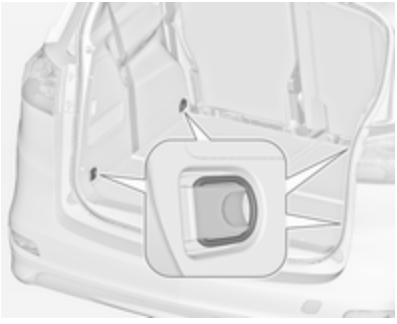

Folding down the seats of the third row

- Push down head restraint by pressing the catch ⇨ 37.

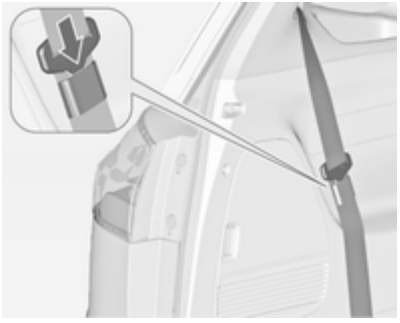

- Insert the latch plate of the seat belt on each side into the pocket that is mounted at the belt.

- Pull the lower strap and swing simultaneously the backrest forwards until the seat is lowered into the vehicle floor.
- Install interior floor mat ⇨ 81 and load compartment cover ⇨ 79 if necessary.

Setting up the seats

Pull up the seat by the upper strap, fold out and allow seat to engage in upright position.

Folding the seat backrests of the second row

- Remove the load compartment cover if necessary ⇨ 79.
- Push down head restraints by pressing the catch ⇨ 37.
- Move front passenger seat in a position that avoids contact with the head restraints of the folded backrests.

- Pull the strap and fold down the backrest onto the seat cushion.

Caution

- Do not fold the outer seatbacks while the seats are in the lounge seat position ⇨ 43.
- Do not pull release lever of the easy entry function when the backrest is folded down.

The seats could be damaged.

- Alternatively pull the strap and adjust backrest in vertical position as cargo position.

⚠Warning

Use vertical position of the backrest only for increased luggage volume and not as seating position.

Folding up backrest

Raise up backrest in vertical position. Adjust inclination by pulling the strap.

Ensure that all positions are engaged correctly.

⚠Warning

Only drive the vehicle if the backrests are securely locked into position. Otherwise there is a risk of personal injury or damage to the load or vehicle in the event of heavy braking or a collision.

Folding backrest of front passenger seat

If the vehicle is equipped on the front passenger seat with a release mechanism, the seat backrest can be folded down to horizontal position, e.g. for very long objects.

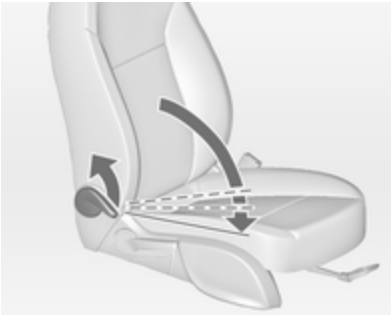

- Push down head restraint by pressing the catch ⇨ 37.
- Move passenger front seat in a position that avoids contact of the head restraint with the instrument panel.
- Pull lever and fold down the backrest on the seat, then release lever. The backrest can be engaged in two positions before horizontal position. Allow the backrest to engage audibly.

Folding up backrest

- Pull lever and fold up backrest in desired seat position, then release lever. Allow the backrest to engage audibly.
- Adjust seat and head restraint.

Rear storage

On both sides of the load compartment there are storage shelfs.

To open release cover in side trim panel and remove.

Floor storage

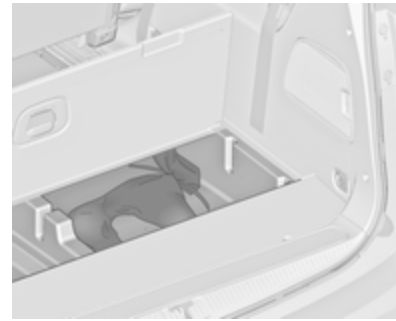

On version without third seat row, there are storage boxes under the floor cover. Lift up the cover to open.

Load compartment cover

Do not place any heavy or sharp-edged objects on the load compartment cover.

Before operating the load compartment cover, insert the latch plate of the seat belt on each side into the pocket that is mounted at the belt.

Closing

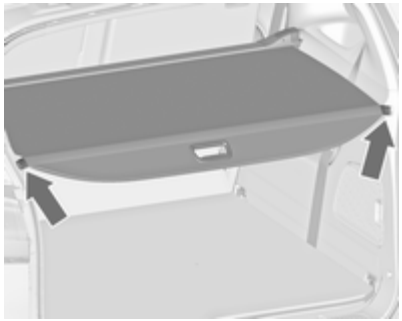

Pull the cover towards the rear using the handle and engage it in the retainers at the sides.

Opening

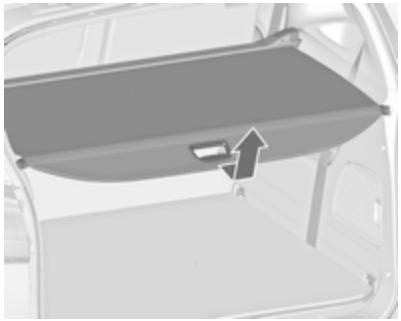

Remove load compartment cover from side brackets. Hold the cover and guide it until it is fully rolled up.

Removing

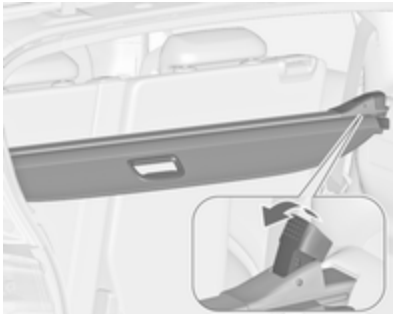

Open the load compartment cover.

Pull the release lever up and hold. Lift cover on right side and remove from retainers.

Stowing in the load compartment

If the load compartment cover is not used, stow it in the storage in the vehicle floor.

Open the cover of the storage in front of the tailgate.

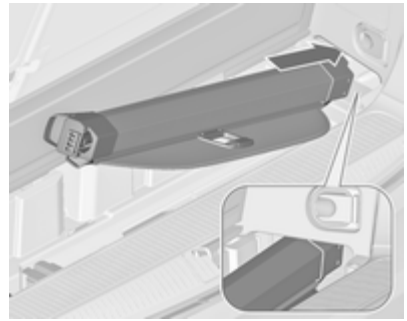

Insert the cover with the top side downwards and with the release lever to the left into the adapter on the right side of the storage.

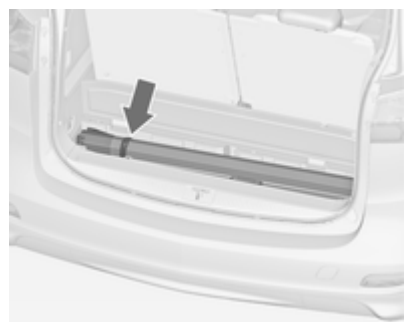

Fasten the load compartment cover in the storage with the Velcro tape.

Installing

Insert the left side of the load compartment cover in the recess, pull the release lever up and hold, insert the right side of the load compartment cover and engage.

Rear floor storage cover

Floor cover

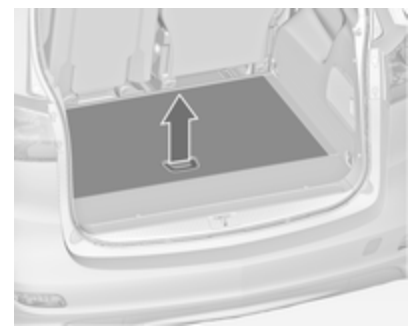

On versions without third seat row, there are storage boxes under the floor cover. To open lift up the cover and fold it upright behind rear seats.

Interior protection mat

Interior protection mat is a covering and protection feature for the load compartment to be used when all or single seats/backrests are folded down.

By folding and expanding the mat there are a lot of individual applications possible.

The interior protection mat is available in two versions:

- **Standard protection mat** covers the area between tailgate and second seat row, when third row is complete or one seat folded down.
- **Flex cover interior protection mat** is double size of standard protection mat, connected by a zipper. It covers the load compartment fully, when all or single seats of third and second row are folded down.

Protection mat is longitudinal foldable in 4 parts (standard) rsp. 8 parts (Flex cover) with a zipper central and transversely foldable in 4 parts.

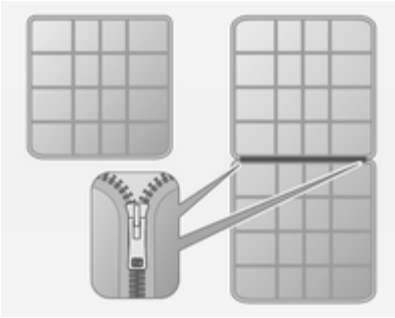

Following only a few examples of using the mats are described.

Before folding and expanding the mat, all components must be removed from the side rails and from the lashing eyes. Lashing eyes must be in stored position.

Covering the load compartment between tailgate and second seat row possible with both **Standard protection mat** or **Flex cover interior protection mat** being folded at the zipper to half size (double layer).

Mat is located fourfold flapped behind the raised up seats of the third row.

- Fold down third row seats.

- Expand the parts of the folded mat so, that first part is raised up at second row backrest.
- When folding down second row backrests, the mat expands automatically and covers the space between both seat rows.
- To let one seat in the third row raised up, fold mat in half lengthways.

- Pull out the mat a little to protect load compartment sill when loading heavy objects. Raise up the overlaying part of the mat before closing the tailgate.

Covering the load compartment up to the backrests of the front seats

only possible with **Flex cover interior protection mat** being folded at the zipper to half size (double layer).

Mat is expanded up to the second row seats, as described before.

- Fold down second row backrests.
- Expand the upper parts of the double layer mat, so that the load compartment is fully covered. The first part of the mat is now raised up at the backrests of front seats.

- Fold the overlaying rear part under the mat before closing the tailgate.

Covering the load compartment partially

only possible with **Flex cover interior protection mat** being folded at the zipper to half size (double layer).

e.g. left outer backrest is not folded down

Mat is expanded up to the second row seats, as described in first section.

- Fold down the backrests that shall be covered.

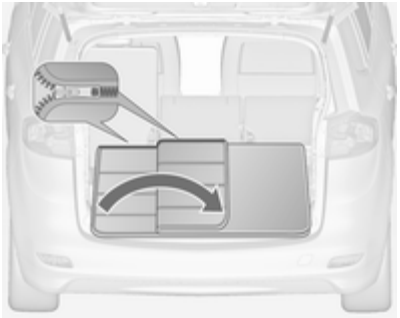

- Open the zipper behind the raised up backrest.
- Pull out the mat until the first part is flat on the load compartment floor.
- Raise up lengthways the part, that is opened by the zipper, and fold it to the centre.

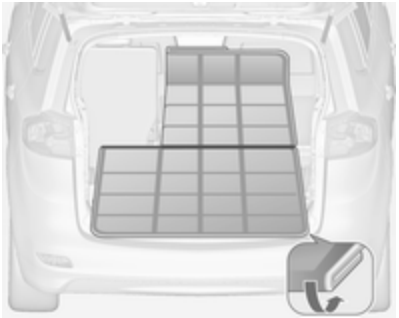

- Expand the upper part of double layer mat over the folded backrests.
- Fold the overlaying rear part under the mat before closing the tailgate.

Doing the same way when one outer and centre backrest are not folded down.

e. g. only centre backrest is folded down

Mat is expanded up to the second row seats, as described in first section.

- Fold down centre backrest to be covered.

- Open the zipper from both sides behind the left and right backrest.
- Pull out the mat until the first part is flat on the load compartment floor.
- Raise up lengthways both parts, that are opened by the zipper, and fold them to the centre.

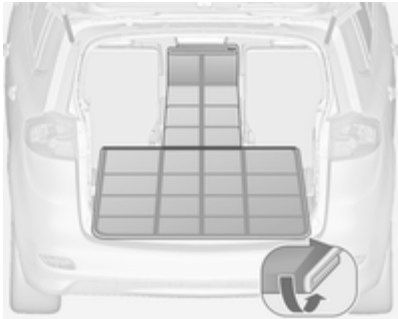

- Expand now the small upper part of double layer mat over the centre backrest.
- Fold the overlaying rear part under the mat before closing the tailgate.

The following illustrations show some further examples.

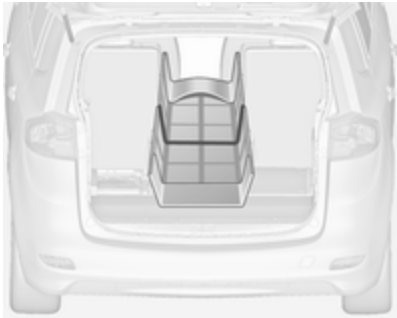

Example for long small objects, e.g. skis.

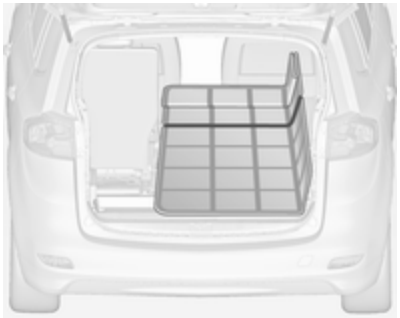

Example for side cover protection.

Example for covering folded backrest on second row and one folded seat on third row.

Load rails and hooks

Install the hooks in the desired position in the rails: insert the hook in the upper groove on the rail and press in the lower groove.

Lashing eyes

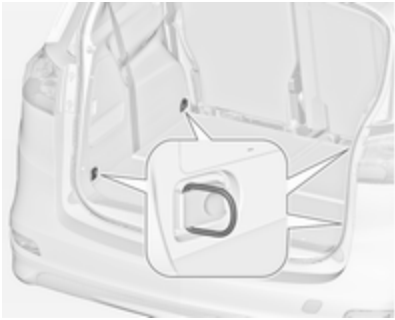

The lashing eyes are designed to secure items against slippage, e.g. using lashing straps or luggage net.

Cargo management system

The FlexOrganizer is a flexible system for dividing up the load compartment.

The system consists of:

- adapters,
- mesh pockets,

- hooks,
- variable partition net.

The components are fitted in rails on both side panels using adapters and hooks.

Installation of adapters in the rails

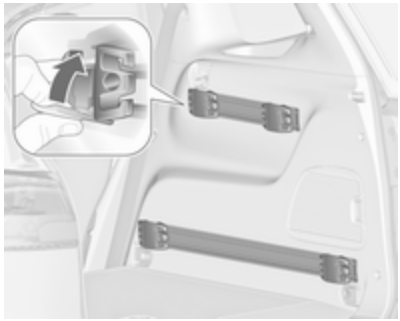

Fold open the handle plate, insert the adapter into the upper and lower groove of the rail and move to the required position. Turn the handle plate upwards to lock the adapter. To remove, turn the handle plate down and move out of the rail.

Variable partition net

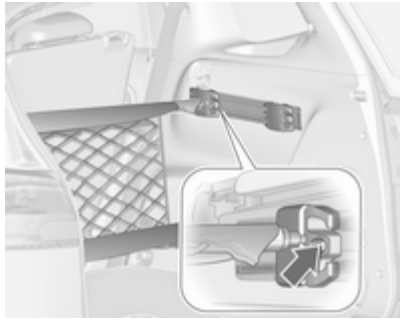

Insert adapters into the required position in the rails. Stick together the halves of the net rods.

To install, push rods together a little and insert into the relevant openings in the adapters.

To remove, press the net rods together and remove from the adapters.

Net pocket

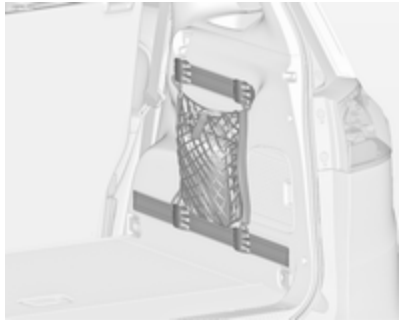

Insert adapters into the required position in the rails. The net pocket can be suspended from the adapters.

Installation of hooks in the rails

Insert the hook in the desired position first in the upper groove of the rail and then press in the lower groove. To remove, first pull out of the upper groove.

Partitioning net in front of tailgate

Install directly in front of the tailgate.

Before installation push in the four end pieces of the net rod by rotating each end piece anticlockwise.

To install, push the net rods together and insert into the openings of the tailgate frame. The longer rod must be inserted at the top.

To remove, push the net rods together and remove.

Safety net

The safety net can be installed behind the seats of the second row or the front seats.

Passengers must not be transported behind the safety net.

Installation behind second row seats

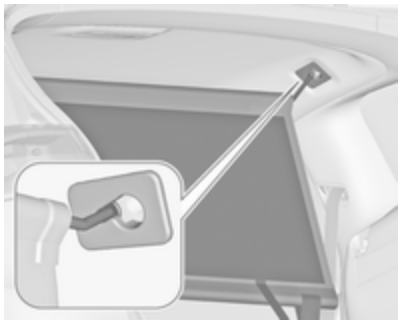

- There are installation openings on both sides in the roof frame above second row seats: suspend and engage rod of net at one side, compress rod and suspend and engage at the other side.

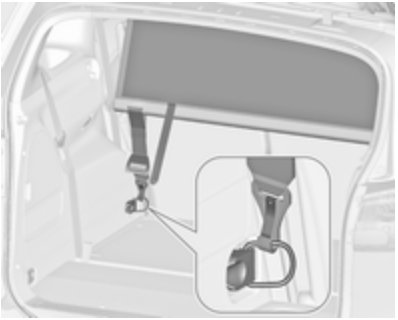

- Attach hooks of safety net straps to front lashing eyes on both sides in the load compartment.
- Tension both straps by pulling at the loose end.

Installation behind front seats

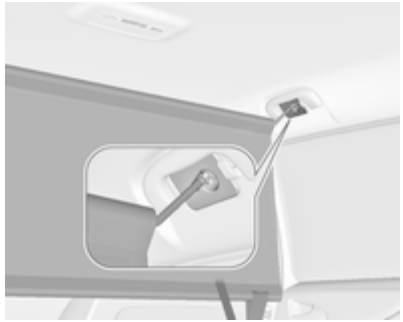

- There are installation openings on both sides in the roof frame above the front seats: suspend and engage rod of net at one side, compress rod and suspend and engage at the other side.

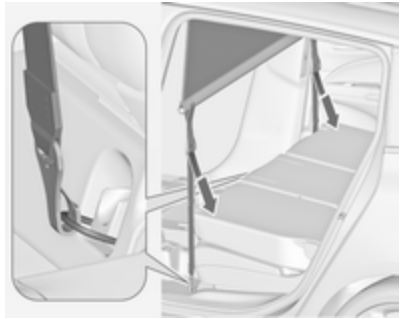

- Attach hooks of safety net straps to the lashing eyes on both sides in the floor in front of the seats.
- Tension both straps by pulling at the loose end.

Removal

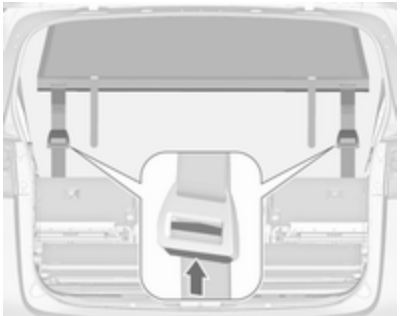

Push button on the tightener to release the strap on both sides. Detach hooks from the eyes. Unhook the safety net rods from the brackets in the roof frame. Roll up the net and secure with a strap.

Stowing

Open the cover of the storage in the load compartment floor in front of the tailgate.

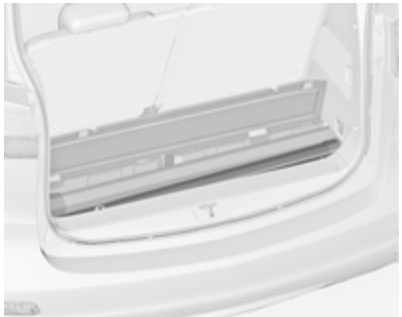

Insert the safety net in the storage and close cover.

Folding tray

Located in the front seat backrests.

Open by pulling upwards until it engages.

Fold away by pressing down past the resistance point.

Do not place any heavy objects on the folding tray.

Warning triangle

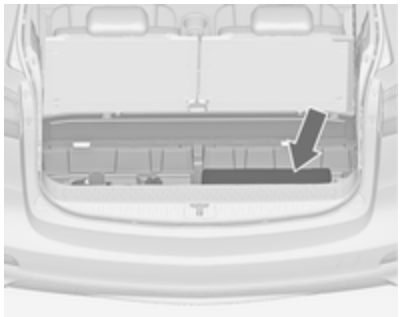

Stow the warning triangle in the storage of the load compartment floor in front of the tailgate.

First aid kit

Stow the first aid kit and the high visibility vest under the driver's seat.

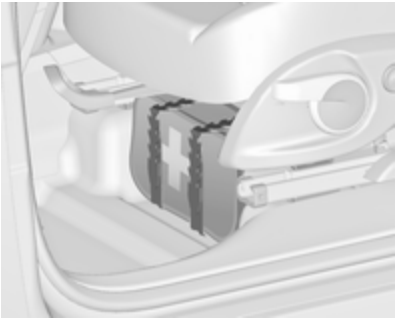

Use the straps to fix.

On another version, first aid kit is located in a storage box under the driver's seat. Slide the rollo to open or close the box.

Roof rack system

Roof rack

For safety reasons and to avoid damage to the roof, the vehicle approved roof rack system is recommended. For further information contact your workshop.

Follow the installation instructions and remove the roof rack when not in use.

Mounting roof rack

Vehicles with roof railing

Fasten the roof rack in the area of the holes, indicated by the arrows in the illustration.

Vehicles without roof railing

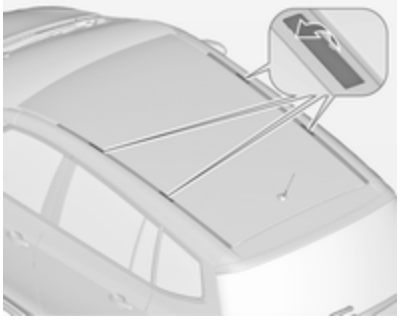

To fasten a roof rack, open the caps in the roof strips. Insert the mounting provisions, as instructed, in the retainer indicated in the illustration.

Loading information

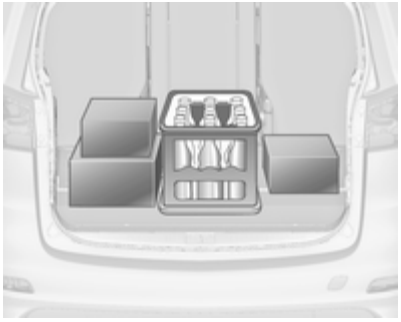

- Heavy objects in the load compartment should be placed against the seat backrests. Ensure the backrests are securely engaged. If objects can be stacked, the heavier objects should be placed at the bottom.
- Secure objects with lashing straps attached to lashing eyes ⇨ 86.
- Secure loose objects in load compartment to prevent sliding.
- Do not allow the load to protrude above the upper edge of the backrests.
- Do not place any objects on the load compartment cover or the instrument panel.
- The load must not obstruct the operation of the pedals, parking brake and gear selector, or hinder the freedom of movement of the driver. Do not place any unsecured objects in the interior.
- Do not drive with an open load compartment.

⚠ Warning

Always make sure that the load in the vehicle is securely stowed. Otherwise objects can be thrown around inside the vehicle and cause personal injury or damage to the load or car.

- The payload is the difference between the permitted gross vehicle weight (see identification

plate ⇨ 260) and the EC kerb weight.

To calculate the payload, enter the data for your vehicle in the Weights table at the front of this manual.

The EC kerb weight includes weights for the driver (68 kg), luggage (7 kg) and all fluids (tank 90 % full).

Optional equipment and accessories increase the kerb weight.

- Driving with a roof load increases the sensitivity of the vehicle to cross-winds and has a detrimental effect on vehicle handling due to the vehicle's higher centre of gravity. Distribute the load evenly and secure it properly with retaining straps. Adjust the tyre pressure and vehicle speed according to the load conditions. Check and retighten the straps frequently.

  Do not drive faster than 120 km/h.

  The permissible roof load is 75 kg for vehicles without roof railing and 100 kg for vehicles with roof railing.

  The roof load is the combined weight of the roof rack and the load.

Instruments and controls

Controls 94
Warning lights, gauges and indicators 101
Information displays 114
Vehicle messages 120
Trip computer 124
Vehicle personalisation 127

Controls

Steering wheel adjustment

Unlock lever, adjust steering wheel, then engage lever and ensure it is fully locked.

Do not adjust steering wheel unless vehicle is stationary and steering wheel lock has been released.

Steering wheel controls

The Infotainment system, some driver assistance systems and a connected mobile phone can be operated via the controls on the steering wheel.

Further information is available in the Infotainment system manual.

Driver assistance systems ⇨ 171.

Heated steering wheel

Activate heating by pressing button. Activation is indicated by the LED in the button.

The recommended grip areas of the steering wheel are heated quicker and to a higher temperature than the other areas.

Heating is operational when the engine is running and during an Autostop.

Stop-start system ⇨ 157.

Horn

Press .

Windscreen wiper/washer

Windscreen wiper

2 = fast
1 = slow
⊽ = interval wiping
O = off

For a single wipe when the windscreen wiper is off, press the lever down.

Do not use if the windscreen is frozen.

Switch off in car washes.

Adjustable wiper interval

Wiper lever in position ⊽.

Turn the adjuster wheel to adjust the desired wipe interval:

short interval	=	turn adjuster wheel upwards
long interval	=	turn adjuster wheel downwards

Automatic wiping with rain sensor

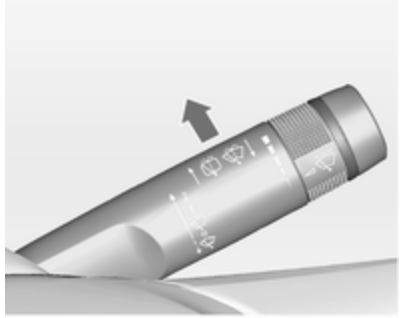

⊽ = automatic wiping with rain sensor

The rain sensor detects the amount of water on the windscreen and automatically regulates the frequency of the windscreen wiper.

If the wiper frequency is above 20 seconds the wiper arm moves slightly down to park position.

Adjustable sensitivity of the rain sensor

Turn the adjuster wheel to adjust the sensitivity:

low sensitivity	=	turn adjuster wheel downwards
high sensitivity	=	turn adjuster wheel upwards

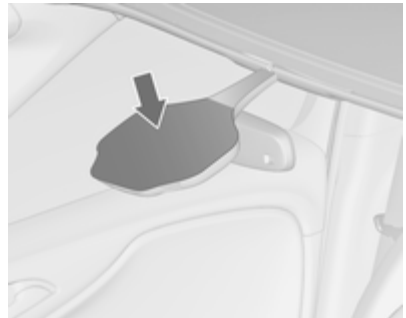

Keep the sensor free from dust, dirt and ice.

Windscreen and headlight washer

Pull lever. Washer fluid is sprayed onto the windscreen and the wiper wipes a few times.

If the headlights are on, washer fluid is also sprayed onto the headlights, provided that the lever is pulled sufficiently long. Afterwards the headlight washer system is inoperable for 5 wash cycles or until engine or headlights have been switched off and on again.

Rear window wiper/washer

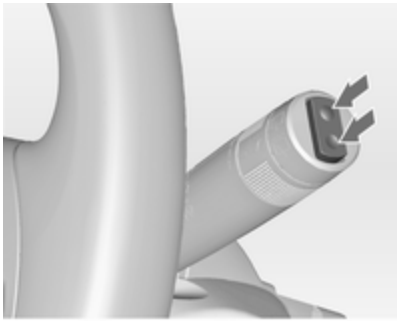

Press the rocker switch to activate the rear window wiper:

upper position	=	continuous operation
lower position	=	intermittent operation
middle position	=	off

Push lever. Washer fluid is sprayed onto the rear window and the wiper wipes a few times.

Do not use if the rear window is frozen.

Switch off in car washes.

The rear window wiper comes on automatically when the windscreen wiper is switched on and reverse gear is engaged.

Activation or deactivation of this function can be changed in the menu **Settings** in the Info-Display.

Vehicle personalisation ⇨ 127.

The rear window washer system is deactivated when the fluid level is low.

Outside temperature

A drop in temperature is indicated immediately and a rise in temperature after a time delay.

If outside temperature drops to 3 °C, a warning message is displayed in the Driver Information Centre with Uplevel-Display or Uplevel-Combi-Display.

⚠Warning
The road surface may already be icy even though the display indicates a few degrees above 0 °C.

Clock

Date and time are shown in the Info-Display.

Set date and time

Press the **CONFIG** button. The menu **Settings** is displayed.

Select **Time & Date**.

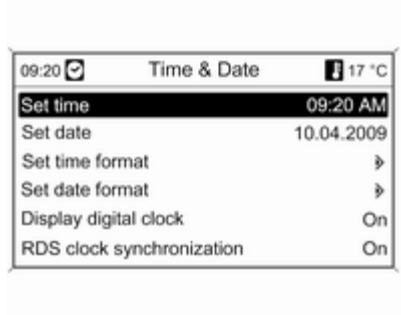

Selectable setting options:

- **Set time**: Changes the time shown on the display.
- **Set date**: Changes the date shown on the display.
- **Set time format**: Changes indication of hours between **12 hours** and **24 hours**.
- **Set date format**: Changes indication of date between **MM/DD/YYYY** and **DD.MM.YYYY**.
- **Display digital clock**: Switches on/off indication of time on the display.
- **RDS clock synchronization**: The RDS signal of most VHF transmitters automatically sets the time. RDS time synchronisation can take a few minutes. Some transmitters do not send a correct time signal. In such cases, it is recommended to switch off automatic time synchronisation.

Vehicle personalisation ⇨ 127.

Power outlets

A 12 Volt power outlet is located in the front console. Fold the cover downwards.

Further 12 Volt power outlets are located in the rear console

and at the left sidewall in the load compartment.

Do not exceed the maximum power consumption of 120 watts.

With ignition off, the power outlets are deactivated. Additionally the power outlets are deactivated in the event of low battery voltage.

Electrical accessories that are connected must comply with the electromagnetic compatibility requirements laid down in DIN VDE 40 839.

Do not connect any current-delivering accessories, e.g. electrical charging devices or batteries.

Do not damage the outlet by using unsuitable plugs.

Stop-start system ⇨ 157.

Cigarette lighter

The cigarette lighter is located in the front console. Fold the cover downwards.

Press in cigarette lighter. It switches off automatically once the element is glowing. Pull out lighter.

Ashtrays

Caution
To be used only for ash and not for combustible rubbish.

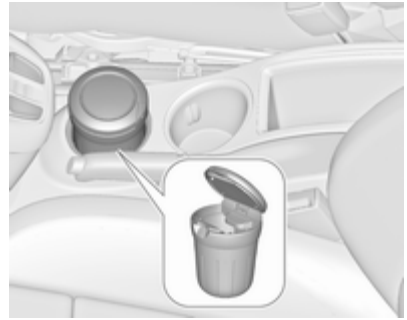

The portable ashtray can be placed in the cupholders.

Warning lights, gauges and indicators

Instrument cluster

In some versions, the needles of the instruments briefly rotate to the end position when the ignition is switched on.

Speedometer

Indicates vehicle speed.

Odometer

The bottom line displays the recorded distance in km.

Trip odometer

The top line displays the recorded distance since the last reset.

To reset, press the **SET/CLR** button on the turn signal lever for a few seconds ⇨ 114.

Some versions are equipped with a reset knob between speedometer and Driver Information Centre: to reset hold the knob depressed for a few seconds with the ignition on.

Trip odometer counts up to a distance of 2000 kilometres and restarts then with 0.

Tachometer

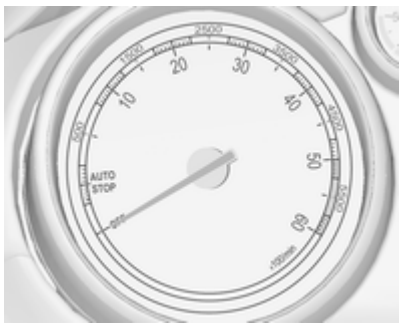

Displays the engine speed.

Drive in a low engine speed range for each gear as much as possible.

Caution
If the needle is in the red warning zone, the maximum permitted engine speed is exceeded. Engine at risk.

Fuel gauge

Displays the fuel level or gas pressure in the tank depending on the operation mode.

Control indicator ⬬ illuminates if the level in the tank is low. Refuel immediately if it flashes.

During liquid gas operation, the system automatically switches over to petrol operation when gas tanks are empty ⇨ 103.

Never run the tank dry.

Because of the fuel remaining in the tank, the top-up quantity may be less than the specified tank capacity.

Fuel selector

Natural gas operation

Press button ⛽ to switch between petrol and natural gas operation. The LED ▬ status shows the current operating mode.

▬ off	=	natural gas operation.
▬ illuminates	=	petrol operation.
▬ flashes	=	no switching is possible, one type of fuel is empty.

As soon as the natural gas tank is empty, petrol operation is automatically engaged until the ignition is switched off.

Fuel for natural gas operation ⇨ 201.

Liquid gas operation

Press button **LPG** to switch between petrol and liquid gas operation. The LED ▬ status shows the current operating mode.

▬ off	=	petrol operation
▬ illuminates	=	liquid gas operation
▬ flashes	=	no switching is possible, one type of fuel is empty

As soon as the liquid gas tank is empty, petrol operation is automatically engaged until the ignition is switched off.

Fuel for liquid gas operation ⇨ 202.

Engine coolant temperature gauge

Displays the coolant temperature.

left area	=	engine operating temperature not yet reached
central area	=	normal operating temperature
right area	=	temperature too high

Caution

If engine coolant temperature is too high, stop vehicle, switch off engine. Danger to engine. Check coolant level.

Service display

The engine oil life system lets you know when to change the engine oil and filter. Based on driving conditions, the interval at which an engine oil and filter change will be indicated can vary considerably.

In the Uplevel-Display or Uplevel-Combi-Display, the remaining oil life duration is displayed in the **Vehicle Information Menu**.

In the Midlevel-Display, the remaining engine oil life duration is displayed by the control indicator, therefore the ignition must be switched on, with the engine not running.

The menu and function can be selected via the buttons on the turn signal lever.

To display the remaining engine oil life duration:

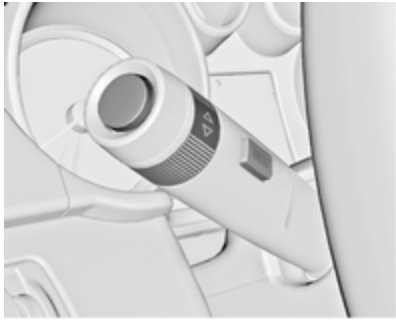

Press the **MENU** button to select the **Vehicle Information Menu**.

Turn the adjuster wheel to select **Remaining Oil Life**.

The system must be reset every time the engine oil is changed to allow proper functionality. Seek the assistance of a workshop.

Press the **SET/CLR** button to reset. Therefore the ignition must be switched on, with the engine not running.

When the system has calculated that engine oil life has been diminished, **Change Engine Oil Soon** or a warning code appears in the Driver Information Centre. Have engine oil and filter changed by a workshop within one week or 500 km (whichever occurs first).

Driver Information Centre ⇨ 114.

Service information ⇨ 257.

Control indicators

The control indicators described are not present in all vehicles. The description applies to all instrument versions. Depending on the equipment, the position of the control indicators may vary. When the ignition is switched on, most control indicators will illuminate briefly as a functionality test.

The control indicator colours mean:

red	=	danger, important reminder
yellow	=	warning, information, fault
green	=	confirmation of activation
blue	=	confirmation of activation
white	=	confirmation of activation

Control indicators in the instrument cluster

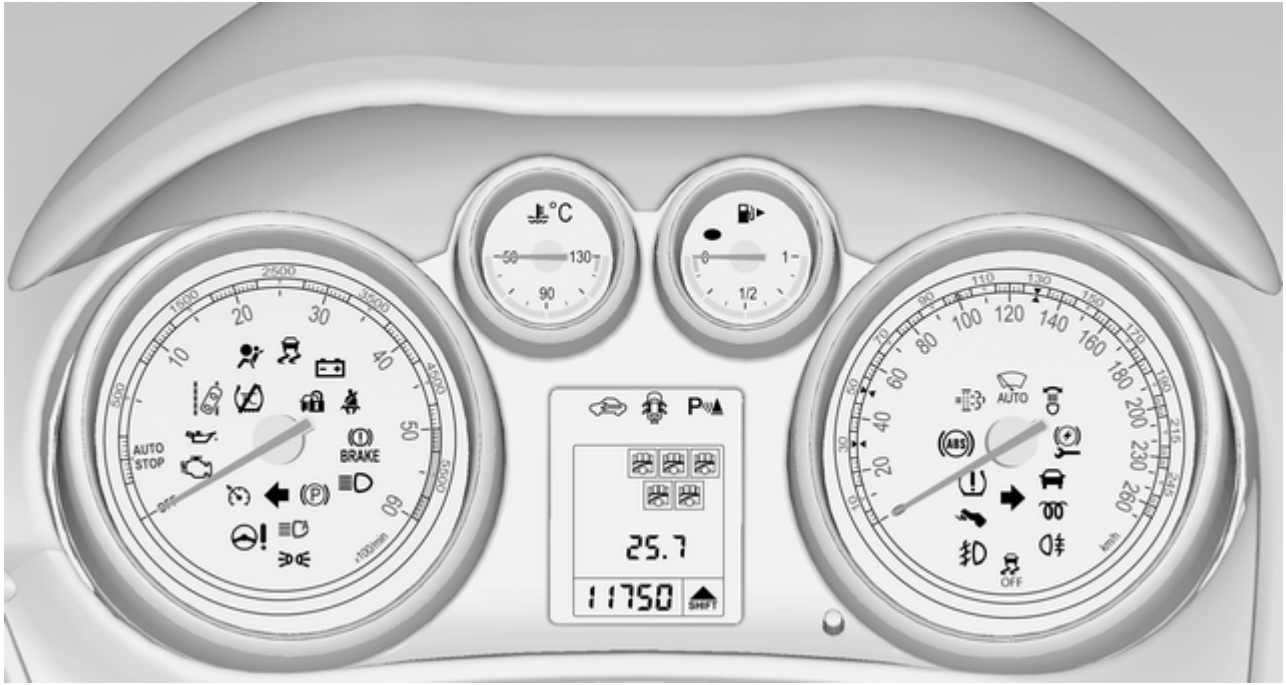

Control indicators in the centre console

Turn signal

⇦⇨ illuminates or flashes green.

Illuminates briefly

The parking lights are switched on.

Flashes

A turn signal or the hazard warning flashers are activated.

Rapid flashing: failure of a turn signal light or associated fuse, failure of turn signal light on trailer.

Bulb replacement ⇨ 222, Fuses ⇨ 230.

Turn signals ⇨ 140.

Seat belt reminder

Seat belt reminder on front seats

for driver's seat or for front passenger seat illuminates or flashes red.

Illuminates

After the ignition has been switched on until the seat belt has been fastened.

Flashes

After having started the engine for a maximum of 100 seconds until the seat belt has been fastened.

Fastening the seat belt ⇨ 50.

Seat belt status on rear seats

or in the Driver Information Centre flashes or illuminates.

Illuminates

After the ignition has been switched on for a minimum of 35 seconds until the seat belt has been fastened.

If an unfastened seat belt is fastened whilst driving.

Flashes

After starting off when the seat belt is unfastened.

Fastening the seat belt ⇨ 50.

Airbag and belt tensioners

illuminates red.

When the ignition is switched on, the control indicator illuminates for approx. 4 seconds. If it does not illuminate, does not go out after 4 seconds or illuminates whilst driving, there is a fault in the airbag system. Seek the assistance of a workshop. The airbags and belt pretensioners may fail to trigger in the event of an accident.

Deployment of the belt pretensioners or airbags is indicated by continuous illumination of .

⚠ Warning

Have the cause of the fault remedied immediately by a workshop.

Belt pretensioners, airbag system ⇨ 49, ⇨ 53.

Airbag deactivation

ON illuminates yellow.

Illuminates for approx. 60 seconds after the ignition is switched on. The front passenger airbag is activated.

OFF illuminates yellow.

The front passenger airbag is deactivated ⇨ 55.

⚠ Danger

Risk of fatal injury for a child using a child restraint system together with activated front passenger airbag.

Risk of fatal injury for an adult person with deactivated front passenger airbag.

Charging system

illuminates red.

Illuminates when the ignition is switched on and extinguishes shortly after the engine starts.

Illuminates when the engine is running

Stop, switch off engine. Battery is not charging. Engine cooling may be interrupted. The brake servo unit may cease to be effective. Seek the assistance of a workshop.

Malfunction indicator light

illuminates or flashes yellow.

Illuminates when the ignition is switched on and extinguishes shortly after the engine starts.

Illuminates when the engine is running

Fault in the emission control system. The permitted emission limits may be exceeded. Seek the assistance of a workshop immediately.

Flashes when the engine is running

Fault that could lead to catalytic converter damage. Ease up on the accelerator until the flashing stops. Seek the assistance of a workshop immediately.

Service vehicle soon

illuminates yellow.

Additionally a warning message or a warning code is displayed.

The vehicle needs a service.

Seek the assistance of a workshop.

Vehicle messages ⇨ 120.

Brake and clutch system

Brake and clutch fluid level

BRAKE illuminates red.

The brake and clutch fluid level is too low ⇨ 219.

⚠Warning

Stop. Do not continue your journey. Consult a workshop.

Illuminates after the ignition is switched on if the manual parking brake is applied ⇨ 166.

Operate pedal

illuminates or flashes yellow.

Clutch pedal needs to be operated to start the engine. Stop-start system ⇨ 157.

Illuminates

Brake pedal needs to be operated to release the electrical parking brake ⇨ 166.

Flashes

Clutch pedal needs to be operated to start the engine ⇨ 155.

Electrical parking brake

(P) illuminates or flashes red.

Illuminates

Electrical parking brake is applied ⇨ 166.

Flashes

Electrical parking brake is not fully applied or released. Switch on ignition, depress brake pedal and attempt to reset the system by first releasing and then applying the electrical parking brake. If (P) remains flashing, do not drive and seek the assistance of a workshop.

Electrical parking brake fault

illuminates or flashes yellow.

Illuminates

Electrical parking brake is operating with degraded performance ⇨ 166.

Flashes

Electrical parking brake is in service mode. Stop vehicle, apply and release the electrical parking brake to reset.

⚠Warning

Have the cause of the fault remedied immediately by a workshop.

Antilock brake system (ABS)

(ABS) illuminates yellow.

Illuminates for a few seconds after the ignition is switched on. The system is ready for operation when the control indicator extinguishes.

If the control indicator does not extinguish after a few seconds, or if it illuminates while driving, there is a fault in the ABS. The brake system remains operational but without ABS regulation.

Antilock brake system ⇨ 165.

Upshift

SHIFT illuminates green as a control indicator, or is shown as a symbol in the Driver Information Centre with Uplevel-Display or Uplevel-Combi-Display, when upshifting is recommended for fuel saving reasons.

On some versions gear shift indication is popped-up as a full page in the Driver Information Centre.

EcoFlex drive assistant ⇨ 124.

Power steering

! illuminates yellow.

Illuminates with power steering reduced

Power steering is reduced due to overheating of the system. Control indicator extinguishes when the system has cooled down.

Stop-start system ⇨ 157.

Illuminates with power steering disabled

Failure in the power steering system. Consult a workshop.

Lane departure warning

illuminates green or flashes yellow.

Illuminates green

System is switched on and ready to operate.

Flashes yellow

System recognizes an unintended lane change.

Ultrasonic parking assist

P illuminates yellow.

Fault in system

or

Fault due to sensors that are dirty or covered by ice or snow

or

Interference due to external sources of ultrasound. Once the source of interference is removed, the system will operate normally.

Have the cause of the fault in the system remedied by a workshop.

Ultrasonic parking assist ⇨ 186.

Electronic Stability Control off

illuminates yellow.

The system is deactivated.

Electronic Stability Control and Traction Control system

illuminates or flashes yellow.

Illuminates

A fault in the system is present. Continued driving is possible. Driving stability, however, may deteriorate depending on road surface conditions.

Have the cause of the fault remedied by a workshop.

Flashes

The system is actively engaged. Engine output may be reduced and the vehicle may be braked automatically to a small degree.

Electronic Stability Control ⇨ 169, Traction Control system ⇨ 168.

Traction Control system off

illuminates yellow.

The system is deactivated.

Preheating

illuminates yellow.

Preheating is activated. Only activates when outside temperature is low.

Diesel particle filter

illuminates or flashes yellow.

The diesel particle filter requires cleaning.

Continue driving until extinguishes. If possible, do not allow engine speed to drop below 2000 rpm.

Illuminates

The diesel particle filter is full. Start cleaning process as soon as possible.

Flashes

The maximum filling level of the filter is reached. Start cleaning process immediately to avoid damage to the engine.

Diesel particle filter ⇨ 159, Stop-start system ⇨ 157.

Tyre pressure monitoring system

illuminates or flashes yellow.

Illuminates

Tyre pressure loss. Stop immediately and check tyre pressure.

Flashes

Fault in system or tyre without pressure sensor mounted (e.g. spare wheel). After 60-90 seconds the control indicator illuminates continuously. Consult a workshop.

Engine oil pressure

illuminates red.

Illuminates when the ignition is switched on and extinguishes shortly after the engine starts.

Illuminates when the engine is running

Caution
Engine lubrication may be interrupted. This may result in damage to the engine and/or locking of the drive wheels.

1. Depress clutch.
2. Select neutral gear, set selector lever to **N**.
3. Move out of the flow of traffic as quickly as possible without impeding other vehicles.
4. Switch off ignition.

⚠ Warning
When the engine is off, considerably more force is needed to brake and steer. During an Autostop the brake servo unit will still be operational. Do not remove key until vehicle is stationary, otherwise the steering wheel lock could engage unexpectedly.

Check oil level before seeking the assistance of a workshop ⇨ 216.

Low fuel

illuminates or flashes yellow.

Illuminates

Level in fuel tank is too low.

Flashes

Fuel used up. Refuel immediately. Never run the tank dry.

Catalytic converter ⇨ 160.

Bleeding the diesel fuel system ⇨ 221.

Immobiliser

flashes yellow.

Fault in the immobiliser system. The engine cannot be started.

Reduced engine power

illuminates yellow.

The engine power is limited. Consult a workshop.

Exterior light

illuminates green.

The exterior lights are on ⇨ 133.

High beam

illuminates blue.

Illuminates when high beam is on, during headlight flash ⇨ 134, or when high beam is on with high beam assist or intelligent light range ⇨ 136.

High beam assist

illuminates green.

The high beam assist or intelligent light range is activated ⇨ 134, ⇨ 136.

Adaptive forward lighting

illuminates or flashes yellow.

Illuminates

Fault in system.

Seek the assistance of a workshop.

Flashes

System switched to symmetrical low beam.

Control indicator flashes for approx. 4 seconds after the ignition is switched on as a reminder that the system has been activated ⇨ 136.

Automatic light control ⇨ 134.

Fog light

illuminates green.

The front fog lights are on ⇨ 140.

Rear fog light

illuminates yellow.

The rear fog light is on ⇨ 141.

Low washer fluid

illuminates yellow.

The washer fluid level is low.

Washer fluid ⇨ 218.

Rain sensor

AUTO illuminates green.

Illuminated when automatic rain sensor is activated ⇨ 96.

Cruise control

illuminates white or green.

Illuminates white

The system is on.

Illuminates green

Cruise control is active.

Cruise control ⇨ 171.

Adaptive cruise control

illuminates white or green.

Illuminates white

The system is on.

Illuminates green

Adaptive cruise control is active.

Adaptive cruise control ⇨ 174.

Vehicle detected ahead

illuminates green.

A vehicle ahead is detected in the same lane.

Adaptive cruise control ⇨ 174, Forward collision alert ⇨ 181.

Door open

illuminates red.

A door or the tailgate is open.

Information displays

Driver Information Centre

The Driver Information Centre (DIC) is located in the instrument cluster between speedometer and tachometer. It is available as Midlevel-Display, Uplevel-Display or Uplevel-Combi-Display.

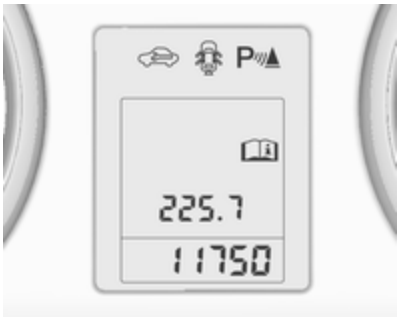

Midlevel-Display indicates:

- overall odometer
- trip odometer
- some control indicators
- vehicle information
- trip/fuel information
- vehicle messages, displayed as code numbers ⇨ 120.

In the Uplevel-Display the following main menus can be selected by pressing the **MENU** button:

- **Vehicle Information Menu**
- **Trip/Fuel Information Menu**

In the Uplevel-Combi-Display, menu pages can be selected by pushing the **MENU** button, Menu symbols are indicated in the top line of the display:

- **Vehicle Information Menu**
- **Trip/Fuel Information Menu**
- **ECO ECO Information Menu**

Some of the displayed functions differ when the vehicle is being driven or at a standstill. Some functions are only available when the vehicle is being driven.

Vehicle personalisation ⇨ 127.
Memorised settings ⇨ 23.

Selecting menus and functions

The menus and functions can be selected via the buttons on the turn signal lever.

Press the **MENU** button to switch between the menus or to return from a submenu to the next higher menu level.

Turn the adjuster wheel to highlight a menu option or to set a numeric value.

Press the **SET/CLR** button to select a function or to confirm a message.

Vehicle Information Menu

Press the **MENU** button to select the **Vehicle Information Menu**, or on Uplevel-Combi-Display select 🚗.

Turn the adjuster wheel to select a submenu. Press the **SET/CLR** button to confirm.

Follow the instructions given in the submenus.

Possible submenus can be, depending on the version:

- **Unit**: displayed units can be changed
- **Tyre Pressure**: checks tyre pressure of all wheels during driving ⇨ 238

- **Remaining Oil Life**: indicates when to change the engine oil and filter ⇨ 104

- **Speed Warning**: if exceeding the preset speed, a warning chime will be activated
- **Traffic Sign Assistant**: displays detected traffic signs for the current route section ⇨ 196
- **Following Distance Indication**: displays the distance to a preceding moving vehicle ⇨ 184

Selection and indication can be different between Midlevel-, Uplevel-, and Uplevel-Combi-Display.

Trip/Fuel Information Menu

Press the **MENU** button to select the **Trip/Fuel Information Menu**, or select /⁝\ on Uplevel-Combi-Display.

Turn the adjuster wheel to select a submenu. Press the **SET/CLR** button to confirm.

- Trip odometer 1
- Trip odometer 2
- Digital speed

Trip odometer 2 and digital speed are only available on vehicles with Uplevel-Display or Uplevel-Combi-Display.

Reset trip odometer by pressing the **SET/CLR** button on the turn signal lever for a few seconds or by pressing the reset knob between speedometer and Driver Information Centre with the ignition on.

On vehicles with trip computer, more submenus are available.

Selection and indication can be different between Midlevel-, Uplevel-, and Uplevel-Combi-Display.

Trip/Fuel Information Menu, Trip Computer ⇨ 124.

ECO Information Menu

Press the **MENU** button to select **eco** in the top line of the Uplevel-Combi-Display.

Turn the adjuster wheel to select a submenu. Press the **SET/CLR** button to confirm.

Submenus are:

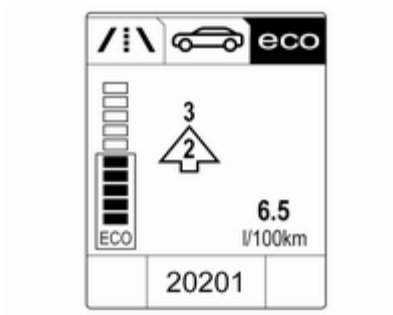

- **Shift indication**: Current gear is indicated inside an arrow. The cypher above recommends upshifting for fuel saving reasons.

  Eco index display: The current fuel consumption is indicated on a segment display. For economical driving, adapt your driving style to keep the filled segments within the Eco area. The more segments are filled, the higher the fuel consumption. Simultaneously the current consumption value is indicated.

- **Top Consumers**: List of top comfort consumers currently switched on is displayed in descending order. Fuel saving potential is indicated. A switched-off consumer disappears from the list and the consumption value will be updated.

- **Economy Trend**: Displays the average consumption development over a distance of 50 km. Filled segments display the consumption in 5 km steps and shows the effect of topography or driving behaviour on fuel consumption.

Graphic-Info-Display, Colour-Info-Display

Depending on the vehicle configuration the vehicle has a Graphic- or Colour-Info-Display. The Info-Display is located in the instrument panel above the Infotainment system.

Graphic-Info-Display

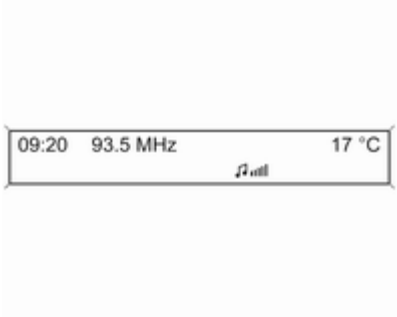

Depending on the Infotainment system, the Graphic-Info-Display is available in two versions.

Graphic-Info-Display indicates:

- time ⇨ 99
- outside temperature ⇨ 98
- date ⇨ 99
- Infotainment system, see description in the Infotainment system manual
- settings for vehicle personalisation ⇨ 127

Colour-Info-Display

The Colour-Information-Display indicates in colour:

- time ⇨ 99
- outside temperature ⇨ 98
- date ⇨ 99
- Infotainment system, see description in the Infotainment system manual
- navigation, see description in the Infotainment system manual
- rear view camera
- system settings
- vehicle messages ⇨ 120
- settings for vehicle personalisation ⇨ 127

The type of information and how it is displayed depends on the equipment of the vehicle and the settings made.

Selecting menus and settings

Menus and settings are accessed via the display.

Selections are made via:

- menus
- function buttons and multifunction knob of the Infotainment system

Selecting with the Infotainment system

Select a function via the Infotainment system buttons. The menu of the selected function is displayed.

The multifunction knob is used to select an item and to confirm.

Multifunction knob

The multifunction knob is the central control element for the menus:

Turn

- To mark a menu option
- To set a numeric value or to display a menu option

Press (the outer ring)

- To select or activate the marked option
- To confirm a set value
- To switch a system function on/off

BACK button

Press button to:

- exit a menu without changing settings
- return from a submenu to a higher menu level
- delete the last character in a character sequence

Press and hold the button for a few seconds to delete the entire entry.

Vehicle personalisation ⇨ 127.

Memorised settings ⇨ 23.

Vehicle messages

Messages are indicated mainly in the Driver Information Centre (DIC), in some cases together with a warning and signal buzzer.

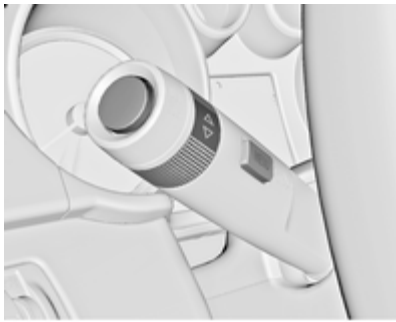

Press the **SET/CLR** button, the **MENU** button or turn the adjuster wheel to confirm a message.

Vehicle messages on the Midlevel-Display

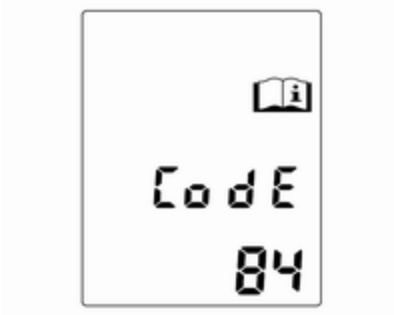

The vehicle messages are displayed as code numbers.

No.	Vehicle message
2	No radio remote control detected, depress clutch pedal for a restart
3	Engine coolant level low
4	Air conditioning off
5	Steering wheel is locked

No.	Vehicle message
6	Depress brake pedal to release electrical parking brake
7	Turn steering wheel, switch ignition off and then on
9	Turn steering wheel, start engine again
12	Vehicle overloaded
13	Compressor overheated
15	Centre high-mounted brake light failure
16	Brake light failure
17	Headlight levelling malfunction
18	Left low beam failure
19	Rear fog light failure
20	Right low beam failure
21	Left sidelight failure
22	Right sidelight failure
23	Reversing light failure

No.	Vehicle message
24	Number plate light failure
25	Left front turn signal failure
26	Left rear turn signal failure
27	Right front turn signal failure
28	Right rear turn signal failure
29	Check trailer brake light
30	Check trailer reversing light
31	Check left trailer turn signal
32	Check right trailer turn signal
33	Check trailer rear fog light
34	Check trailer rear light
35	Replace battery in radio remote control
48	Clean side blind zone alert system
49	Lane departure warning unavailable
53	Tighten gas cap

No.	Vehicle message
54	Water in diesel fuel filter
55	Diesel particle filter is full ⇨ 159
56	Tyre pressure imbalance on front axle
57	Tyre pressure imbalance on rear axle
58	Tyres without TPMS sensors detected
59	Open and then close driver window
60	Open and then close front passenger window
61	Open and then close rear left window
62	Open and then close rear right window
65	Theft attempted
66	Service theft alarm system
67	Service steering wheel lock

No.	Vehicle message
68	Service power steering
69	Service suspension system
70	Service level control system
71	Service rear axle
74	Service AFL
75	Service air conditioning
76	Service side blind zone alert system
77	Service lane departure warning
79	Top up engine oil
81	Service transmission
82	Change engine oil soon
83	Service adaptive cruise control
84	Engine power is reduced
94	Shift to park before exiting
95	Service airbag
128	Bonnet open
134	Park assist fault, clean bumper
136	Service parking assist
145	Check washer fluid level
174	Low battery
258	Park assist off

Vehicle messages on the Uplevel-Display or Uplevel-Combi-Display

The vehicle messages are displayed as text. Follow the instructions given in the messages.

The system displays messages regarding the following topics:

- Fluid levels
- Anti-theft alarm system
- Brakes
- Drive systems
- Ride control systems
- Cruise control
- Adaptive cruise control
- Forward collision alert
- Collision imminent braking system
- Parking assistant systems
- Lighting, bulb replacement
- Adaptive forward lighting
- Wiper/washer system
- Doors, windows
- Side blind spot alert
- Traffic sign assistant
- Lane departure warning
- Radio remote control

- Seat belts
- Airbag systems
- Engine and transmission
- Tyre pressure
- Diesel particle filter ⇨ 159
- Battery

Vehicle messages on the Colour-Info-Display

Some important messages appear additionally in the Colour-Info-Display. Press the multifunction knob to confirm a message. Some messages only pop-up for a few seconds.

Warning chimes

When starting the engine or whilst driving

Only one warning chime will sound at a time.

The warning chime regarding unfastened seat belts has priority over any other warning chime.

- If seat belt is not fastened.
- If a door or the tailgate is not fully closed when starting off.
- If a certain speed is exceeded with parking brake applied.
- If adaptive cruise control deactivates automatically.
- If approaching a vehicle ahead too closely.
- If a programmed speed or speed limit is exceeded.
- If a warning message or a warning code appears in the Driver Information Centre.
- If the parking assist detects an object.
- If unintended lane change occurs.
- If side blind spot alert recognises a vehicle.
- If the reverse gear is engaged and the rear end carrier extended.
- If the diesel particle filter has reached the maximum filling level.

When the vehicle is parked and/or the driver's door is opened

- When the key is in the ignition switch.
- With exterior lights on.

During an Autostop

- If the driver's door is opened.

Battery voltage

When the battery voltage is running low, a warning message or warning code 174 will appear in the Driver Information Centre.

1. Switch off immediately electrical consumers which are not required for a safe ride, such as seat heating, heated rear window or other main consumers.
2. Charge the battery by driving continuously for a while or by using a charging device.

The warning message or warning code will disappear after the engine has been started two times consecutively without voltage drop.

If the battery cannot be recharged, have the cause of the fault remedied by a workshop.

Trip computer

The menus and functions can be selected via the buttons on the turn signal lever.

Press the **MENU** button to select the **Trip/Fuel Information Menu**, or select /⋮\ on the Uplevel-Combi-Display.

Trip/Fuel Information Menu on Uplevel-Display

Turn the adjuster wheel to select one of the submenus:

- Trip odometer 1
- Trip odometer 2
- Range
- Average consumption
- Instantaneous consumption
- Average speed
- Digital speed
- Traffic sign assistant
- Route guidance

Trip/Fuel Information Menu on Uplevel-Combi-Display

Turn the adjuster wheel to select the submenus:

- Trip odometer 1
- Average consumption 1
- Average speed 1

- Trip odometer 2
- Average consumption 2
- Average speed 2

- Digital speed
- Range
- Instantaneous consumption
- Route guidance

Trip computer 1 and 2

The information of two trip computers can be reset separately for odometer, average consumption and average speed by pressing the **SET/CLR**

button, making it possible to display different trip information for different drivers.

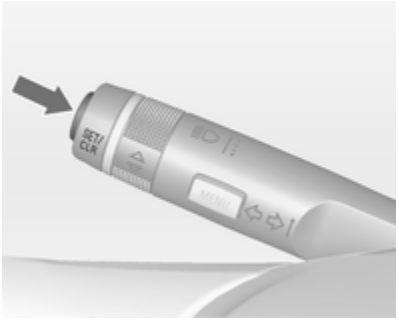

Trip odometer

Trip odometer displays the recorded distance since a certain reset.

Trip odometer counts up to a distance of 2000 km then restarts at 0.

To reset, press the **SET/CLR** button for a few seconds.

Range

Range is calculated from current fuel tank content and current consumption. The display shows average values.

After refuelling, the range is updated automatically after a brief delay.

When the fuel level in the tank is low, a message appears on vehicles with Uplevel-Display or Uplevel-Combi-Display.

When the tank has to be refuelled immediately, a warning code or warning message is displayed on vehicles with Midlevel- and Uplevel-Display or Uplevel-Combi-Display.

Additionally the control indicator ⬬ in the fuel gauge illuminates or flashes ⇨ 112.

Average consumption

Display of average consumption. The measurement can be reset at any time and starts with a default value.

To reset, press the **SET/CLR** button for a few seconds.

Instantaneous consumption

Display of the instantaneous consumption.

Average speed

Display of average speed. The measurement can be reset at any time.

To reset, press the **SET/CLR** button for a few seconds.

Digital speed

Digital display of the instantaneous speed.

Traffic sign assistant

Indicates detected traffic signs for the current route section ⇨ 196.

Route guidance

Additionally to the navigation information in the Color-Info-Display, route guidance is displayed in the Driver Information Centre.

Different indication on vehicles with natural gas engine:

Range

Range is indicated for petrol mode and natural gas mode.

Both modes can be indicated added together.

Average consumption

Average consumption is always indicated in the selected mode.

Fuel selector ⇨ 103.

Instantaneous consumption

Instantaneous consumption is always indicated in the selected mode.

Fuel selector ⇨ 103.

Vehicle personalisation

The vehicle's behaviour can be personalised by changing the settings in the Info-Display.

Some of the personal settings for different drivers can be memorised individually for each vehicle key. Memorised settings ⇨ 23.

Depending on vehicle equipment and country-specific regulations some of the functions described below may not be available.

Some functions are only displayed or active when the engine is running.

Personal settings in the Graphic-Info-Display

Press the **CONFIG** button. The menu **Settings** is displayed.

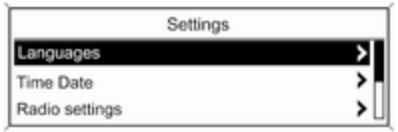

The following settings can be selected by turning and pressing the multifunction knob:

- **Sport mode settings**
- **Languages**
- **Time Date**
- **Radio settings**
- **Phone settings**
- **Vehicle settings**

In the corresponding submenus the following settings can be changed:

Sport mode settings
The driver can select the functions which will be activated in Sport mode ⇨ 169.

- **Sport suspension**: Damping becomes harder.
- **Sport powertrain performance**: Accelerator pedal and gear change characteristics become more responsive.
- **Sport steering**: Steering support is reduced.
- **Swap backlight colour main instr.**: Change of instrument illumination colour.

Languages
Selection of the desired language.

Time Date
See Clock ⇨ 99.

Radio settings
See description for Infotainment system in the Infotainment system manual.

Phone settings
See description for Infotainment system in the Infotainment system manual.

Vehicle settings

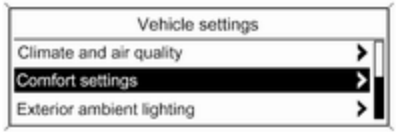

- **Climate and air quality**

  Auto fan speed: Modifies the fan regulation. Changed setting will be active after switching the ignition off and on again.

  Climate control mode: Activates or deactivates the cooling every time the ignition is switched on or uses the last chosen setting.

Auto rear demist: Activates automatically rear heated window.

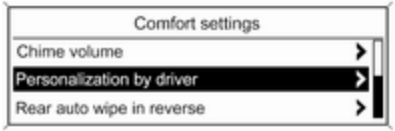

20340

- **Comfort settings**

  Chime volume: Changes the volume of warning chimes.

  Personalization by driver: Activates or deactivates the personalisation function.

  Rear auto wipe in reverse: Activates or deactivates automatic switching on of the rear window wiper when reverse gear is engaged.

- **Park assist / Collision detection**

  Park assist: Activates or deactivates the ultrasonic parking assist.

  Auto collision preparation: Changes or activates/deactivates settings for adaptive cruise control, forward collision alert and collision imminent braking system.

  Side blind zone alert: Changes the settings for the side blind spot alert system.

- **Exterior ambient lighting**

  Duration upon exit of vehicle: Activates or deactivates and changes the duration of exit lighting.

  Exterior lighting by unlocking: Activates or deactivates the welcome lighting.

- **Power door locks**

  Auto door lock: Activates or deactivates the automatic door unlocking function after switching off ignition. Activates or deactivates the automatic door locking function after driving-off.

  Stop door lock if door open: Activates or deactivates the automatic door locking function while a door is open.

  Delayed door lock: Activates or deactivates the delayed door locking function.

- **Remote locking, unlocking, starting**

  Remote unlock feedback: Activates or deactivates the hazard warning flasher feedback whilst unlocking.

  Remote door unlock: Changes the configuration to unlock only the driver's door or the whole vehicle whilst unlocking.

  Auto relock doors: Activates or deactivates the automatic relock function after unlocking without opening the vehicle.

- **Restore factory settings**

  Restore factory settings: Reset all settings to the default settings.

Personal settings in the Colour-Info-Display

Press the **CONFIG** button. The menu **Settings** is displayed.

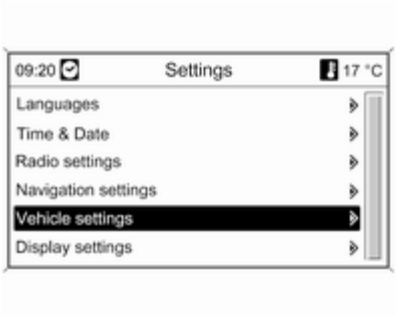

The following settings can be selected by turning and pressing the multifunction knob:

- **Sport mode settings**
- **Languages**
- **Time & Date**
- **Radio settings**
- **Phone settings**
- **Navigation settings**
- **Vehicle settings**
- **Display settings**

In the corresponding submenus the following settings can be changed:

Sport mode settings

The driver can select the functions which will be activated in Sport mode ⇨ 169.

- **Sport suspension**: Damping becomes harder.
- **Sport powertrain performance**: Accelerator pedal and gear change characteristics become more responsive.
- **Sport steering**: Steering support is reduced.
- **Swap backlight colour main instr.**: Change of instrument illumination colour.

Languages

Selection of the desired language.

Time & Date

See Clock ⇨ 99.

Radio settings

See description for Infotainment system in the Infotainment system manual.

Phone settings
See description for Infotainment system in the Infotainment system manual.

Navigation settings
See description for Infotainment system in the Infotainment system manual.

Vehicle settings

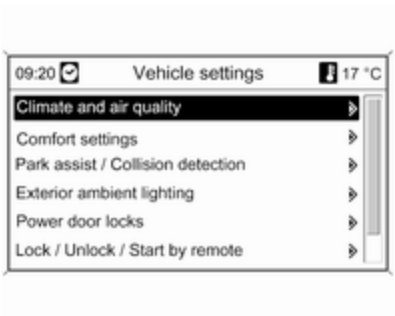

- **Climate and air quality**

  Auto fan speed: Modifies the fan regulation. Changed setting will be active after switching the ignition off and on again.

  Climate control mode: Activates or deactivates cooling when switching on the ignition or uses the last chosen setting.

  Auto rear demist: Activates automatically the rear heated window.

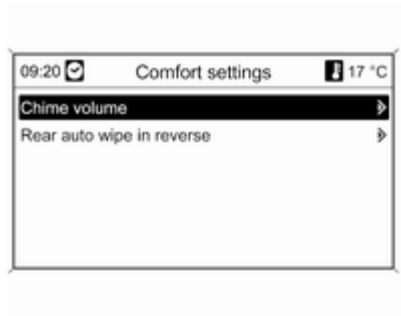

- **Comfort settings**

  Chime volume: Changes the volume of warning chimes.

  Rear auto wipe in reverse: Activates or deactivates automatic switching on of the rear window wiper when reverse gear is engaged.

- **Park assist / Collision detection**

  Park assist: Activates or deactivates the ultrasonic parking assist.

  Auto collision preparation: Changes or activates/deactivates settings for adaptive cruise control, forward collision alert and collision imminent braking system.

  Side blind zone alert: Changes the settings for the side blind spot alert system.

- **Exterior ambient lighting**

  Duration upon exit of vehicle: Activates or deactivates and changes the duration of exit lighting.

  Exterior lighting by unlocking: Activates or deactivates the welcome lighting.

- **Power door locks**

  Auto door lock: Activates or deactivates the automatic door unlocking function after switching off ignition. Activates or deactivates the automatic door locking function after driving-off.

Prevent doorlock while door open: Activates or deactivates the automatic door locking function while a door is open.

- **Lock / Unlock / Start by remote**

  Remote unlock feedback: Activates or deactivates the hazard warning flasher feedback whilst unlocking.

  Remote door unlock: Changes the configuration to unlock only the driver's door or the whole vehicle whilst unlocking.

  Auto relock doors: Activates or deactivates the automatic relock function after unlocking without opening the vehicle.

- **Restore factory settings**

  Restore factory settings: Resets all settings to the default settings.

Display settings

Selectable display settings:

- **Day mode**: Optimisation for daylight conditions.
- **Night mode**: Optimisation for darkness.
- **Automatic mode**: The display changes mode when the vehicle lights are switched on/off.
- **Rear view camera**: Changes the settings for the rear view camera.
- **Picture frame**: See description for Infotainment system in the Infotainment system manual.

Lighting

Exterior lighting 133
Interior lighting 142
Lighting features 143

Exterior lighting

Light switch

Turn light switch:

0 = lights off
⇛⇚ = sidelights
≣D = headlights

Control indicator ⇛⇚ ⇨ 112.

Light switch with Automatic light control

Turn light switch:

AUTO = automatic light control: Headlights are switched on and off automatically depending on external lighting conditions.
⏻ = activation or deactivation of the automatic light control. Switch turns back to **AUTO**.
⇛⇚ = sidelights
≣D = headlights

In the Driver Information Centre with Uplevel-Display or Uplevel-Combi-Display, the current status of the automatic light control is displayed.

When switching on the ignition, automatic light control is active.

When headlights are on, lights up. Control indicator ⇨ 112.

Tail lights

Tail lights are illuminated together with headlights and sidelights.

Automatic light control

When the automatic light control function is switched on and the engine is running, the system switches between daytime running light and headlights automatically depending on the lighting conditions and information given by the rain sensor system.

Daytime running light

Daytime running light increases visibility of the vehicle during daylight.

Automatic headlight activation

During poor lighting conditions the headlights are switched on.

Furthermore the headlights are switched on if the windscreen wipers have been activated for several wipes.

Tunnel detection

When a tunnel is entered the headlights are switched on without any delay.

Adaptive forward lighting ⇨ 136.

High beam

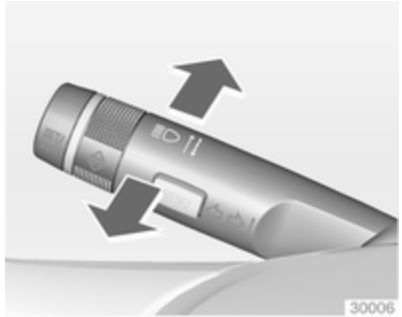

To switch from low to high beam, push lever.

To switch to low beam, push lever again or pull.

High beam assist

This feature allows high beam as main driving light by night and when vehicle speed is faster than 40 km/h.

It switches to low beam when:

- a sensor detects the lights of oncoming or preceding vehicles
- the vehicle speed is slower than 20 km/h
- it is foggy or snowy
- driving in urban areas

If there are no restrictions detected, the system switches back to high beam.

Activation

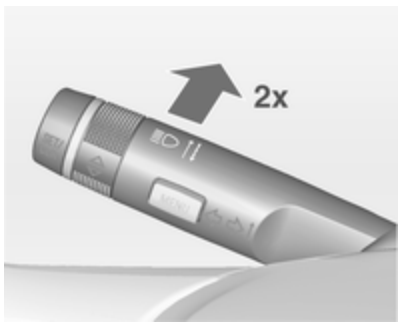

The high beam assist is activated by pushing the indicator lever twice with a speed above 40 km/h.

The green control indicator illuminates continuously when the assist is activated, the blue one illuminates when high beam is on.

Control indicator ⇨ 112.

Deactivation

Push indicator lever once. It is also deactivated when front fog lights are switched on.

If a headlight flash is activated when the high beam is on, the high beam assist will be deactivated.

If a headlight flash is activated when the high beam is off, the high beam assist will stay activated.

The latest setting of the high beam assist will remain after the ignition is switched on again.

Headlight flash

To activate the headlight flash, pull lever.

Headlight range adjustment

Manual headlight range adjustment

To adapt headlight range to the vehicle load to prevent dazzling: turn thumb wheel to required position.

0 = front seats occupied
1 = all seats occupied
2 = all seats occupied and load compartment laden
3 = driver's seat occupied and load compartment laden.

Dynamic automatic headlight levelling ⇨ 136.

Headlights when driving abroad

The asymmetrical headlight beam extends visibility at the edge of the road at the passenger side.

However, when driving in countries where traffic drives on the opposite side of the road, adjust the headlights to prevent dazzling of oncoming traffic.

Vehicles with halogen headlight system

The headlights do not have to be adjusted.

Vehicles with Xenon headlight system

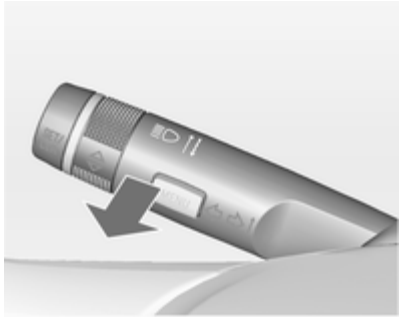

1. Key in ignition switch.
2. Pull turn signal lever and hold (headlight flash).
3. Switch on ignition.
4. After approx. 5 seconds the control indicator ⚠ starts flashing and an acoustic signal sounds.

Control indicator ⚠ ⇨ 113.

Every time the ignition is switched on, ⚠ flashes as a reminder for approx. 4 seconds.

For deactivation operate the same procedure as described above. ⚠ will not flash when function is deactivated.

Adaptive forward lighting

The Adaptive forward lighting functions are only available with Bi-Xenon headlights. Light range, light distribution and intensity of light are variably triggered depending on the light conditions, weather and road type.

With the light switch in position **AUTO** all lighting functions are available.

The following functions are available also with light switch in position ≡D:

- Dynamic curve lighting
- Corner lighting
- Reversing function
- Dynamic automatic headlight levelling

Playstreet lighting

Activated automatically at low speed up to approx. 30 km/h. The light beam is turned at an angle of 8° to the roadside.

Town lighting

Activated automatically at a speed range between approx. 40 and 55 km/h and when street lights are detected by the light sensor. The light range is reduced by an extended light distribution.

Country lighting

Activated automatically at a speed range between approx. 55 and 115 km/h. The beam of light and the brightness is different between the left and the right side.

Motorway lighting

Activated automatically at a speed above approx. 115 km/h and minimal steering movements. It switches on after a delay or directly when the vehicle is powerfully accelerated. The light beam is longer and brighter.

Adverse weather lighting

Activated automatically up to a speed of approx. 70 km/h, when the rain sensor recognises condensation or the wiper operates continuously. The range, distribution and light intensity is regulated variably depending on visibility.

Dynamic curve lighting

The light beam pivots based on steering wheel angle and speed, improving lighting in curves.

Control indicator ⇨ 113.

Corner lighting

On tight bends or when turning off, depending on the steering angle or the turn signal light, an additional left or right reflector is switched on which illuminates the road at an right angle to the direction of travel. It is activated up to a speed of 40 km/h.

Control indicator ⇨ 113.

Reversing function

If the headlights are on and reverse gear is engaged, both corner lights are switched on. They remain illuminated for 20 seconds after disengaging reverse gear or until driving faster than 17 km/h in a forward gear.

High beam assist

This feature allows high beam as main driving light by night and when vehicle speed is faster than 40 km/h.

It switches to low beam when:

- the camera in the windscreen detects the lights of oncoming or preceding vehicles
- the vehicle speed is slower than 20 km/h
- it is foggy or snowy
- driving in urban areas

If there are no restrictions detected, the system switches back to high beam.

Activation

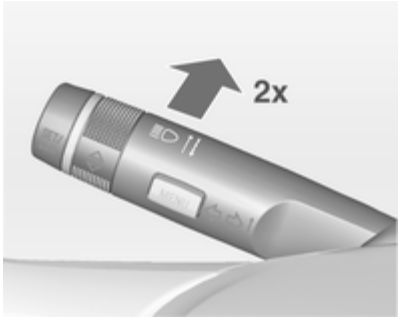

The high beam assist is activated by pushing the indicator lever twice with a speed above 40 km/h.

The green control indicator ≣D illuminates continuously when the assist is activated, the blue one ≣D illuminates when high beam is on.

Control indicator ≣D ⇨ 112.

Deactivation

Push indicator lever once. It is also deactivated when front fog lights are switched on.

If a headlight flash is activated when the high beam is on, the high beam assist will be deactivated.

If a headlight flash is activated when the high beam is off, the high beam assist will stay activated.

High beam assist is always active after the ignition is switched on.

Intelligent light ranging with automatic high beam activation

Intelligent light ranging uses the properties of Bi-Xenon headlights to extend the light range of the low beams by up to 400 metres and additionally activates automatic high beam without dazzling or disturbing oncoming or preceding traffic.

High beam is deactivated and the low beam light range will be reduced to avoid dazzling when the following restrictions are detected by the front camera in the windscreen:

- a preceding vehicle is recognised,
- an oncoming vehicle is recognised,
- urban areas are entered,
- it is foggy or snowy.

If there are no restrictions detected, the system switches back to high beam.

When the system is active, the front camera monitors the area ahead of the vehicle and ensures an optimum light distribution for maximum driver vision during almost all conditions

Intelligent light ranging with automatic high beam activation therefore reduces the difference between conventional low and high beam without drastic changes in light-range, distribution and intensity.

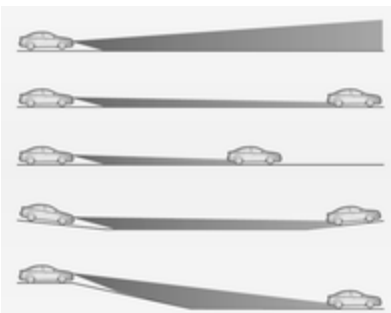

A special topographical evaluation function detects preceding vehicles on hills or slopes by recognising the rear light moving ahead. The system adjusts the height of the light range to ensure optimum illumination on the road ahead without dazzling.

Activation

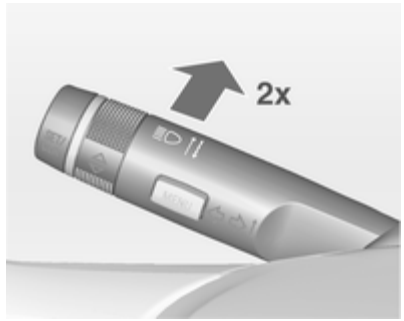

Intelligent light ranging and automatic high beam activation are switched on together by pushing the indicator lever twice. They can be switched on with ignition on.

Automatic high beam activation operates at a speed above 40 km/h and deactivates below 20 km/h. Intelligent light ranging operates above 55 km/h.

The green control indicator illuminates continuously when the function is activated, the blue one illuminates when high beam switches on automatically.

Deactivation

Push indicator lever once. It is also deactivated when front fog lights are switched on.

Dynamic automatic headlight levelling

To prevent oncoming traffic from dazzle, headlight levelling is automatically adjusted based on inclination information measured by front and rear axle, acceleration or deceleration and vehicle speed.

Fault in Adaptive forward lighting system

When the system detects a failure in the Adaptive forward lighting system, the system moves to a preset position to avoid dazzling of oncoming traffic. If this is not possible, the affected headlight will be automatically switched off. In any case, one headlight will stay on. A warning is displayed in the Driver Information Centre.

Hazard warning flashers

Operated with the button.

In the event of an accident with airbag deployment the hazard warning flashers are activated automatically.

Turn and lane-change signals

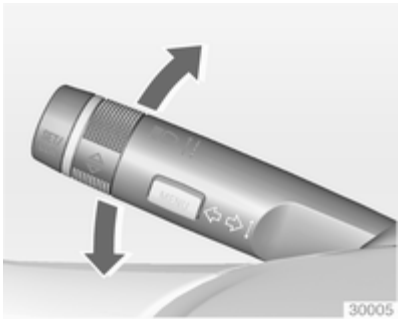

lever up = right turn signal
lever down = left turn signal

If the lever is moved past the resistance point, the turn signal is switched on constantly. When the steering wheel moves back, the turn signal is automatically deactivated.

For three flashes, e.g. when changing lanes, press the lever until resistance is felt and then release.

When a trailer is connected, turn signal flashes six times when pressing the lever until resistance is felt and then releasing.

Move the lever to the resistance point and hold for longer indication.

Switch the turn signal off manually by moving the lever to its original position.

Front fog lights

Operated with the button.

Light switch in position **AUTO**: switching on front fog lights will switch headlights on automatically.

Rear fog lights

Operated with the button.

Light switch in position **AUTO**: switching on rear fog light will switch headlights on automatically.

Light switch in position : rear fog light can only be switched on with front fog lights.

The vehicle rear fog light is deactivated when towing.

Parking lights

When the vehicle is parked, the parking lights on one side can be activated:

1. Switch off ignition.
2. Move turn signal lever all the way up (right parking lights) or down (left parking lights).

Confirmed by a signal and the corresponding turn signal control indicator.

Reversing lights

The reversing light comes on when the ignition is on and reverse gear is selected.

Misted light covers

The inside of the light housing may mist up briefly in poor, wet and cold weather conditions, in heavy rain or after washing. The mist disappears quickly by itself; to help switch on the headlights.

Interior lighting

Instrument panel illumination control

Brightness of the following lights can be adjusted when the exterior lights are on:

- Instrument panel illumination
- Info-Display
- Illuminated switches and operation elements.

Turn thumb wheel and hold until the desired brightness is obtained.

On vehicles with light sensor, the brightness can only be adjusted when the exterior lights are on and the light sensor detects night conditions.

Interior lights

During entry and exit of the vehicle, the front and rear courtesy lights automatically switch on and then off after a delay.

Note
In the event of an accident with airbag deployment the courtesy lights are turned on automatically.

Front courtesy light

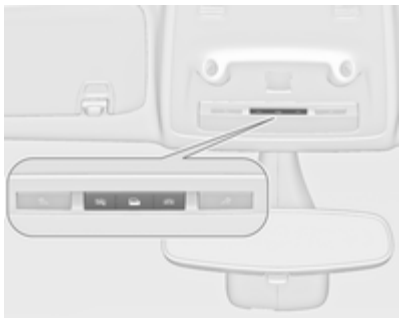

Operate rocker switch:

	=	automatic switching on and off.
press	=	on.
press	=	off.

Rear courtesy lights

Illuminate in conjunction with the front courtesy light depending on rocker switch position.

Reading lights

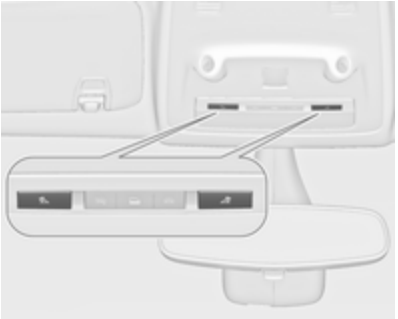

Operated with and buttons in front and rear courtesy lights.

Sunvisor lights

Illuminates when the cover is opened.

Lighting features

Centre console lighting

Spotlight incorporated in the interior lighting comes on when headlights are switched on.

Entry lighting

Welcome lighting

Headlights, tail lights, reversing lights, number plate lights, instrument panel light, interior lights, light pipes in doors and FlexConsole and puddle lights are switched on for a short time by unlocking the vehicle with the radio remote control. This function works only in the dark and facilitates locating the vehicle.

The lighting switches off immediately when the ignition key is turned to position **1** ⇨ 155.

Activation or deactivation of this function can be changed in the menu **Settings** in the Info-Display. Vehicle personalisation ⇨ 127.

The settings can be saved for the key being used ⇨ 23.

The following lights will additionally switch on when the driver's door is opened:

- All switches
- Driver Information Centre
- Door pocket lights
- Light pipes in doors and FlexConsole

Exit lighting

The following lights switch on if the key is removed from the ignition switch:

- Interior lights
- Instrument panel light (only when it is dark)
- Light pipes in doors and FlexConsole
- Puddle lights

They will switch off automatically after a delay and will be activated again if the driver's door is opened.

Headlights, tail lights, reversing lights and number plate lights illuminate the surrounding area for an adjustable time after leaving the vehicle.

Switching on

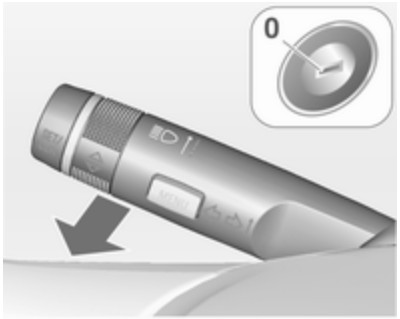

1. Switch off ignition.
2. Remove ignition key.
3. Open driver's door.
4. Pull turn signal lever.
5. Close driver's door.

If the driver's door is not closed the lights switch off after two minutes.

Exit lighting is switched off immediately if the turn signal lever is pulled while the driver's door is open.

Activation, deactivation and duration of this function can be changed in the menu **Settings** in the Info-Display. Vehicle personalisation ⇨ 127.

The settings can be saved for the key being used ⇨ 23.

Battery discharge protection

To prevent discharge of the battery when the ignition is switched off, some interior lights are switched off automatically after some time.

Climate control

Climate control systems 145
Air vents 151
Maintenance 152

Climate control systems

Heating and ventilation system

Controls for:

- Temperature
- Air distribution
- Fan speed
- Demisting and defrosting

Heated rear window ⇨ 34.

Temperature

red = warm
blue = cold

Heating will not be fully effective until the engine has reached normal operating temperature.

Air distribution

= to windscreen and front door windows
= to head area via adjustable air vents
= to foot well

All combinations are possible.

Fan speed

Adjust the air flow by switching the fan to the desired speed.

Demisting and defrosting

- Press button : fan automatically switches to higher speed, the air distribution is directed towards the windscreen.
- Set temperature control to warmest level.
- Switch on heated rear window .
- Open side air vents as required and direct them towards the door windows.

Air conditioning system

In addition to the heating and ventilation system, the air conditioning system has controls for:

❄ = cooling
= air recirculation

Heated seats ⇨ 43, Heated steering wheel ⇨ 95.

Cooling ❄

Operated with the ❄ button and is functional only when the engine and fan are running.

The air conditioning system cools and dehumidifies (dries) as soon as the outside temperature is slightly above the freezing point. Therefore condensation may form and drip from under the vehicle.

If no cooling or drying is required, switch the cooling system off to save fuel. When the cooling system is switched off, no engine restart will be requested by the climate control system during an Autostop.

Air recirculation system

Operated with the button.

⚠ Warning

The exchange of fresh air is reduced in air recirculation mode. In operation without cooling the air humidity increases, so the windows may mist up from inside. The quality of the passenger compartment air deteriorates, which may cause the vehicle occupants to feel drowsy.

In warm and very humid ambient air conditions, the windscreen might mist up from outside, when cold air is directed to it. If windscreen mists up from outside, activate windscreen wiper and deactivate .

Maximum cooling

Briefly open the windows so that hot air can disperse quickly.

- Cooling ❄ on.
- Air recirculation system on.
- Press air distribution switch .
- Set temperature control to coldest level.
- Set fan speed to highest level.
- Open all vents.

Demisting and defrosting the windows

- Press button : fan automatically switches to higher speed, the air distribution is directed towards the windscreen.
- Switch cooling on.
- Set temperature control to warmest level.
- Switch on heated rear window .
- Open side air vents as required and direct them towards the door windows.

Note

If the button is pressed while the engine is running, an Autostop will be inhibited until the button is pressed again.

If the button is pressed while the engine is in an Autostop, the engine will restart automatically.

Electronic climate control system

The dual zone climate control allows different climatisation temperatures for driver and front passenger side.

Controls for:

- Temperature on driver side
- Air distribution
- Fan speed
- Temperature on front passenger side

	=	cooling
AUTO	=	automatic mode
	=	manual air recirculation
	=	demisting and defrosting

Heated rear window ⇨ 34, Heated seats ⇨ 43, Heated steering wheel ⇨ 95.

The preselected temperature is automatically regulated. In the automatic mode the fan speed and air distribution automatically regulate the air flow.

The system can be manually adapted via the use of air distribution and air flow controls.

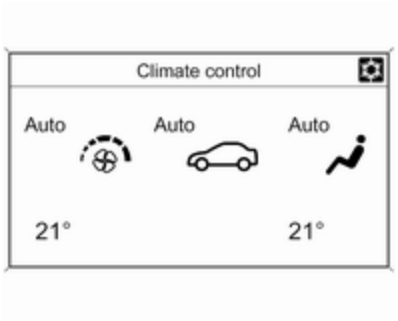

Each change of settings is shown in the Info-Display for a few seconds.

The electronic climate control system is only fully operational when the engine is running.

Automatic mode AUTO

Basic setting for maximum comfort:

- Press **AUTO** button, the air distribution and fan speed are regulated automatically.
- Open all air vents.
- Press ❄ to switch on optimal cooling and demisting.
- Set the preselected temperatures for driver and front passenger using the left and right rotary knobs to 22 °C.

The fan speed regulation in automatic mode can be changed in the menu **Settings**.

Vehicle personalisation ⇨ 127.

All air vents are actuated automatically in automatic mode. The air vents should therefore always be open.

Temperature preselection

Temperatures can be set to a desired value between 16 °C and 28 °C.

If the minimum temperature is set, the climate control system runs at maximum cooling, if cooling ❄ is switched on.

If the maximum temperature is set, the climate control system runs at maximum heating.

Note
If the temperature will be reduced for climate comfort reasons, an Autostop can be inhibited or the engine will restart automatically, when cooling is switched on.

Stop-start system ⇨ 157.

Demisting and defrosting the windows

- Press button.
- Press cooling button ❄.
- Temperature and air distribution are set automatically and the fan runs at high speed.
- Switch on heated rear window.
- To return to previous mode: press button, to return to automatic mode: press button **AUTO**.

Setting of automatic rear window heating can be changed in the menu **Settings** in the Info-Display. Vehicle personalisation ⇨ 127.

Note
If the button is pressed while the engine is running, an Autostop will be inhibited until the button is pressed again.

If the button is pressed while the engine is in an Autostop, the engine will restart automatically.

Manual settings

Climate control system settings can be changed by activating the buttons and rotary knobs as follows.
Changing a setting will deactivate the automatic mode.

Fan speed

Press lower button to decrease or upper button to increase fan speed as shown in the illustration. The fan speed is indicated by the number of segments in the display.

Pressing the lower button longer: fan and cooling are switched off.

Pressing the upper button longer: the fan runs at maximum speed.

To return to automatic mode: Press **AUTO** button.

Air distribution

Press appropriate button for desired adjustment. Activation is indicated by the LED in the button.

- = to windscreen and front door windows.
- = to head area via adjustable air vents.
- = to foot well.

All combinations are possible.

Return to automatic air distribution: Deactivate corresponding setting or press button **AUTO**.

Cooling

Activate or deactivate with the button.

The air conditioning system cools and dehumidifies (dries) when outside temperature is above a specific level. Therefore condensation may form and drip from under the vehicle.

If no cooling or drying is required, switch the cooling system off to save fuel. When the cooling system is switched off, no engine restart will be requested by the climate control system during an Autostop. Exception: defrost system is activated and outside temperature above 0° C requests a restart.

The display will indicate **ACON** when cooling is activated or **ACOFF** when the cooling is deactivated.

Activation or deactivation of cooling operation after engine start can be changed in the menu **Settings** in the Info-Display. Vehicle personalisation ⇨ 127.

Air recirculation mode

⚠ Warning

The exchange of fresh air is reduced in air recirculation mode. In operation without cooling the air humidity increases, so the windows may mist up from inside. The quality of the passenger compartment air deteriorates, which may cause the vehicle occupants to feel drowsy.

In warm and very humid ambient air conditions, the windscreen might mist up from outside, when cold air is directed to it. If windscreen mists up from outside, activate windscreen wiper and deactivate .

Press button once to activate the manual air recirculation mode.

Activation is indicated by the LED in the button.

Basic settings

Some settings can be changed in the menu **Settings** in the Info-Display. Vehicle personalisation ⇨ 127.

Auxiliary heater

Air heater

Quickheat is an electric auxiliary air heater which automatically warms up the passenger compartment more quickly.

Air vents

Adjustable air vents

At least one air vent must be open while the cooling is on.

To open the vent, turn the adjuster wheel to I. Adjust the air amount at the vent outlet by turning the adjuster wheel.

Direct the flow of air by tilting and swivelling the slats.

To close the vent, turn the adjuster wheel to **0**.

Air vents for rear passenger are left and right side behind the front seats.

⚠Warning
Do not attach any objects to the slats of the air vents. Risk of damage and injury in case of an accident.

Fixed air vents

Additional air vents are located beneath the windscreen and door windows and in the foot wells.

Maintenance

Air intake

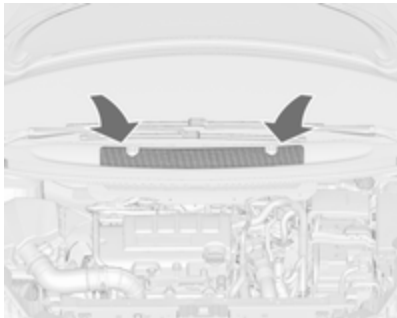

The air intake in front of the windscreen in the engine compartment must be kept clear to allow air intake. Remove any leaves, dirt or snow.

Pollen filter

The pollen filter cleans dust, soot, pollen and spores from the air entering the vehicle through the air intake.

Air conditioning regular operation

In order to ensure continuously efficient performance, cooling must be operated for a few minutes once a month, irrespective of the weather and time of year. Operation with cooling is not possible when the outside temperature is too low.

Service

For optimal cooling performance, it is recommended to annually check the climate control system, starting three years after initial vehicle registration, including:

- Functionality and pressure test
- Heating functionality
- Leakage check
- Check of drive belts
- Cleaning of condenser and evaporator drainage
- Performance check

Driving and operating

Driving hints 154
Starting and operating 155
Engine exhaust 159
Automatic transmission 161
Manual transmission 164
Brakes 165
Ride control systems 168
Driver assistance systems 171
Fuel 201
Towing 209

Driving hints

Control of the vehicle

Never coast with engine not running (except during Autostop)

Many systems will not function in this situation (e.g. brake servo unit, power steering). Driving in this manner is a danger to yourself and others. All systems function during an Autostop, but there will be a controlled reduction in power steering assist and vehicle speed is reduced.

Stop-start system ⇨ 157.

Idle boost

If charging of the battery is required due to battery condition, the power output of the generator has to be increased. This will be achieved by an idle boost which may be audible.

On vehicles with Uplevel-Display or Uplevel-Combi-Display, a message appears in the Driver Information Centre.

Pedals

To ensure the pedal travel is uninhibited, there must be no mats in the area of the pedals.

Starting and operating

New vehicle running-in

Do not brake unnecessarily hard for the first few journeys.

During the first drive, smoke may occur because of wax and oil evaporating off the exhaust system. Park the vehicle in the open for a while after the first drive and avoid inhaling the fumes.

During the running-in period, fuel and engine oil consumption may be higher and the cleaning process of the diesel particle filter may take place more often. Autostop may be inhibited to allow for charging of the battery.

Diesel particle filter ⇨ 159.

Ignition switch positions

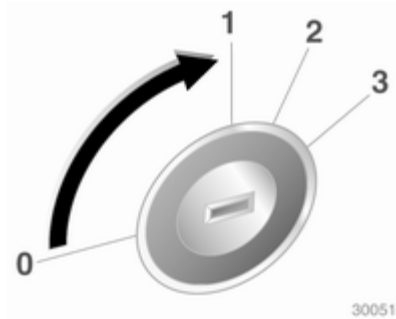

0 = Ignition off
1 = Steering wheel lock released, ignition off
2 = Ignition on, for diesel engine: preheating
3 = Starting

Retained power off

The following electronic systems can work until the driver's door is opened or at the latest for 10 minutes after the ignition is switched off:

- Power windows
- Power outlets

Power to the Infotainment system will continue to operate for 30 minutes or until the key is removed from the ignition switch, regardless of whether any door will be opened.

Starting the engine

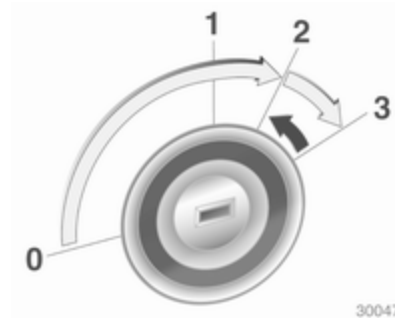

Manual transmission: operate clutch.

Automatic transmission: operate brake and move the selector lever to **P** or **N**.

Do not operate the accelerator pedal.

Diesel engine: turn the key to position **2** for preheating until control indicator ➰ extinguishes.

Turn the key briefly to position **3** and release: an automatic procedure operates the starter with a short delay as long as the engine is running, see Automatic Starter Control.

Before restarting or to switch off the engine, turn the key back to position **0**.

During an Autostop, the engine can be started by depressing the clutch pedal.

Starting the vehicle at low temperatures

The start of the engine without additional heaters is possible down to -25 °C for diesel engines and -30 °C for petrol engines. Required is an engine oil with the correct viscosity, the correct fuel, performed services and a sufficiently charged battery. With temperatures below -30 °C the automatic transmission need a warming phase of approx. 5 minutes. The selector lever must be in position **P**.

Automatic Starter Control

This function controls the engine starting procedure. The driver does not have to hold the key in position **3**. Once applied, the system will go on starting automatically until the engine is running. Because of the checking procedure, the engine starts running after a short delay.

Possible reasons for a non-starting engine:

- Clutch pedal not operated (manual transmission)
- Brake pedal not operated or selector lever not in **P** or **N** (automatic transmission)
- Timeout occurred

Turbo engine warm-up

Upon start-up, engine available torque may be limited for a short time, especially when the engine temperature is cold. The limitation is to allow the lubrication system to fully protect the engine.

Overrun cut-off

The fuel supply is automatically cut off during overrun, i.e. when the vehicle is driven with a gear engaged but accelerator is released.

Stop-start system

The stop-start system helps to save fuel and to reduce the exhaust emissions. When conditions allow, it switches off the engine as soon as the vehicle is at a low speed or at a standstill, e.g. at a traffic light or in a traffic jam. It starts the engine automatically as soon as the clutch is depressed. A battery sensor ensures that an Autostop is only performed if the battery is sufficiently charged for a restart.

Activation

The stop-start system is available as soon as the engine is started, the vehicle starts-off and the conditions as stated below in this section are fulfilled.

Deactivation

Deactivate the stop-start system manually by pressing the **eco** button. Deactivation is indicated by the LED in the button extinguishing.

Autostop

If the vehicle is at a low speed or at a standstill, activate an Autostop as follows:

- Depress the clutch pedal
- set the lever to neutral
- release the clutch pedal

The engine will be switched off while the ignition stays on.

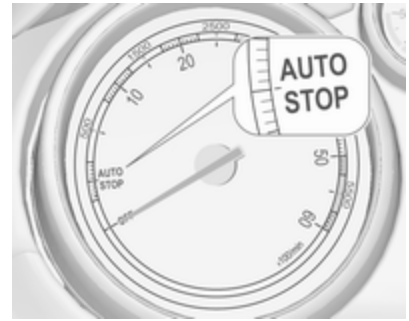

An Autostop is indicated by the needle at the **AUTOSTOP** position in the tachometer.

During an Autostop, the heating and brake performance will be maintained.

Caution
The steering assist can be reduced during an Autostop.

Conditions for an Autostop

The stop-start system checks if each of the following conditions is fulfilled.

- The stop-start system is not manually deactivated
- the bonnet is fully closed
- the driver's door is closed or the driver's seat belt is fastened
- the battery is sufficiently charged and in good condition
- the engine is warmed up
- the engine coolant temperature is not too high
- the engine exhaust temperature is not too high, e.g. after driving with high engine load
- the ambient temperature is above -5° C
- the climate control system allows an Autostop
- the brake vacuum is sufficient
- the self-cleaning function of the diesel particle filter is not active
- the vehicle was driven at least at walking speed since the last Autostop

Otherwise an Autostop will be inhibited.

Certain settings of the climate control system may inhibit an Autostop. See "**Climate control**" chapter for more details ⇨ 147.

Immediately after motorway driving an Autostop may be inhibited.

New vehicle running-in ⇨ 155.

Battery discharge protection

To ensure reliable engine restarts, several battery discharge protection features are implemented as part of the stop-start system.

Power saving measures

During an Autostop, several electrical features such as auxiliary electric heater or rear window heating are disabled or switched into a power-saving mode. The fan speed of the climate control system is reduced to save power.

Restart of the engine by the driver

Depress the clutch pedal to restart the engine.

The engine start is indicated by the needle at the idle speed position in the tachometer.

If the selector lever is shifted out of neutral before depressing the clutch first, control indicator illuminates or is shown as a symbol in the Driver Information Centre.

Control indicator ⇨ 109.

Restart of the engine by the stop-start system

The selector lever must be in neutral to enable an automatic restart.

If one of the following conditions occurs during an Autostop, the engine will be restarted automatically by the stop-start system.

- The stop-start system is manually deactivated
- the bonnet is opened
- the driver's seat belt is unfastened and the driver's door is opened
- the engine temperature is too low
- the charge level of the battery is below a defined level

- the brake vacuum is not sufficient
- the vehicle is driven at least at walking speed
- the climate control system requests an engine start
- the air conditioning is manually switched on

If the bonnet is not fully closed, a warning message is displayed in the Driver Information Centre.

If an electrical accessory, e.g. a portable CD player, is connected to the power outlet, a brief power drop during restart might be noticeable.

Parking

- Do not park the vehicle on an easily ignitable surface. The high temperature of the exhaust system could ignite the surface.
- Always apply parking brake. Apply manual parking brake without pressing release button. Apply as firmly as possible on downhill or uphill slopes. Depress the foot brake at the same time to reduce operating force.

  Apply electrical parking brake by pulling switch Ⓟ for approx. one second. Control indicator Ⓟ must light up.
- Switch off the engine and ignition. Turn the steering wheel until the steering wheel lock engages.
- If the vehicle is on a level surface or uphill slope, engage first gear or set the selector lever to **P** before switching off the ignition. On an uphill slope, turn the front wheels away from the kerb.

  If the vehicle is on a downhill slope, engage reverse gear or set the selector lever to **P** before switching off the ignition. Turn the front wheels towards the kerb.
- Lock the vehicle and activate the anti-theft alarm system.

Note
In the event of an accident with airbag deployment, the engine is turned off automatically if the vehicle comes to a standstill within a certain time.

Engine exhaust

⚠ Danger

Engine exhaust gases contain poisonous carbon monoxide, which is colourless and odourless and could be fatal if inhaled.

If exhaust gases enter the interior of the vehicle, open the windows. Have the cause of the fault rectified by a workshop.

Avoid driving with an open load compartment, otherwise exhaust gases could enter the vehicle.

Diesel particle filter

The diesel particle filter system filters harmful soot particles out of the exhaust gases. The system includes a self-cleaning function that runs automatically during driving without any notification. The filter is cleaned by periodically burning off the soot particles at high temperature. This process takes place automatically under set driving conditions and may

take up to 25 minutes. Typically it needs between 7 and 12 minutes. Autostop is not available and fuel consumption may be higher during this period. The emission of smells and smoke during this process is normal.

Under certain driving conditions, e.g. short distances, the system cannot clean itself automatically.

If the cleaning of the filter is required and if previous driving conditions did not enable automatic cleaning, it will be indicated by control indicator . Simultaneously **Diesel partic. filter is full continue driving** or warning code 55 appears in the Driver Information Centre.

 illuminates when diesel particle filter is full. Start cleaning process as soon as possible.

 flashes when diesel particle filter has reached the maximum filling level. Start cleaning process immediately to avoid damage to the engine.

Cleaning process

To activate cleaning process, continue driving, keep engine speed above 2000 revolutions per minute. Shift down if necessary. Diesel particle filter cleaning is then started.

If illuminates additionally, cleaning is not possible, seek the assistance of a workshop.

Caution
If the cleaning process is interrupted, there is a risk of provoking severe engine damage.

Cleaning takes place quickest at high engine speeds and loads.

The control indicator extinguishes as soon as the self-cleaning operation is complete.

Catalytic converter

The catalytic converter reduces the amount of harmful substances in the exhaust gases.

Caution
Fuel grades other than those listed on pages ⇨ 201, ⇨ 265 could damage the catalytic converter or electronic components. Unburnt petrol will overheat and damage the catalytic converter. Therefore avoid excessive use of the starter, running the fuel tank dry and starting the engine by pushing or towing.

In the event of misfiring, uneven engine running, a reduction in engine performance or other unusual problems, have the cause of the fault

rectified by a workshop as soon as possible. In an emergency, driving can be continued for a short period, keeping vehicle speed and engine speed low.

Automatic transmission

The automatic transmission permits automatic gearshifting (automatic mode) or manual gearshifting (manual mode).

Transmission display

The mode or selected gear is shown in the transmission display.

Selector lever

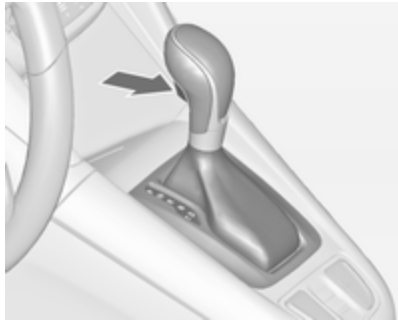

P = park position, wheels are locked, engage only when the vehicle is stationary and the parking brake is applied
R = reverse gear, engage only when the vehicle is stationary
N = neutral
D = automatic mode with all gears

The selector lever is locked in **P** and can only be moved when the ignition is on and the brake pedal is applied.

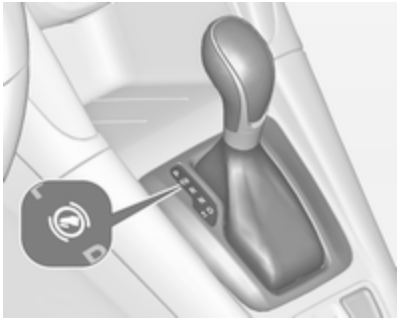

Without brake pedal applied, the control indicator ⊘ illuminates.

If the selector lever is not in **P** when the ignition is switched off, the control indicators ⊘ and **P** flash.

To engage **P** or **R**, press the release button.

The engine can only be started with the lever in position **P** or **N**. When position **N** is selected, press the brake pedal or apply the parking brake before starting.

Do not accelerate while engaging a gear. Never depress the accelerator pedal and brake pedal at the same time.

When a gear is engaged, the vehicle slowly begins to creep when the brake is released.

Engine braking

To utilise the engine braking effect, select a lower gear in good time when driving downhill, see manual mode.

Rocking the vehicle

Rocking the vehicle is only permissible if the vehicle is stuck in sand, mud or snow. Move the selector lever between **D** and **R** in a repeat pattern. Do not race the engine and avoid sudden acceleration.

Parking

Apply the parking brake and engage **P**.

The ignition key can only be removed when the selector lever is in position **P**.

Manual mode

Move selector lever out of position **D** towards the left and then forwards or backwards.

+ = Shift to a higher gear.

– = Shift to a lower gear.

If a higher gear is selected when vehicle speed is too low, or a lower gear when vehicle speed is too high, the shift is not executed. This can cause a message in the Driver-Info-Display.

In manual mode no automatic shifting to a higher gear takes place at high engine revolutions.

Electronic driving programmes

- Following a cold start, the operating temperature programme increases engine speed to quickly bring the catalytic converter to the required temperature.
- The automatic neutral shift function automatically shifts gear to idling when the vehicle is stopped with a forward gear engaged and the brake pedal is pressed.
- When SPORT mode is engaged, the vehicle shifts at higher engine speeds (unless cruise control is on). SPORT mode ⇨ 169.
- Special programmes automatically adapt the gearshift points when driving up inclines or down hills.
- When starting-off in snowy or icy conditions or on other slippery surfaces, the electronic transmission control selects a higher gear automatically.

Kickdown

If the accelerator pedal is pressed down completely in automatic mode, the transmission shifts to a lower gear depending on engine speed.

Fault

In the event of a fault, illuminates. Additionally a code number or a vehicle message is displayed in the Driver Information Centre. Vehicle messages ⇨ 120.

The transmission no longer shifts automatically. Continued travel is possible with manual shifting.

Only the highest gear is available. Depending on the fault, 2nd gear may also be available in manual mode. Shift only when vehicle is at a standstill.

Have the cause of the fault remedied by a workshop.

Interruption of power supply

In the event of an interruption of power supply, the selector lever cannot be moved out of the **P** position. The ignition key cannot be removed from the ignition switch.

If the battery is discharged, start the vehicle using jump leads ⇨ 250.

If the battery is not the cause of the fault, release the selector lever.

1. Apply the parking brake.

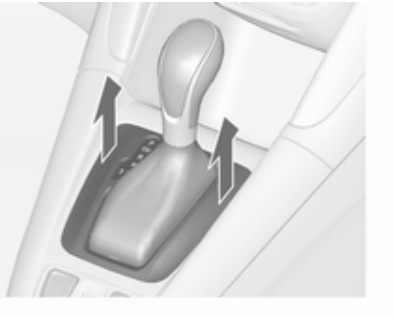

2. Release the selector lever trim from the centre console at the front, fold it upwards and rotate it to the left.

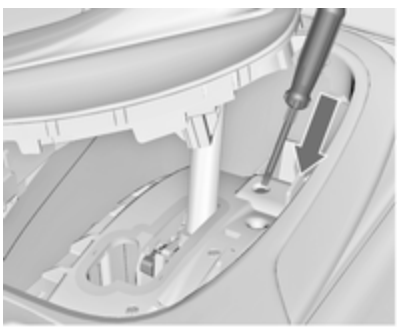

3. Insert a screwdriver into the opening as far as it will go and move the selector lever out of **P** or **N**. If **P** or **N** is engaged again, the selector lever will be locked in position again. Have the cause of the power supply interruption remedied by a workshop.
4. Mount the selector lever trim onto the centre console and refit.

Manual transmission

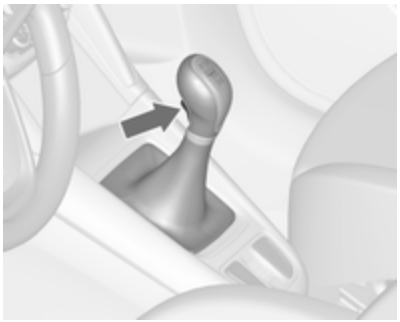

To engage reverse, with the vehicle stationary wait 3 seconds after depressing the clutch pedal and then press the release button on the selector lever and engage the gear.

If the gear does not engage, set the lever to neutral, release the clutch pedal and depress again; then repeat gear selection.

Do not grind the clutch unnecessarily.

When operating, depress the clutch pedal completely. Do not use the pedal as a foot rest.

Caution
It is not advisable to drive with the hand resting on the selector lever.

Brakes

The brake system comprises two independent brake circuits.

If a brake circuit fails, the vehicle can still be braked using the other brake circuit. However, braking effect is achieved only when the brake pedal is depressed firmly. Considerably more force is needed for this. The braking distance is extended. Seek the assistance of a workshop before continuing your journey.

When the engine is not running, the support of the brake servo unit disappears once the brake pedal has been depressed once or twice. Braking effect is not reduced, but braking requires significantly greater force. It is especially important to bear this in mind when being towed.

Control indicator BRAKE ⇨ 109.

Antilock brake system

Antilock brake system (ABS) prevents the wheels from locking.

ABS starts to regulate brake pressure as soon as a wheel shows a tendency to lock. The vehicle remains steerable, even during hard braking.

ABS control is made apparent through a pulse in the brake pedal and the noise of the regulation process.

For optimum braking, keep the brake pedal fully depressed throughout the braking process, despite the fact that the pedal is pulsating. Do not reduce the pressure on the pedal.

After starting off the system performs a self-test which may be audible.

Control indicator (ABS) ⇨ 110.

Adaptive brake light

During full braking, all three brake lights flash for the duration of ABS control.

Fault

⚠Warning

If there is a fault in the ABS, the wheels may be liable to lock due to braking that is heavier than normal. The advantages of ABS are no longer available. During hard braking, the vehicle can no longer be steered and may swerve.

Have the cause of the fault remedied by a workshop.

Parking brake

Manual parking brake

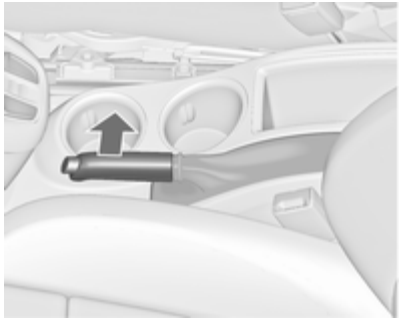

Always apply parking brake firmly without operating the release button, and apply as firmly as possible on a downhill or uphill slope.

To release the parking brake, pull the lever up slightly, press the release button and fully lower the lever.

To reduce the operating forces of the parking brake, depress the foot brake at the same time.

Control indicator (!) BRAKE ⇨ 109.

Electrical parking brake

Applying when vehicle is stationary

Pull switch Ⓟ for approx. one second, the electrical parking brake is applied automatically with an adequate force. For maximum force, e.g. parking with trailer or on inclines, pull switch Ⓟ twice.

The electrical parking brake is applied when control indicator Ⓟ illuminates ⇨ 109.

The electrical parking brake can always be activated, even if the ignition is off.

Do not operate electrical parking brake system too often with engine not running, as this will discharge the battery.

Before leaving the vehicle, check the electrical parking brake status. Control indicator Ⓟ ⇨ 109.

Releasing

Switch on ignition. Keep brake pedal depressed and then push switch Ⓟ.

Drive away function

Depressing clutch pedal (manual transmission) or engaging drive gear (automatic transmission) and then depressing the accelerator pedal releases the electrical parking brake automatically. This is not possible when the switch is pulled at the same time.

This function also helps driving away on inclines.

Aggressive drive-away may reduce lifetime of wear parts.

Dynamic braking when vehicle is moving

When the vehicle is moving and the switch Ⓟ is kept pulled, the electrical parking brake system will decelerate the vehicle, but will not apply statically.

As soon as the switch Ⓟ is released, dynamic braking will be stopped.

Fault

Failure mode of electrical parking brake is indicated by control indicator ⚠ and by a code number or a vehicle message which is displayed in the Driver Information Centre. Vehicle messages ⇨ 120.

Apply electrical parking brake: pull and hold the switch Ⓟ for more than 5 seconds. If control indicator Ⓟ illuminates, electrical parking brake is applied.

Release electrical parking brake: push and hold the switch Ⓟ for more than 2 seconds. If control indicator Ⓟ extinguishes, electrical parking brake is released.

Control indicator Ⓟ flashes: electrical parking brake is not fully applied or released. When continuously flashing, release electrical parking brake and retry applying.

Brake assist

If the brake pedal is depressed quickly and forcefully, maximum brake force is automatically applied (full braking).

Maintain steady pressure on the brake pedal for as long as full braking is required. Maximum brake force is automatically reduced when the brake pedal is released.

Hill start assist

The system helps prevent unintended movement when driving away on inclines.

When releasing the foot brake after stopping on an incline, the brakes remain on for a further two seconds. The brakes release automatically as soon as the vehicle begins to accelerate.

The hill start assist is not active during an Autostop.

Ride control systems

Traction Control system

The Traction Control system (TC) is a component of the Electronic Stability Control.

TC improves driving stability when necessary, regardless of the type of road surface or tyre grip, by preventing the drive wheels from spinning.

As soon as the drive wheels starts to spin, engine output is reduced and the wheel spinning the most is braked individually. This considerably improves the driving stability of the vehicle on slippery road surfaces.

TC is operational as soon as the control indicator extinguishes.

When TC is active flashes.

⚠ Warning

Do not let this special safety feature tempt you into taking risks when driving.

Adapt speed to the road conditions.

Control indicator ⇨ 111.

Deactivation

TC can be switched off when spinning of drive wheels is required: press button briefly.

Control indicator illuminates.

TC is reactivated by pressing the button again.

TC is also reactivated the next time the ignition is switched on.

Electronic Stability Control

Electronic Stability Control (ESC) improves driving stability when necessary, regardless of the type of road surface or tyre grip. It also prevents the drive wheels from spinning.

As soon as the vehicle starts to swerve (understeer/oversteer), engine output is reduced and the wheels are braked individually. This considerably improves the driving stability of the vehicle on slippery road surfaces.

ESC is operational as soon as the control indicator extinguishes.

When ESC is active flashes.

⚠ Warning

Do not let this special safety feature tempt you into taking risks when driving.

Adapt speed to the road conditions.

Control indicator ⇨ 111.

Deactivation

For very high-performance driving ESC can be deactivated: hold button depressed for approx. 7 seconds.

Control indicator illuminates.

ESC is reactivated by pressing the button again. If the TC system was previously disabled, both TC and ESC are reactivated.

ESC is also reactivated the next time the ignition is switched on.

Interactive driving system

Flex Ride

Flex Ride driving system allows the driver to select between three driving modes:

- SPORT mode: press button **SPORT**, LED illuminates.
- TOUR mode: press button **TOUR**, LED illuminates.
- Normal mode: both buttons **SPORT** and **TOUR** are not pressed, no LED illuminates.

Deactivate SPORT mode and TOUR mode by pressing corresponding button once more.

In each driving mode Flex Ride networks the following electronic systems:

- Continuous Damping Control.
- Accelerator Pedal Control.
- Steering Control.
- Automatic transmission.

SPORT mode

The settings of the systems are adapted to a sportier driving style:

- Damping of shock absorbers reacts more stiffly to provide better contact with the road surface.
- The engine reacts more quickly to the accelerator pedal.
- Steering support is reduced.
- Shift points of automatic transmission occur later.
- With SPORT mode activated, the illumination of main instruments changes from white to red.

TOUR mode

The settings of the systems are adapted to a comfort driving style:

- Damping of shock absorbers reacts more softly.
- Accelerator pedal reacts with standard settings.
- Steering support is in standard mode.
- Shift points of automatic transmission occur in a comfort mode.
- Illumination of main instruments is white.

Normal mode

All settings of the systems are adapted to standard values.

Drive mode control

Within each manual selected driving mode SPORT, TOUR or Normal, the Drive Mode Control (DMC) detects and analyses continuously the real driving characteristic, responses by the driver, and the active dynamic state of the vehicle. If necessary, the control unit of DMC automatically

changes the settings within the selected driving mode or, when recognising greater variations, the driving mode is changed for the length of variation.

If, for example, Normal mode is selected and DMC detects a sporty driving behaviour, DMC changes several settings of the Normal mode into sporty settings. The DMC changes to SPORT mode in case of very sporty driving behaviour.

If, for example, TOUR mode is selected and whilst driving on a winding road a sudden hard brake is necessary, DMC will detect the dynamic vehicle condition and changes the settings for suspension to SPORT mode to increase vehicle stability.

When the driving characteristic or the dynamic vehicle state returns to former state, DMC will change the settings to the preselected driving mode.

Personalised settings in the Sport mode

The driver can select the functions of the SPORT mode when **SPORT** button is pressed. These settings can be changed in the menu **Settings** in the Info-Display. Vehicle personalisation ⇨ 127.

Driver assistance systems

⚠Warning

Driver assistance systems are developed to support the driver and not to replace his attention.

The driver accepts full responsibility when driving the vehicle.

When using driver assistance systems, always take care regarding the current traffic situation.

Cruise control

The cruise control can store and maintain speeds of approx. 30 to 200 km/h. Deviations from the stored speeds may occur when driving uphill or downhill.

For safety reasons, the cruise control cannot be activated until the foot brake has been operated once. Activation in first gear is not possible.

Do not use the cruise control if it is not advisable to maintain a constant speed.

With automatic transmission, only activate cruise control in automatic mode.

Control indicator ⌚ ⇨ 113.

Switching on

Press button ⌚, control indicator ⌚ in instrument cluster illuminates white.

Activation

Accelerate to the desired speed and turn thumb wheel to **SET/-**, the current speed is stored and maintained. Control indicator ⌚ in instrument cluster illuminates green. Accelerator pedal can be released.

Vehicle speed can be increased by depressing the accelerator pedal. When the accelerator pedal is released, the previously stored speed is resumed.

Cruise control remains activated while gearshifting.

Increase speed

With cruise control active, hold thumb wheel turned to **RES/+** or briefly turn to **RES/+** repeatedly: speed increases continuously or in small increments.

Alternatively accelerate to the desired speed and store by turning to **SET/-**.

Reduce speed

With cruise control active, hold thumb wheel turned to **SET/-** or briefly turn to **SET/-** repeatedly: speed decreases continuously or in small increments.

Deactivation

Press button ⌚, control indicator ⌚ in instrument cluster illuminates white. Cruise control is deactivated. Last used set speed is stored in memory for later speed resume.

Automatic deactivation:

- vehicle speed below approx. 30 km/h,
- vehicle speed above approx. 200 km/h,
- the brake pedal is depressed,
- the clutch pedal is depressed for a few seconds,
- selector lever in **N**,
- engine speed in a very low range,
- the Traction Control system or Electronic Stability Control is operating.

Resume stored speed

Turn thumb wheel to **RES/+** at a speed above 30 km/h. The stored speed will be obtained.

Switching off

Press button, control indicator in instrument cluster extinguishes. The stored speed is deleted.

Pressing button for activating speed limiter or switching off the ignition also switches off cruise control and deletes the stored speed.

Speed limiter

The speed limiter prevents the vehicle exceeding a preset maximum speed.

The maximum speed can be set at a speed above 25 km/h.

The driver can only accelerate up to the preset speed. Deviations from the limited speed may occur when driving downhill.

The preset speed limit is displayed in the top line of the Driver Information Centre when the system is active.

Activation

Press button . If cruise control or adaptive cruise control has been activated before, it is switched off when speed limiter is activated and the control indicator extinguishes.

Set speed limit

With speed limiter active, hold thumb wheel turned to **RES/+** or briefly turn to **RES/+** repeatedly until the desired maximum speed is displayed in the Driver Information Centre.

Alternatively accelerate to the desired speed and briefly turn thumb wheel to **SET/-**: the current speed is stored as maximum speed. Speed limit is displayed in the Driver Information Centre.

Change speed limit

With speed limiter active, turn thumb wheel to **RES/+** to increase or **SET/-** to decrease the desired maximum speed.

Exceeding the speed limit

In the event of an emergency it is possible to exceed the speed limit by depressing the accelerator pedal firmly beyond the point of resistance.

The limited speed will flash in the Driver Information Centre and a chime sounds during this period.

Release the accelerator pedal and the speed limiter function is reactivated once a speed lower than the limit speed is obtained.

Deactivation

Press button : speed limiter is deactivated and the vehicle can be driven without speed limit.

The limited speed is stored and a corresponding message appears in the Driver Information Centre.

Resume limit speed

Turn thumb wheel to **RES/+**. The stored speed limit will be obtained.

Switching off

Press button , the speed limit indication in the Driver Information Centre extinguishes. The stored speed is deleted.

By pressing button to activate cruise control or adaptive cruise control or by switching off the ignition, speed limiter is also deactivated and the stored speed is deleted.

Adaptive cruise control

Adaptive cruise control is an enhancement to traditional cruise control with the additional feature of maintaining a certain distance behind the vehicle ahead.

Adaptive cruise control automatically decelerates the vehicle when approaching a slower moving vehicle. It then adjusts the vehicle speed to follow the vehicle ahead at the selected following distance. The vehicle speed increases or decreases to follow the vehicle in front, but will not exceed the set speed. It may apply limited braking with activated brake lights.

The adaptive cruise control can store and maintain speeds over approx. 50 km/h and brakes automatically to follow a slower vehicle driving ahead down to a minimum speed of 30 km/h.

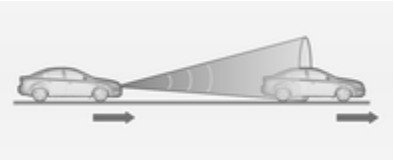

Adaptive cruise control uses a radar sensor to detect the vehicles ahead. If no vehicle is detected in the driving path, the adaptive cruise control will behave like a traditional cruise control.

For safety reasons, the system cannot be activated before the brake pedal has been depressed once after switching on ignition. Activation in first gear is not possible.

Adaptive cruise control is mainly advised to be used on long straight roads like highways or country roads with steady traffic. Do not use the system if it is not advisable to maintain a constant speed.

Control indicator ⇨ 113, ⇨ 113.

⚠Warning

The complete driver attention is always required while driving with adaptive cruise control. The driver stays fully in control of the vehicle because the brake pedal, the accelerator pedal and the cancel switch have priority over any adaptive cruise control operation.

Switching on

Press button to switch on adaptive cruise control. The control indicator illuminates white.

Activation by setting the speed

Adaptive cruise control can be activated between 50 km/h and 180 km/h.

Accelerate to the desired speed and turn thumb wheel to **SET/-**, the current speed is stored and maintained. Control indicator illuminates green.

The adaptive cruise control symbol, the following distance setting and set speed are indicated in the top line of the Driver Information Centre.

The accelerator pedal can be released. Adaptive cruise control remains activated while gearshifting.

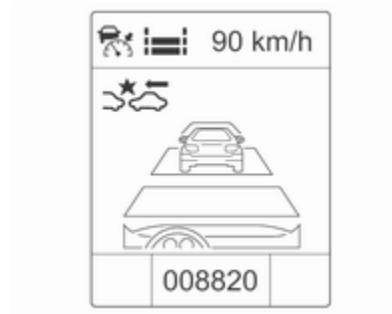

To display the adaptive cruise control page on the Driver Information Centre, press the **MENU** button on the turn signal lever and turn the adjuster wheel to choose adaptive cruise control page.

Overriding set speed

It is always possible to drive faster than the selected set speed by depressing the accelerator pedal. When the accelerator pedal is released, the vehicle returns to the

desired distance if a slower vehicle is ahead. Otherwise it returns to the stored speed.

Once the system is activated, adaptive cruise control decelerates or brakes if it detects a vehicle ahead which is slower or closer than the desired following distance.

⚠Warning

Accelerating by the driver deactivates braking by the system. This is indicated as a popup warning in the Driver Information centre.

Increase speed

With adaptive cruise control active, hold thumb wheel turned to RES/+: speed increases continuously in large increments, or activate repeatedly RES/+: speed increases in small increments.

If the vehicle is driven with adaptive cruise control active much faster than the desired speed, e.g. after depressing the accelerator pedal, then the current speed can be stored and maintained by turning the thumb wheel to SET/-.

Reduce speed

With adaptive cruise control active, hold thumb wheel turned to SET/-: speed decreases continuously in large increments, or activate repeatedly SET/-: speed decreases in small increments.

If the vehicle is driven with adaptive cruise control active much slower than the desired speed, e.g. because of a slower vehicle ahead, then the current speed can be stored and maintained by turning the thumb wheel to SET/-.

Resume stored speed

If the system is switched on but inactive, then turn thumb wheel to RES/+ at a speed above 50 km/h to obtain the stored speed.

Setting the following distance

When adaptive cruise control detects a slower moving vehicle in the driving path, it will adjust the vehicle speed to maintain the following distance selected by the driver.

The following distance can be set to near, medium or far.

Press button ⛐, the current setting is shown on the Driver Information Centre. Press button ⛐ again to change the following distance. The setting is also displayed in the top line of the Driver Information Centre.

The selected following distance is indicated by filled distance bars in the adaptive cruise control page.

Note that the following distance setting is shared with the sensitivity setting of forward collision alert.

Example: If setting 3 (far) is selected, then the driver is warned sooner before a possible collision, also if adaptive cruise control is inactive or switched off.

⚠ Warning

The driver accepts fully responsibility for the valid following distance based on traffic-, weather- and visibility conditions.

Detecting the vehicle ahead

The green illuminated "vehicle ahead" control indicator displays in the speedometer when the system detects a vehicle in the driving path.

If this symbol does not display, or displays briefly, adaptive cruise control will not respond to vehicles ahead.

Deactivation

Adaptive cruise control is deactivated by the driver when:

- button is pressed,
- brake pedal is applied,
- clutch pedal is depressed for more than four seconds,
- gear selector lever of automatic transmission is moved to **N**.

The system is also automatically deactivated when:

- vehicle speed slows down below 45 km/h or accelerates above 190 km/h,
- Traction Control system is operating for more than 20 seconds,
- Electronic Stability Control is operating,

- there is no traffic and nothing detected on the road sides for several minutes. In this case there are no radar echoes and the sensor may report that it is blocked,
- collision imminent braking system is applying the brakes,
- radar sensor is blocked by an ice or water film,
- fault is detected in the radar, engine or brake system.

When adaptive cruise control is deactivated automatically, the control indicator illuminates white and a warning symbol is displayed as a pop-up in the Driver Information Centre.

The stored speed is maintained.

⚠Warning

When adaptive cruise control is deactivated, the driver has to take over brake and engine control.

Switching off

Press button to switch off adaptive cruise control. The control indicator extinguishes. The stored speed is deleted.

Switching off the ignition also switches off adaptive cruise control and deletes the stored speed.

Driver's attention

- Use adaptive cruise control carefully on bends or mountain roads, as it can lose the vehicle ahead and require time to detect it again.
- Do not use the system on slippery roads as it can create fast changes in tyre traction (wheel spinning), so that you could lose control.
- Do not use adaptive cruise control during rain, snow or heavy dirt, as the radar sensor can be covered by a water film, dust, ice or snow. This reduces or suppresses completely the visibility. In case of sensor blockage, clean the sensor cover.

System limits

- The system's automatic brake force does not permit strong braking and the braking level may not be sufficient to avoid a collision.
- After a sudden lane change, the system needs a certain time to detect the next preceding vehicle.

So if a new vehicle is detected, the system may accelerate instead of braking.

- Adaptive cruise control does ignore the oncoming traffic.
- Adaptive cruise control does not brake for stopped vehicles, pedestrians or animals.

Curves

The adaptive cruise control calculates a predicted path based on the centrifugal force. This predicted path considers the current curve characteristic, but cannot consider a future curve change. The system may lose the current vehicle ahead or consider a vehicle which is not in the actual lane. This can happen when entering or exiting a curve or if the curve gets stronger or weaker. If it no longer detects any vehicle ahead, then control indicator 🚗 will extinguish.

If the centrifugal force is too high in a curve, the system slows down the vehicle slightly. This braking level is not designed to avoid spinning off the curve. The driver is responsible for reducing the selected speed before entering a curve and in general to adapt the speed to the road type and to existing speed limits.

Motorways

On motorways, adapt the set speed to the situation and the weather. Always consider that adaptive cruise control has a limited visibility range, a limited braking level and a certain reaction time to verify if a vehicle is in the driving path or not. Adaptive cruise control may not be able to brake the vehicle in time to avoid a collision with a much slower vehicle or after a lane change. This is particularly true if driving fast or if the visibility is reduced due to weather conditions.

While entering or exiting a motorway, adaptive cruise control may lose the vehicle ahead and accelerate up to the set speed. For this reason, decrease the set speed before the exit or before the entry.

Vehicle path changes

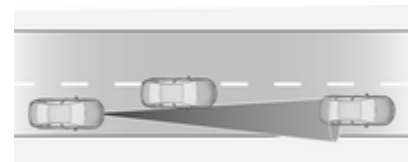

If another vehicle enters your driving path, adaptive cruise control will first consider the vehicle when it is completely in your path. Be ready to take action and press the brake pedal, if you need to brake quicker.

Hill and trailer considerations

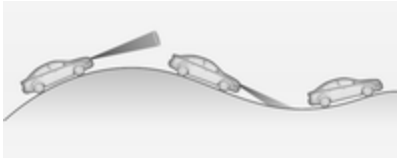

System performance on hills and when towing a trailer depends on vehicle speed, vehicle load, traffic conditions and the road gradient. It may not detect a vehicle in your path while driving on hills. On steep hills, you may have to use the accelerator pedal to maintain your vehicle speed. When going downhill, especially when towing a trailer, you may have to brake to maintain or reduce your speed.

Note that applying the brake deactivates the system. It is not recommended to use adaptive cruise control on steep hills especially when towing a trailer.

Radar unit

The radar unit is mounted behind the radiator grille below the brand emblem.

⚠ Warning

The radar unit was aligned carefully during manufacture. Therefore, after a frontal accident, do not use the system. The front bumper may appear to be intact, however the sensor behind can be out of position and react incorrectly. After an accident, consult a workshop to verify and correct the adaptive cruise control sensor position.

Settings

Settings can be changed in the **Auto collision preparation** menu in the vehicle personalisation ⇨ 127.

Fault

If the adaptive cruise control does not work due to temporary conditions (e.g. blockage by ice) or if there is a permanent system error, then a message is displayed in the Driver Information Centre.

Vehicle messages ⇨ 120.

Forward collision alert

The forward collision alert can help to avoid or reduce the harm caused by front-end crashes. If a vehicle directly ahead is approached too quickly, a warning chime and alert in the Driver Information Centre is provided.

The green illuminated vehicle ahead symbol appears in the speedometer when the system has detected a vehicle in the driving path. Precondition is, that forward collision alert is activated in the vehicle personalisation menu ⇨ 127 or that it is not deactivated by the button (depending on the system, see following).

Depending on the vehicle's equipment, there are two variants of the forward collision alert available:

- **Forward collision alert based on radar system**

  on vehicles equipped with adaptive cruise control ⇨ 174.
- **Forward collision alert based on front camera system**

  on vehicles with no or traditional cruise control ⇨ 171.

Forward collision alert based on radar system

The system uses the radar sensor behind the radiator grille to detect a vehicle directly ahead, in your path, within a distance of max. 150 metres.

Activation

Forward collision alert operates automatically above walking speed, provided that **Auto collision preparation** setting is not deactivated in the vehicle personalisation menu ⇨ 127.

Selecting the alert sensitivity

The alert sensitivity can be set to near, medium or far.

Press button , the current setting is shown on the Driver Information Centre. Press button again to change the alert sensitivity. The setting is also displayed in the top line of the Driver Information Centre.

Note that the alert timing sensitivity setting is shared with the following distance setting of the adaptive cruise control. So changing the alert timing sensitivity changes the adaptive cruise control following distance setting.

Alerting the driver

When approaching another vehicle too rapidly, the collision alert warning page will be indicated in the Driver Information Centre. Simultaneously a warning chime sounds. Press the brake pedal, if it is requested by the situation.

Settings

Settings can be changed in the **Auto collision preparation** menu in the vehicle personalisation ⇨ 127.

Forward collision alert based on front camera system

Forward collision alert uses the front camera system in the windscreen to detect a vehicle directly ahead, in your path, within a distance of approx. 60 metres.

Activation

Forward collision alert operates automatically above 40 km/h, if it is not deactivated by button ⚠, see below.

Selecting the alert sensitivity

The alert sensitivity can be set to near, medium or far.

Press button ⚠, the current setting is shown on the Driver Information Centre. Press button ⚠ again to change the alert sensitivity.

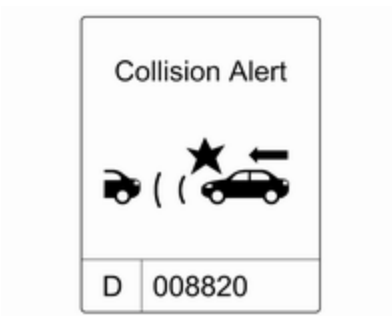

Alerting the driver

When approaching another vehicle too rapidly, the collision alert warning page will be indicated in the Driver Information Centre. Simultaneously a warning chime sounds. Press the brake pedal, if it is requested by the situation.

Deactivation

The system can be deactivated. Press button ⚠ as often as the following message appears in the Driver Information Centre.

General information for both variants of forward collision alert

⚠Warning

Forward collision alert is just a warning system and does not apply the brakes. When

approaching a vehicle ahead too rapidly, it may not provide you enough time to avoid a collision.

The driver accepts fully responsibility for the valid following distance based on traffic-, weather- and visibility conditions.

The complete attention of the driver is always required while driving. He shall always be ready to take action and apply the brakes.

System limitations

The system is designed to warn only for vehicles, but may react also on other metallic objects.

In the following cases, forward collision alert may not detect a vehicle ahead or sensor performance is limited:

- on winding roads,
- when weather limits visibility, such as fog, rain, or snow,
- when the sensor is blocked by snow, ice, slush, mud, dirt, or windscreen damage.

Following distance indication

The following distance indication displays the distance to a preceding moving vehicle. The system uses, depending on the vehicle equipment, either the radar behind the radiator grille or the front camera in the windscreen to detect the distance of a vehicle directly ahead in your path. It is active at speeds above 40 km/h.

When a preceding vehicle is detected ahead, the distance is indicated in seconds, displayed on a page in the Driver Information Centre ⇨ 114. Press the **MENU** button on the turn signal lever to select **Vehicle Information Menu** and turn the adjuster wheel to choose following distance indication page.

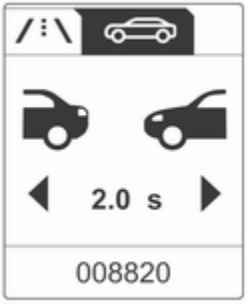

The minimum indicated distance is 0.5 s.

If there is no vehicle ahead or the vehicle ahead is out of range, two dashes will be displayed: -.- s.

Active Emergency Braking

Active emergency braking can help to reduce the damage from crashes with vehicles and obstacles directly ahead, when a collision can no longer

be avoided either by manual braking or by steering. Before the active emergency braking applies, the driver is warned by the forward collision alert ⇨ 181.

The feature uses various inputs (e.g. radar sensor, brake pressure, vehicle speed) to calculate the probability of a frontal collision.

Active emergency braking operates automatically above walking speed, provided that **Auto collision preparation** setting is not deactivated in the vehicle personalisation menu ⇨ 127.

The system includes:

- **Brake preparation system**
- **Emergency automatic braking**
- **Forward looking brake assist**

⚠Warning

This system is not intended to replace the driver responsibility of driving the vehicle and looking ahead. Its function is limited to supplemental use only. The driver shall continue to apply the brake pedal as the driving situation dictates.

Brake preparation system

When approaching a vehicle ahead so quickly that a collision is likely, the brake preparation system slightly pressurises the brakes. This reduces the response time, when a manual or automatic braking is requested.

The brake system is prepared so that braking can occur more rapidly.

Emergency automatic braking

After the brake preparation and just before the imminent collision, this function automatically applies limited braking to reduce the impact speed of the collision.

Forward looking brake assist

In addition to brake preparation system and emergency automatic braking, the forward looking brake assist function makes the brake assist more sensitive. In this way, depressing the brake pedal slightly results immediately in a strong braking. This function helps the driver brake quicker and stronger before the imminent collision.

⚠Warning

Active emergency braking is not designed to apply strong autonomous braking or to avoid automatically a collision. It is designed to reduce the vehicle speed before collision. It may not react on stopped vehicles, pedestrians or animals. After a sudden lane change, the system needs a certain time to detect the next preceding vehicle.

The complete attention of the driver is always required while driving. The driver shall always be ready to take action and apply the brakes and steer to avoid collisions. The system is designed to work with all occupants wearing their seat belts.

System limitations
The active emergency braking has limited or no function during rain, snow or heavy dirt, as the radar sensor can be covered by a water film, dust, ice or snow. In case of sensor blockage, clean the sensor cover.

In some seldom cases the active emergency braking system may provide a short automatic braking in situations that seem to be unnecessary, for instance due to traffic signs in a curve or due to vehicles in another lane. This is acceptable operation, the vehicle does not need service. Firmly apply the accelerator pedal to override the automatic braking.

Settings
Settings can be changed in the **Auto collision preparation** menu in the vehicle personalisation, ⇨ 127.

Fault
In the event of a system service requirement, a message is displayed in the Driver Information Centre.

If the system does not work as it should, vehicle messages are displayed in the Driver Information Centre.

Vehicle messages ⇨ 120.

Parking assist

The parking assist makes parking easier by measuring the distance between the vehicle and obstacles, and giving acoustic signals. It is the driver, however, who bears full responsibility for the parking manoeuvre.

The system consists of four ultrasonic parking sensors in each of the front and rear bumpers.

The system uses two different frequencies for the front and rear sensors, respectively, each with a different sound.

Control indicator P⁄⁄▲ ⇨ 110.

Button

Parking assist is activated and deactivated by pressing the parking assist button. If the vehicle is equipped with parking assist and advanced parking assist ⇨ 189 both use the same button to operate the systems.

For activating or deactivating parking assist, press button once briefly. For activating or deactivating advanced parking assist, press button for approx. one second.

If one system is active, it is possible to switch between both systems by pressing the button shorter or longer.

Activation

When reverse gear is engaged, the system is activated automatically.

The front parking assist can also be activated at a low speed by pressing the parking assist button briefly.

An illuminated LED in the parking assist button indicates that the system is ready to operate.

Indication

The system warns the driver with acoustic signals against handicaps in front of or behind the vehicle. Depending on which of the sensors are closer to an obstacle, you will hear a buzzing sound of the respective sensors. The interval between the sounds becomes shorter as the vehicle gets closer to the obstacle. When the distance is less than 30 cm, the buzzing is continuous.

Additionally the distance to obstacles can be shown in the Driver Information Centre ⇨ 114.

On version with Uplevel-Display, the distance to a front obstacle is indicated by changing segments.

On version with Uplevel-Combi-Display, the distance to a front and rear obstacle is indicated by changing distance lines around the vehicle.

The distance indication in the display can be inhibited and overwritten by vehicle messages with a higher priority. Once the distance indication is overwritten by a vehicle message, distance is no longer indicated until parking assist is activated again.

Deactivation

Deactivate the system by pressing the parking assist button briefly.

The LED in the button extinguishes and **Park Assist Off** will be displayed in the Driver Information Centre.

The system is deactivated automatically when exceeding a certain speed.

If the button is pressed once within an ignition cycle, the front parking assist is always reactivated when the vehicle speed goes below a certain value.

Fault

In the event of a fault in the system, **P** illuminates or a message is displayed in the Driver Information Centre.

If the system does not work due to temporary conditions like snow covered sensors, **P** illuminates or a message is displayed in the Driver Information Centre.

Vehicle messages ⇨ 120.

⚠ Warning

Under certain circumstances, various reflective surfaces on objects or clothing as well as external noise sources may cause the system to fail to detect obstacles.

Special attention has to be paid to low obstacles which can damage the lower part of the bumper.

Caution

Performance of the sensor can be reduced when sensors are covered, e.g. by ice or snow.

Performance of the parking assist system can be reduced due to heavy loading.

Special conditions apply if there are taller vehicles involved (e.g. off-road vehicles, mini vans, vans). Object identification in the upper part of these vehicles cannot be guaranteed.

Objects with a very small reflection cross section, like objects of narrow size or soft materials, may not be detected by the system.

Parking assist will not detect objects out of the detection range.

Note
The parking assist system automatically detects factory-fitted towing equipment. It is deactivated when the connector is plugged in.

The sensor may detect a non-existing object (echo disturbance) caused by external acoustical or mechanic disturbances.

Advanced parking assist

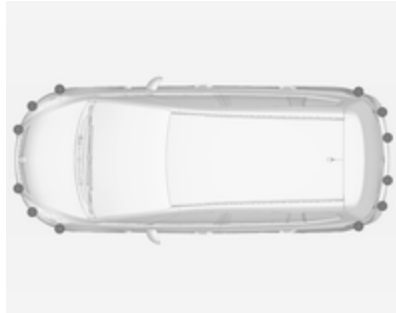

The advanced parking assist system manoeuvres the driver into a parking slot by giving instructions on the Driver Information Centre and acoustic signals. It is the driver, however, who bears full responsibility for accepting the parking slot suggested by the system and the parking manoeuvre.

The system uses the sensors of the parking assist system in combination with two additional sensors on both sides of the front bumper and the rear bumper.

Button

Advanced parking assist and parking assist ⇨ 186 both use the same button to operate the systems. For activating or deactivating parking assist push button once briefly. For activating or deactivating advanced parking assist push button for approx. one second.

If one system is active, it can be switched between both systems by pushing the button shorter or longer.

Activation

When looking for a parking slot, the system has to be activated by pushing the button for approx. one second.

The system can only be activated at a speed up to 30 km/h and the system searches for a parking slot at a speed up to 30 km/h.

The maximum allowed parallel distance between the vehicle and a row of parking cars is 1.8 m.

Note
Before using the advanced parking assist the first time, the vehicle has to be driven at least for 40 km to calibrate the system automatically.

Functionality

When the vehicle passes a row of cars and the system is activated, the advanced parking assist system begins looking for a suitable parking slot. When a suitable slot is detected, a visual feedback on the Driver Information Centre and an acoustic signal are given.

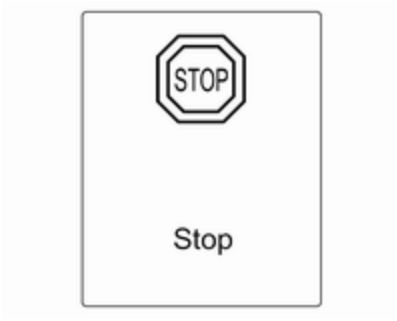

The parking slot suggestion of the system is accepted when the vehicle is stopped by the driver within 10 metres after the Stop message is given. The system calculates the optimal route into the parking slot. Then it manoeuvres the driver into the slot by giving detailed instructions.

The instructions show:

- a hint when driving faster than 30 km/h,
- the demand to stop the vehicle, when a parking slot is detected,
- the direction of driving during the parking manoeuvre,
- the steering wheel position during parking,
- for some of the instructions a progress bar is shown.

A successful parking manoeuvre is indicated by the End position symbol.

If the driver does not stop the vehicle within 10 metres after a parking slot is proposed, the system starts to search for another suitable parking slot.

Changing the parking side

The system is configured to detect parking slots on the passenger side. To detect parking slots on the driver side, switch turn indicator to the driver side.

Display priorities

After activating the advanced parking assist, a message appears on the Driver Information Centre. Indication of messages with higher priority like vehicle messages ⇨ 120 will be displayed. After approving the message by pressing the **SET/CLR** button, parking assist messages appear again and parking can be continued.

Deactivation

The system is deactivated by:

- pushing button ⊟P⊿ for approx. one second
- parking manoeuvre successfully ended
- driving faster than 30 km/h
- switching off the ignition

Deactivation by the driver or by the system during manoeuvring will be indicated by **Parking Deactivated** in the Driver Information Centre.

Fault

A message appears in the Driver Information Centre when:

- there is a fault in the system
- the driver did not successfully complete the parking manoeuvre
- the system is not operational

If an object is detected during parking instructions, **Stop** is indicated in the Driver Information Centre. Removing the object will resume the parking manoeuvre. If the object is not removed, the system will be deactivated. Push button for approx. one second to activate the system and search for a new parking slot.

Important hints for using the parking assist systems

⚠ Warning

Under certain circumstances, various reflective surfaces on objects or clothing as well as external noise sources may cause the system to fail to detect obstacles.

Special attention has to be paid to low obstacles which can damage the lower part of the bumper.

Caution

Performance of the sensor can be reduced when sensors are covered, e.g. by ice or snow.

Performance of the parking assist system can be reduced due to heavy loading.

Special conditions apply if there are taller vehicles involved (e.g. off-road vehicles, mini vans,

vans). Object identification in the upper part of these vehicles cannot be guaranteed.

Objects with a very small reflection cross section, like objects of narrow size or soft materials, may not be detected by the system.

Parking assist will not detect objects out of the detection range.

Note
The parking assist system automatically detects factory-fitted towing equipment. It is deactivated when the connector is plugged in.

It is possible that the sensor detects a non-existing object (echo disturbance) caused by external acoustical or mechanic disturbances.

Advanced parking assist system may not respond to changes in the parking space after initiating a parallel parking manoeuvre.

Side blind spot alert

The Side blind spot alert system detects and reports objects on either side of the vehicle, within a specified "blind spot" zone. The system alerts visually in each side rear view mirror, when detecting objects that may not be visible in the inside and outside rear view mirrors.

The system's sensors are located in the bumper on the left and right side of the vehicle.

⚠ Warning

Side blind spot alert does not replace driver vision.

The system does not detect:

- Vehicles outside the side blind zones which may be rapidly approaching.
- Pedestrians, cyclists or animals.

Before changing a lane, always check all mirrors, look over the shoulder and use the turn signal.

When the system detects a vehicle in the side blind zone while driving forward, either while passing a vehicle or being passed, an amber warning symbol will light up in the relevant outside mirror. If the driver then activates the turn signal, the warning symbol starts flashing amber and a chime sounds as a warning not to change lanes.

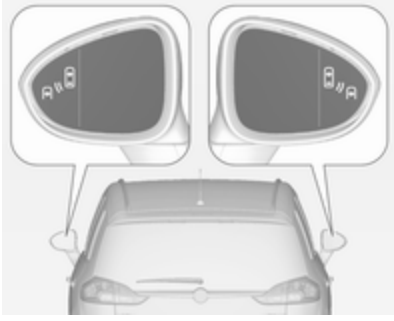

Side blind spot alert is active from speeds of 10 km/h up to 140 km/h. Driving faster than 140 km/h deactives the system, indicated by low lighting warning symbols in both outside mirrors. Reducing the

speed again will extinguish the warning symbols. If a vehicle is then detected in the blind zone, the warning symbols will illuminate as normal on the relevant side.

When the vehicle is started, both outside mirror displays will briefly come on to indicate that the system is operating.

The system can be activated or deactivated in the menu **Settings** in the Info-Display, vehicle personalisation ⇨ 127.

Deactivation is indicated by a message in the Driver Information Centre.

Detection zones

The system sensor covers a zone of approx. 3 metres on both sides of the vehicle. This zone starts at each side mirror and extends rearwards by approx. 3 metres. The height of the zone is approx. between 0.5 metres and 2 metres off the ground.

The detection zones will not change if the vehicle is towing a trailer.

Side blind spot alert is designed to ignore stationary objects such as guardrails, posts, curbs, walls and beams. Parked vehicles or oncoming vehicles are not detected.

Fault

Occasional missed alerts can occur under normal circumstances and will increase in wet conditions.

Side blind spot alert does not operate when the left or right corners of the rear bumper are covered with mud, dirt, snow, ice, slush, or in heavy rainstorms. Cleaning instructions ⇨ 254.

In the event of a fault in the system or if the system does not work due to temporary conditions, a message is displayed in the Driver Information Centre. Seek the assistance of a workshop.

Rear view camera

The rear view camera assists the driver when reversing by displaying a view of the area behind the vehicle.

The view of the camera is displayed in the Colour-Info-Display.

⚠ Warning

The rear view camera does not replace driver vision. Note that objects that are outside the camera's field of view and the advanced parking assist sensors, e.g. below the bumper or underneath the vehicle, are not displayed.

Do not reverse the vehicle by only looking at the Info-Display and check the surrounding behind and around the vehicle before reversing.

Activation

Rear view camera is automatically activated when reverse gear is engaged.

Functionality

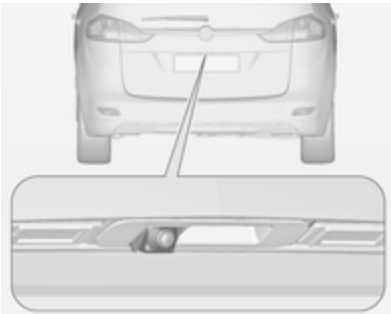

The camera is mounted in the tailgate handle and has a viewing angle of 130°.

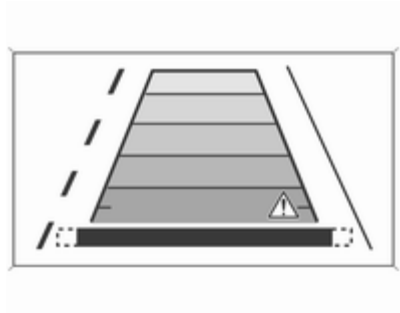

Due to the high position of the camera the rear bumper can be seen on the display as a guide to position.

The area displayed by the camera is limited. The distance of the image that appears on the display differs from the actual distance.

Guiding lines

Dynamic guiding lines are horizontal lines in 1 metre intervals projected on the picture to define the distance to shown objects.

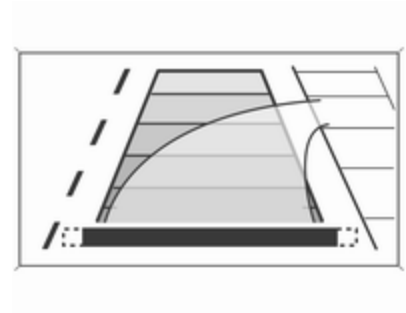

Trajectory lane of the vehicle is shown in accordance with the steering angle.

The function can be deactivated in the menu **Settings** in the Info-Display. Vehicle personalisation ⇨ 127.

Warning symbols

Warning symbols are indicated as triangles ⚠on the picture which show obstacles detected by the rear sensors of the advanced parking assist.

Display settings

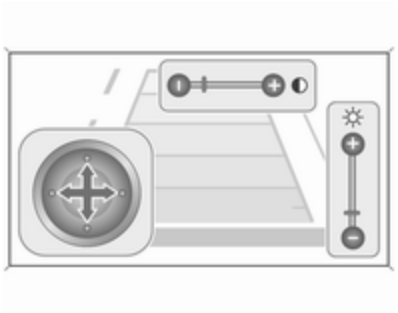

Brightness can be set with the up/ down buttons of the multifunction knob.

Contrast can be set with left/right buttons of the multifunction knob.

Deactivation

The camera is deactivated when a certain forward speed is exceeded or if reverse gear is not engaged for approx. 10 seconds.

Activation or deactivation of the rear view camera can be changed in the menu **Settings** in the Info-Display. Vehicle personalisation ⇨ 127.

Fault

Fault messages are displayed with a ⚠on the top line of the Info-Display.

The rear view camera may not operate properly when:

- the surrounding is dark,
- the sun or the beam of headlights is shining directly into the camera lens,
- ice, snow, mud, or anything else covers the camera lens. Clean the lens, rinse it with water, and wipe it with a soft cloth,
- the tailgate is not closed correctly,
- the vehicle had a rear end accident,
- there are extreme temperature changes.

Traffic sign assistant

Functionality

The traffic sign assistant system detects designated traffic signs via a front camera and displays them in the Driver Information Centre.

Traffic signs, which will be detected, are

Limit- and no passing signs

- speed limit
- no passing
- end of speed limit
- end of no passing

Road signs
beginning and end of:

- motorways
- A-roads
- play streets

Add on signs

- additional hints to traffic signs
- restriction of trailer towing
- wet warning
- ice warning
- direction arrows

Speed limit signs are displayed in the Driver Information Centre until the next speed limit sign or end of speed limit is detected or up to a defined sign timeout.

Combinations of more signs in the display are possible.

An exclamation mark in a frame indicates that there is an add on sign detected which cannot be recognised by the system.

The system is active up to a speed of 200 km/h depending on the lighting conditions. At night the system is active up to a speed of 160 km/h.

As soon as the speed becomes slower than 55 km/h the display will be reset and the content of the traffic sign page will be cleared. The next recognized speed indication will be displayed.

Display indication

Traffic signs are displayed on the page **Traffic sign detection** on the Driver Information Centre, chosen via the adjuster wheel on the turn signal lever ⇨ 114.

When another function on the Driver Information Centre menu was selected and then **Traffic sign detection** page is chosen again, the last recognised traffic sign will be displayed.

If the system is deactivated by itself, the content of the traffic sign page is cleared (not if equipped with a navigation system), indicated by the following symbol:

The content of the traffic sign page is also cleared during driving by pressing the **SET/CLR** button on the turn signal lever for longer.

Pop-up function

Speed limits and no passing signs are displayed as pop-ups on each page of the Driver Information Centre.

The pop-up function can be deactivated on the traffic sign page by pressing the **SET/CLR** button on the turn signal lever.

Once setting page is displayed, select **Off** to deactivate pop-up function. Reactivated by selecting **On**. When switching on the ignition, pop-up function is deactivated.

Pop-up indication is displayed for approx. 8 seconds in the Driver Information Centre.

Traffic sign detection in conjunction with navigation system

If the vehicle is equipped with a navigation system, the following features can be available:

- constant indication of actual speed limits
- in heavy weather conditions, the navigation data for speed limits are displayed

Fault

The traffic sign assistant system may not operate correctly when:

- the area of the windscreen, where the front camera is located, is not clean
- traffic signs are completely or partially covered or difficult to discern
- there are adverse environmental conditions, e.g. heavy rain, snow, direct sunlight or shadows. In this case **No Traffic Sign Detection due to Weather** is indicated on the display
- traffic signs are incorrectly mounted or damaged
- traffic signs do not comply with the Vienna Convention on traffic signs (Wiener Übereinkommen über Straßenverkehrszeichen)

Caution

The system is intended to help the driver within a defined speed range to discern certain traffic signs. Do not ignore traffic signs which are not displayed by the system.

The system does not discern any other than the conventional traffic signs that might give or end a speed limit.

Do not let this special feature tempt you into taking risks when driving.

Always adapt speed to the road conditions.

The driver assistance systems do not relieve the driver from full responsibility for vehicle operation.

Lane departure warning

The lane departure warning system observes the lane markings between which the vehicle is driving via a front camera. The system detects lane changes and warns the driver in the event of an unintended lane change via visual and acoustic signals.

Criteria for the detection of an unintended lane change are:

- no operation of turn signals
- no brake pedal operation
- no active accelerator operation or speeding-up
- no active steering

If the driver is active, no warning will be issued.

Activation

The lane departure warning system is activated by pressing the button. The illuminated LED in the button indicates that the system is switched on. When the control indicator in the instrument cluster illuminates green, the system is ready to operate.

The system is only operable at vehicle speeds above 56 km/h and if lane markings are available.

When the system recognises an unintended lane change, the control indicator changes to yellow and flashes. Simultaneously a chime sound is activated.

Deactivation

The system is deactivated by pressing button, the LED in the button extinguishes.

At speeds below 56 km/h the system is inoperable.

Fault

The lane departure warning system may not operate properly when:

- the windscreen is not clean
- there are adverse environmental conditions like heavy rain, snow, direct sunlight or shadows

The system can not operate when no lane marking is detected.

Fuel

Fuel for petrol engines

Only use unleaded fuel that complies with European standard EN 228 or E DIN 51626-1 or equivalent.

Your engine is capable of running with E10 fuel that fulfills these standards. E10 fuel contains up to 10 % bioethanol.

Use fuel with the recommended octane rating ⇨ 265. Use of fuel with too low an octane rating can reduce engine power and torque and slightly increases fuel consumption.

Caution

Do not use fuel or fuel additives that contain metallic compounds such as manganese-based additives. This may cause engine damage.

Caution

Use of fuel that does not comply to EN 228 or E DIN 51626-1 or equivalent can lead to deposits or engine damage and may affect your warranty.

Caution

Use of fuel with too low an octane rating could lead to uncontrolled combustion and engine damage.

Fuel for diesel engines

Only use diesel fuel that complies with EN 590.

In countries outside the European Union use Euro-Diesel fuel with a sulphur concentration below 50 ppm.

Caution

Use of fuel that does not comply to EN 590 or similar can lead to engine powerloss, increased wear or engine damage and may affect your warranty.

Do not use marine diesel oils, heating oils, Aquazole and similar diesel-water emulsions. Diesel fuels must not be diluted with fuels for petrol engines.

Fuel for natural gas operation

Use natural gas with a methane content of approx. 78 - 99 %. L-gas (low) has approx. 78 - 87 % and H-gas (high) has approx. 87 - 99 %. Biogas with the same methane content can also be used if it has been chemically prepared and desulphurised.

Only use natural gas or biogas that complies with DIN 51624.

Liquid gas or LPG must not be used.

Fuel selector

Pressing button ⛽ switches between petrol and natural gas operation. Switching is not possible at high loads (e.g. strong acceleration, running at full throttle). The LED status shows the current operating mode.

- off = natural gas operation.
- illuminates = petrol operation.
- flashes = no switching is possible, one type of fuel is empty.

As soon as the natural gas tank is empty, petrol operation is automatically engaged until the ignition is switched off.

If the natural gas tank is not refuelled, the system must be manually switched to petrol operation before the engine is started-up again. This will prevent damage to the catalytic converter (overheating caused by irregular fuel supply).

If the selector switch is operated several times within a short time, a switchover block is activated. The engine remains in the current operating mode. The block remains active until the ignition is switched off.

A slight loss of power and torque can be expected during petrol operation. You must therefore adapt your driving style (e.g. during overtaking manoeuvres) and vehicle loads (e.g. towing loads) accordingly.

Every six months run the petrol tank down until control indicator ⛽ illuminates, then refuel. This is necessary to maintain fuel quality as well as system function necessary for petrol operation.

Fill the tank completely at regular intervals to prevent corrosion in the tank.

Fuel for liquid gas operation

Liquid gas is known as LPG (Liquefied Petroleum Gas) or under its French name GPL (Gaz de Pétrole Liquéfié). LPG is also known as Autogas.

LPG consists mainly of propane and butane. The octane rating is between 105 and 115, depending on the butane proportion. LPG is stored liquid at around 5 - 10 bar pressure.

The boiling point depends on the pressure and mixing ratio. At ambient pressure, it is between -42 °C (pure propane) and -0.5 °C (pure butane).

Caution

The system works at an ambient temperature of approx. -8 °C to 100 °C.

Full function of the LPG system can only be guaranteed with liquid gas which complies with the minimum requirements of DIN EN 589.

Fuel selector

Pressing the **LPG** button switches between petrol and liquid gas operation as soon as the required parameters (coolant temperature, gas temperature and minimum engine speed) have been reached. The requirements are usually fulfilled after around 60 seconds (depending on exterior temperature) and the first firm press on the accelerator. The LED status shows the current operating mode.

⬬ off	=	petrol operation
⬬ illuminates	=	liquid gas operation
⬬ flashes	=	no switching is possible, one type of fuel is empty

As soon as the liquid gas tank is empty, petrol operation is automatically engaged until the ignition is switched off.

Every six months, run the petrol tank down until control indicator ⬬ illuminates, then refuel. This helps maintain fuel quality and system function for petrol operation.

Fill the tank completely at regular intervals to prevent corrosion in the tank.

Faults and remedies

If gas mode is not possible, check the following:

- Is there enough liquid gas present?
- Is there enough petrol present for starting?

Due to extreme temperatures in combination with the gas composition, it may take slightly longer before the system switches from petrol to gas mode.

In extreme situations, the system may also switch back to petrol mode if the minimum requirements are not fulfilled.

Seek the assistance of a workshop in the event of all other faults.

Caution

Repairs and adjustments may only be made by trained specialists in order to maintain the safety and warranty on the LPG system.

Liquid gas is given a particular odour (odorised) so that any leaks can be detected easily.

⚠ Warning

If you smell gas in the vehicle or in the immediate vicinity, switch to petrol mode immediately. No smoking. No naked flames or ignition sources.

If the gas odour persists, do not start the engine. Have the cause of the fault remedied by a workshop.

When using underground car parks, follow the instructions of the operator and local laws.

Note
In the event of an accident, switch off the ignition and lights.

Refuelling

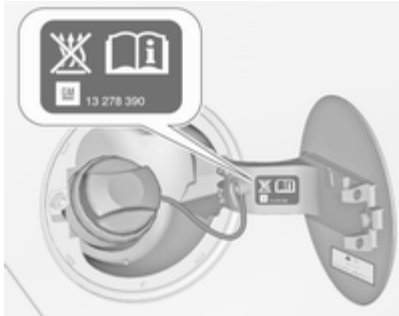

⚠ Danger

Before refuelling, switch off engine and any external heaters with combustion chambers. Switch off any mobile phones.

Follow the operating and safety instructions of the filling station when refuelling.

⚠ Danger

Fuel is flammable and explosive. No smoking. No naked flames or sparks.

If you can smell fuel in your vehicle, have the cause of this remedied immediately by an authorized dealer.

Caution

In case of misfuelling, do not switch on ignition.

Fuel filler flap is located at right rear side of the vehicle.

The fuel filler flap can only be opened if the vehicle is unlocked. Pull flap at the recess and open.

Petrol and Diesel refuelling

To open, turn the cap slowly to the left.

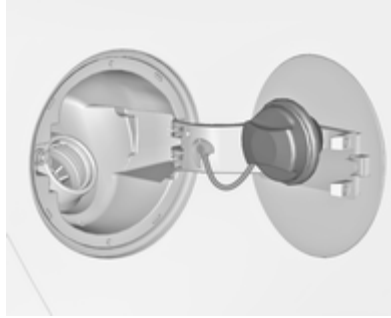

The fuel filler cap can be retained in the bracket on the fuel filler flap.

For refuelling, fully insert the pump nozzle and switch it on.

After automatic cut-off, it can be topped up with max. two doses of fuel.

Caution
Wipe off any overflowing fuel immediately.

To close, turn the fuel filler cap to the right until it clicks.

Close the flap and let engage.

Natural gas refuelling

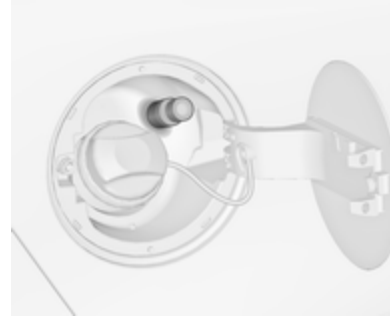

The fuel filler flap can only be opened if the vehicle is unlocked. Release the fuel filler flap by pushing the flap.

⚠ Warning
Refuel only with a maximum output pressure of 250 bar. Use only temperature compensated filling stations.

The refuelling procedure must be completed, i.e. the filler neck must be vented.

The capacity of the natural gas tank depends on outside temperature, filling pressure and type of refuelling system. Capacities ⇨ 271.

Close the flap and allow it to engage.

Terms for "natural gas vehicles" abroad:

German	Erdgasfahrzeuge
English	NGVs = Natural Gas Vehicles
French	Véhicules au gaz naturel – or – Véhicules GNV
Italian	Metano auto

Terms for "natural gas" abroad:

German	Erdgas
English	CNG = Compressed Natural Gas
French	GNV = Gaz Naturel (pour) Véhicules - or - CGN = carburantgaz naturel
Italian	Metano (per auto)

Liquid gas refuelling

Follow the operating and safety instructions of the filling station when refuelling.

The filling valve for the liquid gas is behind the fuel filler cap.

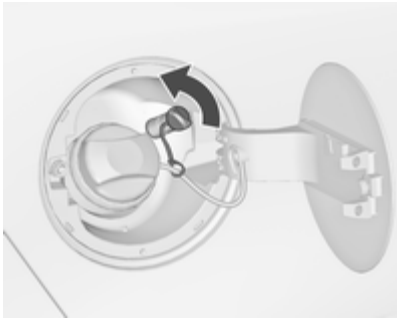

Unscrew protective cap from the filler neck.

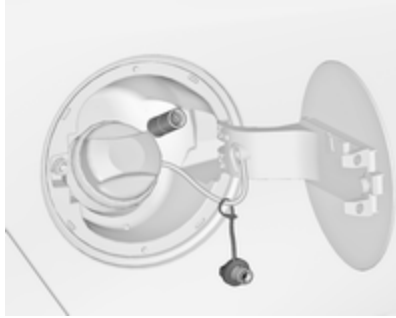

Fit the required adapter.

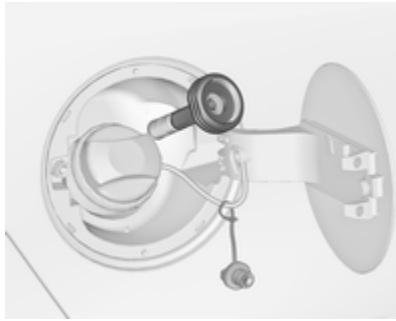

ACME Adapter: Screw the nut of the filling nozzle onto the adapter. Press locking lever on filler nozzle down.

DISH (Italy) filler neck: Place the filler nozzle into the adapter. Press locking lever on filler nozzle down.

Bayonet filler neck: Place filler nozzle on the adapter and turn to the left or right through one quarter turn. Pull locking lever of filler nozzle fully.

EURO filler neck: Press the filler nozzle onto the adapter until it engages.

Press the button of the liquid gas supply point. The filling system stops or begins to run slowly when 80% of the tank volume is reached (maximum fill level).

Release button on filling system and the filling process stops. Release the locking lever and remove the filler nozzle. A small quantity of liquid gas can escape.

Remove adapter and stow in vehicle.

Fit protective cap to prevent the penetration of foreign bodies into the filler opening and the system.

⚠Warning

Due to the system design, an escape of liquid gas after releasing the locking lever is unavoidable. Avoid inhaling.

⚠Warning

The liquid gas tank may only be filled to 80% for safety reasons.

The multivalve on the liquid gas tank automatically limits the fill quantity. If a larger quantity is added, we recommend not exposing the vehicle to the sun until the excess amount has been used up.

Filling adapter

As filling systems are not standardised, different adapters are required which are available from Opel Distributors and from Opel Authorised Repairers.

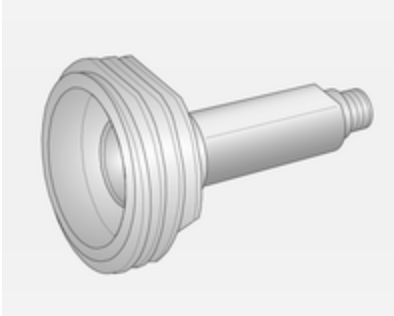

ACME adapter: Belgium, Germany, Ireland, Luxembourg, Switzerland

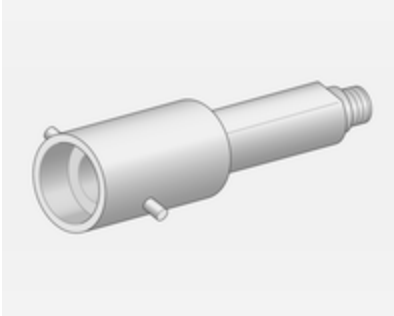

Bayonet adapter: Netherlands, Norway, Spain, United Kingdom

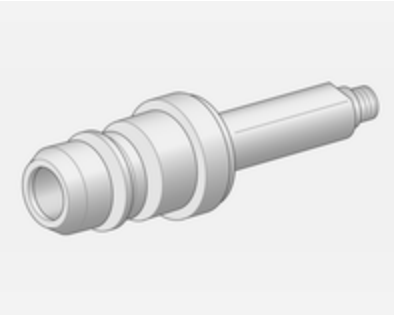

EURO adapter: Spain

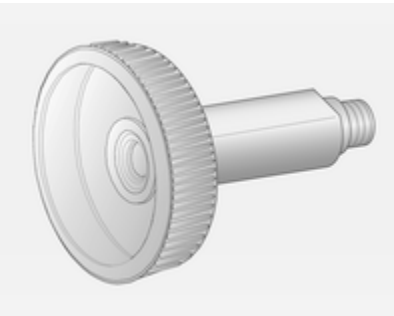

DISH (Italy) adapter: Bosnia-Herzegovina, Bulgaria, Denmark, Estonia, France, Greece, Italy, Croatia, Latvia, Lithuania, Macedonia, Austria, Poland, Portugal, Romania, Sweden, Switzerland, Serbia, Slovakia, Slovenia, Czech Republic, Turkey, Ukraine, Hungary

Fuel filler cap

Only use genuine fuel filler caps. Diesel-engined vehicles have special fuel filler caps.

Fuel consumption - CO_2-Emissions

Petrol and Diesel engines

The fuel consumption (combined) of the model Opel Zafira is within a range of 4.5 to 7.2 l/100 km.

The CO_2 emission (combined) is within a range of 119 to 169 g/km.

For the values specific for your vehicle, refer to the EEC Certificate of Conformity provided with your vehicle or other national registration documents.

Natural gas engines

The gas consumption (combined) of the model Opel Zafira is 4.7 kg/100 km.

The CO_2 emission (combined) is within a range of 106 to 167 g/km.

For the values specific for your vehicle, refer to the EEC Certificate of Conformity provided with your vehicle or other national registration documents.

General information

The official fuel consumption and specific CO_2 emission figures quoted relate to the EU base model with standard equipment.

Fuel consumption data and CO_2 emission data are determined according to regulation R (EC) No. 715/2007 (in the version respectively applicable), taking into consideration the vehicle weight in running order, as specified by the regulation.

The figures are provided only for the purpose of comparison between different vehicle variants and must

not be taken as a guarantee for the actual fuel consumption of a particular vehicle. Additional equipment may result in slightly higher results than the stated consumption and CO_2 figures.

Furthermore, fuel consumption is dependent on personal driving style as well as road and traffic conditions.

Natural gas

The fuel consumption information was obtained using reference fuel G20 (methane proportion 99 - 100 mol%) under prescribed driving conditions. When using natural gas with a lower proportion of methane, the fuel consumption can differ from the specified values.

Towing

General information

Only use towing equipment that has been approved for your vehicle. Vehicles with natural gas engine require a special towing equipment.

Entrust retrofitting of towing equipment to a workshop. It may be necessary to make changes that affect the cooling system, heat shields or other equipment.

The bulb outage detection function for trailer brake light can not detect partial bulb outage. E. g. in case of 4x5 Watts it only detects lamp outage when only a 5 watts lamp remains or none.

Fitting of towing equipment could cover the opening of the towing eye. If this is the case use the coupling ball bar for towing. Always keep the coupling ball bar in the vehicle.

Installation dimensions of factory-fitted towing equipment ⇨ 275.

Driving characteristics and towing tips

Before attaching a trailer, lubricate the coupling ball. However, do not do so if a stabiliser, which acts on the coupling ball, is being used to reduce snaking movements.

For trailers with low driving stability and caravan trailers with a permitted gross vehicle weight of more than 1300 kg the use of a stabiliser is strongly recommended when driving above 80 km/h.

If the trailer starts snaking, drive more slowly, do not attempt to correct the steering and brake sharply if necessary.

When driving downhill, drive in the same gear as if driving uphill and drive at a similar speed.

Adjust tyre pressure to the value specified for full load ⇨ 272.

Trailer towing

Trailer loads

The permissible trailer loads are vehicle and engine-dependent maximum values which must not be exceeded. The actual trailer load is the difference between the actual gross weight of the trailer and the actual coupling socket load with the trailer coupled.

The permissible trailer loads are specified in the vehicle documents. In general, they are valid for gradients up to max. 12 %.

The permitted trailer load applies up to the specified incline and up to an altitude of 1000 metres above sea level. Since engine power decreases as altitude increases due to the air becoming thinner, therefore reducing climbing ability, the permissible gross train weight also decreases by 10 % for every 1000 metres of additional altitude. The gross train weight does not have to be reduced when driving on roads with slight inclines (less than 8 %, e.g. motorways).

The permissible gross train weight must not be exceeded. This weight is specified on the identification plate ⇨ 260.

Vertical coupling load

The vertical coupling load is the load exerted by the trailer on the coupling ball. It can be varied by changing the weight distribution when loading the trailer.

The maximum permissible vertical coupling load (75 kg) is specified on the towing equipment identification plate and in the vehicle documents. Always aim for the maximum load, especially in the case of heavy trailers. The vertical coupling load should never fall below 25 kg.

Rear axle load

When the trailer is coupled and the towing vehicle fully loaded, the permissible rear axle load (see identification plate or vehicle documents) may be exceeded by 60 kg, the gross vehicle weight rating may be exceeded by 60 kg. If the permissible rear axle load is exceeded, a maximum speed of 100 km/h applies.

Towing equipment

Caution
When operating without a trailer, remove the coupling ball bar.

Stowage of coupling ball bar

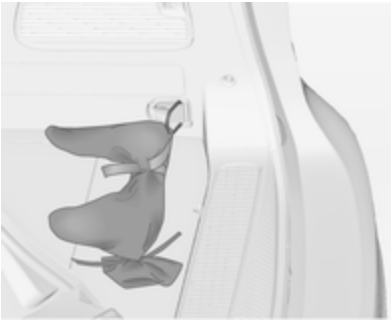

The bag with the coupling ball bar is stowed in the load compartment.

Place the strap through the right rear lashing eye, wrap around twice and tighten the strap to secure the bag.

Fitting the coupling ball bar

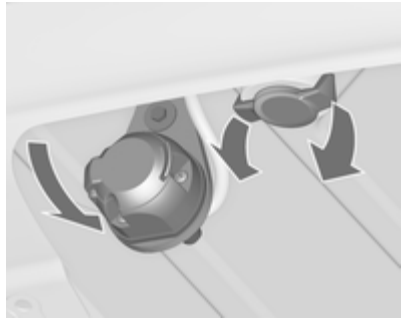

Disengage and fold down the socket. Remove the sealing plug from the opening for the coupling ball bar and stow it.

Checking the tensioning of the coupling ball bar

- Red marking on rotary knob must point towards green marking on coupling ball bar.
- The gap between the rotary knob and the coupling ball bar must be approx. 6 mm.
- The key must be in position 🔓.

Otherwise, the coupling ball bar must be tensioned before being inserted:

- Unlock coupling ball bar by turning key to position 🔓.

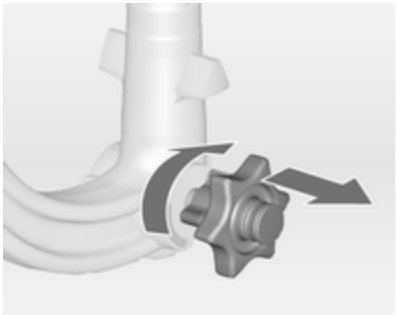

- Pull out rotary knob and turn clockwise as far as it will go.

Inserting the coupling ball bar

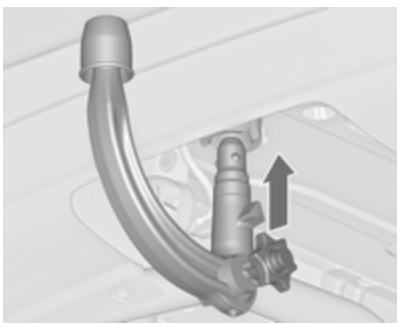

Insert the tensioned coupling ball bar in the opening and push firmly upwards until it audibly engages.

The rotary handle snaps back into its original position resting against the coupling ball bar without a gap.

⚠Warning

Do not touch rotary handle during insertion.

Lock the coupling ball bar by turning the key to position 🔒. Remove the key and close the protective flap.

Eye for break-away stopping cable

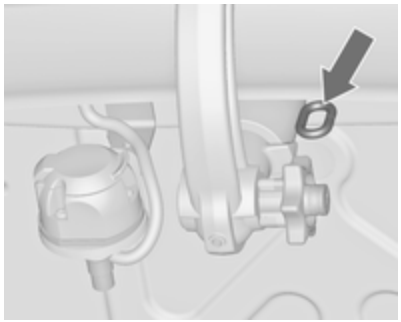

Attach breakaway stopping cable to eye.

Check that the coupling ball bar is correctly installed

- Green marking on rotary knob must point towards green marking on coupling ball bar.
- There must be no gap between the rotary handle and the coupling ball bar.

- The coupling ball bar must be firmly engaged in the opening.
- The coupling ball bar must be locked and the key removed.

⚠ Warning

Towing a trailer is permitted only when a coupling ball bar is fitted correctly. If the coupling ball bar does not engage correctly, seek the assistance of a workshop.

Dismounting the coupling ball bar

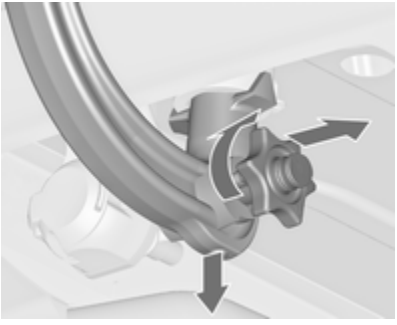

Open the protective flap and turn the key to position 🔓 to unlock the coupling ball bar.

Pull out rotary handle and turn clockwise as far as it will go. Pull out coupling ball bar downwards.

Insert sealing plug in opening. Fold away socket.

Trailer stability assist

If the system detects snaking movements, engine power is reduced and the vehicle/trailer combination is selectively braked until the snaking ceases. While system is working keep steering wheel as still as possible.

Trailer stability assist (TSA) is a function of the Electronic Stability Control ⇨ 169.

Vehicle care

General Information 214
Vehicle checks 215
Bulb replacement 222
Electrical system 230
Vehicle tools 237
Wheels and tyres 237
Jump starting 250
Towing 252
Appearance care 254

General Information

Accessories and vehicle modifications

We recommend the use of genuine parts and accessories and factory approved parts specific for your vehicle type. We cannot assess or guarantee reliability of other products - even if they have a regulatory or otherwise granted approval.

Do not make any modifications to the electrical system, e.g. changes of electronic control units (chip tuning).

Caution
When transporting the vehicle on a train or on a recovery vehicle, the mud flaps might be damaged.

Vehicle storage

Storage for a long period of time

If the vehicle is to be stored for several months:

- Wash and wax the vehicle.
- Have the wax in the engine compartment and underbody checked.
- Clean and preserve the rubber seals.
- Fill up fuel tank completely.
- Change the engine oil.
- Drain the washer fluid reservoir.
- Check the coolant antifreeze and corrosion protection.
- Adjust tyre pressure to the value specified for full load.
- Park the vehicle in a dry, well ventilated place. Engage first or reverse gear or set selector lever to **P**. Prevent the vehicle from rolling.
- Do not apply the parking brake.

- Open the bonnet, close all doors and lock the vehicle.
- Disconnect the clamp from the negative terminal of the vehicle battery. Beware that all systems are not functional, e.g. anti-theft alarm system.

Putting back into operation

When the vehicle is to be put back into operation:

- Connect the clamp to the negative terminal of the vehicle battery. Activate the electronics of the power windows.
- Check tyre pressure.
- Fill up the washer fluid reservoir.
- Check the engine oil level.
- Check the coolant level.
- Fit the number plate if necessary.

End-of-life vehicle recovery

Information on end-of-life vehicle recovery centres and the recycling of end-of-life vehicles is available on our website, where legally required. Only entrust this work to an authorised recycling centre.

Gas vehicles must be recycled by a service centre authorised for gas vehicles.

Vehicle checks

Performing work

⚠ Warning

Only perform engine compartment checks when the ignition is off.

The cooling fan may start operating even if the ignition is off.

⚠ Danger

The ignition system and Xenon headlights use extremely high voltage. Do not touch.

Bonnet

Opening

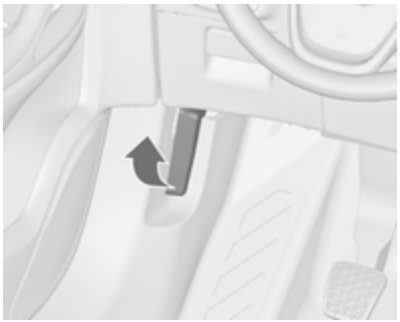

Pull the release lever and return it to its original position.

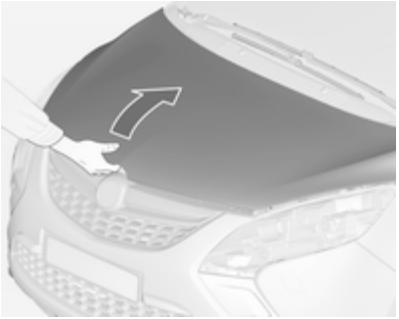

Push the safety catch to the right and open the bonnet.

The bonnet is held open automatically by a lifter.

If the bonnet is opened during an Autostop, the engine will be restarted automatically for safety reasons.

Closing

Lower the bonnet and allow it to drop into the catch. Check that the bonnet is engaged.

Engine oil

Check the engine oil level manually on a regular basis to prevent damage to the engine. Ensure that the correct specification of oil is used. Recommended fluids and lubricants ⇨ 258.

Check with the vehicle on a level surface. The engine must be at operating temperature and switched off for at least 5 minutes.

Pull out the dipstick, wipe it clean, insert it to the stop on the handle, pull out and read the engine oil level.

Insert dipstick to the stop on the handle and make half a turn.

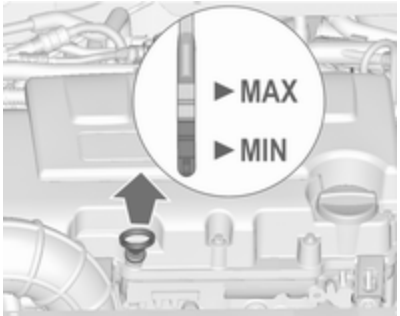

Different dipsticks are used depending on engine variant.

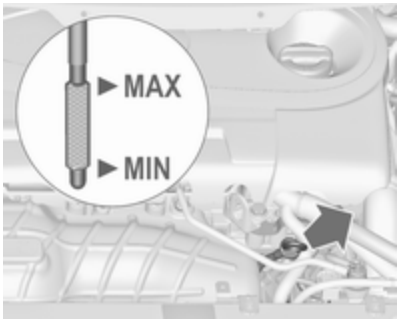

When the engine oil level has dropped to the **MIN** mark, top up engine oil.

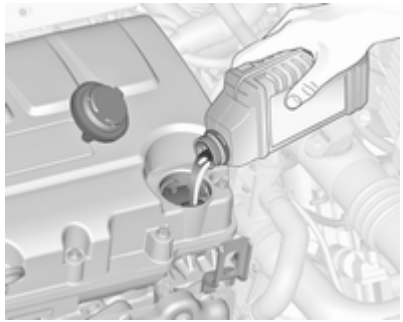

We recommend the use of the same grade of engine oil that was used at last change.

The engine oil level must not exceed the **MAX** mark on the dipstick.

On some engines a chute is needed to top up engine oil.

A chute is located on the right side storage in the load compartment.

Use the chute to fill in the engine oil into the engine oil opening.

After topping up, put the chute into the plastic bag and stow it in the storage.

Caution
Overfilled engine oil must be drained or suctioned out.

Capacities ⇨ 271.

Fit the cap on straight and tighten it.

Engine coolant

The coolant provides freeze protection down to approx. -28 °C. In northern countries with very low temperatures the factory filled coolant provides frost protection down to approx. -37°C.

Caution
Only use approved antifreeze.

Coolant level

Caution
Too low a coolant level can cause engine damage.

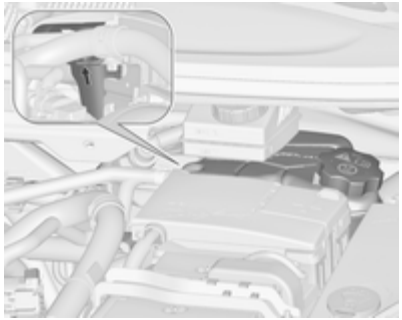

If the cooling system is cold, the coolant level should be above the filling line mark. Top up if the level is low.

⚠Warning
Allow the engine to cool before opening the cap. Carefully open the cap, relieving the pressure slowly.

To top up use a 1:1 mixture of released coolant concentrate mixed with clean tap water. If no coolant concentrate is available, use clean tap water. Install the cap tightly. Have the coolant concentration checked and have the cause of the coolant loss remedied by a workshop.

Washer fluid

Fill with clean water mixed with a suitable quantity of windscreen washer fluid which contains antifreeze. For the correct mixing ratio refer to the washer fluid container.

Caution

Only washer fluid with a sufficient antifreeze concentration provides protection at low temperatures or a sudden drop in temperature.

Brakes

In the event of minimum thickness of the brake lining, a squealing noise sounds during braking.

Continued driving is possible but have the brake lining replaced as soon as possible.

Once new brake linings are installed, do not brake unnecessarily hard for the first few journeys.

Brake fluid

⚠Warning

Brake fluid is poisonous and corrosive. Avoid contact with eyes, skin, fabrics and painted surfaces.

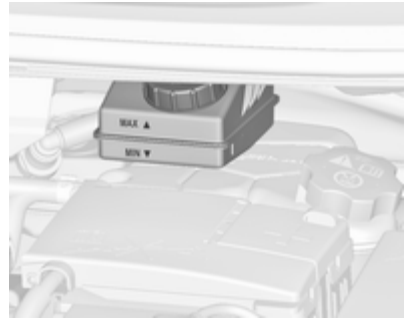

The brake fluid level must be between the **MIN** and **MAX** marks.

When topping up, ensure maximum cleanliness as contamination of the brake fluid can lead to brake system malfunctions. Have the cause of the loss of brake fluid remedied by a workshop.

Only use high-performance brake fluid approved for the vehicle. Brake and clutch fluid ⇨ 258.

Battery

The vehicle battery is maintenance-free provided that the driving profile allows sufficient charging of the battery. Short-distance-driving and frequent engine starts can discharge the battery. Avoid the use of unnecessary electrical consumers.

Batteries do not belong in household waste. They must be disposed of at an appropriate recycling collection point.

Laying up the vehicle for more than 4 weeks can lead to battery discharge. Disconnect the clamp from the negative terminal of the vehicle battery.

Ensure the ignition is switched off before connecting or disconnecting the vehicle battery.

Battery discharge protection ⇨ 144.

Replacing the battery

Note
Any deviation from the instructions given in this paragraph may lead to a temporary deactivation of the stop-start system.

When the battery is being replaced, please ensure that there are no open ventilation holes in the vicinity of the positive terminal. If a ventilation hole is open in this area, it must be closed off with a dummy cap, and the ventilation in the vicinity of the negative terminal must be opened.

Only use batteries that allow the fuse box to be mounted above the battery.

In vehicles with stop-start system, ensure to have the AGM (Absorptive Glass Mat) battery replaced with an AGM battery again.

An AGM battery can be identified by the label on the battery. We recommend the use of an original Opel battery.

Note
Using an AGM battery different from the original Opel battery might result in a lower performance of the stop-start system.

We recommend that you have the battery replaced by a workshop.

Stop-start system ⇨ 157.

Charging the battery

⚠ Warning

On vehicles with stop-start system, ensure that the charging potential does not exceed 14.6 volts when using a battery charger. Otherwise the battery might be damaged.

Jump starting ⇨ 250.

Warning label

Meaning of symbols:

- No sparks, naked flames or smoking.
- Always shield eyes. Explosive gases can cause blindness or injury.
- Keep the battery out of reach of children.
- The battery contains sulphuric acid which could cause blindness or serious burn injuries.
- See the Owner's Manual for further information.
- Explosive gas may be present in the vicinity of the battery.

Diesel fuel system bleeding

If the tank has been run dry, the diesel fuel system must be bled. Switch on the ignition three times for 15 seconds at a time. Then crank the engine for a maximum of 40 seconds. Repeat this process after no less than 5 seconds. If the engine fails to start, seek the assistance of a workshop.

Wiper blade replacement

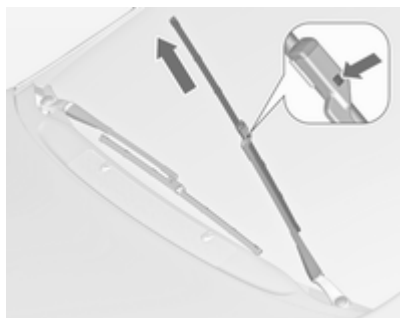

Lift the wiper arm until it stays in the raised position, press button to disengage the wiper blade and remove.

Attach the wiper blade slightly angled to the wiper arm and push until it engages.

Lower wiper arm carefully.

Wiper blade on the rear window

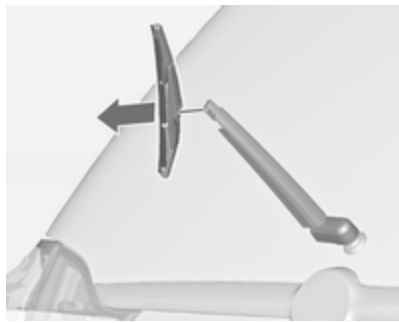

Lift wiper arm. Disengage wiper blade as shown in illustration and remove.

Attach the wiper blade slightly angled to the wiper arm and push until it engages.

Lower wiper arm carefully.

Bulb replacement

Switch off the ignition and switch off the relevant switch or close the doors.

Only hold a new bulb at the base! Do not touch the bulb glass with bare hands.

Use only the same bulb type for replacement.

Replace headlight bulbs from within the engine compartment.

Halogen headlights

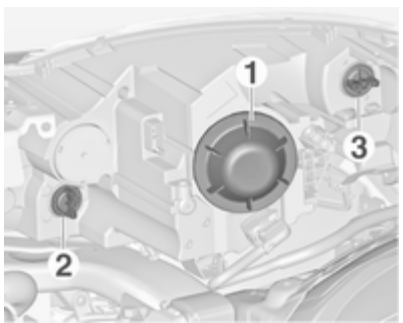

Bi-Halogen Headlight (1) with one bulb for low and high beam.

Front turn signal (2).

Sidelight/Daytime running light (3).

Low/High beam (1)

1. Rotate the cap (1) anticlockwise and remove it.

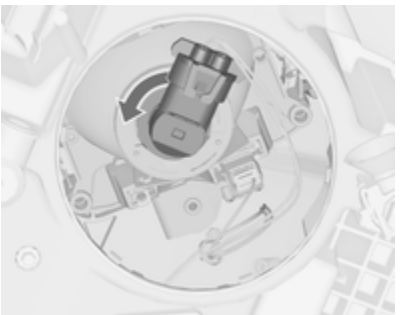

2. Rotate the bulb holder anticlockwise to disengage. Withdraw the bulb holder from the reflector.

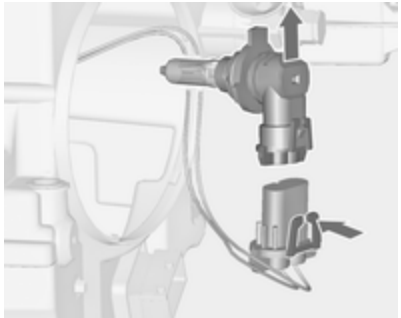

3. Disengage the bulb holder from the plug connector by pressing the retaining lug.
4. Replace the bulb and connect bulb holder with the plug connector.
5. Insert the bulb holder, engaging the two lugs into the reflector and rotate clockwise to secure.
6. Fit the cap and rotate clockwise.

Front turn signal (2)

1. Rotate bulb socket (2) anticlockwise to disengage. Withdraw the bulb socket from the reflector.

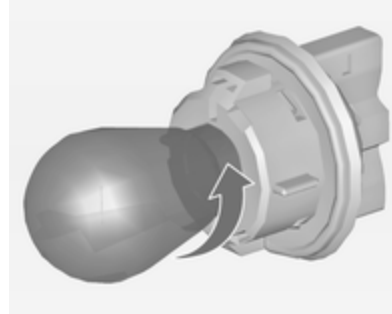

2. Remove the bulb from the socket by turning anticlockwise.
3. Replace and insert new bulb into socket by turning clockwise.
4. Insert the bulb socket into the reflector and turn clockwise.

Sidelight/Daytime running light (3)

1. Rotate bulb socket (3) anticlockwise to disengage. Withdraw the bulb socket from the reflector.

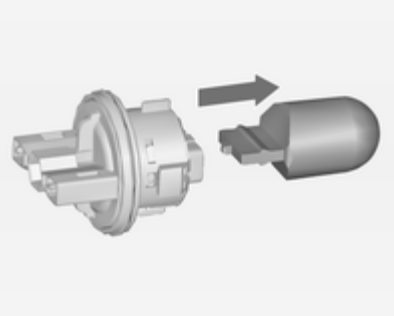

2. Remove the bulb from the socket by pulling.
3. Replace and insert new bulb into socket.
4. Insert the bulb socket into the reflector and turn clockwise.

Adaptive forward lighting

⚠ Danger

Adaptive forward lighting system uses Xenon headlights.

Xenon headlights work under extremely high electrical voltage. Do not touch. Have bulbs replaced by a workshop.

Bulbs for front turn signal and corner lighting can be changed.

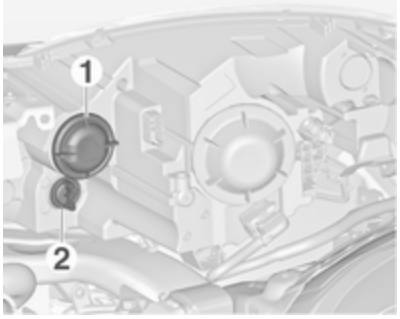

Corner lighting (1).

Front turn signal (2).

Sidelight/Daytime running light are designed as Light Emitting Diodes (LEDs) and cannot be changed.

Corner lighting (1)

1. Rotate the cap (1) anticlockwise and remove it.

2. Rotate the bulb holder anticlockwise to disengage. Withdraw the bulb holder from the reflector.

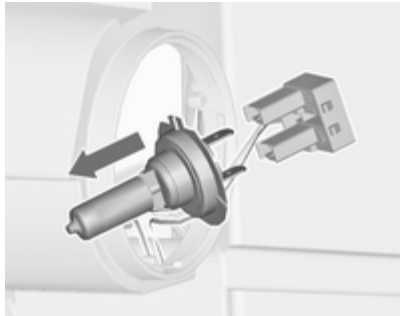

3. Disengage the bulb from the plug connector by pulling.
4. Replace the bulb and connect bulb holder with the plug connector.
5. Insert the bulb holder, engaging the two lugs into the reflector and rotate clockwise to secure.
6. Fit the cap and rotate clockwise.

Front turn signal (2)

1. Rotate bulb socket (2) anticlockwise to disengage. Withdraw the bulb socket from the reflector.

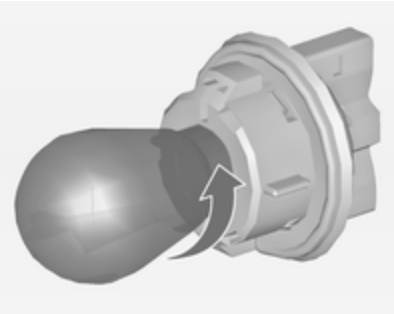

2. Remove the bulb from the socket by turning anticlockwise.
3. Replace and insert new bulb into socket by turning clockwise.
4. Insert the bulb socket into the reflector and turn clockwise.

Fog lights

The bulbs are accessible from beneath the vehicle.

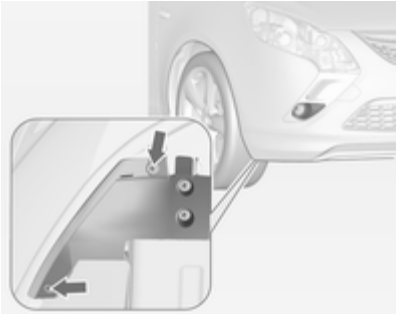

1. Remove the outer screws of the cover, marked by the arrows.

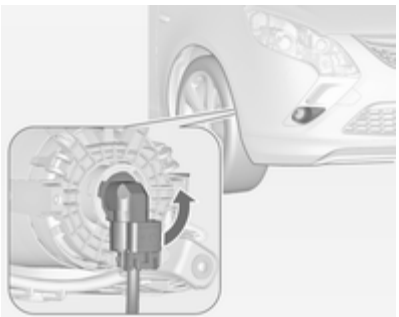

2. Hinge away the cover.

   Turn the bulb socket anti-clockwise and remove it from the reflector.

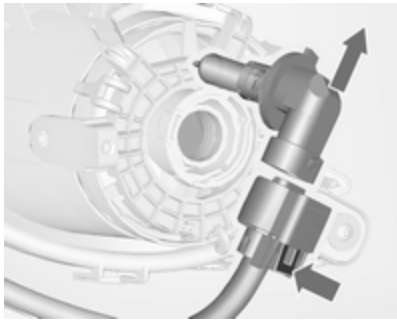

3. Disengage the bulb socket from the plug connector by pressing the retaining lug.
4. Remove and replace the bulb socket with bulb and attach the plug connector.
5. Insert the bulb socket into the reflector, turn clockwise and engage.
6. Mount the cover with the screws.

Tail lights

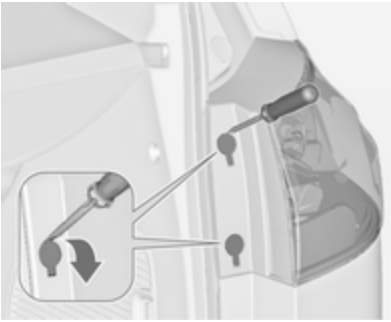

1. Hinge out the screw cover.

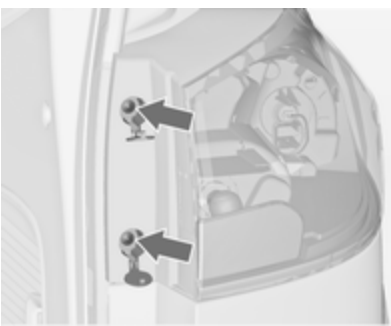

2. Remove the screws, marked by the arrows.

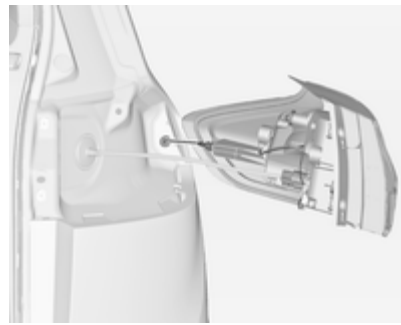

3. Carefully withdraw the light assembly from retaining pins and remove.
4. Detach the plug connector from the light assembly.

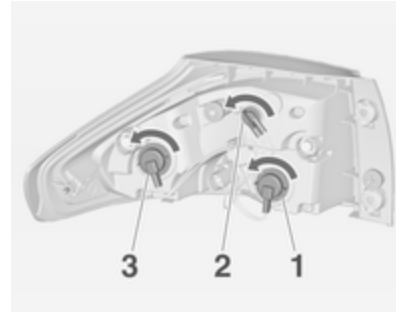

5. Remove and replace the bulb by turning the bulb socket.

   Turn signal light (**1**)

   Tail lights (**2**)

   Brake light (**3**)

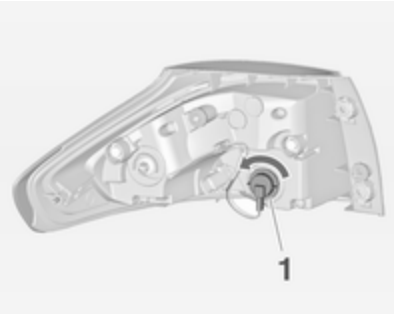

Tail lights with Light Emitting Diode (LED) for tail and brake light

Only turn signal light (**1**) can be changed.

Remove and replace the bulb by turning the bulb socket.

6. Connect the plug connector with the light assembly.
7. Fit light assembly onto retaining pins and mount light assembly with the screws.
8. Plug in screw cover.

Reverse lights (4) in the tailgate

1. Open the tailgate and remove the cover.

2. Turn the bulb holder anti-clockwise and remove it from the reflector.

3. Remove the bulb from the socket by pulling.
4. Replace and insert new bulb into socket.
5. Insert the bulb socket into the reflector and turn clockwise.
6. Install the cover.

Rear fog light

The bulbs are accessible from beneath the vehicle.

1. Turn the bulb socket anti-clockwise and remove it from the reflector.

2. Remove the bulb from the socket by turning anticlockwise.
3. Replace and insert new bulb into the socket by turning clockwise.
4. Insert the bulb socket into the reflector, turn clockwise and engage.

Bulb check

Switch on the ignition, operate and check all lights.

Side turn signal lights

Have bulbs replaced by a workshop.

Number plate light

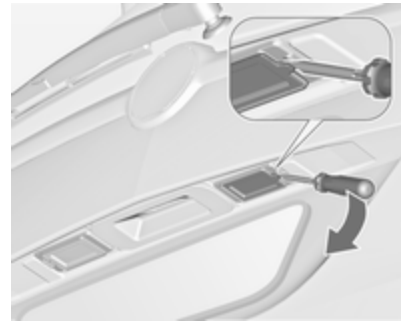

1. Insert screwdriver in recess of the cover, press to the side and release spring. Remove cover.

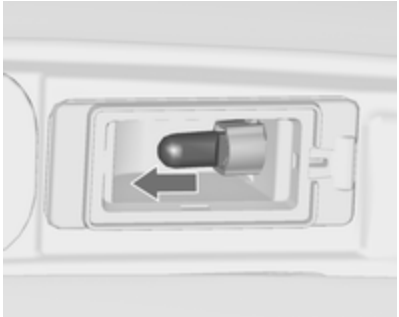

2. Remove the bulb from the socket by pulling.
3. Replace the bulb and insert it into the socket.
4. Push the cover into the housing.

Interior lights

Courtesy lights, reading lights

Have bulbs replaced by a workshop.

Load compartment light

Have bulbs replaced by a workshop.

Instrument panel illumination

Have bulbs replaced by a workshop.

Electrical system

Fuses

Data on the replacement fuse must match the data on the defective fuse.

There are three fuse boxes in the vehicle:

- in the front left of the engine compartment,
- in left-hand drive vehicles, in the interior behind the storage compartment, or, in right-hand drive vehicles, behind the glovebox,
- behind a cover on the left side of the load compartment.

Before replacing a fuse, turn off the respective switch and the ignition.

A blown fuse can be recognised by its melted wire. Do not replace the fuse until the cause of the fault has been remedied.

Some functions are protected by several fuses.

Fuses may also be inserted without existence of a function.

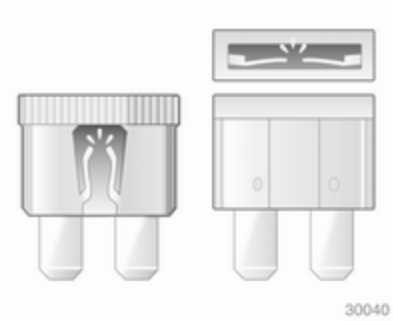

Fuse extractor

A fuse extractor may be located in the fuse box in the engine compartment.

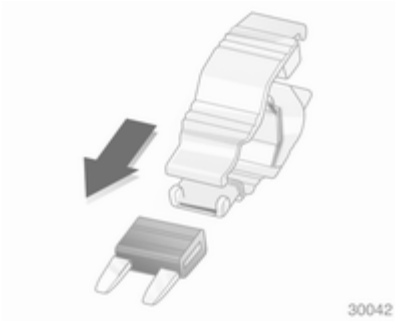

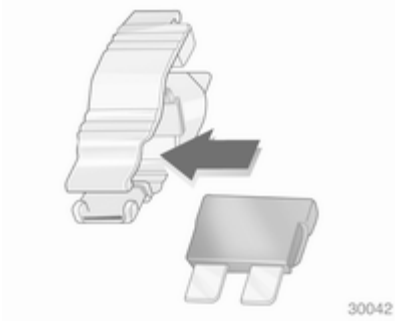

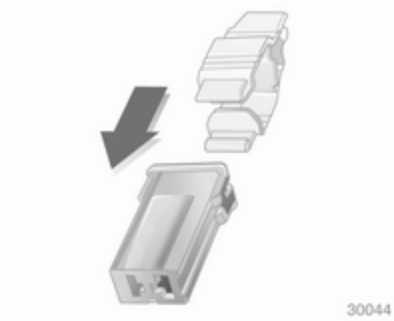

Place the fuse extractor on the various types of fuse from the top or side, and withdraw fuse.

Engine compartment fuse box

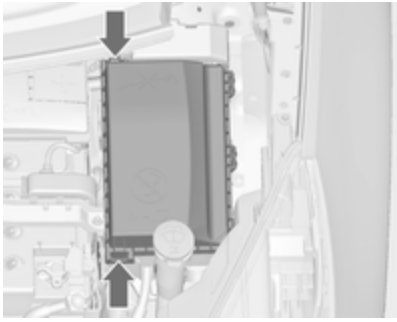

The fuse box is in the front left of the engine compartment.

Disengage the cover and fold it upwards until it stops. Remove the cover vertically upwards.

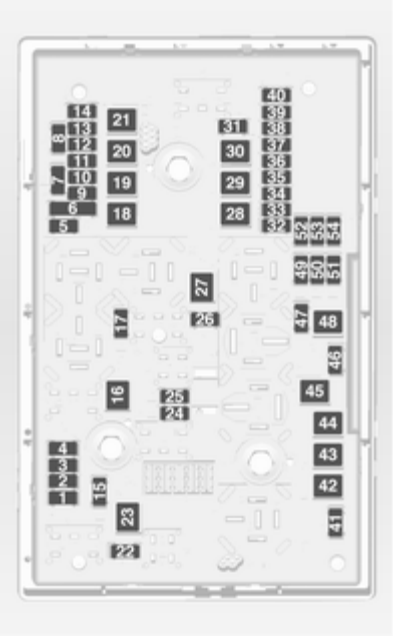

No.	Circuit
1	Engine control module
2	Lambda probe
3	Fuel injection, ignition system
4	Fuel injection, ignition system
5	–
6	Mirror heating
7	Fan control
8	Lambda probe, engine
9	Rear window sensor
10	Battery sensor
11	Trunk release
12	Adaptive forward lighting module
13	–
14	Rear window wiper
15	Engine control module
16	Starter

No.	Circuit
17	Transmission control module
18	Heated rear window
19	Front power windows
20	Rear power windows
21	ABS
22	Left high beam (Halogen)
23	Headlamp washer system
24	Right low beam (Xenon)
25	Left low beam (Xenon)
26	Fog lights
27	Diesel fuel heating
28	Stop-start system
29	Electrical parking brake
30	ABS
31	Stop-start system, Adaptive cruise control, auxiliary heater
32	Airbag

No.	Circuit
33	Adaptive forward lighting
34	Coolant pump
35	Power windows
36	Air condition compressor
37	Canister vent solenoid
38	Vacuum pump
39	Fuel system control module
40	Windscreen washer, Rear window washer system
41	Right high beam (Halogen)
42	Radiator fan
43	Windscreen wiper
44	Wiper system
45	Radiator fan
46	–
47	Horn
48	Radiator fan

No.	Circuit
49	Fuel pump
50	Headlamp levelling
51	Air shutter
52	Auxiliary heater, diesel engine
53	Transmission control module, Engine control module
54	Wiring monitoring

After having changed defective fuses close the fuse box cover and press until it engages.

If the fuse box cover is not closed correctly, malfunction may occur.

Instrument panel fuse box

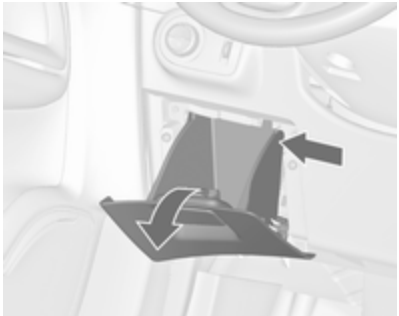

In left-hand drive vehicles, the fuse box is behind the storage compartment in the instrument panel.

Open the compartment and push it to the left to unlock. Fold the compartment down and remove it.

In right-hand drive vehicles, the fuse box is located behind a cover in the glovebox. Open the glovebox, then open the cover and fold it down.

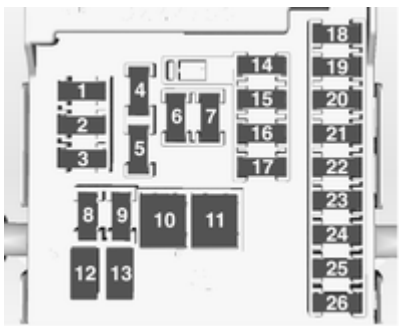

No.	Circuit
1	Cruise control, speed limiter, adaptive cruise control, steering wheel controls
2	Body control module
3	Body control module
4	Radio
5	Infotainment system, instrument
6	Cigar lighter
7	Power outlet
8	Body control module
9	Airbag module
10	Body control module
11	Interior fan air condition
12	–
13	–
14	Diagnostic connector
15	Airbag unit

No.	Circuit
16	Power outlet load compartment
17	Air conditioning system
18	Stop-start system
19	Brake lights, tail lights, interior lights
20	Body control module
21	Instrument panel cluster
22	Ignition switch
23	Body control module
24	Body control module
25	–
26	–

Load compartment fuse box

The fuse box is on the left side of the load compartment behind a cover.

Remove the cover.

If equipped with tyre repair kit, remove the complete box.

Fuse assignments

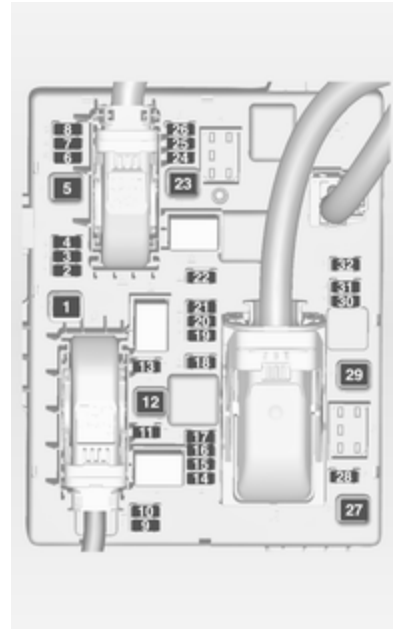

No.	Circuit
1	Trailer module
2	Trailer outlet
3	Parking assist
4	–
5	–
6	–
7	Front seat
8	Anti-theft alarm system
9	–
10	–
11	Trailer module, Trailer socket
12	–
13	Trailer outlet
14	–
15	Mirror folding, Rainsensor, High beam assist
16	Inside mirror

No.	Circuit
17	Power outlet
18	–
19	Steering wheel heating
20	Sunblind
21	Seat heating
22	–
23	–
24	–
25	Adaptive cruise control, Side blind spot alert
26	–
27	–
28	–
29	–
30	–

No.	Circuit
31	Amplifier, Subwoofer
32	Active damping system, Lane departure warning

Vehicle tools

Tools

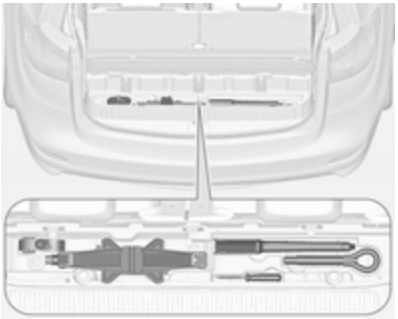

Some tools, the towing eye and (only on vehicles with spare wheel) the vehicle jacking equipment are placed in the rear storage in the load compartment floor.

Open the cover in front of the tailgate.

Wheels and tyres

Tyre condition, wheel condition

Drive over edges slowly and at right angles if possible. Driving over sharp edges can cause tyre and wheel damage. Do not trap tyres on the kerb when parking.

Regularly check the wheels for damage. Seek the assistance of a workshop in the event of damage or unusual wear.

Winter tyres

Winter tyres improve driving safety at temperatures below 7 °C and should therefore be fitted on all wheels.

In accordance with country-specific regulations, affix the speed sticker in the driver's field of view.

Tyre designations

E.g. **215/60 R 16 95 H**

215	=	Tyre width, mm
60	=	Cross-section ratio (tyre height to tyre width), %
R	=	Belt type: Radial
RF	=	Type: RunFlat
16	=	Wheel diameter, inches
95	=	Load index e.g. 95 is equivalent to 690 kg
H	=	Speed code letter

Speed code letter:

Q	=	up to 160 km/h
S	=	up to 180 km/h
T	=	up to 190 km/h
H	=	up to 210 km/h
V	=	up to 240 km/h
W	=	up to 270 km/h

Tyre pressure

Check the pressure of cold tyres at least every 14 days and before any long journey. Do not forget the spare wheel. This also applies to vehicles with tyre pressure monitoring system.

Unscrew the valve cap.

Tyre pressure ⇨ 272 and on the label on the front left or right door frame.

The tyre pressure data refers to cold tyres. It applies to summer and winter tyres.

Always inflate the spare tyre to the pressure specified for full load.

The ECO tyre pressure serves to achieve the smallest amount of fuel consumption possible.

Incorrect tyre pressures will impair safety, vehicle handling, comfort and fuel economy and will increase tyre wear.

⚠Warning

If the pressure is too low, this can result in considerable tyre warm-up and internal damage, leading to tread separation and even to tyre blow-out at high speeds.

If the tyre pressure must be reduced or increased on a vehicle with tyre pressure monitoring system, switch off ignition.

Tyre pressure monitoring system

The tyre pressure monitoring system checks the pressure of all four wheels once a minute when vehicle speed exceeds a certain limit.

All wheels must be equipped with pressure sensors and the tyres must have the prescribed pressure.

The current tyre pressures can be shown in the **Vehicle Information Menu** in the Driver Information Centre.

The menu can be selected by the buttons on the turn signal lever.

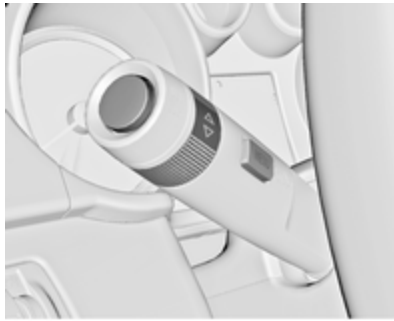

Press the **MENU** button to select the **Vehicle Information Menu** 🚗.

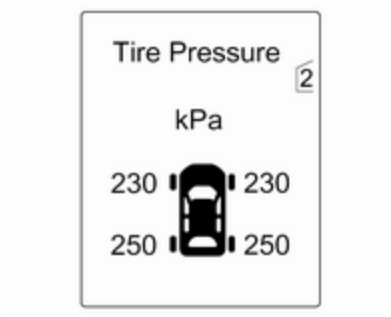

Turn the adjuster wheel to select the tyre pressure monitoring system.

System status and small pressure differences are displayed by a warning message with the corresponding tyre flashing in the Driver Information Centre.

Furthermore considerable pressure differences between the tyres on one axle are displayed by a warning message in the Driver Information Centre.

Major pressure differences are indicated additionally by the control indicator (!).

Control indicator (!) ⇨ 111.

Vehicle messages ⇨ 120.

If the tyre pressure shall be reduced or increased, switch off ignition.

If a complete set of wheels without sensors is mounted (e.g. four winter tyres), a message is displayed in the Driver Information Centre. The tyre pressure monitoring system is not operational. Retrofitting of sensors is possible.

A spare wheel or temporary spare wheel is not equipped with pressure sensors. The tyre pressure monitoring system is not operational for these wheels. Control indicator (!) illuminates. For the further three wheels the system remains operational.

The use of commercially available liquid tyre repair kits can impair the function of the system. Factory approved repair kits can be used.

External high-power radio equipment could disrupt the tyre pressure monitoring system.

The tyre pressure monitoring system valve cores and sealing rings must be replaced each time the tyres are changed.

Adaptive threshold function

The tyre pressure monitoring system automatically detects if the vehicle is driven with a tyre pressure appropriate for a load of up to 3 people or for a full load.

If the tyre pressure shall be reduced, switch off ignition before reducing.

Auto learn function

After changing wheels the vehicle has to be stationary for approx. 20 minutes, before the system recalculates. The following relearn process takes up to 10 minutes of driving with a minimum speed of 20 km/h. In this case – – can be displayed or pressure values can swap in the Driver Information Centre.

If problems occur during the relearn process a warning message is displayed in the Driver Information Centre.

Temperature compensation

Cold tyres decrease the tyre pressure, warm tyres increase the tyre pressure. The tyre pressure monitoring system considers this effect for the warning messages.

The tyre pressure value displayed in the Driver Information Centre shows the actual tyre pressure. Therefore it is important to check tyre pressure with cold tyres.

Tread depth

Check tread depth at regular intervals.

Tyres should be replaced for safety reasons at a tread depth of 2-3 mm (4 mm for winter tyres).

For safety reasons, it is recommended that the tread depth of the tyres on one axle should not vary by more than 2 mm.

The legally permissible minimum tread depth (1.6 mm) has been reached when the tread has worn down as far as one of the tread wear indicators (TWI). Their position is indicated by markings on the sidewall.

If there is more wear at the front than the rear, swap round front wheels and rear wheels periodically. Ensure that the direction of rotation of the wheels remains the same.

Tyres age, even if they are not used. We recommend tyre replacement every 6 years.

Changing tyre and wheel size

If tyres of a different size than those fitted at the factory are used, it may be necessary to reprogramme the speedometer as well as the nominal tyre pressure and make other vehicle modifications.

After converting to a different tyre size, have the label with tyre pressures replaced.

⚠ Warning

Use of unsuitable tyres or wheels may lead to accidents and will invalidate the vehicle type approval.

Wheel covers

Wheel covers and tyres that are factory approved for the respective vehicle and comply with all of the relevant wheel and tyre combination requirements must be used.

If the wheel covers and tyres used are not factory approved, the tyres must not have a rim protection ridge.

Wheel covers must not impair brake cooling.

⚠Warning

Use of unsuitable tyres or wheel covers could lead to sudden pressure loss and thereby accidents.

Tyre chains

Tyre chains are only permitted on the front wheels.

Always use fine mesh chains that add no more than 10 mm to the tyre tread and the inboard sides (including chain lock).

⚠Warning

Damage may lead to tyre blowout.

Tyre chains are only permitted on tyres of size 215/60 R 16 and 225/50 R 17.

Tyre chains are not permitted on tyres of size 225/45 R 18, 235/45 R 18 and 235/40 R 19.

The use of tyre chains is not permitted on the temporary spare wheel.

Tyre repair kit

Minor damage to the tyre tread can be repaired with the tyre repair kit.

Do not remove foreign bodies from the tyres.

Tyre damage exceeding 4 mm or that is at tyre's sidewall cannot be repaired with the tyre repair kit.

⚠Warning

Do not drive faster than 80 km/h.

Do not use for a lengthy period.

Steering and handling may be affected.

If you have a flat tyre:

Apply the parking brake and engage first gear, reverse gear or **P**.

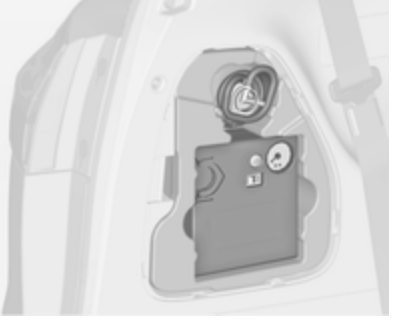

The tyre repair kit is on the left side in the load compartment behind a cover.

1. Take the tyre repair kit from the compartment.
2. Remove the compressor.

3. Remove the electrical connection cable and air hose from the stowage compartments on the underside of the compressor.

4. Screw the compressor air hose to the connection on the sealant bottle.
5. Fit the sealant bottle into the retainer on the compressor.

   Set the compressor near the tyre in such a way that the sealant bottle is upright.

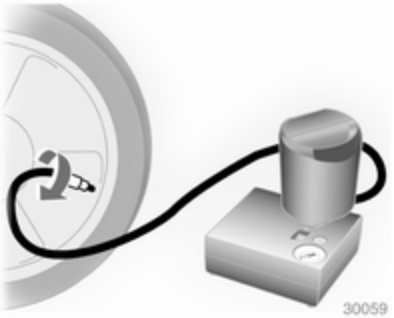

6. Unscrew valve cap from defective tyre.
7. Screw the filler hose to the tyre valve.
8. The switch on the compressor must be set to O.
9. Connect the compressor plug to the power outlet or cigarette lighter socket.

   To avoid discharging the battery, we recommend running the engine.

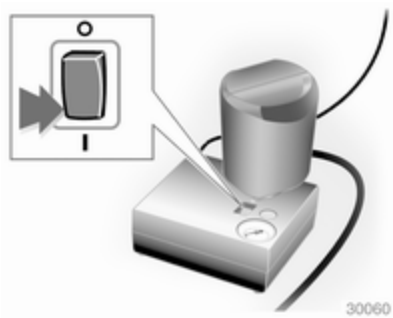

10. Set the rocker switch on the compressor to I. The tyre is filled with sealant.
11. The compressor pressure gauge briefly indicates up to 6 bar whilst the sealant bottle is emptying (approx. 30 seconds). Then the pressure starts to drop.
12. All of the sealant is pumped into the tyre. Then the tyre is inflated.
13. The prescribed tyre pressure should be obtained within 10 minutes. Tyre pressure ⇨ 272. When the correct pressure is obtained, switch off the compressor.

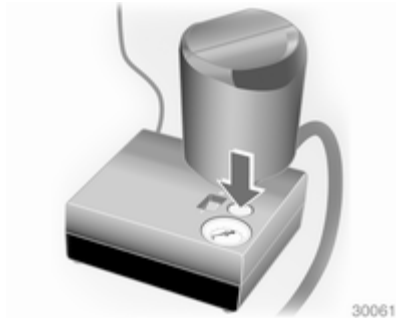

If the prescribed tyre pressure is not obtained within 10 minutes, remove the tyre repair kit. Move the vehicle one tyre rotation. Reattach the tyre repair kit and continue the filling procedure for 10 minutes. If the prescribed tyre pressure is still not obtained, the tyre is too badly damaged. Seek the assistance of a workshop.

Drain excess tyre pressure with the button over the pressure indicator.

Do not run the compressor longer than 10 minutes.

14. Detach the tyre repair kit. Push catch on bracket to remove sealant bottle from bracket. Screw the tyre inflation hose to the free connection of the sealant bottle. This prevents sealant from escaping. Stow tyre repair kit in load compartment.
15. Remove any excess sealant using a cloth.
16. Take the label indicating maximum permitted speed from the sealant bottle and affix in the driver's field of view.
17. Continue driving immediately so that sealant is evenly distributed in the tyre. After driving approx. 10 km (but no more than 10 minutes), stop and check tyre pressure. Screw compressor air hose directly onto tyre valve and compressor when doing this.

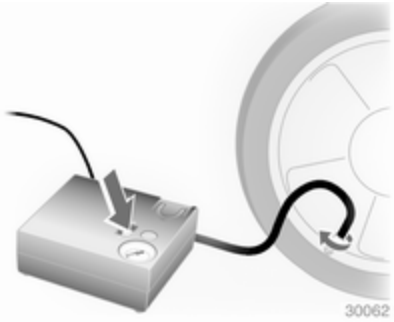

If tyre pressure is more than 1.3 bar, set it to the correct value. Repeat the procedure until there is no more loss of pressure.

If the tyre pressure has fallen below 1.3 bar, the vehicle must not be used. Seek the assistance of a workshop.

18. Stow away tyre repair kit in load compartment.

Note
The driving characteristics of the repaired tyre are severely affected, therefore have this tyre replaced.

If unusual noise is heard or the compressor becomes hot, turn compressor off for at least 30 minutes.

The built-in safety valve opens at a pressure of 7 bar.

Note the expiry date of the kit. After this date its sealing capability is no longer guaranteed. Pay attention to storage information on sealant bottle.

Replace the used sealant bottle. Dispose of the bottle as prescribed by applicable laws.

The compressor and sealant can be used from approx. -30 °C.

The adapters supplied can be used to pump up other items e.g. footballs, air mattresses, inflatable dinghies etc. They are located on the underside of the compressor. To remove, screw on compressor air hose and withdraw adapter.

Wheel changing

Some vehicles are equipped with a tyre repair kit instead of a spare wheel ⇨ 241.

Make the following preparations and observe the following information:

- Park the vehicle on a level, firm and non-skid surface. The front wheels must be in the straight-ahead position.
- Apply the parking brake and engage first gear, reverse gear or **P**.
- Remove the spare wheel ⇨ 247.
- Never change more than one wheel at once.
- Use the jack only to change wheels in case of puncture, not for seasonal winter or summer tyre change.
- If the ground on which the vehicle is standing is soft, a solid board (max. 1 cm thick) should be placed under the jack.
- No people or animals may be in the vehicle when it is jacked-up.
- Never crawl under a jacked-up vehicle.

- Do not start the vehicle when it is raised on the jack.
- Clean wheel nuts and thread with a clean cloth before mounting the wheel.

⚠Warning

Do not grease wheel bolt, wheel nut and wheel nut cone.

1. Disengage wheel nut caps with a screwdriver and remove. Pull off the wheel cover with the hook. Vehicle tools ⇨ 237.

   Alloy wheels: Disengage wheel nut caps with a screwdriver and remove. To protect the wheel, place a soft cloth between the screwdriver and the alloy wheel.

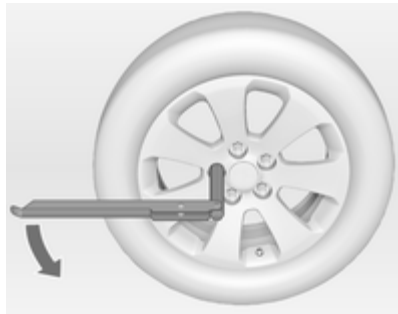

2. Fold out the wheel wrench and install ensuring that it locates securely and loosen each wheel nut by half a turn.

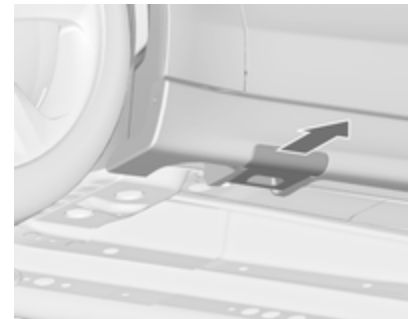

3. Some versions may have covered the vehicle jacking point. Pull out the cover sideways.

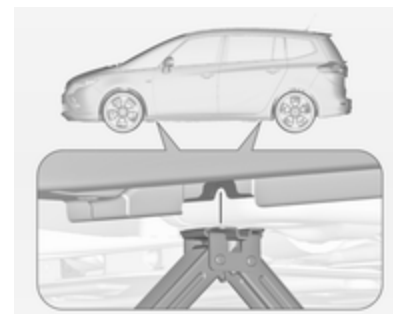

4. Ensure the jack is correctly positioned under the relevant vehicle jacking point.

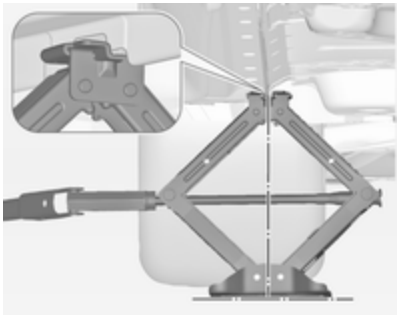

5. Set the jack to the necessary height. Position it directly below the jacking point in a manner that prevents it from slipping.

Attach wheel wrench and with the jack correctly aligned rotate wheel wrench until wheel is clear of the ground.

6. Unscrew the wheel nuts.
7. Change the wheel. Spare wheel ⇨ 247
8. Screw on the wheel nuts.
9. Lower vehicle.
10. Install the wheel wrench ensuring that it locates securely and tighten each nut in a crosswise sequence. Tightening torque is 140 Nm.
11. Align the valve hole in the wheel cover with the tyre valve before installing.

    Install wheel nut caps.
12. Install vehicle jacking point cover.
13. Stow the replaced wheel ⇨ 247 and the vehicle tools ⇨ 237.
14. Check the tyre pressure of the installed tyre and the wheel nut torque as soon as possible.

Have the defective tyre renewed or repaired as soon as possible.

Jacking position for lifting platform

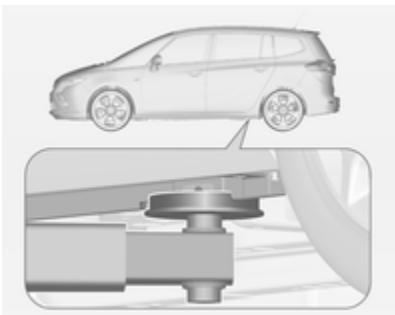

Rear arm position of the lifting platform centrically under the recess of the sill.

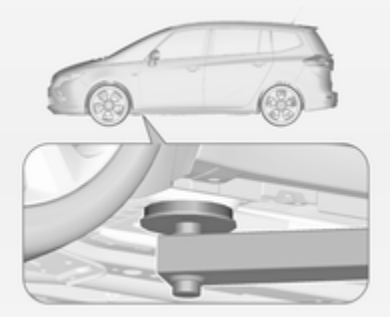

Front arm position of the lifting platform at the underbody.

Spare wheel

Some vehicles are equipped with a tyre repair kit instead of a spare wheel.

The spare wheel can be classified as a temporary spare wheel depending on the size compared to the other mounted wheels and country regulations.

The spare wheel has a steel rim.

Caution
The use of a spare wheel that is smaller than the other wheels or in combination with winter tyres could affect driveability. Have the defective tyre replaced as soon as possible.

The spare wheel is located in a holder beneath the vehicle floor.

1. Open the stowage in the load compartment ⇨ 237.
2. Remove both caps above the hexagon bolts.

3. Fit the wheel wrench on one hexagon bolt and turn it anti-clockwise until a resistance is noticeable.
4. Proceed with the other hexagon bolt in the same way.

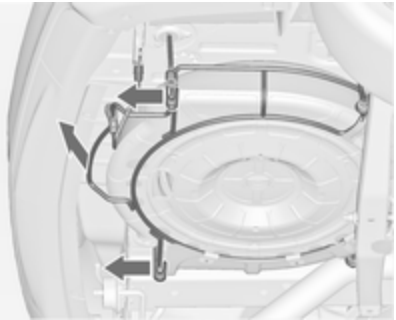

5. Lift the spare wheel holder and unhook both catches.
6. Lower the spare wheel holder.

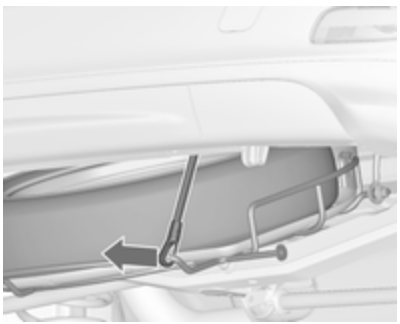

7. Detach the safety cable.

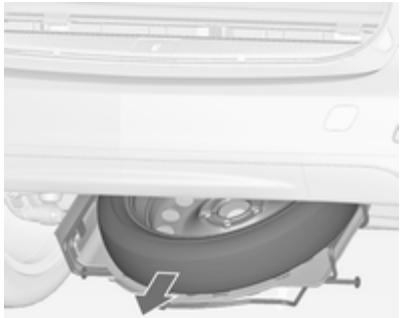

8. Lower holder all the way and remove spare wheel.
9. Change the wheel.

   The damaged wheel has to be secured in the load compartment, see below.
10. Lift the empty spare wheel holder and insert the safety cable.
11. Lift the spare wheel holder farther and engage in both catches. The open sides of the catches must point in the direction of travel.
12. Close the empty spare wheel holder by turning both hexagon bolts clockwise successively using the wheel wrench.
13. Fit the caps above both hexagon bolts.
14. Stow wheel wrench and the jack in the stowage in front of the tailgate.
15. Close the stowage compartment cover.

When stowing again the spare wheel in the spare wheel holder, note that the wheel is positioned with the tyre valve above the recess of the wheel holder.

Stowing a damaged wheel in the load compartment

The spare wheel holder is not designed for other tyre sizes than spare wheel.

A damaged wheel wider than the spare wheel has to be stowed in the load compartment and secured with a strap. Vehicle tools ⇨ 237.

The seats of the third row must be folded in ⇨ 76.

1. Position the wheel close to the left sidewall of the load compartment.

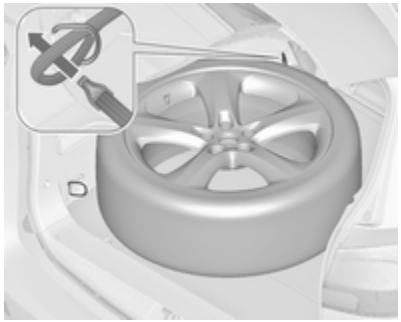

2. Place the loop end of the strap through the front lashing eye on the left side.
3. Place the hook end of the strap through the loop and pull it until the strap is fastened securely to the lashing eye.

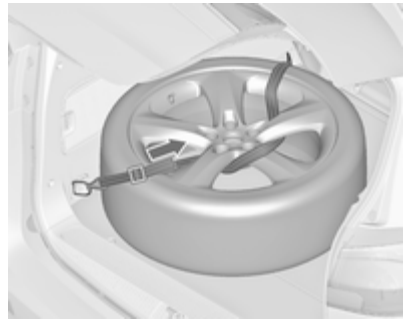

4. Insert the strap through the spokes of the wheel as shown in the illustration.
5. Mount the hook to the rear left lashing eye.
6. Tighten the strap and secure it using the buckle.

⚠ Danger

Always drive with folded up and engaged rear seat backrests when stowing a damaged full size wheel in the load compartment.

⚠ Warning

Storing a jack, a wheel or other equipment in the load compartment could cause injury if they are not fixed properly. During a sudden stop or a collision, loose equipment could strike someone.

Store jack and tools always in the respective storage compartments and secure them by fixing.

Damaged wheel placed in the load compartment must always be secured by the strap.

Temporary spare wheel

The use of the temporary spare wheel could affect driveability. Have the defective tyre renewed or repaired as soon as possible.

Only mount one temporary spare wheel. Do not drive faster than 80 km/h. Take curves slowly. Do not use for a long period of time.

If your vehicle gets a flat tyre on the rear while towing another vehicle, mount the temporary spare wheel in the front and the full tyre in the rear.

Tyre chains ⇨ 241.

Directional tyres

Fit directional tyres such that they roll in the direction of travel. The rolling direction is indicated by a symbol (e.g. an arrow) on the sidewall.

The following applies to tyres fitted opposing the rolling direction:

- Driveability may be affected. Have the defective tyre renewed or repaired as soon as possible.
- Drive particularly carefully on wet and snow-covered road surfaces.

Jump starting

Do not start with quick charger.

A vehicle with a discharged battery can be started using jump leads and the battery of another vehicle.

⚠ Warning

Be extremely careful when starting with jump leads. Any deviation from the following instructions can lead to injuries or damage caused by battery explosion or damage to the electrical systems of both vehicles.

⚠ Warning

Avoid contact of the battery with eyes, skin, fabrics and painted surfaces. The fluid contains sulphuric acid which can cause injuries and damage in the event of direct contact.

- Never expose the battery to naked flames or sparks.
- A discharged battery can already freeze at a temperature of 0 °C. Defrost the frozen battery before connecting jump leads.
- Wear eye protection and protective clothing when handling a battery.
- Use a booster battery with the same voltage (12 Volts). Its capacity (Ah) must not be much less than that of the discharged battery.
- Use jump leads with insulated terminals and a cross section of at least 16 mm^2 (25 mm^2 for diesel engines).
- Do not disconnect the discharged battery from the vehicle.
- Switch off all unnecessary electrical consumers.
- Do not lean over the battery during jump starting.
- Do not allow the terminals of one lead to touch those of the other lead.

- The vehicles must not come into contact with each other during the jump starting process.
- Apply the parking brake, transmission in neutral, automatic transmission in **P**.

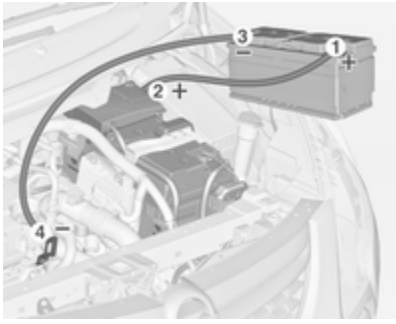

Lead connection order:

1. Connect the red lead to the positive terminal of the booster battery.
2. Connect the other end of the red lead to the positive terminal of the discharged battery.
3. Connect the black lead to the negative terminal of the booster battery.
4. Connect the other end of the black lead to a vehicle grounding point, such as the engine block or an engine mounting bolt. Connect as far away from the discharged battery as possible, however at least 60 cm.

Route the leads so that they cannot catch on rotating parts in the engine compartment.

To start the engine:

1. Start the engine of the vehicle providing the jump.
2. After 5 minutes, start the other engine. Start attempts should be made for no longer than 15 seconds at an interval of 1 minute.
3. Allow both engines to idle for approx. 3 minutes with the leads connected.
4. Switch on electrical consumers (e.g. headlights, heated rear window) of the vehicle receiving the jump start.
5. Reverse above sequence exactly when removing leads.

Towing

Towing the vehicle

Insert a screwdriver in the slot at the short edge of the cap. Release the cap by carefully moving the screwdriver sidewards. To prevent damage it is recommended to place a cloth between the screwdriver and the frame.

The towing eye is stowed with the vehicle tools ⇨ 237.

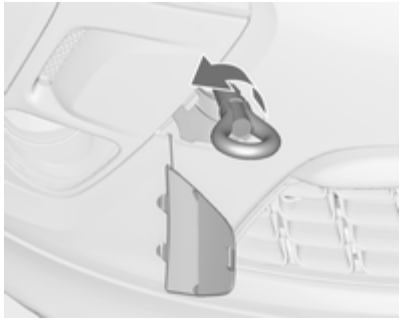

Screw in the towing eye as far as it will go until it stops in a horizontal position.

Attach a tow rope – or better still a tow rod – to the towing eye.

The towing eye must only be used for towing and not for recovering the vehicle.

Switch on ignition to release steering wheel lock and to permit operation of brake lights, horn and windscreen wiper.

Transmission in neutral.

Caution
Drive slowly. Do not drive jerkily. Excessive tractive force can damage the vehicle.

When the engine is not running, considerably more force is needed to brake and steer.

To prevent the entry of exhaust gases from the towing vehicle, switch on the air recirculation and close the windows.

Vehicles with automatic transmission: The vehicle must be towed facing forwards, not faster than 80 km/h nor further than 100 km. In all other cases and when the transmission is defective, the front axle must be raised off the ground.

Seek the assistance of a workshop.

After towing, unscrew the towing eye.

Insert cap at the bottom and close.

Towing another vehicle

Insert a screwdriver in the slot at the lower edge of the cap. Release the cap by carefully moving the screwdriver downwards. To prevent damage it is recommended to place a cloth between the screwdriver and the frame.

The towing eye is stowed with the vehicle tools ⇨ 237.

Screw in the towing eye as far as it will go until it stops in a horizontal position.

The lashing eye at the rear underneath the vehicle must never be used as a towing eye.

Attach a tow rope – or even better a tow bar – to the towing eye.

The towing eye must only be used for towing and not for recovering a vehicle.

Caution
Drive slowly. Do not drive jerkily. Excessive tractive force can damage the vehicle.

After towing, unscrew the towing eye.

Insert cap at the bottom and engage.

Appearance care

Exterior care

Locks

The locks are lubricated at the factory using a high quality lock cylinder grease. Use de-icing agent only when absolutely necessary, as this has a degreasing effect and impairs lock function. After using de-icing agent, have the locks regreased by a workshop.

Washing

The paintwork of your vehicle is exposed to environmental influences. Wash and wax your vehicle regularly. When using automatic vehicle washes, select a programme that includes waxing.

Bird droppings, dead insects, resin, pollen and the like should be cleaned off immediately, as they contain aggressive constituents which can cause paint damage.

If using a vehicle wash, comply with the vehicle wash manufacturer's instructions. The windscreen wiper and rear window wiper must be switched off. Remove antenna and external accessories such as roof racks etc.

If you wash your vehicle by hand, make sure that the insides of the wheel housings are also thoroughly rinsed out.

Clean edges and folds on opened doors and the bonnet as well as the areas they cover.

Caution
Always use a cleaning agent with a pH value of 4 to 9. Do not use cleaning agents on hot surfaces.

Have the door hinges of all doors greased by a workshop.

Do not clean the engine compartment with a steam-jet or high-pressure jet cleaner.

Thoroughly rinse and leather-off the vehicle. Rinse leather frequently. Use separate leathers for painted and glass surfaces: remnants of wax on the windows will impair vision.

Do not use hard objects to remove spots of tar. Use tar removal spray on painted surfaces.

Exterior lights

Headlight and other light covers are made of plastic. Do not use any abrasive or caustic agents, do not use an ice scraper, and do not clean them dry.

Polishing and waxing

Wax the vehicle regularly (at the latest when water no longer beads). Otherwise, the paintwork will dry out.

Polishing is necessary only if the paint has become dull or if solid deposits have become attached to it.

Paintwork polish with silicone forms a protective film, making waxing unnecessary.

Plastic body parts must not be treated with wax or polishing agents.

Windows and windscreen wiper blades

Use a soft lint-free cloth or chamois leather together with window cleaner and insect remover.

When cleaning the rear window, make sure the heating element inside is not damaged.

For mechanical removal of ice, use a sharp-edged ice scraper. Press the scraper firmly against the glass so that no dirt can get under it and scratch the glass.

Clean smearing wiper blades with a soft cloth and window cleaner.

Glass panel

Never clean with solvents or abrasive agents, fuels, aggressive media (e.g. paint cleaner, acetone-containing solutions etc.), acidic or highly alkaline media or abrasive pads. Do not apply wax or polishing agents to the glass panel.

Wheels and tyres

Do not use high-pressure jet cleaners.

Clean rims with a pH-neutral wheel cleaner.

Rims are painted and can be treated with the same agents as the body.

Paintwork damage

Rectify minor paintwork damage with a touch-up pen before rust forms. Have more extensive damage or rust areas repaired by a workshop.

Underbody

Some areas of the vehicle underbody have a PVC undercoating while other critical areas have a durable protective wax coating.

After the underbody is washed, check the underbody and have it waxed if necessary.

Bitumen/rubber materials could damage the PVC coating. Have underbody work carried out by a workshop.

Before and after winter, wash the underbody and have the protective wax coating checked.

Liquid gas system

⚠ Danger

Liquid gas is heavier than air and can collect in sink points.

Take care when performing work at the underbody in a pit.

For painting work and when using a drying booth at a temperature above 60 °C, the liquid gas tank must be removed.

Do not make any modifications to the liquid gas system.

Towing equipment

Do not clean the coupling ball bar with a steam-jet or high-pressure jet cleaner.

Rear carrier system

Clean the rear carrier system with a steam-jet or high-pressure jet cleaner at least once a year.

Operate the rear carrier system periodically if not in regular use, in particular during winter.

Air shutter

Clean the shutter system in the front bumper to maintain correct functionality.

Interior care

Interior and upholstery

Only clean the vehicle interior, including the instrument panel fascia and panelling, with a dry cloth or interior cleaner.

Clean the leather upholstery with clear water and a soft cloth. In case of heavy soiling, use leather care.

The instrument panel should only be cleaned using a soft damp cloth.

Clean fabric upholstery with a vacuum cleaner and brush. Remove stains with an upholstery cleaner.

Clothing fabrics may not be colourfast. This could cause visible discolourations, especially on light-coloured upholstery. Removable stains and discolourations should be cleaned as soon as possible.

Clean seat belts with lukewarm water or interior cleaner.

Caution

Close Velcro fasteners as open Velcro fasteners on clothing could damage seat upholstery.

The same applies to clothing with sharp-edged objects, like zips or belts or studded jeans.

Plastic and rubber parts

Plastic and rubber parts can be cleaned with the same cleaner as used to clean the body. Use interior cleaner if necessary. Do not use any other agent. Avoid solvents and petrol in particular. Do not use high-pressure jet cleaners.

Service and maintenance

General information 257
Recommended fluids, lubricants and parts 258

General information

Service information

In order to ensure economical and safe vehicle operation and to maintain the value of your vehicle, it is of vital importance that all maintenance work is carried out at the proper intervals as specified.

The detailed, up-to-date service schedule for your vehicle is available at the workshop.

Service display ⇨ 104.

European service intervals

Maintenance of your vehicle is required every 30000 km or after 1 year, whichever occurs first, unless otherwise indicated in the service display.

The European service intervals are valid for the following countries:

Andorra, Austria, Belgium, Bosnia-Herzegovina, Bulgaria, Croatia, Cyprus, Czech Republic, Denmark, Estonia, Finland, France, Germany, Greece, Greenland, Hungary, Iceland, Ireland, Italy, Latvia, Lithuania, Luxembourg, Macedonia, Malta, Montenegro, Netherlands, Norway, Poland, Portugal, Romania, Slovakia, Slovenia, Spain, Sweden, Switzerland, United Kingdom.

Service display ⇨ 104.

International service intervals

Maintenance of your vehicle is required every 15000 km or after 1 year, whichever occurs first, unless otherwise indicated in the service display.

The international service intervals are valid for the countries which are not listed in the European service intervals.

Service display ⇨ 104.

Confirmations

Confirmation of service is recorded in the Service and Warranty Booklet. The date and mileage is completed with the stamp and signature of the servicing workshop.

Make sure that the Service and Warranty Booklet is completed correctly as continuous proof of service is essential if any warranty or goodwill claims are to be met, and is also a benefit when selling the vehicle.

Service interval with remaining engine oil life duration

The service interval is based on several parameters depending on usage.

The service display lets you know when to change the engine oil.

Service display ⇨ 104.

Recommended fluids, lubricants and parts

Recommended fluids and lubricants

Only use products that meet the recommended specifications. Damage resulting from the use of products not in line with these specifications will not be covered by the warranty.

⚠ Warning

Operating materials are hazardous and could be poisonous. Handle with care. Pay attention to information given on the containers.

Engine oil

Engine oil is identified by its quality and its viscosity. Quality is more important than viscosity when selecting which engine oil to use. The oil quality ensures e.g. engine cleanliness, wear protection and oil ageing control, whereas viscosity grade gives information on the oil's thickness over a temperature range.

Dexos is the newest engine oil quality that provides optimum protection for gasoline and diesel engines. If it is unavailable, engine oils of other listed qualities have to be used. Recommendations for gasoline engines are also valid for Compressed Natural Gas (CNG), Liquified Petroleum Gas (LPG) and Ethanol (E85) fuelled engines.

Select the appropriate engine oil based on its quality and on the minimum ambient temperature ⇨ 262.

Topping up engine oil

Engine oils of different manufacturers and brands can be mixed as long as they comply with the required engine oil quality and viscosity.

Use of engine oil with only ACEA A1/B1 or only A5/B5 quality is prohibited, since it can cause long-term engine damage under certain operating conditions.

Select the appropriate engine oil based on its quality and on the minimum ambient temperature ⇨ 262.

Additional engine oil additives

The use of additional engine oil additives could cause damage and invalidate the warranty.

Engine oil viscosity grades

The SAE viscosity grade gives information of the thickness of the oil.

Multigrade oil is indicated by two figures, e.g. SAE 5W-30. The first figure, followed by a W, indicates the low temperature viscosity and the second figure the high temperature viscosity.

Select the appropriate viscosity grade depending on the minimum ambient temperature ⇨ 262.

All of the recommended viscosity grades are suitable for high ambient temperatures.

Coolant and antifreeze

Use only silicate-free long life coolant (LLC) antifreeze.

The system is factory filled with coolant designed for excellent corrosion protection and frost protection down to approx. -28 °C. In northern countries with very low temperatures the factory filled coolant provides frost protection down to approx. -37°C. This concentration should be maintained all year round. The use of additional coolant additives that intend to give additional corrosion protection or seal against minor leaks can cause function problems. Liability for consequences resulting from the use of additional coolant additives will be rejected.

Brake and clutch fluid

Only use high-performance brake fluid approved for the vehicle, consult a workshop.

Over time, brake fluid absorbs moisture which will reduce braking effectiveness. The brake fluid should therefore be replaced at the specified interval.

Brake fluid should be stored in a sealed container to avoid water absorption.

Ensure brake fluid does not become contaminated.

Technical data

Vehicle identification 260
Vehicle data 262

Vehicle identification

Vehicle Identification Number

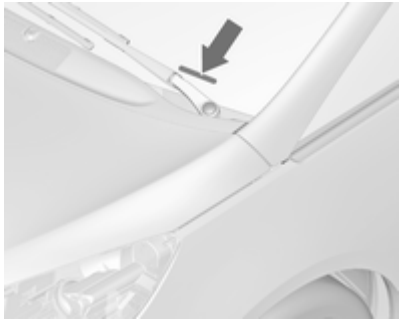

The Vehicle Identification Number is visible through the windscreen

and in the floor on the front passenger side behind a cover.

Identification plate

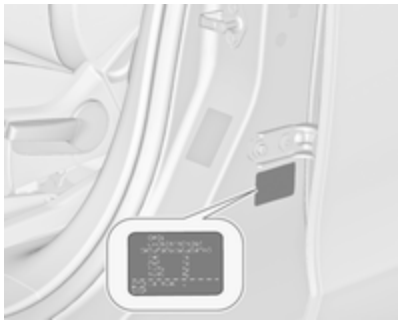

The identification plate is located on the front left door frame.

Information on identification label:

1 = Manufacturer
2 = Type approval number
3 = Vehicle Identification Number
4 = Permissible gross vehicle weight rating in kg
5 = Permissible gross train weight in kg
6 = Maximum permissible front axle load in kg
7 = Maximum permissible rear axle load in kg
8 = Vehicle-specific or country-specific data

The combined total of front and rear axle loads must not exceed the permissible gross vehicle weight. For example, if the front axle is bearing its maximum permissible load, the rear axle can only bear a load that is equal to the gross vehicle weight minus the front axle load.

The technical data is determined in accordance with European Community standards. We reserve the right to make modifications. Specifications in the vehicle documents always have priority over those given in this manual.

Vehicle data
Recommended fluids and lubricants

European service schedule

Required engine oil quality

	All European countries (except Belarus, Moldova, Russia, Serbia, Turkey)		Only Israel	
Engine oil quality	Petrol engines (including CNG, LPG, E85)	Diesel engines	Petrol engines (including CNG, LPG, E85)	Diesel engines
dexos 1	–	–	✓	–
dexos 2	✓	✓	–	✓

In case dexos quality is unavailable you may use max. 1 litre engine oil quality ACEA C3 once between each oil change.

Engine oil viscosity grades

	All European countries and Israel (except Belarus, Moldova, Russia, Serbia, Turkey)
Ambient temperature	Petrol and diesel engines
down to -25 °C	SAE 5W-30 or SAE 5W-40
below -25 °C	SAE 0W-30 or SAE 0W-40

International service schedule

Required engine oil quality

	All countries outside Europe except Israel		Only Belarus, Moldova, Russia, Serbia, Turkey	
Engine oil quality	Petrol engines (including CNG, LPG, E85)	Diesel engines	Petrol engines (including CNG, LPG, E85)	Diesel engines
dexos 1	✓	–	–	–
dexos 2	–	✓	✓	✓

In case dexos quality is unavailable you may use the oil qualities listed below:

	All countries outside Europe except Israel		Only Belarus, Moldova, Russia, Serbia, Turkey	
Engine oil quality	Petrol engines (including CNG, LPG, E85)	Diesel engines	Petrol engines (including CNG, LPG, E85)	Diesel engines
GM-LL-A-025	✓	–	✓	–
GM-LL-B-025	–	✓	–	✓

	All countries outside Europe except Israel		Only Belarus, Moldova, Russia, Serbia, Turkey	
Engine oil quality	Petrol engines (including CNG, LPG, E85)	Diesel engines	Petrol engines (including CNG, LPG, E85)	Diesel engines
ACEA A3/B3	✓	–	✓	–
ACEA A3/B4	✓	✓	✓	✓
ACEA C3	✓	✓	✓	✓
API SM	✓	–	✓	–
API SN resource conserving	✓	–	✓	–

Engine oil viscosity grades

	All countries outside Europe (except Israel), including Belarus, Moldova, Russia, Serbia, Turkey
Ambient temperature	Petrol and diesel engines
down to -25 °C	SAE 5W-30 or SAE 5W-40
below -25 °C	SAE 0W-30 or SAE 0W-40
down to -20 °C	SAE 10W-30[1)] or SAE 10W-40[1)]

[1)] Permitted, but usage of SAE 5W-30 or SAE 5W-40 with dexos quality is recommended.

Engine data

Sales designation	1.4	1.4	1.4 LPG	1.6 CNG	1.8	1.8
Engine identifier code	A14NEL	A14NET	A14NET	A16XNT	A18XEL	A18XER
Number of cylinders	4	4	4	4	4	4
Piston displacement [cm^3]	1364	1362	1362	1598	1796	1796
Engine power [kW]	88	103	103	110	85	103
at rpm	4200-6000	4900-6000	4900-6000	5000	5600	6300
Torque [Nm]	200	200	200	210	175	175
at rpm	1850-4200	1850-4900	1850-4900	2300-5000	3800	3800
Fuel type	Petrol	Petrol	Liquid gas/Petrol	Natural gas/Petrol	Petrol	Petrol
Octane rating RON						
recommended	95	95	95	95	95	95
possible	98	98	98	98	98	98
possible	91	91	91	91	91	91
Gas	–	–	LPG	CNG	–	–
Oil consumption [l/1000 km]	0.6	0.6	0.6	0.6	0.6	0.6

Sales designation	2.0 Turbo	2.0 Turbo	2.0 Turbo	2.0 BiTurbo	2.0 Turbo
Engine identifier code	A20DTL	A20DT	Z20DTJ	A20DTR	A20DTH
Number of cylinders	4	4	4	4	4
Piston displacement [cm^3]	1956	1956	1956	1956	1956
Engine power [kW]	81	96	96	143	121
at rpm	4000	4000	4000	4000	4000
Torque [Nm]	260	300	300	400	350
at rpm	1750-2500	1750-2500	1750-2500	1750-2500	1750-2500
Fuel type	Diesel	Diesel	Diesel	Diesel	Diesel
Oil consumption [l/1000 km]	0.6	0.6	0.6	0.6	0.6

Performance

Engine	A14NEL	A14NET	A14NET LPG	A16XNT CNG	A18XEL	A18XER
Maximum speed[2] [km/h]						
Manual transmission	190	200	195	204	185	195
with Stop-start system	192	202	–	–	–	–
Automatic transmission	–	197	–	–	–	–

Engine	A20DTL	A20DT	A20DTJ	A20DTH	A20DTR
Maximum speed[2] [km/h]					
Manual transmission	183	191	195	–	–
with Stop-start system	–	193	–	208	218
Automatic transmission	–	–	192	205	–

[2] The maximum speed indicated is achievable at kerb weight (without driver) plus 200 kg payload. Optional equipment could reduce the specified maximum speed of the vehicle.

Vehicle weight

Kerb weight, basic model without any optional equipment

	Engine	Manual transmission	Automatic transmission
5-/7- seats [kg]	A14NEL	1613/1640	–
	A14NET	1613/1640	1613/1640
	A14NET LPG	1664/1691	–
	A16XNT CNG	1701/1728	–
	A18XEL	1571/1598	–
	A18XER	1571/1598	–
	A20DTL	1701/1728	–
	A20DT	1701/1728	–
	A20DTJ	1701/1728	1733/1760
	A20DTH	1733/1760	1733/1760
	A20DTR	1733/1760	–

Kerb weight, basic model with all optional equipment

	Engine	Manual transmission	Automatic transmission
maximum equipment 5-/7- seats [kg]	A14NEL	1788/1816	–
	A14NET	1788/1816	1816/1843
	A14NET LPG	1843/–	–
	A16XNT CNG	1843/–	–
	A18XEL	1733/1764	–
	A18XER	1733/1764	–
	A20DTL	1901/1931	–
	A20DT	1901/1931	–
	A20DTJ	1901/1931	1901/1953
	A20DTH	1901/1931	1931/1953
	A20DTR	1901/1931	–

Vehicle dimensions

	Zafira Tourer
Length [mm]	4656
Width without exterior mirrors [mm]	1884
Width with two exterior mirrors [mm]	2100
Height (without antenna) [mm]	1685
Length of load compartment floor with folded third row [mm]	1094
Length of load compartment with folded second and third row [mm]	1832
Load compartment width [mm]	1057
Load compartment height at tailgate [mm]	840
Wheelbase [mm]	2760
Turning circle diameter [m]	11.4

Capacities

Engine oil

Engine	A14NEL	A14NET, A14NET LPG	A16XNT CNG	A18XEL, A18XER
including Filter [l]	4.0	4.0	4.5	4.5
between MIN and MAX [l]	1.0	1.0	1.0	1.0

Engine	A20DTL	A20DT	A20DTJ	A20DTH	A20DTR
including Filter [l]	4.5	4.5	4.5	4.5	4.5
between MIN and MAX [l]	1.0	1.0	1.0	1.0	1.0

Fuel tank

Petrol/diesel, nominal capacity [l]	58
Natural gas CNG, nominal capacity [kg] or [l] Petrol, nominal capacity	25 kg[3] or 144 l 14
Liquid gas LPG, nominal capacity	–[4]

[3] at 20 MPa/200 bar/2900 psi and 15°C.
[4] Value was not available at time of printing.

Tyre pressures

Engine	Tyres	Comfort with up to 3 people		ECO with up to 3 people		With full load	
		front	rear	front	rear	front	rear
		[kPa/bar] ([psi])	[kPa/bar] ([psi])	[kPa/bar] ([psi])	[kPa/bar] ([psi])	[kPa/bar] ([psi])	[kPa/bar] ([psi])
A14NEL, A14NET, A14NET LPG	215/60 R16, 225/50 R17, 235/45 R18, 235/40 R19	220/2.2 (32)	220/2.2 (32)	260/2.6 (38)	260/2.6 (38)	230/2.3 (33)	300/3.0 (43)
A16XNT CNG	225/50 R17, 215/60 R16	220/2.2 (32)	220/2.2 (32)	260/2.6 (38)	260/2.6 (38)	230/2.3 (33)	280/2.8 (41)
A18XEL, A18XER	215/60 R16, 225/50 R17, 235/45 R18, 235/40 R19	220/2.2 (32)	220/2.2 (32)	260/2.6 (38)	260/2.6 (38)	230/2.3 (33)	280/2.8 (41)

Engine	Tyres	Comfort with up to 3 people		ECO with up to 3 people		With full load	
		front	rear	front	rear	front	rear
		[kPa/bar] ([psi])	[kPa/bar] ([psi])	[kPa/bar] ([psi])	[kPa/bar] ([psi])	[kPa/bar] ([psi])	[kPa/bar] ([psi])
A20DTL, A20DT, A20DTJ	215/60 R16, 225/50 R17, 235/45 R18, 235/40 R19	240/2.4 (35)	240/2.4 (35)	280/2.8 (41)	280/2.8 (41)	250/2.5 (36)	300/3.0 (43)
A20DT ECO	215/60 R16, 225/50 R17	240/2.4 (35)	240/2.4 (35)	280/2.8 (41)	280/2.8 (41)	260/2.6 (38)	300/3.0 (43)
A20DTH	225/50 R17, 235/45 R18, 235/40 R19, 225/45 R18	260/2.6 (38)	240/2.4 (35)	280/2.8 (41)	280/2.8 (41)	280/2.8 (41)	320/3.2 (46)

Engine	Tyres	Comfort with up to 3 people		ECO with up to 3 people		With full load	
		front	rear	front	rear	front	rear
		[kPa/bar] ([psi])	[kPa/bar] ([psi])	[kPa/bar] ([psi])	[kPa/bar] ([psi])	[kPa/bar] ([psi])	[kPa/bar] ([psi])
A20DTR	225/50 R17, 235/45 R18, 235/40 R19, 225/45 R18	260/2.6 (38)	240/2.4 (35)	280/2.8 (41)	280/2.8 (41)	280/2.8 (41)	320/3.2 (46)
All	Temporary spare wheel	420/4.2 (61)	420/4.2 (61)	–	–	420/4.2 (61)	420/4.2 (61)

Towing hitch installation dimensions

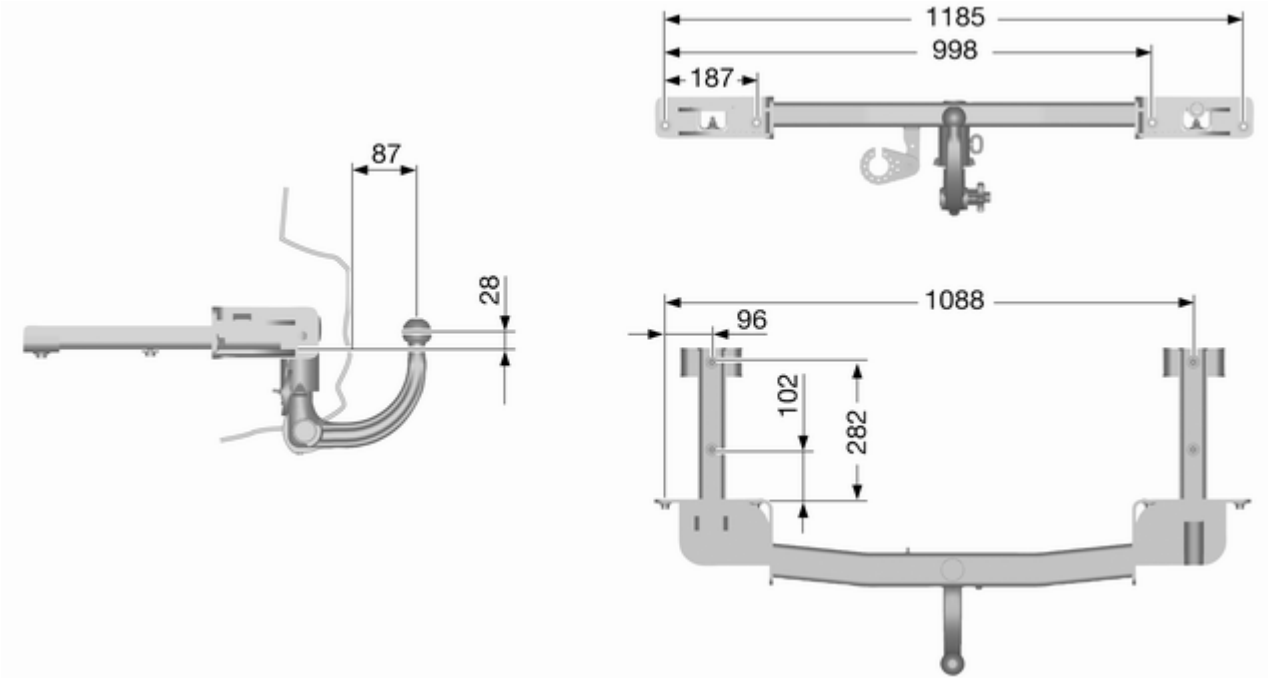

Customer information

Vehicle data recording and privacy 276

Vehicle data recording and privacy

Event data recorders

Data storage modules in the vehicle

A large number of electronic components of your vehicle contain data storage modules temporarily or permanently storing technical data about the condition of the vehicle, events and errors. In general, this technical information documents the condition of parts, modules, systems or the environment:

- Operating conditions of system components (e.g. filling levels)
- Status messages of the vehicle and its single components (e.g. number of wheel revolutions / rotational speed, deceleration, lateral acceleration)
- Dysfunctions and defects in important system components
- Vehicle reactions in particular driving situations (e.g. inflation of an airbag, activation of the stability regulation system)
- Environmental conditions (e.g. temperature)

These data are exclusively technical and help identifying and correcting errors as well as optimizing vehicle functions.

Motion profiles indicating travelled routes cannot be created with these data.

If services are used (e.g. repair works, service processes, warranty cases, quality assurance), employees of the service network (manufacturer included) are able to read out this technical information from the event and error data storage modules applying special diagnostic devices. If required, you will receive further information at these workshops. After an error has been corrected, the data are deleted from the error storage module or they are constantly overwritten.

When using the vehicle, situations may occur in which these technical data related to other information (accident report, damages on the vehicle, witness statements etc.) may be associated with a specific person - possibly, with the assistance of an expert.

Additional functions contractually agreed upon with the client (e.g. vehicle location in emergency cases) allow the transmission of particular vehicle data from the vehicle.

Radio Frequency Identification (RFID)

RFID technology is used in some vehicles for functions such as tyre pressure monitoring and ignition system security. It is also used in connection with conveniences such as radio remote controls for door locking/unlocking and starting, and in-vehicle transmitters for garage door openers. RFID technology in Opel vehicles does not use or record personal information or link with any other Opel system containing personal information.

Index

A

Accessories and vehicle modifications 214
Active Emergency Braking..... 184
Active head restraints..... 38
Adaptive cruise control..... 113, 174
Adaptive forward lighting 113, 136, 224
Adjustable air vents 151
Advanced parking assist..... 189
Airbag and belt tensioners 108
Airbag deactivation 55, 108
Airbag system 53
Air conditioning regular operation 153
Air conditioning system 146
Air intake 152
Air vents..... 151
Antilock brake system 165
Antilock brake system (ABS) 110
Anti-theft alarm system 27
Anti-theft locking system 27
Appearance care..... 254
Armrest..... 42
Armrest storage 66
Ashtrays 101
Automatic anti-dazzle 31
Automatic light control 134
Automatic locking 25
Automatic transmission 161
Auxiliary heater..... 151

B

Battery 219
Battery discharge protection 144
Battery voltage 123
Bicycle rack..... 68
Bonnet 216
Brake and clutch fluid..... 258
Brake and clutch system 109
Brake assist 167
Brake fluid 219
Brakes 165, 219
Breakdown..... 252
Bulb replacement 222

C

Capacities 271
Cargo management system 86
Car Pass 21
Catalytic converter 160
Central locking system 23
Centre console lighting 143
Centre console storage 67
Changing tyre and wheel size ... 240
Charging system 108
Child locks 25
Child restraint installation locations 59

Child restraints..... 57
Child restraint systems 57
Cigarette lighter 101
Climate control 17
Climate control systems..... 145
Clock..... 99
Code..... 120
Control indicators..... 105
Control of the vehicle 154
Controls..... 94
Convex shape 30
Coolant and antifreeze..... 258
Cruise control 113, 171
Cupholders 64
Curtain airbag system 55
Curve lighting..... 136

D

Danger, Warnings and Cautions . . . 4
Diesel fuel system bleeding 221
Diesel particle filter..... 111, 159
Door open 113
Door panel storage..... 65
Doors..... 26
Driver assistance systems..... 171
Driver Information Centre..... 114
Driving characteristics and
towing tips 209
Driving hints..... 154

E

Electric adjustment 30
Electrical parking brake..... 109
Electrical parking brake fault..... 109
Electrical system..... 230
Electronic climate control
system 147
Electronic driving programmes . . 163
Electronic Stability Control..... 169
Electronic Stability Control and
Traction Control system..... 111
Electronic Stability Control off..... 111
End-of-life vehicle recovery 215
Engine compartment fuse box ... 232
Engine coolant 218
Engine coolant temperature
gauge 104
Engine data 265
Engine exhaust 159
Engine oil 216, 258, 262
Engine oil pressure 112
Entry lighting 143
Event data recorders..... 276
Exit lighting 143
Exterior care 254
Exterior light 112
Exterior lighting 14, 133
Exterior mirrors..... 30

F

Fault 163
First aid kit 90
Fixed air vents 152
Flex-Fix system..... 68
Fog light 113
Fog lights 226
Folding 30
Folding tray 90
Following distance indication..... 184
Forward collision alert..... 181
Front airbag system 53
Front fog lights 140
Front seats..... 39
Front storage..... 65
Fuel..... 201
Fuel consumption - CO_2-
Emissions 208
Fuel for diesel engines 201
Fuel for liquid gas operation..... 202
Fuel for natural gas operation . . . 201
Fuel for petrol engines 201
Fuel gauge 102
Fuel selector 103
Fuses 230

G

Gauges..... 101
General information 209

Glass panel 35
Glovebox 63
Graphic-Info-Display, Colour-Info-Display 118

H
Halogen headlights 222
Hand brake..... 165, 166
Hazard warning flashers 140
Headlight flash 135
Headlight range adjustment 135
Headlights..... 133
Headlights when driving abroad 136
Head restraint adjustment 8
Head restraints 37
Heated 31
Heated rear window 34
Heated steering wheel 95
Heating 43
Heating and ventilation system . 145
High beam 112, 134
High beam assist..... 112, 134
Hill start assist 167
Horn 15, 95

I
Identification plate 260
Ignition switch positions 155
Immobiliser 29, 112
Indicators..... 101
Information displays..... 114
Instrument cluster 101
Instrument panel fuse box 234
Instrument panel illumination 230
Instrument panel illumination control 142
Instrument panel overview 10
Instrument panel storage..... 63
Interactive driving system..... 169
Interior care 256
Interior lighting..... 142
Interior lights 142, 230
Interior mirrors..... 31
Interruption of power supply 163
Introduction 3
ISOFIX child restraint systems 62

J
Jump starting 250

K
Keys 21
Keys, locks..... 21

L
Lane departure warning..... 110, 199
Lashing eyes 86
Lighting features..... 143
Light switch 133
Load compartment 26, 76
Load compartment cover 79
Load compartment fuse box 235
Loading information 92
Load rails and hooks 86
Low fuel 112
Low washer fluid 113

M
Malfunction indicator light 108
Manual anti-dazzle 31
Manual mode 162
Manual transmission 164
Manual windows 32
Memorised settings..... 23
Mirror adjustment 8
Misted light covers 141

N
New vehicle running-in 155
Number plate light 229

O
Object detection systems..... 186
Odometer 102
Oil, engine..... 216, 258, 262
Outside temperature 98
Overhead console 65
Overrun cut-off 156

P

Parking 19, 159
Parking assist 186
Parking brake 166
Parking lights 141
Particulate filter..... 159
Performance 267
Performing work 215
Pollen filter 152
Power outlets 100
Power steering..... 110
Power windows 32
Preheating 111
Puncture..... 244

Q

Quickheat..... 151

R

Radio Frequency Identification (RFID)..... 277
Radio remote control 21
Rain sensor..... 113
Reading lights 143
Rear carrier system..... 68
Rear floor storage cover 81
Rear fog light 113
Rear fog lights 141
Rear seats..... 43
Rear storage..... 79
Rear view camera 194
Rear window wiper/washer 98
Recommended fluids and lubricants 258, 262
Reduced engine power..... 112
Refuelling 204
Retained power off..... 155
Reversing lights 141
Ride control system..... 168
Roller blinds 34
Roof..... 35
Roof rack 91

S

Safety net 88
Seat adjustment 6, 39
Seat belt 8
Seat belt reminder 107
Seat belts 49
Seat position 39
Second row seats 43
Selector lever 161
Service 153, 257
Service display 104
Service information 257
Service vehicle soon 109
Side airbag system 54
Side blind spot alert..... 193
Sidelights..... 133
Side turn signal lights 229
Spare wheel 247
Speed limiter..... 173
Speedometer 101
Starting and operating..... 155
Starting off 18
Starting the engine 155
Steering wheel adjustment 9, 94
Steering wheel controls 94
Stop-start system..... 157
Storage compartment..... 63
Sunvisor lights 143
Sun visors 34
Symbols 4

T

Tachometer 102
Tail lights 227
Third row seats 47
Three-point seat belt 50
Tools 237
Top-tether fastening eyes 62
Towing..... 209, 252
Towing another vehicle 253
Towing equipment 210
Towing hitch installation dimensions 275
Towing the vehicle 252
Traction Control system 168
Traction Control system off..... 111
Traffic sign assistant..... 196

Trailer coupling..... 209
Trailer stability assist 213
Trailer towing 210
Transmission 18
Transmission display 161
Tread depth 240
Trip computer 124
Trip odometer 102
Turn and lane-change signals ... 140
Turn signal 107
Tyre chains 241
Tyre designations 237
Tyre pressure 237
Tyre pressure monitoring system..... 111, 238
Tyre pressures 272
Tyre repair kit 241

U

Ultrasonic parking assist ... 110, 186
Underseat storage 66
Upholstery..... 256
Upshift..... 110
Using this manual 3

V

Vehicle checks..... 215
Vehicle data..... 262
Vehicle data recording and privacy..... 276
Vehicle detected ahead..... 113
Vehicle dimensions 270
Vehicle Identification Number 260
Vehicle jack..... 237
Vehicle messages 120
Vehicle personalisation 127
Vehicle security..... 27
Vehicle specific data 3
Vehicle storage..... 214
Vehicle tools..... 237
Vehicle unlocking 6
Vehicle weight 268
Ventilation..... 145

W

Warning chimes 123
Warning lights..... 101
Warning triangle 90
Washer and wiper systems 16
Washer fluid 218
Wheel changing 244
Wheel covers 240
Wheels and tyres 237
Windows..... 32
Windscreen..... 32
Windscreen wiper/washer 96
Winter tyres 237
Wiper blade replacement 221

Copyright by ADAM OPEL AG, Rüsselsheim, Germany.

The information contained in this publication is effective as of the date indicated below. Adam Opel AG reserves the right to make changes to the technical specifications, features and design of the vehicles relative to the information in this publication as well as changes to the publication itself.

Edition: August 2012, ADAM OPEL AG, Rüsselsheim.

Printed on chlorine-free bleached paper.

KTA-2722/2-en

August 2012