MANUAL TRANSAXLE

SECTION MT

CONTENTS

PRECAUTION
Precaution 2
PREPARATION
Preparation 3
SIDE OIL SEAL
Removal • Installation 4
STRIKING ROD OIL SEAL
Removal • Installation 5
POSITION SWITCH
Inspection 6
Neutral Position Switch 6
AIR BLEEDER HOSE
Removal • Installation 7
TRANSAXLE ASSEMBLY
Removal • Installation 8
Transaxle Gear Shift Control 12
Case Components 13
Gear Component 14
Shaft Control Components 15
Disassembly 16
Assembly 19
COMPONENTS REPAIR
Input Shaft and Gear 22
Inspection after Disassembly 23
Main Shaft and Gear 25
Inspection 26
Final Drive 30
Inspection 30
Shift Control Components 32
Case Components 33
Removal • Installation 33
ADJUSTMENT
Differential Side Bearing Free Load 35
GENERAL SPECIFICATIONS
Transaxle 37
Final Gear 37
SERVICE DATA
Endplay 38
Snap Ring and C-Ring 38
Thrust Washer 38
Adjusting Shim 39
Free Load 39
Reverse Check Tension 39
Reverse Check Plug 39
Shift Fork 39
Baulk Ring Clearance 40
Tightening Torque 40

Precaution

Caution

- Do not reuse the used transaxle oil.
- Perform the oil check or change while the vehicle is on the level ground.
- Be careful not to let any foreign particles such as waste or dust into the transaxle during removal/installation.

Preparation

Special Service Tools

Item	Description
Differential oil seal drift set KV38100200 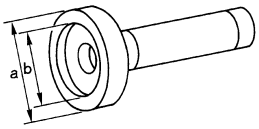 ZZA1143D	Installing transaxle side oil seal **a: 65 mm (2.65 in) dia.** **b: 49 mm (1.93 in) dia.**
ST22350000 Drift 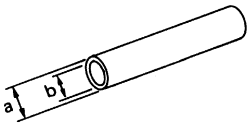 ZZA0534D_D1	Installing striking rod oil seal Installing input shaft front bearing **a: 34 mm (1.34 in) dia.** **b: 28 mm (1.10 in) dia.**
ST22452000 Drift 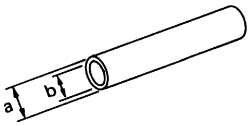 ZZA0534D_D1	Installing 1st & 2nd synchronizer **a: 45 mm (1.77 in) dia.** **b: 36 mm (1.42 in) dia.**
ST37750000 Drift 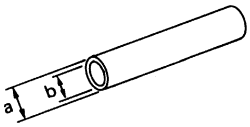 ZZA0534D_D1	Installing 5th main gear Installing 3rd & 4th synchronizer Installing input shaft oil seal Installing 5th synchronizer **a: 40 mm (1.57 in) dia.** **b: 31 mm (1.22 in) dia.**
ST22360002 Drift 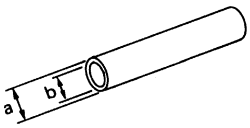 ZZA0534D_D1	Installing mainshaft rear bearing inner race **a: 29 mm (1.14 in) dia.** **b: 23 mm (0.91 in) dia.**
ST30031000 Puller 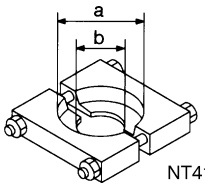 NT411	Removing 3rd, 5th input gear Removing 3rd & 4th and 5th & Rev synchronizer hub Removing mainshaft rear bearing Removing 2nd gear, 5th gear bush Removing 1st & 2nd synchronizer hub, 1st and 4th main gear Removing and installing differential side bearing **a: 90 mm (3.54 in) dia.** **b: 50 mm (1.97 in) dia.**

Side Oil Seal

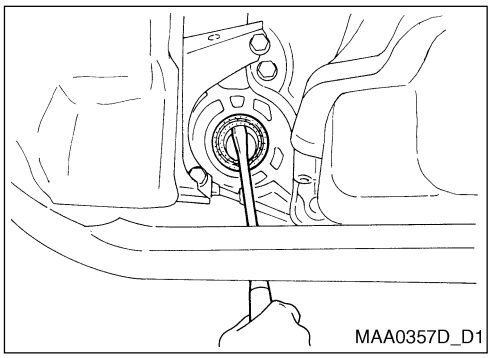

Removal • Installation

REMOVAL

1. Remove the drive shaft from the transaxle assembly.
2. Remove the oil seal using a minus (-) screwdriver.

CAUTION:

- **Be careful not to damage the case surface when removing the oil seal.**

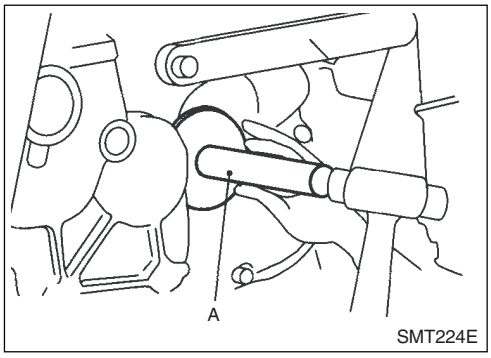

INSTALLATION

1. Using a drift (A: KV38100200), strike the oil seal from the case surface to be the clearance “A”.

   Clearance A: Distance to the case surface 0 ± 0.5 mm

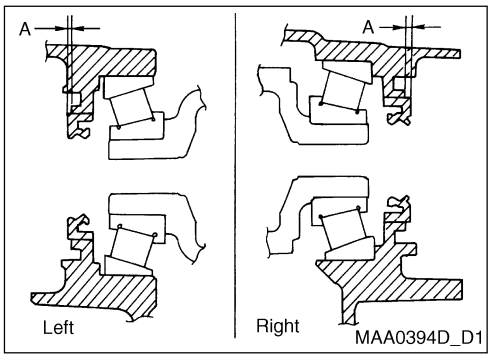

CAUTION:

- **Apply the multi-purpose grease to the oil seal lip when installing the oil seal.**
- **Do not reuse the oil seal. Replace it with new.**

2. Install in the reverse order of removal and check for the oil level.

Striking Rod Oil Seal

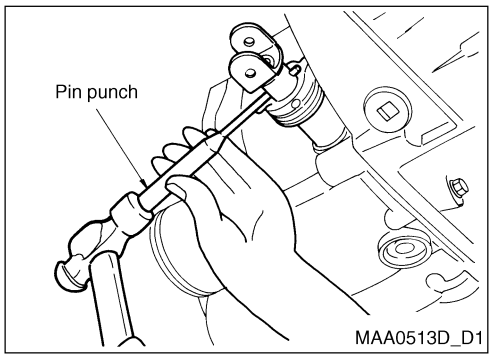

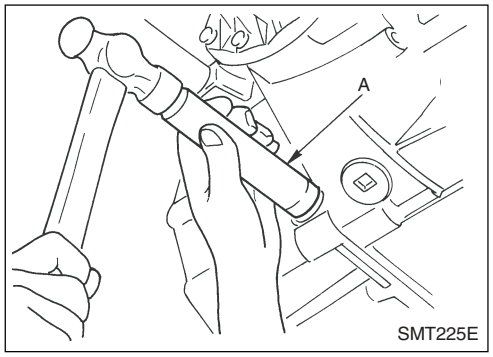

Removal • Installation

REMOVAL

1. Remove the control rod, support rod and bracket.
2. Pull out the retaining pin using the pin punch and remove the striking yoke.
3. Remove the oil seal using a minus (-) screwdriver.

CAUTION:

- **Be careful not to damage the case surface when removing the oil seal.**

INSTALLATION

1. Install the oil seal using the drift (A: ST22350000).

CAUTION:

- **Apply the multi-purpose grease to the oil seal lip when installing the oil seal.**
- **Do not exert too much force to prevent from oil seal deformation.**
- **Do not reuse the oil seal. Replace it with new.**

2. Insert the retaining pin to the striking yoke using a pin punch.

CAUTION:

- **Do not reuse the retaining pin. Replace it with new.**

3. Install the control yoke, support rod and bracket.

Position Switch

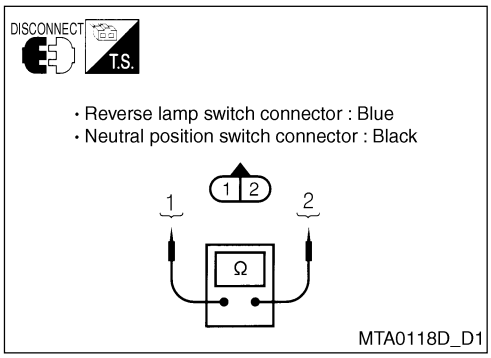

Inspection

REVERSE LAMP SWITCH

- Disconnect the reverse lamp switch connector and check the continuity by shifting the shift lever to each gear positions (1 - 5 and R). Replace if defective.

  1 - 2

  Reverse position: Continuity

  Other than reverse position: No continuity

NEUTRAL POSITION SWITCH

- Disconnect the neutral position switch connector and check the continuity by moving the shift lever to each shift button and neutral position switch. Replace if defective.

  1 - 2

  Neutral position: Continuity

  Other than neutral position: No continuity

Air Bleeder Hose

Removal • Installation

Refer to the illustration to remove and install the air bleeder hose.

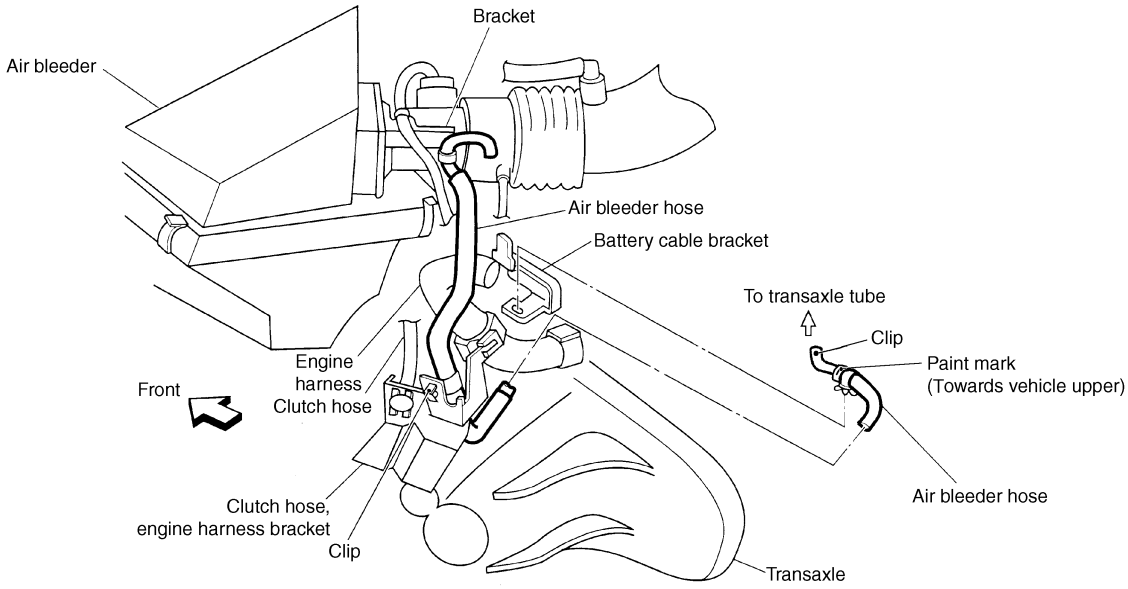

- Install the air bleeder hose in front of the engine harness.
- When inserting transaxle tube hose, securely insert so that it touches the rounded section of the tube.

SCIA0151J_D1

CAUTION:

- **Be careful not to have any vibrations or clogging due to disconnections and bends during air bleeder hose installation.**

Transaxle Assembly

Removal • Installation

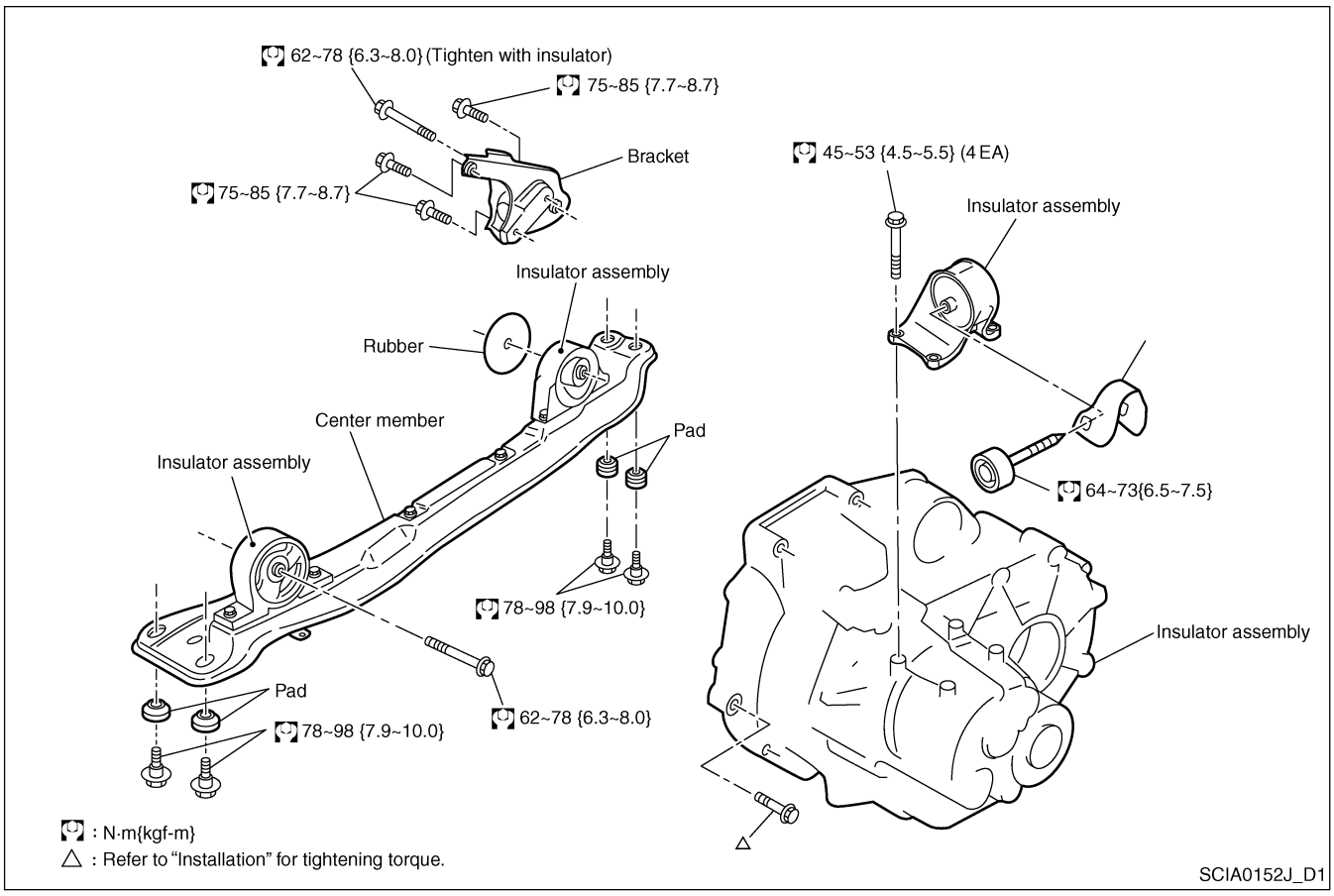

REMOVAL

1. Remove the air bleeder hose.
2. Remove the air cleaner and air duct.
3. Remove the clutch operating cylinder.

CAUTION:

- **Do not depress the clutch pedal during removal.**

4. Remove the control linkage from the transaxle.
5. Remove the drive shaft.
6. Remove the connectors and harnesses such as neutral position switch, reverse lamp switch, speed sensor and ground.
7. Remove the starter motor.
8. Install the transmission jack to the transaxle.

CAUTION:

- **Be careful not to touch the switch during transmission jack installation.**

9. Remove the center member, engine insulator, engine mount bracket and gusset.
   - Refer to "Engine Assembly" (QG16: EM-56).
10. Install the transmission jack to the engine.
11. Remove the mounting bolts from the engine and transaxle.

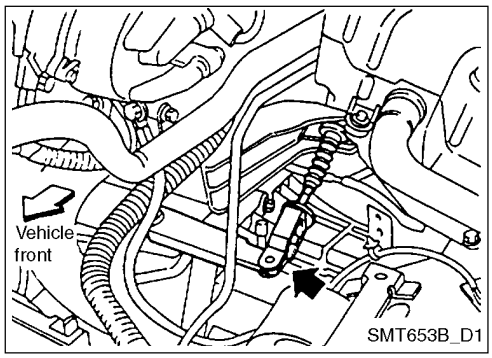

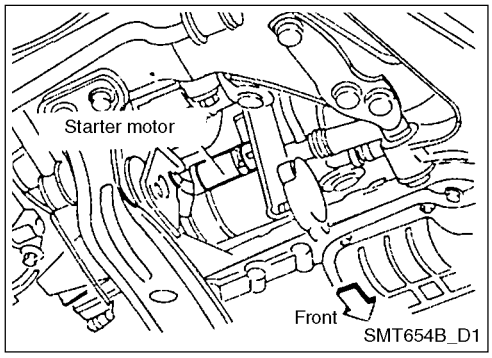

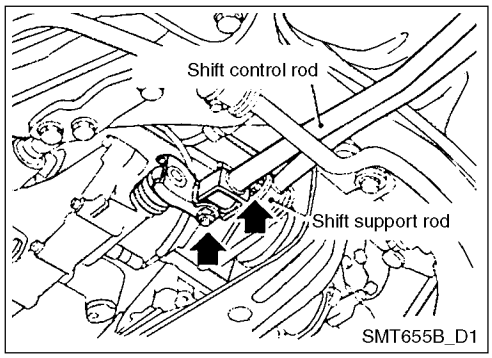

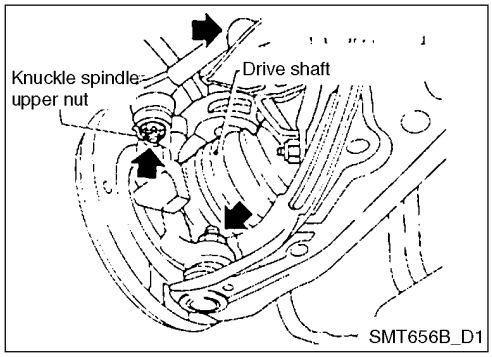

REMOVAL

1. Disconnect the battery negative (-) terminal.
2. Remove the air duct.
3. Remove the clutch pipe from the transaxle.
4. Remove the clutch operating cylinder from the transaxle.
5. Disconnect the reverse lamp switch, speedometer sensor, neutral position switch and ground connectors.
6. Remove the starter motor from the transaxle.
7. Remove the shift control rod and support rod from the transaxle.
8. Drain the gear oil from the transaxle.
9. Remove the front exhaust tube.
10. Remove the drive shaft from the transaxle.

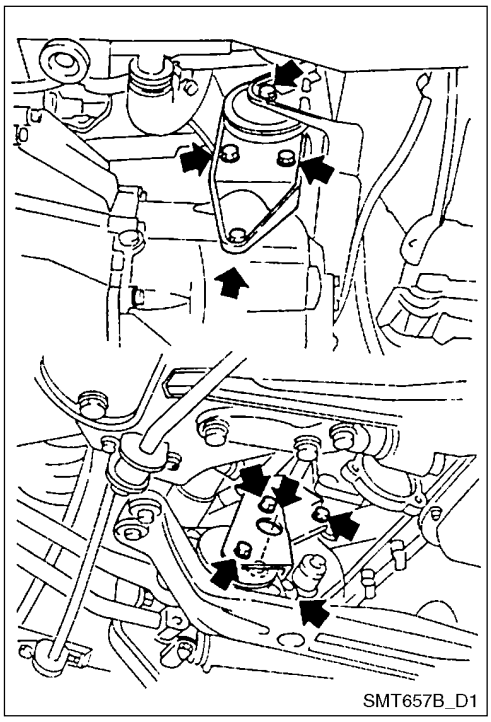

11. Support the jack under the engine oil pan.

CAUTION:

- **Do not position the jack under the oil pan drain plug.**

12. Support the transmission jack to the transaxle.
13. Remove the center member and engine mount.

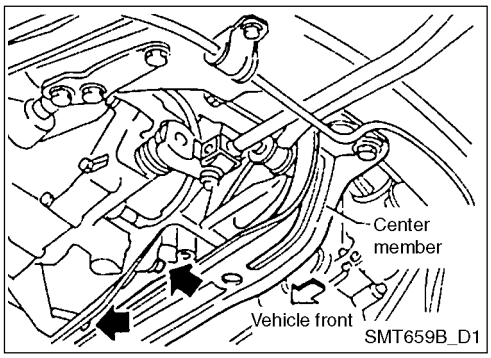

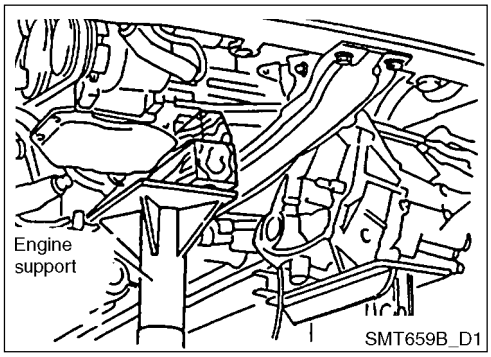

14. Remove the transaxle mounting bolt.
15. Lower the transaxle slowly while the engine is supported by the jack.

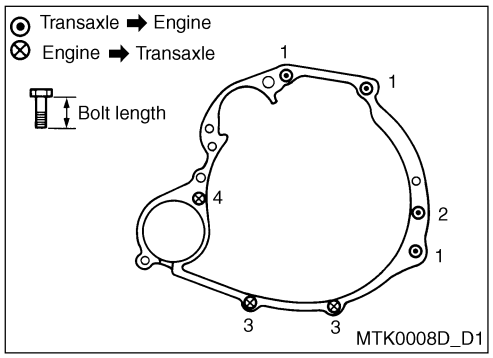

Installation

Install in the reverse order of removal by cautioning as below.

- While removing and installing the transaxle to the engine, follow the below standards for the mounting bolts.

CAUTION:

- **Be careful not let the transaxle input shaft touch the clutch cover during removal/installation.**

Bolt No.	1	2	3	4
Quantity	3	1	2	1
Bolt length (mm)	70	80	25	30
Tightening torque N•m (kgf-m)	30.4 - 40.2 (3.1 - 4.1)		15.7 - 20.6 (1.6 - 2.1)	30.4 - 40.2 (3.1 - 4.1)

Transaxle Gear Shift Control

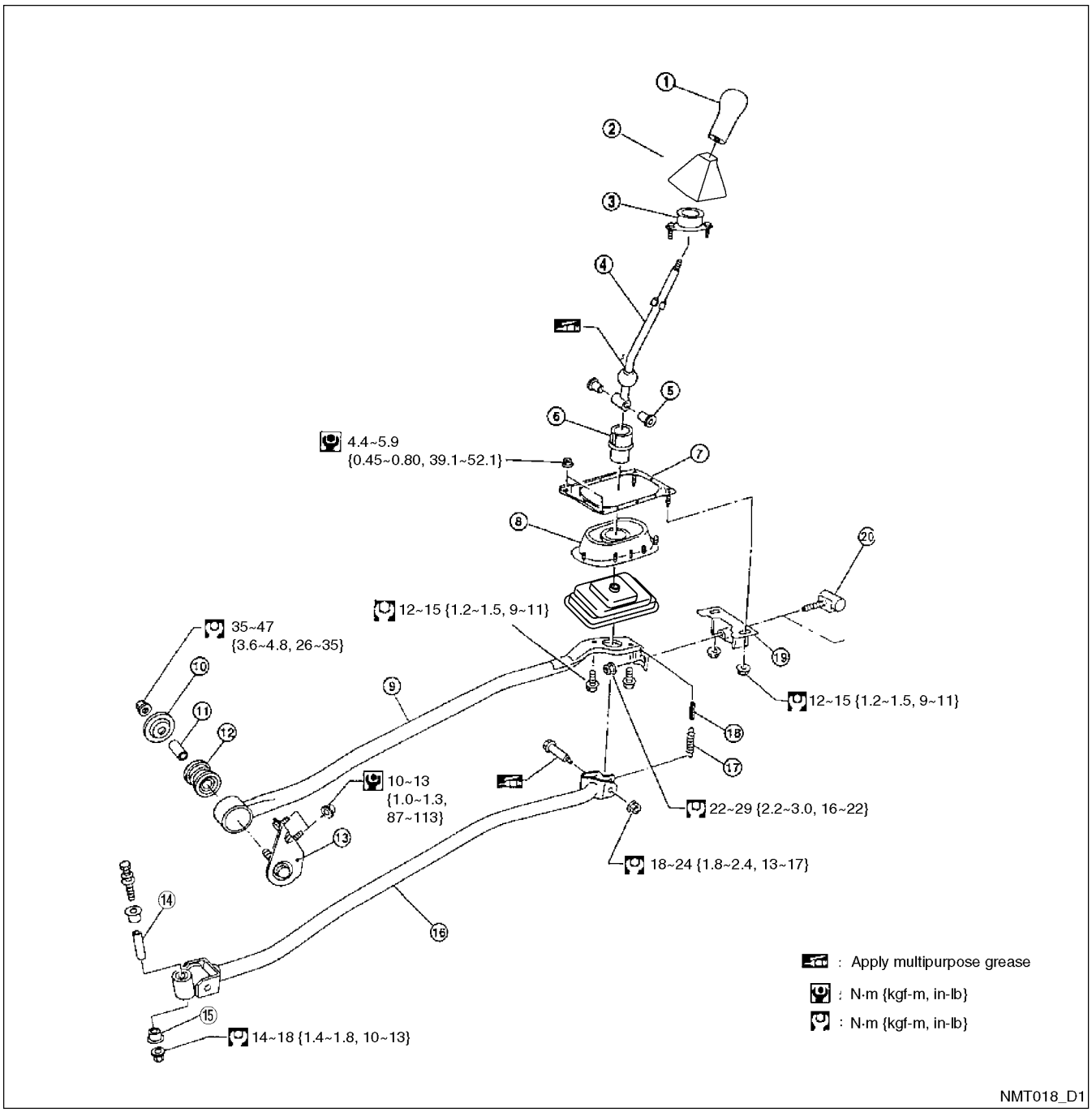

① Control lever knob
② Boot
③ Control lever socket
④ Control lever
⑤ Bushing
⑥ Hand lever socket
⑦ Plate bolt
⑧ Transaxle hole cover
⑨ Support rod
⑩ Plate
⑪ Collar
⑫ Bushing
⑬ Support rod bracket
⑭ Collar
⑮ Bushing
⑯ Control rod
⑰ Return spring
⑱ Return spring rubber
⑲ Holder bracket
⑳ Mass damper

Case Components

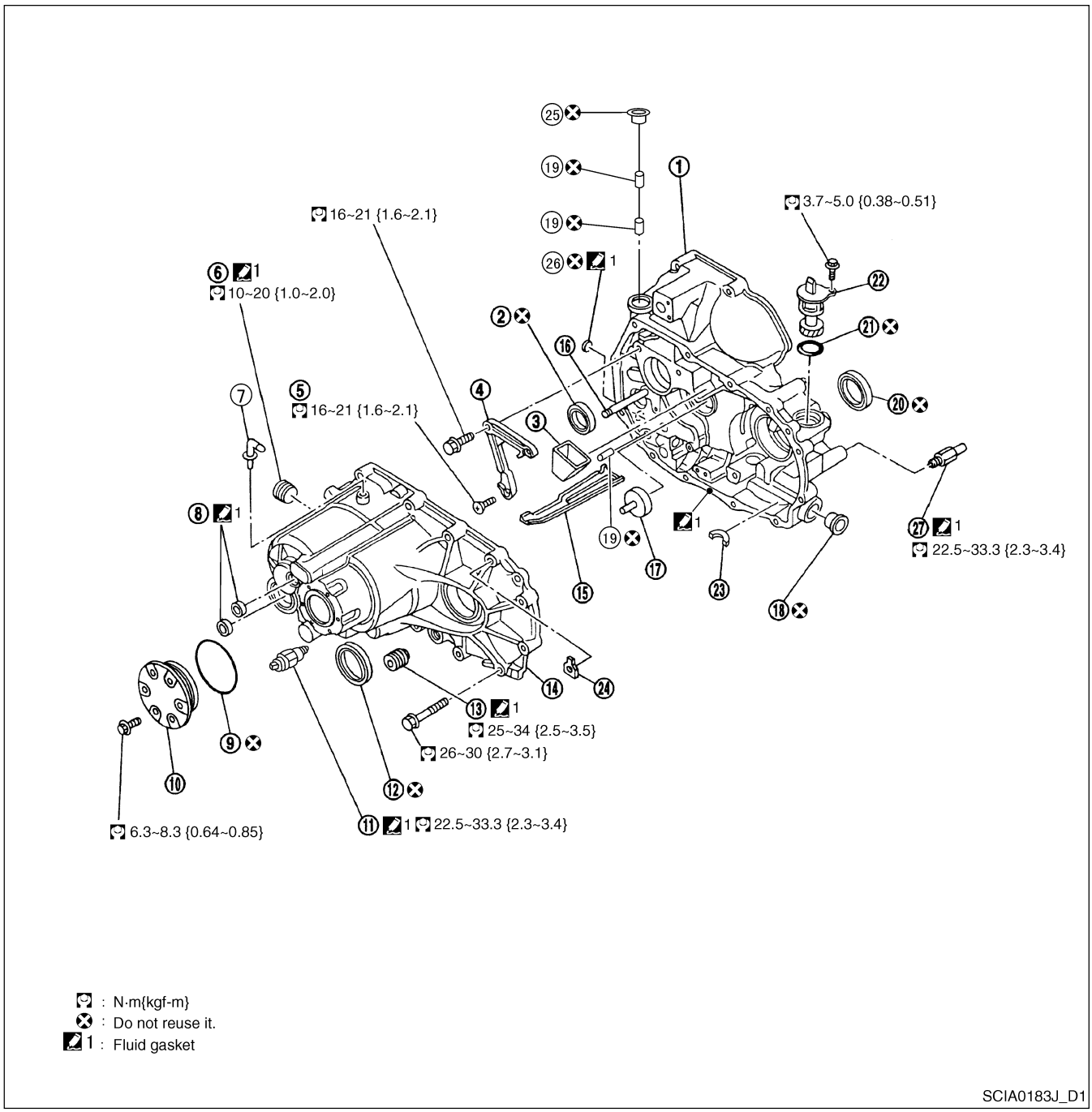

① Clutch housing
② Input shaft oil seal
③ Oil pocket
④ Bearing retainer
⑤ Torque support
⑥ Wheel plug
⑦ Air bleeder tube
⑧ Welch plug
⑨ O-ring
⑩ Case cover
⑪ Reverse switch
⑫ Differential oil seal
⑬ Drain plug
⑭ Transaxle case
⑮ Oil cover
⑯ Reverse idle shaft
⑰ Oil channel
⑱ Striking rod oil seal
⑲ Push
⑳ Differential oil seal
㉑ O-ring
㉒ Speedometer pinion assembly
㉓ Magnet
㉔ Ground terminal
㉕ Dust seal
㉖ Plug
㉗ Neutral position switch

Gear Component

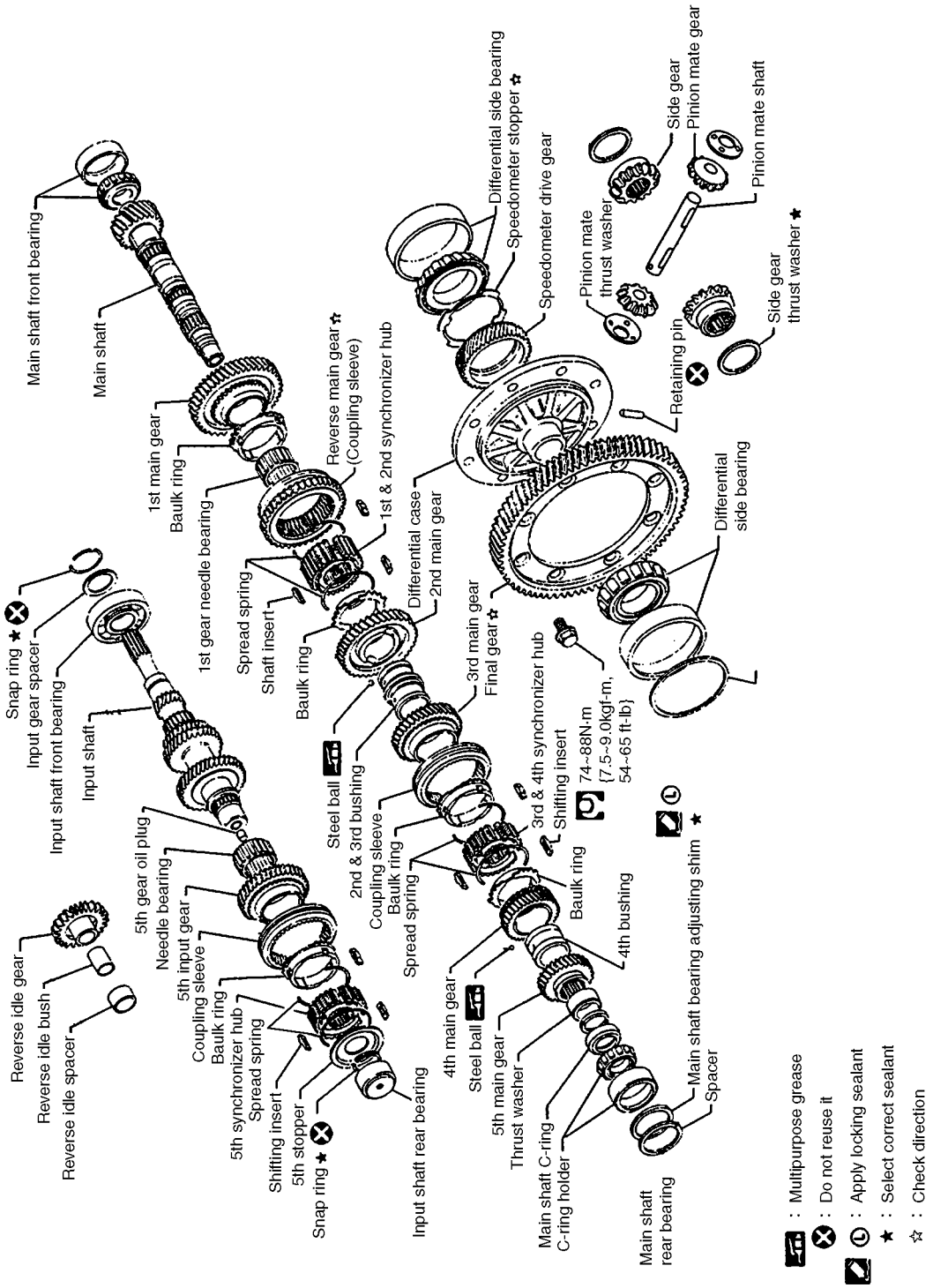

NMT020_D1

Shaft Control Components

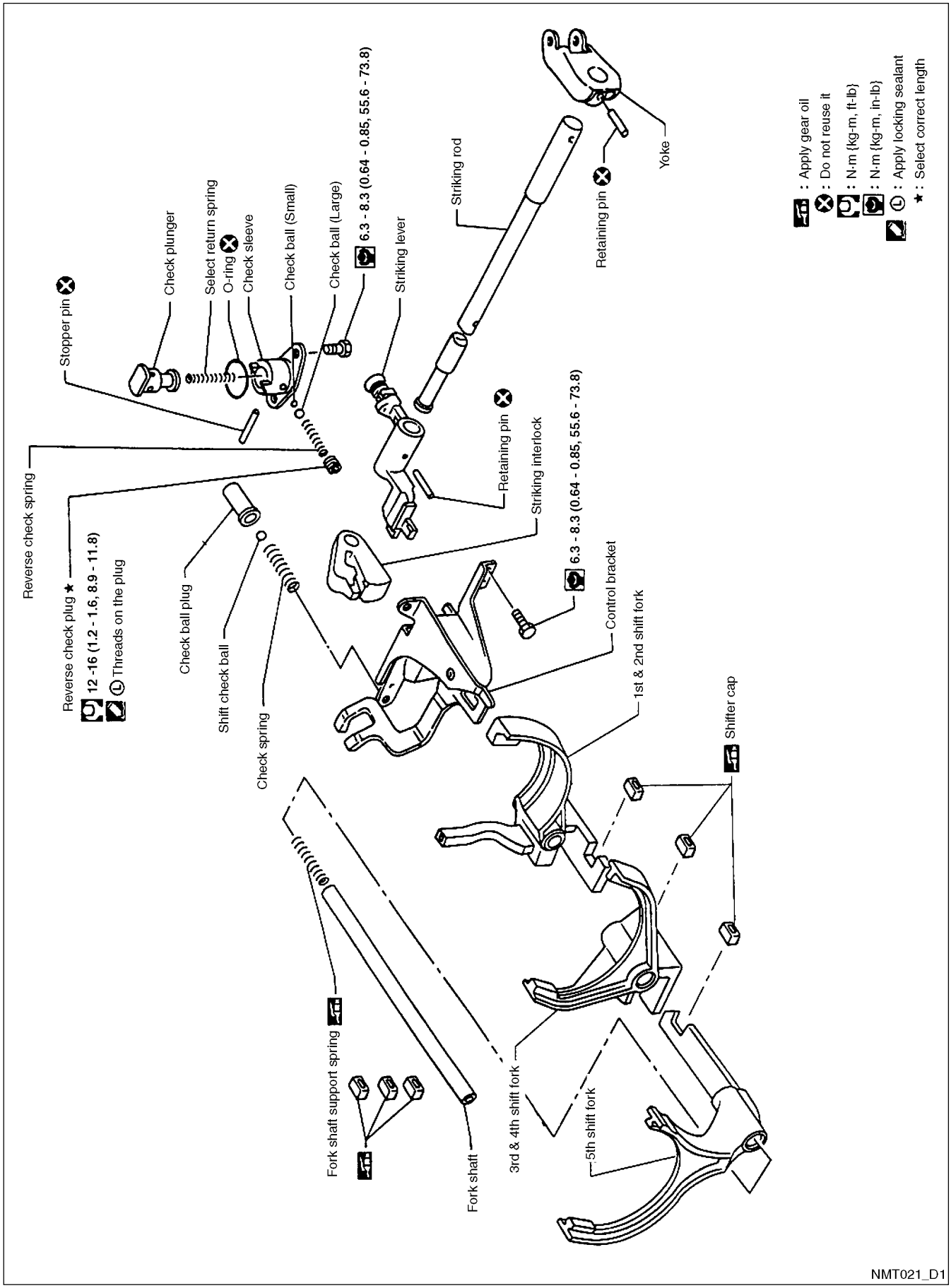

Disassembly

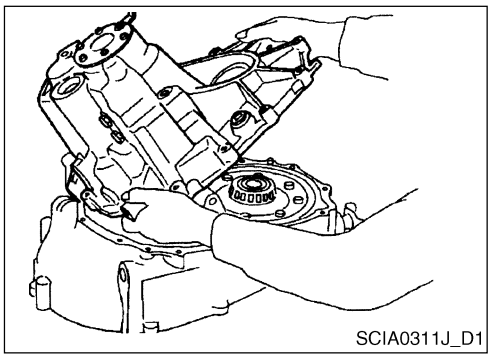

1. Remove the transaxle case by tilting it slightly so that the 5th shift fork does not interfere with the transaxle case.

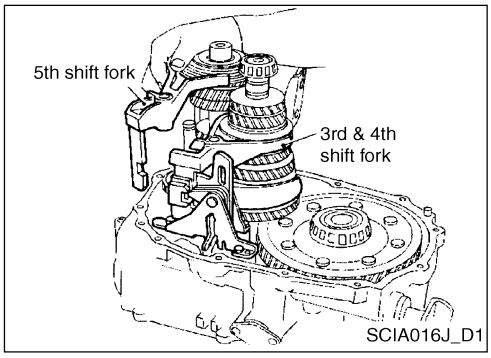

2. Take out the reverse idle spacer and fork shaft and remove the 5th shift fork and 3rd & 4th shift fork.
   - Be careful not to lose the shifter cap.

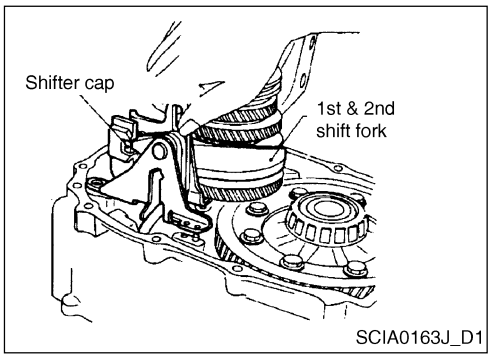

3. Remove the 1st & 2nd shift fork and control bracket.
   - Be careful not to lose the shifter cap.

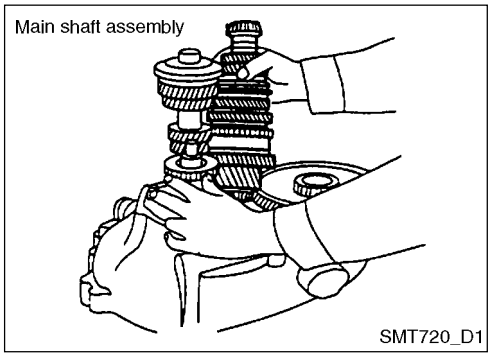

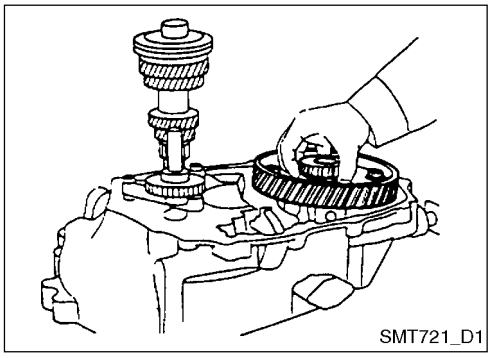

4. Remove the gear related components from the clutch housing.
   a. Remove the main shaft and final drive assembly.
      - Not to damage the oil channel in the clutch housing, remove the main shaft by lifting it upwards.

Disassembly (Continued)

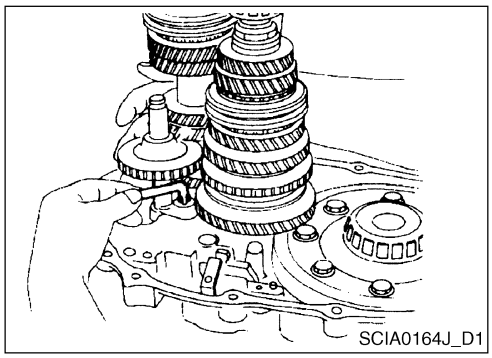
SCIA0164J_D1

b. Remove the bearing retainer mounting bolt.

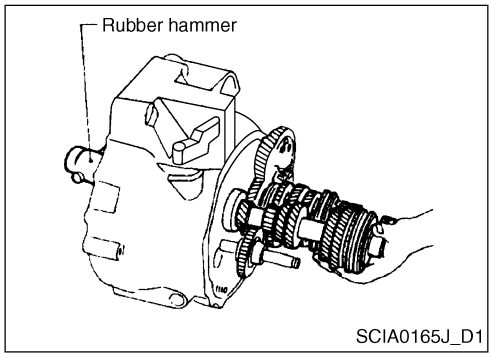

SCIA0165J_D1

c. Remove the input shaft and reverse idle gear by tapping them with rubber hammer.
   - Do not remove the reverse idle shaft because its tightening can be loosened when reinstalled.
   - Be careful not to damage the oil seal by the spline during input shaft removal.

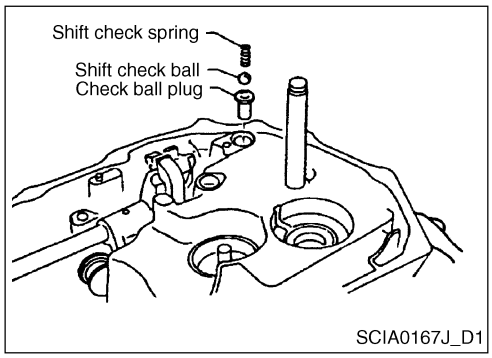

SCIA0167J_D1

5. Remove the oil pocket, shift check ball, check spring and check ball plug.

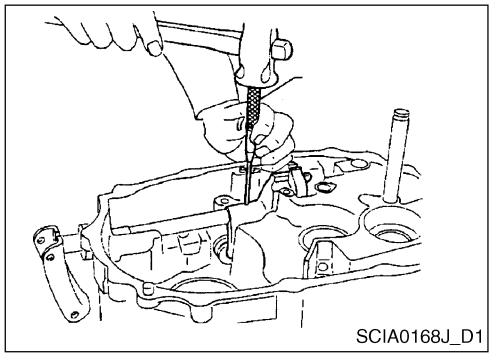
SCIA0168J_D1

6. Remove the retaining pin from the striking lever using the pin punch and remove the striking rod, bush, striking lever and striking interlock.
   - Be careful not to let the retaining pin touch the clutch housing during retaining pin removal.

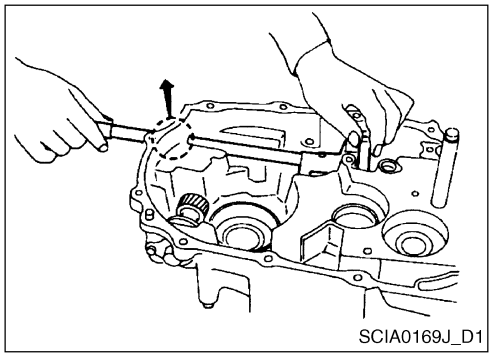
SCIA0169J_D1

   - Be careful not to damage the oil seal lip during striking rod removal. Cover the striking rod's sharp edge with the tape if necessary.

Disassembly (Continued)

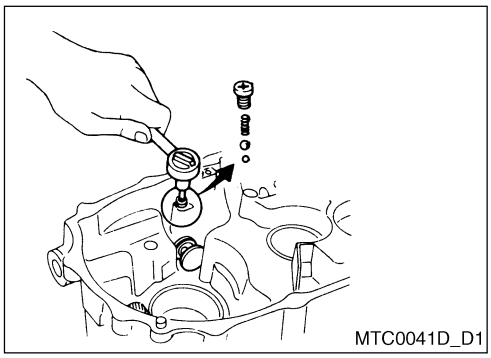

7. Remove the reverse check plug and disconnect the reverse check spring and the check ball.

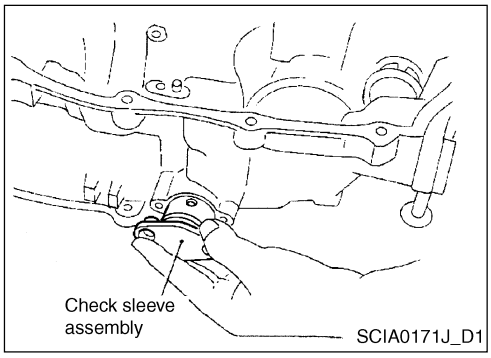

8 . Remove the check sleeve assembly.

Assembly

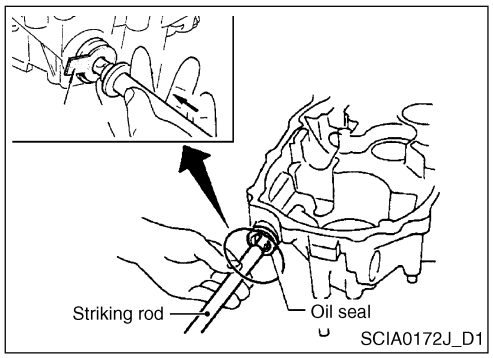

1. Install the striking rod, lever and interlock.
   - Cover the striking rod's sharp edge with the tape during striking rod installation not to damage the oil seal.

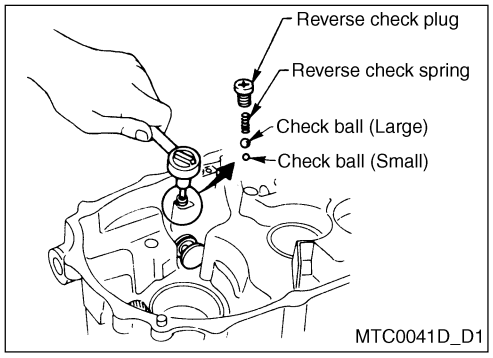

2. Install the reverse check sleeve assembly.
3. Install the reverse check ball, reverse check spring and reverse check plug.

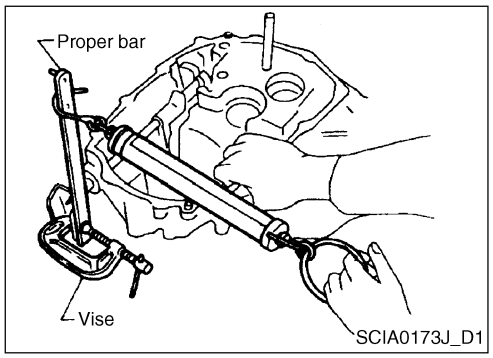

4. Measure the tension of the reverse check.

   Reverse check tension:

   4.9 - 7.4 N•m (50 - 75 kg-cm: 43 - 65 in-lb)
   - If out of the standard value, select and install a different check plug.
   - Reverse check plug: Refer to "Reverse Check Plug" (MT-39) in "Service Data".
5. Install the selected reverse check plug.
   - Apply the locking sealant at the plug surroundings before installation.

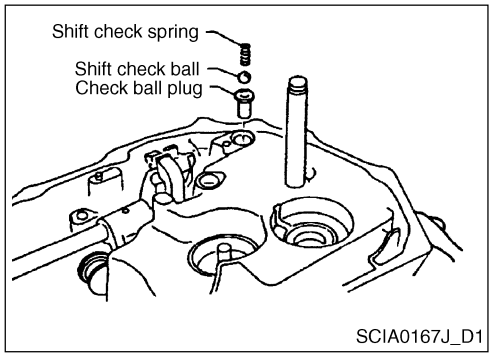

6. Install the shift check ball plug, shift check ball and check spring.
7. Install the oil pocket.

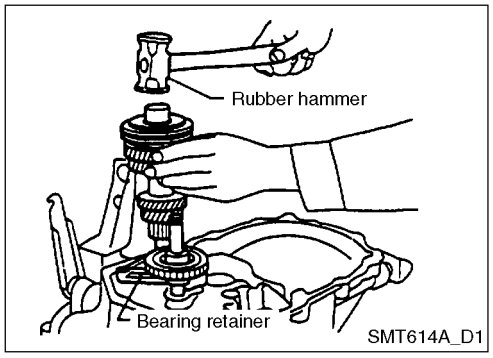

8. Install the gear related components to the clutch housing.
   a. Install the input shaft assembly and reverse idler gear.
      - Be careful not to damage the oil seal by the input shaft spline during installation of input shaft to the housing.
   b. Install the bearing retainer.

      Apply the liquid gasket (TB1215) on the threads of one torque bolt.

Assembly (Continued)

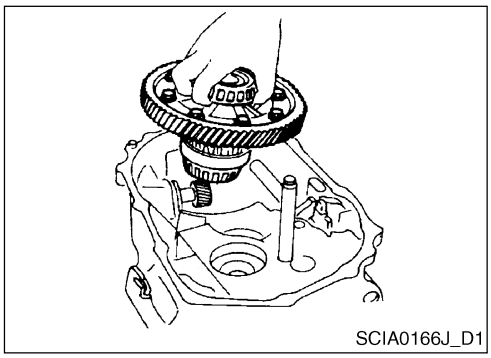
SCIA0166J_D1

b. Install the final drive assembly.

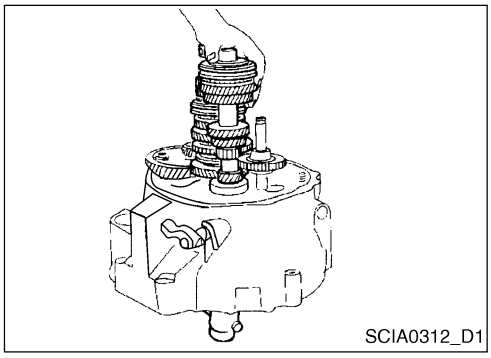
SCIA0312_D1

c. Install the main shaft assembly.
   - Be careful not to damage the oil channel when installing the main shaft to the clutch housing.

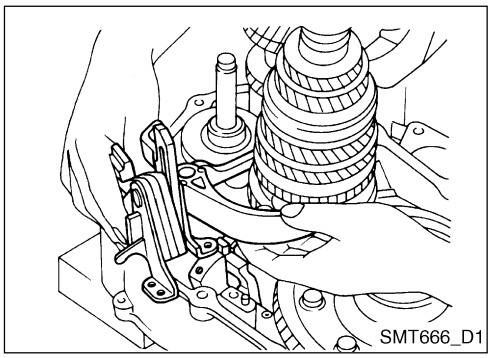
SMT666_D1

9. Apply grease to the shifter cap and install it to the control bracket.

   Install the 1st & 2nd shift fork and control bracket.
10. Install the 3rd & 4th shift fork and 5th shift fork.

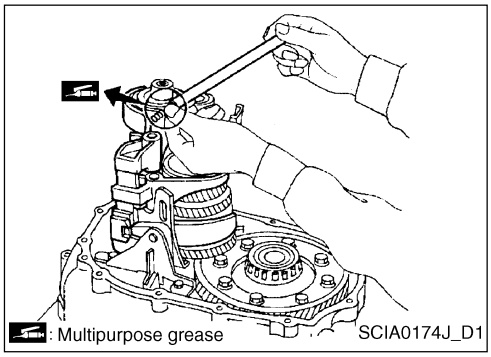

SCIA0174J_D1

11. Install the fork shaft.
    - Apply a multipurpose grease to the support spring before fork shaft installation.
12. Install the reverse idle spacer.

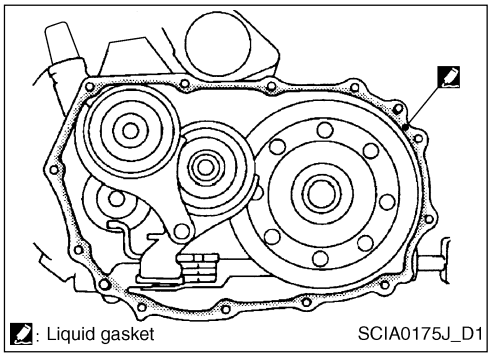

SCIA0175J_D1

13. Apply the liquid gasket (TB1215) continuously to the clutch housing and transaxle mating surface.

Assembly (Continued)

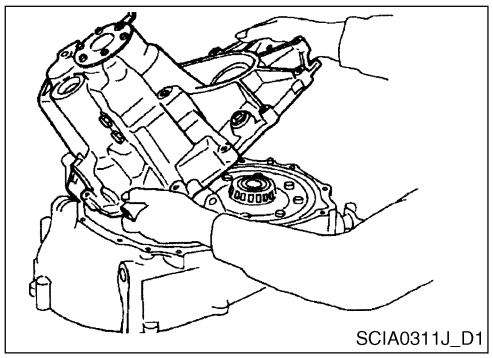

14. Install the transmission case to the clutch housing.
15. Tighten the mounting bolt to the specified torque.
    - Refer to “Installation” (MT-11) in “Transaxle Assembly” for tightening torque.

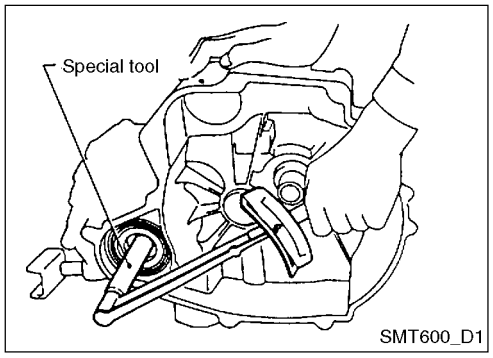

16. Measure the overall turning torque.

    Overall turning torque (new bearing):

    3.97 - 13.7 N•m (40 - 140 kgf-cm, 35 - 122 in-lb)
    - The turning torque is measured slightly lower than the above value if the bearing is reused.
    - Check if the turning torque is similar with the specified value.

Input Shaft and Gear

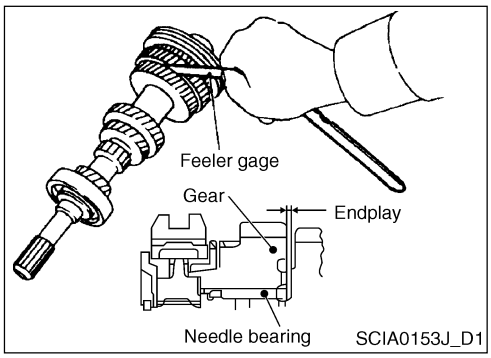

DISASSEMBLY

1. Measure the 5th gear endplay before disassembly.

   Gear endplay

Gear	Endplay mm (in)
5th gear	0.18 - 0.31 (0.0071 - 0.0122)

- When the values are out of the standard, disassemble and check the contacting surfaces of the gear, shaft and hub and measure the snap ring groove clearance during assembly.

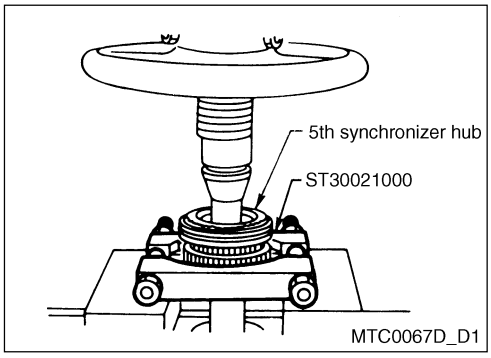

2. Remove the snap ring and 5th stopper.
3. Remove the 5th synchronizer, 5th input gear and 5th needle bearing.

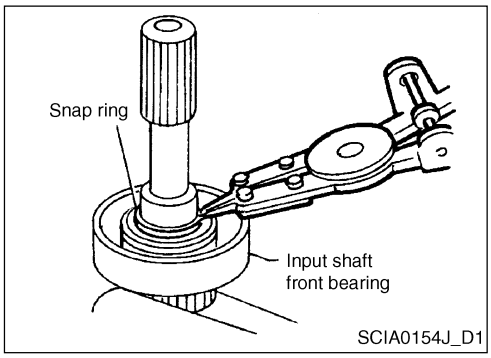

4. Remove the input shaft front bearing snap ring and remove the input gear spacer.

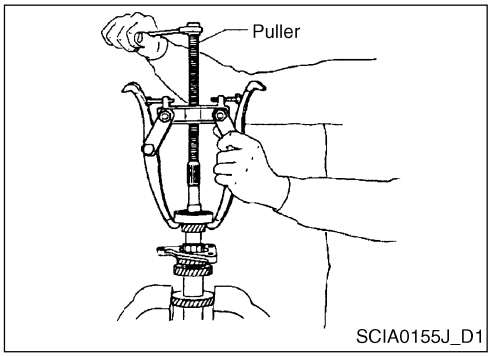

5. Remove the input shaft front bearing.
6. Remove the bearing retainer.

Input Shaft and Gear (Continued)

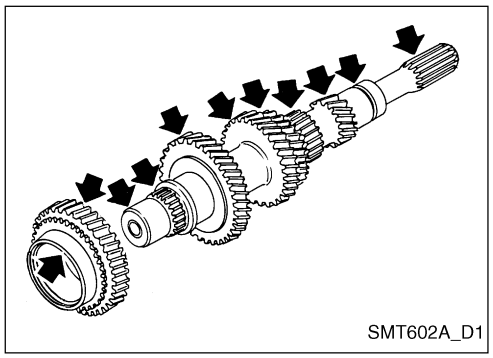

INSPECTION AFTER DISASSEMBLY

GEAR AND SHAFT

- Check for any crack, wear or distortion at the shaft.
- Check for any excessive wear, damage or chip at the gear.

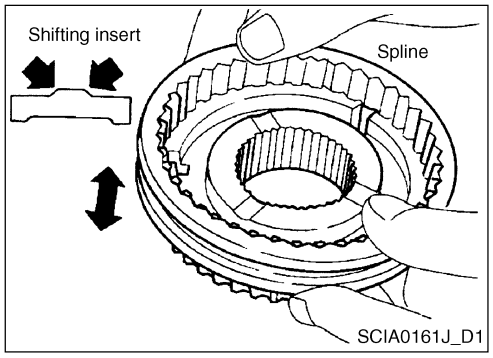

SYNCHRONIZER

- Inspect for any wear and crack at the coupling sleeve spline, hub and gear.
- Check for any wear or deformation at the baulk ring.
- Check for any wear or deformation at the shifting insert.

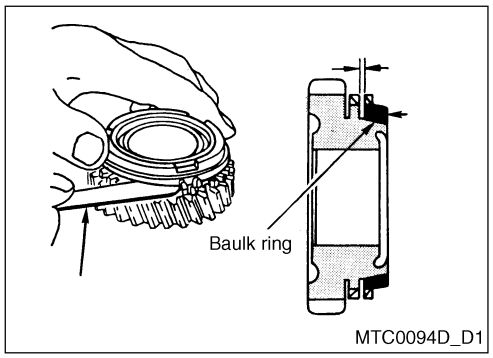

- Measure the clearance between the baulk ring and gear.
  Clearance between the baulk ring and gear.
  Standard:
  1.0 - 1.35 mm (0.0394 - 0.0531 in)
  Wear limit:
  0.7 mm (0.028 in)

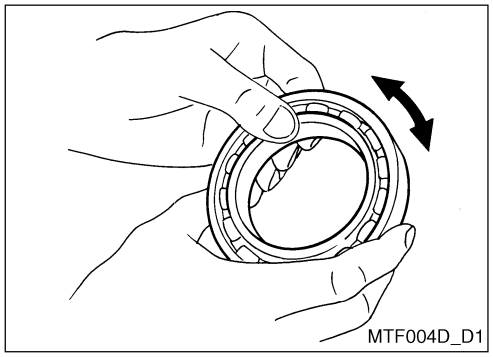

BEARING

- Check if the bearing rotates smoothly without any ticking noises and check for any wear and deformation.

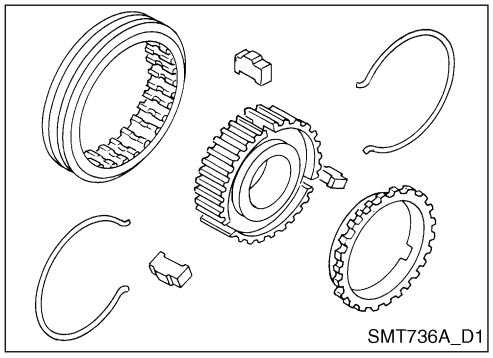

ASSEMBLY

1. Assemble the 5th synchronizer.

Input Shaft and Gear (Continued)

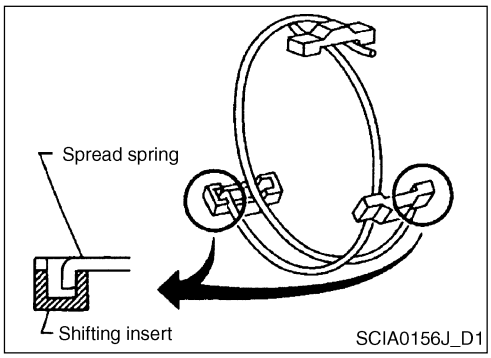

- Be careful so that the front and gear spread spring ends not to be caught by the same shifting insert.

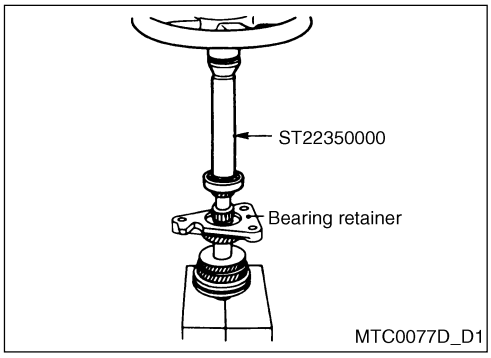

2. Install the bearing retainer.
3. Press in the input shaft front bearing.
4. Install the input gear spacer.

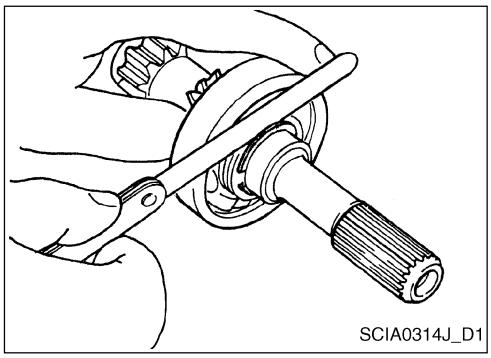

5. Select the input shaft front bearing snap ring to minimize the input shaft groove clearance. Install the snap ring.

   Groove clearance: 0 - 0.1 mm (0 - 0.004 in)

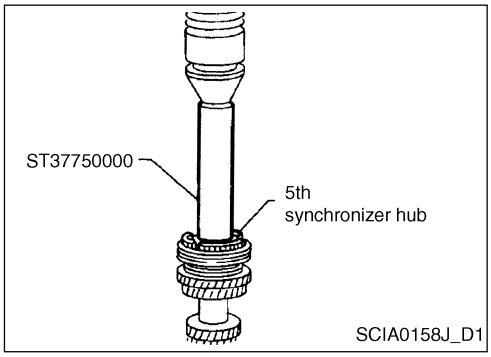

6. Install the 5th needle bearing, 5th input gear, 5th synchronizer and 5th stopper.
7. Measure the 5th input gear endplay.

   Endplay standard: 0.18 - 0.31 mm

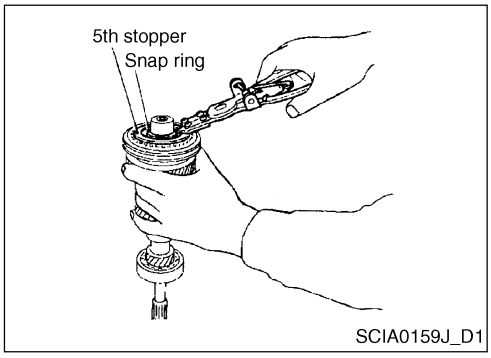

8. Select and install the 5th synchronizer hub snap ring to minimize the input shaft groove clearance.

   Groove clearance: 0 - 0.1 mm (0 - 0.004 in)

Main Shaft and Gear

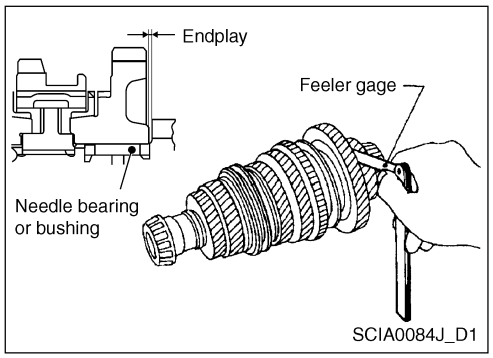

DISASSEMBLY

1. Measure the 1st, 2nd, 3rd and 4th main gear endplay.

   Gear endplay:

   1st gear: 0.18 - 0.31 mm
   2nd gear: 0.2 - 0.3 mm
   3rd gear: 0.2 - 0.3 mm
   4th gear: 0.2 - 0.3 mm

   - If out of the standard value, disassembly and inspect the contacting surfaces of the gear, shaft and hub. Adjust with the snap ring during assembly.

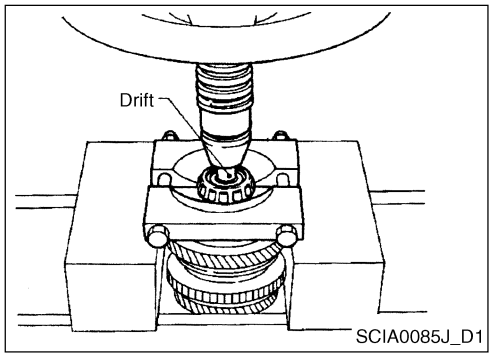

2. Remove the main shaft rear bearing using the press and commercial tool.

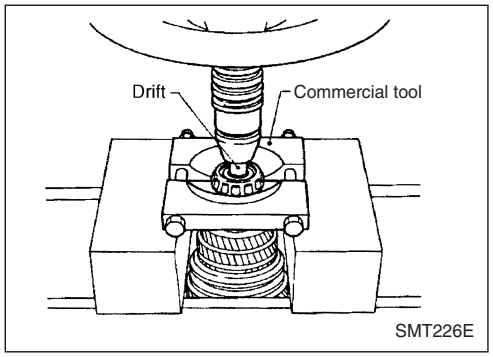

3. Remove the C-ring, C-ring holder and thrust washer.

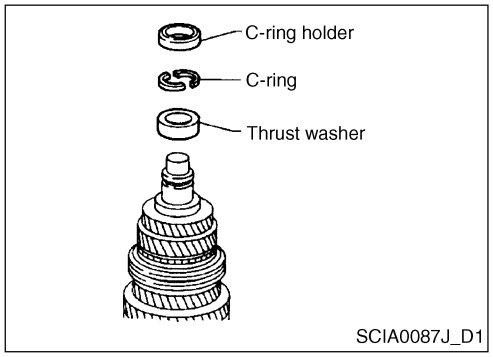

4. Remove the 5th main gear.

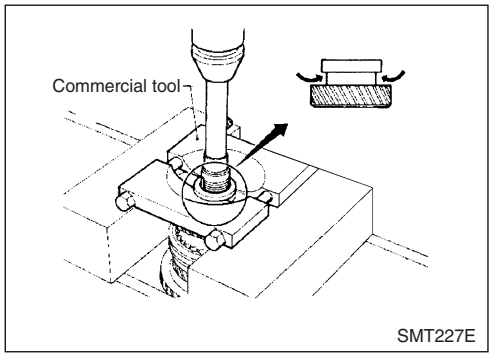

Main Shaft and Gear (Continued)

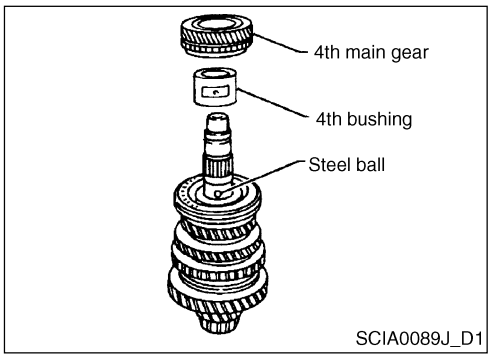

5. Remove the 4th main gear, 4th gear bushing and steel ball.
   - Be careful not to lose the steel ball.

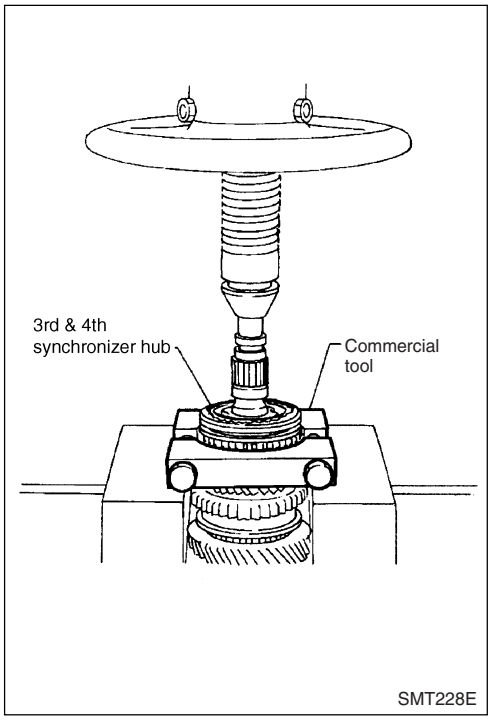

6. Remove the 3rd & 4th synchronizer, 3rd main gear, 2nd & 3rd bushing, steel ball and 2nd main gear.
   - Be careful not to lose the steel ball.

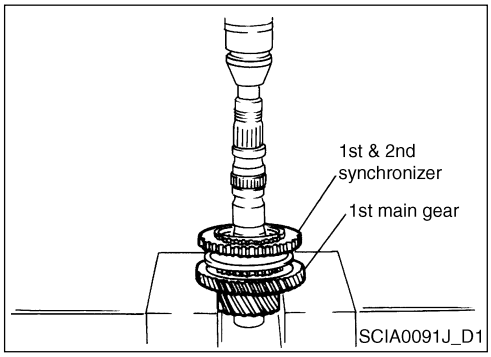

7. Remove the 1st & 2nd synchronizer and 1st main gear. Remove the 1st gear needle bearing.

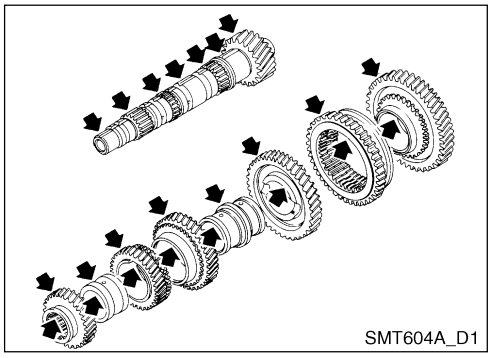

Inspection

GEAR AND SHAFT

- Inspect for any crack, damage or distortion at the shaft.
- Inspect for any excessive wear or crack at the shaft gear.

Main Shaft and Gear (Continued)

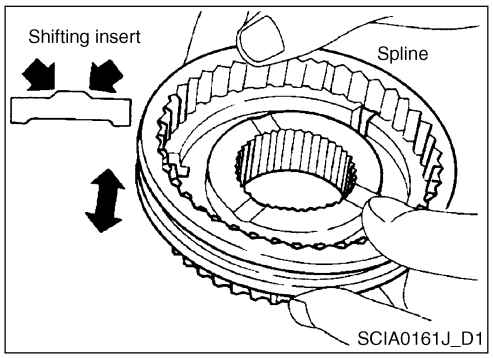

SYNCHRONIZER

- Check for any wear and crack at the coupling sleeve spline, hub and gear.
- Inspect for any crack or deformation at the baulk ring.
- Inspect for any crack or deformation at the shifting insert.

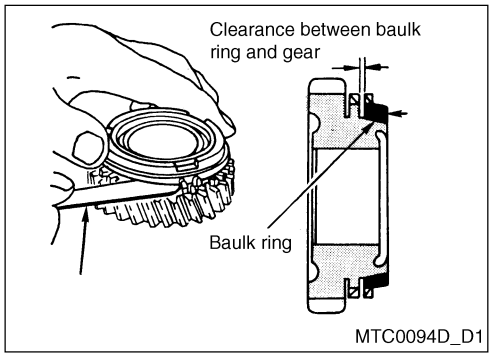

- Measure the clearance between the baulk ring and gear.
  Clearance between the baulk ring and 1st~4th main gear
  Standard:
  1.0 - 1.35 mm (0.0394 - 0.0531 in)
  Wear limit:
  0.7 mm (0.028 in)

Main Shaft and Gear (Continued)

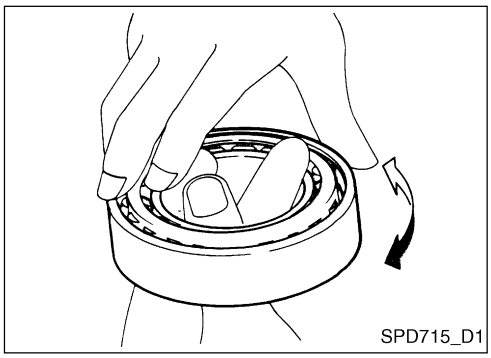

BEARING

- Check if the bearing rotates smoothly without any ticking noises and check for any wear and deformation.
- When replacing the taper roller bearing, replace the outer and inner race as a set.

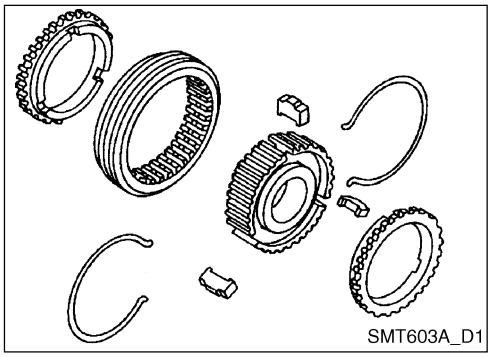

ASSEMBLY

1. Assembly the 1st & 2nd, 3rd & 4th synchronizers.

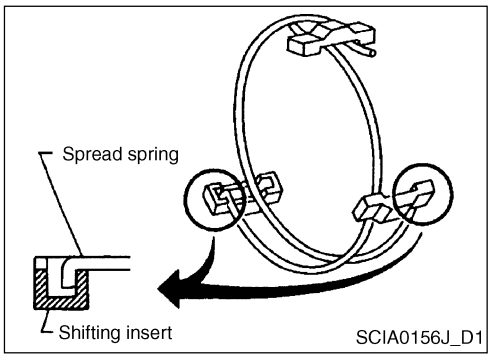

- Be careful so that the front and gear spread spring ends not to be caught by the same shifting insert.

Main Shaft and Gear (Continued)

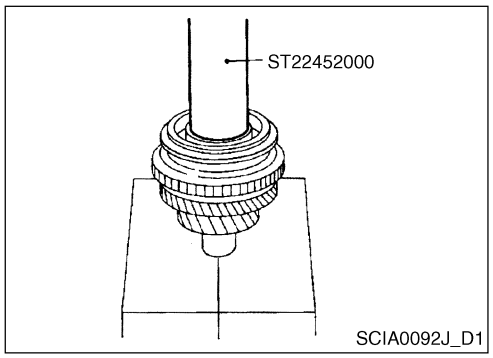

2. Install the 1st gear needle bearing and 1st main gear.
3. Press in the 1st & 2nd synchronizer.

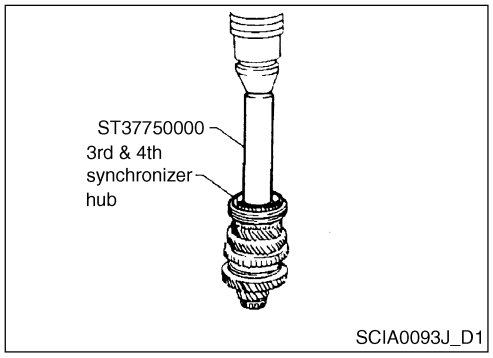

4. Install the steel ball, 2nd main gear, 2nd & 3rd bushing, 3rd main gear, 3rd & 4th synchronizer.
   - Apply a multipurpose grease to the steel ball before installing it to the 2nd & 3rd bushing groove.

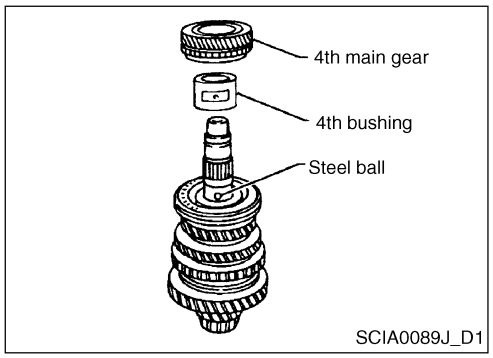

5. Install the steel ball, 4th bushing and 4th main gear.
   - Apply a multipurpose grease to the steel ball before installing it to the 4th bushing groove.

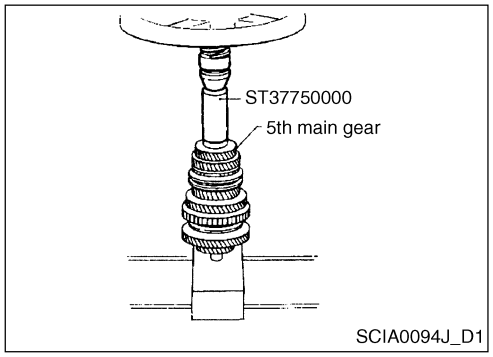

6. Press in the 5th main gear.

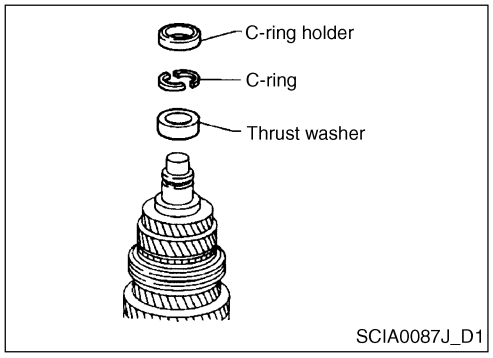

7. Install the thrust washer.
8. Select and install the C-ring so that the main shaft endplay becomes the standard value.

   Endplay standard:

   0 - 0.1 mm (0 - 0.004 in)

9. Install the C-ring holder.

Main Shaft and Gear (Continued)

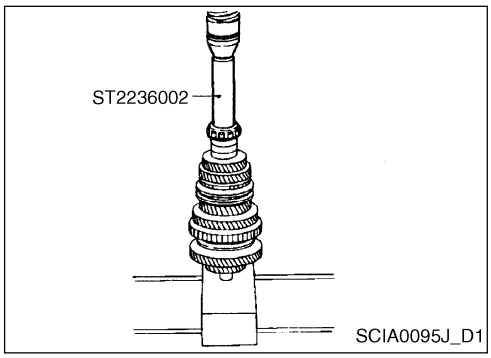

10. Press in the main shaft gear bearing.

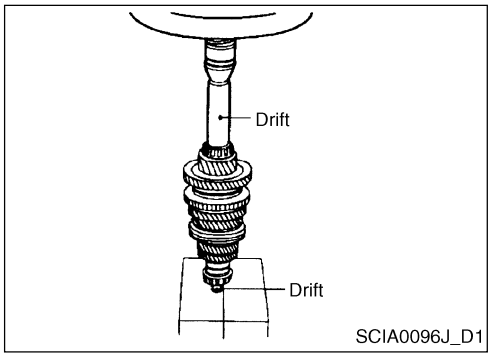

11. Press in the main shaft front bearing.
12. Measure the endplay for the 1st, 2nd, 3rd, 4th and main gear.

    Endplay standard

    1st gear: 0.18 - 0.31 mm

    2nd~4th gear: 0.20 - 0.30 mm

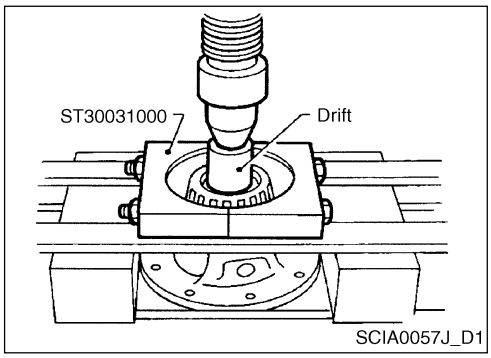

Final Drive

DISASSEMBLY

1. Remove the final gear.
2. Remove the differential side bearing.
   - Be careful not to mix the left and right bearings each other.

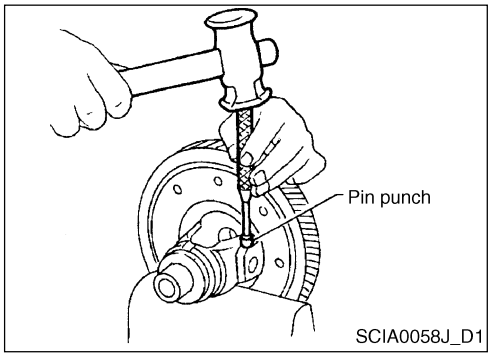

3. Remove the speedometer drive gear.
4. Remove the speedometer stopper.
5. Remove the lock pin using the pin punch and disassemble the pinion mate shaft.
6. Disconnect the pinion mate gear and side gear.

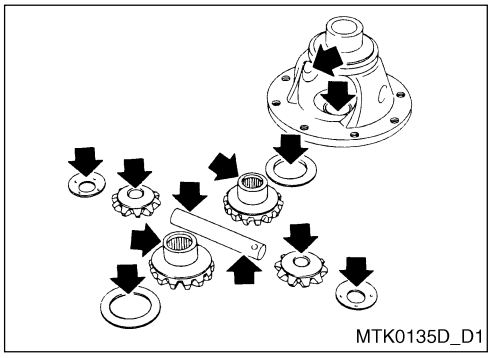

Inspection

GEAR, WASHER, SHAFT AND CASE

- Inspect the contacting surfaces of the side gear and pinion mate gear, and inspect for differential case and washer.

Final Drive (Continued)

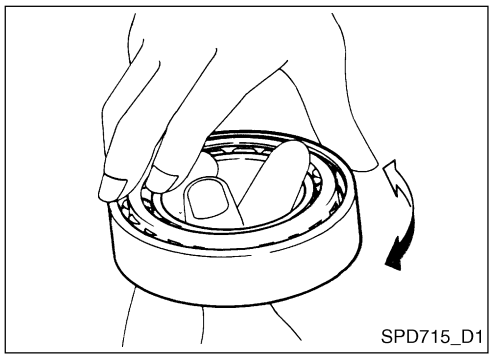
SPD715_D1

BEARING

- Check if the bearing rotates smoothly and check for any noise, crack, dents or wear at the bearing.
- When replacing the taper roller bearing, replace it as a set.

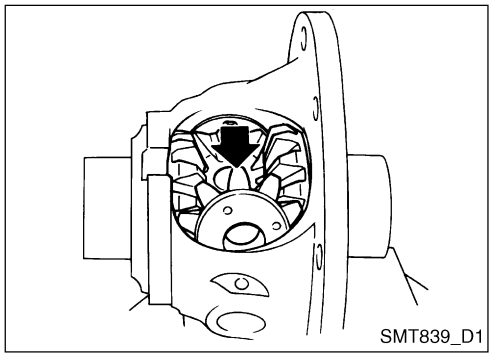
SMT839_D1

ASSEMBLY

1. Attach the side gear thrust washer to the side gear and install the pinion mate washer and pinion mate gear to their original positions.

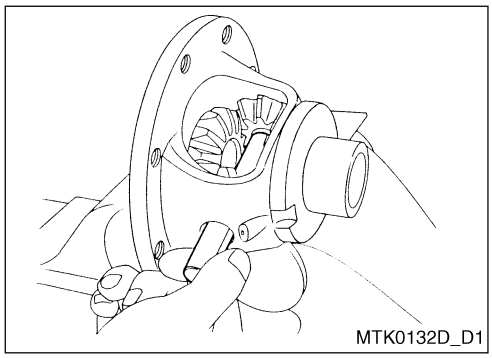
MTK0132D_D1

2. Insert the pinion mate shaft.
   - Be careful not to damage the pinion mate thrust washer during insertion.

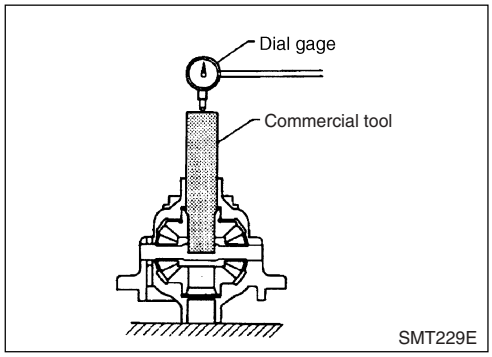

SMT229E

3. Measure the side gear endplay and select the proper side gear thrust washer.
   a. Install the commercial tool and dial gage to the side gear.
   b. By moving the side gear up and down, check the dial gage reading. Measure both side gears.

      Endplay standard:

      0.1 - 0.2 mm

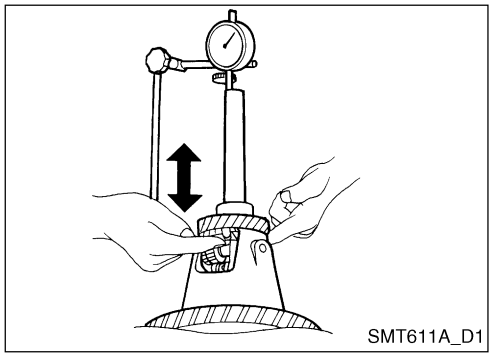
SMT611A_D1

   c. If out of the standard value, adjust the clearance by changing the side gear thrust washer width.

      Side gear thrust washer: Refer to “SERVICE DATA” (MT-38).

Final Drive (Continued)

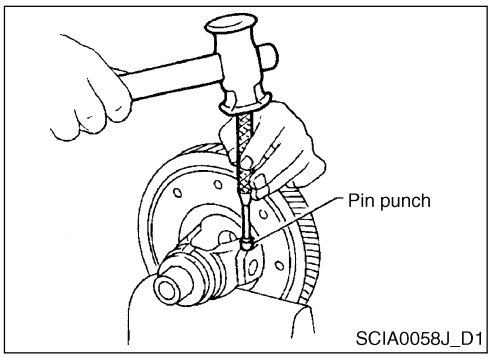

4. Install the retaining pin.
   - Be careful not to let the retaining pin extrude over the case.

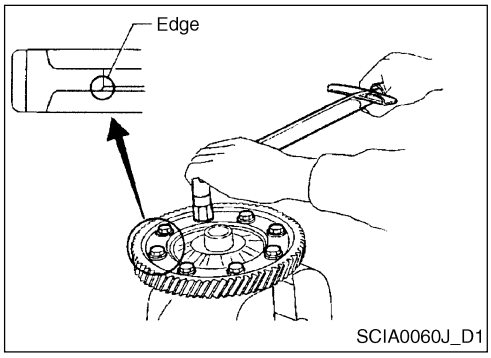

5. Install the final gear.
   - Apply the locking sealant to the mounting bolts before the final gear installation.
6. Install the speedometer drive gear and stopper.

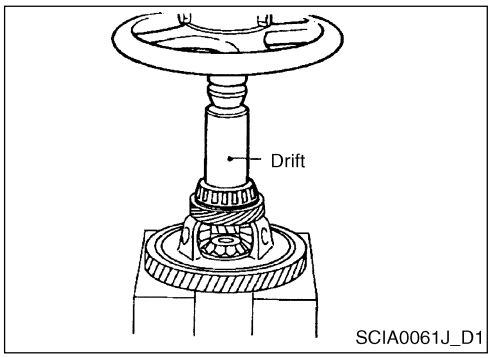

7. Press in the differential side bearing.

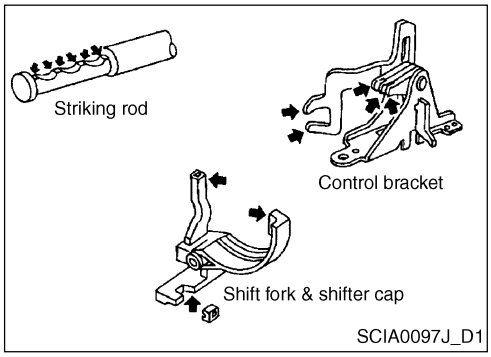

Shift Control Components

INSPECTION

- Check for any wear, scratch or damage at the contact surfaces and moving surfaces.

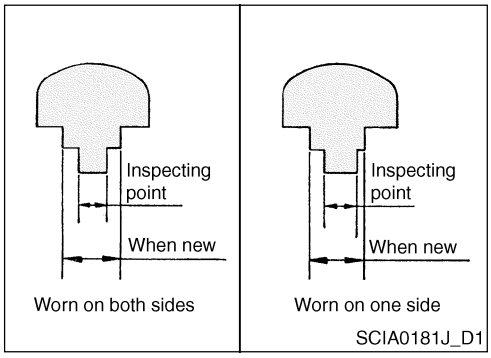

SHIFT FORK INSPECTION

Check if the shift fork end width (the moving section against coupling sleeve) is in the limit value.

Shift fork width

- **1st~2nd, when new: 10.8 - 11.0 mm**
  Uneven wear limit: 10.3 [10.5]
- **3rd~4th, when new: 5.8 - 6.0 mm**
  Uneven wear limit: 5.3 [5.5]
- **5th, when new: 5.8 - 6.0 mm**
  Uneven wear limit: 5.3 [5.5]

Case Components

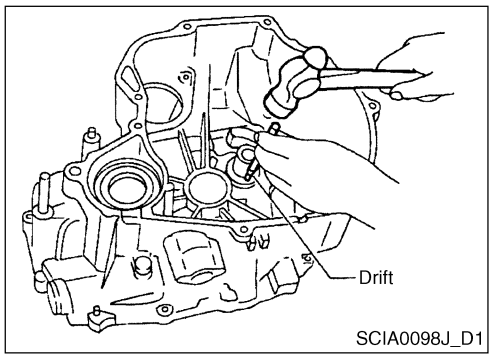

REMOVAL • INSTALLATION

INPUT SHAFT OIL SEAL

1. Remove the oil seal.

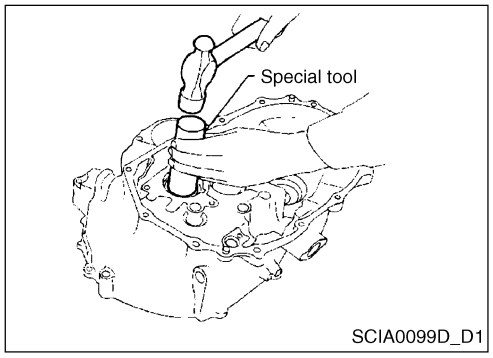

2. Install a new oil seal using the special tool.
   - Install after applying the multipurpose grease to the oil seal.
   - Always replace the oil seal. It cannot be used again.

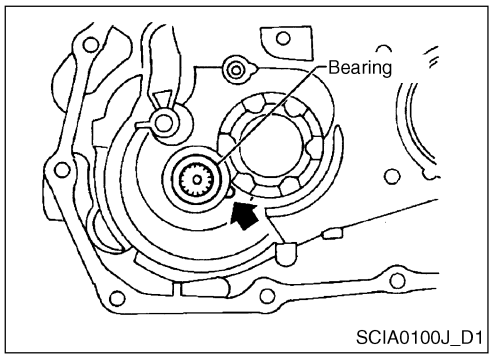

INPUT SHAFT REAR BEARING

1. Remove the plug from the transmission case.

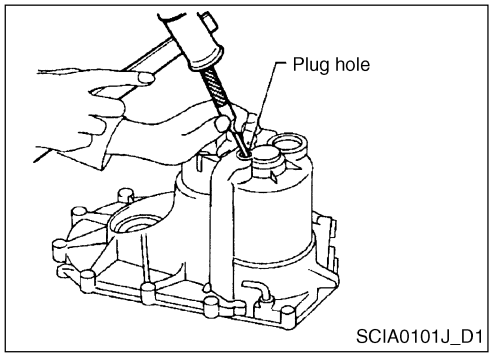

2. Remove the input shaft rear bearing from the plug hole by tapping with a pin punch.

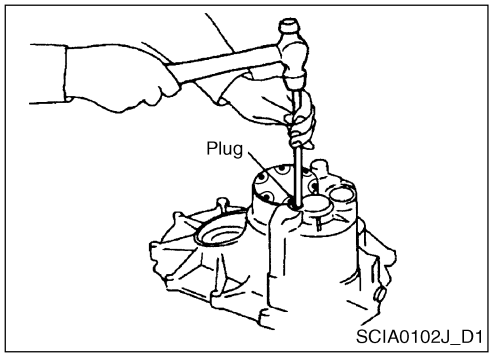

3. Apply the liquid gasket (TB1215) to the plug and install it to the transaxle case.

Case Components (Continued)

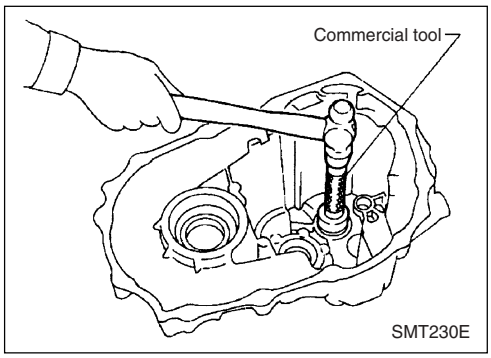

4. Install the input shaft rear bearing.

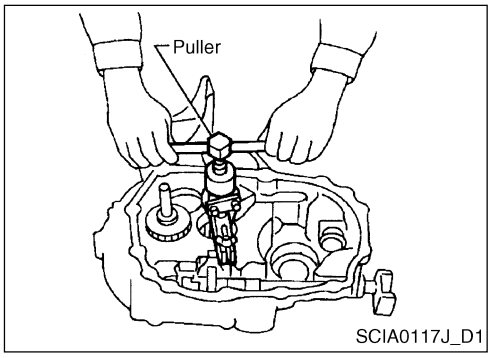

MAIN SHAFT FRONT BEARING OUTER RACE AND OIL CHANNEL

1. Remove the main shaft front bearing outer race using the puller.
2. Disconnect the oil channel.

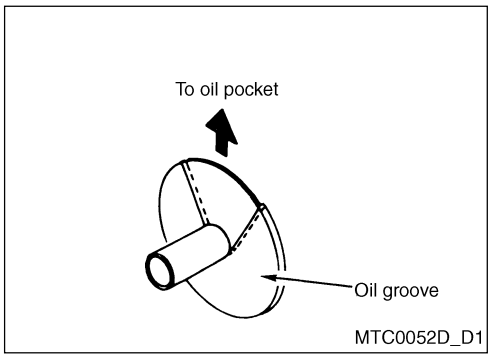

3. Install the oil channel.
   - Pay attention to the oil channel installation direction.

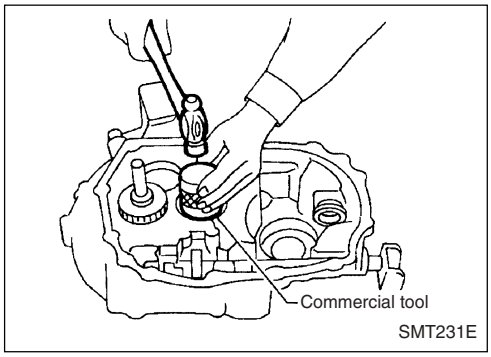

4. Install the main shaft front bearing outer race.
   - Refer to “MAIN SHAFT BEARING FREE LOAD” (MT-36) in “Differential Side Bearing Free Load” for main shaft bearing free load.

Differential Side Bearing Free Load

If any of the below is replaced, adjust the differential side bearing free load.

- Differential case
- Differential side bearing
- Clutch housing
- Transmission case

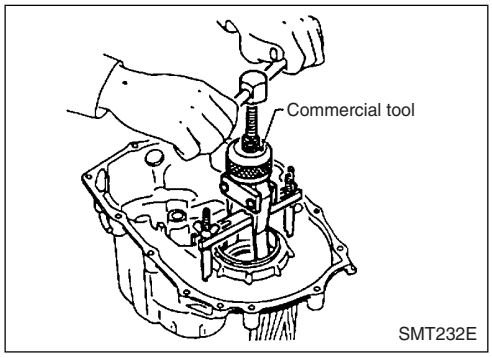

1. Remove the differential side bearing outer race (at the transmission case) and the shim.

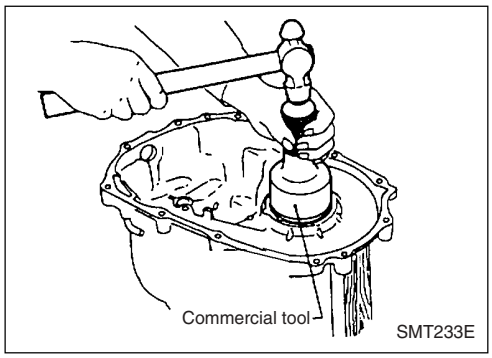

2. Reinstall the shim and differential side bearing outer race.
3. Install the final drive assembly to the clutch housing.
4. Install the transmission case to the clutch housing.
   - Tighten the transmission case mounting bolts to the specified torque.

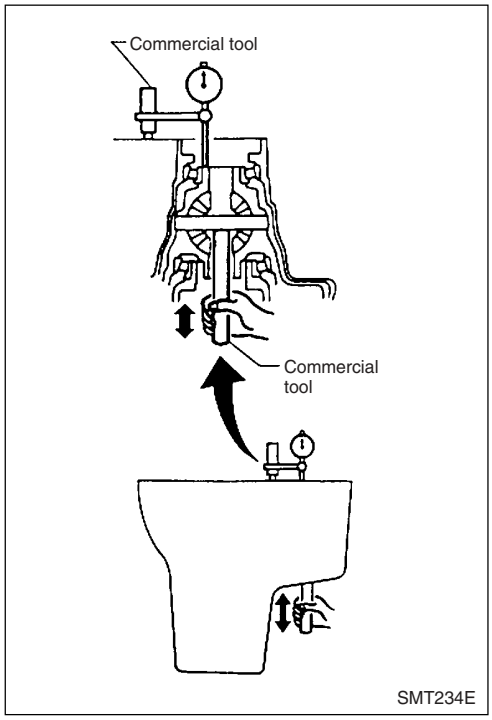

5. Install the dial gage at the front end of the differential case.
6. Insert the tool to the differential side gear.
7. Read the dial gage changes by moving the tool up and down.
8. Select a proper shim referring the service data.
9. Install the selected shim and the differential side bearing outer race.
10. Measure the differential side bearing turning torque.
    a. Install the final drive assembly to the clutch housing.
    b. Install the transmission case to the clutch housing.
       - Tighten to the specified torque.

Differential Side Bearing Free Load (Continued)

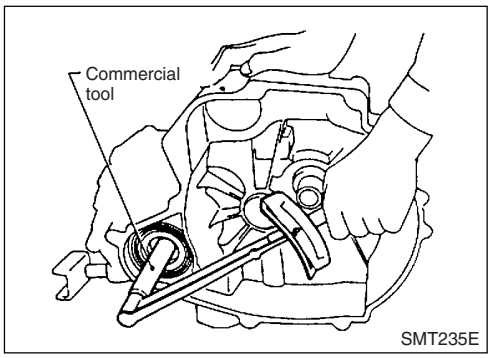

c. Measure the turning torque of final drive assembly.

Turning torque (New bearing):

2.0 - 7.8 mm

- If the bearing is reused, then the turning torque value decreases.
- The value fluctuation for each measurement should be under 1.0 N•m (10 kg-cm: 17 - 69 in-lb).

MAIN SHAFT BEARING FREE LOAD

If any of the below is replaced, adjust the main shaft bearing free load.

- Main shaft
- Main shaft bearing
- Clutch housing
- Transmission case

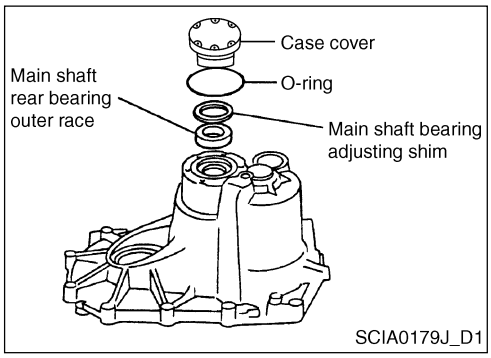

1. Remove the case cover, O-ring, spacer, main shaft bearing adjusting shim and main shaft rear bearing outer race from the transmission case.
2. Install the main shaft assembly to the clutch housing.
3. Install the transmission case to the clutch housing.
   - Tighten the transmission case mounting bolts to the specified torque.

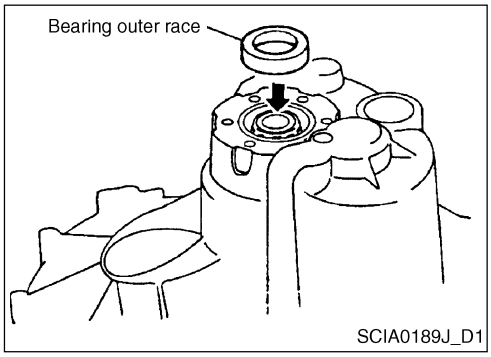

4. Install the main shaft rear bearing outer race to the inner race.

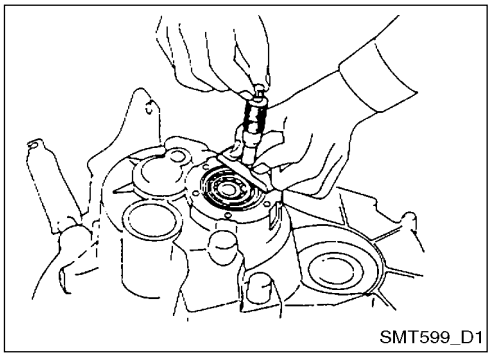

5. Measure the clearance between the transmission case and bearing outer race.
   - Be sure to securely seat the bearing.
6. Select a proper shim referring the service data.

   Shim thickness = Measured value - 12.5 mm + Main bearing free load standard value 0.2 ~ 0.25 mm
7. Measure the overall turning torque.
   - **Overall turning torque (New bearing):**

     3.9 - 13.7 N•m (40 - 140 kgf-cm 35 - 122 in-lb)

     Refer to “Assembly” (MT-21).

General Specifications

Transaxle

Engine			QG15DE	QG16DE
Transaxle model			RS5F30A	
Number of gears			5	
Synchromesh type			key type	
Gear Ratio	1st		3.333	
	2nd		1.782	1.955
	3rd		1.207	1.286
	4th		0.902	0.926
	5th		0.756	
	Reverse		3.417	3.214
Number of teeth	Input gear	1st	15	
		2nd	23	22
		3rd	29	28
		4th	41	
		5th	45	
		Reverse	12	14
	Main gear	1st	50	
		2nd	41	43
		3rd	35	36
		4th	37	38
		5th	34	
		Reverse	41	45
	Reverse idler gear		30	37
Oil capacity			2.9 L (2.8 L ~ 3.0 L)	
Oil level			-58 ~ -66 mm from the speedometer hole	

Final Gear

Engine		QG15DE
Gear ratio		4.167
Number of teeth	Differential gear / Main shaft	75 / 18
	Side gear / Pinion mate	14 / 10

Service Data

Endplay

Item	Standard Value (mm)
1st gear	0.18 - 0.31
2nd gear	0.20 - 0.30
3rd gear	0.20 - 0.30
4th gear	0.20 - 0.30
5th gear	0.18 - 0.31
Input shaft front	0 - 0.1
Input shaft rear	0 - 0.1
Input shaft 5th synchronizer	0 - 0.1
Main shaft	0 - 0.1
Differential side gear	0.1 - 0.2

Snap Ring and C-Ring

Selecting Position	Thickness (mm)
Input shaft front	1.27 1.33 1.39 1.45
Input shaft rear	1.27 1.33 1.39 1.45
Input shaft 5th synchronizer	2.00 2.05 2.10 2.15 2.20 2.25 2.30
Main shaft	3.63 3.70 3.77 3.84 3.91 3.98 4.05 4.12 4.19 4.26 4.33 4.40 4.47 4.54

Thrust Washer

Selecting Position	Thickness (mm)	Part No.
Differential side gear	0.76 - 0.81	38424 01M10
	0.81 - 0.86	38424 01M11
	0.86 - 0.91	38424 01M12
	0.91 - 0.96	38424 01M13

Adjusting Shim

Selecting Position	Thickness (mm)
Main shaft bearing	0.10 0.15 0.20 0.25 0.30 0.35 0.40 0.45 0.50 0.55 0.60 0.65 0.70 0.75 0.80 0.85 0.90 0.95 1.00
Differential side bearing	0.44 0.48 0.56 0.60 0.64 0.68 0.72 0.76 0.80 0.84 0.88

Free Load

Item	Standard Value (mm)
Main shaft bearing	0.20 - 0.25
Differential side bearing	0.24 - 0.32

Reverse Check Tension

Item	Standard Value N•m (kgf • m)
Reverse checker	5.0 - 7.3 (0.50 - 0.75)

Reverse Check Plug

Item	Length (mm)	Part No.
Plug length of the reverse check plug	7.1	32188 M8002
	7.7	32188 M8003
	8.3	32188 M8001
	8.9	32188 M8004

Shift Fork

Item		Limit Value (mm)	New (mm)
End width of the shift fork	1st~2nd gear	10.3 [10.5]	10.8 - 11.0
	3rd~4th gear	5.3 [5.5]	5.8 - 6.0
	5th gear	5.3 [5.5]	5.8 - 6.0

Baulk Ring Clearance

Measuring Location	Standard Value (mm)	Limit Value (mm)
1st & 2nd inner baulk ring clearance a	0.7 - 0.9	Less than 0.2
Outer baulk ring clearance b	0.7 - 1.0	Less than 0.2
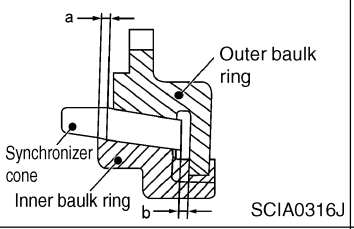		
3rd, 4th, 5th	1.0 - 1.35	0.7

Tightening Torque

Unit: N•m (kgf - m)

Transaxle-Engine mounting torque	From transaxle towards engine	31 - 40 (3.1 - 4.1)
	From engine towards transaxle	16 - 20 (1.6 - 2.1)
		31 - 40 (3.1 - 4.1)