Technical training.
Product information.

G30 Voltage Supply and Bus Systems

cardiagn.com

Edited for the U.S. market by:
BMW Group University
Technical Training
ST1604 11/1/2016

BMW Service

General information

Symbols used

The following symbol is used in this document to facilitate better comprehension or to draw attention to very important information:

⚠

Contains important safety information and information that needs to be observed strictly in order to guarantee the smooth operation of the system.

Information status and national-market versions

BMW Group vehicles meet the requirements of the highest safety and quality standards. Changes in requirements for environmental protection, customer benefits and design render necessary continuous development of systems and components. Consequently, there may be discrepancies between the contents of this document and the vehicles available in the training course.

This document basically relates to the European version of left hand drive vehicles. Some operating elements or components are arranged differently in right-hand drive vehicles than shown in the graphics in this document. Further differences may arise as the result of the equipment specification in specific markets or countries.

Additional sources of information

Further information on the individual topics can be found in the following:

- Owner's Handbook
- Integrated Service Technical Application.

Contact: conceptinfo@bmw.de

©2016 BMW AG, Munich

Reprints of this publication or its parts require the written approval of BMW AG, Munich.

The information contained in this document forms an integral part of the BMW Group Technical Qualification and is intended for the trainer and participants in the seminar. Refer to the latest relevant information systems of the BMW Group for any changes/additions to the technical data.

Information status: **September 2016**
Technical training.

cardiagn.com

G30 Voltage Supply and Bus Systems

Contents

1. Introduction **1**

2. Bus Systems **2**
- 2.1. Bus overview 2
- 2.2. Main bus systems 4
  - 2.2.1. K-CAN 4
  - 2.2.2. PT-CAN 5
  - 2.2.3. MOST 5
  - 2.2.4. FlexRay 6
  - 2.2.5. Ethernet 7
  - 2.2.6. D-CAN 11
- 2.3. Sub-bus systems 11
  - 2.3.1. LIN-Bus 11
  - 2.3.2. Local CAN 22
  - 2.3.3. USB 22
- 2.4. Diagnosis access OBD2 22

3. Control Units **23**
- 3.1. Installation locations of control units 23
- 3.2. Gateway 25
  - 3.2.1. Body Domain Controller (BDC) 25
- 3.3. Control units on the MOST bus 28
  - 3.3.1. Head unit 28
  - 3.3.2. Hi-fi amplifier with MOST bus 28
  - 3.3.3. Rear seat entertainment (RSE) 30
- 3.4. Control units on the K-CAN2 31
  - 3.4.1. Roof function center (FZD) 31
  - 3.4.2. Trunk function module (HKFM) 32
  - 3.4.3. Seat modules 32
  - 3.4.4. Seat pneumatics modules 33
- 3.5. Control units on the K-CAN3 34
  - 3.5.1. Frontal Light Electronics 34
  - 3.5.2. Parking Maneuver Assistant (PMA) 35
  - 3.5.3. Lane change warning (SWW) also know as the Short Range Radar Sensor (SRR) 36
- 3.6. Control units on the K-CAN4 37
  - 3.6.1. Active Sound Design (ASD) 37
  - 3.6.2. Controller (CON) 38
  - 3.6.3. Integrated automatic heating / air conditioning (IHKA) 38
  - 3.6.4. Light Effect Manager (LEM) 39
  - 3.6.5. Telematic Communication Box (TCB) 40

cardiagn.com

G30 Voltage Supply and Bus Systems

Contents

3.7. Control units on the K-CAN5 ... 41
3.7.1. Remote control receiver (FBD) ... 41
3.8. Control units on the Ethernet ... 41
3.8.1. Active Cruise Control (ACC) Long Range Radar (LRR) sensor ... 41
3.8.2. Rear view camera (RFK) ... 42
3.8.3. Top Rear Side View Camera (TRSVC) ... 42
3.8.4. Camera-based driver support systems (KAFAS) ... 43
3.9. Control units on the PT-CAN ... 44
3.9.1. Digital Motor Electronics (DME, DME2) ... 44
3.9.2. High-beam assistant (FLA) ... 44
3.9.3. Instrument panel (KOMBI) ... 45
3.9.4. Night vision electronics (NVE) ... 45
3.10. Control units on the PT-CAN2 ... 46
3.10.1. Electronic transmission control (EGS) ... 46
3.10.2. Gear selector switch (GWS) ... 46
3.10.3. Power Control Unit (PCU) ... 47
3.11. Control units on the FlexRay ... 48
3.11.1. Advanced Crash Safety Module (ACSM) ... 48
3.11.2. Dynamic Stability Control (DSC) ... 48
3.11.3. Electric Active Roll Stabilization (EARS) ... 49
3.11.4. Electronic Power Steering (EPS) ... 50
3.11.5. Rear axle slip angle control (HSR) ... 50
3.11.6. Optional equipment system (SAS) ... 51
3.11.7. Transfer case ... 52
3.11.8. Vertical Dynamics Platform (VDP) ... 52
3.12. Control units on the local CAN ... 53
3.12.1. Radar sensor (primary) ... 53
3.12.2. Lane change warning SWW2 (secondary) also know as the Short Range Radar Sensor (SRR2) ... 53

4. Voltage Supply ... 54
4.1. Overview of voltage supply ... 54
4.1.1. System wiring diagram ... 54
4.2. Components ... 56
4.2.1. Overview of luggage compartment ... 56
4.2.2. Overview of engine compartment ... 57
4.2.3. Battery ... 57
4.2.4. Intelligent battery sensor ... 58
4.2.5. Safety battery terminal ... 58
4.2.6. Alternator ... 59

cardiagn.com

G30 Voltage Supply and Bus Systems

Contents

4.2.7. Integrated supply module 59
4.2.8. Power distribution box, front right 60
4.2.9. Power distribution box, front left (PHEV Version only) 60
4.2.10. Power distribution box, rear 61
4.2.11. Body Domain Controller 61
4.2.12. PCU with vehicle electrical system assistance measure 62
4.2.13. 24 V Electronic Power Steering 62

5. Terminal Control 66
5.1. Introduction 66
5.2. Vehicle conditions 66
5.3. Power supply terminals 70
5.4. Partial network operation 71
5.4.1. Prerequisites for partial network operation 71
5.4.2. Prerequisites of control units for partial network operation 71

cardiagn.com

cardiagn.com

G30 Voltage Supply and Bus Systems

1. Introduction

The electrical system of the new BMW 5 Series is based on the G12. The following topic is described in the Technical Reference Material for “ST1501 G12 Complete Vehicle”.

Topic	“ST1501 G12 Complete Vehicle”
Ethernet	“G12 General Vehicle Electronics”

cardiagn.com

G30 Voltage Supply and Bus Systems

2. Bus Systems

2.1. Bus overview

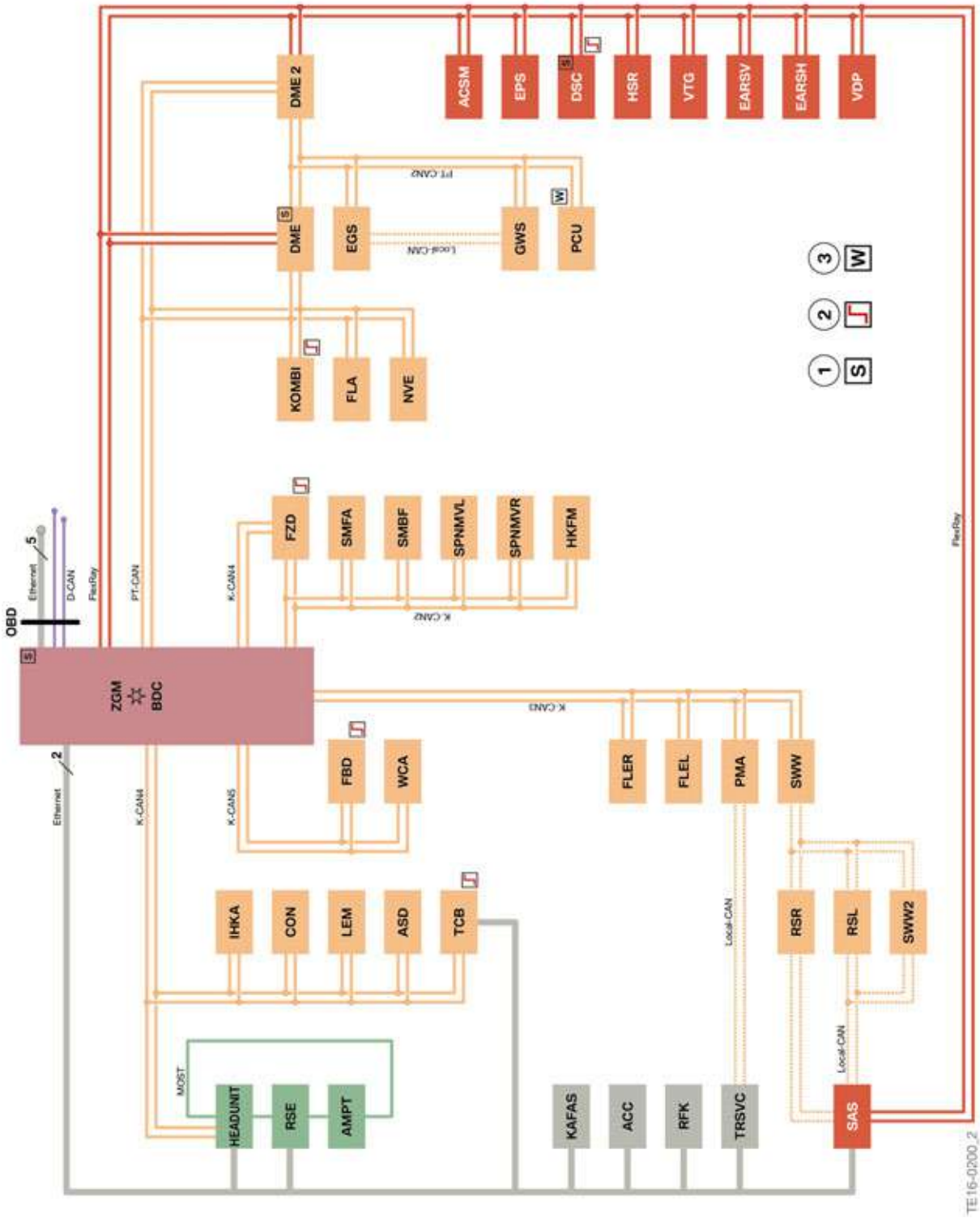

Bus overview

cardiagn.com

G30 Voltage Supply and Bus Systems

2. Bus Systems

Index	Explanation
ACC	Active Cruse Control also known as Long Range Radar sensor (LRR)
ACSM	Advanced Crash Safety Module
AMPT	Top HiFi amplifier
ASD	Active Sound Design
BDC	Body Domain Controller
CON	Controller
DME	Digital Motor Electronics
DME2	Digital Motor Electronics 2
DSC	Dynamic Stability Control
EARSH	Electric active roll stabilization rear
EARSV	Electric active roll stabilization front
EGS	Electronic transmission control
EPS	Electromechanical Power Steering
FBD	Remote control receiver
FLA	High-beam assistant
FLER	Frontal Light Electronics Right
FLEL	Frontal Light Electronics Left
FZD	Roof function center
GWS	Gear selector
HEADUNIT	Head Unit
HKFM	Trunk function module
HSR	Rear axle slip angle control
IHKA	Integrated automatic heating / air conditioning
KAFAS	Camera-based driver support systems
KOMBI	Instrument panel
LEM	Light Effect Manager
NVE	Night Vision Electronics
PCU	Power Control Unit
PMA	Parking Maneuver Assistant
RFK	Reverse camera
RSE	Rear Seat Entertainment
RSL	Radar Sensor, Left (Evasion Aid)
RSR	Radar Sensor, Right (Evasion Aid)
SAS	Optional equipment system
SMBF	Seat module, passenger

cardiagn.com

Index	Explanation
SMFA	Seat module, driver
SPNMVL	Seat pneumatics module front left
SPNMVR	Seat pneumatics module front right
SWW	Lane change warning (primary) also known as the Short Range Radar Sensor (SRR)
SWW2	Lane change warning (secondary) also known as the Short Range Radar Sensor (SRR2)
TCB	Telematic Communication Box
TRSVC	Top rear side view camera
VDP	Vertical Dynamic Platform
VTG	Transfer case
WCA	Wireless charging tray
ZGM	Central Gateway Module
1	Start-up node control units for starting and synchronizing the FlexRay bus system
2	Control units with wake-up authorization
3	Control units also connected at terminal 15 WUP

2.2. Main bus systems

2.2.1. K-CAN

In the G30 the following K-CAN's are used:

- K-CAN2
- K-CAN3
- K-CAN4
- K-CAN5

The control units on the K-CAN5 are not displayed in the bus overview by the BMW diagnosis system ISTA. Diagnosis is performed via the Body Domain Controller.

All K-CAN data buses have a data transfer rate of 500 kBit/s.

cardiagn.com

2.2.2. PT-CAN

In the G30 the following PT-CAN are used:

- PT-CAN
- PT-CAN2

The gateway for the PT-CAN2 is located in the DME.

Both PT-CAN data buses have a data transfer rate of 500 kBit/s.

2.2.3. MOST

On the G30 the MOST system known from other BMW models with a data transfer rate of 22.5 MBit/s is used. The gateway for the MOST system is located in the HEADUNIT.

cardiagn.com

G30 Voltage Supply and Bus Systems

2. Bus Systems

2.2.4. FlexRay

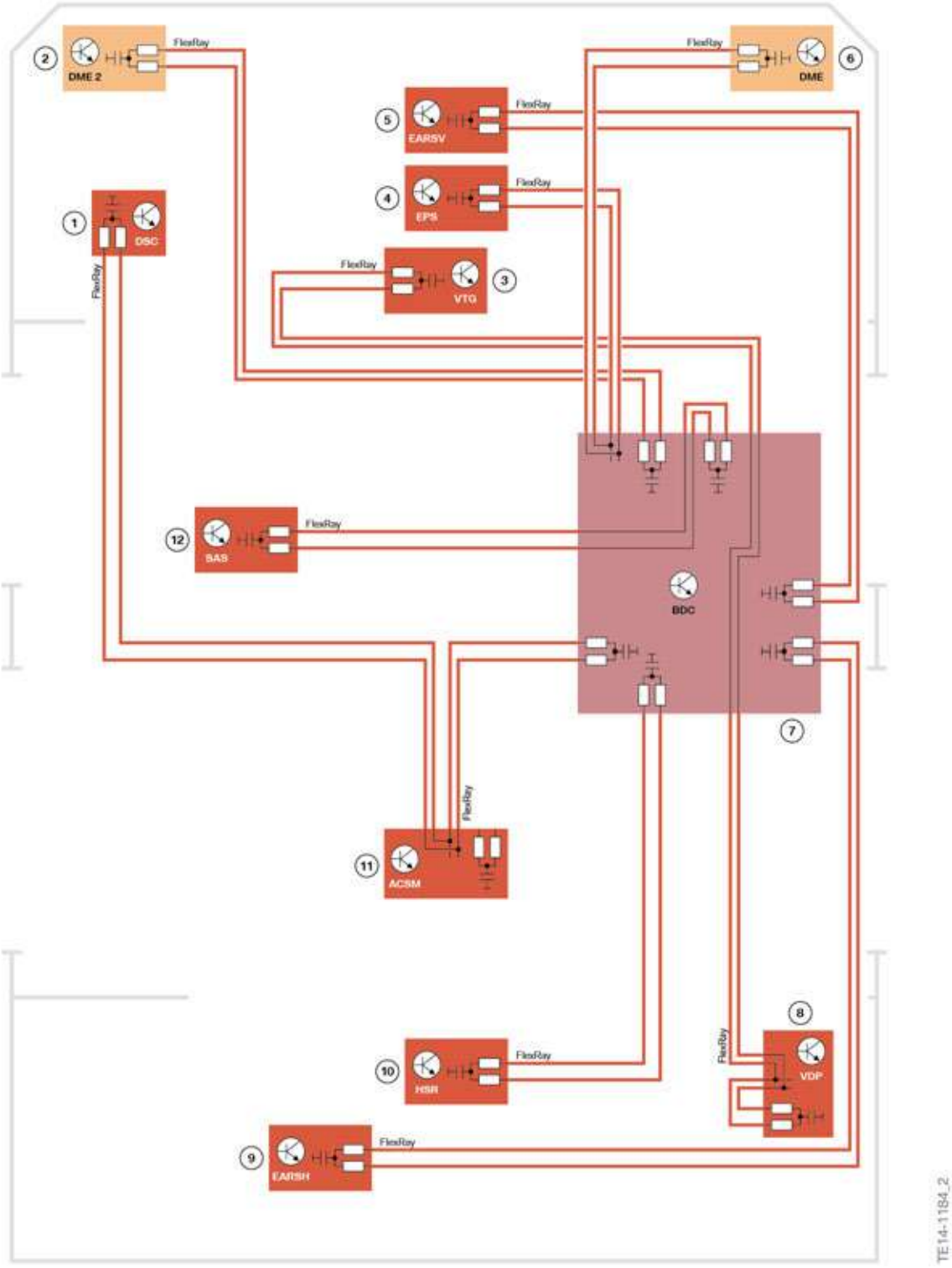

FlexRay

cardiagn.com

Index	Explanation
1	Dynamic Stability Control (DSC)
2	Digital Motor Electronics (DME2) (8-cylinder engine)
3	Transfer case
4	Electronic Power Steering (EPS)
5	Electric active roll stabilization front (EARSV)
6	Digital Motor Electronics (DME) (4 & 6-cylinder engine)
7	Body Domain Controller (BDC)
8	Vertical Dynamics Platform (VDP)
9	Electric active roll stabilization rear (EARSH)
10	Rear axle slip angle control (HSR)
11	Advanced Crash Safety Module (ACSM)
12	Optional equipment system (SAS)

The FlexRay overview includes all engine versions and optional equipment. The DME (item 6) is used for 4 & 6-cylinder engines. On 8-cylinder engines the DME2 (item 2) is used. The terminating resistors for line termination are located in the DME control units and in the Body Domain Controller.

The FlexRay has a data transfer rate of 10 MBit/s.

2.2.5. Ethernet

On the G30 the 2-wire OABR Ethernet (OPEN Alliance BroadR-Reach) from the G12 is used.

The Ethernet variant with 5 lines (4 data lines and 1 activation line) is still used on the G30 by the OBD2 interface to the Body Domain Controller.

Use of 2-wire OABR Ethernet on the G30

The following control units are connected to the vehicle electrical system via 2-wire OABR Ethernet in the G30:

- Active Cruise Control (ACC)
- Camera-based driver support systems (KAFAS)
- Top Rear Side View Camera (TRSVC)
- Rear view camera (RFK)

cardiagn.com

G30 Voltage Supply and Bus Systems

2. Bus Systems

The following control units are additionally connected via 2-wire OABR Ethernet in the G30:

- Head unit
- Rear Seat Entertainment (RSE)
- Optional equipment system (SAS)
- Telematic Communication Box

Ethernet in the vehicle

The standard "Open Alliance BroadR-Reach" (OABR Ethernet) has been specially developed as a new data transmission layer for use in vehicles. OABR Ethernet only requires an unshielded twisted two-wire connection. OABR Ethernet supports bidirectional 100 MBit/s communication between 2 nodes. This means that both nodes can simultaneously send and receive at a data transfer rate of 100 MBit/s. OABR Ethernet requires point-to-point networking. This means that the bus system is not split up between multiple nodes, as is the case e.g. with Controller Area Network (CAN) systems. Instead, Ethernet switches are used for the connection of further nodes. Today, Ethernet switches are integrated in the following control units: Body Domain Controller (BDC), Head Unit (HU), optional equipment system (SAS), Top Rear Side View Camera (TRSVC). An Ethernet switch (ENS) is used on the G30 depending on the vehicle equipment. In the event of failure of an Ethernet switch, all bus users connected by it are disconnected from the rest of the network and are no longer able to communicate via Ethernet.

Depending on the vehicle equipment, the control units are connected to the vehicle electrical system in different ways.

On vehicles with Navigation, the data transfer takes place from the Head Unit High to the instrument cluster via an APIX data cable.

Depending on the vehicle equipment an Ethernet switch may in some cases be required.

A wake-up line may be required for control units that are only connected to the Ethernet and are not additionally connected to a body CAN.

Control units on the Ethernet cannot be woken up via the bus. Instead, the control units are activated via the wake-up line or switched directly via terminal 15. As a result of the activation via a wake-up line, so-called partial network operation is also possible. In partial network operation, individual control units can switch to a rest state in different vehicle conditions.

The Ethernet topology of the G30 is listed below.

Ethernet topology with Head Unit High

In the wiring diagram the connection of the Top Rear Side View Camera (TRSVC) control unit and rear view camera (RFK) is shown. In the vehicle, either TRSVC is installed for a vehicle with multiple cameras, or RFK for a vehicle with a rear view camera (standalone).

On vehicles with Head Unit High, the Telematic Communication Box (TCB) and the Rear Seat Entertainment are directly connected to the head unit. The data transfer from the Head Unit High to the instrument cluster takes place via APIX. The instrument cluster does not require Ethernet. As a result, the Ethernet interfaces on the Body Domain Controller are sufficient, and no Ethernet switch (ENS) is required.

cardiagn.com

G30 Voltage Supply and Bus Systems

2. Bus Systems

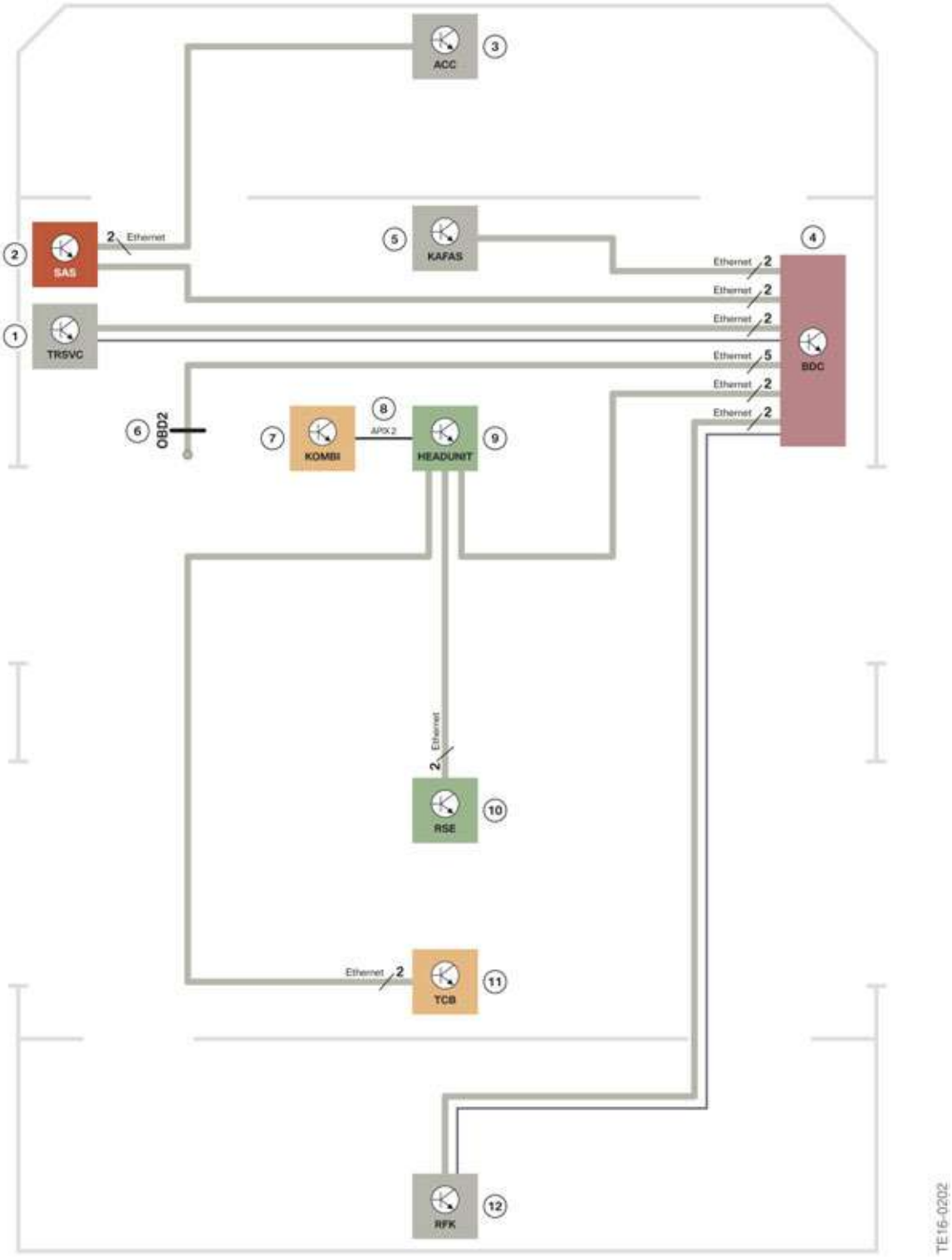

Ethernet topology on vehicles with Head Unit High

cardiagn.com

G30 Voltage Supply and Bus Systems

2. Bus Systems

Index	Explanation
1	Top Rear Side View Camera (TRSVC)
2	Optional equipment system (SAS)
3	Active Cruise Control (ACC) Long Range Radar (LRR)
4	Body Domain Controller (BDC)
5	Camera-based driver support systems (KAFAS)
6	OBD2 interface (Ethernet with 5 lines)
7	Instrument panel (KOMBI)
8	APIX data line
9	Head Unit (HEADUNIT)
10	Rear Seat Entertainment
11	Telematic Communication Box (TCB)
12	Rear view camera (RFK)

The data transfer takes place from the Head Unit High to the instrument cluster via APIX connection.

Ethernet switch

Ethernet switch

The Ethernet switch is required for expansion of the Ethernet network. It connects the control units and forwards their data packages accordingly.

The Ethernet switch is not displayed in the bus overview by the BMW diagnosis system ISTA.

cardiagn.com

2.2.6. D-CAN

The D-CAN has a data transfer rate of 500 kBit/s.

2.3. Sub-bus systems

2.3.1. LIN-Bus

For a better overview, the LIN buses are divided up between several wiring diagrams for the G30.

cardiagn.com

G30 Voltage Supply and Bus Systems

2. Bus Systems

LIN bus overview in the door area

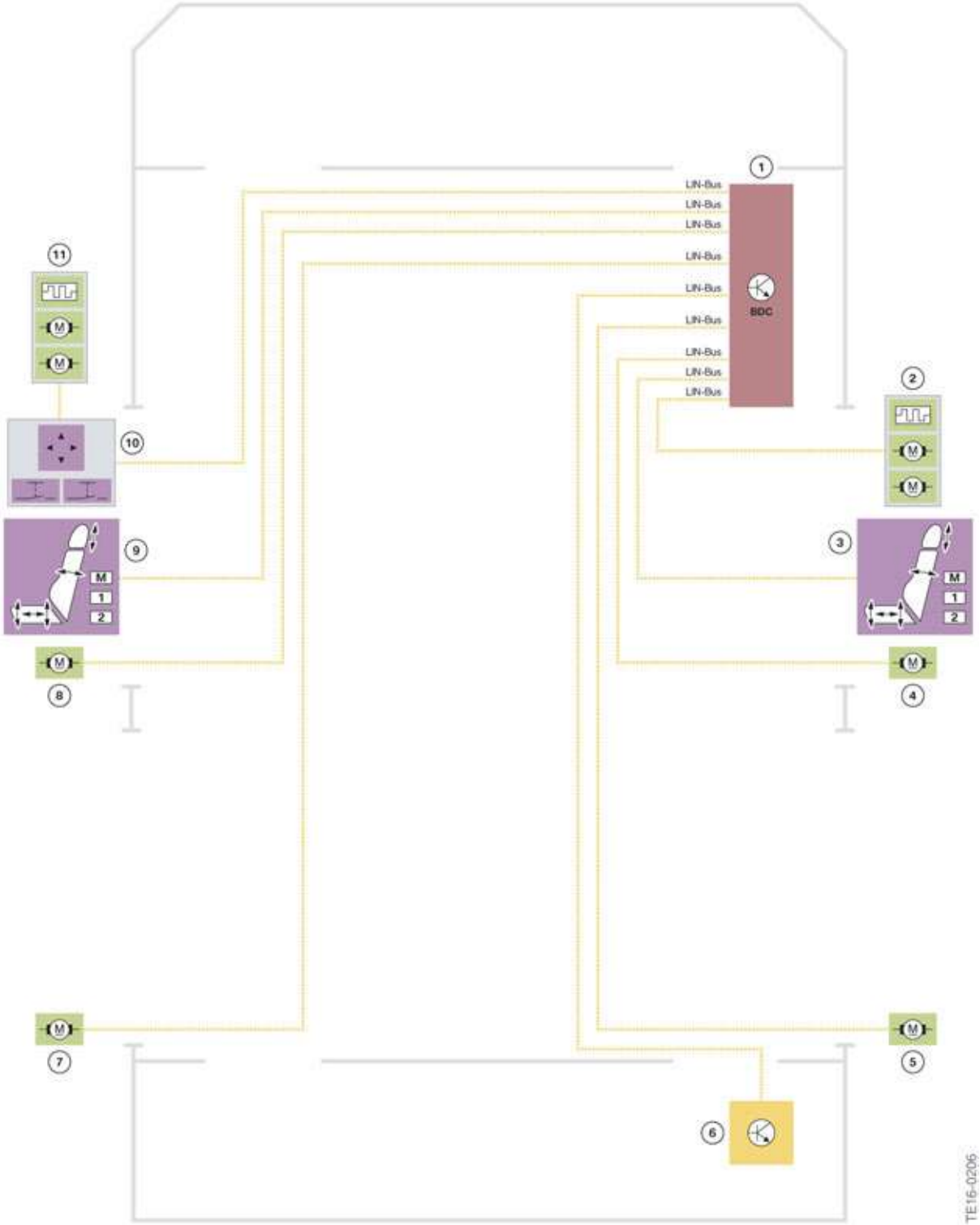

LIN-Bus

cardiagn.com

G30 Voltage Supply and Bus Systems

2. Bus Systems

Index	Explanation
1	Body Domain Controller (BDC)
2	Exterior mirror, front passenger side
3	Memory seat, front passenger's side
4	Power window electronics, passenger's side front
5	Power window electronics, passenger’s side rear
6	Hands free trunk opening
7	Power window electronics, driver’s side rear
8	Power window electronics, driver's side front
9	Memory switch, driver’s side front
10	Switch block, driver's door
11	Exterior mirror, driver's side

cardiagn.com

G30 Voltage Supply and Bus Systems

2. Bus Systems

LIN bus overview for engine electrical system and voltage supply

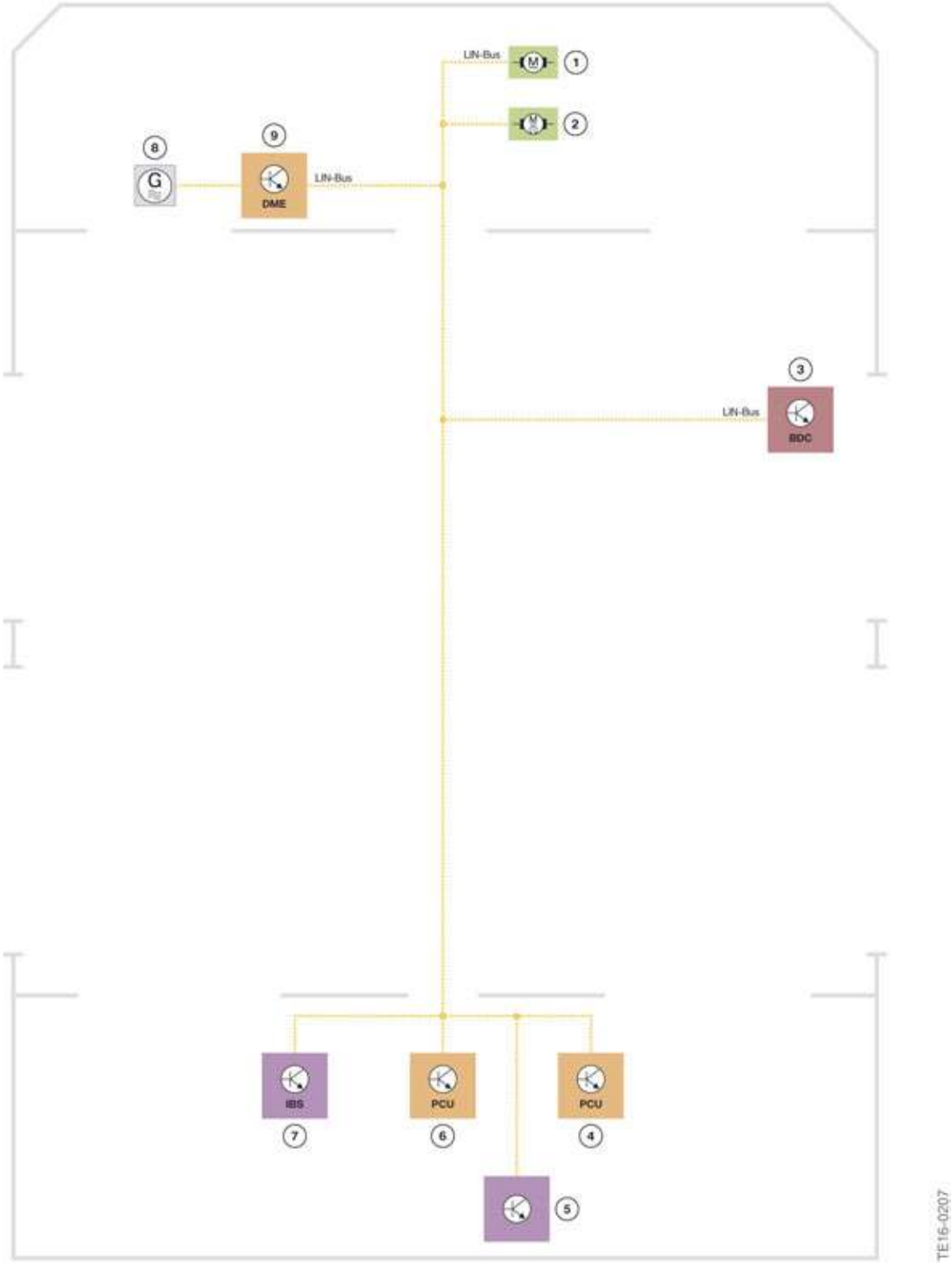

LIN-Bus

cardiagn.com

G30 Voltage Supply and Bus Systems

2. Bus Systems

Index	Explanation
1	Air damper control
2	Electric fan
3	Body Domain Controller (BDC)
4	Power Control Unit (PCU) 500W
5	Rear right power distribution box
6	Power Control Unit (PCU) 150 W [1]
7	Intelligent Battery Sensor (IBS)
8	Alternator
9	Digital Motor Electronics (DME)

[1]The Power Control Unit PCU 150 W is installed in vehicles with 24 V steering.

cardiagn.com

G30 Voltage Supply and Bus Systems

2. Bus Systems

LIN bus overview for roof function center

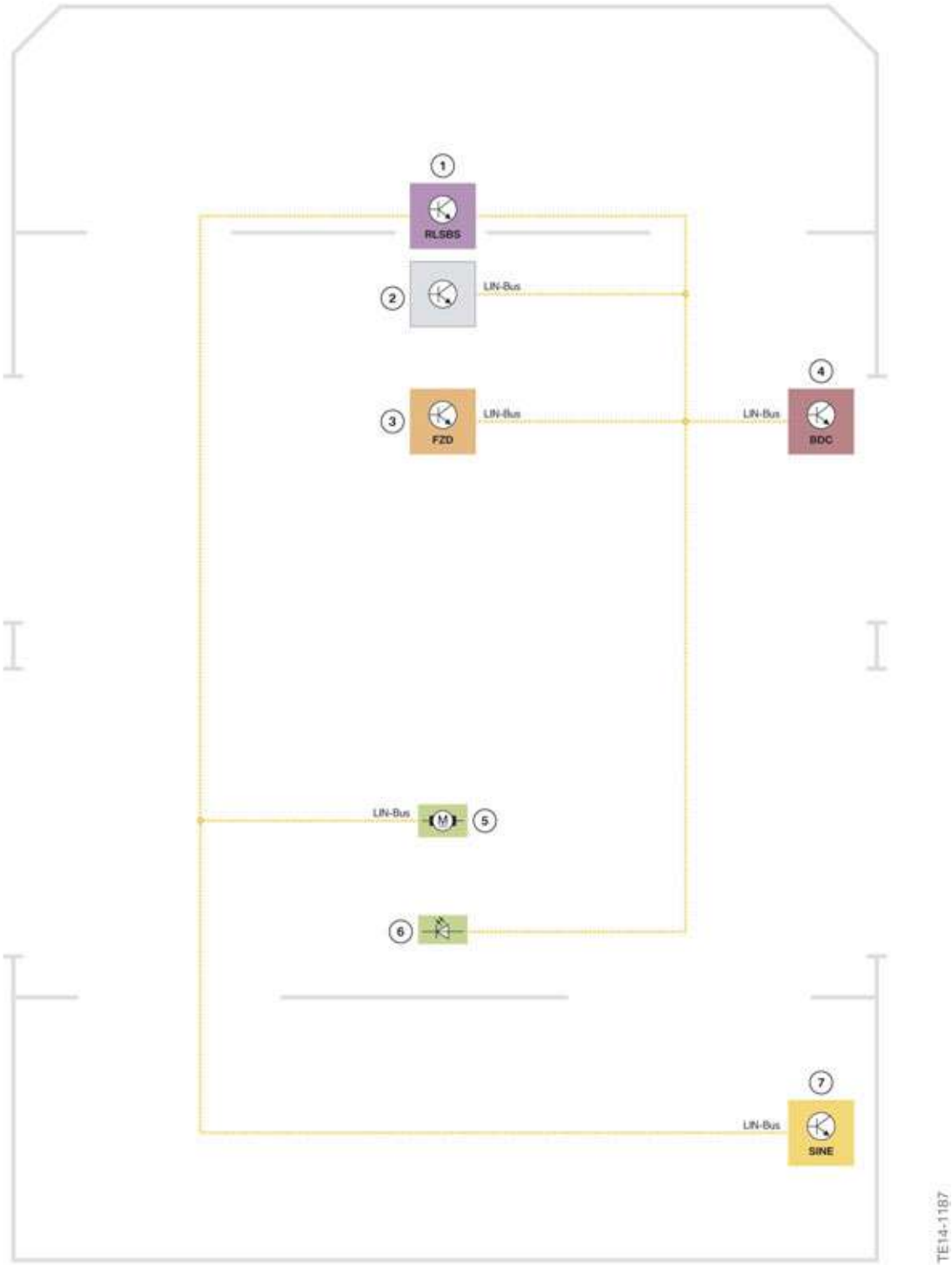

LIN-Bus

cardiagn.com

G30 Voltage Supply and Bus Systems

2. Bus Systems

Index	Explanation
1	Rain-light-solar-condensation sensor
2	Inside mirror
3	Roof function center (FZD)
4	Body Domain Controller (BDC)
5	Sliding roofliner motor
6	Interior lighting, rear
7	Siren with tilt alarm sensor (SINE)

cardiagn.com

G30 Voltage Supply and Bus Systems

2. Bus Systems

LIN bus overview for steering column switch cluster and operating units

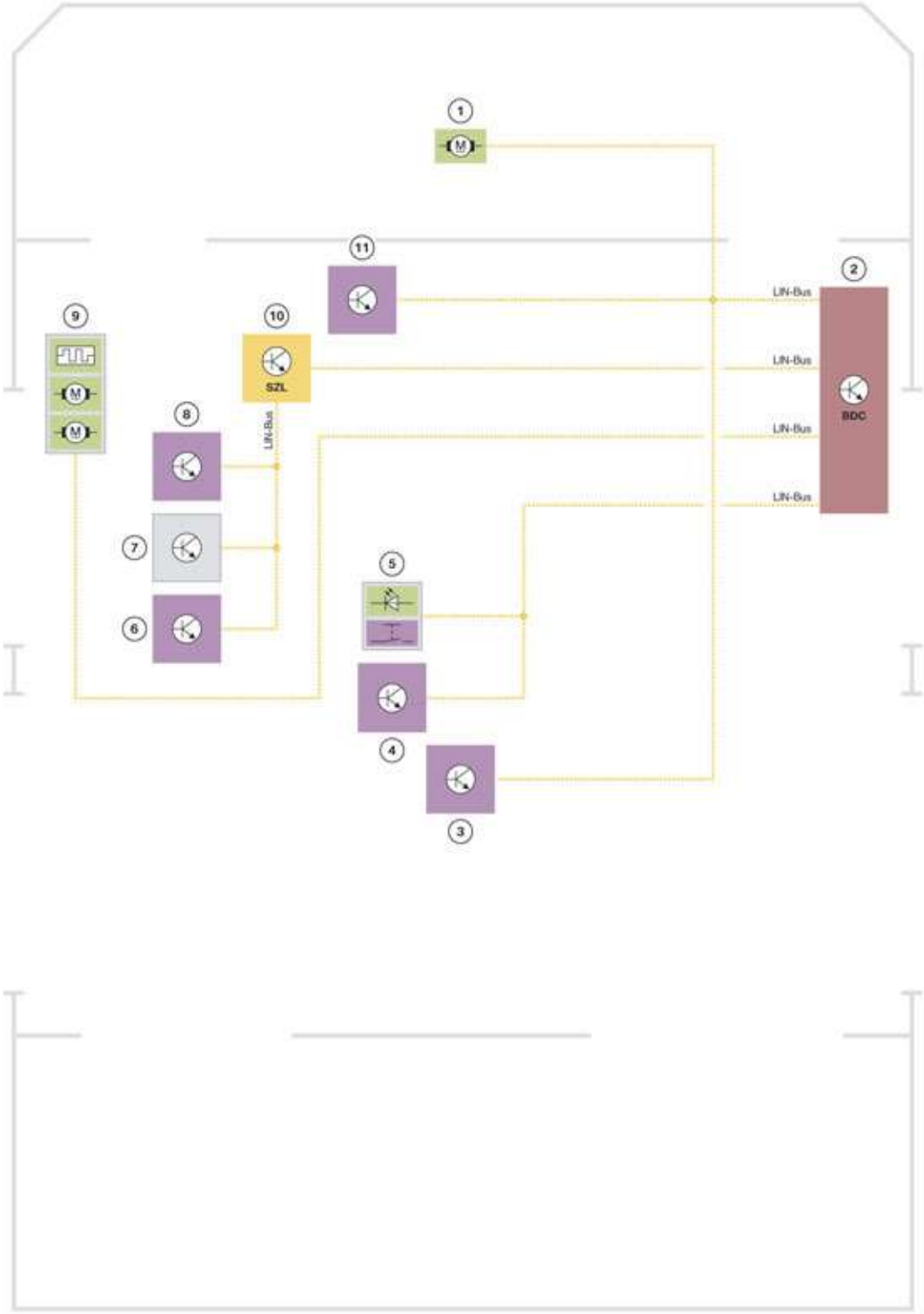

LIN-Bus

cardiagn.com

G30 Voltage Supply and Bus Systems

2. Bus Systems

Index	Explanation
1	Wiper motor
2	Body Domain Controller (BDC)
3	Operating unit, center console
4	Audio operating facility
5	Hazard warning switch/Intelligent Safety button
6	Touch detection HOD (Hands Off Detection)
7	Steering wheel module
8	Multifunction steering wheel buttons, right
9	Operating unit for light
10	Steering column switch cluster (SZL)
11	Steering column adjustment

cardiagn.com

G30 Voltage Supply and Bus Systems

2. Bus Systems

LIN bus overview for integrated automatic heating/air conditioning system

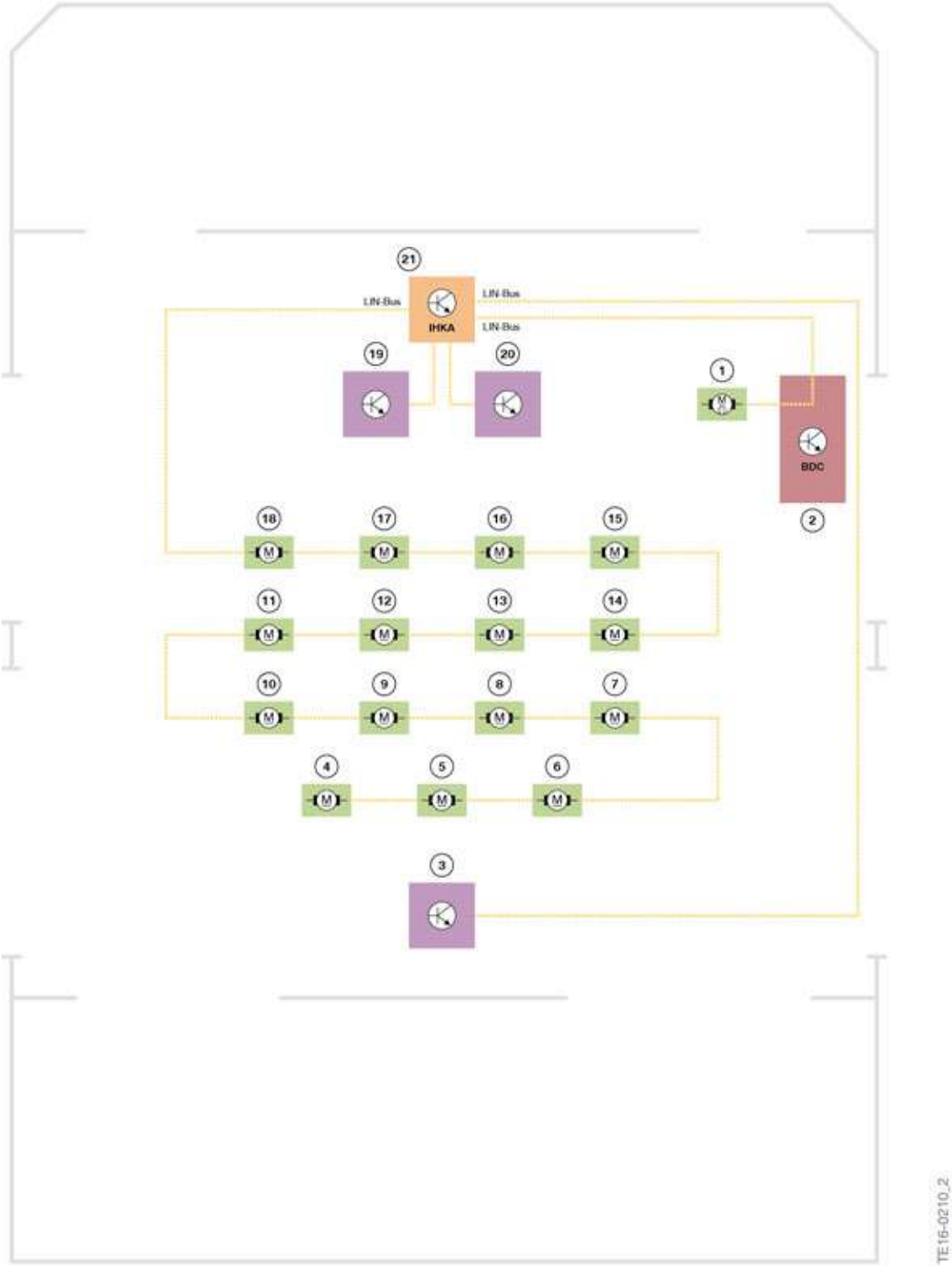

LIN-Bus

cardiagn.com

G30 Voltage Supply and Bus Systems

2. Bus Systems

Index	Explanation
1	Blower motor
2	Body Domain Controller (BDC)
3	Operating unit, rear passenger compartment
4	Stepper motor for blending flap, right rear passenger compartment
5	Stepper motor for blending flap, left rear passenger compartment
6	Stepper motor for blending flap, right
7	Stepper motor for blending flap, left
8	Stepper motor for air distribution, right rear passenger compartment
9	Stepper motor for air distribution, left rear passenger compartment
10	Stepper motor for footwell, right
11	Stepper motor for footwell, left
12	Stepper motor for stratification, right
13	Stepper motor for stratification, left
14	Stepper motor for ventilation, right
15	Stepper motor for ventilation, left
16	Stepper motor for defrost function
17	Stepper motor for air recirculation function
18	Stepper motor for fresh air
19	Operating unit, air conditioning
20	Touch operating unit in the center grill (Not for the US)
21	Integrated Automatic Heating / Air conditioning (IHKA)

The LIN bus overview shows the Integrated Automatic Heating/Air conditioning system (IHKA) with the maximum possible LIN bus components.

cardiagn.com

2.3.2. Local CAN

In the G30 the following Local Controller Area Networks are available with the corresponding equipment:

- Local CAN from electronic transmission control (EGS) to the gear selector switch (GWS).
- Local CAN from the camera-based driver assistance system KAFAS to the Parking Maneuver Assistant (PMA).
- Local CAN from the optional equipment system (SAS) to the radar sensor, front right (RSR).
- Local CAN from the optional equipment system (SAS) to the radar sensor, front left (RSL) and lane change warning (secondary) (SWW2).
- Local CAN from the lane change warning (primary) (SWW) also know as the Short Range Radar Sensor (SRR) to the radar sensor, right (RSR), to the radar sensor, left (RSL), and to the lane change warning (secondary) (SWW2) also know as the Short Range Radar Sensor (SRR2).

The control units on the local CAN are not displayed in the bus overview by the BMW diagnosis system ISTA. Diagnosis takes place via the corresponding primary control unit.

The local CAN buses have a data transfer rate of 500 kBit/s.

2.3.3. USB

The following USB interfaces are provided in the G30 depending on the vehicle equipment:

- In the center console (standard)
- In the center armrest
- In the base plate
- USB interface in Rear Seat Entertainment

2.4. Diagnosis access OBD2

The vehicle diagnosis via D-CAN is effected using the OBD2 interface. The Ethernet access for the vehicle programming is also located in the OBD2 interface.

cardiagn.com

G30 Voltage Supply and Bus Systems

3. Control Units

3.1. Installation locations of control units

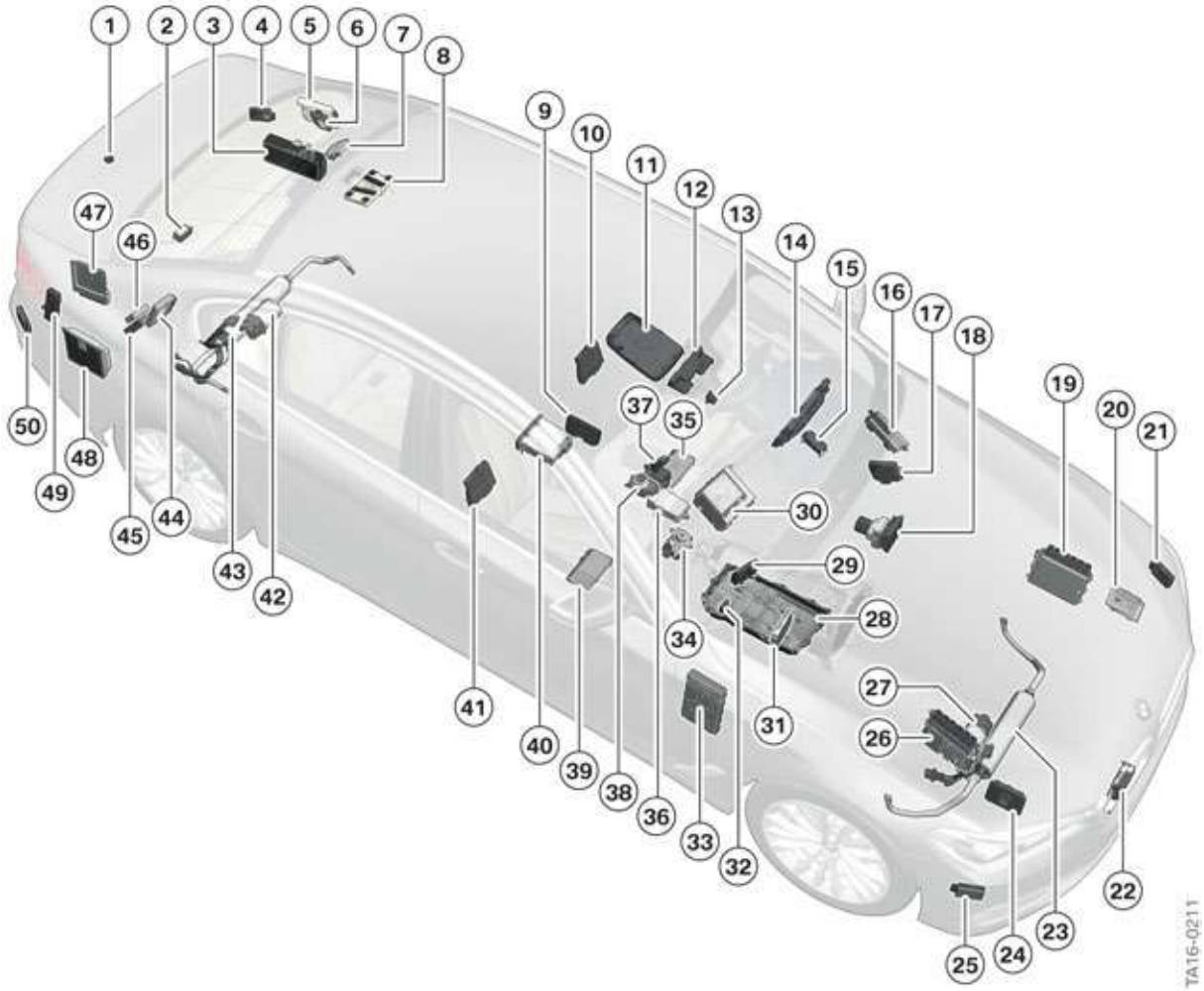

Installation locations of control units

Index	Explanation
1	Rear view camera (RFK)
2	Remote control receiver (FBD)
3	Top HiFi amplifier (AMPT)
4	Lane change warning (secondary) (SWW2)
5	Video module (VM) (Not for the US)
6	Light Effect Manager (LEM)
7	Active Sound Design (ASD)
8	Telematic Communication Box (TCB)
9	Wireless charging tray (WCA)
10	Seat pneumatics module front left (SPNMVL)

cardiagn.com

G30 Voltage Supply and Bus Systems
3. Control Units

Index	Explanation
11	Roof function center (FZD)
12	Camera-based driver support systems (KAFAS)
13	High-beam assistant (FLA)
14	Instrument panel (KOMBI)
15	Electronic steering lock (ELV) (Not for the US, manual transmission vehicles only)
16	Control unit for rear view camera and SideView (TRSVC)
17	Optional equipment system (SAS)
18	Dynamic Stability Control (DSC)
19	Digital Motor Electronics (DME)
20	Frontal Light Electronics Left (FLEL)
21	Radar Sensor Left (RSL)
22	Active Cruise Control (ACC) Long Range Radar (LRR)
23	Electric active roll stabilization front (EARSV)
24	Frontal Light Electronics Right (FLER)
25	Radar Sensor Right (RSR)
26	Digital Engine Electronics 2 (DME2)
27	Electronic Power Steering (EPS)
28	Electronic transmission control (EGS)
29	Integrated automatic heating / air conditioning (IHKA)
30	Head Unit (HEADUNIT)
31	Night vision electronics (NVE)
32	Near Field Communication (NFC) (Not for the US)
33	Body Domain Controller (BDC)
34	Transfer case
35	Driver's seat module (SMFA)
36	Advanced Crash Safety Module (ACSM)
37	Gear selector switch (GWS)
38	Controller (CON)
39	Front passenger seat module, (SMBF)
40	Rear Seat Entertainment (RSE)
41	Seat pneumatics module front right (SPNMVR)
42	Rear axle slip angle control (HSR)
43	Electric active roll stabilization rear (EARSH)
44	Selective Catalytic Reduction (SCR) (Currently not available for the US)

cardiagn.com

Index	Explanation
45	Trailer module AHM (Not for the US)
46	Parking Maneuver Assistant (PMA)
47	Vertical dynamic platform
48	Power Control Unit
49	Trunk function module (HKFM)
50	Lane change warning SWW (primary) also know as the Short Range Radar Sensor (SRR)

3.2. Gateway

3.2.1. Body Domain Controller (BDC)

Body Domain Controller (BDC)

cardiagn.com

BDC functions

The Body Domain Controller BDC is responsible for the following functions:

- Gateway
- Electronic immobilizer
- Terminal control
- Central locking system
- Exterior lights
- Power windows
- Horn
- Interior light
- Wash/wipe system
- Vehicle data storage
- Data transfer for Condition Based Service (CBS)

Fuses in the BDC

The following components are protected by fuses in the BDC:

- Audio operating facility
- Operating facility for assist systems
- Operating unit for light
- Power windows
- Heated rear window
- Trunk function module
- Integrated automatic heating / air conditioning
- OBD2 interface
- Power Control Unit
- Rain-light-solar-condensation sensor
- Steering column switch cluster
- Telematic Communication Box
- Outside door handle electronics
- Vertical dynamics platform (electronics)
- Central locking system

cardiagn.com

Relay in the BDC

The following relays are located in the BDC:

- Terminal 30F
- Power window regulators
- Central locking system
- Heated rear window
- Headlight cleaning system

Gateway in the BDC

The central gateway module (ZGM) is integrated in the BDC. It is a control unit within a control unit. The task of the ZGM is to connect all the data bus systems to each other. By connecting them in this way, it is possible to use information from the individual bus systems on a generalized level. The central gateway module is able to implement different protocols and speeds on other bus systems. The programming data for the control units is transmitted by Ethernet to the vehicle via the ZGM.

LIN controller in the BDC

The BDC is the gateway for the following components at the local interconnect network bus:

- Exterior mirror, left and right
- Switch block, driver's door, front passenger door
- Steering column switch cluster
- Light switch
- Intelligent Safety button
- Audio operating facility
- Inside mirror
- Rain-light-solar-condensation sensor
- Roof function center (interior lighting)
- Comfort seat, rear passenger compartment, left and right
- Electrical steering column adjustment
- Wiper
- Operating unit, center console
- Power distribution box, rear

cardiagn.com

The following control units are connected to the BDC via LIN, but the BDC has only a wake-up function and not a gateway or primary function:

- Battery charging unit
- Intelligent battery sensor
- Electric fan
- Active air flap control
- Digital Motor Electronics

3.3. Control units on the MOST bus

3.3.1. Head unit

Head unit

On the G30, the head unit can be operated by touch at the CID in addition to operation via the controller. In the case of optional equipment with gesture control, selected functions can also be operated by means of gestures.

3.3.2. Hi-fi amplifier with MOST bus

The following amplifiers are used in the G30 depending on the audio systems:

- Standard 8-channel amplifier without bus connection for HiFi audio system.
- Optional 9-channel amplifier for Top HiFi audio system.
- Optional 10-channel amplifier for High End audio system.

cardiagn.com

G30 Voltage Supply and Bus Systems

3. Control Units

HiFi amplifier

8-channel amplifier without bus connection with a power of 205 W.

HiFi amplifier

Top Harmon Kardon HiFi amplifier

9-channel amplifier with MOST bus and a power of 600 W.

Top HiFi amplifier

cardiagn.com

High End Bowers & Wilkins amplifier

10-channel amplifier with MOST bus and a power of 1400 W.

High End amplifier

3.3.3. Rear seat entertainment (RSE)

Rear Seat Entertainment (RSR)

The Rear Seat Entertainment (RSE) on the G30 is equipped with a Blu-ray drive.

cardiagn.com

3.4. Control units on the K-CAN2

3.4.1. Roof function center (FZD)

Roof function center (FZD)

Depending on the vehicle equipment the roof function center FZD includes the corresponding components for:

- Alarm system
- Control, slide/tilt sunroof
- Gesture recognition camera
- Emergency call button

On vehicles with gesture control, the gesture recognition camera is installed in the FZD. The gesture recognition camera is not shown as a control unit by the BMW diagnosis system. Diagnosis takes place via the FZD. The gesture recognition camera is connected to the PT-CAN4. As a result, the bus signals do not have to be forwarded to another CAN bus by the Body Domain Controller.

The FZD is not responsible for the control of the interior light. The interior light unit and the FZD electronics are located in the same housing.

cardiagn.com

3.4.2. Trunk function module (HKFM)

Trunk function module (HKFM)

The control unit for the power trunk function module (HKFM) is responsible for control of the lift.

3.4.3. Seat modules

Seat module

The following seat modules are present corresponding to the vehicle equipment:

- Driver's seat module (SMFA)
- Front passenger seat module (SMBF)

The seat modules are responsible for actuation of the servomotors in the corresponding seat. Depending on the equipment, there may be 2 identical seat modules installed in the vehicle. Encoding of the control units takes place by connection to the wiring harness. The control unit is assigned correspondingly in the vehicle depending on the additional ground encoding.

cardiagn.com

3.4.4. Seat pneumatics modules

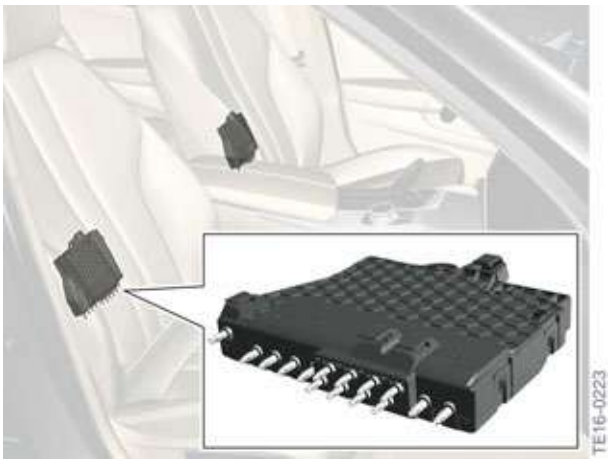

Seat pneumatics module back right SPNMHR

The following seat pneumatics modules are present corresponding to the vehicle equipment:

- Seat pneumatics module front left (SPNMVL)
- Seat pneumatics module front right (SPNMVR)

The seat pneumatics modules are responsible for the massage function in the corresponding front seat. Depending on the equipment, there may be 2 identical seat pneumatics modules installed in the vehicle. Encoding of the control units takes place by connection to the wiring harness. The control unit is assigned correspondingly in the vehicle depending on the additional ground encoding.

cardiagn.com

3.5. Control units on the K-CAN3

3.5.1. Frontal Light Electronics

Frontal Light Electronics Right and Left

The control units Frontal Light Electronics Right (FLER) and Frontal Light Electronics Left (FLEL) are installed in the corresponding headlight.

The Frontal Light Electronics includes:

- LED activation in the corresponding headlight.
- Actuation of the bulb for the turn indicator (depending on the headlight variant).
- Activation of the stepper motor for the headlight beam adjustment.
- Actuation of the fans.

cardiagn.com

3.5.2. Parking Maneuver Assistant (PMA)

Parking manoeuvring assistant (PMA)

The PMA control unit performs the corresponding functions depending on equipment:

- Park Distance Control (PDC)
- Parking assist
- Parking Maneuver Assistant Plus

Park Distance Control (PDC) assists the driver when pulling in and out of a parking space.
The current distance from an obstruction is indicated by acoustic signals and on a visual display.

The Parking Maneuver Assistant performs parking in parking spaces.

In a vehicle with Parking Maneuver Assistant (PMA) all sensors of the Park Distance Control (PDC) are used. In addition, there is a sensor for the PMA in each case on the left and right of the front and rear bumper panels. For the parking assistant the camera systems of the vehicle are also required.

cardiagn.com

3.5.3. Lane change warning (SWW) also know as the Short Range Radar Sensor (SRR)

Lane change warning (SWW/SRR)

Both control units lane change warning SWW (primary) and SWW2 (secondary) also know as the Short Range Radar Sensor (SRR/SRR2) are shown in the picture. The SWW/SRR (primary) control unit is located on the right. The control unit lane change warning SWW2/SRR2(secondary) is on the left.

The control unit for the lane change warning (SWW/SRR) is required for the following optional equipment:

- Driving Assistant Plus (SA5AT)

The SWW/SRR is the primary control unit, and it is also used for diagnosis of the additional control units connected to the local CAN. The control unit lane change warning SWW2/SRR2 (secondary) is required for the lane change warning.

The following control units are additionally required for the optional equipment Driving Assistant Plus:

- Radar sensor, front left
- Radar sensor, front right

cardiagn.com

3.6. Control units on the K-CAN4

3.6.1. Active Sound Design (ASD)

Active Sound Design (ASD)

The control unit for Active Sound Design generates the engine sound for output in the vehicle interior. The engine sound is calculated according to the programmed sound specification and various parameters such as the accelerator pedal angle (driver's desired load), engine speed and torque. It is then output via the vehicle's own audio system in the passenger compartment.

cardiagn.com

3.6.2. Controller (CON)

Controller (CON)

On the G30 a controller with touchpad is used. On the controller with touch control box the customer can input location information for the navigation system or phone numbers and contact details as numbers and letters. In the map operation the map section for example can be moved and enlarged or reduced by finger movement.

3.6.3. Integrated automatic heating / air conditioning (IHKA)

Integrated automatic heating / air conditioning (IHKA)

The integrated automatic heating/air conditioning system (IHKA) is standard equipment in the G30.

cardiagn.com

3.6.4. Light Effect Manager (LEM)

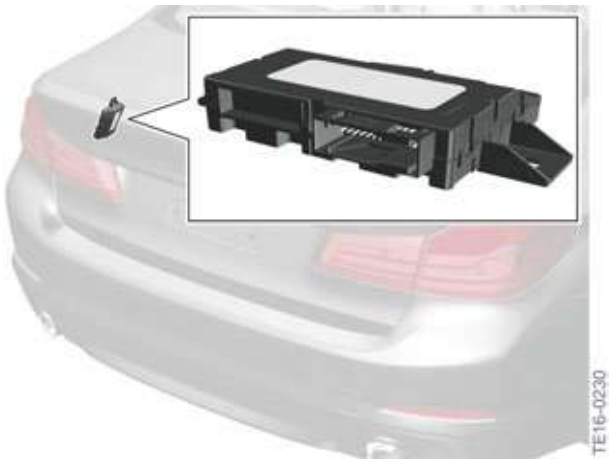

Light Effect Manager (LEM)

The control unit LEM is responsible for controlling the following lighting systems:

- Speaker covers in the High End Bowers & Wilkins audio system.

cardiagn.com

3.6.5. Telematic Communication Box (TCB)

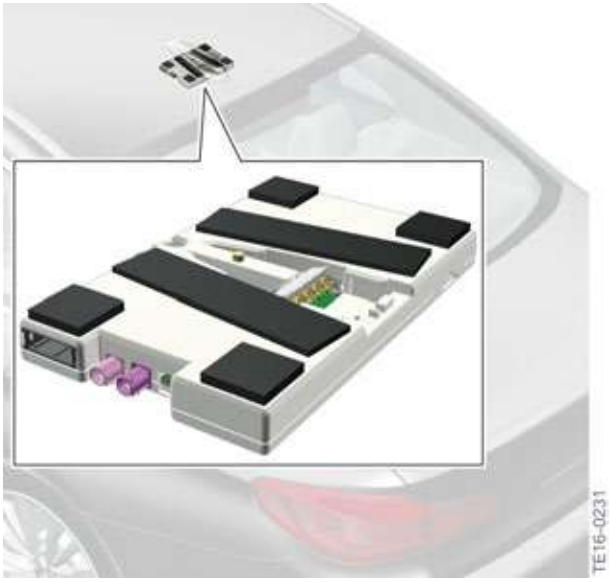

Telematic Communication Box (TCB)

The 2nd-generation Telematic Communication Box (TCB) is installed in the G30. The Telematic Communication Box (TCB) is connected directly to the roof-mounted antenna and is responsible for the following functions:

- BMW ConnectedDrive services (incl. BMW Assist with ECALL (emergency call function)) + BMW Online.
- BMW Internet using a SIM card integrated in the vehicle (P-SIM).
- Remote functions (reception and controller).
- "Speech-to-text" function in Office area.
- BMW Teleservices via P-SIM.
- WLAN hotspot via P-SIM.

cardiagn.com

3.7. Control units on the K-CAN5

3.7.1. Remote control receiver (FBD)

Remote control receiver

The control unit remote control receiver (FBD) is responsible for communication of the remote control services. It receives the data of the wheel electronics for the tire pressure control.

The control unit for the remote control service is not displayed by the BMW diagnosis system ISTA in the bus overview. Diagnosis is performed via the Body Domain Controller.

3.8. Control units on the Ethernet

3.8.1. Active Cruise Control (ACC) Long Range Radar (LRR) sensor

Active Cruise Control ACC Long Range Radar (LRR) sensor

The control unit for active cruise control for ACC Stop & Go contains a radar-based sensor for sensing the area in front of the vehicle. Both the near and far ranges are monitored by this sensor.

cardiagn.com

3.8.2. Rear view camera (RFK)

Reversing camera

On vehicles with a rear view camera only, the rear view camera is connected to the Ethernet.

3.8.3. Top Rear Side View Camera (TRSVC)

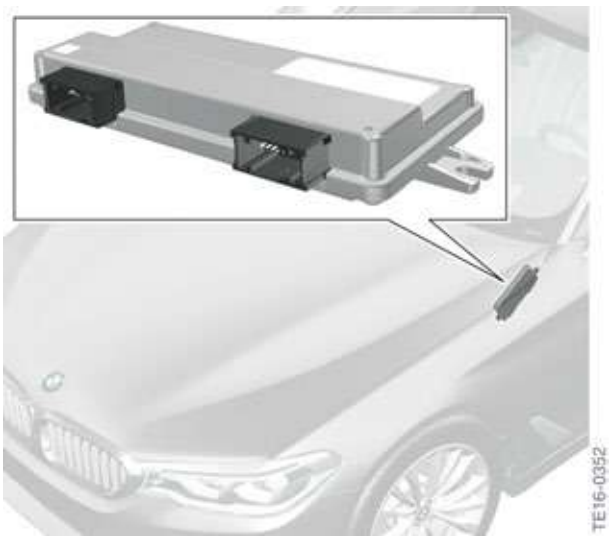

Top Rear Side View Camera (TRSVC)

cardiagn.com

The control unit Top Rear Side View Camera receives the picture information from the following cameras:

- Front camera
- Exterior mirror camera, left
- Exterior mirror camera, right
- Rear view camera

The cameras are connected to the TRSVC via Ethernet.

3.8.4. Camera-based driver support systems (KAFAS)

The control unit camera-based driver support systems (KAFAS) is required for the following optional equipment:

Camera-based driver support systems (KAFAS)

- Camera-based cruise control with Stop & Go function
- Traffic Jam Assist
- Speed limit information
- Person recognition with city braking function
- Collision warning with city braking function

cardiagn.com

3.9. Control units on the PT-CAN

3.9.1. Digital Motor Electronics (DME, DME2)

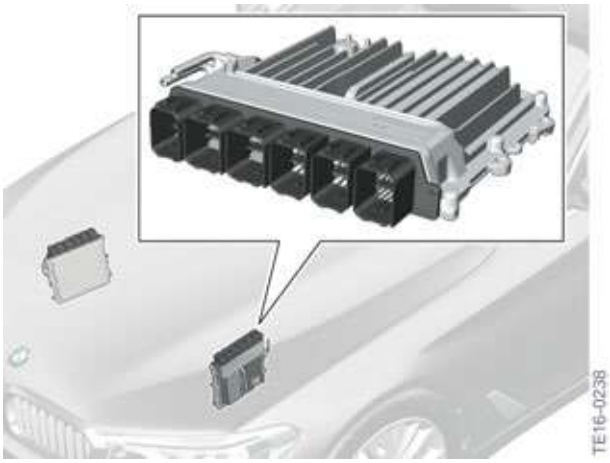

Digital Motor Electronics DME and DME2

The illustration shows the DME and DME2 control units. The DME control unit is on the left side (seen in the direction of travel).

The DME is responsible for the control of the combustion engine. In addition, the DME is the gateway between PT-CAN and PT-CAN2.

The DME control unit is installed for 4 and 6-cylinder gasoline engines.

The DME2 control unit is installed in addition to the DME control unit for 8-cylinder engines.

3.9.2. High-beam assistant (FLA)

High-beam assistant (FLA)

On vehicles without camera-based driver assistance systems (KAFAS), the control unit for the high-beam assistant is integrated in the interior mirror. On vehicles with KAFAS, the function of the high-beam assistant is performed by the camera-based driver assistance system.

cardiagn.com

3.9.3. Instrument panel (KOMBI)

Instrument panel (KOMBI)

One instrument cluster version is used in the G30, since the navigation system is standard equipment.

3.9.4. Night vision electronics (NVE)

Night vision electronics (NVE)

The control unit Night Vision Electronics receives picture information from the Night Vision camera. The picture information is transmitted via Color Video Blanking Signal to the HEADUNIT and can then be displayed on in the CID, instrument cluster and Head-Up Display.

cardiagn.com

3.10. Control units on the PT-CAN2

3.10.1. Electronic transmission control (EGS)

Electronic transmission control (EGS)

The control unit for electronic transmission control is installed directly inside the automatic transmission.

3.10.2. Gear selector switch (GWS)

Gear selector switch (GWS)

The gear selector switch (GWS) is used for selecting a drive position.

The bus connection is via the PT-CAN2 and additionally via a local CAN to the electronic transmission control (EGS) unit.

cardiagn.com

3.10.3. Power Control Unit (PCU)

Power Control Unit (PCU)

The Power Control Unit is required:

- For charging the auxiliary battery.
- For supplying the vehicle electrical system from the auxiliary battery.

The Power Control Unit (PCU) contains a DC/DC converter with a power of 500 W.

The preconditions for the direction of the energy management are calculated from the use of the vehicle. The auxiliary battery is charged by the PCU when the engine is running. During the phases in which the combustion engine is not running, e.g. automatic engine start/stop function, the PCU supplies energy from the auxiliary battery to the vehicle electrical system.

cardiagn.com

3.11. Control units on the FlexRay

3.11.1. Advanced Crash Safety Module (ACSM)

Advanced Crash Safety Module (ACSM)

The function of the Advanced Crash Safety Module (ACSM) is to evaluate all sensor signals in order to identify a crash situation. The ACSM evaluates the information from the sensors and then forwards corresponding measures for selective activation of the necessary restraint systems.

The ACSM records the yaw rate and sends this information on the FlexRay data bus.

No additional yaw sensors are therefore required for the other systems.

3.11.2. Dynamic Stability Control (DSC)

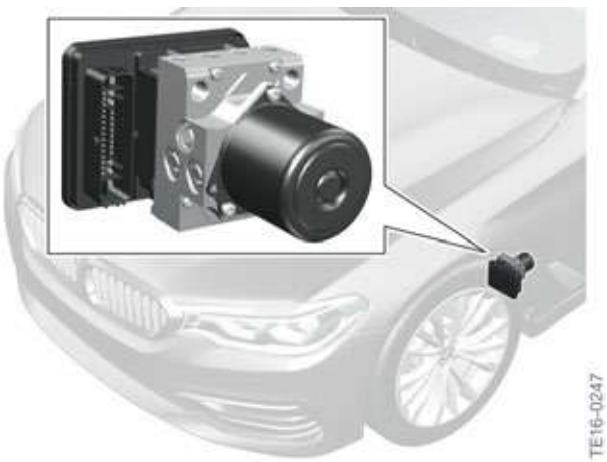

Dynamic Stability Control (DSC)

The DSC control unit and the DSC hydraulic control unit are screwed together. The DSC control unit can be replaced individually to reduce servicing costs. The functions of the tire pressure control (TPMS) and the electric parking brake are integrated in the DSC control unit.

cardiagn.com

3.11.3. Electric Active Roll Stabilization (EARS)

Electric active roll stabilization front (EARSV)

Electric active roll stabilization rear (EARSH)

Above are the electric active roll stabilization units for the rear EARSH and front EARSV.

The control units for EARS are directly integrated in the corresponding actuator.

cardiagn.com

3.11.4. Electronic Power Steering (EPS)

Electronic Power Steering (EPS)

The Electronic Power Steering (EPS) is supplied with 12 V or 24 V depending on the equipment and engine.

An auxiliary battery, a separating element and a charging unit for the auxiliary battery are required for the 24 V version. These components are installed in the luggage compartment of the G30.

The steering angle information is determined by the EPS and made available to the other control units via the FlexRay bus.

3.11.5. Rear axle slip angle control (HSR)

Rear axle slip angle control (HSR)

The control unit for slip angle control is responsible for steering the rear axle.

cardiagn.com

3.11.6. Optional equipment system (SAS)

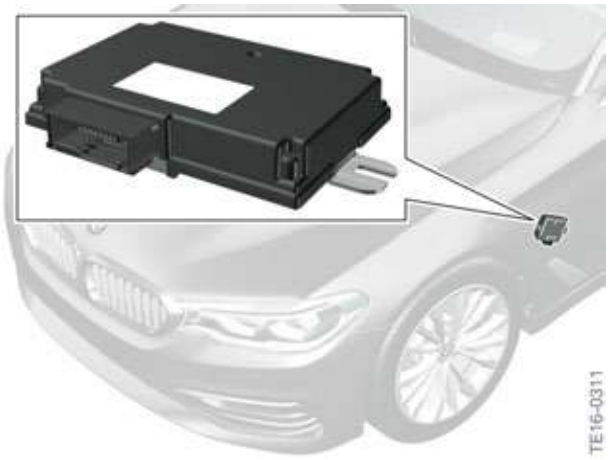

Optional equipment system (SAS)

The optional equipment system control unit provides a variety of driver assistance functions. The SAS does not have any installed sensors. The information needed for the functions is made available by the corresponding control units and sensors. The SAS activates the control units necessary for the corresponding function.

Possible functions:

- Collision warning with city braking function
- Cruise control with braking function
- Person recognition with city braking function
- Parking Maneuver Assistant
- Traffic Jam Assist
- Camera-based cruise control with Stop & Go function
- Proactive driving assistant

The image information required by the optional equipment system is provided by the camera-based driver support systems.

cardiagn.com

3.11.7. Transfer case

Transfer case

The control unit for the transfer case controls the clutch in the transfer case on vehicles with xDrive.

3.11.8. Vertical Dynamics Platform (VDP)

Vertical Dynamics Platform (VDP)

The control unit for the vertical dynamic platform is required for the following equipment:

- Dynamic Damper Control

The VDP control unit is responsible for:

- Valve control in the shock absorbers
- Detection of vehicle ride heights by the ride height sensors

cardiagn.com

3.12. Control units on the local CAN

The control units on the local CAN are not displayed in the bus overview by the BMW diagnosis system ISTA. Diagnosis takes place via the corresponding primary control unit.

3.12.1. Radar sensor (primary)

Radar sensor, left (RSL) and radar sensor, right (RSR)

The control units for the radar sensor, front right (RSR) and radar sensor, front left (RSL) are installed at the front right and front left of the vehicle for the optional equipment Driving Assist Plus.

3.12.2. Lane change warning SWW2 (secondary) also know as the Short Range Radar Sensor (SRR2)

Lane change warning

Both control units lane change warning SWW/SRR (primary) and SWW2/SRR2 (secondary) are shown in the picture. The SWW/SRR (primary) control unit is located on the right. The control unit lane change warning SWW2/SRR2 (secondary) is on the left. The control unit lane change warning SWW2/SRR2 (secondary) is connected with the control unit lane change warning SWW/SRR (primary) via a local CAN. Diagnose with the BMW diagnosis system takes place via the primary control unit.

cardiagn.com

G30 Voltage Supply and Bus Systems

4. Voltage Supply

4.1. Overview of voltage supply

4.1.1. System wiring diagram

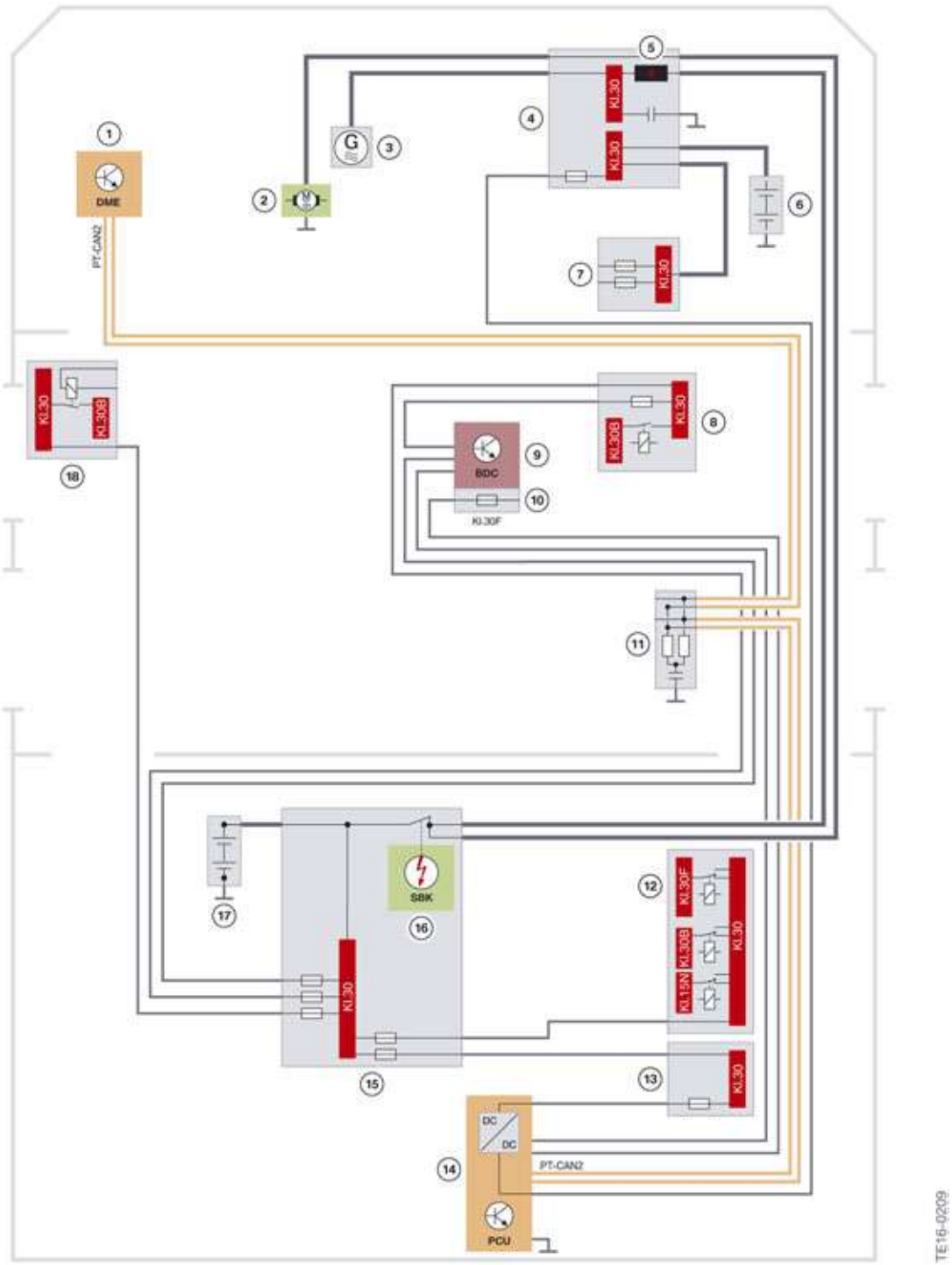

Voltage supply

cardiagn.com

G30 Voltage Supply and Bus Systems

4. Voltage Supply

Index	Explanation
1	Digital Motor Electronics (DME)
2	Starter motor
3	Alternator
4	Power distribution box, engine compartment
5	Jump start terminal point
6	Auxiliary battery, engine compartment
7	Power distribution box, auxiliary battery, engine compartment
8	Power distribution box, front right
9	Body Domain Controller (BDC)
10	Fuse in the Body Domain Controller
11	CAN terminator
12	Power distribution box, rear
13	Fuse in the power distribution box, battery, right
14	Power Control Unit PCU 500 W
15	Battery power distribution box
16	Safety battery terminal
17	Battery
18	Power distribution box, front left (PHEV version only)

cardiagn.com

4.2. Components

4.2.1. Overview of luggage compartment

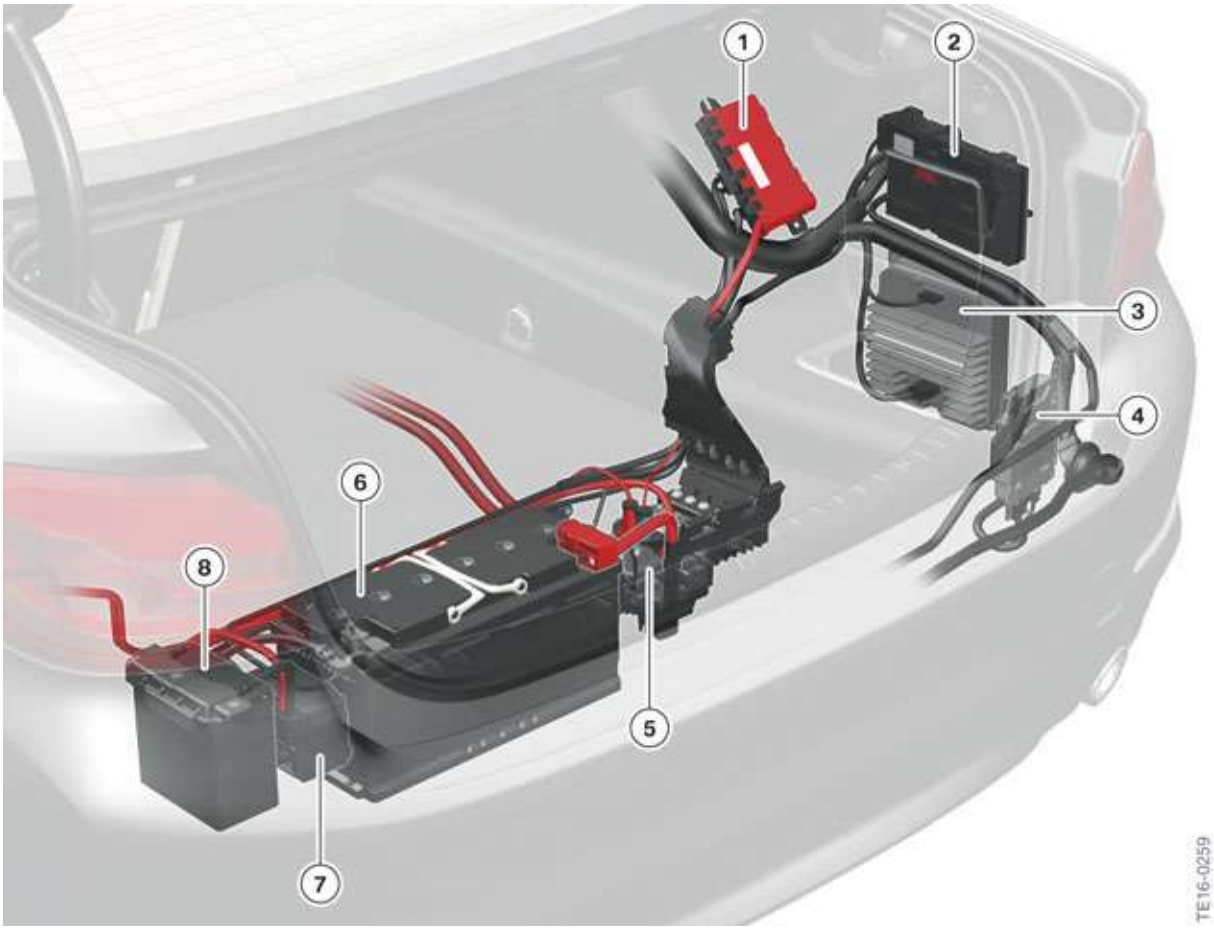

Battery

Index	Explanation
1	Power distribution box, battery, right
2	Power distribution box, rear
3	Power Control Unit (PCU) 500 W
4	Power Control Unit (PCU) 150 W
5	Power distribution box with safety battery terminal
6	Battery
7	Separator
8	Auxiliary battery, luggage compartment

The vehicle battery in the G30 is an AGM battery with 90 Ah or 105 Ah. The battery variant depends on the engine version and optional equipment.

cardiagn.com

4.2.2. Overview of engine compartment

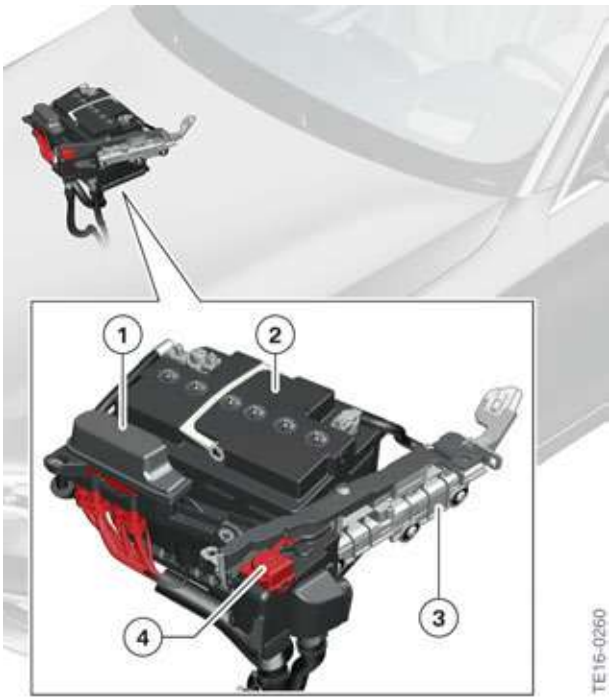

Auxiliary battery, engine compartment

Index	Explanation
1	Power distribution box, engine compartment
2	Auxiliary battery, engine compartment
3	Power distribution box, auxiliary battery, engine compartment
4	Jump start terminal point

The auxiliary battery in the engine compartment of the G30 is an AGM battery with 50 Ah or 60 Ah. The battery variant depends on the engine version and optional equipment.

4.2.3. Battery

AGM batteries are used for the voltage supply in the G30.

There may by 1, 2 or 3 batteries in the vehicle depending on the engine version and vehicle equipment.

- Starter battery in the luggage compartment with 90 Ah or 105 Ah.
- Auxiliary battery in the engine compartment with 50 Ah or 60 Ah.
- Auxiliary battery in the luggage compartment with 12 Ah for vehicles with 24 V steering.

An auxiliary battery in the engine compartment is used to provide assistance for the vehicle electrical system. On vehicles with electric active roll stabilization, the two anti-roll bar actuators are also supplied with power by this battery.

cardiagn.com

4.2.4. Intelligent battery sensor

The IBS records the following data of the 12 V battery:

- Voltage
- Current
- Temperature

The IBS performs the calculation and the evaluation of the information. The results are then forwarded to the DME and BDC via the local interconnect network bus.

4.2.5. Safety battery terminal

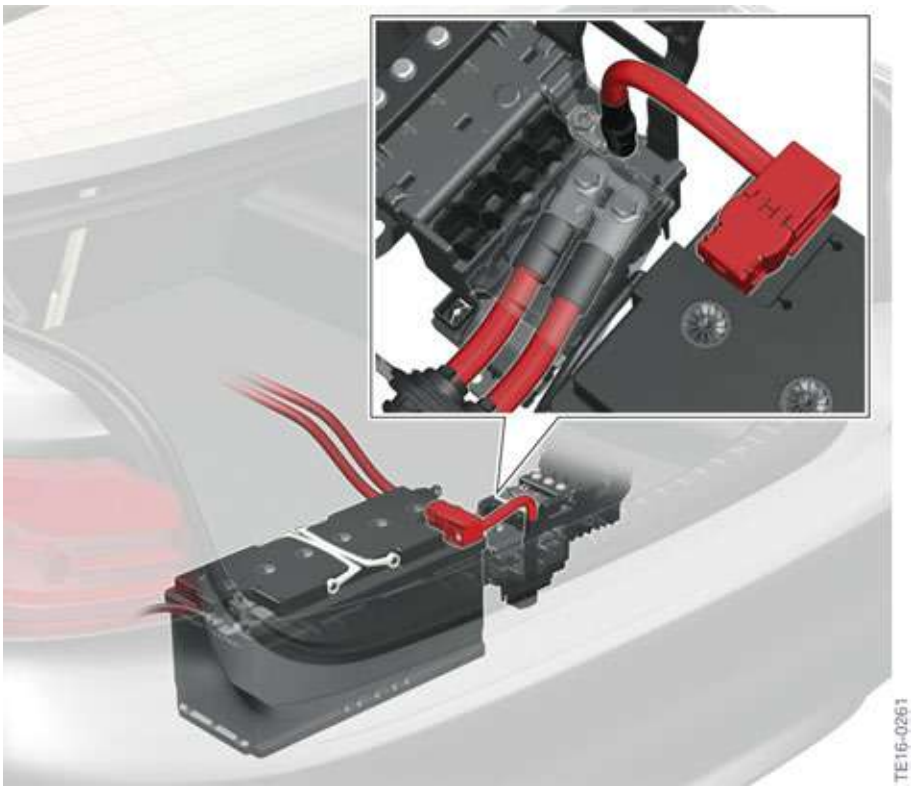

Safety battery terminal

The safety battery terminal (SBK) is activated in the event of an accident of corresponding severity. The voltage supply to the positive battery connection point in the engine compartment is interrupted and the consumers connected to this are de-energized. The safety battery terminal is installed in the power distribution box next to the battery.

cardiagn.com

4.2.6. Alternator

Alternators with increased efficiency are used in the G30. The increase in alternator efficiency is achieved by reducing the losses in the rectifier. The loss-causing diodes are replaced by actively activated MOSFET transistors. A reduction in fuel consumption is achieved by increasing the efficiency.

- Bosch with 180 A and 250 A, for 4 and 6-cylinder engines.
- Valeo with 252 A, for 8-cylinder engine.

4.2.7. Integrated supply module

Integrated supply module

The engine control and its components are supplied with a 12 V voltage via the integrated supply module.

cardiagn.com

4.2.8. Power distribution box, front right

Power distribution box, front right

A relay for terminal 30B is installed in the front right power distribution box.

Consumers are supplied with terminal 30, terminal 30B and terminal 15N and provided with corresponding fuse protection by the front right power distribution box. Terminal 15N is supplied from the front power distribution box by the rear power distribution box.

4.2.9. Power distribution box, front left (PHEV Version only)

Power distribution box, front left

A relay for terminal 30B is installed in the front left power distribution box.

Consumers are supplied with terminal 30 and terminal 30B and provided with corresponding fuse protection by the front left power distribution box.

cardiagn.com

4.2.10. Power distribution box, rear

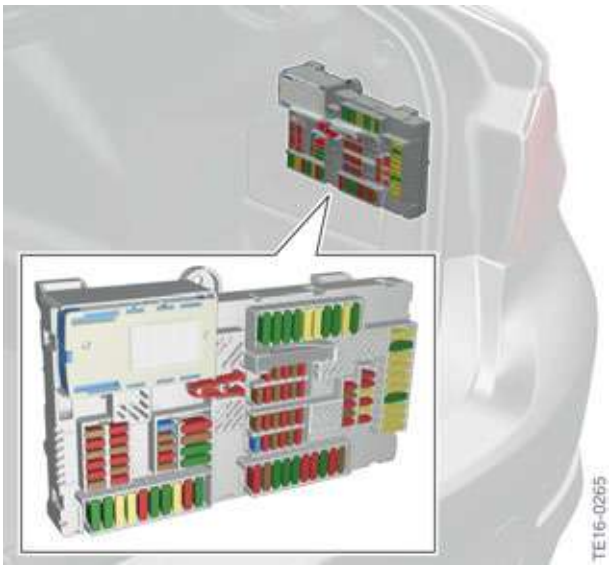

Power distribution box, rear

The following relays are installed in the rear power distribution box:

- 2 Relay's, terminal 30F
- 2 Relay's, terminal 30B
- Relay, terminal 15N
- Relay for rear window heating

All relays are bi-stable relays. The relays area activated by the Body Domain Controller via LIN. The hard-wired terminal 30B relays of the two front power distribution boxes are activated via the rear power distribution box.

4.2.11. Body Domain Controller

The Body Domain Controller (BDC) is responsible for the terminal control.

A terminal 30F relay is installed in the BDC.

A number of consumers are supplied with terminal 30 and terminal 30F and provided with corresponding fuse protection via the BDC.

cardiagn.com

4.2.12. PCU with vehicle electrical system assistance measure

Modern vehicles have a high energy consumption due to the many electrical consumers. As a result, there is a high demand on the battery particularly in phases in which the combustion engine is not running and the alternator supplies no energy (e.g. engine start/stop phases).

In order to protect the vehicle battery, a DC/DC converter is installed in the Power Control Unit (PCU) and an auxiliary battery in the engine compartment in the G30.

The preconditions for the direction of the energy management are calculated from the use of the vehicle. When the engine is running the auxiliary battery is charged from the conventional vehicle electrical system. During the phases in which the combustion engine is not running, e.g. automatic start/stop function, the energy is supplied from the auxiliary battery into the conventional vehicle electrical system.

The Power Control Unit PCU contains a control unit which is connected to the PT-CAN2 and a DC/DC converter with a power of 500 W.

On vehicles with the equipment electric active roll stabilization, this is supplied by the auxiliary battery in the engine compartment.

4.2.13. 24 V Electronic Power Steering

The greater weight of the engines in the G30 on vehicles with 8-cylinder engines results in a higher front axle load. This has the effect that the required power of the steering assist increases. Due to these high currents, it is necessary to increase the voltage supply of the EPS to 24 V.

An auxiliary battery, separating element and a charging unit for the auxiliary battery are required for this. These components are installed in the luggage compartment of the G30.

The charging unit monitors the state of charge and also charges the auxiliary battery using a DC/DC converter. The EPS is only supplied with 24 V once this relay has been activated. The EPS can also be operated with 12 V in the event of a fault.

cardiagn.com

G30 Voltage Supply and Bus Systems

4. Voltage Supply

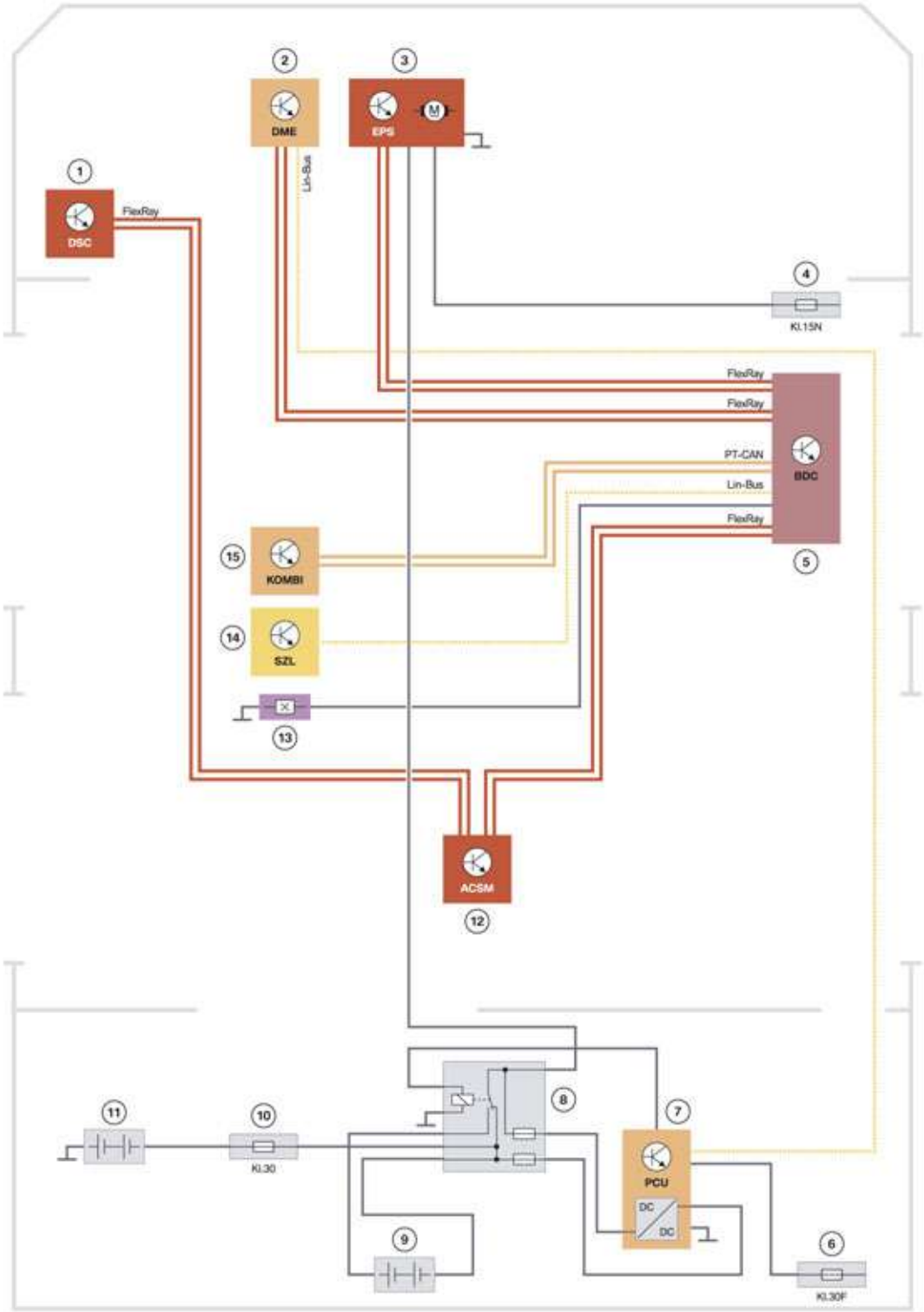

Voltage supply for 24 V steering

cardiagn.com

Index	Explanation
1	Dynamic Stability Control (DSC)
2	Digital Motor Electronics (DME)
3	Electronic Power Steering (EPS)
4	Fuse for front right power distribution box
5	Body Domain Controller (BDC)
6	Fuse in the rear power distribution box
7	Power Control Unit PCU 150 W
8	Separator
9	Auxiliary battery in the luggage compartment
10	Fuse in the power distribution box, battery
11	Battery
12	Advanced Crash Safety Module (ACSM)
13	Brake light switch
14	Steering column switch cluster (SZL)
15	Instrument panel (KOMBI)

Auxiliary battery with separating element

Battery and separating element

Index	Explanation
1	Auxiliary battery in the luggage compartment
2	Separator

cardiagn.com

Power Control Unit

150 W Power Control Unit

The Power Control Unit monitors the state of charge and also charges the auxiliary battery using a DC/DC converter.

cardiagn.com

5. Terminal Control

5.1. Introduction

The terminal control in the G30 is identical to the terminal control of the G12. In the G30, the vehicle is always in the right condition from the point of view of the customer. The terminals are controlled via a customer-oriented condition management. The terminal control is dependent on the driving conditions.

5.2. Vehicle conditions

The G30 vehicle may be in the following conditions:

- PARKING (asleep)
- RESIDING (awake)
- DRIVING (ready)

The different vehicle functions are possible depending on the relevant conditions.

PARKING (asleep)

- Customer not in the vehicle.
- Vehicle secured or not used for a certain time.
- Vehicle functions cannot be operated.

RESIDING (awake)

- Customer in the vehicle.
- No driving readiness.
- Functions that are relevant when the vehicle is stationary can be operated.

DRIVING (ready)

- Customer in the vehicle.
- Driving readiness established.
- All functions are available.

The driving conditions are changed by condition management, taking into account the customer behavior. Additional information is also evaluated that may help to determine the vehicle condition, e.g.:

- Door opening
- Door closing
- Operations in the vehicle

cardiagn.com

G30 Voltage Supply and Bus Systems

5. Terminal Control

The following diagram shows the changes between the vehicle conditions.

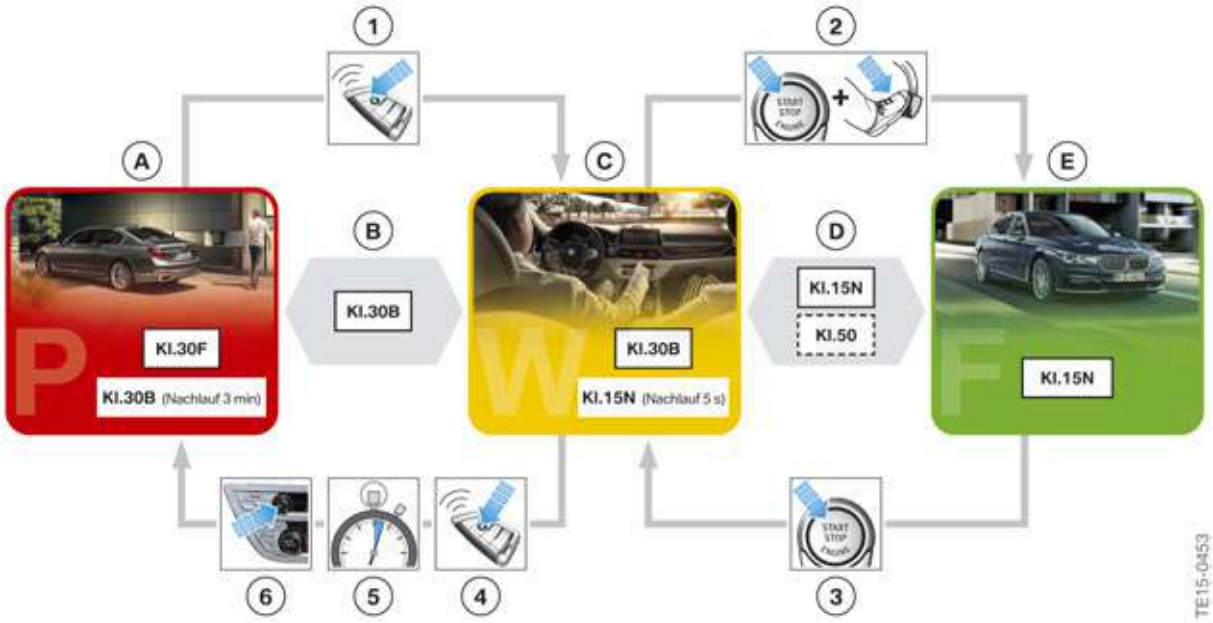

Vehicle conditions

Index	Explanation
A	Vehicle condition PARKING (asleep)
B	Transitional condition with stationary functions
C	Vehicle condition RESIDING (awake)
D	Transitional condition for establishing driving readiness or ending driving readiness or Testing/Analysis/Diagnosis (PAD)
E	Vehicle condition DRIVING (ready)
1	Unlock vehicle
2	Operation of start/stop button + brake pedal
3	Press START/STOP button
4	Locks vehicle
5	No activity of a vehicle user detected for 10 minutes
6	Extended press

cardiagn.com

G30 Voltage Supply and Bus Systems

5. Terminal Control

Detailed overview of vehicle conditions.

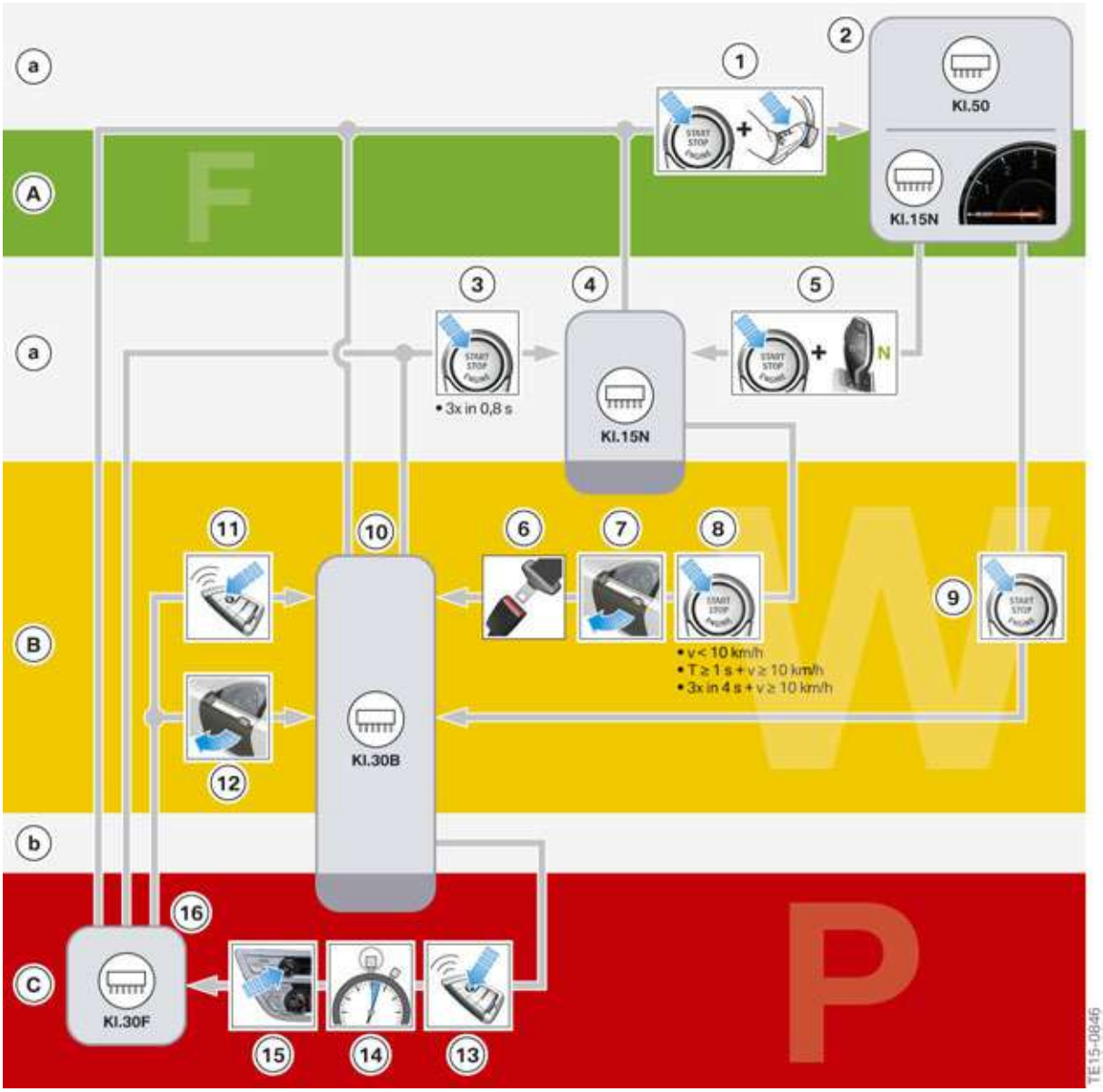

Overview of vehicle conditions

Index	Explanation
A	Vehicle condition DRIVING (ready)
B	Vehicle condition RESIDING (awake)
C	Vehicle condition PARKING (asleep)
a	Transitional condition for Establishing/ending driving readiness — Testing/Analysis/Diagnosis (PAD)
b	Transitional condition with STATIONARY FUNCTIONS

cardiagn.com

Index	Explanation
1	Operation of start/stop button + brake pedal + valid remote control or valid ID transmitter in the vehicle interior
2	Driving readiness established, terminal 15N (terminal 50)
3	Operation of start/stop button (three times within 0,8 s) + valid remote control or valid ID transmitter in the vehicle interior
4	Terminal 15N
5	Operation of start/stop button + selector lever in Neutral
6	Undoing driver's seat belt (v < 0.1 km/h, driver's door opened, selector lever not in Neutral, brake not pressed, low beam off, no OBD communication, no diagnosis mode, no assembly mode)
7	Door contact change (v < 0.1 km/h, driver's seat belt undone, selector lever not in Neutral, brake not pressed, low beam off, no OBD communication, no diagnosis mode, no assembly mode)
8	Press start/stop button + vehicle is stationary or press start/stop button for at least 1 s + driving speed ≥ 10 km/h (6 mph) or press start/stop button at least three times within 4 s + driving speed ≥ 10 km/h (6 mph)
9	Press START/STOP button
10	Terminal 30B
11	Unlock vehicle
12	Residing interaction or stationary function interaction
13	Locks vehicle
14	No customer interaction for 3 minutes
15	Extended press of head unit media button
16	Terminal 30F

Automatic switch-off

Automatic switch-off

Switch off after door opening.

cardiagn.com

In the menu "Doors/Keys", an immediate change from the vehicle condition RESIDING to the vehicle condition PARKING can be activated.

If this option is activated, then the system will immediately change to the vehicle condition PARKING when the driver's door is opened. The omission of the after-running period in the vehicle condition RESIDING saves energy.

5.3. Power supply terminals

Control units in the vehicle must be supplied with power only when they are needed. The following terminals are used in the G30:

- Terminal 15N
- Terminal 30B
- Terminal 30F
- Terminal 30

Terminal 15N supplies control units which are needed only when driving and which may be needed to safely end a journey. After-run of 5 s starts at the transition from DRIVING to RESIDING.

Terminal 30B is used to supply control units that are needed in the stationary mode RESIDING and for stationary functions where the customer is not in the vehicle. An after-run of 6 minutes starts at the transition from RESIDING to PARKING, and terminal 30B is then switched off.

Terminal 30F is used to supply control units which must perform functions in PARKING condition. Terminal 30F is normally switched on in PARKING condition, but may be switched off due to faults in the vehicle electrical system. The terminal is switched off with an after-running period of 1 min if a fault is detected.

Terminal 30 control units (e.g. alarm system) are always supplied with voltage and are also not switched off in the event of a fault.

	Terminal 30F	Terminal 30B	Terminal 15N
PARKING, vehicle electrical system not OK (fault in vehicle electrical system)	OFF	OFF	OFF
PARKING, vehicle electrical system OK	ON	OFF	OFF
Stationary functions (customer not in vehicle)	ON	ON	OFF
RESIDING	ON	ON	OFF
DRIVING	ON	ON	ON

cardiagn.com

Programming-analysis-diagnosis (PAD) mode

The vehicle condition programming-analysis-diagnosis is still present for diagnosis. All terminals are switched on in this mode. This ensures that diagnosis can be performed with all control units. This vehicle condition is displayed in the BMW diagnosis system ISTA.

Activation of the PAD mode:

- Operation of the start/stop button (three times within 0.8 s) + valid remote control or valid ID transmitter in the vehicle interior.
- By the BMW diagnosis system ISTA.

The PAD mode is exited by pressing the start/stop button or by closing the diagnosis with the BMW diagnosis system ISTA.

5.4. Partial network operation

Today's premium vehicles contain up to 70 control units with well over 100 micro-controllers which are networked with each other. However, depending on the current vehicle condition or the vehicle user requirements, not all convenience and assistance systems may always be needed.

It is possible to save energy, relieve the load on the battery and also prolong the battery life by targeted deactivation and activation on control units which are not needed, so-called selective partial network operation.

If functions are not used or needed when driving, e.g.:

- Seat adjustment

5.4.1. Prerequisites for partial network operation

The partial network in the Body Domain Controller calculates the partial network status on the basis of the current vehicle condition and the required functions. The control units that are not required are switched off by means of the corresponding bus messages.

5.4.2. Prerequisites of control units for partial network operation

Different transceivers are used in order to operate the partial network operation in control units. These transceivers are able to evaluate and interpret messages. This control unit remains switched off as long as any bus communication takes place without a valid wake-up event for the corresponding control unit being present. If a valid wake-up event for the corresponding control unit is sent on the bus, the transceiver can activate the voltage regulator of the micro-controller and the control unit starts up. The control unit is switched off by deactivation of the voltage regulator.

cardiagn.com

cardiagn.com

Bayerische Motorenwerke Aktiengesellschaft
Händlerqualifizierung und Training
Röntgenstraße 7
85716 Unterschleißheim, Germany