SYSTEM WIRING DIAGRAMS
Air Conditioning Circuits
1997 Honda CR-V

For DIAKOM-AUTO http://www.diakom.ru Taganrog support@diakom.ru (8634)315187

Copyright © 1998 Mitchell Repair Information Company, LLC

Saturday, December 23, 2000 05:39PM

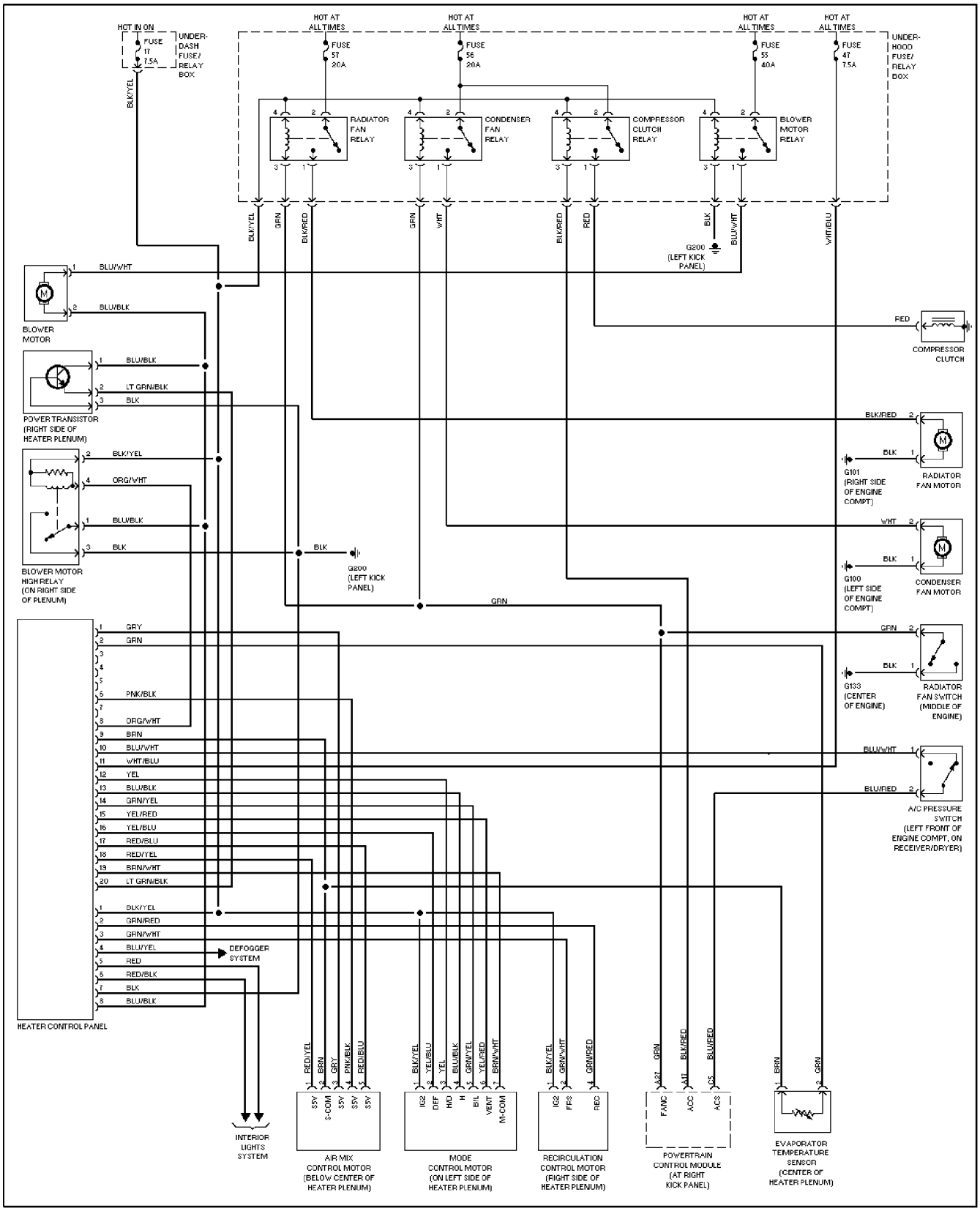

SYSTEM WIRING DIAGRAMS
Anti-lock Brake Circuits
1997 Honda CR-V

For DIAKOM-AUTO http://www.diakom.ru Taganrog support@diakom.ru (8634)315187
Copyright © 1998 Mitchell Repair Information Company, LLC
Saturday, December 23, 2000 05:39PM

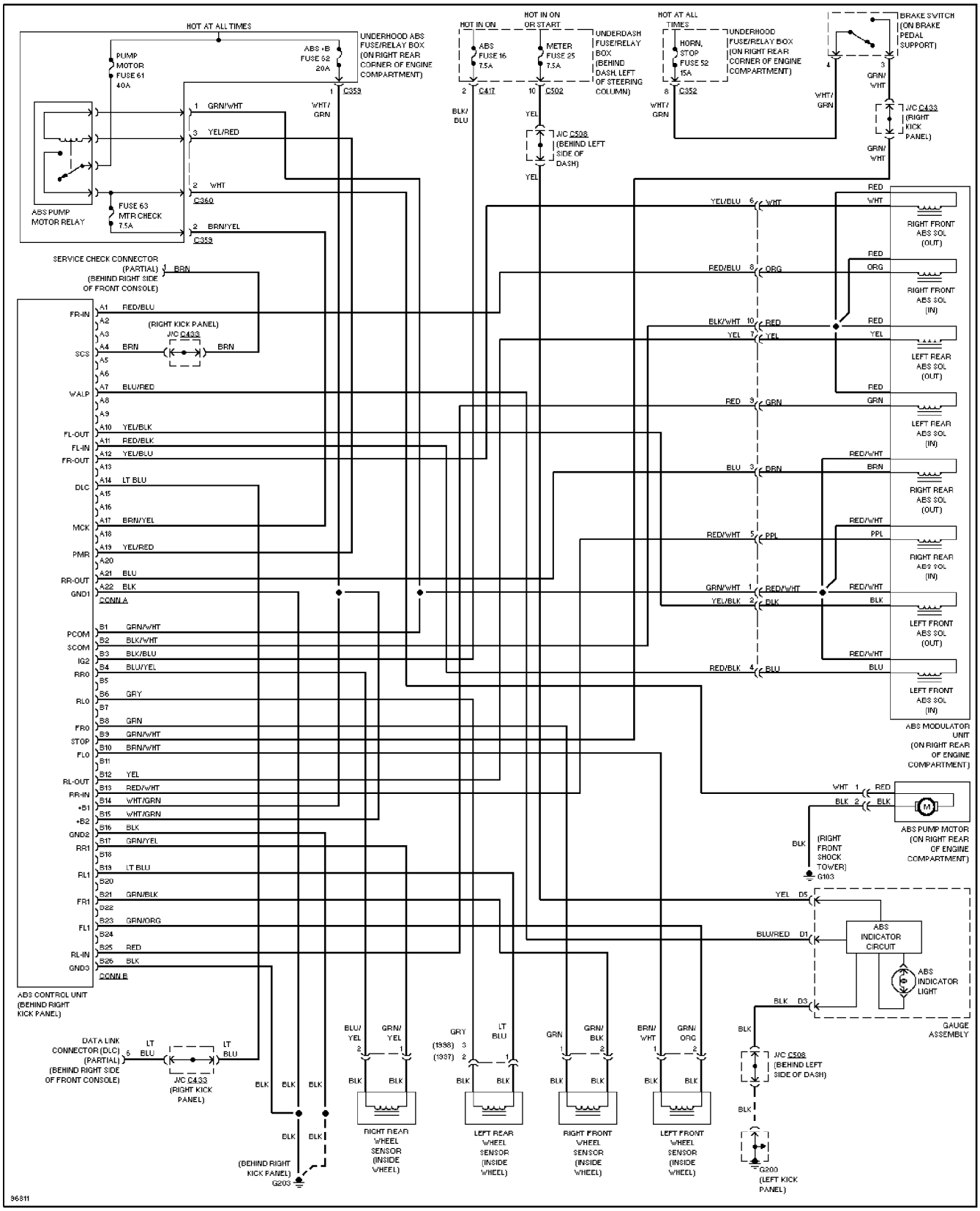

SYSTEM WIRING DIAGRAMS
Anti-theft Circuit
1997 Honda CR-V

For DIAKOM-AUTO http://www.diakom.ru Taganrog support@diakom.ru (8634)315187
Copyright © 1998 Mitchell Repair Information Company, LLC
Saturday, December 23, 2000 05:39PM

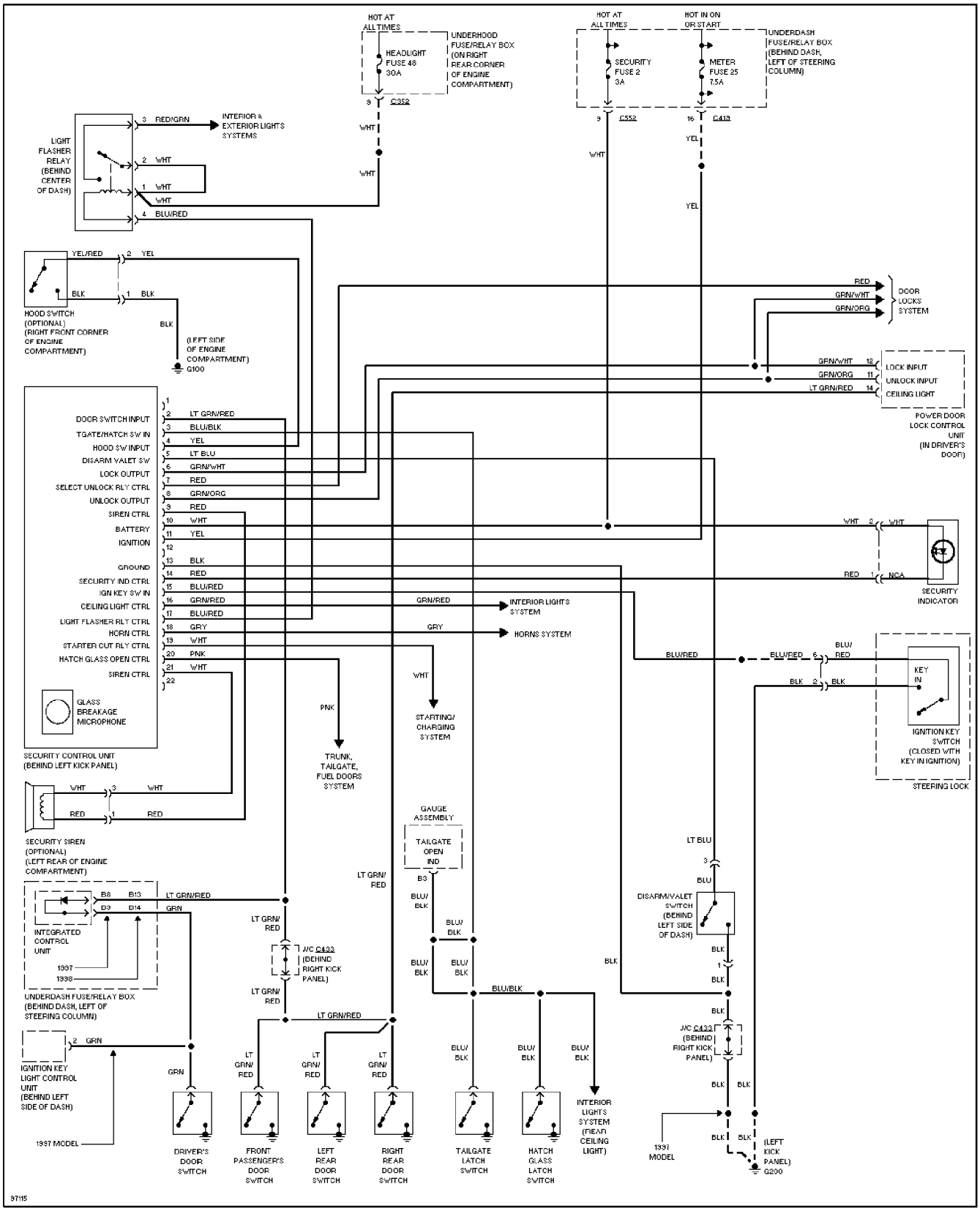

SYSTEM WIRING DIAGRAMS
Computer Data Lines
1997 Honda CR-V

For DIAKOM-AUTO http://www.diakom.ru Taganrog support@diakom.ru (8634)315187
Copyright © 1998 Mitchell Repair Information Company, LLC
Saturday, December 23, 2000 05:39PM

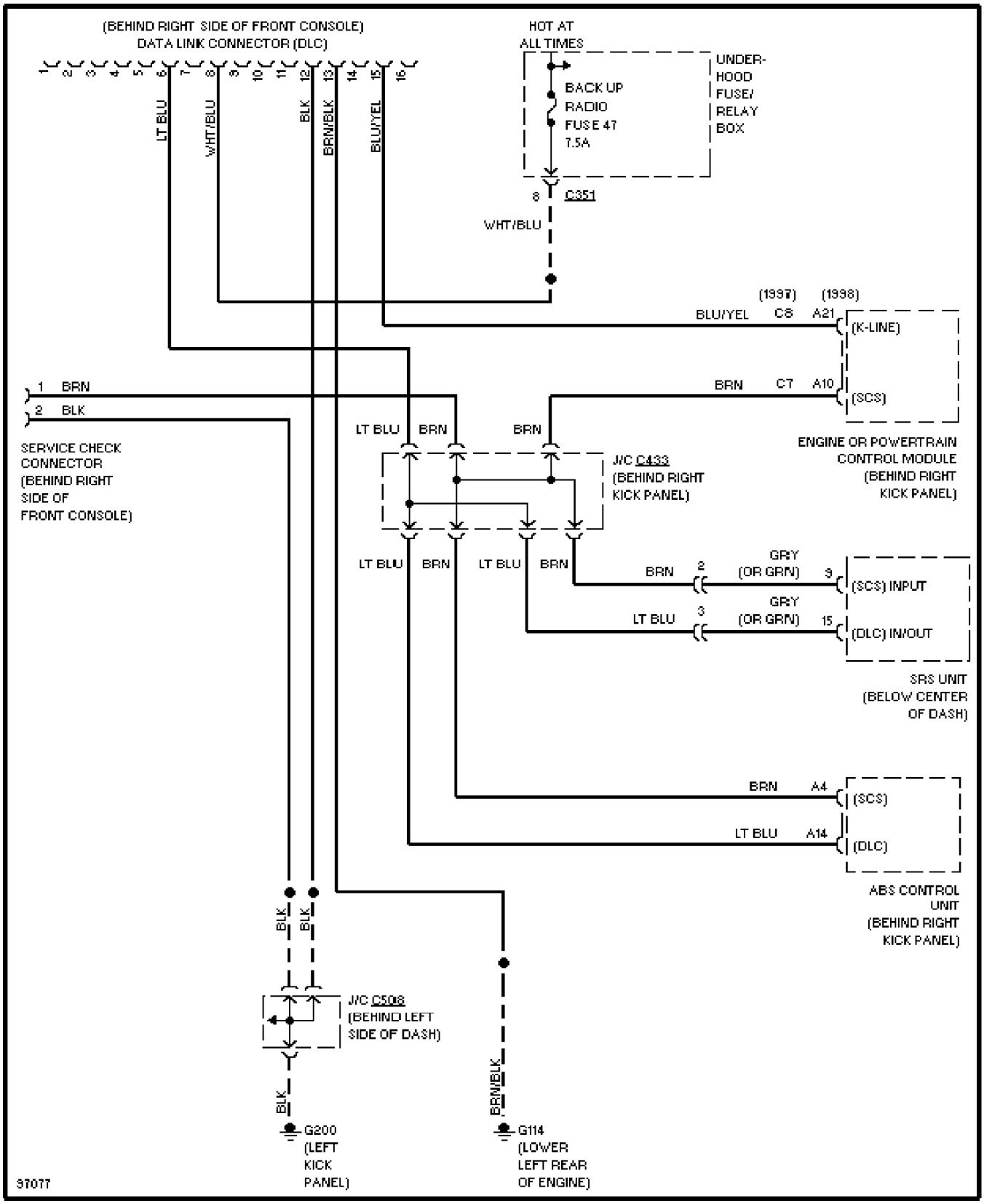

SYSTEM WIRING DIAGRAMS
Cooling Fan Circuit
1997 Honda CR-V

For DIAKOM-AUTO http://www.diakom.ru Taganrog support@diakom.ru (8634)315187
Copyright © 1998 Mitchell Repair Information Company, LLC
Saturday, December 23, 2000 05:39PM

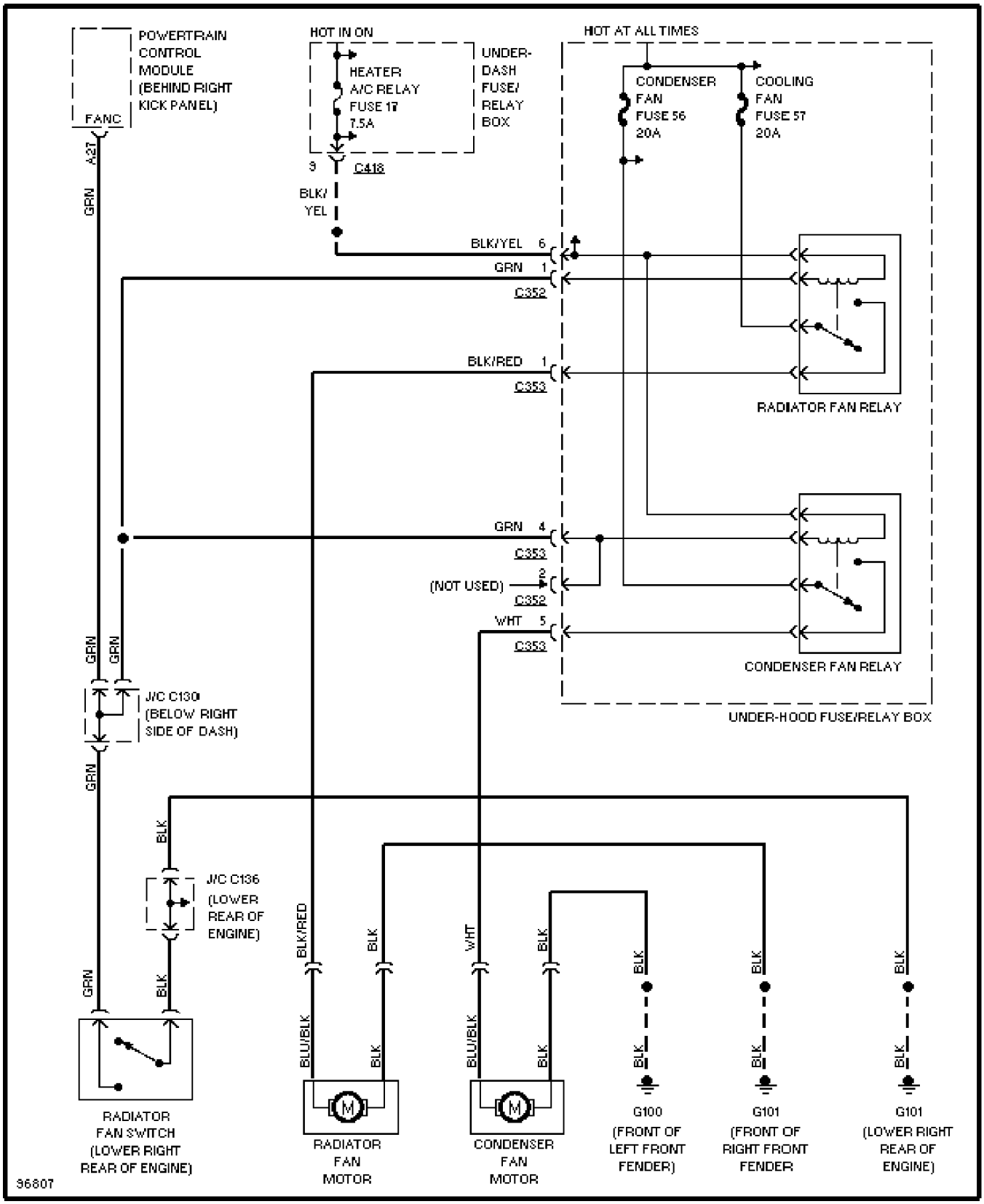

SYSTEM WIRING DIAGRAMS
Cruise Control Circuit
1997 Honda CR-V

For DIAKOM-AUTO http://www.diakom.ru Taganrog support@diakom.ru (8634)315187

Copyright © 1998 Mitchell Repair Information Company, LLC

Saturday, December 23, 2000 05:39PM

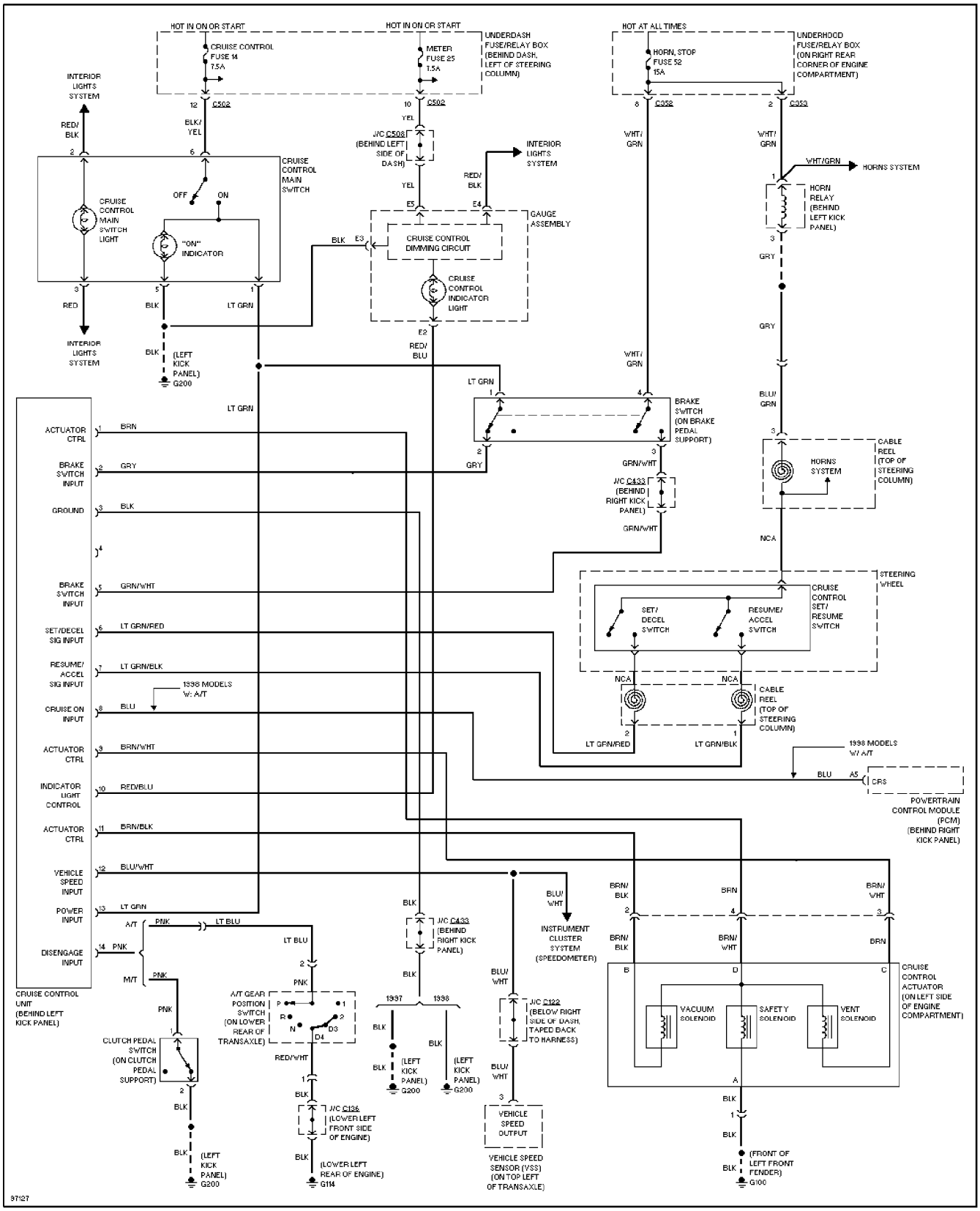

SYSTEM WIRING DIAGRAMS
Defogger Circuit
1997 Honda CR-V

For DIAKOM-AUTO http://www.diakom.ru Taganrog support@diakom.ru (8634)315187
Copyright © 1998 Mitchell Repair Information Company, LLC
Saturday, December 23, 2000 05:40PM

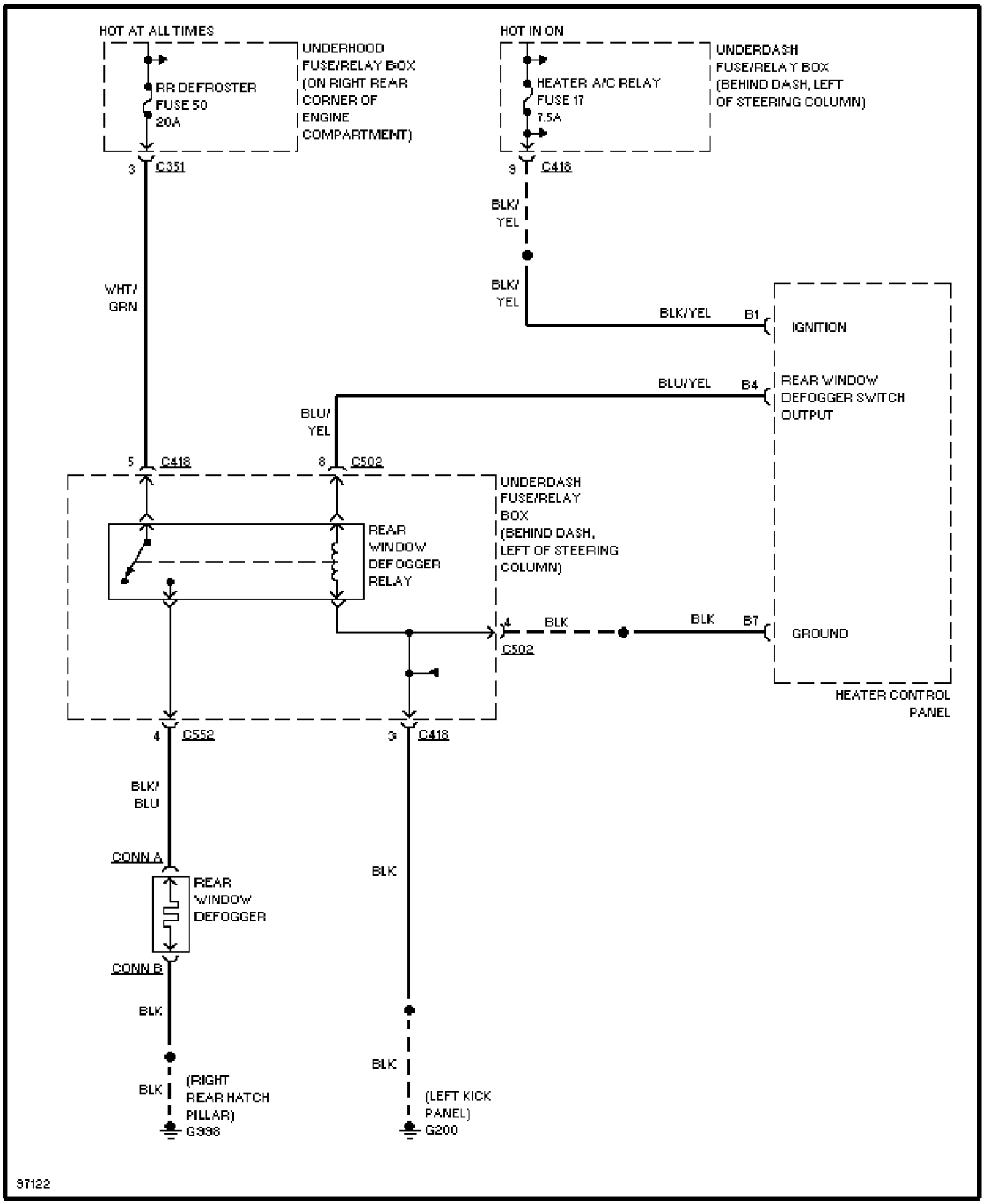

SYSTEM WIRING DIAGRAMS
2.0L, Engine Performance Circuits (1 of 3)

1997 Honda CR-V

For DIAKOM-AUTO http://www.diakom.ru Taganrog support@diakom.ru (8634)315187
Copyright © 1998 Mitchell Repair Information Company, LLC

Saturday, December 23, 2000 05:40PM

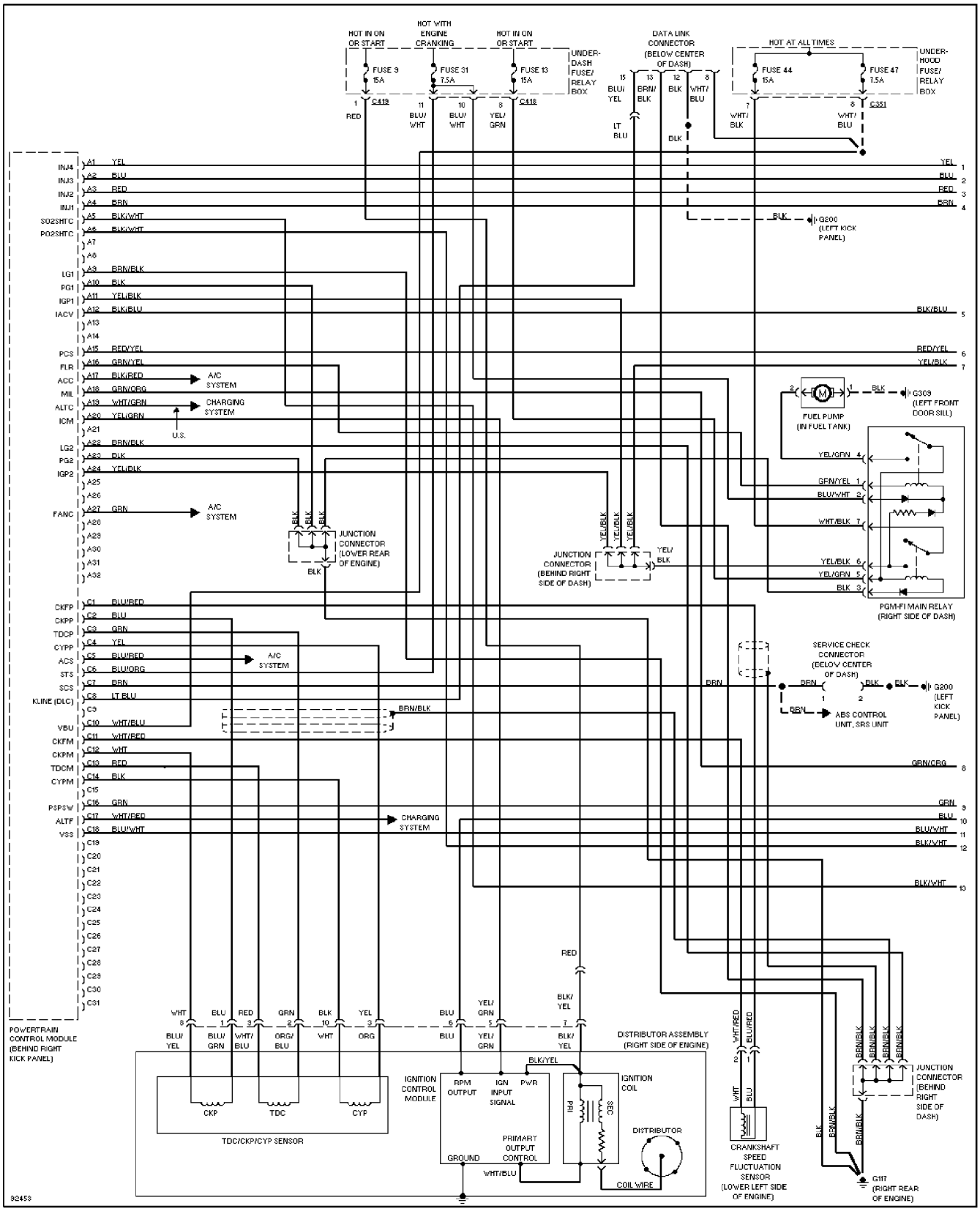

SYSTEM WIRING DIAGRAMS
2.0L, Engine Performance Circuits (2 of 3)
1997 Honda CR-V

For DIAKOM-AUTO http://www.diakom.ru Taganrog support@diakom.ru (8634)315187

Copyright © 1998 Mitchell Repair Information Company, LLC

Saturday, December 23, 2000 05:40PM

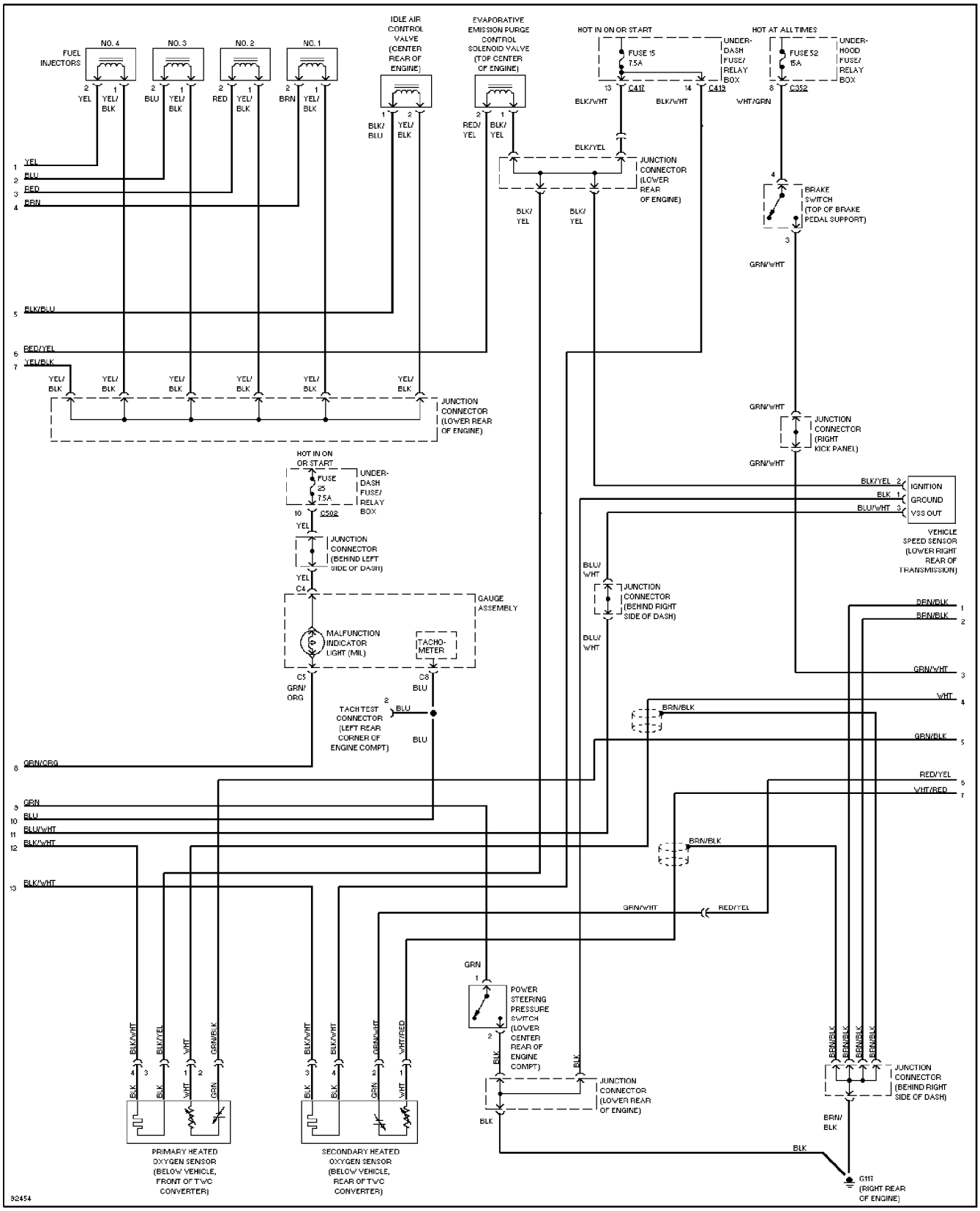

SYSTEM WIRING DIAGRAMS
2.0L, Engine Performance Circuits (3 of 3)
1997 Honda CR-V

For DIAKOM-AUTO http://www.diakom.ru Taganrog support@diakom.ru (8634)315187
Copyright © 1998 Mitchell Repair Information Company, LLC
Saturday, December 23, 2000 05:40PM

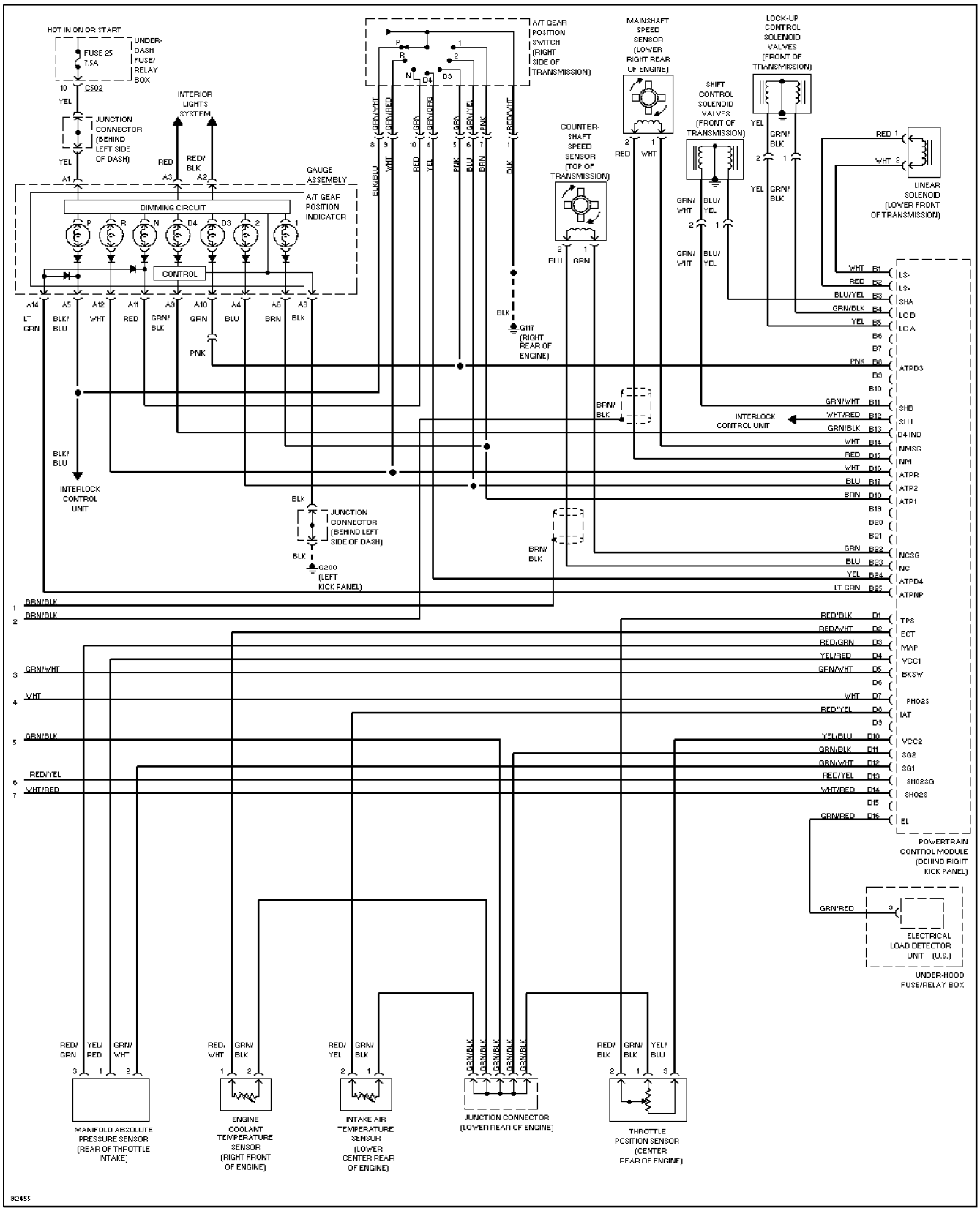

SYSTEM WIRING DIAGRAMS
Back-up Lamps Circuit
1997 Honda CR-V

For DIAKOM-AUTO http://www.diakom.ru Taganrog support@diakom.ru (8634)315187
Copyright © 1998 Mitchell Repair Information Company, LLC
Saturday, December 23, 2000 05:40PM

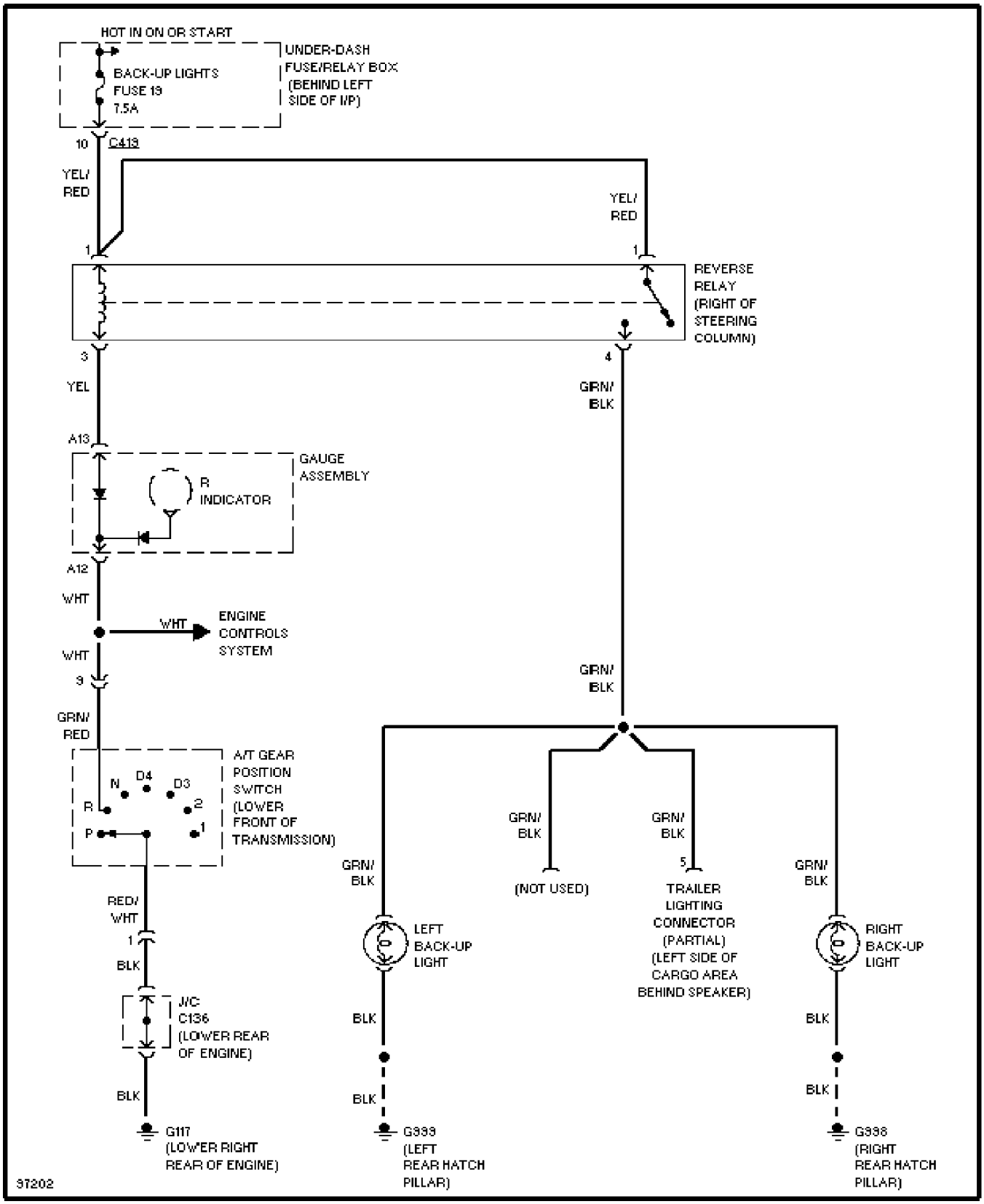

SYSTEM WIRING DIAGRAMS
Exterior Lamps Circuit (1 of 2)
1997 Honda CR-V

For DIAKOM-AUTO http://www.diakom.ru Taganrog support@diakom.ru (8634)315187

Copyright © 1998 Mitchell Repair Information Company, LLC

Saturday, December 23, 2000 05:40PM

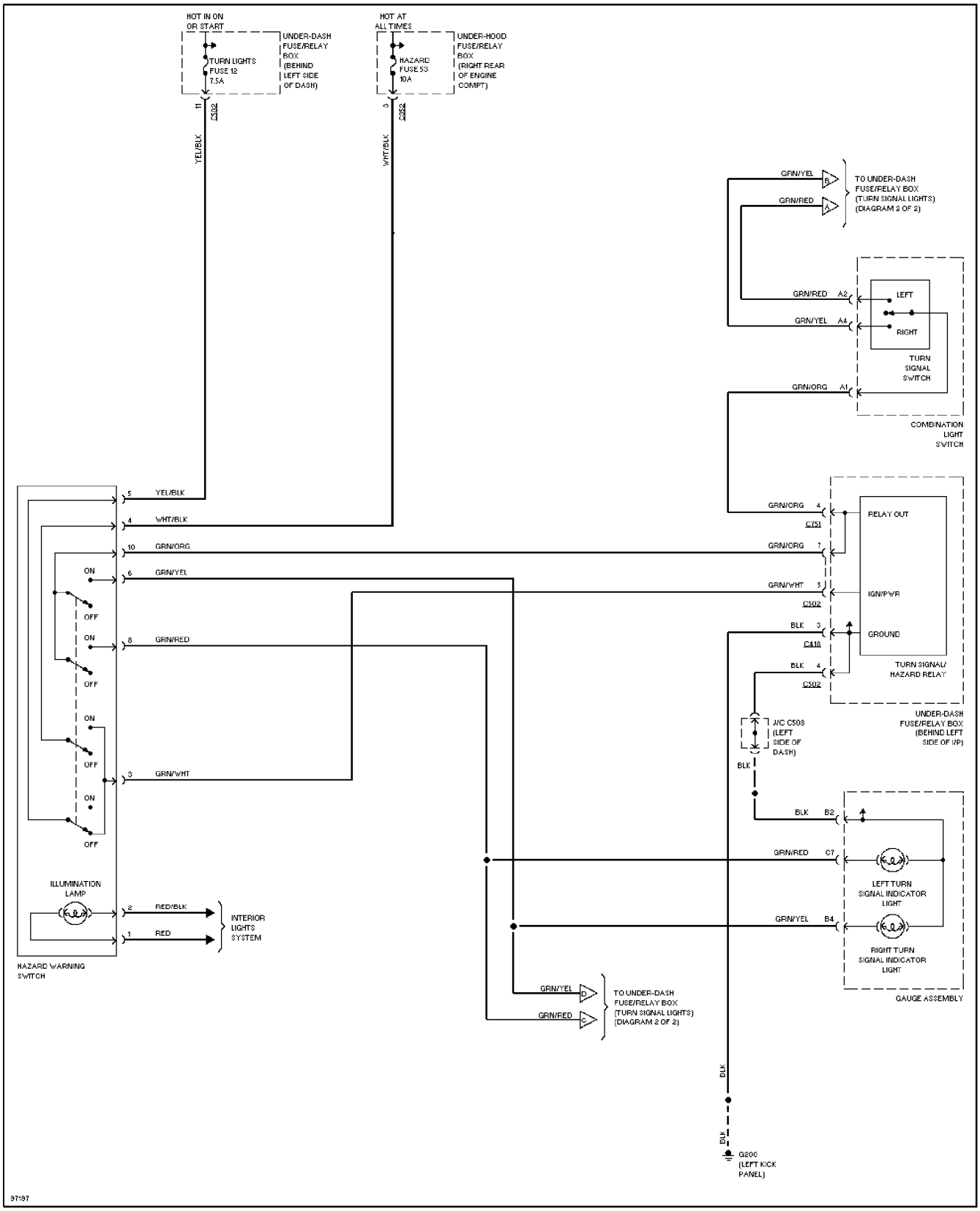

SYSTEM WIRING DIAGRAMS
Exterior Lamps Circuit (2 of 2)

1997 Honda CR-V

For DIAKOM-AUTO http://www.diakom.ru Taganrog support@diakom.ru (8634)315187
Copyright © 1998 Mitchell Repair Information Company, LLC

Saturday, December 23, 2000 05:41PM

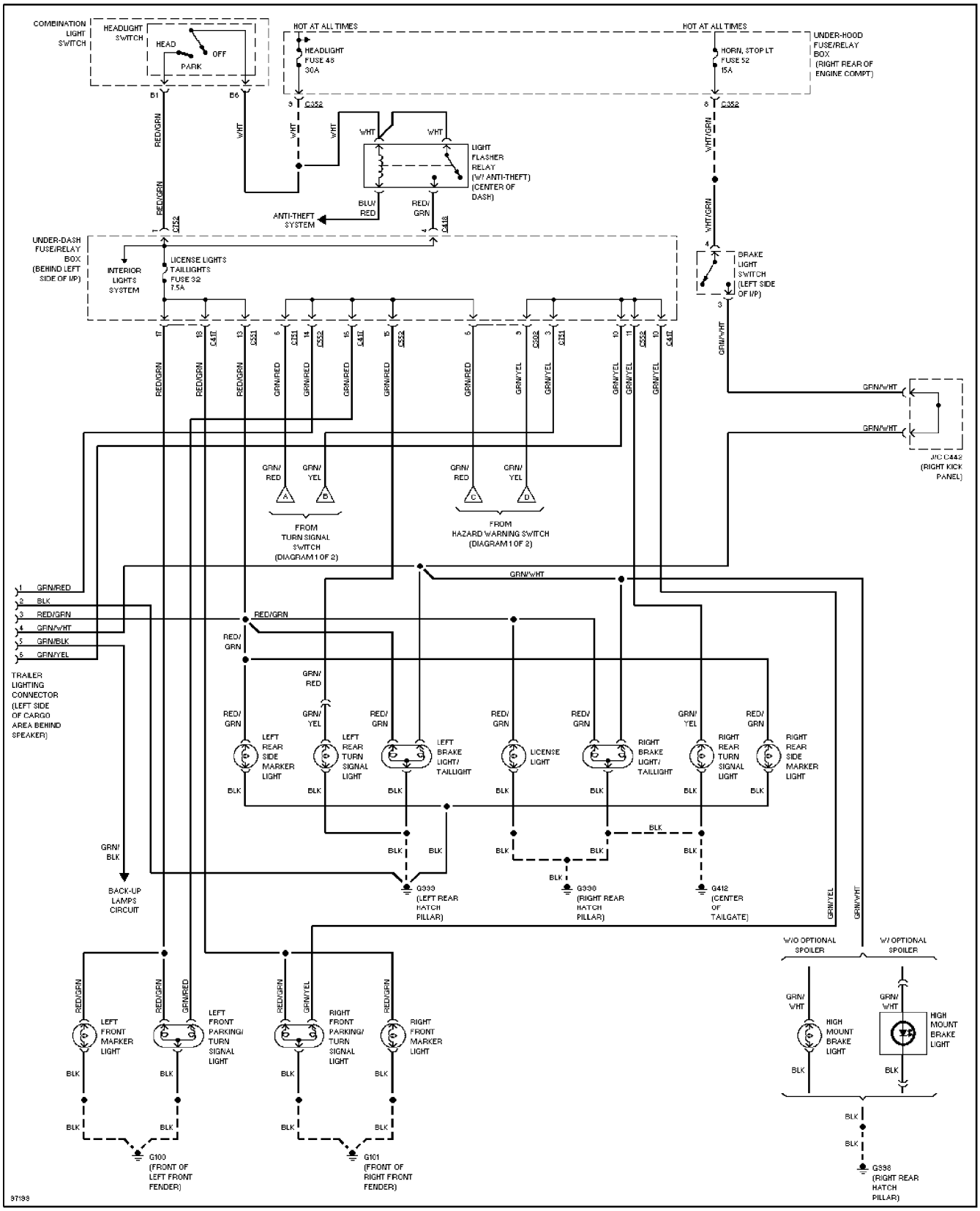

SYSTEM WIRING DIAGRAMS
Ground Distribution Circuit (1 of 3)

1997 Honda CR-V

For DIAKOM-AUTO http://www.diakom.ru Taganrog support@diakom.ru (8634)315187

Copyright © 1998 Mitchell Repair Information Company, LLC

Saturday, December 23, 2000 05:41PM

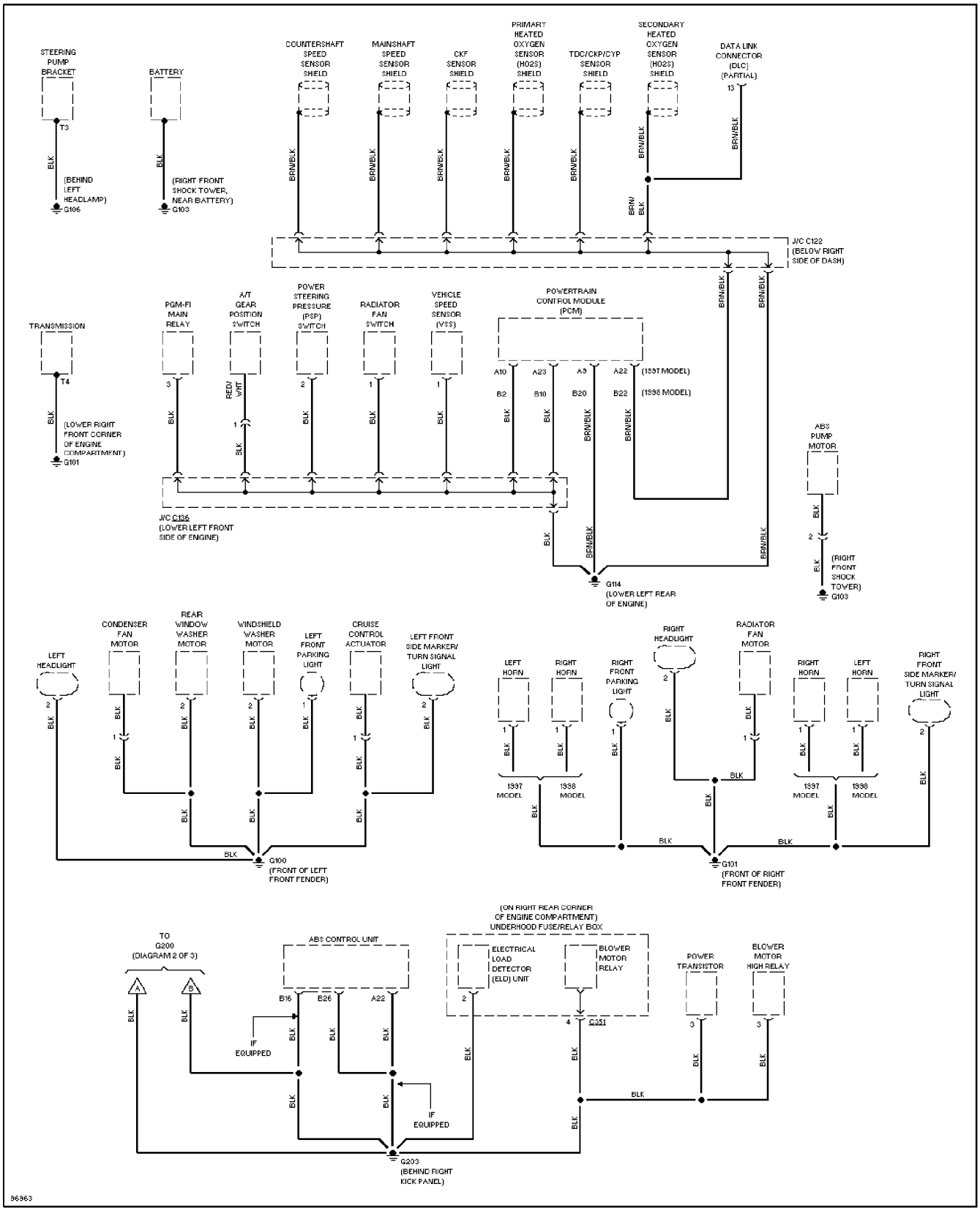

SYSTEM WIRING DIAGRAMS
Ground Distribution Circuit (2 of 3)

1997 Honda CR-V

For DIAKOM-AUTO http://www.diakom.ru Taganrog support@diakom.ru (8634)315187

Copyright © 1998 Mitchell Repair Information Company, LLC

Saturday, December 23, 2000 05:41PM

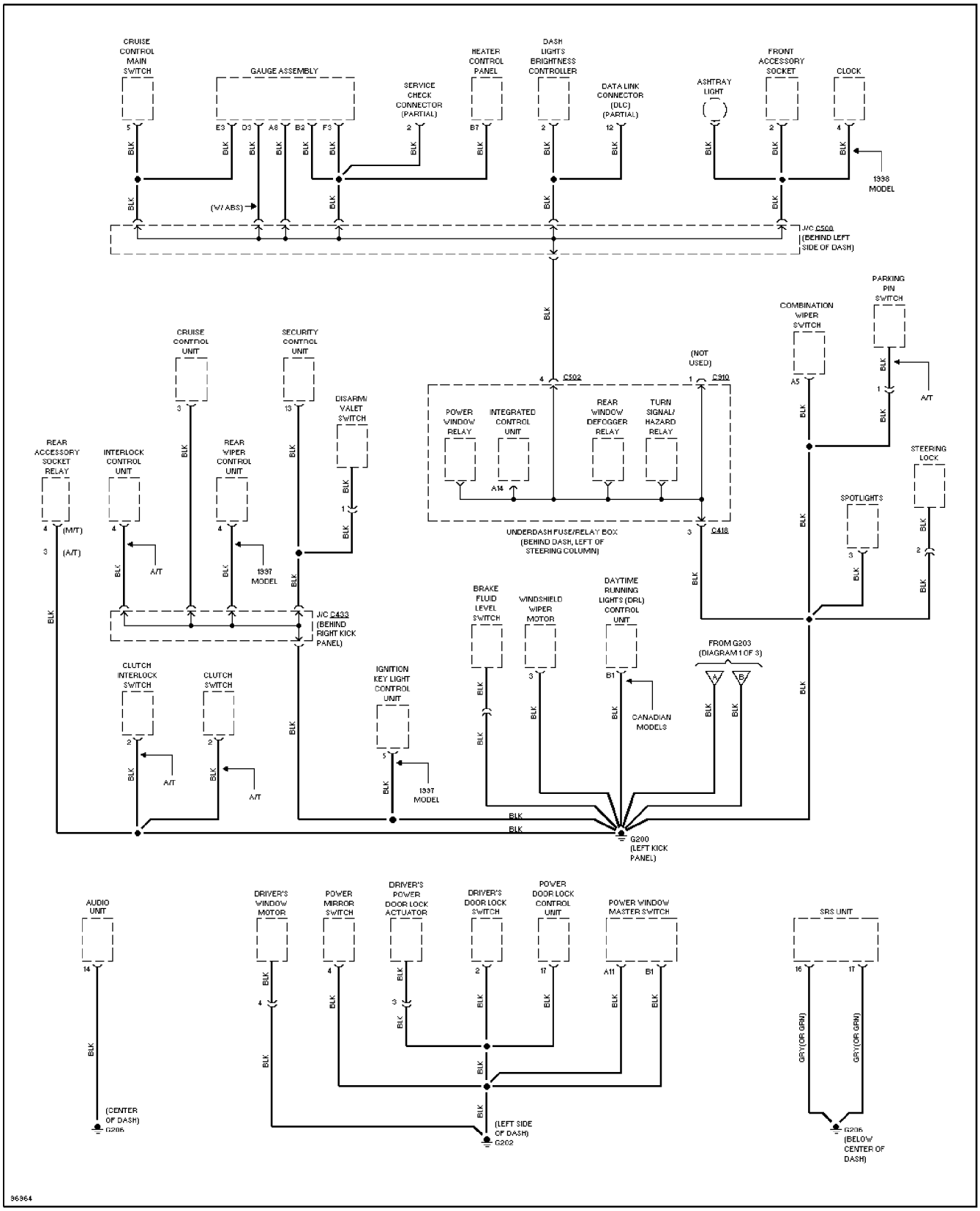

SYSTEM WIRING DIAGRAMS
Ground Distribution Circuit (3 of 3)
1997 Honda CR-V

For DIAKOM-AUTO http://www.diakom.ru Taganrog support@diakom.ru (8634)315187
Copyright © 1998 Mitchell Repair Information Company, LLC
Saturday, December 23, 2000 05:41PM

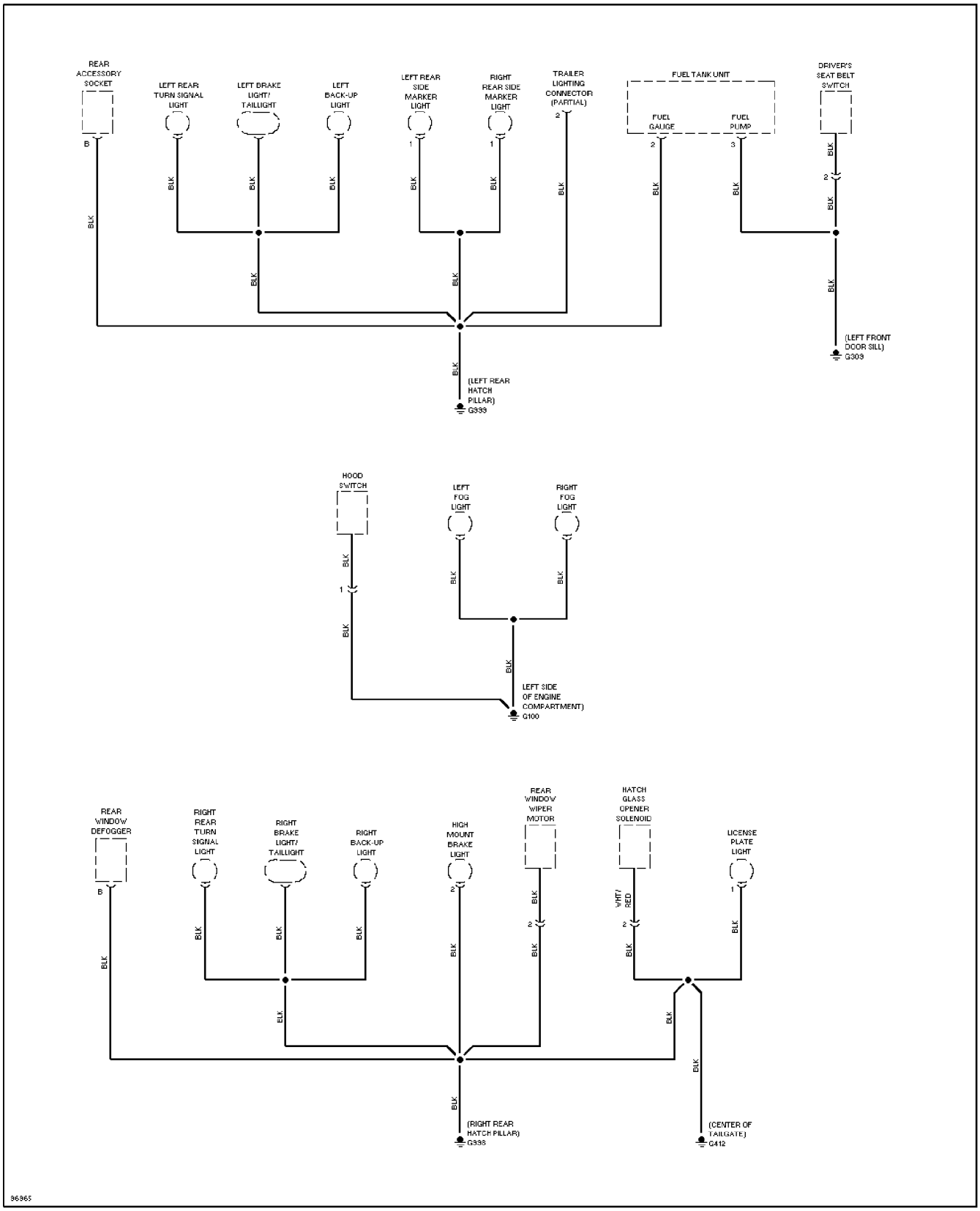

SYSTEM WIRING DIAGRAMS
Headlight Circuit, W/ DRL

1997 Honda CR-V

For DIAKOM-AUTO http://www.diakom.ru Taganrog support@diakom.ru (8634)315187

Copyright © 1998 Mitchell Repair Information Company, LLC

Saturday, December 23, 2000 05:41PM

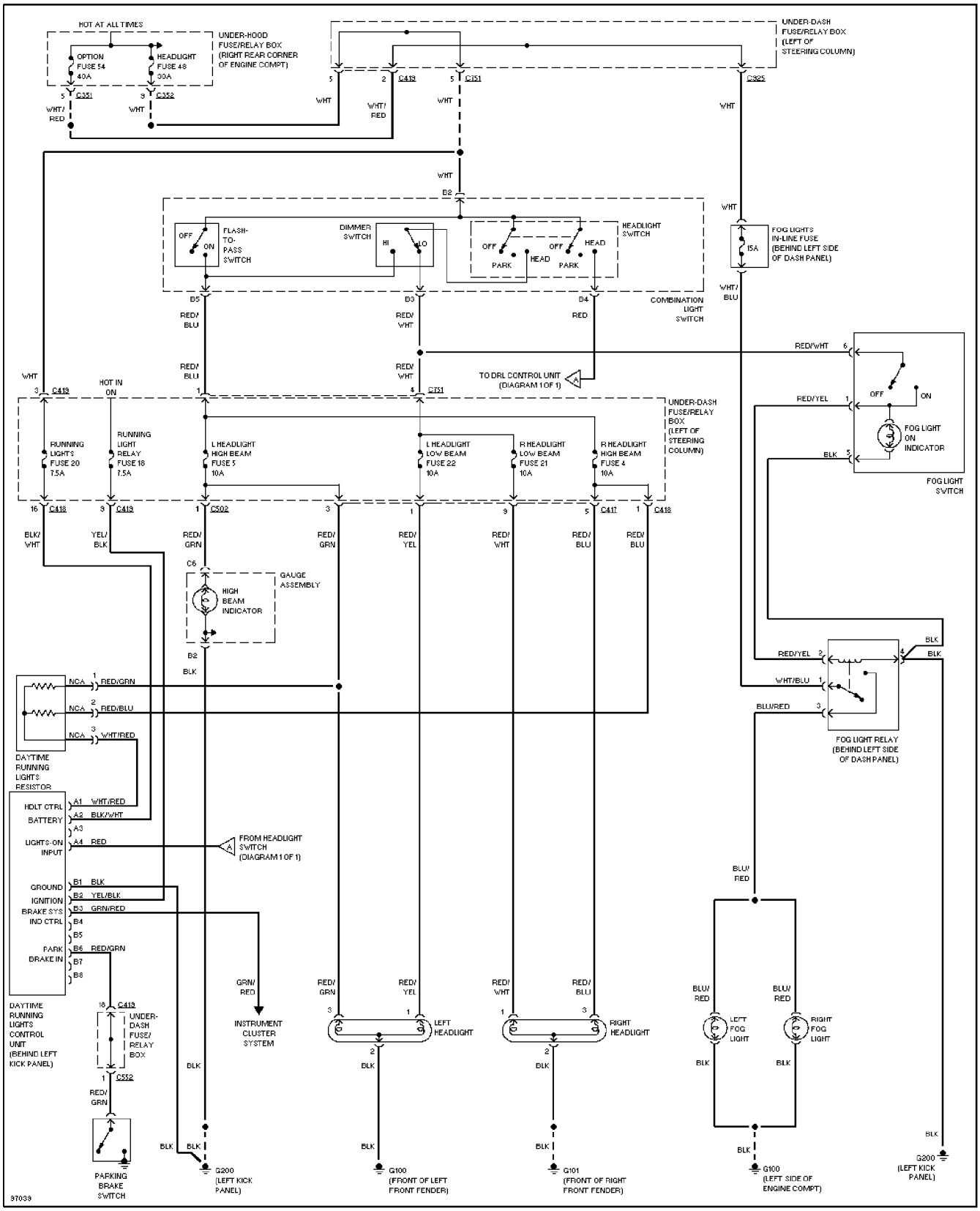

SYSTEM WIRING DIAGRAMS
Headlight Circuit, W/O DRL

1997 Honda CR-V

For DIAKOM-AUTO http://www.diakom.ru Taganrog support@diakom.ru (8634)315187

Copyright © 1998 Mitchell Repair Information Company, LLC

Saturday, December 23, 2000 05:41PM

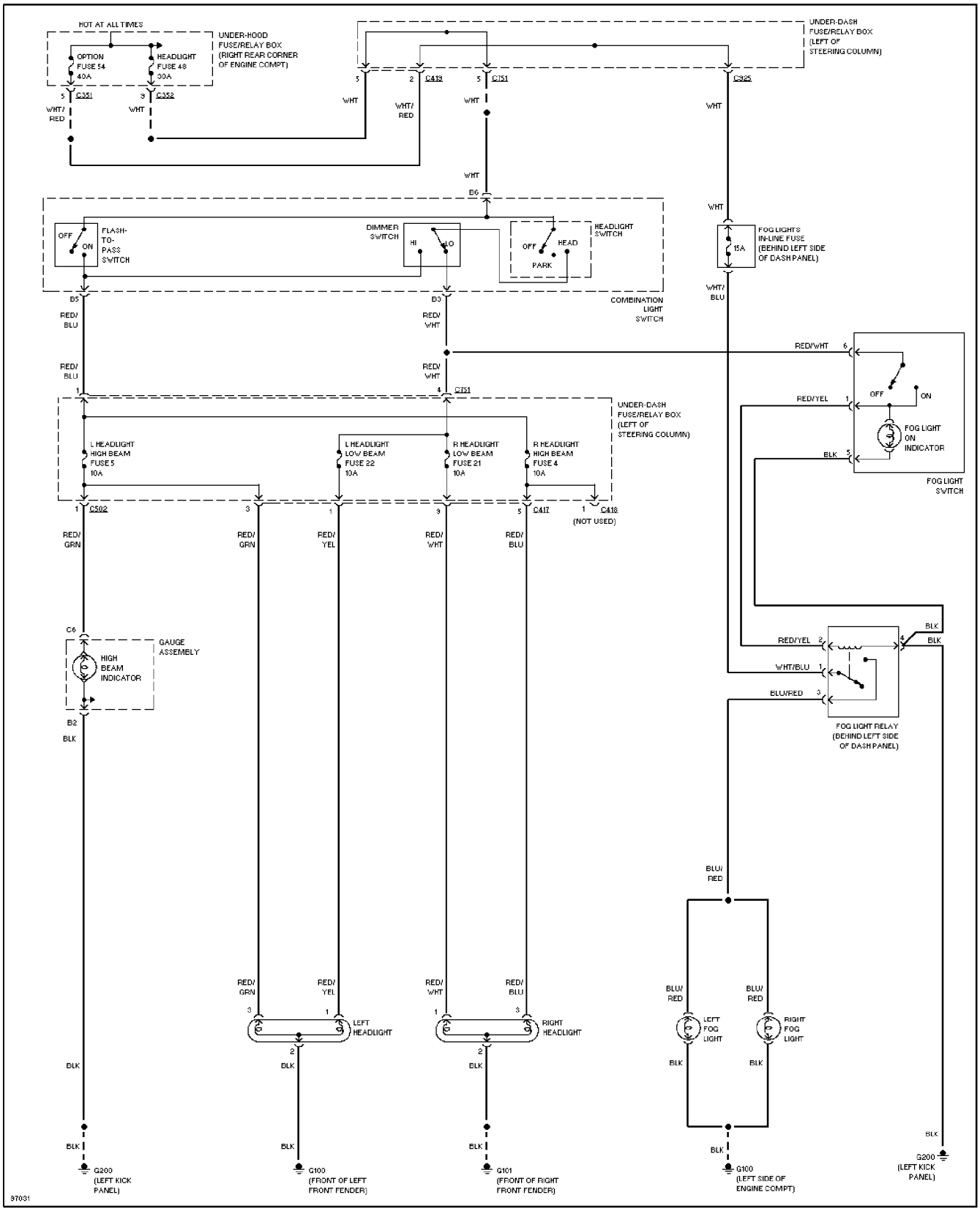

SYSTEM WIRING DIAGRAMS
Horn Circuit
1997 Honda CR-V

For DIAKOM-AUTO http://www.diakom.ru Taganrog support@diakom.ru (8634)315187

Copyright © 1998 Mitchell Repair Information Company, LLC

Saturday, December 23, 2000 05:41PM

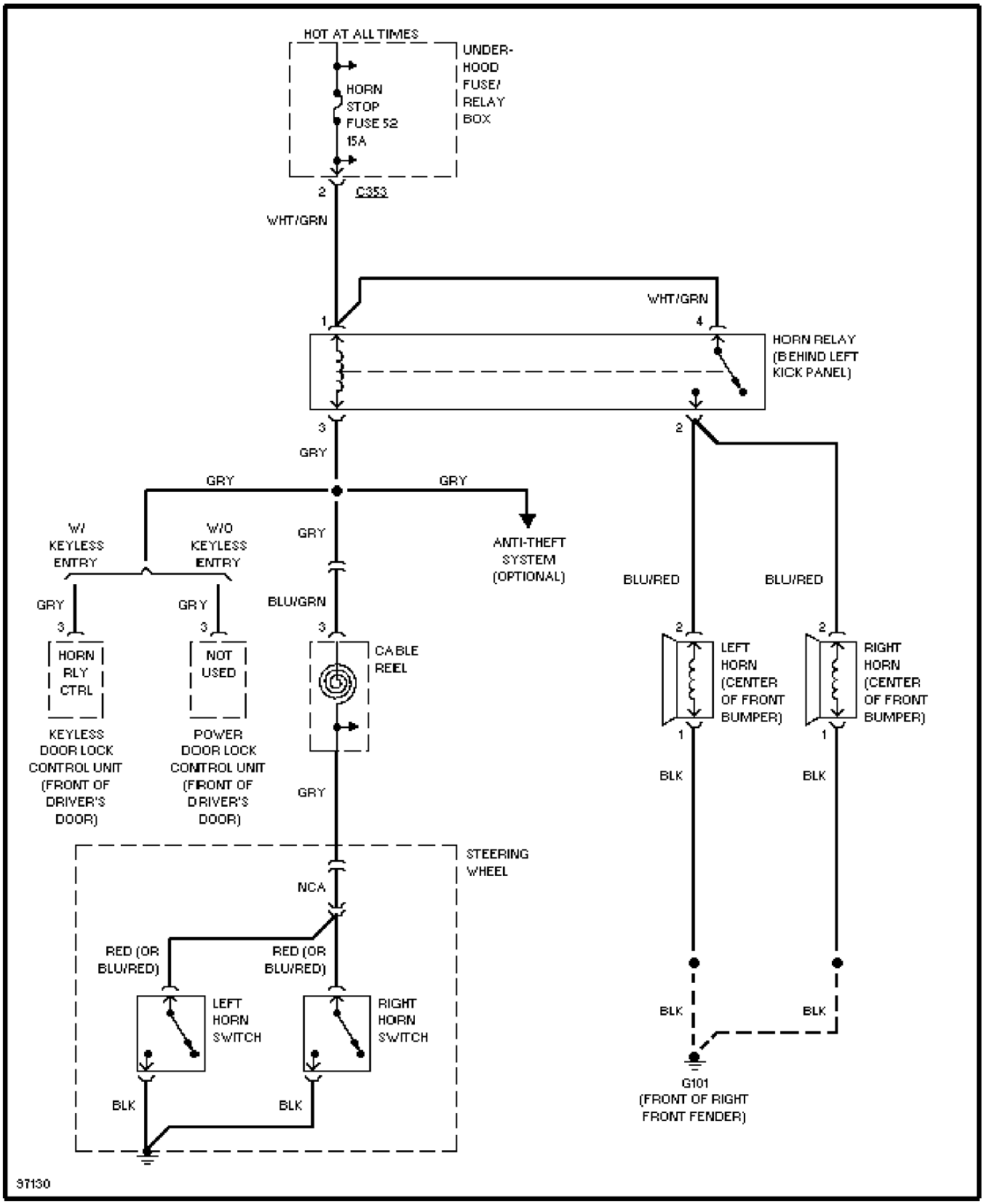

SYSTEM WIRING DIAGRAMS
Instrument Cluster Circuit (1 of 2)
1997 Honda CR-V

For DIAKOM-AUTO http://www.diakom.ru Taganrog support@diakom.ru (8634)315187

Copyright © 1998 Mitchell Repair Information Company, LLC

Saturday, December 23, 2000 05:42PM

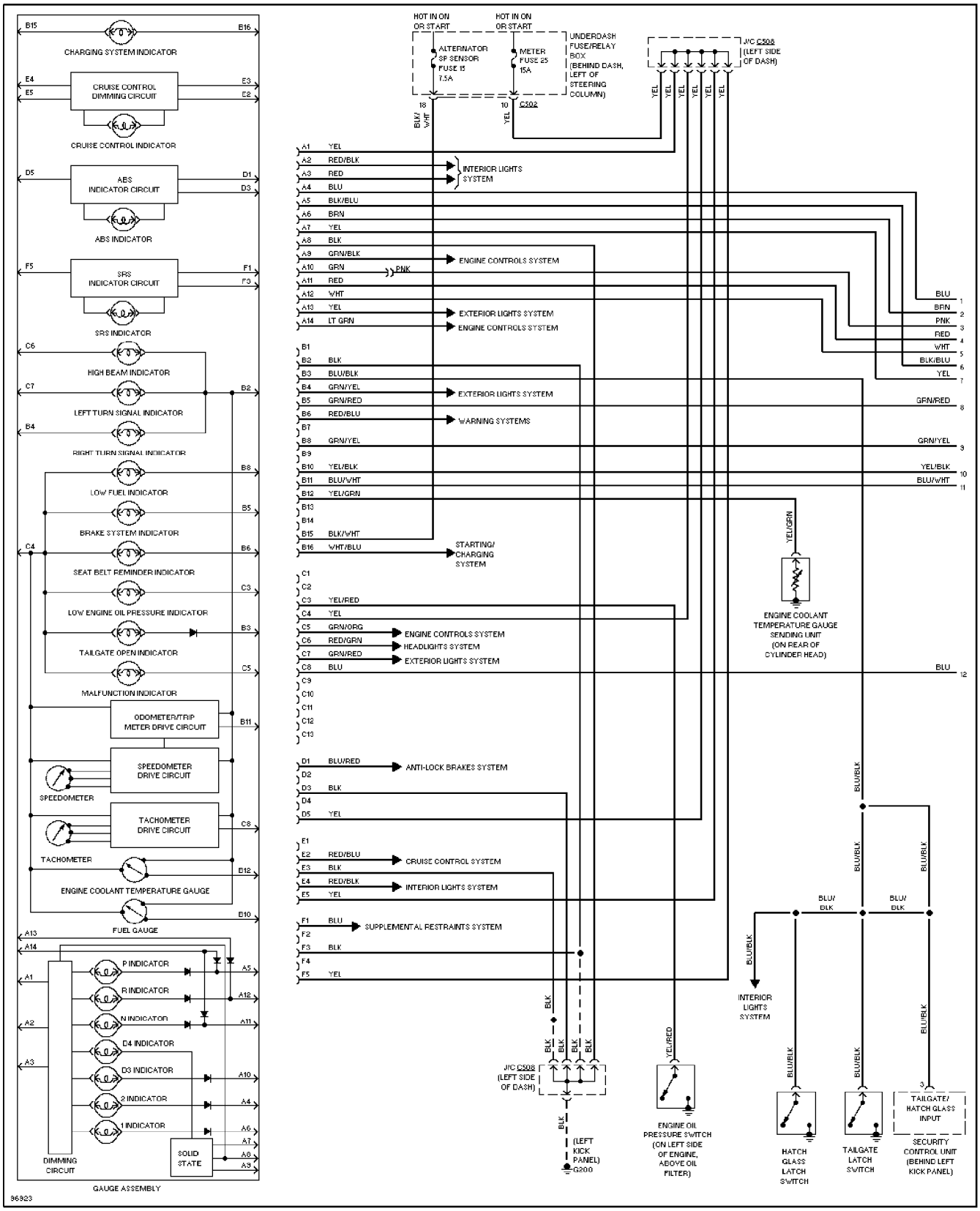

SYSTEM WIRING DIAGRAMS
Instrument Cluster Circuit (2 of 2)
1997 Honda CR-V

For DIAKOM-AUTO http://www.diakom.ru Taganrog support@diakom.ru (8634)315187
Copyright © 1998 Mitchell Repair Information Company, LLC
Saturday, December 23, 2000 05:42PM

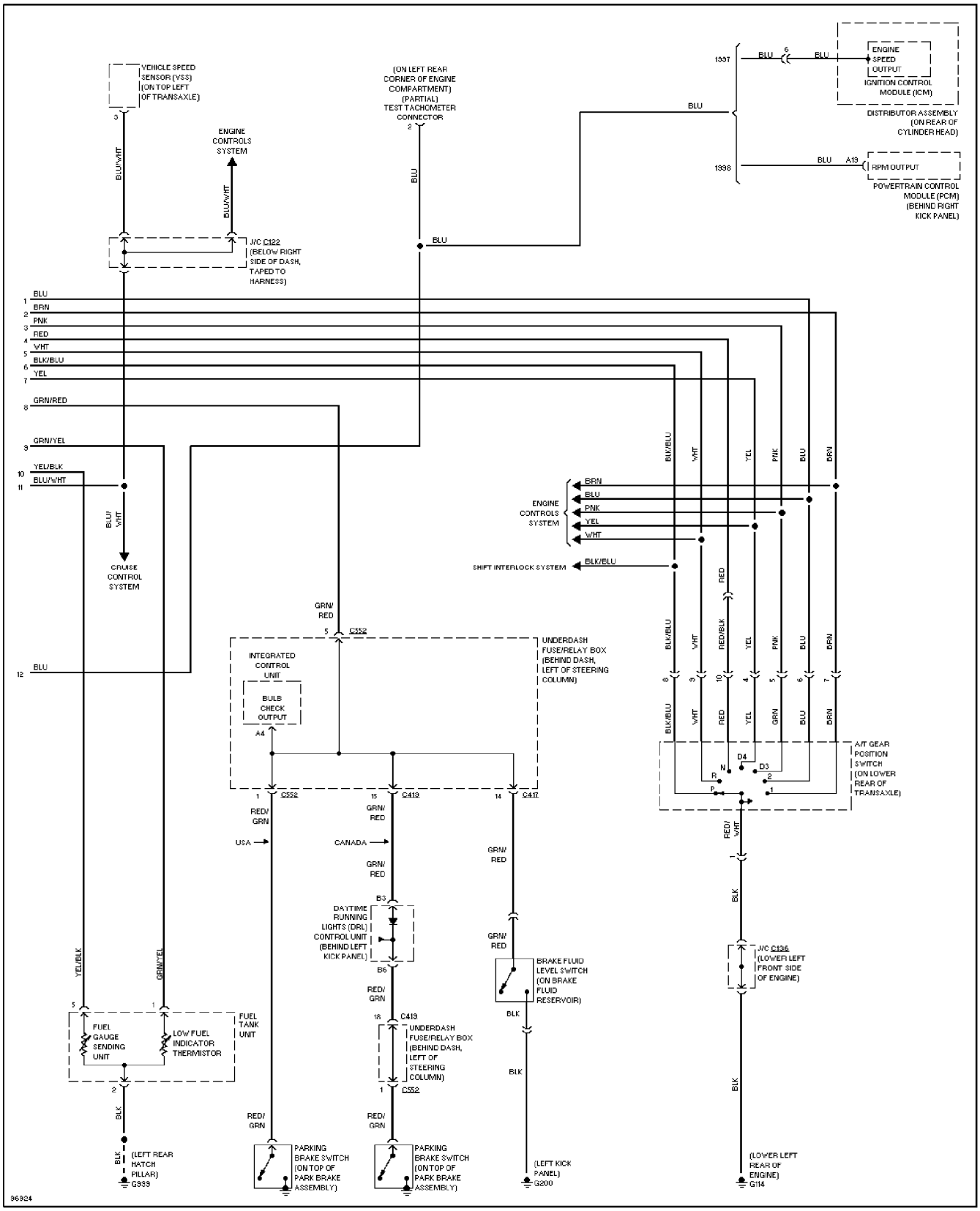

SYSTEM WIRING DIAGRAMS
Courtesy Lamp Circuit
1997 Honda CR-V

For DIAKOM-AUTO http://www.diakom.ru Taganrog support@diakom.ru (8634)315187
Copyright © 1998 Mitchell Repair Information Company, LLC
Saturday, December 23, 2000 05:42PM

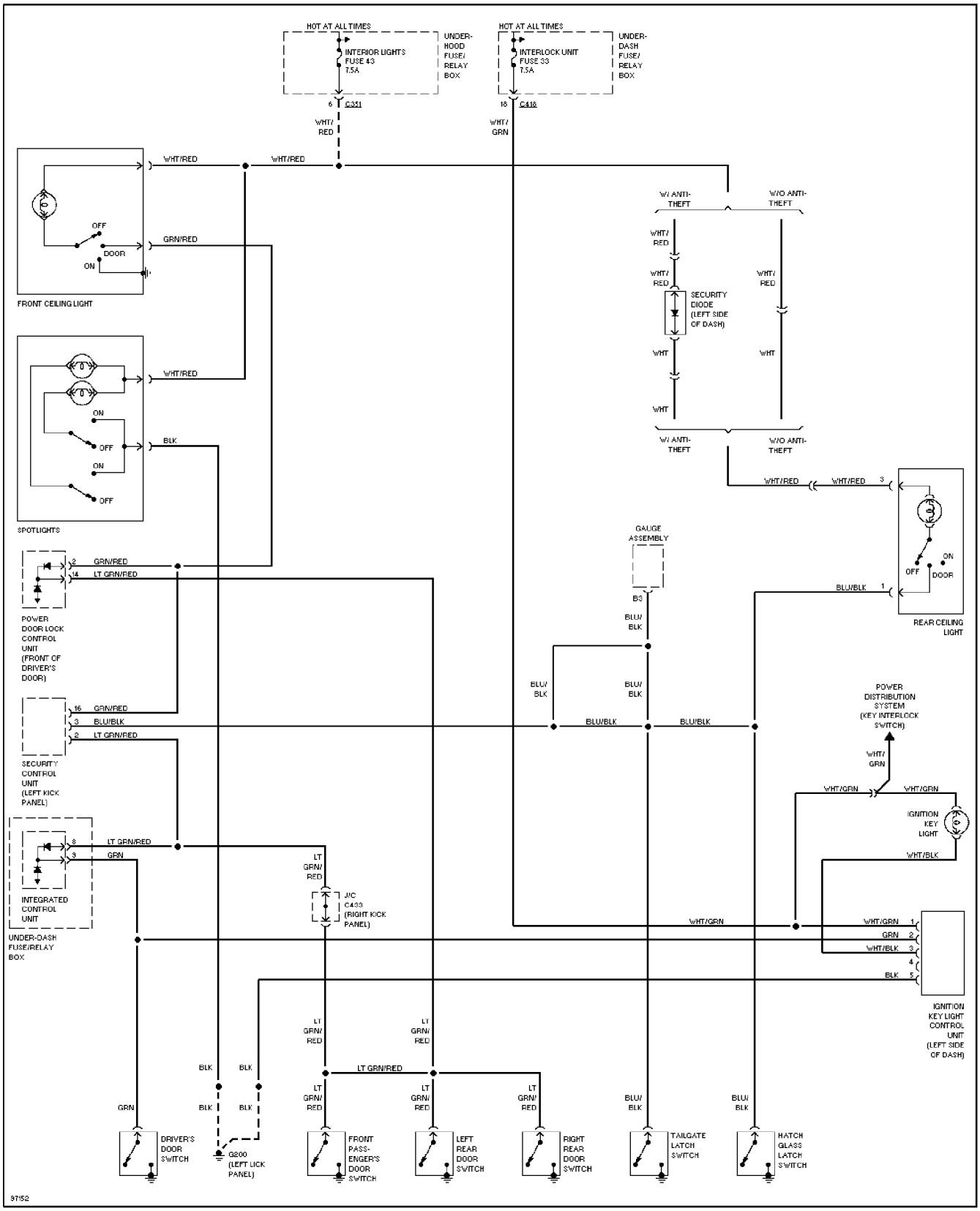

SYSTEM WIRING DIAGRAMS
Instrument Illumination Circuit
1997 Honda CR-V

For DIAKOM-AUTO http://www.diakom.ru Taganrog support@diakom.ru (8634)315187

Copyright © 1998 Mitchell Repair Information Company, LLC

Saturday, December 23, 2000 05:42PM

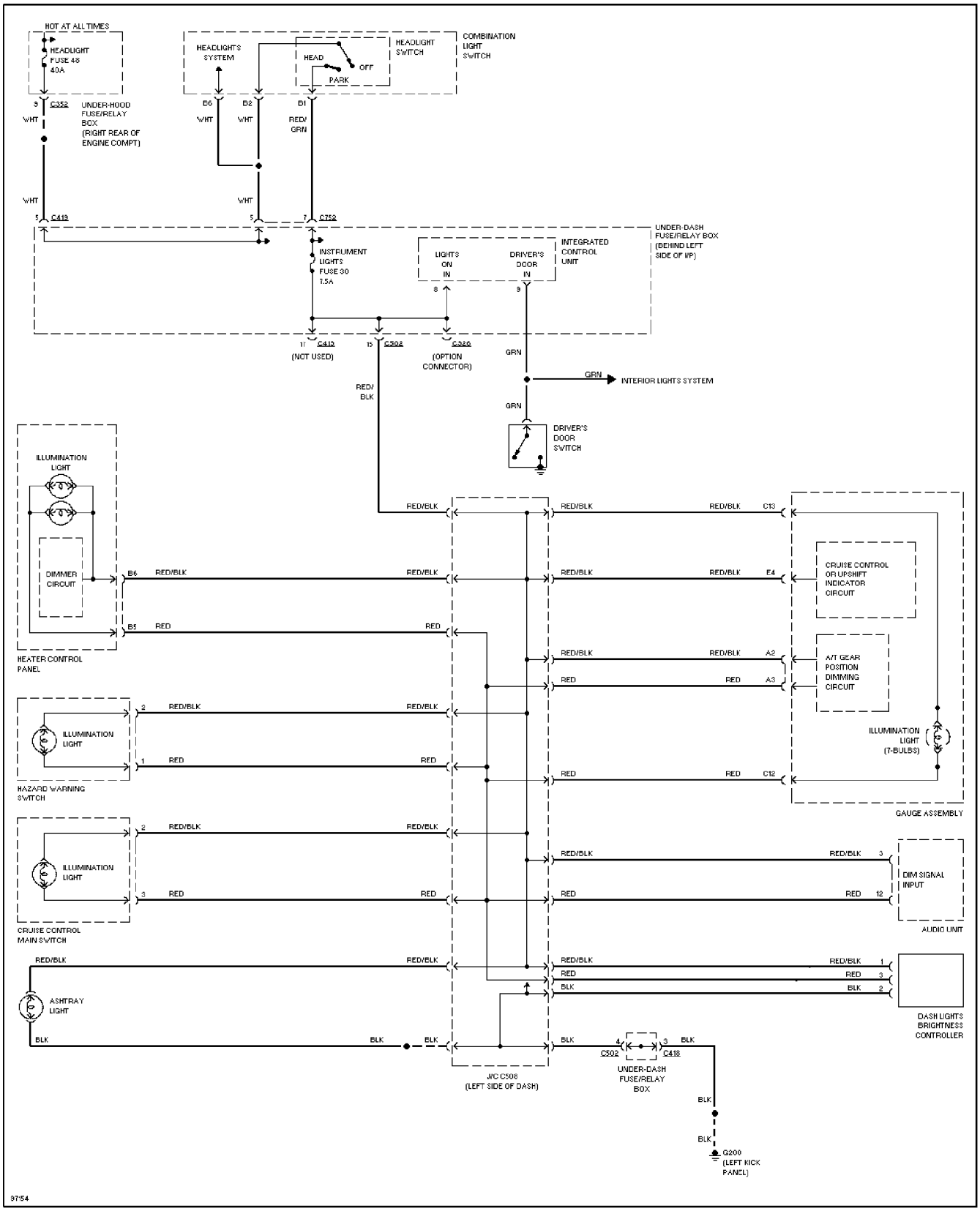

SYSTEM WIRING DIAGRAMS
Power Distribution Circuit (1 of 3)
1997 Honda CR-V

For DIAKOM-AUTO http://www.diakom.ru Taganrog support@diakom.ru (8634)315187

Copyright © 1998 Mitchell Repair Information Company, LLC

Saturday, December 23, 2000 05:42PM

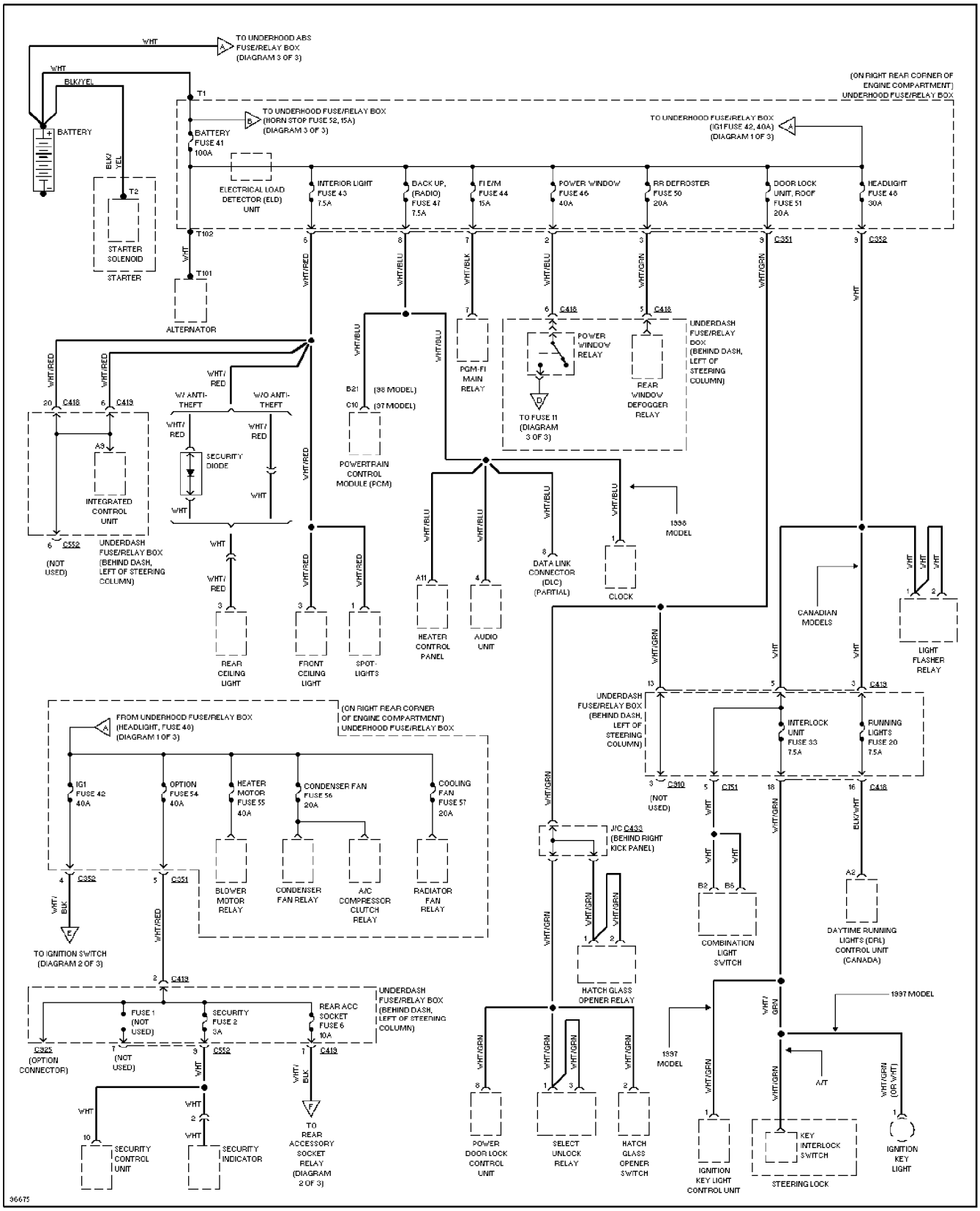

SYSTEM WIRING DIAGRAMS
Power Distribution Circuit (2 of 3)
1997 Honda CR-V

For DIAKOM-AUTO http://www.diakom.ru Taganrog support@diakom.ru (8634)315187
Copyright © 1998 Mitchell Repair Information Company, LLC
Saturday, December 23, 2000 05:42PM

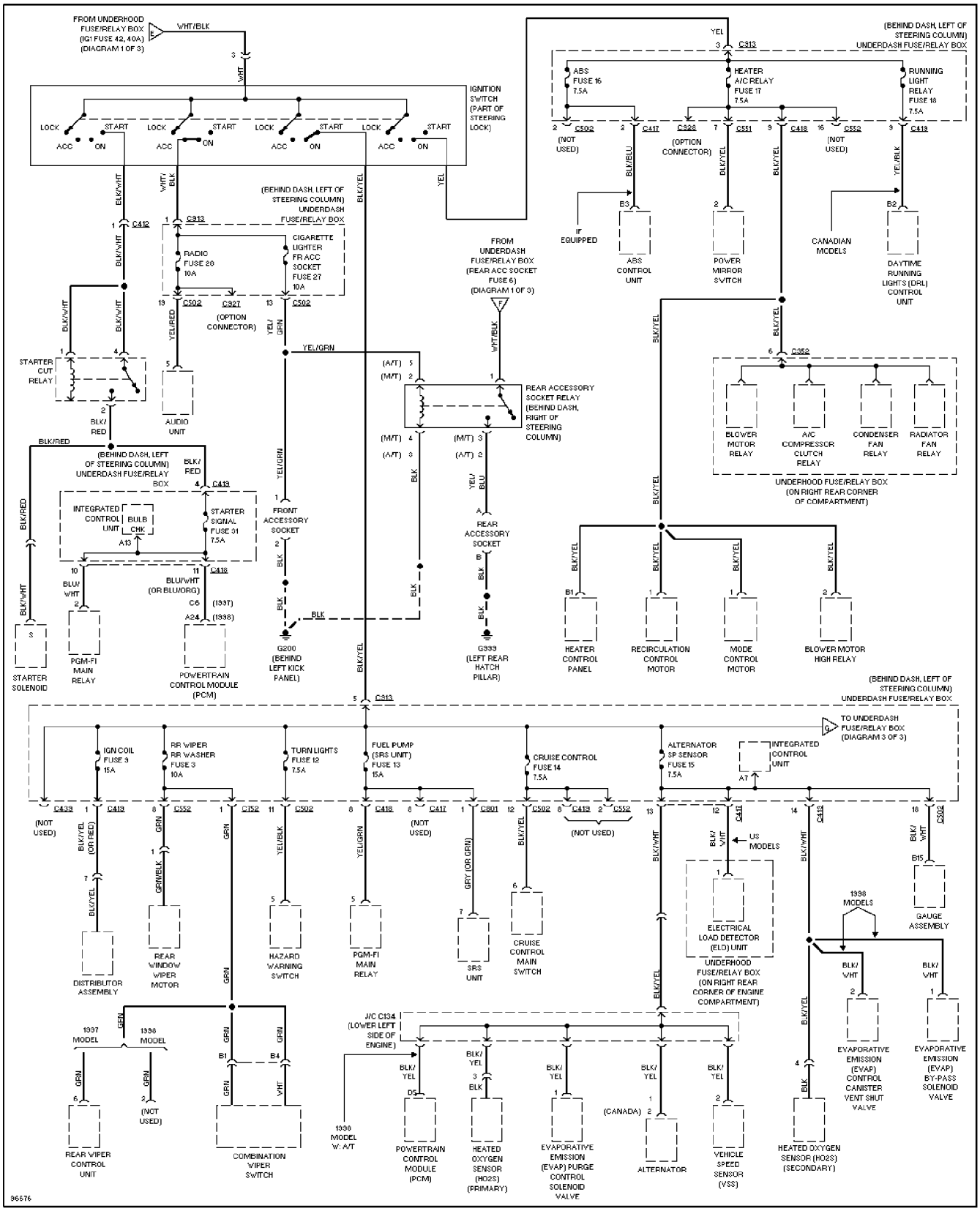

SYSTEM WIRING DIAGRAMS
Power Distribution Circuit (3 of 3)
1997 Honda CR-V

For DIAKOM-AUTO http://www.diakom.ru Taganrog support@diakom.ru (8634)315187
Copyright © 1998 Mitchell Repair Information Company, LLC
Saturday, December 23, 2000 05:43PM

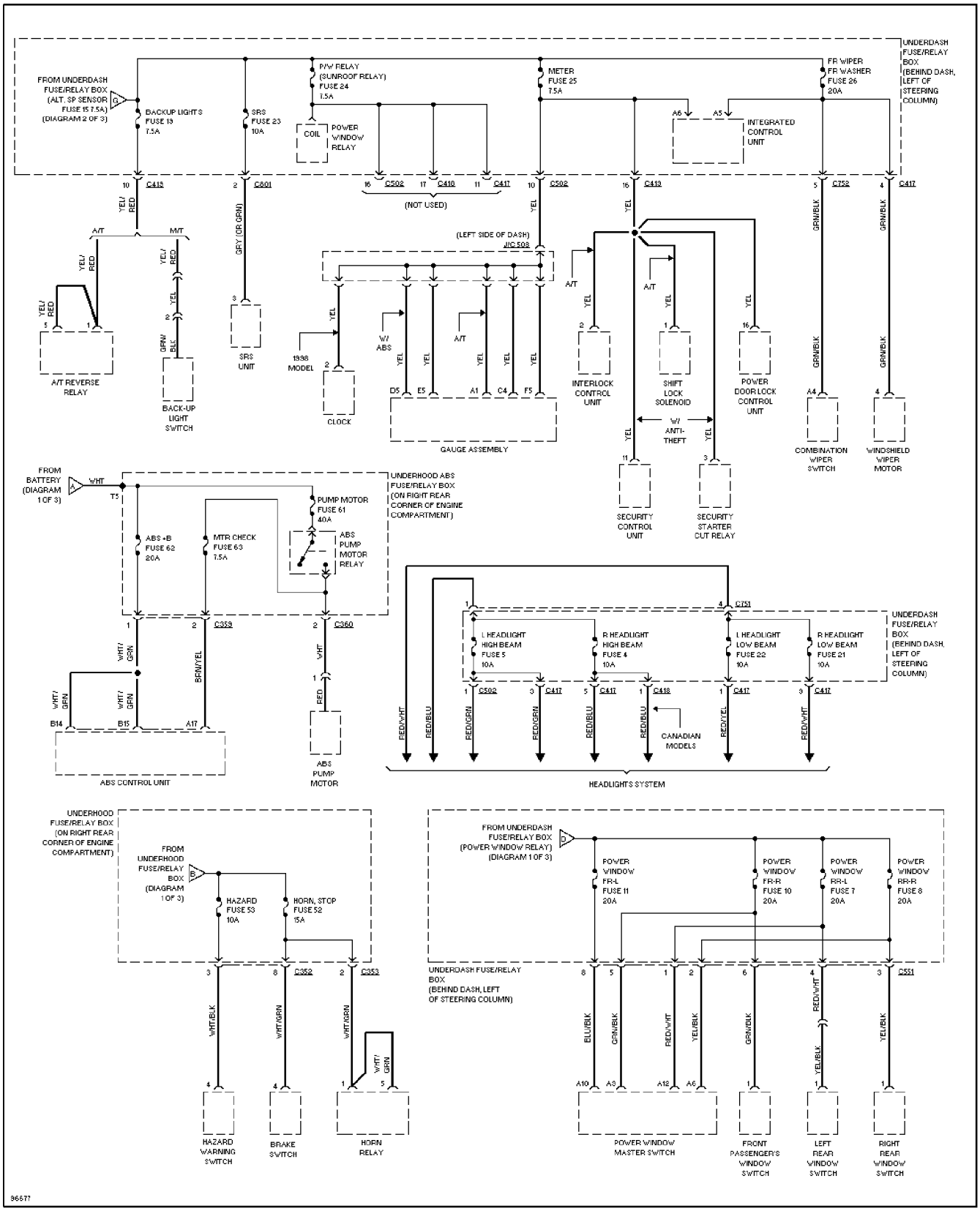

SYSTEM WIRING DIAGRAMS
Power Door Lock Circuit
1997 Honda CR-V

For DIAKOM-AUTO http://www.diakom.ru Taganrog support@diakom.ru (8634)315187
Copyright © 1998 Mitchell Repair Information Company, LLC
Saturday, December 23, 2000 05:43PM

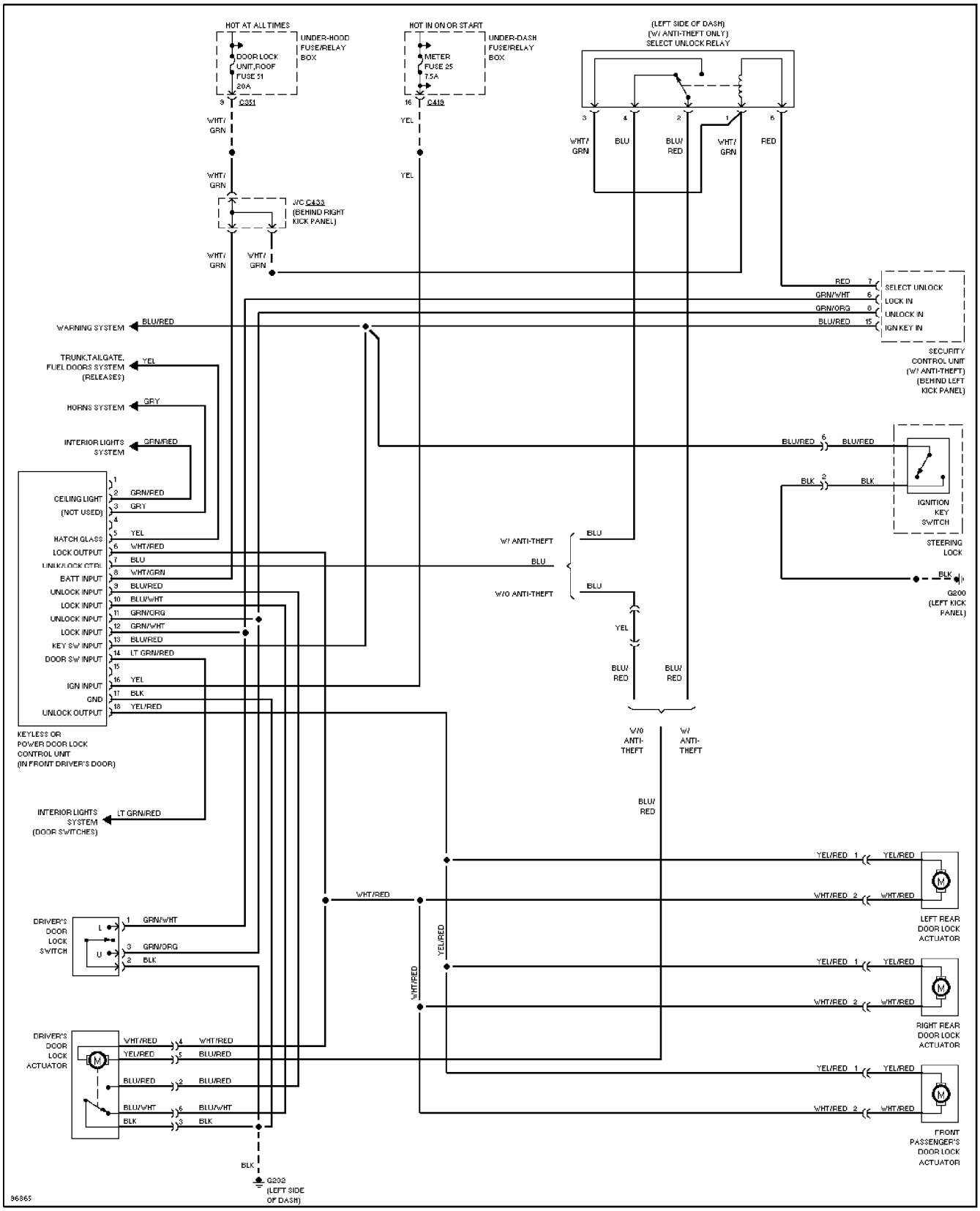

SYSTEM WIRING DIAGRAMS
Power Mirror Circuit
1997 Honda CR-V

For DIAKOM-AUTO http://www.diakom.ru Taganrog support@diakom.ru (8634)315187
Copyright © 1998 Mitchell Repair Information Company, LLC
Saturday, December 23, 2000 05:43PM

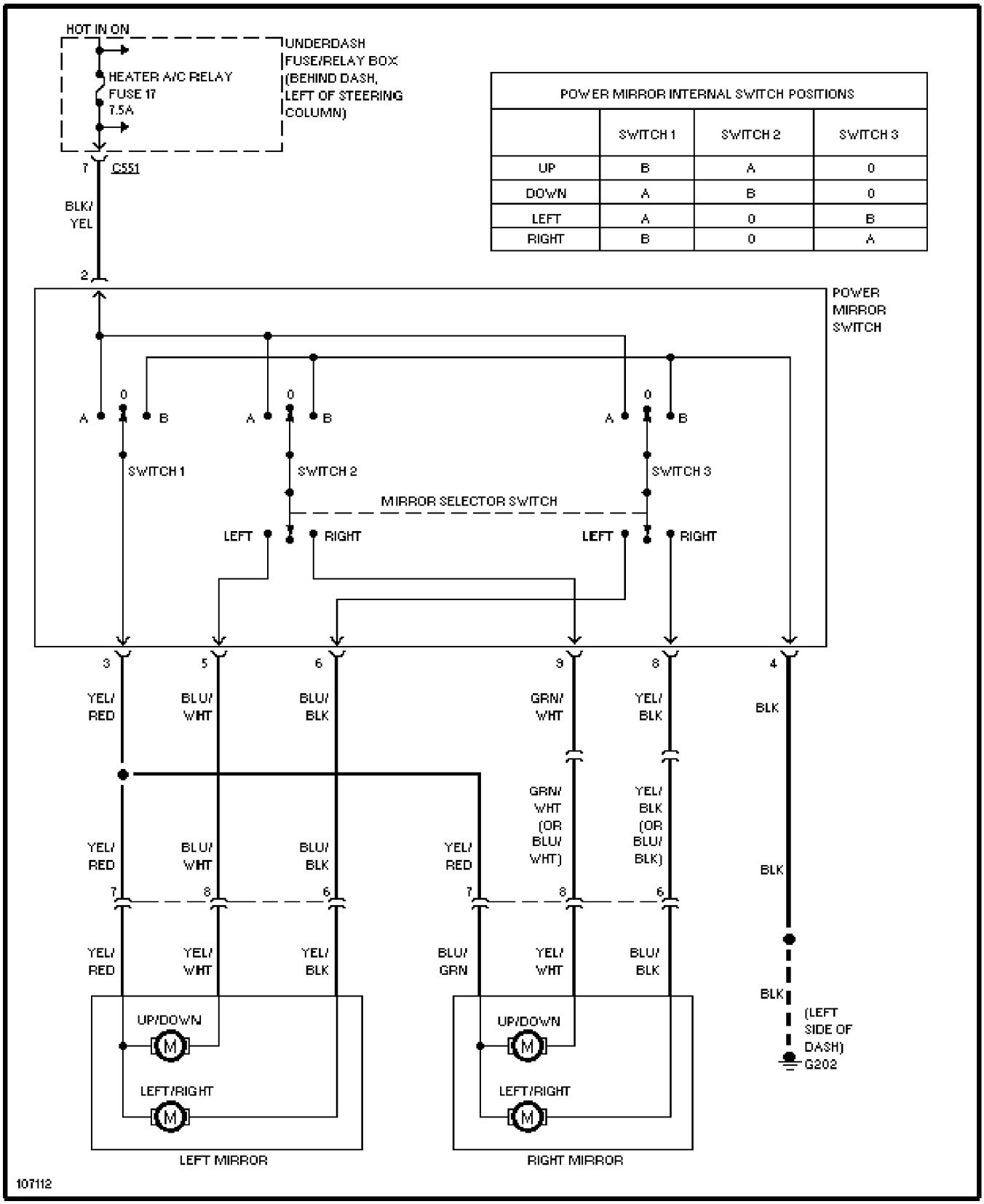

POWER MIRROR INTERNAL SWITCH POSITIONS			
	SWITCH 1	SWITCH 2	SWITCH 3
UP	B	A	0
DOWN	A	B	0
LEFT	A	0	B
RIGHT	B	0	A

SYSTEM WIRING DIAGRAMS
Power Window Circuit (1 of 2)
1997 Honda CR-V

For DIAKOM-AUTO http://www.diakom.ru Taganrog support@diakom.ru (8634)315187
Copyright © 1998 Mitchell Repair Information Company, LLC
Saturday, December 23, 2000 05:43PM

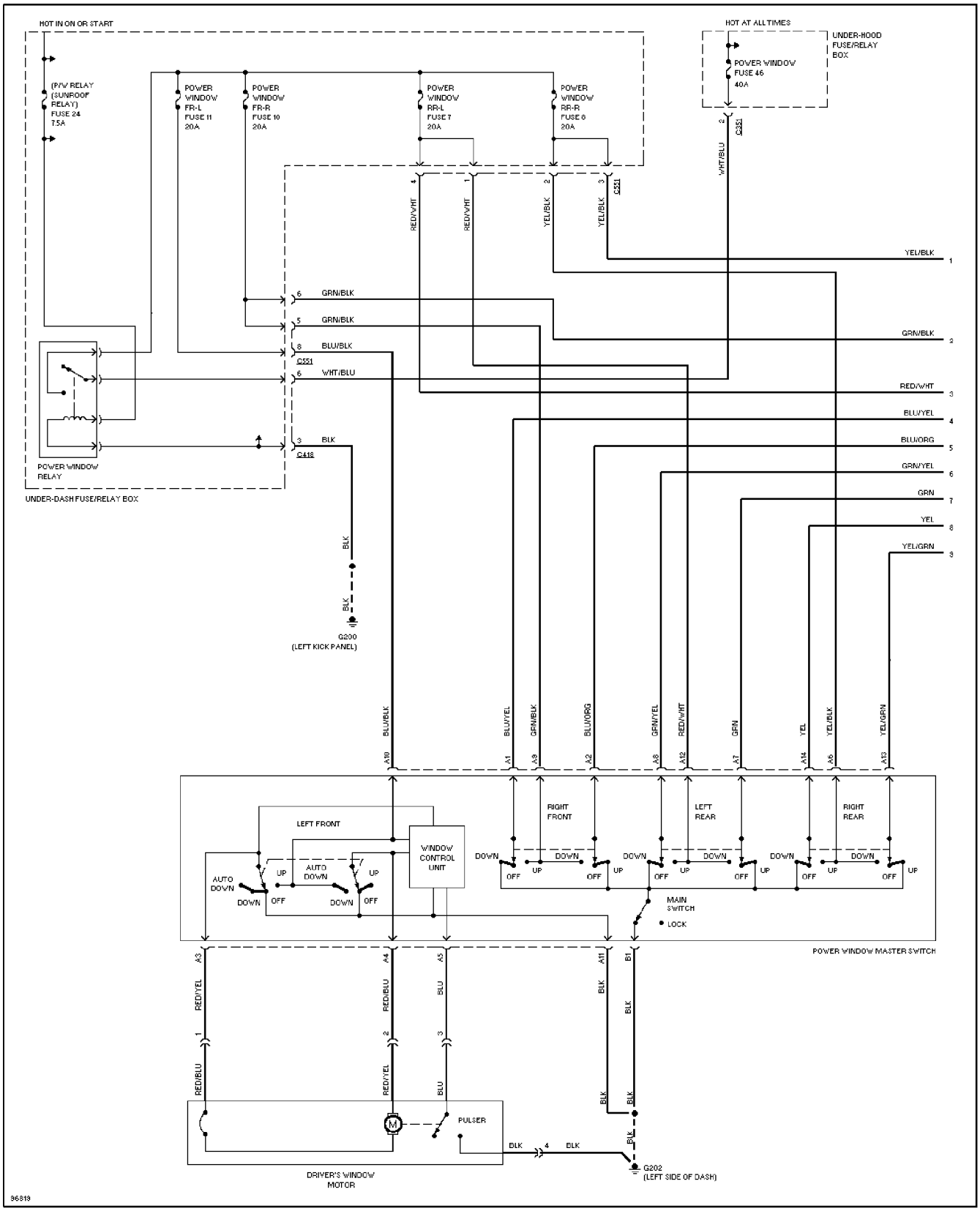

SYSTEM WIRING DIAGRAMS
Power Window Circuit (2 of 2)
1997 Honda CR-V

For DIAKOM-AUTO http://www.diakom.ru Taganrog support@diakom.ru (8634)315187
Copyright © 1998 Mitchell Repair Information Company, LLC
Saturday, December 23, 2000 05:43PM

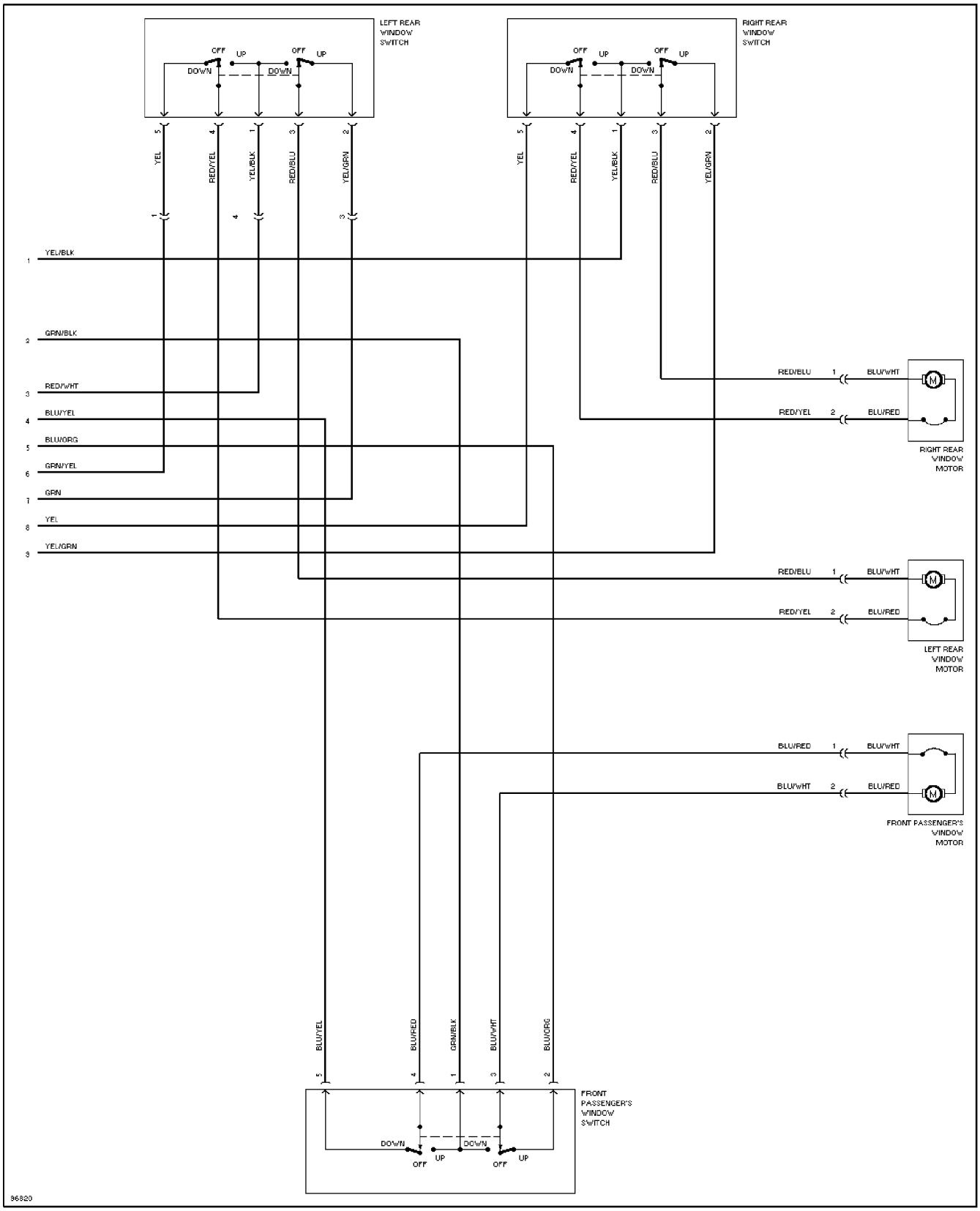

SYSTEM WIRING DIAGRAMS
Shift Interlock Circuit
1997 Honda CR-V

For DIAKOM-AUTO http://www.diakom.ru Taganrog support@diakom.ru (8634)315187
Copyright © 1998 Mitchell Repair Information Company, LLC
Saturday, December 23, 2000 05:43PM

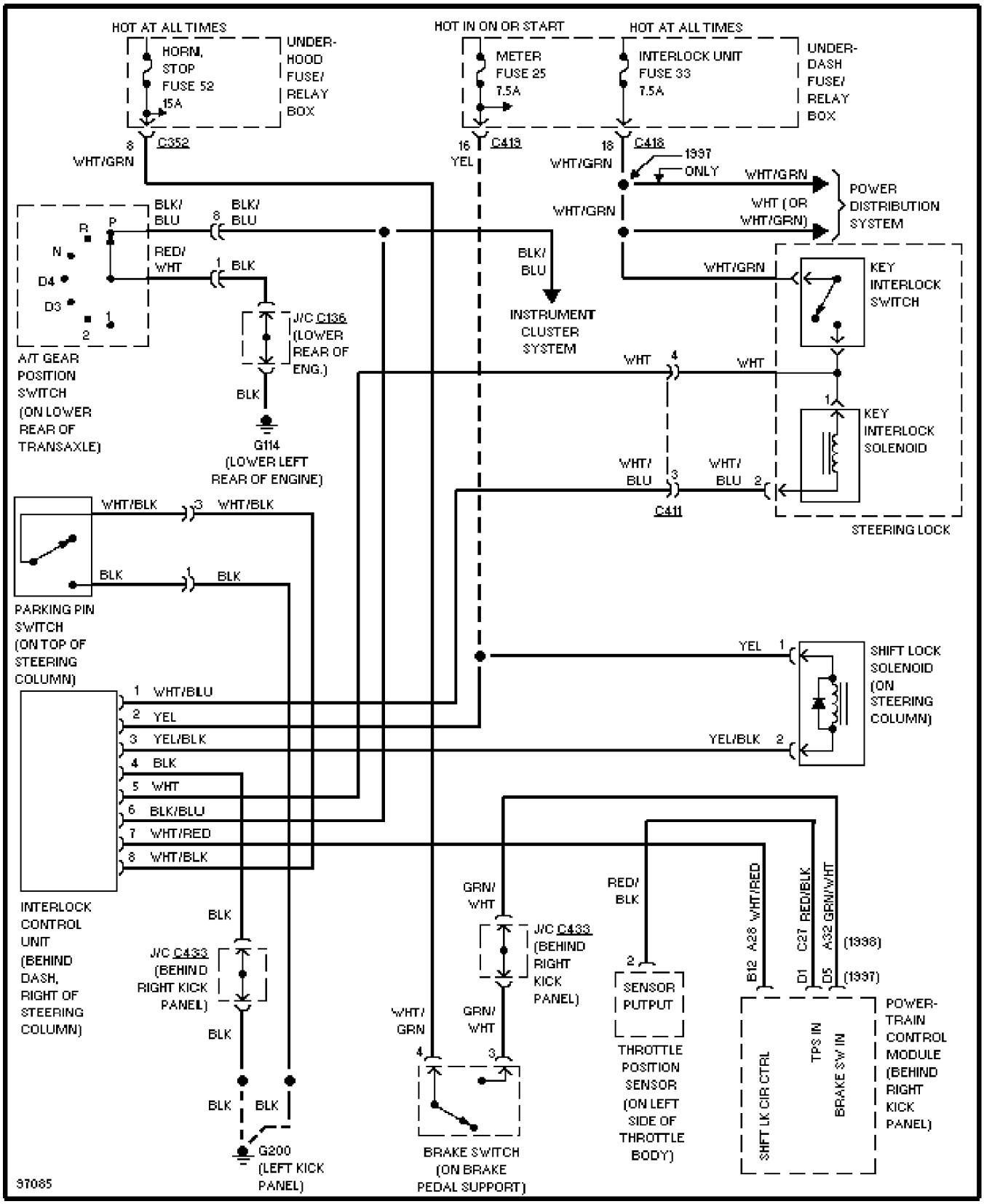

SYSTEM WIRING DIAGRAMS
Charging Circuit
1997 Honda CR-V

For DIAKOM-AUTO http://www.diakom.ru Taganrog support@diakom.ru (8634)315187

Copyright © 1998 Mitchell Repair Information Company, LLC

Saturday, December 23, 2000 05:44PM

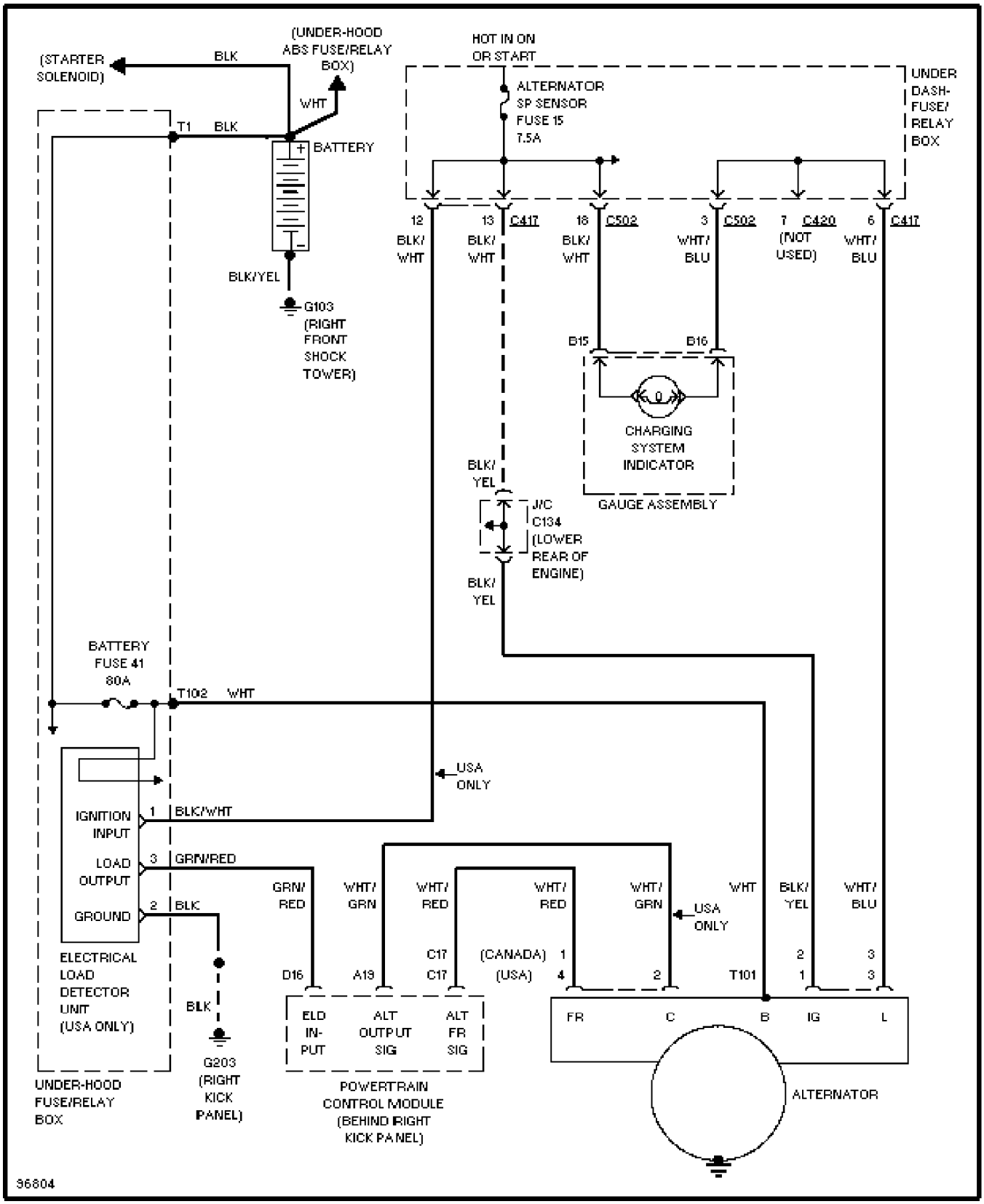

SYSTEM WIRING DIAGRAMS
Starting Circuit, W/ Anti-theft
1997 Honda CR-V

For DIAKOM-AUTO http://www.diakom.ru Taganrog support@diakom.ru (8634)315187

Copyright © 1998 Mitchell Repair Information Company, LLC

Saturday, December 23, 2000 05:44PM

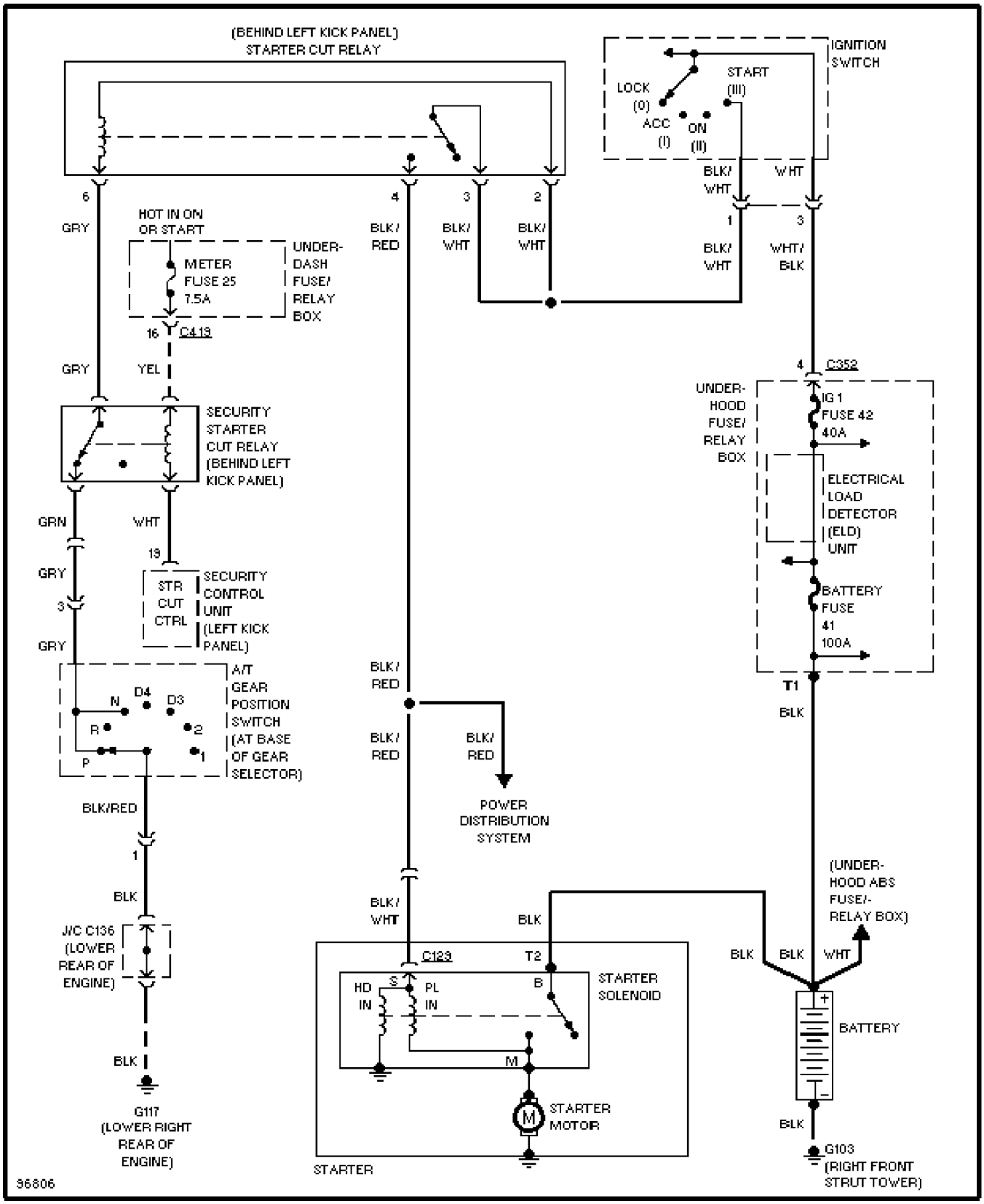

SYSTEM WIRING DIAGRAMS
Starting Circuit, W/O Anti-theft
1997 Honda CR-V

For DIAKOM-AUTO http://www.diakom.ru Taganrog support@diakom.ru (8634)315187

Copyright © 1998 Mitchell Repair Information Company, LLC

Saturday, December 23, 2000 05:44PM

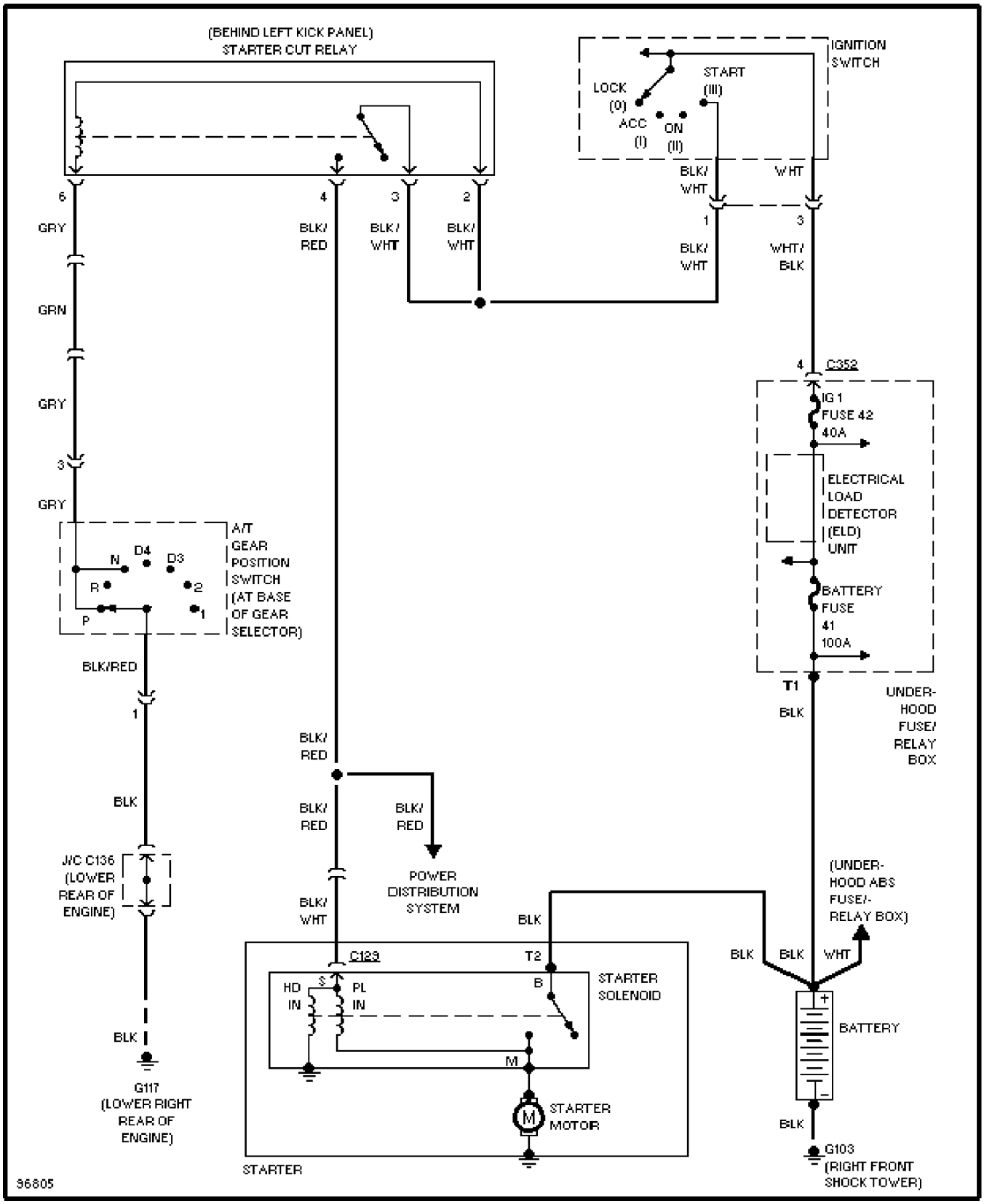

SYSTEM WIRING DIAGRAMS
Supplemental Restraint Circuit
1997 Honda CR-V

For DIAKOM-AUTO http://www.diakom.ru Taganrog support@diakom.ru (8634)315187
Copyright © 1998 Mitchell Repair Information Company, LLC
Saturday, December 23, 2000 05:44PM

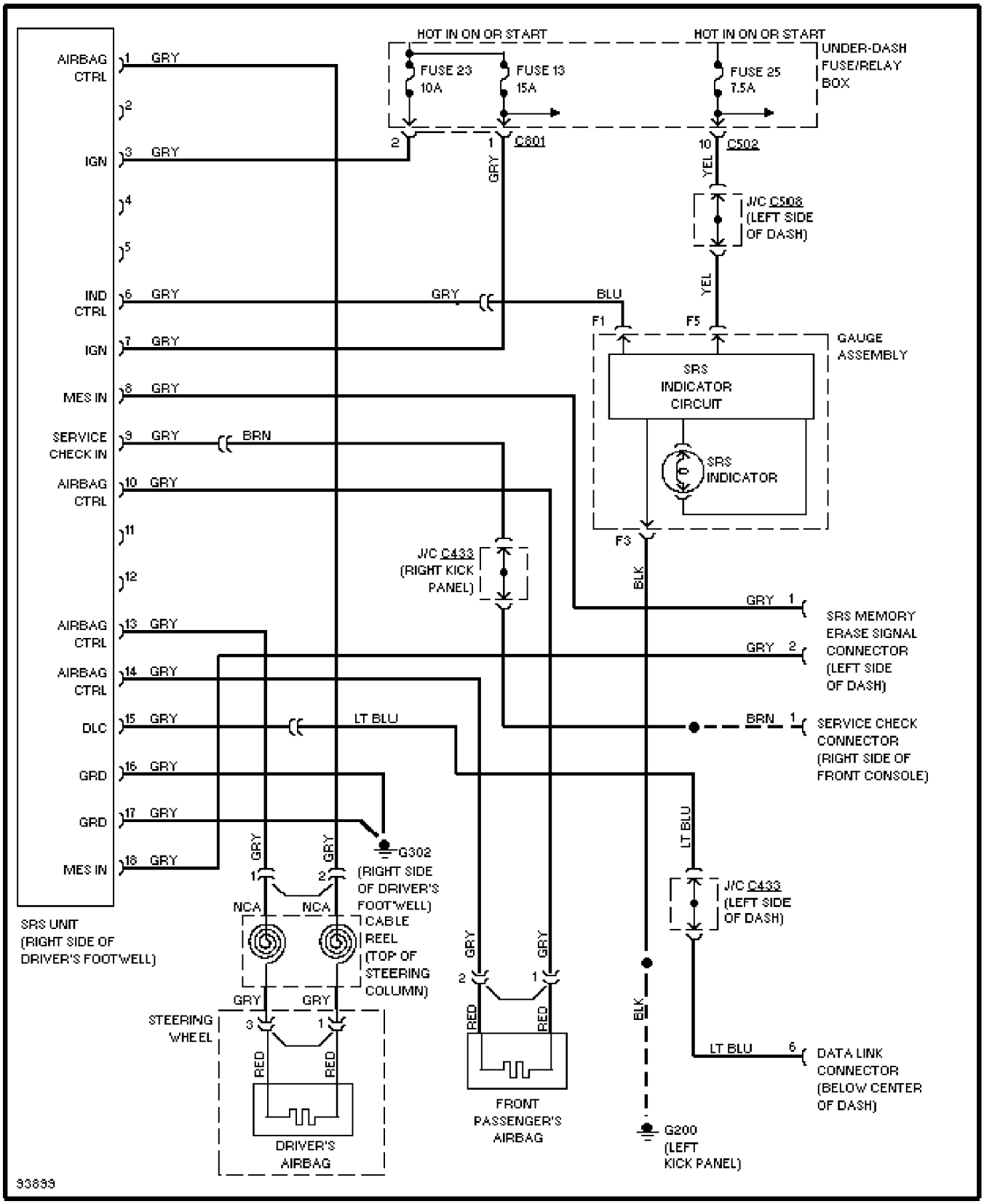

SYSTEM WIRING DIAGRAMS
A/T Circuit
1997 Honda CR-V

For DIAKOM-AUTO http://www.diakom.ru Taganrog support@diakom.ru (8634)315187
Copyright © 1998 Mitchell Repair Information Company, LLC
Saturday, December 23, 2000 05:44PM

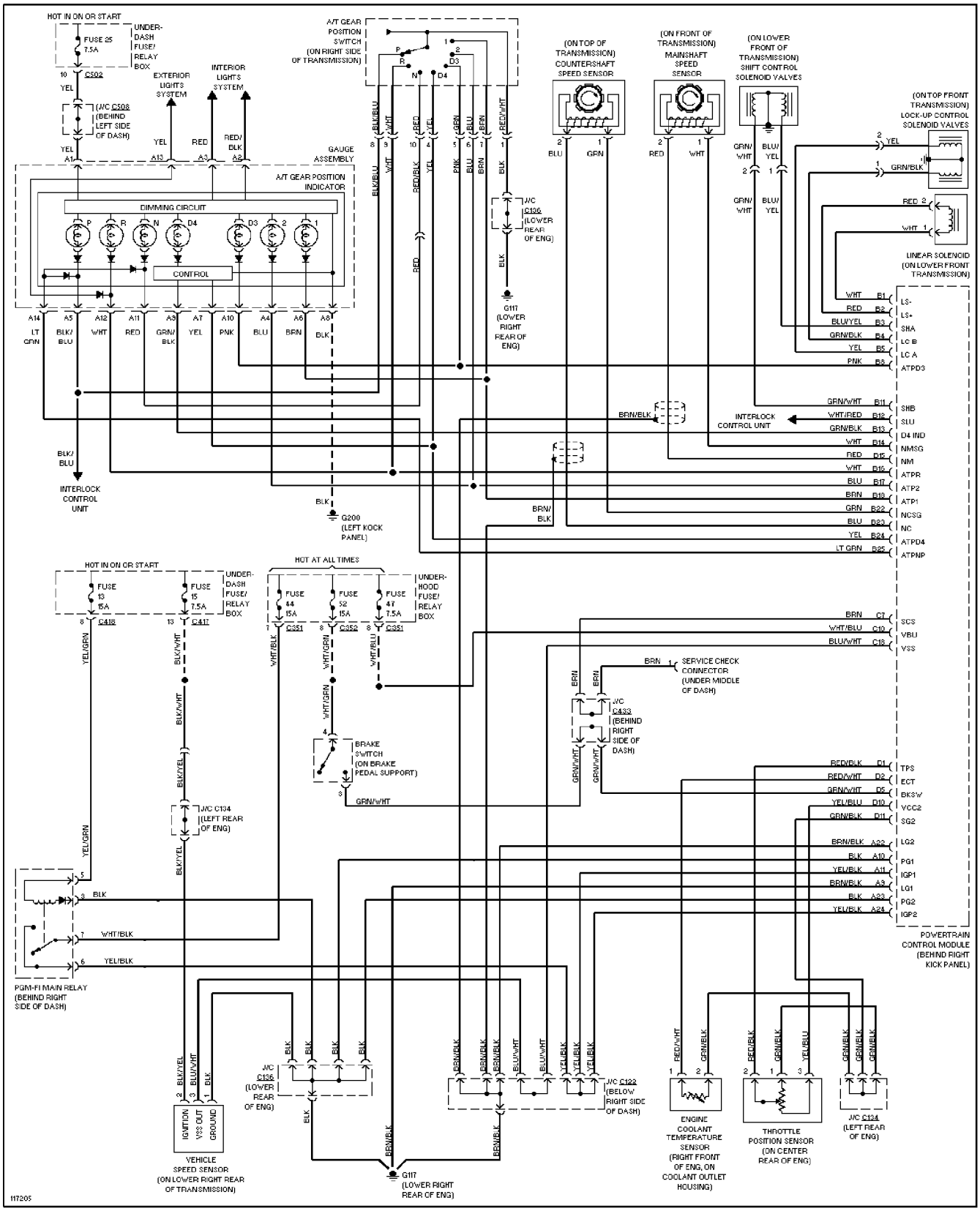

SYSTEM WIRING DIAGRAMS
Liftglass Release Circuit, W/ Security
1997 Honda CR-V

For DIAKOM-AUTO http://www.diakom.ru Taganrog support@diakom.ru (8634)315187
Copyright © 1998 Mitchell Repair Information Company, LLC
Saturday, December 23, 2000 05:44PM

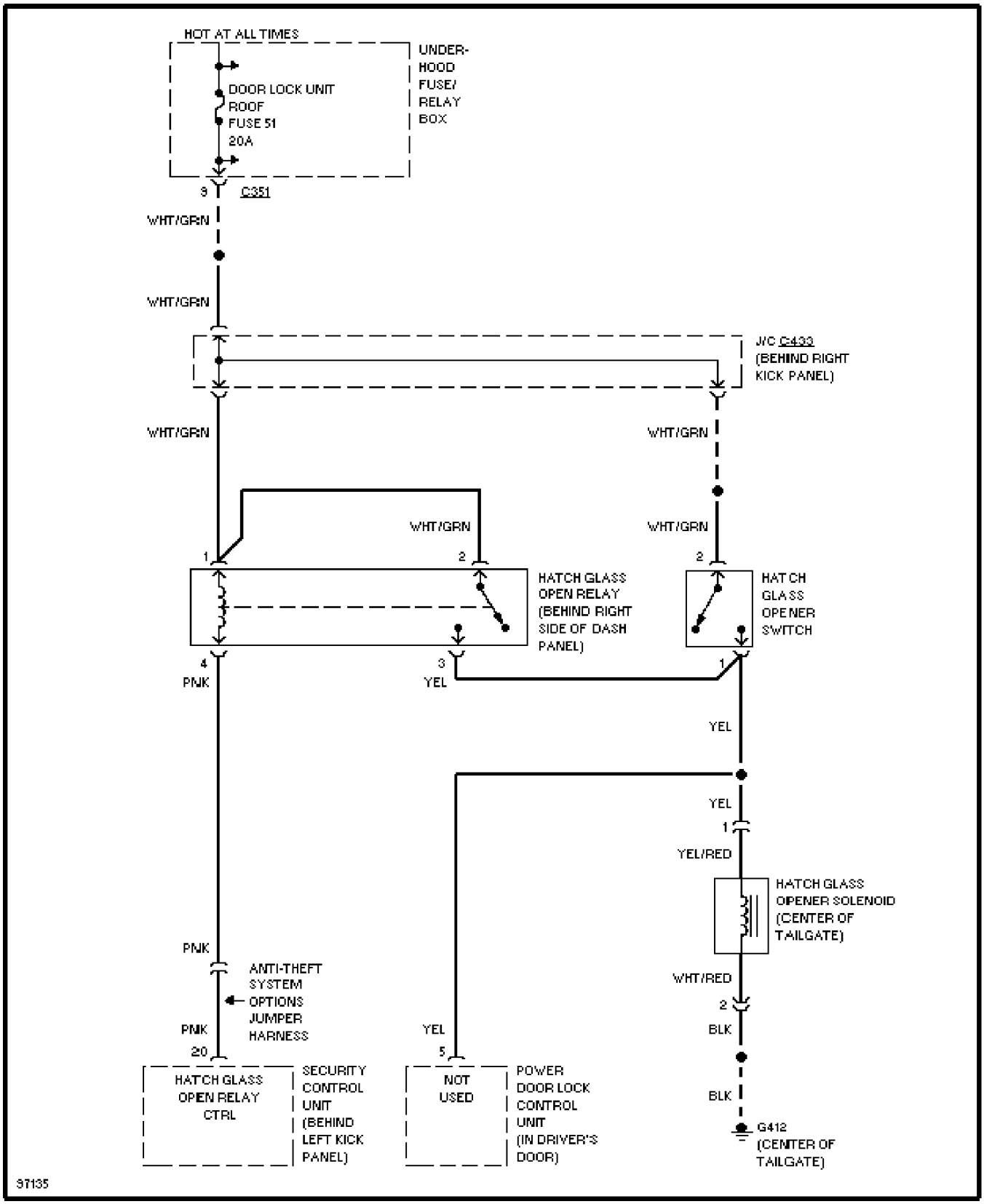

SYSTEM WIRING DIAGRAMS
Liftglass Release Circuit, W/O Security
1997 Honda CR-V

For DIAKOM-AUTO http://www.diakom.ru Taganrog support@diakom.ru (8634)315187
Copyright © 1998 Mitchell Repair Information Company, LLC
Saturday, December 23, 2000 05:45PM

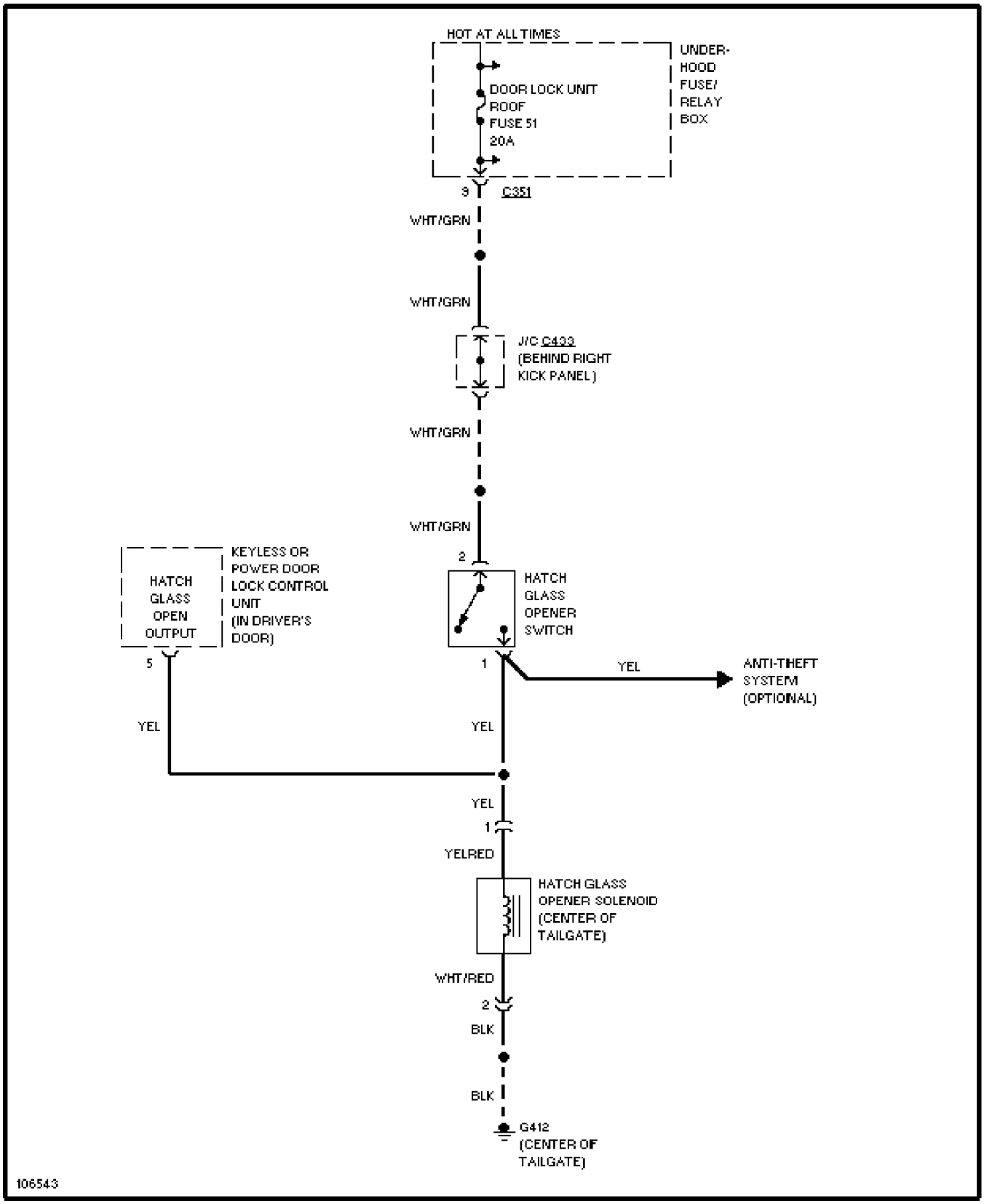

SYSTEM WIRING DIAGRAMS
Warning System Circuits
1997 Honda CR-V

For DIAKOM-AUTO http://www.diakom.ru Taganrog support@diakom.ru (8634)315187
Copyright © 1998 Mitchell Repair Information Company, LLC
Saturday, December 23, 2000 05:45PM

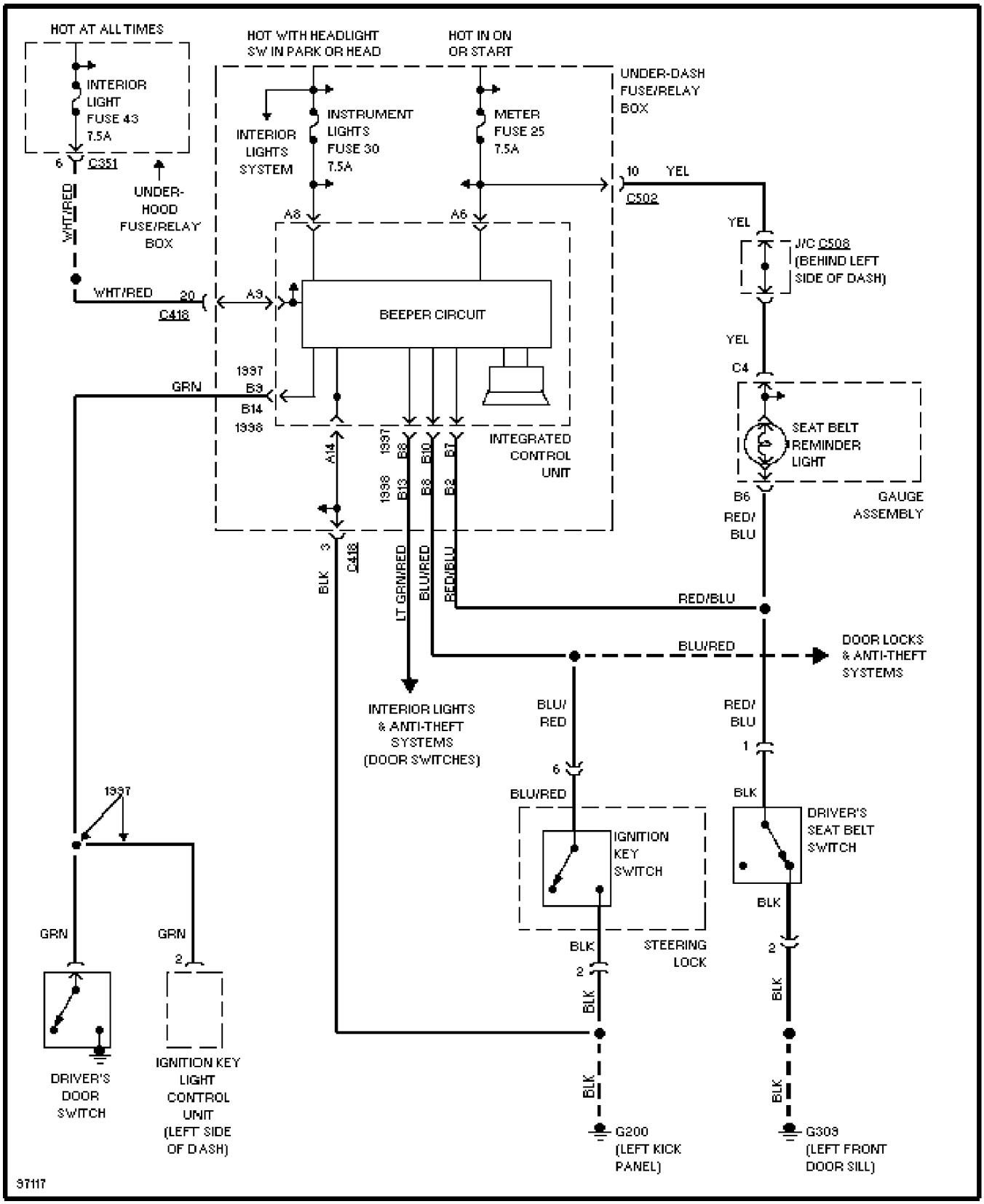

SYSTEM WIRING DIAGRAMS
Front Wiper/Washer Circuit
1997 Honda CR-V

For DIAKOM-AUTO http://www.diakom.ru Taganrog support@diakom.ru (8634)315187
Copyright © 1998 Mitchell Repair Information Company, LLC
Saturday, December 23, 2000 05:45PM

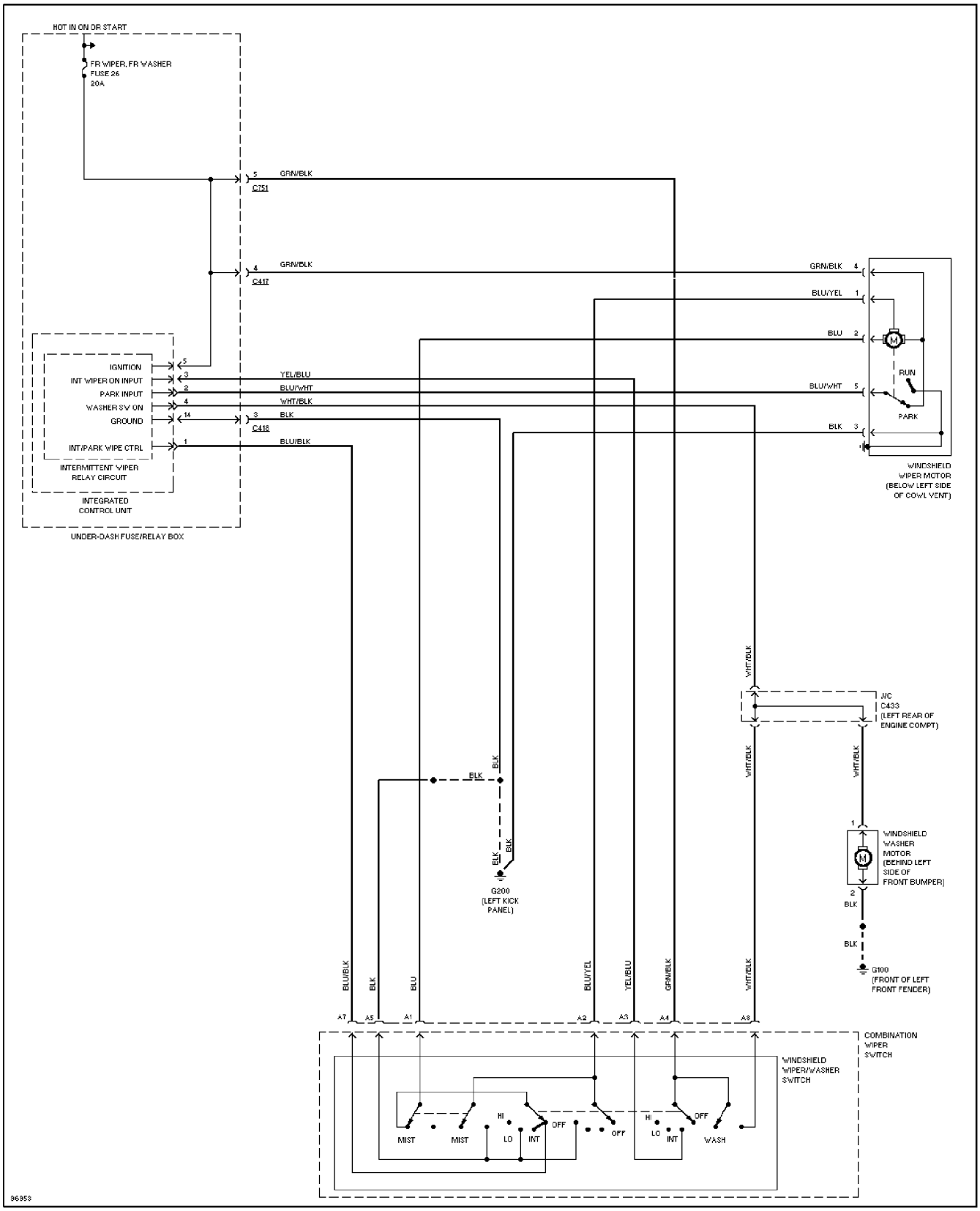

SYSTEM WIRING DIAGRAMS
Rear Wiper/Washer Circuit
1997 Honda CR-V

For DIAKOM-AUTO http://www.diakom.ru Taganrog support@diakom.ru (8634)315187

Copyright © 1998 Mitchell Repair Information Company, LLC
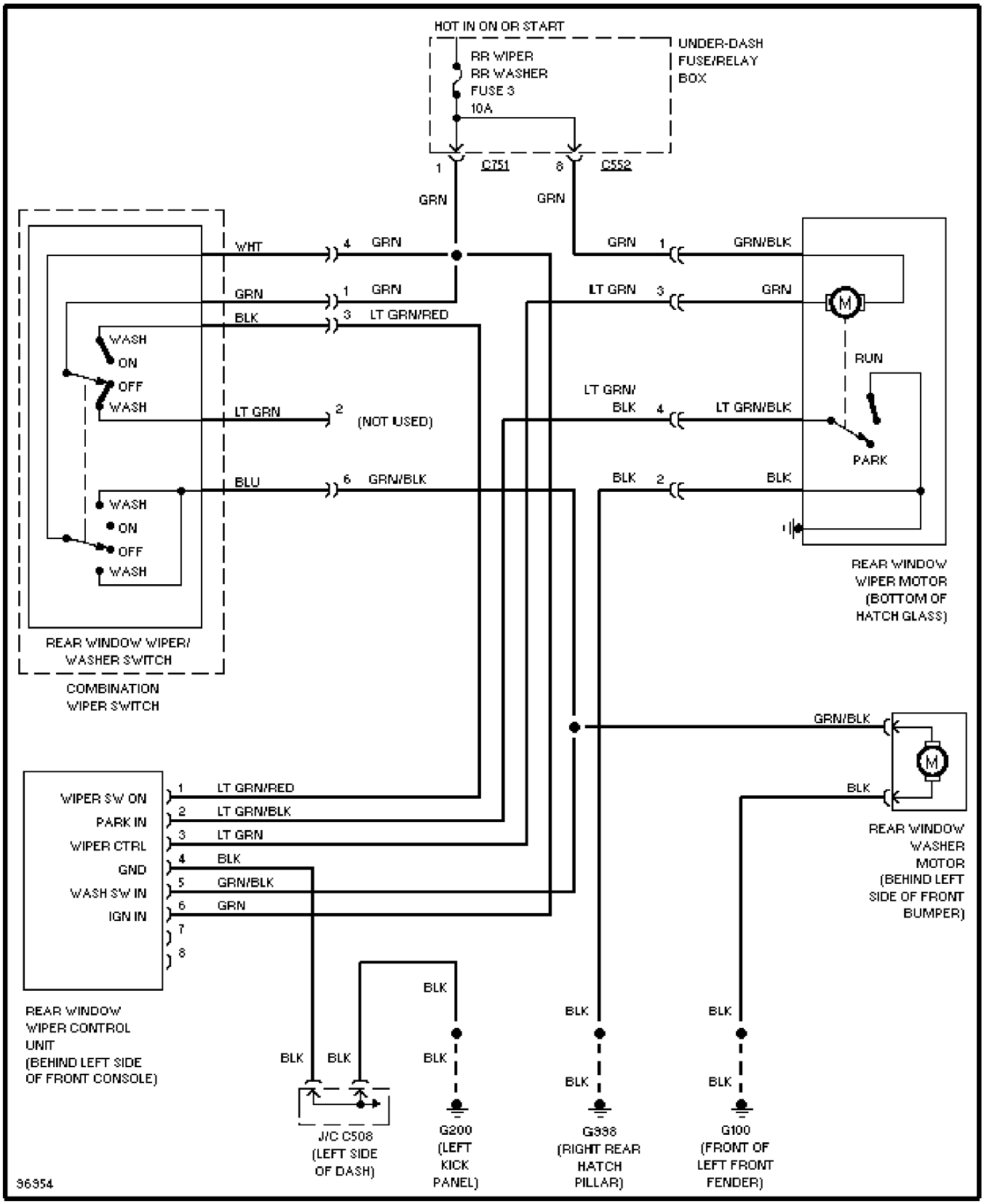
Saturday, December 23, 2000 05:45PM