Table of Contents

E70 Vertical Dynamics Systems

Subject Page

History of Vertical Dynamics 5
EDC 5
System Description 5
EHC 6
ARS 7
Adaptive Drive 8
What is "Adaptive Drive"? 8
General Information 8

System Overview 11
Active Roll Stabilization (ARS) 11
ARS Bus Overview 11
ARS System Circuit Diagram 12
ARS Components 13
Vertical Dynamics Control (VDC) 14
VDC Bus Overview 14
VDC System Circuit Diagram 16
Legend for VDC System Circuit Diagram 17
VDC Components 18
Ride Height Sensor Location 19
Electronic Height Control (EHC) 20
EHC System Diagram 20
EHC Pneumatic Diagram 21
EHC Components 22

System Functions 24
Active Roll Stabilization (ARS) 24
Physical Conditions 24
Affect of the Self-steering Behavior 26
1. Identical stabilizing torque on both axles 26
2. Larger stabilizing torque on the front axle 26
System Dynamics 28
Comparison between the conventional stabilizer bar and the active stabilizer bar 28

cardiagn.com

Subject Page

Operating States 29
Straight-ahead Travel 29
Cornering 29
Restricted Function 29
Hydraulic Circuit, Normal Function 30
Hydraulic Circuit, Fail-safe Function 31
Vertical Dynamics Control (VDC) 32
General Information 32
Objectives of the VDC System 34
System Network 35
Electronic Height Control (EHC) 36
Air Spring Functions 36
Control Modes with Single-axle Air Suspension 36
Sleep-mode 36
Post-mode 37
Pre-mode 37
Normal mode 37
Tilt_Switch 38
Drive Mode 38
Kerb (Curb) 38
Curve 39
Lift 39
Special Modes (Belt) 39
Functional Principle 40
Initialization/reset Behavior: 40
Control Sequence 40
Safety Concept 41

System Components 42
ARS Components 42
ARS Control Unit 42
ARS Control Unit Inputs 43
ARS Control Unit Outputs 43
Lateral Acceleration Sensor 44
Active anti-roll Bar 46
Function of Pressure Relief Valves 47
Operating Principle of Oscillating Motors 48
Front Axle Anti-roll Bar 49
Rear Axle Anti-roll Bar 50
Hydraulic Valve Block 51
Pressure Control Valves 52
Directional Valve 53
Failsafe Valve 53
Switch-position Recognition Sensor 53

cardiagn.com

Subject Page

Front-axle/Rear-axle Pressure Sensors 53
Tandem Pump 54
Radial Piston Pump (part of the tandem pump) 55
Vane-cell Pump (part of the tandem pump) 55
Fluid Reservoir 56
Fluid Level Sensor 57
Hydraulic-fluid Cooler 57
VDC Components 58
VDM Control Unit 58
Control Strategy 58
Display Control 59
Degradation Behavior in the Event of a Fault 60
Diagnostic Functions 60
EDC Satellite Control (with damper) 61
EDC Satellite Control Unit 61
Twin-tube Gas Pressure Damper 62
Ride-height Sensor 63
EHC Components 66
EHC Control Unit 66
Air Supply Unit (LVA) 67
Air Suspension 68
Ride-height Sensor 68

Service Information 71
Steering Angle Calibration 71
ARS Initialization 71
ARS Bleeding Procedure 72

Diagnostics 73
Programming 76
Coding 76

cardiagn.com

Vertical Dynamics Systems

Model: E70

Production: From Start of Production

OBJECTIVES

After completion of this module you will be able to:

- Describe the differences between EDC and VDC
- Locate and Identify VDC and ARS components

cardiagn.com

History of Vertical Dynamics

If we were to break down the common dynamic driving systems of today into the three coordinate axes by their principle of operation and assign them according to their function, BMW vehicles would have three different systems that would belong to the vertical dynamics systems.

Vertical dynamics systems (effective direction mainly along the z-axis or vertical axis)

- VDC/EDC - Vertical Dynamics Control (Electronic Damper Control)
- EHC - Electronic Height Control
- ARS - Active Roll Stabilization (or Dynamic Drive)

EDC

An EDC was first fitted to a BMW in 1987, in the BMW E30 M3. EDC I was first fitted in series production in 1987 in the E32 (7 Series, 750i), which was based on the premise of manual toggling between a comfort and sports suspension setting.

EDC II was then introduced in the E24 (6 Series). Even at this early stage of development, EDC functioned with characteristic curve mapping.

Then in 1990, EDC III was fitted in the series production of the E31, E38 and E39. A modified form of this system, EDC-K, was also later to be found in the E65.

System Description

Chassis designs should be able to offer the driver (and occupants) the best possible standards in driving comfort, a very high level of driving safety, high agility and easy handling.

Conventional, non-adjustable vibration dampers are only able to achieve a compromise between these objectives.

The electronically controlled damper system was developed to practically eliminate this conflict of objectives.

BMW EDC-K is a fully-automatic system that continually adjusts the damper settings to the current driving situation.

cardiagn.com

The fundamental difference between EDC-K and EDC III is the design of the EDC valves and their control logic. EDC-K thus improves driving comfort without impairing driving safety. If the damper settings are too soft or comfortable, the vehicle will quickly begin to vibrate on unfavorable road conditions.

EDC-K remains in the soft damper setting for as long as possible and only changes immediately to the harder setting when the road situation requires it.

The system also guarantees consistently good vibration damping characteristics however the vehicle is laden. In addition, all vehicle movements which have an effect on vehicle handling are monitored constantly by sensors. All measurement results are analyzed by a microprocessor and appropriate control commands are transferred to the dampers.

The damping force at the damper is adjusted by solenoid valves with infinite variability in line with the changing road surface conditions, load status and handling characteristics.

EHC

It all began for BMW with level control systems, which were available for the 7 Series (E23/E32), 6 Series (E24) and 5 Series (E28) as option or, in some vehicles, as part of the standard equipment.

A distinction was made between:

- Hydro-pneumatic suspension
- Self-levelling suspension with electrohydraulic pump
- Self-levelling suspension with engine driven piston pump
- Single-axle air suspension
- Twin-axle air suspension

The purpose of a level control system is to maintain the height of the vehicle body as close as possible to a predefined level under all load conditions. Through a constant level of the body mainly the driving quality (e.g. camber, toe-in) will remain unaltered in the event of changes in payload.

With the E39, the entire rear-axle load was supported by a single-axle air suspension for the first time. This system was controlled automatically under all operating states and thus did not permit any intervention by the driver.

With the X5 (E53), the single-axle air suspension system was taken from the E39 and adapted accordingly. In addition, E53 customers were given the opportunity to order a twin-axle air suspension system for their vehicle.

The twin-axle air suspension and its scope for adjustment by the driver has particular advantages by comparison with the single axle air suspension, especially as regards off road handling. Lowering the entire body makes it easier to get into and out of the vehicle and facilitates loading and unloading.

cardiagn.com

ARS

The customer-friendly name for the option is "Dynamic Drive" and was first available in the 7 Series with the E65. The Dynamic Drive in the E60 is the same as the Dynamic Drive in the E65.

As the vehicle drives through a bend, a rolling moment builds up about the vehicle's roll axis (x-axis) due to the centrifugal force that acts on the center of gravity of the vehicle. This moment tilts the vehicle body towards the wheel on the outside of the bend, causing the vehicle to rapidly approach its dynamic limits. The tilting of the body and the accompanying shift in wheel load differences are counteracted by the use of anti-roll bars.

- Conventional anti-roll bar - During cornering, the wheel suspension on the outside of the bend is compressed and the wheel suspension on the inside of the bend rebounds. This has a twisting effect on the anti-roll bar (torsion). The forces arising in the bearing points of the anti-roll bar produce a moment that counteracts the tilting of the body. The effect is to improve the distribution of loads acting on both wheels on the same axle.

  A disadvantage of a passive anti-roll bar is that the basic suspension tuning hardens when the suspension is compressed on one side of the vehicle during straight ahead travel. This results in a reduction in comfort.

- Active anti-roll bar - The Dynamic Drive active chassis system also known as Active Roll Stabilization (ARS) - is a revolutionary step in chassis and suspension engineering. For the first time, the trade-off between handling/agility and comfort is largely eliminated. This results in a new type of "driving pleasure" typical of BMW.

  Dynamic Drive has two active anti-roll bars, which have a positive influence on body roll and handling characteristics. The fundamental feature of Dynamic Drive is the divided anti-roll bars on each axle. The two halves of the anti-roll bars are connected by a hydraulic oscillating motor.

  One half of the anti-roll bar is connected to the shaft of the oscillating motor, the other to the housing of the oscillating motor. These active anti-roll bars control stabilizing moments:

  - which reduce the reciprocal movement of the vehicle body,
  - which make it possible to achieve high levels of agility and target precision over the entire road speed range,
  - and produce optimum self-steering characteristics.

During straight-ahead travel, the system improves suspension comfort because the anti-roll bar halves are de-coupled, with the effect that the basic suspension tuning does not additionally harden when the suspension on one side is compressed.

cardiagn.com

Adaptive Drive

What is "Adaptive Drive"?

With the Adaptive Drive option in the E70, Dynamic Drive active roll stabilization (ARS) and the variable damper adjustment (VDC) are functionally linked for the first time.
The integration of both systems provides maximum safety, comfort and agility beyond compare for an SAV (Sports Activity Vehicle).

Adaptive Drive reduces lateral roll of the body, which normally occurs during high-speed cornering or in the event of rapid swerving. Adaptive Drive also reduces the required steering angle and improves ride comfort coupled with an increase in driving dynamics.

The customer can choose between a normal and a sporty basic setting. Adaptive Drive means increased driving pleasure and less tiring driving. Unpleasant pitching and lateral rolling of the body are diminished or eliminated entirely. The self-steering and load transfer characteristics of the vehicle are significantly improved.

The reciprocal movements in the upper part of the body, which are inherent in the design of SAV vehicles, are considerably reduced. The vehicle can be driven with higher levels of precision and agility. The system also contributes to shorter braking distances.

General Information

Due to specific dynamic influences acting on the vehicle while it is in motion, the body is prone to self-movements, which can be divided into and illustrated by three categories.

These degrees of freedom can be defined by basing the categories on the mathematics coordinate system with its three spatial coordinate axes.

- Longitudinal dynamics - The main direction of motion - the direction of travel - is defined by the x - or longitudinal - axis. Longitudinal dynamic driving states, such as acceleration or braking, result in a pitching of the vehicle, which is where the vehicle is subjected to motion about the y axis.
- Lateral dynamics - Lateral dynamics is where the direction of motion is along the y - or lateral - axis, e.g. as a result of steering or swerving, and the vehicle exhibits movement about the x-axis in the form of a rolling motion.
- Vertical dynamics - Vertical dynamics is where the vehicle body moves along the z - or vertical - axis and the raising and lowering of the body, e.g. on bumpy roads, are described as vertical strokes.

  Movement of the vehicle about the z or vertical axis is known as yaw. Movements such as these occur during under or oversteering and are also commonly described as sporty drifting.

cardiagn.com

Coordinate Axes

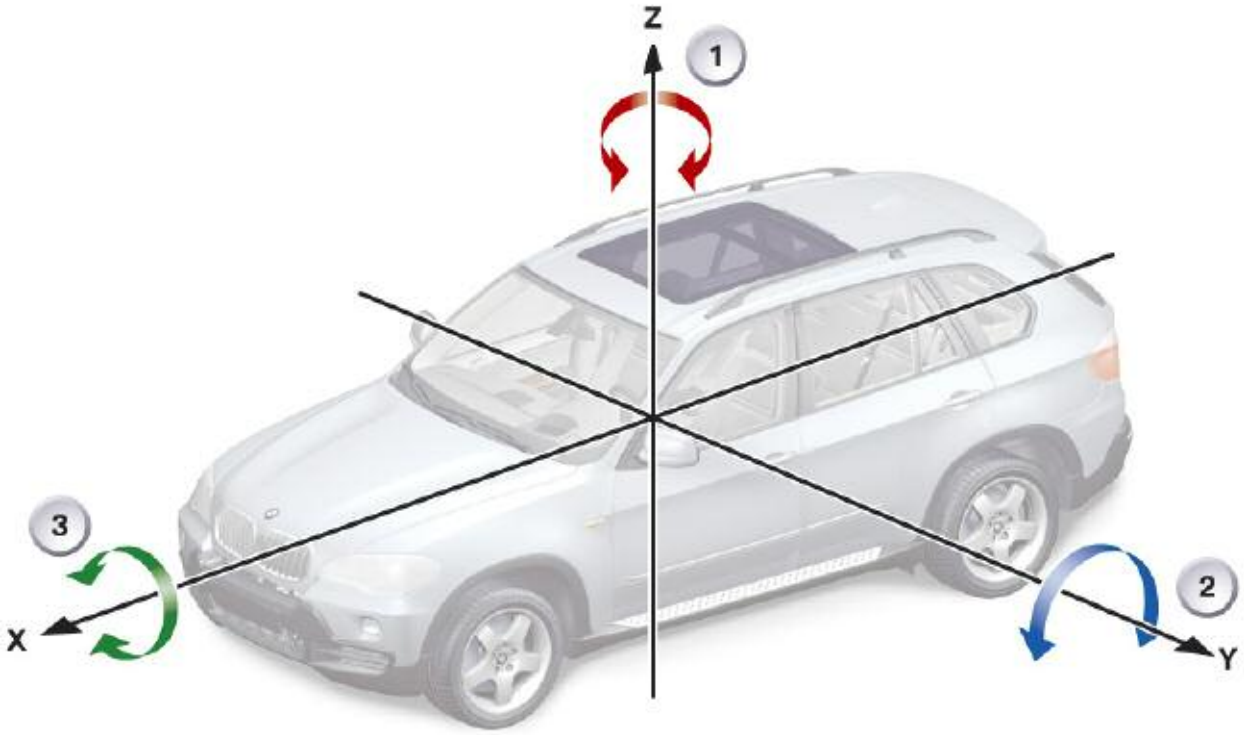

Index	Explanation	Index	Explanation
1	Yawing (about the vertical axis)	3	Rolling (about the longitudinal axis)
2	Pitching (about the vertical axis)		

These basic dynamic driving properties depend, in particular, on the following vehicle dimensions.

cardiagn.com

The position of the center of gravity in a vehicle, its distance from road level, the wheelbase and the track width are decisive parameters in the dynamic driving behavior of a vehicle.

Index	Explanation	Index	Explanation
1	Distance for the center of gravity from the road surface	3	Wheelbase
2	Track width		

cardiagn.com

System Overview

Active Roll Stabilization (ARS)

ARS Bus Overview

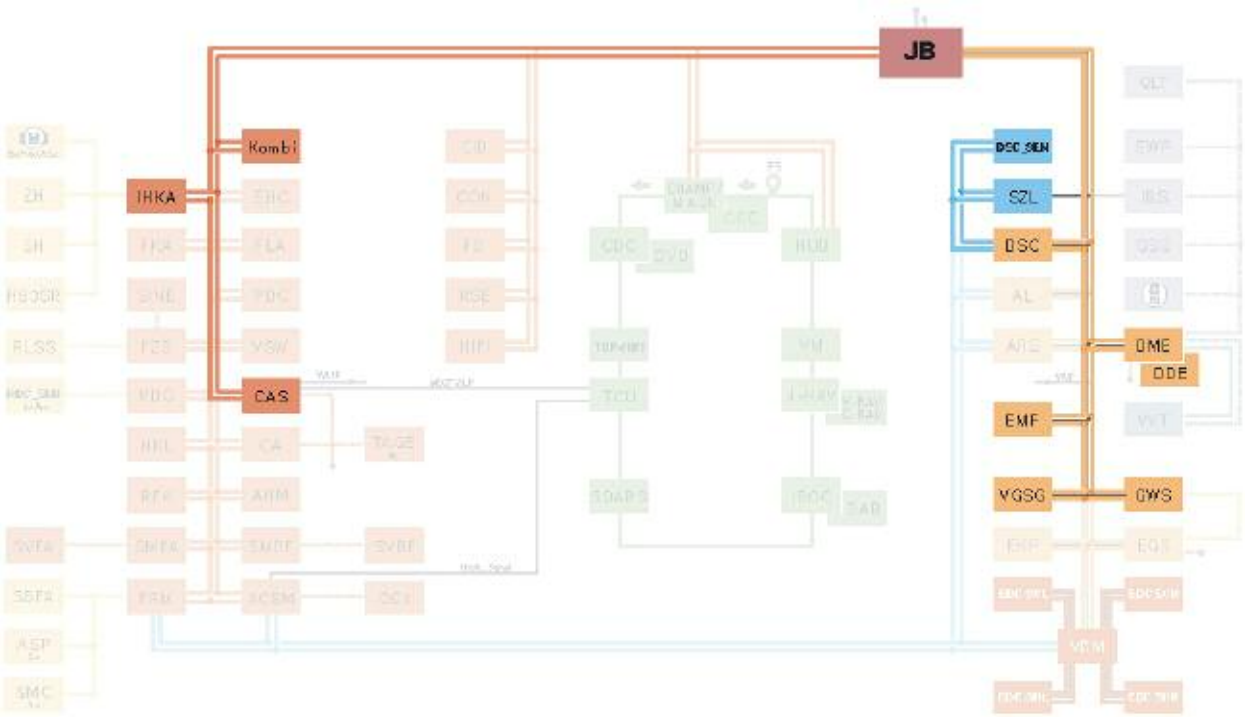

Index	Explanation	Index	Explanation
KOMBI	Instrument cluster	DSC	Dynamic Stability Control
CAS	Car Access System	ARS	Active Roll Stabilization
FRM	Footwell Module	DME	Digital Motor Electronics
JB	Junction box	VDM	Vertical Dynamics Management
DSC_SENS	DSC Sensor	IHKA	Automatic Integrated Heating and A/C
SZL	Steering Column Switch Cluster		

cardiagn.com

ARS System Circuit Diagram

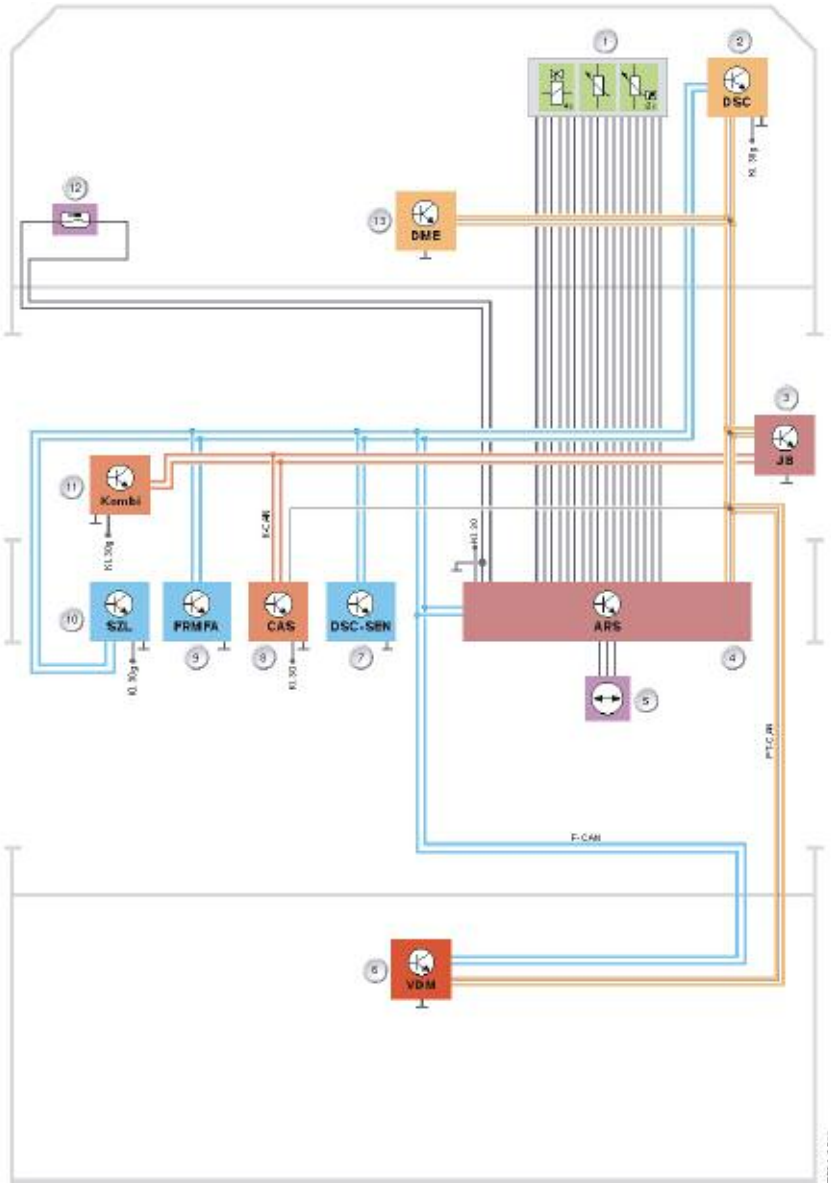

Index	Explanation	Index	Explanation
1	Hydraulic valve block	8	Car Access System
2	Dynamic Stability Control	9	Footwell Module
3	Junction Box (control unit)	10	Steering Wheel Switch Cluster
4	Active Roll Stabilization	11	Kombi
5	Lateral acceleration sensor	12	Hydraulic fluid sensor
6	Vertical Dynamics Management	13	Digital Motor Electronics
7	DSC Sensor		

cardiagn.com

ARS Components

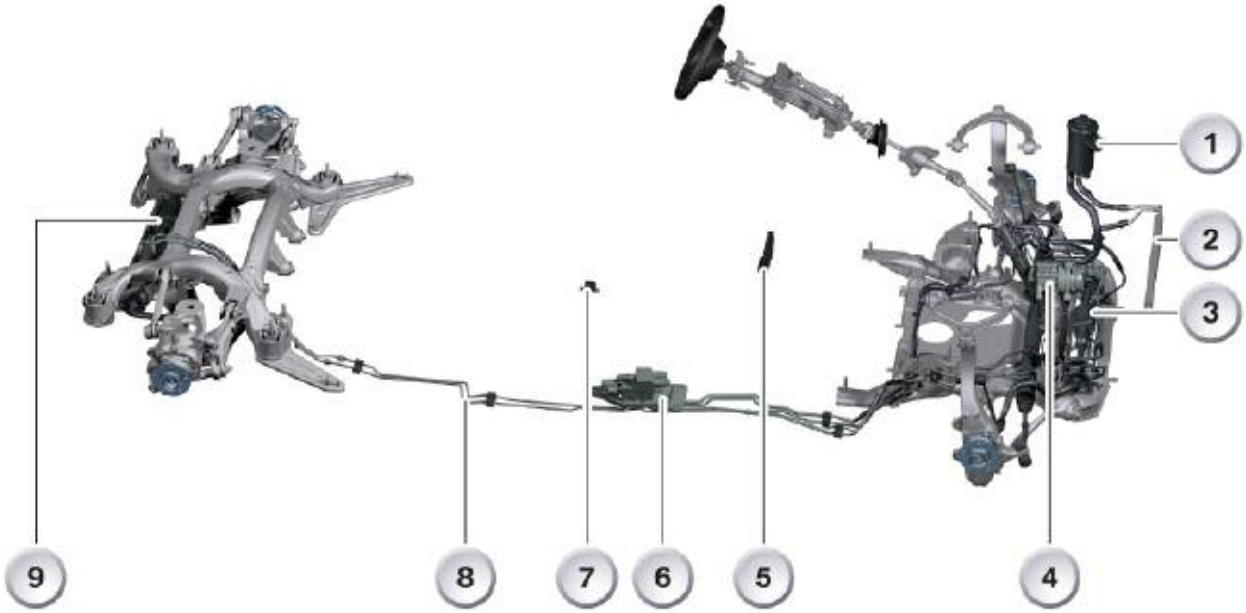

Index	Explanation	Index	Explanation
1	Hydraulic-fluid reservoir	6	Valve block
2	Hydraulic-fluid radiator (cooler)	7	Lateral acceleration sensor
3	Front oscillating motor	8	Hydraulic lines
4	Tandem pump	9	Rear oscillating motor
5	Control unit		

cardiagn.com

Vertical Dynamics Control (VDC)

VDC Bus Overview

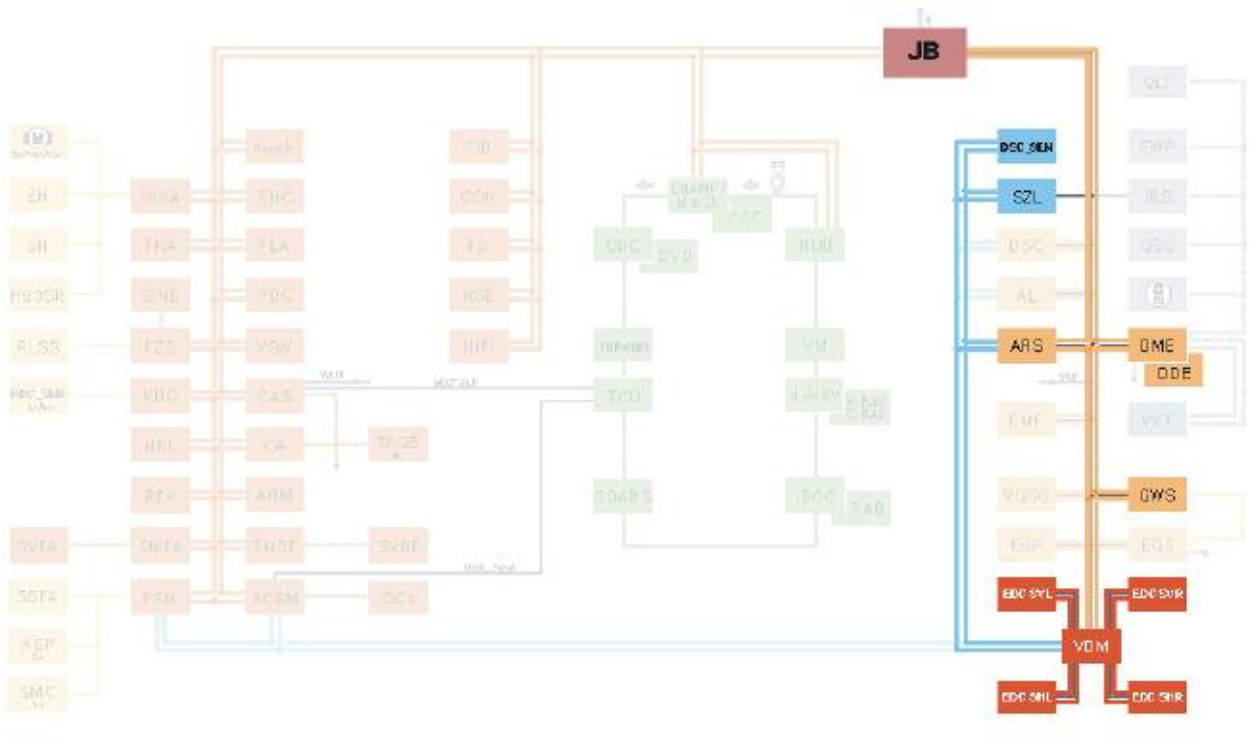

Index	Explanation	Index	Explanation
JB	Junction box	VDM	Vertical Dynamics Management
DSC_SENS	DSC Sensor	EDC SVL	Electronic Damper Control satellite, front left
SZL	Steering Column Switch Cluster	EDC SVR	Electronic Damper Control satellite, front right
ARS	Active Roll Stabilization	EDC SHL	Electronic Damper Control satellite, rear left
DME	Digital Motor Electronics	EDC SHR	Electronic Damper Control satellite, front right
GWS	Gear Selector Switch		

cardiagn.com

NOTES PAGE

cardiagn.com

VDC System Circuit Diagram

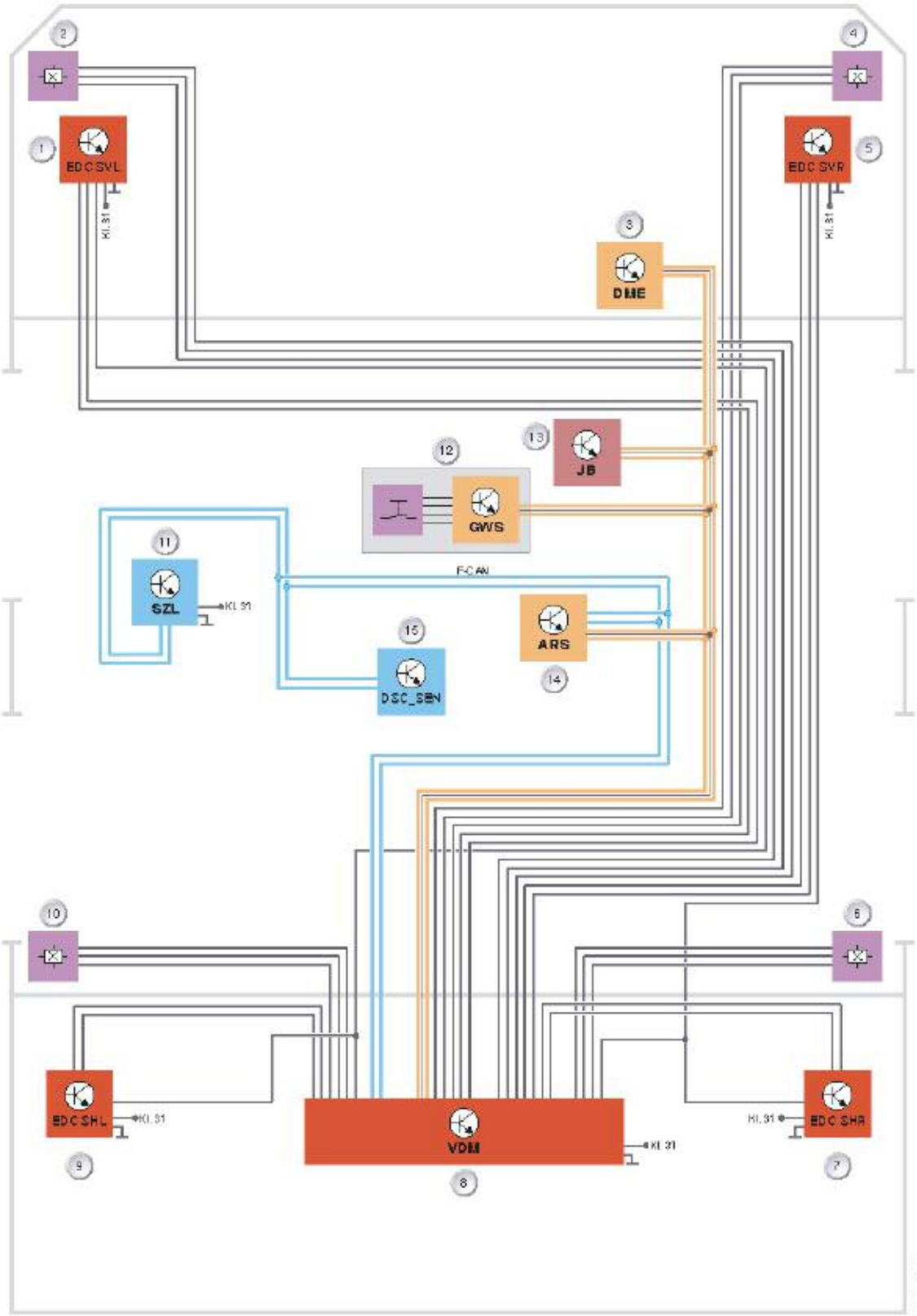

cardiagn.com

Legend for VDC System Circuit Diagram

Index	Explanation	Index	Explanation
1	Electronic Damper Control satellite, front left	9	Electronic Damper Control satellite, rear left
2	Ride height sensor, front left	10	Ride height sensor, rear left
3	Digital Motor Electronics	11	Steering Column Switch Cluster
4	Ride height sensor, front right	12	Gear Selector Switch
5	Electronic Damper Control satellite, front right	13	Junction box
6	Ride height sensor, rear right	14	Active Roll Stabilization
7	Electronic Damper Control satellite, rear right	15	DSC Sensor
8	Vertical Dynamics Management		

cardiagn.com

VDC Components

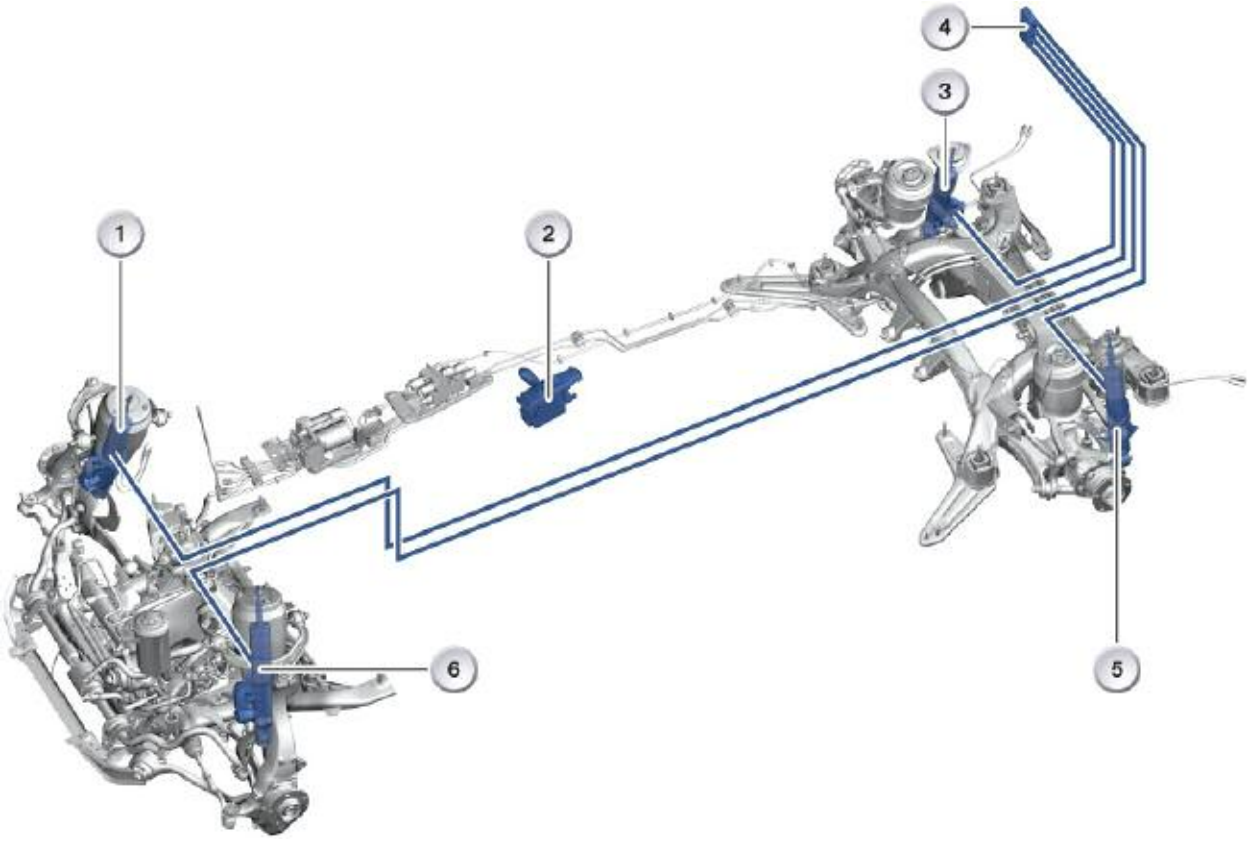

Index	Explanation	Index	Explanation
1	Electronic Damper Control satellite, front right	4	Vertical Dynamics Management
2	Gear Selector Switch	5	Electronic Damper Control satellite, rear left
3	Electronic Damper Control satellite, rear right	6	Electronic Damper Control satellite, front left

cardiagn.com

Ride Height Sensor Location

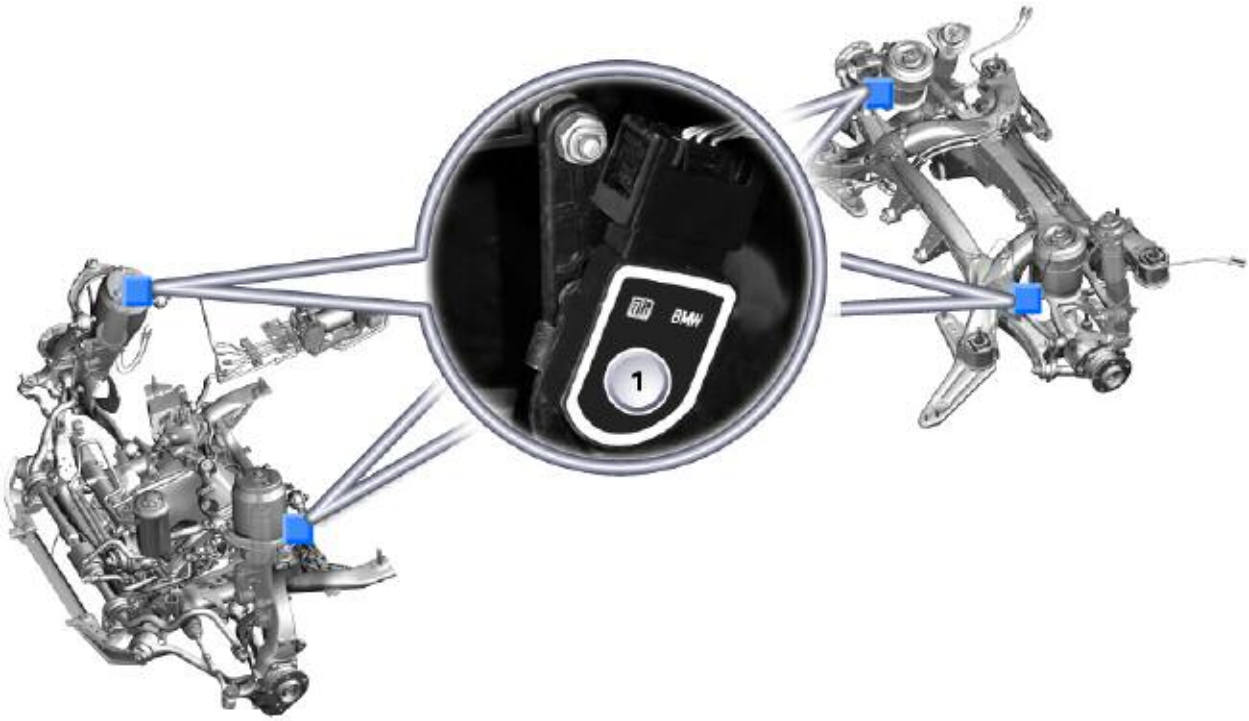

Index	Explanation
1	Ride height sensor (4x)

cardiagn.com

Electronic Height Control (EHC)

EHC System Diagram

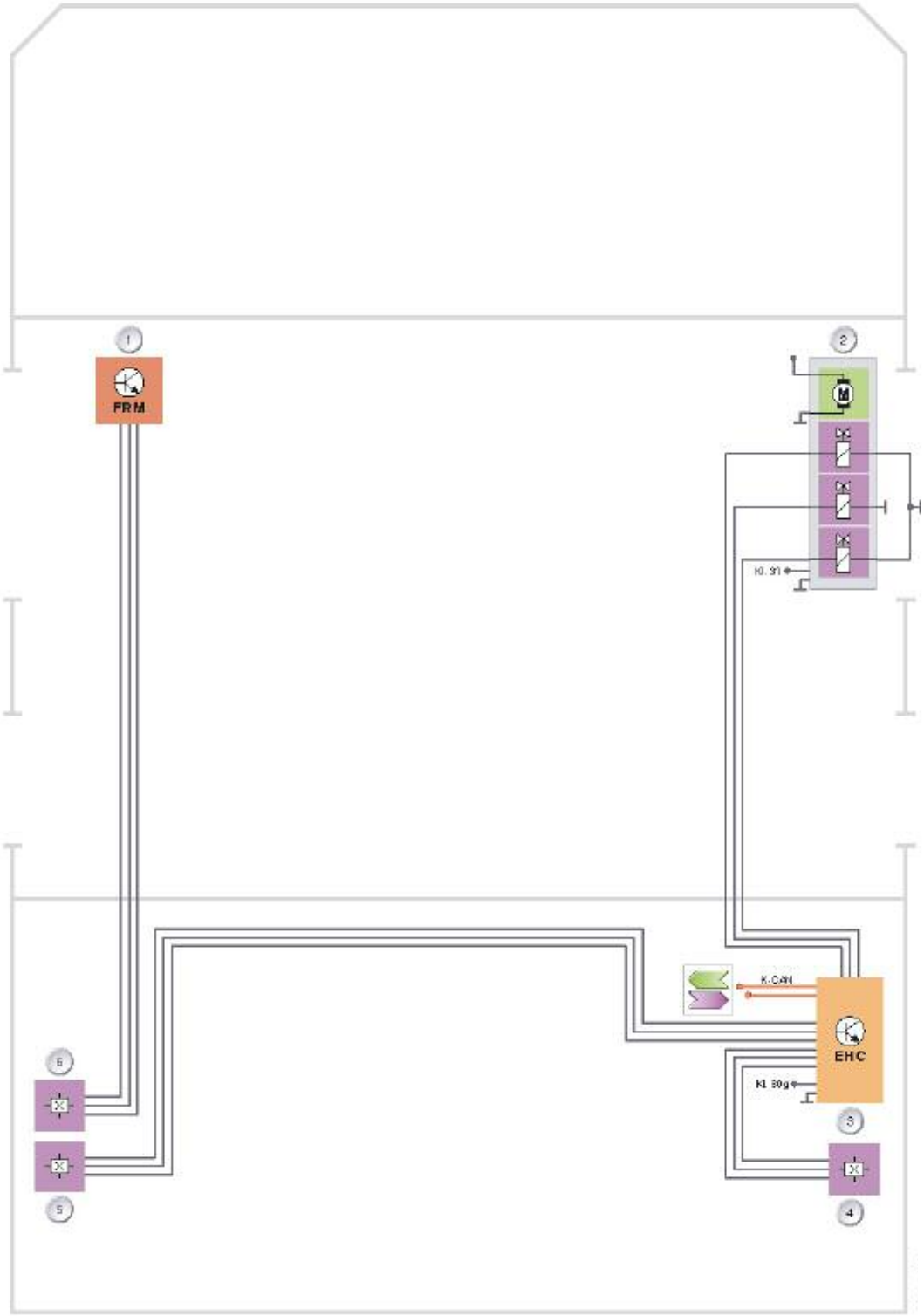

cardiagn.com

Legend for EHC System Diagram

Index	Explanation	Index	Explanation
1	Footwell module	4	Right height sensor, right
2	Air supply unit	5	Ride height sensor, left
3	EHC control unit	6	Headlight range adjustment sensor

EHC Pneumatic Diagram

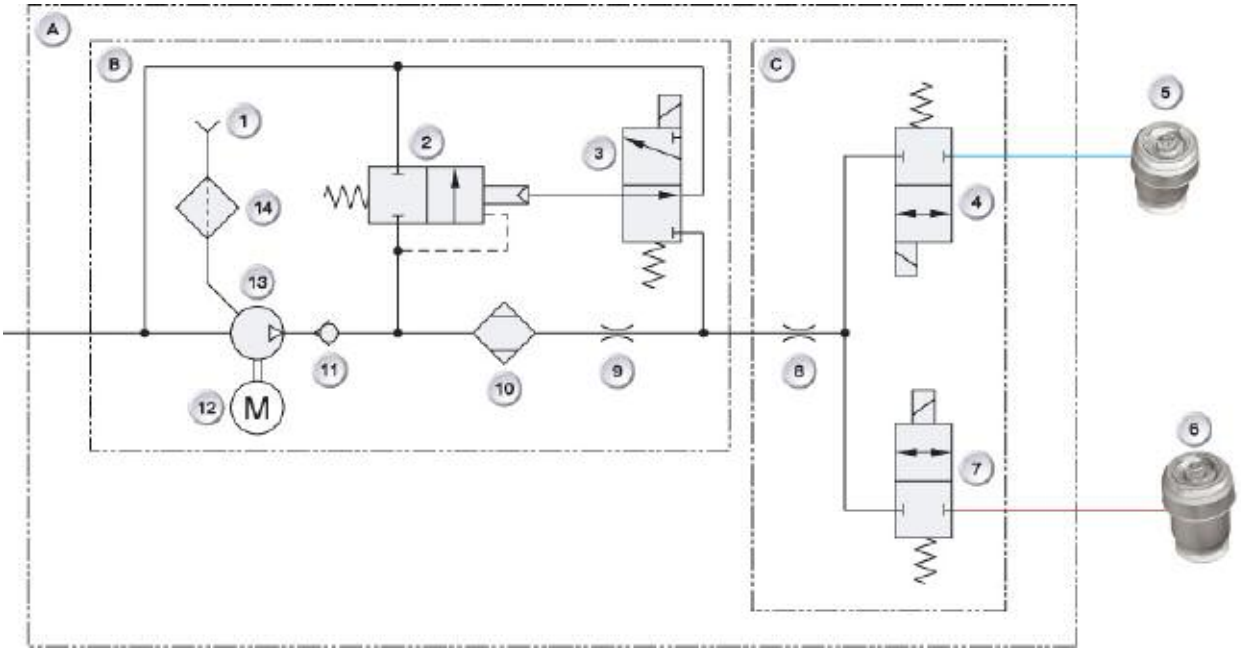

Index	Explanation	Index	Explanation
A	LVA, Air supply unit	7	Solenoid valve, left side
B	Compressor unit	8	Restrictor
C	Solenoid valve block	9	Restrictor
1	Air intake	10	Air drier
2	Pressure limiting/holding valve	11	Non-return valve
3	Outlet valve	12	Electric motor
4	Solenoid valve, right side	13	Compressor
5	Air spring, rear right	14	Air cleaner
6	Air spring, rear left		

cardiagn.com

EHC Components

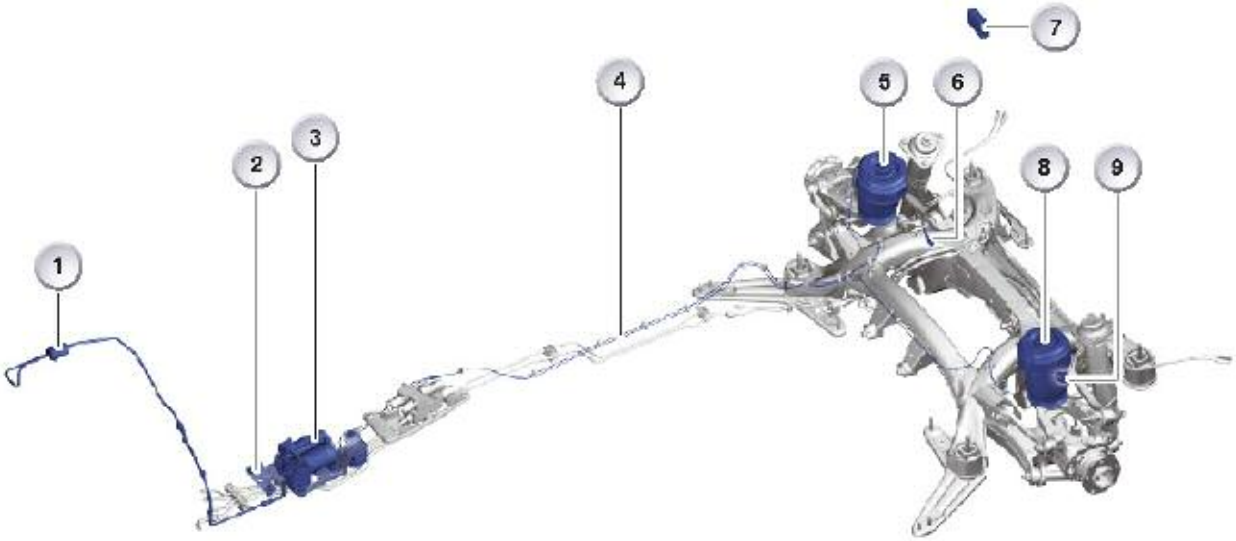

Index	Explanation	Index	Explanation
1	Air cleaner	6	Ride height sensor, right
2	Retaining plate	7	EHC control unit
3	LVA, Air supply unit	8	Air spring, rear left
4	Pneumatic lines	9	Ride height sensor, left
5	Air spring, rear right		

cardiagn.com

NOTES PAGE

cardiagn.com

System Functions

Active Roll Stabilization (ARS)

Physical Conditions

When the vehicle drives through a bend, the vehicle is subjected to lateral acceleration [ay], which acts on the vehicle's center of gravity [1]. The vehicle body rolls about the roll axis [2] due to the kinematics of the front and rear axle. The roll angle is formed. (max. 5°). This produces a maximum change in level on the wheel arch of 10 cm.

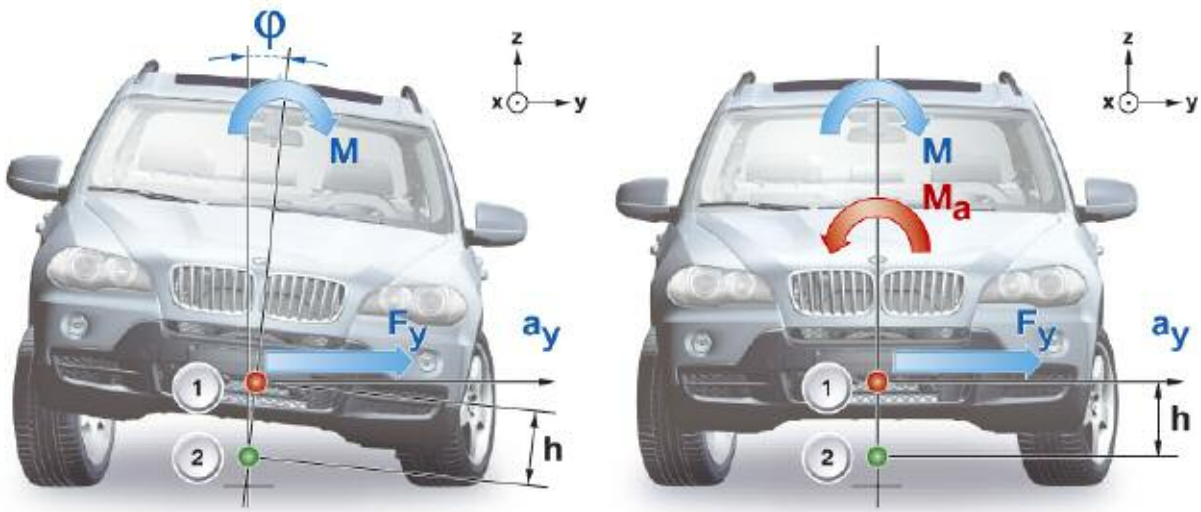

Index	Explanation	Index	Explanation
A	Vehicle without Adaptive Drive	Ma	Body torque
B	Vehicle with Adaptive Drive	1	Center of gravity [SP]
M	Rolling moment	2	Roll axis [RA]
ay	Lateral acceleration	Fy	Lateral force
φ	Roll angle	h	Lever arm center of gravity height

In a passive vehicle with conventional suspension, the rolling moment [M] is absorbed by the anti-roll bars and springs. The springs on the outside of the bend are compressed and the springs on the inside of the bend rebound. In addition, the anti-roll bars rotate. A roll angle [.] forms between the vertical and the body.

In a vehicle with Adaptive Drive, the rolling moment [M] can be fully compensated for by the active anti-roll bars up to a specific rate of lateral acceleration ay. A roll angle only begins to form once the rolling moment [M] has exceeded the moment [Ma] actively set by the anti-roll bar. The residual rolling moment [M] is then absorbed by the passive springs.

cardiagn.com

The active body moments [Ma] at the front and rear axle counteract the rolling moment [M]. Using this approach, the roll angle is compensated for in accordance with the characteristic curve specified in the control unit. The roll angle is fully compensated for up to a lateral acceleration of approximately 5 m/s^2 (0.5 g).

A roll angle can form even with Adaptive Drive, but only at higher rates of lateral acceleration. The roll angle together with an increasing understeering trend therefore provide the driver with an indication that the vehicle is approaching its limit range.

There is no compensation for tire compression caused by the rolling moment [M].

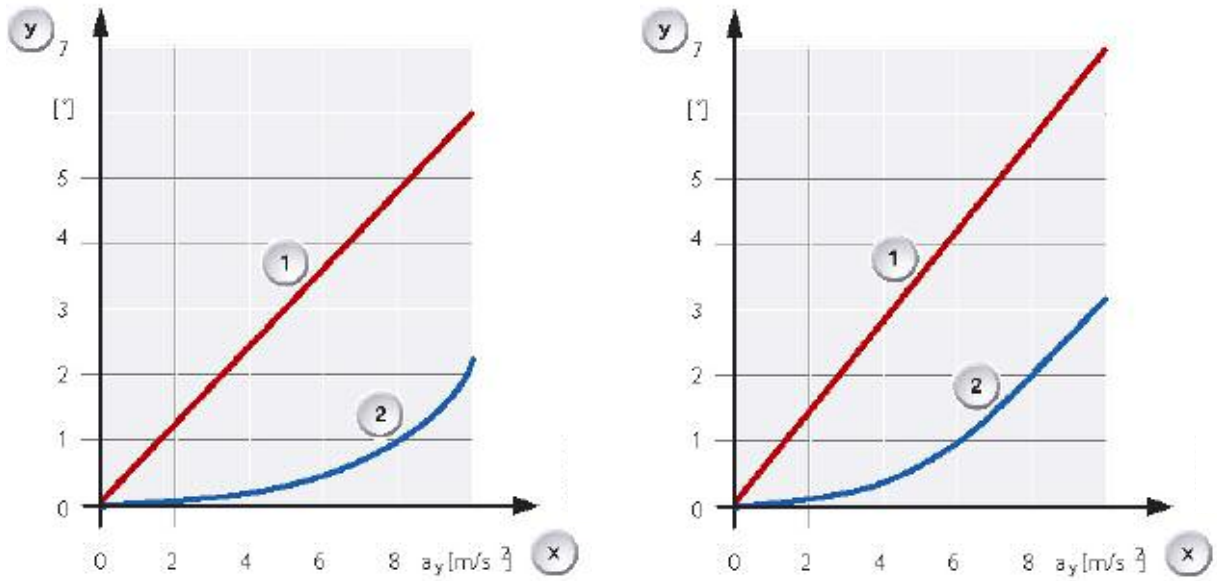

Index	Explanation
1	Passive anti-roll bar
2	Active anti-roll bar

The roll angle shown is achieved when the vehicle is unladen and the driver is in the vehicle. When the vehicle is fully laden, the larger body mass effects a greater lateral force on the vehicle. Depending on the arrangement of the vehicle load (inside the vehicle or on the roof), there may also be a change in leverage [h].

The vehicle will then exhibit a somewhat larger roll angle than is shown in the control characteristic curve. A fully laden passive vehicle still forms a larger roll angle.

The distribution of the active body torque between the front and rear axle depends on the road speed.

cardiagn.com

Affect of the Self-steering Behavior

The self-steering behavior can be decisively influenced by the distribution of the stabilizing torque on the axles. The greater the stabilizing torque on an axle, the lower the lateral forces transmitted on this axle.

Two cases are described below with different distributions of stabilizing moments at the axles:

1. Identical stabilizing torque on both axles

Handling is NEUTRAL. The front wheels can apply about the same amount of lateral force on the road as the rear wheels without drive torque. The handling conditions are neutral.

A vehicle which is tuned to neutral handling conditions provides very agile handling, the steering reacts very quickly. The driver experiences precise handling.
Even an inexperienced driver can control a vehicle which is tuned to neutral handling very well at low speeds.

2. Larger stabilizing torque on the front axle

Handling is UNDERSTEERING. The front axle wheels cannot apply the same amount of lateral force on the road as the rear axle wheels. The vehicle suffers understeer.
A greater steering-wheel angle is required to be able to follow the desired course.
An understeering vehicle can generally be well controlled even by an inexperienced driver at higher speeds and higher cornering speeds. This very sensitive handling reduces the vehicle's agility.

Adaptive Drive adjusts the stabilizing moments at the front and rear axles in such a way that different handling characteristics are produced for low and high speeds.

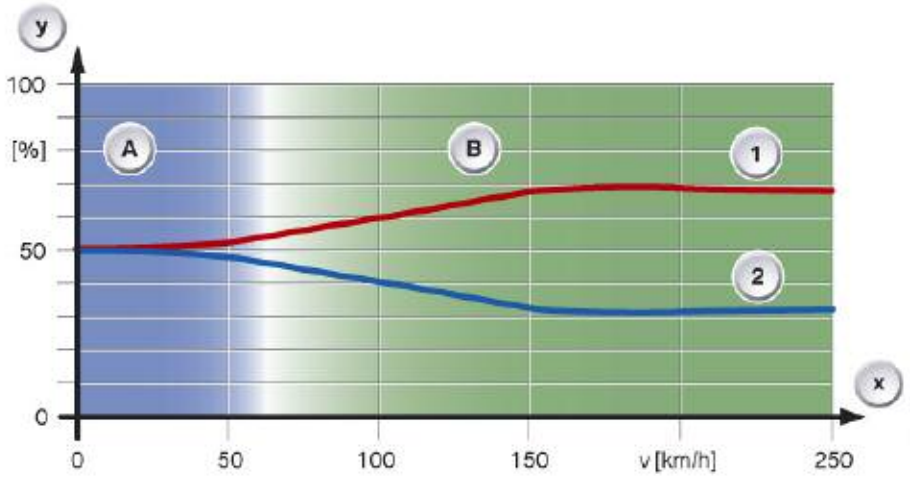

Index	Explanation	Index	Road Speed	Explanation
1	Front axle	A	Low	Neutral
2	Rear axle	B	High	Understeering

cardiagn.com

More active body moment [Ma] is required with increasing lateral acceleration.
The characteristic curves are shown for two different road speeds.

The following illustration shows the relationship between lateral acceleration [ay] and steering wheel angle [LW] for the passive vehicle and for the vehicle with Adaptive Drive and in different road speed ranges.

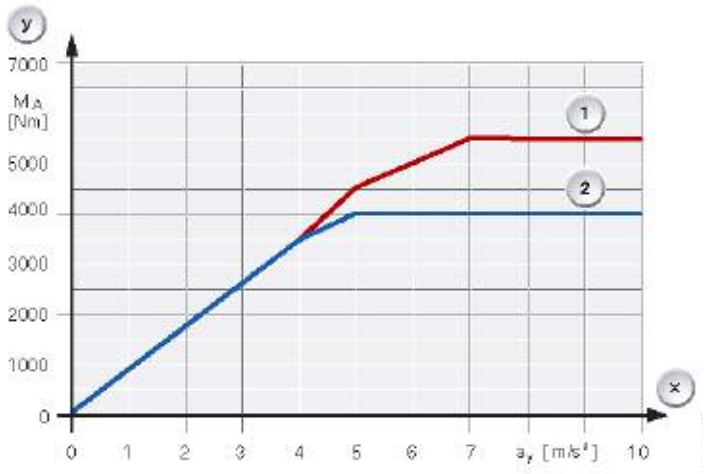

Index	Explanation	Index	Explanation
1	v = 15 km/h	2	v = 250 km/h

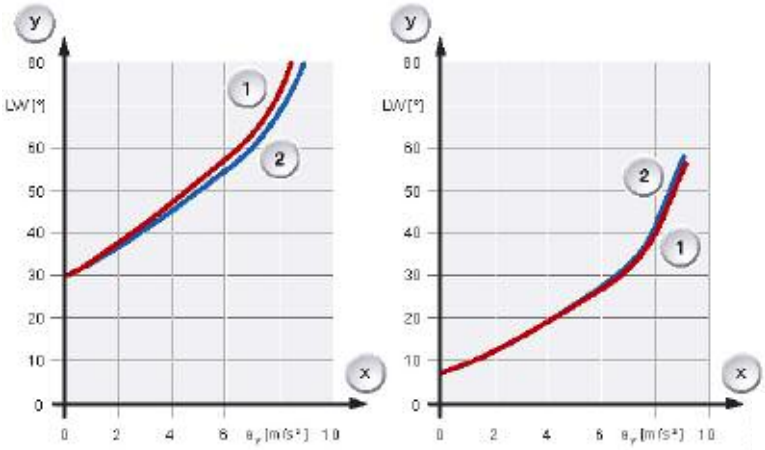

Index	Explanation	Index	Explanation
1	Passive, agility v < 100 km/h	1	Passive, agility v > 150 km/h
2	RS, agility v < 100 km/h	2	ARS, agility v > 150 km/h

cardiagn.com

The passive vehicle is configured as slightly understeering irrespective of the speed range.

Adaptive Drive is tuned to be neutral in the lower road speed range. The driver does not have to steer as much to drive through the same bend. This results in optimum handling and agility.

In the upper speed range, both vehicles behave almost identically with regard to the required steering angle on the same bend.

The hydro-mechanical concept is designed so that a greater active stabilizing torque cannot occur on the rear axle than on the front axle under any circumstances. This means that mechanically and hydraulically the vehicle with Adaptive Drive is safeguarded such that no oversteering and therefore for normal customers no critical handling characteristics can occur under any circumstances.

System Dynamics

Adaptive Drive has to respond as fast as is required in the event of rapid lane changes, rapid cornering or rapid changes of direction on winding country roads.

The system dynamics of Adaptive Drive are determined by the duration of the following stages:

Process	Time
Signal detection by sensor, processing of sensor signals in the control unit, valve control	Approximately 10 milliseconds
Change of direction, reversal of moment direction, directional valve	Approximately 30 milliseconds
Pressure increase (force per wheel) 0 - > 30 bar (0 - > 350 N) 0 - > 160 bar (0- > 2100 N)	Approximately 120 milliseconds Approximately 400 milliseconds

Comparison between the conventional stabilizer bar and the active stabilizer bar

Active stabilizer bars introduce fewer comfort reducing forces into the body than passive stabilizer bars. In this case a differentiation must be made depending on the frequency with which the forces were introduced.

Road stimulus	Anti-roll bar behavior
At approximately 1 Hz (natural body frequency)	With smaller strokes, the active anti-roll bar twists more easily than a conventional anti-roll bar. The forces introduced into the body are reduced, the vehicle becomes more comfortable and body displacement is reduced
From 8 Hz (wheel natural frequency)	Both anti-roll bars behave in a similar way. On a vehicle with an active stabilizer bar this is because the fluid is not displaced so quickly.

cardiagn.com

Operating States

Straight-ahead Travel

When the engine is started, the pump delivers hydraulic fluid to the system and a back pressure builds up. The pressure difference of approximately 1 bar which exists between the chambers of the control motor is very small and has no effect on the anti-roll bar.

The pressure valves for the front-axle anti-roll bar (PVV) and rear-axle anti-roll bar (PVH) are not supplied with current and are therefore open. The hydraulic fluid can flow back into the hydraulic-fluid reservoir directly. This condition remains unchanged as long as the vehicle is travelling straight ahead.

The system function is displayed continuously up to 15 km/h. The full stabilization potential is available from 15 km/h onwards.

Cornering

As the vehicle enters a bend, the signals from the lateral acceleration sensor are sent to the ARS control unit. The control unit now sends a pulse-width-modulated signal (PWM) to the pressure valves for the front and rear-axle anti-roll bars. The stronger the lateral acceleration, the greater the signal will be (current). The stronger the current supplied to the valve, the more the valve closes and the higher the pressure which builds up in the anti-roll bars. The pressures at the anti-roll bars are detected by pressure sensors [10, 11] and sent to the control unit.

Direction valve [9] is controlled by the control unit to increase and maintain pressure suitable to the characteristic of the bend (left or right hand bend). A sensor [8] detects the switch position of the direction valve.

Restricted Function

If a fault is detected, the system enters failsafe mode. The control unit stores the fault in the fault memory and displays the failsafe condition in the instrument cluster. Failsafe condition is retained until start-up is completed without a fault.

Failsafe valve [7] is closed by a spring in the event of a system malfunction. The hydraulic fluid in the front anti-roll bar is sealed in, thereby ensuring sufficient stabilization and an understeering effect equivalent to that of a conventional chassis.

External leakage:
External leakage is detected by the front and rear pressure sensors and results in the total failure of the system. The failsafe situation is shown in the following hydraulic circuit diagram overview.

cardiagn.com

Hydraulic Circuit, Normal Function

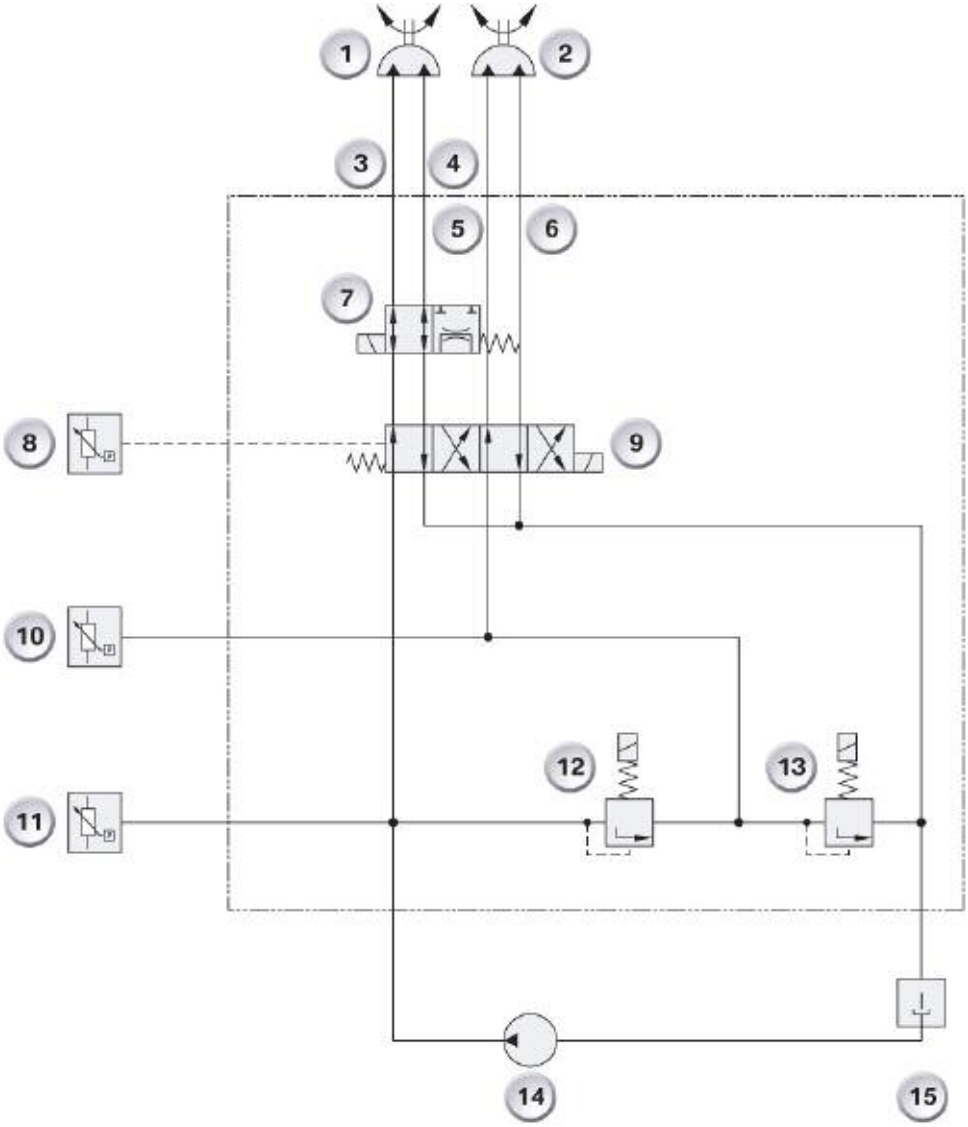

Index	Explanation	Index	Explanation
1	Front oscillating motor [SMV]	9	Direction valve [RV]
2	Rear oscillating motor [SMH]	10	Rear-axle pressure sensor [DSH]
3	Front-axle hydraulic circuit 1[V1]	11	Front-axle pressure sensor [DSV]
4	Front-axle hydraulic circuit 2 [V2]	12	Front-axle pressure valve [PVV]
5	Rear-axle hydraulic circuit 1 [H1]	13	Rear-axle pressure valve [PVH]
6	Rear-axle hydraulic circuit 2 [H2]	14	Tandem pump [P]
7	Failsafe valve [FS]	15	Hydraulic-fluid reservoir [HB]
8	Switch-position recognition sensor [SSE]		

cardiagn.com

Hydraulic Circuit, Fail-safe Function

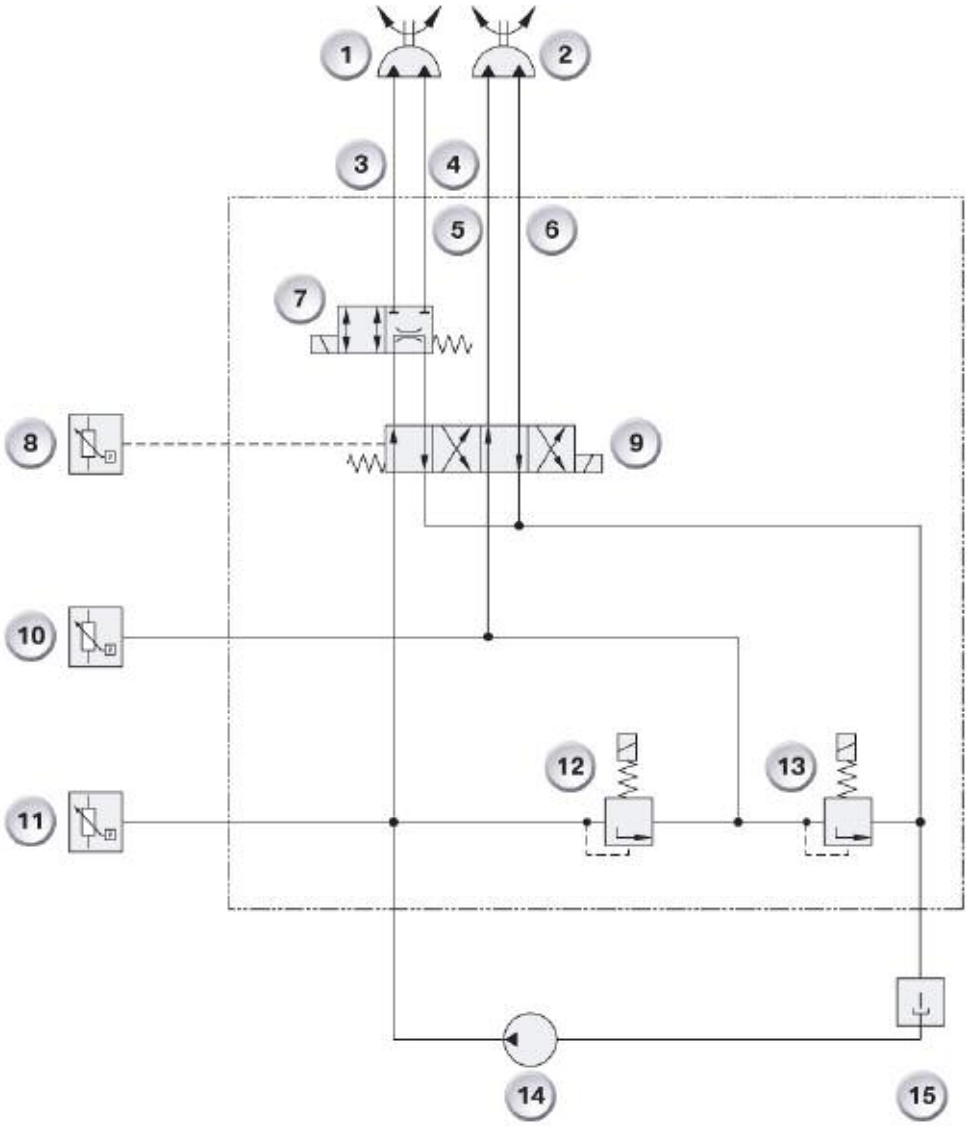

Index	Explanation	Index	Explanation
1	Front oscillating motor [SMV]	9	Direction valve [RV]
2	Rear oscillating motor [SMH]	10	Rear-axle pressure sensor [DSH]
3	Front-axle hydraulic circuit 1[V1]	11	Front-axle pressure sensor [DSV]
4	Front-axle hydraulic circuit 2 [V2]	12	Front-axle pressure valve [PVV]
5	Rear-axle hydraulic circuit 1 [H1]	13	Rear-axle pressure valve [PVH]
6	Rear-axle hydraulic circuit 2 [H2]	14	Tandem pump [P]
7	Failsafe valve [FS]	15	Hydraulic-fluid reservoir [HB]
8	Switch-position recognition sensor [SSE]		

cardiagn.com

Vertical Dynamics Control (VDC)

General Information

The Vertical Dynamics Control (VDC) system being introduced for the time from SOP with the E70 is a component of the Adaptive Drive equipment package and is an advancement of the EDC-K already fitted on the E65. Like EDC-K, VDC is notable for its continually adjustable dampers whereby, within certain limits, as many damping characteristic curves (damping force - piston speed) as desired can be plotted. The characteristic curve used depends on the driving situation, in other words, the variables that describe the dynamic driving state of the vehicle and which are selected automatically at the driver's command.

Comparison between EDC-K in the E65 and VDC in the E70:

	EDC-K	VDC
Model	E65 from introduction into series production from 7/2001	E70 from SOP 10/06 in the Adaptive Drive equipment package
Program Selection	via Control Display and controller	“SPORT” button next to gear selector switch
Control unit	EDC-K control unit on the device holder behind glove compartment	VDM control unit: rear left of luggage compartment Four EDC satellite control units directly on the damper
Sensors	Vertical: vertical acceleration sensor, front left, front right, rear right Longitudinal: wheel speed sensors, front left, front right Lateral: steering angle sensor (LWS) from the steering column switch cluster	Vertical: four vertical acceleration sensors integrated in the EDC satellite-control units, four ride-height sensors connected directly to the VDM control unit Longitudinal: wheel speed sensors or vehicle speed from the DSC control unit Lateral: steering angle sensor (LWS) from the steering column switch cluster, Rotor position sensor (if Active Steering fitted), lateral acceleration (DSC sensor) as redundant signal to the steering angle
Damper	Twin-tube gas-pressure dampers	Twin-tube gas-pressure dampers
Diagnostics	fully compatible	VDM and EDC satellite control units flash-programmable
Programming	EDC-K control unit is flash programmable	VDM and EDC satellite control units are flash programmable
Coding		VDM and EDC satellite control units are codable
Malfunction display	Messages in the Control Display or instrument cluster	Messages in the Control Display or instrument cluster
Testing	Diagnostic tester	Diagnostic tester

cardiagn.com

NOTES PAGE

cardiagn.com

Objectives of the VDC System

The primary objective of the VDC system to improve ride comfort while maintaining driving safety at an invariably high level. High levels of ride comfort are achieved when the vehicle body hardly moves along the vertical axis in spite of excitations of the vehicle induced by cornering or by the road surface itself (bumps, gaps). For this reason, the adjustable dampers are operated in line with a soft, comfortable damping characteristic curve in as many situations as possible.

High levels of driving safety are achieved if the wheels never lose contact with the road surface and a high support force is available if required. A harder damping characteristic is therefore set if the driving situation or driver's intervention (e.g. steering, braking) demands it.

As with EDC-K, the dampers have an infinite number of damping characteristic curves at their disposal; unlike EDC-K, however, the dampers are controlled not only axle by axle but also at each individual wheel.

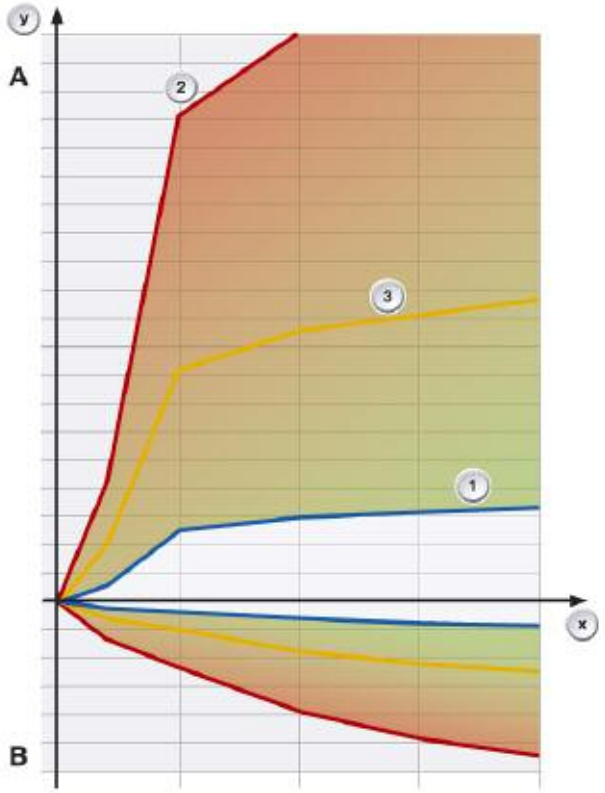

Index	Explanation	Index	Explanation
A	Rebound stage	1	Comfort
B	Compression stage	2	Stability
x	Piston speed (m/s)	3	Safety
y	Damping force (N)		

cardiagn.com

In its regulation, the system uses the complete characteristic map of the rebound and compression stages between the comfort (1) and stability (2) threshold curves.

In the event of a fault, the control range is minimized to safety characteristic curve (3).

System Network

The VDC system is a mechatronic system consisting of electronic, hydraulic and mechanical subsystems. These can be subdivided by function as follows:

- Detection of input signals
  - Sensors for ride heights and rates of vertical acceleration to permit detection of the driving state and the prevailing road conditions
  - Control element to enable the driver to set the damping program (comfort, sport). This is located on, and electrically integrated in, the gear selector switch.
  - Steering angle (output by the SZL control unit via F-CAN) for preemptive detection of cornering
  - Lateral acceleration (out by the DSC sensor via F-CAN) for detection of cornering
  - Vehicle speed or wheel speeds (output by the DSC control unit via F-CAN)
- Processing unit
  - VDM control unit - This checks the plausibility of the incoming signals and uses control algorithms that deliver damping forces at individual wheels as a set point value
  - EDC satellite control units - These process the signals from the vertical acceleration sensors on the one hand and output the processed signal. On the other hand, they convert into a valve current the target force from the VDM control unit by means of a stored characteristic curve
- Actuators
  The electrically controllable valve in the adjusting damper makes it possible to realize the different damping force characteristic curves
- Communications media
  The VDM control unit is connected to the PT-CAN, F-CAN and FlexRay; the EDC satellite control units are only connected to the FlexRay

cardiagn.com

Electronic Height Control (EHC)

Air Spring Functions

The various control modes in the E70 are designed in a similar way to those in the E6x:

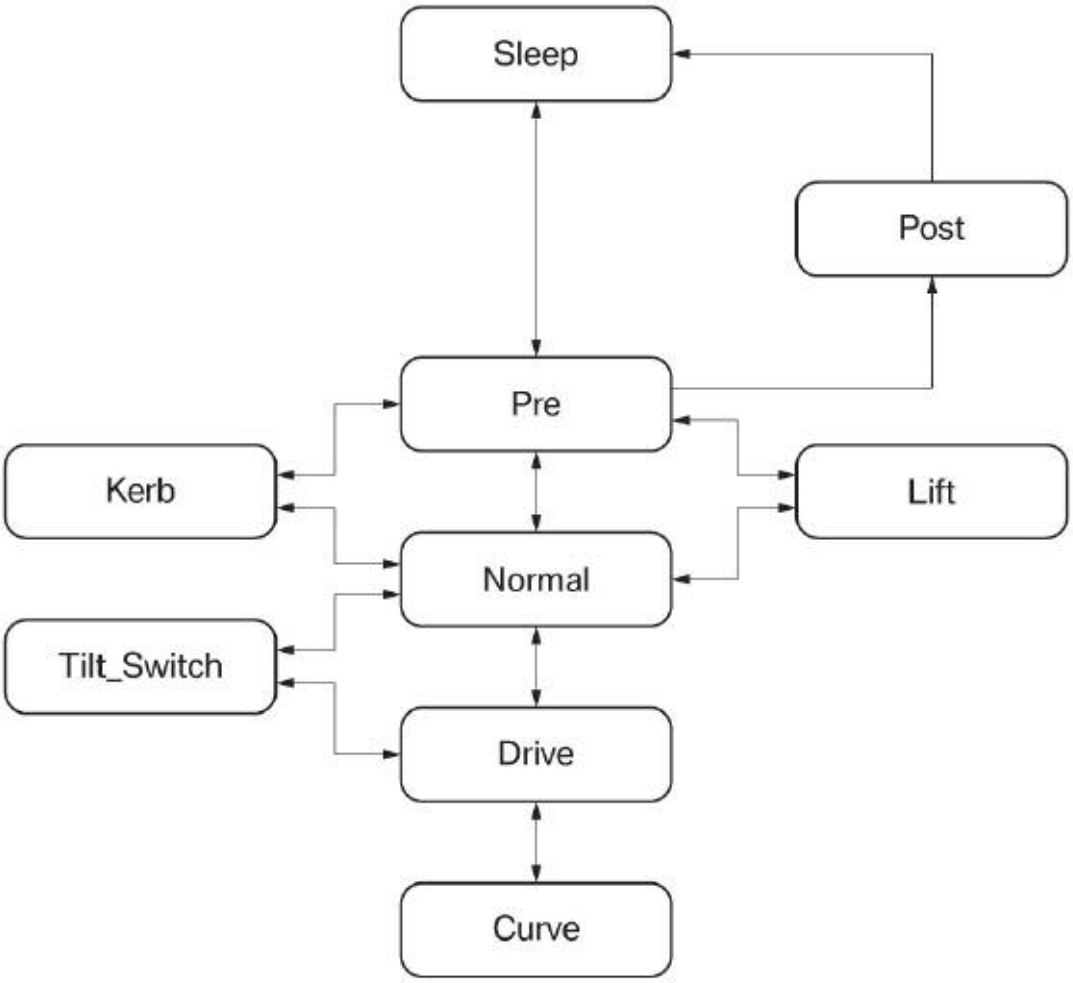

Control Modes with Single-axle Air Suspension

Ongoing control operations are not affected by transitions from one mode to another. After the procedure of the follow-up time the EHC control unit sets the sleep mode. Any yet active control operations will be terminated.

Sleep-mode

The vehicle is in Sleep-mode at the latest when it has been parked for longer than 16 minutes without a door or hood/trunk lid being operated or the terminal status changing. This is the initial state of the control system. No control operation is performed in Sleep mode. The control system goes into Pre-mode when a wake-up signal is received by the EHC control unit.

cardiagn.com

Post-mode

Post-mode is activated in order to compensate for any inclination or to adjust the ride height after driving and between the Pre mode and Sleep mode.

The Post-mode is limited in time to 1 minute. This mode is only executed if the engine has been running before the system switches into this mode. If the engine has not been running, Sleep mode is entered directly from Premode.

The control operation is performed in a narrow tolerance band of -6 mm and is terminated at -4 mm. The quick signal filter is used. In the event of an inclination (Kerb mode), the control operation takes place for the nominal heights applicable in this situation.

Pre-mode

The activation of the Pre-mode with follow-up triggering afterwards takes place with flap change or change of terminal R from ON to OFF. The ride height of the vehicle is monitored and evaluated with a wide tolerance band.

In Pre-mode, the vehicle is only controlled up to the nominal height if the level is significantly below the nominal height. The control tolerance band is -60 mm from the mean value. This control tolerance ensures that the vehicle is only controlled up in the case of large loads in order to increase the ground clearance prior to departure. Small loads give rise to small compression travel and this is compensated only when the engine is started. This control setting helps to reduce the battery load.

With single-axle air suspension, the vehicle is controlled down when the mean value of both ride height signals is > 0 mm and one side is in excess of + 10 mm.

In this mode, only the mean value of the two ride height signals (fast filter) is considered when deciding whether there is a need for a control operation. There is no inclination detection in Pre-mode.

Normal mode

Normal mode is the starting point for the vehicle's normal operating state. It is obtained by way of the "Engine running" signal. Ride level compensation and a change in the vehicle's ride height are possible. The compressor starts up as required.

A narrower tolerance band than that in Pre mode can be used because the battery capacity does not have to be protected. The fast filter is used with a narrow tolerance band of ± 10 mm. In this way, ride level compensation takes place outside a narrow tolerance band of ± 10 mm. The faster filter allows the system to respond immediately to changes in ride level. Evaluation and control are performed separately for each wheel.

When a speed signal is detected, the EHC control unit switches into Drive mode.
When the vehicle is stopped, the EHC control unit switches into Normal mode.
The system switches back into Normal mode only when a door or the trunk lid is also opened. If none of the doors or the boot lid is opened, the vehicle logically cannot be loaded or unloaded.

cardiagn.com

This prevents a control operation happening when the vehicle is, for example, stopped at traffic lights and the ride height is above the mean value due to a possible pitching motion at the rear axle.

Tilt_Switch

The single-axle air suspension enters this mode if a signal is registered on the vehicle bus by the TMPS. A flat tire can be relieved of load thanks to the "Inclination in run flat mode" function. When this message is received, the flat tire can be relieved of load by the venting of air on the defective side and an intake of air on the unaffected side of the vehicle.

Drive Mode

Drive mode for the single-axle air suspension is activated when a speed of > 1 km/h is detected. Low-pass filters are used. In this way, only changes in ride height over a prolonged period of time (1000 seconds) are corrected. These are merely the changes in ride height, caused by vehicle compression and a reduction in vehicle mass due to fuel consumption.

The high-pass filter (fast filter) is used during the control operation. The slow filters are re-initialized at the end of the control operation. The markedly dynamic height signals caused by uneven road surfaces are filtered out.

Kerb (Curb)

The Kerb mode prevents the inclination caused by the vehicle mounting an obstacle with only one wheel from being compensated. Compensation would cause a renewed inclination of the vehicle and result in a renewed control operation after the wheel came off the obstacle.

Kerb mode is activated if the difference in height between the left and right-hand side of the vehicle is > 28 mm and this difference remains for longer than 0.9 s. No speed signal may be present for this mode to be set. The system switches from single-wheel control to axle control.

Kerb mode is quit if the difference between the left and right-hand side of the vehicle is < 24 mm and this difference remains for longer than 0.9 s or if the speed is > 1 km/h.

If the system switches from Kerb mode to Sleep mode, this status is stored in the EEPROM.

If the vehicle is being loaded or unloaded in Kerb mode, the EHC control unit calculates the mean value for the axle from the changes in ride height determined from the spring travel on the right and left-hand side.

A change in ride level is initiated if the mean value of compression or rebound at the axle is outside the tolerance band of ± 10 mm. The left and right sides of the vehicle are raised or lowered in parallel. The height difference between the two sides is maintained.

cardiagn.com

Curve

Since rolling motions have a direct impact on the measured ride levels, an unwanted control operation would be initiated during longer instances of cornering with an appropriate roll angle in spite of the slow filtering of the Drive mode.

The control operations during cornering would cause displacement of the air volume from the outer side to the inner side of the curve. Once the curve is completed, this would produce an inclination which would result in a further control operation. Curve mode prevents this adjustment by stopping the slow filtering when cornering is detected and cancelling any adjustment that may have been started.

Curve mode is activated above a lateral acceleration of > 2 m/s^2 and deactivated at < 1.5 m/s^2. The lateral acceleration is recorded by the DSC sensor.

Lift

The Lift mode is used to prevent control operations when a wheel is changed or during work on the vehicle while it is on a lifting platform.

This mode is detected when the permitted rebound travel at one or more wheels is exceeded > 65 mm. A jacking situation is also detected and the ride height stored if the lowering speed drops below the value of 0,7 mm/s for 8 seconds.

If the vehicle is raised only slightly and the permitted rebound travel has not yet been reached, the control operation attempts to readjust the ride height. If the vehicle is not lowered, a car jack situation is recognized after a specific period of time and this ride height is stored. A reset is performed if the vehicle is again 10 mm below this stored ride height.

Special Modes (Belt)

Belt mode is set during assembly in the works to prevent control operations. When Belt mode is activated, no message will be displayed in the instrument cluster. This is only recognizable by the non-deletable fault memory entry "energy-save mode active".

Belt mode is cleared by means of diagnostics control only. The Belt mode can no longer set afterwards.

New EHC control units (spare part) are supplied with Belt mode set. Control operations are not performed, the safety concept only operates with limited effect.

cardiagn.com

Control modes	Single-axle air suspension
Sleep	No control, load cutout on
Post	Approximately. 1 minute fast filter 2 s, very narrow tolerance band < -6 / > 6 mm, control ends at < -4 / > 4 mm
Pre	Approximately. 20 minutes fast filter 2 s, wide tolerance band controlled up when < -60 mm, controlled down when mean value > 0 mm and one side > 10 mm
Tilt_Switch	Can be activated and deactivated by coding; not activated when a trailer is connected to the vehicle. Activated in response to RDC/RPA bus message
Normal	Engine running: Fast filter 2 s, narrow tolerance band ± 10 mm
Drive	v > 1 km/h, slow filter 1,000 s, narrow tolerance band ± 10 mm
Kerb	ON when: difference between left and right-hand sides of vehicle > 28 mm, longer than 0.9 s changeover from single-wheel control to axle control OFF when: difference between left and right-hand sides of vehicle < 24mm, t = 0.9 s or v > 1 km/h
Curve	ON when: lateral acceleration > 2 m/s2 OFF when: lateral acceleration < 1.5 m/s2
Lift	ON when: rebound travel > 65 mm at one or more wheels Jack on at: Lowering speed drops below the value 0,7 mm/s for 8 s, ride height storing OFF when: level change < -10 mm, ride height drops below stored setting by > 10 mm

Functional Principle

Initialization/reset Behavior:

Different checks and initializations are carried out when the EHC control unit is powered up after a reset (triggered by an undervoltage). The system is only enabled after the tests have been successfully completed and starts to execute the control programs on a cyclical basis. Occurring faults are stored and displayed.

Control Sequence

In an ongoing control operation, the high-pass filter (fast filter) is always used to prevent the controlled height from overshooting the nominal value. If a low-pass filter (slow filter) were used to calculate the ride height, brief changes of ride height would be "absorbed".

The low-pass filter is used when the vehicle is in motion (see Normal mode) to filter out vibrations induced by prevailing road conditions on this basis of this method of filtering.

The high-pass filter is used to respond quickly to ride level deviations from set point. These take place while the vehicle is stationary in the event of large load changes (see Pre-mode).

Both sides of the vehicle are controlled individually, i.e. even the set point/actual-value comparison for both sides is carried out individually.

Exception: check for falling below the minimum height in Pre-mode and Kerb mode.The left/right mean values are taken into consideration here.

cardiagn.com

The following stipulations are applicable here:

- Raising before lowering
- All valves controlled with control in the same direction
- Individual wheel deactivation.

To ensure reliable closing of the non-return valve in the air drier, the drain valve is controlled by the EHC control unit briefly for 200 ms after the control-up procedure has ended.

The permissible ON period of the components is monitored while control up operations are executed.

Safety Concept

The safety concept is intended to inhibit any system malfunction, particularly unintentional control operations, through the monitoring of signals and function-relevant parameters. If faults are detected, the system is switched over or shut down depending on the components concerned. The driver is informed of a malfunction by the display, and detected faults are stored for diagnostics purposes.

In order to ensure high system availability, existing faults, as far as possible, are cleared with terminal 15 ON. This is done by resetting the fault counter to zero. However, the fault memory content in the EEPROM is retained and can be read out for diagnostic purposes.

The system is then operational again. The fast troubleshooting helps to detect existing faults before control operations can take place.

Only lowering is permitted if:

- The permissible supply voltage of 9 volts is undershot
- The permissible compressor running time of 480 seconds is exceeded

A reset takes place if the voltage is in the OK range of 9 to 16 volts or after the compressor pause time of 100 seconds has elapsed.

Only raising is permitted if:

- The permissible control down period of 40 seconds is exceeded
- The reset takes place the next time the vehicle is driven or after the next control-up procedure.

No control if:

- The permissible supply voltage of 16 volts is exceeded

The reset takes place as soon as the voltage is in the OK range.

cardiagn.com

System Components

ARS Components

ARS Control Unit

The ARS control unit is located in the vehicle interior near the right-hand A-pillar.

Index	Explanation
1	ARS Control unit

The ARS control unit is supplied with power via terminal 30 and is protected by a 10 A fuse.

The ARS control unit is activated exclusively by the Car Access System (CAS) on a CAN wake-up line after "ignition ON".

A vehicle authentication process takes place when the system is started. This compares the vehicle identification number from CAS with the vehicle identification number which is encoded in the ARS control unit.

Then the ARS control unit's hardware and software are checked.

All the outputs (valve magnets) are subjected to a complex check for short circuits and breaks. If there is a fault, the system switches the actuators into a safe driving condition.

The ARS control unit switches off if there is undervoltage or overvoltage.

The ARS control unit learns the offset for the steering angle and the lateral acceleration during start-up and during driving.

cardiagn.com

ARS Control Unit Inputs

The ARS control unit uses the input signals to calculate control of the actuators. The input signals are also checked for plausibility and used for system monitoring.

The ARS control unit receives the following input signals:

- Lateral acceleration
- PT-CAN
- Front-axle circuit pressure
- Rear-axle circuit pressure
- Switch-position detection position
- Fluid level sensor signal.

The most important Dynamic Drive control signal is the measured lateral acceleration value. Additional information from the PT-CAN that describes lateral dynamics includes the road speed signal, steering wheel angle and the yaw velocity from the yaw rate sensor.

From this information, the stabilization requirement is determined and the appropriate active moments are implemented. The road speed and steering angle signals also help to improve the response time of the system.

ARS Control Unit Outputs

All outputs are compatible with diagnostics and protected against short-circuit.
The outputs include controls for:

- Pressure regulating valves for front and rear axle
- Directional valve
- Failsafe valve
- 5 V power supply for the sensors:
  - Lateral acceleration sensor
  - Pressure sensors at the front and rear axle
  - Switch-position recognition sensor (SSE).

The valves are controlled by the supply of current regulated by pulse-width modulation (PWM). The current measurements of the individual coil currents are designed with redundancy. The valve currents are mutually checked for plausibility on a continuous basis.

Thanks to the current measurement, the pressure can be set more precisely and the switch valves can be monitored electronically.

cardiagn.com

A telegram is sent to the DME on the PT-CAN. The telegram contains information on how much power the tandem pump currently requires to supply the active anti-roll bars. In this way, output at the engine can be increased to satisfy the additional power requirement.

A regular data signal (alive signal) is output and read by other ARS control units to identify whether the system is still active.

All signal faults are detected and stored in the non-volatile memory.

Fault symptoms of output signals are

- Short circuit to terminal 30 and terminal 31
- Open circuit and
- Valve short circuits.

Lateral Acceleration Sensor

The lateral acceleration sensor supplies the main sensor signal. It measures the lateral acceleration of the vehicle during cornering up to a measurement range of 1.1 g. It is installed on the base plate under the right front seat. The ARS control unit can learn an offset during start-up and when the vehicle is in motion.

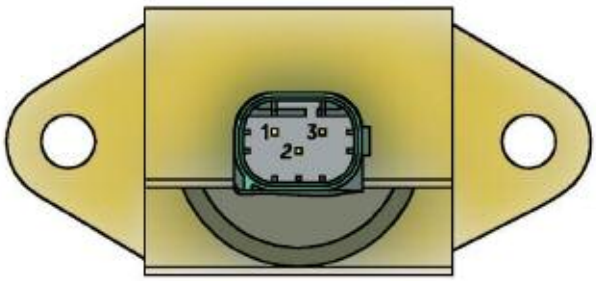

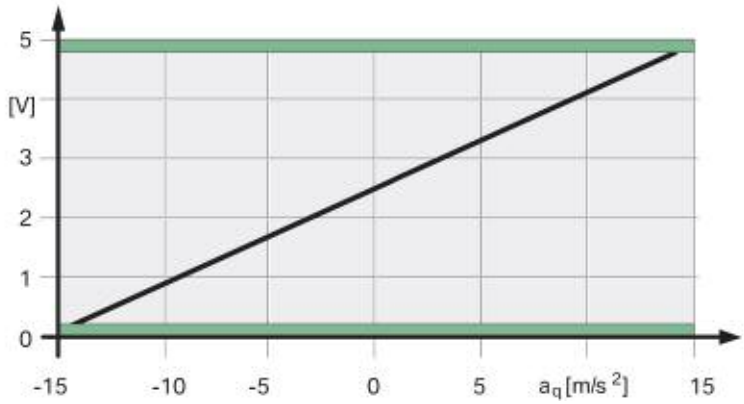

cardiagn.com

NOTES PAGE

cardiagn.com

Active anti-roll Bar

The oscillating motor and the oscillating motor housing are joined by one half of the anti-roll bar.

The active anti-roll bar consists of the oscillating motor and the anti-roll bar halves fitted to the oscillating motor, with press-fitted roller bearings for their connection to the axle carriers. The use of roller bearings ensures optimum comfort thanks to better response and reduced control forces.

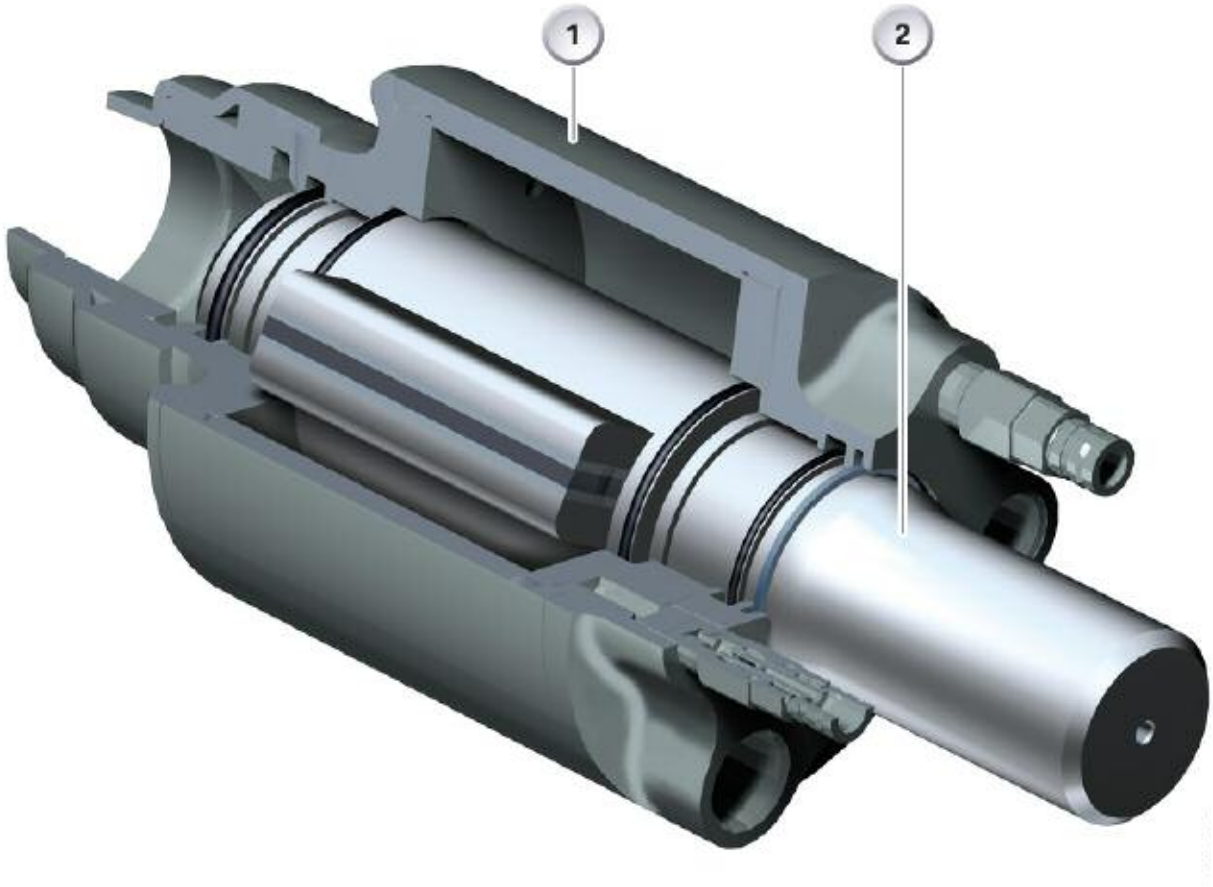

Index	Explanation	Index	Explanation
1	Oscillating motor housing	2	Oscillating motor shaft

The oscillating motor of the front axle stabilizer bar is fitted with 2 pressure relief valves.

Air filter elements are fitted to the pressure relief valves. These air filter caps with Goretex inserts must not be removed.

There are screw plugs in the area of the pressure relief valves on the oscillating motor of the rear-axle anti-roll bar.

cardiagn.com

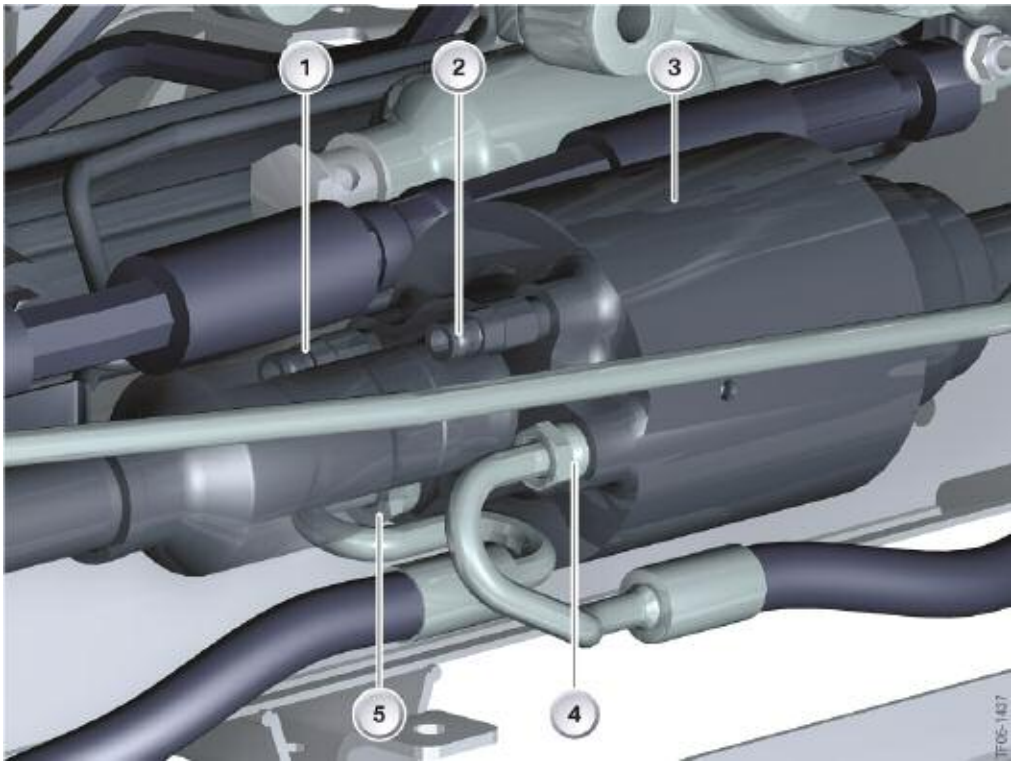

Index	Explanation	Index	Explanation
1	Pressure relief valve with air filter cap	4	Hydraulic connection
2	Pressure relief valve with air filter cap	5	Hydraulic connection
3	Front oscillating motor		

Function of Pressure Relief Valves

When the vehicle is driven on poor road surfaces, brief underpressures (cavitation) result from the movements of the anti-roll bar, which in turn could cause rattling noises.

Pressure relief valves have been fitted on the front oscillating motor in order to eliminate these noises. These pressure relief valves allow the filtered air to flow into the oscillating motor. This prevents cavitation. This small quantity of air is absorbed by the hydraulic fluid (Pentosin) to form an emulsion, which is discharged during subsequent activations of the oscillating motor. The surplus air is separated in the expansion tank.

Since no noises can be heard at the rear axle, the pressure relief valves have been omitted from the rear oscillating motor.

cardiagn.com

Operating Principle of Oscillating Motors

The oscillating motor has three functions to perform:

- The oscillating motor transfers the torque into the anti-roll bars.
- The oscillating motor de-couples the anti-roll bar halves.
- In the event of system failure (failsafe mode), the front axle anti-roll bar creates sufficient damping via the oscillating motor hydraulic fluid (hydraulic locking). It now works like a conventional anti-roll bar.

  Exception: If the oscillating motor chambers no longer contain any fluid as a result of a leak, the front axle anti-roll bar can no longer create damping.

The opposing chambers in the oscillating motor are connected to one another.
The same pressure exists in both chambers. Two chambers are supplied with high pressure fluid using one connection. The two other chambers are connected to the tank via the return line.

The forces FH (High) or FL (Low) are created as a result of the differences in pressure. Since FH is greater than FL, a torque MS is produced, which causes the shaft to turn in relation to the housing.

Since one half of the stabilizer bar is connected to the shaft, and the other with the hous ing, the two halves turn in opposite directions.

This torque MS generates the active moment MA around the vehicle longitudinal axis via the anti-roll bar connections which counteracts the rolling moment M during cornering. The shell is forced upwards on the outside of a curve, and dragged down on the inside of a curve.

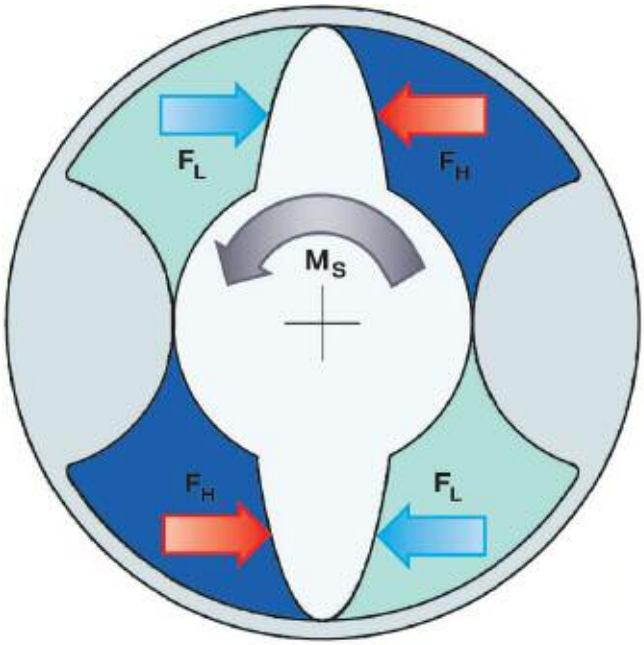

cardiagn.com

The maximum body torque on the front and rear axle occurs when there is a high degree of lateral acceleration. The system pressure is then 160 bar at the front axle and also 160 bar at the rear axle. At 160 bar, both oscillating motors generate a force of 850 Nm.

If the oscillating motor twists as a consequence of external forces (road excitation, e.g. bumps or potholes), the oscillating motor then acts as a torsional vibration damper.
As a result of the twisting action, fluid is forced out of the two chambers.

The fluid that is forced out flows through the lines and the hydraulic valve block, the hydraulic resistances in which produce a damping effect.

In the event of failsafe locking (hydraulic locking), the oscillating motor can only twist with a very high damping effect as a consequence of the hydraulic jamming in the oscillating motor.

Front Axle Anti-roll Bar

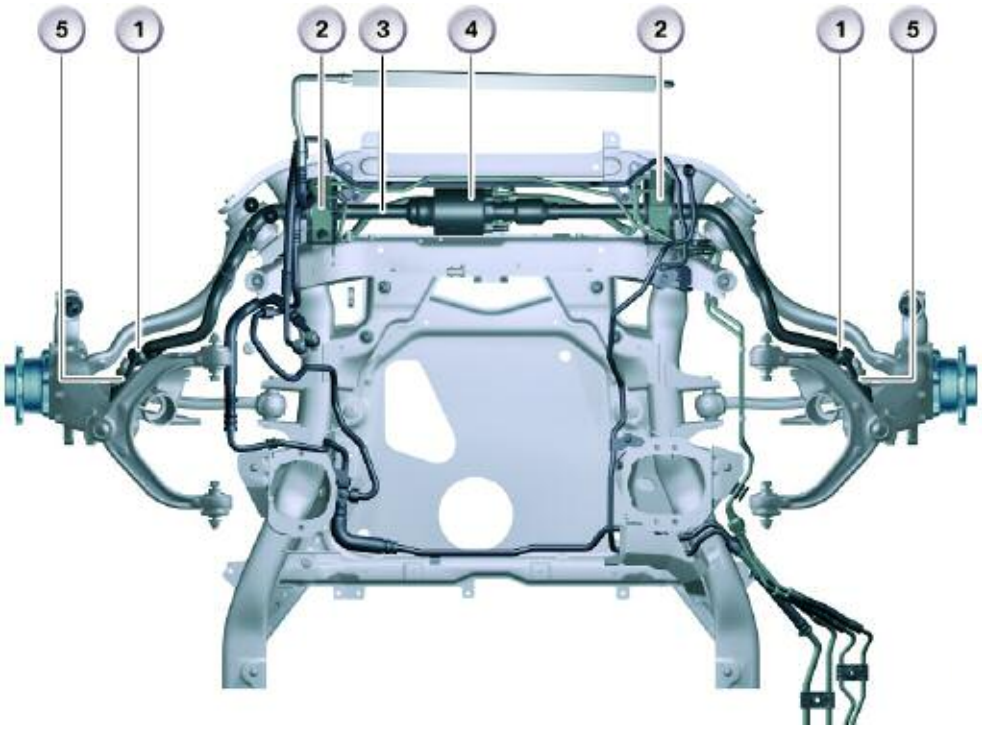

Index	Explanation	Index	Explanation
1	Anti-roll bar link connection to swivel bearing	4	Oscillating motor
2	Anti-roll bar bracket	5	Anti-roll bar links
3	Anti-roll bar		

The anti-roll bar is mounted on the front-axle carrier. The anti-roll bar links are connected to the "goose-necks" of the swivel bearings.

cardiagn.com

Rear Axle Anti-roll Bar

The anti-roll bar is mounted behind the rear axle carrier. The anti-roll bar links are connected to the rear-axle swinging arms.

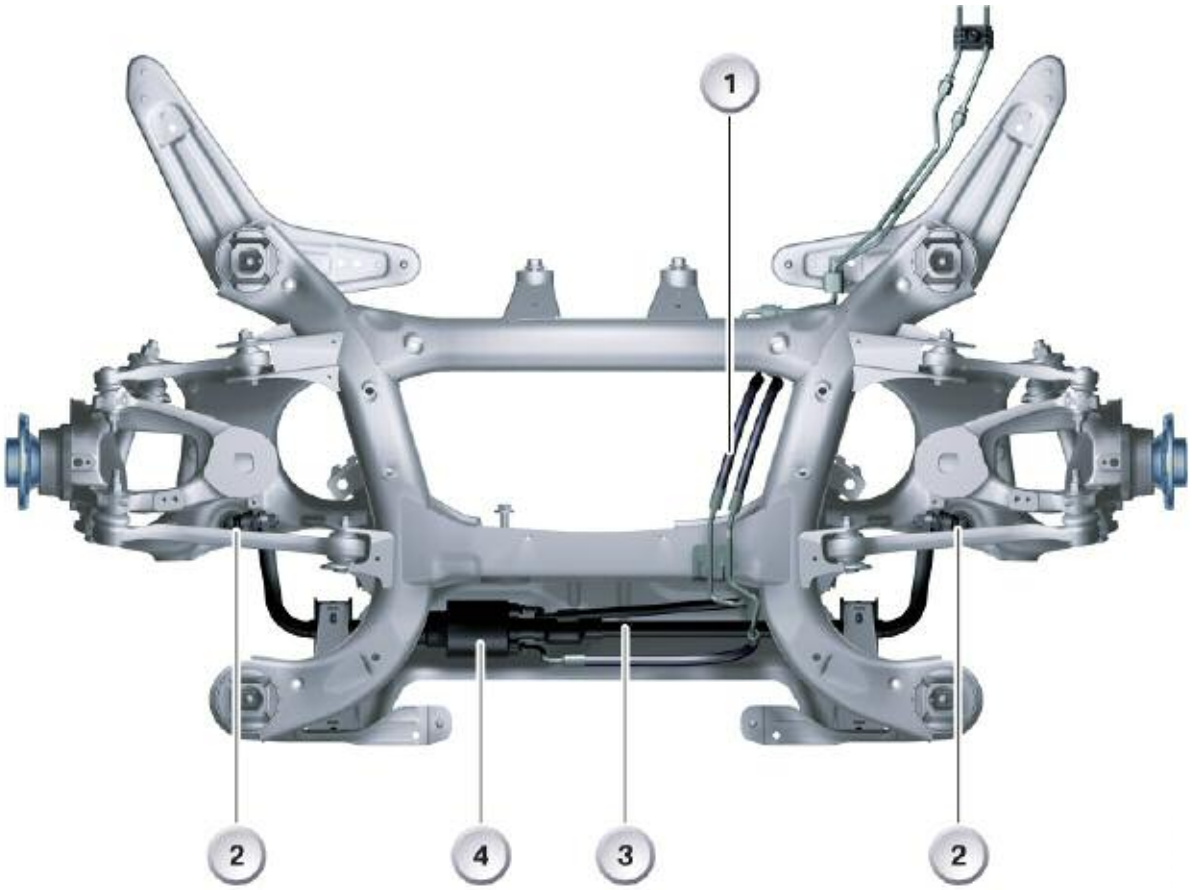

Index	Explanation	Index	Explanation
1	Lines from the hydraulic valve block	3	Anti-roll bar
2	Anti-roll bar links	4	Oscillating motor

cardiagn.com

Hydraulic Valve Block

The hydraulic valve block is located on the floor plate of the vehicle behind the front right hand wheel housing level with the front right hand door. The hydraulic valve block is connected to a carrier plate bolted to the body.

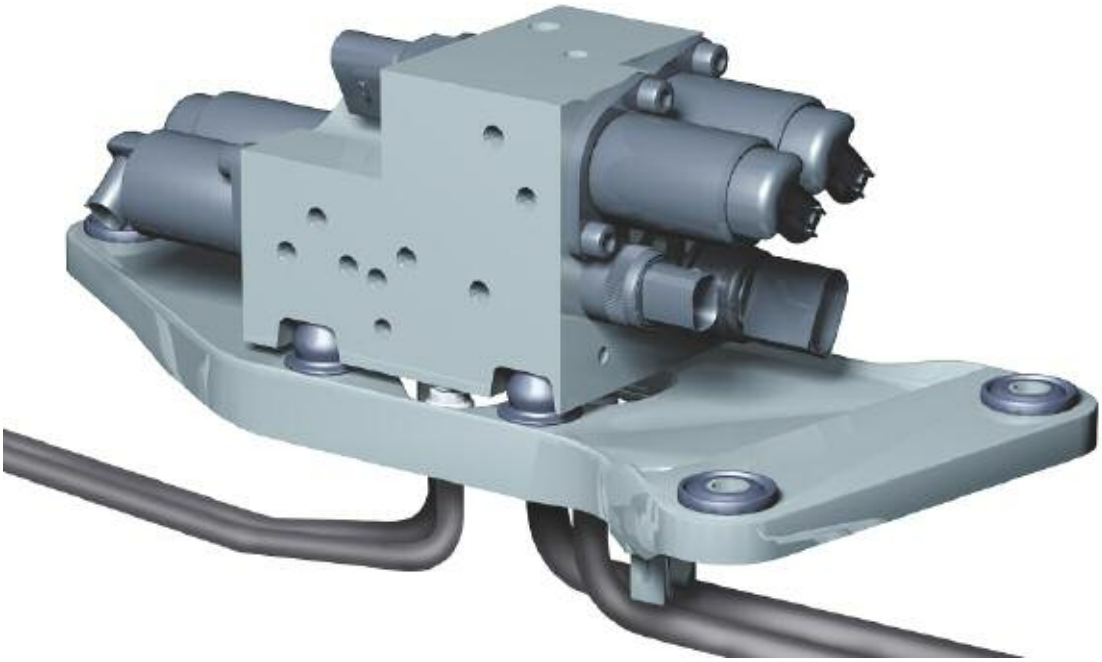

The hydraulic valve block houses the following valves and sensors:

- 2 pressure regulating valves; one for the front axle and one for the rear axle
- one direction valve
- one failsafe valve
- 2 pressure sensors; one sensor for the front axle, one sensor for the rear axle
- one switch-position recognition sensor.

The hydraulic valve block has the following connections:

- 2 lines to the oscillating motor at the front
- 2 lines to the oscillating motor at the rear
- one connection for the line to the tandem pump
- one connection for the line to the hydraulic fluid reservoir.

cardiagn.com

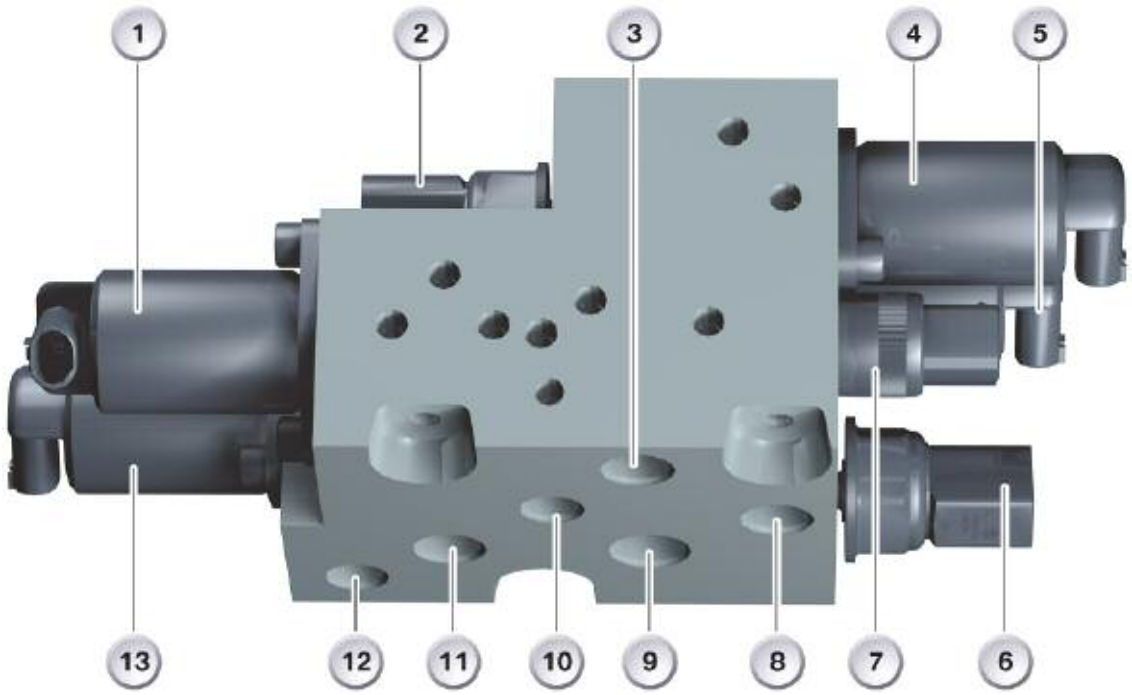

Index	Explanation	Index	Explanation
1	Directional valve	8	Tandem pump line
2	Rear-axle pressure sensor	9	Hydraulic-fluid reservoir line
3	Line 2, front-axle oscillating motor	10	Line 1, rear axle oscillating motor
4	Proportional pressure limiting valve, front axle	11	Line 2, front axle oscillating motor
5	Proportional pressure limiting valve, rear axle	12	Line 1, front axle oscillating motor
6	Front-axle pressure sensor	13	Failsafe valve
7	Switch position recognition sensor		

Pressure Control Valves

There is a pressure control valve on both the front and rear axles. They both adjust the actuation pressures for the front- and rear-axle anti-roll bars.

During straight-ahead travel, the pressure regulating valves are in the precurrent-supply (0.35 A) stand-by position; the throttles are open. The fluid is able to flow freely into the tank.

As the vehicle enters a bend, the valves are supplied with current. The pressure in the oscillating motors increases rapidly and is regulated to the set point value. Depending on the road speed and rate of lateral acceleration, pressures of up to 160 bar at the front and rear axle may be achieved.

The pressure at the front-axle oscillating motor is equal to or greater than the pressure at the rear-axle oscillating motor.

cardiagn.com

Directional Valve

The directional valve is electrically actuated. It specifies the direction of the high-pressure fluid (active pressures) and the reservoir fluid for right-hand and left-hand bends.

Failsafe Valve

The failsafe valve (safety valve) is electrically actuated. The failsafe valve responds in the event of a failure in the power supply or if a fault is detected in the system.

In the absence of current, the failsafe valve shuts down the front-axle oscillating motor. The rear-axle oscillating motor is short circuited and simultaneously connected to the tank line. The circulating position limits the system pressure and causes the flow to circulate.

Switch-position Recognition Sensor

The task of this sensor is to detect the specific position of the directional valve.

2 positions can be detected:

- Left-hand control
- Right-hand control.

Front-axle/Rear-axle Pressure Sensors

The pressure sensors are responsible for detecting the front and rear axle anti-roll bar hydraulic pressures. The sensors are mounted on the hydraulic valve block.
The pressure sensor offset values are learned by the ARS control unit once, during start-up.

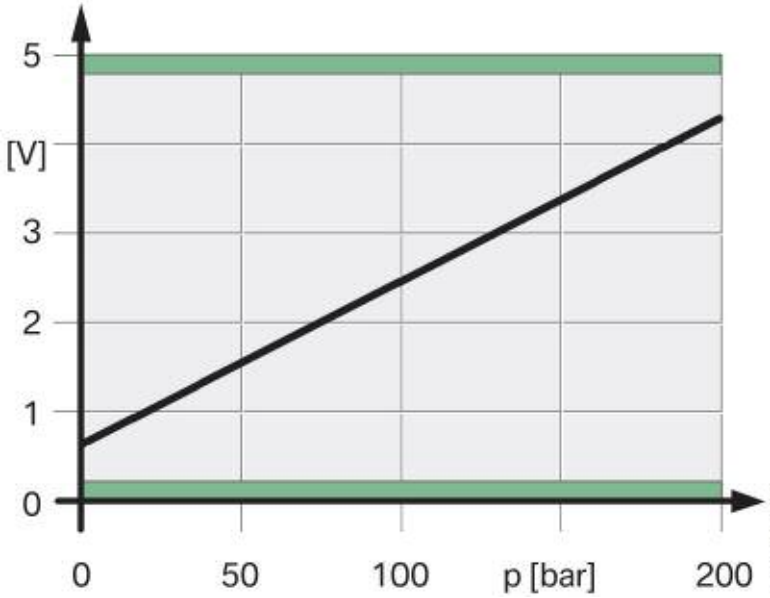

cardiagn.com

Tandem Pump

The hydraulic pumps fitted in the E70 were developed with a modular design. Depending on the engine and equipment specification, a suitably dimensioned hydraulic pump is flange-mounted to the engine in the same installation space.

Decisive equipment attributes:

- Basic steering
- Active Steering AS (option 217)
- CO2 measure (option 1CB)
- Adaptive Drive (option 2VA)
- Adaptive Drive and Active Steering.

The hydraulic pump driven by the engine's poly-V-belt is, on vehicles with Adaptive Drive, invariably a tandem pump, which consists of a radial piston part for ARS and a vane-cell part for the power steering.

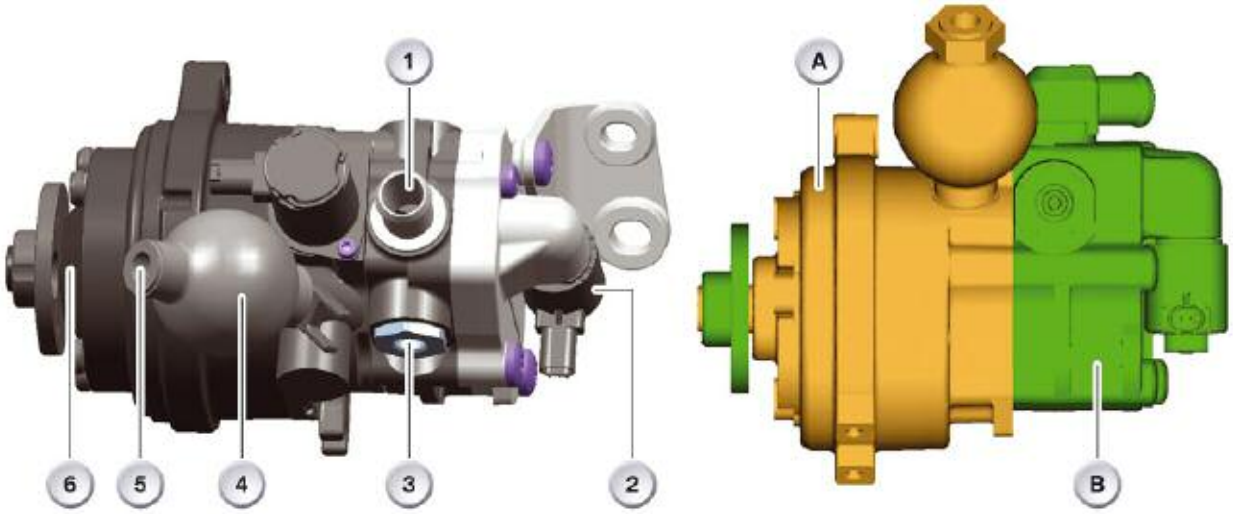

Index	Explanation	Index	Explanation
A	Radial piston pump	3	Steering pressure connection
B	Vane-cell pump	4	ARS pressure connection
1	Intake connection	5	Input flange
2	Proportional valve		

cardiagn.com

Radial Piston Pump (part of the tandem pump)

This radial piston pump has 10 pistons set out in two rows and designed for a maximum pressure of 210 bar.

When the engine is idling, the pump speed is approximately 750 rpm. At this idling speed, the radial piston part delivers a minimum fluid flow rate of approximately 6.75 liters/minute at a pressure of approximately 5 bar. This means that sufficient system dynamics are also guaranteed when the engine is idling.

At a pump speed of 1,450 rpm, the maximum fluid flow rate is limited to 13.3 rpm.

Vane-cell Pump (part of the tandem pump)

This part comprises 10 vane cells and designed for a maximum pressure of 135 bar. The vane-cell part has a characteristic map controlled fluid flow rate of 7-15 liters/minute.

The decisive parameters for the characteristic map are the vehicle's road speed and the steering angle speed.

Adaptive Drive and the power steering share the same fluid reservoir and radiator.

cardiagn.com

Fluid Reservoir

In the fluid reservoir is a fluid filter and fluid level sensor. The fluid filter cannot be replaced. The screw cap is fitted with a dipstick, which makes it possible to check the fluid level. A "MAX" mark indicates the maximum permissible fluid level, measured at room temperature (20°C).

If a dipstick check at room temperature reveals the fluid reservoir to be dry, the reservoir must be topped up with the specified hydraulic fluid. If the lowest edge of the dipstick is still only just wet with hydraulic fluid (3), this is to be construed as the "MIN" mark.

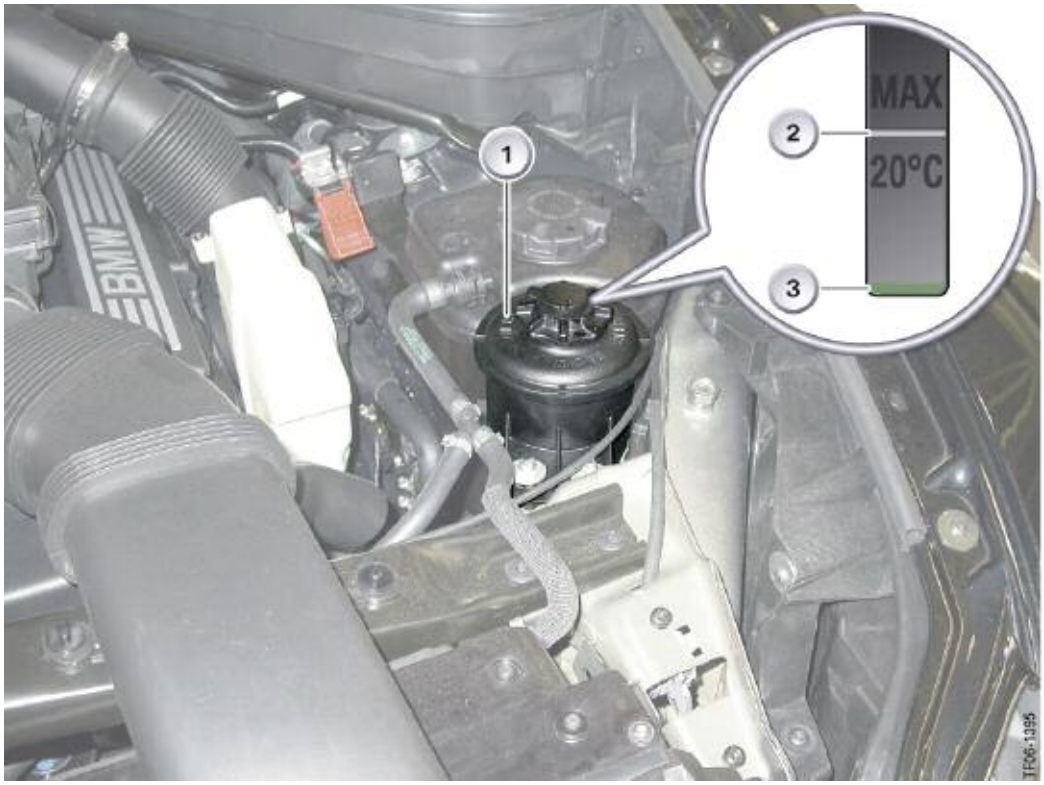

Index	Explanation	Index	Explanation
1	Fluid reservoir	3	Hydraulic fluid
2	“MAX” mark		

cardiagn.com

Fluid Level Sensor

The fluid level sensor detects the fluid level in the fluid reservoir. The fluid level sensor determines whether the fluid level has dropped below a critical minimum level and activates a warning message. Normal movements of the fluid in the reservoir are not cause for a message.

A mobile float contains a reed contact that converts float movements into an electric signal.

The fluid level sensor is fitted to the fluid reservoir. Short/open circuits cannot be detected by the fluid level sensor. A line break is interpreted as a loss of fluid.

Fluid level sensor (1)

Hydraulic-fluid Cooler

The hydraulic-fluid cooler serves to maintain a fluid temperature of < 120°C in all hydro-mechanical components under all conditions, although temperatures of < 135°C are acceptable for brief periods.

cardiagn.com

VDC Components

VDM Control Unit

Index	Explanation	Index	Explanation
1	Comfort Access	4	Vertical Dynamics Management
2	Not for US market	5	Electronic Height Control
3	Park Distance Control		

Control Strategy

The underlying control strategy is known as the "Skyhook regulator"; the name reflects the highest of control objectives: to keep the vehicle body at the same height irrespective of the driving situation (as if the vehicle were suspended from the sky).

To achieve this highest of all comfort objectives, the movements of the entire body have to be evaluated. To this end, there is a comprehensive analysis of ride heights and accelerations along the z-axis within the frequency range of between approximately 1 and 3 Hz.

cardiagn.com

The necessary (total) damping force for this control component will turn out to be comparatively low. To simultaneously ensure that the wheels do not lose contact with the road surface and that optimum contact force is transferred according to the situation, the movement of each individual wheel is evaluated and not just the movement of the entire body. The movements, or excitations, relevant here take place within a frequency range of between approximately 11 and 13 Hz and can therefore be distinguished from the movements of the body. This control component will therefore calculate high damping forces dependent on the vertical movement of the individual wheel.

As a matter of principal, these forces may be different at each individual wheel and, for the first time with VDC, can be implemented as such.

Furthermore, VDC regulation takes into consideration steering inputs (e.g. transition from straight-ahead travel to cornering) based on the steering angle curve. If VDC detects a rapid increase in the steering angle, the controller infers that the vehicle is entering a bend and can preventively adjust the dampers on the outside of the bend to a harder setting in advance. In this way, VDC is able to support ARS regulation and contributes to a reduction in vehicle rolling movements (of course, this applies also during steady-state circular driving).

Moreover, VDC is able to detect the braking applications of the driver based on the brake pressure information supplied by DSC. A high brake pressure normally results in a pitching of the vehicle; VDC counteracts this by adjusting the front dampers to higher damping forces.

This also results in an improvement in the front/rear brake force distribution, which in turn reduces the braking distance (by comparison with a vehicle without VDC).

The VDC controller adjusts the basic damping force level in accordance with the damping program selected by the driver (comfort/sport). Nevertheless, high damping forces are always applied at individual wheels in critical driving situations, e.g. despite the fact that the comfort program is selected.

Once the individual control components have been prioritized, a target damping force is output on the FlexRay for each wheel or damper. In addition, the dampers are prescribed a current value for the steady-state operating point.

Display Control

The VDM control unit is responsible for evaluating the button on the gear selector lever that the driver uses to select the damping program. Depending on the damping program selected, the VDM control unit issues a request on the PT-CAN to switch the LED in the button on or off (off = comfort, on = sport).

cardiagn.com

Degradation Behavior in the Event of a Fault

Depending on the type of fault present, the VDM control unit decides which of three degradation levels must come into effect.

- Level 1: Substitute values If, for example, the steering angle signal is unavailable, different variables will be used as a substitute value for cornering detection.
  The driver receives no failure message. No fault code memory entry is stored.
- Level 2: Constant supply of current.
  The VDM control unit specifies a constant damping force, which is the same for all four wheels ("medium-hard damping"). This leads to a constant supply of current to the valve in the adjusting dampers. A triggering factor for this degradation level may be a faulty ride-height sensor, for example. The driver receives a failure message.
  A fault code memory entry is stored.
- Level 3: Zero supply of current.
  If a fault is present in the load circuit, e.g. in the control of a valve, the VDM control unit will select the third degradation level: it tells the dampers that the valve is no longer permitted to be supplied with current. The valve therefore moves into a position that corresponds to a rather hard suspension setting. The driver receives a failure message. A fault code memory entry is stored.

From the damping force selected in the degradation levels, it can be seen that it is always the safe condition (harder tuning) that is adopted in the event of a fault (failsafe behavior).

Diagnostic Functions

The VDM control unit only stores its own faults in its fault memory. Faults with the EDC satellite control units are stored in their own fault memory. In the event of a VDC fault, therefore, it is necessary to check not only the fault memory of the VDM control unit, but of the satellites too. The VDM control unit also functions as a diagnostics gateway between the PT-CAN and VD-FlexRay so that the EDC satellite control units are accessible to the tester).

Note: The fault memories of the VDM control unit and the EDC satellite control units must be checked in the event of a VDC system failure. Unlike the EDC-K in the E65, it is not necessary to perform straight-ahead calibration of the VDC system following replacement of the steering angle sensor/SZL.

cardiagn.com

EDC Satellite Control (with damper)

This new generation EDC on the E70 is located externally, unlike the EDC system in the E65. The twin-tube gas-pressure damper, EDC satellite control unit and the EDC control valve with wiring as far as the first plug connection form one complete component and can only be replaced in this combination.

Index	Explanation	Index	Explanation
1	Twin-tube gas pressure dampers	3	EDC control valve
2	EDC satellite control unit		

EDC Satellite Control Unit

The following functions are implemented in the EDC satellite control unit:

- Signal processing: The EDC satellite control units each have one single-axis acceleration sensor on the control unit board. It is a micro mechanical structural element, which converts accelerations into capacitance changes first and then into an analog voltage signal.

  This is processed accordingly by the EDC satellite control unit and made available to the VDM control unit via FlexRay.

- Actuating functions: Each EDC satellite control unit has a damping characteristic map valid for this type of damper that is electronically stored in the form of support points. It is therefore possible to compensate for unavoidable tolerances (variations) arising from manufacture and achieve a higher degree of actuating precision (damping force).

cardiagn.com

Note: The EDC satellite control unit with twin tube gas-pressure damper and EDC control valve can only be replaced as one unit. The vehicle model and installation location (e.g. front left) must be stated when a replacement part is being ordered.

- Diagnostic functions
  Each EDC satellite control unit is compatible with diagnostics and has its own fault memory.

Note: The fault memories of the VDM control unit and the EDC satellite control units must be checked in the event of a VDC system failure. If the EDC satellite control units do not respond to diagnostics, there may be a fault in the VDM control unit (diagnostic gateway) or FlexRay. A calibration of the ride-height sensors and acceleration sensors must be carried out in the VDM control unit following replacement of an EDC satellite control unit.

Twin-tube Gas Pressure Damper

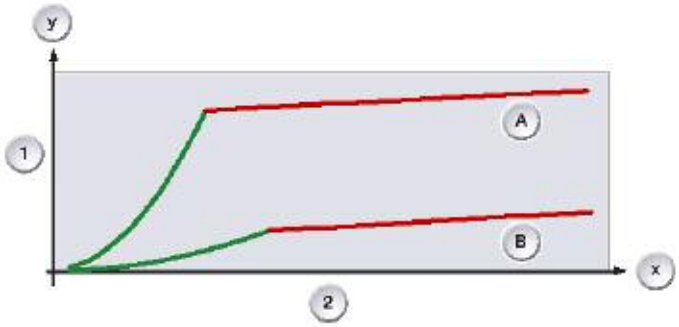

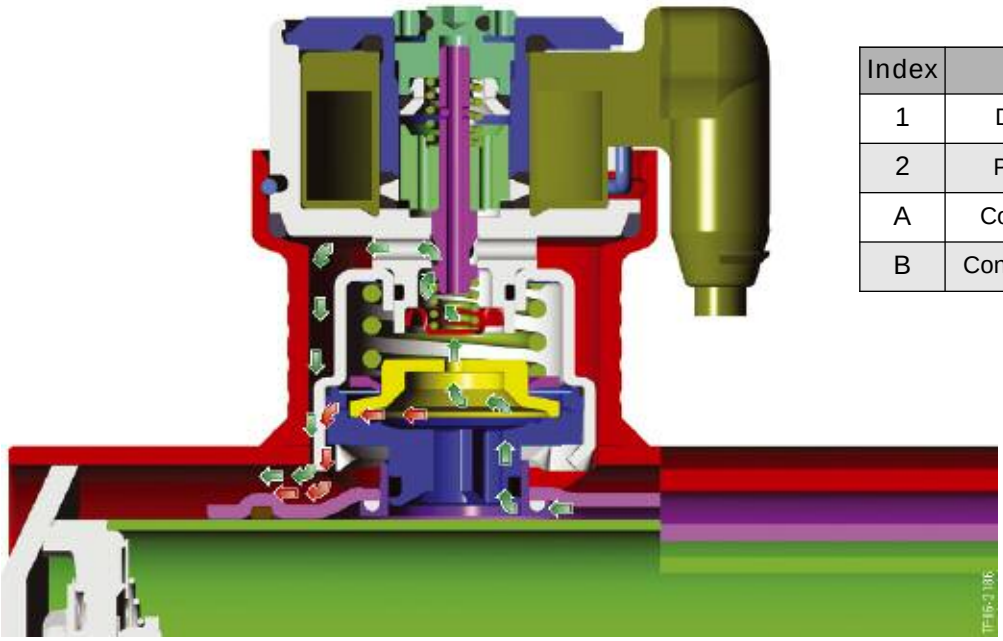

Index	Explanation
1	Damping force (N)
2	Piston speed (m/s)
A	Control current = 2 A
B	Control current = 0.65 A

cardiagn.com

Ride-height Sensor

The ride-height sensors are electrically connected directly to the VDM control unit. The mode of signal transfer is analog. Two way or one-way sensors may be fitted to the rear axle, depending on the vehicle's equipment level.

Two-way sensors deliver the signal not only to the VDM control unit but also to the EHC control unit.

Note: If a new ride-height sensor is being fitted, it must be ensured that only parts with matching part numbers are fitted. In particular, care must be taken not to confuse one-way and two-way sensors (one-way/two-way depends on the equipment level of the vehicle). Two-way sensors bear the marking "doppelt" on the housing.

E70 Ride Height Sensors

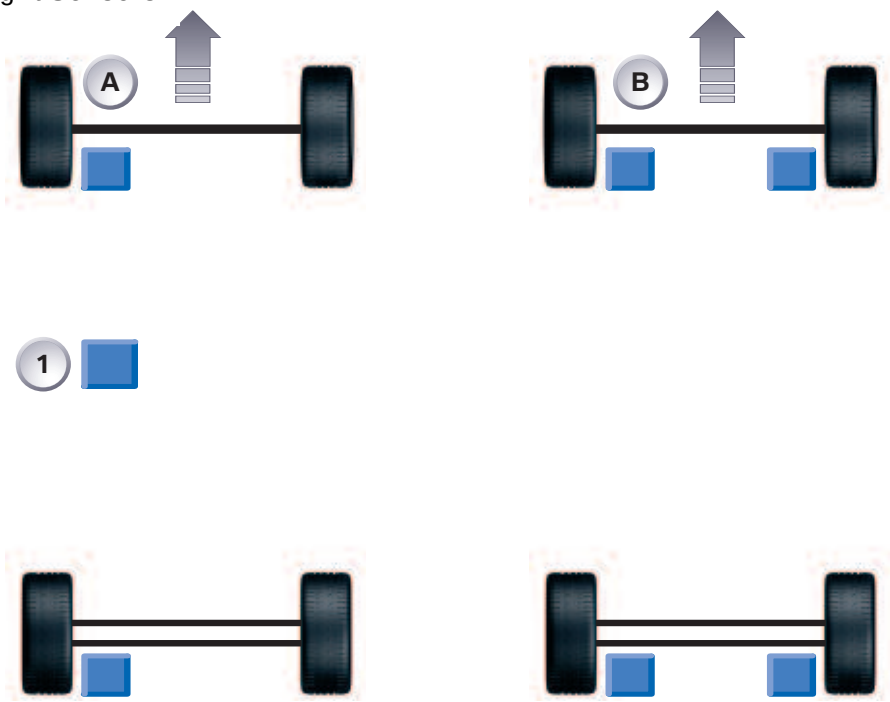

Index	Explanation	Index	Explanation
1	One-way ride height sensor with one output	B	Adaptive drive with Xenon
A	Xenon only		

cardiagn.com

E70 Ride Height Sensors (Cont.)

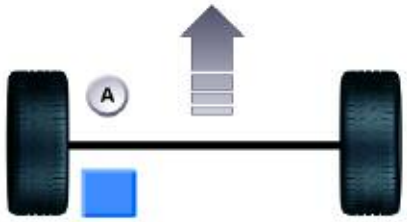

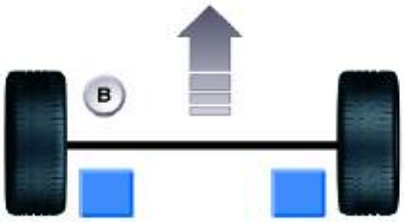

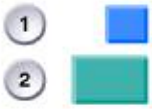

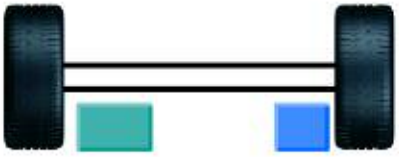

Index	Explanation	Index	Explanation
1	One-way ride height sensor with one output	A	Option-EHC and Xenon
2	Two-way ride height sensor with two outputs	B	Adaptive drive and EHC with Xenon

cardiagn.com

E70 Ride Height Sensor Variants

Index	Explanation	Index	Explanation
1	Two-way ride height sensor with two outputs	2	One-way ride height sensor with one output

cardiagn.com

EHC Components

EHC Control Unit

The EHC control unit is located in a module carrier in the rear of the luggage compartment on the right-hand side.

Index	Explanation	Index	Explanation
1	Comfort Access	4	Vertical Dynamics Management
2	Not for US market	5	Electronic Height Control
3	Park Distance Control		

The EHC control unit receives the following signal information:

- Vehicle ride height
- Load cutout signals
- Terminal 15 ON/OFF
- Vehicle speed
- Lateral acceleration
- "Engine running" signal
- Hatch status.

The EHC control unit decides on a case-by-case basis whether a control operation is required in order to compensate for changes in load. It is thus possible to optimally adapt the frequency, specified heights, tolerance thresholds and battery load to the relevant situation by means of the control operation.

The EHC control unit is fully compatible with diagnostics.

cardiagn.com

Air Supply Unit (LVA)

The air supply unit is fitted to the underbody of vehicle by a component carrier level with the front right door.

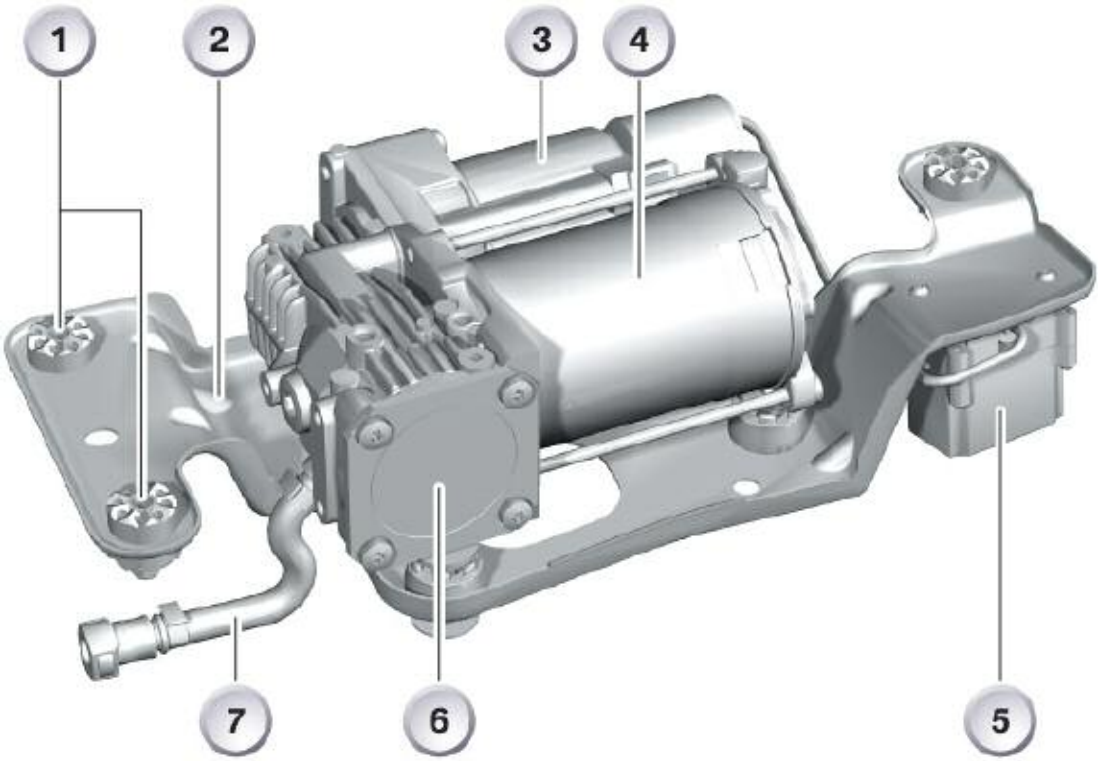

Index	Explanation	Index	Explanation
1	Rubber mount	5	Valve block
2	Component carrier	6	Compressor
3	Air drier	7	Air intake
4	Electric motor		

cardiagn.com

Air Suspension

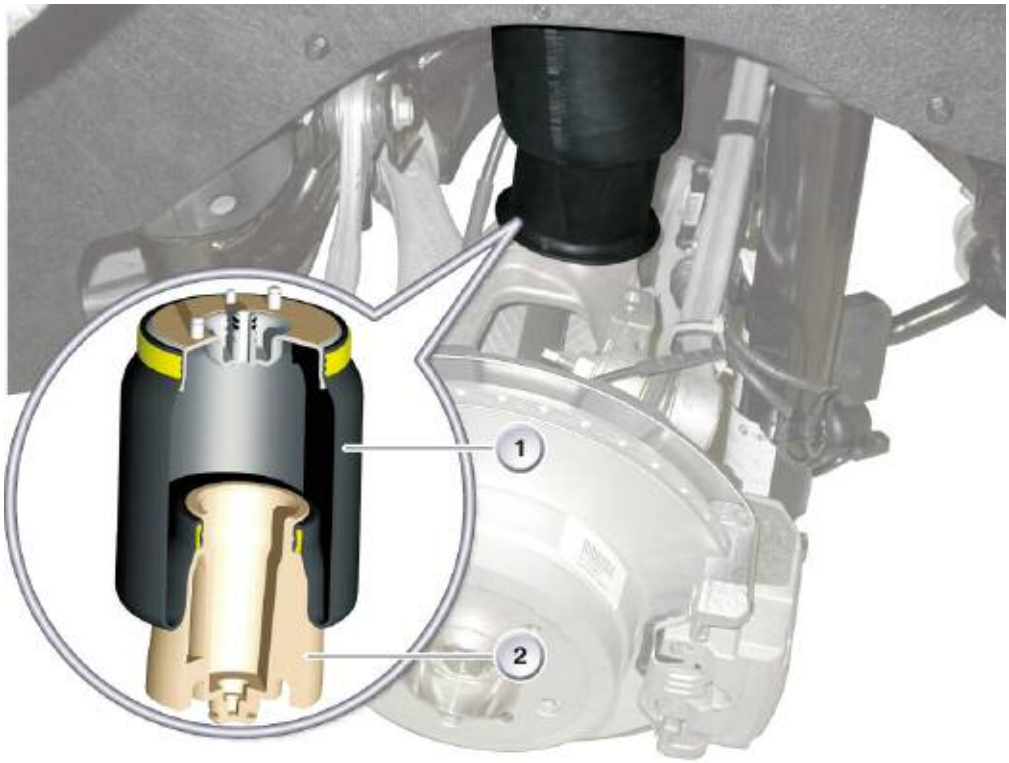

Index	Explanation	Index	Explanation
1	Rubber gaiter	2	Inner pipe

Note: When a new air spring is being fitted, care must be taken to ensure that it is not over-stretched. Otherwise, the retaining ring for the inner pipe could snap off the rubber gaiter, which could result in damage to the suspension air bag.

For this reason, the top of the air spring should be secured to the body first, and only then should it be connected to the axle carrier.

Ride-height Sensor

The ride-height sensors are electrically connected directly to the EHC control unit.
The mode of signal transfer is analog. Two-way or one-way sensors may be fitted to the rear axle, depending on the vehicle's equipment level. Two-way sensors deliver the signal not only to the VDM control unit but also to the EHC control unit.

Note: If a new ride-height sensor is being fitted, it must be ensured that only parts with matching part numbers are fitted. In particular, care must be taken not to confuse one-way and two-way sensors (one-way/two-way depends on the equipment level of the vehicle). Two-way sensors bear the marking "doppelt" on the housing.

cardiagn.com

E70 Ride Height Sensors for EHC

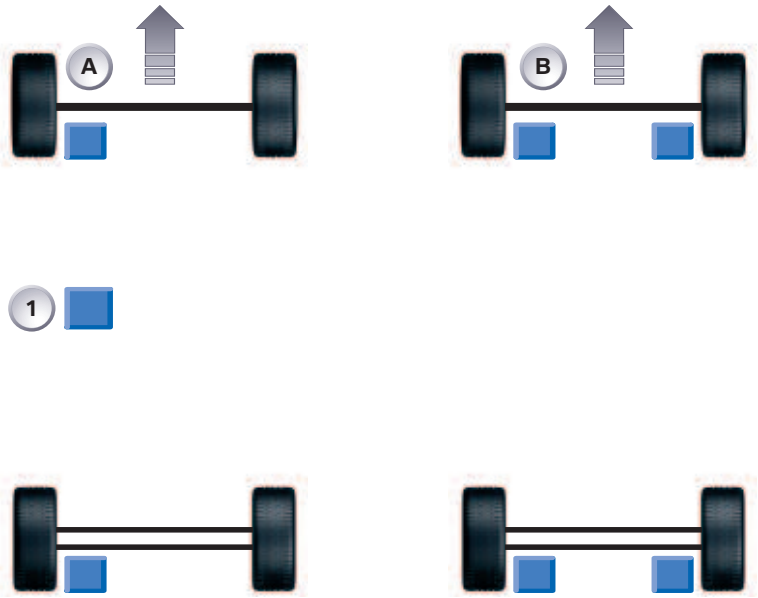

Index	Explanation	Index	Explanation
1	One-way ride height sensor with one output	B	Adaptive drive
A	Standard - Xenon only		

E70 Ride Height Sensor Variants

Index	Explanation	Index	Explanation
1	Two-way ride height sensor with two outputs	2	One-way ride height sensor with one output

cardiagn.com

E70 Ride Height Sensors for EHC (Cont.)

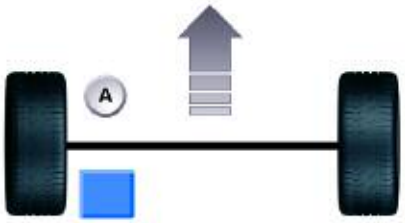

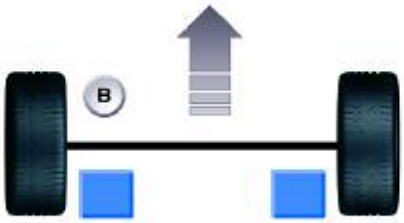

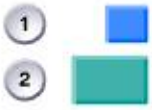

Index	Explanation	Index	Explanation
1	One-way ride height sensor with one output	A	Option-EHC and Xenon
2	Two-way ride height sensor with two outputs	B	Adaptive drive and EHC with Xenon

cardiagn.com

Service Information

If Dynamic Drive fails, DSC can no longer be deactivated or if it is already deactivated it does not switch back on automatically. The connections for all the hydraulic components are designed in different dimensions and lengths so that they cannot be transposed.

A disturbing transmission of noise into the vehicle interior occurs due mainly to the assembly and line connections. The lines must not make contact; they must be routed correctly through the brackets without slack or tension. They are covered by the underbody paneling.

Steering Angle Calibration

After work on the front axle, it is necessary to carry out a steering angle calibration with the Dynamic Drive control unit.

The Dynamic Drive system is dependent on the exact zero balance of the steering angle. The maximum deviation tolerance is 1. Precise chassis alignment is a prerequisite. The steering angle calibration must always be carried out on the measuring stand and in accordance with BMW axle alignment guidelines.

The zero position is lost each time the Dynamic Drive control unit is flash programmed. A steering angle calibration is required whenever the control unit is flash programmed.

ARS Initialization

The initialization procedure must always be carried out once the system has been opened or a part has been replaced. This also applies after the lateral acceleration sensor has been replaced.

The following conditions must be guaranteed for calibration of the offset values of the lateral acceleration sensor and the two pressure sensors:

- The vehicle must be stand level on all four wheels
- The vehicle must be unladen
- The engine must be idling
- Rest status (doors closed, persons are not allowed in the vehicle).

No persons may remain within the vicinity of moving chassis parts during the initialization (both in the works and the workshop). In addition you must ensure that the basic commissioning conditions (temperature range, constant engine speed etc.) are maintained. The ground clearance must not be limited and the doors must not be closed. The arms of the hoist may no longer be situated beneath the car.

cardiagn.com

The commissioning procedure is split into five stages which follow on from each other automatically:

I: direction valve test (from 3 to 3.4 s)	First the direction valve is tested by evaluating the signal of the SSE.
II: low-pressure test (from 3.4 to 4.3 s)	The failsafe and direction valves are without power during this stage. Then tests are carried out with pressure control valves with and without power on the front and rear axle. This causes the body to roll. The sides of the vehicle must be clear.
III: high-pressure test front axle (from 4.3 to 9.9 s)	Pressure of 180 bar is applied to the front-axle oscillating motor. Air in the system, internal leaks and a blocked oscillating motor are detected.
IV: high-pressure test rear axle (from 9.9 to 15 s)	Pressure of 170 bar is applied to the rear-axle oscillating motor. Air in the system, internal leaks and a blocked oscillating motor are detected.
V: pressure control valve test (from 15 to 25 s)	The characteristic curves of the front and rear axle are checked (set point/actual-value comparison). Faulty pressure control valves are detected.

ARS Bleeding Procedure

A bleeding procedure must be carried out using the diagnostic tester if the ARS system was opened hydraulically. The bleeding procedure is performed exclusively by way of the initialization routine of the diagnostic tester and not at the pressure relief valves or at the screw plugs of the oscillating motors.

If the test still detects air in the system, a short movement trip should be made if necessary.

The initialization routine must then be repeated after the short trip.

In the event of an extreme leak or suspected partial function of the pressure relief valves (noticeable by rattling noises in the front end), the pressure relief valves and the pneumatic lines must be replaced with new components.

cardiagn.com

Diagnostics

The following faults can be detected at the components:

Component	Fault type	Fault detection via:
Control unit	De-energized or faulty	Instrument cluster through absence of alive counter, VIN not recognized during authentication, watchdog
Pump	No Pressure	set point/actual-value comparison pressures
Directional valve	Jammed in "energized" position (spring break, dirt)	Direction-valve sensor
	Jammed in "de-energized" position (line break)	Direction valve sensor and current monitoring
Pressure control valve FA	Open (de-energized, p = pRA)	set point/actual-value comparison, pressure at front axle, current measurement
	Closed (mechanical fault) (pFA = pmax)	set point/actual-value comparison, pressure, front axle
RA pressure control valve	Open (de-energized) (p = 0)	set point/actual-value comparison, pressure, rear axle,and current measurement
	Closed (mechanical fault) (pRA and pFA = pmax)	set point/actual-value comparison, pressure, rear axle,
Failsafe valve	Jammed open	Pre-drive check
	Jammed closed (line)	Current measurement
Actuator front/rear axle	Leaking (no torque)	set point/actual-value comparison pressure
	Blocked	set point/actual-value comparison pressure
CAN bus	Total failure (line disconnected)	CAN timeout
Steering angle, vCar, aq, Y	Implausible or absent	Plausibility monitoring and CAN bus signal fault detection
Sensor aq	Total failure (line disconnected)	Voltage monitoring
	Incorrect signal	Check plausibility via CAN signals
Fluid level sensor	No signal (line)	
Front-axle pressure sensor	No signal (line)	Voltage monitoring
	Incorrect signal	set point/actual-value comparison, pressure,front axle
Rear axle Pressure sensor	No signal (line)	Voltage monitoring
	Incorrect signal	set point/actual-value comparison, pressure, RA
Direction-valve sensor	No signal (line)	Voltage monitoring
	Incorrect signal	set point/actual-value comparison, pressure, RA

cardiagn.com

Depending on the fault, the system displays one of the following responses.

System Shutdown (failsafe status)

The following faults result in system shutdown, i.e. all output stages are de-energized:

- Fault in the front-axle anti-roll bar
- Fault at the front-axle pressure sensor
- Fault in the pressure build-up (pump, pressure-limiting valve on the front axle)
- Fault in the control unit
- VIN is not sent via the CAS / absent / incorrect
- Direction valve position fault, faulty SSE
- No PT-CAN signal

The de-energized failsafe valve shuts off the chambers of the active anti-roll bar. Fluid equalization can only take place by means of internal leakage of the oscillating motor and valve block. The non-return valves in the valve block make it possible to siphon off the fluid to prevent cavitation in the front-axle oscillating motor.

The chambers of the rear-axle oscillating motor must not be shut off.

The handling corresponds virtually to that of a conventional vehicle. The crossover to the failsafe status can also be controlled in the event of extreme manoeuvring.

Warning message	Instruction
Cornering stability! Drive slowly around bends	Driving-stability system not functioning, driving stability restricted. No high cornering speeds. Continued driving possible, contact BMW Service immediately
The fluid level sensor in the fluid reservoir responds in the event of a fluid loss in the Dynamic Drive hydraulic system or in the steering circuit. The driver is alerted so that damage to the tandem pump caused by continued driving is avoided.	
Warning message	Instruction
Fluid loss! Pull over carefully, switch off engine	Fluid loss in the chassis and steering systems. Continued driving not possible, contact BMW Service immediately

cardiagn.com

Restricted Control Comfort	
A lateral acceleration is calculated from the road speed and steering-wheel angle from the CAN signals. This signal is faster than the actual lateral acceleration and compensates the time delay of the hydro-mechanical system. In the event of a fault in these two signals, the system responds with a delayed roll compensation. This arises only in the case of extremely quick steering manoeuvres and is barely noticeable in normal cornering manoeuvres. In the event of a faulty lateral acceleration sensor, the lateral acceleration is calculated from the CAN signals only. No impairment of function can be detected by the customer. In the event of a fault in the rear-axle circuit, i.e. a stabilization at the front axle only, the customer notices that the vehicle is subject to larger rolling motions. Agility diminishes at road speeds < 120 km/h. The system also responds if the "failsafe valve jammed open fault" is detected in the Pre-drive check. An electrical fault in the rear-axle pressure sensor may result in minor failures in roll-angle compensation. To be on the safe side, slightly more stabilizing torque is exerted on the front axle than in normal operation. This can be felt by the driver.	
Warning message	Instruction
Cornering stability slightly restricted	Chassis stabilization slightly restricted around bends. Continued driving possible, contact BMW Service at next opportunity

Restricted System Monitoring	
Dynamic Drive receives the following sensor signals from the DSC and SZL on the PT-CAN: • Lateral acceleration • Yaw velocity • Road speed • Steering-wheel angle These signals are used to check the lateral acceleration sensor. Drop-out of the engine-speed signal (DME) results in restricted control comfort. In the event of a fault in the lateral acceleration and yaw velocity CAN signals, the system is lacking two items of redundant information. Since this information is used exclusively for checking the other signals, the Dynamic Drive function is preserved with full control comfort. Although no restriction of the Dynamic Drive function exists, the message "Chassis and suspension-control system comfort restricted" is displayed for the driver who is requested to drive to the workshop at the next opportunity.	
Warning message	Instruction
Cornering stability slightly restricted	Chassis stabilization slightly restricted around bends. Continued driving possible, contact BMW Service at next opportunity

cardiagn.com

A "dynamic" driver will notice the absence of the steering angle signal. The warning messages must be acknowledged by the driver. Each warning message goes out only after it has been acknowledged.

Once the cause of the fault has been rectified, the control unit can be returned to full function.

There are two reset conditions depending on how fast a fault is to be detected:

- All faults that are no longer present are reset with "ignition Off". For this to happen, it is necessary to wait until the vehicle has entered sleep mode before switching to "ignition On" again.
- Sporadic faults which can mostly be traced back to communication faults in the CAN bus are then automatically reset while the vehicle is moving straight ahead or stationary provided they have only occurred briefly and rarely. In this case, the customer cannot detect the activation while the vehicle is moving or stationary.

  The associated faults with important additional information are stored in the fault memory. This additional information contains the kilometer reading/mileage at which the fault occurred, whether the fault is currently present and the frequency with which the fault in question has occurred. Thus, when the vehicle is brought into the garage/workshop, it is possible to carry out a specific analysis of the currently present fault and also an analysis of a sporadic fault.

Programming

It is possible to program the Dynamic Drive control unit.

Coding

It is possible to code the Dynamic Drive control unit.

cardiagn.com