66 20 517 Removing and installing/replacing a front centre left (inside) ultrasonic transducer (Park Distance Control)

Necessary preliminary tasks:

- Remove front bumper panel

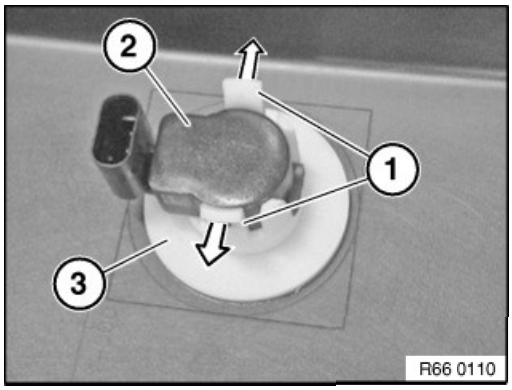

Disconnect plug connection.

Unlock retaining tabs (1) in direction of arrow and pull ultrasound transducer (2) upward out of bracket (3).

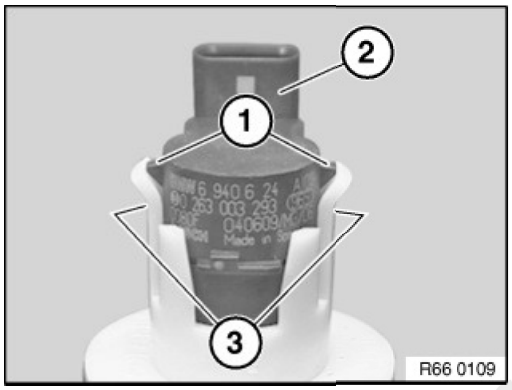

Installation note:
Before installation of ultrasonic sensor (2) on wiring harness, clean plug connection!

Retaining hooks (1) of ultrasonic transducer (2) must engage exactly in mountings (3).

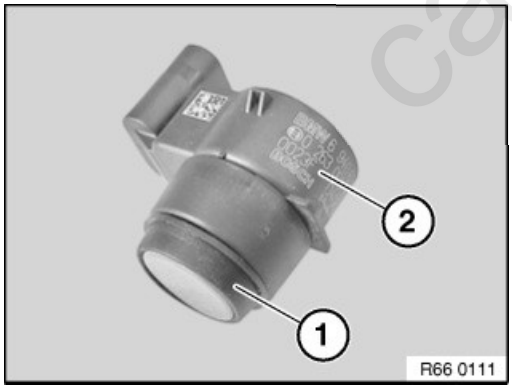

Installation note:
Make sure rubber ring (1) is correctly seated on ultrasonic sensor (2).

cardiagn.com

66 20 519 Removing and installing/replacing a front centre right (inside) ultrasonic transducer (Park Distance Control)

Necessary preliminary tasks:

- Remove front bumper panel

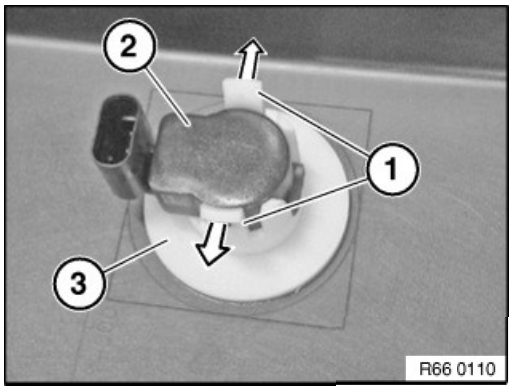

Disconnect plug connection.

Unlock retaining tabs (1) in direction of arrow and pull ultrasound transducer (2) upward out of bracket (3).

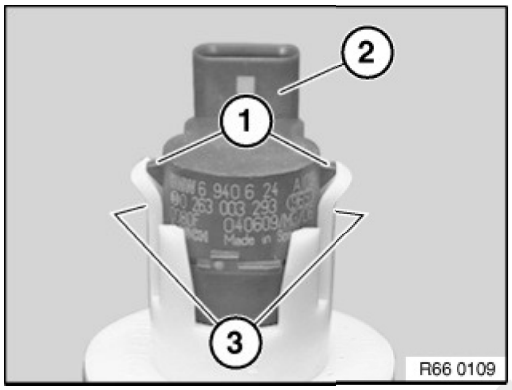

Installation note:
Before installation of ultrasonic sensor (2) on wiring harness, clean plug connection!

Retaining hooks (1) of ultrasonic transducer (2) must engage exactly in mountings (3).

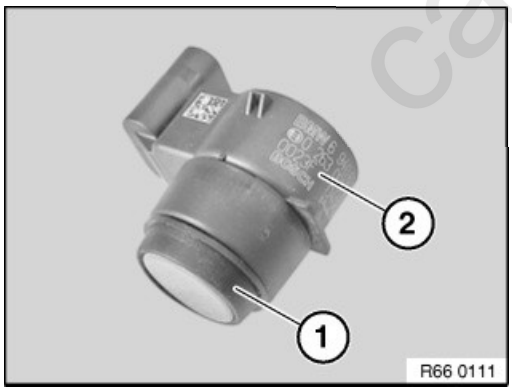

Installation note:
Make sure rubber ring (1) is correctly seated on ultrasonic sensor (2).

cardiagn.com

66 20 515 Removing and installing/replacing a front left (outside) ultrasonic transducer (Park Distance Control)

Necessary preliminary tasks:

- Remove front bumper trim.

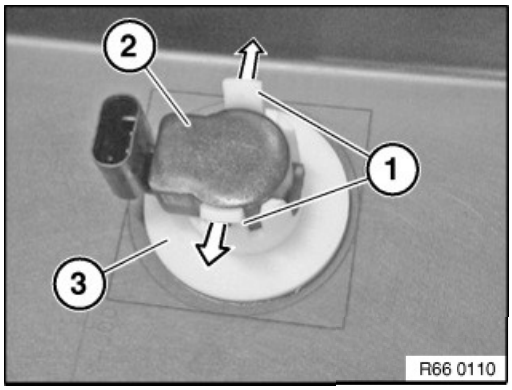

Disconnect plug connection.

Unlock retaining tabs (1) in direction of arrow and pull ultrasound transducer (2) upward out of bracket (3).

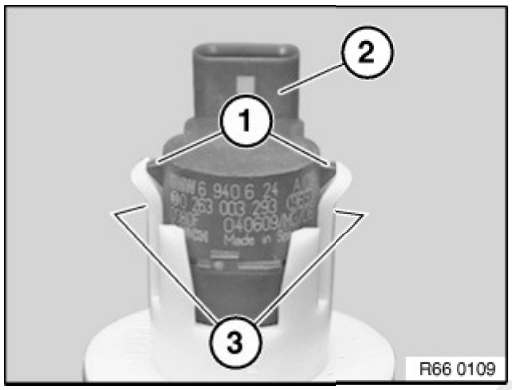

Installation note:
Before installation of ultrasonic sensor (2) on wiring harness, clean plug connection!

Retaining hooks (1) of ultrasonic transducer (2) must engage exactly in mountings (3).

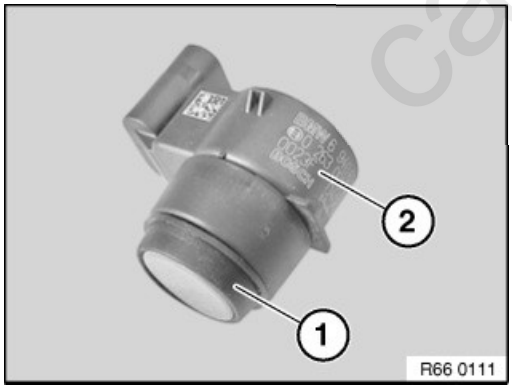

Installation note:
Make sure rubber ring (1) is correctly seated on ultrasonic sensor (2).

cardiagn.com

66 20 516 Removing and installing/replacing a front right (outside) ultrasonic transducer (Park Distance Control)

Necessary preliminary tasks:

- Remove front bumper panel

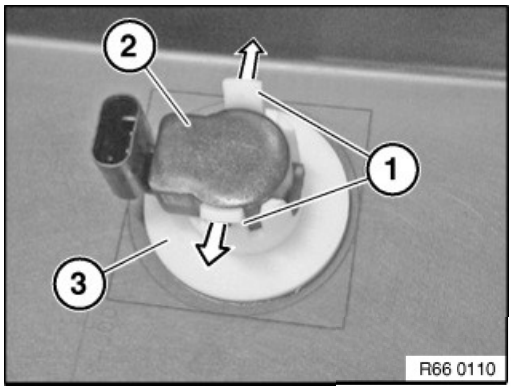

Disconnect plug connection.

Unlock retaining tabs (1) in direction of arrow and pull ultrasound transducer (2) upward out of bracket (3).

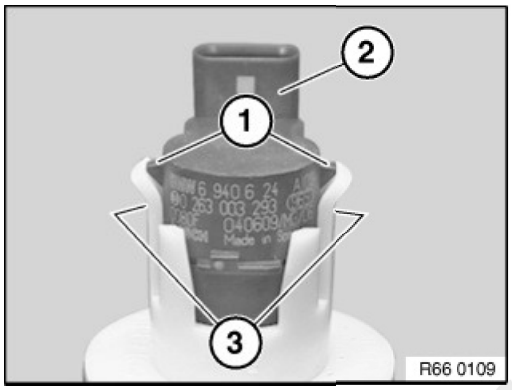

Installation note:
Before installation of ultrasonic sensor (2) on wiring harness, clean plug connection!

Retaining hooks (1) of ultrasonic transducer (2) must engage exactly in mountings (3).

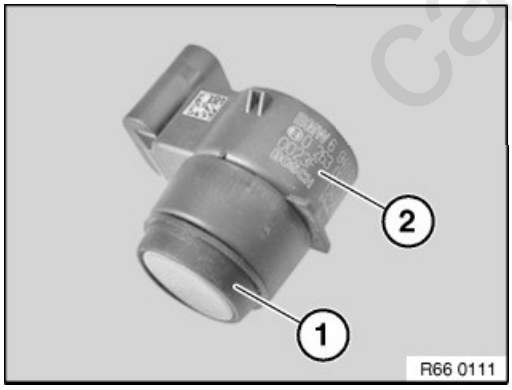

Installation note:
Make sure rubber ring (1) is correctly seated on ultrasonic sensor (2).

cardiagn.com

66 20 535 Removing and installing/replacing rear right ultrasonic sensor (N57T)

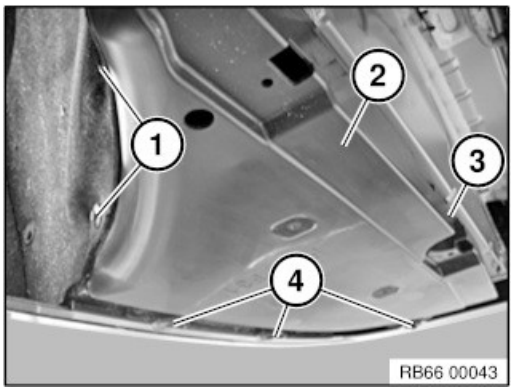

Undo expander rivet or screws (1).

Unscrew nut (3).

Release screws (4).

Remove cover (2) toward the bottom.

Installation note:
Replace faulty expanding rivet (1) if necessary.

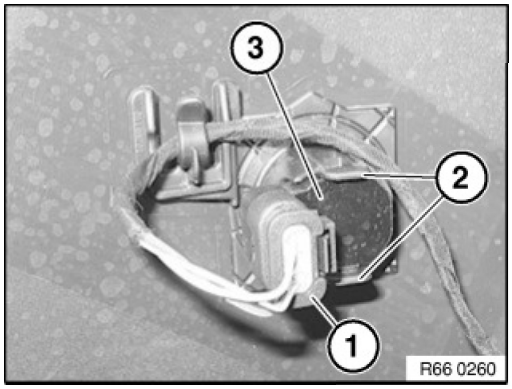

Note:
Ultrasonic transducers (3) can be reached from below with bumper installed.

Unlock plug connection (1) and disconnect. Unlock latch mechanisms (2) and pull ultrasonic transducer (3) out of bracket.*Installation note:*
Before installation of ultrasonic sensor (3) on wiring harness, clean plug connection!

Retaining tabs (2) must not be damaged!

Make sure ultrasonic sensor is securely seated.

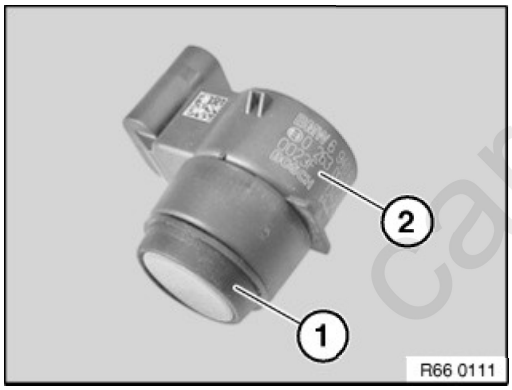

Installation note:
Make sure rubber ring (1) is correctly seated on ultrasonic sensor (2).

cardiagn.com

66 31 010 Adjusting the ACC sensor

Special tools required:

- 0 442 898
- 2 338 466

Note:
This document is valid for the entire F-series with the new ACC sensor.

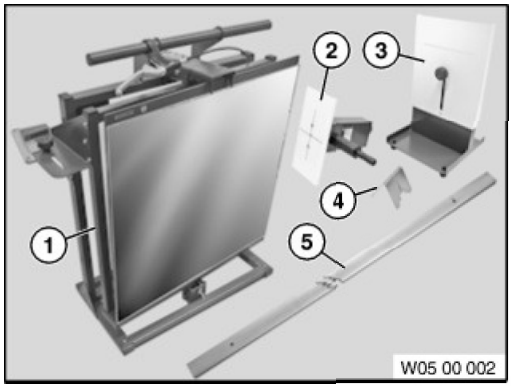

Special tool required:

ACC adjusting device, complete.

Order number:0 442 898

Consisting of:

1. Mirror, complete
2. Wheel laser
3. Slotted diaphragm
4. Control holder (for initial installation of rail)
5. Rail
6. Setup and Operating Instructions (not shown)

Note:
A mounting which is not included in the delivery specification is required to support the wheel laser. Use either the quick-action clamp from the existing Kinematics Diagnosis System or ACC wheel holder (2 338 466).

Note:

- Follow notes for ACC adjusting device.

Note:
To set the ACC sensor, connect the diagnosis system and fit the ACC adjusting device.

Carry out the setting via the following path:

- Service function
- Driver assistance
- Active cruise control
- Start-up of ACC sensor

Handle ACC adjusting device in accordance with mounting and Owner's Handbook provided with device.

cardiagn.com

Note:
Further information on the ACC adjusting device can be found in the BMW Workshop Equipment and Planning Documentation.

Note:
The following operation must be carried out if faulty code entry "Sensor misaligned" is present or is suspected to be present.

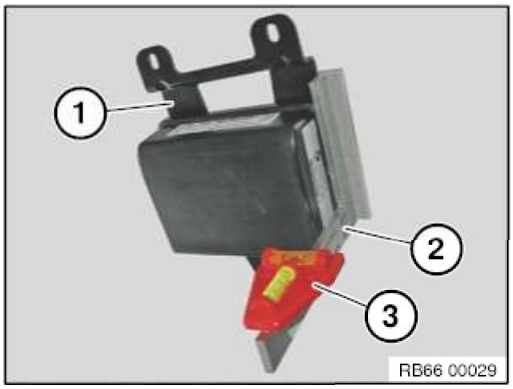

All except for F34:

Attention!

The vehicle must be parked on a flat, **horizontal** surface!

Note:
For purposes of clarity, graphic shows holder (1) removed.

Hold square (2) against holder (1) as shown.

Limit stop leg length: approx. 105 mm

Check the vertical orientation in the direction of travel with a conventional bubble level (3).

Replace holder if necessary.

Attention!

After replacing the holder, check the ACC sensor position again using the square (2) and bubble level (3).

If the ACC sensor position is still not right, check the support for the bumper panel at the bottom front for damage and replace if necessary (except F34).

A damaged / bent holder (1) indicates a mechanical misuse of the vehicle and will not be considered to be a warranty case.

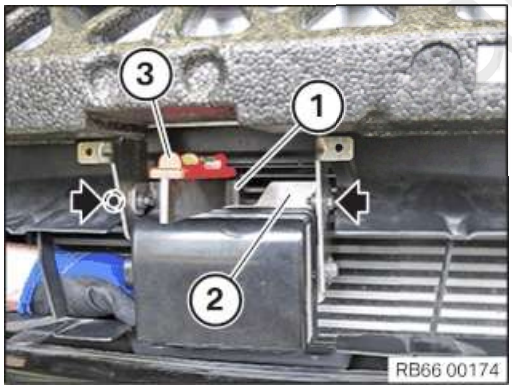

F34 only:

Attention!

The vehicle must be parked on a flat, **horizontal** surface!

Hold square (1) against holder (2) as shown.

Check the vertical orientation in the direction of travel with a conventional bubble level (3).

Adjust as appropriate by screws on side of holder (2).

If no correct setting can be attained, replace the complete holder (2).

Attention!

After replacing the holder, check the ACC sensor position again using the square (1) and bubble level (3).

If the ACC sensor position is still not right, check the support for the bumper panel for damage and replace if necessary.

A damaged / bent holder (1) indicates a mechanical misuse of the vehicle and will not be considered to be a warranty case.

66 31 010 Instructions for ACC adjusting device

Note:
This document is valid for the entire F-series with the new ACC sensor.

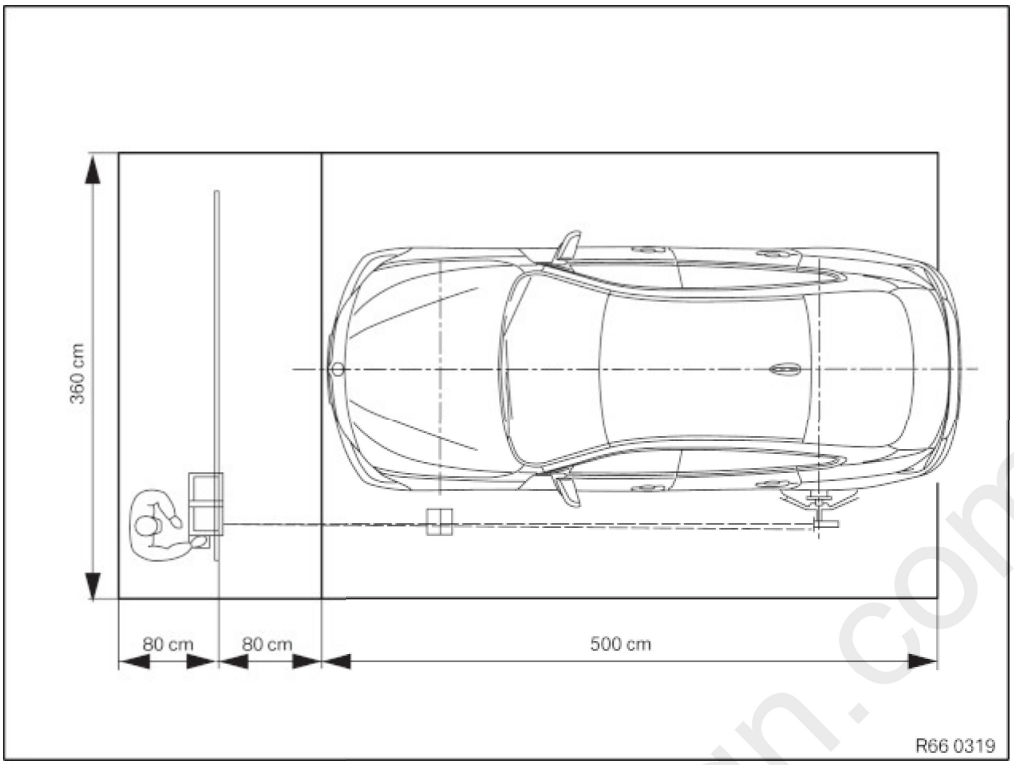

Requirements for the measurement area for ACC adjusting device

Dimensions:

1. Area behind the mirror of at least 80 cm that cane be entered
2. Distance between mirror and vehicle 80 cm +/- 5 cm
   (Distance between mirror and ACC sensor 100 cm +/- 5 cm)
3. Total area of work area 360 cm x 660 cm

Maximum irregularity of floor surface:

- Floor surface - adjusting device ≤ 1 mm
- Floor surface - vehicle ≤ 10 mm

cardiagn.com

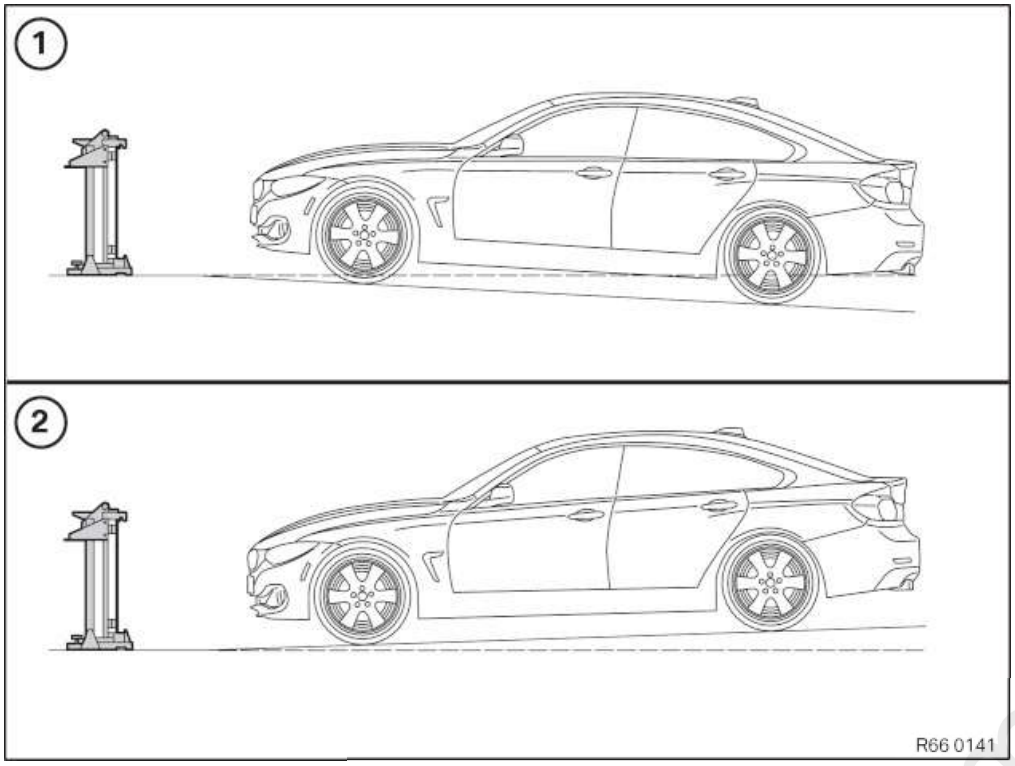

Maximum angle of inclination of floor surface - vehicle:

- Downward incline of floor surface maximum 3°, see graphic above (1)
- Upward incline of floor surface maximum 1°, see graphic above (2)

Note:
Setting up the ACC adjusting device (one-off task) comprises the following steps:

- Assembly of adjusting device
- Assembly of rail
- Basic setting of adjusting device on measurement area

Detailed setup and operating instructions are enclosed with every ACC adjusting device.

cardiagn.com

66 31 006 Removing and installing (replacing) ACC sensor

Necessary preliminary tasks:

- Remove the support for the front bottom bumper panel

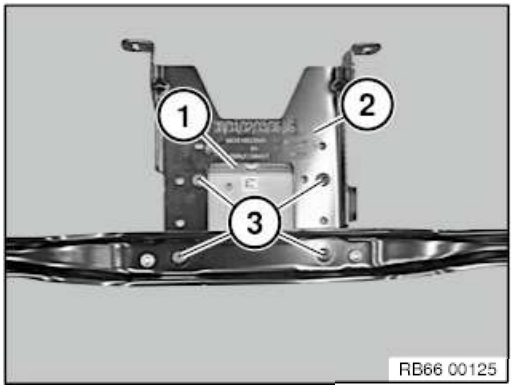

Loosen screws (3).

Tightening torque 66 31 1AZ.

Remove ACC sensor (1) from holder (2).

After installation:

- Adjusting ACC sensor

Replacement:

- Carry out programming/encoding
- Adjusting ACC sensor

cardiagn.com

66 32 020 Removing and installing/replacing sensor for lane change warning

Necessary preliminary tasks:

- Remove rear bumper panel

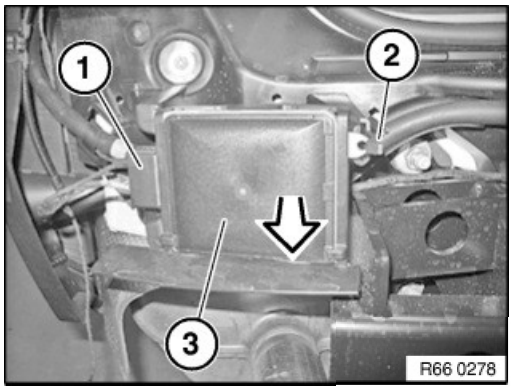

Unfasten plug connection (1) and disconnect.

Unlock catch (2).

Remove sensor (3) from bracket in direction of arrow.

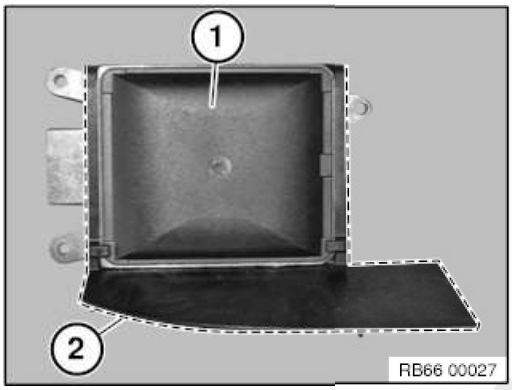

Replacement:

Remount frame (2) for new sensor (1).

Attention!

If, in the event of side damage to the vehicle, it is not necessary to replace the tail panel, observe the following points:

- Fit middle bumper panel guide on undamaged side
- Use middle bumper panel guide as a gauge in order to check or correct the position of the remaining connecting points.
- Middle bumper panel guide must be able to be fitted without tension.

Replacement:

- Carry out programming/encoding.

cardiagn.com

Run the service function below in the following cases:

- After replacing the sensor for the lane change warning
- After a body repair in the sensor area (including when the sensor for the lane change warning was not replaced)

Service Function:

- Driver assistance
- Lane Change Warning
- Initialisation of the SWW sensor system

cardiagn.com

66 33 010 Removing and installing / replacing ultrasonic sensors for Parking Manoeuvring Assistant

Necessary preliminary tasks:

- Partially remove wheel arch cover, front left or right

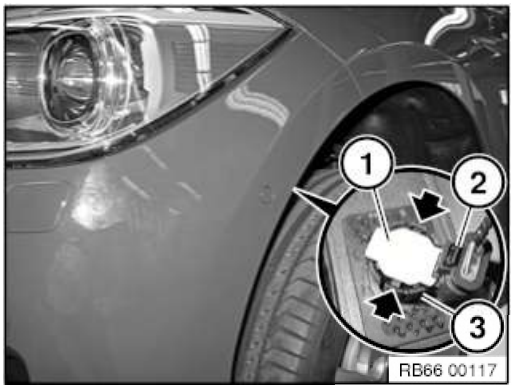

Unfasten plug connection (2) and disconnect.

Unlock latch mechanismsÂ where marked and pull ultrasonic sensor (1) out of bracket (3).

Installation note:
Latch mechanisms must not be damaged or missing.

Make sure ultrasonic sensor is seated securely!

cardiagn.com

66 33 008 Removing and installing/replacing of the Parking Manoeuvring Assistant control unit

Necessary preliminary tasks:

- Remove control unit holder

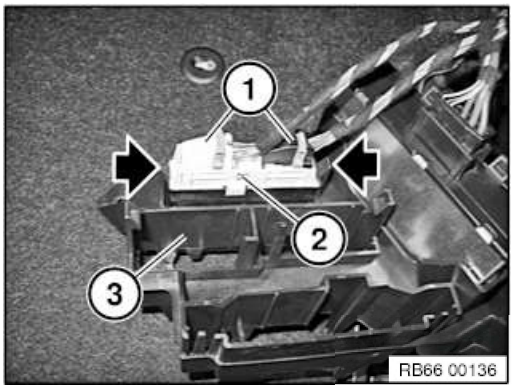

Unlock plug connections (1) and disconnect.

Unlock latches at marked points.

Pull Parking Manoeuvring Assistant control unitÂ (2) out of holder (3) in an upward direction.

Replacement:

Carry out programming/encoding.

cardiagn.com

66 51 030 Remove and install/replace KAFAS camera

Attention!

Read and comply with notes on protection against electrostatic damage (ESD protection).

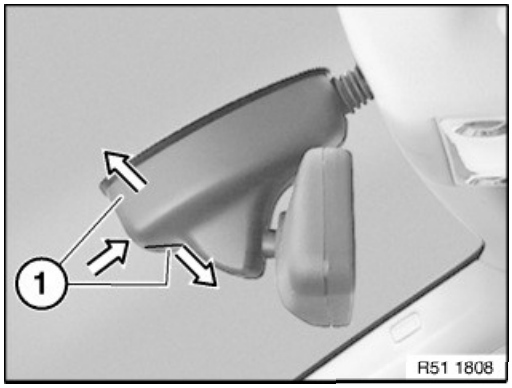

Expand two-part mirror base cover (1) by pressing from below and detach.

Feed out two-part mirror base cover (1) and remove.

Note:
Latch mechanisms of two-part mirror base cover (1) must not be damaged.

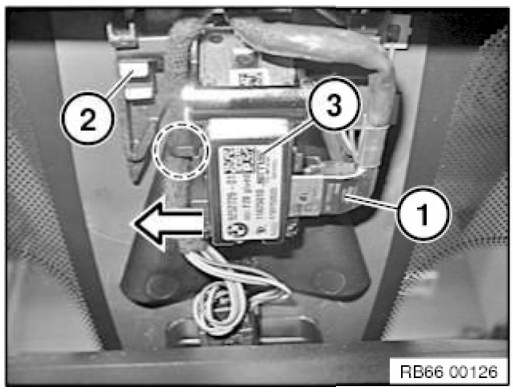

Disconnect plug connection (1).

Unclip cable in marked area.

Unlock retaining claps (2) and remove camera (3) in direction of arrow.

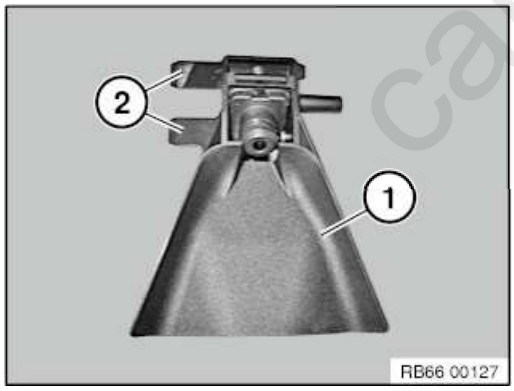

Installation note:
Guides (2) on camera (1) must be correctly inserted in counter supports on windscreen!

Make sure camera (1) is securely seated.

When replacing windscreen:

Carry out the service function:

- Driver assistance
- Camera-based driver assistance systems
- Calibration of camera-based driver support systems

cardiagn.com

Note:
The calibration process of the KAFAS camera is not complete until the vehicle drives in traffic.

Tell the customer that some driver assistance systems are temporarily unavailable after vehicle pick-up.

Note:
Heating of the KAFAS camera is integrated in the windscreen.

If the heating is defective, the windscreen must be replaced!

cardiagn.com

66 32 020 Removing and installing/replacing sensor for lane change warning

Necessary preliminary tasks:

- Remove rear bumper panel

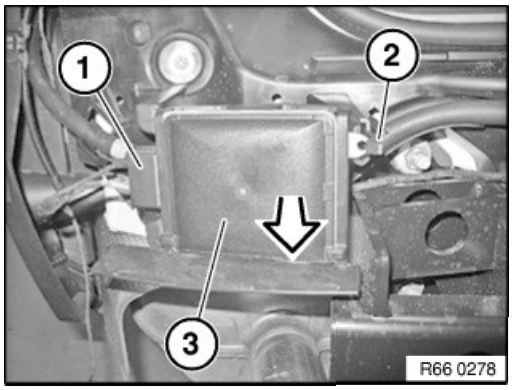

Unfasten plug connection (1) and disconnect.

Unlock catch (2).

Remove sensor (3) from bracket in direction of arrow.

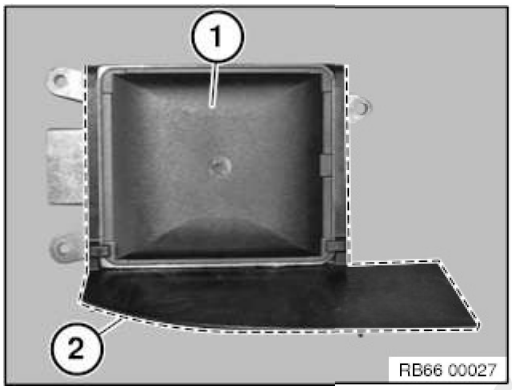

Replacement:

Remount frame (2) for new sensor (1).

Attention!

If, in the event of side damage to the vehicle, it is not necessary to replace the tail panel, observe the following points:

- Fit middle bumper panel guide on undamaged side
- Use middle bumper panel guide as a gauge in order to check or correct the position of the remaining connecting points.
- Middle bumper panel guide must be able to be fitted without tension.

Replacement:

- Carry out programming/encoding.

cardiagn.com

Run the service function below in the following cases:

- After replacing the sensor for the lane change warning
- After a body repair in the sensor area (including when the sensor for the lane change warning was not replaced)

Service Function:

- Driver assistance
- Lane Change Warning
- Initialisation of the SWW sensor system

cardiagn.com

66 53 010 Calibrating reversing camera

Note:
Calibration of reversing camera must be carried out after the following work:

- Replace the RFK
- Repair work on the rear area of the body
- Adjusting work at tailgate

Attention!

Follow instructions and specifications in procedure.

To obtain an optimum result, always adhere to the following conditions:

- Vehicle standing level on headlight aiming station
- Rear seat bench is unoccupied
- Do not swap seats during calibration
- Steering wheel in straight-ahead position
- Do not move steering wheel

Note:
Also switch on reversing camera by means of PDC button.

Calibration can only be carried out with the diagnosis system.

Equipment specification with rear view camera:

Carry out the service function:

- Driver assistance
- Rear view camera
- Calibration of the reversing camera

Equipment specification with all-round vision camera:

Carry out the service function:

- Driver assistance
- All-round vision camera
- Calibration and teaching in for all-round vision camera

Using a special tool is no longer required for vehicles with a production date from 03/2011!

cardiagn.com

66 53 010 Calibrating the rear view camera

1 â€“ Calibrating reversing camera

Prerequisite

The vehicle is parked horizontally at the headlight adjustment station. The steering wheel is in the straight-ahead position. The rear seat is not occupied.

- Press the PDC button to switch on the rear view camera (RFK).

Note: The use of special tools is no longer required for vehicles with a production date from 03/2011.

- Connect diagnosis system:
  - Service functions
  - Driver assistance
  - Reversing camera
- **For vehicles with rear view camera (RFK):**
  - Calibration of the reversing camera (RFK)
- **For vehicles with all-round vision camera:**
  - Calibration and teaching in for all-round vision camera
- Do not move the steering wheel during calibration and do not switch seats.

cardiagn.com

66 53 180 Removing and installing (replacing) control unit for reversing camera

Important!

Read and comply with notes on protection against electrostatic damage (ESD protection).

Necessary preliminary tasks:

- Remove trim panel for pedal mechanism

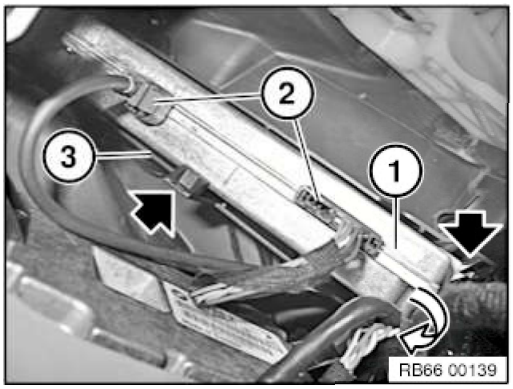

Unlock plug connections (2) and disconnect.

Unlock latches at marked points.

Remove control unit (1) from holder (3) in direction of arrow.

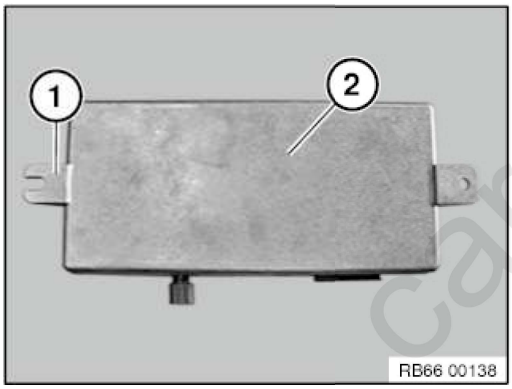

Installation note:
Guide (1) on control unitÂ (2) must be inserted in corresponding recess on counter support.

Make sure control unit (2) is securely seated.

Replacement:

- Carry out programming/encoding.
- Calibrate reversing camera

cardiagn.com

66 53 020 Removing and installing (replacing) reversing camera

Attention!

Read and comply with notes on protection against electrostatic discharge (ESD protection)!

Necessary preliminary tasks:

- Remove button for tailgate activation

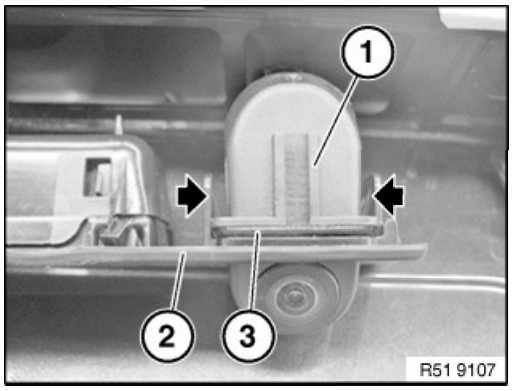

Unclip rear view camera (1) left and right and feed out of button holders (2).

Unlock associated plug connection and disconnect.

Installation note:
Seal (3) of rear view camera (1) must not be damaged and must be installed.

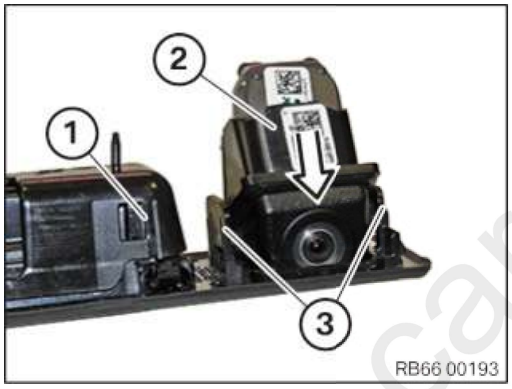

Insert rear view camera (2) as shown in button holder (1).

Engage rear view camera (2) in direction of arrow in button holder (1).

Latch mechanisms (3) must not be damaged.

Installation note:
Make sure the rear view camera is latched correctly (2)!

Replacement:

Carry out vehicle programming/coding.

cardiagn.com

66 53 170 Removing and installing/replacing control unit for Top-/Rear-/Side-View Camera

Important!

Read and comply with notes on protection against electrostatic damage (ESD protection).

Necessary preliminary tasks:

- Remove trim panel for pedal mechanism

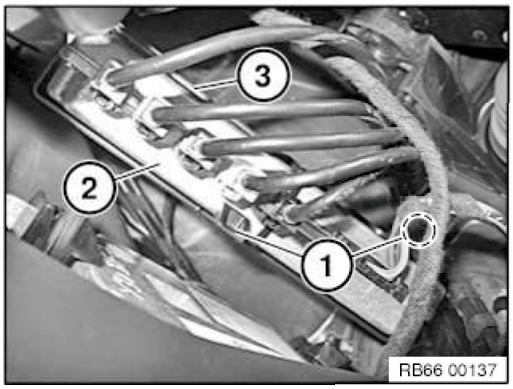

Unlock all plug connections and disconnect.

Unlock latch mechanisms (1).

Remove control unit (2) from holder (3) downwards.

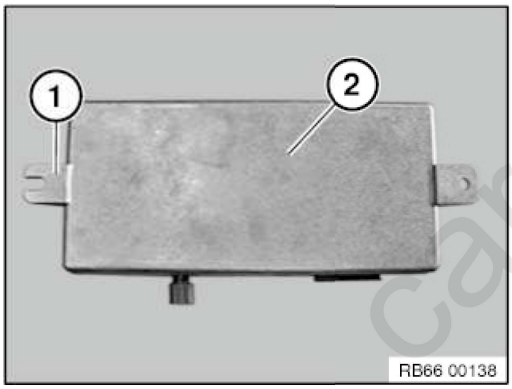

Installation note:
Guide (1) on control unitÂ (2) must be correctly inserted in corresponding recess on counter support.

Make sure control unit (2) is securely seated.

Replacement:

- Carry out programming/encoding.
- Calibrate reversing camera

cardiagn.com

66 53 030 Removing and installing/replacing side view camera on left or right

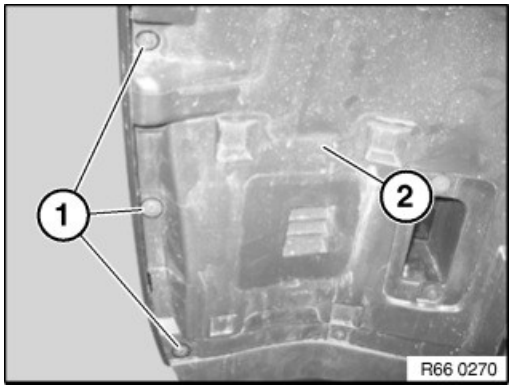

Note:
Picture shows front wheel removed for purposes of clarity

Release screws (1).

Fold wheel arch panel (2) to one side.

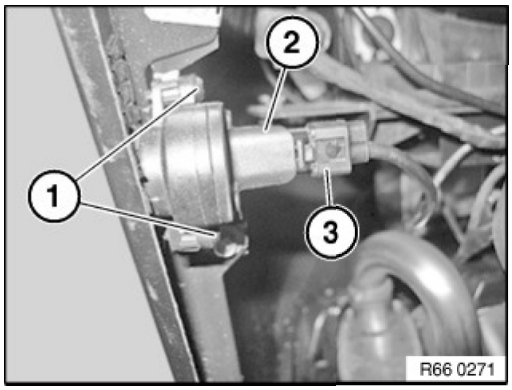

Release screws (1).

Remove side view camera (2).

Unfasten plug connection (3) and disconnect.

Replacement:

Carry out programming/encoding.

Carry out the service function:

- Driver assistance
- All-round vision camera
- All-round vision camera programming

cardiagn.com

66 53 060 Removing and refitting/replacing top view camera

Necessary preliminary tasks:

- Remove retaining ring on exterior mirror

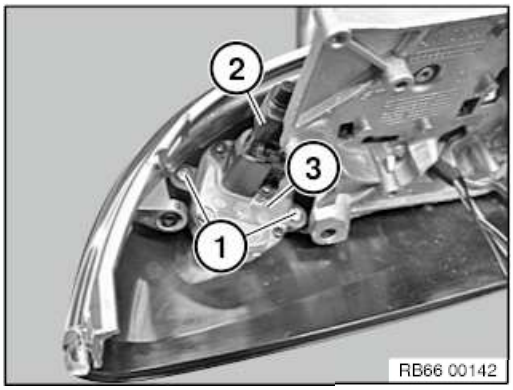

Unfasten plug connection (2) and disconnect.

Release screwsÂ (1).

Remove exterior mirror camera (3).

Replacement:

Carry out the calibration procedure as follows:

- Service function
- Body
- All-round vision camera
- Calibration of all-round vision camera

cardiagn.com

51 11 ... Replace the holder for the PDC/PMA/side view camera

Necessary preliminary work:

- If necessary, remove the side view camera or ultrasonic sensor

Observe notes for bonding with adhesive tape.

The description of the work uses the example of a PDC holder.

If necessary, completely remove the faulty holder and adhesive residue.

Lightly sand the adhesive area (1) with sandpaper.

Clean the adhesive area (1).

Insert the ultrasonic sensor (1) in the holder (2).

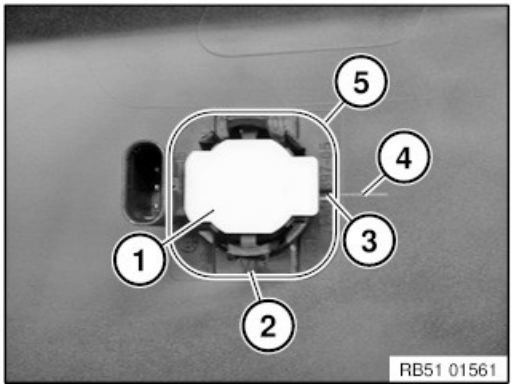

Attention!

Mount holder (2) according to its installation position. Note the label on the holder (2).

Align the visible notch (3) with the mark (4) and bond the holder (2) with the integrated ultrasonic sensor (1).

Fasten the holder (3) on the bumper panel in the area (5) on all sides with the adhesive kitK6.

cardiagn.com

65 82 300 Removing and installing (replacing) Touchbox controller control unit

Important!

Read and comply with notes on protection against electrostatic discharge (ESD protection).

Necessary preliminary tasks:

- Remove complete centre console

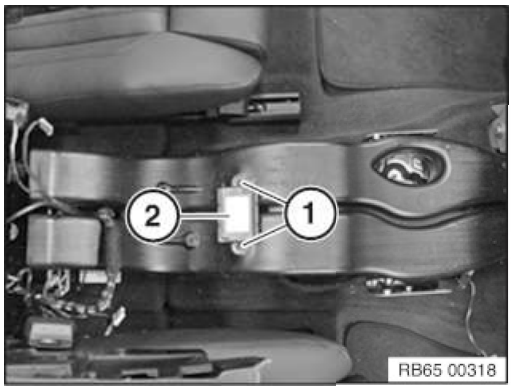

Version with air duct:

Loosen the screws (1).

Remove Touchbox (2).

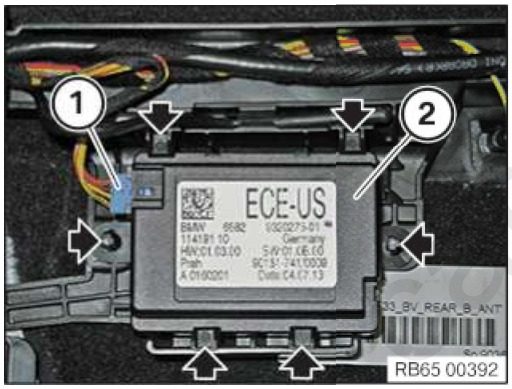

Version without air duct:

Unfasten plug connection (1) and disconnect.

Release latch mechanisms at marked points.

Remove Touchbox (2).

Replacement:

Carry out vehicle programming and encoding.

cardiagn.com

65 82 300 Removing and installing (replacing) Touchbox controller control unit

Attention!

Read and comply with notes on protection against electrostatic damage (ESD protection).

Necessary preliminary tasks:

- Remove footwell side trim panel, right

Removal:

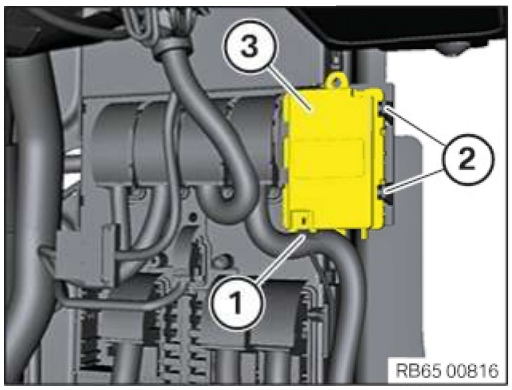

Unfasten plug connection (1) and disconnect.

Release Touchbox (3) from the latch mechanisms (2) and feed out from the holder.

Installation:

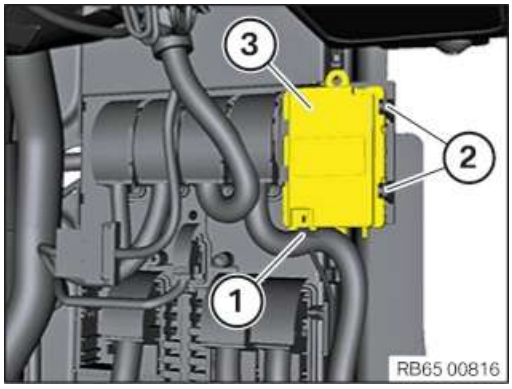

Note:
Latch mechanisms (2) must not be damaged or missing.

Feed in Touchbox (3) correctly on the holder and engage it to the latch mechanisms (2).

Connect and lock plug connection (1).

cardiagn.com

Required reworking:

- Install the side trim panel in the right-hand footwell

Replacement:

Carry out programming.

cardiagn.com

66 53 020 Removing and installing (replacing) reversing camera

Attention!

Read and comply with notes on protection against electrostatic discharge (ESD protection)!

Necessary preliminary tasks:

- Remove button for tailgate activation

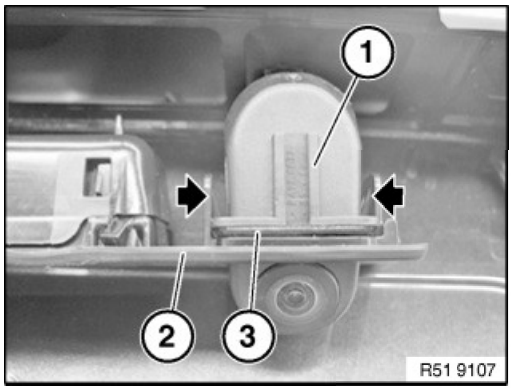

Unclip rear view camera (1) left and right and feed out of button holders (2).

Unlock associated plug connection and disconnect.

Installation note:
Seal (3) of rear view camera (1) must not be damaged and must be installed.

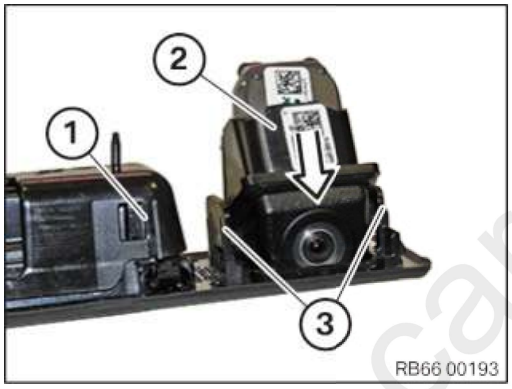

Insert rear view camera (2) as shown in button holder (1).

Engage rear view camera (2) in direction of arrow in button holder (1).

Latch mechanisms (3) must not be damaged.

Installation note:
Make sure the rear view camera is latched correctly (2)!

Replacement:

Carry out vehicle programming/coding.

cardiagn.com

00 Safety information for working on vehicles with automatic engine start-stop function (MSA)

Warning!

If the engine hood/bonnet contact is pulled upwards (workshop mode), the information "switch closed" is output. The automatic engine start-stop function is active.

An automatic engine start is possible.

Observe safety precautions when working on MSA vehicles.

Before carrying out practical work on the engine, always ensure that the MSA functionality is deactivated so as to prevent automatic engine starting while work is being carried out in the engine compartment.

MSA function is deactivated by:

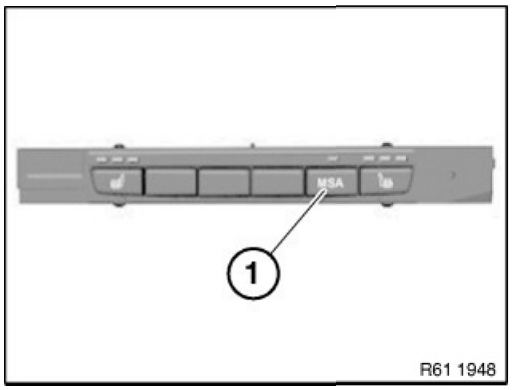

- Deactivate MSA by means of button (1) in passenger compartment
- Open seat belt buckle and driver's door

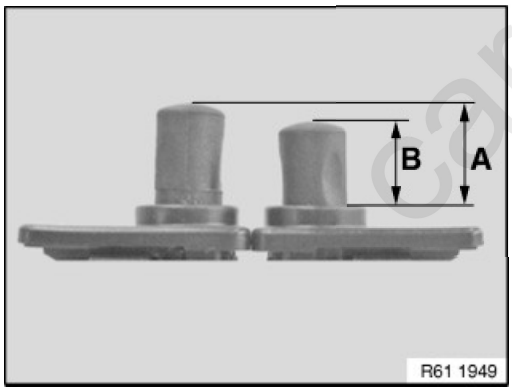

- Open engine bonnet/hood and ensure that engine hood/bonnet contact is not in workshop mode
  - Workshop mode

    A = 10 mm
  - Basic setting (engine hood/bonnet open)

    B = 7 mm

  To make sure that the engine hood/bonnet contact is at the basic setting, if necessary press the hood/bonnet contact up to the limit position before starting work and slowly release.

When working with diagnosis tools:

- Observe instructions in diagnosis tool

cardiagn.com

Note:
For further information on automatic engine start-stop function (MSA):

- Refer to the Service Information (bulletin) (for manual transmissions) Service Information (bulletin) 61 01 07 335
- Refer to the Service Information (bulletin) (for automatic transmissions or twin-clutch gearboxes) Service Information (bulletin) 61 01 10 629

cardiagn.com