iQ

2013

QUICK REFERENCE GUIDE

GET INFORMED.
ROLL.

what moves you

2013
Scion iQ

This *Quick Reference Guide* is a summary of basic vehicle operations. It contains brief descriptions of fundamental operations so you can locate and use the vehicle's main equipment quickly and easily.

The *Quick Reference Guide* is not intended as a substitute for the *Owner's Manual* located in the vehicle's glove box. We strongly encourage you to review the *Owner's Manual* and supplementary manuals so you will have a better understanding of the vehicle's capabilities and limitations.

Your dealership and the entire staff of Toyota Motor Sales, U.S.A., Inc. wish you many years of satisfied driving in your new Scion iQ.

A word about safe vehicle operation

This *Quick Reference Guide* is not a full description of Scion iQ operations. Every Scion iQ owner should review the *Owner's Manual* that accompanies this vehicle.

Pay special attention to the boxed information highlighted in color throughout the *Owner's Manual*. Each box contains safe operating instructions to help you avoid injury or equipment malfunction.

All information in this *Quick Reference Guide* is current at the time of printing. Toyota reserves the right to make changes at any time without notice.

INDEX

OVERVIEW	Engine maintenance	7
	Fuel tank door opener and cap	6
	Hood release	7
	Indicator symbols	4-5
	Instrument cluster	4
	Instrument panel	2-3
	Keyless entry*	6
	Light control-Instrument panel	6
FEATURES/OPERATIONS	Air Conditioning/Heating	12
	Automatic Transmission	8
	Auxiliary box	14
	AUX port/USB port	13
	Bottle holders	14
	Cup holders	14
	Lights & turn signals	10
	Multi-Information Display	11
	Parking brake	8
	Power outlet	14
	Seat adjustments-Front	9
	Seat-Folding down rear seat	9
	Steering wheel switches	13
	Tilt steering wheel	12
	Windows	11
	Windshield wipers & washers	10
SAFETY AND EMERGENCY FEATURES	Door locks	15
	Emergency tire puncture repair kit	17
	Floor mat installation	19
	Seat belts	16
	Star Safety System™	18
	Tire Pressure Monitoring (warning) System	16

**** Visit your Toyota dealer for information on customizing this feature.***

OVERVIEW

Instrument panel

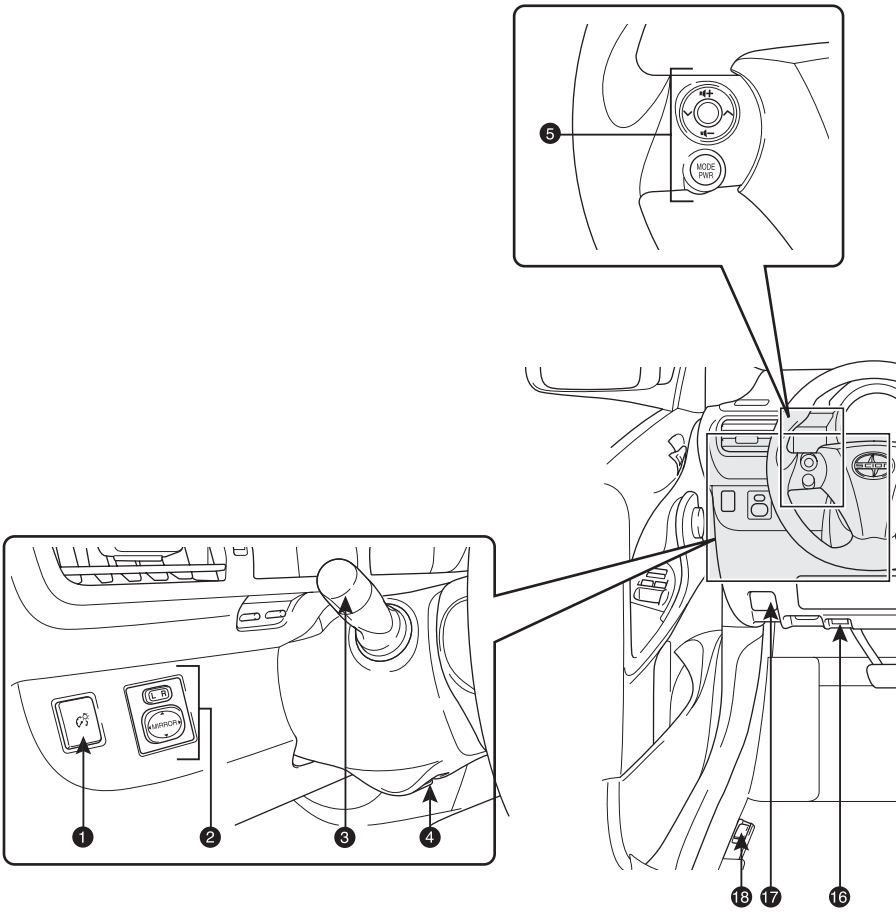

1. Instrument panel light control
2. Power outside rearview mirror controls
3. Headlight and turn signal controls
4. Tilt steering lock release
5. Steering wheel audio controls[2]
6. Wiper and washer controls
7. Ignition switch
8. Front passenger occupant classification indicator/ Front passenger seat belt reminder light
9. Emergency flasher button
10. Air Conditioning controls
11. Power outlet

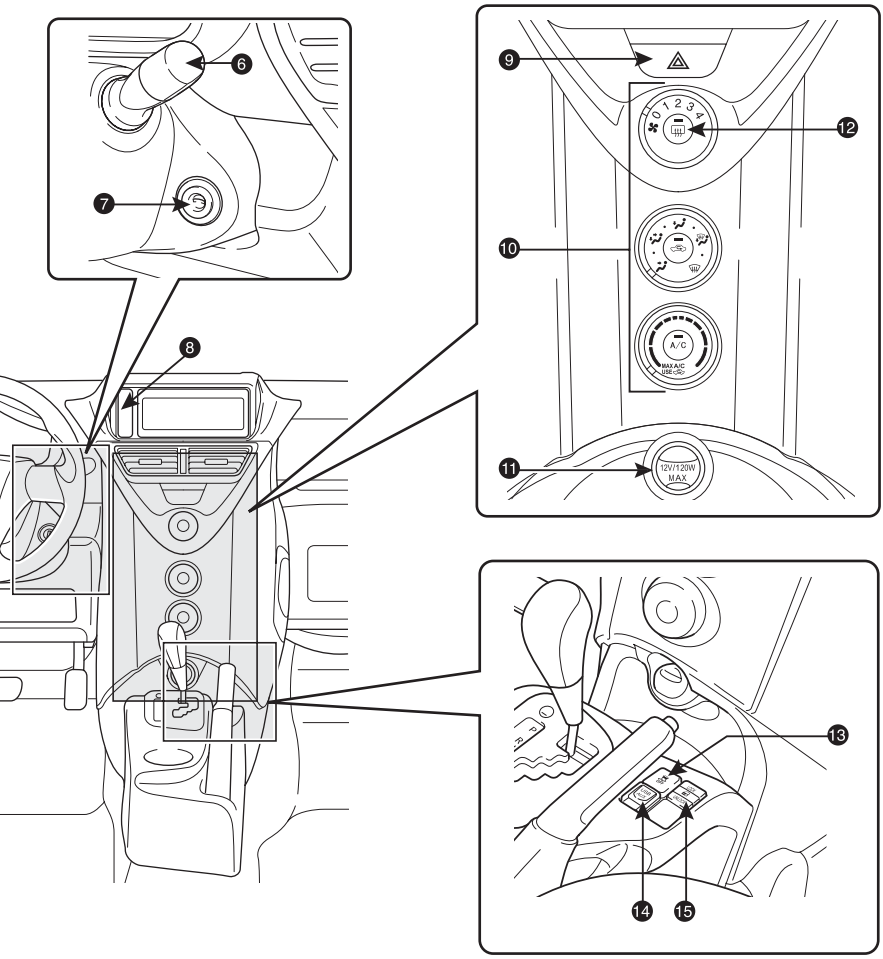

⓬ Outside rearview mirror[1]/Rear window defogger button
⓭ “VSC OFF” (Vehicle Stability Control OFF)
⓮ AUX port/USB port[2]
⓯ Door lock switch
⓰ Tire Pressure Monitoring (warning) System reset button
⓱ Hood release
⓲ Fuel filler door opener

[1] If equipped
[2] For details, refer to the “*SCION Audio System Owner’s Manual*” or the “*SCION Navigation System Owner’s Manual*.”

Instrument cluster

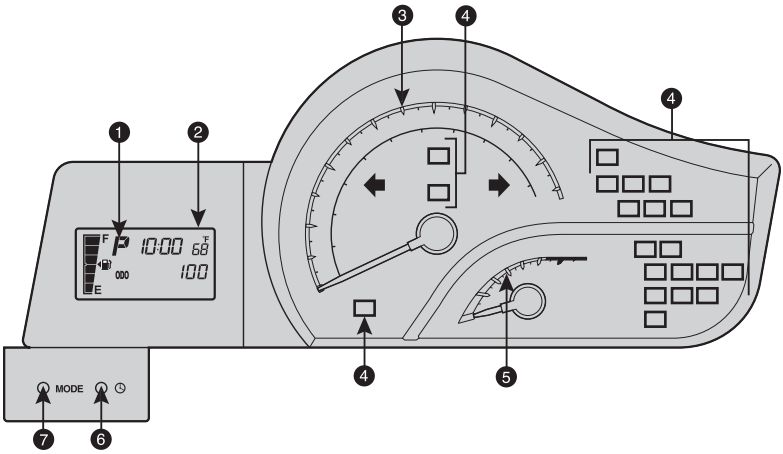

1. Shift position and shift range indicator
2. Multi-Information Display
3. Speedometer
4. Service indicator and reminder
5. Tachometer
6. Clock reset button
7. MODE button

Indicator symbols

For details, refer to “Indicators and warning lights,” Section 2-2, *2013 Owner’s Manual*.

BRAKE	Brake system warning*
	Driver seat belt reminder (alarm will sound if speed is over 12 mph)
PASSENGER	Front passenger seat belt reminder (alarm will sound if speed is over 12 mph)
	Charging system warning*
CHECK	Malfunction/Check Engine indicator*
	Low engine oil pressure warning*
	Open door warning
	Airbag SRS warning*

* *If indicator does not turn off within a few seconds of starting engine, there may be a malfunction. Have vehicle inspected by your Toyota dealer.*

Low Tire Pressure Warning*

MAINT REQD Engine oil replacement reminder*

AIR BAG ON / AIR BAG OFF Front passenger occupant classification indicator/ Front passenger airbag ON/OFF indicator

Headlight high beam indicator

Turn signal indicator

Low fuel level warning

Slip indicator*

OFF Vehicle Stability Control OFF indicator*

Electric power steering system warning*

ABS Anti-lock Brake System warning*

TRAC OFF Traction Control OFF indicator*

Low engine coolant temperature indicator

High engine coolant temperature warning light*

Low washer fluid warning*

Engine immobilizer system indicator

ECO ECO Driving Indicator Light*

Keyless entry

Locking operation

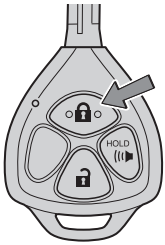

Push

Unlocking operation

Push ONCE: Driver door
TWICE: ALL doors

NOTE: If a door is not opened within 60 seconds of unlocking, all doors will relock for safety.

Panic button

Push and hold

Fuel tank door release and cap

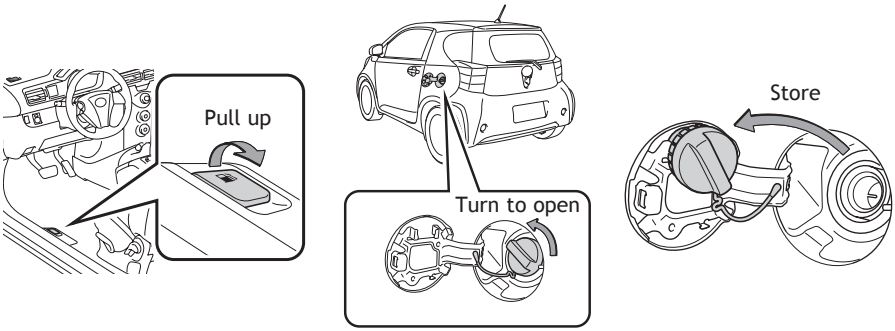

Light control-Instrument panel

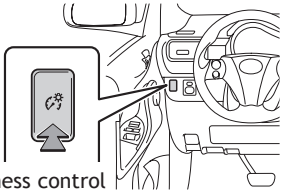

Brightness control

Brightness can be adjusted by pressing the brightness control switch.

Hood release

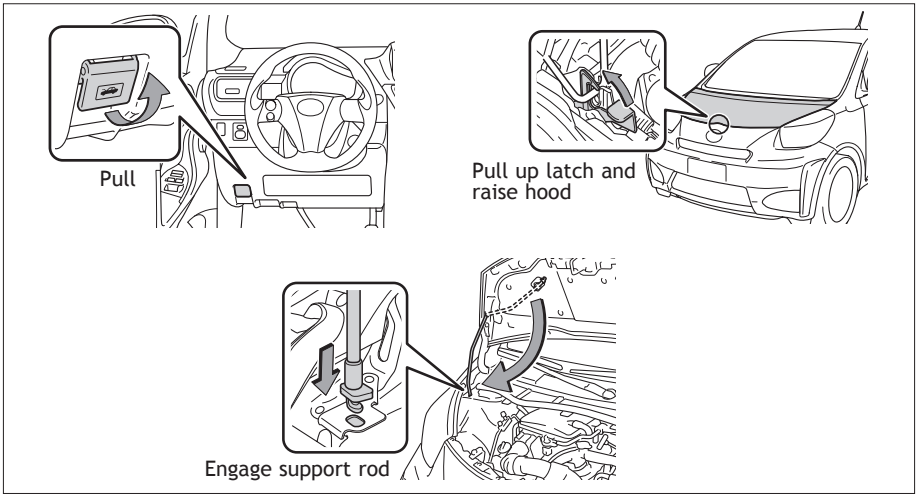

Engine maintenance

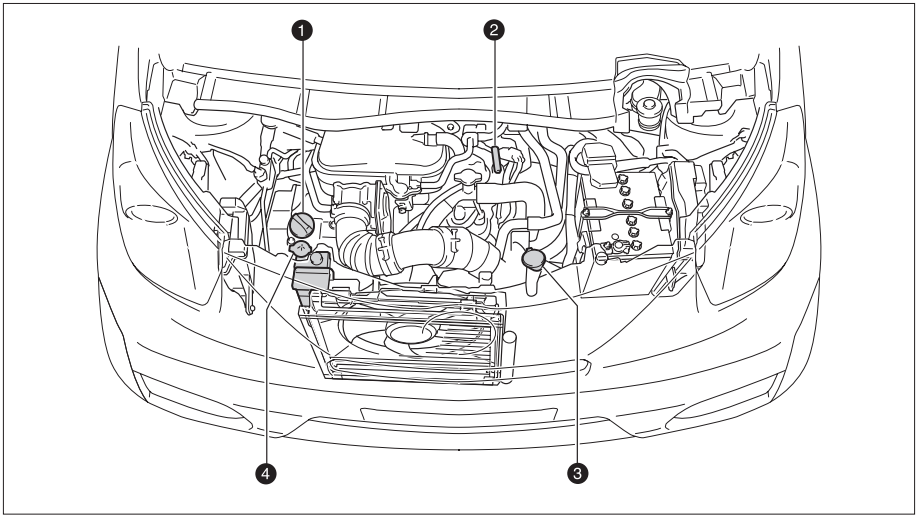

1. Engine oil filler cap
2. Engine oil level dipstick
3. Windshield washer fluid tank
4. Engine coolant reservoir

NOTE: Regularly scheduled maintenance, including oil changes, will help extend the life of your vehicle and maintain performance. Please refer to the "Warranty Maintenance Guide."

FEATURES/OPERATIONS

Automatic Transmission

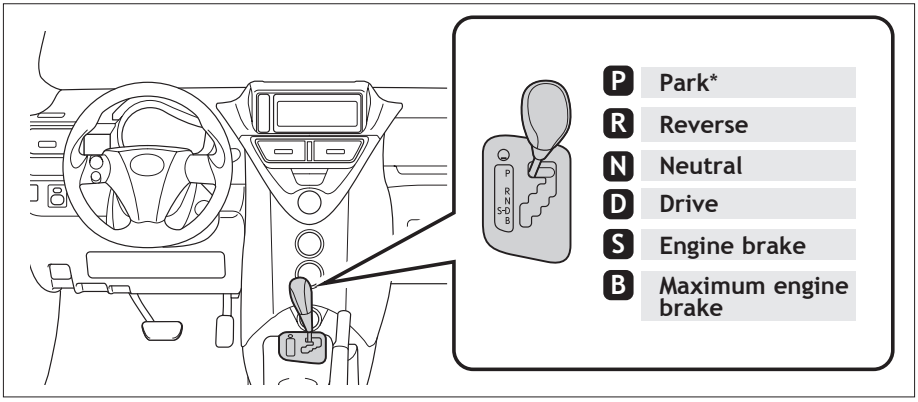

* The ignition switch must be “ON” and the brake pedal depressed to shift from Park.

Downshifting increases power going uphill, or provides engine braking downhill. For best fuel economy during normal driving conditions, always drive with the shift lever in the “D” position.

Parking brake

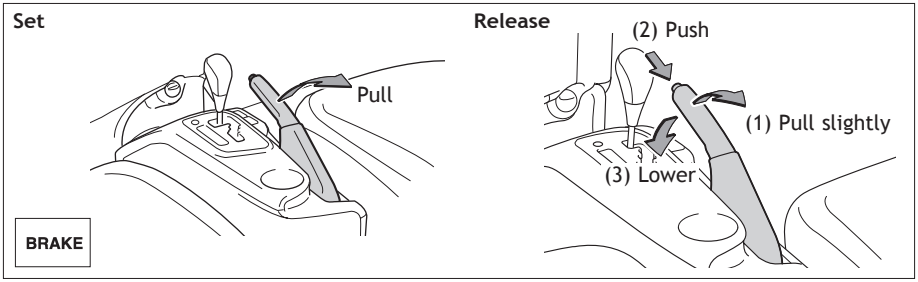

Seat adjustments-Front

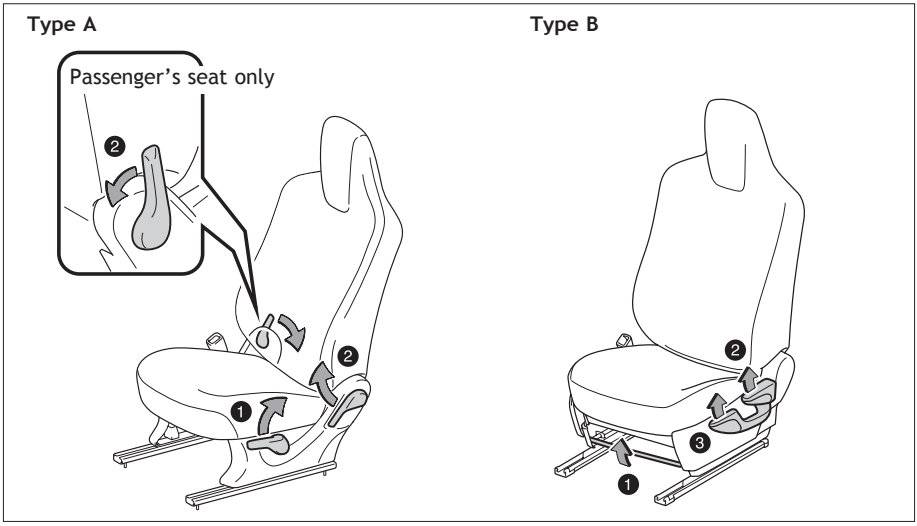

❶ Seat position (forward/backward)
❷ Seatback angle
❸ Height crank

Seat-Folding down rear seat

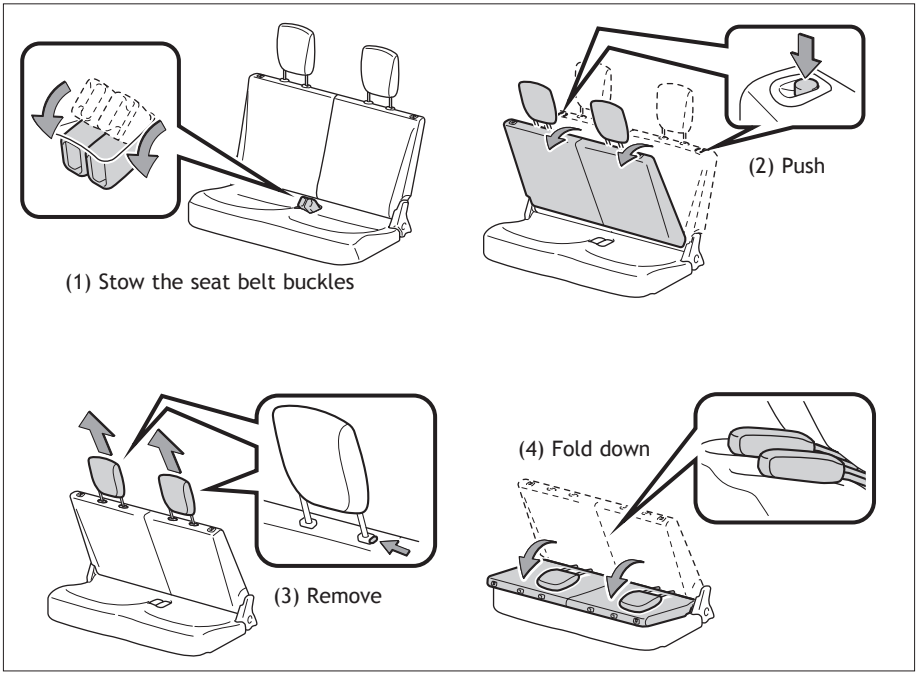

Lights & turn signals

Headlights

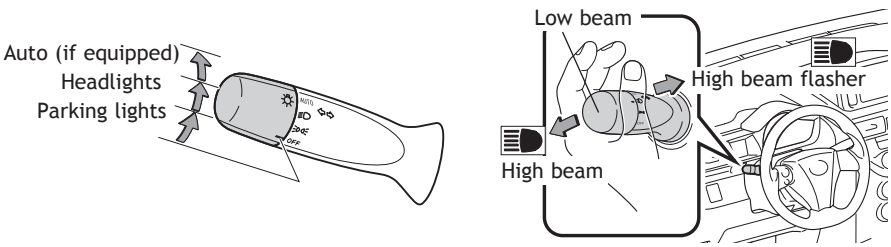

Turn signals

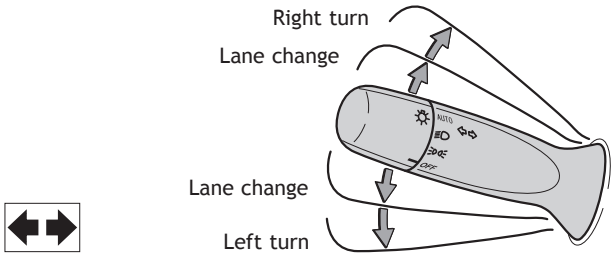

Windshield wipers & washers

Front

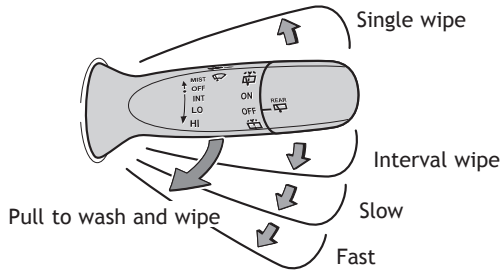

Rear

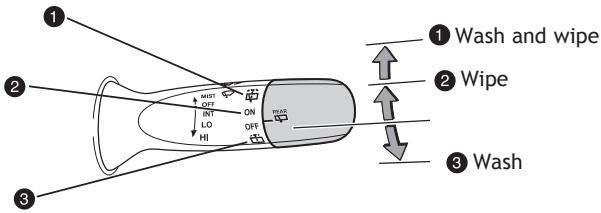

Windows

Driver side

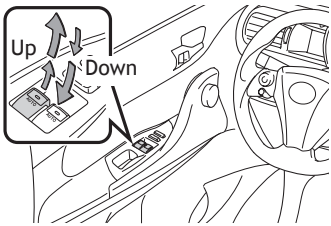

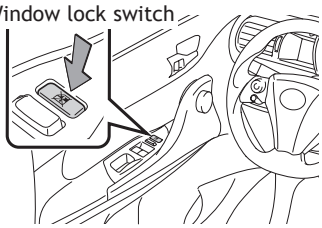

Automatic operation Push the switch completely down or pull it completely up and release to fully open or close. To stop the window partway, operate the switch in the opposite direction.
Window lock switch Deactivates all passenger windows. Driver's window remains operable.

Multi-Information Display

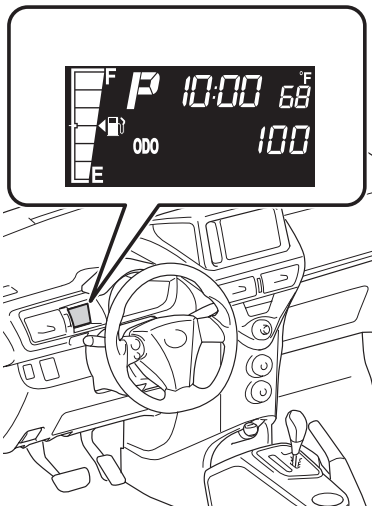

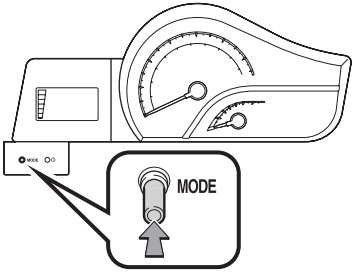

Push "MODE" to scroll through the following:
(1) Total distance the vehicle has been driven
(2) Driving distance from when meter was last reset
(3) Current gas mileage
(4) Average gas mileage after refueling
(5) Setting ECO Driving Indicator Light
(6) Average vehicle speed

Tilt steering wheel

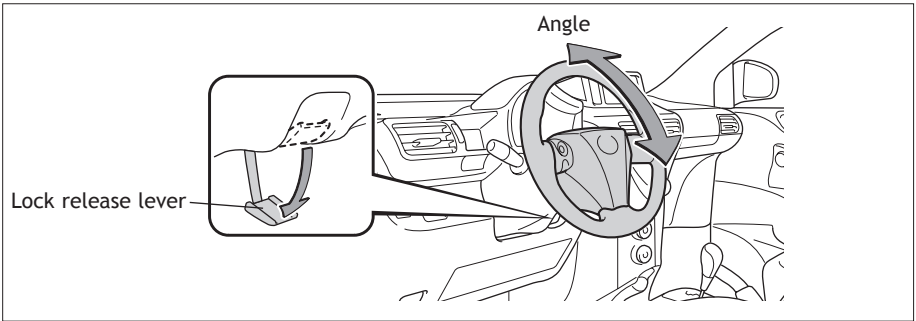

Hold wheel, push lever down, set angle and return lever.

NOTE: Do not attempt to adjust while the vehicle is in motion.

Air Conditioning/Heating

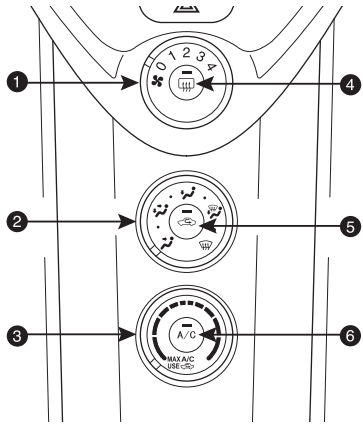

1. Fan speed
2. Airflow vent
   "" and "" mode use fresh air ("" indicator "OFF") to reduce window fogging.
3. Temperature selector
4. Outside rearview mirror (if equipped)/Rear window defogger
5. Recirculate cabin air (fresh air when OFF)
6. Air Conditioning ON/OFF
   Use fresh air to quickly cool interior, then change to recirculate for cooler air.

Steering wheel switches

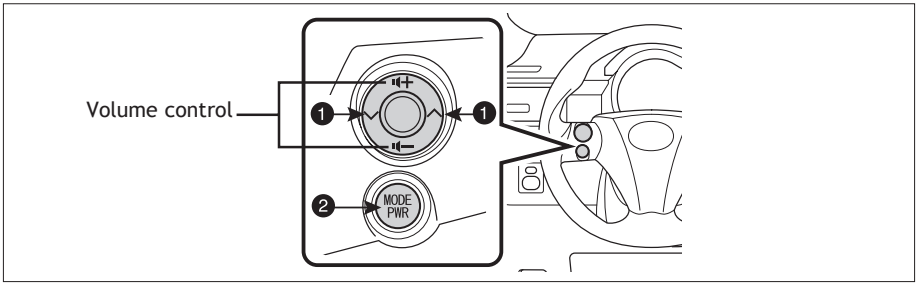

❶ **"∧ ∨"**
Use to search within the selected audio medium (radio, CD, iPod®, etc.).

❷ **"MODE PWR"**
Push to turn audio ON and select an audio mode. Push and hold to turn the audio system OFF.

Refer to the "*SCION Audio System Owner's Manual*" or the "*SCION Navigation System Owner's Manual*" for more details.

AUX port/USB port

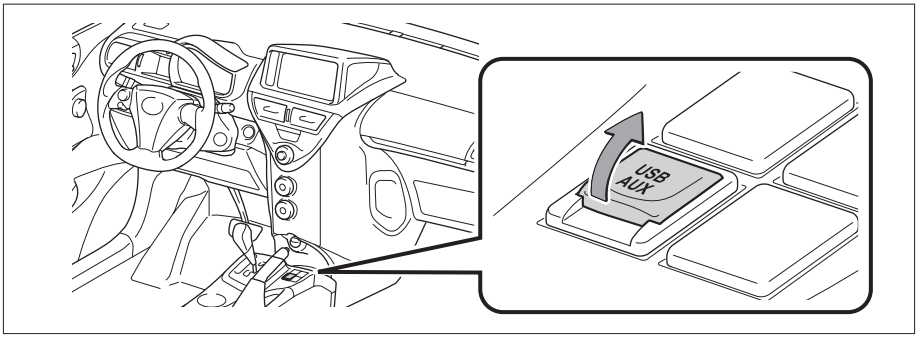

AUX port
By inserting a mini plug (not included) into the AUX port, you can listen to music from a portable audio device through the vehicle's speaker system while in AUX mode.

USB port
By connecting a USB memory or USB-compatible portable audio device to the USB port, you can listen to music from the portable audio device or USB memory through the vehicle's speaker system.

If you do not have a SCION genuine audio system, you will not be able to use the USB port or AUX port.

Refer to the "*SCION Audio System Owner's Manual*" or the "*SCION Navigation System Owner's Manual*" *for more details*.

Power outlet

Instrument panel

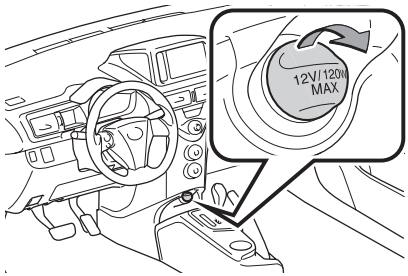

Designed for car accessories. Key must be in the “ACC” or “ON” position to use.

Auxiliary box

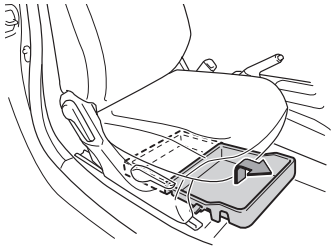

Cup holder

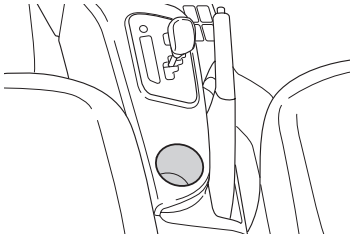

Bottle holders

Front

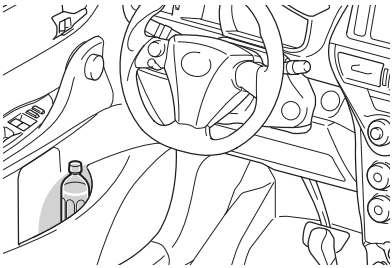

Rear

Door locks

Driver's use

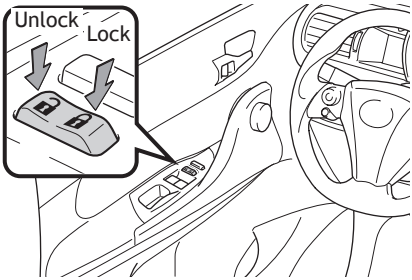

Front passenger's use

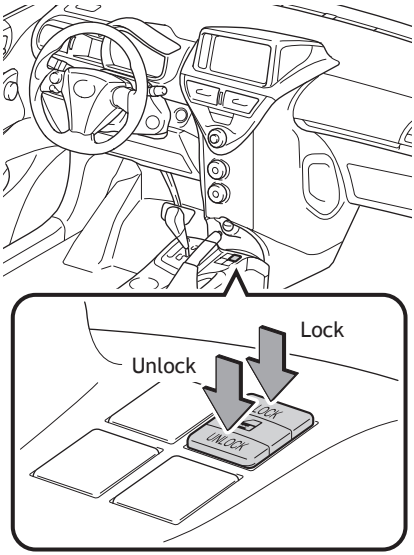

Seat belts

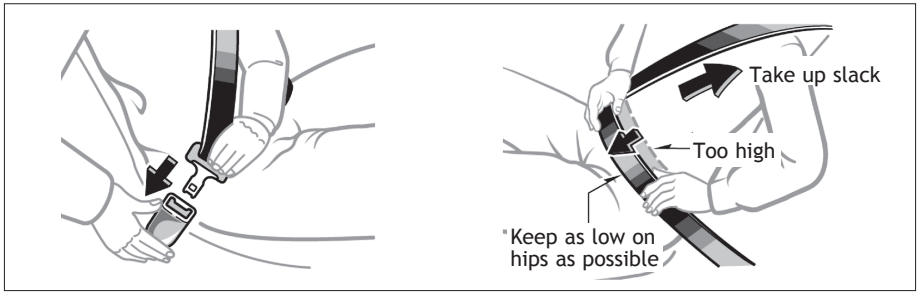

If belt is fully extended, then retracted even slightly, it cannot be re-extended beyond that point, unless fully retracted again. This feature is used to help hold child restraint systems securely.

To find more information about seat belts, and how to install a child restraint system, refer to the *Owner's Manual*.

Tire Pressure Monitoring (warning) System

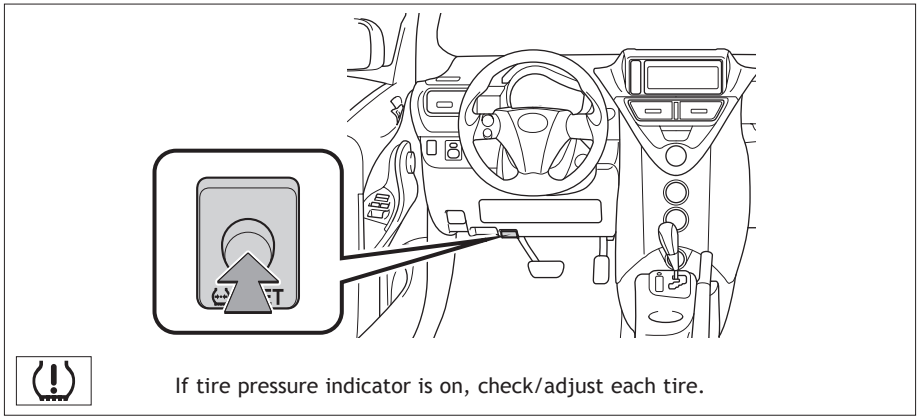

After adjusting tire pressures, or after tires have been rotated or replaced, turn the ignition switch to "ON" and press and hold the "SET" button until indicator blinks three times. Let the vehicle sit for a few minutes to allow initialization to complete.

Refer to the load label on the door jamb or the *Owner's Manual* for tire inflation specifications.

If the tire pressure indicator flashes for more than 60 seconds and then remains on, take the vehicle to your local Toyota dealer.

NOTE: The warning light may come on due to temperature changes or changes in tire pressure from natural air leakage. If the system has not been initialized recently, setting the tire pressures to factory specifications should turn off the light.

Emergency tire puncture repair kit

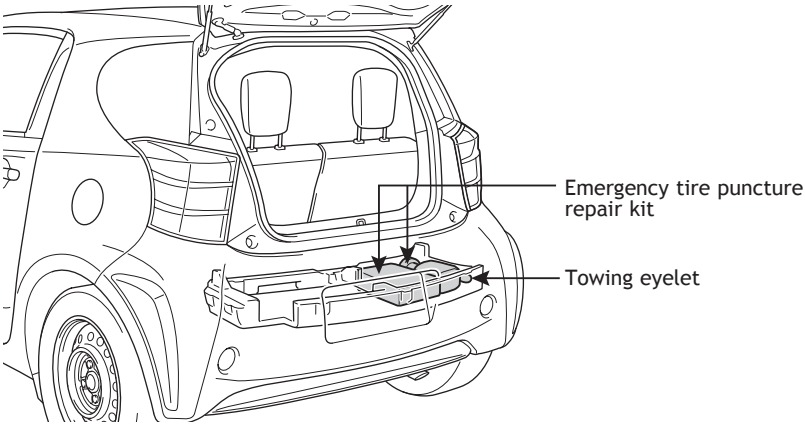

Refer to the *Owner's Manual* for more details.

Star Safety System

All new Toyota vehicles come standard with the Star Safety System™, which combines Vehicle Stability Control (VSC), Traction Control (TRAC), Anti-lock Braking System (ABS), Electronic Brake-force Distribution (EBD), Brake Assist (BA) and Smart Stop Technology (SST).

Vehicle Stability Control (VSC)

VSC helps prevent loss of traction during cornering by reducing engine power and applying brake force to selected wheels.

Toyota's VSC monitors steering angle and the direction your vehicle is traveling. When it senses that the front or rear wheels begin to lose traction, VSC reduces engine power and applies braking to selected wheels. This helps restore traction and vehicle control.

Traction Control (TRAC)

VSC helps prevent loss of traction during cornering by reducing engine power, and Traction Control helps maintain traction on loose gravel and wet, icy, or uneven surfaces by applying brake force to the spinning wheel(s).

Toyota's TRAC sensors are activated when one of the drive wheels starts to slip. TRAC limits engine output and applies the brakes to the spinning wheel. This transfers power to the wheels that still have traction to help keep you on track.

Anti-Lock Brake System (ABS)

ABS helps prevent brakes from locking up by "pulsing" brake pressure to each wheel. This limits brake lockup and helps provide directional control for the current road conditions.

Toyota's ABS sensors detect which wheels are locking up and limits wheel lockup by "pulsing" each wheel's brakes independently. Pulsing releases brake pressure repeatedly for fractions of a second. This helps the tires attain the traction that current road conditions will allow, helping you to stay in directional control.

Electronic Brake Force Distribution (EBD)

Toyota's ABS technology has Electronic Brake-force Distribution (EBD) to help maintain control and balance when braking. Abrupt stops can cause a vehicle to tilt forward, reducing the braking power of the rear wheels. EBD responds to sudden stops by redistributing brake force to enhance the braking effectiveness of all four wheels.

Brake Assist (BA)

Brake Assist is designed to detect sudden or "panic" braking, and then add braking pressure to help decrease the vehicle's stopping distance. When there's only a split second to react, Brake Assist can add additional brake pressure more quickly than just the driver alone can.

Smart Stop Technology (SST)

Smart Stop Technology automatically reduces engine power when the accelerator and brake pedals are pressed simultaneously under certain conditions.

SST engages when the accelerator is depressed first and the brakes are applied firmly for longer than one-half second at speeds greater than five miles per hour.

SST doesn't engage if the brake pedal is depressed before the accelerator pedal, allowing vehicles to start on a steep hill and safely accelerate without rolling backward.

Floor mat installation

There are two types of Toyota floor mats: carpeted and all-weather. Each vehicle has model-specific floor mats. Installation is easy.

To keep your floor mat properly positioned, follow these steps:

- Only use floor mats designed for your specific model.
- Use only one floor mat at a time, using the retaining hooks to keep the mat in place.
- Install floor mats right side up.

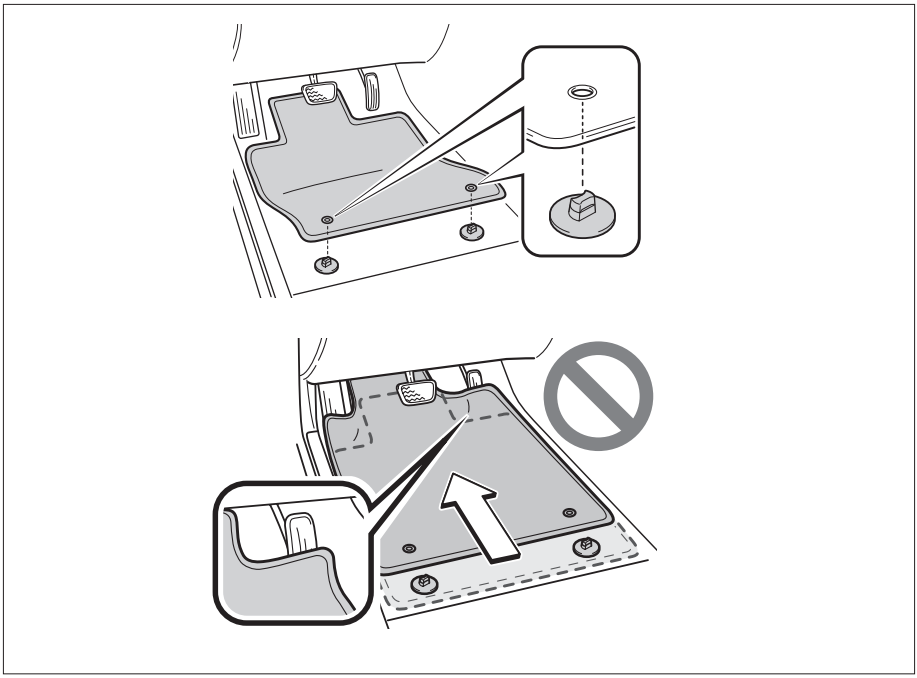

NOTES

EMAIL
www.scion.com
→ Contact

-

CHAT
www.scion.com
→ Have a Question?
→ Contact

-

PHONE
1.866.70.SCION

-

MAIL
SCION
19001 S. Western Ave.
D102, P.O. Box 2742
Torrance, CA 90509-2742
USA

-

WEB
www.scion.com

-

MIX
Paper from
responsible sources
FSC® C102835
www.fsc.org

©2012 Scion, a marque of Toyota Motor Sales, U.S.A., Inc.
Printed in U.S.A. 7/12
12-TCS-05916

00505-QRG13-IQ