2007 Chevrolet Corvette Owner Manual

Seats and Restraint Systems 7
- Front Seats 8
- Safety Belts 16
- Child Restraints 31
- Airbag System 50
- Restraint System Check 66

Features and Controls 69
- Keys 71
- Doors and Locks 78
- Windows 86
- Theft-Deterrent Systems 88
- Starting and Operating Your Vehicle 90
- Mirrors 108
- OnStar® System 114
- Universal Home Remote System 118
- Storage Areas 128
- Roof Panel 133
- Convertible Top 138

Instrument Panel 151
- Instrument Panel Overview 154
- Climate Controls 177
- Warning Lights, Gages, and Indicators 186
- Driver Information Center (DIC) 205
- Audio System(s) 242

Driving Your Vehicle 271
- Your Driving, the Road, and Your Vehicle 272
- Towing 313

Service and Appearance Care 315
- Service 318
- Fuel 320
- Checking Things Under the Hood 326
- Rear Axle 370
- Bulb Replacement 370
- Windshield Replacement 374

Windshield Wiper Blade Replacement ... 375
Tires 378
Appearance Care 407
Vehicle Identification 418
Electrical System 419
Capacities and Specifications 427

Maintenance Schedule 429
Maintenance Schedule 430

Customer Assistance Information 451
Customer Assistance and Information ... 452
Reporting Safety Defects 470

Index 473

GENERAL MOTORS, GM, the GM Emblem, CHEVROLET, the CHEVROLET Emblem, the names CORVETTE and Z06 and the CORVETTE Emblem are registered trademarks of General Motors Corporation.

This manual includes the latest information at the time it was printed. We reserve the right to make changes after that time without further notice. For vehicles first sold in Canada, substitute the name “General Motors of Canada Limited” for Chevrolet Motor Division whenever it appears in this manual.

This manual describes features that may be available in this model, but your vehicle may not have all of them. For example, more than one entertainment system may be offered or your vehicle may have been ordered without a front passenger or rear seats.

Keep this manual the vehicle, so it will be there if it is needed when on the road. If the vehicle is sold, leave this manual in it.

Canadian Owners

A French language copy of this manual can be obtained from your dealer or from:

Helm, Incorporated
P.O. Box 07130
Detroit, MI 48207

Litho in U.S.A.
Part No. 15865975 A First Printing

©2006 General Motors Corporation. All Rights Reserved.

How to Use This Manual

Many people read the owner manual from beginning to end when they first receive their new vehicle. If this is done, it can help you learn about the features and controls for the vehicle. Pictures and words work together in the owner manual to explain things.

Index

A good place to quickly locate information about the vehicle is the Index in the back of the manual. It is an alphabetical list of what is in the manual and the page number where it can be found.

Safety Warnings and Symbols

There are a number of safety cautions in this book. We use a box and the word CAUTION to tell about things that could hurt you if you were to ignore the warning.

⚠ CAUTION:

These mean there is something that could hurt you or other people.

In the caution area, we tell you what the hazard is. Then we tell you what to do to help avoid or reduce the hazard. Please read these cautions. If you do not, you or others could be hurt.

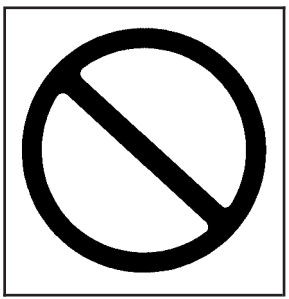

You will also find a circle with a slash through it in this book. This safety symbol means “Do Not,” “Do Not do this” or “Do Not let this happen.”

Vehicle Damage Warnings

Also, in this manual you will find these notices:

Notice: **These mean there is something that could damage your vehicle.**

A notice tells about something that can damage the vehicle. Many times, this damage would not be covered by your vehicle's warranty, and it could be costly. But the notice will tell what to do to help avoid the damage.

When you read other manuals, you might see CAUTION and NOTICE warnings in different colors or in different words.

There are also warning labels on the vehicle. They use the same words, CAUTION or NOTICE.

Vehicle Symbols

The vehicle has components and labels that use symbols instead of text. Symbols are shown along with the text describing the operation or information relating to a specific component, control, message, gage, or indicator.

If you need help figuring out a specific name of a component, gage, or indicator, reference the following topics:

- Seats and Restraint Systems in Section 1
- Features and Controls in Section 2
- Instrument Panel Overview in Section 3
- Climate Controls in Section 3
- Warning Lights, Gages, and Indicators in Section 3
- Audio System(s) in Section 3
- Engine Compartment Overview in Section 5

These are some examples of symbols that may be found on the vehicle:

CAUTION POSSIBLE INJURY	LATCH BOTH LAP AND SHOULDER BELTS TO PROTECT OCCUPANT DO NOT TWIST SAFETY BELT WHEN ATTACHING		MASTER LIGHTING SWITCH	ENGINE COOLANT TEMP	TIRE PRESSURE
PROTECT EYES BY SHIELDING	FASTEN SEAT BELTS	AIRBAG	TURN SIGNALS	BATTERY CHARGING SYSTEM	FUSE BOX ACCESS
CAUSTIC BATTERY ACID COULD CAUSE BURNS	MOVE SEAT FULLY REARWARD SECURE CHILD SEAT	DO NOT INSTALL A REAR-FACING CHILD RESTRAINT IN THIS SEATING POSITION	PARKING LAMPS	BRAKE	ENGINE COOLANT FAN
AVOID SPARKS OR FLAMES	PULL BELT OUT COMPLETELY THEN SECURE CHILD SEAT	DO NOT INSTALL A FORWARD-FACING CHILD RESTRAINT IN THIS SEATING POSITION	HAZARD WARNING FLASHER	COOLANT	FUEL
SPARK OR FLAME COULD EXPLODE BATTERY	POWER WINDOW	DOOR LOCK UNLOCK	DAYTIME RUNNING LAMPS	ENGINE OIL PRESSURE	OWNER MANUAL
			FOG LAMPS	ANTI-LOCK BRAKE SYSTEM	SERVICE MANUAL

Section 1 Seats and Restraint Systems

Front Seats 8
Manual Seats 8
Power Seats 8
Power Lumbar and Side Bolsters 9
Heated Seats 10
Memory Seat, Mirrors and Steering Wheel 10
Reclining Seatbacks 13
Seatback Latches 15

Safety Belts 16
Safety Belts: They Are for Everyone 16
Questions and Answers About Safety Belts 20
How to Wear Safety Belts Properly 21
Driver Position 22
Safety Belt Use During Pregnancy 29
Passenger Position 30
Safety Belt Pretensioners 30
Safety Belt Extender 30

Child Restraints 31
Older Children 31
Infants and Young Children 34
Child Restraint Systems 37
Lower Anchors and Tethers for Children (LATCH) (Z06 Models Only) 42
Lower Anchors and Tethers for Children (LATCH) (Coupe and Convertible Models Only) 45
Securing a Child Restraint in the Passenger Seat Position 46

Airbag System 50
Where Are the Airbags? 53
When Should an Airbag Inflate? 56
What Makes an Airbag Inflate? 57
How Does an Airbag Restrain? 57
What Will You See After an Airbag Inflates? 58
Passenger Sensing System 59
Servicing Your Airbag-Equipped Vehicle 64
Adding Equipment to Your Airbag-Equipped Vehicle 65

Restraint System Check 66
Checking the Restraint Systems 66
Replacing Restraint System Parts After a Crash 67

Front Seats

Manual Seats

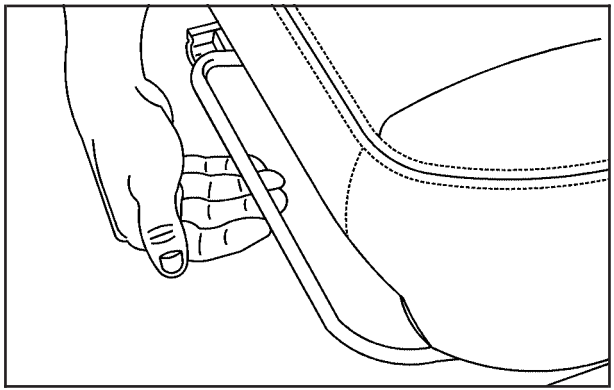

To move a manual passenger seat, pull up the bar located under the front of the seat to unlock it. Slide the seat to where you want it and release the bar. Then try to move the seat forward with your body to make sure it is locked into place.

Power Seats

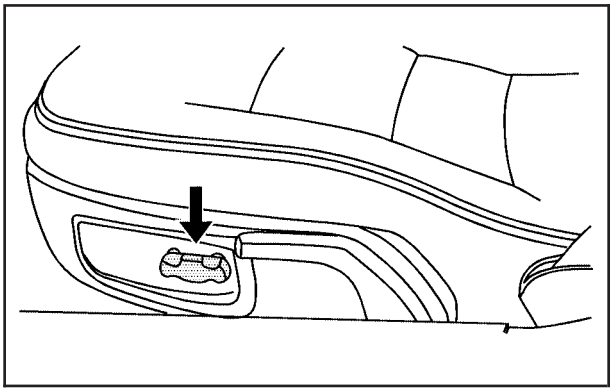

The control for the driver's power seat is located on the outboard side of the seat cushion. Your vehicle may also have a passenger power seat.

- Move the seat forward or rearward by sliding the control forward or rearward.
- Raise or lower the front part of the seat cushion by moving the front of the control up or down.
- Raise or lower the rear part of the seat cushion by moving the rear of the control up or down.

Your preferred seat position can be stored and recalled if you have the memory option. See *Memory Seat, Mirrors and Steering Wheel on page 10*.

Power Lumbar and Side Bolsters

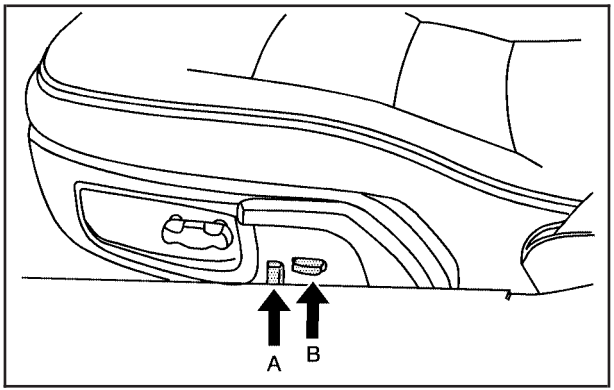

Your vehicle may have power lumbar and side bolsters. The switches are located on the outboard side of the seat cushion.

Use the power seat control to move the seat to the proper position. See *Power Seats on page 8*.

Use the vertical lumbar switch (A) to adjust support in the seatback. Press the switch forward to increase support. Press the switch rearward to decrease support.

Use the horizontal switch (B) to adjust the side bolsters. Pull up the switch to move the wings of the seatback in closer to your body. Push down the switch to move the wings away from your body.

Keep in mind that as your seating position changes, as it may during long trips, so should the position of your lumbar support. Adjust the seat as needed.

Heated Seats

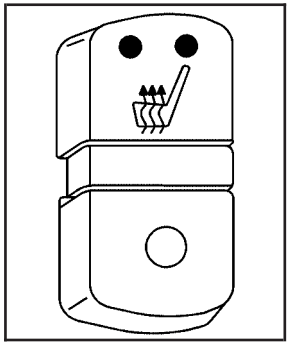

If your vehicle has heated seats, the buttons are located on the center console.

Each seat has two settings: high and low.

To turn on the heated seats, press the top button once. The seat will heat to the high setting. Press the top button again to switch to the low setting. The lights on the top button will indicate which setting it is in. Press the bottom button to turn the system off.

The heated seats can only be used when the ignition is on. When the vehicle is off, the heated seats will turn off.

Memory Seat, Mirrors and Steering Wheel

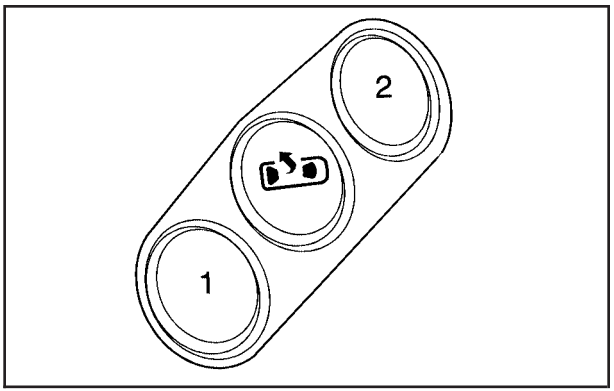

If your vehicle has this feature, memory can program and recall the settings for the driver's seating position. The controls for this feature are located on the driver's door.

The numbers on the back of the keyless access transmitters, 1 and 2, correspond to the numbers on the memory buttons.

To program each button, use the following steps:

1. Adjust the settings for the driver's seat position, both outside mirrors, and the telescopic steering column position to a comfortable driving position.
2. Press and hold button 1 until two beeps are heard, then release the button.

   Your settings are now programmed.

A second seating, mirror, and telescopic steering column position can be programmed by repeating the above steps and pressing button 2 for driver 2.

To recall a memory position, do one of the following:

- If you have an automatic transmission vehicle, press and release the desired button 1 or 2 while the vehicle is in PARK (P).

  A single beep will sound and the memory position will be recalled after a brief delay.

  If the vehicle is not in PARK (P), three beeps will sound and the memory position will not be recalled.

- If you have a manual transmission vehicle, press and release the desired button 1 or 2. If the vehicle is on, the parking brake needs to be set to recall the memory position.

  A single beep will sound and the memory position will be recalled after a brief delay.

  If the vehicle is on and the parking brake is not set, three beeps will sound and the memory position will not be recalled.

If your vehicle has the Auto Memory Recall feature and it is turned on in the Driver Information Center (DIC), the seat, mirrors, and telescopic steering column position will automatically adjust to their programmed positions when the engine is started. See "Auto Memory Recall" under *DIC Vehicle Personalization on page 232* for more information.

To stop recall movement of the memory feature at any time, press one of the power seat controls, power mirror control buttons, memory buttons, or the telescopic steering column switch.

Easy Exit Seat

Two personalized exit positions can also be programmed to allow for an easy exit or entry into the vehicle. The controls for this memory function are located on the driver's door.

(Easy Exit Seat): This button is used to program and recall the desired driver's seat exit position.

To program an exit position, use the following steps:

1. Recall the desired driving position by pressing button 1 or 2.

   The seat will move to the programmed memory position.

2. Position the seat and the telescopic steering column position to a comfortable exit position.

3. Press and hold the exit button until two beeps sound.

   Your exit position is now programmed.

A second exit position can be programmed by repeating the above steps and pressing the other memory button.

To recall an exit position, do one of the following:

- If you have an automatic transmission vehicle, press and release the exit button while the vehicle is in PARK (P).

  One beep will sound and the exit position for the currently identified driver will be recalled.

- If you have a manual transmission vehicle, press and release the exit button. The parking brake needs to be set to recall the memory position.

  One beep will sound and the exit position for the currently identified driver will be recalled.

If your vehicle has the Auto Exit Recall feature and it is turned on in the DIC, automatic seat and telescopic steering column movement to the exit position will occur when you use the keyless access transmitter to unlock your vehicle or when you turn the engine off and open the driver's door. See "Auto Exit Recall" under *DIC Vehicle Personalization on page 232* for more information.

Reclining Seatbacks

⚠ CAUTION:

You can lose control of the vehicle if you try to adjust a manual driver's seat while the vehicle is moving. The sudden movement could startle and confuse you, or make you push a pedal when you do not want to. Adjust the driver's seat only when the vehicle is not moving.

⚠ CAUTION:

If the seatback is not locked, it could move forward in a sudden stop or crash. That could cause injury to the person sitting there. Always push and pull on the seatback to be sure it is locked.

The seats have manual reclining seatbacks. The lever used to operate them is located on the outboard side of the seats.

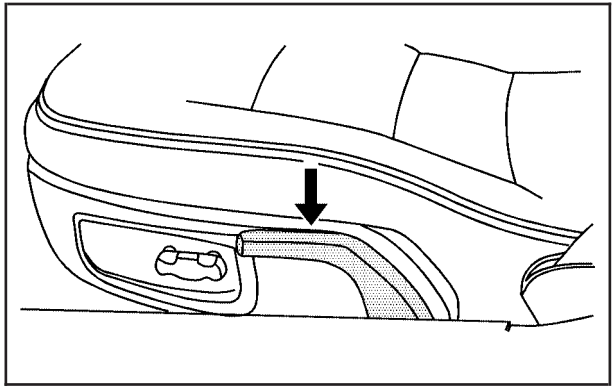

To adjust the seatback, lean slightly forward to lift your weight off the seatback. Pull completely up on the lever until it stops, and lean back to position the seatback to where you want it. Release the lever to lock the seatback into place.

⚠ CAUTION:

Sitting in a reclined position when your vehicle is in motion can be dangerous. Even if you buckle up, your safety belts cannot do their job when you are reclined like this.

The shoulder belt cannot do its job. In a crash, you could go into it, receiving neck or other injuries.

The lap belt cannot do its job either. In a crash the belt could go up over your abdomen. The belt forces would be there, not at your pelvic bones. This could cause serious internal injuries.

For proper protection when the vehicle is in motion, have the seatback upright. Then sit well back in the seat and wear your safety belt properly.

Do not have a seatback reclined if your vehicle is moving.

Seatback Latches

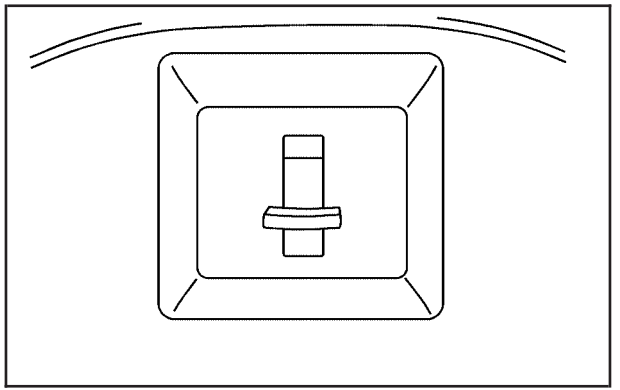

Both seatbacks fold forward to give you access to the rear area. To fold a seatback forward, lift this latch, which is located on top of the backside of the seat, and pull the seatback forward. The seatback will lock down in this position.

To unlock, lift up on the latch and push the seatback rearward. When you return the seatback to its original position, make sure the seatback is locked in place.

⚠ CAUTION:

If the seatback is not locked, it could move forward in a sudden stop or crash. That could cause injury to the person sitting there. Always push and pull on the seatback to be sure it is locked.

Safety Belts

Safety Belts: They Are for Everyone

This part of the manual tells you how to use safety belts properly. It also tells you some things you should not do with safety belts.

⚠ CAUTION:

Do not let anyone ride where he or she can not wear a safety belt properly. If you are in a crash and you are not wearing a safety belt, your injuries can be much worse. You can hit things inside the vehicle or be ejected from it. You can be seriously injured or killed. In the same crash, you might not be if you are buckled up. Always fasten your safety belt, and check that your passenger's belt is fastened properly too.

⚠ CAUTION:

It is extremely dangerous to ride in a cargo area, inside or outside of a vehicle. In a collision, people riding in these areas are more likely to be seriously injured or killed. Do not allow people to ride in any area of your vehicle that is not equipped with seats and safety belts. Be sure everyone in your vehicle is in a seat and using a safety belt properly.

Your vehicle has a light that comes on as a reminder to buckle up. See *Safety Belt Reminder Light on page 188*.

In most states and in all Canadian provinces, the law says to wear safety belts. Here is why: *They work*.

You never know if you will be in a crash. If you do have a crash, you do not know if it will be a bad one.

A few crashes are mild, and some crashes can be so serious that even buckled up, a person would not survive. But most crashes are in between. In many of them, people who buckle up can survive and sometimes walk away. Without belts they could have been badly hurt or killed.

After more than 40 years of safety belts in vehicles, the facts are clear. In most crashes buckling up does matter... a lot!

Why Safety Belts Work

When you ride in or on anything, you go as fast as it goes.

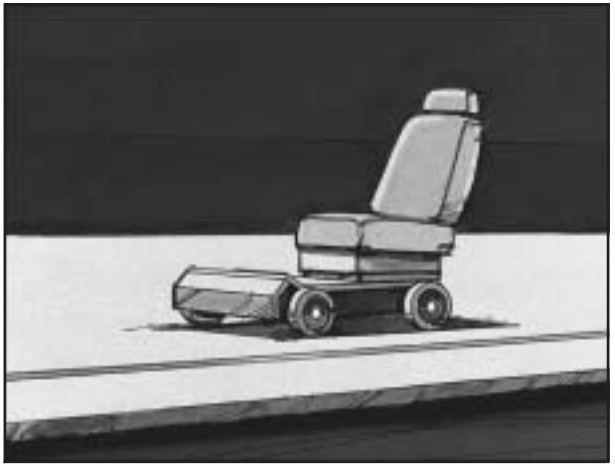

Take the simplest vehicle. Suppose it is just a seat on wheels.

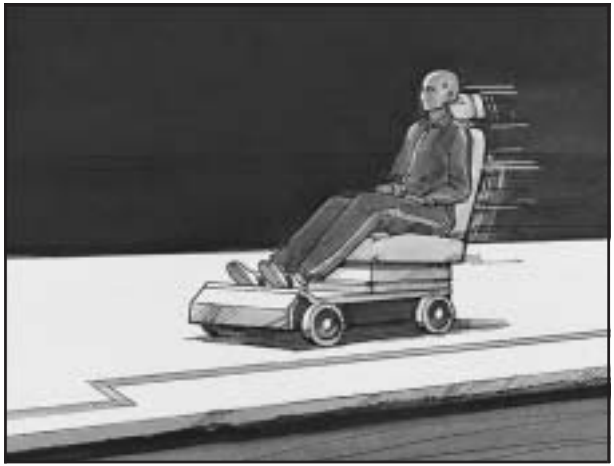

Put someone on it.

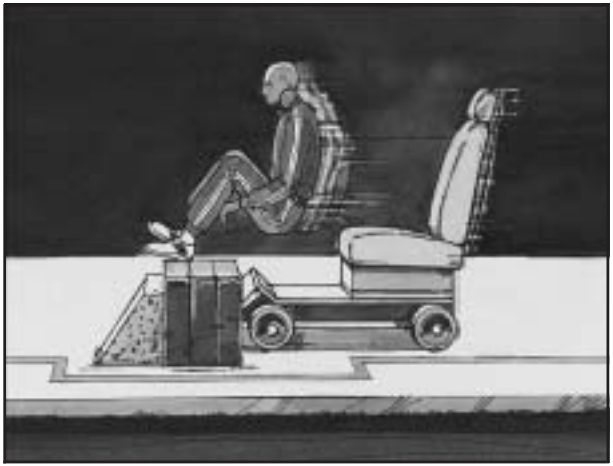

Get it up to speed. Then stop the vehicle. The rider does not stop.

The person keeps going until stopped by something. In a real vehicle, it could be the windshield...

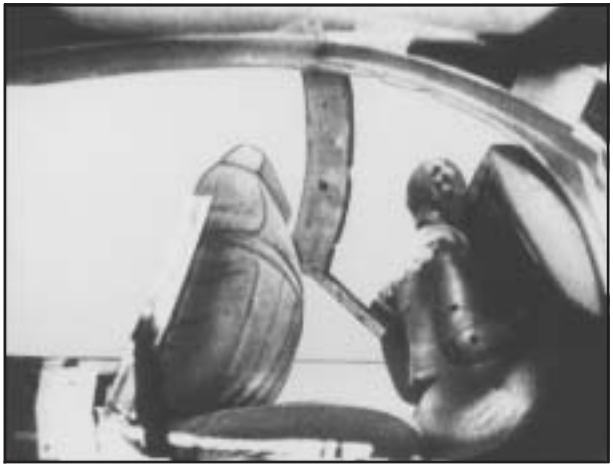

or the instrument panel...

or the safety belts!

With safety belts, you slow down as the vehicle does. You get more time to stop. You stop over more distance, and your strongest bones take the forces. That is why safety belts make such good sense.

Questions and Answers About Safety Belts

Q: Will I be trapped in the vehicle after an accident if I am wearing a safety belt?

A: You *could* be — whether you are wearing a safety belt or not. But you can unbuckle a safety belt, even if you are upside down. And your chance of being conscious during and after an accident, so you *can* unbuckle and get out, is *much* greater if you are belted.

Q: If my vehicle has airbags, why should I have to wear safety belts?

A: Airbags are supplemental systems only; so they work *with* safety belts — not instead of them. Every airbag system ever offered for sale has required the use of safety belts. Even if you are in a vehicle that has airbags, you still have to buckle up to get the most protection. That is true not only in frontal collisions, but especially in side and other collisions.

Q: If I am a good driver, and I never drive far from home, why should I wear safety belts?

A: You may be an excellent driver, but if you are in an accident — even one that is not your fault — you and your passenger can be hurt. Being a good driver does not protect you from things beyond your control, such as bad drivers.

Most accidents occur within 25 miles (40 km) of home. And the greatest number of serious injuries and deaths occur at speeds of less than 40 mph (65 km/h).

Safety belts are for everyone.

How to Wear Safety Belts Properly

This part is only for people of adult size.

Be aware that there are special things to know about safety belts and children. And there are different rules for smaller children and babies. If a child will be riding in your vehicle, see *Older Children on page 31* or *Infants and Young Children on page 34*. Follow those rules for everyone's protection.

First, you will want to know which restraint systems your vehicle has.

We will start with the driver position.

Driver Position

Lap-Shoulder Belt

The driver has a lap-shoulder belt. Here is how to wear it properly.

1. Close and lock the door.
2. Adjust the seat so you can sit up straight. To see how, see “Seats” in the Index.

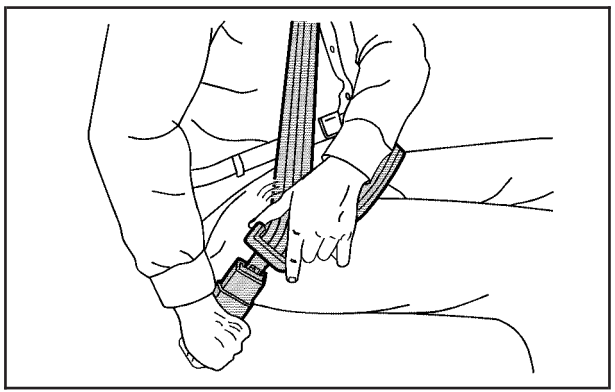

3. Pick up the latch plate and pull the belt across you. Do not let it get twisted.

   The lap-shoulder belt may lock if you pull the belt across you very quickly. If this happens, let the belt go back slightly to unlock it. Then pull the belt across you more slowly.

4. Push the latch plate into the buckle until it clicks.

   Pull up on the latch plate to make sure it is secure.

   If the belt is not long enough, see *Safety Belt Extender on page 30*.

   Make sure the release button on the buckle is positioned so you would be able to unbuckle the safety belt quickly if you ever had to.

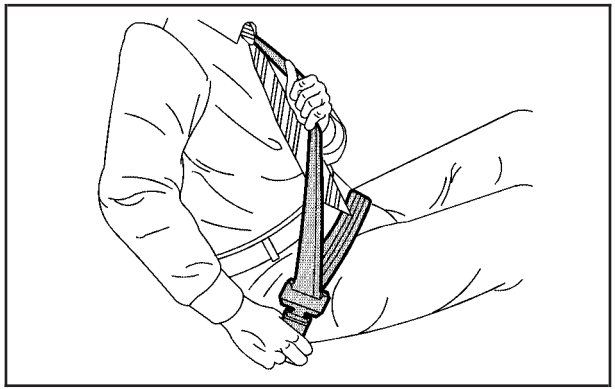

5. To make the lap part tight, pull up on the shoulder belt.

   It may be necessary to pull stitching on the safety belt through the latch plate to fully tighten the lap belt on smaller occupants.

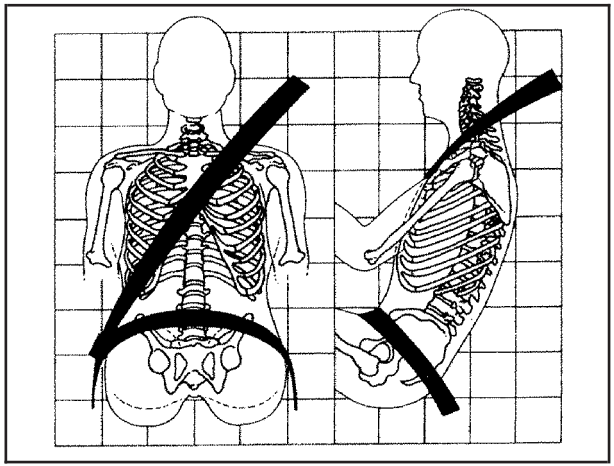

The lap part of the belt should be worn low and snug on the hips, just touching the thighs. In a crash, this applies force to the strong pelvic bones. And you would be less likely to slide under the lap belt. If you slid under it, the belt would apply force at your abdomen. This could cause serious or even fatal injuries. The shoulder belt should go over the shoulder and across the chest. These parts of the body are best able to take belt restraining forces. The safety belt locks if there is a sudden stop or crash.

Q: What is wrong with this?

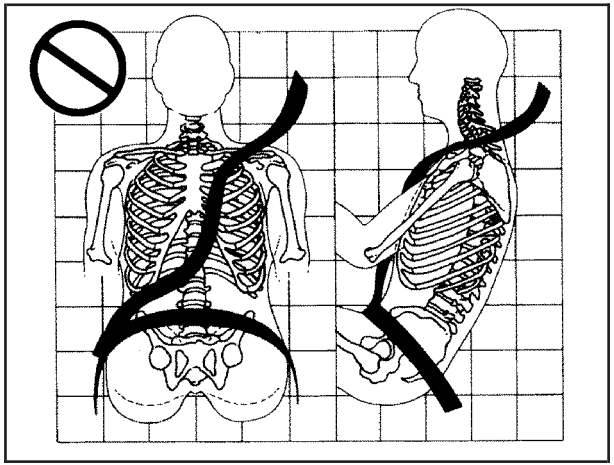

A: The shoulder belt is too loose. It will not give nearly as much protection this way.

⚠ CAUTION:

You can be seriously hurt if your shoulder belt is too loose. In a crash, you would move forward too much, which could increase injury. The shoulder belt should fit against your body.

Q: What is wrong with this?

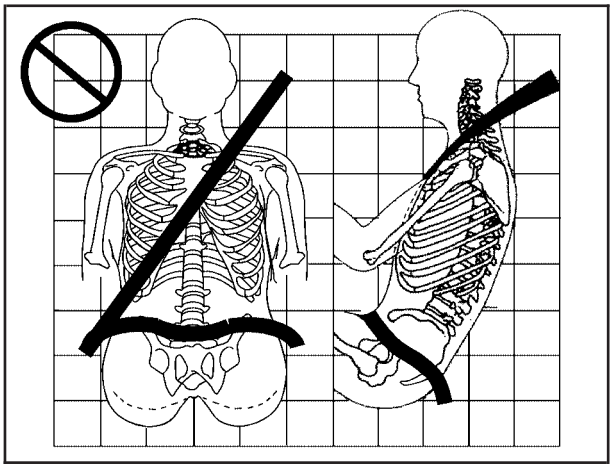

A: The lap belt is too loose. It will not give nearly as much protection this way.

⚠ CAUTION:

You can be seriously hurt if your lap belt is too loose. In a crash, you could slide under the lap belt and apply force at your abdomen. This could cause serious or even fatal injuries. The lap belt should be worn low and snug on the hips, just touching the thighs.

Q: What is wrong with this?

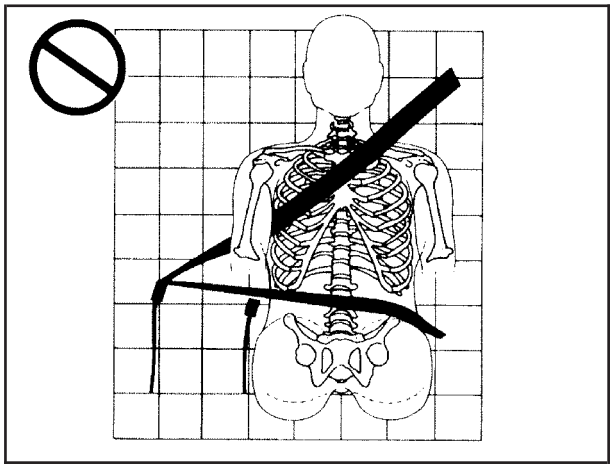

A: The belt is buckled in the wrong place.

⚠ CAUTION:

You can be seriously injured if your belt is buckled in the wrong place like this. In a crash, the belt would go up over your abdomen. The belt forces would be there, not at the pelvic bones. This could cause serious internal injuries. Always buckle your belt into the buckle nearest you.

Q: What is wrong with this?

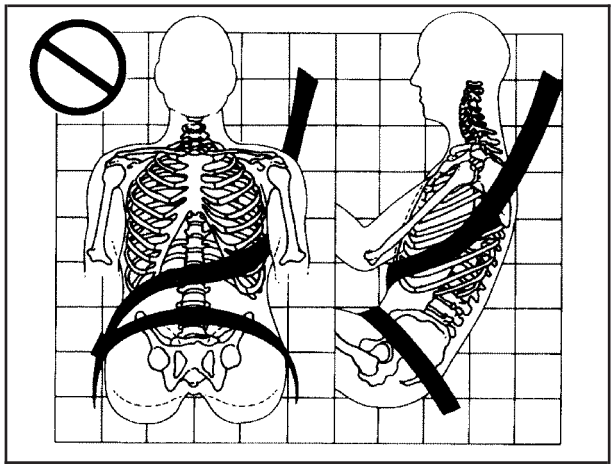

A: The shoulder belt is worn under the arm. It should be worn over the shoulder at all times.

⚠ CAUTION:

You can be seriously injured if you wear the shoulder belt under your arm. In a crash, your body would move too far forward, which would increase the chance of head and neck injury. Also, the belt would apply too much force to the ribs, which are not as strong as shoulder bones. You could also severely injure internal organs like your liver or spleen.

Q: What is wrong with this?

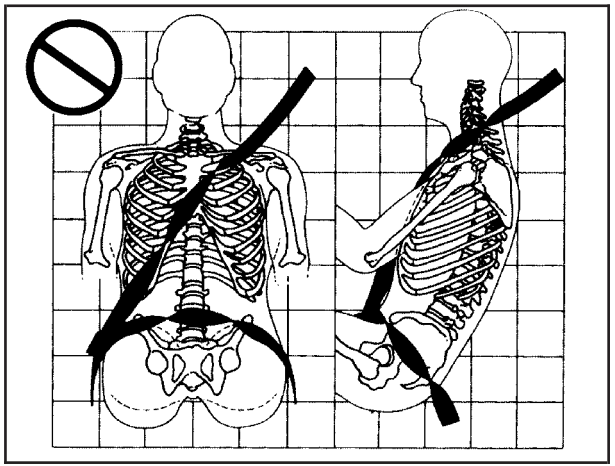

A: The belt is twisted across the body.

⚠ CAUTION:

You can be seriously injured by a twisted belt. In a crash, you would not have the full width of the belt to spread impact forces. If a belt is twisted, make it straight so it can work properly, or ask your dealer to fix it.

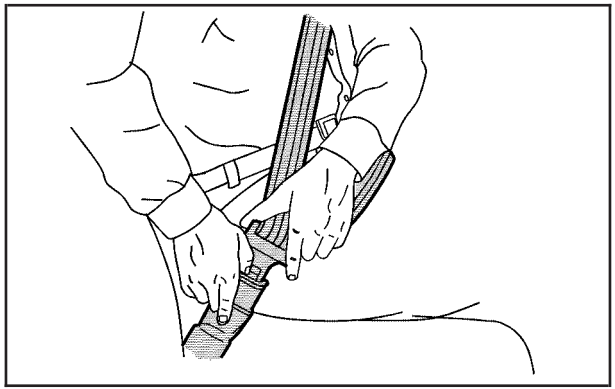

To unlatch the belt, push the button on the buckle. The belt should go back out of the way.

Before you close the door, be sure the belt is out of the way. If you slam the door on it, you can damage both the belt and your vehicle.

Safety Belt Use During Pregnancy

Safety belts work for everyone, including pregnant women. Like all occupants, they are more likely to be seriously injured if they do not wear safety belts.

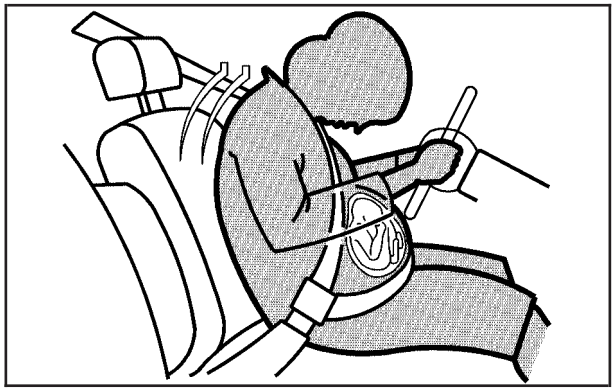

A pregnant woman should wear a lap-shoulder belt, and the lap portion should be worn as low as possible, below the rounding, throughout the pregnancy.

The best way to protect the fetus is to protect the mother. When a safety belt is worn properly, it is more likely that the fetus will not be hurt in a crash. For pregnant women, as for anyone, the key to making safety belts effective is wearing them properly.

Passenger Position

The passenger's safety belt works the same way as the driver's safety belt. To learn how to wear the passenger's safety belt properly, see *Driver Position on page 22*.

Safety Belt Pretensioners

Your vehicle has safety belt pretensioners for the driver and right front passenger. Although you cannot see them, they are part of the safety belt assembly. They help tighten the safety belts during the early stages of a moderate to severe frontal and near frontal crash if the threshold conditions for pretensioner activation are met. And, if your vehicle has side impact airbags, safety belt pretensioners can help tighten the safety belts in a side crash.

Pretensioners work only once. If they activate in a crash, you will need to get new ones, and probably other new parts for your safety belt system. See *Replacing Restraint System Parts After a Crash on page 67*.

Safety Belt Extender

If the vehicle's safety belt will fasten around you, you should use it.

But if a safety belt is not long enough, your dealer will order you an extender. When you go in to order it, take the heaviest coat you will wear, so the extender will be long enough for you. To help avoid personal injury, do not let someone else use it, and use it only for the seat it is made to fit. The extender has been designed for adults. Never use it for securing child seats. To wear it, just attach it to the regular safety belt. For more information see the instruction sheet that comes with the extender.

Child Restraints

Older Children

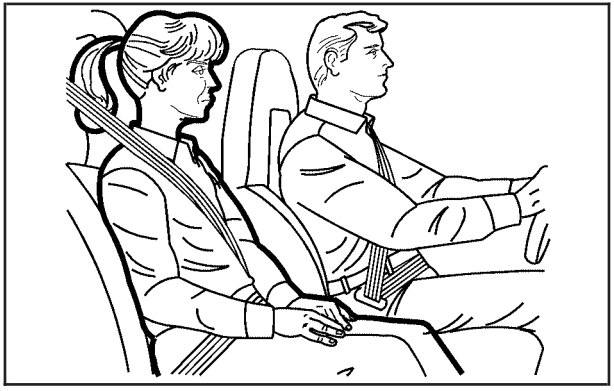

Older children who have outgrown booster seats should wear the vehicle's safety belts.

Q: What is the proper way to wear safety belts?

A: If possible, an older child should wear a lap-shoulder belt and get the additional restraint a shoulder belt can provide. The shoulder belt should not cross the face or neck. The lap belt should fit snugly below the hips, just touching the top of the thighs. It should never be worn over the abdomen, which could cause severe or even fatal internal injuries in a crash.

According to accident statistics, children are safer when properly restrained in the rear seating positions than in the front seating positions.

In a crash, children who are not buckled up can strike other people who are buckled up, or can be thrown out of the vehicle. Older children need to use safety belts properly.

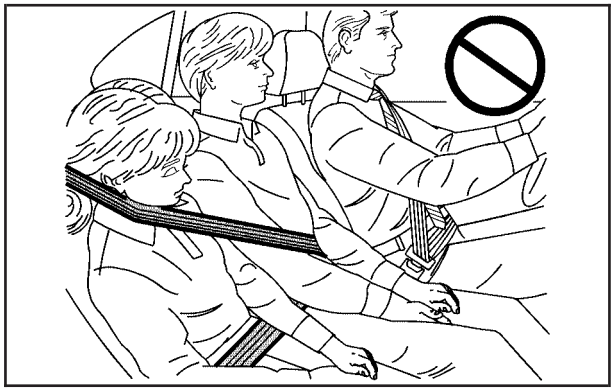

⚠ CAUTION:

Never do this.

Here two children are wearing the same belt. The belt can not properly spread the impact forces. In a crash, the two children can be crushed together and seriously injured. A belt must be used by only one person at a time.

Q: What if a child is wearing a lap-shoulder belt, but the child is so small that the shoulder belt is very close to the child's face or neck?

A: Move the child toward the center of the vehicle, but be sure that the shoulder belt still is on the child's shoulder, so that in a crash the child's upper body would have the restraint that belts provide.

⚠ CAUTION:

Never do this.

Here a child is sitting in a seat that has a lap-shoulder belt, but the shoulder part is behind the child. If the child wears the belt in this way, in a crash the child might slide under the belt. The belt's force would then be applied right on the child's abdomen. That could cause serious or fatal injuries.

The lap portion of the belt should be worn low and snug on the hips, just touching the child's thighs. This applies belt force to the child's pelvic bones in a crash.

Infants and Young Children

Everyone in a vehicle needs protection! This includes infants and all other children. Neither the distance traveled nor the age and size of the traveler changes the need, for everyone, to use safety restraints. In fact, the law in every state in the United States and in every Canadian province says children up to some age must be restrained while in a vehicle.

⚠ CAUTION:

Children can be seriously injured or strangled if a shoulder belt is wrapped around their neck and the safety belt continues to tighten. Never leave children unattended in a vehicle and never allow children to play with the safety belts.

Every time infants and young children ride in vehicles, they should have the protection provided by appropriate restraints. Young children should not use the vehicle's adult safety belts alone, unless there is no other choice. Instead, they need to use a child restraint.

⚠ CAUTION:

People should never hold a baby in their arms while riding in a vehicle. A baby does not weigh much — until a crash. During a crash a baby will become so heavy it is not possible to hold it. For example, in a crash at only 25 mph (40 km/h), a 12 lb (5.5 kg) baby will suddenly become a 240 lb (110 kg) force on a person's arms. A baby should be secured in an appropriate restraint.

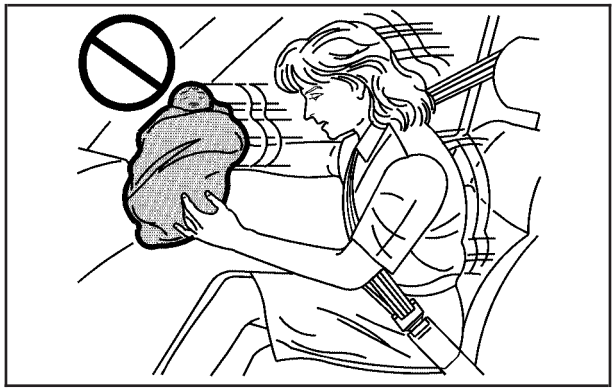

⚠ CAUTION:

Children who are up against, or very close to, any airbag when it inflates can be seriously injured or killed. Airbags plus lap-shoulder belts offer protection for adults and older children, but not for young children and infants. Neither the vehicle's safety belt system nor its airbag system is designed for them. Young children and infants need the protection that a child restraint system can provide.

Q: What are the different types of add-on child restraints?

A: Add-on child restraints, which are purchased by the vehicle's owner, are available in four basic types. Selection of a particular restraint should take into consideration not only the child's weight, height, and age but also whether or not the restraint will be compatible with the motor vehicle in which it will be used.

For most basic types of child restraints, there are many different models available. When purchasing a child restraint, be sure it is designed to be used in a motor vehicle. If it is, the restraint will have a label saying that it meets federal motor vehicle safety standards.

The restraint manufacturer's instructions that come with the restraint state the weight and height limitations for a particular child restraint. In addition, there are many kinds of restraints available for children with special needs.

⚠ CAUTION:

Newborn infants need complete support, including support for the head and neck. This is necessary because a newborn infant's neck is weak and its head weighs so much compared with the rest of its body. In a crash, an infant in a rear-facing seat settles into the restraint, so the crash forces can be distributed across the strongest part of an infant's body, the back and shoulders. Infants always should be secured in appropriate infant restraints.

⚠ CAUTION:

The body structure of a young child is quite unlike that of an adult or older child, for whom the safety belts are designed. A young child's hip bones are still so small that the vehicle's regular safety belt may not remain low on the hip bones, as it should. Instead, it may settle up around the child's abdomen. In a crash, the belt would apply force on a body area that is unprotected by any bony structure. This alone could cause serious or fatal injuries. Young children always should be secured in appropriate child restraints.

Child Restraint Systems

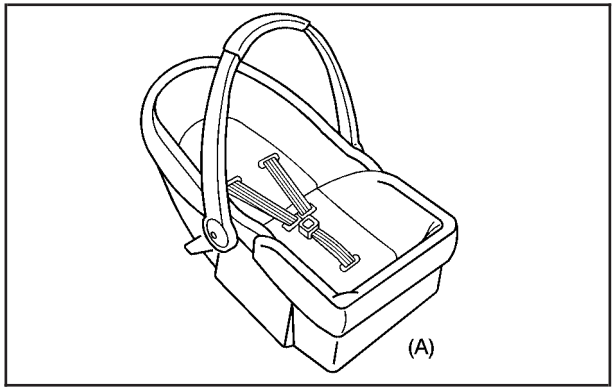

An infant car bed (A), a special bed made for use in a motor vehicle, is an infant restraint system designed to restrain or position a child on a continuous flat surface. Make sure that the infant's head rests toward the center of the vehicle.

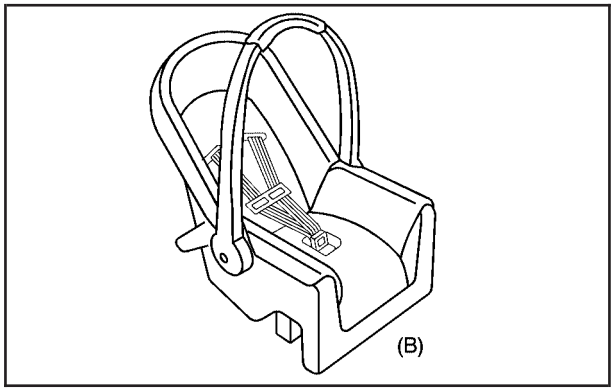

A rear-facing infant seat (B) provides restraint with the seating surface against the back of the infant. The harness system holds the infant in place and, in a crash, acts to keep the infant positioned in the restraint.

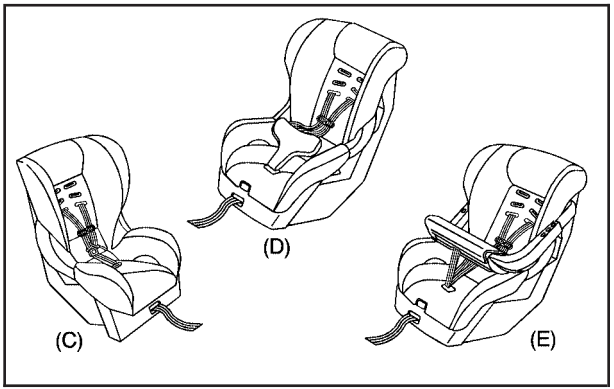

A forward-facing child seat (C-E) provides restraint for the child's body with the harness and also sometimes with surfaces such as T-shaped or shelf-like shields.

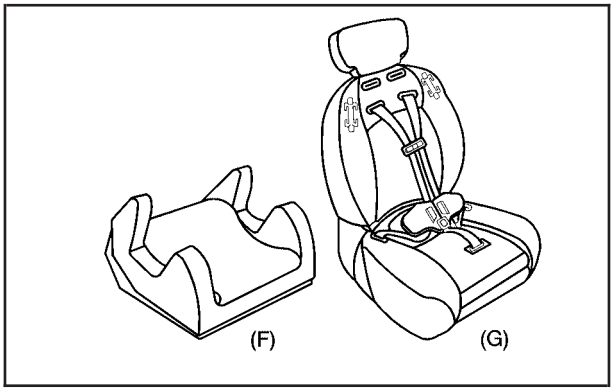

A booster seat (F-G) is a child restraint designed to improve the fit of the vehicle's safety belt system. Some booster seats have a shoulder belt positioner, and some high-back booster seats have a five-point harness. A booster seat can also help a child to see out the window.

Q: How Should I Use a Child Restraint?

A: A child restraint system is any device designed for use in a motor vehicle to restrain, seat, or position children. A built-in child restraint system is a permanent part of the motor vehicle. An add-on child restraint system is a portable one, which is purchased by the vehicle's owner. To help reduce injuries, an add-on child restraint must be secured in the vehicle. With built-in or add-on child restraints, the child has to be secured within the child restraint.

When choosing an add-on child restraint, be sure the child restraint is designed to be used in a vehicle. If it is, it will have a label saying that it meets federal motor vehicle safety standards. Then follow the instructions for the restraint. You may find these instructions on the restraint itself or in a booklet, or both.

Securing an Add-on Child Restraint in the Vehicle

⚠ CAUTION:

A child can be seriously injured or killed in a crash if the child restraint is not properly secured in the vehicle. Make sure the child restraint is properly installed in the vehicle using the vehicle's safety belt or LATCH system, following the instructions that came with that restraint, and also the instructions in this manual.

To help reduce the chance of injury, the child restraint must be secured in the vehicle. Child restraint systems must be secured in vehicle seats by lap belts or the lap belt portion of a lap-shoulder belt, or by the LATCH system.

See *Lower Anchors and Tethers for Children (LATCH) (Z06 Models Only) on page 42* or *Lower Anchors and Tethers for Children (LATCH) (Coupe and Convertible Models Only) on page 45* for more information. A child can be endangered in a crash if the child restraint is not properly secured in the vehicle.

When securing an add-on child restraint, refer to the instructions that come with the restraint which may be on the restraint itself or in a booklet, or both, and to this manual. The child restraint instructions are important, so if they are not available, obtain a replacement copy from the manufacturer.

Keep in mind that an unsecured child restraint can move around in a collision or sudden stop and injure people in the vehicle. Be sure to properly secure any child restraint in your vehicle — even when no child is in it.

Securing the Child Within the Child Restraint

There are several systems for securing the child within the child restraint. One system, the three-point harness, has straps that come down over each of the infant's shoulders and buckle together at the crotch. The five-point harness system has two shoulder straps, two hip straps, and a crotch strap. A shield may take the place of hip straps. A T-shaped shield has shoulder straps that are attached to a flat pad which rests low against the child's body. A shelf- or armrest-type shield has straps that are attached to a wide, shelf-like shield that swings up or to the side.

⚠ CAUTION:

A child can be seriously injured or killed in a crash if the child is not properly secured in the child restraint. Make sure the child is properly secured, following the instructions that came with that restraint.

Because there are different systems, it is important to refer to the instructions that come with the restraint. A child can be endangered in a crash if the child is not properly secured in the child restraint.

Lower Anchors and Tethers for Children (LATCH) (Z06 Models Only)

Some child restraints have a LATCH system. As part of the LATCH system, your child restraint may have lower attachments and/or a top tether. The LATCH system can help hold the child restraint in place during driving or in a crash. Some vehicles have lower and/or top tether anchors designed to secure a child restraint with lower attachments and/or a top tether.

Your vehicle does not have lower anchors to accommodate lower attachments. Your vehicle does have a top tether anchor. If your child restraint has a top tether, make sure your child restraint is properly installed using the top tether anchor and the vehicle's safety belt. A child restraint must never be installed using only the top tether and anchor. Refer to your child restraint instructions and see *Securing a Child Restraint in the Passenger Seat Position on page 46* for instructions on securing your child restraint using the vehicle's safety belts.

In order to use the top tether anchors in your vehicle, you need a child restraint equipped with a top tether. The child restraint manufacturer will provide you with instructions on how to use the child restraint and its top tether. The following explains how to attach a child restraint with the top tether in your vehicle.

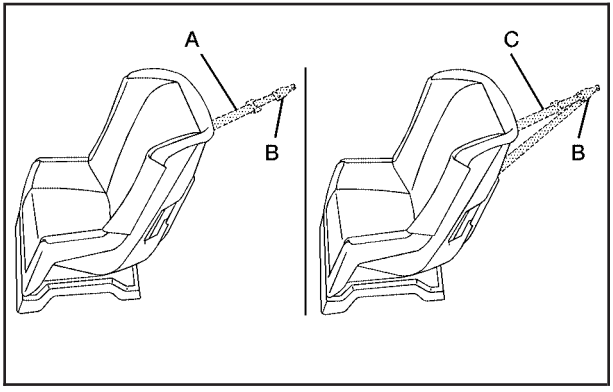

A top tether (A, C) anchors the top of the child restraint to the vehicle. A top tether anchor is built into the vehicle.

The top tether attachment (B) on the child restraint connects to the top tether anchor in the vehicle in order to reduce the forward movement and rotation of the child restraint during driving or in a crash.

Your child restraint may have a single tether (A) or a dual tether (C). Either will have a single attachment (B) to secure the top tether to the anchor.

Some top tether-equipped child restraints are designed for use with or without the top tether being attached. Others require the top tether always to be attached. In Canada, the law requires that forward-facing child restraints have a top tether, and that the tether be attached. In the United States, some child restraints also have a top tether. Be sure to read and follow the instructions for your child restraint.

If the child restraint does not have a top tether, one can be obtained, in kit form, for many child restraints. Ask the child restraint manufacturer whether or not a kit is available.

Top Tether Anchor Locations

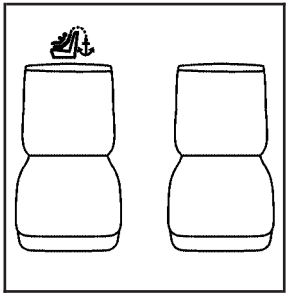

(Top Tether Anchor): Seating positions with top tether anchors.

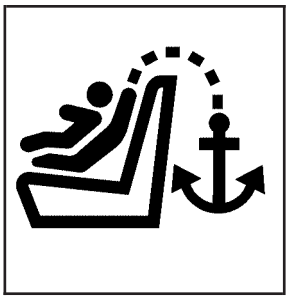

To assist you in locating the top tether anchors, the top tether anchor symbol is located on the trim cover.

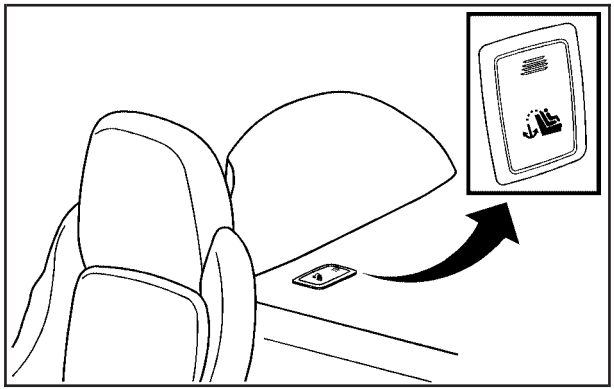

The top tether anchor is located behind the passenger seat.

Securing a Child Restraint with a Top Tether

⚠ CAUTION:

If a LATCH-type child restraint is not attached to anchors, the restraint will not be able to protect the child correctly. In a crash, the child could be seriously injured or killed. Make sure that a LATCH-type child restraint is properly installed using the anchors, or use the vehicle's safety belts to secure the restraint, following the instructions that came with that restraint, and also the instructions in this manual.

1. Secure the child restraint using the vehicle's safety belt. See *Securing a Child Restraint in the Passenger Seat Position on page 46*.

2. If the child restraint manufacturer recommends that the top tether be attached, attach and tighten the top tether to the top tether anchor, if equipped. Refer to the child restraint instructions and the following steps:
   2.1. Find the top tether anchor.
   2.2. Press the ribbed area of the trim cover to open the cover and expose the anchor.
   2.3. Route, attach and tighten the top tether according to your child restraint instructions and the following instructions:

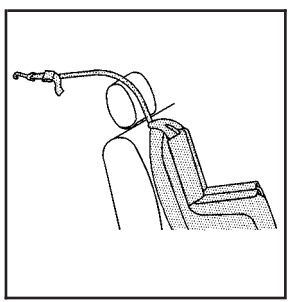

If the position you are using has a fixed head restraint and you are using a single tether, route the tether over the head restraint.

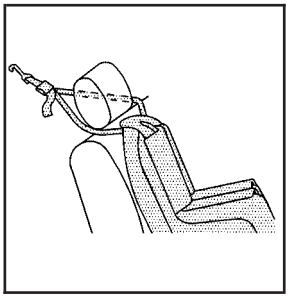

If the position you are using has a fixed head restraint and you are using a dual tether, route the tether around the head restraint.

3. Push and pull the child restraint in different directions to be sure it is secure.

Lower Anchors and Tethers for Children (LATCH) (Coupe and Convertible Models Only)

Some child restraints have a LATCH system. As part of the LATCH system, your child restraint may have lower attachments and/or a top tether. The LATCH system can help hold the child restraint in place during driving or in a crash. Some vehicles have lower and/or top tether anchors designed to secure a child restraint with lower attachments and/or a top tether.

Some child restraints with a top tether are designed to be used whether the top tether is anchored or not. Other child restraints require that the top tether be anchored. A national or local law may require that the top tether be anchored.

In Canada, the law requires that forward-facing child restraints have a top tether, and that the tether be attached.

Your vehicle does not have lower anchors or top tether anchors to secure a child restraint with the LATCH system. If a national or local law requires that your top tether be anchored, do not use a child restraint in this vehicle because a top tether cannot be properly anchored. You must use the safety belts to secure your child restraint in this vehicle, unless a national or local law requires that the top tether be anchored. Refer to your child restraint instructions and instructions in this manual for securing a child restraint using the vehicle's safety belts. See *Securing a Child Restraint in the Passenger Seat Position on page 46*.

Securing a Child Restraint in the Passenger Seat Position

Your vehicle has a right front passenger airbag. A rear seat is a safer place to secure a forward-facing child restraint.

In addition, your vehicle has the passenger sensing system. The passenger sensing system is designed to turn off the right front passenger's frontal airbag and side impact airbag (if equipped) when an infant in a rear-facing infant seat or a small child in a forward-facing child restraint or booster seat is detected. See *Passenger Sensing System on page 59* and *Passenger Airbag Status Indicator on page 190* for more information on this including important safety information.

Your vehicle has a label on the sun visor that says, "Never put a rear-facing child seat in the front." This is because the risk to the rear-facing child is so great, if the airbag deploys.

Never put a child in a rear-facing child restraint in the passenger's seat unless the passenger airbag status indicator shows off and the airbag is off. Here is why:

⚠ CAUTION:

A child in a rear-facing child restraint can be seriously injured or killed if the right front passenger's airbag inflates. This is because the back of the rear facing child restraint would be very close to the inflating airbag. Be sure the airbag is off before using a rear-facing child restraint in the passenger's position.

Even though the passenger sensing system is designed to turn off the passenger's frontal airbag and side impact airbag (if equipped) if the system detects a rear-facing child restraint, no system is fail-safe, and no one can guarantee that an airbag will not deploy under some unusual circumstance, even though it is turned off. We recommend

CAUTION: (Continued)

CAUTION: (Continued)

that rear-facing child restraints be transported in vehicles with a rear seat that will accommodate a rear-facing child restraint, whenever possible.

If you need to secure a forward-facing child restraint in the passenger's position, move the seat as far back as it will go before securing the forward-facing child restraint. See *Manual Seats on page 8* or *Power Seats on page 8*.

If your vehicle is a coupe or a convertible, there is no top tether anchor in the passenger's position. Do not secure a child restraint in this position if a national or local law requires that a top tether be anchored or if the instructions that came with your child restraint say that the top tether must be anchored. See *Lower Anchors and Tethers for Children (LATCH) (Z06 Models Only) on page 42* or *Lower Anchors and Tethers for Children (LATCH) (Coupe and Convertible Models Only) on page 45* if your child restraint has a top tether.

You will be using the lap-shoulder belt to secure the child restraint in this position. Be sure to follow the instructions that came with the child restraint. Secure the child in the child restraint when and as the instructions say.

1. Your vehicle has a right front passenger's frontal airbag. See *Passenger Sensing System on page 59*. We recommend that rear-facing child restraints not be transported in your vehicle, even if the airbag is off. If your child restraint is forward-facing, move the seat as far back as it will go before securing the child restraint in this seat. See *Manual Seats on page 8* or *Power Seats on page 8*.

   When the passenger sensing system has turned off the right front passenger's frontal airbag and side impact airbag (if equipped), the off indicator in the passenger airbag status indicator should light and stay lit when the vehicle is started. See *Passenger Airbag Status Indicator on page 190*.

2. Put the child restraint on the seat.

3. Pick up the latch plate, and run the lap and shoulder portions of the vehicle's safety belt through or around the restraint. The child restraint instructions will show you how.

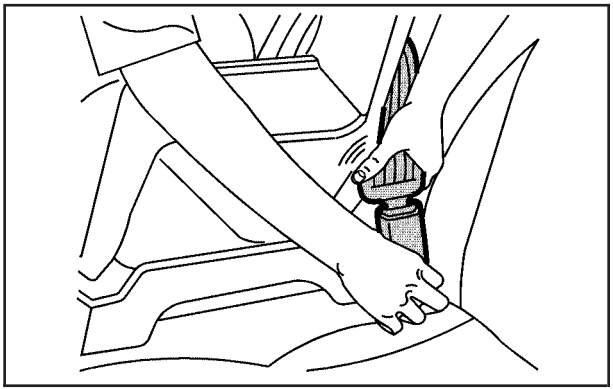

4. Buckle the belt. Make sure the release button is positioned so you would be able to unbuckle the safety belt quickly if you ever had to.

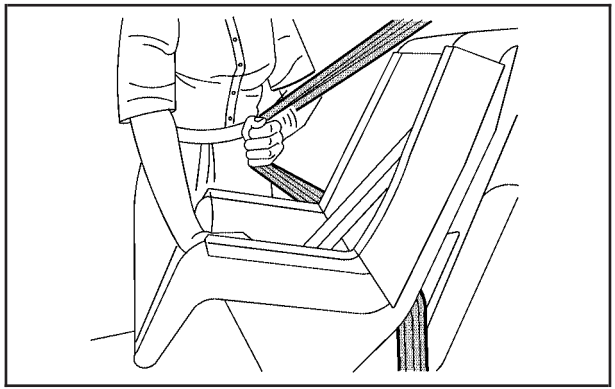

5. Pull the rest of the shoulder belt all the way out of the retractor to set the lock.

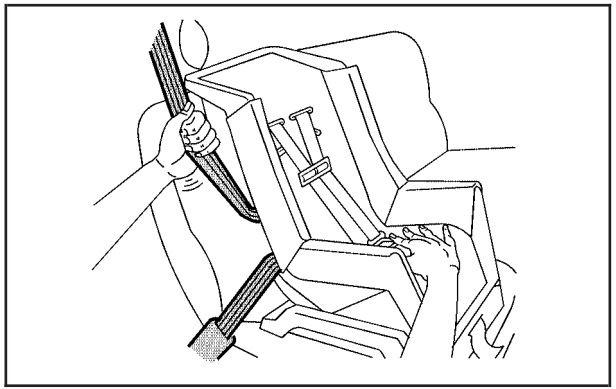

6. To tighten the belt, push down on the child restraint, pull the shoulder portion of the belt to tighten the lap portion of the belt and feed the shoulder belt back into the retractor. If you are using a forward-facing child restraint, you may find it helpful to use your knee to push down on the child restraint as you tighten the belt. You should not be able to pull more of the belt from the retractor once the lock has been set.

7. If your child restraint manufacturer recommends using a top tether and your vehicle is a Z06 model, attach and tighten the top tether to the top tether anchor. Refer to the instructions that came with the child restraint and to *Lower Anchors and Tethers for Children (LATCH) (Z06 Models Only) on page 42* or *Lower Anchors and Tethers for Children (LATCH) (Coupe and Convertible Models Only) on page 45*.
8. Push and pull the child restraint in different directions to be sure it is secure.
9. If the airbag is off, the off indicator in the inside rearview mirror will be lit and stay lit when the vehicle is started.

If a child restraint has been installed and the on indicator is lit, turn the vehicle off. Remove the child restraint from the vehicle and reinstall the child restraint.

If, after reinstalling the child restraint and restarting the vehicle, the on indicator is still lit, check to make sure that the vehicle's seatback is not pressing the child restraint into the seat cushion. If this happens, slightly recline the vehicle's seatback and adjust the seat cushion if possible.

If the on indicator is still lit, do not secure a child restraint in this vehicle and check with your dealer.

To remove the child restraint, if the top tether is attached to the top tether anchor, disconnect it. Unbuckle the vehicle's safety belt and let it go back all the way. The safety belt will move freely again and be ready to work for an adult or larger child passenger.

Airbag System

Your vehicle has a frontal airbag for the driver and a frontal airbag for the passenger. Your vehicle may also have a side impact airbag for the driver, and a side impact airbag for the right front passenger.

If your vehicle has a side impact airbag for the driver and right front passenger, the word AIRBAG will appear on the airbag covering on the side of the seatback closest to the door.

Airbags are designed to supplement the protection provided by safety belts. Even though today's airbags are also designed to help reduce the risk of injury from the force of an inflating bag, all airbags must inflate very quickly to do their job.

Here are the most important things to know about the airbag system:

⚠ CAUTION:

You can be severely injured or killed in a crash if you are not wearing your safety belt — even if you have airbags. Wearing your safety belt during a crash helps reduce your chance of hitting things inside the vehicle or being ejected from it. Airbags are "supplemental restraints" to the safety belts. All airbags are designed to work with safety belts, but do not replace them.

⚠ CAUTION:

Frontal airbags for the driver and passenger are designed to deploy in moderate to severe frontal and near frontal crashes. They are not designed to inflate in rollover, rear crashes, or in many side crashes. And, for some unrestrained occupants, frontal airbags may provide less protection in frontal crashes than more forceful airbags have provided in the past.

Side impact airbags are designed to inflate in moderate to severe crashes where something hits the side of your vehicle. They are not designed to inflate in frontal, in rollover, or in rear crashes.

Everyone in your vehicle should wear a safety belt properly — whether or not there is an airbag for that person.

⚠ CAUTION:

Both frontal and side impact airbags inflate with great force, faster than the blink of an eye. If you are too close to an inflating airbag, as you would be if you were leaning forward, it could seriously injure you. Safety belts help keep you in position for airbag inflation before and during a crash. Always wear your safety belt even with frontal airbags. The driver should sit as far back as possible while still maintaining control of the vehicle. Occupants should not lean on or sleep against the door.

⚠ CAUTION:

Anyone who is up against, or very close to, any airbag when it inflates can be seriously injured or killed. Airbags plus lap-shoulder belts offer the best protection for adults, but not for young children and infants. Neither the vehicle's safety belt system nor its airbag system is designed for them. Young children and infants need the protection that a child restraint system can provide. Always secure children properly in your vehicle. To read how, see *Older Children on page 31* and *Infants and Young Children on page 34*.

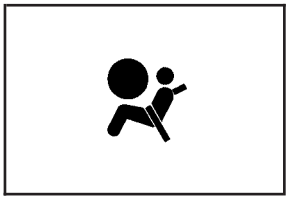

There is an airbag readiness light on the instrument panel cluster, which shows the airbag symbol.

The system checks the airbag electrical system for malfunctions. The light tells you if there is an electrical problem. See *Airbag Readiness Light on page 189* for more information.

Where Are the Airbags?

The driver's frontal airbag is in the middle of the steering wheel.

The passenger's frontal airbag is in the instrument panel on the passenger's side.

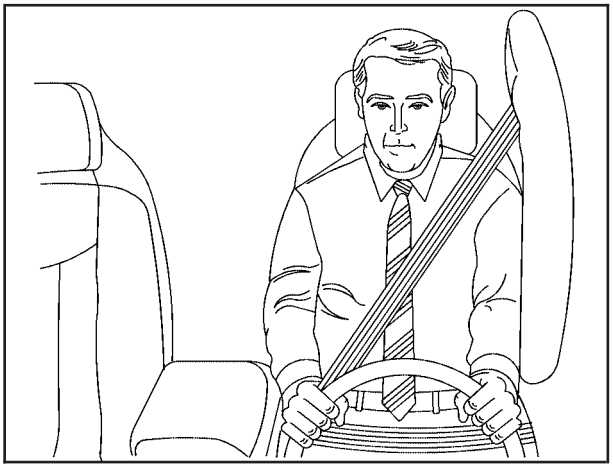

If your vehicle has a side impact airbag for the driver, it is in the side of the driver's seatback closest to the door.

If your vehicle has a side impact airbag for the right front passenger, it is in the side of the passenger's seatback closest to the door.

⚠ CAUTION:

If something is between an occupant and an airbag, the airbag might not inflate properly or it might force the object into that person causing severe injury or even death. The path of an inflating airbag must be kept clear. Do not put anything between an occupant and an airbag, and do not attach or put anything on the steering wheel hub or on or near any other airbag covering. Do not let seat covers block the inflation path of a side impact airbag.

When Should an Airbag Inflate?

The driver's and passenger's frontal airbags are designed to inflate in moderate to severe frontal or near-frontal crashes. But they are designed to inflate only if the impact exceeds a predetermined deployment threshold. Deployment thresholds take into account a variety of desired deployment and non-deployment events and are used to predict how severe a crash is likely to be in time for the airbags to inflate and help restrain the occupants. Whether your frontal airbags will or should deploy is not based on how fast your vehicle is traveling. It depends largely on what you hit, the direction of the impact, and how quickly your vehicle slows down.

In addition, your vehicle has "dual-stage" frontal airbags, which adjust the restraint according to crash severity. Your vehicle has electronic frontal sensors which help the sensing system distinguish between a moderate frontal impact and a more severe frontal impact. For moderate frontal impacts, these airbags inflate at a level less than full deployment. For more severe frontal impacts, full deployment occurs.

If the front of your vehicle goes straight into a wall that does not move or deform, the threshold level for the reduced deployment is about 10 to 12 mph (16 to 19.3 km/h), and the threshold level for a full deployment is about 18 to 21 mph (28.9 to 33.8 km/h). The threshold level can vary, however, with specific vehicle design, so that it can be somewhat above or below this range.

Frontal airbags may inflate at different crash speeds. For example:

- If the vehicle hits a stationary object, the airbags could inflate at a different crash speed than if the vehicle hits a moving object.
- If the vehicle hits an object that deforms, the airbags could inflate at a different crash speed than if the vehicle hits an object that does not deform.
- If the vehicle hits a narrow object (like a pole), the airbags could inflate at a different crash speed than if the vehicle hits a wide object (like a wall).
- If the vehicle goes into an object at an angle, the airbags could inflate at a different crash speed than if the vehicle goes straight into the object.

Frontal airbags (driver and passenger) are not intended to inflate during vehicle rollovers, rear impacts, or in many side impacts.

Your vehicle may or may not have side impact airbags. See *Airbag System on page 50* for more information. Side impact airbags are intended to inflate in moderate to severe side crashes. A side impact airbag will inflate if the crash severity is above the system's designed "threshold level." The threshold level can vary with specific vehicle design. Side impact airbags are not intended to inflate in frontal or near-frontal impacts, rollovers, or rear impacts. A side impact airbag is intended to deploy on the side of the vehicle that is struck.

In any particular crash, no one can say whether an airbag should have inflated simply because of the damage to a vehicle or because of what the repair costs were. For frontal airbags, inflation is determined by what the vehicle hits, the angle of the impact, and how quickly the vehicle slows down in frontal and near-frontal impacts. For side impact airbags, inflation is determined by the location and severity of the impact.

What Makes an Airbag Inflate?

In an impact of sufficient severity, the airbag sensing system detects that the vehicle is in a crash. The sensing system triggers a release of gas from the inflator, which inflates the airbag. The inflator, the airbag and related hardware are all part of the airbag modules. Frontal airbag modules are located inside the steering wheel and instrument panel. For seating positions with side impact airbags, there are also airbag modules in the side of the seatbacks closest to the door.

How Does an Airbag Restrain?

In moderate to severe frontal or near frontal collisions, even belted occupants can contact the steering wheel or the instrument panel. In moderate to severe side collisions, even belted occupants can contact the inside of the vehicle. Airbags supplement the protection provided by safety belts. Airbags distribute the force of the impact more evenly over the occupant's upper body, stopping the occupant more gradually.

But the frontal airbags would not help you in many types of collisions, including rollovers, rear impacts, and many side impacts, primarily because an occupant's motion is not toward the airbag. Side impact airbags would not help you in many types of collisions, including many frontal or near frontal collisions, rollovers, and rear impacts.

Airbags should never be regarded as anything more than a supplement to safety belts, and then only in moderate to severe frontal or near-frontal collisions for the driver's and right front passenger's frontal airbags, and only in moderate to severe side collisions for vehicles with side impact airbags.

What Will You See After an Airbag Inflates?

After an airbag inflates, it quickly deflates, so quickly that some people may not even realize the airbag inflated. Some components of the airbag module — the steering wheel hub for the driver's frontal airbag, the instrument panel for the right front passenger's frontal airbag, and for seating positions with side impact airbags, the side of the seatback closest to the door — may be hot for a short time. The parts of the airbag that come into contact with you may be warm, but not too hot to touch. There may be some smoke and dust coming from the vents in the deflated airbags. Airbag inflation does not prevent the driver from seeing out of the windshield or being able to steer the vehicle, nor does it prevent people from leaving the vehicle.

⚠ CAUTION:

When an airbag inflates, there may be dust in the air. This dust could cause breathing problems for people with a history of asthma or other breathing trouble. To avoid this, everyone in the vehicle should get out as soon as it is safe to do so. If you have breathing problems but cannot get out of the vehicle after an airbag inflates, then get fresh air by opening a window or a door. If you experience breathing problems following an airbag deployment, you should seek medical attention.

Your vehicle has a feature that may automatically unlock the doors, turn the interior lamps on, and turn on the hazard warning flashers when the airbags inflate. You can lock the doors, turn the interior lamps off, and turn the hazard warning flashers off by using the controls for those features.

In many crashes severe enough to inflate an airbag, windshields are broken by vehicle deformation. Additional windshield breakage may also occur from the right front passenger airbag.

- Airbags are designed to inflate only once. After they inflate, you will need some new parts for the airbag system. If you do not get them, the airbag system will not be there to help protect you in another crash. A new system will include airbag modules and possibly other parts. The service manual for your vehicle covers the need to replace other parts.
- Your vehicle has a crash sensing and diagnostic module which records information after a crash. See *Vehicle Data Collection and Event Data Recorders on page 464*.
- Let only qualified technicians work on your airbag system. Improper service can mean that an airbag system will not work properly. See your dealer for service.

Passenger Sensing System

Your vehicle has a passenger sensing system. The passenger airbag status indicator in the rearview mirror will be visible when you start the vehicle.

United States

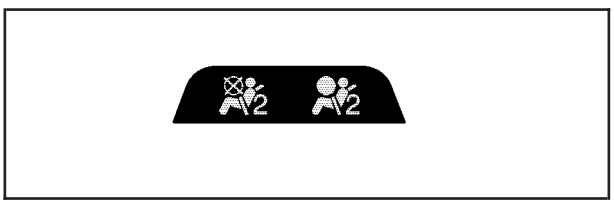

Canada

The words ON and OFF, or the symbol for on and off, will be visible during the system check.

When the system check is complete, either the word ON or the word OFF, or the symbol for on or the symbol for off, will be visible. See *Passenger Airbag Status Indicator on page 190*.

The passenger sensing system will turn off the passenger's frontal airbag and side impact airbag (if equipped) under certain conditions. The driver's airbags are not part of the passenger sensing system.

The passenger sensing system works with sensors that are part of the passenger's seat and safety belt. The sensors are designed to detect the presence of a properly seated occupant and determine if the passenger's frontal airbag and side impact airbag (if equipped) should be enabled (may inflate) or not.

Accident statistics show that children are safer if they are restrained in the rear rather than the front seat. We recommend that rear-facing child restraints not be transported in your vehicle, even if the airbag is off.

Your vehicle has a label on the sun visor that says, "Never put a rear-facing child seat in the front." This is because the risk to the rear-facing child is so great if the airbag deploys.

Never put a child in a rear-facing child restraint in the passenger's seat unless the passenger airbag status indicator shows off and the airbags are off.

⚠ CAUTION:

A child in a rear-facing child restraint can be seriously injured or killed if the passenger's airbag inflates. This is because the back of the rear-facing child restraint would be very close to the inflating airbag. Be sure the airbag is off before using a rear-facing child restraint in the passenger's position.

CAUTION: (Continued)

CAUTION: (Continued)

Even though the passenger sensing system is designed to turn off the passenger's frontal airbag and side impact airbag (if equipped) if the system detects a rear-facing child restraint, no system is fail-safe, and no one can guarantee that an airbag will not deploy under some unusual circumstance, even though it is turned off. We recommend that rear-facing child restraints be transported in vehicles with a rear seat that will accommodate a rear-facing child restraint, whenever possible.

If you need to secure a forward-facing child restraint in the passenger's seat, always move the passenger's seat as far back as it will go. It is better to secure the child restraint in a rear seat.

The passenger sensing system is designed to turn off the passenger's frontal airbag and side impact airbag (if equipped) if:

- The passenger's seat is unoccupied.
- The system determines that an infant is present in a rear-facing infant seat.
- The system determines that a small child is present in a forward-facing child restraint.
- The system determines that a small child is present in a booster seat.
- A passenger takes his/her weight off of the seat for a period of time.
- The passenger's seat is occupied by a smaller person, such as a child who has outgrown child restraints.
- Or, if there is a critical problem with the airbag system or the passenger sensing system.

When the passenger's frontal airbag and side impact airbag (if equipped) have been turned off by the passenger sensing system, the off indicator will light and stay lit to remind you that the airbags are off.

If a child restraint has been installed and the on indicator is lit, turn the vehicle off. Remove the child restraint from the vehicle and reinstall the child restraint following the child restraint manufacturer's directions and refer to *Securing a Child Restraint in the Passenger Seat Position on page 46*.

If, after reinstalling the child restraint and restarting the vehicle, the on indicator is still lit, check to make sure that the vehicle's seatback is not pressing the child restraint into the seat cushion. If this happens, slightly recline the vehicle's seatback and adjust the seat cushion if possible.

If the on indicator is still lit, do not secure the child restraint in this vehicle and check with your dealer.

The passenger sensing system is designed to enable (may inflate) the passenger's frontal airbag and side impact airbag (if equipped) anytime the system senses that a person of adult size is sitting properly in the passenger's seat. When the passenger sensing system has allowed the airbags to be enabled, the on indicator will light and stay lit to remind you that the airbags are active.

For some children who have outgrown child restraints and for very small adults, the passenger sensing system may or may not turn off the passenger's frontal airbag and side impact airbag (if equipped), depending upon the person's seating posture and body build. Everyone in your vehicle who has outgrown child restraints should wear a safety belt properly — whether or not there is an airbag for that person.

If a person of adult-size is sitting in the passenger's seat, but the off indicator is lit, it could be because that person is not sitting properly in the seat. If this happens, turn the vehicle off and ask the person to place the seatback in the fully upright position, then sit upright in the seat, centered on the seat cushion, with the person's legs comfortably extended. Restart the vehicle and have the person remain in this position for about two minutes. This will allow the system to detect that person and then enable the passenger's frontal airbag and side impact airbag (if equipped).

⚠ CAUTION:

If the airbag readiness light in the instrument panel cluster ever comes on and stays on, it means that something may be wrong with the airbag system. If this ever happens, have the vehicle serviced promptly, because an adult-size person sitting in the right front passenger's seat may not have the protection of an airbag. See *Airbag Readiness Light on page 189* for more on this, including important safety information.

Aftermarket equipment, such as seat covers, can affect how well the passenger sensing system operates. You may want to consider not using seat covers or other aftermarket equipment if your vehicle has the passenger sensing system. See *Adding Equipment to Your Airbag-Equipped Vehicle on page 65* for more information about modifications that can affect how the system operates.

⚠ CAUTION:

Stowing of articles under the passenger's seat or between the passenger's seat cushion and seatback may interfere with the proper operation of the passenger sensing system.

Servicing Your Airbag-Equipped Vehicle

Airbags affect how your vehicle should be serviced. There are parts of the airbag system in several places around your vehicle.

You do not want the system to inflate while someone is working on your vehicle. Your dealer and the service manual have information about servicing your vehicle and the airbag system. To purchase a service manual, see *Service Publications Ordering Information on page 471*.

⚠ CAUTION:

For up to 10 seconds, after the ignition is turned off and the battery is disconnected, an airbag can still inflate during improper service. You can be injured if you are close to an airbag when it inflates. Avoid yellow connectors. They are probably part of the airbag system. Be sure to follow proper service procedures, and make sure the person performing work for you is qualified to do so.

The airbag system does not need regular maintenance.

Adding Equipment to Your Airbag-Equipped Vehicle

Q: Is there anything I might add to the front or sides of the vehicle that could keep the airbags from working properly?

A: Yes. If you add things that change your vehicle's frame, bumper system, height, front end or side sheet metal, they may keep the airbag system from working properly. Also, the airbag system may not work properly if you relocate any of the airbag sensors. If you have any questions about this, you should contact Customer Assistance before you modify your vehicle. The phone numbers and addresses for Customer Assistance are in Step Two of the Customer Satisfaction Procedure in this manual. See *Customer Satisfaction Procedure on page 452*.

Q: Because I have a disability, I have to get my vehicle modified. How can I find out whether this will affect my advanced airbag system?

A: Changing or moving any parts of the front seats, safety belts, the airbag sensing and diagnostic module, steering wheel, instrument panel, the inside review mirror, or airbag wiring can affect the operation of the airbag system. If you have questions, call Customer Assistance. The phone numbers and addresses for Customer Assistance are in Step Two of the Customer Satisfaction Procedure in this manual. See *Customer Satisfaction Procedure on page 452*.

Restraint System Check

Checking the Restraint Systems

Now and then, make sure the safety belt reminder light and all your belts, buckles, latch plates, retractors and anchorages are working properly. Look for any other loose or damaged safety belt system parts. If you see anything that might keep a safety belt system from doing its job, have it repaired. See *Care of Safety Belts on page 411*.

Torn or frayed safety belts may not protect you in a crash. They can rip apart under impact forces. If a belt is torn or frayed, get a new one right away.

Also look for any opened or broken airbag covers, and have them repaired or replaced. The airbag system does not need regular maintenance.

Notice: **If you damage the covering for the driver's or the right front passenger's frontal airbag, or an airbag covering on a seatback (if equipped), the airbag may not work properly. You may have to replace the airbag module in the steering wheel, both the airbag module and the instrument panel for the right front passenger's frontal airbag, or both the airbag module and the seatback for seating positions with a side impact airbag (if equipped). Do not open or break the airbag coverings.**

Replacing Restraint System Parts After a Crash

⚠ CAUTION:

A crash can damage the restraint systems in your vehicle. A damaged restraint system may not properly protect the person using it, resulting in serious injury or even death in a crash. To help make sure your restraint systems are working properly after a crash, have them inspected and any necessary replacements made as soon as possible.

If you have had a crash, do you need new belts or LATCH system (if equipped) parts?

After a very minor collision, nothing may be necessary. But if the belts were stretched, as they would be if worn during a more severe crash, then you need new parts.

If your vehicle has the LATCH system and it was being used during a more severe crash, you may need new LATCH system parts.

If belts are cut or damaged, replace them. Collision damage also may mean you will need to have LATCH system (if equipped), safety belt or seat parts repaired or replaced. New parts and repairs may be necessary even if the belt or LATCH system (if equipped) was not being used at the time of the collision.

If an airbag inflates, you will need to replace airbag system parts. See the part on the airbag system earlier in this section.

If the frontal airbags inflate, you will also need to replace the driver's and right front passenger's safety belt buckle assembly. Be sure to do so. Then the new buckle assembly will be there to help protect you in a collision.

After a crash you may need to replace the driver and front passenger's safety belt buckle assemblies, even if the frontal airbags have not deployed. The driver and front passenger's safety belt buckle assemblies contain the safety belt pretensioners. Have your safety belt pretensioners checked if your vehicle has been in a collision, or if your airbag readiness light stays on after you start your vehicle or while you are driving. See *Airbag Readiness Light on page 189*.

NOTES

Section 2 Features and Controls

Keys 71
Keyless Access System 73
Keyless Access System Operation 74
Doors and Locks 78
Door Locks 78
Power Door Locks 81
Automatic Door Lock 81
Programmable Automatic Door Unlock 82
Lockout Protection 82
Hatch/Trunk 83
Windows 86
Power Windows 87
Sun Visors 87
Theft-Deterrent Systems 88
Theft-Deterrent System 88
Starting and Operating Your Vehicle 90
New Vehicle Break-In 90
Ignition Positions 90
Retained Accessory Power (RAP) 91
Starting the Engine 91
Engine Coolant Heater 94
Automatic Transmission Operation 95
Manual Transmission Operation 100
Parking Brake 103
Shifting Into Park (P) (Automatic Transmission) 103
Shifting Out of Park (P) (Automatic Transmission) 105
Parking Your Vehicle (Manual Transmission) 105
Parking Over Things That Burn 106
Engine Exhaust 106
Running the Engine While Parked 107
Mirrors 108
Manual Rearview Mirror 108
Automatic Dimming Rearview Mirror with OnStar® and Compass 108
Automatic Dimming Rearview Mirror with Compass 110
Outside Power Heated Mirrors 113
Outside Automatic Dimming Mirror 114
Outside Convex Mirror 114
OnStar® System 114

Universal Home Remote System 118
Universal Home Remote System (With One Triangular LED) 118
Universal Home Remote System (With Three Round LED) 118
Universal Home Remote System Operation (With Three Round LED) 119
Universal Home Remote System Operation (With One Triangular LED) 124
Storage Areas 128
Glove Box 128
Cupholder(s) 128
Center Console Storage Area 129
Floor Mats 129
Rear Storage Area 130
Convenience Net 131
Cargo Cover 132
Roof Panel 133
Removing the Roof Panel 133
Storing the Roof Panel 136
Installing the Roof Panel 137
Convertible Top 138
Convertible Top (Manual) 138
Convertible Top (Power) 145

Keys

⚠ CAUTION:

Leaving children unattended in a vehicle is dangerous, but it is even more dangerous if the keyless access transmitter is also left in the vehicle. A child or others could be badly injured or even killed.

They could operate the power windows or other controls or even make the vehicle move.

Do not leave the keyless access transmitter in a vehicle with children.

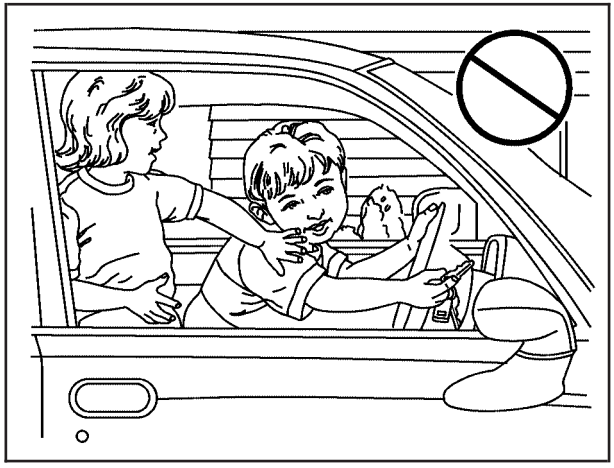

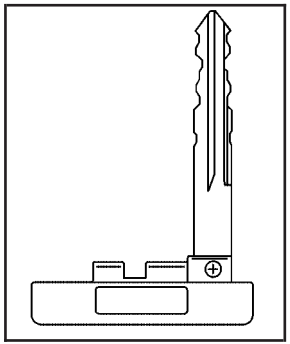

There is a key, located inside the keyless access transmitter, that works the glove box and can open the hatch/trunk lid if vehicle power is lost. See *Hatch/Trunk on page 83* for more information.

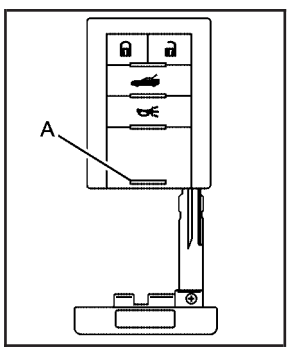

To remove the key, press the button (A) near the bottom of the keyless access transmitter, and pull the key out. Never pull the key out without pressing the button.

Your vehicle has a keyless access system with pushbutton start. See *Ignition Positions on page 90* for information on starting the vehicle.

Notice: **If you ever lose your transmitter(s) and/or key, it could be difficult to get into your vehicle. You may even have to damage your vehicle to get in. Be sure you have a spare transmitter and/or key.**

In an emergency, contact Roadside Assistance. See *Roadside Assistance Program on page 458*.

Keyless Access System

Your vehicle has a Keyless Access System that operates on a radio frequency subject to Federal Communications Commission (FCC) Rules and with Industry Canada.

This device complies with Part 15 of the FCC Rules. Operation is subject to the following two conditions:

1. This device may not cause harmful interference.
2. This device must accept any interference received, including interference that may cause undesired operation.

This device complies with RSS-210 of Industry Canada. Operation is subject to the following two conditions:

1. This device may not cause interference.
2. This device must accept any interference received, including interference that may cause undesired operation of the device.

Changes or modifications to this system by other than an authorized service facility could void authorization to use this equipment.

If you ever notice a decrease in the keyless access transmitter range, try doing one of the following:

- Check the distance. You may be too far from your vehicle. You may need to stand closer during rainy or snowy weather.
- Check the location. Other vehicles or objects may be blocking the signal. Take a few steps to the left or right, hold the transmitter higher, and try again.
- Check to determine if battery replacement is necessary. See “Battery Replacement” under *Keyless Access System Operation on page 74*.
- Check to make sure that an electronic device such as a cellular phone or lap top computer is not causing interference.
- If you are still having trouble, see your dealer or a qualified technician for service.

Keyless Access System Operation

Your vehicle has a keyless access system that allows you to lock and unlock your doors, unlock your hatch/trunk lid and disarm or arm your theft-deterrent system. The range distance is as much as 100 feet (30 m) away.

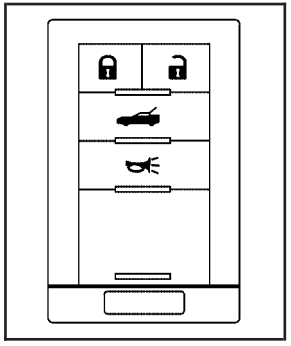

Your vehicle comes standard with two transmitters, and up to four can be matched to your vehicle. See "Matching Transmitter(s) to Your Vehicle" later in this section.

(Lock): Press this button to lock the doors. The light on the door will flash once. If this button is pressed two times, the doors will lock, the light will flash and the horn will sound.

(Unlock): Press this button to unlock the driver's door. The light on the door will flash two times. Press the button two times within 10 seconds to unlock both doors. If it is dark enough outside, your interior lamps will come on.

Your memory settings may also be recalled when you press the unlock button on the keyless access transmitter. See *Memory Seat, Mirrors and Steering Wheel on page 10* for more information.

(Hatch/Trunk): Press and hold this button for about one second to open the hatch/trunk lid while the engine is turned off. If the engine is running the shift lever needs to be in PARK (P) for an automatic transmission or NEUTRAL with the parking brake set for a manual transmission. See *Parking Brake on page 103*.

(Panic): Press this button to sound the vehicle alarm. Press any other button on the keyless access transmitter to stop the vehicle alarm.

Matching Transmitter(s) to Your Vehicle

Each keyless access transmitter is coded to allow only transmitters programmed to your vehicle, to work. If a transmitter is lost or stolen, a replacement can be purchased and programmed through your dealer. Your dealer can reprogram your vehicle so lost or stolen transmitters no longer work with your vehicle. Each vehicle can have a maximum of four transmitters matched to it.

To match a new transmitter to your vehicle when you have a recognized transmitter (two recognized transmitters are required for Canadian owners), do the following:

1. The vehicle must be off.
2. Have the recognized and new, unrecognized transmitters on your person.
3. Go to the rear of the vehicle and insert the vehicle key into the key cylinder located above the license plate. See *Hatch/Trunk on page 83* for more information on the key cylinder.
4. Open the trunk.
5. Turn the key five times within five seconds.
6. The DIC will display READY FOR FOB #X, where X can be 2, 3 or 4.

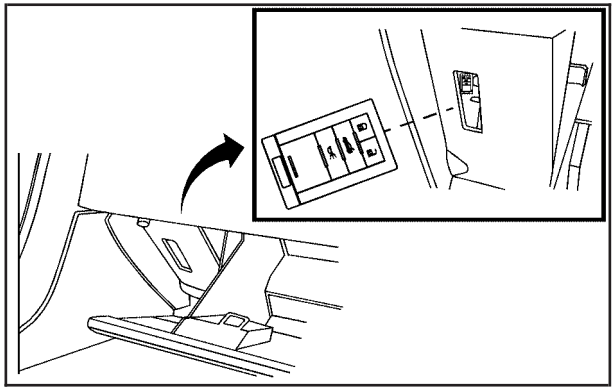

7. Place the new, unrecognized transmitter in the glove box transmitter pocket with the buttons facing towards the passenger's side.
8. Once the transmitter is programmed, a beep will sound. The DIC will display READY FOR #X, where X can be 3 or 4, or MAX # FOBS LEARNED.
9. Press the Acc button (ignition switch).

The Canadian immobilizer standard requires Canadian owners to see their dealer for matching new transmitters when a recognized transmitter is not available. United States owners are permitted to match a new transmitter to their vehicle when a recognized transmitter is not available. The procedure will require three ten minutes cycles to complete the matching process. Do the following:

1. The vehicle must be off.

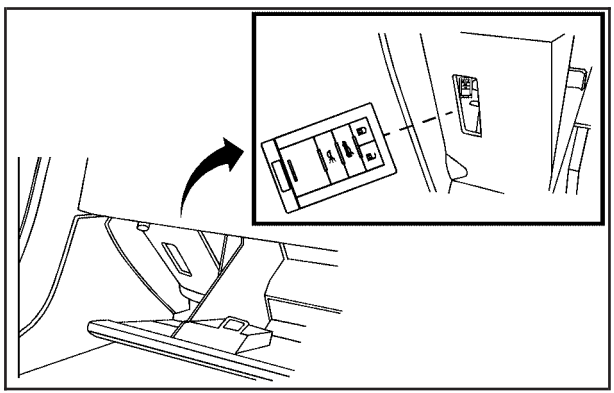

2. Place the new, unrecognized transmitter in the glove box transmitter pocket with the buttons facing towards the passenger side.
3. Go to the rear of the vehicle and insert the vehicle key into the key cylinder located above the license plate. See *Hatch/Trunk on page 83* for more information on the key cylinder.
4. Open the trunk.
5. Turn the key five times within five seconds.
6. The DIC message will display OFF-ACCESSORY TO LEARN.
7. Press the Acc. button (ignition switch).
8. The DIC will read WAIT 10 MINUTES and will count down to zero, one minute at a time.
9. The DIC will display OFF-ACCESSORY TO LEARN again.
10. Press the Acc. button (ignition switch).
11. The DIC will read WAIT 10 MINUTES and will count down to zero, one minute at a time.
12. The DIC will display OFF-ACCESSORY TO LEARN again.

13. Press the Acc. button (ignition switch).
14. The DIC will read WAIT 10 MINUTES and will count down to zero, one minute at a time.
15. A beep will sound and the DIC will read READY FOR FOB #1. At this time, all previously known transmitters have been erased.
16. Once the transmitter is recognized and programmed, a beep will sound and the DIC will display READY FOR FOB #2.

If you have additional transmitters to program, take transmitter 1 out of the transmitter pocket and place transmitter 2 in the pocket. This can be done repeatedly until up to four transmitters have be programmed. The DIC will then display MAX # FOBS LEARNED and will exit the programming mode.

When you are done programming transmitters, press the Acc. button (ignition switch).

Battery Replacement

Under normal use, the battery in your keyless access transmitter should last about three years.

The battery is weak if the transmitter will not work at the normal range in any location. If you have to get close to your vehicle before the transmitter works, it is probably time to change the battery.

A weak battery may also cause the DIC to display NO FOBS DETECTED when you try to start the vehicle. If this happens, place the transmitter in the glove box transmitter pocket with the buttons facing towards the passenger's side. Then, with the vehicle in PARK (P) for an automatic transmission, press the brake pedal and the START button. If your vehicle has a manual transmission, press the clutch and the START button. Although this will start the vehicle, it is recommended that you replace the transmitter battery as soon as possible. The DIC may display FOB BATTERY LOW.

Notice: **When replacing the battery, use care not to touch any of the circuitry. Static from your body transferred to these surfaces may damage the transmitter.**

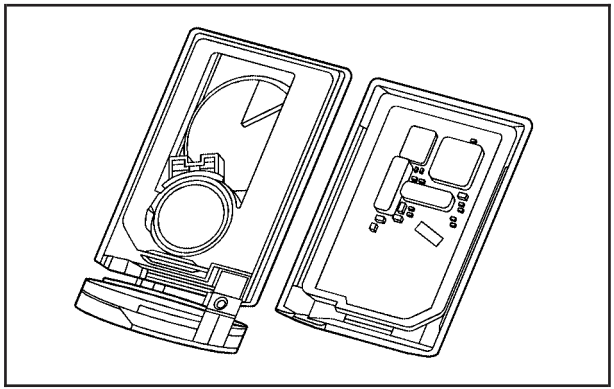

1. Insert a flat object with a thin edge into the slot on the side of the transmitter and separate the bottom half from the top half.
2. Gently pull the battery out of the transmitter.
3. Put the new battery in the transmitter, positive (+) side down. Use a battery, type CR2032, or equivalent.
4. Reassemble the transmitter. Make sure to put it together so water will not get in.
5. Test the transmitter.

Doors and Locks

Door Locks

⚠ CAUTION:

Unlocked doors can be dangerous.

- **Passengers — especially children — can easily open the doors and fall out of a moving vehicle. When a door is locked it will not open. You increase the chance of being thrown out of the vehicle in a crash if the doors are not locked. So, wear safety belts properly and lock the doors whenever you drive.**

CAUTION: (Continued)

CAUTION: (Continued)

- **Young children who get into unlocked vehicles may be unable to get out. A child can be overcome by extreme heat and can suffer permanent injuries or even death from heat stroke. Always lock your vehicle whenever you leave it.**
- **Outsiders can easily enter through an unlocked door when you slow down or stop your vehicle. Locking your doors can help prevent this from happening.**

There are several ways to lock and unlock your vehicle.

From the outside, press the lock or unlock button on the keyless access transmitter.

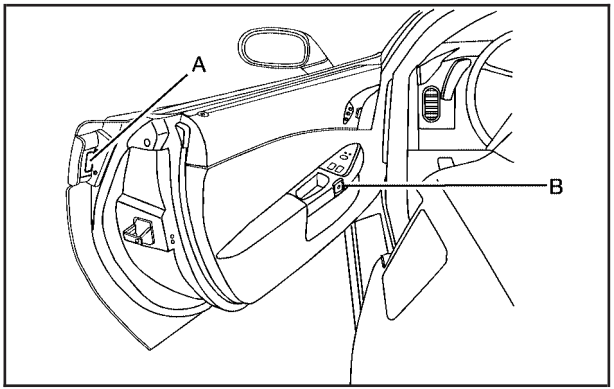

Door Open to Show Location of Door Handle Sensor

When you have the transmitter with you, you may also unlock and open the door by squeezing the door handle sensor (A). You do not have to press the unlock button on the transmitter. You will be able to open the door when you press the door handle sensor and the vehicle recognizes your keyless access transmitter. When the passenger door is opened first, the driver's door will also unlock.

From the inside, use the power door lock switch located at the top of the door panel near both windows. See *Power Door Locks on page 81*.

To open a door from the inside, press the button (B) in front of the door handle and push the door open. You will hear a tone when the button is pressed.

If power to the vehicle or the keyless access transmitter is lost, there are two ways to open the door.

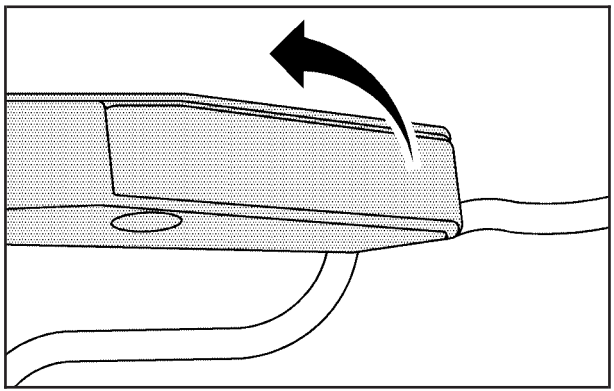

From inside the vehicle, use the door release handle located on the floor next to each seat. Pull the handle up to unlock and unlatch the door.

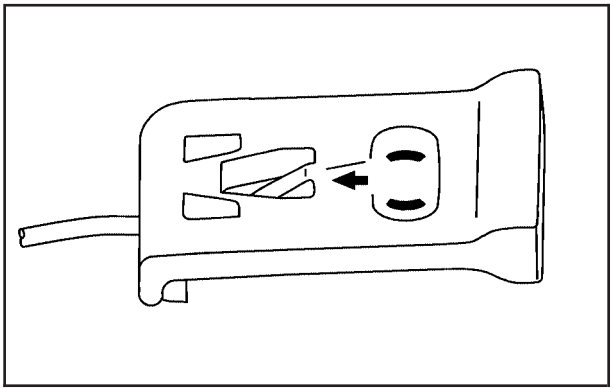

From outside the vehicle, use the key in the cylinder above the license plate to open the hatch the use the door release tab located on the carpet inside the trunk on the driver's side of the vehicle. Pull the tab to unlock and unlatch the driver's door. See *Keys on page 71* for information on opening the trunk during a loss of power.

Power Door Locks

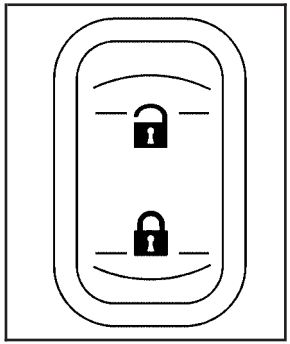

The power door lock switches are located on the door panels.

(Unlock): Press this part of the switch to unlock the doors.

(Lock): Press this part of the switch to lock the doors.

There is an indicator light on the rear of the door near the window.

When lock is pressed, a beep will sound. If the door is closed when lock is pressed, the light will come on for a few seconds, then turn off. If the door is open when lock is pressed, the light will stay on.

When unlock is pressed, a beep will sound. If the door is closed when unlock is pressed, the light will flash two times. If the door is open when unlock is pressed, the light will flash.

Automatic Door Lock

Your vehicle is programmed so that, when the doors are closed, the ignition is on and the shift lever is moved out of PARK (P) for automatic transmissions, or when vehicle speed becomes faster than 8 mph (13 km/h) for manual transmissions, both doors will lock.

If someone needs to get out while the vehicle is running or not in PARK (P), have the person use the power door unlock switch. When the door is closed again, the doors will lock either when your foot is removed from the brake or the vehicle speed becomes faster than 8 mph (13 km/h).

Programmable Automatic Door Unlock

Your vehicle is programmed so that when the shift lever is moved into PARK (P) for automatic transmission vehicles or when the ignition is turned off or is in Retained Accessory Power (RAP) for manual transmission vehicles, both doors will unlock.

With the vehicle stopped and the engine running, door unlocking can be programmed through prompts displayed on the Driver Information Center (DIC). These prompts allow the driver to choose various unlock settings. For programming information, see *DIC Vehicle Personalization on page 232*.

Lockout Protection

Your vehicle can be programmed to sound the horn three times and unlock the driver's door when both doors are closed and there is a keyless access transmitter inside the vehicle. When the driver's door is opened, a reminder chime will sound continuously. The vehicle will remain locked only when at least one transmitter has been removed from the vehicle and both doors are closed. See *DIC Vehicle Personalization on page 232*.

Hatch/Trunk

⚠ CAUTION:

It can be dangerous to drive with the hatch/trunk lid open because carbon monoxide (CO) gas can come into your vehicle. You can not see or smell CO. It can cause unconsciousness and even death. If you must drive with the hatch/trunk lid open or if electrical wiring or other cable connections must pass through the seal between the body and the hatch/trunk lid:

- **Make sure all other windows are shut.**
- **Turn the fan on your heating or cooling system to its highest speed and select the control setting that will force outside air into your vehicle. See *Dual Automatic Climate Control System on page 177*.**
- **If you have air outlets on or under the instrument panel, open them all the way.**

See *Engine Exhaust on page 106*.

Notice: **Closing the hatch/trunk lid forcefully or from the sides can cause damage to the glass, the defogger or the weather stripping. Be sure objects will fit in the hatch/trunk area before closing the hatch/trunk lid. When closing the hatch/trunk lid, gently pull down from the center.**

Notice: **Do not store heavy or sharp objects in the rear storage compartments located in the hatch/trunk area. If you do, the objects could damage the underbody.**

Hatch/Trunk Lid Release

There are several ways to release the hatch/trunk lid. If your vehicle has an automatic transmission, the shift lever must be in PARK (P). For manual transmission vehicles, the parking brake must be set when the ignition is started for the hatch/trunk release to operate. The parking brake does not need to be set when the ignition is off for the hatch/trunk release to operate. See *Parking Brake on page 103*.

- **(Hatch/Trunk):** Press the hatch/trunk lid release button, located on the instrument panel to the left of the steering wheel. The theft-deterrent alarm system must not be armed.
- **(Hatch/Trunk):** Press the hatch/trunk lid release button on the keyless access transmitter. See *Keyless Access System on page 73*.
- Press the hatch/trunk release button located on the rear of the hatch/trunk lid above the license plate, as long as you have your transmitter with you.

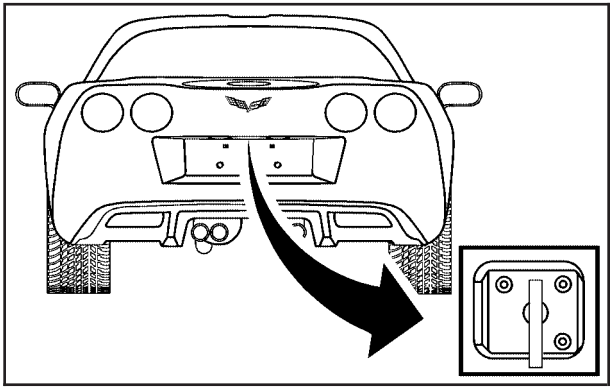

If your vehicle has lost battery power, open the hatch/trunk using the vehicle key located inside the keyless access transmitter. See *Keys on page 71* for more information. The key lock cylinder is located on the rear of the hatch/trunk lid above the license plate. Turn the vehicle key clockwise in the lock.

Closing the Rear Compartment (Coupe)

To assist in closing the rear compartment lid of your coupe, use the pocket on the underside of the lid on the passenger's side of the vehicle. When closing the lid, lower it until the power pull down latch feature activates and it will close the rest of the way and latch automatically.

Emergency Trunk Release Handle (Convertible Only)

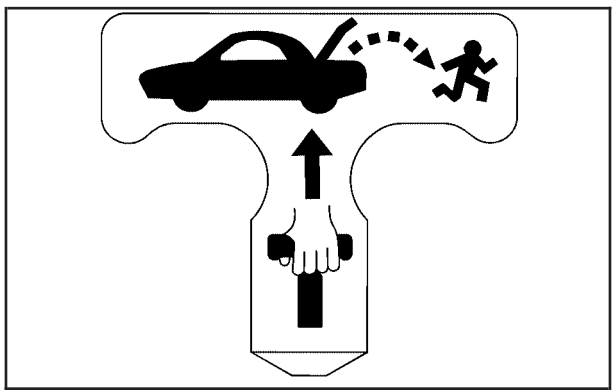

Notice: **Do not use the emergency trunk release handle as a tie-down or anchor point when securing items in the trunk as it could damage the handle. The emergency trunk release handle is only intended to aid a person trapped in a latched trunk, enabling them to open the trunk from the inside.**

There is a glow-in-the-dark emergency trunk release handle located on the rear wall of the trunk below the latch. This handle will glow following exposure to light. Pull the release handle down to open the trunk from the inside.

Windows

⚠ CAUTION:

Leaving children, helpless adults, or pets in a vehicle with the windows closed is dangerous. They can be overcome by the extreme heat and suffer permanent injuries or even death from heat stroke. Never leave a child, a helpless adult, or a pet alone in a vehicle, especially with the windows closed in warm or hot weather.

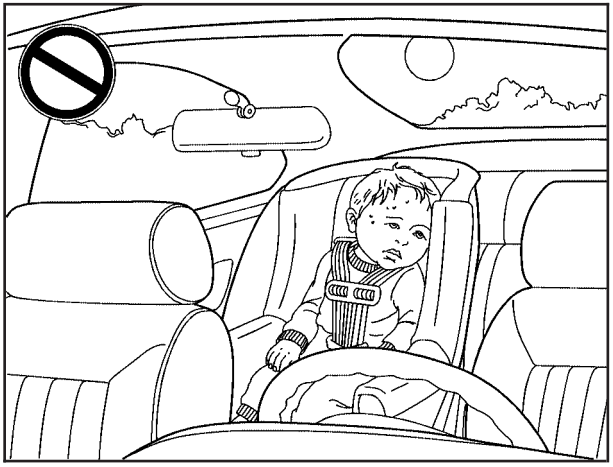

Power Windows

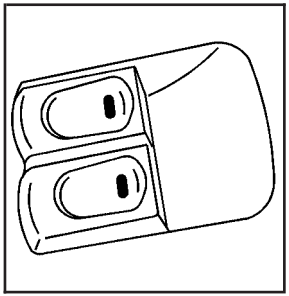

The power window switches are located on each door.

Pull up on the front of the switch to raise the window. Press down on the front of the switch to lower the window.

Your vehicle has Retained Accessory Power (RAP) that allows you to use the power windows when the ignition is off. For more information, see *Retained Accessory Power (RAP) on page 91*.

Express-Down Window

This feature is on both power windows. Press the front of the switch to the second position to activate the express-down feature. If you want to stop the window as it is lowering, press the switch again.

Window Indexing

This feature automatically lowers the window a small amount when the door is opened. Then, when the door is closed, the window will raise to its full up position. If either window does not index properly, it could be due to loss of power. Before returning to your dealer for service, perform the power window initialize procedure following.

Power Window Initialize

After a power reconnect such as battery replacement, the window index-up feature will not function until the system is initialized. Once power is restored, do the following:

1. Close the door.
2. Raise the window by pulling up the switch.
3. Hold the up switch for three seconds after the window is closed. Release the switch.
4. Hold the up switch again for three seconds and release.

Sun Visors

To block out glare, you can swing down the visors. You can also swing them to the side.

Lighted Visor Vanity Mirrors

Pull down the sun visor and lift the cover to expose the lighted vanity mirror. When the cover is lifted, the lamps will come on automatically, even if the ignition is off.

Theft-Deterrent Systems

Vehicle theft is big business, especially in some cities. Although your vehicle has a number of theft-deterrent features, we know that nothing we put on it can make it impossible to steal.

Theft-Deterrent System

Your vehicle is equipped with a theft-deterrent alarm system.

With this system, the security light will flash when the door is open and locked with the power door lock switch.

If this light is on continuously while the engine is running, your vehicle needs service.

Arming the System

Use one of the three following items listed here to arm the system:

- Press the lock button on the keyless access transmitter.
- Open the door. Lock the door with the power door lock switch. The security light should flash. Remove the keyless access transmitter from inside the vehicle and close the door. The security light will stop flashing and stay on. After 30 seconds, the light should turn off.
- The vehicle can be programmed to automatically lock the doors and arm the theft-deterrent system when you exit the vehicle. See *DIC Vehicle Personalization on page 232*.

Now, if a door or the hatch/trunk is opened without the keyless access transmitter, the alarm will go off. Your horn will sound for two minutes, then it will go off to save battery power. Your vehicle will not start without a keyless access transmitter present.

The theft-deterrent system will not arm if you lock the driver's door with the power door lock switch after the doors are closed.

If your passenger stays in the vehicle when you leave with the keyless access transmitter, have the passenger lock the vehicle after the doors are closed. This way the alarm will not arm, and your passenger will not set it off.

Testing the Alarm

Do the following to test the system:

1. Make sure the trunk lid/hatch is latched.
2. Lower the window on the driver's door.
3. Manually arm the system.
4. Close the doors and wait 30 seconds.
5. Reach through the open window and manually pull the release lever on the floor.
6. Turn off the alarm by pressing the unlock button on the transmitter.

If the alarm is inoperative, check to see if the horn works. If not, check the horn fuse. See *Fuses and Circuit Breakers on page 420*. If the horn works, but the alarm doesn't go off, see your dealer.

Disarming the System

Always use your keyless access transmitter to unlock a door either by pressing the unlock button on the transmitter or by squeezing the door handle sensor while you have the transmitter with you. Unlocking a door any other way will set off the alarm. If your alarm sounds, press the unlock button on the keyless access transmitter to disarm it.

Starting and Operating Your Vehicle

New Vehicle Break-In

Notice: **Your vehicle does not need an elaborate break-in. But it will perform better in the long run if you follow these guidelines:**

- **Keep your speed at 55 mph (88 km/h) or less for the first 500 miles (805 km).**
- **Do not drive at any one constant speed, fast or slow, for the first 500 miles (805 km). Do not make full-throttle starts. Avoid downshifting to brake, or slow, the vehicle.**
- **Avoid making hard stops for the first 200 miles (322 km) or so. During this time your new brake linings are not yet broken in. Hard stops with new linings can mean premature wear and earlier replacement. Follow this breaking-in guideline every time you get new brake linings.**

Following break-in, engine speed and load can be gradually increased.

Ignition Positions

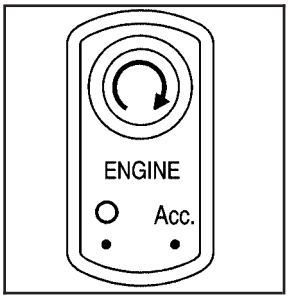

Your vehicle has an electronic keyless ignition with a pushbutton start.

(START): Press this button while your foot is on the brake for an automatic transmission, or while pressing in the clutch for a manual transmission, to start the engine. If your vehicle is in OFF or Retained Accessory Power (RAP) mode, the keyless access transmitter must be inside the vehicle to start the engine.

◯ **Acc. (OFF/ACCESSORY):** When the engine is on or the vehicle is in accessory power mode, it is recommended that a manual transmission be placed in REVERSE (R). An automatic transmission must be placed in PARK (P). Then press the Acc. button to turn the engine off and place the vehicle in RAP. See “Retained Accessory Power (RAP)” later for more information. If an automatic vehicle is not correctly placed in PARK (P) a SHIFT TO PARK message will display on the Driver Information Center (DIC).

For more information, see *DIC Warnings and Messages on page 212*.

When the engine is off, press this button to place the vehicle in accessory mode. ACCESSORY MODE ON will display on the Driver Information Center (DIC). This mode allows you to use things like the radio and the windshield wipers while the engine is off. Use accessory mode if you must have your vehicle in motion while the engine is off, for example, if your vehicle is being pushed or towed.

After being in accessory mode for about 20 minutes, the vehicle will automatically enter RAP or OFF, depending on if the doors are opened or closed.

Retained Accessory Power (RAP)

With RAP, your power windows and the audio system will continue to work for up to 10 minutes after the engine is turned off or until either door is opened. If a door is opened, the power windows and audio system will shut off.

Starting the Engine

Move the shift lever to PARK (P) or NEUTRAL (N) for an automatic transmission. For a manual transmission the vehicle can be started in NEUTRAL or any other gear as long as the clutch is depressed. To restart a manual transmission when you are already moving, use the NEUTRAL position only. To restart an automatic transmission when you are already moving, use NEUTRAL (N).

Notice: **Do not try to shift to PARK (P) if your vehicle is moving. If you do, you could damage the transmission. Shift to PARK (P) only when your vehicle is stopped.**

The keyless access transmitter must be inside the vehicle for the ignition to work.

Cell phone chargers can interfere with the operation of the Keyless Access System. Battery chargers should not be plugged in when starting or turning off the engine.

To start your vehicle, do the following:

1. For an automatic transmission, with your foot on the brake pedal, press the START button located on the instrument panel. For a manual transmission, while pressing in the clutch, press the START button.

   If there is not a keyless access transmitter in the vehicle or if there is something causing interference with it, the DIC will display NO FOBS DETECTED. See *DIC Warnings and Messages on page 212* for more information.

2. When the engine begins cranking, let go of the button and the engine cranks automatically until it starts. If the battery in the keyless access transmitter is weak, the DIC displays FOB BATTERY LOW. You can still drive the vehicle.

   See “Battery Replacement” under *Keyless Access System Operation on page 74* for more information. If the fob battery is dead, you need to insert the fob into the fob slot to enable engine starting. See “No Fobs Detected” under *DIC Warnings and Messages on page 212*.

3. Do not race the engine immediately after starting it. Operate the engine and transmission gently until the oil warms up and lubricates all moving parts.

4. If the engine does not start and no DIC message is displayed, wait 15 seconds before trying again to let the cranking motor cool down.

   If the engine does not start after 5-10 seconds, especially in very cold weather (below 0°F or –18°C), it could be flooded with too much gasoline. Try pushing the accelerator pedal all the way to the floor while cranking for up to 15 seconds maximum. Wait at least 15 seconds between each try, to allow the cranking motor to cool down. When the engine starts, let go of the accelerator. If the vehicle starts briefly but then stops again, do the same thing. This clears the extra gasoline from the engine.

Notice: **Cranking the engine for long periods of time, by pressing the START button immediately after cranking has ended, can overheat and damage the cranking motor, and drain the battery. Wait at least 15 seconds between each try, to allow the cranking motor to cool down.**

Your vehicle has a Computer-Controlled Cranking System. This feature assists in starting the engine and protects components. Once cranking has been initiated, the engine continues cranking for a few seconds or until the vehicle starts. If the engine does not start, cranking automatically stops after 15 seconds to prevent cranking motor damage. To prevent gear damage, this system also prevents cranking if the engine is already running.

Notice: **Your engine is designed to work with the electronics in your vehicle. If you add electrical parts or accessories, you could change the way the engine operates. Before adding electrical equipment, check with your dealer. If you do not, your engine might not perform properly. Any resulting damage would not be covered by your vehicle's warranty.**

Stopping Your Engine

If your vehicle has an automatic transmission, move the shift lever to PARK (P) and press the Acc. (Off/Accessory) button located on the instrument panel. If the shift lever is not in PARK (P), the engine shuts off and the vehicle goes into the Accessory Mode. The DIC displays "SHIFT TO PARK". Once the shifter is moved to PARK (P), the vehicle turns off. If your vehicle has a manual transmission, it is recommended that you move the shift lever to REVERSE (R) and set the parking brake after you turn off the engine by pressing the Acc. (Off/Accessory) button.

If the keyless access transmitter is not detected inside the vehicle when it is turned to off, the DIC displays NO FOB – OFF OR RUN?.

See *DIC Warnings and Messages on page 212* for more information.

Engine Coolant Heater

Your vehicle may have an engine coolant heater.

In very cold weather, 0°F (–18°C) or colder, the engine coolant heater can help. You will get easier starting and better fuel economy during engine warm-up.

Usually, the coolant heater should be plugged in a minimum of four hours prior to starting your vehicle. At temperatures above 32°F (0°C), use of the coolant heater is not required. Your vehicle may also have an internal thermostat in the plug end of the cord. This will prevent operation of the engine coolant heater when the temperature is at or above 0°F (–18°C) as noted on the cord.

To Use The Engine Coolant Heater

1. Turn off the engine.
2. Open the hood and unwrap the electrical cord.

   The electrical cord is located on the driver's side of the engine compartment, in front of the coolant surge tank.
3. Plug it into a normal, grounded 110-volt AC outlet.

⚠ CAUTION:

Plugging the cord into an ungrounded outlet could cause an electrical shock. Also, the wrong kind of extension cord could overheat and cause a fire. You could be seriously injured. Plug the cord into a properly grounded three-prong 110-volt AC outlet. If the cord will not reach, use a heavy-duty three-prong extension cord rated for at least 15 amps.

4. Before starting the engine, be sure to unplug and store the cord as it was before to keep it away from moving engine parts. If you do not it could be damaged.

How long should you keep the coolant heater plugged in? The answer depends on the outside temperature, the kind of oil you have, and some other things. Instead of trying to list everything here, we ask that you contact your dealer in the area where you will be parking your vehicle. The dealer can give you the best advice for that particular area.

Automatic Transmission Operation

P
R
N
D
S

There are several different positions for your shift lever.

PARK (P): This position locks your rear wheels. It is the best position to use when you start your engine because your vehicle cannot move easily.

⚠ CAUTION:

It is dangerous to get out of your vehicle if the shift lever is not fully in PARK (P) with the parking brake firmly set. Your vehicle can roll.

Do not leave your vehicle when the engine is running unless you have to. If you have left the engine running, the vehicle can move suddenly. You or others could be injured. To be sure your vehicle will not move, even when you are on fairly level ground, always set your parking brake and move the shift lever to PARK (P). See *Shifting Into Park (P) (Automatic Transmission) on page 103*.

Be sure the shift lever is fully in PARK (P) before starting the engine. Your vehicle has an automatic transmission shift lock control system.

You have to fully apply your regular brakes first and then press the shift lever button before you can shift from PARK (P) when the vehicle is running. If you cannot shift out of PARK (P), ease pressure on the shift lever and push the shift lever all the way into PARK (P) as you maintain brake application. Then press the shift lever button and move the shift lever into another gear. See *Shifting Out of Park (P) (Automatic Transmission) on page 105*.

REVERSE (R): Use this gear to back up.

Notice: **Shifting to REVERSE (R) while your vehicle is moving forward could damage the transmission. The repairs would not be covered by your warranty. Shift to REVERSE (R) only after your vehicle is stopped.**

To rock your vehicle back and forth to get out of snow, ice, or sand without damaging your transmission, see *If Your Vehicle is Stuck in Sand, Mud, Ice, or Snow on page 306*.

NEUTRAL (N): In this position, your engine does not connect with the wheels. To restart when you are already moving, use NEUTRAL (N) only. If your vehicle needs towing, see *Towing Your Vehicle on page 313*.

⚠ CAUTION:

Shifting into a drive gear while your engine is running at high speed is dangerous. Unless your foot is firmly on the brake pedal, your vehicle could move very rapidly. You could lose control and hit people or objects. Do not shift into a drive gear while your engine is running at high speed.

Notice: **Shifting out of PARK (P) or NEUTRAL (N) with the engine running at high speed may damage the transmission. The repairs would not be covered by your warranty. Be sure the engine is not running at high speed when shifting your vehicle.**

DRIVE (D): This position is for normal driving. It provide the best fuel economy for your vehicle. If you need more power for passing, and you are:

- Going less than about 35 mph (56 km/h), push the accelerator pedal about halfway down.
- Going about 35 mph (56 km/h) or more, push the accelerator all the way down.

Downshifting the transmission in slippery road conditions could result in skidding, see “Skidding” under *Loss of Control on page 289*.

SPORT MODE (S): When in SPORT MODE (S), the transmission will work as an automatic until you use the Manual Paddle Shift Controls, which activates the driver manual gear selection. See Manual Paddle Shift later in this section. While in automatic SPORT MODE (S), the transmission computer determines when the vehicle is being driven in a competitive manner and will select and hold the transmission in lower gears and have more noticeable upshifts for sportier vehicle performance.

Manual Paddle Shift

While in the SPORT MODE (S) position, the paddles located on the steering wheel, can be used to manually up-shift or down-shift the transmission.

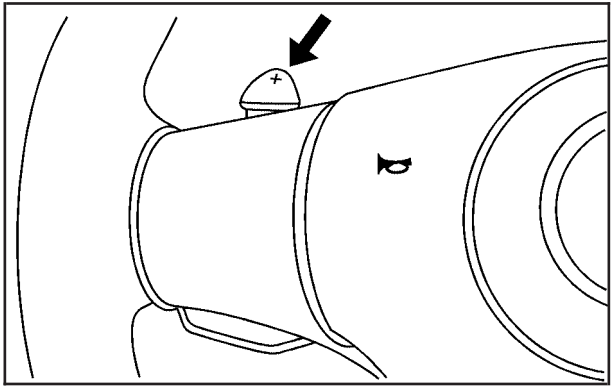

While in the SPORT MODE (S) mode, push the paddle above the steering wheel spokes to up-shift to the next gear, or pull on the paddle behind the steering wheel spokes to down-shift to the next gear.

To use the system, shift from PARK (P) position to SPORT MODE (S) while stopped and with the engine running, or from DRIVE (D) with the vehicle moving. When accelerating your vehicle from a stop in snowy and icy conditions, you may want to shift to second (2) or third (3) gear. A higher gear allows you to gain more traction on slippery surfaces. If the traction control is active, upshifts are delayed to increase your control of the vehicle. See *Traction Control System (TCS) on page 279*.

While the Manual Paddle Shift gear selection system is active, the transmission will automatically downshift through the gears as the vehicle slows. The transmission will select second gear as the vehicle stops. From a stop, the vehicle will start from and hold second (2) gear unless the driver manually paddle shifts into a different gear or selects DRIVE (D). The driver can select first (1) gear for maximum acceleration from a stop.

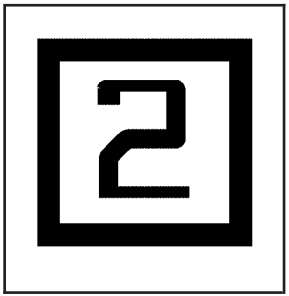

When using the Manual Paddle Shift Feature while in the SPORT MODE (S), the current gear will be displayed in the Driver Information (DIC), or the Head-Up Display (HUD), if the vehicle has either of these features.

If your vehicle has a Navigation system, see “Head-Up Display (HUD)” in the Index of the navigation manual.

The Manual Paddle Shift system will not allow either an up-shift or a down-shift if the vehicle speed is too fast or too slow, nor will it allow a start from Fourth (4) or higher gear

If up-shifting does not occur when needed, the vehicle speed will be limited to protect the engine.

The transmission will also automatically down-shift as the vehicle slows down and comes to a stop.

When the transmission gear does not respond to a shift change, the DIC will show an X over the gear display.

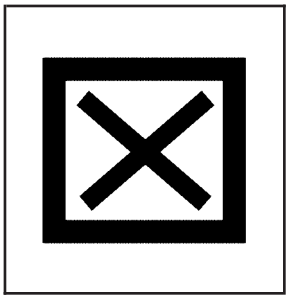

When a requested shift is denied due to the speed restrictions shown, the DIC will momentarily show an X over the gear display and a chime will sound.

If the vehicle has a HUD, and the transmission gear does not respond to a shift change, then a chime will sound and the HUD will momentarily show an X over the gear display.

Manual Paddle Shift operation is available for use with Cruise Control, see *Cruise Control on page 162* for more information.

The vehicle speeds required for Manual Paddle Shift up-shifts depend on several vehicle inputs, which will vary the allowed up-shift speed by a few mph (km/h).

- Up-shifts to Fourth (4) gear require approximately 22 mph (35 km/h).
- Up-shifts to Fifth (5) gear require approximately 28 mph (45 km/h).
- Up-shifts to Sixth (6) gear require approximately 41 mph (65 km/h).

To prevent damage to the powertrain, Manual Paddle downshifts to a lower gear cannot be done above certain speeds. The maximum speed allowed for downshifting of gears one (1) through fourth (4) are:

- Into Fourth (4) gear over 168 mph (270 km/h)
- Into Third (3) gear over 124 mph (200 km/h)
- Into Second (2) gear over 81 mph (130 km/h)
- Into First (1) gear over 45 mph (72 km/h).

If the driver does not request an upshift as the engine speed approaches fuel shut off RPM, the engine speed will be limited to protect the engine. See *Tachometer on page 188* for more information.

Manual Transmission Operation

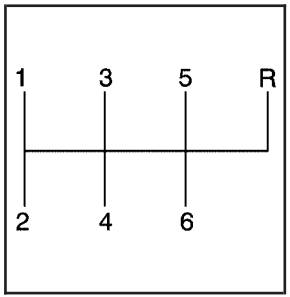

This is the shift pattern for the six-speed manual transmission.

Here is how to operate your transmission:

FIRST (1): Press the clutch pedal and shift into FIRST (1). Then slowly let up on the clutch pedal as you press the accelerator pedal.

You can shift into FIRST (1) when you are going less than 40 mph (64 km/h). If you come to a complete stop and it is hard to shift into FIRST (1), put the shift lever in NEUTRAL and let up on the clutch. Press the clutch pedal back down. Then shift into FIRST (1).

SECOND (2): Press the clutch pedal as you let up on the accelerator pedal and shift into SECOND (2). Then, slowly let up on the clutch pedal as you press the accelerator pedal.

THIRD (3), FOURTH (4), FIFTH (5) and SIXTH (6): Shift into THIRD (3), FOURTH (4), FIFTH (5) and SIXTH (6) the same way you do for SECOND (2). Slowly let up on the clutch pedal as you press the accelerator pedal.

To stop, let up on the accelerator pedal and press the brake pedal. Just before the vehicle stops, press the clutch pedal and the brake pedal, and shift to NEUTRAL.

NEUTRAL: Use this position when you start or idle your engine. Your shift lever is in NEUTRAL when it is centered in the shift pattern, not in any gear.

REVERSE (R): To back up, press down the clutch pedal and shift into REVERSE (R). Just apply pressure to get the lever past FIFTH (5) and SIXTH (6) into REVERSE (R). Let up on the clutch pedal slowly while pressing the accelerator pedal.

Your six-speed manual transmission has a feature that allows you to safely shift into REVERSE (R) while the vehicle is rolling at less than 3 mph (5 km/h). You will be locked out if you try to shift into REVERSE (R) while your vehicle is moving faster than 3 mph (5 km/h).

Shift Speeds (Manual Transmission)

⚠ CAUTION:

If you skip a gear when you downshift, you could lose control of your vehicle. You could injure yourself or others. Do not shift down more than one gear at a time when you downshift.

This chart shows when to shift to the next higher gear for the best fuel economy.

Manual Transmission Recommended Shift Speeds in mph (km/h)					
Engine	Acceleration Shift Speed				
	1 to 2	2 to 3	3 to 4	4 to 5	5 to 6
All Engines	15 (24)	25 (40)	40 (64)	45 (72)	50 (80)

If your engine speed drops below 900 rpm, or if the engine is not running smoothly, you should downshift to the next lower gear. You may have to downshift two or more gears to keep the engine running smoothly or for good engine performance.

Notice: **When shifting gears, do not move the shift lever around unnecessarily. This may damage the transmission. Shift directly into the next gear.**

One to Four Shift Light (Manual Transmission)

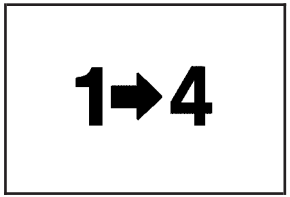

When this light comes on, you can only shift from FIRST (1) to FOURTH (4) instead of FIRST (1) to SECOND (2).

See *One-to-Four Shift Light (Manual Transmission) on page 193* for more information.

Downshifting (Manual Transmission)

Do not downshift into the gear shown below at a speed greater than shown in the table:

FIRST (1)	50 mph (80 km/h)
SECOND (2)	74 mph (119 km/h)
THIRD (3)	101 mph (163 km/h)
FOURTH (4)	130 mph (209 km/h)

Notice: **If you skip more than one gear when you downshift, or if you race the engine when you release the clutch pedal while downshifting, you could damage the engine, clutch, driveshaft or the transmission. Do not skip gears or race the engine when downshifting.**

The six-speed transmission has a spring that centers the shift lever near THIRD (3) and FOURTH (4). This spring helps you know which gear you are in when you are shifting. Be careful when shifting from FIRST (1) to SECOND (2) or downshifting from SIXTH (6) to FIFTH (5). The spring will try to pull the shift lever toward FOURTH (4) and THIRD (3). Make sure you move the lever into SECOND (2) or FIFTH (5). If you let the shift lever move in the direction of the pulling, you may end up shifting from FIRST (1) to FOURTH (4) or from SIXTH (6) to THIRD (3).

Parking Brake

The parking brake lever is located to the right of the center console.

To set the parking brake, hold the brake pedal down. Pull the parking brake lever up. If the ignition is on, the brake system warning light will come on.

To release the parking brake, hold the brake pedal down. Then push the release button in as you move the parking brake lever all the way down.

Notice: **Driving with the parking brake on can overheat the brake system and cause premature wear or damage to brake system parts. Verify that the parking brake is fully released and the brake warning light is off before driving.**

Shifting Into Park (P) (Automatic Transmission)

⚠ CAUTION:

It can be dangerous to get out of your vehicle if the shift lever is not fully in PARK (P) with the parking brake firmly set. Your vehicle can roll. If you have left the engine running, the vehicle can move suddenly. You or others could be injured. To be sure your vehicle will not move, even when you are on fairly level ground, use the steps that follow.

1. Hold the brake pedal down with your right foot and set the parking brake.
2. Move the shift lever into PARK (P) by holding in the button on the lever and pushing the lever all the way toward the front of the vehicle.
3. Press the Acc. button (ignition switch) to turn the engine off.

Leaving Your Vehicle With the Engine Running (Automatic Transmission)

⚠ CAUTION:

It can be dangerous to leave your vehicle with the engine running. Your vehicle could move suddenly if the shift lever is not fully in PARK (P) with the parking brake firmly set. And, if you leave the vehicle with the engine running, it could overheat and even catch fire. You or others could be injured. Do not leave your vehicle with the engine running.

If you have to leave your vehicle with the engine running, be sure your vehicle is in PARK (P) and your parking brake is firmly set before you leave it. After you have moved the shift lever into PARK (P), hold down the regular brake pedal. See if you can move the shift lever away from PARK (P) without first pulling it toward you. If you can, it means that the shift lever was not fully locked into PARK (P).

Torque Lock (Automatic Transmission)

If you are parking on a hill and you do not shift your transmission into PARK (P) properly, the weight of the vehicle may put too much force on the parking pawl in the transmission. You may find it difficult to pull the shift lever out of PARK (P). This is called “torque lock.” To prevent torque lock, set the parking brake and then shift into PARK (P) properly before you leave the driver’s seat. To find out how, see “Shifting Into PARK (P)” listed previously in this section.

When you are ready to drive, move the shift lever out of PARK (P) before you release the parking brake.

If torque lock does occur, you may need to have another vehicle push yours a little uphill to take some of the pressure from the transmission parking pawl, so you can pull the shift lever out of PARK (P).

Shifting Out of Park (P) (Automatic Transmission)

Your vehicle has an automatic transmission shift lock control system which locks the shift lever in PARK (P) when the ignition is off. In addition, you have to fully apply your regular brake before you can shift from PARK (P) when the ignition is on. See *Automatic Transmission Operation on page 95*.

If you cannot shift out of PARK (P), ease pressure on the shift lever and push the shift lever all the way into PARK (P) and release the shift lever button as you maintain brake application. Then press the shift lever button and move the shift lever into the gear you wish.

If you ever hold the brake pedal down but still cannot shift out of PARK (P), try this:

1. Press the regular brake.
2. Press the Acc. button twice to pluce the ignition in accessory mode. See *Ignition Positions on page 90* for more information.
3. Apply and hold the brake until the end of Step 4.
4. Shift to NEUTRAL (N).
5. Start the engine and then shift to the drive gear you want.
6. Have your vehicle inspected by your dealer as soon as possible.

Parking Your Vehicle (Manual Transmission)

Before you get out of your vehicle, move the shift lever into REVERSE (R) and firmly apply the parking brake. Once the shift lever has been placed into REVERSE (R) with the clutch pedal pressed in, you can turn the ignition off and release the clutch.

Parking Over Things That Burn

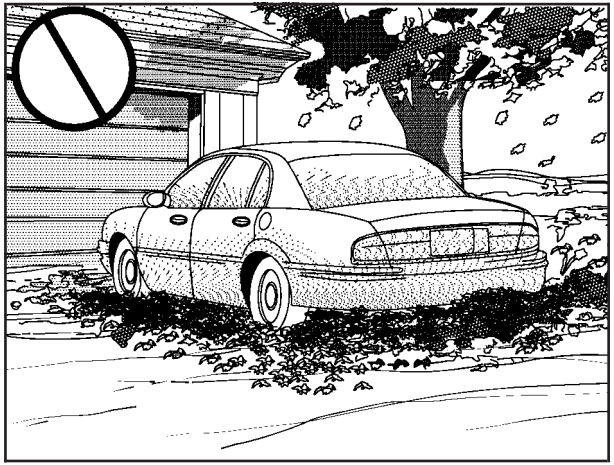

⚠ CAUTION:

Things that can burn could touch hot exhaust parts under your vehicle and ignite. Do not park over papers, leaves, dry grass, or other things that can burn.

Engine Exhaust

⚠ CAUTION:

Engine exhaust can kill. It contains the gas carbon monoxide (CO), which you cannot see or smell. It can cause unconsciousness and death.

You might have exhaust coming in if:

- **Your exhaust system sounds strange or different.**
- **Your vehicle gets rusty underneath.**
- **Your vehicle was damaged in a collision.**
- **Your vehicle was damaged when driving over high points on the road or over road debris.**
- **Repairs were not done correctly.**
- **Your vehicle or exhaust system has been modified improperly.**

If you ever suspect exhaust is coming into your vehicle:

- **Drive it only with all the windows down to blow out any CO; and**
- **Have your vehicle fixed immediately.**

Running the Engine While Parked

It is better not to park with the engine running. But if you ever have to, here are some things to know.

⚠ CAUTION:

Idling the engine with the climate control system off could allow dangerous exhaust into your vehicle. See the earlier caution under *Engine Exhaust on page 106*.

Also, idling in a closed-in place can let deadly carbon monoxide (CO) into your vehicle even if the climate control fan is at the highest setting. One place this can happen is a garage. Exhaust — with CO — can come in easily. NEVER park in a garage with the engine running.

Another closed-in place can be a blizzard. See *Winter Driving on page 302*.

⚠ CAUTION:

It can be dangerous to get out of your vehicle if the shift lever is not fully in PARK (P) with the parking brake firmly set. Your vehicle can roll. Do not leave your vehicle when the engine is running unless you have to. If you have left the engine running, the vehicle can move suddenly. You or others could be injured. To be sure your vehicle will not move, even when you are on fairly level ground, always set your parking brake and move the shift lever to PARK (P).

Follow the proper steps to be sure your vehicle will not move. See *Shifting Into Park (P) (Automatic Transmission) on page 103*.

Mirrors

Manual Rearview Mirror

When you are sitting in a comfortable driving position, adjust the mirror so you can see clearly behind your vehicle. Grip the mirror in the center to move it up or down and side to side. The day/night control, located at the bottom of the mirror, lessens glare from the headlamps behind your vehicle when in the night position. Turn the control to the right for the night position and to the left for the day position.

Two buttons under the rearview mirror control map lamps. Push each button to turn each map lamp on or off.

Automatic Dimming Rearview Mirror with OnStar® and Compass

The vehicle may have an automatic dimming rearview mirror with OnStar®, a compass and map lamps. Three OnStar® buttons are at the bottom of the mirror. See *OnStar® System on page 114* for more information on the services OnStar® provides.

Mirror Operation

The mirror automatically changes to reduce glare from headlamps behind you. A time delay feature prevents rapid changing from the day to night positions while driving under lights and through traffic.

⏻ **(On/Off):** The automatic dimming feature is activated when the vehicle is started. The automatic dimming feature is turned on or off by pressing this button located on the lower part of the mirror. Press and hold the button for up to three seconds to turn this feature on or off.

(Indicator Light): This light will turn on when the automatic dimming feature is active.

Map Lamps

The mirror has map lamps located at the bottom of the mirror. To manually turn the lamps on or off, press the button next to each lamp.

Compass Operation

The mirror has an eight-point compass display in the bottom of the mirror face.

When the ignition and the compass feature are on, the compass will show two character boxes for approximately two seconds. After two seconds, the mirror will display the current compass heading. For example, NE is displayed for north-east.

Compass Calibration

If after two seconds the display does not show a compass heading, there may be a strong magnetic field interfering with the compass. Such interference may be caused by a magnetic antenna mount, note pad holder or similar object. If the letter C appears in the compass window, the compass needs calibration.

The mirror compass can be calibrated by driving the vehicle in circles at 5 mph (8 km/h) or less until the display reads a direction.

The compass can be placed in calibration mode by pressing and holding the left map light button until a C appears on the compass display.

Compass Variance

Compass variance is the difference between earth's magnetic north and true geographic north. If the mirror is not adjusted for compass variance, your compass could give false readings.

The mirror is set in zone eight upon leaving the factory. It will be necessary to adjust the compass to compensate for compass variance if you live outside zone eight. Under certain circumstances, such as a long distance, cross-country trip, it will be necessary to adjust the compass variance.

To adjust for compass variance, do the following:

1. Find your current location and variance zone number on the zone map that follows.

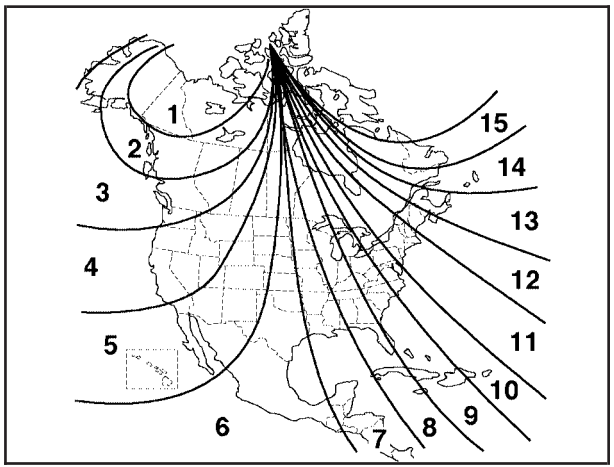

2. Press and hold the on/off button until a Z and a zone number appears on the display. The compass is now in zone mode.

3. Once the zone number appears on the display, press the on/off button quickly until you reach the correct zone number. Stop pressing the button and the mirror will return to normal operation. If C appears in the compass window, the compass may need calibration. See “Compass Calibration” listed previously.

Cleaning the Mirror

When cleaning the mirror, use a paper towel or similar material dampened with glass cleaner. Do not spray glass cleaner directly on the mirror as that may cause the liquid cleaner to enter the mirror housing.

Automatic Dimming Rearview Mirror with Compass

If the vehicle has this feature, an automatic dimming mirror automatically dims to the proper level to minimize glare at night from lights behind your vehicle.

The mirror also includes a compass display in the upper right corner of the mirror face.

⏻ **(On/Off):** This is the on/off button.

Automatic Dimming Mirror Operation

The automatic dimming mirror function is turned on each time the ignition is started. A light near the on/off button will come on to indicate the automatic dimming is on.

Press the on/off button for about six seconds to manually turn the automatic dimming function on or off.

Compass Display

Press the on/off button, located to the far left, briefly to turn the compass display on or off.

If the display reads CAL, the compass needs to be calibrated. For more information, see “Compass Calibration” later in this section.

To adjust between Fahrenheit and Celsius:

1. Press and hold the on/off button for approximately four seconds until either a flashing °F, or °C appears.
2. Press the button again to change the display to the desired unit of measurement. After approximately four seconds of inactivity, the new unit will be locked in and the compass/temperature display will return.

If an abnormal temperature reading is displayed for an extended period of time, please consult your dealer. Under certain circumstances, a delay in updating the temperature is normal.

Compass Variance

Compass variance is the difference between earth’s magnetic north and true geographic north. If not adjusted to account for compass variance, the mirror’s compass could give false readings. The mirror is set in zone eight upon leaving the factory. It will be necessary to adjust the compass to compensate for compass variance if you live outside of zone eight. Under certain circumstances, as during a long distance cross-country trip, it will also be necessary to adjust for compass variance.

To adjust for compass variance do the following:

1. Find your current location and variance zone number on the following zone map.

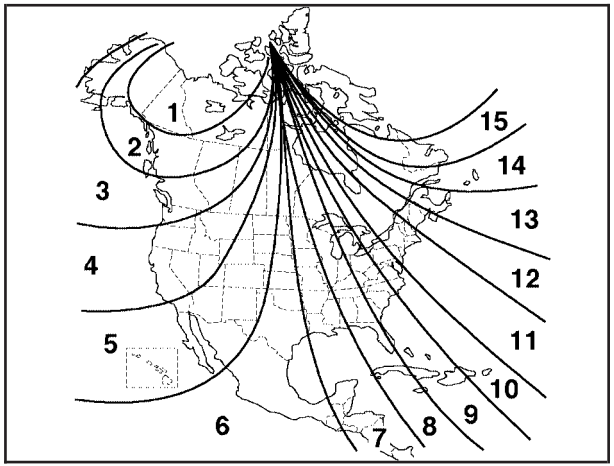

2. Press and hold the on/off button until a Z and a zone number appears in the display. The compass is now in zone mode.
3. Keep pressing the on/off button until the desired zone number appears in the display. Release the button. After approximately four seconds of inactivity, the new zone number will be locked in and the compass/temperature display will return.
4. Calibrate the compass as described below.

Compass Calibration

The compass may need calibration if one of the following occurs:

- After approximately five seconds, the display does not show a compass heading (N for North, for example), there may be a strong magnetic field interfering with the compass. Such interference may be caused by a magnetic antenna mount, magnetic note pad holder, or a similar magnetic item.
- The compass does not display the correct heading and the compass zone variance is set correctly.

In order to calibrate, CAL must be displayed in the mirror compass windows. If CAL is not displayed, push the on/off button for approximately 12 seconds or until CAL is displayed.

The compass can be calibrated by driving the vehicle in circles at 5 mph (8 km/h) or less until the display reads a direction.

Cleaning the Mirror

When cleaning the mirror, use a paper towel or similar material dampened with glass cleaner. Do not spray glass cleaner directly on the mirror as that may cause the liquid cleaner to enter the mirror housing.

Outside Power Heated Mirrors

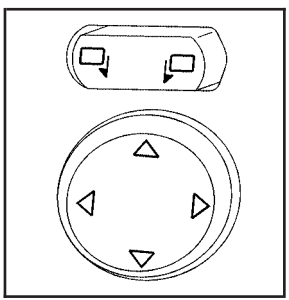

The controls for the outside power mirrors are located on the driver's door.

Move the top selector control to the left or right to select either the driver's or passenger's mirror. To adjust the direction of the mirror, use the arrows on the round four-way control. Adjust each outside mirror so that a little of the vehicle and the area behind it can be seen while sitting in a comfortable, driving position. Keep the control in the center position when not adjusting either outside mirror.

If the vehicle has the memory feature, a preferred mirror position can be stored. See *Memory Seat, Mirrors and Steering Wheel on page 10*.

Both mirrors are heated to rid them of snow, ice, or condensation. They will heat when the rear window defogger is turned on. See "Rear Window Defogger" under *Dual Automatic Climate Control System on page 177*.

Both mirrors can manually be folded inward by pulling them toward the vehicle. This feature may be useful when going through a car wash or a confined space. Push the mirrors away from the vehicle, to the normal position, before driving.

Outside Automatic Dimming Mirror

If your vehicle has this feature, the driver's side outside mirror will adjust for the glare of headlamps behind you. This feature is controlled by the on and off setting on the inside mirror.

Outside Convex Mirror

⚠ CAUTION:

A convex mirror can make things (like other vehicles) look farther away than they really are. If you cut too sharply into the right lane, you could hit a vehicle on your right. Check your inside mirror or glance over your shoulder before changing lanes.

The passenger side mirror is convex. A convex mirror's surface is curved so more can be seen from the driver's seat. It also makes things look farther away than they really are.

OnStar® System

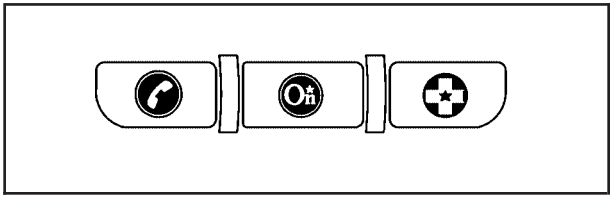

OnStar® uses several innovative technologies and live advisors to provide you with a wide range of safety, security, information, and convenience services. If your airbags deploy, the system is designed to make an automatic call to OnStar® Emergency advisors who can request emergency services be sent to your location. If you lock your keys in the vehicle, call OnStar® at 1-888-4-ONSTAR and they can send a signal to unlock your doors. If you need roadside assistance, press the OnStar® button and they can contact Roadside Service for you.

OnStar® service is provided to you subject to the OnStar® Terms and Conditions. You may cancel your OnStar® service at any time by contacting OnStar® as provided below. A complete OnStar® Owner's Guide and the OnStar® Terms and Conditions are included in the vehicle's OnStar® Subscriber glove box literature. For more information, visit onstar.com or onstar.ca, contact OnStar® at 1-888-4-ONSTAR (1-888-466-7827) or TTY 1-877-248-2080, or press the OnStar® button to speak with an OnStar® advisor 24 hours a day, 7 days a week.

Not all OnStar® features are available on all vehicles. To check if your vehicle is equipped to provide the services described below, or for a full description of OnStar® services and system limitations, see the OnStar® Owner's Guide in your glove box or visit onstar.com.

OnStar® Services

For new vehicles equipped with OnStar®, the Safe & Sound Plan, or the Directions & Connections® Plan is included for one year from the date of purchase. You can extend this plan beyond the first year, or upgrade to the Directions & Connections® Plan. For more information, press the OnStar® button to speak with an advisor. Some OnStar® services (such as Remote Door Unlock or Stolen Vehicle Location Assistance) may not be available until you register with OnStar®.

Available Services with Safe & Sound® Plan

- Automatic Notification of Airbag Deployment
- Advanced Automatic Crash Notification (AACN) (If equipped)
- Link to Emergency Services
- Roadside Assistance
- Stolen Vehicle Location Assistance
- AccidentAssist
- Remote Door Unlock/Vehicle Alert
- OnStar® Vehicle Diagnostics
- GM® Goodwrench® On Demand Diagnostics
- OnStar® Hands-Free Calling with 30 complimentary minutes
- OnStar® Virtual Advisor (U.S. Only)

Available Services included with Directions & Connections® Plan

- All Safe and Sound Plan Services
- Driving Directions - Advisor delivered or OnStar® Turn-by-Turn Navigation (If equipped)
- RideAssist
- Information and Convenience Services

OnStar® Hands-Free Calling

OnStar® Hands-Free Calling allows eligible OnStar® subscribers to make and receive calls using voice commands. Hands-Free Calling is fully integrated into the vehicle, and can be used with OnStar® Pre-Paid Minute Packages. Hands-Free Calling may also be linked to a Verizon Wireless service plan in the U.S. or a Bell Mobility service plan in Canada, depending on eligibility. To find out more, refer to the OnStar® Owner's Guide in the vehicle's glove box, visit www.onstar.com or www.onstar.ca, or speak with an OnStar® advisor by pressing the OnStar® button or calling 1-888-4-ONSTAR (1-888-466-7827).

OnStar® Virtual Advisor

OnStar® Virtual Advisor is a feature of OnStar® Hands-Free Calling that uses your minutes to access location-based weather, local traffic reports, and stock quotes. By pressing the phone button and giving a few simple voice commands, you can browse through the various topics. See the OnStar® Owner's Guide for more information.
(Only available in the continental U.S.)

How OnStar® Service Works

In order to provide you with OnStar® services, your vehicle's OnStar® system has the capability of recording and transmitting vehicle information. This information is automatically sent to an OnStar® Call Center at the time of an OnStar® button press, Emergency button press or if your airbags or AACN system deploys. The vehicle information usually includes your GPS location and, in the event of a crash, additional information regarding the accident that your vehicle has been involved in (e.g. the direction from which your vehicle was hit). When you use the Virtual Advisor feature of OnStar® Hands-Free Calling, your vehicle also sends OnStar® your GPS location so that we can provide you with location-based services.

OnStar® service cannot work unless your vehicle is in a place where OnStar® has an agreement with a wireless service provider for service in that area. OnStar® service also cannot work unless you are in a place where the wireless service provider OnStar® has hired for that area has coverage, network capacity and reception when the service is needed, and technology that is compatible with the OnStar® service. Not all services are available everywhere, particularly in remote or enclosed areas, or at all times.

OnStar® service that involves location information about your vehicle cannot work unless GPS satellite signals are unobstructed and available in that place as well.

Your vehicle must have a working electrical system (including adequate battery power) for the OnStar® equipment to operate. There are other problems OnStar® cannot control that may prevent OnStar® from providing OnStar® service to you at any particular time or place. Some examples are damage to important parts of your vehicle in an accident, hills, tall buildings, tunnels, weather or wireless phone network congestion.

Your Responsibility

You may need to increase the volume of your radio to hear the OnStar® advisor. If the light next to the OnStar® buttons is red, this means that your system is not functioning properly and should be checked by a dealer. If the light appears clear (no light is appearing), your OnStar® subscription has expired. You can always press the OnStar® button to confirm that your OnStar® equipment is active.

Universal Home Remote System

Universal Home Remote System (With One Triangular LED)

The Universal Home Remote System provides a way to replace up to three hand-held radio-frequency (RF) transmitters used to activate devices such as garage door openers, security systems, and home lighting.

This device complies with Part 15 of the FCC Rules. Operation is subject to the following two conditions:

1. This device may not cause harmful interference.
2. This device must accept any interference received, including interference that may cause undesired operation.

The FCC Grant of Equipment Authorization Certificate number is CB2SAHL3.

This device complies with RSS-210 of Industry Canada. Operation is subject to the following two conditions:

1. This device may not cause interference.
2. This device must accept any interference received, including interference that may cause undesired operation of the device.

The Canadian Registration ID number is 2791021849A.

Changes or modifications to this system by other than an authorized service facility could void authorization to use this equipment.

Universal Home Remote System (With Three Round LED)

The Universal Home Remote System provides a way to replace up to three hand-held radio-frequency (RF) transmitters used to activate devices such as garage door openers, security systems, and home lighting.

This device complies with Part 15 of the FCC Rules. Operation is subject to the following two conditions:

1. This device may not cause harmful interference.
2. This device must accept any interference received, including interference that may cause undesired operation.

The FCC Grant of Equipment Authorization Certificate number is KOBGTV06A.

This device complies with RSS-210 of Industry Canada. Operation is subject to the following two conditions:

1. This device may not cause interference.
2. This device must accept any interference received, including interference that may cause undesired operation of the device.

The Canadian Registration ID number is 3521A-GTV06A.

Changes or modifications to this system by other than an authorized service facility could void authorization to use this equipment.

Universal Home Remote System Operation (With Three Round LED)

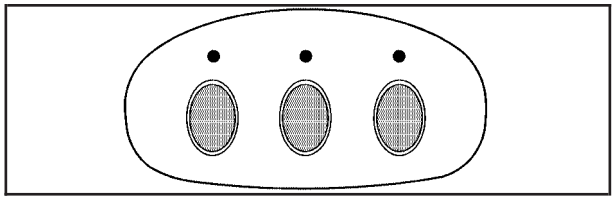

Your vehicle may have the Universal Home Remote System. If there are three round Light Emitting Diode (LED) above the Universal Home Remote System buttons, follow the instructions below. If there is one triangular LED above the Universal Home Remote System buttons, follow the instructions under Universal Home Remote System Operation (with one triangular LED).

This system provides a way to replace up to three remote control transmitters used to activate devices such as garage door openers, security systems, and home lighting.

Do not use the this system with any garage door opener that does not have the stop and reverse feature. This includes any garage door opener model manufactured before April 1, 1982.

Read the instructions completely before attempting to program the transmitter. Because of the steps involved, it may be helpful to have another person available to assist you in programming the transmitter.

Be sure to keep the original remote control transmitter for use in other vehicles, as well as, for future programming. You only need the original remote control transmitter for fixed code programming. It is also recommended that upon the sale or lease termination of the vehicle, the programmed buttons should be erased for security purposes. See “Erasing your Universal Home Remote Buttons” later in this section.

Be sure that people and objects are clear of the garage door or security device you are programming. When programming a garage door, it is advised to park outside of the garage.

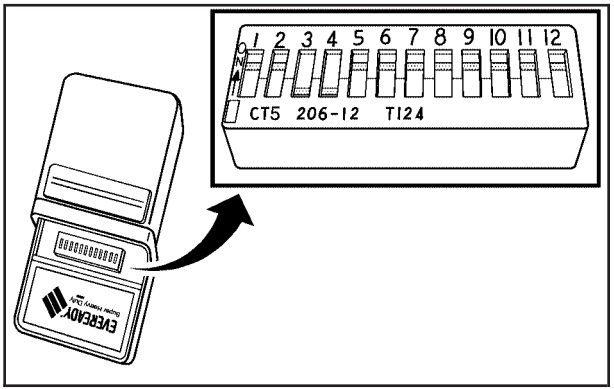

If you do not know if your garage door opener is a fixed code or rolling code device, open your garage door opener’s remote control battery cover. Your garage door opener is a fixed code device if there is a panel of switches. If not, your garage door opener is a rolling code device.

Programming Universal Home Remote — Fixed Code

Fixed Code garage door openers are used for garage doors produced prior to 1996. Fixed code uses the same coded signal every time, which is manually programmed by setting DIP switches for a unique personal code.

To program up to three channels,

1. Remove the battery cover of the hand-held transmitter.

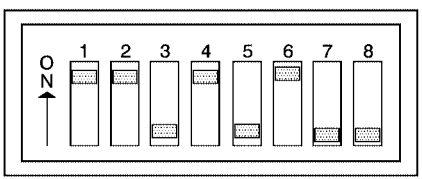

Switch Number	1	2	3	4	5	6	7	8
Switch Position	On	On	Off	On	Off	On	Off	Off

Example of Switch Settings

2. Write down the eight to 12 coding switch settings from left to right. When the switch is in the up position, write “on,” and when a switch is in the down position, write “off”. If a switch is set between the up and down position, write “middle”.
3. Enter these positions into the Universal Home Remote System as follows.

Press and release all three buttons at the same time to put the device into programming mode.

Switch Number	1	2	3	4	5	6	7	8
Switch Position	On	On	Off	On	Off	On	Off	Off
Your UHR Button	Left	Left	Right	Left	Right	Left	Right	Right

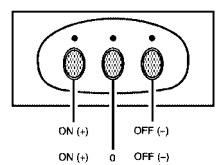

4. The indicator light will blink slowly. In order from left to right, and within two and one-half minutes, enter each switch setting into the Universal Home Remote System. Push one button for each switch as follows:
   - Left button = “on” switch position.
   - Right button = “off” switch position.
   - Middle button = “middle” switch position.
5. After entering the switch settings, press and release all three buttons at the same time. The indicator lights will turn on.
6. Press and hold the button you would like to use to control the garage door until the garage door moves. The indicator light above the selected button should slowly blink. You may need to hold the button from five to 55 seconds.
7. Immediately release the button when the garage door moves. The indicator light will blink rapidly until programming is complete.
8. Press and release the button again. The garage door should move, confirming that programming is successful and complete.

To program another device such as an additional garage door opener, a security device, or home lighting, repeat Steps 1–8, choosing a different function button in Step 7 than what you used for the garage door opener.

Programming Universal Home Remote — Rolling Code

Rolling code garage door openers are used for garage doors produced after 1996 and are code protected. Rolling code means the coded signal is changed every time your remote control garage door opener is used.

Programming a rolling code garage door opener involves time-sensitive actions, so read the entire procedure before you begin. If you do not follow these actions, the device will time out and you will have to repeat the procedure.

Follow these steps to program up to three channels:

1. Press the two outside buttons at the same time for one to two seconds, and immediately release them.

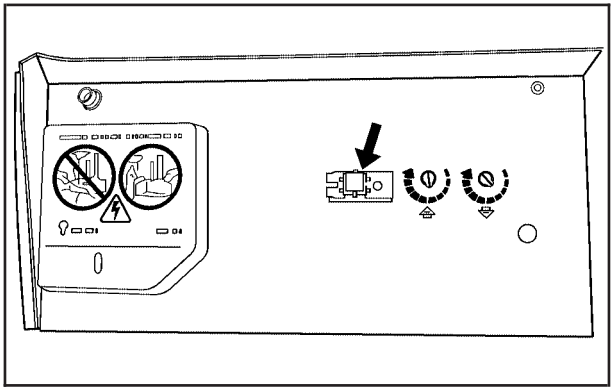

2. Go to the garage. Locate the garage door motor head and press and release the “learn” button.

   After pressing the “learn” button, you have 10 to 30 seconds to complete Step 4 depending on your garage control unit. If you cannot locate the “learn” button, refer to the owners guide for your garage door opener.

3. Press and hold the button you would like to use to control the garage door until the garage door moves. The indicator light, above the selected button, should slowly blink. You may need to hold the button from five to 20 seconds.
4. Immediately release the button when the garage door moves. The indicator light will blink rapidly until programming is complete.
5. Press and release the button again. The garage door should move, confirming that programming is successful and complete.

To program another device such as an additional garage door opener, a security device, or home lighting, repeat Steps 1–5, choosing a different function button in Step 3 than what you used for the garage door opener.

Using Universal Home Remote

Press and hold the appropriate button for at least half of a second. The indicator light will come on while the signal is being transmitted.

Reprogramming Universal Home Remote Buttons

You can reprogram any of the three buttons by repeating the instructions.

Erasing Universal Home Remote Buttons

You should erase the programmed buttons when you sell the vehicle or terminate your lease.

To erase either rolling code or fixed code on the Universal Home Remote device, do the following:

1. Press and hold the two outside buttons at the same time for approximately 20 seconds, until the indicator lights, located directly above the buttons, begin to blink rapidly.
2. Once the indicator lights begin to blink, release both buttons. The codes from all button will be erased.

For additional information on Universal Home Remote, see *Customer Assistance Offices on page 456*.

Universal Home Remote System Operation (With One Triangular LED)

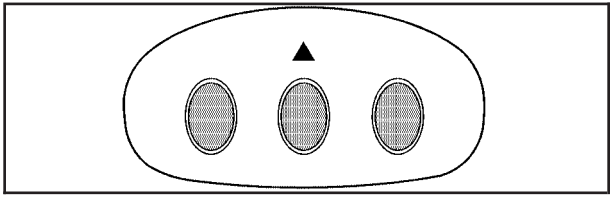

Your vehicle may have the Universal Home Remote System. If there is one triangular Light Emitting Diode (LED) above the Universal Home Remote buttons, follow the instructions below. If your vehicle has three round LED above the Universal Home Remote buttons, follow the instructions under Universal Home Remote System Operation (With three round LED).

Do not use the Universal Home Remote with any garage door opener that does not have the stop and reverse feature. This includes any garage door opener model manufactured before April 1, 1982.

If you have a newer garage door opener with rolling codes, please be sure to follow Steps 6 through 8 to complete the programming of your Universal Home Remote Transmitter.

Read the instructions completely before attempting to program the Universal Home Remote. Because of the steps involved, it may be helpful to have another person available to assist you in the programming steps.

Keep the original hand-held transmitter for use in other vehicles as well as for future Universal Home Remote programming. It is also recommended that upon the sale of the vehicle, the programmed Universal Home Remote buttons should be erased for security purposes. See "Erasing Universal Home Remote Buttons" later in this section or, for assistance, see *Customer Assistance Offices on page 456*.

Be sure that people and objects are clear of the garage door or gate operator you are programming. When programming a garage door, it is advised to park outside of the garage.

It is recommended that a new battery be installed in your hand-held transmitter for quicker and more accurate transmission of the radio-frequency signal.

Programming Universal Home Remote

Follow these steps to program up to three channels:

1. Press and hold down the two outside Universal Home Remote buttons, releasing only when the Universal Home Remote indicator light begins to flash, after 20 seconds. Do not hold down the buttons for longer than 30 seconds and do not repeat this step to program a second and/or third hand-held transmitter to the remaining two Universal Home Remote buttons.
2. Position the end of your hand-held transmitter about 1 to 3 inches (3 to 8 cm) away from the Universal Home Remote buttons while keeping the indicator light in view.
3. Simultaneously press and hold both the desired Universal Home Remote button and the hand-held transmitter button. Do not release the buttons until Step 4 has been completed.

   Some entry gates and garage door openers may require you to substitute Step 3 with the procedure noted in "Gate Operator and Canadian Programming" later in this section.

4. The indicator light will flash slowly at first and then rapidly after Universal Home Remote successfully receives the frequency signal from the hand-held transmitter. Release both buttons.
5. Press and hold the newly-trained Universal Home Remote button and observe the indicator light.

   If the indicator light stays on continuously, programming is complete and your device should activate when the Universal Home Remote button is pressed and released.

   To program the remaining two Universal Home Remote buttons, begin with Step 2 under "Programming Universal Home Remote." Do not repeat Step 1 as this will erase all of the programmed channels.

   If the indicator light blinks rapidly for two seconds and then turns to a constant light, continue with Steps 6 through 8 following to complete the programming of a rolling-code equipped device, most commonly, a garage door opener.
6. Locate in the garage, the garage door opener receiver (motor-head unit). Locate the "Learn" or "Smart" button. This can usually be found where the hanging antenna wire is attached to the motor-head unit.
7. Firmly press and release the "Learn" or "Smart" button. The name and color of the button may vary by manufacturer.

   You will have 30 seconds to start Step 8.
8. Return to the vehicle. Firmly press and hold the programmed Universal Home Remote button for two seconds, then release it. Immediately press and hold the same button a second time for two seconds, then release it. Immediately, press and hold the same button a third time for two seconds, then release.

   The Universal Home Remote should now activate your rolling-code equipped device.

To program the remaining two Universal Home Remote buttons, begin with Step 2 of "Programming Universal Home Remote." You do not want to repeat Step 1, as this will erase all previous programming from the Universal Home Remote buttons.

Gate Operator and Canadian Programming

Canadian radio-frequency laws require transmitter signals to time out or quit after several seconds of transmission. This may not be long enough for Universal Home Remote to pick up the signal during programming. Similarly, some U.S. gate operators are manufactured to time out in the same manner.

If you live in Canada, or you are having difficulty programming a gate operator or garage door opener by using the “Programming Universal Home Remote” procedures, regardless of where you live, replace Step 3 under “Programming Universal Home Remote” with the following:

Continue to press and hold the Universal Home Remote button while you press and release every two seconds (cycle) the hand-held transmitter button until the frequency signal has been successfully accepted by the Universal Home Remote. The Universal Home Remote indicator light will flash slowly at first and then rapidly. Proceed with Step 4 under “Programming Universal Home Remote” to complete.

Using Universal Home Remote

Press and hold the appropriate Universal Home Remote button for at least half of a second. The indicator light will come on while the signal is being transmitted.

Erasing Universal Home Remote Buttons

To erase programming from the three Universal Home Remote buttons do the following:

1. Press and hold down the two outside buttons until the indicator light begins to flash, after 20 seconds. Do not hold the two outside buttons for longer than 30 seconds.
2. Release both buttons.

The Universal Home Remote is now in the training (learning) mode and can be programmed at any time beginning with Step 2 under “Programming Universal Home Remote” shown earlier in this section.

Individual buttons cannot be erased, but they can be reprogrammed. See “Reprogramming a Single Universal Home Remote Button” following this section.

Reprogramming a Single Universal Home Remote Button

To program a device to Universal Home Remote using a Universal Home Remote button previously trained, follow these steps:

1. Press and hold the desired Universal Home Remote button. Do not release the button.
2. The indicator light will begin to flash after 20 seconds. While still holding the Universal Home Remote button, proceed with Step 2 under “Programming Universal Home Remote” shown earlier in this section.

For additional information on Universal Home Remote, see *Customer Assistance Offices on page 456*.

Storage Areas

Glove Box

To open the glove box, lift up on the lever. Use the key to lock and unlock. The glove box has a light inside.

Cupholder(s)

There are two cupholders located on the center console next to the shift lever. To access, place your thumb on the left side of the lid and slide the handle to the right.

Center Console Storage Area

To use this storage area, pull up the lid on the driver's side front edge of the console and swing it to the passenger side.

Your vehicle may have a lock on the center console storage area. Use the key to lock and unlock the console. Do not leave the key in the lock, or it could be damaged when the driver sits down.

Floor Mats

The floor mats are designed to remain in position under your feet and out of reach of the accelerator pedal. The driver side floor mat is held in place by two locator pins and the passenger side is held in place by one.

Make sure that the driver side floor mat is properly placed on the floor so that it does not block the movement of the accelerator pedal.

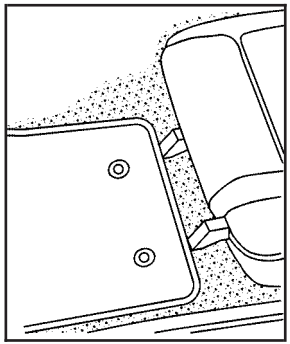

To remove a floor mat, pull up on the rear of the mat to disconnect it from the locator pins.

To reinstall the floor mats, line up the openings in the floor mat over the locator pins and push it down into place.

Rear Storage Area

There are two rear storage compartments in the floor of the rear hatch/trunk area.

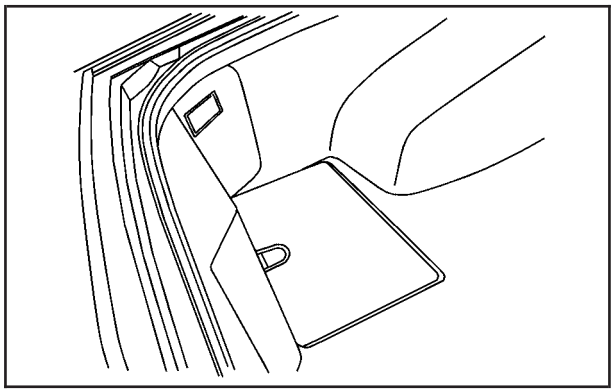

Convertible shown, Coupe similar

Your vehicle has two storage compartment lids.

To access a storage compartment, pull up to open the lid. The lids cannot be removed.

For Z06 models the right rear compartment stores the battery and cannot be used for storage.

Notice: **Do not store heavy or sharp objects in the rear storage compartments located in the hatch/trunk area. If you do, the objects could damage the underbody.**

Rear Trunk Partition

For vehicles with the power convertible top option only, there is a trunk partition to keep cargo from getting in the way of the convertible top. The trunk partition must be in place for the top to move. If the trunk partition is not properly in place the ATTACH TRUNK PARTITION Driver Information Center (DIC) message will display and you will not be able to remove the convertible top. See *DIC Warnings and Messages on page 212* for more information.

The trunk partition is a flat carpeted board with a horizontal flap that can be attached to the top of the trunk to divide the storage compartment or stored flat when not in use.

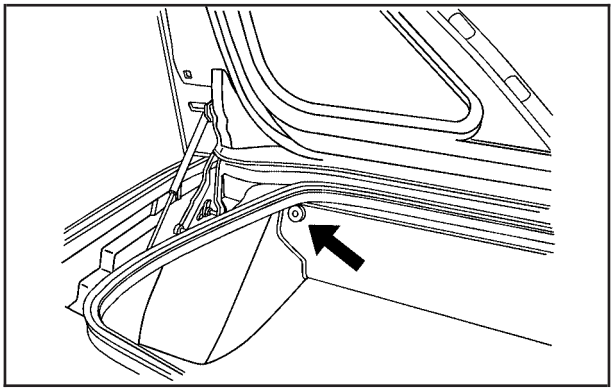

Pull the divider up and snap it onto the snaps on both sides of the trunk.

Convenience Net

If your vehicle has this feature it is on the back wall of the rear area of the vehicle.

Put small loads, like grocery bags, in the net. It can help keep them from falling over during sharp turns or quick starts and stops. The convenience net is not for larger, heavier loads.

You can unhook the net and place it in one of the rear storage compartments when not in use.

Cargo Cover

If your vehicle has this feature, the security shade can provide hidden storage in the rear area of the vehicle. The shade is also helpful in blocking the glare from the removable roof when it is stored in the rear compartment.

Using the Cargo Cover

1. Hook the elastic loops on the front corners (A) of the shade to the T-nuts located on the front corners of the rear hatch frame.

2. Hook the elastic loops on the rear corners (B) of the shade to the hooks recessed inside the rear hatch frame, near the rear corners.

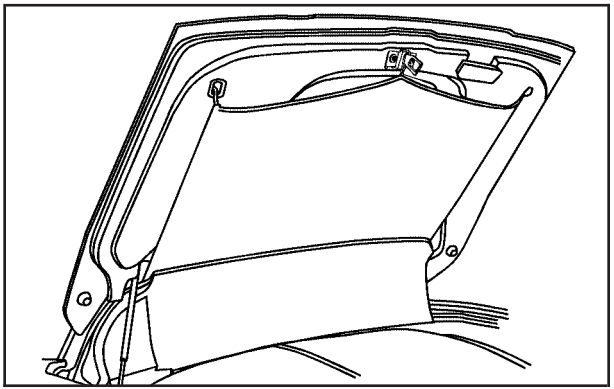

3. Grasp the loop at the rear center of the shade and wrap it around the striker assembly.

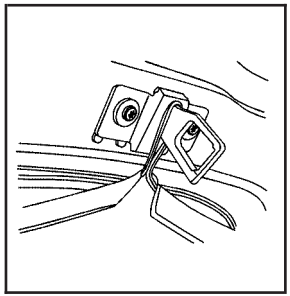

4. Push the loop to the top of the striker (base plate).

Roof Panel

The vehicle may have a removable roof panel. Follow the procedures listed when removing or installing it.

Removing the Roof Panel

⚠ CAUTION:

Do not try to remove a roof panel while the vehicle is moving. Trying to remove the roof panel while the vehicle is moving could cause an accident. The panel could fall into the vehicle and cause you to lose control, or it could fly off and strike another vehicle. You or others could be injured. Remove the roof panel only when the vehicle is parked.

Until you are sure you can remove the panel alone, have someone help you.

Notice: **If you drop or rest a roof panel on its edges, the roof panel, paint and/or weatherstripping may be damaged. Always place the roof panel in the stowage receivers after removing it from the vehicle.**

1. Park on a level surface and set the parking brake. Shift an automatic transmission into PARK (P). Shift a manual transmission into NEUTRAL.
2. Make sure the ignition is off.
3. Lower both sun visors.
4. Open the rear hatch and remove any items that may interfere with proper storage of the roof panel.
5. Lower the windows.

   There are two release latches on the front of the roof panel and one rear release latch on the back of the roof panel.

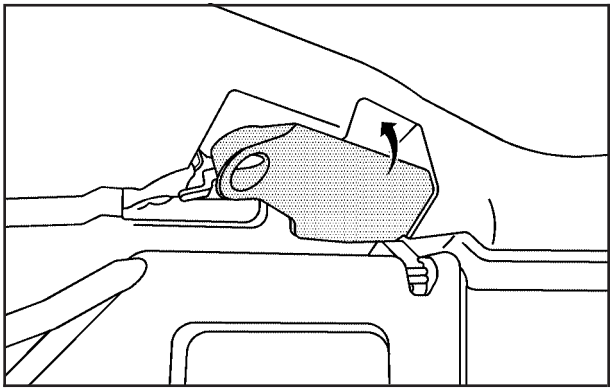

Driver's Side Front Roof Panel Release Latch

6. To unlock the release latches on the front of the roof panel, grasp each handle with your fingers and pull it outward.

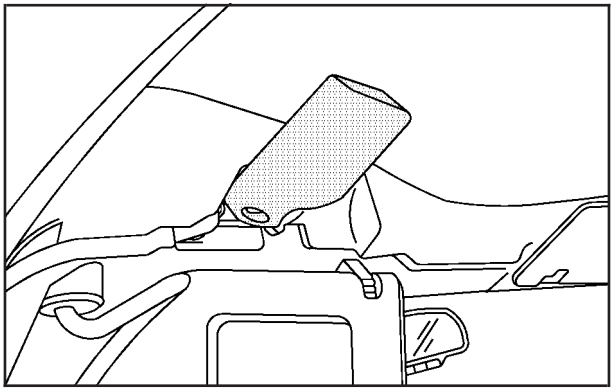

Driver's Side Rear Roof Panel Release Hatch

The driver's side handle moves toward the driver's door. The passenger's side handle moves toward the passenger's door.

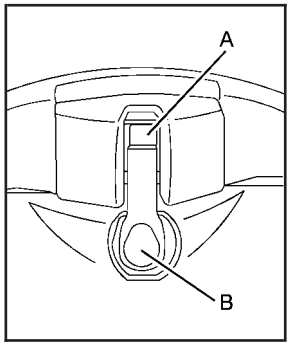

7. To unlock the rear of the roof panel's rear release latch, press the back of the release handle (B). Then press the button on the front of the release handle, (A) with your thumb.

   Pull down the latch lever with your fingers.

8. Stand on one side of the vehicle, and if necessary, have someone stand on the other side. Together, carefully lift the front edge of the roof panel up and forward.
9. When the roof panel is loosened from the vehicle, one person should grasp the roof panel as close to the center as possible and lift it away from the vehicle.

Storing the Roof Panel

⚠ CAUTION:

If a roof panel is not stored properly, it could be thrown about the vehicle in a crash or sudden maneuver. People in the vehicle could be injured. Whenever you store a roof panel in the vehicle, always be sure that it is stored securely in the proper location.

Notice: **If you drop or rest a roof panel on its edges, the roof panel, paint and/or weatherstripping may be damaged. Always place the roof panel in the stowage receivers after removing it from the vehicle.**

1. Turn the roof panel so that the front edge of the panel is facing the storage area.

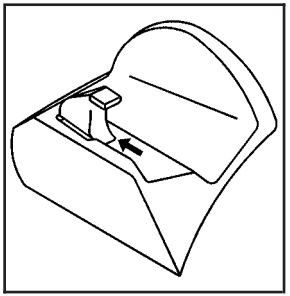

2. Insert the roof panel so that the outside front edges line up between the receiver covers. Push forward on the roof panel until it stops.

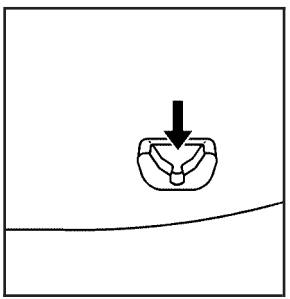

3. Gently place the roof panel down so that the back pins on the roof panel drop into the receivers in the back of the storage area.

Press down firmly to seat the pins in the receivers.

Installing the Roof Panel

⚠ CAUTION:

An improperly attached roof panel may fall into or fly off the vehicle. You or others could be injured. After installing the roof panel, always check that it is firmly attached by pushing up on the underside of the panel. Check now and then to be sure the roof panel is firmly in place.

Notice: **If you drop or rest a roof panel on its edges, the roof panel, paint and/or weatherstripping may be damaged. Always place the roof panel in the stowage receivers after removing it from the vehicle.**

In most cases, it makes it easier if two people re-install the roof panel.

1. Park on a level surface and set the parking brake. Shift an automatic transmission into PARK (P). Shift a manual transmission into NEUTRAL.
2. Check that the front release latches and the rear release latch on the vehicle's roof opening are in their opened positions before attempting to install the roof panel.
3. If the roof panel is stored in the rear storage area of the vehicle, grasp the rear edge of the roof panel with both hands and gently lift it up and remove it from the storage area.
4. Carefully place the roof panel over the top of the vehicle.
5. Position the rear edge of the roof panel to the weatherstrip on the back of the roof opening. Then align and fit the pins at the rear of the roof panel inside the openings in the rear overhead weatherstrip. Gently lower the front edge of the roof panel to the front of the roof opening.

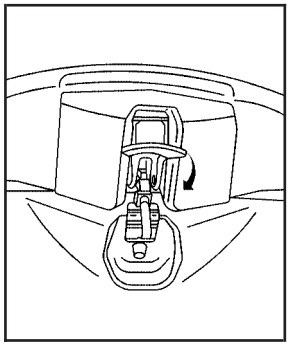

6. Turn the front release handles inward so that they latch to the closed position.

7. Push up on the handle of the rear roof release handle to latch its hook in the closed position.
8. Push and pull the roof panel up and down and side-to-side to ensure the roof panel is securely installed.

Convertible Top

Convertible Top (Manual)

For care and cleaning of the convertible top, see *Convertible Top on page 414* under “Service and Appearance Care”. High pressure car washes may cause water to enter the vehicle.

If the vehicle has this feature, the following procedures explain the proper operation of the manual convertible top.

The parts of the manual convertible top that are used when lowering and raising it are:

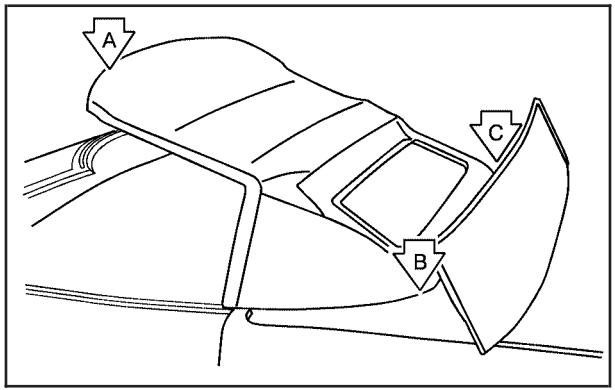

A. Front Edge of the Convertible Top
B. Rear Edge of the Convertible Top
C. Tonneau Cover

Notice: **Leaving the convertible top down and exposing the interior of your vehicle to outdoor conditions may cause damage. Always close the convertible top if leaving your vehicle outdoors.**

Notice: **Lowering the convertible top when there are objects in the storage area could damage it or break the glass rear window. Always verify that no objects are in the storage area before lowering the convertible top.**

Notice: **Lowering the top if it is damp, wet, or dirty can cause stains, mildew, and damage to the inside of your vehicle. Dry off the top before lowering it.**

Notice: **If you lower the top on your vehicle in cold weather (0°F/-18°C or lower), you may damage top components. Do not lower the top in cold weather.**

Notice: **If you raise or lower the convertible top while the vehicle is in motion, you could damage the top or the top mechanism. The repairs would not be covered by your warranty. Always put an automatic transmission in PARK (P) or a manual transmission in NEUTRAL before raising or lowering the convertible top.**

Lowering the Manual Convertible Top

1. Park on a level surface. Shift an automatic transmission into PARK (P) and set the parking brake. Shift a manual transmission into NEUTRAL and set the parking brake.
2. Make sure the ignition is off.
3. Make sure the trunk is closed.

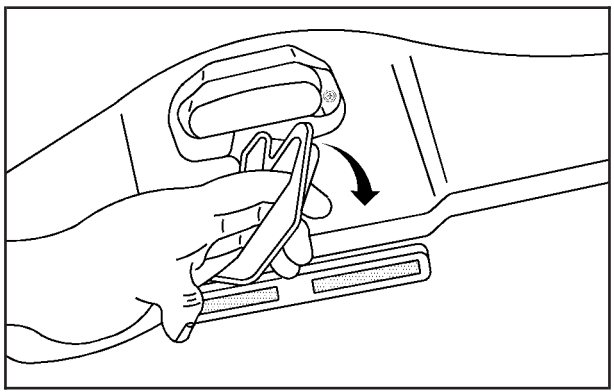

4. The convertible top front latch, located above the inside rearview mirror, must be unlocked. Pull the convertible top front latch down and turn it clockwise to unlock it.

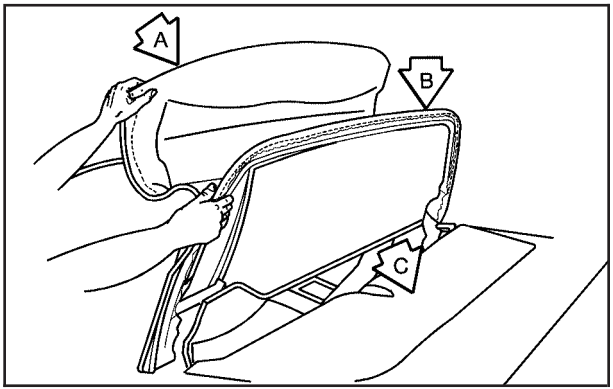

5. Lift upward on the front edge (A) of the convertible top off of the windshield frame. Then lift upward on the rear edge (B) of the convertible top so it is vertical to the tonneau cover (C). The front edge (A) and rear edge (B) should be straight up.

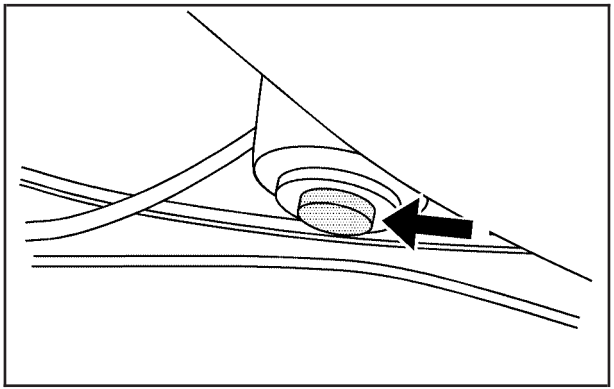

6. Tilt the driver's seatback forward and press the tonneau cover release button located on the underside of the tonneau cover (C) behind the driver's seat. Then raise the tonneau cover (C). If the tonneau cover does not release and three chimes are heard, check to make sure the trunk lid is closed. Also, the cover will not release if the vehicle alarm is armed.

   After pressing the release button, the driver's and passenger's door glass should retract to the full-down position.

   If the vehicle has lost battery power, the tonneau cover (C) can still be opened using the manual release cable.

   The tonneau cover emergency manual release cable is located underneath the carpeting behind the passenger's seat head restraint, on the underside forward edge of the tonneau cover. To access the cable, lift and pull back the carpeting. Also, see *Hatch/Trunk on page 83* for information on the emergency trunk release handle.

Notice: **If you lower the convertible top into the storage compartment and the rear edge of the top is not in the full-down position, you could damage the top. Always verify that the rear edge of the convertible top is in the full-down position before lowering the top into the storage compartment.**

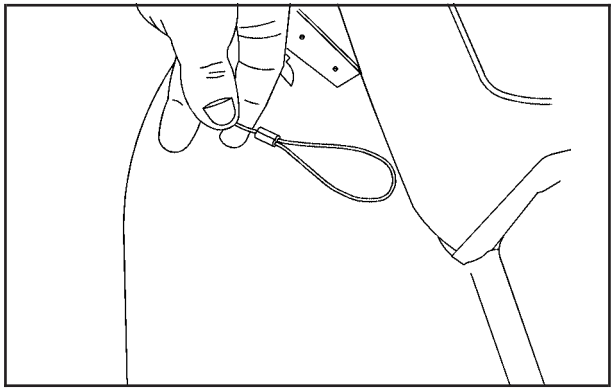

7. Pull the cable to release the tonneau cover.

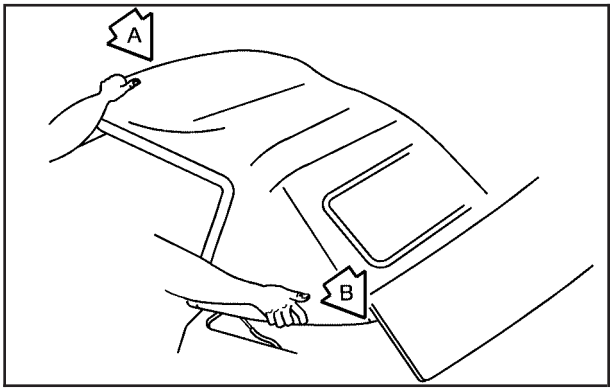

8. Push forward on the front edge (A) of the convertible top to allow the rear edge (B) of the convertible top to be moved to its full-down position.

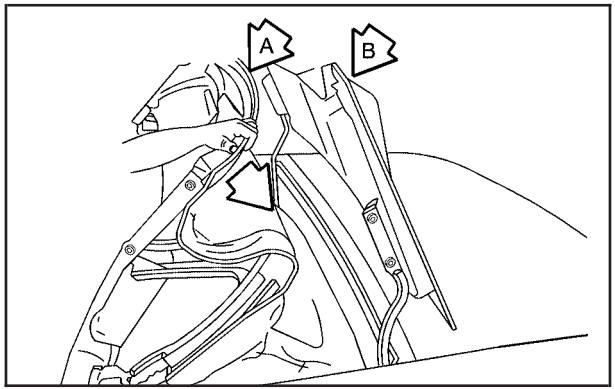

9. Then move the top rearward to its fully-stored position.
10. After the top is stored, apply one even push on the center of the front edge (A) of the convertible top to assure that the top is fully retracted.
11. Close the tonneau cover (B) by pressing down on it with a swift, firm motion.

Raising the Manual Convertible Top

1. Park on a level surface. Shift an automatic transmission into PARK (P) and set the parking brake. Shift a manual transmission into NEUTRAL and set the parking brake.
2. Lower both windows.
3. Make sure the ignition is off.
4. Tilt the driver's seat forward and press the tonneau cover release button, or use the manual release cable if battery power has been lost. See Step 6 under "Lowering the Manual Convertible Top" earlier in this section.

   After pressing the release button, the driver's and passenger's door glass should retract to the full-down position, if they have not already been lowered.
5. Lift the tonneau cover.

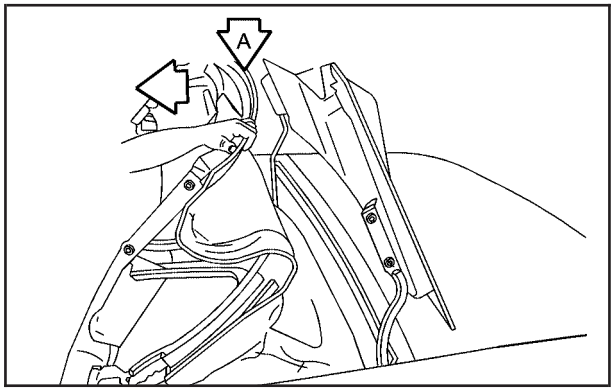

6. Pull the convertible top up by firmly gripping the front edge (A) near the center and applying a brisk upward and forward motion to get the top in the full-up position.

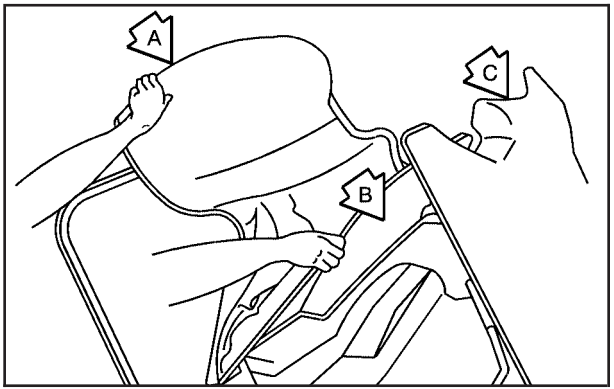

7. Lift the rear edge (B) of the convertible top to its full-up position by first raising the front edge (A).
8. Close the tonneau cover (C) by pushing it down with a swift, firm motion.
9. Lower the rear edge (B) of the convertible top by first slightly pushing the front edge (A) of the convertible top forward.

10. Push the front edge (A) of the convertible top down from the outside of the vehicle, or pull the front edge (A) of the convertible top down from the center pull-down handle located in the inside of the vehicle.

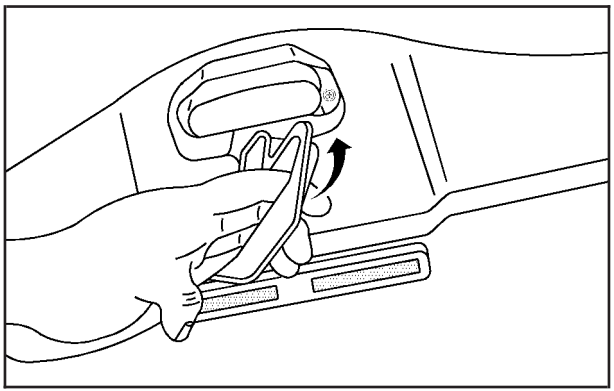

11. Pull the top front latch handle down and turn it counterclockwise to lock the convertible top.

Convertible Top (Power)

For care and cleaning of the convertible top see *Convertible Top on page 414* under “Service and Appearance Care”. High pressure car washes may cause water to enter the vehicle.

To operate the power convertible top use the following steps.

Notice: **Leaving the convertible top down and exposing the interior of your vehicle to outdoor conditions may cause damage. Always close the convertible top if leaving your vehicle outdoors.**

Notice: **Lowering the convertible top when there are objects in the storage area could damage it or break the glass rear window. Always verify that no objects are in the storage area before lowering the convertible top.**

Notice: **Lowering the top if it is damp, wet, or dirty can cause stains, mildew, and damage to the inside of your vehicle. Dry off the top before lowering it.**

Notice: **If you lower the top on your vehicle in cold weather (0°F/-18°C or lower), you may damage top components. Do not lower the top in cold weather.**

Notice: **If you raise or lower the convertible top while the vehicle is in motion, you could damage the top or the top mechanism. The repairs would not be covered by your warranty. Always put an automatic transmission in PARK (P) or a manual transmission in NEUTRAL before raising or lowering the convertible top.**

Lowering the Power Convertible Top

1. Park on a level surface. The vehicle must be running or in Acc. Shift an automatic transmission into PARK (P) and set the parking brake. Shift a manual transmission into NEUTRAL, and set the parking brake.
2. Make sure the trunk is closed and the rear trunk partition in the rear storage area is in the fastened upright position, and that no objects are forward of the divider. See “Rear Trunk Partition” under *Rear Storage Area on page 130*.

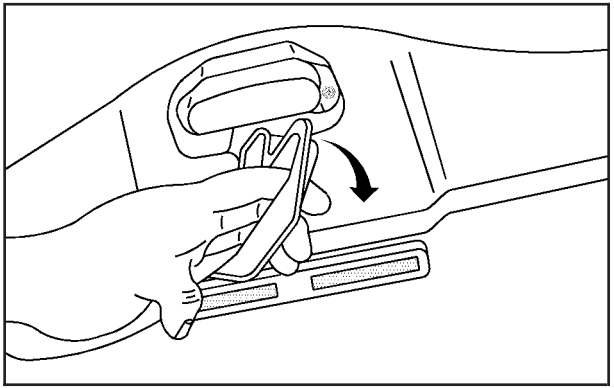

3. Release the convertible top front latch, located above the inside rearview mirror, by pulling and turning it clockwise toward the driver’s door. Push upward on the front edge. The windows will automatically lower.

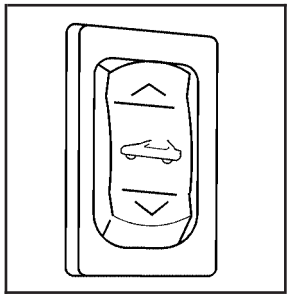

4. Push and hold the bottom of the power convertible top button, located to the left of the steering wheel, on the instrument panel.

The windows will automatically lower and the convertible top will lower into the rear of the vehicle. A chime will sound when the convertible top has lowered completely. If the radio is on the sound may be muted for a brief time due to a new audio system equalization being loaded.

If the convertible top is operated multiple times, the engine should be running to prevent drain on the vehicle's battery. Under certain conditions, the Driver Information Center (DIC) may display a message regarding the power convertible top. See *DIC Warnings and Messages on page 212* for more information.

Raising the Power Convertible Top

Notice: **If you raise or lower the convertible top while the vehicle is in motion, you could damage the top or the top mechanism. The repairs would not be covered by your warranty. Always put an automatic transmission in PARK (P) or a manual transmission in NEUTRAL before raising or lowering the convertible top.**

1. Park on a level surface. The vehicle must be running or in Acc. Shift an automatic transmission into PARK (P) and set the parking brake. Shift a manual transmission into NEUTRAL and set the parking brake.
2. Make sure the trunk lid is closed and the rear trunk partition in the rear storage area is in the fastened upright position, and that no objects are forward of the divider. See "Rear Trunk Partition" under *Rear Storage Area on page 130*.
3. Push and hold the top of the power convertible top button. The top will raise and the windows will lower if they were in the raised position. A chime will sound when the top is raised completely.

4. After the convertible top is completely raised, release the power convertible top button.
5. Pull the convertible front top latch down and turn it counterclockwise to lock the convertible top.

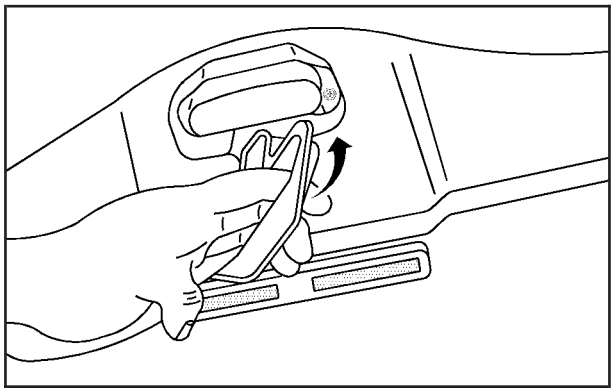

If the radio is on the sound may be muted for a brief time due to a new audio system equalization being loaded.

If the vehicle has lost power, the convertible top can still be raised by releasing pressure on the hydraulic pump, located under the passenger's side of the tonneau cover, by using the following steps. The carpet liner on the passenger's side must be pulled back to access the hydraulic pump.

Manual operation of the power convertible top cannot be attempted for five minutes from the last time the convertible top button was pressed if the top is not completely stowed, with the top down and the tonneau latched, or closed, with the front top latch locked in place, at the time the convertible top button was released.

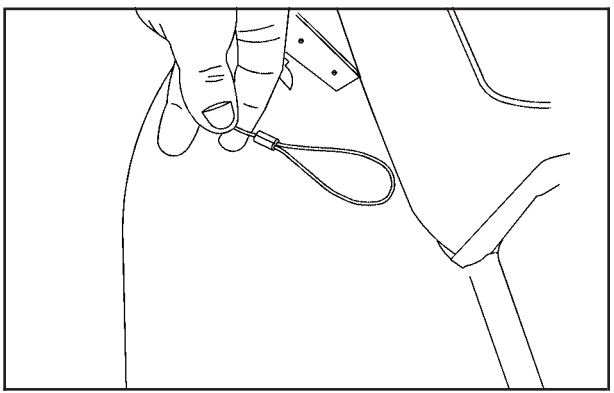

1. Open the tonneau cover by pulling the emergency release cable.

The tonneau cover emergency release cable is located behind the passenger's seat head restraint, on the underside forward edge of the tonneau cover. Also, see *Hatch/Trunk on page 83* for information on the emergency trunk release handle.

Be careful when opening the tonneau cover by hand. If the tonneau cover is opened quickly, damage can occur to the hinging mechanism, which can prevent proper operation of the convertible top.

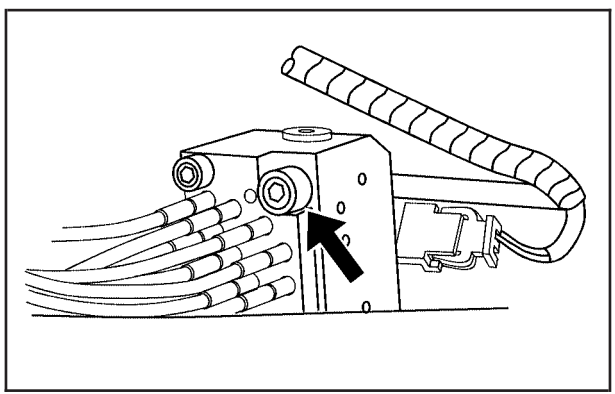

2. Locate the pressure release bolt on the front side of the hydraulic pump.
3. Use the wrench, located in the console, and turn the pressure release bolt counterclockwise one revolution, to relieve pressure to the hydraulic pump. This will allow you to manually raise the convertible top.
4. Then follow the steps under raising the manual convertible top. See "Convertible Top (Manual)" under *Convertible Top (Manual) on page 138* or *Convertible Top (Power) on page 145*

When power is restored to the vehicle, the hydraulic bolt must be tightened, by turning it clockwise. The power convertible top button can then be used to lower or raise the convertible top.

If the power convertible top is operated multiple times, the engine should be running to prevent drain on the vehicle's battery. Under certain conditions, the Driver Information Center (DIC) may display a message regarding the power top. See *DIC Warnings and Messages on page 212* for more information.

If the battery has been disconnected, the power windows must be initialized for the power top to operate. See *Power Windows on page 87* for more information.

NOTES

Section 3 Instrument Panel

Instrument Panel Overview 154
Hazard Warning Flashers 156
Other Warning Devices 157
Horn 157
Tilt Wheel 157
Turn Signal/Multifunction Lever 158
Turn and Lane-Change Signals
(Auto Signal) 159
Headlamp High/Low-Beam Changer 160
Flash-to-Pass 160
Windshield Wipers 160
Windshield Washer 161
Cruise Control 162
Exterior Lamps 166
Wiper Activated Headlamps 167
Headlamps on Reminder 167
Daytime Running Lamps (DRL) 167
Fog Lamps 169
Twilight Sentinel® 169
Exterior Lighting Battery Saver 170
Instrument Panel Brightness 170
Courtesy Lamps 171
Entry/Exit Lighting 171
Reading Lamps 171
Battery Run-Down Protection 171
Head-Up Display (HUD) 172
Accessory Power Outlet(s) 176
Ashtray(s) and Cigarette Lighter 177
Climate Controls 177
Dual Automatic Climate Control System 177
Outlet Adjustment 184
Passenger Compartment Air Filter 184
Warning Lights, Gages, and Indicators 186
Instrument Panel Cluster 186
Speedometer and Odometer 188
Tachometer 188
Safety Belt Reminder Light 188
Airbag Readiness Light 189

Section 3 Instrument Panel

Passenger Airbag Status Indicator 190
Voltmeter Gage 192
One-to-Four Shift Light
(Manual Transmission) 193
Brake System Warning Light 194
Anti-Lock Brake System Warning Light 195
Traction Control System (TCS)
Warning Light 195
Active Handling System Light 196
Engine Coolant Temperature Gage 197
Tire Pressure Light 197
Malfunction Indicator Lamp 198
Engine Oil Pressure Gage 202
Security Light 203
Fog Lamp Light 203
Lights On Reminder 204
Highbeam On Light 204
Fuel Gage 204

Driver Information Center (DIC) 205
DIC Controls and Displays 206
DIC Warnings and Messages 212
Other Messages 230
DIC Vehicle Personalization 232

Audio System(s) 242
Setting the Time 243
Radio with CD 244
Using an MP3 259
XM Radio Messages 265
Navigation/Radio System 267
Theft-Deterrent Feature 267
Audio Steering Wheel Controls 267
Radio Reception 268
Care of Your CDs 269
Care of the CD Player 270
Diversity Antenna System 270
XM™ Satellite Radio Antenna System 270

NOTES

Instrument Panel Overview

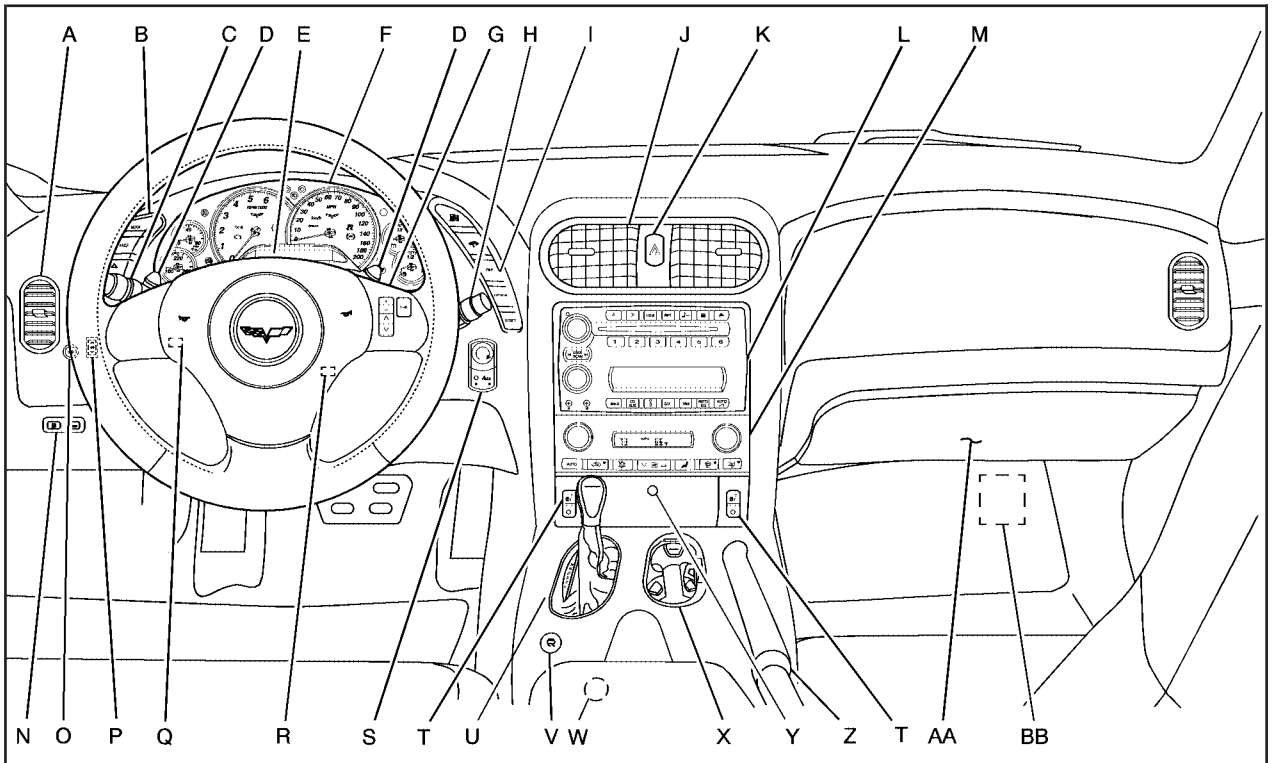

The main components of your instrument panel are the following:

A. Air Outlet. See *Outlet Adjustment on page 184*.

B. Head-Up Display Controls (If Equipped). See *Head-Up Display (HUD) on page 172*.

C. Turn Signal/Multifunction Lever. See *Turn Signal/Multifunction Lever on page 158*. Cruise Control. See *Cruise Control on page 162*. Fog Lamps. See *Fog Lamps on page 169*. Headlamp Controls. See *Exterior Lamps on page 166*.

D. Manual Shift Paddles (If Equipped). See *Automatic Transmission Operation on page 95*.

E. Driver Information Center (DIC). See *Driver Information Center (DIC) on page 205*.

F. Instrument Panel Cluster. See *Instrument Panel Cluster on page 186*.

G. Audio Steering Wheel Controls (If Equipped). See *Audio Steering Wheel Controls on page 267*.

H. Windshield Wiper/Washer Lever. See *Windshield Wipers on page 160* and *Windshield Washer on page 161*.

I. Driver Information Center (DIC) Controls. See *DIC Controls and Displays on page 206*.

J. Center Air Outlets. See *Outlet Adjustment on page 184*.

K. Hazard Warning Flasher Button. See *Hazard Warning Flashers on page 156*.

L. Audio System. See *Audio System(s) on page 242*.

M. Climate Controls. See *Dual Automatic Climate Control System on page 177*.

N. Fuel Door Release Button. See *Filling the Tank on page 323*. Hatch/Trunk Release Button. See “Hatch/Trunk Lid Release” under *Hatch/Trunk on page 83*.

O. Instrument Panel Brightness Control. See *Instrument Panel Brightness on page 170*.

P. Power Folding Top Switch (If Equipped). See *Convertible Top (Manual) on page 138* or *Convertible Top (Power) on page 145*.

Q. Tilt Wheel Lever. See *Tilt Wheel on page 157*.

R. Telescopic Wheel Button (If Equipped). See *Tilt Wheel on page 157*.

S. Ignition Switch. See *Ignition Positions on page 90*.

T. Heated Seat Controls (If Equipped). See *Heated Seats on page 10*.

U. Shift Lever (Automatic Shown). See *Automatic Transmission Operation on page 95* or *Manual Transmission Operation on page 100*.

V. Active Handling Button. See *Active Handling System on page 281*.

W. Accessory Power Outlet. See *Accessory Power Outlet(s) on page 176*.

X. Center Console Cupholder. See *Cupholder(s) on page 128*.

Y. Ashtray and Cigarette Lighter. See *Ashtray(s) and Cigarette Lighter on page 177*.

Z. Parking Brake. See *Parking Brake on page 103*.

AA. Glove Box. See *Glove Box on page 128*.

BB. Instrument Panel Fuse Block. See *Instrument Panel Fuse Block on page 420*.

Hazard Warning Flashers

Your hazard warning flashers let you warn others. They also let police know you have a problem. Your front and rear turn signal lamps will flash on and off.

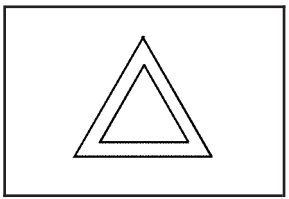

The hazard warning flasher button is located near the center of the instrument panel.

Your hazard warning flashers work no matter what mode the ignition is in, even if the ignition is turned off.

Press the button to make the front and rear turn signal lamps flash on and off. Press the button again to turn the flashers off.

When the hazard warning flashers are on, your turn signals will not work.

Other Warning Devices

If you carry reflective triangles, you can set them up at the side of the road about 300 feet (100 m) behind your vehicle.

Horn

Press near or on the horn symbols on your steering wheel pad to sound the horn.

Tilt Wheel

A tilt wheel allows you to adjust the steering wheel before you drive. You can raise it to the highest level to give your legs more room when you exit and enter the vehicle.

The lever that allows you to tilt the steering wheel is located on the left side of the steering column.

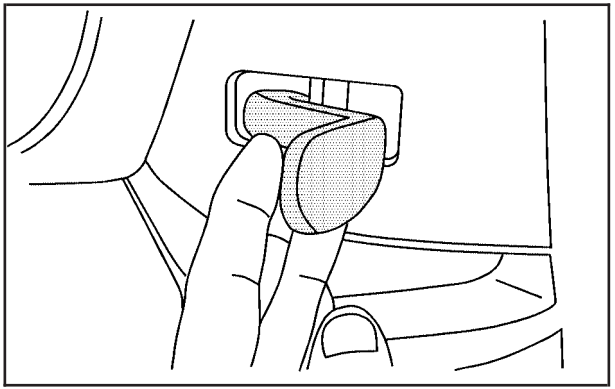

To tilt the wheel, hold the steering wheel and pull the lever toward you. Then move the wheel to a comfortable position and release the lever to lock the wheel in place.

Telescopic Steering Column

If your vehicle has this feature, the telescopic steering column will allow you to adjust the distance the steering wheel is from the instrument panel.

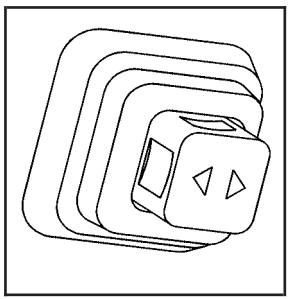

The telescopic steering column switch is located on the right side of the steering column.

To operate the telescopic steering column, push the switch forward and the wheel will move away from you. Pull the switch rearward and the wheel will move toward you

The telescopic steering column position can be stored with your memory settings. See *Memory Seat, Mirrors and Steering Wheel on page 10* for more information.

Turn Signal/Multifunction Lever

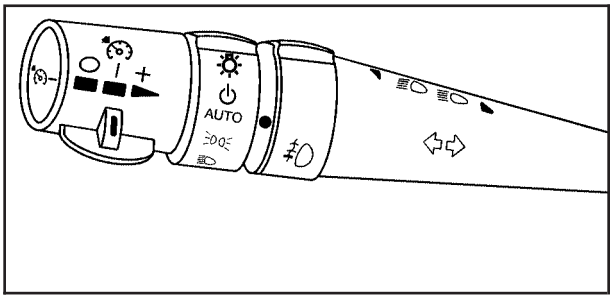

The lever on the left side of the steering column includes the following:

- Turn and Lane-Change Signals. See *Turn and Lane-Change Signals (Auto Signal) on page 159*.
- Headlamp High/Low-Beam Changer. See *Headlamp High/Low-Beam Changer on page 160*.
- Fog Lamps. See *Fog Lamps on page 169*.

- Flash-to-Pass Feature. See *Flash-to-Pass on page 160*.
- Cruise Control. See *Cruise Control on page 162*.
- Exterior Lamps Control. See *Exterior Lamps on page 166*.

Turn and Lane-Change Signals (Auto Signal)

The turn signal has two upward (for right) and two downward (for left) positions. These positions allow you to signal a turn or a lane change.

To signal a turn, move the multifunction lever all the way up or down. When the turn is finished, the lever will return automatically.

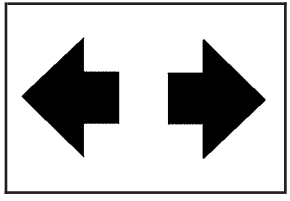

An arrow on the instrument panel cluster will flash in the direction of the turn or lane change.

To signal a lane change, just raise or lower the lever until the arrow starts to flash. Release the lever and the turn signal will automatically flash three times. If more flashes are desired, continue to hold the lever.

If you signal a turn or a lane change and the arrows flash faster than normal, a signal bulb may be burned out.

If a bulb is burned out, replace it to help avoid an accident. If the arrows do not go on at all when you signal a turn, check the fuses and check for burned-out bulbs. See *Fuses and Circuit Breakers on page 420*.

Turn Signal on Chime

A chime will remind you if you leave the turn signal on for more than three-quarters of a mile (1.2 km) of driving.

If you need to leave the turn signal on for more than three-quarters of a mile (1.2 km), turn off the signal and then turn it back on.

Headlamp High/Low-Beam Changer

To change the headlamps from low beam to high, push the turn signal lever all the way forward. To change from high to low beam, pull the lever rearward.

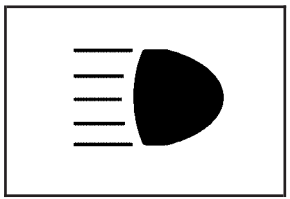

While the high beams are on, this light on the instrument panel cluster will also be lit.

Flash-to-Pass

To use the flash-to-pass feature, briefly pull the turn signal lever toward you. The high-beam indicator flashes to indicate to the other driver that you intend to pass. If the low-beam headlamps are off and the fog lamps are on, the fog lamps flash.

Windshield Wipers

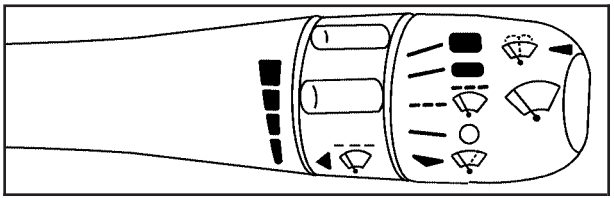

Use the lever located on the right side of the steering column to operate the windshield wipers.

(High Speed): Move the lever to this position for steady wiping at high speed.

(Low Speed): Move the lever to this position for steady wiping at low speed.

(Delay): Move the lever to this position to set a delay between wipes.

(Delay Adjustment): Move the lever to this position to choose a delayed wiping cycle. Turn the intermittent adjust band down for a longer delay or up for a shorter delay. The wiper speed can only be manually adjusted when the lever is in this position.

(Off): Move the lever to this position to turn off the windshield wipers.

(Mist): Move the lever all the way down to mist and release for a single wiping cycle. The windshield wipers will stop after one wipe. If you want more wipes, hold the band on mist longer.

Heavy snow or ice can overload the wipers. If this occurs, a circuit breaker will stop the wipers until the motor cools. So, be sure to clear any ice and snow from the windshield wiper blades before using them. If the wiper blades are frozen to the windshield, carefully loosen them or warm the windshield before turning the wipers on. If your blades do become worn or damaged, get new blades or blade inserts.

Windshield Washer

The lever on the right side of the steering column also controls the windshield washer. There is a button at the end of the lever. To spray washer fluid on the windshield, press the button and hold it. The washer will spray until you release the button. The wipers will continue to clear the window for about six seconds after the button is released and then stop or return to your preset speed.

⚠ CAUTION:

In freezing weather, do not use your washer until the windshield is warmed. Otherwise the washer fluid can form ice on the windshield, blocking your vision.

If the fluid in the windshield washer fluid reservoir is low, the message CHECK WASHER FLUID will appear on the Driver Information Center (DIC) display. It will take 15 seconds after the bottle is refilled for this message to turn off. For information on the correct washer fluid to use, see *Windshield Washer Fluid on page 359* and *Recommended Fluids and Lubricants on page 443*.

Cruise Control

Your vehicle has cruise control.

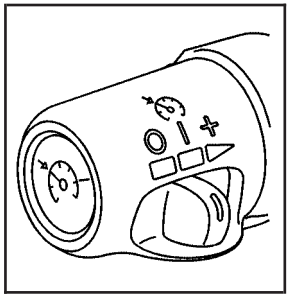

○ **(Off):** Slide the switch to this position to turn the system off.

| **(On):** Slide the switch to this position to turn the system on.

+ (Resume/Accelerate): Slide the switch to this position to make the vehicle accelerate or resume a previously set speed.

(Set): Press this button at the end of the lever to set the speed.

With cruise control, you can maintain a speed of about 25 mph (40 km/h) or more without keeping your foot on the accelerator. This can really help on long trips. Cruise control does not work at speeds below about 25 mph (40 km/h).

Cruise control will not work if your parking brake is set, or if the master cylinder brake fluid level is low.

⚠ CAUTION:

Cruise control can be dangerous where you cannot drive safely at a steady speed. So, do not use your cruise control on winding roads or in heavy traffic.

Cruise control can be dangerous on slippery roads. On such roads, fast changes in tire traction can cause excessive wheel slip, and you could lose control. Do not use cruise control on slippery roads.

If your vehicle is in cruise control, and has the Traction Control System (TCS), and it begins to limit wheel spin, the cruise control automatically disengages. See *Traction Control System (TCS) on page 279*. When road conditions allow you to safely use it again, you can turn cruise control back on.

Setting Cruise Control

⚠ CAUTION:

If you leave your cruise control on when you are not using cruise, you might hit a button and go into cruise when you do not want to. You could be startled and even lose control. Keep the cruise control switch off until you want to use cruise control.

1. Move the cruise control switch to on.
2. Get up to the speed desired.
3. Press in the set button at the end of the lever and release it.
4. Take your foot off the accelerator pedal.

When the cruise control is engaged, the CRUISE SET TO XX MPH message displays on the Driver Information Center (DIC). See *Other Messages on page 230*.

Resuming a Set Speed

Suppose you set your cruise control at a desired speed and then you apply the brake. This, of course, disengages the cruise control. But you do not need to reset it.

Once you are going about 25 mph (40 km/h) or more, you can move the cruise control switch briefly from on to resume/accelerate.

You will go right back up to your chosen speed and stay there.

If you hold the switch at resume/accelerate the vehicle keeps going faster until you release the switch or apply the brake. Do not hold the switch at resume/accelerate, unless you want the vehicle to go faster.

Increasing Speed While Using Cruise Control

There are two ways to go to a higher speed:

- Use the accelerator pedal to get to the higher speed. Press the set button at the end of the lever, then release the button and the accelerator pedal. You will now cruise at the higher speed. If the accelerator pedal is held longer than 60 seconds, cruise control will turn off.
- Move the cruise switch from on to resume/accelerate. Hold it there until you get up to the speed desired, and then release the switch. To increase your speed in very small amounts, move the switch briefly to resume/accelerate. Each time you do this, your vehicle will go about 1 mph (1.6 km/h) faster.

Reducing Speed While Using Cruise Control

- Press and hold the set button until you reach the lower speed you want, then release it.
- To slow down in very small amounts, briefly press the set button. Each time you do this, you will go about 1 mph (1.6 km/h) slower.

Passing Another Vehicle While Using Cruise Control

Use the accelerator pedal to increase your speed. When you take your foot off the pedal, your vehicle slows down to the cruise control speed you set earlier.

Using Cruise Control on Hills

How well your cruise control will work on hills depends upon your speed, load, and the steepness of the hills. When going up steep hills, you might want to step on the accelerator pedal to maintain the vehicle's speed. When going downhill, you might have to brake or shift to a lower gear to keep the vehicle's speed down. Of course, applying the brake turns off the cruise control. Many drivers find this to be too much trouble and do not use cruise control on steep hills.

Cruise Control in Sport (S) and Manual Paddle Shift Gear Selection

When your vehicle is in Sport (S) and the manual paddle shift controls are not being used, cruise control operates in the same manner as Drive (D).

When your vehicle is in Sport (S) and the manual paddle shift controls are being used, cruise control operates as follows:

- If cruise control is active and a gear is selected with the manual paddle shift controls, the vehicle maintains vehicle speed in the driver selected gear and will not automatically up-shift or down-shift the transmission while the driver's gear selection is active.
- If driving in hilly terrain, cruise control may not be able to maintain vehicle speed if an up-shift or down-shift is not selected by the driver. While driving on hilly terrain and cruise control is active with a manual paddle shift gear selection, the driver must select the proper gear for the terrain or select Drive (D) on the gear range selector for full automatic transmission operation.

Ending Cruise Control

To end a cruise control session, step lightly on the brake pedal. If your vehicle has a manual transmission, lightly tapping the clutch will also end a cruise control session.

Move the cruise control switch to off to turn the system completely off.

When cruise control is disengaged, the CRUISE DISENGAGED message displays on the Driver Information Center (DIC). See *DIC Warnings and Messages on page 212*.

Erasing Speed Memory

When you turn off the cruise control or the ignition, the cruise control set speed memory is erased.

Exterior Lamps

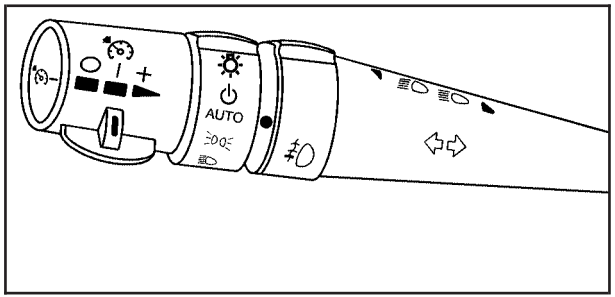

The exterior lamp control is located to the left of the steering wheel on the multifunction lever.

(Exterior Lamp Control): Turn the band with this symbol on it to operate the exterior lamps.

The exterior lamp band has four positions:

(Off): Turn the band to this position to turn off all lamps.

AUTO (Automatic): Turn the band to this position to set the exterior lamps in automatic mode. AUTO mode turns the exterior lamps on and off depending on how much light is available outside the vehicle.

To override AUTO mode, turn the control to off.

To reset to AUTO mode turn the control to exterior lamps and then back to AUTO. Automatic mode also resets when your vehicle is turned off and then back on again if the control is left in the AUTO position.

(Parking Lamp): Turning the band to this position turns on the parking lamps together with the following:

- Sidemarker Lamps
- Taillamps
- License Plate Lamps
- Instrument Panel Lights

The parking brake indicator light comes on and stays on when the parking lamps are on with the engine off and the ignition to Acc.

(Headlamps): Turning the control to this position turns on the headlamps, together with the previously listed lamps and lights.

Wiper Activated Headlamps

This feature activates the headlamps and parking lamps after the windshield wipers have been in use for approximately 15 seconds and deactivates and returns to ambient lighting conditions 15 seconds after the wipers are turned off.

If the exterior lamp control has been turned off or is in the parking lamp position while the wiper control is active in any position, the HEADLAMPS SUGGESTED message appears on the Driver Information Center (DIC). See *DIC Warnings and Messages on page 212*.

When the ignition is turned off, the wiper-activated headlamps will immediately turn off.

Headlamps on Reminder

A warning chime will sound if the exterior lamp control is left on in either the headlamp or parking lamp position and the driver's door is opened with the ignition off.

Daytime Running Lamps (DRL)

Daytime Running Lamps (DRL) can make it easier for others to see the front of your vehicle during the day. DRL can be helpful in many different driving conditions, but they can be especially helpful in the short periods after dawn and before sunset. Fully functional daytime running lamps are required on all vehicles first sold in Canada.

The DRL system will make the front turn signal lamps come on when the following conditions are met:

- It is still daylight and the ignition is on.
- The exterior lamp control is in the AUTO position.
- The transmission is not in PARK (P) or the parking brake is off.
- The parking brake is off or the vehicle speed is greater than 8 mph (13 km/h).

When DRL are on, only the front turn signal lamps will be on. No other exterior lamps such as the parking lamps, taillamps, etc. will be on when the DRL are being used. Your instrument panel will not be lit up either.

When it is dark enough outside, the front turn signal lamps will turn off and normal low-beam headlamps will turn on.

When it is bright enough outside, the regular lamps will go off, and the front turn signal lamps will take over. If you start your vehicle in a dark garage, the automatic headlamp system will come on immediately. Once you leave the garage, it will take approximately one minute for the automatic headlamp system to change to DRL if it is light outside. During that delay, the instrument panel cluster may not be as bright as usual. Make sure your instrument panel brightness knob is in the full bright position. See *Instrument Panel Brightness on page 170* for more information.

If it is dark enough outside and the exterior lamp control is off, a HEADLAMPS SUGGESTED message will display on the Driver's Information Center (DIC). This message informs the driver that turning on the exterior lamps is recommended. See *DIC Warnings and Messages on page 212*.

Turning the exterior lamp control to off a second time, or turning on the headlamps will remove the HEADLAMPS SUGGESTED message in the DIC. If the parking lamps or the fog lamps were turned on instead, the HEADLAMPS SUGGESTED message will continue to be displayed.

As with any vehicle, you should turn on the regular headlamp system when you need it.

To turn off the DRL, turn the exterior lamp control to the off position or shift into PARK (P). The DRL will stay off until the control is toggled again or the vehicle is shifted out of PARK (P).

This procedure applies only to vehicles first sold in the United States.

Fog Lamps

Use fog lamps for better vision in foggy or misty conditions.

The fog lamps control is located on the multifunction lever next to the exterior lamp control.

(Fog Lamps): Turning the band to this position will turn the fog lamps on.

When you turn the fog lamps on, the fog lamp light will appear on the instrument panel cluster to indicate that the fog lamps and the parking lamps are on.

If you turn the high-beam headlamps on, the fog lamps will turn off. They will turn on again when you switch to low-beam headlamps.

The ignition must be on for the fog lamps to operate.

Some localities have laws that require the headlamps to be on along with the fog lamps.

Twilight Sentinel®

Twilight Sentinel® can turn your lamps on and off for you. A light sensor on top of the instrument panel makes the Twilight Sentinel® work, so be sure it is not covered.

With Twilight Sentinel®, you will see the following happen:

- When it is dark enough outside, the front turn signal lamps (DRL) will go off, and the headlamps and parking lamps will come on. The other lamps that come on with headlamps will also come on.
- When it is bright enough outside, the headlamps will go off, and the front turn signal lamps (DRL) will come on, as long as the exterior lamp switch is in the AUTO position.

If you start your vehicle in a dark garage, the automatic headlamp system will come on immediately. Once you leave the garage, it will take about one minute for the automatic headlamp system to change to DRL if it is light outside. During that delay, your instrument panel cluster may not be as bright as usual. Make sure your instrument panel brightness control is in full bright position. See *Instrument Panel Brightness on page 170*.

You can idle the vehicle with the lamps off, even when it is dark outside.

After starting the vehicle, turn the exterior lamp control band on the multifunction lever to off and then release it. The lamps will remain off until you turn the control band to off again.

Twilight Sentinel® also provides exterior illumination as you leave the vehicle. If Twilight Sentinel® has turned on the lamps when you turn off the ignition, your lamps will remain on until:

- The exterior lamp switch is moved from off to the parking lamp position, or
- A delay time that you select has elapsed.

See “Personal Options” under *DIC Vehicle Personalization on page 232* to select the delay time that you want. You can also select no delay time.

If you turn off the ignition with the exterior lamp switch in the parking lamp or headlamp position, the Twilight Sentinel® delay will not occur. The lamps will turn off as soon as the switch is turned off.

As with any vehicle, you should turn on the regular headlamp system when you need it.

Exterior Lighting Battery Saver

If the manual parking lamps or headlamps have been left on, the exterior lamps will turn off as soon as the ignition is turned off or Retained Accessory Power (RAP) is active. This protects against draining the battery in case you have accidentally left the headlamps or parking lamps on. The battery saver does not work if the headlamps are turned on after the ignition switch is turned to off.

If you need to leave the lamps on, use the exterior lamp control to turn the lamps back on.

Instrument Panel Brightness

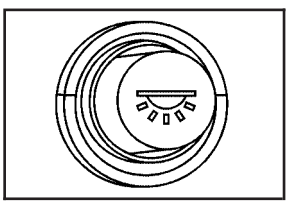

The knob for this feature is located on the left side of the instrument panel.

Push the knob in to turn on the interior lights.

Turn and hold the knob clockwise to brighten the lights or counterclockwise to dim them. During the day, this knob will adjust the instrument panel brightness and at night will adjust all interior lighting.

Be sure not to have this knob turned all the way down with the lamps on during the day. Your Driver Information Center (DIC) may not be visible.

Courtesy Lamps

When any door or the hatch/trunk lid is opened, the interior lamps will go on unless it is bright outside.

You can also turn the courtesy lamps on and off by pressing the instrument panel brightness knob.

Entry/Exit Lighting

With entry lighting, the interior lamps will come on when entering the vehicle. The interior lamps will come on for about 20 seconds when the engine is off.

You can turn exit and entry lighting off by quickly turning the courtesy lamps on and off.

Reading Lamps

The inside rearview mirror includes two reading lamps. The lamps will go on when a door is opened. When the doors are closed, each lamp can be turned on individually by pressing the switch for that lamp.

An ambient light is located in the passenger sun visor clip. This light stays on while driving to keep the cabin from being too dark.

Battery Run-Down Protection

This vehicle has a feature to help prevent the battery from being drained in case any of the following lamps are left on; the underhood lamp, if your vehicle has this feature, vanity mirror lamps, cargo lamps, reading lamps, console or glove box lamps. If any of these lamps are left on, they will automatically time-out after about 20 minutes. To reset it, all of the above lamps must be turned off or the ignition key on.

Head-Up Display (HUD)

⚠ CAUTION:

If the HUD image is too bright, or too high in your field of view, it may take you more time to see things you need to see when it is dark outside. Be sure to keep the HUD image dim and placed low in your field of view.

If your vehicle has the Head-Up Display (HUD), you can see some of the driver information that appears on the instrument panel cluster.

The information may be displayed in English or metric units and appears as an image focused out toward the front of your vehicle. The HUD consists of the following information:

- Speedometer
- Turn Signal Indicators
- High-Beam Indicator Symbol
- Tachometer
- Manual Paddle Shift Gear Indicator (If Equipped)
  These displays on the HUD are for use when using the manual paddle shift controls to shift the transmission. See “Manual Paddle Shift” in *Automatic Transmission Operation on page 95*.
- Shift Light
  This light is used for performance driving to indicate that the vehicle’s best performance level has been reached to shift the transmission into the next higher gear. An arrow pointing up will light up on the display just prior to reaching the engine fuel cut-off mode. This cut-off is about 6,500 RPM for the LS2 engine and 7,000 RPM for the LS7 engine.
- Check Gages Warning
- Engine Coolant Temperature Gage
- Transmission Fluid Temperature Gage, (Automatic Transmission Vehicles Only)
- Engine Oil Temperature Gage
- Engine Oil Pressure Gage
- G-Force Gage
- Audio Functions, Street Mode Only
- Navigation, Only with Navigation Radio, Turn-by-Turn Guidance

There are three HUD modes that you can choose to view in the HUD display. By pressing the MODE button, you can scroll through these modes in the following order:

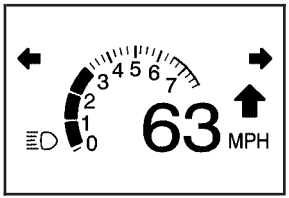

Street Mode supports audio and navigation functions with your choice of tachometer settings.

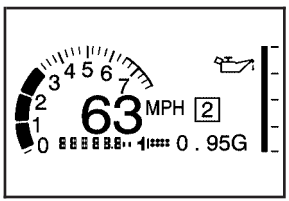

Track Mode 1 supports the G-Force gage and minor gages with a circular tachometer.

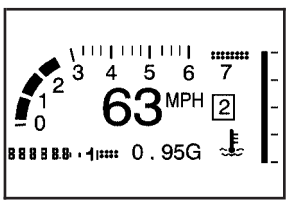

Track Mode 2 supports G-Force gages and minor gages with a linear tachometer.

When the desired HUD display has been selected, release the MODE button.

Within each mode, the display, can be further customized by pressing the PAGE button. Pressing this button in each mode will turn off and on the following:

- Street Mode — No tachometer, circular tachometer, and linear tachometer.
- Track Modes 1 and 2 — No minor gage, coolant temperature, transmission oil temperature, engine oil temperature, and engine oil pressure.

  While in Track Mode 1 or 2, the maximum G value achieved during the current ignition cycle can be displayed by pressing and holding the PAGE button. The maximum G display will be shown until the PAGE button is released. The maximum G value display will be identical to the normal G value display, except the maximum G gage digits (X.XX G) and corresponding G gage bar will overwrite the current G value.

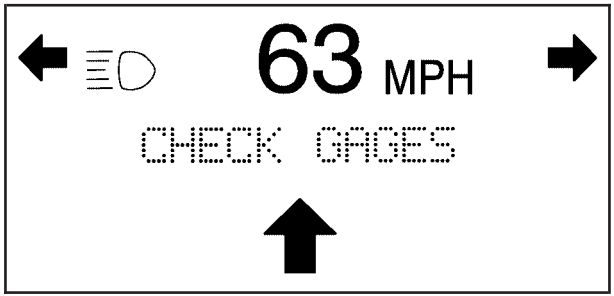

Be sure to continue scanning the displays, controls and driving environment just as you would in a vehicle without HUD. If you never look at your instrument panel cluster, you may miss something important, such as a warning light. Under important warning conditions, the CHECK GAGES warning will illuminate in the HUD. View your Driver Information Center (DIC) for more information.

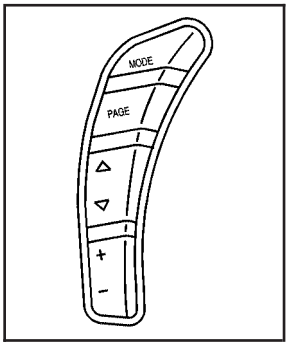

The HUD controls are located to the left of the steering wheel.

To adjust the HUD so you can see it properly, do the following:

1. Start the engine and press the HUD dimmer control all the way up by pressing the (+) button.

   The brightness of the HUD image is determined by the light conditions in the direction the vehicle is facing and where you have the HUD dimmer control set. If you are facing a dark object or a heavily shaded area, your HUD may anticipate that you are entering a dark area and may begin to dim.

It is possible for sunlight to enter the HUD making it difficult to see the image. The display will return to normal when the sunlight is no longer entering the HUD.

2. Adjust the seat to a comfortable driving position. If you change your seat position later, you may have to re-adjust your HUD.
3. Press the up or down arrows to center the HUD image in your view.

   The HUD image can only be adjusted up and down, not side-to-side.
4. Press the dimmer control downward until the HUD image is no brighter than necessary.

To turn HUD off, press and hold the (–) button until the HUD display turns off.

If the sun comes out or it becomes cloudy, you may need to adjust the HUD brightness again using the dimmer control. Polarized sunglasses could make the HUD image harder to see.

The HUD information can be displayed in one of six languages including English, Spanish, French, German, Italian or Japanese. The speedometer can be displayed in either English or Metric units.

To change the language and unit selections, see "OPTION" under *DIC Controls and Displays on page 206*.

Clean the inside of the windshield as needed to remove any dirt or film that reduces the sharpness or clarity of the HUD image.

To clean the HUD, spray household glass cleaner on a soft, clean cloth. Wipe the HUD lens gently, then dry it. Do not spray cleaner directly on the lens because the cleaner could leak into the unit.

If the ignition is on and you can not see the HUD image, check to see if:

- Something is covering the HUD unit.
- The HUD dimmer control is adjusted properly.
- The HUD image is adjusted to the proper height.
- Ambient light is low, in the direction your vehicle is facing.
- A fuse is blown. See *Fuses and Circuit Breakers on page 420*.

Keep in mind that your windshield is part of the HUD system. See *Windshield Replacement on page 374*.

Accessory Power Outlet(s)

The accessory power outlet can be used to connect electrical equipment such as a cellular phone or CB radio.

The accessory power outlet is located inside the center console storage compartment, on the forward left side.

To use the outlet, remove the tethered cap. When not using it, always cover the outlet with the protective cap.

Notice: **Leaving electrical equipment plugged in for an extended period of time while the vehicle is off will drain the battery. Power is always supplied to the outlets. Always unplug electrical equipment when not in use and do not plug in equipment that exceeds the maximum 20 ampere rating.**

Certain electrical accessories may not be compatible with the accessory power outlet and could result in blown vehicle or adapter fuses. If you experience a problem, see your dealer for additional information on accessory power outlets.

Notice: **Adding any electrical equipment to your vehicle may damage it or keep other components from working as they should. The repairs would not be covered by your warranty. Do not use equipment exceeding maximum amperage rating of 20 amperes. Check with your dealer before adding electrical equipment.**

When adding electrical equipment, be sure to follow the installation instructions included with the equipment.

We recommend that you see a qualified technician or your dealer for the proper installation of your equipment.

Notice: **Improper use of the power outlet can cause damage not covered by your warranty. Do not hang any type of accessory or accessory bracket from the plug because the power outlets are designed for accessory power plugs only.**

Ashtray(s) and Cigarette Lighter

The ashtray and cigarette lighter are located on the instrument panel, in front of the shift lever. To use the ashtray, press on the indentation at the top of the door.

Notice: **If you put papers, pins, or other flammable items in the ashtray, hot cigarettes or other smoking materials could ignite them and possibly damage your vehicle. Never put flammable items in the ashtray.**

Loose objects, such as paper clips, can lodge behind and beneath the ashtray lid and prevent movement of the lid. You should avoid putting small, loose objects near the ashtray.

To use the cigarette lighter, push it in all the way and let go. When it is ready, it will pop back out by itself.

Notice: **Holding a cigarette lighter in while it is heating will not allow the lighter to back away from the heating element when it is hot. Damage from overheating may occur to the lighter or heating element, or a fuse could be blown. Do not hold a cigarette lighter in while it is heating.**

Climate Controls

Dual Automatic Climate Control System

With this system you can control the heating, cooling, and ventilation for your vehicle.

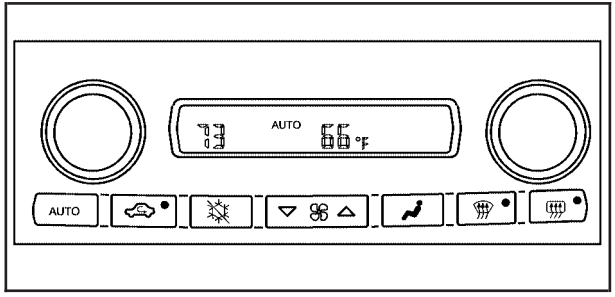

When the vehicle is first started, the display will show the driver's temperature setting, the outside temperature, the fan speed and the air delivery, for about 10 seconds.

The outside temperature is shown in the center of the display. The digital display will show the readings in Fahrenheit or Celsius. See "Personal Options" under *DIC Vehicle Personalization on page 232* for information on changing your display.

Automatic Operation

AUTO (Automatic): Press the AUTO button to place the entire system in the automatic mode. When automatic operation is active, the system will automatically control the inside temperature, the air delivery mode, and the fan speed.

After a ten second display of the current settings, the word AUTO, the driver's temperature setting and the outside temperature will be shown.
The system will operate to achieve your comfort set temperature as quickly as possible. The AUTO control system works best with the windows up and the removable roof installed or the convertible top up.

1. Press the AUTO button.
2. Adjust the temperature to a comfortable setting between 60°F (16°C) and 90°F (32°C). Choosing the coldest or warmest temperature setting will not cause the system to heat or cool any faster. A setting of 73°F (23°C) is suggested.

   In cold weather, the system will start at reduced fan speeds to avoid blowing cold air into your vehicle until warmer air is available. The system will start out blowing air at the floor but may change modes automatically as the vehicle warms up to maintain the chosen temperature setting. The length of time needed for warm up will depend on the outside temperature and the length of time that has elapsed since your vehicle was last driven.
3. Wait for the system to regulate. This may take from 10 to 30 minutes. Then adjust the temperature, if necessary.

Do not cover the solar sensor located in the center of the instrument panel, near the windshield. For more information on the solar sensor, see "Sensor" later in this section.

Manual Operation

Driver Power/Temperature: Press the driver temperature knob on the driver side of the climate control panel to turn the climate control system off. This is the only setting that completely shuts off the fan. The digital display will show only the outside temperature. You can still adjust the driver and the passenger set temperature and the air intake mode when the climate control is off.

Passenger Power/Temperature: Press the passenger temperature knob on the passenger side of the climate control panel to turn the passenger's climate control system on or off. Turn the knob to increase or decrease the temperature for the passenger. If the passenger's climate control system is off, the driver's temperature knob will control the temperature for the entire vehicle.

(MODE): Press this button to manually lock in the current air delivery setting and to stop the automatic mode control. Pressing the MODE button will delete AUTO from the digital display and the mode graphics will be shown. To change the setting, press the MODE button again. The AUTO button must be pressed to return to the automatic mode selection.

To change the current mode, select one of the following:

(Vent): This mode directs most of the air to the instrument panel outlets, with a very small amount of air directed to the floor outlets.

(Bi-Level): This mode directs about half of the air to the instrument panel outlets, and directs the remaining air to the floor outlets. Cooler air is directed to the upper outlets and warmer air to the floor outlets.

(Floor): This mode directs most of the air to the floor outlets with some air directed to the side window defogger outlets and some air directed toward the windshield.

The MODE button can also be used to select the defog mode. Information on defogging and defrosting can be found later in this section.

▽ ⊛ △ **(Fan):** Press the button with the fan symbol to manually increase or decrease the fan speed. Keep pressing the up or down arrow on this switch until the desired fan speed appears on the display.

Pressing the arrows will delete AUTO from the digital display. The fan graphics with the fan speed bars will be shown. To increase the fan speed so that more air flows into the vehicle, press the up arrow on the fan switch. To decrease the fan speed and airflow, press the down arrow.
The AUTO button must be pressed to return to the automatic fan control.

If the airflow seems low when the fan speed is at the highest setting, the passenger compartment air filter may need to be replaced. For more information, see *Passenger Compartment Air Filter on page 184* and *Scheduled Maintenance on page 433*.

(Recirculation): Press this button to turn the recirculation mode on or off. When the climate control system is in recirculation mode an indicator light will come on. This mode prevents outside air from entering your vehicle. It can be used to prevent outside air and odors from entering your vehicle and to help cool the air inside your vehicle more quickly. Recirculation mode is not available in defrost or defog mode.

(Air Conditioning Off): Press this button to turn the air conditioning compressor off. Press AUTO to return to automatic operation. When in AUTO, the air conditioning compressor will come on automatically, as needed.

Air conditioning does not operate at temperatures below about 35°F to 40°F (2°C to 4°C). In temperatures above 40°F (4°C), the air conditioning cannot be turned off in defrost and defog, as it helps to remove moisture from the vehicle. It also helps to keep the windows clear.

You may notice a slight change in engine performance when the air-conditioning compressor shuts off and turns on again. This is normal.
The system is designed to make adjustments to help with fuel economy while still maintaining the selected temperature.

On hot days, open the windows to let hot inside air escape; then close them. This helps to reduce the time it takes for your vehicle to cool down.
It also helps the system to operate more efficiently.

For quick cool down on hot days press the AUTO button and adjust the temperature to a cool, comfortable setting. To achieve maximum cool down, do the following:

1. Select the vent mode.
2. Select recirculation mode.
3. Select the A/C on.
4. Select the coolest temperature.
5. Select the highest fan speed.

Using these settings together for long periods of time may cause the air inside of your vehicle to become too dry. To prevent this from happening, after the air in your vehicle has cooled, turn the recirculation mode off.

The air conditioning system removes moisture from the air, so you may sometimes notice a small amount of water dripping underneath your vehicle while idling or after turning off the engine. This is normal.

Sensors

The solar sensor on your vehicle monitors the solar radiation and uses the information to maintain the selected temperature when operating in AUTO mode by initiating needed adjustments to the temperature, the fan speed and the air delivery system. The system may also supply cooler air to the side of the vehicle facing the sun. The recirculation mode will also be activated, as necessary. Do not cover the solar sensor located on the top of the instrument panel near the windshield or the system will not work properly.

There is also a sensor located behind the front bumper. This sensor reads the outside air temperature and helps to maintain the temperature inside the vehicle. Any cover on the front of the vehicle could give a false reading in the temperature.

If the outside temperature goes up, the displayed temperature will not change until:

- The vehicle's speed is above 12 mph (19 km/h) for five minutes.
- The vehicle's speed is above 32 mph (52 km/h) for two and a half minutes.

These delays prevent false readings. If the temperature goes down, the outside temperature will be shown when you start the vehicle. If it has been turned off for less than three hours, the temperature will be recalled from the previous vehicle operation.

There is also an inside temperature sensor located to the left of the ignition switch. The automatic climate control system uses this sensor to receive information, so if you block or cover it, the system will not function properly.

Defogging and Defrosting

Fog on the inside of windows is a result of high humidity and moisture condensing on the cool window glass. This can be minimized if the climate control system is used properly. There are two modes to clear fog or frost from your windshield. Use the floor/defog mode to clear the windows of fog or moisture and warm the passengers. Use defrost to remove fog or frost from the windshield more quickly. To prevent fogging on the inside of the windows in modes other than floor/defog and defrost, make sure the air conditioning compressor is on and recirculation mode is off.

Press the mode button until the defog mode appears on the display.

(Floor/Defog): This mode directs the air equally between the windshield and the floor outlets with a small amount to the side window outlets. When you select this mode, the system turns off recirculation and runs the air-conditioning compressor unless the outside temperature is at or below freezing. The recirculation mode cannot be selected while in the defog mode.

(Defrost): Pressing this button directs most of the air to the windshield, with a small amount directed to the side window outlets. The light on the button will come on and the digital display will show the defrost mode symbol and fan speed when the front defrost mode is being used. In this mode, the system will automatically turn off the recirculation and run the air-conditioning compressor, unless the outside temperature is at or below freezing. Recirculation cannot be selected while in the defrost mode. Pressing this button again will return the system to the last operating mode.

For severe ice conditions, turn the driver's temperature knob to 90°F (32°C) while in defrost mode.

Do not drive the vehicle until all the windows are clear.

Rear Window Defogger

The rear window defogger uses a warming grid to remove fog or frost from the rear window.

The rear window defogger will only work when the engine is running.

(Rear Window Defogger): Press this button to turn the rear window defogger on. Be sure to clear as much snow from the rear window as possible. An indicator light in the button will come on to let you know that the rear window defogger is activated.

The rear window defogger will turn off about 10 minutes after the button is pressed when traveling less than 30 mph (48 km/h). If turned on again, the defogger will only run for about five minutes before turning off. The defogger can also be turned off by pressing the button again or by turning off the engine.

Your vehicle has heated outside rearview mirrors. The mirrors will heat to help clear fog or frost from the surface of the mirrors when the rear window defog button is pressed.

If your vehicle has the power convertible top, the rear window defogger and heated mirrors are automatically disabled when the power convertible top is moving or down.

Notice: **Do not use anything sharp on the inside of the rear window. If you do, you could cut or damage the warming grid, and the repairs would not be covered by your warranty. Do not attach a temporary vehicle license, tape, a decal or anything similar to the defogger grid.**

Outlet Adjustment

Use the tab located on the air outlets to change the direction of the airflow.

Operation Tips

- Clear away any ice, snow or leaves from the air inlets at the base of the windshield that may block the flow of air into your vehicle.
- Use of non-GM approved hood deflectors may adversely affect the performance of the system.
- Keep the area around the base of the instrument panel console and air path under the seats clear of objects to help circulate the air inside of your vehicle more effectively.

Passenger Compartment Air Filter

The passenger compartment air filter removes certain particles from the air including pollen and dust particles. Reductions in airflow, which may occur more often in dusty areas, indicate that the filter may need to be replaced. See *Scheduled Maintenance on page 433* for information on how often to replace the filter.

Notice: **Driving without a passenger compartment air filter in place can cause water and small particles, like paper and leaves, to be pulled into your climate control system which may cause damage to it. Make sure you always replace the old filter with a new one.**

The passenger compartment air filter is located on the passenger side of the engine compartment near the battery. See *Engine Compartment Overview on page 328*.

To check or replace the air filter, do the following:

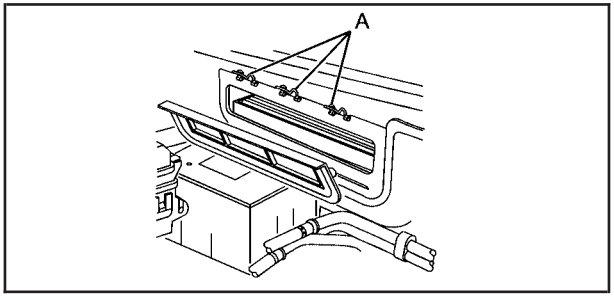

1. Undo the passenger compartment air filter housing cover retainer clips (A).
2. Remove the passenger compartment air filter housing cover.

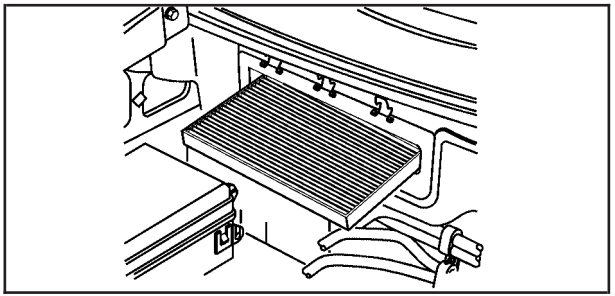

3. Remove the passenger compartment air filter from the housing.
4. Insert the new filter into the housing.
5. Reinstall the passenger compartment air filter housing cover.
6. Attach the passenger compartment air filter housing cover retainer clips.

Warning Lights, Gages, and Indicators

This part describes the warning lights and gages that may be on your vehicle. The pictures will help you locate them.

Warning lights and gages can signal that something is wrong before it becomes serious enough to cause an expensive repair or replacement. Paying attention to your warning lights and gages could also save you or others from injury.

Warning lights come on when there may be or is a problem with one of your vehicle's functions. As you will see in the details on the next few pages, some warning lights come on briefly when you start the engine just to let you know they are working. If you are familiar with this section, you should not be alarmed when this happens.

Gages can indicate when there may be or is a problem with one of your vehicle's functions. Often gages and warning lights work together to let you know when there is a problem with your vehicle.

When one of the warning lights comes on and stays on when you are driving, or when one of the gages shows there may be a problem, check the section that tells you what to do about it. Please follow this manual's advice. Waiting to do repairs can be costly — and even dangerous. So please get to know your warning lights and gages. They are a big help.

Your vehicle has a Driver Information Center that works along with the warning lights and gages. See *Driver Information Center (DIC) on page 205*.

Instrument Panel Cluster

Your instrument panel cluster and Driver Information Center (DIC) are designed to let you know at a glance how the vehicle is running. You will know how fast you are going, about how much fuel you have left and many other things you will need to know to drive safely and economically. The instrument panel cluster indicator warning lights, gages and DIC messages are explained on the following pages.

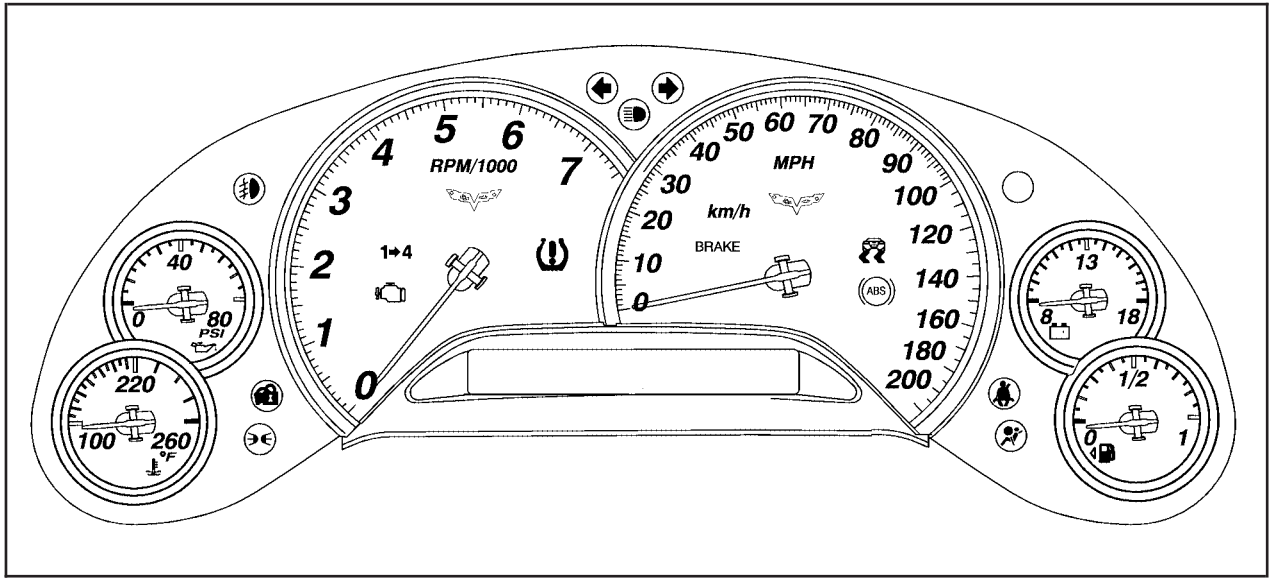

United States Manual Transmission shown, Canada, Automatic Transmission and Z06 Model similar

Speedometer and Odometer

Your speedometer lets you see your speed in either miles per hour (mph) or kilometers per hour (km/h). For more information see “Personal Options” under *DIC Vehicle Personalization on page 232*.

To read the odometer with the ignition off, turn on the parking lamps.

You may wonder what happens if your vehicle needs a new odometer installed. The mileage total of the new odometer will be set to the original miles (kilometers) of the old odometer. See your dealer if the odometer must be replaced in your vehicle.

Tachometer

The tachometer displays the engine speed in thousands of revolutions per minute (rpm).

Notice: **Fuel will shut off at about 6600 rpm for the base model and 7100 rpm for the Z06 model. If you continue to drive your vehicle at the fuel shut off rpm, you could damage your engine. Be sure to operate your vehicle below the fuel shut off rpm or reduce your rpm quickly when the fuel shuts off.**

Safety Belt Reminder Light

When the ignition is turned on, a chime will come on for several seconds to remind people to fasten their safety belts, unless the driver’s safety belt is already buckled.

The safety belt light will also come on and stay on for several seconds, then it will flash for several more.

This chime and light will be repeated if the driver remains unbuckled and the vehicle is in motion.

If the driver’s belt is already buckled, neither the chime nor the light will come on.

Airbag Readiness Light

There is an airbag readiness light on the instrument panel, which shows a deployed airbag symbol. The system checks the airbag's electrical system for malfunctions. The light tells you if there is an electrical problem. The system check includes the airbag modules, the wiring and the diagnostic module. For more information on the airbag system, see *Airbag System on page 50*.

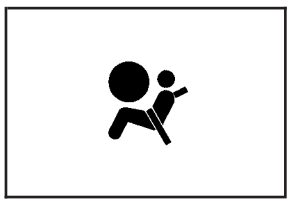

This light will come on when you start your vehicle, and it will flash for a few seconds. Then the light should go out. This means the system is ready.

If the airbag readiness light stays on after you start the vehicle or comes on when you are driving, your airbag system may not work properly. Have your vehicle serviced right away.

⚠ CAUTION:

If the airbag readiness light stays on after you start your vehicle, it means the airbag system may not be working properly. The airbags in your vehicle may not inflate in a crash, or they could even inflate without a crash. To help avoid injury to yourself or others, have your vehicle serviced right away if the airbag readiness light stays on after you start your vehicle.

The airbag readiness light should flash for a few seconds when you turn the vehicle on. If the light does not come on then, have it fixed so it will be ready to warn you if there is a problem.

Passenger Airbag Status Indicator

Your rearview mirror has a passenger airbag status indicator.

United States

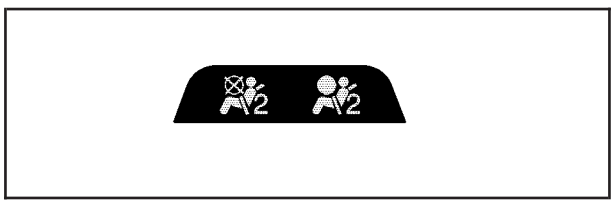

Canada

When the vehicle is started, the passenger airbag status indicator will light ON and OFF, or the symbol for on and off, for several seconds as a system check. Then, after several more seconds, the status indicator will light either ON or OFF, or either the on or off symbol, to let you know the status of the passenger's frontal airbag and side impact airbag (if equipped).

Your vehicle has a label on the sun visor that says, "Never put a rear-facing child seat in the front." This is because the risk to the rear-facing child is so great if the airbag deploys.

Never put a child in a rear-facing child restraint in the passenger's seat unless the passenger airbag status indicator shows off and the airbag is off. Here is why:

⚠ CAUTION:

Even though the passenger sensing system is designed to turn off the passenger's frontal airbag and side impact airbag (if equipped) if the system detects a rear-facing child restraint, no system is fail-safe, and no one can guarantee that an airbag will not deploy under some unusual circumstance, even though it is turned off. We recommend that rear-facing child restraints be transported in vehicles with a rear seat that will accommodate a rear-facing child restraint, whenever possible.

If the word ON or the on symbol is lit on the passenger airbag status indicator, it means that the passenger's frontal airbag and side impact airbag (if equipped) are enabled (may inflate).

⚠ CAUTION:

If the on indicator comes on when you have a rear-facing child restraint installed in the passenger's seat, it means that the passenger sensing system has not turned off the passenger's frontal airbag and side impact airbag (if equipped). A child in a rear-facing child restraint can be seriously injured or killed if the passenger's airbag inflates. This is because the back of the rear-facing child restraint would be very close to the inflating airbag. Do not use a rear-facing child restraint in the passenger's seat if the airbag is turned on.

If the word OFF or the off symbol is lit on the passenger airbag status indicator, it means that the passenger sensing system has turned off the passenger's airbag(s). See *Passenger Sensing System on page 59* for more on this, including important safety information.

If, after several seconds, all status indicator lights remain on, or if there are no lights at all, there may be a problem with the lights or the passenger sensing system. See your dealer for service.

⚠ CAUTION:

If the airbag off indicator and the airbag readiness light ever come on together, it means that something may be wrong with the airbag system. If this ever happens, have the vehicle serviced promptly, because an adult-size person sitting in the right front passenger seat may not have the protection of the airbag. See *Airbag Readiness Light on page 189*.

Voltmeter Gage

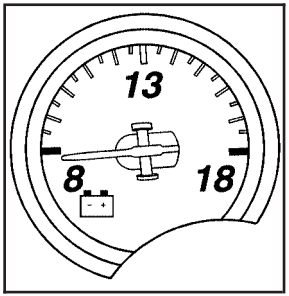

The voltmeter shows the voltage output of your battery. When the engine is running, it shows the voltage output of the charging system.

The reading will change as the rate of charge changes (with engine speed, for example), but if the voltmeter reads at 9 volts or below, your instrument panel cluster and other systems may shut down. The Driver Information Center (DIC) will read BATTERY VOLTAGE LOW when your vehicle is at 10 volts or below. Have it checked right away. Driving with the voltmeter reading at 10 volts or below could drain your battery and disable your vehicle.

One-to-Four Shift Light (Manual Transmission)

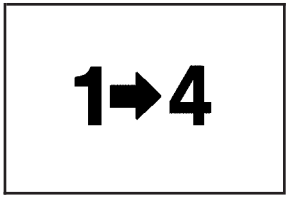

When this light comes on, you can only shift from FIRST (1) to FOURTH (4) instead of FIRST (1) to SECOND (2).

You must complete the shift into FOURTH (4) to turn off this feature. This helps you get the best possible fuel economy.

After shifting to FOURTH (4), you may downshift to a lower gear if you prefer.

Notice: **Forcing the shift lever into any gear except FOURTH (4) when the 1 TO 4 SHIFT light comes on may damage the transmission. Shift only from FIRST (1) to FOURTH (4) when the light comes on.**

This light will come on when:

- The engine coolant temperature is higher than 169°F (76°C),
- the vehicle is going 15 to 19 mph (24 to 31 km/h) and
- the vehicle 21 percent throttle or less.

Brake System Warning Light

Your vehicle's hydraulic brake system is divided into two parts. If one part is not working, the other part can still work and stop you. For good braking, though, you need both parts working well.

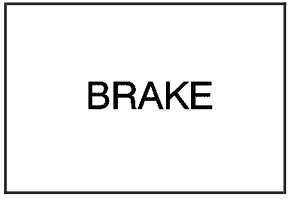

United States

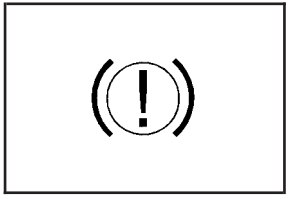

Canada

This light should come on when you start the engine. If it does not come on then, have it fixed so it will be ready to warn you if there is a problem.

If this warning light stays on after you start the engine, the parking brake may still be set or there could be a brake problem. Refer to *Parking Brake on page 103* to see if it is set. If the parking brake is not set, have your brake system inspected right away.

If the light comes on while you are driving and you have a CHECK BRAKE FLUID message showing on the DIC, pull off the road and stop carefully. You may notice that the pedal is harder to push or the pedal may go closer to the floor. It may take longer to stop. If the light is still on, have the vehicle towed for service. See *Towing Your Vehicle on page 313* and *DIC Warnings and Messages on page 212* for more information.

⚠ CAUTION:

Your brake system may not be working properly if the brake system warning light is on. Driving with the brake system warning light on can lead to an accident. If the light is still on after you have pulled off the road and stopped carefully, have the vehicle towed for service.

Anti-Lock Brake System Warning Light

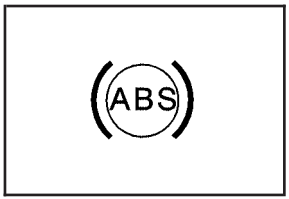

With the Anti-Lock Brake System (ABS), this light will come on when the engine is started and may stay on for several seconds.

If the light stays on, turn the ignition off. If the light comes on when you are driving, stop as soon as possible and turn the ignition off. Then start the engine again to reset the system. If the light still stays on, or comes on again while you are driving, your vehicle needs service. If the regular brake system warning light is not on, you still have brakes, but you do not have anti-lock brakes. If the regular brake system warning light is also on, you do not have anti-lock brakes and there is a problem with your regular brakes. See "SERVICE ANTILOCK BRAKES" under *DIC Warnings and Messages on page 212*.

The ABS warning light will come on briefly when you turn the ignition on. This is normal. If the light does not come on then, have it fixed so it will be ready to warn you if there is a problem.

Traction Control System (TCS) Warning Light

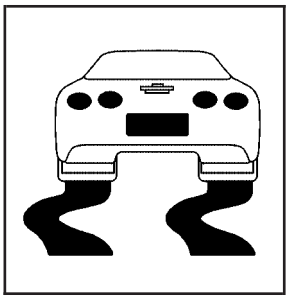

This light should come on briefly as you start the engine. If the light does not come on then, have it fixed so it will be ready to warn you if there is a problem.

If it stays on, or comes on and the Driver Information Center (DIC) shows a SERVICE TRACTION SYSTEM message when you are driving, there is a problem with your Traction Control System (TCS) and your vehicle needs service. When this light is on, the system will not limit wheel spin. Adjust your driving accordingly. If the driver turns off the TCS by pressing the button on the console, the TCS light will come on and the TRACTION SYSTEM OFF message will show on the DIC. See *DIC Warnings and Messages on page 212* for more information.

Active Handling System Light

The Active Handling System light will come on briefly as you start the engine. If the light does not come on then, have it fixed so it will be ready to warn you if there is a problem. This light will also come on when the ACTIVE HANDLING CALIBRATING message is displayed in the Driver Information Center (DIC).

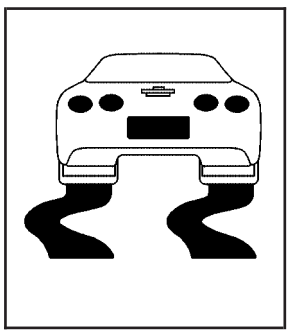

If the light stays on or comes on while you are driving, a chime sounds and a SERVICE ACTIVE HANDLING SYSTEM message appears on the DIC, there is a problem with your Active Handling System and your vehicle needs service.

The driver can acknowledge this message by pressing the RESET button. When the SERVICE ACTIVE HANDLING SYSTEM message is displayed in the DIC, the Active Handling System will not assist you in controlling the vehicle. You should have the system serviced as soon as possible. Adjust your driving accordingly.

When the system is working, you will see the ACTIVE HANDLING message displayed in the DIC. You may also feel or hear the system working. This is normal.

If the driver turns off the Active Handling System by pressing the button on the console for five seconds, the Active Handling System light will come on, a chime will sound, and the TRACTION SYSTEM AND ACTIVE HANDLING – OFF message will be displayed in the DIC. The Traction Control System will also be turned off. See *DIC Warnings and Messages on page 212* for more information.

If the Active Handling System and the Traction Control System are off, pressing the console button momentarily will turn both systems on. The DIC will display the TRACTION SYSTEM AND ACTIVE HANDLING – ON message, the instrument cluster light will be off, and a chime will sound. See *DIC Warnings and Messages on page 212* for more information.

Engine Coolant Temperature Gage

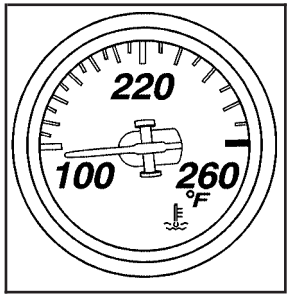

United States

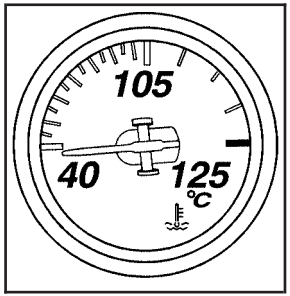

Canada

This gage shows the engine coolant temperature. If the gage pointer moves into the shaded area, your engine is too hot.

This means that your engine coolant has overheated. If you have been operating your vehicle under normal driving conditions, you should pull off the road, stop your vehicle and turn off the engine as soon as possible.

See *Engine Overheating on page 350* for more information.

Tire Pressure Light

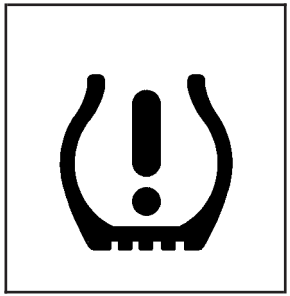

This light will come on briefly when you turn the ignition on.

This light will also come on when one or more of your tires are significantly underinflated.

A LOW TIRE PRESSURE message in the Driver Information Center (DIC) will accompany the light, see *DIC Warnings and Messages on page 212*

Stop and check your tires as soon as it is safe to do so. If underinflated, inflate to the proper pressure. See *Tires on page 378* for more information.

This light will flash for about 60 seconds and then turn on solid if a problem is detected with the Tire Pressure Monitor system.

See *Tire Pressure Monitor System on page 389* for more information.

Malfunction Indicator Lamp

Check Engine Light

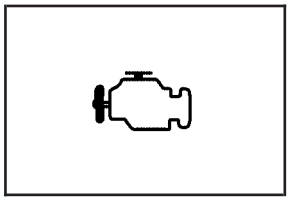

Your vehicle has a computer which monitors operation of the fuel, ignition, and emission control systems.

This system is called OBD II (On-Board Diagnostics-Second Generation) and is intended to assure that emissions are at acceptable levels for the life of the vehicle, helping to produce a cleaner environment. The check engine light comes on to indicate that there is a problem and service is required. Malfunctions often will be indicated by the system before any problem is apparent. This may prevent more serious damage to your vehicle. This system is also designed to assist your service technician in correctly diagnosing any malfunction.

Notice: **If you keep driving your vehicle with this light on, after awhile, your emission controls may not work as well, your fuel economy may not be as good, and your engine may not run as smoothly. This could lead to costly repairs that may not be covered by your warranty.**

Notice: **Modifications made to the engine, transmission, exhaust, intake, or fuel system of your vehicle or the replacement of the original tires with other than those of the same Tire Performance Criteria (TPC) can affect your vehicle's emission controls and may cause this light to come on. Modifications to these systems could lead to costly repairs not covered by your warranty. This may also result in a failure to pass a required Emission Inspection/Maintenance test. See *Accessories and Modifications on page 318*.**

This light should come on briefly, as a check to show you it is working, as you start the engine. If the light does not come on, have it repaired. This light will also come on during a malfunction in one of two ways:

- **Light Flashing** — A misfire condition has been detected. A misfire increases vehicle emissions and may damage the emission control system on your vehicle. Diagnosis and service may be required.
- **Light On Steady** — An emission control system malfunction has been detected on your vehicle. Diagnosis and service may be required.

If the Light Is Flashing

The following may prevent more serious damage to your vehicle:

- Reducing vehicle speed
- Avoiding hard accelerations
- Avoiding steep uphill grades

If the light stops flashing and remains on steady, see “If the Light Is On Steady” following.

If the light continues to flash, when it is safe to do so, stop the vehicle. Find a safe place to park your vehicle. Turn the engine off, wait at least 10 seconds and restart the engine. If the light remains on steady, see “If the Light Is On Steady” following. If the light is still flashing, follow the previous steps, and see your dealer for service as soon as possible.

If the Light Is On Steady

You also may be able to correct the emission system malfunction by considering the following:

Did you recently put fuel into your vehicle?

If so, reinstall the fuel cap, making sure to fully install the cap. See *Filling the Tank on page 323*. The diagnostic system can determine if the fuel cap has been left off or improperly installed. A loose or missing fuel cap will allow fuel to evaporate into the atmosphere. A few driving trips with the cap properly installed should turn the light off.

Did you just drive through a deep puddle of water?

If so, your vehicle's electrical system may be wet. The condition will usually be corrected when the electrical system dries out. A few driving trips should turn the light off.

Have you recently changed brands of fuel?

If so, be sure to fuel your vehicle with quality fuel. See *Gasoline Octane on page 320*. Poor fuel quality will cause the engine not to run as efficiently as designed. You may notice this as stalling after start-up, stalling when you put the vehicle into gear, misfiring, hesitation on acceleration, or stumbling on acceleration. (These conditions may go away once the engine is warmed up.) This will be detected by the system and cause the light to turn on.

If you experience one or more of these conditions, change the fuel brand you use. It will require at least one full tank of the proper fuel to turn the light off.

If none of the above steps have made the light turn off, your dealer can check the vehicle. Your dealer has the proper test equipment and diagnostic tools to fix any mechanical or electrical problems that may have developed.

Emissions Inspection and Maintenance Programs

Some state/provincial and local governments have or may begin programs to inspect the emission control equipment on your vehicle. Failure to pass this inspection could prevent you from getting a vehicle registration.

Here are some things you need to know to help your vehicle pass an inspection:

Your vehicle will not pass this inspection if the check engine light is on or not working properly.

To perform a check engine light bulb check with the keyless ignition, make sure the transmitter fob is in the passenger compartment. See *Ignition Positions on page 90*. Press the bottom of the Acc. button on the instrument panel and hold the button down for five seconds. The instrument panel, including the check engine light, will light up and the ignition will be on, but the engine will not start — if you press the bottom of the Acc. button only briefly, less than five seconds, the accessory power mode will be turned on, but not the ignition. After the bulb check, be sure to press and release the Acc. button again to turn the ignition off and avoid draining the vehicle's battery.

Your vehicle will not pass this inspection if the OBD (on-board diagnostic) system determines that critical emission control systems have not been completely diagnosed by the system. The vehicle would be considered not ready for inspection. This can happen if you have recently replaced the battery or if the battery has run down. The diagnostic system is designed to evaluate critical emission control systems during normal driving. This may take several days of routine driving. If you have done this and your vehicle still does not pass the inspection for lack of OBD system readiness, your dealer can prepare the vehicle for inspection.

Engine Oil Pressure Gage

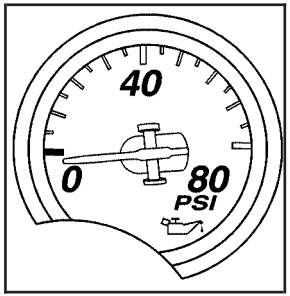

United States

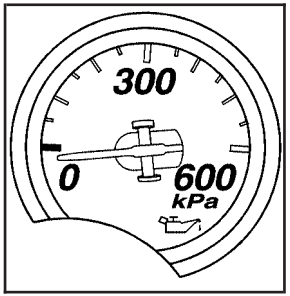

Canada

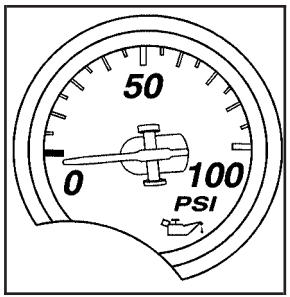

United States — Z06 Model

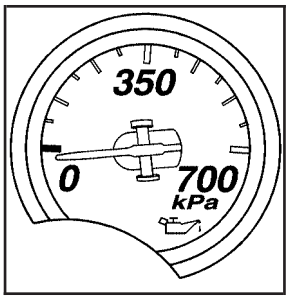

Canada — Z06 Model

The engine oil pressure gage shows the engine oil pressure in psi (pounds per square inch) or kPa (kilopascals) when the engine is running.

Oil pressure should be 20 to 80 psi (140 to 550 kPa). In certain situations such as long, extended idles on hot days, it could read as low as 6 psi (40 kPa) and still be considered normal. It may vary with engine speed, outside temperature and oil viscosity, but readings above the shaded area show the normal operating range. Readings in the shaded area tell you that the engine is low on oil, or that you might have some other oil problem. See *Engine Oil on page 332*.

The engine oil pressure can also be displayed using the GAGES button on the Driver Information Center (DIC). See *Driver Information Center (DIC) on page 205*.

⚠ CAUTION:

Do not keep driving if the oil pressure is low. If you do, your engine can become so hot that it catches fire. You or others could be burned. Check your oil as soon as possible and have your vehicle serviced.

Notice: **Lack of proper engine oil maintenance may damage the engine. The repairs would not be covered by your warranty. Always follow the maintenance schedule in this manual for changing engine oil.**

Security Light

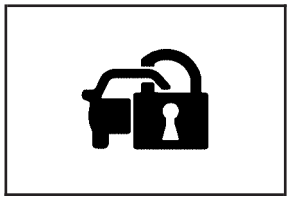

For information regarding this light, see *Theft-Deterrent Systems on page 88*.

Fog Lamp Light

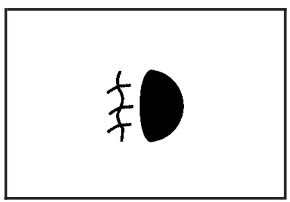

The fog lamp light will come on when the fog lamps are in use.

The light will go out when the fog lamps are turned off. See *Fog Lamps on page 169* for more information.

Lights On Reminder

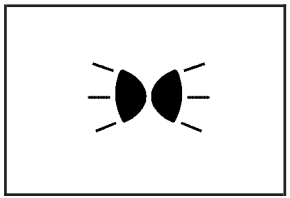

This light comes on whenever the parking lamps are on.

See *Headlamps on Reminder on page 167* for more information.

Highbeam On Light

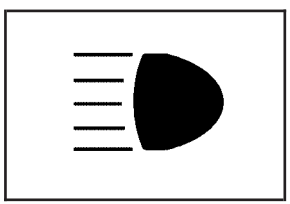

This light comes on whenever the high-beam headlamps are on.

See *Headlamp High/Low-Beam Changer on page 160* for more information.

Fuel Gage

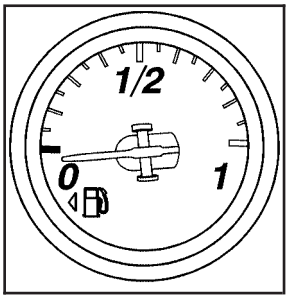

Your fuel gage tells you about how much fuel you have left when the engine is on.

When the needle approaches the low fuel symbol, a chime will sound and LOW FUEL will appear on the Driver Information Center (DIC) display. At this time, you still have a little fuel left, but you should get more soon.

Press the RESET button to acknowledge a DIC message(s). Pressing the RESET button will also turn off a DIC message but the LOW FUEL message will come on again in 10 minutes if you have not added fuel to the vehicle.

Here are five things that some owners ask about. All these things are normal and do not indicate that anything is wrong with the fuel gage.

- At the gas station, the gas pump shuts off before the gage reads the full symbol.
- It takes more (or less) fuel to fill up than the gage reads. For example, the gage reads half full, but it took more (or less) than half of the tank's capacity to fit it.
- The gage pointer may move while cornering, braking or speeding up.
- The gage may not indicate the tank is empty when the ignition is turned off.
- The gage reading may change slightly within the first several minutes after starting the vehicle.

See *DIC Controls and Displays on page 206* for more information.

Driver Information Center (DIC)

The Driver Information Center (DIC) gives you the status of many of your vehicle's systems. It is also used to display driver personalization features and warning/status messages. The DIC display is located on the instrument panel cluster below the speedometer and tachometer, directly above the steering column. The DIC buttons are located on the instrument panel, to the right of the instrument panel cluster.

The DIC comes on when the ignition is turned on. After displaying CORVETTE BY CHEVROLET, the DIC will display the current driver and the information that was last displayed before the engine was turned off.

If a problem is detected, a warning message will appear on the DIC display. Be sure to take any message that appears on the display seriously and remember that clearing the message will only make the message disappear, not correct the problem.

If your vehicle has the Head-Up Display (HUD) and you use the Manual Paddle Shift feature, the gear will display in the HUD, except if your vehicle has the Navigation system and the HUD is displaying turn-by-turn guidance information. If the HUD is displaying turn-by-turn guidance information, the gear instead displays in the DIC. See “Manual Paddle Shift” under *Automatic Transmission Operation on page 95* and “Head-Up Display (HUD)” in the index of the Navigation system manual for more information.

DIC Controls and Displays

The Driver Information Center (DIC) has different modes which can be accessed by pressing the following buttons located on the instrument panel, to the right of the instrument panel cluster.

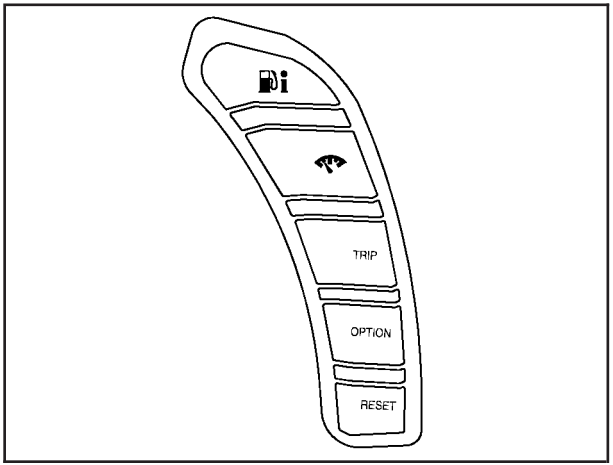

(Fuel): Press this button to display fuel information such as fuel economy and range.

(Gages): Press this button to display gage information like oil pressure and temperature, coolant temperature, automatic transmission fluid temperature, if equipped, battery voltage, and front/rear tire pressures.

TRIP: Press this button to display your total and trip distance driven, the elapsed time function, your average speed, and the engine oil life.

OPTION: Press this button to choose personal options that are available on your vehicle, depending on the options your vehicle is equipped with, such as door locks, easy entry seats, and language.

RESET: Press this button, used along with the other buttons, to reset system functions, select personal options, and turn off or acknowledge messages on the DIC.

FUEL Button

The fuel button displays average fuel economy and instantaneous fuel economy, calculated for your specific driving conditions, and range information.

Average Fuel Economy: The average fuel economy is viewed as a long-term approximation of your overall driving conditions. You should reset the average fuel economy display every time you refuel. If you press the RESET button in this mode while you are driving, the system will reset this display and begin figuring fuel economy from that point in time.

Press the fuel button to display average fuel economy, such as:

- AVERAGE FUEL ECONOMY 20.1 MPG or
- AVERAGE FUEL ECONOMY 11.7 L/100 km

Instantaneous Fuel Economy: Instantaneous fuel economy reflects only the fuel economy that the vehicle has right now and will change frequently as driving conditions change. Unlike average fuel economy, this menu item cannot be reset.

Press the fuel button again to display instantaneous fuel economy, such as:

- INSTANT FUEL ECONOMY 20.1 MPG or
- INSTANT FUEL ECONOMY 11.7 L/100 km

Fuel Range: The range calculates the remaining distance you can drive without refueling. It is based on fuel economy and the fuel remaining in the tank.

Press the fuel button again to display the range, such as:

- RANGE 30 MI or
- RANGE 48 km

If the LOW FUEL warning is displayed or if RANGE is less than 40 miles (64 km), the display will read RANGE LOW.

The fuel economy data used to determine fuel range is an average of recent driving conditions. As your driving conditions change, this data is gradually updated automatically.

If the vehicle has been idling for a long time, the range displayed on the DIC could be abnormally low. The vehicle must be driven 5–10 miles (8–16 km) to get an accurate reading.

GAGES Button

The gages button displays oil pressure, oil temperature, coolant temperature, transmission fluid temperature for automatic transmission vehicles only, battery voltage, and tire pressure information.

Oil Pressure: This display shows the oil pressure.

Press the gages button to display the oil pressure, such as:

- OIL PRESSURE 40 PSI or
- OIL PRESSURE 276 kPa

Oil Temperature: This display shows the oil temperature.

Press the gages button again to display the oil temperature, such as:

- OIL TEMPERATURE 234°F or
- OIL TEMPERATURE 112°C

If the oil temperature is low, the display will show OIL TEMPERATURE LOW. If the oil temperature is high, the display will show OIL TEMPERATURE HIGH.

Coolant Temperature: This display shows the engine coolant temperature.

Press the gages button again to display the coolant temperature, such as:

- COOLANT TEMPERATURE 123°F or
- COOLANT TEMPERATURE 51°C

If the coolant temperature is low, the display will show COOLANT TEMPERATURE LOW. If the coolant temperature is high, the display will show COOLANT TEMPERATURE HIGH.

Transmission Fluid Temperature: If you have an automatic transmission vehicle, this display shows the automatic transmission fluid temperature.

Press the gages button again to display the automatic transmission fluid temperature, such as:

- TRANS FLUID TEMP 123°F or
- TRANS FLUID TEMP 51°C

If the transmission fluid temperature is low, the display will show TRANS FLUID TEMP LOW. If the transmission fluid temperature is high, the display will show TRANS FLUID TEMP HIGH.

Battery Voltage: This display shows the current battery voltage.

Press the gages button again to display the battery voltage, such as:

- BATTERY VOLTAGE 13.5 VOLTS

Tire Pressure: This display shows the tire pressure for each tire.

Press the gages button again to display the tire pressure for the front tires, such as:

- FRONT TIRE PRESSURES L 34 PSI R 33 PSI or
- FRONT TIRE PRESSURES L 234 kPa R 228 kPa

Press the gages button again to display the tire pressure for the rear tires, such as:

- REAR TIRE PRESSURES L 34 PSI R 33 PSI or
- REAR TIRE PRESSURES L 234 kPa R 228 kPa

TRIP Button

The TRIP button displays the odometer, trip distance, elapsed time, average speed, and oil life remaining information.

Odometer: The odometer shows how far your vehicle has been driven in either miles or kilometers. Press the TRIP button to display odometer readings, such as:

- ODOMETER 12345 MI or
- ODOMETER 20008 km

You can also display the odometer by turning on the parking lamps.

Trip Odometers: There are two trip odometers. Press the TRIP button to display TRIP ODOMETER A readings and press the button again to display TRIP ODOMETER B readings, such as:

- TRIP ODOMETER A 130.5 MI or
- TRIP ODOMETER A 209.9 km
- TRIP ODOMETER B 300.5 MI or
- TRIP ODOMETER B 483.5 km

Both of the trip odometers can be used simultaneously. TRIP A could be used to track the distance to a destination. TRIP B could be used to track maintenance periods. The trip odometers can be reset by pressing the RESET button on the DIC.

There is also a miles since last ignition feature that displays the number of miles (kilometers) driven since you last started the vehicle. Press and hold the RESET button for three seconds, then release it. The miles (kilometers) since the last ignition cycle will be set into the trip odometer.

Elapsed Timer: Press the TRIP button until ELAPSED TIMER is displayed, such as ELAPSED TIMER .00.

When the ignition is in on, the DIC can be used as a stopwatch. The display can show hours, minutes and seconds. The elapsed time indicator will record up to 23 hours, 59 minutes and 59 seconds, then it will reset to zero and continue counting. The display appears as ELAPSED TIMER .00 in the elapsed time function.

You can start or stop the elapsed time by pressing the RESET button. To reset the elapsed time to zero, press the RESET button for three seconds while the timer is displayed.

Pressing and holding the RESET button for at least 10 seconds will reset the timer display to the time since last ignition cycle.

Average Speed: Press the TRIP button until the average speed is displayed, such as:

- AVERAGE SPEED 62 MPH or
- AVERAGE SPEED 100 km/h

Press and hold the RESET button to reset to 0.0 mph (km/h).

Engine Oil Life: Press the TRIP button until the engine oil life is displayed, such as OIL LIFE REMAINING 89%.

This is an estimate of the engine oil's remaining useful life. It will show 100% when the system is reset after an oil change. It will alert you to change your oil on a schedule consistent with your driving conditions.

When the remaining oil life is low, the system will alert you with the message CHANGE ENGINE OIL.

Remember, you must reset the engine oil life system yourself after each oil change. It will not reset itself. To reset the system, see *Engine Oil Life System on page 340*. Be careful not to reset the engine oil life system accidentally at any time other than when the oil has just been changed. It cannot be reset accurately until the next oil change.

See *Scheduled Maintenance on page 433* and *Engine Oil on page 332* for more information.

OPTION Button

The OPTION button allows you to access the PERSONAL OPTIONS menu and customize the personalization settings on your vehicle. See *DIC Vehicle Personalization on page 232* for more information.

RESET Button

The RESET button, used along with other buttons, will reset system functions and turn off or acknowledge messages on the DIC.

DIC Warnings and Messages

Messages are displayed on the DIC to notify the driver that the status of the vehicle has changed and that some action may be needed by the driver to correct the condition. Multiple messages may appear one after another. You can scroll through the messages that may have been sent at the same time. The DIC is continuously updated with the vehicle performance status.

Some messages may not require immediate action, but you can press the RESET button to acknowledge that you received the messages and to clear them from the display.

Some messages cannot be cleared from the DIC display because they are more urgent. These messages require action before they can be cleared. You should take any messages that appear on the display seriously and remember that clearing the messages will only make the messages disappear, not correct the problem.

The following are the possible messages that can be displayed and some information about them.

ABS (Anti-lock Brake System) ACTIVE

This message displays when the Anti-lock Brake System (ABS) is adjusting brake pressure to help avoid a braking skid.

Slippery road conditions may exist if this message is displayed, so adjust your driving accordingly. The message stays on for a few seconds after the system stops adjusting brake pressure. See *Anti-Lock Brake System (ABS) on page 277* for more information.

ACTIVE HANDLING

This message displays when the Active Handling System is operating. The Active Handling System is a computer controlled system that assists the driver in controlling the vehicle in difficult driving conditions. You may feel or hear the system working and see the ACTIVE HANDLING message displayed in the DIC. This message stays on for a few seconds following the active handling event. This is normal when the system is operating. See *Active Handling System on page 281* and *Braking on page 276*.

ACTIVE HANDLING CALIBRATING

This message displays and the active handling system light on the instrument panel cluster turns on while the system is calibrating after exceeding 19 mph (30 km/h) for 10 seconds. See *Active Handling System Light on page 196*. The Active Handling System is not functional yet. The Active Handling System performance is affected until the next message ACTIVE HANDLING READY is displayed. The Active Handling System is off until the ACTIVE HANDLING READY message is displayed. See *Active Handling System on page 281* for more information.

ACTIVE HANDLING READY

This message displays when the functional check of the Active Handling System has been completed. See *Active Handling System on page 281* for more information.

ACTIVE HANDLING WARMING UP

This message may display when you first start your vehicle during cold winter weather, and begin to drive away, up to 6 mph (10 km/h). This is normal. The Active Handling System performance is affected until the next message ACTIVE HANDLING READY is displayed in the DIC. See *Active Handling System on page 281* for more information.

To acknowledge the message, press the RESET button.

ATTACH TRUNK PARTITION

If your vehicle has a power convertible top, this message displays and a chime sounds if the trunk partition is not in place. Open the hatch/trunk and make sure the trunk partition is secure and no objects are on the trunk partition. See *Rear Storage Area on page 130* for more information.

BATTERY SAVER ACTIVE

This message displays when the vehicle has detected that the battery voltage is dropping beyond a reasonable point. The battery saver system starts reducing certain features of the vehicle that you may be able to notice. At the point that features are disabled, this message is displayed. It means that the vehicle is trying to save the charge in the battery. Turn off unnecessary accessories to allow the battery to recharge.

BUCKLE PASSENGER

This message reminds you to buckle the passenger's safety belt.

This message displays and a chime sounds when the ignition is on, the driver's safety belt is buckled, the passenger's safety belt is unbuckled with the passenger airbag enabled, and the vehicle is in motion. You should have the passenger buckle their safety belt.

The reminder will be repeated if the ignition is on, the vehicle is in motion, the driver is buckled and the passenger is still unbuckled, and the passenger airbag is enabled. If the passenger's safety belt is already buckled, this message and chime will not come on.

BUCKLE SEATBELT

This message reminds you to buckle the driver's safety belt.

This message displays and a chime sounds when the ignition is on, the driver's safety belt is unbuckled, and the vehicle is in motion. You should buckle your safety belt.

If the driver remains unbuckled when the ignition is on and the vehicle is in motion, the reminder will be repeated. If the driver's safety belt is already buckled, this message and chime will not come on.

This message is an additional reminder to the safety belt reminder light in the instrument panel cluster. See *Safety Belt Reminder Light on page 188* for more information.

CHANGE ENGINE OIL

This message displays when the life of the engine oil has expired. See *Scheduled Maintenance on page 433*. After an oil change, the engine oil life system must be reset. See “Engine Oil Life” under *DIC Controls and Displays on page 206*. Also, see *Engine Oil on page 332* and *Engine Oil Life System on page 340* for more information.

CHECK BRAKE FLUID

This message displays, a chime sounds, and the brake system warning light on the instrument panel cluster turns on if the ignition is on to inform the driver that the brake fluid level is low. See *Brake System Warning Light on page 194*. Have the brake system serviced by your dealer as soon as possible. See *Brakes on page 360*.

CHECK COOLANT LEVEL

This message displays when the engine coolant level is low. Have the cooling system serviced by your dealer as soon as possible. See *Engine Coolant on page 347*.

CHECK GAS CAP

This message displays if the fuel cap has not been fully tightened. Check the fuel cap to make sure that it is on properly. Once tightened, it takes at least one overnight park to reset or clear this message. If both the CHECK GAS CAP message and the malfunction indicator lamp in the instrument panel cluster are on, you may need to see your dealer for service. See *Malfunction Indicator Lamp on page 198* for more information.

CHECK OIL LEVEL

This message displays and two chimes sound if the oil level in the vehicle is low. Once the vehicle senses a change in the engine oil level, the light remains off.

If this message appears after starting the engine, the engine oil level may be too low. You may need to add oil. See *Engine Overheating on page 350*.

To acknowledge the message, press the RESET button. The message reappears every 10 minutes until this condition changes.

CLOSE TRUNK TO MOVE TOP

This message displays and a chime sounds if the trunk is open while you are trying to operate the convertible top. Make sure the trunk is closed before operating the convertible top. See *Convertible Top (Manual) on page 138* or *Convertible Top (Power) on page 145*.

COMPETITIVE DRIVING MODE

This message displays and a short chime sounds when the Competitive Driving mode is selected. The instrument panel cluster light will not be on when the Competitive Driving mode is selected. The Traction Control System (TCS) will not be operating while in the Competitive Driving mode. Adjust your driving accordingly. See *Racing or Other Competitive Driving on page 290* for more information.

COOLANT OVER TEMPERATURE

This message displays and a chime sounds if the engine coolant exceeds 255°F (124°C). If you have been operating your vehicle under normal driving conditions, pull off the road, stop your vehicle, and turn off the engine as soon as possible.

You can monitor the coolant temperature with the gages button on the DIC or the engine coolant temperature gage on the instrument panel cluster. See *Engine Overheating on page 350*, *DIC Controls and Displays on page 206*, and *Engine Coolant Temperature Gage on page 197*.

To acknowledge the message, press the RESET button. The message reappears and a chime sounds every minute until this condition changes. If you do not press the RESET button, the message remains on until the condition changes.

CRUISE DISENGAGED

This message displays briefly when you disengage the cruise control system by stepping on the brake on an automatic transmission vehicle or the clutch on a manual transmission vehicle, or by turning off the cruise control switch. See *Cruise Control on page 162* for more information.

ENGINE DRAG CONTROL ACTIVE

This message displays when engine drag control is active. When driving in a lower gear in rainy, snowy, or icy conditions and then letting up on the accelerator or downshifting, the rear wheels may begin to slip and this message displays. This message stays on for a few seconds following the engine drag control event.

ENGINE OVERHEATED – STOP ENGINE

This message displays and a continuous chime sounds when the engine has overheated. Stop and turn the engine off immediately to avoid severe engine damage. See *Engine Overheating on page 350*.

ENGINE PROTECTION REDUCE ENGINE RPM

This message displays if the engine oil temperature exceeds 320°F (160°C). Check the engine coolant temperature and engine oil level. If the engine is too hot, see *Engine Overheating on page 350*. Your vehicle may need service, so see your dealer.

You can monitor the oil temperature with the gages button on the DIC. See *DIC Controls and Displays on page 206*.

Multiple chimes sound when this message is displayed. This message remains displayed and active until the issue is resolved.

HEADLAMPS SUGGESTED

This message displays if it is dark enough outside and the headlamps and the Twilight Sentinel® controls are off. This message informs the driver that turning on the exterior lamps is recommended. It has become dark enough outside to require the headlamps and/or other exterior lamps.

HIGH TIRE PRESSURE

This message displays when one or more of the tires is over-inflated. This message also displays LEFT FRONT, RIGHT FRONT, LEFT REAR, or RIGHT REAR to indicate which tire is affected. You can receive more than one tire pressure message at a time. To read other messages that may have been sent at the same time, press the RESET button. If a tire pressure message appears on the DIC, stop as soon as you can.

Have the tire pressures checked and set to those shown on the Tire Loading Information label. See *Extended Mobility Tires on page 384*, *Loading Your Vehicle on page 307*, *Inflation - Tire Pressure on page 386*, and *Tire Pressure Monitor System on page 389*.

To acknowledge the message, press the RESET button. A message reappears every 10 minutes until the condition is corrected.

The DIC display also shows the tire pressure values for the front and rear tires by pressing the gages button. See *DIC Controls and Displays on page 206*.

HOT ENGINE AIR CONDITIONING OFF

This message displays when the engine coolant becomes hotter than the normal operating temperature. To avoid added strain on a hot engine, the air conditioning compressor is automatically turned off. When the coolant temperature returns to normal, the A/C operation automatically resumes. You can continue to drive your vehicle. If this message continues to appear, have the system repaired by your dealer as soon as possible to avoid compressor damage.

ICE POSSIBLE

This message displays when the outside air temperature is cold enough to create icy road conditions. Adjust your driving accordingly.

LOW FUEL

This message displays when the fuel tank is less than 10 percent full and the display is turned off. A multiple chime also sounds when this message is displayed. Refill the fuel tank as soon as possible. See *Fuel Gage on page 204*.

LOW OIL PRESSURE

This message displays if low oil pressure levels occur. If this message appears while the engine is running, stop the engine and do not operate it until the cause of low oil pressure is corrected. Severe damage to the engine can result.
A multiple chime sounds when this message is displayed. See *Engine Oil on page 332*.

LOW TIRE PRESSURE

⚠ CAUTION:

When the LOW TIRE PRESSURE or TIRE FLAT message is displayed on the Driver Information Center, your vehicle's handling capabilities will be reduced during severe maneuvers. The active handling system will be affected. See *Active Handling System on page 281*. If you drive too fast, you could lose control of your vehicle. You or others could be injured. Do not drive over 55 mph (90 km/h) when the LOW TIRE PRESSURE or TIRE FLAT message is displayed. Drive cautiously and check your tire pressures as soon as you can.

This message displays when one or more of the tires is under-inflated. This message also displays LEFT FRONT, RIGHT FRONT, LEFT REAR, or RIGHT REAR to indicate which tire is affected. Multiple chimes sound and the tire pressure light on the instrument panel cluster turns on when this message is displayed. See *Tire Pressure Light on page 197*. You can receive more than one tire pressure message at a time. To read other messages that may have been sent at the same time, press the RESET button. If a tire pressure message appears on the DIC, stop as soon as you can. Have the tire pressures checked and set to those shown on the Tire Loading Information label. See *Extended Mobility Tires on page 384*, *Loading Your Vehicle on page 307*, *Inflation - Tire Pressure on page 386*, and *Tire Pressure Monitor System on page 389*.

To acknowledge the message, press the RESET button. A message reappears every 10 minutes until the condition is corrected.

The DIC display also shows the tire pressure values for the front and rear tires by pressing the gages button. See *DIC Controls and Displays on page 206*.

MAXIMUM SPEED 80 MPH (129 km/h)

This message displays when a malfunction is present in the Selective Ride Control system. The vehicle speed will be limited to a value determined by the vehicle when the shock absorber system has failed and the shocks are in their full soft mode. Have your vehicle serviced by your dealer as soon as possible.

To acknowledge the message, press the RESET button. The message reappears every 10 minutes until this condition changes.

NO FOBS DETECTED

This message displays if the vehicle does not detect the presence of a keyless access transmitter when you have attempted to start the vehicle or a vehicle door has just closed. The following conditions may cause this message to appear:

- Driver-added equipment plugged into the accessory power outlet on the center console is causing interference. Examples of these devices are cell phones and cell phone chargers, two-way radios, power inverters, or similar items. Try moving the keyless access transmitter away from these devices when starting the vehicle. In addition, PDA devices and remote garage and gate openers may also generate Electromagnetic Interference (EMI) that may interfere with the keyless access transmitter. Do not carry the keyless access transmitter in the same pocket or bag as these devices.
- The vehicle is experiencing Electromagnetic Interference (EMI). Some locations, such as airports, automatic toll booths, and some gas stations have EMI fields which may interfere with the keyless access transmitter.

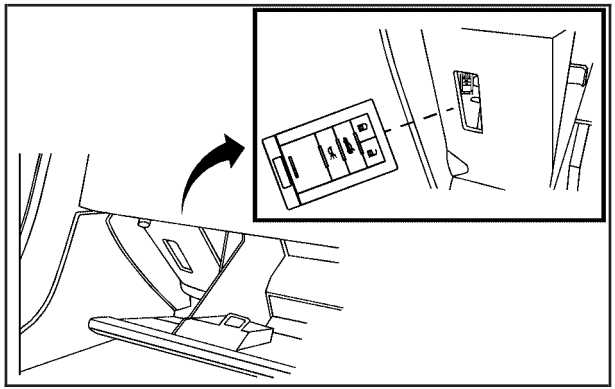

If moving the transmitter to different locations within the vehicle does not help, place the transmitter in the glove box transmitter pocket with the buttons facing to the right and then press the START button.

- The vehicle's battery voltage is low. The battery voltage must be above 10 volts for the keyless access transmitter to be detected properly.

NO FOB - OFF OR RUN?

This message displays when the keyless access transmitter is not detected inside the vehicle while you are trying to turn the ignition off. Your vehicle may be near a strong radio antenna signal causing the keyless access system to be jammed. The vehicle will remain in Acc. until OFF or START has been pressed or five minutes has expired. If you turn the ignition off and you cannot find the keyless access transmitter, you will not be able to restart the vehicle. The keyless access transmitter needs to be inside of the vehicle in order for the vehicle to start. See *Starting the Engine on page 91* for more information.

OPTIONS UNAVAILABLE

This message displays for a few seconds if a keyless access transmitter that is not labelled 1 or 2 is used and you try to personalize the features on your vehicle by pressing the OPTION button. The personalization system will not recognize the transmitter and the DIC will not display the current driver number or the menus used to set personalizations. The personalization features will then be set to the default states. See *DIC Vehicle Personalization on page 232* for more information.

PRESS BRAKE TO START ENGINE (Automatic Transmission Only)

This message displays if you try to start the engine by pressing the keyless ignition start button without having the brake pressed. The brake needs to be pressed when starting the engine. See *Ignition Positions on page 90* for more information.

REDUCED ENGINE POWER

If this message displays and the check engine light comes on, a noticeable reduction in the vehicle's performance may occur. If the REDUCED ENGINE POWER message is displayed, but there is no reduction in performance, proceed to your destination. The performance may be reduced the next time the vehicle is driven.

The vehicle may be driven at a reduced speed while the REDUCED ENGINE POWER message is displayed, but acceleration and speed may be reduced. Anytime the check engine light stays on, the vehicle should be taken to your dealer as soon as possible for diagnosis and repair. See *Malfunction Indicator Lamp on page 198* for more information.

Multiple chimes sound when this message is displayed.

To acknowledge the message, press the RESET button. The message reappears every five minutes until this condition changes.

If the REDUCED ENGINE POWER message is displayed in combination with the COOLANT OVER TEMPERATURE message, see *Engine Overheating on page 350*.

SERVICE ACTIVE HANDLING SYSTEM

This message displays if there is a problem with the Active Handling System and your vehicle needs service. The active handling system light on the instrument panel cluster also turns on and a chime sounds. See your dealer. When this message is displayed, the system is not working. Adjust your driving accordingly. See *Active Handling System on page 281* for more information.

SERVICE AIR CONDITIONING

This message displays when the electronic sensors that control the air conditioning and heating systems are no longer working. Have the climate control system serviced by your dealer if you notice a drop in heating and air conditioning efficiency.

SERVICE ANTILOCK BRAKES

If this message displays while you are driving, stop as soon as possible and turn the ignition off. Then start the engine again to reset the system. If the message stays on, or comes back on again while you are driving, your vehicle is in need of service. See your dealer. If the anti-lock brake system (ABS) warning light is on and the regular brake system warning light is not on, you still have brakes, but do not have ABS. If the regular brake system warning light is also on, you do not have ABS and there is a problem with the brakes. See *Anti-Lock Brake System Warning Light on page 195* and *Brake System Warning Light on page 194*.

If this message is displayed, the Traction Control System (TCS) and the Active Handling System will also be disabled. The DIC will scroll three messages: SERVICE ANTILOCK BRAKES, SERVICE TRACTION SYSTEM, and SERVICE ACTIVE HANDLING, and the instrument panel cluster lights will come on along with a chime. When the service message is displayed, the computer controlled systems will not assist the driver. Have the system repaired by your dealer as soon as possible. Adjust your driving accordingly.

To acknowledge these messages, press the RESET button.

SERVICE CHARGING SYSTEM

If this message displays while you are driving, there may be a problem with the electrical charging system. It could mean that there is a loose or broken drive belt or that there is another electrical problem. Have your vehicle checked right away by your dealer. Driving while this message is on could drain the battery.

If you must drive a short distance with the message on, be certain to turn off the vehicle's accessories, such as the radio and air conditioner.

Multiple chimes sound when this message is displayed.

To acknowledge the message, press the RESET button. The message reappears every 10 minutes until this condition changes.

SERVICE ELECTRICAL SYSTEM

This message displays if an electrical problem has occurred within the Powertrain Control Module (PCM). Have your vehicle serviced by your dealer.

SERVICE FUEL SYSTEM

This message displays if the Powertrain Control Module (PCM) has detected a problem within the fuel system. Have your vehicle serviced by your dealer. This message also displays when the cluster is not getting fuel information from the PCM.

SERVICE RIDE CONTROL

This message displays when the Selective Ride Control system has detected a malfunction and the system must be serviced. See your dealer. If a fault is present in the Selective Ride Control system which causes the shocks to be in their full soft condition, the messages SERVICE RIDE CONTROL, SHOCKS INOPERATIVE, and MAXIMUM SPEED 80 MPH (129 km/h) will display together. See *Selective Ride Control on page 284* for more information.

SERVICE TIRE MONITOR

This message displays if a part on the Tire Pressure Monitor (TPM) system is not working properly. If you drive your vehicle while any of the four sensors are missing or inoperable, the warning comes on in about 30 minutes. A sensor would be missing, for example, if you put different wheels on your vehicle without transferring the sensors. If the warning comes on and stays on, there may be a problem with the TPM. See your dealer.

SERVICE TRACTION SYSTEM

If this message displays when you are driving, there is a problem with the Traction Control System (TCS) and your vehicle is in need of service. See your dealer. When this message is displayed, the system will not limit wheel spin. Adjust your driving accordingly.

The traction control system (TCS) warning light on the instrument panel cluster will also turn on and a chime will sound.

When this message is displayed, the computer controlled systems will not assist the driver in controlling the vehicle. Have the system repaired by your dealer as soon as possible. Adjust your driving accordingly. See *Traction Control System (TCS) on page 279* for more information.

To acknowledge the message, press the RESET button.

SERVICE TRANSMISSION

This message displays when there is a problem with the transmission. See your dealer for service.

SERVICE VEHICLE SOON

This message displays and a chime sounds when there may be an electrical or another system problem with your vehicle. Have your vehicle checked by your dealer if this message keeps appearing.

SET PARK BRAKE FOR SEAT RECALL

If your vehicle has a manual transmission, this message displays if you try to recall the memory positions when the ignition is on and the parking brake is not set. If the vehicle is on, you must set the parking brake in order for the memory positions to recall. See *Memory Seat, Mirrors and Steering Wheel on page 10* for more information.

SET PARK BRAKE TO MOVE TOP

If your vehicle has a manual transmission, this message displays and a chime sounds if you try to operate the power convertible top without first setting the parking brake. Set the parking brake before trying to operate the power convertible top. See *Convertible Top (Manual) on page 138* or *Convertible Top (Power) on page 145* for more information.

SHIFT TO PARK

If your vehicle has an automatic transmission, this message displays if the vehicle is not in PARK (P) when the engine is being turned off. The vehicle will be in Acc. Once the shift lever is moved to PARK (P), the vehicle will turn off.

The vehicle will remain in Acc., without the 20 minute time-out period, until the shift lever is moved to PARK (P) or until the driver presses the pushbutton to restart the vehicle. See *Ignition Positions on page 90* for more information.

SHIFT TO PARK OR SET PARK BRAKE FOR TOP

If your vehicle has an automatic transmission, this message displays and a chime sounds if you try to operate the power convertible top without first shifting into PARK (P) or setting the parking brake. Either shift the vehicle into PARK (P) or set the parking brake before trying to operate the power convertible top. See *Convertible Top (Manual) on page 138* or *Convertible Top (Power) on page 145* for more information.

SHOCKS INOPERATIVE

This message displays when a malfunction is present in the Selective Ride Control system which is causing the shocks to be in their full soft mode. This is a warning to the driver that the vehicle handling may be affected. Have your vehicle serviced by your dealer as soon as possible.

To acknowledge the message, press the RESET button. The message reappears every 10 minutes until this condition changes.

TIRE FLAT

⚠ CAUTION:

When the LOW TIRE PRESSURE or TIRE FLAT message is displayed on the Driver Information Center, your vehicle's handling capabilities will be reduced during severe maneuvers. If you drive too fast, you could lose control of your vehicle. You or others could be injured. Do not drive over 55 mph (90 km/h) when the LOW TIRE PRESSURE or TIRE FLAT message is displayed. Drive cautiously and check your tire pressures as soon as you can.

This message displays when one or more of the tires is flat. This message also displays LEFT FRONT, RIGHT FRONT, LEFT REAR, or RIGHT REAR to indicate which tire is affected. Multiple chimes sound and the tire pressure light on the instrument panel cluster comes on when this message is displayed. See *Tire Pressure Light on page 197*.

This message is followed by the MAXIMUM SPEED 55 MPH (90 km/h) message, and then by the REDUCED HANDLING message. The Active Handling System will intervene more quickly when a flat tire has been detected. Adjust your driving accordingly.

You can receive more than one tire pressure message at a time. To read other messages that may have been sent at the same time, press the RESET button. If a tire pressure message appears on the DIC, stop as soon as you can. Have the tire pressures checked and set to those shown on the Tire Loading Information label. See *Extended Mobility Tires on page 384*, *Loading Your Vehicle on page 307*, *Inflation - Tire Pressure on page 386*, and *Tire Pressure Monitor System on page 389*.

To acknowledge the message, press the RESET button. A message reappears every 10 minutes until the condition is corrected.

TOO COLD TO MOVE TOP

This message displays and a chime sounds when the power convertible top button is pressed and the power convertible top pump motor temperature is below -4°F (-20°C). Wait for the power convertible top pump motor to warm up before using the power convertible top.

TOP MOTOR OVER TEMPERATURE

This message displays and a chime sounds when the power convertible top button is pressed and the power convertible top pump motor temperature is over 221°F (105°C). Wait for the power convertible top pump motor to cool down before using the power convertible top.

TOP NOT SECURE

This message displays and a chime sounds when the power convertible top button is released before the top open or close operation is complete or if the top is closed without the header latch engaged. Press and hold the convertible top button to fully open or close the top, and make sure that the header latch is engaged after the top is closed.

TRACTION SYSTEM ACTIVE

This message displays when the Traction Control System (TCS) is limiting wheel spin. Slippery road conditions may exist if this message is displayed, so adjust your driving accordingly. The message stays on for a few seconds after the TCS stops limiting wheel spin. See *Traction Control System (TCS) on page 279* for more information.

TRACTION SYSTEM AND ACTIVE HANDLING – OFF

This message displays, the instrument panel cluster light turns on, and a chime sounds when the Traction Control System (TCS) and Active Handling System are turned off by pressing the Active Handling System button on the console for five seconds. The Anti-lock Brake System (ABS) remains on with the TCS and Active Handling System off. Adjust your driving accordingly. See *Traction Control System (TCS) on page 279* and *Active Handling System on page 281* for more information.

To acknowledge this message, press the RESET button.

TRACTION SYSTEM AND ACTIVE HANDLING – ON

If the Traction Control System (TCS) and Active Handling System are off, this message displays briefly, the instrument panel cluster light turns off, and a chime sounds when the TCS and Active Handling System are turned on by briefly pressing the Active Handling System button on the console. See *Traction Control System (TCS) on page 279* and *Active Handling System on page 281* for more information.

TRACTION SYSTEM – OFF

This message displays and stays on, a single, quick tone sounds, and the traction control system (TCS) warning light on the instrument panel cluster turns on when the TCS is turned off by pressing the Active Handling System button on the console. See *Traction Control System (TCS) Warning Light on page 195*. See *Traction Control System (TCS) on page 279* for more information.

To acknowledge the message, press the RESET button.

TRACTION SYSTEM – ON

This message displays and a single, quick tone sounds when the Traction Control System (TCS) is turned on by pressing the Active Handling System button on the console. This message automatically clears from the DIC display on its own. See *Traction Control System (TCS) on page 279* for more information.

TRANSMISSION HOT IDLE ENGINE

This message displays and four chimes sound if the transmission fluid temperature rises above 270°F (132°C) or rises rapidly. The transmission may shift gears or apply the torque converter clutch to reduce the fluid temperature. Driving aggressively or driving on long hills can cause the transmission fluid temperature to be higher than normal. If this message appears, you may continue to drive at a slower speed. Monitor the transmission fluid temperature and allow it to cool to at least 230°F (110°C). The transmission fluid temperature can be monitored with the gages button on the DIC. See *DIC Controls and Displays on page 206* and *Automatic Transmission Fluid on page 345*. Also check the engine coolant temperature. If it is also hot, see *Engine Overheating on page 350*.

If this message is displayed during normal vehicle operation on flat roads, your vehicle may need service. See your dealer for an inspection.

If driving in a performance or competitive manner, the use of (S) Sport Automatic Mode or (S) Sport Manual Paddle Shift gear selection is recommended. See *Automatic Transmission Operation on page 95* for more information.

To acknowledge the message, press the RESET button. The message reappears every 10 minutes until this condition changes. If you do not press the RESET button, the message remains on the display until the condition changes.

TURN SIGNAL ON

This message displays and a chime sounds if a turn signal is left on for three-quarters of a mile (1.2 km). Move the turn signal/multifunction lever to the off position.

To acknowledge this message, press the RESET button.

UNLATCH HEADER TO MOVE TOP

This message displays and a chime sounds if you try to lower the convertible top without first unlocking the top. Move the latch handle to unlock the convertible top. See *Convertible Top (Manual) on page 138* or *Convertible Top (Power) on page 145*.

Other Messages

Here are more messages that you can receive on your Driver Information Center (DIC). To acknowledge a message and read another message that may have come on at the same time, press the RESET button.

- ACCESSORY MODE ON
- BATTERY VOLTAGE HIGH

  See *Voltmeter Gage on page 192*.
- BATTERY VOLTAGE LOW

  See *Voltmeter Gage on page 192*.
- CHECK WASHER FLUID

  See *Windshield Washer Fluid on page 359*.

- CRUISE SET TO XXX MPH (XXX km/h)

  See *Cruise Control on page 162*.
- DRIVER DOOR AJAR
- FOB AUTOLEARN WAIT XX MINUTES

  See “Matching Transmitter(s) to Your Vehicle” under *Keyless Access System Operation on page 74*.
- FOB BATTERY LOW

  See “Battery Replacement” under *Keyless Access System Operation on page 74*.
- HATCH AJAR (Coupe)
- INTRUSION SENSOR OFF, if your vehicle has this feature
- INTRUSION SENSOR ON, if your vehicle has this feature
- KNOWN FOB

  See “Matching Transmitter(s) to Your Vehicle” under *Keyless Access System Operation on page 74*.
- MAXIMUM NUMBER OF FOBS LEARNED

  See “Matching Transmitter(s) to Your Vehicle” under *Keyless Access System Operation on page 74*.
- OFF–ACCESSORY TO LEARN

  See “Matching Transmitter(s) to Your Vehicle” under *Keyless Access System Operation on page 74*.
- PASSENGER DOOR AJAR
- READY FOR FOB #X

  See “Matching Transmitter(s) to Your Vehicle” under *Keyless Access System Operation on page 74*.
- TONNEAU AJAR (Convertible)
- TRUNK AJAR (Convertible)
- UPSHIFT NOW

  See *Manual Transmission Operation on page 100*.

DIC Vehicle Personalization

Many features on your vehicle can be personalized. This means that the operation of these features can be set to operate differently depending on who is driving the vehicle. See “Personal Options” later in this section for the features that you can personalize.

The personalization settings for other features are automatically updated and saved as the driver adjusts them. These include the following settings and presets:

- The radio presets, tone, volume, fade, balance, equalization (EQ) settings and source (radio or CD)
- The last climate control setting
- The Head-Up Display (HUD) position and dimming level, if your vehicle has this feature
- The instrument panel cluster dimming level and last selected DIC display

Separate personalization settings are saved for two different drivers. One of the keyless access transmitters is assigned to driver 1. The other is assigned to driver 2. The back of the keyless access transmitters are labelled 1 or 2 to correspond to each driver.

The current driver’s preferences are recalled when one of the following occurs:

- The lock or unlock button on the keyless access transmitter, labelled 1 or 2, is pressed.
- The appropriate memory button, 1 or 2, located on the driver’s door is pressed. See *Memory Seat, Mirrors and Steering Wheel on page 10* for more information.
- A valid keyless access transmitter is detected upon opening the driver’s door.

If more than one valid keyless access transmitter is detected upon opening the driver’s door, the driver preferences for the lowest driver number will be recalled.

If a keyless access transmitter that is not labelled 1 or 2 is used, the personalization system will not recognize the transmitter. The Driver Information Center (DIC) will not display a current driver number and the features that are normally programmed through the DIC will be set to the default states. Also, if the OPTION button is pressed, the DIC does not display the menus used to set personalizations, but instead displays OPTIONS UNAVAILABLE for a few seconds.

Entering the Personal Options Menu

To enter the personal options menu, use the following steps:

1. If you have an automatic transmission vehicle, turn the vehicle on with the shift lever in PARK (P).

   If you have a manual transmission vehicle, turn the vehicle on with the parking brake set.

   To avoid excessive drain on the battery, it is recommended that the headlamps are turned off.

2. Press the OPTION button and you will enter the PERSONAL OPTIONS menu.

   The DIC will display the current driver number (1 or 2) for a few seconds and then will display instructions on which buttons to use for setting the personalizations. The RESET button is used to select a setting for a particular feature. The OPTION button is used to move to the next feature.

3. Press the OPTION button while the instruction screen is displayed to enter the first personalization menu item.

4. Once you have cycled through all of the personal options, pressing the OPTION button a final time exits the personal options menu. In addition, if no button is pressed within 45 seconds, the DIC will exit the personal options menu.

Personal Options

The following options are available for programming:

Display Units: This option allows you to choose the measurement units.

Press the OPTION button until DISPLAY UNITS appears on the display, then press the RESET button to scroll through the following modes:

- ENGLISH (default)
- METRIC

If you choose ENGLISH, all information will be displayed in English units.

If you choose METRIC, all information will be displayed in metric units.

When the mode you want is selected, press the OPTION button to set your choice and advance to the next personal option.

Auto Memory Recall (Automatic Transmission only): If your automatic transmission vehicle has the memory package, you may have this option. This option allows the driver's seat, the telescopic steering column, if your vehicle has this feature, and the outside rearview mirrors to automatically move to the current driver's set position when the engine starts.

Press the OPTION button until AUTO MEMORY RECALL appears on the display, then press the RESET button to scroll through the following modes:

- YES
- NO (default)

If you choose YES, the driver's seat, the outside rearview mirrors and the telescopic steering column, if your vehicle has this feature, positions are recalled when you turn the ignition on.

If you choose NO, this option will turn off.

When the mode you want is selected, press the OPTION button to set your choice and advance to the next personal option.

Auto Exit Recall: If your vehicle has the memory package, you may have this option. This option allows the driver's seat and telescopic steering column, if your vehicle has this feature, to automatically move to the current driver's exit position when one of the following occurs:

- The vehicle is turned off or in Retained Accessory Power (RAP) or accessory mode and the driver's door is opened.
- The vehicle is turned off or in RAP and the unlock button on the keyless access transmitter is pressed.

In order for the Auto Exit Recall feature to work on an automatic transmission vehicle, the vehicle must be in PARK (P). On a manual transmission vehicle, the parking brake must be set.

Press the OPTION button until AUTO EXIT RECALL appears on the display, then press the RESET button to scroll through the following modes:

- YES
- NO (default)

If you choose YES, when you turn the ignition off and open the driver's door or press the unlock button on the keyless access transmitter, the seat and the telescopic steering wheel, if your vehicle has this feature, will return to their stored exit positions for an easy exit or an easy entrance when returning to the vehicle.

The seat and steering wheel will only return to the stored driving position if you press the appropriate memory button or activate the auto memory recall feature.

If you choose NO, this option will turn off.

When the mode you want is selected, press the OPTION button to set your choice and advance to the next personal option.

Approach Lights: This option briefly turns on the parking lamps, the front fog lamps and the back-up lamps during low light periods when the keyless access transmitter is used to unlock the vehicle.

Press the OPTION button until APPROACH LIGHTS appears on the display, then press the RESET button to scroll through the following modes:

- OFF
- ON (default)

If you choose OFF, this option will turn off.

If you choose ON, the parking lamps, the front fog lamps, and the back-up lamps will come on for 20 seconds during low light periods when all of the following occurs:

- You press the unlock button on the keyless access transmitter.
- Both of the doors are closed.
- The vehicle is off or in RAP.

The lamps remain on for 20 seconds or until a door is opened, the lock button on the keyless access transmitter is pressed or the vehicle is no longer off or in RAP.

See *Keyless Access System on page 73* for more information.

When the mode you want is selected, press the OPTION button to set your choice and advance to the next personal option.

Twilight Delay: This option allows you to set the amount of time you want the parking lamps and front fog lamps to remain on after you exit the vehicle. This will occur when the vehicle is off or in RAP and the headlamps are on due to the automatic headlamp system. The parking lamps and front fog lamps will remain on until the driver selected time expires, the exterior lamp control is activated or the vehicle is no longer off or in RAP.

Press the OPTION button until TWILIGHT DELAY appears on the display, then press the RESET button to scroll through the following modes:

- OFF
- 15 S
- 30 S (default)
- 90 S

If you choose OFF, this option will turn off.

If you choose 15 S, the twilight delay time will be set to 15 seconds.

If you choose 30 S, the twilight delay time will be set to 30 seconds.

If you choose 90 S, the twilight delay time will be set to 90 seconds.

When the mode you want is selected, press the OPTION button to set your choice and advance to the next personal option.

Flash at Unlock: This option activates the front and rear turn signals for two short flashes when the unlock or hatch/trunk button on the keyless access transmitter is pressed. This will only occur when the vehicle is off.

Press the OPTION button until FLASH AT UNLOCK appears on the display, then press the RESET button to scroll through the following modes:

- YES (default)
- NO

If you choose YES, the front and rear turn signals will flash twice when you press the unlock button or the hatch/trunk button on the keyless access transmitter.

If you choose NO, this option will turn off.

When the mode you want is selected, press the OPTION button to set your choice and advance to the next personal option.

Flash at Lock: This option activates the front and rear turn signals for one long flash when the lock button on the keyless access transmitter is pressed. This will only occur when the vehicle is off. If the lock button on the keyless access transmitter is pressed again within five seconds, the horn will sound regardless of which setting you have selected.

Press the OPTION button until FLASH AT LOCK appears on the display, then press the RESET button to scroll through the following modes:

- YES (default)
- NO

If you choose YES, the front and rear turn signals will flash once when you press the lock button on the keyless access transmitter.

If you choose NO, this option will turn off.

When the mode you want is selected, press the OPTION button to set your choice and advance to the next personal option.

FOB Reminder: This option chirps the horn three times when the driver's door is closed and there is a keyless access transmitter inside the interior of the vehicle. This will only occur when the vehicle is off.

Press the OPTION button until FOB REMINDER appears on the display, then press the RESET button to scroll through the following modes:

- YES
- NO (default)

If you choose YES, the horn will chirp three times when a keyless access transmitter is inside of the vehicle while the ignition is turned off and the driver's door is closed.

If you choose NO, this option will turn off.

When the mode you want is selected, press the OPTION button to set your choice and advance to the next personal option.

Passive Door Locking: This option allows you to select whether the doors automatically lock during normal vehicle exit. When the ignition is turned off and all doors become closed, the vehicle will determine how many keyless access transmitters remain in the vehicle interior. If at least one keyless access transmitter has been removed from the interior of the vehicle, the doors will lock after eight seconds.

For example, if there are two keyless access transmitters in the vehicle and one is removed, the other will be locked in. The keyless access transmitter locked in the vehicle can still be used to start the vehicle or unlock the doors, if needed. A person approaching the outside of the locked vehicle without an authorized keyless access transmitter, however, will not be able to open the door, even with a transmitter in the vehicle.

You may temporarily disable the passive door locking feature by pressing the door unlock switch for three seconds on an open door. Passive door locking will then remain disabled until a door lock switch is pressed or until the power mode transitions from the off power mode.

Press the OPTION button until PASSIVE DOOR LOCKING appears on the display, then press the RESET button to scroll through the following modes:

- OFF (default)
- SILENT
- HORN

If you choose OFF, this option will turn off.

If you choose SILENT, the doors will automatically lock eight seconds after you turn the ignition off, remove a keyless access transmitter from the interior of the vehicle, and close both doors.

If you choose HORN, the doors will automatically lock and the horn will chirp eight seconds after you turn the ignition off, remove a keyless access transmitter from the interior of the vehicle, and close both doors.

If you are parking in a quiet area and do not want the horn to sound when the doors lock, press the lock button on the keyless access transmitter immediately after removing it from the interior and closing the doors. This will lock the doors and cancel the passive locking for this ignition cycle.

When the mode you want is selected, press the OPTION button to set your choice and advance to the next personal option.

Passive Door Unlock: This option allows you to select which doors will automatically unlock when you approach and open the driver's door with your keyless access transmitter. See *Door Locks on page 78* for more information.

Press the OPTION button until PASSIVE DOOR UNLOCK appears on the display, then press the RESET button to scroll through the following modes:

- DRIVER (default)
- BOTH

If you choose DRIVER, only the driver's door will automatically unlock when you approach and open the driver's door with your keyless access transmitter.

If you choose BOTH, both doors will automatically unlock when you approach and open the driver's door with your keyless access transmitter.

Auto Unlock: This option allows you to select whether the driver's door, both doors or neither door automatically unlocks when the shift lever is moved into PARK (P) for automatic transmission vehicles or when the ignition is turned off or is in RAP for manual transmission vehicles.

Press the OPTION button until AUTO UNLOCK appears on the display, then press the RESET button to scroll through the following modes:

- OFF
- DRIVER
- BOTH (default)

If you choose OFF, this option will turn off.

If you choose DRIVER, on automatic transmission vehicles, the driver's door will automatically unlock when the shift lever is moved into PARK (P). On manual transmission vehicles, the driver's door will automatically unlock when the ignition is turned off or is in RAP.

If you choose BOTH, on automatic transmission vehicles, both doors will automatically unlock when the shift lever is moved into PARK (P). On manual transmission vehicles, both doors will automatically unlock when the ignition is turned off or is in RAP.

When the mode you want is selected, press the OPTION button to set your choice and advance to the next personal option.

Language: This option allows you to select the language the DIC, the Head-Up Display (HUD), if your vehicle has this feature, and the radio uses to display messages. Each language mode will be displayed in its own language. For example, English will be displayed as ENGLISH, Spanish as ESPANOL, etc. If your vehicle has the navigation system, you will not have the Japanese language mode.

Press the OPTION button until LANGUAGE appears on the display, then press the RESET button to scroll through the following modes:

- ENGLISH (default)
- DEUTSCH (German)
- FRANCAIS (French)
- ITALIANO (Italian)
- ESPANOL (Spanish)

If you choose a language that you do not understand, press the OPTION and RESET buttons for five seconds. The DIC will begin displaying all of the various languages one by one for as long as the buttons are pressed. When the desired language is displayed, release the buttons and the DIC will set to this language.

When the mode you want is selected, press the OPTION button to set your choice and advance to the next personal option.

Personalize Name: This option allows you to type in a name or greeting that will appear on the DIC display whenever the corresponding keyless access transmitter (1 or 2) is used or one of the memory buttons (1 or 2) located on the driver's door is pressed.

Press the OPTION button until PERSONALIZE NAME appears on the display, then press the RESET button to scroll through the following modes:

- YES
- NO (default)

If you choose YES, you can type in a name that will appear on the DIC display.

To program a name, use the following procedure:

1. Enter the PERSONAL OPTIONS menu and select the driver number (1 or 2) that you would like to program by following the instructions listed previously under "Entering the Personal Options Menu".

2. Press the OPTION button until the PERSONALIZE NAME option appears on the display.
3. Select YES under PERSONALIZE NAME by pressing the RESET button.
4. Press the OPTION button and a cursor will display where you can insert a letter.
5. Press the OPTION button again until the letter you want is displayed. To scroll through the letters faster and without a beeping noise, keep the OPTIONS button depressed. There are alpha/numeric characters and a blank space available.
6. Then press the RESET button to select the letter of your choice and proceed on to the next space to the right.

   If you make a mistake and would like to clear or replace a letter, perform the following steps:

   6.1. Press the RESET button to reach the letter you would like to change.

   6.2. Press the OPTION button to scroll through the letter choices.

   6.3. Press the RESET button to select the letter and proceed on to the next space to the right.

7. Repeat Steps 5 and 6 until the name or greeting you want is complete. After the name or greeting is complete, keep pressing the RESET button until the display turns blank and exits out of this option. You can program up to 20 characters.

If you choose NO, this option will turn off.

If a customized name or greeting is not programmed, the DIC display will show Driver 1 or Driver 2 to correspond with either the number on the back of the keyless access transmitter (1 or 2) that is being used or to the memory button (1 or 2) that is pressed.

PERSONALIZE NAME is the last option available to program in the PERSONAL OPTIONS menu. Pressing the OPTION button after this setting will exit you from the PERSONAL OPTIONS menu. The last item you were in prior to entering PERSONAL OPTIONS will then display on the DIC.

Audio System(s)

Determine which radio your vehicle has and then read the pages following to familiarize yourself with its features.

Driving without distraction is a necessity for a safer driving experience. See *Defensive Driving on page 272*. By taking a few moments to read this manual and get familiar with your vehicle's audio system, you can use it with less effort, as well as take advantage of its features. While your vehicle is parked, set up your audio system by presetting your favorite radio stations, setting the tone and adjusting the speakers. Then, when driving conditions permit, you can tune to your favorite stations using the presets and steering wheel controls if the vehicle has them.

⚠ CAUTION:

This system provides you with a far greater access to audio stations and song listings. Giving extended attention to entertainment tasks while driving can cause a crash and you or others can be injured or killed. Always keep your eyes on the road and your mind on the drive — avoid engaging in extended searching while driving.

Keeping your mind on the drive is important for safe driving. For more information, see *Defensive Driving on page 272*.

Here are some ways in which you can help avoid distraction while driving.

While your vehicle is parked:

- Familiarize yourself with all of its controls.
- Familiarize yourself with its operation.
- Set up your audio system by presetting your favorite radio stations, setting the tone, and adjusting the speakers. Then, when driving conditions permit, you can tune to your favorite radio stations using the presets and steering wheel controls if the vehicle has them.

Notice: **Before adding any sound equipment to your vehicle, such as an audio system, CD player, CB radio, mobile telephone, or two-way radio, make sure that it can be added by checking with your dealer. Also, check federal rules covering mobile radio and telephone units. If sound equipment can be added, it is very important to do it properly. Added sound equipment may interfere with the operation of your vehicle's engine, radio, or other systems, and even damage them. Your vehicle's systems may interfere with the operation of sound equipment that has been added.**

Your vehicle has a feature called Retained Accessory Power (RAP). With RAP, the audio system can be played even after the ignition is turned off. See *Retained Accessory Power (RAP) on page 91* for more information.

Setting the Time

With the ignition on and the radio off, press the H or the M button to enter clock mode. Press and hold H until the correct hour appears on the display. Press and hold M until the correct minute appears on the display.

To change the time default setting from 12 hour to 24 hour, press either the H or the M button to enter the clock mode. Press the tune knob to select between the 12 or 24 hour display format. The clock mode will automatically time out with the changed display format set as the current default setting.

Radio with CD

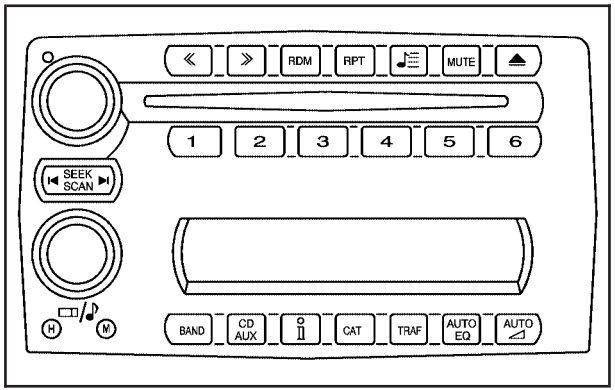

Radio with CD shown, Radio with Six-Disc CD similar

An indicator light on the upper left side of the radio flashes when the ignition is off, to indicate the theft deterrent feature is set. For more information, see *Theft-Deterrent Feature on page 267*

Your vehicle has seven Bose® amplified speakers. See your dealer for details.

Radio Data System (RDS)

The audio system has a Radio Data System (RDS). RDS features are available for use only on FM stations that broadcast RDS information.

With RDS, the radio can do the following:

- Seek to stations broadcasting the selected type of programming
- Receive announcements concerning local and national emergencies
- Display messages from radio stations
- Seek to stations with traffic announcements

This system relies upon receiving specific information from these stations and works only when the information is available. In rare cases, a radio station may broadcast incorrect information that causes the radio features to work improperly. If this happens, contact the radio station.

While the radio is tuned to an RDS station, the station name or call letters appear on the display. RDS stations may also provide the time of day, a program type (PTY) for current programming, and the name of the program being broadcast.

XM™ Satellite Radio Service

If your vehicle has the XM™ satellite radio service, it is based in the 48 contiguous United States and Canada. XM™ offers a large variety of coast-to-coast channels including music, news, sports, talk, traffic/weather (U.S. subscribers), and children's programming. XM™ provides digital quality audio and text information that includes song title and artist name. A service fee is required in order to receive the XM™ service. For more information, contact XM™; In the U.S. at www.xmradio.com or call 1-800-852-XMXM (9696) or in Canada at www.xmradio.ca or call 1-877-GET-XMSR (438-9677).

Playing the Radio

Top Knob (Power/Volume): Press this knob to turn the system on and off. Turn this knob clockwise or counterclockwise to increase or decrease the volume.

i (Information): For RDS, press this button to change what appears on the display while using RDS. The display options are station name, RDS station frequency, PTY, and the name of the program (if available).

For XM™ (if equipped), press the information button while in XM™ mode to retrieve four different categories of information related to the current song or channel: Artist, Song Title, Category or PTY, Channel Number/Channel Name.

To change the default on the display, press the information button until you see the desired display, then hold the button for two seconds. The radio produces one beep and the selected display is now the default.

AUTO ◿ (Automatic Volume): Automatic volume automatically adjusts the audio system to make up for road and wind noise as you drive, by it increasing the volume as vehicle speed increases.

Set the volume at the desired level. Press this button to select AUTO VOLUME MIN (minimum), AUTO VOLUME MED (medium), or AUTO VOLUME MAX (maximum). Each higher setting provides more volume compensation at faster vehicle speeds. To turn automatic volume off, press this button until AUTO VOLUME OFF appears on the display.

If your vehicle has the Bose® audio system, it includes Bose® AudioPilot® noise compensation technology. When turned on, AudioPilot® continuously adjusts the audio system to compensate for background noise, so that the music always sounds the same at the set volume level. This feature is most effective at lower radio volume settings where background noise can affect how well you hear the music being played. At higher volume settings, where the music is much louder than the background noise, there may be little or no adjustments by AudioPilot®.

To use AudioPilot®, set the radio volume to your desired level. Turn AudioPilot® on by pressing the automatic volume button until AVOL ON appears on the display. As the vehicle goes faster, the background noise increases. AudioPilot® adjusts the audio system's sound level to overcome background noise. To turn AudioPilot® off, press the automatic volume button until AVOL OFF appears on the display. For additional information on AudioPilot®, visit www.bose.com.

MUTE: Press this button to silence the system. Press this button again to turn the sound on.

This button is not available on the Radio with Six-Disc CD.

Finding a Station

BAND: Press this button to switch between FM1, FM2, AM, or XM1 or XM2 (if equipped). The display shows the selection.

/ ♪ (Tune): Turn this knob to select radio stations.

|◀ SEEK ▶| : Press the right or the left arrow to go to the next or to the previous station and stay there.

The radio only seeks stations with a strong signal that are in the selected band.

|◀ SCAN ▶| : Press and hold either arrow for two seconds until FREQUENCY SCAN appears on the display. The radio goes to a station, plays for a few seconds, then goes on to the next station. Press either arrow again to stop scanning.

To scan preset stations, press and hold either arrow for four seconds until PRESET SCAN appears on the display. The radio goes to the next preset station, plays for a few seconds, then goes to the next preset station. Press either scan arrow again or one of the pushbuttons to stop scanning presets.

The radio only scans stations with a strong signal that are in the selected band.

Setting Preset Stations

Up to 30 stations (six FM1, six FM2, and six AM, six XM1 and six XM2 (if equipped)), can be programmed on the six numbered pushbuttons, by performing the following steps:

1. Turn the radio on.
2. Press BAND to select FM1, FM2, AM, or XM1 or XM2 (if equipped).
3. Tune in the desired station.
4. Press AUTO EQ to select the equalization.
5. Press and hold one of the six numbered pushbuttons until you hear a beep. Whenever that numbered pushbutton is pressed, the station that was set returns and the equalization that was selected is stored for that pushbutton.
6. Repeat the steps for each pushbutton.

Setting the Tone (Bass/Treble)

♪ **(Bass/Treble/Midrange):** Press this knob to select BASS, MIDRANGE, or TREBLE. Turn the knob to increase or to decrease the tone. If a station is weak or has static, decrease the treble.

To adjust the bass, midrange, and treble to the middle position, press and hold this knob when the tone control is on the display. The level changes to the middle position.

To adjust all tone and speaker controls to the middle position, press and hold this knob when no tone or speaker control is displayed. AUDIO SETTINGS CENTERED appears on the display.

AUTO EQ (Automatic Equalization): Press this button to select customized equalization settings designed for country/western, jazz, talk, pop, rock, and classical. Selecting CUSTOM or changing bass or treble, returns the EQ to the manual bass and treble settings.

The radio saves separate AUTO EQ settings for each preset and source.

If the radio has the Bose® audio system, the equalization settings are EQ1 through EQ6 and CUSTOM.

Adjusting the Speakers (Balance/Fade)

♪ **(Balance/Fade):** To adjust the balance between the right and the left speakers, press this knob until BALANCE appears on the display. Turn the knob to move the sound toward the right or the left speakers.

To adjust the fade between the front and the rear speakers, press this knob until FADE appears on the display. Turn the knob to move the sound toward the front or the rear speakers.

To adjust the balance and fade to the middle position, press and hold this knob when the speaker control is on the display. The level changes to the middle position.

To adjust all tone and speaker controls to the middle position, press and hold this knob when no tone or speaker control is displayed. AUDIO SETTINGS CENTERED appears on the display.

Finding a Category Station (RDS and XM™ (if equipped))

To select and find a desired category perform the following:

1. Press the CAT (category) button. The last selected category appears on the display.
2. Turn the tune knob to select the category.
3. Once the desired category is displayed, press either SEEK arrow to go to a category's station. SEEKING CATEGORY appears on the display.
4. To go to another station within that category, press the CAT button to display the category, then press either SEEK arrow to go to another station.

If both category and traffic are on, the radio searches for stations with the selected category and traffic announcements.

If the radio cannot find the desired category, NONE appears on the display and the radio returns to the last station tuned.

SCAN: Scan the stations within a category by performing the following:

1. Press the CAT button. The last selected category appears on the display.
2. Turn the tune knob to select the category.
3. Once the desired category is displayed, press and hold either SCAN arrow until you hear a beep and SCAN CATEGORY appears on the display. The radio begins scanning the stations in the category.
4. Press either SCAN arrow to stop scanning.

If both category and TRAF (traffic) are on, the radio scans for stations with the selected category and traffic announcements.

BAND (AF Alternate Frequency): Alternate frequency allows the radio to switch to a stronger station in the same category. To turn alternate frequency on, press and hold BAND for four seconds. AF ON appears on the display. The radio may could to stations with a stronger frequency.

To turn alternate frequency off, press and hold BAND again for four seconds. AF OFF appears on the display. The radio will not switch to other stations.

This function does not apply for XM™ Satellite Radio Service.

RDS Messages

ALERT!: Alert warns of local or national emergencies. When an alert announcement comes on the current radio station, ALERT! appears on the display. You will hear the announcement, even if the volume is low or a CD is playing. If a CD is playing, play stops during the announcement. Alert announcements cannot be turned off.

ALERT! is not affected by tests of the emergency broadcast system. This feature is not supported by all RDS stations.

i (Information): If the current station has a message, INFO (information) appears on the display. Press this button to see the message. The message may display the artist, song title, call in phone numbers, etc.

If the entire message is not displayed, parts of the message appears every three seconds. To scroll through the message, press and release this button. A new group of words appears on the display after every press of the button.

Once the complete message has displayed, INFO disappears from the display until another new message is received. The last message can be displayed by pressing this button. The last message until a new message is received or the radio is tuned to a different station.

When a message is not available from a station, NO INFO appears on the display.

TRAF (Traffic): If TA (traffic) appears on the display, the tuned station broadcasts traffic announcements. When a traffic announcement is broadcast on this station, you will hear it.

If the station does not broadcast traffic announcements, press the TRAF button and the radio seeks to a station that does. When a station that broadcasts traffic announcements is found, the radio stops seeking and TA appears on the display. If no station is found that broadcasts traffic announcements, NO TRAFFIC appears on the display.

If TA is on the display, press the TRAF button to turn off the traffic announcements.

The radio plays the traffic announcement even if the volume is low. The radio interrupts the play of a CD if the last tuned station broadcasts traffic announcements.

This function does not apply to XM™ Satellite Radio Service.

Radio Messages

CAL ERR (Calibration Error): The audio system has been calibrated for your vehicle from the factory. If CAL ERR appears on the display, it means that the radio has not been configured properly for your vehicle and must be returned to your dealer for service.

LOCKED: This message is displayed when the THEFTLOCK® system has locked up. Take the vehicle to your dealer for service.

If any error occurs repeatedly or if an error cannot be corrected, contact your dealer. If the radio displays an error message, write it down and provide it to your dealer when reporting the problem.

XM™ Radio Messages

If your vehicle has XM™ Satellite Radio Service, the radio may display screen messages pertaining to the XM™ radio service, software and hardware. See *XM Radio Messages on page 265* later in this section for further detail.

Playing a CD (Single CD Player)

Insert a CD partway into the slot, label side up. The player pulls it in and the CD should begin playing.

If the ignition or radio is turned off with a CD in the player, it stays in the player. When the ignition or radio is turned on, the CD starts playing where it stopped, if it was the last selected audio source.

When a CD is inserted, CD and the CD symbol appears on the display. As each new track starts to play, the track number appears on the display.

The CD player can play the smaller 3 inch (8 cm) single CDs with an adapter ring. Full-size CDs and the smaller CDs are loaded in the same manner.

If playing a CD-R, the sound quality (and playback performance) may be reduced due to the CD-R quality, method of recording, the quality of the music that has been recorded, and the way the CD-R has been handled. For better playback performance when home burning audio discs, use brand named CD media with the [“Compact Disc” trade mark logo], and a burn rate no faster than 12X.

There may be an increase in skipping, difficulty in finding tracks, and/or difficulty in loading and ejecting. If these problems occur, check the bottom surface of the CD. If the surface of the CD is damaged, such as cracked, broken, or scratched, the CD will not play properly. If the surface of the CD is soiled, see *Care of Your CDs on page 269* for more information.

If there is no apparent damage, try a known good CD.

Do not add any label to a CD, it could get caught in the CD player. If a CD is recorded on a personal computer and a description label is needed, try labeling the top of the recorded CD with a marking pen instead.

Notice: **If you add any label to a CD, insert more than one CD into the slot at a time, or attempt to play scratched or damaged CDs, you could damage the CD player. When using the CD player, use only CDs in good condition without any label, load one CD at a time, and keep the CD player and the loading slot free of foreign materials, liquids, and debris.**

If an error appears on the display, see “CD Messages” later in this section.

/ ♪ (Tune): Turn this knob to go to the next or previous track.

≪ (Reverse): Press and hold this button to reverse the current track.

≫ (Fast Forward): Press and hold this button to fast forward through the current track.

RDM (Random): Press this button to hear the tracks in random, rather than sequential, order. RANDOM DISC appears on the display. Press this button again to turn off random play.

RPT (Repeat): Press this button to hear a track over again. REPEAT appears on the display. Press this button again to turn off repeat play.

MUTE: Press this button to silence the system. Press this button again to turn the sound on.

|◀ SEEK ▶| : Press the left arrow to go to the start of the current track if more than eight seconds have played. Press the right arrow to go to the start of the next track. If either arrow is held or pressed more than once, the player continues moving backward or forward through the CD.

BAND: Press this button to listen to the radio when a CD is playing. The inactive CD remains safely inside the radio for future listening.

CD AUX (Auxiliary): Press this button to play a CD while listening to the radio. CD appears on the display when a CD is in the player. If the system has a remote playback device, pressing this button a second time allows the remote device to play.

AUTO EQ (Automatic Equalization): Press AUTO EQ to select the equalization setting while playing a CD. The equalization is stored whenever a CD is played. For more information on AUTO EQ, see “AUTO EQ” listed previously in this section.

⏏ **(Eject):** Press this button to eject the CD. EJECT can be activated with either the ignition or radio off.

Playing a CD(s) (Six-Disc CD Player)

If the ignition or radio is turned off, with a CD in the player, it stays in the player. When the ignition or radio is turned on, the CD starts playing where it stopped, if it was the last selected audio source.

When a CD is inserted, the CD symbol appears on the CD. As each new track starts to play, the track number appears on the display.

The CD player can play the smaller 3 inch (8 cm) single CDs with an adapter ring. Full-size CDs and the smaller CDs are loaded in the same manner.

If playing a CD-R, the sound quality (and playback performance) may be reduced due to the CD-R quality, method of recording, the quality of the music that has been recorded, and the way the CD-R has been handled. For better playback performance when home burning audio discs, use brand named CD media with the [“Compact Disc” trade mark logo], and a burn rate no faster than 12X.

There may be an increase in skipping, difficulty in finding tracks, and/or difficulty in loading and ejecting. If these problems occur, check the bottom surface of the CD. If the surface of the CD is damaged, such as cracked, broken, or scratched, the CD will not play properly. If the surface of the CD is soiled, see *Care of Your CDs on page 269* for more information.

If there is no apparent damage, try a known good CD.

Do not add any label to a CD, it could get caught in the CD player. If a CD is recorded on a personal computer and a description label is needed, try labeling the top of the recorded CD with a marking pen.

Notice: **If you add any label to a CD, insert more than one CD into the slot at a time, or attempt to play scratched or damaged CDs, you could damage the CD player. When using the CD player, use only CDs in good condition without any label, load one CD at a time, and keep the CD player and the loading slot free of foreign materials, liquids, and debris.**

If an error appears on the display, see "CD Messages" later in this section.

(Load): Press this button to load CDs into the CD player. This CD player holds up to six CDs.

To insert one CD, do the following:

1. Turn the ignition on.
2. Press and release the load button.
3. When INSET CD # appears on the display, load a CD and insert the CD partway into the slot, label side up. The player pulls the CD in.

To insert multiple CDs, do the following:

1. Turn the ignition on.
2. Press and hold the load button for two seconds.

   A beep will sound and LOAD ALL DISC appears on the display.
3. When INSERT CD # appears on the display, load a CD and insert the CD partway into the slot, label side up. The player pulls the CD in.

   Once the CD is loaded, wait for INSERT CD # to appear on the display, then load the next CD. The CD player takes up to six CDs. Do not load more than six.

To load more than one CD but less than six, complete Steps 1 through 3. When finished loading CDs, press the load button to cancel the loading function. The radio begins to play the last CD loaded.

If more than one CD has been loaded, a number for each CD appears on the display.

Playing a Specific Loaded CD

For every CD loaded, a number appears on the display. To play a specific CD press the numbered pushbutton that corresponds to the CD.

If an error appears on the display, see “CD Messages” later in this section.

⏏ **(Eject):** Press this button to eject CD(s).

To eject the CD that is currently playing, press and release this button.

To eject multiple CDs, do the following:

1. Press and hold the eject button for two seconds.

   A beep will sound and EJECT ALL DISCS appears on the display.

2. When REMOVE DISC appears on the display, the CD ejects and can be removed.

   To stop ejecting the CDs, press the load or the eject button.

If the CD is not removed, after 25 seconds, the CD is automatically pulled back into the player. If the CD is pushed back into the player, before the 25 second time period is complete, the player senses an error and tries to eject the CD several times before stopping.

Do not repeatedly press the eject button to eject a CD after you have tried to push it in manually. The player’s 25-second eject timer resets at each press of eject, causing the player not to eject the CD until the 25-second time period has elapsed.

▭ / ♪ **(Tune):** Turn this knob to go to the next or previous track.

≪ **(Reverse):** Press and hold this button to reverse within the current track.

≫ **(Fast Forward):** Press and hold this button to fast forward through the current track.

RDM (Random): Press this button to hear the tracks in random, rather than sequential order, on one CD or all of the loaded CDs.

To use random, do one of the following:

- To play the tracks on the CD you are listening to in random order, press and release this button until RANDOM DISC PLAY appears on the display.
- To play the tracks on all of the CDs that are loaded in random order, press and release this button until RANDOM ALL DISCS appears on the display.

To turn off random play, press and release the RDM button until RANDOM OFF appears on the display.

RPT (Repeat): Press this button to hear a track or an entire CD over again.

To use repeat, do one of the following:

- To repeat a track, press and release this button until REPEAT appears on the display.
- To repeat an entire CD, press and release this button until REPEAT ONE DISC appears on the display.

To turn off repeated play, press and release the RPT button until REPEAT OFF appears on the display

|◀ SEEK ▶| : Press the left arrow to go to the start of the current track, if more than ten seconds have played. Press the right arrow to go to the next track. If either arrow is held or pressed more than once, the player continues moving backward or forward through the CD.

|◀ SCAN ▶| : To scan one CD, press and hold either SCAN arrow for more than two seconds until SCAN appears on the display and you hear a beep. The radio goes to the next track, plays for 10 seconds, then goes to the next track. Press either SCAN arrow again, to stop scanning.

To scan all loaded CDs, press and hold either SCAN arrow for more than four seconds until CD SCAN appears on the display and you hear a beep. Use this feature to listen to 10 seconds of the first track of each loaded CD. Press either SCAN arrow again, to stop scanning.

BAND: Press this button to listen to the radio when a CD is playing. The inactive CD(s) remains safely inside the radio for future listening.

CD AUX (Auxiliary): Press this button to play a CD when listening to the radio. CD appears on the display when a CD is in the player. If your system has a remote playback device, pressing this button a second time allows the remote device to play.

AUTO EQ (Automatic Equalization): Press AUTO EQ to select the equalization setting while playing a CD. The equalization is stored whenever a CD is played. For more information on AUTO EQ, see “AUTO EQ” listed previously in this section.

Playing an MP3 CD-R Disc

Your vehicle’s radio system may have the MP3 feature. If it has this feature, it is capable of playing an MP3 CD-R disc. For more information on how to play an MP3 CD-R disc, see *Using an MP3 on page 259* later in this section.

Using ♩☰ (Song List) Mode (Single CD, MP3, and Six-Disc CD)

This feature is capable of saving 20 track selections. To save tracks into the song list feature, perform the following steps:

1. Turn the CD player on and load it with at least one CD.
2. Check to see that the CD player is not in song list mode. S-LIST should not appear on the display. If S-LIST displays, press the song list button to turn it off.
3. Select the desired CD by pressing the numbered pushbutton and then use the SEEK right arrow or turn the tune knob to locate the track to be saved. The track begins to play.
4. Press and hold the song list button to save the track into memory. When song list is pressed, one beep is heard immediately. ADDED SONG appears on the display.
5. Repeat Steps 3 and 4 for saving other selections.

SONGLIST FULL appears on the display if you try to save more than 20 selections.

To play the song list, press the song list button. The recorded tracks begins to play in the order they were saved.

Seek through the song list by using the SEEK arrows. Seeking past the last saved track returns to the first saved track.

To delete tracks from the song list, perform the following steps:

1. Turn the CD player on.
2. Press the song list button to turn song list on. S-LIST appears on the display.
3. Press either SEEK arrow or turn the tune knob to select the desired track to be deleted.
4. Press and hold the song list button for two seconds. Release the button when SONG REMOVED appears on the display.

After a track has been deleted, the remaining tracks are moved up the list. When another track is added to the song list, the track is added to the end of the list.

To delete the entire song list, perform the following steps:

1. Turn the CD player on.
2. Press the song list button to turn song list on. S-LIST appears on the display.
3. Press and hold the song list button for more than four seconds. One beep is heard and SONGLIST EMPTY appears on the display indicating the song list has been deleted.

If a CD is ejected, and the song list contains saved tracks from that CD, those tracks are automatically deleted from the song list. Any tracks saved to the song list again are added to the bottom of the list.

To end song list mode, press the song list button. One beep is heard and S-LIST is removed from the display.

CD Messages

CHECK CD: If this message appears on the display and/or the CD comes out, it could be for one of the following reasons:

- It is very hot. When the temperature returns to normal, the CD should play.
- You are driving on a very rough road. When the road becomes smoother, the CD should play.
- The CD is dirty, scratched, wet, or upside down.
- The air is very humid. If so, wait about an hour and try again.
- There may have been a problem while burning the CD.
- The label may be caught in the CD player.

If the CD is not playing correctly, for any other reason, try a known good CD.

If any error occurs repeatedly or if an error cannot be corrected, contact your dealer. If the radio displays an error message, write it down and provide it to your dealer when reporting the problem.

Using an MP3

MP3 CD-R Disc

MP3 Format

If you burn your own MP3 disc on a personal computer:

- Make sure the MP3 files are recorded on a CD-R disc.
- Do not mix standard audio and MP3 files on one disc.
- Make sure playlists have a .mp3 or .wpl extension, other file extensions may not work.
- Files can be recorded with a variety of fixed or variable bit rates. Song title, artist name, and album are available for display by the radio when recorded using ID3 tags version 1 and 2.
- Create a folder structure that makes it easy to find songs while driving. Organize songs by albums using one folder for each album. Each folder or album should contain 18 songs or less.

- Make sure to finalize the disc when burning an MP3 disc, using multiple sessions. It is usually better to burn the disc all at once.
- Do not use CD-RW discs.
- Do not use colored discs.

The player will be able to read and play a maximum of 50 folders, 50 playlists, 10 sessions, and 255 files. Long file names, folder names, or playlist names may use more disc memory space than necessary. To conserve space on the disc, minimize the length of the file, folder, or playlist names. You can also play an MP3 CD that was recorded using no file folders. The system can support up to 11 folders in depth, though, keep the depth of the folders to a minimum in order to keep down the complexity and confusion in trying to locate a particular folder during playback. If a CD contains more than the maximum of 50 folders, 50 playlists, 10 sessions, and 255 files the player lets you access and navigate up to the maximum, but all items over the maximum are ignored.

Root Directory

The root directory is treated as a folder. If the root directory has compressed audio files, the directory is displayed as F1 ROOT. All files contained directly under the root directory are accessed prior to any root directory folders. However, playlists (Px) are always accessed before root folders or files.

Empty Directory or Folder

If a root directory or a folder exists somewhere in the file structure that contains only folders/subfolders and no compressed files directly beneath them, the player advances to the next folder in the file structure that contains compressed audio files. The empty folder does not display.

No Folder

When the CD contains only compressed files, the files are located under the root folder. The next and previous folder functions will not function on a CD that was recorded without folders or playlists. When displaying the name of the folder the radio displays ROOT.

When the CD contains only playlists and compressed audio files, but no folders, all files are located under the root folder. The folder down and the folder up buttons searches playlists (Px) first and then goes to the root folder. When the radio displays the name of the folder the radio displays ROOT.

Order of Play

Tracks are played in the following order:

- Play begins from the first track in the first playlist and continues sequentially through all tracks in each playlist. When the last track of the last playlist has played, play continues from the first track of the first playlist.
- If the CD does not contain any playlists, then play begins from the first track under the root directory. When all tracks from the root directory have played, play continues from files according to their numerical listing. After playing the last track from the last folder, play begins again at the first track of the first folder or root directory.

When play enters a new folder, the display does not automatically show the new folder name unless the folder mode has been chosen as the default display. See the information button later in this section for more information. The new track name appears on the display.

File System and Naming

The song name that is displayed is the song name that is contained in the ID3 tag. If the song name is not present in the ID3 tag, then the radio displays the file name without the extension (such as .mp3) as the track name.

Track names longer than 32 characters or four pages are shortened. Parts of words on the last page of text and the extension of the filename will not display.

Preprogrammed Playlists

Preprogrammed playlists that were created by WinAmp™, MusicMatch™, or Real Jukebox™ software can be accessed, however, they cannot be edited using the radio. These playlists are treated as special folders containing compressed audio song files.

Playing an MP3

Insert a CD partway into the slot, label side up. The player pulls it in, and READING appears on the display. The CD should begin playing and the CD symbol appears on the display.

If the ignition or radio is turned off with a CD-R in the player, it stays in the player. When the ignition or radio is turned on, the CD-R starts to play where it stopped, if it was the last selected audio source.

As each new track starts to play, the track number appears on the display.

The CD player can play the smaller 3 inch (8 cm) single CDs with an adapter ring. Full-size CDs and the smaller CDs are loaded in the same manner.

If playing a CD-R, the sound quality (and playback performance) may be reduced due to the CD-R quality, method of recording, the quality of the music that has been recorded, and the way the CD-R has been handled. For better playback performance when home burning audio discs, use brand named CD media with the [“Compact Disc” trade mark logo], and a burn rate no faster than 12X.

There may be an increase in skipping, difficulty in finding tracks, and/or difficulty in loading and ejecting. If these problems occur, check the bottom surface of the CD. If the surface of the CD is damaged, such as cracked, broken, or scratched, the CD will not play properly. If the surface of the CD is soiled, see *Care of Your CDs on page 269* for more information.

If there is no apparent damage, try a known good CD.

Do not add any label to a CD, it could get caught in the CD player. If a CD is recorded on a personal computer and a description label is needed, try labeling the top of the recorded CD with a marking pen instead.

Notice: **If you add any label to a CD, insert more than one CD into the slot at a time, or attempt to play scratched or damaged CDs, you could damage the CD player. When using the CD player, use only CDs in good condition without any label, load one CD at a time, and keep the CD player and the loading slot free of foreign materials, liquids, and debris.**

If an error appears on the display, see “CD Messages” later in this section.

/ ♪ (Tune): Turn this knob clockwise or counterclockwise to go to the next or previous track.

≪ **(Previous Folder):** Press this button to go to the first track in the previous folder. Press and hold this button to reverse through the current track.

≫ **(Next Folder):** Press this pushbutton to go to the first track in the next folder. Press and hold this button to fast forward the current track.

RDM (Random): Press this button to hear the tracks in random, rather than sequential order, on one CD, one folder, or all of the loaded CDs.

To use random, do one of the following:

- To play the tracks on the CD you are listening to in random order, press and release this button until RANDOM DISC appears on the display.
- To play the tracks in the folder you are listening to in random order, press and release this button until RANDOM FOLDER appears on the display.
- To play the tracks on all of the CDs that are loaded in random order, press and release this button until RANDOM ALL appears on the display.

To turn off random play, press and release the RDM button until RANDOM OFF appears on the display.

RPT (Repeat): Press this button to hear a track, CD, or a folder over again.

To use repeat, do one of the following:

- To repeat a track, press and release this button until REPEAT TRACK appears on the display.
- To repeat a CD, press and release this button until REPEAT DISC appears on the display.
- To repeat a folder, press and release this button until REPEAT FOLDER appears on the display.

To turn off repeated play, press and release the RPT button until REPEAT OFF appears on the display

MUTE: Press this button to silence the system. Press this button again to turn the sound on.

This button is not available on the Radio with Six-Disc CD.

|◀ SEEK ▶|: Press the left arrow to go to the start of the current track, if more than 10 seconds have played. Press the right arrow to go to the next track. If either arrow is held or pressed more than once, the player continues moving backward or forward through the CD.

i (Information): Press this button to display the artist name and album contained in the ID3 tag.

BAND: Press this button to listen to the radio when a CD is playing. The inactive CD remains safely inside the radio for future listening.

CD AUX (Auxiliary): Press this button to play a CD when listening to the radio. The CD symbol appears on the display when a CD is loaded.

⏏ (Eject): Press this button to eject a CD. Eject can activated with either the ignition or radio off.

XM Radio Messages

If your vehicle has XM™ Satellite Radio Service, the radio may display some of the screen messages as shown in the XM™ Radio Message table. If any of these messages do appear on the radio display, follow the information and/or instructions provided in the table.

Radio Display Message	Condition	Action Required
XL (Explicit Language Channels)	XL on the radio display, after the channel name, indicates content with explicit language.	These channels, or any others, can be blocked at a customer's request, by calling 1-800-852-XMXM (9696).
Updating	Updating encryption code	The encryption code in the receiver is being updated, and no action is required. This process should take no longer than 30 seconds.
No Signal	Loss of signal	The system is functioning correctly, but the vehicle is in a location that is blocking the XM™ signal. When you move into an open area, the signal should return.
Loading XM	Acquiring channel audio (after 4 second delay)	The audio system is acquiring and processing audio and text data. No action is needed. This message should disappear shortly.
CH Off Air	Channel not in service	This channel is not currently in service. Tune to another channel.
CH Unavail	Channel no longer available	This previously assigned channel is no longer assigned. Tune to another station. If this station was one of the presets, choose another station for that preset button.

Radio Display Message	Condition	Action Required
No Info	Artist Name/Feature not available	No artist information is available at this time on this channel. The system is working properly.
No Info	Song/Program Title not available	No song title information is available at this time on this channel. The system is working properly.
No Info	Category Name not available	No category information is available at this time on this channel. The system is working properly.
No Info	No Text/Informational message available	No text or informational messages are available at this time on this channel. The system is working properly.
Not Found	No channel available for the chosen category	There are no channels available for the selected category. The system is working properly.
XM Locked	Theft lock active	The XM™ receiver in the vehicle may have previously been in another vehicle. For security purposes, XM™ receivers cannot be swapped between vehicles. If this message is received after having your vehicle serviced, check with your dealer.
Radio ID	Radio ID label (channel 0)	If tuned to channel 0, this message alternates with the XM™ Radio eight digit radio ID label. This label is needed to activate the service.
Unknown	Radio ID not known (should only be if hardware failure)	If this message is received when tuned to channel 0, there could be a receiver fault. Consult with your dealer.
Chk XMRcvr	Hardware failure	If this message does not clear within a short period of time, your receiver could have a fault. Consult with your dealer.

Navigation/Radio System

Your vehicle may have a navigation radio system.

The navigation system has built-in features intended to minimize driver distraction. Technology alone, no matter how advanced, can never replace your own judgment. See the Navigation System manual for some tips to help you reduce distractions while driving.

Theft-Deterrent Feature

THEFTLOCK® is designed to discourage theft of your vehicle's radio. The feature works automatically by learning a portion of the Vehicle Identification Number (VIN). If the radio is moved to a different vehicle, it will not operate and LOCKED will appear on the display.

With THEFTLOCK® activated, the radio will not operate if stolen.

Your radio has a blinking indicator light located on the upper left side of the radio. The indicator light is used to show that the theft-deterrent feature mode is set. The blinking indicator light will only flash when the ignition is in the off position.

Audio Steering Wheel Controls

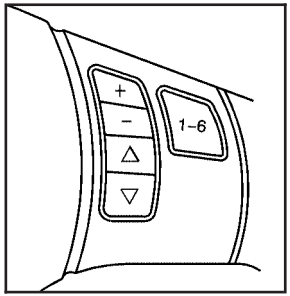

If your vehicle has this feature, some audio controls can be adjusted at the steering wheel. They include the following:

▽ △**:** Press the up or the down arrow to go to the next or to the previous radio station and stay there. The radio will only seek stations with a strong signal that are in the selected band.

To scan stations, press and hold either arrow for two seconds until SCAN appears on the display and you hear a beep. The radio will go to a station, play for a few seconds, then go on to the next station. Press either arrow again to stop scanning.

To scan presets, press and hold either arrow for four seconds until PRESET SCAN appears on the display and you hear a beep. The radio will go to a station, play for a few seconds, then go on to the next station. Press either arrow again to stop scanning.

When a CD is playing, press the up or the down arrow to go to the next or previous track.

To scan the current CD, press and hold either up or down arrow for more than two seconds. The CD will go to the next track, play the first 10 seconds, then go on to the next track. Press either up or down arrow again to stop scanning.

To scan all of the CDs loaded, press and hold either up or down arrow for more than four seconds. The CD will go to the next CD, play the first 10 seconds of each track, then go on to the next CD. Press either up or down arrow again to stop scanning.

+ – (Volume): Press the plus or minus button to increase or to decrease the volume.

1–6 (Preset Pushbuttons): Press this button to play stations that are programmed on the radio preset pushbuttons. The radio will only seek preset stations with a strong signal that are in the selected band.

Radio Reception

You may experience frequency interference and static during normal radio reception if items such as cellphone chargers, vehicle convenience accessories, and external electronic devices are plugged into the accessory power outlet. If there is interference or static, unplug the item from the accessory power outlet.

AM

The range for most AM stations is greater than for FM, especially at night. The longer range can cause station frequencies to interfere with each other. For better radio reception, most AM radio stations will boost the power levels during the day, and then reduce these levels during the night. Static can also occur when things like storms and power lines interfere with radio reception. When this happens, try reducing the treble on your radio.

FM Stereo

FM stereo will give the best sound, but FM signals will reach only about 10 to 40 miles (16 to 65 km). Tall buildings or hills can interfere with FM signals, causing the sound to fade in and out.

XM™ Satellite Radio Service

If your vehicle as the XM™ Satellite Radio Service, this type of radio service gives digital radio reception from coast-to-coast in the 48 contiguous United States, and in Canada. Just as with FM, tall buildings or hills can interfere with satellite radio signals, causing the sound to fade in and out. In addition, traveling or standing under heavy foliage, bridges, garages, or tunnels may cause loss of the XM™ signal for a period of time. The radio may display NO SIGNAL to indicate interference.

Care of Your CDs

Handle CDs carefully. Store them in their original cases or other protective cases and away from direct sunlight and dust. The CD player scans the bottom surface of the disc. If the surface of a CD is damaged, such as cracked, broken, or scratched, the CD will not play properly or not at all. If the surface of a CD is soiled, take a soft, lint free cloth or dampen a clean, soft cloth in a mild, neutral detergent solution mixed with water, and clean it. Make sure the wiping process starts from the center to the edge.

Do not touch the bottom side of a CD while handling it; this could damage the surface. Pick up CDs by grasping the outer edges or the edge of the hole and the outer edge.

Care of the CD Player

Do not use CD lens cleaners for CD players because the lens of the CD optics can become contaminated by lubricants.

Diversity Antenna System

The AM-FM antenna is a hidden self tuning system. It optimizes the AM and FM signals relative to the vehicle's position and radio station source. No maintenance or adjustments are needed.

XM™ Satellite Radio Antenna System

If your vehicle has the XM™ Satellite Radio Service, it will have an XM™ Satellite Radio antenna. This type of antenna is located on the roof or on the trunk lid of your vehicle. Keep this antenna clear of snow and ice build up for clear radio reception.

Section 4 Driving Your Vehicle

Your Driving, the Road, and Your Vehicle 272
Defensive Driving 272
Drunken Driving 273
Control of a Vehicle 276
Braking 276
Anti-Lock Brake System (ABS) 277
Braking in Emergencies 279
Traction Control System (TCS) 279
Active Handling System 281
Limited-Slip Rear Axle 283
Selective Ride Control 284
Steering 284
Off-Road Recovery 287
Passing 287
Loss of Control 289
Racing or Other Competitive Driving 290
Driving at Night 291
Driving in Rain and on Wet Roads 293
City Driving 295
Freeway Driving 296
Before Leaving on a Long Trip 298
Highway Hypnosis 299
Hill and Mountain Roads 300
Winter Driving 302
If Your Vehicle is Stuck in Sand, Mud, Ice, or Snow 306
Rocking Your Vehicle to Get It Out 307
Loading Your Vehicle 307

Towing 313
Towing Your Vehicle 313
Recreational Vehicle Towing 313
Towing a Trailer 313

Your Driving, the Road, and Your Vehicle

Defensive Driving

The best advice anyone can give about driving is: Drive defensively.

Please start with a very important safety device in your vehicle: Buckle up. See *Safety Belts: They Are for Everyone on page 16*.

⚠ CAUTION:

Defensive driving really means "Be ready for anything." On city streets, rural roads, or expressways, it means "Always expect the unexpected." Assume that pedestrians or other drivers are going to be careless and make mistakes. Anticipate what they might do and be ready. Rear-end collisions are about the most preventable of accidents. Yet they are common. Allow enough following distance. Defensive driving requires that a driver concentrate on the driving task. Anything that distracts from the driving task makes proper defensive driving more difficult and can even cause a collision, with resulting injury. Ask a passenger to help do these things, or pull off the road in a safe place to do them. These simple defensive driving techniques could save your life.

Drunken Driving

Death and injury associated with drinking and driving is a national tragedy. It is the number one contributor to the highway death toll, claiming thousands of victims every year.

Alcohol affects four things that anyone needs to drive a vehicle:

- Judgment
- Muscular Coordination
- Vision
- Attentiveness

Police records show that almost half of all motor vehicle-related deaths involve alcohol. In most cases, these deaths are the result of someone who was drinking and driving. In recent years, more than 16,000 annual motor vehicle-related deaths have been associated with the use of alcohol, with more than 300,000 people injured.

Many adults — by some estimates, nearly half the adult population — choose never to drink alcohol, so they never drive after drinking. For persons under 21, it is against the law in every U.S. state to drink alcohol. There are good medical, psychological, and developmental reasons for these laws.

The obvious way to eliminate the leading highway safety problem is for people never to drink alcohol and then drive. But what if people do? How much is “too much” if someone plans to drive? It is a lot less than many might think. Although it depends on each person and situation, here is some general information on the problem.

The Blood Alcohol Concentration (BAC) of someone who is drinking depends upon four things:

- The amount of alcohol consumed
- The drinker’s body weight
- The amount of food that is consumed before and during drinking
- The length of time it has taken the drinker to consume the alcohol

According to the American Medical Association, a 180 lb (82 kg) person who drinks three 12 ounce (355 ml) bottles of beer in an hour will end up with a BAC of about 0.06 percent. The person would reach the same BAC by drinking three 4 ounce (120 ml) glasses of wine or three mixed drinks if each had 1-1/2 ounces (45 ml) of liquors like whiskey, gin, or vodka.

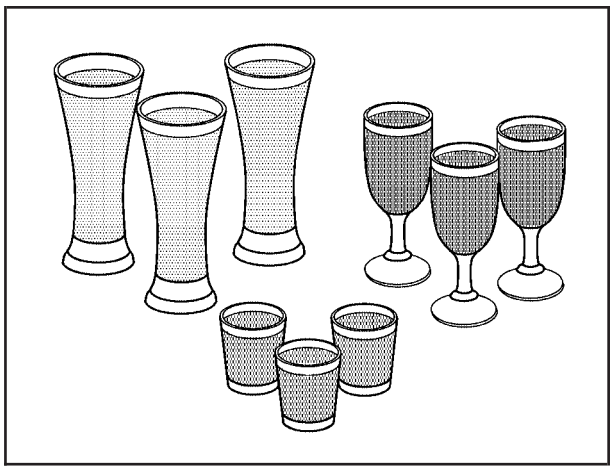

It is the amount of alcohol that counts. For example, if the same person drank three double martinis (3 ounces or 90 ml of liquor each) within an hour, the person's BAC would be close to 0.12 percent. A person who consumes food just before or during drinking will have a somewhat lower BAC level.

There is a gender difference, too. Women generally have a lower relative percentage of body water than men. Since alcohol is carried in body water, this means that a woman generally will reach a higher BAC level than a man of her same body weight will when each has the same number of drinks.

The law in most U.S. states, and throughout Canada, sets the legal limit at 0.08 percent. In some other countries, the limit is even lower. For example, it is 0.05 percent in both France and Germany. The BAC limit for all commercial drivers in the United States is 0.04 percent.

The BAC will be over 0.10 percent after three to six drinks (in one hour). Of course, as we have seen, it depends on how much alcohol is in the drinks, and how quickly the person drinks them.

But the ability to drive is affected well below a BAC of 0.10 percent. Research shows that the driving skills of many people are impaired at a BAC approaching 0.05 percent, and that the effects are worse at night. All drivers are impaired at BAC levels above 0.05 percent. Statistics show that the chance of being in a collision increases sharply for drivers who have a BAC of 0.05 percent or above. A driver with a BAC level of 0.06 percent has doubled his or her chance of having a collision. At a BAC level of 0.10 percent, the chance of this driver having a collision is 12 times greater; at a level of 0.15 percent, the chance is 25 times greater!

The body takes about an hour to rid itself of the alcohol in one drink. No amount of coffee or number of cold showers will speed that up. "I will be careful" is not the right answer. What if there is an emergency, a need to take sudden action, as when a child darts into the street? A person with even a moderate BAC might not be able to react quickly enough to avoid the collision.

There is something else about drinking and driving that many people do not know. Medical research shows that alcohol in a person's system can make crash injuries worse, especially injuries to the brain, spinal cord, or heart. This means that when anyone who has been drinking — driver or passenger — is in a crash, that person's chance of being killed or permanently disabled is higher than if the person had not been drinking.

⚠ CAUTION:

Drinking and then driving is very dangerous. Your reflexes, perceptions, attentiveness, and judgment can be affected by even a small amount of alcohol. You can have a serious — or even fatal — collision if you drive after drinking. Please do not drink and drive or ride with a driver who has been drinking. Ride home in a cab; or if you are with a group, designate a driver who will not drink.

Control of a Vehicle

You have three systems that make your vehicle go where you want it to go. They are the brakes, the steering, and the accelerator. All three systems have to do their work at the places where the tires meet the road.

Sometimes, as when you are driving on snow or ice, it is easy to ask more of those control systems than the tires and road can provide. That means you can lose control of your vehicle. See *Traction Control System (TCS) on page 279* and *Active Handling System on page 281*.

Adding non-GM accessories can affect your vehicle's performance. See *Accessories and Modifications on page 318*.

Braking

See *Brake System Warning Light on page 194*.

Braking action involves perception time and reaction time.

First, you have to decide to push on the brake pedal. That is perception time. Then you have to bring up your foot and do it. That is reaction time.

Average reaction time is about three-fourths of a second. But that is only an average. It might be less with one driver and as long as two or three seconds or more with another. Age, physical condition, alertness, coordination, and eyesight all play a part. So do alcohol, drugs, and frustration. But even in three-fourths of a second, a vehicle moving at 60 mph (100 km/h) travels 66 feet (20 m). That could be a lot of distance in an emergency, so keeping enough space between your vehicle and others is important.

And, of course, actual stopping distances vary greatly with the surface of the road, whether it is pavement or gravel; the condition of the road, whether it is wet, dry, or icy; tire tread; the condition of the brakes; the weight of the vehicle; and the amount of brake force applied.

Avoid needless heavy braking. Some people drive in spurts — heavy acceleration followed by heavy braking — rather than keeping pace with traffic. This is a mistake. The brakes may not have time to cool between hard stops. The brakes will wear out much faster if you do a lot of heavy braking. If you keep pace with the traffic and allow realistic following distances, you will eliminate a lot of unnecessary braking. That means better braking and longer brake life.

If your vehicle's engine ever stops while you are driving, brake normally but do not pump the brakes. If you do, the pedal may get harder to push down. If the engine stops, you will still have some power brake assist. But you will use it when you brake. Once the power assist is used up, it may take longer to stop and the brake pedal will be harder to push.

Under certain weather or operating conditions, occasional brake squeak, squeal, or other noise may be heard with your vehicle's performance braking system. This brake system is designed for superior fade resistance and consistent operation using high performance brake pads. Brake noise is normal and does not affect system performance.

Adding non-GM accessories can affect your vehicle's performance. See *Accessories and Modifications on page 318*.

Anti-Lock Brake System (ABS)

Your vehicle has the Anti-Lock Brake System (ABS), an advanced electronic braking system that will help prevent a braking skid.

When you start your engine and begin to drive away, ABS will check itself. You may hear a momentary motor or clicking noise while this test is going on, and you may even notice that your brake pedal moves a little. This is normal.

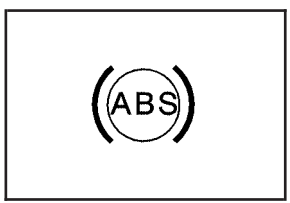

If there is a problem with ABS, this warning light will stay on. See *Anti-Lock Brake System Warning Light on page 195*.

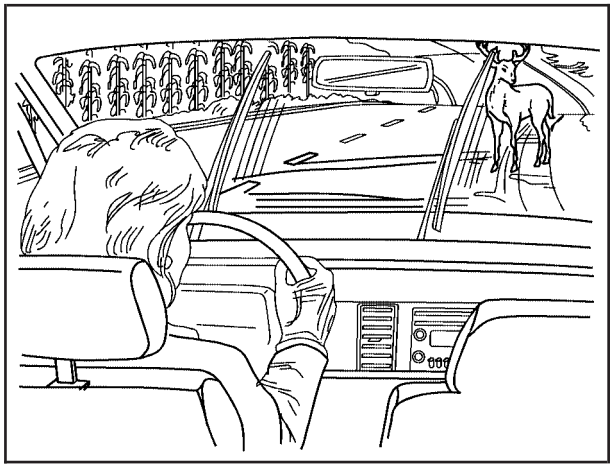

Let us say the road is wet and you are driving safely. Suddenly, an animal jumps out in front of you. You slam on the brakes and continue braking. Here is what happens with ABS:

A computer senses that wheels are slowing down. If one of the wheels is about to stop rolling, the computer will separately work the brakes at each wheel.

ABS can change the brake pressure faster than any driver could. The computer is programmed to make the most of available tire and road conditions. This can help you steer around the obstacle while braking hard.

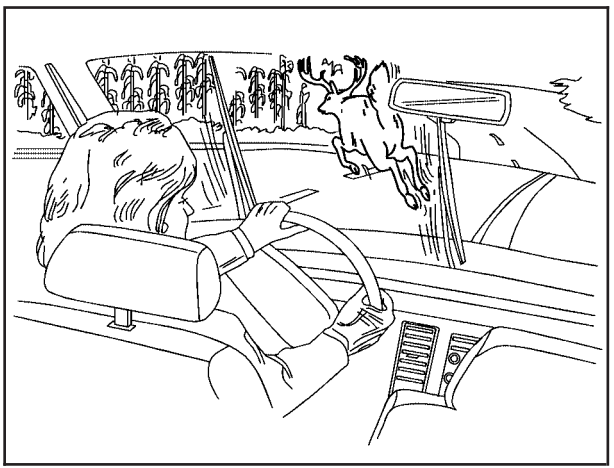

As you brake, your computer keeps receiving updates on wheel speed and controls braking pressure accordingly.

Remember: ABS does not change the time you need to get your foot up to the brake pedal or always decrease stopping distance. If you get too close to the vehicle in front of you, you will not have time to apply your brakes if that vehicle suddenly slows or stops. Always leave enough room up ahead to stop, even though you have ABS.

Using ABS

Do not pump the brakes. Just hold the brake pedal down firmly and let anti-lock work for you. You may hear a motor or clicking noise and feel the brake pedal move a little during a stop, but this is normal.

Braking in Emergencies

With ABS, you can steer and brake at the same time. In many emergencies, steering can help you more than even the very best braking.

Traction Control System (TCS)

Your vehicle has a traction control system called TCS that limits wheel spin. This is especially useful in slippery road conditions. The system operates only if it senses that the rear wheels are spinning too much or are beginning to lose traction. When this happens, the system works the rear brakes and reduces engine power (by closing the throttle and managing engine spark) to limit wheel spin.

The TRACTION SYSTEM ACTIVE message displays on the Driver Information Center (DIC) when the TCS system is limiting wheel spin. See *DIC Warnings and Messages on page 212*. You may feel or hear the system working, but this is normal.

If your vehicle is in cruise control when the TCS system begins to limit wheel spin, the cruise control will automatically disengage. When road conditions allow you to safely use it again, you may re-engage the cruise control. See *Turn Signal/Multifunction Lever on page 158*.

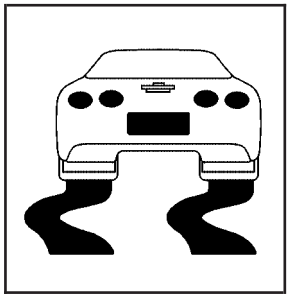

The SERVICE TRACTION SYSTEM message and the TCS warning light will come on to let you know if there is a problem with your TCS system. See *DIC Warnings and Messages on page 212*.

When this light and the SERVICE TRACTION SYSTEM message are on, the system will not limit wheel spin. Adjust your driving accordingly.

The TCS system automatically comes on whenever you start your vehicle. To limit wheel spin, especially in slippery road conditions, you should always leave the system on. But you can turn the TCS system off if you ever need to.

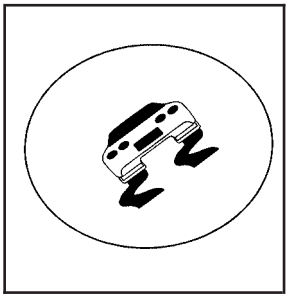

To turn the system off, press the button located on the console.

You can turn the system on or off at any time by pressing the ACTIVE HANDLING button. The DIC will display the appropriate message when you push the button.

Notice: **When traction control is turned off, or Competitive Driving Mode is active, it is possible to lose traction. If you attempt to shift with the rear wheels spinning with a loss of traction, it is possible to cause damage to the transmission. Do not attempt to shift when the rear wheels do not have traction. Damage caused by misuse of the vehicle is not covered. See your warranty book for additional information.**

Adding non-GM accessories can affect your vehicle's performance. See *Accessories and Modifications on page 318* for more information.

Active Handling System

The Active Handling System is a computer controlled system that helps the driver maintain directional control of the vehicle in difficult driving conditions. This is accomplished by selectively applying any one of the vehicle's brakes.

When you first start your vehicle during cold winter weather and begin to drive away, the message ACTIVE HANDLING WARMING UP may be displayed in the DIC. This is normal. You can acknowledge this message by pressing the RESET button. The Active Handling System performance is affected until the message, ACTIVE HANDLING READY, is displayed in the DIC.

The ACTIVE HANDLING CALIBRATING message may be displayed in the DIC and the instrument panel cluster light will be on after exceeding 18 mph (30 km/h) for 10 seconds. The Active Handling System is off until the ACTIVE HANDLING READY message is displayed. This could take up to 15 minutes.

The ACTIVE HANDLING message will come on when the system is operating. See *DIC Warnings and Messages on page 212* for more information. You may also feel or hear the system working. This is normal.

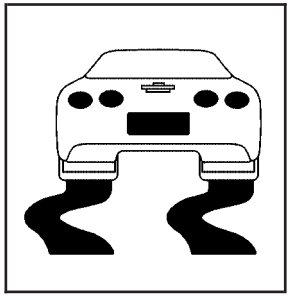

The SERVICE ACTIVE HANDLING message will be displayed, the instrument cluster light will come on, and a chime will sound to let you know if there is a problem with the system.

See *DIC Warnings and Messages on page 212* for more information.

When this light and the SERVICE ACTIVE HANDLING SYSTEM message are on, the system is not operational. Adjust your driving accordingly.

The Active Handling System comes on automatically whenever you start your vehicle. To help maintain directional control of the vehicle, you should always leave the system on. You can turn the system off if you ever need to. If you turn the Active Handling System off, the Traction Control System will also be turned off. Adjust your driving accordingly.

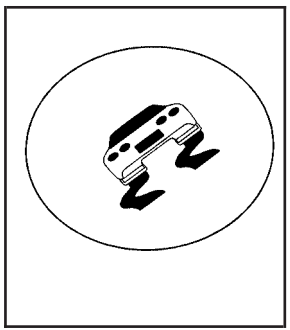

To turn the system off, press the ACTIVE HANDLING button on the console for five seconds. You can turn the system on at any time by pressing the button. The DIC will display the appropriate message when you push the button.

If the Tire Pressure Monitor (TPM) system detects a flat tire and the Driver Information Center (DIC) displays TIRE FLAT, or if the TPM system is malfunctioning and the DIC displays SERVICE TIRE MONITOR, the Active Handling System will be affected as follows:

- The Active Handling System cannot be turned off by the driver.
- If the Active Handling System is off, it will be turned on automatically.
- Competitive Driving Mode is unavailable.
- The Active Handling System will feel different in aiding and maintaining directional control.

Competitive Driving Mode

The driver can select this optional handling mode by pressing the ACTIVE HANDLING button on the console two times within a five second time period. COMPETITIVE DRIVING MODE will be displayed in the DIC. Competitive Driving Mode allows the driver to have full control of the rear wheels while the Active Handling System helps maintain directional control of the vehicle by selective brake application. This involves less intervention than with both the Active Handling System and Traction Control Systems on. The instrument cluster light will not be on. The Traction Control System will not be operating. Adjust your driving accordingly.

When you press the ACTIVE HANDLING button again, or turn the ignition to Acc., the Active Handling and Traction Control Systems will be on. The TRACTION SYSTEM AND ACTIVE HANDLING-ON message will be displayed temporarily in the DIC and a chime will be heard.

Notice: **When traction control is turned off, or Competitive Driving Mode is active, it is possible to lose traction. If you attempt to shift with the rear wheels spinning with a loss of traction, it is possible to cause damage to the transmission. Do not attempt to shift when the rear wheels do not have traction. Damage caused by misuse of the vehicle is not covered. See your warranty book for additional information.**

Limited-Slip Rear Axle

Your limited-slip rear axle can give you additional traction on snow, mud, ice, sand or gravel. It works like a standard axle most of the time, but when one of the rear wheels has no traction and the other does, this feature will allow the wheel with traction to move the vehicle.

Selective Ride Control

You may have a ride control system on your vehicle called Magnetic Selective Ride Control. The system provides the following performance benefits:

- Reduced Impact Harshness
- Improved Road Isolation
- Improved High-Speed Stability
- Improved Handling Response
- Better Control of Body Ride Motions

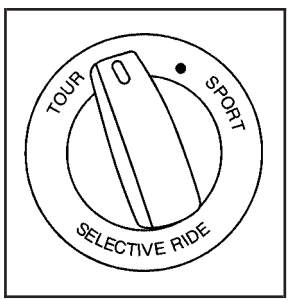

This knob is located on the center console. Turn it to select the suspension of your choice.

TOUR: Use for normal city and highway driving. This setting provides a smooth, soft ride.

SPORT: Use where road conditions or personal preference demand more control. This setting provides more “feel”, or response to the road conditions.

You can select a setting at any time. Based on road conditions, steering wheel angle and your vehicle speed, the system automatically adjusts to provide the best ride and handling. Select a new setting whenever driving conditions change.

There are three Driver Information Center (DIC) messages that are displayed when a malfunction occurs with the Selective Ride Control system (SERVICE RIDE CONTROL, SHOCKS INOPERATIVE, MAXIMUM SPEED 80 MPH (129 KM/H). Refer to *DIC Warnings and Messages on page 212* for more information.

Steering

Power Steering

If you lose power steering assist because the engine stops or the system is not functioning, you can steer but it will take much more effort.

Magnetic Speed Variable Assist Steering

Your vehicle has a steering system that continuously adjusts the effort you feel when steering at all vehicle speeds. It provides ease when parking, yet a firm, solid feel at highway speeds.

Steering Tips

It is important to take curves at a reasonable speed.

A lot of the “driver lost control” accidents mentioned on the news happen on curves. Here is why:

Experienced driver or beginner, each of us is subject to the same laws of physics when driving on curves. The traction of the tires against the road surface makes it possible for the vehicle to change its path when you turn the front wheels. If there is no traction, inertia will keep the vehicle going in the same direction. If you have ever tried to steer a vehicle on wet ice, you will understand this.

The traction you can get in a curve depends on the condition of the tires and the road surface, the angle at which the curve is banked, and your speed. While you are in a curve, speed is the one factor you can control.

Suppose you are steering through a sharp curve. Then you suddenly accelerate. Both control systems — steering and acceleration — have to do their work where the tires meet the road. Adding the sudden acceleration can demand too much of those places. You can lose control. See *Traction Control System (TCS) on page 279*.

What should you do if this ever happens? Ease up on the accelerator pedal, steer the vehicle the way you want it to go, and slow down.

Speed limit signs near curves warn that you should adjust your speed. Of course, the posted speeds are based on good weather and road conditions. Under less favorable conditions you will want to go slower.

If you need to reduce your speed as you approach a curve, do it before you enter the curve, while the front wheels are straight ahead.

Try to adjust your speed so you can “drive” through the curve. Maintain a reasonable, steady speed. Wait to accelerate until you are out of the curve, and then accelerate gently into the straightaway.

Adding non-GM accessories can affect your vehicle’s performance. See *Accessories and Modifications on page 318*.

Steering in Emergencies

There are times when steering can be more effective than braking. For example, you come over a hill and find a truck stopped in your lane, or a car suddenly pulls out from nowhere, or a child darts out from between parked cars and stops right in front of you. You can avoid these problems by braking — if you can stop in time. But sometimes you cannot; there is not room. That is the time for evasive action — steering around the problem.

Your vehicle can perform very well in emergencies like these. First apply your brakes.

See *Braking on page 276*. It is better to remove as much speed as you can from a possible collision. Then steer around the problem, to the left or right depending on the space available.

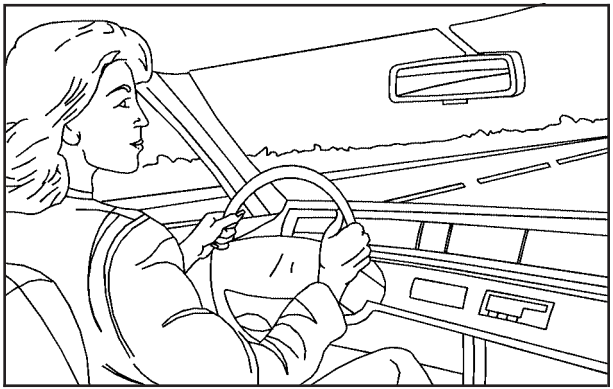

An emergency like this requires close attention and a quick decision. If you are holding the steering wheel at the recommended 9 and 3 o'clock positions, you can turn it a full 180 degrees very quickly without removing either hand. But you have to act fast, steer quickly, and just as quickly straighten the wheel once you have avoided the object.

The fact that such emergency situations are always possible is a good reason to practice defensive driving at all times and wear safety belts properly.

Off-Road Recovery

You may find that your right wheels have dropped off the edge of a road onto the shoulder while you are driving.

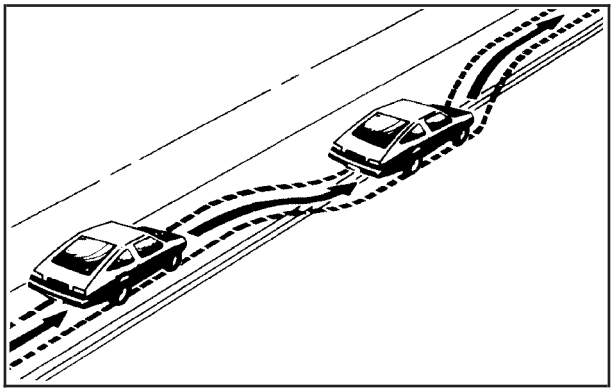

If the level of the shoulder is only slightly below the pavement, recovery should be fairly easy. Ease off the accelerator and then, if there is nothing in the way, steer so that your vehicle straddles the edge of the pavement.

You can turn the steering wheel up to one-quarter turn until the right front tire contacts the pavement edge. Then turn your steering wheel to go straight down the roadway.

Passing

The driver of a vehicle about to pass another on a two-lane highway waits for just the right moment, accelerates, moves around the vehicle ahead, then goes back into the right lane again. A simple maneuver?

Not necessarily! Passing another vehicle on a two-lane highway is a potentially dangerous move, since the passing vehicle occupies the same lane as oncoming traffic for several seconds. A miscalculation, an error in judgment, or a brief surrender to frustration or anger can suddenly put the passing driver face to face with the worst of all traffic accidents — the head-on collision.

So here are some tips for passing:

- Drive ahead. Look down the road, to the sides, and to crossroads for situations that might affect your passing patterns. If you have any doubt whatsoever about making a successful pass, wait for a better time.
- Watch for traffic signs, pavement markings, and lines. If you can see a sign up ahead that might indicate a turn or an intersection, delay your pass. A broken center line usually indicates it is all right to pass, providing the road ahead is clear. Never cross a solid line on your side of the lane or a double solid line, even if the road seems empty of approaching traffic.
- Do not get too close to the vehicle you want to pass while you are awaiting an opportunity. For one thing, following too closely reduces your area of vision, especially if you are following a larger vehicle. Also, you will not have adequate space if the vehicle ahead suddenly slows or stops. Keep back a reasonable distance.
- When it looks like a chance to pass is coming up, start to accelerate but stay in the right lane and do not get too close. Time your move so you will be increasing speed as the time comes to move into the other lane. If the way is clear to pass, you will have a running start that more than makes up for the distance you would lose by dropping back. And if something happens to cause you to cancel your pass, you need only slow down and drop back again and wait for another opportunity.
- If other vehicles are lined up to pass a slow vehicle, wait your turn. But take care that someone is not trying to pass you as you pull out to pass the slow vehicle. Remember to glance over your shoulder and check the blind spot.
- Check your vehicle's mirrors, glance over your shoulder, and start your left lane change signal before moving out of the right lane to pass. When you are far enough ahead of the passed vehicle to see its front in your vehicle's inside mirror, activate the right lane change signal and move back into the right lane. Remember that your vehicle's passenger side outside mirror is convex. The vehicle you just passed may seem to be farther away from you than it really is.

- Try not to pass more than one vehicle at a time on two-lane roads. Reconsider before passing the next vehicle.
- Do not overtake a slowly moving vehicle too rapidly. Even though the brake lamps are not flashing, it may be slowing down or starting to turn.
- If you are being passed, make it easy for the following driver to get ahead of you. Perhaps you can ease a little to the right.

Loss of Control

Let us review what driving experts say about what happens when the three control systems — brakes, steering, and acceleration — do not have enough friction where the tires meet the road to do what the driver has asked.

In any emergency, do not give up. Keep trying to steer and constantly seek an escape route or area of less danger.

Skidding

In a skid, a driver can lose control of the vehicle. Defensive drivers avoid most skids by taking reasonable care suited to existing conditions, and by not overdriving those conditions. But skids are always possible.

The three types of skids correspond to your vehicle's three control systems. In the braking skid, your wheels are not rolling. In the steering or cornering skid, too much speed or steering in a curve causes tires to slip and lose cornering force. And in the acceleration skid, too much throttle causes the driving wheels to spin.

A cornering skid is best handled by easing your foot off the accelerator pedal.

Remember: Any traction control system helps avoid only the acceleration skid. If your traction control system is off, then an acceleration skid is also best handled by easing your foot off the accelerator pedal.

If your vehicle starts to slide, ease your foot off the accelerator pedal and quickly steer the way you want the vehicle to go. If you start steering quickly enough, your vehicle may straighten out. Always be ready for a second skid if it occurs.

Of course, traction is reduced when water, snow, ice, gravel, or other material is on the road. For safety, you will want to slow down and adjust your driving to these conditions. It is important to slow down on slippery surfaces because stopping distance will be longer and vehicle control more limited.

While driving on a surface with reduced traction, try your best to avoid sudden steering, acceleration, or braking, including reducing vehicle speed by shifting to a lower gear. Any sudden changes could cause the tires to slide. You may not realize the surface is slippery until your vehicle is skidding. Learn to recognize warning clues — such as enough water, ice, or packed snow on the road to make a mirrored surface — and slow down when you have any doubt.

Remember: Any Anti-Lock Brake System (ABS) helps avoid only the braking skid.

Racing or Other Competitive Driving

See your warranty book before using your vehicle for racing or other competitive driving.

Notice: **If you use your vehicle for racing or other competitive driving, the engine may use more oil than it would with normal use. Low oil levels can damage the engine. For information on how to add oil, see *Engine Oil on page 332*.**

Z06 Only: Be sure to check the oil level often during racing or other competitive driving and keep the level at or near the upper mark that shows the proper operating range on the engine oil dipstick.

Except Z06: Be sure to check the oil level often during racing or other competitive driving and keep the level at or near 1 quart (1 L) above the upper mark that shows the proper operating range on the engine oil dipstick. After the competitive driving, remove excess oil so that the level on the dipstick is not above the upper mark that shows the proper operating range.

Vehicles with the Z51 performance package have greaseable outer ends on both of the rear toe-links. Under normal use, lubrication should be performed as described in the maintenance schedule. See *Scheduled Maintenance on page 433* and *Recommended Fluids and Lubricants on page 443*. If you use the vehicle for racing, lubrication should be performed at the end of each racing day. See your dealer for lubrication and make sure any needed repairs are made at once. Proper procedures for performing these services can be found in the service manual. See *Service Publications Ordering Information on page 471*.

Driving at Night

Night driving is more dangerous than day driving. One reason is that some drivers are likely to be impaired — by alcohol or drugs, with night vision problems, or by fatigue.

Here are some tips on night driving.

- Drive defensively.
- Do not drink and drive.
- Adjust the inside rearview mirror to reduce the glare from headlamps behind you.
- Since you cannot see as well, you may need to slow down and keep more space between you and other vehicles.
- Slow down, especially on higher speed roads. Your vehicle's headlamps can light up only so much road ahead.
- In remote areas, watch for animals.
- If you are tired, pull off the road in a safe place and rest.

No one can see as well at night as in the daytime. But as we get older these differences increase. A 50-year-old driver may require at least twice as much light to see the same thing at night as a 20-year-old.

What you do in the daytime can also affect your night vision. For example, if you spend the day in bright sunshine you are wise to wear sunglasses. Your eyes will have less trouble adjusting to night. But if you are driving, do not wear sunglasses at night. They may cut down on glare from headlamps, but they also make a lot of things invisible.

You can be temporarily blinded by approaching headlamps. It can take a second or two, or even several seconds, for your eyes to re-adjust to the dark. When you are faced with severe glare, as from a driver who does not lower the high beams, or a vehicle with misaimed headlamps, slow down a little. Avoid staring directly into the approaching headlamps.

Keep the windshield and all the glass on your vehicle clean — inside and out. Glare at night is made much worse by dirt on the glass. Even the inside of the glass can build up a film caused by dust. Dirty glass makes lights dazzle and flash more than clean glass would, making the pupils of your eyes contract repeatedly.

Remember that the headlamps light up far less of a roadway when you are in a turn or curve. Keep your eyes moving; that way, it is easier to pick out dimly lighted objects. Just as the headlamps should be checked regularly for proper aim, so should your eyes be examined regularly. Some drivers suffer from night blindness — the inability to see in dim light — and are not even aware of it.

Driving in Rain and on Wet Roads

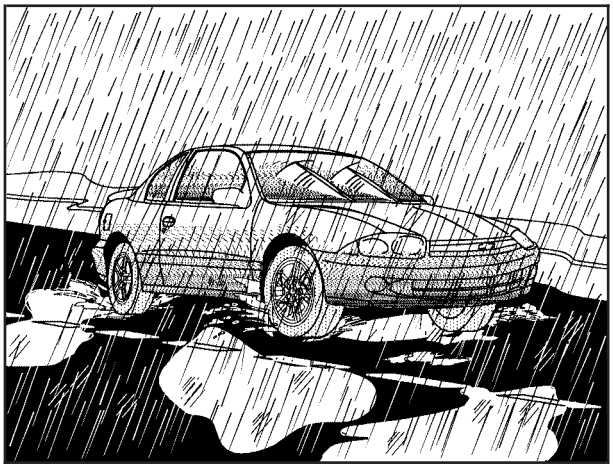

Rain and wet roads can mean driving trouble. On a wet road, you cannot stop, accelerate, or turn as well because your tire-to-road traction is not as good as on dry roads. And, if your tires do not have much tread left, you will get even less traction. It is always wise to go slower and be cautious if rain starts to fall while you are driving. The surface may get wet suddenly when your reflexes are tuned for driving on dry pavement.

The heavier the rain, the harder it is to see. Even if your windshield wiper blades are in good shape, a heavy rain can make it harder to see road signs and traffic signals, pavement markings, the edge of the road, and even people walking.

It is wise to keep your windshield wiping equipment in good shape and keep your windshield washer fluid reservoir filled with washer fluid. Replace your windshield wiper inserts when they show signs of streaking or missing areas on the windshield, or when strips of rubber start to separate from the inserts.

⚠ CAUTION:

Wet brakes can cause accidents. They may not work as well in a quick stop and may cause pulling to one side. You could lose control of the vehicle.

After driving through a large puddle of water or a car wash, apply your brake pedal lightly until your brakes work normally.

Driving too fast through large water puddles or even going through some car washes can cause problems, too. The water may affect your brakes. Try to avoid puddles. But if you cannot, try to slow down before you hit them.

Hydroplaning

Hydroplaning is dangerous. So much water can build up under your tires that they can actually ride on the water. This can happen if the road is wet enough and you are going fast enough. When your vehicle is hydroplaning, it has little or no contact with the road.

Hydroplaning does not happen often. But it can if your tires do not have much tread or if the pressure in one or more is low. It can happen if a lot of water is standing on the road. If you can see reflections from trees, telephone poles, or other vehicles, and raindrops dimple the water's surface, there could be hydroplaning.

Hydroplaning usually happens at higher speeds. There just is not a hard and fast rule about hydroplaning. The best advice is to slow down when it is raining.

Driving Through Deep Standing Water

Notice: **If you drive too quickly through deep puddles or standing water, water can come in through your engine's air intake and badly damage your engine. Never drive through water that is slightly lower than the underbody of your vehicle. If you cannot avoid deep puddles or standing water, drive through them very slowly.**

Driving Through Flowing Water

⚠ CAUTION:

Flowing or rushing water creates strong forces. If you try to drive through flowing water, as you might at a low water crossing, your vehicle can be carried away. As little as six inches of flowing water can carry away a smaller vehicle. If this happens, you and other vehicle occupants could drown. Do not ignore police warning signs, and otherwise be very cautious about trying to drive through flowing water.

Some Other Rainy Weather Tips

- Besides slowing down, allow some extra following distance. And be especially careful when you pass another vehicle. Allow yourself more clear room ahead, and be prepared to have your view restricted by road spray.
- Have good tires with proper tread depth. See *Tires on page 378*.

City Driving

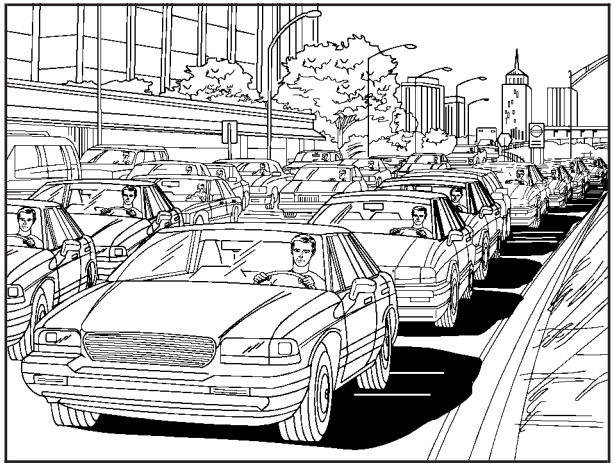

One of the biggest problems with city streets is the amount of traffic on them. You will want to watch out for what the other drivers are doing and pay attention to traffic signals.

Here are ways to increase your safety in city driving:

- Know the best way to get to where you are going. Get a city map and plan your trip into an unknown part of the city just as you would for a cross-country trip.
- Try to use the freeways that rim and crisscross most large cities. You will save time and energy. See *Freeway Driving on page 296*.
- Treat a green light as a warning signal. A traffic light is there because the corner is busy enough to need it. When a light turns green, and just before you start to move, check both ways for vehicles that have not cleared the intersection or may be running the red light.

Freeway Driving

Mile for mile, freeways — also called thruways, parkways, expressways, turnpikes, or superhighways — are the safest of all roads. But they have their own special rules.

The most important advice on freeway driving is: Keep up with traffic and keep to the right. Drive at the same speed most of the other drivers are driving. Too-fast or too-slow driving breaks a smooth traffic flow. Treat the left lane on a freeway as a passing lane.

At the entrance, there is usually a ramp that leads to the freeway. If you have a clear view of the freeway as you drive along the entrance ramp, you should begin to check traffic. Try to determine where you expect to blend with the flow. Try to merge into the gap at close to the prevailing speed. Switch on your turn signal, check your mirrors, and glance over your shoulder as often as necessary. Try to blend smoothly with the traffic flow.

Once you are on the freeway, adjust your speed to the posted limit or to the prevailing rate if it is slower. Stay in the right lane unless you want to pass.

Before changing lanes, check your mirrors. Then use your turn signal.

Just before you leave the lane, glance quickly over your shoulder to make sure there is not another vehicle in your blind spot.

Once you are moving on the freeway, make certain you allow a reasonable following distance.

Expect to move slightly slower at night.

When you want to leave the freeway, move to the proper lane well in advance. If you miss your exit, do not, under any circumstances, stop and back up. Drive on to the next exit.

The exit ramp can be curved, sometimes quite sharply. The exit speed is usually posted. Reduce your speed according to your speedometer, not to your sense of motion. After driving for any distance at higher speeds, you may tend to think you are going slower than you actually are.

Before Leaving on a Long Trip

Make sure you are ready. Try to be well rested. If you must start when you are not fresh — such as after a day's work — do not plan to make too many miles that first part of the journey. Wear comfortable clothing and shoes you can easily drive in.

Is your vehicle ready for a long trip? If you keep it serviced and maintained, it is ready to go. If it needs service, have it done before starting out. Of course, you will find experienced and able service experts in GM dealerships all across North America. They will be ready and willing to help if you need it.

Here are some things you can check before a trip:

- *Windshield Washer Fluid:* Is the reservoir full? Are all windows clean inside and outside?
- *Wiper Blades:* Are they in good shape?
- *Fuel, Engine Oil, Other Fluids:* Have you checked all levels?
- *Lamps:* Are they all working? Are the lenses clean?
- *Tires:* They are vitally important to a safe, trouble-free trip. Is the tread good enough for long-distance driving? Are the tires all inflated to the recommended pressure?
- *Weather Forecasts:* What is the weather outlook along your route? Should you delay your trip a short time to avoid a major storm system?
- *Maps:* Do you have up-to-date maps?

Highway Hypnosis

Is there actually such a condition as highway hypnosis? Or is it just plain falling asleep at the wheel? Call it highway hypnosis, lack of awareness, or whatever.

There is something about an easy stretch of road with the same scenery, along with the hum of the tires on the road, the drone of the engine, and the rush of the wind against the vehicle that can make you sleepy. Do not let it happen to you! If it does, your vehicle can leave the road in less than a second, and you could crash and be injured.

What can you do about highway hypnosis? First, be aware that it can happen.

Then here are some tips:

- Make sure your vehicle is well ventilated, with a comfortably cool interior.
- Keep your eyes moving. Scan the road ahead and to the sides. Check your rearview mirrors and your instruments frequently.
- If you get sleepy, pull off the road into a rest, service, or parking area and take a nap, get some exercise, or both. For safety, treat drowsiness on the highway as an emergency.

Hill and Mountain Roads

Driving on steep hills or mountains is different from driving in flat or rolling terrain.

If you drive regularly in steep country, or if you are planning to visit there, here are some tips that can make your trips safer and more enjoyable.

- Keep your vehicle in good shape. Check all fluid levels and also the brakes, tires, cooling system, and transmission. These parts can work hard on mountain roads.

⚠ CAUTION:

If you do not shift down, your brakes could get so hot that they would not work well. You would then have poor braking or even none going down a hill. You could crash. Shift down to let your engine assist your brakes on a steep downhill slope.

⚠ CAUTION:

Coasting downhill in NEUTRAL (N) or with the ignition off is dangerous. Your brakes will have to do all the work of slowing down. They could get so hot that they would not work well. You would then have poor braking or even none going down a hill. You could crash. Always have your engine running and your vehicle in gear when you go downhill.

- Know how to go down hills. The most important thing to know is this: let your engine do some of the slowing down. Shift to a lower gear when you go down a steep or long hill.
- Know how to go uphill. You may want to shift down to a lower gear. The lower gears help cool your engine and transmission, and you can climb the hill better.
- Stay in your own lane when driving on two-lane roads in hills or mountains. Do not swing wide or cut across the center of the road. Drive at speeds that let you stay in your own lane.
- As you go over the top of a hill, be alert. There could be something in your lane, like a stalled car or an accident.
- You may see highway signs on mountains that warn of special problems. Examples are long grades, passing or no-passing zones, a falling rocks area, or winding roads. Be alert to these and take appropriate action.

Winter Driving

Here are some tips for winter driving:

- Have your vehicle in good shape for winter.
- You may want to put winter emergency supplies in your vehicle.

Also see *Tires on page 378*.

Include an ice scraper, a small brush or broom, a supply of windshield washer fluid, a rag, some winter outer clothing, a small shovel, a flashlight, a red cloth, and a couple of reflective warning triangles. And, if you will be driving under severe conditions, include a small bag of sand, a piece of old carpet, or a couple of burlap bags to help provide traction. Be sure you properly secure these items in your vehicle.

Driving On Snow or Ice

Most of the time, those places where the tires meet the road probably have good traction.

However, if there is snow or ice between the tires and the road, you can have a very slippery situation. You will have a lot less traction, or grip, and will need to be very careful.

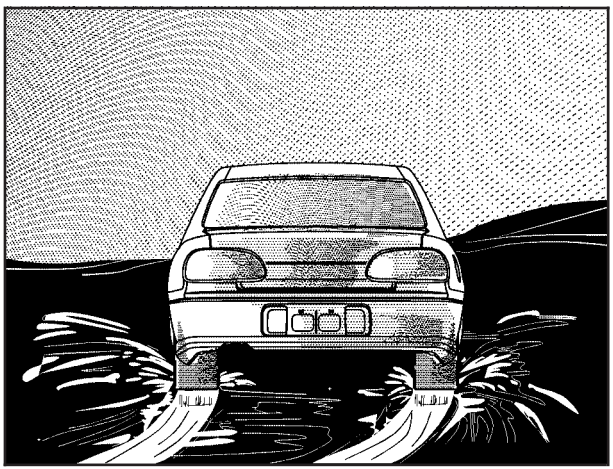

What is the worst time for this? Wet ice. Very cold snow or ice can be slick and hard to drive on. But wet ice can be even more trouble because it may offer the least traction of all. You can get wet ice when it is about freezing, 32°F (0°C), and freezing rain begins to fall. Try to avoid driving on wet ice until salt and sand crews can get there.

Whatever the condition — smooth ice, packed, blowing, or loose snow — drive with caution.

Traction control improves your ability to accelerate when driving on a slippery road. Even though your vehicle has a traction control system, you will want to slow down and adjust your driving to the road conditions. Under certain conditions, you may want to turn the traction control system off, such as when driving through deep snow and loose gravel, to help maintain vehicle motion at lower speeds. See *Traction Control System (TCS) on page 279*. The Active Handling System may also activate. See *Active Handling System on page 281*.

The Anti-Lock Brake System (ABS) improves your vehicle's stability when you make a hard stop on a slippery road. Even though you have ABS, you will want to begin stopping sooner than you would on dry pavement. See *Anti-Lock Brake System (ABS) on page 277*.

- Allow greater following distance on any slippery road.
- Watch for slippery spots. The road might be fine until you hit a spot that is covered with ice. On an otherwise clear road, ice patches may appear in shaded areas where the sun cannot reach, such as around clumps of trees, behind buildings, or under bridges. Sometimes the surface of a curve or an overpass may remain icy when the surrounding roads are clear. If you see a patch of ice ahead of you, brake before you are on it. Try not to brake while you are actually on the ice, and avoid sudden steering maneuvers.

If You Are Caught in a Blizzard

If you are stopped by heavy snow, you could be in a serious situation. You should probably stay with your vehicle unless you know for sure that you are near help and you can hike through the snow. Here are some things to do to summon help and keep yourself and your passengers safe:

- Turn on your hazard flashers.
- Tie a red cloth to your vehicle to alert police that you have been stopped by the snow.
- Put on extra clothing or wrap a blanket around you. If you do not have blankets or extra clothing, make body insulators from newspapers, burlap bags, rags, floor mats — anything you can wrap around yourself or tuck under your clothing to keep warm.

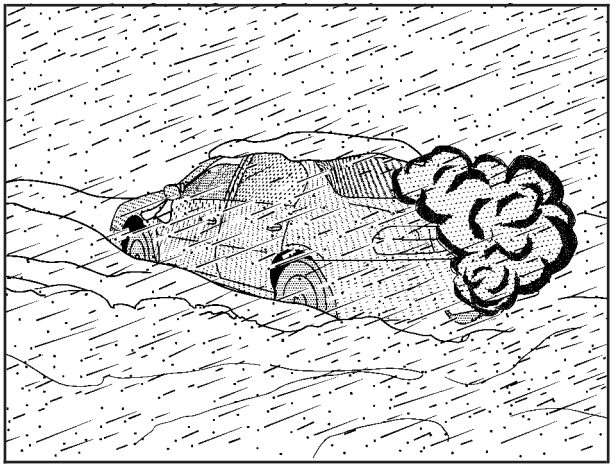

You can run the engine to keep warm, but be careful.

⚠ CAUTION:

Snow can trap exhaust gases under your vehicle. This can cause deadly CO (carbon monoxide) gas to get inside. CO could overcome you and kill you. You cannot see it or smell it, so you might not know it is in your vehicle. Clear away snow from around the base of your vehicle, especially any that is blocking your exhaust pipe. And check around again from time to time to be sure snow does not collect there.

Open a window just a little on the side of the vehicle that is away from the wind. This will help keep CO out.

Run your engine only as long as you must. This saves fuel. When you run the engine, make it go a little faster than just idle. That is, push the accelerator slightly. This uses less fuel for the heat that you get and it keeps the battery charged.

You will need a well-charged battery to restart the vehicle, and possibly for signaling later on with your headlamps. Let the heater run for a while.

Then, shut the engine off and close the window almost all the way to preserve the heat. Start the engine again and repeat this only when you feel really uncomfortable from the cold. But do it as little as possible. Preserve the fuel as long as you can. To help keep warm, you can get out of the vehicle and do some fairly vigorous exercises every half hour or so until help comes.

If Your Vehicle is Stuck in Sand, Mud, Ice, or Snow

In order to free your vehicle when it is stuck, you will need to spin the wheels, but you do not want to spin your wheels too fast. The method known as rocking can help you get out when you are stuck, but you must use caution.

⚠ CAUTION:

If you let your vehicle's tires spin at high speed, they can explode, and you or others could be injured. And, the transmission or other parts of the vehicle can overheat. That could cause an engine compartment fire or other damage. When you are stuck, spin the wheels as little as possible. Do not spin the wheels above 35 mph (55 km/h) as shown on the speedometer.

Notice: **Spinning the wheels can destroy parts of your vehicle as well as the tires. If you spin the wheels too fast while shifting the transmission back and forth, you can destroy the transmission.**

For information about using tire chains on your vehicle, see *Tire Chains on page 401*.

Rocking Your Vehicle to Get It Out

First, turn the steering wheel left and right. That will clear the area around the front wheels. You should turn the traction control system off. See *Traction Control System (TCS) on page 279*. Then shift back and forth between REVERSE (R) and a forward gear, spinning the wheels as little as possible. For a manual transmission, shift slowly between either FIRST (1) or SECOND (2) and REVERSE (R), allowing the wheels to stop before shifting into gear. Release the accelerator pedal while you shift, and press lightly on the accelerator pedal when the transmission is in gear. By slowly spinning the wheels in the forward and reverse directions, you will cause a rocking motion that may free your vehicle. If that does not get your vehicle out after a few tries, it may need to be towed out. If your vehicle does need to be towed out, see *Towing Your Vehicle on page 313*.

Loading Your Vehicle

It is very important to know how much weight your vehicle can carry. This weight is called the vehicle capacity weight and includes the weight of all occupants, cargo and all nonfactory-installed options. Two labels on your vehicle show how much weight it may properly carry, the Tire and Loading Information label and the Certification label.

⚠ CAUTION:

Do not load your vehicle any heavier than the Gross Vehicle Weight Rating (GVWR), or either the maximum front or rear Gross Axle Weight Rating (GAWR). If you do, parts on your vehicle can break, and it can change the way your vehicle handles. These could cause you to lose control and crash. Also, overloading can shorten the life of your vehicle.

Tire and Loading Information Label

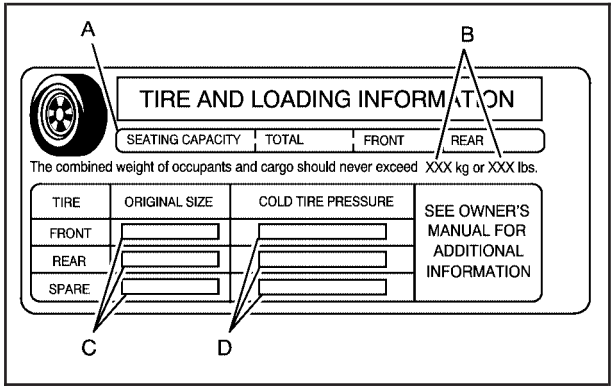

Label Example

A vehicle specific Tire and Loading Information label is attached to the center pillar (B-pillar) of your vehicle. With the driver's door open, you will find the label attached below the door latch. This label shows the number of occupant seating positions (A), and the maximum vehicle capacity weight (B) in kilograms and pounds.

The Tire and Loading Information label also shows the size of the original equipment tires (C) and the recommended cold tire inflation pressures (D). For more information on tires and inflation see *Tires on page 378* and *Inflation - Tire Pressure on page 386*.

There is also important loading information on the vehicle Certification label. It tells you the Gross Vehicle Weight Rating (GVWR) and the Gross Axle Weight Rating (GAWR) for the front and rear axle. See "Certification Label" later in this section.

Steps for Determining Correct Load Limit

1. Locate the statement “The combined weight of occupants and cargo should never exceed XXX kg or XXX lbs” on your vehicle’s placard.
2. Determine the combined weight of the driver and passengers that will be riding in your vehicle.
3. Subtract the combined weight of the driver and passengers from XXX kg or XXX lbs.
4. The resulting figure equals the available amount of cargo and luggage load capacity. For example, if the “XXX” amount equals 1400 lbs and there will be five 150 lb passengers in your vehicle, the amount of available cargo and luggage load capacity is 650 lbs (1400 – 750 (5 x 150) = 650 lbs).
5. Determine the combined weight of luggage and cargo being loaded on the vehicle. That weight may not safely exceed the available cargo and luggage load capacity calculated in Step 4.
6. If your vehicle will be towing a trailer, the load from your trailer will be transferred to your vehicle. Consult this manual to determine how this reduces the available cargo and luggage load capacity of your vehicle.

   Your vehicle is neither designed nor intended to tow a trailer.

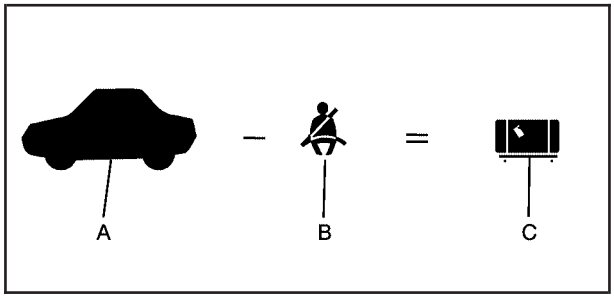

Example 1

Item	Description	Total
A	Vehicle Capacity Weight for Example 1 =	400 lbs (181 kg)
B	Subtract Occupant Weight @ 150 lbs (68 kg) x 1 =	150 lbs (68 kg)
C	Available Occupant and Cargo Weight =	250 lbs (113 kg)

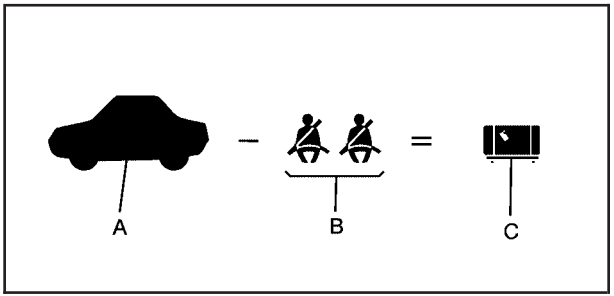

Example 2

Item	Description	Total
A	Vehicle Capacity Weight for Example 2 =	400 lbs (181 kg)
B	Subtract Occupant Weight @ 150 lbs (68 kg) x 2 =	300 lbs (136 kg)
C	Available Cargo Weight =	100 lbs (45 kg)

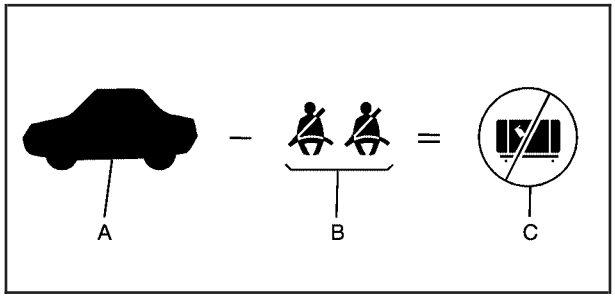

Example 3

Item	Description	Total
A	Vehicle Capacity Weight for Example 3 =	400 lbs (181 kg)
B	Subtract Occupant Weight @ 200 lbs (91 kg) x 2 =	400 lbs (181 kg)
C	Available Cargo Weight =	0 lbs (0 kg)

Refer to your vehicle's tire and loading information label for specific information about your vehicle's capacity weight and seating positions. The combined weight of the driver, passengers and cargo should never exceed your vehicle's capacity weight.

Certification Label

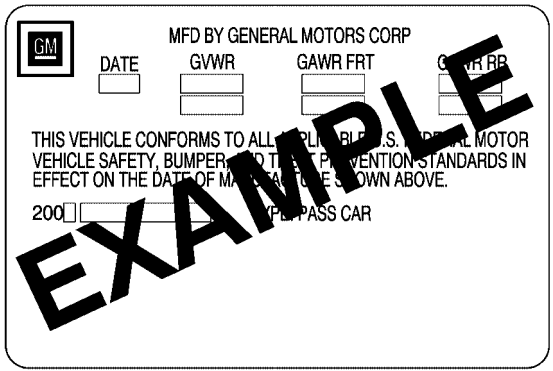

A vehicle specific Certification label is attached to the rear edge of the driver's door. It tells you the gross weight capacity of your vehicle, called the Gross Vehicle Weight Rating (GVWR). The GVWR includes the weight of the vehicle, all occupants, fuel and cargo. Never exceed the GVWR for your vehicle, or the Gross Axle Weight Rating (GAWR) for either the front or rear axle.

Do not load your vehicle with more weight than it was designed to carry. See “Steps for Determining Correct Load Limit” earlier in this section.

⚠ CAUTION:

Do not load your vehicle any heavier than the Gross Vehicle Weight Rating (GVWR), or either the maximum front or rear Gross Axle Weight Rating (GAWR). If you do, parts on your vehicle can break, and it can change the way your vehicle handles. These could cause you to lose control and crash. Also, overloading can shorten the life of your vehicle.

Notice: **Overloading your vehicle may cause damage. Repairs would not be covered by your warranty. Do not overload your vehicle.**

If you put things inside your vehicle — like suitcases, tools, packages or anything else — they will go as fast as the vehicle goes. If you have to stop or turn quickly, or if there is a crash, they will keep going.

⚠ CAUTION:

Things you put inside your vehicle can strike and injure people in a sudden stop or turn, or in a crash.

- **Put things in the rear area of your vehicle. Try to spread the weight evenly.**
- **Never stack heavier things, like suitcases, inside the vehicle so that some of them are above the tops of the seats.**
- **Do not leave an unsecured child restraint in your vehicle.**
- **When you carry something inside the vehicle, secure it whenever you can.**

Towing

Towing Your Vehicle

Consult your dealer or a professional towing service if you need to have your disabled vehicle towed. See *Roadside Assistance Program on page 458*.

Recreational Vehicle Towing

Recreational vehicle towing means towing your vehicle behind another vehicle — such as behind a motorhome. The two most common types of recreational vehicle towing are known as “dinghy towing”, towing your vehicle with all four wheels on the ground, and “dolly towing”, towing your vehicle with two wheels on the ground and two wheels up on a device known as a “dolly”.

Your vehicle was not designed to be towed with any of its wheels on the ground. If your vehicle must be towed, see “Towing Your Vehicle” earlier in this section.

Towing a Trailer

Your Corvette is neither designed nor intended to tow a trailer.

NOTES

Section 5 Service and Appearance Care

Service 318
Accessories and Modifications 318
California Proposition 65 Warning 319
Doing Your Own Service Work 319
Adding Equipment to the Outside of Your Vehicle 320

Fuel 320
Gasoline Octane 320
Gasoline Specifications 321
California Fuel 321
Additives 322
Fuels in Foreign Countries 323
Filling the Tank 323
Filling a Portable Fuel Container 326

Checking Things Under the Hood 326
Hood Release 327
Engine Compartment Overview 328
Engine Oil 332
Engine Oil Life System 340
Engine Air Cleaner/Filter 342
Automatic Transmission Fluid 345
Manual Transmission Fluid 346
Hydraulic Clutch 346
Engine Coolant 347
Coolant Surge Tank Pressure Cap 350
Engine Overheating 350
Overheated Engine Protection Operating Mode 352
Cooling System 352
Power Steering Fluid 357
Windshield Washer Fluid 359
Brakes 360
Battery 363
Jump Starting 364

Rear Axle 370

Bulb Replacement 370
High Intensity Discharge (HID) Lighting 371
Halogen Bulbs 371
Headlamps, Front Turn Signal, and Parking Lamps 372
Taillamps, Turn Signal, and Stoplamps 373
Replacement Bulbs 374

Section 5 Service and Appearance Care

Windshield Replacement 374
Windshield Wiper Blade Replacement 375
Tires 378
Winter Tires 379
Tire Sidewall Labeling 380
Tire Terminology and Definitions 382
Extended Mobility Tires 384
Inflation - Tire Pressure 386
High-Speed Operation 388
Tire Pressure Monitor System 389
Tire Rotation 392
When It Is Time for New Tires 393
Buying New Tires 393
Different Size Tires and Wheels 395
Uniform Tire Quality Grading 396
Wheel Alignment and Tire Balance 397
Wheel Replacement 398
Tire Chains 401
Lifting Your Vehicle 402
If a Tire Goes Flat 406
Appearance Care 407
Cleaning the Inside of Your Vehicle 407
Fabric/Carpet 409
Coated Moldings 409
Leather 410
Instrument Panel, Vinyl, and Other Plastic Surfaces 410
Cargo Cover and Convenience Net 411
Care of Safety Belts 411
Weatherstrips 411
Washing Your Vehicle 411
Cleaning Exterior Lamps/Lenses 412
Finish Care 412
Windshield and Wiper Blades 413
Removable Roof Panel 414
Convertible Top 414
Aluminum Wheels 415
Tires 415
Finish Damage 416
Underbody Maintenance 416
Fiberglass Springs (Composite Springs) 416
Chemical Paint Spotting 416
Vehicle Care/Appearance Materials 417

Section 5 Service and Appearance Care

Vehicle Identification 418
Vehicle Identification Number (VIN) 418
Service Parts Identification Label 418
Electrical System 419
Add-On Electrical Equipment 419
Headlamp Wiring 419
Windshield Wiper Fuses 419
Power Windows and Other Power Options 420
Fuses and Circuit Breakers 420
Instrument Panel Fuse Block 420
Engine Compartment Fuse Block 424
Capacities and Specifications 427

Service

Your dealer knows your vehicle best and wants you to be happy with it. We hope you will go to your dealer for all your service needs. You will get genuine GM parts and GM-trained and supported service people.

We hope you will want to keep your GM vehicle all GM. Genuine GM parts have one of these marks:

ACDelco®

GM Parts

GM Goodwrench

GM Accessories

Accessories and Modifications

When you add non-GM accessories to your vehicle they can affect your vehicle's performance and safety, including such things as, airbags, braking, stability, ride and handling, emissions systems, aerodynamics, durability, and electronic systems like anti-lock brakes, traction control and stability control. Some of these accessories may even cause malfunction or damage not covered by warranty.

GM Accessories are designed to complement and function with other systems on your vehicle. Your GM dealer can accessorize your vehicle using genuine GM Accessories. When you go to your GM dealer and ask for GM Accessories, you will know that GM-trained and supported service technicians will perform the work using genuine GM Accessories.

California Proposition 65 Warning

Most motor vehicles, including this one, contain and/or emit chemicals known to the State of California to cause cancer and birth defects or other reproductive harm. Engine exhaust, many parts and systems (including some inside the vehicle), many fluids, and some component wear by-products contain and/or emit these chemicals.

Doing Your Own Service Work

⚠ CAUTION:

You can be injured and your vehicle could be damaged if you try to do service work on a vehicle without knowing enough about it.

- **Be sure you have sufficient knowledge, experience, the proper replacement parts, and tools before you attempt any vehicle maintenance task.**

CAUTION: (Continued)

CAUTION: (Continued)

- **Be sure to use the proper nuts, bolts, and other fasteners. English and metric fasteners can be easily confused. If you use the wrong fasteners, parts can later break or fall off. You could be hurt.**

If you want to do some of your own service work, you will want to use the proper service manual. It tells you much more about how to service your vehicle than this manual can. To order the proper service manual, see *Service Publications Ordering Information on page 471*.

Your vehicle has an airbag system. Before attempting to do your own service work, see *Servicing Your Airbag-Equipped Vehicle on page 64*.

You should keep a record with all parts receipts and list the mileage and the date of any service work you perform. See *Maintenance Record on page 447*.

Adding Equipment to the Outside of Your Vehicle

Things you might add to the outside of your vehicle can affect the airflow around it. This may cause wind noise and affect windshield washer performance. Check with your dealer before adding equipment to the outside of your vehicle.

Fuel

Use of the recommended fuel is an important part of the proper maintenance of your vehicle. To help keep your engine clean and maintain optimum vehicle performance, GM recommends the use of gasoline advertised as TOP TIER Detergent Gasoline.

The 8th digit of your Vehicle Identification Number (VIN) shows the code letter or number that identifies your engine. You will find the VIN at the top left of the instrument panel. See *Vehicle Identification Number (VIN) on page 418*.

Gasoline Octane

If your vehicle has the 6.0L V8 engine (VIN Code U), use premium unleaded gasoline with a posted octane rating of 91 or higher. You may also use regular unleaded gasoline rated at 87 octane or higher, but your vehicle's acceleration may be slightly reduced, and you may notice a slight audible knocking noise, commonly referred to as spark knock. If the octane is less than 87, you may notice a heavy knocking noise when you drive. If this occurs, use a gasoline rated at 87 octane or higher as soon as possible. Otherwise, you might damage your engine. If you are using gasoline rated at 87 octane or higher and you hear heavy knocking, your engine needs service.

If your vehicle has the 7.0L V8 engine (VIN Code E), use premium unleaded gasoline with a posted octane rating of 91 or higher. For best performance, use premium unleaded gasoline with a posted octane rating of 93.

In an emergency, you can use regular unleaded gasoline with an octane rating of 87 or higher. If 87 octane fuel is used, do not perform any aggressive driving maneuvers such as wide open throttle applications. You may also hear audible spark knock during acceleration. Refill your tank with premium fuel as soon as possible to avoid damaging your engine. If you are using gasoline rated at 91 octane or higher and you hear heavy knocking, your engine needs service.

Gasoline Specifications

At a minimum, gasoline should meet ASTM specification D 4814 in the United States or CAN/CGSB-3.5 in Canada. Some gasolines may contain an octane-enhancing additive called methylcyclopentadienyl manganese tricarbonyl (MMT). General Motors recommends against the use of gasolines containing MMT. See *Additives on page 322* for additional information.

California Fuel

If your vehicle is certified to meet California Emissions Standards, it is designed to operate on fuels that meet California specifications. See the underhood emission control label. If this fuel is not available in states adopting California emissions standards, your vehicle will operate satisfactorily on fuels meeting federal specifications, but emission control system performance may be affected. The malfunction indicator lamp may turn on and your vehicle may fail a smog-check test. See *Malfunction Indicator Lamp on page 198*. If this occurs, return to your authorized GM dealer for diagnosis. If it is determined that the condition is caused by the type of fuel used, repairs may not be covered by your warranty.

Additives

To provide cleaner air, all gasolines in the United States are now required to contain additives that will help prevent engine and fuel system deposits from forming, allowing your emission control system to work properly. In most cases, you should not have to add anything to your fuel. However, some gasolines contain only the minimum amount of additive required to meet U.S. Environmental Protection Agency regulations. To help keep fuel injectors and intake valves clean, or if your vehicle experiences problems due to dirty injectors or valves, look for gasoline that is advertised as TOP TIER Detergent Gasoline. Also, your dealer has additives that will help correct and prevent most deposit-related problems.

Gasolines containing oxygenates, such as ethers and ethanol, and reformulated gasolines may be available in your area. General Motors recommends that you use these gasolines if they comply with the specifications described earlier. However, E85 (85% ethanol) and other fuels containing more than 10% ethanol must not be used in vehicles that were not designed for those fuels.

Notice: **Your vehicle was not designed for fuel that contains methanol. Do not use fuel containing methanol. It can corrode metal parts in your fuel system and also damage the plastic and rubber parts. That damage would not be covered under your warranty.**

Some gasolines that are not reformulated for low emissions may contain an octane-enhancing additive called methylcyclopentadienyl manganese tricarbonyl (MMT); ask the attendant where you buy gasoline whether the fuel contains MMT. General Motors recommends against the use of such gasolines. Fuels containing MMT can reduce the life of spark plugs and the performance of the emission control system may be affected. The malfunction indicator lamp may turn on. If this occurs, return to your dealer for service.

Fuels in Foreign Countries

If you plan on driving in another country outside the United States or Canada, the proper fuel may be hard to find. Never use leaded gasoline or any other fuel not recommended in the previous text on fuel. Costly repairs caused by use of improper fuel would not be covered by your warranty.

To check the fuel availability, ask an auto club, or contact a major oil company that does business in the country where you will be driving.

Filling the Tank

⚠ CAUTION:

Fuel vapor burns violently and a fuel fire can cause bad injuries. To help avoid injuries to you and others, read and follow all the instructions on the pump island. Turn off your engine when you are refueling. Do not smoke if you are near fuel or refueling your vehicle.

CAUTION: (Continued)

CAUTION: (Continued)

Keep sparks, flames, and smoking materials away from fuel. Do not leave the fuel pump unattended when refueling your vehicle. This is against the law in some places. Keep children away from the fuel pump; never let children pump fuel.

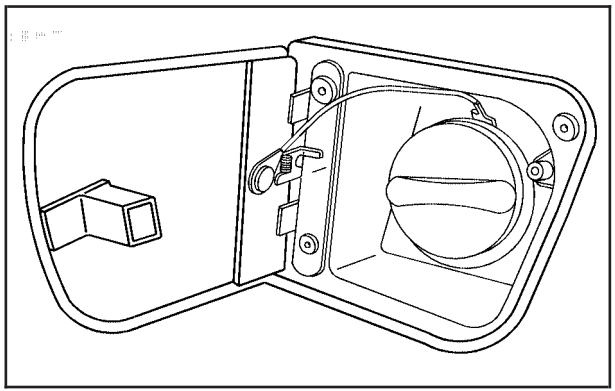

The tethered fuel cap is located behind a hinged fuel door on the driver's side of the vehicle.

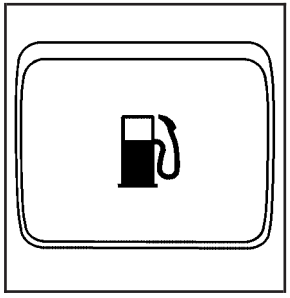

The fuel door release button is located on the instrument panel to the left of the steering wheel. Push the button to release the fuel door.

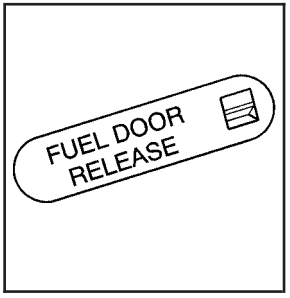

There is also a manual fuel door release tab. It is located against the upper trim in the rear compartment on the driver's side of the vehicle. Pull the tab to release the fuel door.

To remove the fuel cap, turn it slowly counterclockwise. The fuel cap has a spring in it; if the cap is released too soon, it will spring back to the right.

While refueling, let the cap hang by the tether below the fuel fill opening.

⚠ CAUTION:

If you spill fuel and then something ignites it, you could be badly burned. Fuel can spray out on you if you open the fuel cap too quickly. This spray can happen if your tank is nearly full, and is more likely in hot weather. Open the fuel cap slowly and wait for any hiss noise to stop. Then unscrew the cap all the way.

Be careful not to spill fuel. Do not top off or overfill the tank and wait a few seconds after you have finished pumping before removing the nozzle. Clean fuel from painted surfaces as soon as possible. See *Washing Your Vehicle on page 411*.

When replacing the fuel cap, turn it clockwise until it clicks. Make sure the cap is fully installed. The diagnostic system can determine if the fuel cap has been left off or improperly installed. This would allow fuel to evaporate into the atmosphere. See *Malfunction Indicator Lamp on page 198*.

The CHECK GAS CAP message will be displayed on the Driver Information Center (DIC) if the fuel cap is not properly installed. See *DIC Warnings and Messages on page 212* for more information.

⚠ CAUTION:

If a fire starts while you are refueling, do not remove the nozzle. Shut off the flow of fuel by shutting off the pump or by notifying the station attendant. Leave the area immediately.

Notice: **If you need a new fuel cap, be sure to get the right type. Your dealer can get one for you. If you get the wrong type, it may not fit properly. This may cause your malfunction indicator lamp to light and may damage your fuel tank and emissions system. See *Malfunction Indicator Lamp on page 198*.**

Filling a Portable Fuel Container

⚠ CAUTION:

Never fill a portable fuel container while it is in your vehicle. Static electricity discharge from the container can ignite the gasoline vapor. You can be badly burned and your vehicle damaged if this occurs. To help avoid injury to you and others:

- **Dispense gasoline only into approved containers.**
- **Do not fill a container while it is inside a vehicle, in a vehicle's trunk, pickup bed, or on any surface other than the ground.**
- **Bring the fill nozzle in contact with the inside of the fill opening before operating the nozzle. Contact should be maintained until the filling is complete.**
- **Do not smoke while pumping gasoline.**

Checking Things Under the Hood

⚠ CAUTION:

An electric fan under the hood can start up and injure you even when the engine is not running. Keep hands, clothing, and tools away from any underhood electric fan.

⚠ CAUTION:

Things that burn can get on hot engine parts and start a fire. These include liquids like fuel, oil, coolant, brake fluid, windshield washer and other fluids, and plastic or rubber. You or others could be burned. Be careful not to drop or spill things that will burn onto a hot engine.

Hood Release

To open the hood, do the following:

1. Pull the hood release lever with this symbol on it. It is located inside the vehicle below the instrument panel on the driver's side.

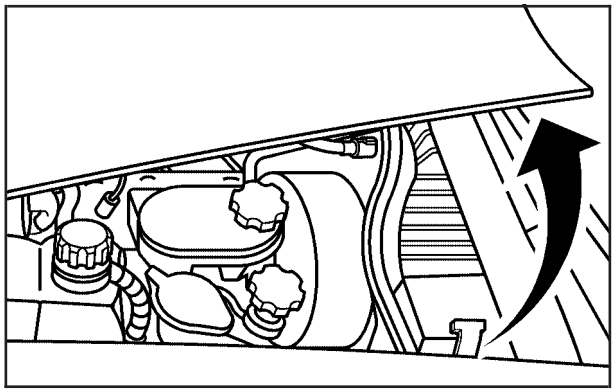

2. Go to the side of the vehicle and pull up on the rear edge of the hood, near the windshield.

Before closing the hood, be sure all the filler caps are on properly. Then, just pull the hood down and close it firmly.

Engine Compartment Overview

If your vehicle has the 6.0L LS2 V8 engine and you are facing the front, when you open the hood, here is what you will see:

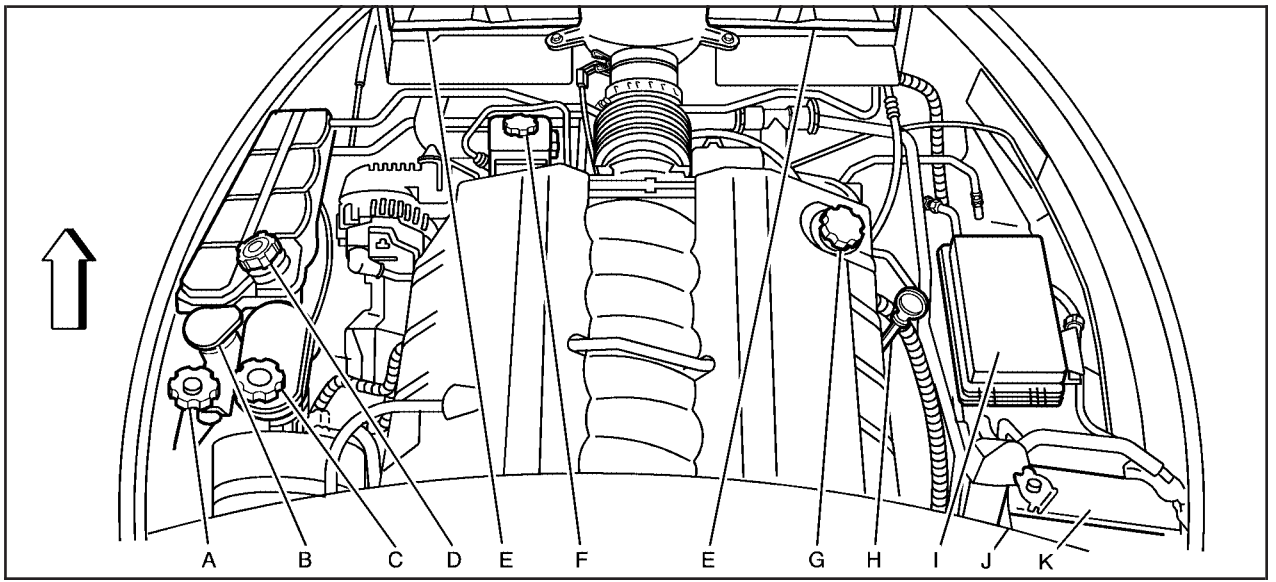

A. Clutch Master Cylinder Reservoir (If Equipped). See *Hydraulic Clutch on page 346*.

B. Windshield Washer Fluid Reservoir. See “Adding Washer Fluid” under *Windshield Washer Fluid on page 359*.

C. Brake Fluid Reservoir. See “Brake Fluid” under *Brakes on page 360*.

D. Coolant Surge Tank and Pressure Cap. See *Engine Coolant on page 347*.

E. Engine Air Cleaner/Filters. See *Engine Air Cleaner/Filter on page 342*.

F. Power Steering Fluid Reservoir. See *Power Steering Fluid on page 357*.

G. Engine Oil Fill Cap. See “When to Add Engine Oil” under *Engine Oil on page 332*.

H. Engine Oil Dipstick. See “Checking Engine Oil” under *Engine Oil on page 332*.

I. Engine Compartment Fuse Block. See *Engine Compartment Fuse Block on page 424*.

J. Passenger Compartment Air Filter (Out of View). See *Passenger Compartment Air Filter on page 184*.

K. Battery. See *Battery on page 363*.

If your vehicle has the 7.0L LS7 V8 engine and you are facing the driver's side of the vehicle, when you open the hood, here is what you will see:

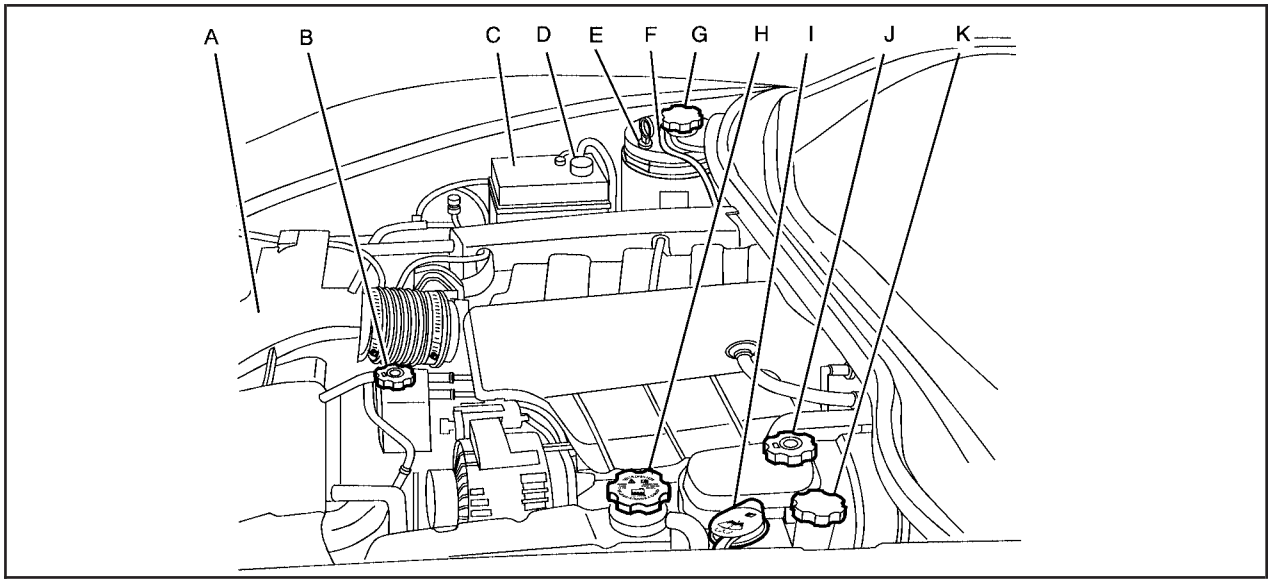

A. Engine Air Cleaner/Filter. See *Engine Air Cleaner/Filter on page 342*.

B. Power Steering Fluid Reservoir. See *Power Steering Fluid on page 357*.

C. Engine Compartment Fuse Block. See *Engine Compartment Fuse Block on page 424*.

D. Remote Positive Terminal (Out of View). See *Battery on page 363*.

E. Engine Oil Dipstick. See “Checking Engine Oil” under *Engine Oil on page 332*.

F. Dry Sump Engine Oil Tank. See “Changing Engine Oil and Filter (Z06 Only)” *Engine Oil on page 332*.

G. Engine Oil Fill Cap. See “When to Add Engine Oil” under *Engine Oil on page 332*.

H. Coolant Surge Tank and Pressure Cap. See *Engine Coolant on page 347*.

I. Windshield Washer Fluid Reservoir. See “Adding Washer Fluid” under *Windshield Washer Fluid on page 359*.

J. Brake Fluid Reservoir. See “Brake Fluid” under *Brakes on page 360*.

K. Clutch Master Cylinder Reservoir. See *Hydraulic Clutch on page 346*.

Engine Oil

Checking Engine Oil (Except Z06)

If the CHECK OIL LEVEL message on the Driver Information Center (DIC) comes on, it means you need to check the engine oil level right away. For more information, see *Driver Information Center (DIC) on page 205*. You should check the engine oil level regularly; this is an added reminder.

It is a good idea to check the engine oil level every time you get fuel. In order to get an accurate reading, the oil must be warm and the vehicle must be on level ground.

The engine oil dipstick handle is a yellow loop. See *Engine Compartment Overview on page 328* for the location of the engine oil dipstick.

1. Turn off the engine and give the oil a few minutes to drain back into the oil pan. If you do not do this, the oil dipstick might not show the actual level.
2. Pull out the dipstick and clean it with a lint-free paper towel or a cloth, then push it back in all the way. Remove it again, keeping the tip down.

Checking Engine Oil (Z06 Only)

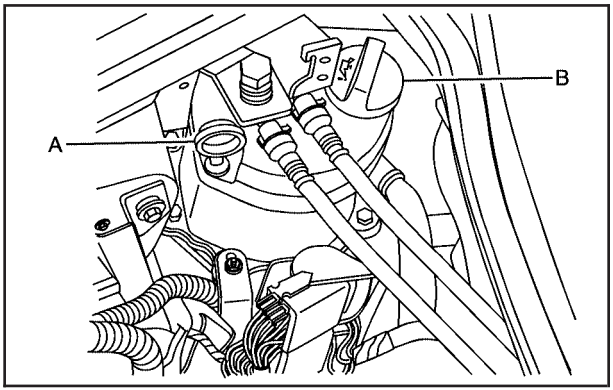

A. Engine Oil Dipstick

B. Engine Oil Fill Cap

It is a good idea to check the engine oil level every time you get fuel. In order to get an accurate reading, the oil must be warm and the vehicle must be on level ground.

The engine oil dipstick handle is a yellow loop. The dipstick is located on the dry sump engine oil tank. See *Engine Compartment Overview on page 328* for the location of the dry sump engine oil tank.

Z06 models have a racetrack-ready dry sump engine lubrication system. This high-performance system operates differently than a standard engine lubrication system and requires a special procedure when checking the engine oil level. Follow this procedure closely when checking the engine oil level.

The engine oil level must be checked when the engine is warm. Cold oil level in the dry sump tank may not indicate the actual amount of oil in the system. With this system, engine oil is contained in an external tank, separate from the engine. Under normal operating conditions, the oil pan under the engine does not store any oil. If the vehicle has been parked for an extended period without the engine being started, some oil will seep back into the oil pan, reducing the amount of oil held in the dry sump tank and there could be no engine oil at all showing on the dipstick. This is normal since the dipstick is designed to read engine oil level only after the engine has run long enough to reach normal operating temperature.

Do not add engine oil based on cold engine dipstick readings. The engine oil level on the dipstick will also be inaccurate if checked while the engine is running.

1. To obtain an accurate engine oil level reading, warm up the engine to at least 175°F (80°C). Cold oil will not give a correct oil level reading.
2. Once the engine is warm, turn off the engine. Checking the oil while the engine is running will result in an incorrect oil level reading.
3. Wait at least five minutes (but not more than 20 minutes) to allow oil to drain and settle in the engine.
4. Remove the dipstick from the external engine oil tank and clean it with a lint-free paper towel or a cloth. Re-insert the dipstick into the external oil tank, pushing it all the way in until it stops.
5. Remove the dipstick from the oil tank and read the level on the cross-hatched area. Oil levels that fall in the cross-hatched area are normal.

When to Add Engine Oil (Except Z06)

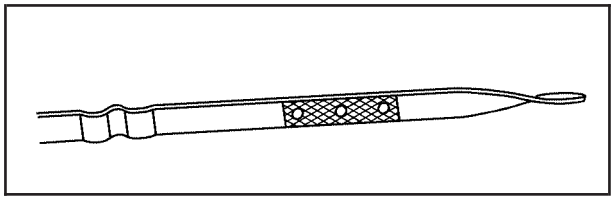

If the oil is below the cross-hatched area at the tip of the dipstick, you will need to add at least one quart/liter of oil. But you must use the right kind. This section explains what kind of oil to use. For engine oil crankcase capacity, see *Capacities and Specifications on page 427*.

See *Racing or Other Competitive Driving on page 290* for additional information on engine oil.

Notice: **Do not add too much oil. If the engine has so much oil that the oil level gets above the cross-hatched area that shows the proper operating range, the engine could be damaged.**

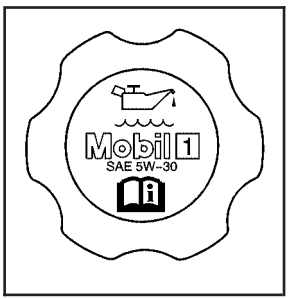

See *Engine Compartment Overview on page 328* for the location of the engine oil fill cap.

Be sure to add enough oil to put the level somewhere in the proper operating range. Push the dipstick all the way back in when you are through.

When to Add Engine Oil (Z06 Only)

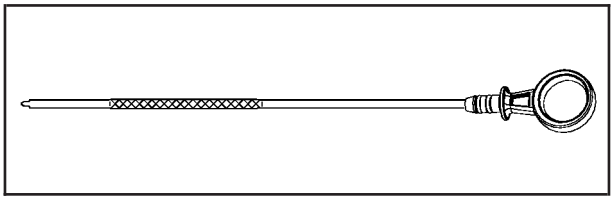

If the oil is below the cross-hatched area at the tip of the dipstick, you will need to add at least one quart/liter of oil through the oil fill cap opening in the oil tank. But you must use the right kind. This section explains what kind of oil to use. For engine oil crankcase capacity, see *Capacities and Specifications on page 427*.

See *Racing or Other Competitive Driving on page 290* for additional information on engine oil.

Notice: **Do not add too much oil. If the engine has so much oil that the oil level gets above the cross-hatched area that shows the proper operating range, the engine could be damaged.**

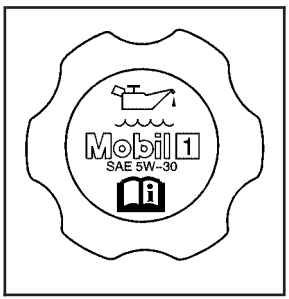

See *Engine Compartment Overview on page 328* for the location of the external engine oil tank and fill cap.

Be sure to add enough oil to put the level somewhere in the proper operating range. Push the dipstick all the way back into the oil tank when you are through.

Changing Engine Oil and Filter (Z06 Only)

Z06 models have a racetrack-ready dry sump engine lubrication system. This high-performance system operates differently than a standard engine lubrication system and requires a special procedure when changing the engine oil and filter. Follow this procedure closely when changing the engine oil and filter.

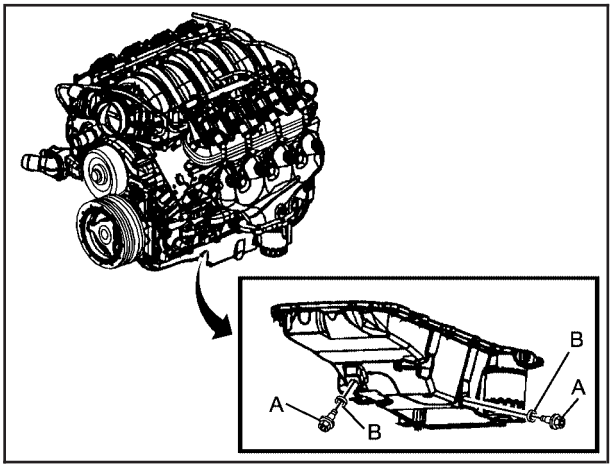

A. Engine Oil Drain Plug

B. Seal

1. Remove the two engine oil drain plugs from the bottom of the engine oil pan. One drain plug drains the external oil tank via the oil transfer supply line. The other drain plug drains residual oil from the crankcase sump. Allow the oil to drain.

2. Once the oil has been drained from the engine, remove the engine oil filter and allow the oil to drain.
3. Re-install both drain plugs and tighten them to 18 lb ft (25 N•m).
4. Replace the oil filter and tighten it to 18 lb ft (25 N•m). See *Normal Maintenance Replacement Parts on page 445* for the correct filter.
5. Oil is filled through the opening in the top of the external engine oil tank. Remove the oil fill cap.
6. Add eight quarts (7.6 L) of oil to the oil tank. See *Capacities and Specifications on page 427*.
7. Install the oil fill cap and insert the dipstick, if removed.
8. Start the engine and let it run at idle for at least 15 seconds. This will circulate the fresh engine oil through the lubrication system.
9. Shut off the engine and check the oil level as described under “Checking Engine Oil (Z06 Only).”

What Kind of Engine Oil to Use

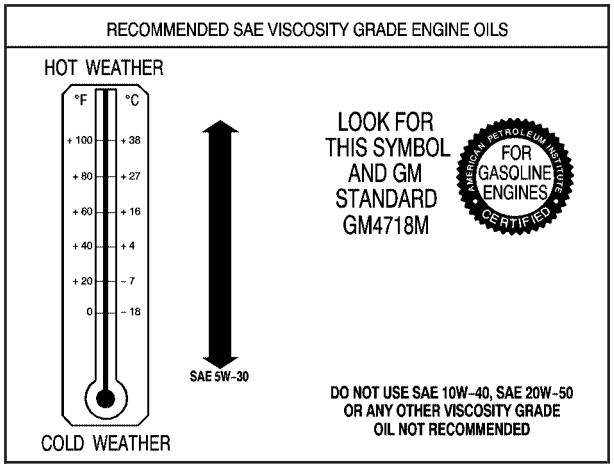

Look for two things:

- GM4718M

  Your vehicle's engine requires a special oil meeting GM Standard GM4718M. Oils meeting this standard may be identified as synthetic. However, not all synthetic oils will meet this GM standard. You should look for and use only an oil that meets GM Standard GM4718M.

Notice: **If you use oils that do not have the GM4718M Standard designation, you can cause engine damage not covered by your warranty.**

- SAE 5W-30

  As shown in the viscosity chart, SAE 5W-30 is best for your vehicle.

  These numbers on an oil container show its viscosity, or thickness. Do not use other viscosity oils such as SAE 20W-50.

Oils meeting these requirements should also have the starburst symbol on the container. This symbol indicates that the oil has been certified by the American Petroleum Institute (API).

You should look for this on the oil container, and use only those oils that are identified as meeting GM Standard GM4718M and have the starburst symbol on the front of the oil container.

Your vehicle's engine is filled at the factory with a Mobil 1® synthetic oil, which meets all requirements for your vehicle.

Substitute Engine Oil: When adding oil to maintain engine oil level, oil meeting GM Standard GM4718M may not be available. You can add substitute oil designated SAE 5W-30 with the starburst symbol at all temperatures. Substitute oil not meeting GM Standard GM4718M should not be used for an oil change.

Engine Oil Additives

Do not add anything to the oil. The recommended oils with the starburst symbol that meet GM Standard GM4718M are all you will need for good performance and engine protection.

Engine Oil Life System

When to Change Engine Oil

Your vehicle has a computer that lets you know when to change your engine oil and filter. This is based on engine revolutions and engine temperature, and not on mileage. Based on driving conditions, the mileage at which an oil change will be indicated can vary considerably. For the oil life system to work properly, you must reset the system every time the oil is changed.

Z06 models are equipped with a racetrack-ready dry sump engine lubrication system. This high-performance system operates differently than a standard engine lubrication system and requires a special procedure when changing the engine oil and filter. See *Engine Oil on page 332*.

When the system has calculated that oil life has been diminished, it will indicate that an oil change is necessary. A CHANGE ENGINE OIL message will come on. Change your oil as soon as possible within the next 600 miles (1 000 km). It is possible that, if you are driving under the best conditions, the oil life system may not indicate that an oil change is necessary for over a year. However, your engine oil and filter must be changed at least once a year and at this time the system must be reset. Your dealer has GM-trained service people who will perform this work using genuine GM parts and reset the system. It is also important to check your oil regularly and keep it at the proper level.

If the system is ever reset accidentally, you must change your oil at 3,000 miles (5 000 km) since your last oil change. Remember to reset the oil life system whenever the oil is changed.

How to Reset the Engine Oil Life System

The Engine Oil Life System calculates when to change your engine oil and filter based on vehicle use. Anytime your oil is changed, reset the system so it can calculate when the next oil change is required. If a situation occurs where you change your oil prior to a CHANGE ENGINE OIL message being turned on, reset the system.

To reset the CHANGE ENGINE OIL message after an oil change, do the following:

1. Press the TRIP button so the OIL LIFE percentage is displayed.
2. Press RESET and hold for two seconds. OIL LIFE REMAINING 100% will appear.

If the CHANGE ENGINE OIL message comes back on when you start your vehicle, the engine oil life system has not reset. Repeat the procedure.

What to Do with Used Oil

Used engine oil contains certain elements that may be unhealthy for your skin and could even cause cancer. Do not let used oil stay on your skin for very long. Clean your skin and nails with soap and water, or a good hand cleaner. Wash or properly dispose of clothing or rags containing used engine oil. See the manufacturer's warnings about the use and disposal of oil products.

Used oil can be a threat to the environment. If you change your own oil, be sure to drain all the oil from the filter before disposal. Never dispose of oil by putting it in the trash, pouring it on the ground, into sewers, or into streams or bodies of water. Instead, recycle it by taking it to a place that collects used oil. If you have a problem properly disposing of your used oil, ask your dealer, a service station, or a local recycling center for help.

Engine Air Cleaner/Filter

See *Engine Compartment Overview on page 328* for the location of the engine air cleaner/filters.

Notice: **If you spray water into the engine air cleaner/filter intake and water enters the engine air cleaner/filter housing, you could damage your vehicle's engine. The repairs would not be covered by your warranty. Do not spray water into the engine air cleaner/filter intake and/or housing.**

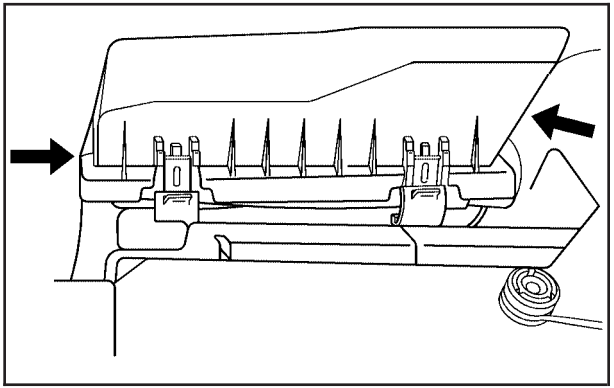

If you are cleaning your vehicle with the hood open, take care not to spray water directly into either end of the air cleaner/filter housing, as shown in the illustration, as this could damage your vehicle's engine.

When to Inspect the Engine Air Cleaner/Filters

Inspect the air cleaner/filters at the Maintenance II intervals and replace them at the first oil change after each 50,000 mile (83 000 km) interval. See *Scheduled Maintenance on page 433* for more information. If you are driving in dusty/dirty conditions, inspect the filters at each engine oil change.

How to Inspect the Engine Air Cleaner/Filters (6.0L V8 Engine)

To inspect the air cleaner/filters, remove the filters from the vehicle and lightly shake the filters to release loose dust and dirt. If the filters remain caked with dirt, new filters are required.

To inspect or replace the engine air cleaner/filters, do the following:

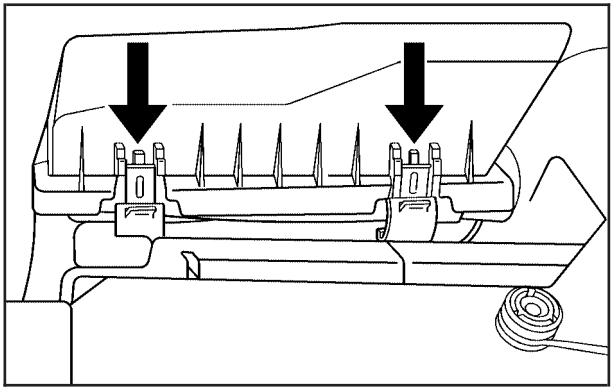

1. Pull the latches on each side of the cover to open, then move the latches up and out of the way.
2. Push the air cleaner/filter cover toward the front of the vehicle and then pull it up and away.

3. Inspect or replace the filter. See *Normal Maintenance Replacement Parts on page 445*.
4. Reverse Steps 1 and 2 to replace the air cleaner/filter cover.
5. Repeat the procedure for the second air cleaner/filter.

How to Inspect the Engine Air Cleaner/Filters (7.0L V8 Engine)

To inspect the air cleaner/filters, remove the filters from the vehicle and lightly shake the filters to release loose dust and dirt. If the filters remain caked with dirt, new filters are required.

To inspect or replace the engine air cleaner/filters, do the following:

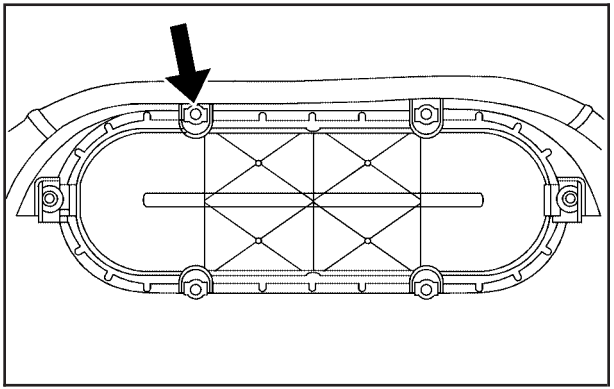

1. Remove the screws holding the filter element in place.
2. Pull on latches found on either side of the filter.
3. Inspect or replace the filter. See *Normal Maintenance Replacement Parts on page 445*.
4. Reverse Steps 1 and 2 to replace the air cleaner/filter cover.

⚠ CAUTION:

Operating the engine with the air cleaner/filter off can cause you or others to be burned. The air cleaner not only cleans the air; it helps to stop flames if the engine backfires. If it is not there and the engine backfires, you could be burned. Do not drive with it off, and be careful working on the engine with the air cleaner/filter off.

Notice: **If the air cleaner/filter is off, a backfire can cause a damaging engine fire. And, dirt can easily get into your engine, which will damage it. Always have the air cleaner/filter in place when you are driving.**

Automatic Transmission Fluid

How to Check Automatic Transmission Fluid

It is not necessary to check the transmission fluid level. A transmission fluid leak is the only reason for fluid loss. If a leak occurs, take the vehicle to the dealership service department and have it repaired as soon as possible.

There is a special procedure for checking and changing the transmission fluid. Because this procedure is difficult, you should have this done at the dealership service department. Contact your dealer for additional information or the procedure can be found in the service manual. To purchase a service manual, see *Service Publications Ordering Information on page 471*.

Notice: **Use of the incorrect automatic transmission fluid may damage your vehicle, and the damages may not be covered by your warranty. Always use the automatic transmission fluid listed in *Recommended Fluids and Lubricants on page 443*.**

Change the fluid and filter at the intervals listed in *Additional Required Services on page 436*, and be sure to use the fluid listed in *Recommended Fluids and Lubricants on page 443*.

Manual Transmission Fluid

It is not necessary to check the manual transmission fluid level. A transmission fluid leak is the only reason for fluid loss. If a leak occurs, take the vehicle to the dealership service department and have it repaired as soon as possible. See *Recommended Fluids and Lubricants on page 443* for the proper fluid to use.

Hydraulic Clutch

It is not necessary to regularly check clutch fluid unless you suspect there is a leak in the system. Adding fluid will not correct a leak.

A fluid loss in this system could indicate a problem. Have the system inspected and repaired.

When to Check and What to Use

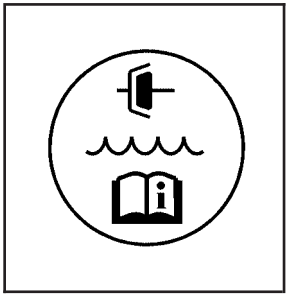

The hydraulic clutch fluid reservoir cap has this symbol on it. See *Engine Compartment Overview on page 328* for reservoir location.

Refer to the Maintenance Schedule to determine how often you should check the fluid level in your clutch master cylinder reservoir and for the proper fluid to use. See *Owner Checks and Services on page 439* and *Recommended Fluids and Lubricants on page 443*.

How to Check and Add Fluid

Make sure the fluid level is at the MIN (Minimum) line on the side of the reservoir. If it is not, remove the cap and add the proper fluid until the level reaches the MIN line.

Engine Coolant

The cooling system in your vehicle is filled with DEX-COOL® engine coolant. This coolant is designed to remain in your vehicle for five years or 150,000 miles (240 000 km), whichever occurs first, if you add only DEX-COOL® extended life coolant.

The following explains your cooling system and how to add coolant when it is low. If you have a problem with engine overheating, see *Engine Overheating on page 350*.

A 50/50 mixture of clean, drinkable water and DEX-COOL® coolant will:

- Give freezing protection down to –34°F (–37°C).
- Give boiling protection up to 265°F (129°C).
- Protect against rust and corrosion.
- Help keep the proper engine temperature.
- Let the warning lights and gages work as they should.

Notice: **Using coolant other than DEX-COOL® may cause premature engine, heater core, or radiator corrosion. In addition, the engine coolant may require changing sooner, at the first maintenance service after each 30,000 miles (50 000 km) or 24 months, whichever occurs first. Any repairs would not be covered by your warranty. Always use DEX-COOL® (silicate-free) coolant in your vehicle.**

What to Use

Use a mixture of one-half clean, drinkable water and one-half DEX-COOL® coolant which will not damage aluminum parts. If you use this coolant mixture, you do not need to add anything else.

⚠ CAUTION:

Adding only plain water to your cooling system can be dangerous. Plain water, or some other liquid such as alcohol, can boil before the proper coolant mixture will. Your vehicle's coolant warning system is set for the proper coolant mixture. With plain water or the wrong mixture, your engine could get too hot but you would not get the overheat warning. Your engine could catch fire and you or others could be burned. Use a 50/50 mixture of clean, drinkable water and DEX-COOL® coolant.

Notice: **If you use an improper coolant mixture, your engine could overheat and be badly damaged. The repair cost would not be covered by your warranty. Too much water in the mixture can freeze and crack the engine, radiator, heater core, and other parts.**

If you have to add coolant more than four times a year, have your dealer check your cooling system.

Notice: **If you use extra inhibitors and/or additives in your vehicle's cooling system, you could damage your vehicle. Use only the proper mixture of the engine coolant listed in this manual for the cooling system. See** ***Recommended Fluids and Lubricants on page 443*** **for more information.**

Checking Coolant

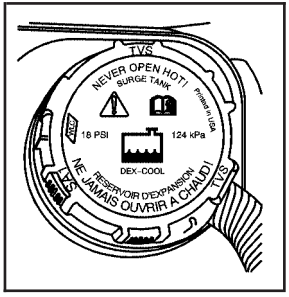

The engine coolant surge tank is located toward the rear of the engine compartment on the driver's side of the vehicle. See *Engine Compartment Overview on page 328* for more information on location.

> **⚠ CAUTION:**
>
> **Turning the surge tank pressure cap when the engine and radiator are hot can allow steam and scalding liquids to blow out and burn you badly. Never turn the surge tank pressure cap — even a little — when the engine and radiator are hot.**

The vehicle must be on a level surface. When your engine is cold, the coolant level should be at the FULL COLD mark. The FULL COLD mark is on the front of the coolant surge tank. Do not overfill the surge tank. Too much coolant can result in an overflow when the fluid is hot.

Adding Coolant

If you need more coolant, add the proper DEX-COOL® coolant mixture at the surge tank, but only when the engine is cool.

> **⚠ CAUTION:**
>
> **You can be burned if you spill coolant on hot engine parts. Coolant contains ethylene glycol, and it will burn if the engine parts are hot enough. Do not spill coolant on a hot engine.**

When replacing the pressure cap, make sure it is hand-tight and fully seated.

Coolant Surge Tank Pressure Cap

Notice: **If the pressure cap is not tightly installed, coolant loss and possible engine damage may occur. Be sure the cap is properly and tightly secured.**

The coolant surge tank pressure cap must be fully installed on the coolant surge tank. See *Engine Compartment Overview on page 328* for more information on location.

Engine Overheating

You will find an engine coolant temperature gage on the instrument panel cluster and a COOLANT OVER TEMPERATURE message on the Driver Information Center (DIC). See *Engine Coolant Temperature Gage on page 197* and *DIC Warnings and Messages on page 212* for more information.

If Steam Is Coming From Your Engine

⚠ CAUTION:

Steam from an overheated engine can burn you badly, even if you just open the hood. Stay away from the engine if you see or hear steam coming from it. Turn it off and get everyone away from the vehicle until it cools down. Wait until there is no sign of steam or coolant before you open the hood.

If you keep driving when the vehicles engine is overheated, the liquids in it can catch fire. You or others could be badly burned. Stop your engine if it overheats, and get out of the vehicle until the engine is cool.

See *Overheated Engine Protection Operating Mode on page 352* for information on driving to a safe place in an emergency.

Notice: **If your engine catches fire because you keep driving with no coolant, your vehicle can be badly damaged. The costly repairs would not be covered by your warranty. See *Overheated Engine Protection Operating Mode on page 352* for information on driving to a safe place in an emergency.**

If No Steam Is Coming From Your Engine

If you get an engine overheat warning but see or hear no steam, the problem may not be too serious. Sometimes the engine can get a little too hot when you:

- Climb a long hill on a hot day.
- Stop after high-speed driving.
- Idle for long periods in traffic.

If you get the overheat warning with no sign of steam, try this for a minute or so:

1. In heavy traffic, let the engine idle in NEUTRAL (N) while stopped. If it is safe to do so, pull off the road, shift to PARK (P) or NEUTRAL (N) and let the engine idle.
2. Turn on your heater to full hot at the highest fan speed and open the windows as necessary.

If you no longer have the overheat warning, you can drive. Just to be safe, drive slower for about 10 minutes. If the warning does not come back on, you can drive normally.

If the warning continues and you are not stopped, pull over, stop, and park your vehicle right away.

If there is still no sign of steam, you can idle the engine for three minutes while you are parked. If you still have the warning, turn off the engine and get everyone out of the vehicle until it cools down. Also, see “Overheated Engine Protection Operating Mode” later in this section.

You may decide not to lift the hood but to get service help right away.

Overheated Engine Protection Operating Mode

If an overheated engine condition exists and the messages COOLANT OVER TEMPERATURE and REDUCED ENGINE POWER are displayed, along with the Check Engine light, an overheat protection mode which alternates firing groups of cylinders helps prevent engine damage. In this mode, you will notice a loss in power and engine performance. This operating mode allows your vehicle to be driven to a safe place in an emergency; you may drive up to 50 miles (80 km).

Notice: **After driving in the overheated engine protection operating mode, to avoid engine damage, allow the engine to cool before attempting any repair. The engine oil will be severely degraded. Repair the cause of coolant loss, change the oil and reset the oil life system. See *Engine Oil on page 332*.**

Cooling System

When you decide it is safe to lift the hood, here is what you will see:

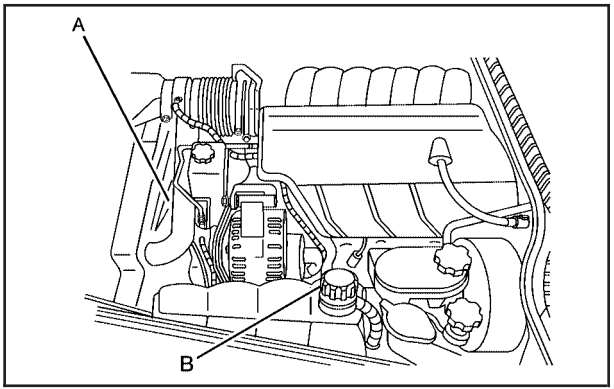

A. Electric Engine Cooling Fan

B. Coolant Surge Tank with Pressure Cap

⚠ CAUTION:

An electric engine cooling fan under the hood can start up even when the engine is not running and can injure you. Keep hands, clothing, and tools away from any underhood electric fan.

If the coolant inside the coolant surge tank is boiling, do not do anything else until it cools down. The vehicle should be parked on a level surface.

The coolant level should be at the FULL COLD mark on the front of the coolant surge tank. If it is not, you may have a leak at the pressure cap or in the radiator hoses, heater hoses, radiator, water pump or somewhere else in the cooling system.

⚠ CAUTION:

Heater and radiator hoses, and other engine parts, can be very hot. Do not touch them. If you do, you can be burned.

Do not run the engine if there is a leak. If you run the engine, it could lose all coolant. That could cause an engine fire, and you could be burned. Get any leak fixed before you drive the vehicle.

If there seems to be no leak, with the engine on, check to see if the electric engine cooling fan is running. If the engine is overheating, the fan should be running. If it is not, your vehicle needs service.

Notice: **Engine damage from running your engine without coolant is not covered by your warranty. See *Overheated Engine Protection Operating Mode on page 352* for information on driving to a safe place in an emergency.**

Notice: **Using coolant other than DEX-COOL® may cause premature engine, heater core, or radiator corrosion. In addition, the engine coolant could require changing sooner, at 30,000 miles (50 000 km) or 24 months, whichever occurs first. Any repairs would not be covered by your warranty. Always use DEX-COOL® (silicate-free) coolant in your vehicle.**

How to Add Coolant to the Coolant Surge Tank

If you have not found a problem yet, check to see if coolant is visible in the surge tank. If coolant is visible but the coolant level is not at the FULL COLD mark on the front of the coolant surge tank, add a 50/50 mixture of clean, drinkable water and DEX-COOL® coolant at the coolant surge tank, but be sure the cooling system, including the coolant surge tank pressure cap, is cool before you do it. See *Engine Coolant on page 347* for more information.

If no coolant is visible in the surge tank, add coolant as follows:

⚠ CAUTION:

Steam and scalding liquids from a hot cooling system can blow out and burn you badly. They are under pressure, and if you turn the coolant surge tank pressure cap — even a little — they can come out at high speed. Never turn the cap when the cooling system, including the coolant surge tank pressure cap, is hot. Wait for the cooling system and coolant surge tank pressure cap to cool if you ever have to turn the pressure cap.

⚠ CAUTION:

Adding only plain water to your cooling system can be dangerous. Plain water, or some other liquid such as alcohol, can boil before the proper coolant mixture will. Your vehicle's coolant warning system is set for the proper coolant mixture. With plain water or the wrong mixture, your engine could get too hot but you would not get the overheat warning. Your engine could catch fire and you or others could be burned. Use a 50/50 mixture of clean, drinkable water and DEX-COOL® coolant.

Notice: **In cold weather, water can freeze and crack the engine, radiator, heater core and other parts. Use the recommended coolant and the proper coolant mixture.**

⚠ CAUTION:

You can be burned if you spill coolant on hot engine parts. Coolant contains ethylene glycol and it will burn if the engine parts are hot enough. Do not spill coolant on a hot engine.

1. You can remove the coolant surge tank pressure cap when the cooling system, including the coolant surge tank pressure cap and upper radiator hose, is no longer hot. Turn the pressure cap slowly counterclockwise about one-quarter turn and then stop.

   If you hear a hiss, wait for that to stop. A hiss means there is still some pressure left.

2. Then keep turning the pressure cap slowly, and remove it.

3. Fill the coolant surge tank with the proper mixture until the level inside stabilizes at the FULL COLD mark on the front of the surge tank.

4. With the coolant surge tank pressure cap off, start the engine and let it run until you can feel the upper radiator hose getting hot. Watch out for the engine cooling fan.

   By this time, the coolant level inside the coolant surge tank may be lower. If the level is lower, add more of the proper mixture to the coolant surge tank until the level stabilizes at the FULL COLD mark on the coolant surge tank.

5. Then replace the pressure cap. Be sure the pressure cap is hand-tight and fully seated.

   Check the level in the surge tank when the system has cooled down. If the coolant is not at the proper level, repeat Steps 1 through 4, then reinstall the pressure cap. If the coolant is not at the proper level when the system cools down again, see your dealer.

Power Steering Fluid

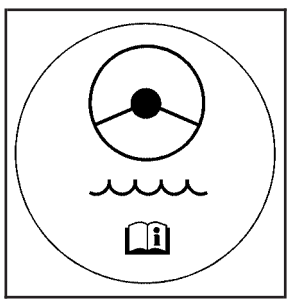

See *Engine Compartment Overview on page 328* for reservoir location.

When to Check Power Steering Fluid

It is not necessary to regularly check power steering fluid unless you suspect there is a leak in the system or you hear an unusual noise. A fluid loss in this system could indicate a problem. Have the system inspected and repaired.

How to Check Power Steering Fluid

To check the power steering fluid, do the following:

1. Turn the ignition off and let the engine compartment cool down.
2. Wipe the cap and the top of the reservoir clean.
3. Unscrew the cap and wipe the dipstick with a clean rag.
4. Replace the cap and completely tighten it.
5. Remove the cap again and look at the fluid level on the dipstick. There are markings on both sides of the dipstick.

The level should be at the FULL COLD mark. If necessary, add only enough fluid to bring the level up to the mark.

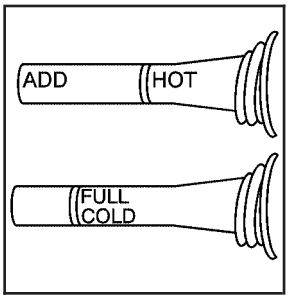

When the engine compartment is hot, the level should be at the HOT mark. When the engine compartment is cool, the level should be at the FULL COLD mark.

What to Use

To determine what kind of fluid to use, see *Recommended Fluids and Lubricants on page 443*. Always use the proper fluid. Failure to use the proper fluid can cause leaks and damage hoses and seals.

Windshield Washer Fluid

What to Use

When you need windshield washer fluid, be sure to read the manufacturer's instructions before use. If you will be operating your vehicle in an area where the temperature may fall below freezing, use a fluid that has sufficient protection against freezing.

Adding Washer Fluid

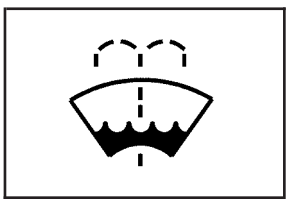

Open the cap with the washer symbol on it. Add washer fluid until the tank is full. See *Engine Compartment Overview on page 328* for reservoir location.

Notice:

- **When using concentrated washer fluid, follow the manufacturer's instructions for adding water.**
- **Do not mix water with ready-to-use washer fluid. Water can cause the solution to freeze and damage your washer fluid tank and other parts of the washer system. Also, water does not clean as well as washer fluid.**
- **Fill your washer fluid tank only three-quarters full when it is very cold. This allows for expansion if freezing occurs, which could damage the tank if it is completely full.**
- **Do not use engine coolant (antifreeze) in your windshield washer. It can damage your washer system and paint.**

Brakes

Brake Fluid

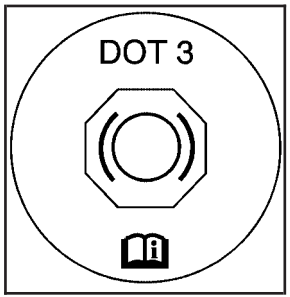

Your brake master cylinder reservoir is filled with DOT-3 brake fluid. See *Engine Compartment Overview on page 328* for the location of the reservoir.

There are only two reasons why the brake fluid level in the reservoir might go down. The first is that the brake fluid goes down to an acceptable level during normal brake lining wear. When new linings are put in, the fluid level goes back up. The other reason is that fluid is leaking out of the brake system. If it is, you should have your brake system fixed, since a leak means that sooner or later your brakes will not work well, or will not work at all.

So, it is not a good idea to top off your brake fluid. Adding brake fluid will not correct a leak. If you add fluid when your linings are worn, then you will have too much fluid when you get new brake linings. You should add or remove brake fluid, as necessary, only when work is done on the brake hydraulic system.

⚠ CAUTION:

If you have too much brake fluid, it can spill on the engine. The fluid will burn if the engine is hot enough. You or others could be burned, and your vehicle could be damaged. Add brake fluid only when work is done on the brake hydraulic system. See "Checking Brake Fluid" in this section.

Refer to the Maintenance Schedule to determine when to check your brake fluid. See *Scheduled Maintenance on page 433*.

Checking Brake Fluid

You can check the brake fluid without taking off the cap. Look at the brake fluid reservoir. The fluid level should be above the MIN mark on the reservoir. If it is not, have your brake system checked to see if there is a leak.

After work is done on the brake hydraulic system, make sure the level is between the MIN and MAX marks.

What to Add

When you do need brake fluid, use only DOT-3 brake fluid. Refer to *Recommended Fluids and Lubricants on page 443*. Use new brake fluid from a sealed container only.

Always clean the brake fluid reservoir cap and the area around the cap before removing it. This will help keep dirt from entering the reservoir.

⚠ CAUTION:

With the wrong kind of fluid in the brake system, the brakes may not work well, or they may not even work at all. This could cause a crash. Always use the proper brake fluid.

Notice:

- **Using the wrong fluid can badly damage brake system parts. For example, just a few drops of mineral-based oil, such as engine oil, in the brake system can damage brake system parts so badly that they will have to be replaced. Do not let someone put in the wrong kind of fluid.**
- **If you spill brake fluid on your vehicle's painted surfaces, the paint finish can be damaged. Be careful not to spill brake fluid on your vehicle. If you do, wash it off immediately. See *Washing Your Vehicle on page 411*.**

Brake Wear

Your vehicle has four-wheel disc brakes.

Disc brake pads have built-in wear indicators that make a high-pitched warning sound when the brake pads are worn and new pads are needed. The sound may come and go or be heard all the time your vehicle is moving, except when you are pushing on the brake pedal firmly.

⚠ CAUTION:

The brake wear warning sound means that soon the brakes will not work well. That could lead to an accident. When you hear the brake wear warning sound, have your vehicle serviced.

Notice: **Continuing to drive with worn-out brake pads could result in costly brake repair.**

Some driving conditions or climates may cause a brake squeal when the brakes are first applied or lightly applied. This does not mean something is wrong with your brakes.

Brake linings should always be replaced as complete axle sets.

Brake Pedal Travel

See your dealer if the brake pedal does not return to normal height, or if there is a rapid increase in pedal travel. This could be a sign of brake trouble.

Brake Adjustment

As you make brake stops, your disc brakes automatically adjust for wear.

Replacing Brake System Parts

The braking system on a vehicle is complex. Its many parts have to be of top quality and work well together if the vehicle is to have really good braking. Your vehicle was designed and tested with top-quality GM brake parts. When you replace parts of your braking system — for example, when your brake linings wear down and you need new ones put in — be sure you get new approved GM replacement parts. If you do not, your brakes may no longer work properly. For example, if someone puts in brake linings that are wrong for your vehicle, the balance between your front and rear brakes can change — for the worse. The braking performance you have come to expect can change in many other ways if someone puts in the wrong replacement brake parts.

Battery

Your vehicle has a maintenance free battery. When it is time for a new battery, get one that has the replacement number shown on the original battery's label. We recommend an ACDelco® replacement battery.

For battery replacement, see your dealer or the service manual. To purchase a service manual, see *Service and Owner Publications* in *Service Publications Ordering Information on page 471*.

Warning: Battery posts, terminals, and related accessories contain lead and lead compounds, chemicals known to the State of California to cause cancer and reproductive harm. Wash hands after handling.

Vehicle Storage

If you are not going to drive your vehicle for 25 days or more, remove the black, negative (-) cable from the battery. This will help keep your battery from running down.

> **⚠ CAUTION:**
>
> **Batteries have acid that can burn you and gas that can explode. You can be badly hurt if you are not careful. See *Jump Starting on page 364* for tips on working around a battery without getting hurt.**

Jump Starting

If your battery has run down, you may want to use another vehicle and some jumper cables to start your vehicle. Be sure to use the following steps to do it safely.

> **⚠ CAUTION:**
>
> **Batteries can hurt you. They can be dangerous because:**
>
> - **They contain acid that can burn you.**
> - **They contain gas that can explode or ignite.**
> - **They contain enough electricity to burn you.**
>
> **If you do not follow these steps exactly, some or all of these things can hurt you.**

Notice: **If you try to start your vehicle by pushing or pulling it, you could damage your vehicle. Do not push or pull your vehicle to start it; instead, use the jump starting procedure in this manual to start your vehicle when the battery has run down.**

1. Check the other vehicle. It must have a 12-volt battery with a negative ground system.

Notice: **If the other vehicle's system is not a 12-volt system with a negative ground, both vehicles can be damaged. Only use vehicles with 12-volt systems with negative grounds to jump start your vehicle.**

2. Get the vehicles close enough so the jumper cables can reach, but be sure the vehicles are not touching each other. If they are, it could cause a ground connection you do not want. You would not be able to start your vehicle, and the bad grounding could damage the electrical systems.

   To avoid the possibility of the vehicles rolling, set the parking brake firmly on both vehicles involved in the jump start procedure. Put an automatic transmission in PARK (P) or a manual transmission in NEUTRAL before setting the parking brakes.

Notice: **If you leave your radio or other accessories on during the jump starting procedure, they could be damaged. The repairs would not be covered by your warranty. Always turn off your radio and other accessories when jump starting your vehicle.**

3. Turn off the ignition on both vehicles. Unplug unnecessary accessories plugged into the cigarette lighter or the accessory power outlet. Turn off the radio and all lamps that are not needed. This will avoid sparks and help save both batteries. And it could save the radio!

4. Open the hoods and locate the positive (+) and negative (–) terminal locations on each vehicle.

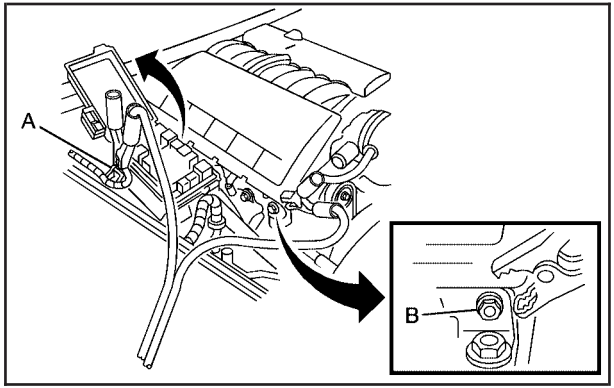

Your vehicle has a remote positive (+) terminal (A) and a remote negative (–) terminal (B), as shown in the illustration, which should be used to jump start your vehicle.

The remote positive (+) terminal (A) can be accessed by opening the cover of the engine compartment fuse block.

The remote negative (–) terminal (B) is located underneath the engine cover, below the engine oil fill cap.

See *Engine Compartment Overview on page 328* for the location of the engine compartment fuse block and engine oil fill cap.

You will not need to access the battery for jump starting. The remote terminals are for that purpose.

⚠ CAUTION:

An electric fan can start up even when the engine is not running and can injure you. Keep hands, clothing and tools away from any underhood electric fan.

⚠ CAUTION:

Using a match near a battery can cause battery gas to explode. People have been hurt doing this, and some have been blinded. Use a flashlight if you need more light.

Be sure the battery has enough water. You do not need to add water to the battery installed in your new vehicle. But if a battery has filler caps, be sure the right amount of fluid is there. If it is low, add water to take care of that first. If you do not, explosive gas could be present.

Battery fluid contains acid that can burn you. Do not get it on you. If you accidentally get it in your eyes or on your skin, flush the place with water and get medical help immediately.

⚠ CAUTION:

Fans or other moving engine parts can injure you badly. Keep your hands away from moving parts once the engine is running.

5. Check that the jumper cables do not have loose or missing insulation. If they do, you could get a shock. The vehicles could be damaged too.

   Before you connect the cables, here are some basic things you should know. Positive (+) will go to positive (+) or to a remote positive (+) terminal if the vehicle has one. Negative (–) will go to a heavy, unpainted metal engine part or to a remote negative (–) terminal if the vehicle has one.

   Do not connect positive (+) to negative (–) or you will get a short that would damage the battery and maybe other parts too. And do not connect the negative (–) cable to the negative (–) terminal on the dead battery because this can cause sparks.

6. Connect the red positive (+) cable to the positive (+) terminal of the dead battery. Use a remote positive (+) terminal if the vehicle has one.
7. Do not let the other end touch metal. Connect it to the positive (+) terminal of the good battery. Use a remote positive (+) terminal if the vehicle has one.
8. Now connect the black negative (–) cable to the negative (–) terminal of the good battery. Use a remote negative (–) terminal if the vehicle has one.

   Do not let the other end touch anything until the next step. The other end of the negative (–) cable does not go to the dead battery. It goes to a heavy, unpainted metal engine part or to a remote negative (–) terminal on the vehicle with the dead battery.
9. Connect the other end of the negative (–) cable at least 18 inches (45 cm) away from the dead battery, but not near engine parts that move. The electrical connection is just as good there, and the chance of sparks getting back to the battery is much less.

   Your vehicle has a remote negative (–) terminal for this purpose.
10. Now start the vehicle with the good battery and run the engine for a while.
11. Try to start the vehicle that had the dead battery. If it will not start after a few tries, it probably needs service.

Notice: **If the jumper cables are connected or removed in the wrong order, electrical shorting may occur and damage the vehicle. The repairs would not be covered by your warranty. Always connect and remove the jumper cables in the correct order, making sure that the cables do not touch each other or other metal.**

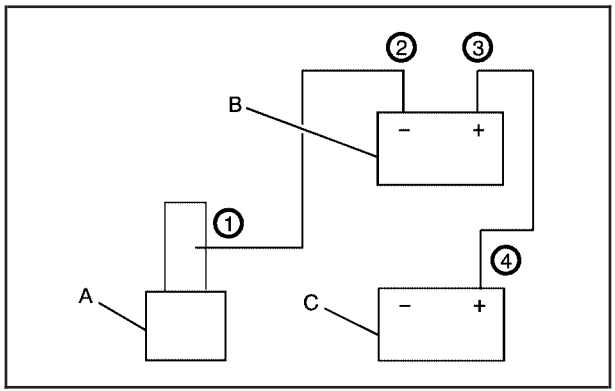

Jumper Cable Removal

A. Heavy, Unpainted Metal Engine Part or Remote Negative (–) Terminal
B. Good Battery or Remote Positive (+) and Negative (–) Terminals
C. Dead Battery or Remote Positive (+) Terminal

To disconnect the jumper cables from both vehicles, do the following:

1. Disconnect the black negative (–) cable from the vehicle that had the dead battery.
2. Disconnect the black negative (–) cable from the vehicle with the good battery.
3. Disconnect the red positive (+) cable from the vehicle with the good battery.
4. Disconnect the red positive (+) cable from the other vehicle.
5. Return the engine fuse block cover to its original position.
6. You may also need to initialize the power windows. See “Power Window Initialize” under *Power Windows on page 87* for more information.

Rear Axle

When to Check Lubricant

It is not necessary to regularly check rear axle fluid unless you suspect there is a leak or you hear an unusual noise. A fluid loss could indicate a problem. Have it inspected and repaired.

How to Check Lubricant

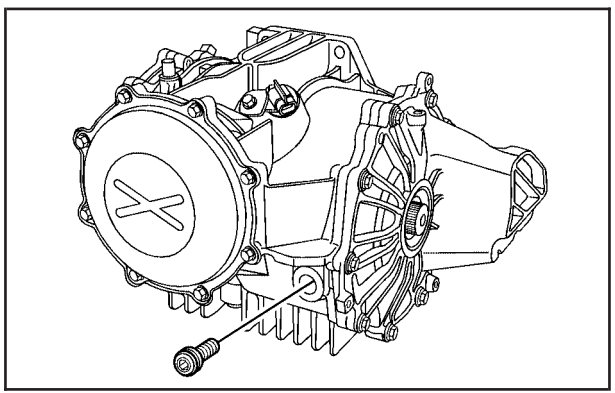

To get an accurate reading, the vehicle should be on a level surface.

If the level is below the bottom of the filler plug hole, you will need to add some lubricant. Add enough lubricant to raise the level to the bottom of the filler plug hole.

What to Use

To add lubricant when the level is low, use SAE 75W–90 Synthetic Axle Lubricant (GM Part No. U.S. 89021677, in Canada 89021678) meeting GM Specification 9986115. To completely refill after draining, add Limited-Slip Axle Lubricant Additive (GM Part No. U.S. 1052358, in Canada 992694). See *Recommended Fluids and Lubricants on page 443*. Then fill to the bottom of the filler plug hole with the Synthetic Gear Lubricant.

Bulb Replacement

For the proper type of replacement bulbs, see *Replacement Bulbs on page 374*.

For any bulb changing procedure not listed in this section, contact your dealer.

High Intensity Discharge (HID) Lighting

⚠ CAUTION:

The low beam high intensity discharge lighting system operates at a very high voltage. If you try to service any of the system components, you could be seriously injured. Have your dealer or a qualified technician service them.

Your vehicle has HID headlamps. After your vehicle's HID headlamp bulb has been replaced, you may notice that the beam is a slightly different shade than it was originally. This is normal.

Halogen Bulbs

⚠ CAUTION:

Halogen bulbs have pressurized gas inside and can burst if you drop or scratch the bulb. You or others could be injured. Be sure to read and follow the instructions on the bulb package.

Headlamps, Front Turn Signal, and Parking Lamps

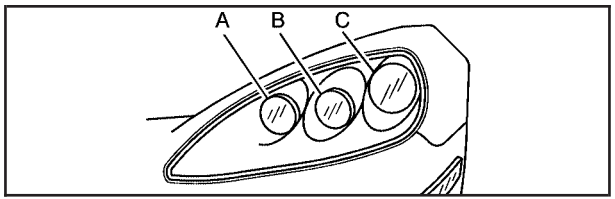

A. High-beam Headlamp
B. Low-beam Headlamp
C. Front Parking/Turn Signal/Daytime Running Lamp (DRL)

If the low-beam headlamp needs to be replaced, you will need to see your dealer. See *High Intensity Discharge (HID) Lighting on page 371* for more information.

To replace a high-beam or front parking/turn signal/DRL bulb, do the following:

1. Turn the wheel to allow access to the wheel well.

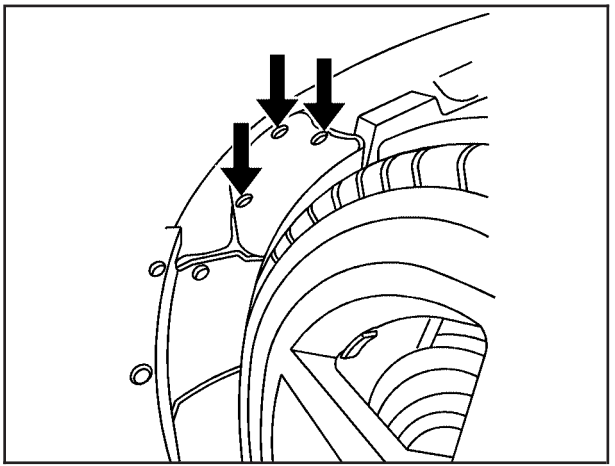

2. Access the high-beam or front parking/turn signal bulbs by removing the access panel. To do this, remove the three outer fasteners and move the cover back.

3. Remove the outer cover to expose the high-beam headlamp bulb socket once the access cover has been removed.

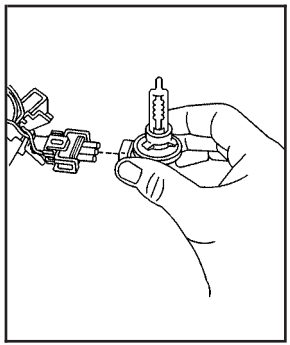

4. Remove the headlamp bulb by releasing the outer tabs from the socket.

5. Remove the front parking/turn signal bulb by turning the bulb socket counterclockwise.

6. Replace the high-beam headlamp bulb with a new bulb and reattach to the bulb socket.

   Replace the front parking/turn signal bulb by turning the bulb socket clockwise.

7. Reverse the Steps 2 through 4 to reinstall.

Taillamps, Turn Signal, and Stoplamps

To replace a stoplamp, taillamp/turn signal bulb, do the following:

1. Remove the screw from the top of the lamp assembly.

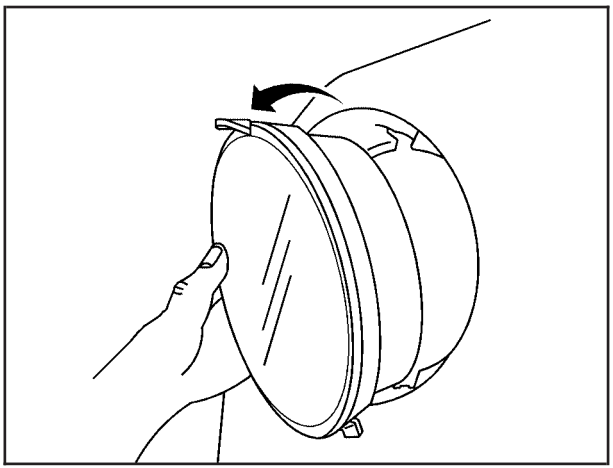

2. Tilt out the lamp assembly.

3. Turn the bulb socket one-quarter turn counterclockwise and pull it out.
4. Pull the bulb straight out to remove it from the socket.
5. Push the new bulb in the bulb socket until it snaps into place.
6. Reinstall the lamp assembly by first lining up the tabs on the bottom of the lamp assembly with the tabs in the vehicle, then slide it in.
7. Replace the screw at the top of the lamp assembly.

Replacement Bulbs

Exterior Lamp	Bulb Number
Front Parking/Turn Signal/Daytime Running Lamp (DRL)	5702KA
Headlamp, High-Beam Lamp	H9
Sidemarker Lamp	W3W
Stoplamp/Taillamp/Turn Signal Lamp	3057KX

For replacement bulbs not listed here, contact your dealer.

Windshield Replacement

Keep in mind that your windshield is part of the Head-Up Display (HUD) system. If you ever have to get your windshield replaced, be sure to get one that is designed for HUD or your HUD image may look blurred or out of focus.

Windshield Wiper Blade Replacement

Windshield wiper blades should be inspected for wear and cracking. See *Scheduled Maintenance on page 433* for more information.

Replacement blades come in different types and are removed in different ways. For the proper type and length, see *Normal Maintenance Replacement Parts on page 445*.

It is a good idea to clean or replace the wiper blade assembly every six months.

Allowing the wiper blade arm to touch the windshield when no wiper blade is installed could damage the windshield. Any damage that occurs would not be covered by your warranty. Do not allow the wiper blade arm to touch the windshield.

To remove the wiper blade assembly, do the following:

1. Open the hood to gain access to the windshield wipers.
2. Lift the wiper arm away from the windshield.

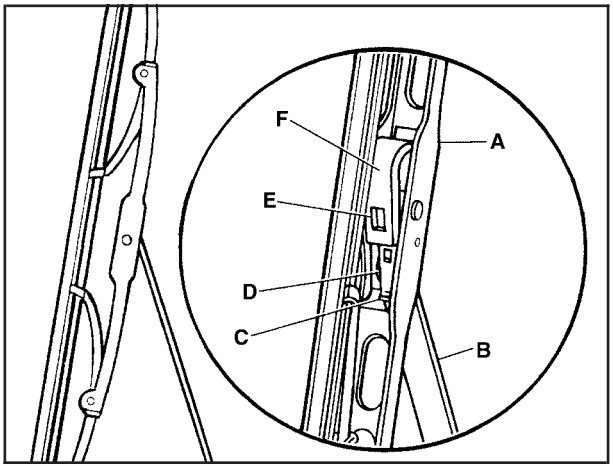

A. Blade Assembly
B. Arm Assembly
C. Locking Tab
D. Blade Pivot
E. Hook Slot
F. Arm Hook

3. Press down on the blade assembly pivot locking tab (C). Pull down on the blade assembly (A) to release it from the wiper arm hook (F).
4. Remove the insert from the blade assembly (A). The insert has two notches at one end that are locked by the bottom claws of the blade assembly. At the notch end, pull the insert from the blade assembly.

To install the new wiper insert:

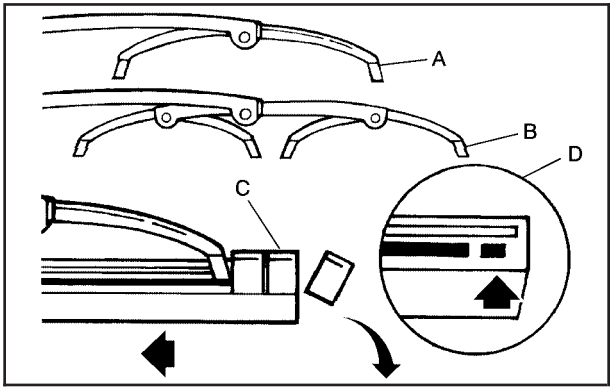

1. Slide the insert (D), notched end last, into the end with the two blade claws (A). Slide the insert all the way through the blade claws at the opposite end (B). Plastic caps (C) will be forced off as the insert is fully installed.

2. Be sure the notches are locked by the bottom claws. Make sure that all other claws are properly locked on both sides of the insert slots.
3. Put the blade assembly pivot in the wiper arm hook. Pull up until the pivot locking tab locks in the hook slot.
4. Carefully lower the wiper arm and blade assembly onto the windshield.

Installation guide:

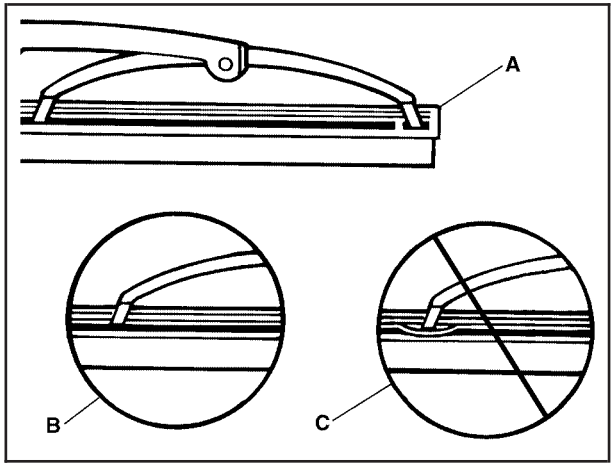

A. Claw in Notch
B. Correct Installation
C. Incorrect Installation

Tires

Your new vehicle comes with high-quality tires made by a leading tire manufacturer. If you ever have questions about your tire warranty and where to obtain service, see your GM Warranty booklet for details. For additional information refer to the tire manufacturer's booklet included with your vehicle.

⚠ CAUTION:

- **Poorly maintained and improperly used tires are dangerous.**
- **Overloading your tires can cause overheating as a result of too much friction. You could have an air-out and a serious accident. See *Loading Your Vehicle on page 307*.**

CAUTION: (Continued)

CAUTION: (Continued)

- **Underinflated tires pose the same danger as overloaded tires. The resulting accident could cause serious injury. Check all tires frequently to maintain the recommended pressure. Tire pressure should be checked when your tires are cold. See *Inflation - Tire Pressure on page 386*.**
- **Overinflated tires are more likely to be cut, punctured, or broken by a sudden impact — such as when you hit a pothole. Keep tires at the recommended pressure.**
- **Worn, old tires can cause accidents. If your tread is badly worn, or if your tires have been damaged, replace them.**

See *High-Speed Operation on page 388* for inflation pressure adjustment for high speed driving.

Low-Profile Performance Tire

The original equipment tires on your vehicle are classified as low-profile performance tires. These tires are designed for very responsive driving on wet or dry pavement. You may also notice more road noise with low-profile tires and that they tend to wear faster.

Notice: **If your vehicle has low-profile tires, they are more susceptible to damage from road hazards or curb impact than standard profile tires. Tire and/or wheel assembly damage can occur when coming into contact with road hazards like, potholes, or sharp edged objects, or when sliding into a curb. Your GM warranty does not cover this type of damage. Keep tires set to the correct inflation pressure and, when possible avoid contact with curbs, potholes, and other road hazards.**

Winter Tires

If you expect to drive on snow or ice covered roads often, you may want to get winter tires for your vehicle.

All season tires provide good overall performance on most surfaces but they may not offer the traction you would like or the same level of performance as winter tires on snow or ice covered roads.

Winter tires, in general, are designed for increased traction on snow and ice covered roads. With winter tires, there may be decreased dry road traction, increased road noise, and shorter tread life. After switching to winter tires, be alert for changes in vehicle handling and braking.

See your dealer for details regarding winter tire availability and proper tire selection. Also, see *Buying New Tires on page 393*.

If you choose to use winter tires:

- Use tires of the same brand and tread type on all four wheel positions.
- Use only radial ply tires of the same size, load range, and speed rating as the original equipment tires.

Winter tires with the same speed rating as your original equipment tires may not be available for H, V, W, Y, and ZR speed rated tires. If you choose winter tires with a lower speed rating, never exceed the tire's maximum speed capability.

Tire Sidewall Labeling

Useful information about a tire is molded into its sidewall. The example below shows a typical passenger (p-metric) tire sidewall.

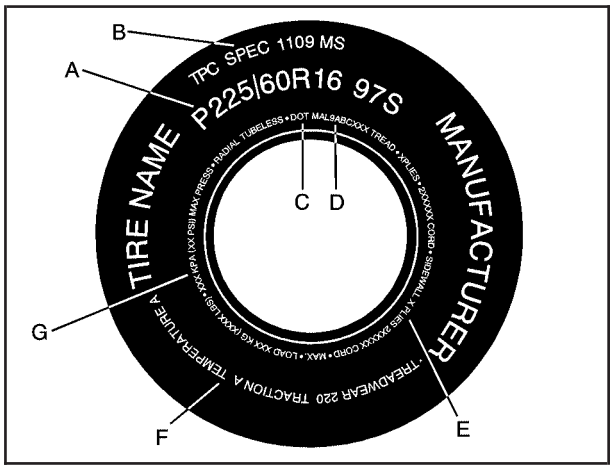

Passenger (P-Metric) Tire Example

(A) Tire Size: The tire size is a combination of letters and numbers used to define a particular tire's width, height, aspect ratio, construction type, and service description. See the "Tire Size" illustration later in this section for more detail.

(B) TPC Spec (Tire Performance Criteria Specification): Original equipment tires designed to GM's specific tire performance criteria have a TPC specification code molded onto the sidewall. GM's TPC specifications meet or exceed all federal safety guidelines.

(C) DOT (Department of Transportation): The Department of Transportation (DOT) code indicates that the tire is in compliance with the U.S. Department of Transportation Motor Vehicle Safety Standards.

(D) Tire Identification Number (TIN): The letters and numbers following DOT code are the Tire Identification Number (TIN). The TIN shows the manufacturer and plant code, tire size, and date the tire was manufactured. The TIN is molded onto both sides of the tire, although only one side may have the date of manufacture.

(E) Tire Ply Material: The type of cord and number of plies in the sidewall and under the tread.

(F) Uniform Tire Quality Grading (UTQG): Tire manufacturers are required to grade tires based on three performance factors: treadwear, traction and temperature resistance. For more information see *Uniform Tire Quality Grading on page 396*.

(G) Maximum Cold Inflation Load Limit: Maximum load that can be carried and the maximum pressure needed to support that load.

Tire Size

The following illustration shows an example of a typical passenger (p-metric) vehicle tire size.

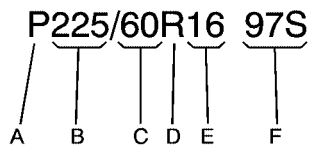

(A) Passenger (P-Metric) Tire: The United States version of a metric tire sizing system. The letter P as the first character in the tire size means a passenger vehicle tire engineered to standards set by the U. S. Tire and Rim Association.

(B) Tire Width: The three-digit number indicates the tire section width in millimeters from sidewall to sidewall.

(C) Aspect Ratio: A two-digit number that indicates the tire height-to-width measurements. For example, if the tire size aspect ratio is 60, as shown in item C of the illustration, it would mean that the tire's sidewall is 60 percent as high as it is wide.

(D) Construction Code: A letter code is used to indicate the type of ply construction in the tire. The letter R means radial ply construction; the letter D means diagonal or bias ply construction; and the letter B means belted-bias ply construction.

(E) Rim Diameter: Diameter of the wheel in inches.

(F) Service Description: These characters represent the load range and speed rating of the tire. The load index represents the load carry capacity a tire is certified to carry. The load index can range from 1 to 279. The speed rating is the maximum speed a tire is certified to carry a load. Speed ratings range from A to Z.

Tire Terminology and Definitions

Air Pressure: The amount of air inside the tire pressing outward on each square inch of the tire. Air pressure is expressed in pounds per square inch (psi) or kilopascal (kPa).

Accessory Weight: This means the combined weight of optional accessories. Some examples of optional accessories are, automatic transmission/transaxle, power steering, power brakes, power windows, power seats, and air conditioning.

Aspect Ratio: The relationship of a tire's height to its width.

Belt: A rubber coated layer of cords that is located between the plies and the tread. Cords may be made from steel or other reinforcing materials.

Bead: The tire bead contains steel wires wrapped by steel cords that hold the tire onto the rim.

Bias Ply Tire: A pneumatic tire in which the plies are laid at alternate angles less than 90 degrees to the centerline of the tread.

Cold Tire Pressure: The amount of air pressure in a tire, measured in pounds per square inch (psi) or kilopascals (kPa) before a tire has built up heat from driving. See *Inflation - Tire Pressure on page 386*.

Curb Weight: This means the weight of a motor vehicle with standard and optional equipment including the maximum capacity of fuel, oil, and coolant, but without passengers and cargo.

DOT Markings: A code molded into the sidewall of a tire signifying that the tire is in compliance with the U.S. Department of Transportation (DOT) motor vehicle safety standards. The DOT code includes the Tire Identification Number (TIN), an alphanumeric designator which can also identify the tire manufacturer, production plant, brand, and date of production.

GVWR: Gross Vehicle Weight Rating. See *Loading Your Vehicle on page 307*.

GAWR FRT: Gross Axle Weight Rating for the front axle. See *Loading Your Vehicle on page 307*.

GAWR RR: Gross Axle Weight Rating for the rear axle. See *Loading Your Vehicle on page 307*.

Intended Outboard Sidewall: The side of an asymmetrical tire, that must always face outward when mounted on a vehicle.

Kilopascal (kPa): The metric unit for air pressure.

Light Truck (LT-Metric) Tire: A tire used on light duty trucks and some multipurpose passenger vehicles.

Load Index: An assigned number ranging from 1 to 279 that corresponds to the load carrying capacity of a tire.

Maximum Inflation Pressure: The maximum air pressure to which a cold tire may be inflated. The maximum air pressure is molded onto the sidewall.

Maximum Load Rating: The load rating for a tire at the maximum permissible inflation pressure for that tire.

Maximum Loaded Vehicle Weight: The sum of curb weight, accessory weight, vehicle capacity weight, and production options weight.

Normal Occupant Weight: The number of occupants a vehicle is designed to seat multiplied by 150 lbs (68 kg). See *Loading Your Vehicle on page 307*.

Occupant Distribution: Designated seating positions.

Outward Facing Sidewall: The side of an asymmetrical tire that has a particular side that faces outward when mounted on a vehicle. The side of the tire that contains a whitewall, bears white lettering, or bears manufacturer, brand, and/or model name molding that is higher or deeper than the same moldings on the other sidewall of the tire.

Passenger (P-Metric) Tire: A tire used on passenger cars and some light duty trucks and multipurpose vehicles.

Recommended Inflation Pressure: Vehicle manufacturer's recommended tire inflation pressure as shown on the tire placard. See *Inflation - Tire Pressure on page 386* and *Loading Your Vehicle on page 307*.

Radial Ply Tire: A pneumatic tire in which the ply cords that extend to the beads are laid at 90 degrees to the centerline of the tread.

Rim: A metal support for a tire and upon which the tire beads are seated.

Sidewall: The portion of a tire between the tread and the bead.

Speed Rating: An alphanumeric code assigned to a tire indicating the maximum speed at which a tire can operate.

Traction: The friction between the tire and the road surface. The amount of grip provided.

Tread: The portion of a tire that comes into contact with the road.

Treadwear Indicators: Narrow bands, sometimes called wear bars, that show across the tread of a tire when only 1/16 inch (1.6 mm) of tread remains. See *When It Is Time for New Tires on page 393*.

UTQGS (Uniform Tire Quality Grading Standards): A tire information system that provides consumers with ratings for a tire's traction, temperature, and treadwear. Ratings are determined by tire manufacturers using government testing procedures. The ratings are molded into the sidewall of the tire. See *Uniform Tire Quality Grading on page 396*.

Vehicle Capacity Weight: The number of designated seating positions multiplied by 150 lbs (68 kg) plus the rated cargo load. See *Loading Your Vehicle on page 307*.

Vehicle Maximum Load on the Tire: Load on an individual tire due to curb weight, accessory weight, occupant weight, and cargo weight.

Vehicle Placard: A label permanently attached to a vehicle showing the vehicle's capacity weight and the original equipment tire size and recommended inflation pressure. See "Tire and Loading Information Label" under *Loading Your Vehicle on page 307*.

Extended Mobility Tires

Your vehicle, when new, had Goodyear Extended Mobility Tires (EMT). There's no spare tire, no tire changing equipment and no place to store a tire in the vehicle. Extended Mobility Tires perform so well without any air that a Tire Pressure Monitor (TPM) is used to alert you if a tire has lost pressure.

If a tire goes flat, you won't need to stop on the side of the road to change the tire. You can just keep on driving. The shorter the distance you drive and the slower the speed, the greater the chance that the tire will not have to be replaced. If you drive on a deflated EMT for 25 miles (40 km) or less and at speeds of 55 mph (90 km/h) or less, there is a good chance that the tire can be repaired. The tire can operate effectively with no air pressure for up to 100 miles (160 km) at speeds up to 55 mph (90 km/h), but the tire would then have to be replaced. When a tire is filled with air, it provides a cushion between the road and the wheel. Because you won't have this cushion when driving on a deflated tire, try to avoid potholes that could damage your wheel and require replacement of it.

Some road hazards can damage a tire beyond repair. This damage could occur even before you've driven on the tire in a deflated condition. When a tire has been damaged, or if you've driven any distance on a deflated EMT, check with an authorized Goodyear EMT Service Center to determine whether the tire can be repaired or should be replaced. To maintain your vehicle's extended mobility feature, all replacement tires must be Extended Mobility Tires.

As soon as possible, contact the nearest authorized GM or Goodyear EMT servicing facility for inspection and repair or replacement. To locate the nearest GM or Goodyear EMT servicing facility, call Roadside Assistance. For phone numbers and Roadside Assistance details see *Roadside Assistance Program on page 458*. You may also contact Goodyear, for the nearest authorized EMT servicing facility, by calling 1-800-789-9878.

⚠ CAUTION:

Extended mobility tires are constructed differently than other tires and could explode during improper service. You or others could be injured or killed if you attempt to repair, replace, dismount, or mount a extended mobility tire. Let only an authorized EMT Service Center repair, replace, dismount and mount extended mobility tires.

The valve stems on your extended mobility tires have sensors that are part of the Tire Pressure Monitor (TPM). See *Tire Pressure Monitor System on page 389*. The TPM sensors contain batteries which are designed to last for 10 years under normal driving conditions. See your dealer if you ever need to have a wheel replaced, or if the sensors ever need replacement.

Notice: **Using liquid sealants can damage the tire valves and tire pressure monitor sensors in your extended mobility tires. This damage would not be covered by warranty. Don't use liquid sealants in your extended mobility tires.**

Inflation - Tire Pressure

Tires need the correct amount of air pressure to operate effectively.

Notice: **Do not let anyone tell you that under-inflation or over-inflation is all right. It is not. If your tires do not have enough air (under-inflation), you can get the following:**

- **Too much flexing**
- **Too much heat**
- **Tire overloading**
- **Premature or irregular wear**
- **Poor handling**
- **Reduced fuel economy**

If your tires have too much air (over-inflation), you can get the following:

- **Unusual wear**
- **Poor handling**
- **Rough ride**
- **Needless damage from road hazards**

A Tire and Loading Information label is attached to the vehicle's b-pillar. This label lists your vehicle's original equipment tires and shows the correct inflation pressures for your tires when they are cold. The recommended cold tire inflation pressure, shown on the label, is the minimum amount of air pressure needed to support your vehicle's maximum load carrying capacity.

For additional information regarding how much weight your vehicle can carry, and an example of the tire and loading information label, see *Loading Your Vehicle on page 307*. How you load your vehicle affects vehicle handling and ride comfort, never load your vehicle with more weight than it was designed to carry.

When to Check

Check your tires once a month or more.

How to Check

Use a good quality pocket-type gage to check tire pressure. You cannot tell if your tires are properly inflated simply by looking at them. Radial tires may look properly inflated even when they're under-inflated. Check the tire's inflation pressure when the tires are cold. Cold means your vehicle has been sitting for at least three hours or driven no more than 1 mile (1.6 km).

Remove the valve cap from the tire valve stem. Press the tire gage firmly onto the valve to get a pressure measurement. If the cold tire inflation pressure matches the recommended pressure on the Tire and Loading Information label, no further adjustment is necessary. If the inflation pressure is low, add air until you reach the recommended amount.

If you overfill the tire, release air by pushing on the metal stem in the center of the tire valve. Re-check the tire pressure with the tire gage.

Be sure to put the valve caps back on the valve stems. They help prevent leaks by keeping out dirt and moisture.

Tire Pressure Monitor System

Your vehicle has a Tire Pressure Monitor (TPM) that sends tire pressure information to the Driver Information Center (DIC). Using the DIC control buttons, the driver is able to check tire pressure levels in all four tires. See *Tire Pressure Monitor System on page 389* and *DIC Controls and Displays on page 206* for additional information.

High-Speed Operation

⚠ CAUTION:

Driving at high speeds, 100 mph (160 km/h) or higher, puts an additional strain on tires. Sustained high-speed driving causes excessive heat build up and can cause sudden tire failure. You could have a crash and you or others could be killed. Some high-speed rated tires require inflation pressure adjustment for high speed operation. When speed limits and road conditions are such that a vehicle can be driven at high speeds, make sure the tires are rated for high speed operation, in excellent condition, and set to the correct cold tire inflation pressure for the vehicle load.

If you will be driving your vehicle at speeds of 175 mph (282 km/h) or higher, where it is legal, set the cold inflation pressure to the maximum inflation pressure shown on the tire sidewall, or 38 psi (265 kPa), whichever is lower. See the example following. When you end this high-speed driving, return the tires to the cold inflation pressure shown on the Tire and Loading Information label. See *Loading Your Vehicle on page 307*.

Example:

You will find the maximum load and inflation pressure molded on the tire's sidewall, in small letters, near the rim flange. It will read something like this: Maximum load 690 kg (1521 lbs) 300 kPa (44 psi) Max. Press.

For this example, you would set the inflation pressure for high-speed driving at 38 psi (265 kPa).

Racing or other competitive driving may affect the warranty coverage of your vehicle. See your warranty booklet for more information.

Tire Pressure Monitor System

The Tire Pressure Monitor System (TPMS) uses radio and sensor technology to check tire pressure levels. TPMS sensors are mounted onto each tire and wheel assembly. The TPMS sensors monitor the air pressure in your vehicle's tires and transmit tire pressure readings to a receiver located in the vehicle.

The TPMS is designed to alert the driver if a low pressure condition exists. Using the Driver Information Center (DIC), tire pressure levels can be viewed by the driver. For additional information and details about the DIC operation and displays see *DIC Controls and Displays on page 206* and *DIC Warnings and Messages on page 212*.

When a low tire pressure condition is detected, the TPMS will illuminate the low tire pressure warning symbol located in the instrument panel cluster. A DIC message to check the pressure in a specific tire will also appear on the DIC display.

The low tire pressure warning symbol on the instrument panel cluster and the LOW TIRE PRESSURE message on the DIC display will appear at each ignition cycle until the tires are inflated to the correct inflation pressure.

You may notice, during cooler weather conditions, that the low tire pressure warning light and the DIC warning message will appear when the vehicle is first started and then turn off as you start to drive the vehicle. This could be an early indicator that the tire pressures are getting low and need to be inflated to the proper pressure.

Each tire, including the spare (if provided), should be checked monthly when cold and inflated to the inflation pressure recommended by the vehicle manufacturer on the vehicle placard or tire inflation pressure label. (If your vehicle has tires of a different size than the size indicated on the vehicle placard or tire inflation pressure label, you should determine the proper tire inflation pressure for those tires.)

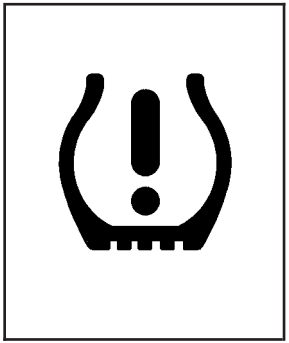

As an added safety feature, your vehicle has been equipped with a tire pressure monitoring system (TPMS) that illuminates a low tire pressure telltale when one or more of your tires is significantly under-inflated.

Accordingly, when the low tire pressure telltale illuminates, you should stop and check your tires as soon as possible, and inflate them to the proper pressure. Driving on a significantly under-inflated tire causes the tire to overheat and can lead to tire failure. Under-inflation also reduces fuel efficiency and tire tread life, and may affect the vehicle's handling and stopping ability.

Please note that the TPMS is not a substitute for proper tire maintenance, and it is the driver's responsibility to maintain correct tire pressure, even if under-inflation has not reached the level to trigger illumination of the TPMS low tire pressure telltale.

Your vehicle has also been equipped with a TPMS malfunction indicator to indicate when the system is not operating properly. The TPMS malfunction indicator is combined with the low tire pressure telltale. When the system detects a malfunction, the telltale will flash for approximately one minute and then remain continuously illuminated. This sequence will continue upon subsequent vehicle start-ups as long as the malfunction exists.

When the malfunction indicator is illuminated, the system may not be able to detect or signal low tire pressure as intended. TPMS malfunctions may occur for a variety of reasons, including the installation of replacement or alternate tires or wheels on the vehicle that prevent the TPMS from functioning properly. Always check the TPMS malfunction telltale after replacing one or more tires or wheels on your vehicle to ensure that the replacement or alternate tires and wheels allow the TPMS to continue to function properly.

A Tire and Loading Information label, attached to your vehicle, shows the size of your vehicle's original equipment tires and the correct inflation pressure for your vehicle's tires when they are cold. See *Loading Your Vehicle on page 307*, for an example of the tire information label and its location on your vehicle. Also see *Inflation - Tire Pressure on page 386*.

Your vehicle's TPMS can alert you about a low or high tire pressure condition but it does not replace normal tire maintenance. See *Inflation - Tire Pressure on page 386* and *When It Is Time for New Tires on page 393*.

The SERVICE TIRE MONITOR message, in the DIC, is displayed when the TPMS is malfunctioning. For example, one or more TPMS sensors may be inoperable or missing. Also, the active handling system will be affected, see *Active Handling System on page 281*. See your dealer for service.

TPMS Sensor Identification Codes

Each TPMS sensor has a unique identification code. Any time you replace one or more of the TPMS sensors, the identification codes will need to be matched to the new tire/wheel position. The sensors are matched, to the tire/wheel positions, in the following order: driver's side front tire, passenger's side front tire, passenger's side rear tire, and driver's side rear tire using a TPMS diagnostic tool. See your GM dealer for service.

Federal Communications Commission (FCC) and Industry and Science Canada

The Tire Pressure Monitor System (TPMS) operates on a radio frequency and complies with Part 15 of the FCC Rules. Operation is subject to the following two conditions:

1. This device may not cause harmful interference.
2. This device must accept any interference received, including interference that may cause undesired operation.

The Tire Pressure Monitor System (TPMS) operates on a radio frequency and complies with RSS-210 of Industry and Science Canada. Operation is subject to the following two conditions:

1. This device may not cause interference.
2. This device must accept any interference received, including interference that may cause undesired operation of the device.

Changes or modifications to this system by other than an authorized service facility could void authorization to use this equipment.

Tire Rotation

The tires on your vehicle are different sizes front to rear. Due to this, your tires should not be rotated. Each tire and wheel should be used only in the position it is in.

When It Is Time for New Tires

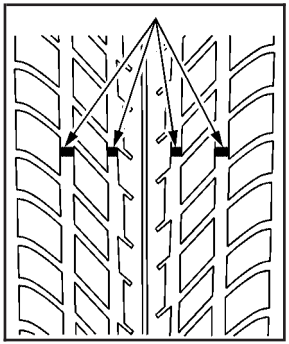

One way to tell when it is time for new tires is to check the treadwear indicators, which will appear when your tires have only 1/16 inch (1.6 mm) or less of tread remaining.

You need a new tire if any of the following statements are true:

- You can see the indicators at three or more places around the tire.
- You can see cord or fabric showing through the tire's rubber.
- The tread or sidewall is cracked, cut or snagged deep enough to show cord or fabric.
- The tire has a bump, bulge or split.
- The tire has a puncture, cut or other damage that cannot be repaired well because of the size or location of the damage.

Buying New Tires

GM has developed and matched specific tires for your vehicle. The original equipment tires installed on your vehicle, when it was new, were designed to meet General Motors Tire Performance Criteria Specification (TPC spec) system rating. If you need replacement tires, GM strongly recommends that you get tires with the same TPC Spec rating. This way, your vehicle will continue to have tires that are designed to give the same performance and vehicle safety, during normal use, as the original tires.

GM's exclusive TPC Spec system considers over a dozen critical specifications that impact the overall performance of your vehicle, including brake system performance, ride and handling, traction control, and tire pressure monitoring performance. GM's TPC Spec number is molded onto the tire's sidewall by the tire manufacturer. If the tires have an all-season tread design, the TPC spec number will be followed by an MS for mud and snow. See *Tire Sidewall Labeling on page 380* for additional information.

Winter tires with the same speed rating as your original equipment tires may not be available for H, V, W, Y, and ZR speed rated tires. If you choose snow tires with a lower speed rating, never exceed the tire's maximum speed capability.

⚠ CAUTION:

Mixing tires could cause you to lose control while driving. If you mix tires of different sizes (other than those originally installed on your vehicle), brands, or types (radial and bias-belted tires), the vehicle may not handle properly, and you could have a crash. Using tires of different sizes (other than those originally installed on your vehicle), brands or types, may also cause damage to your vehicle. Be sure to use the correct size, brand, and type tires on all four wheels.

⚠ CAUTION:

If you use bias-ply tires on your vehicle, the wheel rim flanges could develop cracks after many miles of driving. A tire and/or wheel could fail suddenly, causing a crash. Use only radial-ply tires with the wheels on your vehicle.

If you must replace your vehicle's tires with those that do not have a TPC Spec number, make sure they are the same size, load range, speed rating, and construction type (radial and bias-belted tires) as your vehicle's original tires.

Vehicles that have a tire pressure monitoring system may give an inaccurate low-pressure warning if non-TPC spec rated tires are installed on your vehicle. Non-TPC Spec rated tires may give a low-pressure warning that is higher or lower than the proper warning level you would get with TPC Spec rated tires. See *Tire Pressure Monitor System on page 389*.

Your vehicle's original equipment tires are listed on the Tire and Loading Information label. This label is attached to the vehicle's center pillar (B-pillar). See *Loading Your Vehicle on page 307* for more information about the Tire and Loading Information label and its location on your vehicle.

Different Size Tires and Wheels

If you add wheels or tires that are a different size than your original equipment wheels and tires, this may affect the way your vehicle performs, including its braking, ride and handling characteristics, stability, and resistance to rollover. Additionally, if your vehicle has electronic systems such as, anti-lock brakes, traction control, and electronic stability control, the performance of these systems can be affected.

⚠ CAUTION:

If you add different sized wheels, your vehicle may not provide an acceptable level of performance and safety if tires not recommended for those wheels are selected. You may increase the chance that you will crash and suffer serious injury. Only use GM specific wheel and tire systems developed for your vehicle, and have them properly installed by a GM certified technician.

See *Buying New Tires on page 393* and *Accessories and Modifications on page 318* for additional information.

Uniform Tire Quality Grading

Quality grades can be found where applicable on the tire sidewall between tread shoulder and maximum section width. For example:

Treadwear 200 Traction AA Temperature A

The following information relates to the system developed by the United States National Highway Traffic Safety Administration (NHTSA), which grades tires by treadwear, traction, and temperature performance. This applies only to vehicles sold in the United States. The grades are molded on the sidewalls of most passenger car tires. The Uniform Tire Quality Grading (UTQG) system does not apply to deep tread, winter-type snow tires, space-saver, or temporary use spare tires, tires with nominal rim diameters of 10 to 12 inches (25 to 30 cm), or to some limited-production tires.

While the tires available on General Motors passenger cars and light trucks may vary with respect to these grades, they must also conform to federal safety requirements and additional General Motors Tire Performance Criteria (TPC) standards.

Treadwear

The treadwear grade is a comparative rating based on the wear rate of the tire when tested under controlled conditions on a specified government test course. For example, a tire graded 150 would wear one and a half (1.5) times as well on the government course as a tire graded 100. The relative performance of tires depends upon the actual conditions of their use, however, and may depart significantly from the norm due to variations in driving habits, service practices, and differences in road characteristics and climate.

Traction – AA, A, B, C

The traction grades, from highest to lowest, are AA, A, B, and C. Those grades represent the tire's ability to stop on wet pavement as measured under controlled conditions on specified government test surfaces of asphalt and concrete. A tire marked C may have poor traction performance.

Warning: The traction grade assigned to this tire is based on straight-ahead braking traction tests, and does not include acceleration, cornering, hydroplaning, or peak traction characteristics.

Temperature – A, B, C

The temperature grades are A (the highest), B, and C, representing the tire's resistance to the generation of heat and its ability to dissipate heat when tested under controlled conditions on a specified indoor laboratory test wheel. Sustained high temperature can cause the material of the tire to degenerate and reduce tire life, and excessive temperature can lead to sudden tire failure.

The grade C corresponds to a level of performance which all passenger car tires must meet under the Federal Motor Vehicle Safety Standard No. 109. Grades B and A represent higher levels of performance on the laboratory test wheel than the minimum required by law.

Warning: The temperature grade for this tire is established for a tire that is properly inflated and not overloaded. Excessive speed, under-inflation, or excessive loading, either separately or in combination, can cause heat buildup and possible tire failure.

Wheel Alignment and Tire Balance

The tires and wheels on your vehicle were aligned and balanced carefully at the factory to give you the longest tire life and best overall performance. Adjustments to wheel alignment and tire balancing will not be necessary on a regular basis. However, if you notice unusual tire wear or your vehicle pulling to one side or the other, the alignment may need to be checked. If you notice your vehicle vibrating when driving on a smooth road, your tires and wheels may need to be rebalanced. See your dealer for proper diagnosis.

Wheel Replacement

Replace any wheel that is bent, cracked, or badly rusted or corroded. If wheel nuts keep coming loose, the wheel, wheel bolts, and wheel nuts should be replaced. If the wheel leaks air, replace it (except some aluminum wheels, which can sometimes be repaired). See your dealer if any of these conditions exist.

Your dealer will know the kind of wheel you need.

Each new wheel should have the same load-carrying capacity, diameter, width, offset, and be mounted the same way as the one it replaces.

If you need to replace any of your wheels, wheel bolts or wheel nuts, replace them only with new GM original equipment parts. This way, you will be sure to have the right wheel, wheel bolts, and wheel nuts for your vehicle.

⚠ CAUTION:

Using the wrong replacement wheels, wheel bolts, or wheel nuts on your vehicle can be dangerous. It could affect the braking and handling of your vehicle, make your tires lose air and make you lose control. You could have a collision in which you or others could be injured. Always use the correct wheel, wheel bolts, and wheel nuts for replacement.

Notice: **The wrong wheel can also cause problems with bearing life, brake cooling, speedometer or odometer calibration, headlamp aim, bumper height, vehicle ground clearance, and tire clearance to the body and chassis.**

⚠ CAUTION:

Rust or dirt on a wheel, or on the parts to which it is fastened, can make wheel nuts become loose after a time. The wheel could come off and cause a crash. When you change a wheel, remove any rust or dirt from places where the wheel attaches to the vehicle. In an emergency, you can use a cloth or a paper towel to do this; but be sure to use a scraper or wire brush later, if you need to, to get all the rust or dirt off.

⚠ CAUTION:

Never use oil or grease on studs or the threads of the wheel nuts. If you do, the wheel nuts might come loose and the wheel could fall off, causing a crash.

Tightening Wheel Lug Nuts

⚠ CAUTION:

Incorrect wheel nuts or improperly tightened wheel nuts can cause the wheel to become loose and even come off. This could lead to a crash. Be sure to use the correct wheel nuts. If you have to replace them, be sure to get new GM original equipment wheel nuts.

Notice: **Improperly tightened wheel nuts can lead to brake pulsation and rotor damage. To avoid expensive brake repairs, evenly tighten the wheel nuts in the proper sequence and to the proper torque specification.**

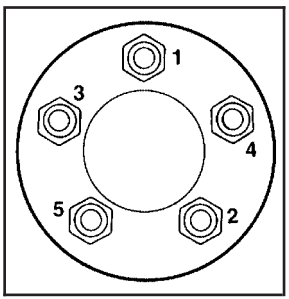

Tighten the wheel lug nuts firmly in a crisscross sequence as shown.

Used Replacement Wheels

⚠ CAUTION:

Putting a used wheel on your vehicle is dangerous. You cannot know how it has been used or how far it has been driven. It could fail suddenly and cause a crash. If you have to replace a wheel, use a new GM original equipment wheel.

Tire Chains

⚠ CAUTION:

Do not use tire chains. There is not enough clearance. Tire chains used on a vehicle without the proper amount of clearance can cause damage to the brakes, suspension, or other vehicle parts. The area damaged by the tire chains could cause you to lose control of your vehicle and you or others may be injured in a crash. Use another type of traction device only if its manufacturer recommends it for use on your vehicle and tire size combination and road conditions. Follow that manufacturer's instructions. To help avoid damage to your vehicle, drive slowly, re-adjust or remove the device if it is contacting your vehicle, and do not spin your wheels. If you do find traction devices that will fit, install them on the rear tires.

Lifting Your Vehicle

⚠ CAUTION:

Lifting a vehicle can cause an injury. The vehicle can slip off the jack and roll over you or other people. You and they could be badly injured. Find a level place to lift your vehicle. To help prevent the vehicle from moving:

1. **Set the parking brake firmly.**
2. **Put an automatic transmission shift lever in PARK (P), or shift a manual transmission to FIRST (1) or REVERSE (R).**
3. **Turn off the engine.**

To be even more certain the vehicle won't move, you can put blocks in front of and behind the wheels.

⚠ CAUTION:

Getting under a vehicle when it is jacked up is dangerous. If the vehicle slips off the jack, you could be badly injured or killed. Never get under a vehicle when it is supported only by a jack.

⚠ CAUTION:

Raising your vehicle with the jack improperly positioned can damage the vehicle and even make the vehicle fall. To help avoid personal injury and vehicle damage, be sure to place the jack in the proper location before raising the vehicle.

If you ever use a jack to lift your vehicle, follow the instructions that came with the jack, and be sure to use the correct lifting points to avoid damaging your vehicle.

Notice: **Lifting your vehicle improperly can damage your vehicle and result in costly repairs not covered by your warranty. To lift your vehicle properly, follow the advice in this part.**

To help prevent vehicle damage:

- **Be sure to place a block or pad between the jack and the vehicle.**
- **Make sure the jack you're using spans at least two crossmember ribs.**
- **Lift only in the areas shown in the following pictures.**

For additional information, see your dealer and the Chevrolet Corvette service manual.

Lifting From the Front

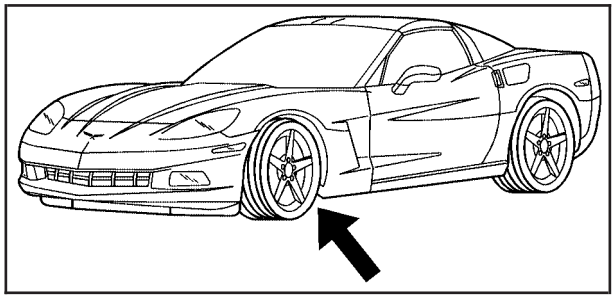

The front lifting points can be accessed from either side of your vehicle, behind the front tires.

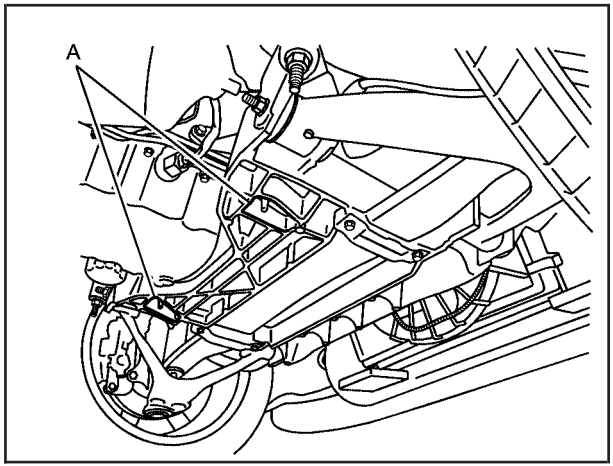

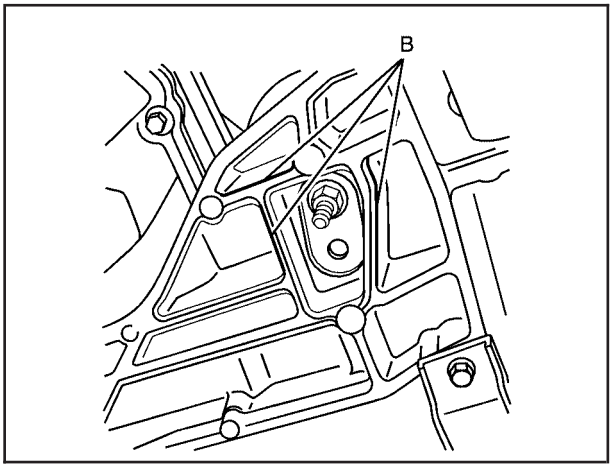

1. Locate the front lifting points (A), according to the illustration shown.
2. Be sure to place a block or pad between the jack and the vehicle.
3. Lift the vehicle with the jack, making sure the jack spans at least two of the crossmember ribs (B).

Lifting From the Rear

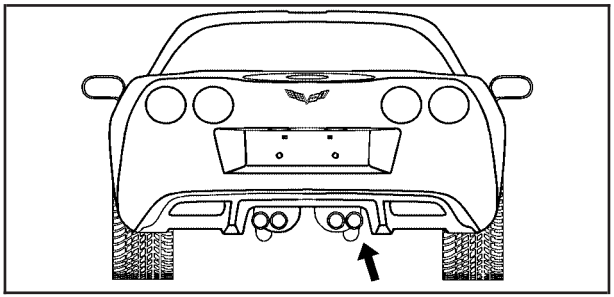

The rear lifting points can be accessed from the rear of the vehicle, on either the driver's or passenger's side.

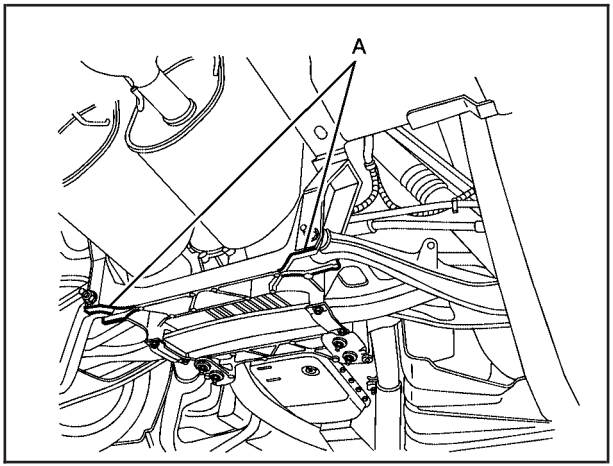

1. Locate the rear lifting points (A), according to the illustration shown.
2. Be sure to place a block or pad between the jack and the vehicle.

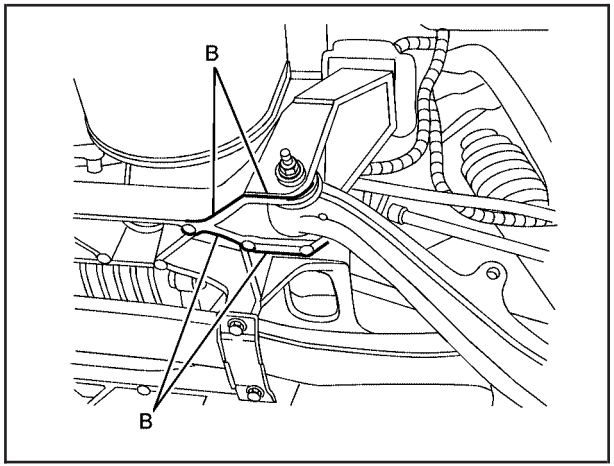

3. Lift the vehicle with the jack, making sure the jack spans at least two of the cross member ribs (B).

For more information, see *Doing Your Own Service Work on page 319*.

If a Tire Goes Flat

Your Corvette has no spare tire, no tire changing equipment, and no place to store a tire.

It is unusual for a tire to blow out while you are driving, especially if you maintain your tires properly. See *Tires on page 378*. If air goes out of a tire, it is much more likely to leak out slowly.

Your vehicle has Extended Mobility Tires (EMT), so you will not need to stop on the side of the road to change a flat tire. EMT tires can operate effectively with no air pressure. If you drive on a deflated EMT for 25 miles (40 km) or less and at speeds of 55 mph (90 km/h) or less, there is a good chance that the tire can be repaired. Contact the nearest authorized Chevrolet or Goodyear EMT servicing facility, as soon as possible, to have the flat tire inspected and repaired or replaced. For more information, see *Extended Mobility Tires on page 384*.

⚠ CAUTION:

Special tools and procedures are required to service an Extended Mobility Tire (EMT). If these special tools and procedures are not used you or others could be injured and your vehicle could be damaged. Always be sure the proper tools and procedures, as described in the service manual, are used.

To order a service manual, see *Service Publications Ordering Information on page 471*.

Appearance Care

Cleaning the Inside of Your Vehicle

Your vehicle's interior will continue to look its best if it is cleaned often. Although not always visible, dust and dirt can accumulate on your upholstery. Dirt can damage carpet, fabric, leather, and plastic surfaces. Regular vacuuming is recommended to remove particles from your upholstery. It is important to keep your upholstery from becoming and remaining heavily soiled. Soils should be removed as quickly as possible. Your vehicle's interior may experience extremes of heat that could cause stains to set rapidly.

Lighter colored interiors may require more frequent cleaning. Use care because newspapers and garments that transfer color to your home furnishings may also transfer color to your vehicle's interior.

When cleaning your vehicle's interior, only use cleaners specifically designed for the surfaces being cleaned. Permanent damage may result from using cleaners on surfaces for which they were not intended.

Use glass cleaner only on glass. Remove any accidental over-spray from other surfaces immediately. To prevent over-spray, apply cleaner directly to the cleaning cloth.

Notice: **If you use abrasive cleaners when cleaning glass surfaces on your vehicle, you could scratch the glass and/or cause damage to the integrated radio antenna and the rear window defogger. When cleaning the glass on your vehicle, use only a soft cloth and glass cleaner.**

Many cleaners contain solvents that may become concentrated in your vehicle's breathing space. Before using cleaners, read and adhere to all safety instructions on the label. While cleaning your vehicle's interior, maintain adequate ventilation by opening your vehicle's doors and windows.

Dust may be removed from small buttons and knobs using a small brush with soft bristles.

Your dealer has a product for cleaning your vehicle's glass. Should it become necessary, you can also obtain a product from your dealer to remove odors from your vehicle's upholstery.

Do not clean your vehicle using the following cleaners or techniques:

- Never use a knife or any other sharp object to remove a soil from any interior surface.
- Never use a stiff brush. It can cause damage to your vehicle's interior surfaces.
- Never apply heavy pressure or rub aggressively with a cleaning cloth. Use of heavy pressure can damage your interior and does not improve the effectiveness of soil removal.
- Use only mild, neutral-pH soaps. Avoid laundry detergents or dishwashing soaps with degreasers. Using too much soap will leave a residue that leaves streaks and attracts dirt. For liquid cleaners, about 20 drops per gallon (3.78 L) of water is a good guide.
- Do not heavily saturate your upholstery while cleaning.
- Damage to your vehicle's interior may result from the use of many organic solvents such as naptha, alcohol, etc.

Fabric/Carpet

Use a vacuum cleaner with a soft brush attachment frequently to remove dust and loose dirt. A canister vacuum with a beater bar in the nozzle may only be used on floor carpet and carpeted floor mats. For soils, always try to remove them first with plain water or club soda. Before cleaning, gently remove as much of the soil as possible using one of the following techniques:

- For liquids: gently blot the remaining soil with a paper towel. Allow the soil to absorb into the paper towel until no more can be removed.
- For solid dry soils: remove as much as possible and then vacuum.

To clean, use the following instructions:

1. Saturate a lint-free, clean white cloth with water or club soda.
2. Wring the cloth to remove excess moisture.
3. Start on the outside edge of the soil and gently rub toward the center. Continue cleaning, using a clean area of the cloth each time it becomes soiled.
4. Continue to gently rub the soiled area until the cleaning cloth remains clean.
5. If the soil is not completely removed, use a mild soap solution and repeat the cleaning process that was used with plain water.

If any of the soil remains, a commercial fabric cleaner or spot lifter may be necessary. When a commercial upholstery cleaner or spot lifter is to be used, test a small hidden area for colorfastness first. If the locally cleaned area gives any impression that a ring formation may result, clean the entire surface.

After the cleaning process has been completed, a paper towel can be used to blot excess moisture from the fabric or carpet.

Coated Moldings

These moldings are around the hatch opening in the rear area.

- When lightly soiled, wipe with a sponge or soft lint-free cloth dampened with water.
- When heavily soiled, use warm soapy water.

Leather

A soft cloth dampened with water may be used to remove dust. If a more thorough cleaning is necessary, a soft cloth dampened with a mild soap solution can be used. Allow the leather to dry naturally. Do not use heat to dry. Never use steam to clean leather. Never use spot lifters or spot removers on leather. Many commercial leather cleaners and coatings that are sold to preserve and protect leather may permanently change the appearance and feel of your leather and are not recommended. Do not use silicone or wax-based products, or those containing organic solvents to clean your vehicle's interior because they can alter the appearance by increasing the gloss in a non-uniform manner. Never use shoe polish on your leather.

Instrument Panel, Vinyl, and Other Plastic Surfaces

A soft cloth dampened with water may be used to remove dust. If a more thorough cleaning is necessary, a clean soft cloth dampened with a mild soap solution can be used to gently remove dust and dirt. Never use spot lifters or removers on plastic surfaces. Many commercial cleaners and coatings that are sold to preserve and protect soft plastic surfaces may permanently change the appearance and feel of your interior and are not recommended. Do not use silicone or wax-based products, or those containing organic solvents to clean your vehicle's interior because they can alter the appearance by increasing the gloss in a non-uniform manner.

Some commercial products may increase gloss on your instrument panel. The increase in gloss may cause annoying reflections in the windshield and even make it difficult to see through the windshield under certain conditions.

Cargo Cover and Convenience Net

Wash with warm water and mild detergent, rinse with cold water and tumble dry on low. Do not use chlorine bleach.

Care of Safety Belts

Keep belts clean and dry.

⚠ CAUTION:

Do not bleach or dye safety belts. If you do, it may severely weaken them. In a crash, they might not be able to provide adequate protection. Clean safety belts only with mild soap and lukewarm water.

Weatherstrips

Silicone grease on weatherstrips will make them last longer, seal better, and not stick or squeak. Apply silicone grease with a clean cloth. During very cold, damp weather frequent application may be required. See *Recommended Fluids and Lubricants on page 443*.

Washing Your Vehicle

The paint finish on the vehicle provides beauty, depth of color, gloss retention, and durability.

The best way to preserve the vehicle's finish is to keep it clean by washing it often with lukewarm or cold water.

Do not wash the vehicle in the direct rays of the sun. Use a car washing soap. Do not use strong soaps or chemical detergents. Be sure to rinse the vehicle well, removing all soap residue completely. GM-approved cleaning products can be obtained from your dealer. See *Vehicle Care/Appearance Materials on page 417*.

Do not use cleaning agents that are petroleum based, or that contain acid or abrasives. All cleaning agents should be flushed promptly and not allowed to dry on the surface, or they could stain. Dry the finish with a soft, clean chamois or an all-cotton towel to avoid surface scratches and water spotting.

Notice: **If you drive your vehicle through an automatic car wash that does not have enough clearance for the wide rear tires and wheels, you could damage your vehicle. Verify with the manager of the car wash that your vehicle will fit before entering the car wash or use a touchless car wash.**

High pressure car washes may cause water to enter the vehicle.

If you are cleaning your vehicle with the hood open, take care not to spray water directly into either end of the air cleaner/filter housing as this could damage your vehicle's engine. See *Engine Air Cleaner/Filter on page 342* for more information.

Cleaning Exterior Lamps/Lenses

Use only lukewarm or cold water, a soft cloth and a car washing soap to clean exterior lamps and lenses. Follow instructions under *Washing Your Vehicle on page 411*.

Finish Care

Occasional waxing or mild polishing of the vehicle by hand may be necessary to remove residue from the paint finish. Approved cleaning products can be obtained from your dealer. See *Vehicle Care/Appearance Materials on page 417*.

Notice: **Machine compounding or aggressive polishing on a basecoat/clearcoat paint finish may damage it. Use only non-abrasive waxes and polishes that are made for a basecoat/clearcoat paint finish on your vehicle.**

The vehicle has a basecoat/clearcoat paint finish. The clearcoat gives more depth and gloss to the colored basecoat. Always use waxes and polishes that are non-abrasive and made for a basecoat/clearcoat paint finish.

Foreign materials such as calcium chloride and other salts, ice melting agents, road oil and tar, tree sap, bird droppings, chemicals from industrial chimneys, etc., can damage the vehicle's finish if they remain on painted surfaces. Wash the vehicle as soon as possible. If necessary, use non-abrasive cleaners that are marked safe for painted surfaces to remove foreign matter.

Exterior painted surfaces are subject to aging, weather, and chemical fallout that can take their toll over a period of years. To help keep the paint finish looking new, keep the vehicle in a garage or covered whenever possible.

Windshield and Wiper Blades

If the windshield is not clear after using the windshield washer, or if the wiper blade chatters when running, wax, sap, or other material may be on the blade or windshield.

Clean the outside of the windshield with a glass cleaning liquid or powder and water solution. The windshield is clean if beads do not form when it is rinsed with water.

Grime from the windshield will stick to the wiper blades and affect their performance. Clean the blade by wiping vigorously with a cloth soaked in full-strength windshield washer solvent. Then rinse the blade with water.

Check the wiper blades and clean them as necessary; replace blades that look worn.

Removable Roof Panel

Notice: **If you use a glass treatment and/or conditioner that contains ethyl alcohol or ethyl sulfate on the roof panel, you could damage the panel. The repairs would not be covered by your warranty. Only use a GM-approved glass cleaner on the roof panel.**

Special care is necessary when cleaning, removing, and/or storing the roof panel.

- Flush with water to remove dust and dirt, then dry the panel.
- Clean a transparent roof panel with GM Glass Cleaner. Leave the cleaner on the panel for one minute, then wipe the panel with a soft, lint-free cloth. Do not use glass cleaner on a painted roof panel.
- Do not use abrasive cleaning materials on either type of panel.

If water drops are frequently allowed to dry on the roof panel, impurities in the water will adhere to the top. These impurities may etch or mar the finish. When the panel gets wet, dry it off.

Convertible Top

The vehicle's convertible top should be cleaned often. However, high pressure car washes may cause water to enter your vehicle.

When you hand wash the top, do it in partial shade. Use a mild soap, lukewarm water and a soft sponge. A chamois or cloth may leave lint on the top, and a brush can chafe the threads in the top fabric. Do not use detergents, harsh cleaners, solvents or bleaching agents.

Wet the entire vehicle and wash the top evenly to avoid spots or rings. Let the soap remain on the fabric for a few minutes. When the top is really dirty, use a mild foam-type cleaner. Thoroughly rinse the entire vehicle, then let the top dry in direct sunlight.

To protect the convertible top:

- After you wash the vehicle, make sure the top is completely dry before you lower it.
- Do not get any cleaner on the vehicle's painted finish; it could leave streaks.
- If you decide to go through an automatic car wash, ask the manager if the equipment could damage your top.

Aluminum Wheels

Notice: **If you use strong soaps, chemicals, abrasive polishes, cleaners, brushes, or cleaners that contain acid on aluminum or chrome-plated wheels, you could damage the surface of the wheel(s). The repairs would not be covered by your warranty. Use only GM-approved cleaners on aluminum or chrome-plated wheels.**

Keep the wheels clean using a soft clean cloth with mild soap and water. Rinse with clean water. After rinsing thoroughly, dry with a soft clean towel. A wax may then be applied.

Notice: **Using chrome polish on aluminum wheels could damage the wheels. The repairs would not be covered by your warranty. Use chrome polish on chrome wheels only.**

The surface of these wheels is similar to the painted surface of the vehicle. Do not use strong soaps, chemicals, abrasive polishes, abrasive cleaners, cleaners with acid, or abrasive cleaning brushes on them because the surface could be damaged. Do not use chrome polish on aluminum wheels.

Notice: **If you drive your vehicle through an automatic car wash that has silicone carbide tire cleaning brushes, you could damage the aluminum or chrome-plated wheels. The repairs would not be covered by your warranty. Never drive a vehicle equipped with aluminum or chrome-plated wheels through an automatic car wash that uses silicone carbide tire cleaning brushes.**

Do not take the vehicle through an automatic car wash that has silicone carbide tire cleaning brushes. These brushes can also damage the surface of these wheels.

Tires

To clean the tires, use a stiff brush with tire cleaner.

Notice: **Using petroleum-based tire dressing products on your vehicle may damage the paint finish and/or tires. When applying a tire dressing, always wipe off any overspray from all painted surfaces on your vehicle.**

Finish Damage

Any stone chips, fractures or deep scratches in the finish should be repaired right away.

Minor chips and scratches can be repaired with touch-up materials available from your dealer or other service outlets. Larger areas of finish damage can be corrected in your dealer's body and paint shop.

Underbody Maintenance

Chemicals used for ice and snow removal and dust control can collect on the underbody. If these are not removed, corrosion and rust can develop on the underbody parts such as fuel lines, frame, floor pan, and exhaust system even though they have corrosion protection.

At least every spring, flush these materials from the underbody with plain water. Clean any areas where mud and debris can collect. Dirt packed in close areas of the frame should be loosened before being flushed. Your dealer or an underbody car washing system can do this for you.

Fiberglass Springs (Composite Springs)

Notice: **If you use acidic or corrosive cleaning products, engine degreasers or aluminum cleaning agents on fiberglass springs, you may damage the springs. The repairs would not be covered by your warranty. Use only approved cleaners when cleaning your vehicle's fiberglass springs.**

Chemical Paint Spotting

Some weather and atmospheric conditions can create a chemical fallout. Airborne pollutants can fall upon and attack painted surfaces on the vehicle. This damage can take two forms: blotchy, ring-shaped discolorations, and small, irregular dark spots etched into the paint surface.

Although no defect in the paint job causes this, GM will repair, at no charge to the owner, the surfaces of new vehicles damaged by this fallout condition within 12 months or 12,000 miles (20 000 km) of purchase, whichever occurs first.

Vehicle Care/Appearance Materials

Description	Usage
Polishing Cloth Wax-Treated	Interior and exterior polishing cloth.
Tar and Road Oil Remover	Removes tar, road oil, and asphalt.
Chrome Cleaner and Polish	Use on chrome or stainless steel.
White Sidewall Tire Cleaner	Removes soil and black marks from whitewalls.
Vinyl Cleaner	Cleans vinyl.
Convertible Top Cleaner	Cleans convertible tops.
Convertible Top Protector	Protects convertible tops.
Glass Cleaner	Removes dirt, grime, smoke and fingerprints.
Chrome and Wire Wheel Cleaner	Removes dirt and grime from chrome wheels and wire wheel covers.
Finish Enhancer	Removes dust, fingerprints, and surface contaminants. Spray on and wipe off.

Description	Usage
Swirl Remover Polish	Removes swirl marks, fine scratches, and other light surface contamination.
Cleaner Wax	Removes light scratches and protects finish.
Foaming Tire Shine Low Gloss	Cleans, shines, and protects in one step. No wiping necessary.
Wash Wax Concentrate	Medium foaming shampoo. Cleans and lightly waxes. Biodegradable and phosphate free.
Spot Lifter	Quickly removes spots and stains from carpets, vinyl, and cloth upholstery.
Odor Eliminator	Odorless spray odor eliminator used on fabrics, vinyl, leather and carpet.

Vehicle Identification

Vehicle Identification Number (VIN)

This is the legal identifier for your vehicle. It appears on a plate in the front corner of the instrument panel, on the driver's side. You can see it if you look through the windshield from outside your vehicle. The VIN also appears on the Vehicle Certification and Service Parts labels and the certificates of title and registration.

Engine Identification

The eighth character in the VIN is the engine code. This code will help you identify your vehicle's engine, specifications, and replacement parts.

Service Parts Identification Label

You will find this label on the inside of the glove box. It is very helpful if you ever need to order parts. On this label, you will find the following:

- VIN
- Model designation
- Paint information
- Production options and special equipment

Do not remove this label from the vehicle.

Electrical System

Add-On Electrical Equipment

Notice: **Do not add anything electrical to your vehicle unless you check with your dealer first. Some electrical equipment can damage your vehicle and the damage would not be covered by your warranty. Some add-on electrical equipment can keep other components from working as they should.**

Your vehicle has an air bag system. Before attempting to add anything electrical to your vehicle, see *Servicing Your Airbag-Equipped Vehicle on page 64*.

Headlamp Wiring

The headlamp wiring is protected by fuses. An electrical overload will cause the lamps to remain off. If this happens, have your headlamp wiring checked right away.

Windshield Wiper Fuses

The windshield wiper motor is protected by a fuse and an internal circuit breaker. If the motor overheats due to heavy snow, etc., the wiper will stop until the motor cools. If the overload is caused by some electrical problem and not snow, etc., be sure to get it fixed.

Power Windows and Other Power Options

Circuit breakers protect the power seats, power windows, and other power accessories. When the current load is too heavy, the circuit breaker opens and closes, protecting the circuit until the problem is fixed or goes away.

Fuses and Circuit Breakers

The wiring circuits in your vehicle are protected from short circuits by a combination of J-Case fuses, mini-fuses and circuit breakers. This greatly reduces the chance of fires caused by electrical problems.

Look at the silver-colored band inside the fuse. If the band is broken or melted, replace the fuse. Be sure you replace a bad fuse with a new one of the identical size and rating.

If you ever have a problem on the road and do not have a spare fuse, you can borrow one that has the same amperage. Just pick some feature of your vehicle that you can get along without – like the radio or cigarette lighter – and use its fuse, if it is the correct amperage. Replace it as soon as you can.

Instrument Panel Fuse Block

The instrument panel fuse block is located on the passenger's side of the vehicle, under the instrument panel and under the toe-board.

Remove the carpet and toe-board covering to access the fuse block by pulling at the top of each corner of the panel. Open the fuse block cover to access the fuses.

You can remove fuses using the fuse puller.

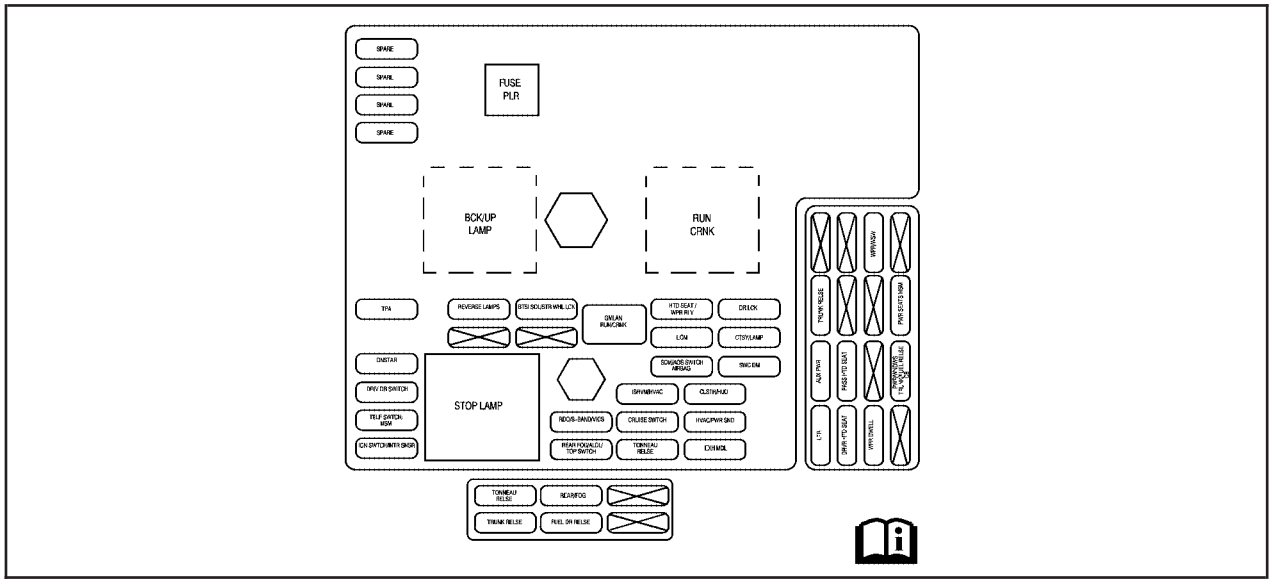

Fuses	Usage
SPARE	Spare Fuse
SPARE	Spare Fuse
SPARE	Spare Fuse

Fuses	Usage
SPARE	Spare Fuse
TPA	Tonneau Pulldown Actuator
ONSTAR	OnStar®

Fuses	Usage
DRIV DR SWTCH	Driver Door Switch
TELE SWTCH/MSM	Telescope Switch, Memory Seat Module
IGN SWTCH/ INTR SNSR	Ignition Switch, Intrusion Sensor
BCK/UP LAMP	Reverse Lamps
REVERSE LAMPS	Reverse Lamps
Blank	Not Used
STOP LAMP	Stop Lamp
BTSI SOL/STR WHL LCK	Brake Transmission Shift Interlock, Steering Wheel Column Lock
BLANK	Not Used
RDO/S-BAND/ VICS	Radio, S-Band, VICS
REAR FOG/ALDL/ TOP SWTCH	Rear Fog Lamp, Assembly Line Diagnostic Link Connector, Convertible Top Switch
GM LAN RUN/CRNK	GM LAN Devices

Fuses	Usage
ISRVM/HVAC	Electric Inside Rearview Mirror, Heating Ventilation, Air Conditioning
CRUISE SWTCH	Cruise Control Switch
TONNEAU RELSE	Tonneau Release
RUN CRNK	Run/Crank Relay
HTD SEAT/ WPR RLY	Heated Seat, Wiper Relays
ECM	Engine Control Module
SDM/AOS SWTCH AIRBAG	Sensing and Diagnostic Module, Automatic Occupant Sensing Module, Airbag
CLSTR/HUD	Cluster, Heads-Up Display
HVAC/PWR SND	Heating, Ventilation/Air Conditioning, Power Sounder
EXH MDL	Exhaust Module (Z06); Spare (Coupe and Convertible)
DR LCK	Door Locks
CTSY/LAMP	Courtesy Lamp
SWC DM	Steering Wheel Dimming

Fuses	Usage
TONNEAU RELSE	Tonneau Release
TRUNK RELSE	Trunk Release
REAR/FOG	Rear Fog Lamps
FUEL DR RELSE	Fuel Door Release
BLANK	Not Used
BLANK	Not Used

Fuses	Usage
LTR	Cigarette Lighter
DRVR HTD SEAT	Driver's Heated Seat
WPR DWELL	Wiper Dwell
BLANK	Not Used
AUX PWR	Auxiliary Power

Fuses	Usage
PASS HTD SEAT	Passenger's Heated Seat
BLANK	Not Used
PWR/ WNDWS/ TRUNK/FUEL RELSE	Power Windows, Trunk, Fuel Door Release
TRUNK RELSE	Trunk Release
BLANK	Not Used
BLANK	Not Used
PWR SEATS MSM	Power Seats, Memory Seat Module
BLANK	Not Used
BLANK	Not Used
WPR/WSW	Windshield Wiper/Washer
BLANK	Not Used

Engine Compartment Fuse Block

There is one fuse block in the engine compartment located on the passenger's side of the vehicle. See *Engine Compartment Overview on page 328* for more information on location.

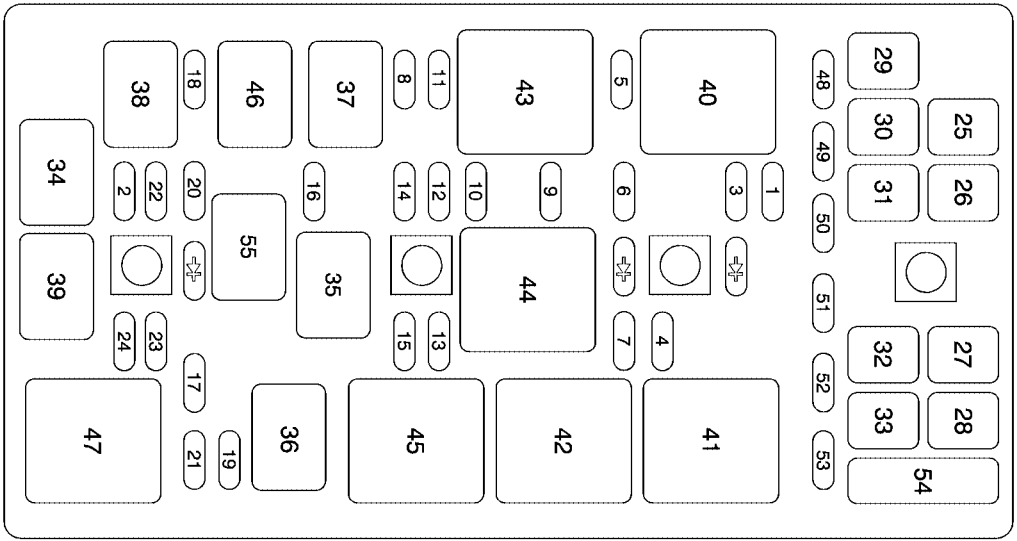

Fuse	Usage
1	Transmission Control Module/Transmission
2	Horn, Alternator Sense
3	Anti-lock Brakes/Real Time Damping
4	Wiper
5	Stoplamps/Back-Up Lamps
6	02 Sensor
7	Battery Main 5
8	Park Lamps
9	Powertrain Relay Input/Electronic Throttle Control
10	Manual Transmission Solenoids
11	Engine Control Module/Transmission Control Module/Easy Key Module
12	Odd Numbered Fuel Injectors
13	Electronic Suspension Control (Option)
14	Canister Purge Solenoid, Mass Air Flow Sensor
15	Air Conditioner Compressor
16	Even Numbered Fuel Injectors
17	Windshield Washer

Fuse	Usage
18	Headlamp Washer
19	Passenger Side Low-Beam Headlamp
20	Fuel Pump
21	Driver Side Low-Beam Headlamp
22	Front Fog Lamp
23	Passenger Side High-Beam Headlamp
24	Driver Side High-Beam Headlamp

J-Style Fuses	Usage
25	Cooling Fan
26	Battery Main 3
27	Anti-lock Brake System
28	Heating/Ventilation/Air Conditioning Blower
29	Battery Main 2
30	Starter
31	Audio Amplifier
32	Blank
33	Battery Main 1

Micro-Relays	Usage
34	Horn
35	Air Conditioning Compressor
36	Windshield Washer
37	Park, Position Lamps
38	Front Fog Lamp
39	High-Beam Headlamp
46	Headlamp Washer
55	Fuel Pump

Mini-Relays	Usage
40	Rear Defog
41	Windshield Wiper High/Low
42	Windshield Wiper Run/Accessory
43	Crank
44	Powertrain Ignition 1
45	Windshield Wiper On/Off
47	Low-Beam Headlamp

Spare Fuses	Usage
48	Spare
49	Spare
50	Spare
51	Spare
52	Spare
53	Spare
54	Fuse Puller

Diodes	Usage
	Diode 1
	Wiper
	Diode 2

Capacities and Specifications

The following approximate capacities are given in English and metric conversions.

See *Recommended Fluids and Lubricants on page 443* for more information.

Application	Capacities	
	English	Metric
Air Conditioning Refrigerant R134a	For the air conditioning system refrigerant charge amount, see the refrigerant caution label located under the hood. See your dealer for more information.	
Cooling System	12.6 qt	11.9 L
Engine Oil with Filter		
6.0 LV8 Engine	5.5 qt	5.2 L
6.0 LV8 Engine Performance Package (Z51)	6.0 qt	5.7 L
7.0 L V8 Engine	8.0 qt	7.6 L
Fuel Tank	18.0 gal	68.0 L

Application	Capacities	
	English	Metric
Transmission Fluid		
Automatic Transmission (Pan Removal and Filter Replacement)	6.5 qt	6.2 L
Manual Transmission – Base	3.6 qt	3.5 L
Manual Transmission – Z51	4.2 qt	4.0 L
Manual Transmission – Z06	4.5 qt	4.3 L
Wheel Nut Torque	100 lb ft	140 N•m
All capacities are approximate. When adding, be sure to fill to the appropriate level, as recommended in this manual. Recheck fluid level after filling		

Engine Specifications

Engine	VIN Code	Transmission	Spark Plug Gap	Firing Order
6.0L V8 (LS2)	U	Automatic Manual	0.040 inch (1.016 mm)	1–8–7–2–6–5–4–3
7.0L V8 (LS7)	E	Manual	0.040 inch (1.016 mm)	1–8–7–2–6–5–4–3

Engine Data

Engine	Horsepower	Torque	Displacement	Compression Ratio
6.0L V8 (LS2)	400 @ 6000 rpm	400 lb ft @ 4400 rpm	6.0L	10.9:1
7.0L V8 (LS7)	505 @6300 rpm	470 lb ft @ 4800 rpm	7.0L	11.0:1

Section 6 Maintenance Schedule

Maintenance Schedule 430
Introduction 430
Maintenance Requirements 430
Your Vehicle and the Environment 431
Using the Maintenance Schedule 431
Scheduled Maintenance 433
Additional Required Services 436
Maintenance Footnotes 437
Owner Checks and Services 439
At Each Fuel Fill 439
At Least Once a Month 440
At Least Once a Year 440
Recommended Fluids and Lubricants 443
Normal Maintenance Replacement Parts ... 445
Engine Drive Belt Routing 446
Maintenance Record 447

Maintenance Schedule

Introduction

Important: Keep engine oil at the proper level and change as recommended.

Have you purchased the GM Protection Plan? The Plan supplements your new vehicle warranties. See your Warranty and Owner Assistance booklet or your dealer for details.

Maintenance Requirements

Notice: **Maintenance intervals, checks, inspections, replacement parts, and recommended fluids and lubricants as prescribed in this manual are necessary to keep your vehicle in good working condition. Any damage caused by failure to follow scheduled maintenance may not be covered by warranty.**

Your Vehicle and the Environment

Proper vehicle maintenance not only helps to keep your vehicle in good working condition, but also helps the environment. All recommended maintenance is important. Improper vehicle maintenance can even affect the quality of the air we breathe. Improper fluid levels or the wrong tire inflation can increase the level of emissions from your vehicle. To help protect our environment, and to keep your vehicle in good condition, be sure to maintain your vehicle properly.

Using the Maintenance Schedule

We at General Motors want to help you keep your vehicle in good working condition. But we do not know exactly how you will drive it. You may drive very short distances only a few times a week. Or you may drive long distances all the time in very hot, dusty weather. You may use your vehicle in making deliveries. Or you may drive it to work, to do errands, or in many other ways.

Because of all the different ways people use their vehicles, maintenance needs vary. You may need more frequent checks and replacements. So please read the following and note how you drive. If you have any questions on how to keep your vehicle in good condition, see your GM Goodwrench® dealer.

This schedule is for vehicles that:

- carry passengers and cargo within recommended limits. You will find these limits on the Tire and Loading Information label. See *Loading Your Vehicle on page 307*.
- are driven on reasonable road surfaces within legal driving limits.
- use the recommended fuel. See *Gasoline Octane on page 320*.

The services in *Scheduled Maintenance on page 433* should be performed when indicated. See *Additional Required Services on page 436* and *Maintenance Footnotes on page 437* for further information.

⚠ CAUTION:

Performing maintenance work on a vehicle can be dangerous. In trying to do some jobs, you can be seriously injured. Do your own maintenance work only if you have the required know-how and the proper tools and equipment for the job. If you have any doubt, see your GM Goodwrench® dealer to have a qualified technician do the work.

Some maintenance services can be complex. So, unless you are technically qualified and have the necessary equipment, you should have your GM Goodwrench® dealer do these jobs.

When you go to your GM Goodwrench® dealer for your service needs, you will know that GM-trained and supported service technicians will perform the work using genuine GM parts.

If you want to purchase service information, see *Service Publications Ordering Information on page 471*.

Owner Checks and Services on page 439 tells you what should be checked, when to check it, and what you can easily do to help keep your vehicle in good condition.

The proper replacement parts, fluids, and lubricants to use are listed in *Recommended Fluids and Lubricants on page 443* and *Normal Maintenance Replacement Parts on page 445*. When your vehicle is serviced, make sure these are used. All parts should be replaced and all necessary repairs done before you or anyone else drives the vehicle. We recommend the use of genuine GM parts.

Scheduled Maintenance

When the CHANGE ENGINE OIL message comes on, it means that service is required for your vehicle. Have your vehicle serviced as soon as possible within the next 600 miles (1 000 km). It is possible that, if you are driving under the best conditions, the engine oil life system may not indicate that vehicle service is necessary for over a year. However, your engine oil and filter must be changed at least once a year and at this time the system must be reset. Your GM Goodwrench® dealer has GM-trained service technicians who will perform this work using genuine GM parts and reset the system.

If the engine oil life system is ever reset accidentally, you must service your vehicle within 3,000 miles (5 000 km) since your last service. Remember to reset the oil life system whenever the oil is changed. See *Engine Oil Life System on page 340* for information on the Engine Oil Life System and resetting the system.

When the CHANGE ENGINE OIL message appears, certain services, checks, and inspections are required. Required services are described in the following for “Maintenance I” and “Maintenance II.” Generally, it is recommended that your first service be Maintenance I, your second service be Maintenance II, and that you alternate Maintenance I and Maintenance II thereafter. However, in some cases, Maintenance II may be required more often.

Maintenance I — Use Maintenance I if the message comes on within 10 months since the vehicle was purchased or Maintenance II was performed.

Maintenance II — Use Maintenance II if the previous service performed was Maintenance I. Always use Maintenance II whenever the message comes on 10 months or more since the last service or if the message has not come on at all for one year.

Scheduled Maintenance

Service	Maintenance I	Maintenance II
Change engine oil and filter. See *Engine Oil on page 332*. Reset oil life system. See *Engine Oil Life System on page 340. An Emission Control Service.*	•	•
Visually check for any leaks or damage. *See footnote (g).*	•	•
Inspect engine air cleaner filter. If necessary, replace filter. See *Engine Air Cleaner/Filter on page 342*. *See footnote (k).*		•
Check tire inflation pressures and tire wear. See *Tires on page 378*.	•	•
Inspect brake system. *See footnote (a).*	•	•
Check engine coolant and windshield washer fluid levels and add fluid as needed.	•	•
Perform any needed additional services. See “Additional Required Services” in this section.	•	•
Inspect suspension and steering components. *See footnote (b).*		•
Inspect engine cooling system. *See footnote (c).*		•
Inspect wiper blades. *See footnote (d).*		•
Inspect restraint system components. *See footnote (e).*		•
Lubricate body components. *See footnote (f).*		•
Replace passenger compartment air filter. *See footnote (j).*		•

Additional Required Services

The following services should be performed at the first maintenance service (I or II) after the indicated miles (kilometers) shown for each item.

Additional Required Services

Service and Miles (Kilometers)	25,000 (40 000)	50,000 (80 000)	75,000 (120 000)	100,000 (160 000)	125,000 (200 000)	150,000 (240 000)
Inspect fuel system for damage or leaks.	•	•	•	•	•	•
Inspect exhaust system for loose or damaged components.	•	•	•	•	•	•
Replace engine air cleaner filter. See *Engine Air Cleaner/Filter on page 342*.		•		•		•
Change automatic transmission fluid and filter (severe service). *See footnote (h).*		•		•		•
Change automatic transmission fluid and filter (normal service).				•		
Replace spark plugs and inspect spark plug wires. *An Emission Control Service.*				•		

Additional Required Services (cont'd)

Service and Miles (Kilometers)	25,000 (40 000)	50,000 (80 000)	75,000 (120 000)	100,000 (160 000)	125,000 (200 000)	150,000 (240 000)
Engine cooling system service (or every five years, whichever occurs first). *An Emission Control Service. See footnote (i).*						•
Inspect engine accessory drive belt. *An Emission Control Service. See footnote (l).*						•

Maintenance Footnotes

(a) *Visually inspect brake lines and hoses for proper hook-up, binding, leaks, cracks, chafing, etc. Inspect disc brake pads for wear and rotors for surface condition. Inspect other brake parts, including calipers, parking brake, etc.*

(b) *Visually inspect front and rear suspension and steering system for damaged, loose, or missing parts or signs of wear. Inspect power steering lines and hoses for proper hook-up, binding, leaks, cracks, chafing, etc. If you have the Z06 or Z51 performance package, lubricate the outer ends of both rear toe-links.*

(c) *Visually inspect hoses and have them replaced if they are cracked, swollen, or deteriorated. Inspect all pipes, fittings, and clamps; replace with genuine GM parts as needed. To help ensure proper operation, a pressure test of the cooling system and pressure cap and cleaning the outside of the radiator and air conditioning condenser is recommended at least once a year.*

(d) *Visually inspect wiper blades for wear or cracking. Replace wiper blades that appear worn or damaged or that streak or miss areas of the windshield.*

(e) *Make sure the safety belt reminder light and all your belts, buckles, latch plates, retractors, and anchorages are working properly. Look for any other loose or damaged safety belt system parts. If you see anything that might keep a safety belt system from doing its job, have it repaired. Have any torn or frayed safety belts replaced. Also look for any opened or broken airbag coverings, and have them repaired or replaced. The airbag system does not need regular maintenance.*

(f) *Lubricate all key lock cylinders and body door hinges. Lubricate all hinges and latches, including those for the hood, rear compartment, console door, and any folding seat hardware. More frequent lubrication may be required when exposed to a corrosive environment. Applying silicone grease on weatherstrips with a clean cloth will make them last longer, seal better, and not stick or squeak.*

(g) *A fluid loss in any vehicle system could indicate a problem. Have the system inspected and repaired and the fluid level checked. Add fluid if needed.*

(h) *Change automatic transmission fluid and filter if the vehicle is mainly driven under one or more of these conditions:*

- *In heavy city traffic where the outside temperature regularly reaches 90°F (32°C) or higher.*
- *In hilly or mountainous terrain.*
- *Uses such as high performance operation.*

(i) *Drain, flush, and refill cooling system. This service can be complex; you should have your dealer perform this service. See Engine Coolant on page 347 for what to use. Inspect hoses. Clean radiator, condenser, pressure cap, and filler neck. Pressure test the cooling system and pressure cap.*

(j) *If you drive regularly under dusty conditions, the filter may require replacement more often.*

(k) *If you drive regularly under dusty conditions, inspect the filter at each engine oil change.*

(l) *Visually inspect belt for fraying, excessive cracks, or obvious damage. Replace belt if necessary.*

Owner Checks and Services

These owner checks and services should be performed at the intervals specified to help ensure the safety, dependability, and emission control performance of your vehicle. Your GM Goodwrench® dealer can assist you with these checks and services.

Be sure any necessary repairs are completed at once. Whenever any fluids or lubricants are added to your vehicle, make sure they are the proper ones, as shown in *Recommended Fluids and Lubricants on page 443*.

At Each Fuel Fill

It is important to perform these underhood checks at each fuel fill.

Engine Oil Level Check

Check the engine oil level and add the proper oil if necessary. See *Engine Oil on page 332* for further details.

Notice: **It is important to check your oil regularly and keep it at the proper level. Failure to keep your engine oil at the proper level can cause damage to your engine not covered by your warranty.**

Engine Coolant Level Check

Check the engine coolant level and add DEX-COOL® coolant mixture if necessary. See *Engine Coolant on page 347* for further details.

Windshield Washer Fluid Level Check

Check the windshield washer fluid level in the windshield washer fluid reservoir and add the proper fluid if necessary.

At Least Once a Month

Tire Inspection and Inflation Check

Visually inspect your vehicle's tires for wear and make sure they are inflated to the correct pressures. See *Inflation - Tire Pressure on page 386*.

At Least Once a Year

Starter Switch Check

⚠ CAUTION:

When you are doing this inspection, the vehicle could move suddenly. If the vehicle moves, you or others could be injured.

1. Before you start, be sure you have enough room around the vehicle.
2. Firmly apply both the parking brake and the regular brake. See *Parking Brake on page 103*.

   Do not use the accelerator pedal, and be ready to turn off the engine immediately if it starts.
3. On automatic transmission vehicles, try to start the engine in each gear. The vehicle should start only in PARK (P) or NEUTRAL (N). If the vehicle starts in any other position, contact your GM Goodwrench® dealer for service.

   On manual transmission vehicles, put the shift lever in NEUTRAL, push the clutch pedal down halfway, and try to start the engine. The vehicle should start only when the clutch pedal is pushed down all the way to the floor. If the vehicle starts when the clutch pedal is not pushed all the way down, contact your GM Goodwrench® dealer for service.

Automatic Transmission Shift Lock Control System Check

⚠ CAUTION:

When you are doing this inspection, the vehicle could move suddenly. If the vehicle moves, you or others could be injured.

1. Before you start, be sure you have enough room around the vehicle. It should be parked on a level surface.
2. Firmly apply the parking brake. See *Parking Brake on page 103*.

   Be ready to apply the regular brake immediately if the vehicle begins to move.
3. With the engine off and without applying the regular brake, try to move the shift lever out of PARK (P) with normal effort. If the shift lever moves out of PARK (P), contact your GM Goodwrench® dealer for service.

Parking Brake and Automatic Transmission Park (P) Mechanism Check

⚠ CAUTION:

When you are doing this check, your vehicle could begin to move. You or others could be injured and property could be damaged. Make sure there is room in front of your vehicle in case it begins to roll. Be ready to apply the regular brake at once should the vehicle begin to move.

Park on a fairly steep hill, with the vehicle facing downhill. Keeping your foot on the regular brake, set the parking brake.

- To check the parking brake's holding ability: With the engine running and transmission in NEUTRAL (N), slowly remove foot pressure from the regular brake pedal. Do this until the vehicle is held by the parking brake only.
- To check the PARK (P) mechanism's holding ability: With the engine running, shift to PARK (P). Then release the parking brake followed by the regular brake.

Contact your GM Goodwrench® dealer if service is required.

Underbody Flushing Service

At least every spring, use plain water to flush any corrosive materials from the underbody. Take care to clean thoroughly any areas where mud and other debris can collect.

Recommended Fluids and Lubricants

Fluids and lubricants identified below by name, part number, or specification may be obtained from your dealer.

Usage	Fluid/Lubricant
Engine Oil	The engine requires a special engine oil meeting GM Standard GM4718M. Oils meeting this standard may be identified as synthetic, and should also be identified with the American Petroleum Institute Certified for Gasoline Engines starburst symbol. However, not all synthetic API oils with the starburst symbol will meet this GM standard. You should look for and use only an oil that meets GM Standard GM4718M. GM Goodwrench® oil meets all the requirements for your vehicle. For the proper viscosity, see *Engine Oil on page 332*.

Usage	Fluid/Lubricant
Engine Coolant	50/50 mixture of clean, drinkable water and use only DEX-COOL® Coolant. See *Engine Coolant on page 347*.
Hydraulic Brake System	Delco® Supreme 11 Brake Fluid or equivalent DOT-3 brake fluid.
Windshield Washer	GM Optikleen® Washer Solvent.
Hydraulic Clutch System	Hydraulic Clutch Fluid. Use only GM Part No. U.S. 88958860, in Canada 88901244, Super DOT-4 brake fluid.
Power Steering System	GM Power Steering Fluid (GM Part No. U.S. 89021184, in Canada 89021186).
Chassis Lubrication (Rear Toe-Link Outer Ends with ZO6 or Z51 Option)	Chassis Lubricant (GM Part No. U.S. 12377985, in Canada 88901242) or lubricant meeting requirements of NLGI #2, Category LB or GC-LB.

Usage	Fluid/Lubricant
Manual Transmission	Manual Transmission Fluid (GM Part No. U.S. 88861800, in Canada 88861801).
Automatic Transmission	DEXRON®-VI Automatic Transmission Fluid.
Key Lock Cylinders	Multi-Purpose Lubricant, Superlube (GM Part No. U.S. 12346241, in Canada 10953474).
Rear Axle (Limited-Slip Differential)	SAE 75W-90 Synthetic Axle Lubricant (GM Part No. U.S. 89021677, in Canada 89021678) meeting GM Specification 9986115. With a complete drain and refill, add 4 ounces (118 ml), or 6.4 ounces (190 ml) for ZO6 Models, of Limited-Slip Axle Lubricant Additive (GM Part No. U.S. 1052358, in Canada 992694) where required. See *Rear Axle on page 370*.

Usage	Fluid/Lubricant
Hood Latch Assembly, Secondary Latch, Pivots, Spring Anchor, and Release Pawl	Lubriplate Lubricant Aerosol (GM Part No. U.S. 12346293, in Canada 992723) or lubricant meeting requirements of NLGI #2, Category LB or GC-LB.
Hood and Door Hinges	Multi-Purpose Lubricant, Superlube (GM Part No. U.S. 12346241, in Canada 10953474).
Weatherstrip Conditioning	Weatherstrip Lubricant (GM Part No. U.S. 3634770, in Canada 10953518) or Dielectric Silicone Grease (GM Part No. U.S. 12345579, in Canada 992887).

Normal Maintenance Replacement Parts

Replacement parts identified below by name, part number, or specification can be obtained from your GM dealer.

Part	GM Part Number	AC Delco® Part Number
Engine Air Cleaner/Filter		
6.0L V8	10342024	A2945C
7.0L V8	15776148	A3077C
Engine Oil Filter		
6.0L V8	89017524	PF48
7.0L V8	89017524	PF48
Passenger Compartment Air Filter Element	10345066	CF131C
Spark Plug		
6.0L V8	12571164	41-985
7.0L V8	12571165	41-104
Windshield Wiper Blade 20.7 inches (52.5 cm)		
Driver's Side	12335960	—
Passenger's Side	12335961	—

Engine Drive Belt Routing

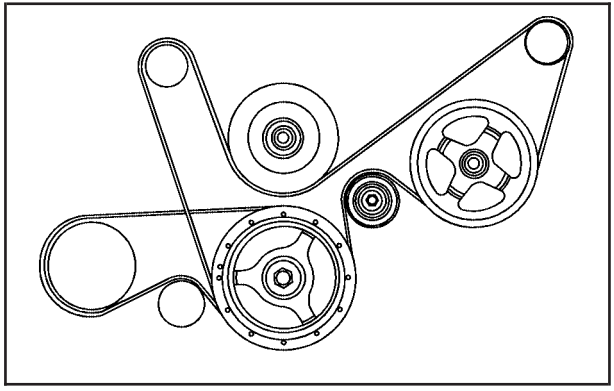

6.0L and 7.0L Engines

Maintenance Record

After the scheduled services are performed, record the date, odometer reading, who performed the service, and the type of services performed in the boxes provided. See *Maintenance Requirements on page 430*. Any additional information from *Owner Checks and Services on page 439* can be added on the following record pages. You should retain all maintenance receipts.

Maintenance Record

Date	Odometer Reading	Serviced By	Maintenance I or Maintenance II	Services Performed

Maintenance Record (cont'd)

Date	Odometer Reading	Serviced By	Maintenance I or Maintenance II	Services Performed

Maintenance Record (cont'd)

Date	Odometer Reading	Serviced By	Maintenance I or Maintenance II	Services Performed

Maintenance Record (cont'd)

Date	Odometer Reading	Serviced By	Maintenance I or Maintenance II	Services Performed

Section 7 Customer Assistance Information

Customer Assistance and Information 452
Customer Satisfaction Procedure 452
Online Owner Center 455
Customer Assistance for Text Telephone (TTY) Users 456
Customer Assistance Offices 456
GM Mobility Reimbursement Program 457
Roadside Assistance Program 458
Courtesy Transportation 461
Vehicle Data Collection and Event Data Recorders 464
Collision Damage Repair 465
Reporting Safety Defects 470
Reporting Safety Defects to the United States Government 470
Reporting Safety Defects to the Canadian Government 470
Reporting Safety Defects to General Motors 470
Service Publications Ordering Information 471

Customer Assistance and Information

Customer Satisfaction Procedure

Your satisfaction and goodwill are important to your dealer and to Chevrolet. Normally, any concerns with the sales transaction or the operation of your vehicle will be resolved by your dealer's sales or service departments. Sometimes, however, despite the best intentions of all concerned, misunderstandings can occur. If your concern has not been resolved to your satisfaction, the following steps should be taken:

STEP ONE: Discuss your concern with a member of dealership management. Normally, concerns can be quickly resolved at that level. If the matter has already been reviewed with the sales, service, or parts manager, contact the owner of the dealership or the general manager.

STEP TWO: If after contacting a member of dealership management, it appears your concern cannot be resolved by the dealership without further help, in the U.S., contact the Chevrolet Customer Assistance Center by calling 1-800-222-1020. In Canada, contact General Motors of Canada Customer Communication Centre by calling 1-800-263-3777 (English) or 1-800-263-7854 (French).

We encourage you to call the toll-free number in order to give your inquiry prompt attention. Please have the following information available to give the Customer Assistance Representative:

- Vehicle Identification Number (VIN). This is available from the vehicle registration or title, or the plate at the top left of the instrument panel and visible through the windshield.
- Dealership name and location.
- Vehicle delivery date and present mileage (kilometers).

When contacting Chevrolet, please remember that your concern will likely be resolved at a dealer's facility. That is why we suggest you follow Step One first if you have a concern.

STEP THREE — U.S. Owners: Both General Motors and your dealer are committed to making sure you are completely satisfied with your new vehicle. However, if you continue to remain unsatisfied after following the procedure outlined in Steps 1 and 2, you should file with the Better Business Bureau (BBB) Auto Line Program to enforce your rights.

The BBB Auto Line Program is an out of court program administered by the Council of Better Business Bureaus to settle automotive disputes regarding vehicle repairs or the interpretation of the New Vehicle Limited Warranty. Although you may be required to resort to this informal dispute resolution program prior to filing a court action, use of the program is free of charge and your case will generally be heard within 40 days. If you do not agree with the decision given in your case, you may reject it and proceed with any other venue for relief available to you.

You may contact the BBB Auto Line Program using the toll-free telephone number or write them at the following address:

BBB Auto Line Program
Council of Better Business Bureaus, Inc.
4200 Wilson Boulevard
Suite 800
Arlington, VA 22203-1838

Telephone: 1-800-955-5100

This program is available in all 50 states and the District of Columbia. Eligibility is limited by vehicle age, mileage, and other factors. General Motors reserves the right to change eligibility limitations and/or discontinue its participation in this program.

STEP THREE — Canadian Owners: In the event that you do not feel your concerns have been addressed after following the procedure outlined in Steps 1 and 2, General Motors of Canada Limited wants you to be aware of its participation in a no-charge Mediation/Arbitration Program. General Motors of Canada Limited has committed to binding arbitration of owner disputes involving factory-related vehicle service claims. The program provides for the review of the facts involved by an impartial third party arbiter, and may include an informal hearing before the arbiter. The program is designed so that the entire dispute settlement process, from the time you file your complaint to the final decision, should be completed in about 70 days. We believe our impartial program offers advantages over courts in most jurisdictions because it is informal, quick, and free of charge.

For further information concerning eligibility in the Canadian Motor Vehicle Arbitration Plan (CAMVAP), call toll-free 1-800-207-0685. Alternatively, you may call the General Motors Customer Communication Centre, 1-800-263-3777 (English), 1-800-263-7854 (French), or you may write to:

The Mediation/Arbitration Program
c/o Customer Communication Centre
General Motors of Canada Limited
Mail Code: CA1-163-005
1908 Colonel Sam Drive
Oshawa, Ontario L1H 8P7

Your inquiry should be accompanied by your Vehicle Identification Number (VIN).

Online Owner Center

Online Owner Center (United States only)

The Owner Center is a resource for your GM ownership needs. Specific vehicle information can be found in one place.

The Online Owner Center allows you to:

- Get e-mail service reminders.
- Access information about your specific vehicle, including tips and videos and an electronic version of this owner manual.
- Keep track of your vehicle's service history and maintenance schedule.
- Find GM dealers for service nationwide.
- Receive special promotions and privileges only available to members.

Refer to www.MyGMLink.com on the web for updated information and to register your vehicle.

My GM Canada (Canada only)

My GM Canada is a password-protected section of gmcanada.com where you can save information on GM vehicles, get personalized offers, and use handy tools and forms with greater ease.

Here are a few of the valuable tools and services you will have access to:

- My Showroom: Find and save information on vehicles and current offers in your area.
- My Dealers/Retailers: Save details such as address and phone number for each of your preferred GM Dealers or Retailers.
- My Driveway: Receive service reminders and helpful advice on owning and maintaining your vehicle.
- My Preferences: Manage your profile, subscribe to E-News and use tools and forms with greater ease.

To sign up to My GM Canada, visit the My GM Canada section within www.gmcanada.com.

Customer Assistance for Text Telephone (TTY) Users

To assist customers who are deaf, hard of hearing, or speech-impaired and who use Text Telephones (TTYs), Chevrolet has TTY equipment available at its Customer Assistance Center. Any TTY user in the U.S. can communicate with Chevrolet by dialing: 1-800-833-CHEV (2438). (TTY users in Canada can dial 1-800-263-3830.)

Customer Assistance Offices

Chevrolet encourages customers to call the toll-free number for assistance. However, if a customer wishes to write or e-mail Chevrolet, the letter should be addressed to:

United States — Customer Assistance

Chevrolet Motor Division
Chevrolet Customer Assistance Center
P.O. Box 33170
Detroit, MI 48232-5170

www.Chevrolet.com
1-800-222-1020
1-800-833-2438
(For Text Telephone devices (TTYs))
Roadside Assistance: 1-800-CHEV-USA (243-8872)
Fax Number: 313-381-0022

From Puerto Rico:
1-800-496-9992 (English)
1-800-496-9993 (Spanish)
Fax Number: 313-381-0022

From U.S. Virgin Islands:
1-800-496-9994
Fax Number: 313-381-0022

Canada — Customer Assistance

General Motors of Canada Limited
Customer Communication Centre, CA1-163-005
1908 Colonel Sam Drive
Oshawa, Ontario L1H 8P7

www.gmcanada.com
1-800-263-3777 (English)
1-800-263-7854 (French)
1-800-263-3830 (For Text Telephone devices (TTYs))
Roadside Assistance: 1-800-268-6800

Overseas — Customer Assistance

Please contact the local General Motors Business Unit.

Mexico, Central America and Caribbean Islands/Countries (Except Puerto Rico and U.S. Virgin Islands) — Customer Assistance

General Motors de Mexico, S. de R.L. de C.V.
Customer Assistance Center
Paseo de la Reforma # 2740
Col. Lomas de Bezares
C.P. 11910, Mexico, D.F.
01-800-508-0000
Long Distance: 011-52-53 29 0 800

GM Mobility Reimbursement Program

GM MOBILITY℠

This program, available to qualified applicants, can reimburse you up to $1,000 of the cost of eligible aftermarket adaptive equipment required for your vehicle, such as hand controls or a wheelchair/scooter lift.

The offer is available for a very limited period of time from the date of vehicle purchase/lease. For more details, or to determine your vehicle's eligibility, visit gmmobility.com or call the GM Mobility Assistance Center at 1-800-323-9935. Text telephone (TTY) users, call 1-800-833-9935.

General Motors of Canada also has a Mobility Program. Call 1-800-GM-DRIVE (463-7483) for details. TTY users call 1-800-263-3830.

Roadside Assistance Program

In the U.S., call **1-800-CHEV-USA (1-800-243-8872)**

In Canada, call **1-800-268-6800**

Service available 24 hours a day, 365 days a year.

As the owner of a new Chevrolet vehicle, you are automatically enrolled in the Chevrolet Roadside Assistance program. This value-added service is intended to provide you with peace of mind as you drive in the city or travel the open road.

Who is Covered?

Roadside Assistance coverage is for the vehicle operator, regardless of ownership. A person driving this vehicle without the consent of the owner is not eligible for coverage.

The following services are provided in the U.S. during the Bumper-to-Bumper warranty period and, in Canada, during the Base Warranty coverage period of the New Vehicle Limited Warranty, up to a maximum coverage of $100.

- **Fuel Delivery:** Delivery of enough fuel for the customer to get to the nearest service station (about $5 in the U.S. and 10 litres in Canada). Service to provide diesel may be restricted. For safety reasons, propane and other alternative fuels will not be provided through this service.
- **Lock-out Service:** To ensure security, the driver must present the vehicle registration and personal ID before lock-out service is provided. Lock-out service will be covered at no charge if you are unable to gain entry into your vehicle. If your vehicle will not start, Roadside Assistance will arrange to have your vehicle towed to the nearest authorized dealership. In the U.S., replacement keys made at the customer's expense will be covered within 10 miles (16 km).

- **Emergency Tow From a Public Roadway or Highway:** Tow to the nearest dealership for warranty service or in the event of a vehicle-disabling accident. Winch-out assistance when the vehicle is mired in sand, mud, or snow.
- **Flat Tire Change:** If your vehicle has a spare tire, installation of the tire in good condition will be covered at no charge. The customer is responsible for the repair or replacement of the tire if not covered by a warrantable failure.
- **Jump Start:** No-start occurrences which require a battery jump start will be covered at no charge.

Additional Services for Canadian Customers

- **Trip Routing Service:** Upon Request, Roadside Assistance will send you detailed, computer-personalized maps, highlighting your choice of either the most direct route or the most scenic route to your destination, anywhere in North America, along with any helpful travel information we may have pertaining to your trip. To request this service, please call us toll-free at 1-800-268-6800.

  We will make every attempt to send your personalized trip routing as quickly as possible, but it is best to allow three weeks before your planned departure date. Trip routing requests will be limited to six per calendar year.

- **Trip Interruption Benefits and Assistance:** In the event of a warranty related vehicle disablement, while en route and over 250 kilometres from original point of departure, you may qualify for trip interruption expense assistance. This assistance covers reasonable reimbursement of up to a maximum of $500 (Canadian) for (A) meals (maximum of $50/day), (B) lodging (maximum of $100/night) and (C) alternate ground transportation (maximum of $40/day). This benefit is to assist you with some of the unplanned expense you may incur while waiting for your vehicle to be repaired.

  Pre-authorization, original detailed receipts and a copy of the repair order are required.

  Once authorization has been given, your advisor will help you make any necessary arrangements and explain how to claim for trip interruption expense assistance.
- **Alternative Service:** There may be times, when Roadside Assistance cannot provide timely assistance, your advisor may authorize you to secure local emergency road service, and you will be reimbursed up to $100 upon submission of the original receipt to Roadside Assistance.

In many instances, mechanical failures are covered under Chevrolet's Bumper-to-Bumper warranty, and the duration of the Base Warranty Coverage for Canadian customers of the new Vehicle Limited Warranty. However, any cost for parts and labor for non-warranty repairs are the responsibility of the driver.

For prompt and efficient assistance when calling, please provide the following to the Roadside Assistance Representative:

- Your name, home address, and home telephone number.
- Telephone number of your location.
- Location of the vehicle.
- Model, year, color, and license plate number.
- Odometer reading, Vehicle Identification Number (VIN), and delivery date of the vehicle.
- Description of the problem.

While we hope you never have the occasion to use our service, it is added security while traveling for you and your family. Remember, we are only a phone call away. U.S. customers call Chevrolet Roadside Assistance: **1-800-CHEV-USA (1-800-243-8872)**, text telephone (TTY) users, call **1-888-889-2438**, Canadian customers call **1-800-268-6800**.

Chevrolet and General Motors of Canada Limited reserve the right to limit services or reimbursement to an owner or driver when, in their sole discretion, the claims become excessive in frequency or type of occurrence.

Roadside Assistance is not part of or included in the coverage provided by the New Vehicle Limited Warranty. Chevrolet and General Motors of Canada Limited reserve the right to make any changes or discontinue the Roadside Assistance program at any time without notification.

Towing and Road Service Exclusions

Specifically excluded from Roadside Assistance coverage are towing or services for vehicles operated on a non-public roadway or highway, fines, impound towing caused by a violation of local, Municipal, State, Provincial, or Federal law, and mounting, dismounting or changing of snow tires, chains, or other traction devices.

Courtesy Transportation

To enhance your ownership experience, we and our participating dealers are proud to offer Courtesy Transportation, a customer support program for new vehicles.

For warranty repairs during the Bumper-to-Bumper (U.S.) or Base Warranty Coverage period (Canada), provided by the New Vehicle Limited Warranty, interim transportation may be available under the Courtesy Transportation program. Several courtesy transportation options are available to assist in reducing your inconvenience when warranty repairs are required.

Courtesy Transportation is not a part of the New Vehicle Limited Warranty and is available only at participating dealers. A separate booklet entitled “Warranty and Owner Assistance Information” furnished with each new vehicle provides detailed warranty coverage information.

Scheduling Service Appointments

When your vehicle requires warranty service, contact your dealer and request an appointment. By scheduling a service appointment and advising your service consultant of your transportation needs, your dealer can help minimize your inconvenience.

If your vehicle cannot be scheduled into the service department immediately, keep driving it until it can be scheduled for service, unless, of course, the problem is safety-related. If it is, please call your dealership, let them know this, and ask for instructions.

If the dealer requests that you simply drop the vehicle off for service, you are urged to do so as early in the work day as possible to allow for the same day repair.

Transportation Options

Warranty service can generally be completed while you wait. However, if you are unable to wait, GM helps to minimize your inconvenience by providing several transportation options. Depending on the circumstances, your dealer can offer you one of the following:

Shuttle Service

Shuttle service is the preferred means of offering Courtesy Transportation and participating dealers can provide you with shuttle service to get you to your destination with minimal interruption of your daily schedule. This includes one-way or round trip shuttle service within reasonable time and distance parameters for the dealer's area.

Public Transportation or Fuel Reimbursement

If your vehicle requires overnight warranty repairs, and public transportation is used as ‘shuttle service,’ the reimbursement is limited to the associated shuttle allowance and must be supported by original receipts. In addition, for U.S. customers, should you arrange transportation through a friend or relative, limited reimbursement for reasonable fuel expenses may be available. Claim amounts should reflect actual costs and be supported by original receipts.

Courtesy Rental Vehicle

Your dealer may arrange to provide you with a courtesy rental vehicle or reimburse you for a rental vehicle that you obtain if your vehicle is kept for an overnight warranty repair. Rental reimbursement will be limited and must be supported by original receipts. This requires that you sign and complete a rental agreement and meet state/provincial, local, and rental vehicle provider requirements. Requirements vary and may include minimum age requirements, insurance coverage, credit card, etc. You are responsible for fuel usage charges and may also be responsible for taxes, levies, usage fees, excessive mileage, or rental usage beyond the completion of the repair.

Generally it is not possible to provide a like-vehicle as a courtesy rental.

Additional Program Information

All program options, such as shuttle service, may not be available at every dealer. Please contact your dealer for specific information about availability. All Courtesy Transportation arrangements will be administered by appropriate dealer personnel.

General Motors reserves the right to unilaterally modify, change or discontinue Courtesy Transportation at any time and to resolve all questions of claim eligibility pursuant to the terms and conditions described herein at its sole discretion.

Vehicle Data Collection and Event Data Recorders

Your vehicle, like other modern motor vehicles, has a number of sophisticated computer systems that monitor and control several aspects of the vehicle's performance. Your vehicle uses on-board vehicle computers to monitor emission control components to optimize fuel economy, to monitor conditions for airbag deployment and, if the vehicle has the Anti-lock Brake System (ABS), to provide anti-lock braking and to help the driver control the vehicle in difficult driving situations. Some information may be stored during regular operations to facilitate repair of detected malfunctions; other information is stored only in a crash event by computer systems, such as those commonly called Event Data Recorders (EDR).

In a crash event, computer systems, such as the airbag Sensing and Diagnostic Module (SDM) in your vehicle may record information about the condition of the vehicle and how it was operated, such as data related to engine speed, brake application, throttle position, vehicle speed, safety belt usage, airbag readiness, airbag performance, and the severity of a collision.

This information has been used to improve vehicle crash performance and may be used to improve crash performance of future vehicles and driving safety. Unlike the data recorders on many airplanes, these on-board systems do not record sounds, such as conversation of vehicle occupants.

To read this information, special equipment is needed and access to the vehicle or the device that stores the data is required. GM will not access information about a crash event or share it with others other than:

- with the consent of the vehicle owner or, if the vehicle is leased, with the consent of the lessee,
- in response to an official request of police or similar government office,
- as part of GM's defense of litigation through the discovery process, or
- as required by law.

In addition, once GM collects or receives data, GM may:

- use the data for GM research needs,
- make it available for research where appropriate confidentiality is to be maintained and need is shown, or
- share summary data which is not tied to a specific vehicle with non-GM organizations for research purposes.

Others, such as law enforcement, may have access to the special equipment that can read the information if they have access to the vehicle or the device that stores the data.

If your vehicle has OnStar®, please check the OnStar® subscription service agreement or manual for information on its operations and data collection.

Collision Damage Repair

If your vehicle is involved in a collision and it is damaged, have the damage repaired by a qualified technician using the proper equipment and quality replacement parts. Poorly performed collision repairs will diminish your vehicle's resale value, and safety performance can be compromised in subsequent collisions.

Collision Parts

Genuine GM Collision parts are new parts made with the same materials and construction methods as the parts with which your vehicle was originally built. Genuine GM Collision parts are your best choice to assure that your vehicle's designed appearance, durability, and safety are preserved. The use of Genuine GM parts can help maintain your GM New Vehicle Warranty.

Recycled original equipment parts may also be used for repair. These parts are typically removed from vehicles that were total losses in prior accidents. In most cases, the parts being recycled are from undamaged sections of the vehicle. A recycled original equipment GM part, may be an acceptable choice to maintain your vehicle's originally designed appearance and safety performance, however, the history of these parts is not known. Such parts are not covered by your GM New Vehicle Limited Warranty, and any related failures are not covered by that warranty.

Aftermarket collision parts are also available. These are made by companies other than GM and may not have been tested for your vehicle. As a result, these parts may fit poorly, exhibit premature durability/corrosion problems, and may not perform properly in subsequent collisions. Aftermarket parts are not covered by your GM New Vehicle Limited Warranty, and any vehicle failure related to such parts are not covered by that warranty.

Repair Facility

GM also recommends that you choose a collision repair facility that meets your needs before you ever need collision repairs. Your GM dealer may have a collision repair center with GM-trained technicians and state of the art equipment, or be able to recommend a collision repair center that has GM-trained technicians and comparable equipment.

Insuring Your Vehicle

Protect your investment in your GM vehicle with comprehensive and collision insurance coverage. There are significant differences in the quality of coverage afforded by various insurance policy terms. Many insurance policies provide reduced protection to your GM vehicle by limiting compensation for damage repairs by using aftermarket collision parts. Some insurance companies will not specify aftermarket collision parts. When purchasing insurance, we recommend that you assure your vehicle will be repaired with GM original equipment collision parts. If such insurance coverage is not available from your current insurance carrier, consider switching to another insurance carrier.

If your vehicle is leased, the leasing company may require you to have insurance that assures repairs with Genuine GM Original Equipment Manufacturer (OEM) parts or Genuine Manufacturer replacement parts. Read your lease carefully, as you may be charged at the end of your lease for poor quality repairs.

If an Accident Occurs

Here is what to do if you are involved in an accident.

- Try to relax and then check to make sure you are all right. If you are uninjured, make sure that no one else in your vehicle, or the other vehicle, is injured.
- If there has been an injury, call 911 for help. Do not leave the scene of an accident until all matters have been taken care of. Move your vehicle only if its position puts you in danger or you are instructed to move it by a police officer.
- Give only the necessary and requested information to police and other parties involved in the accident. Do not discuss your personal condition, mental frame of mind, or anything unrelated to the accident. This will help guard against post-accident legal action.
- If you need roadside assistance, call GM Roadside Assistance. See *Roadside Assistance Program on page 458* for more information.
- If your vehicle cannot be driven, know where the towing service will be taking it. Get a card from the tow truck operator or write down the driver's name, the service's name, and the phone number.
- Remove any valuables from your vehicle before it is towed away. Make sure this includes your insurance information and registration if you keep these items in your vehicle.

- Gather the important information you will need from the other driver. Things like name, address, phone number, driver's license number, vehicle license plate, vehicle make, model and model year, Vehicle Identification Number (VIN), insurance company and policy number, and a general description of the damage to the other vehicle.
- If possible, call your insurance company from the scene of the accident. They will walk you through the information they will need. If they ask for a police report, phone or go to the police department headquarters the next day and you can get a copy of the report for a nominal fee. In some states/provinces with "no fault" insurance laws, a report may not be necessary. This is especially true if there are no injuries and both vehicles are driveable.
- Choose a reputable collision repair facility for your vehicle. Whether you select a GM dealer or a private collision repair facility to fix the damage, make sure you are comfortable with them. Remember, you will have to feel comfortable with their work for a long time.
- Once you have an estimate, read it carefully and make sure you understand what work will be performed on your vehicle. If you have a question, ask for an explanation. Reputable shops welcome this opportunity.

Managing the Vehicle Damage Repair Process

In the event that your vehicle requires damage repairs, GM recommends that you take an active role in its repair. If you have a pre-determined repair facility of choice, take your vehicle there, or have it towed there. Specify to the facility that any required replacement collision parts be original equipment parts, either new Genuine GM parts or recycled original GM parts. Remember, recycled parts will not be covered by your GM vehicle warranty.

Insurance pays the bill for the repair, but you must live with the repair. Depending on your policy limits, your insurance company may initially value the repair using aftermarket parts. Discuss this with your repair professional, and insist on Genuine GM parts.

Remember if your vehicle is leased you may be obligated to have the vehicle repaired with Genuine GM parts, even if your insurance coverage does not pay the full cost.

If another party's insurance company is paying for the repairs, you are not obligated to accept a repair valuation based on that insurance company's collision policy repair limits, as you have no contractual limits with that company. In such cases, you can have control of the repair and parts choices as long as cost stays within reasonable limits.

Reporting Safety Defects

Reporting Safety Defects to the United States Government

If you believe that your vehicle has a defect which could cause a crash or could cause injury or death, you should immediately inform the National Highway Traffic Safety Administration (NHTSA), in addition to notifying General Motors.

If NHTSA receives similar complaints, it may open an investigation, and if it finds that a safety defect exists in a group of vehicles, it may order a recall and remedy campaign. However, NHTSA cannot become involved in individual problems between you, your dealer, or General Motors.

To contact NHTSA, you may call the Vehicle Safety Hotline toll-free at 1-888-327-4236 (TTY: 1-800-424-9153); go to http://www.safercar.gov; or write to:

Administrator, NHTSA
400 Seventh Street, SW.
Washington, D.C. 20590

You can also obtain other information about motor vehicle safety from http://www.safercar.gov.

Reporting Safety Defects to the Canadian Government

If you live in Canada, and you believe that your vehicle has a safety defect, you should immediately notify Transport Canada, in addition to notifying General Motors of Canada Limited. You may call them at 1-800-333-0510 or write to:

Transport Canada
Road Safety Branch
2780 Sheffield Road
Ottawa, Ontario K1B 3V9

Reporting Safety Defects to General Motors

In addition to notifying NHTSA (or Transport Canada) in a situation like this, we certainly hope you will notify General Motors. Please call the Chevrolet Customer Assistance Center at 1-800-222-1020, or write:

Chevrolet Motor Division
Chevrolet Customer Assistance Center
P.O. Box 33170
Detroit, MI 48232-5170

In Canada, please call us at 1-800-263-3777 (English) or 1-800-263-7854 (French). Or, write:

General Motors of Canada Limited
Customer Communication Centre, CA1-163-005
1908 Colonel Sam Drive
Oshawa, Ontario L1H 8P7

Service Publications Ordering Information

Service Manuals

Service Manuals have the diagnosis and repair information on engines, transmission, axle suspension, brakes, electrical, steering, body, etc.

Transmission, Transaxle, Transfer Case Unit Repair Manual

This manual provides information on unit repair service procedures, adjustments, and specifications for GM transmissions, transaxles, and transfer cases.

Service Bulletins

Service Bulletins give technical service information needed to knowledgeably service General Motors cars and trucks. Each bulletin contains instructions to assist in the diagnosis and service of your vehicle.

In Canada, the service bulletin reference number can be obtained by contacting your General Motors dealer or by calling 1-800-GM-DRIVE (1-800-463-7483). This reference number is needed to order the service bulletin from Helm, Inc.

RETAIL SELL PRICE: $6.00 US + Processing Fee

Owner Information

Owner publications are written specifically for owners and intended to provide basic operational information about the vehicle. The owner manual will include the Maintenance Schedule for all models.

In-Portfolio: Includes a Portfolio, Owner Manual, and Warranty Booklet.

RETAIL SELL PRICE: $35.00 US + Processing Fee

Without Portfolio: Owner's Manual only.

RETAIL SELL PRICE: $25.00 US + Processing Fee

Current and Past Model Order Forms

Technical Service Bulletins and Manuals are available for current and past model GM vehicles. To request an order form, please specify year and model name of the vehicle.

ORDER TOLL FREE: 1-800-551-4123
Monday-Friday 8:00 AM - 6:00 PM Eastern Time

For Credit Card Orders Only (VISA-MasterCard-Discover), visit Helm, Inc. on the World Wide Web at: www.helminc.com

Or you can write to:

Helm, Incorporated
P.O. Box 07130
Detroit, MI 48207

Prices are subject to change without notice and without incurring obligation. Allow ample time for delivery.

Note to Canadian Customers: All listed prices are quoted in U.S. funds. Canadian residents are to make checks payable in U.S. funds.

A

Accessories and Modifications 318
Accessory Power Outlet(s) 176
Active Handling System 281
Active Handling System Light 196
Adding Equipment to Your Airbag-Equipped
  Vehicle 65
Additives, Fuel 322
Add-On Electrical Equipment 419
Air Cleaner/Filter, Engine 342
Air Conditioning 177
Airbag
  Passenger Status Indicator 190
  Readiness Light 189
Airbag Sensing and Diagnostic
  Module (SDM) 464
Airbag System 50
  Adding Equipment to Your
    Airbag-Equipped Vehicle 65
  How Does an Airbag Restrain? 57
  Passenger Sensing System 59
  Servicing Your Airbag-Equipped Vehicle 64
  What Makes an Airbag Inflate? 57
  What Will You See After an Airbag
    Inflates? 58
  When Should an Airbag Inflate? 56
Airbag System (cont.)
  Where Are the Airbags? 53
Antenna, Diversity Antenna System 270
Antenna, XM™ Satellite Radio Antenna
  System 270
Anti-Lock Brake System (ABS) 277
Anti-Lock Brake, System Warning Light 195
Appearance Care
  Aluminum Wheels 415
  Care of Safety Belts 411
  Cargo Cover and Convenience Net 411
  Chemical Paint Spotting 416
  Cleaning Exterior Lamps/Lenses 412
  Cleaning the Inside of Your Vehicle 407
  Coated Moldings 409
  Convertible Top 414
  Fabric/Carpet 409
  Fiberglass Springs 416
  Finish Care 412
  Finish Damage 416
  Instrument Panel, Vinyl, and Other
    Plastic Surfaces 410
  Leather 410
  Removable Roof Panel 414
  Tires 415
  Underbody Maintenance 416
  Vehicle Care/Appearance Materials 417

Appearance Care (cont.)
Washing Your Vehicle 411
Weatherstrips 411
Windshield and Wiper Blades 413
Ashtray(s) 177
Audio System(s) 242
Audio Steering Wheel Controls 267
Care of Your CD Player 270
Care of Your CDs 269
Diversity Antenna System 270
Navigation/Radio System, see Navigation Manual 267
Radio with CD 244
Setting the Time 243
Theft-Deterrent Feature 267
Understanding Radio Reception 268
XM™ Satellite Radio Antenna System 270
Automatic Door Lock 81
Automatic Transmission
Fluid 345
Operation 95

B

Battery 363
Exterior Lighting Battery Saver 170
Run-Down Protection 171
Battery (cont.)
Before Leaving on a Long Trip 298
Brake
Anti-Lock Brake System (ABS) 277
Emergencies 279
Parking 103
System Warning Light 194
Brakes 360
Braking 276
Braking in Emergencies 279
Break-In, New Vehicle 90
Bulb Replacement 370
Halogen Bulbs 371
Headlamps, Front Turn Signal, and Parking Lamps 372
High Intensity Discharge (HID) Lighting 371
Replacement Bulbs 374
Taillamps, Turn Signal, and Stoplamps 373
Buying New Tires 393

C

Calibration 108, 110
California Fuel 321
California Proposition 65 Warning 319
Canadian Owners 3
Capacities and Specifications 427

Carbon Monoxide 83, 106, 302, 313
Care of
Safety Belts 411
Your CD Player 270
Your CDs 269
Cargo Cover 132
CD, MP3 259
Center Console Storage Area 129
Chains, Tire 401
Check
Engine Light 198
Checking Things Under the Hood 326
Chemical Paint Spotting 416
Child Restraints
Child Restraint Systems 37
Infants and Young Children 34
Lower Anchors and Tethers for
Children 42, 45
Older Children 31
Securing a Child Restraint in the
Passenger Seat Position 46
Cigarette Lighter 177
Cleaning
Aluminum Wheels 415
Cargo Cover and Convenience Net 411
Coated Moldings 409
Convertible Top 414
Cleaning (cont.)
Exterior Lamps/Lenses 412
Fabric/Carpet 409
Fiberglass Springs 416
Finish Care 412
Inside of Your Vehicle 407
Instrument Panel, Vinyl, and Other
Plastic Surfaces 410
Leather 410
Removable Roof Panel 414
Tires 415
Underbody Maintenance 416
Washing Your Vehicle 411
Weatherstrips 411
Windshield and Wiper Blades 413
Climate Control System
Air Filter, Passenger Compartment 184
Dual Automatic 177
Outlet Adjustment 184
Clutch, Hydraulic 346
Collision Damage Repair 465
Compass 108, 110
Competitive Driving, Racing or Other 290
Control of a Vehicle 276
Convenience Net 131
Convertible Top 138, 145

Coolant
Engine Temperature Gage 197
Heater, Engine 94
Surge Tank Pressure Cap 350
Cooling System 352
Courtesy Lamps 171
Cruise Control 162
Cupholder(s) 128
Customer Assistance Information
Courtesy Transportation 461
Customer Assistance for Text Telephone (TTY) Users 456
Customer Assistance Offices 456
Customer Satisfaction Procedure 452
GM Mobility Reimbursement Program 457
Reporting Safety Defects to General Motors 470
Reporting Safety Defects to the Canadian Government 470
Reporting Safety Defects to the United States Government 470
Roadside Assistance Program 458
Service Publications Ordering Information 471

D

Daytime Running Lamps 167
Defensive Driving 272
Disc, MP3 259
Diversity Antenna System 270
Doing Your Own Service Work 319
Door
Automatic Door Lock 81
Locks 78
Power Door Locks 81
Programmable Automatic Door Unlock 82
Driver
Position, Safety Belt 22
Driver Information Center (DIC) 205
DIC Controls and Displays 206
DIC Vehicle Personalization 232
DIC Warnings and Messages 212
Other Messages 230
Driving
At Night 291
City 295
Defensive 272
Drunken 273
Freeway 296

Driving (cont.)
Hill and Mountain Roads 300
In Rain and on Wet Roads 293
Rocking Your Vehicle to Get it Out 307
Winter 302
Dual Automatic Climate Control System 177

E

Electrical System
Add-On Equipment 419
Engine Compartment Fuse Block 424
Fuses and Circuit Breakers 420
Headlamp Wiring 419
Instrument Panel Fuse Block 420
Power Windows and Other Power Options 420
Windshield Wiper Fuses 419
Engine
Air Cleaner/Filter 342
Battery 363
Check and Service Engine Soon Light 198
Coolant 347
Coolant Heater 94
Coolant Temperature Gage 197
Drive Belt Routing 446
Engine (cont.)
Engine Compartment Overview 328
Exhaust 106
Oil 332
Oil Life System 340
Oil Pressure Gage 202
Overheated Protection Operating Mode 352
Overheating 350
Starting 91
Entry/Exit Lighting 171
Event Data Recorders (EDR) 464
Extended Mobility Tires 384
Extender, Safety Belt 30
Exterior Lamps 166
Exterior Lighting Battery Saver 170

F

Filter
Engine Air Cleaner 342
Finish Damage 416
Flashers, Hazard Warning 156
Flash-to-Pass 160
Flat Tire 406
Floor Mats 129

Fluid
Automatic Transmission 345
Manual Transmission 346
Power Steering 357
Windshield Washer 359
Fog Lamp Light 203
Fog Lamps 169
Fuel 320
Additives 322
California Fuel 321
Filling a Portable Fuel Container 326
Filling Your Tank 323
Fuels in Foreign Countries 323
Gage 204
Gasoline Octane 320
Gasoline Specifications 321
Fuses
Engine Compartment Fuse Block 424
Fuses and Circuit Breakers 420
Instrument Panel Fuse Block 420
Windshield Wiper 419

G

Gage
Engine Coolant Temperature 197
Engine Oil Pressure 202
Fuel 204
Speedometer 188
Tachometer 188
Voltmeter Gage 192
Garage Door Opener 118
Gasoline
Octane 320
Specifications 321
Glove Box 128
GM Mobility Reimbursement Program 457

H

Hatch/Trunk 83
Hazard Warning Flashers 156
Headlamp Wiring 419
Headlamps
Bulb Replacement 370
Daytime Running Lamps 167
Flash-to-Pass 160
Halogen Bulbs 371

Headlamps (cont.)
Headlamps, Front Turn Signal, and Parking Lamps 372
High Intensity Discharge (HID) Lighting 371
High/Low Beam Changer 160
On Reminder 167
Wiper Activated 167
Head-Up Display (HUD) 172
Heated Seats 10
Heater 177
Highbeam On Light 204
High-Speed Operation, Tires 388
Highway Hypnosis 299
Hill and Mountain Roads 300
Hood
Checking Things Under 326
Release 327
Horn 157
How to Use This Manual 4
How to Wear Safety Belts Properly 21
Hydraulic Clutch 346

I

Ignition Positions 90
Infants and Young Children, Restraints 34
Inflation - Tire Pressure 386
Installing the Roof Panel 137
Instrument Panel
Overview 154
Instrument Panel (I/P)
Brightness 170
Cluster 186

J

Jump Starting 364

K

Keyless Access System 73
Keyless Access System, Operation 74
Keys 71

L

Labeling, Tire Sidewall 380
Lamps
Battery Run-Down Protection 171
Courtesy 171
Exterior 166
Exterior Lighting Battery Saver 170
Fog 169

Lamps (cont.)
Reading 171
Twilight Sentinel® 169
LATCH System
Child Restraints 42, 45
Latches, Seatback 15
Lifting Your Vehicle, Tires 402
Light
Active Handling System 196
Airbag Readiness 189
Anti-Lock Brake System Warning 195
Brake System Warning 194
Fog Lamp 203
Highbeam On 204
Lights On Reminder 204
Malfunction Indicator 198
One-to-Four Shift 193
Passenger Airbag Status Indicator 190
Safety Belt Reminder 188
Security 203
TCS Warning Light 195
Tire Pressure 197
Traction Control System (TCS) Warning 195
Lighting
Entry/Exit 171
Limited-Slip Rear Axle 283
Loading Your Vehicle 307
Lockout Protection 82
Locks
Automatic Door Lock 81
Door 78
Lockout Protection 82
Power Door 81
Programmable Automatic Door Unlock 82
Loss of Control 289
Lumbar
Power and Side Bolsters 9

M

Maintenance Schedule
Additional Required Services 436
At Each Fuel Fill 439
At Least Once a Month 440
At Least Once a Year 440
Introduction 430
Maintenance Footnotes 437
Maintenance Record 447
Maintenance Requirements 430
Normal Maintenance Replacement Parts 445
Owner Checks and Services 439
Recommended Fluids and Lubricants 443

Maintenance Schedule (cont.)
Scheduled Maintenance 433
Using 431
Your Vehicle and the Environment 431
Malfunction Indicator Light 198
Manual Seats 8
Manual Transmission
Fluid 346
Operation 100
Memory Seat, Mirrors, Steering Wheel
Controls 10
Message
DIC Warnings and Messages 212
Mirrors
Automatic Dimming Rearview with
Compass 110
Automatic Dimming Rearview with
OnStar® and Compass 108
Manual Rearview Mirror 108
Outside Automatic Dimming Mirror 114
Outside Convex Mirror 114
Outside Power Heated Mirrors 113
MP3 259
MyGMLink.com 455

N

Navigation/Radio System, see Navigation
Manual 267
New Vehicle Break-In 90
Normal Maintenance Replacement Parts 445

O

Odometer 188
Off-Road Recovery 287
Oil
Engine 332
Engine Oil Pressure Gage 202
Oil, Engine Oil Life System 340
Older Children, Restraints 31
One-to-Four Shift Light 193
Online Owner Center 455
OnStar® System, see OnStar® Manual 114
Other Warning Devices 157
Outlet Adjustment 184
Outlet(s), Accessory Power 176
Outside
Automatic Dimming Mirror 114
Convex Mirror 114
Power Heated Mirrors 113

Overheated Engine Protection
Operating Mode 352
Owner Checks and Services 439
Owners, Canadian 3

P

Paint, Damage 416
Park (P)
Shifting Into 103
Shifting Out of 105
Parking
Brake 103
Over Things That Burn 106
Parking Your Vehicle 105
Passenger Airbag Status Indicator 190
Passenger Compartment Air Filter 184
Passenger Position, Safety Belts 30
Passenger Sensing System 59
Passing 287
Power
Accessory Outlet(s) 176
Door Locks 81
Electrical System 420
Lumbar and Side Bolsters 9
Retained Accessory (RAP) 91
Seat 8
Power (cont.)
Steering Fluid 357
Windows 87
Pretensioners, Safety Belt 30
Programmable Automatic Door Unlock 82

Q

Questions and Answers About Safety Belts ... 20

R

Racing or Other Competitive Driving 290
Radios 242
Care of Your CD Player 270
Care of Your CDs 269
Navigation/Radio System, see
Navigation Manual 267
Radio with CD 244
Setting the Time 243
Theft-Deterrent 267
Understanding Reception 268
Reading Lamps 171
Rear Axle 370
Limited-Slip 283
Rear Storage Area 130

Rearview Mirror, Automatic Dimming with
Compass 110
Rearview Mirror, Automatic Dimming with
OnStar® and Compass 108
Rearview Mirrors 108
Reclining Seatbacks 13
Recommended Fluids and Lubricants 443
Recreational Vehicle Towing 313
Removing the Roof Panel 133
Replacement Bulbs 374
Replacement, Windshield 374
Reporting Safety Defects
Canadian Government 470
General Motors 470
United States Government 470
Restraint System Check
Checking the Restraint Systems 66
Replacing Restraint System Parts After
a Crash 67
Retained Accessory Power (RAP) 91
Roadside
Assistance Program 458
Rocking Your Vehicle to Get it Out 307
Roof Panel 133
Installing the Roof Panel 137
Removing the Roof Panel 133
Roof Panel (cont.)
Storing the Roof Panel 136
Routing, Engine Drive Belt 446
Running the Engine While Parked 107

S

Safety Belt
Pretensioners 30
Reminder Light 188
Safety Belts
Care of 411
Driver Position 22
How to Wear Safety Belts Properly 21
Passenger Position 30
Questions and Answers About Safety
Belts 20
Safety Belt Extender 30
Safety Belt Use During Pregnancy 29
Safety Belts Are for Everyone 16
Safety Warnings and Symbols 4
Scheduled Maintenance 433
Seatback Latches 15
Seats
Heated Seats 10
Manual 8
Memory, Mirrors 10

Seats (cont.)
Power Lumbar and Side Bolsters 9
Power Seats 8
Reclining Seatbacks 13
Seatback Latches 15
Securing a Child Restraint
Passenger Seat Position 46
Security Light 203
Selective Ride Control 284
Service 318
Accessories and Modifications 318
Adding Equipment to the Outside of Your Vehicle 320
California Proposition 65 Warning 319
Doing Your Own Work 319
Engine Soon Light 198
Publications Ordering Information 471
Servicing Your Airbag-Equipped Vehicle 64
Setting the Time 243
Shifting Into Park (P) 103
Shifting Out of Park (P) 105
Signals, Turn and Lane-Change 159
Specifications, Capacities 427
Speedometer 188
Starting Your Engine 91
Steering 284
Steering Wheel Controls, Audio 267
Steering Wheel Controls, Memory 10
Steering Wheel, Tilt Wheel 157
Storage Areas
Center Console Storage Area 129
Convenience Net 131
Cupholder(s) 128
Glove Box 128
Rear Storage Area 130
Storing the Roof Panel 136
Stuck in Sand, Mud, Ice, or Snow 306
Sun Visors 87

T

Tachometer 188
Taillamps
Turn Signal, and Stoplamps 373
TCS Warning Light 195
Theft-Deterrent, Radio 267
Theft-Deterrent System 88
Theft-Deterrent Systems 88
Tilt Wheel 157
Tire
Pressure Light 197
Tires 378
Aluminum Wheels, Cleaning 415
Buying New Tires 393

Tires (cont.)
Chains 401
Cleaning 415
Different Size 395
Extended Mobility 384
High-Speed Operation 388
If a Tire Goes Flat 406
Inflation - Tire Pressure 386
Lifting Your Vehicle 402
Pressure Monitor System 389
Rotation 392
Tire Sidewall Labeling 380
Tire Terminology and Definitions 382
Uniform Tire Quality Grading 396
Wheel Alignment and Tire Balance 397
Wheel Replacement 398
When It Is Time for New Tires 393
Winter Tires 379
Towing
Recreational Vehicle 313
Towing a Trailer 313
Your Vehicle 313
Traction
Active Handling System 281
Control System (TCS) 279
Control System Warning Light 195
Traction (cont.)
Limited-Slip Rear Axle 283
Selective Ride Control 284
Transmission
Fluid, Automatic 345
Fluid, Manual 346
One-to-Four Shift Light 193
Transmission Operation, Automatic 95
Transmission Operation, Manual 100
Trunk/Hatch 83
Turn and Lane-Change Signals 159
Turn Signal/Multifunction Lever 158
Twilight Sentinel® 169

U

Understanding Radio Reception 268
Uniform Tire Quality Grading 396
Universal Home Remote System 118
Operation 119, 124

V

Vehicle
Control 276
Damage Warnings 5

Vehicle (cont.)
Loading 307
Parking Your 105
Symbols 5
Vehicle Data Collection and Event Data Recorders 464
Vehicle Identification Number (VIN) 418
Service Parts Identification Label 418
Vehicle Personalization DIC 232
Ventilation Adjustment 184
Visors 87
Voltmeter Gage 192

W

Warning Lights, Gages and Indicators 186
Warnings
DIC Warnings and Messages 212
Hazard Warning Flashers 156
Other Warning Devices 157
Safety and Symbols 4
Vehicle Damage 5
Wheels
Alignment and Tire Balance 397
Different Size 395
Replacement 398
Windows 86
Power 87
Windshield
Replacement 374
Washer 161
Washer Fluid 359
Wiper Blade Replacement 375
Wiper Blades, Cleaning 413
Wiper Fuses 419
Wipers 160
Winter Driving 302
Winter Tires 379
Wiper Activated Headlamps 167

X

XM Radio Messages 265
XM™ Satellite Radio Antenna System 270

Y

Your Vehicle and the Environment 431