# FRONT PASSENGER SEAT BELT WARNING LIGHT (for Sedan)

## COMPONENTS

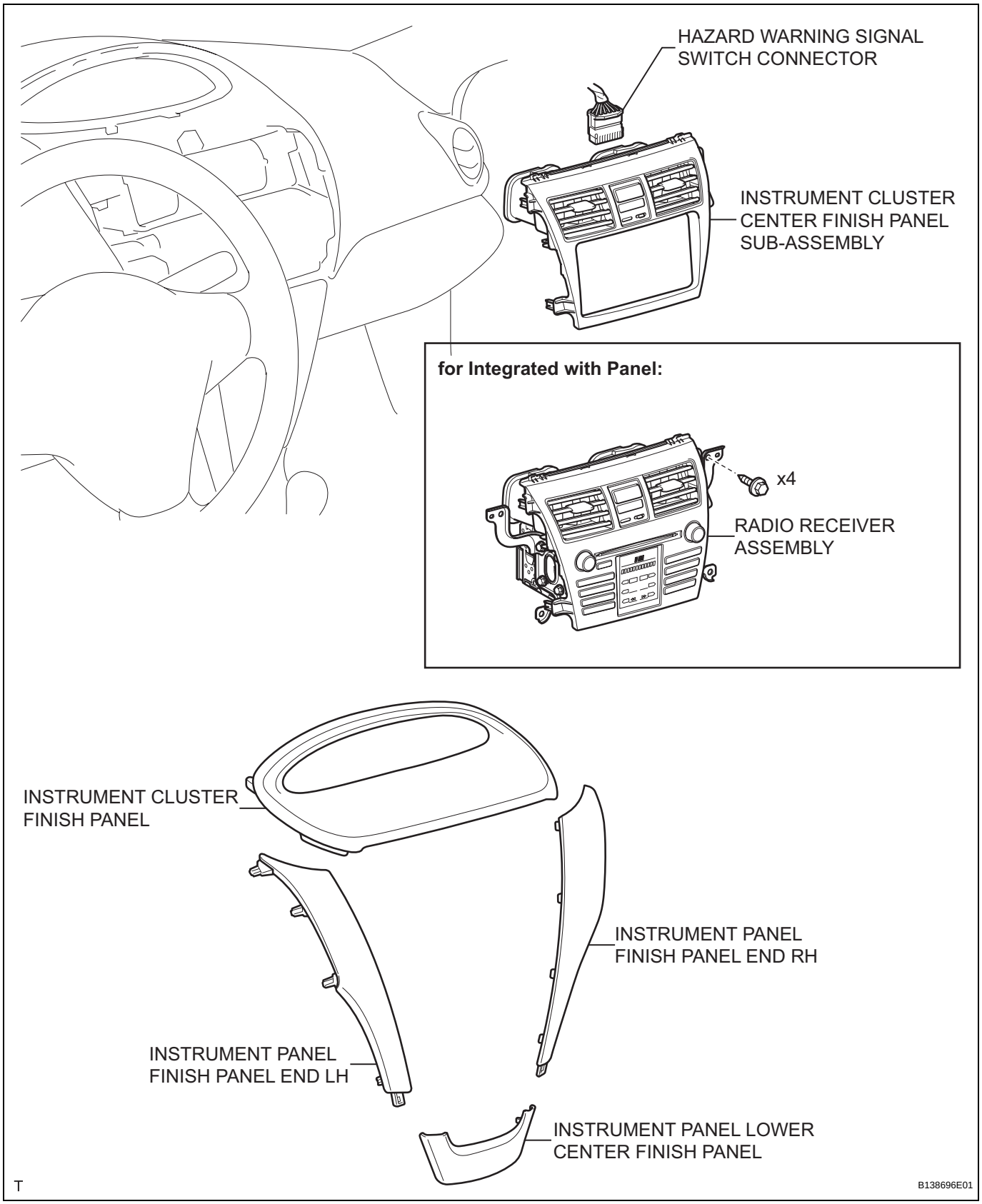


SB

SB

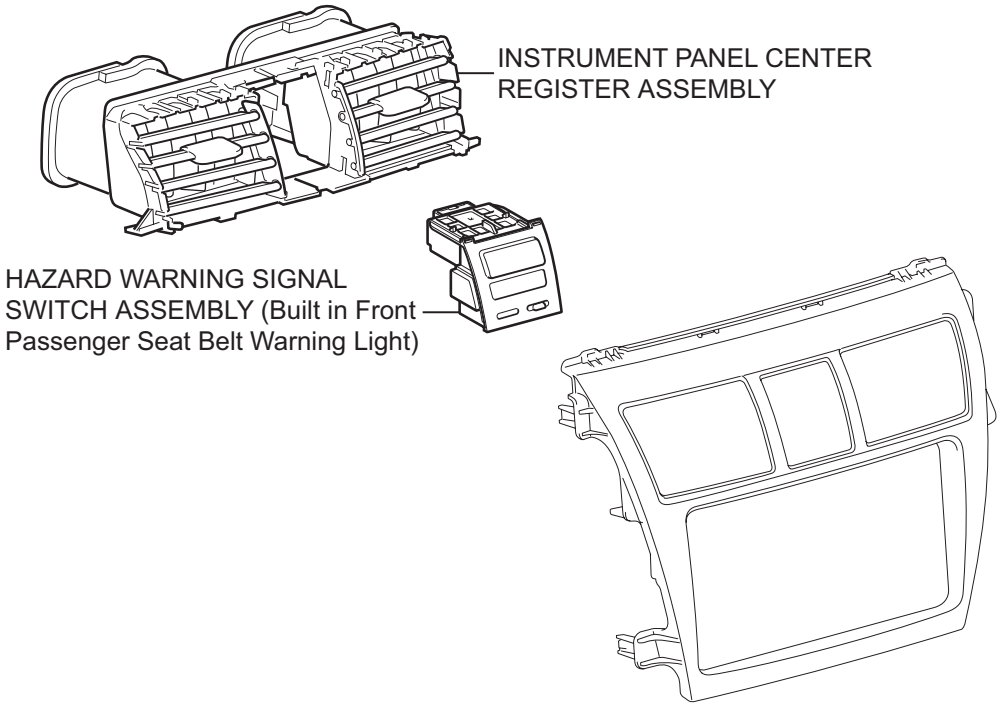


**w/ Radio Receiver:**

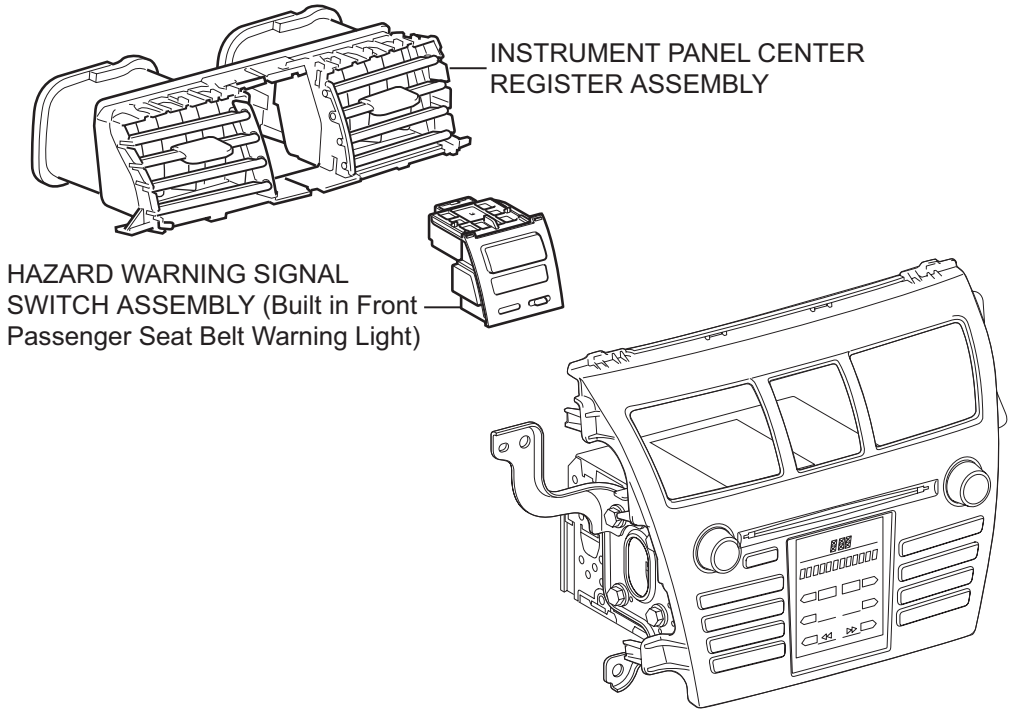


T

B138572E01

# REMOVAL

1. **DISCONNECT CABLE FROM NEGATIVE BATTERY TERMINAL**
2. **REMOVE INSTRUMENT PANEL LOWER CENTER FINISH PANEL (See page ME-138)**
3. **REMOVE INSTRUMENT PANEL FINISH PANEL END RH (See page ME-138)**
4. **REMOVE INSTRUMENT PANEL FINISH PANEL END LH (See page ME-138)**
5. **REMOVE INSTRUMENT CLUSTER FINISH PANEL (See page ME-139)**
6. **REMOVE RADIO RECEIVER ASSEMBLY (for Integrated with Panel) (See page AV-38)**
7. **REMOVE INSTRUMENT CLUSTER CENTER FINISH PANEL SUB-ASSEMBLY (except Integrated with Panel) (See page IP-43)**
8. **REMOVE INSTRUMENT PANEL CENTER REGISTER ASSEMBLY (See page LI-166)**
9. **REMOVE HAZARD WARNING SIGNAL SWITCH ASSEMBLY (Built in Front Passenger Seat Belt Warning Light)**
   (a) Disengage the 3 claws and remove the hazard warning signal switch.

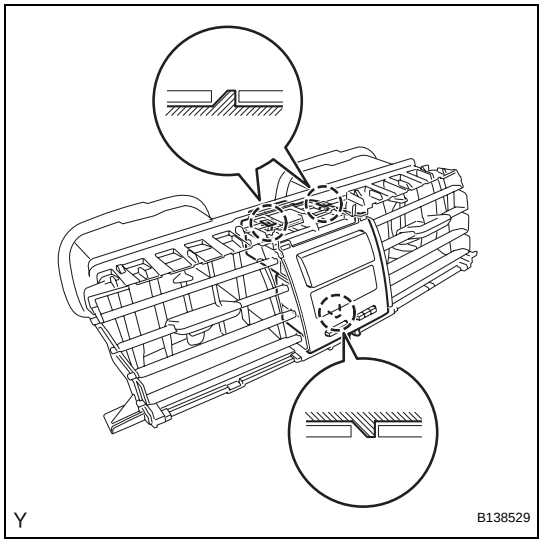


# INSPECTION

1. **INSPECT HAZARD WARNING SIGNAL SWITCH ASSEMBLY (Built in Front Passenger Seat Belt Warning Light)**
   (a) Check the operation.
      (1) Apply battery voltage to the terminals and check that the indicator illuminates.
      **Standard**

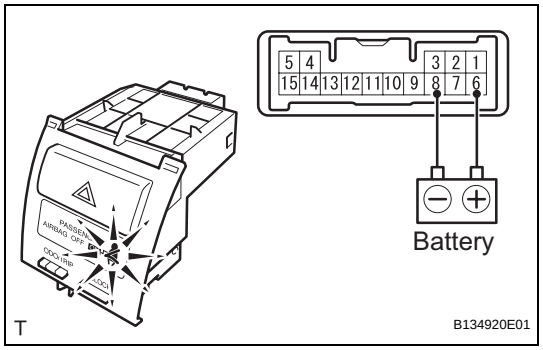


| Condition | Standard |
|---|---|
| Positive battery - Terminal 6 (IG+)<br>Negative battery - Terminal 8 (PBEW) | Illuminates |

If the result is not as specified, replace the hazard warning signal switch.

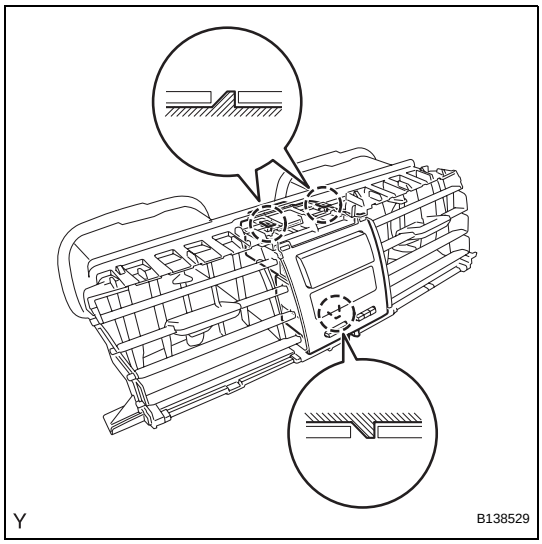


# INSTALLATION

1. **INSTALL HAZARD WARNING SIGNAL SWITCH ASSEMBLY (Built in Front Passenger Seat Belt Warning Light)**
   (a) Engage the 3 claws and install the hazard warning signal switch.
2. **INSTALL INSTRUMENT PANEL CENTER REGISTER ASSEMBLY (See page LI-168)**
3. **INSTALL RADIO RECEIVER ASSEMBLY (for Integrated with Panel) (See page AV-40)**
4. **INSTALL INSTRUMENT CLUSTER CENTER FINISH PANEL SUB-ASSEMBLY (except Integrated with Panel) (See page IP-56)**
5. **INSTALL INSTRUMENT CLUSTER FINISH PANEL (See page ME-140)**
6. **INSTALL INSTRUMENT PANEL FINISH PANEL END RH (See page ME-141)**
7. **INSTALL INSTRUMENT PANEL FINISH PANEL END LH (See page ME-141)**
8. **INSTALL INSTRUMENT PANEL LOWER CENTER FINISH PANEL (See page ME-142)**
9. **CONNECT CABLE TO NEGATIVE BATTERY TERMINAL**
   **Torque: 5.4 N*m (55 kgf*cm, 48 in.*lbf)**

# FRONT PASSENGER SEAT BELT WARNING LIGHT (for Hatchback)

## COMPONENTS



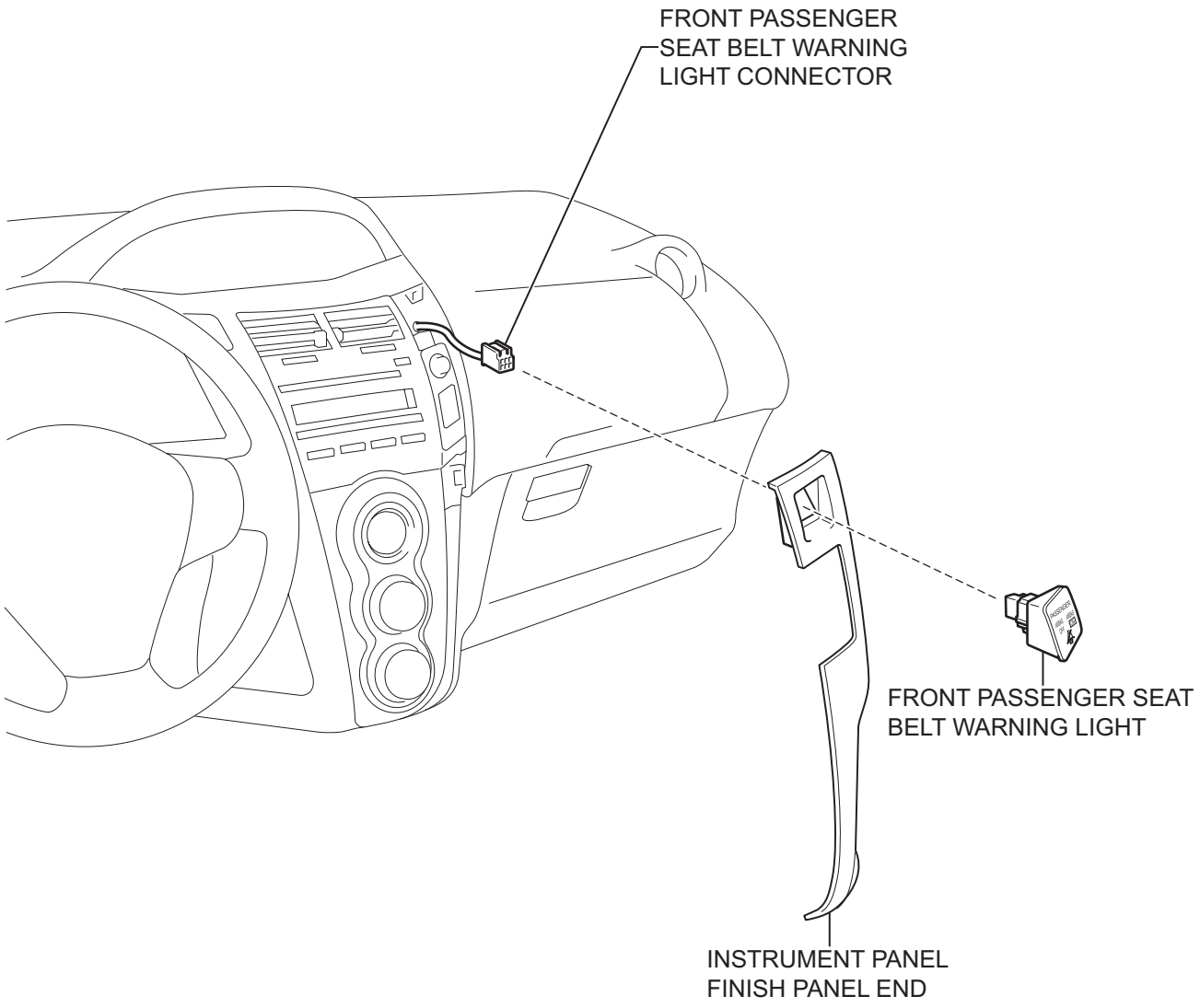


T

B117689E01

SB

# REMOVAL

1. **DISCONNECT CABLE FROM NEGATIVE BATTERY TERMINAL**
2. **REMOVE INSTRUMENT PANEL FINISH PANEL END (See page ME-145)**
3. **REMOVE FRONT PASSENGER SEAT BELT WARNING LIGHT**
   (a) Disengage the 2 claws and remove the front passenger seat belt warning light.

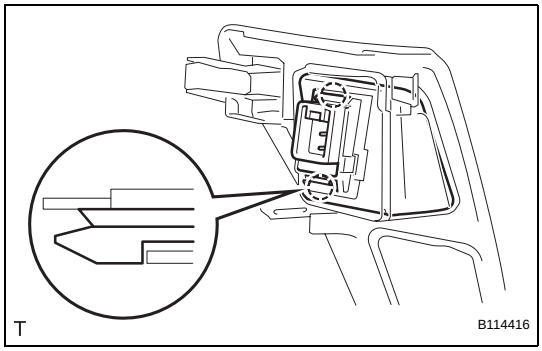


# INSPECTION

1. **INSPECT FRONT PASSENGER SEAT BELT WARNING LIGHT**
   (a) Check the operation.
      (1) Apply battery voltage to the terminals and check that the indicator illuminates.
      **Standard**

| Condition | Standard |
|---|---|
| Positive battery - Terminal 6 (IG+)<br>Negative battery - Terminal 3 (PBELT) | Illuminates |

If the result is not as specified, replace the front passenger seat belt warning light.

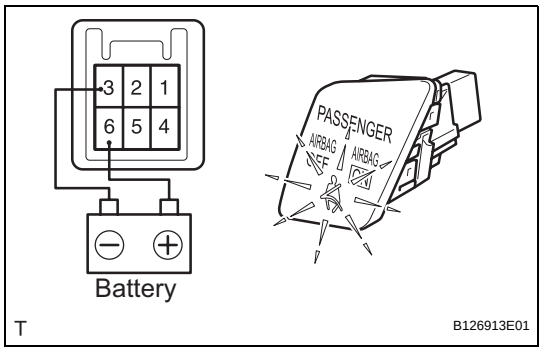


# INSTALLATION

1. **INSTALL FRONT PASSENGER SEAT BELT WARNING LIGHT**
   (a) Engage the 2 claws and install the front passenger seat belt warning light.
2. **INSTALL INSTRUMENT PANEL FINISH PANEL END (See page ME-149)**
3. **CONNECT CABLE TO NEGATIVE BATTERY TERMINAL**
   **Torque: 5.4 N*m (55 kgf*cm, 48 in.*lbf)**

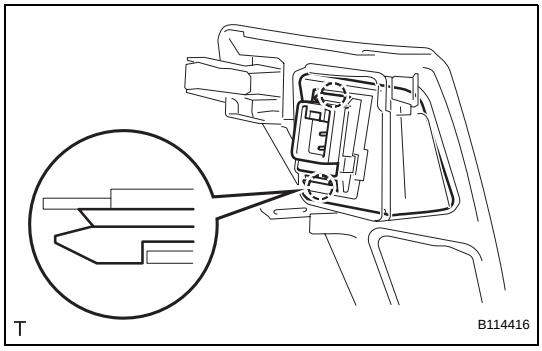

# SEAT BELT WARNING SYSTEM

## PARTS LOCATION

**HATCHBACK:**

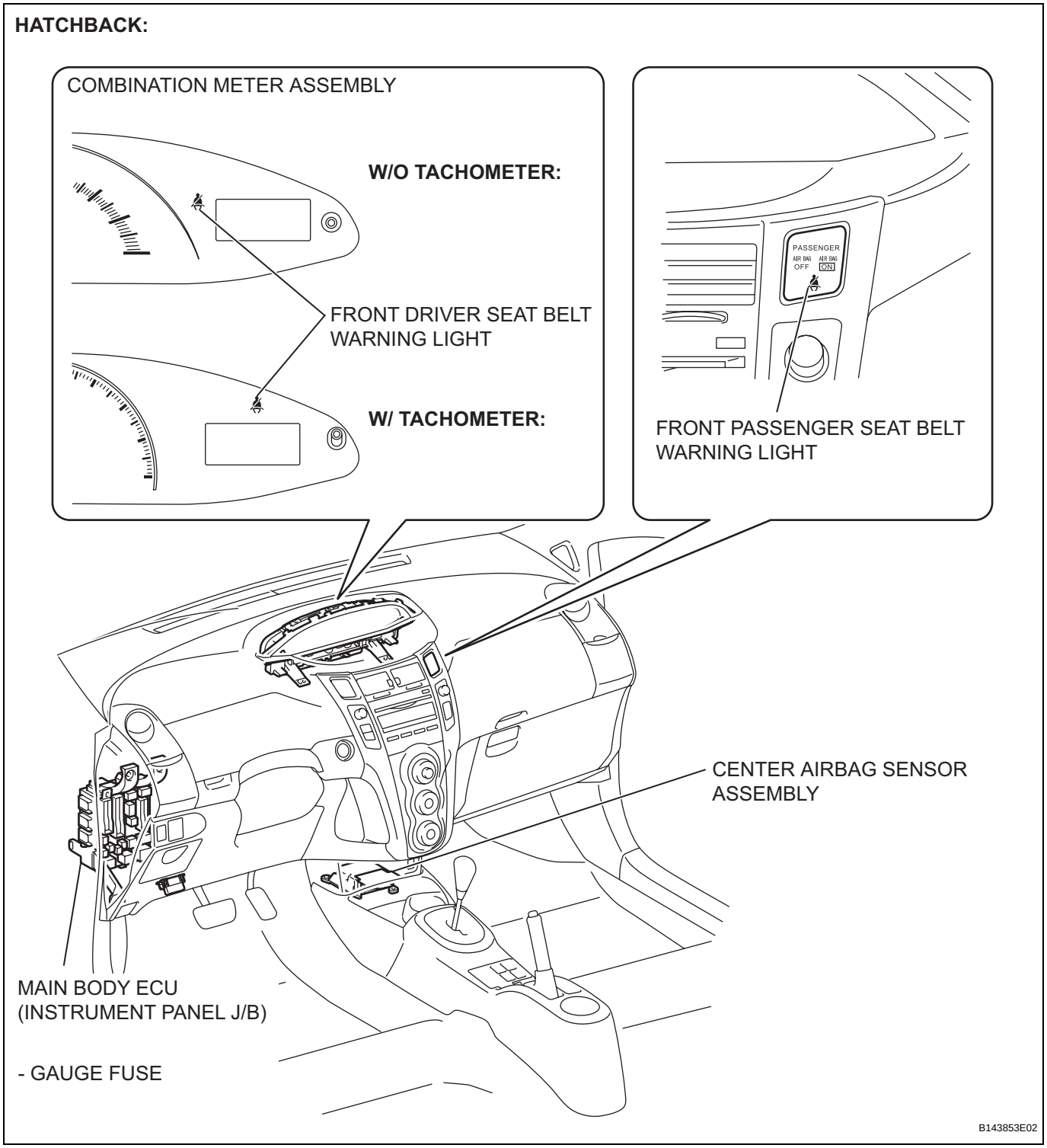


SB

SB

**SEDAN:**

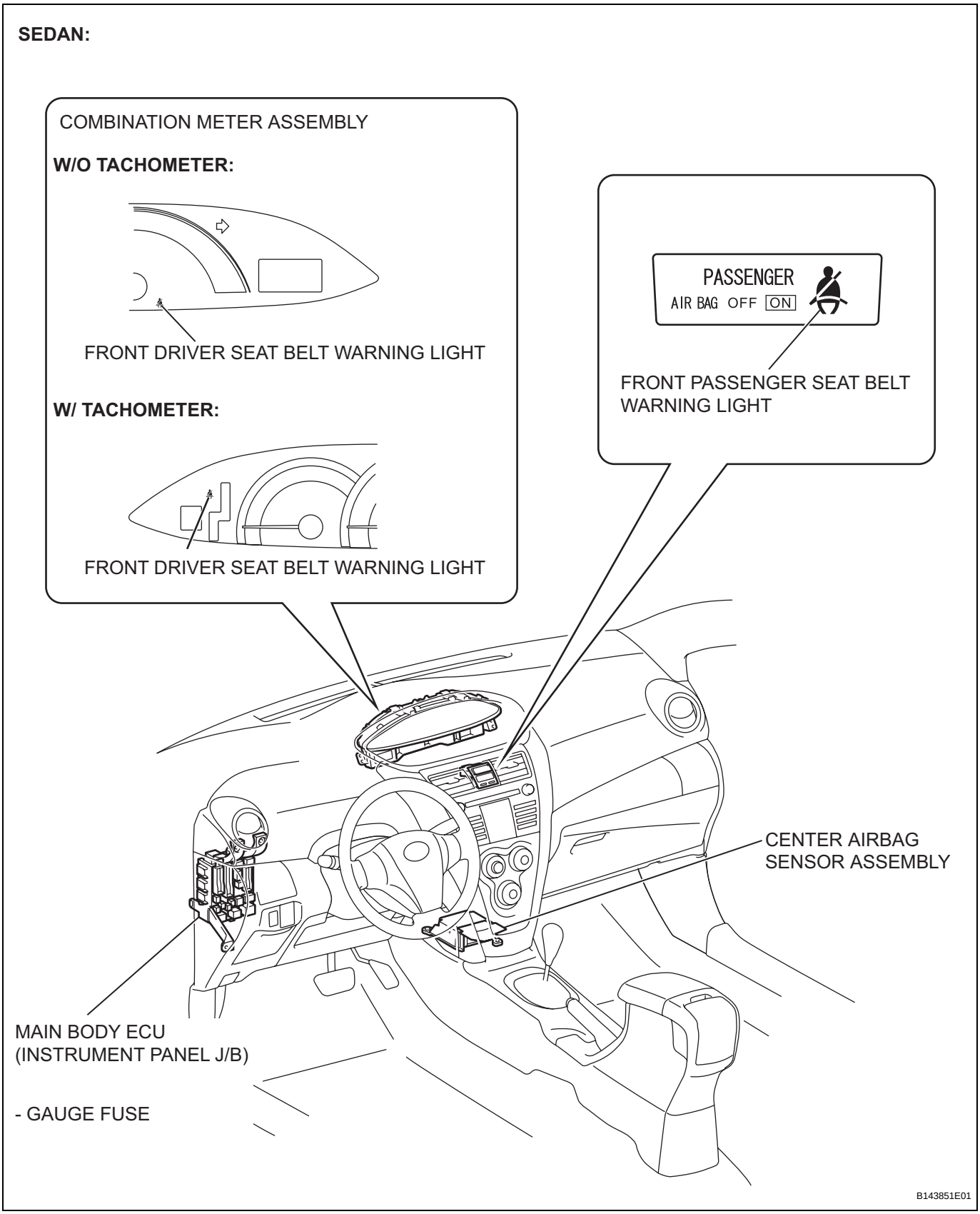
COMBINATION METER ASSEMBLY
W/O TACHOMETER:
FRONT DRIVER SEAT BELT WARNING LIGHT
W/ TACHOMETER:
FRONT DRIVER SEAT BELT WARNING LIGHT
PASSENGER
AIR BAG OFF ON
FRONT PASSENGER SEAT BELT WARNING LIGHT
CENTER AIRBAG SENSOR ASSEMBLY
MAIN BODY ECU (INSTRUMENT PANEL J/B)
- GAUGE FUSE
B143851E01

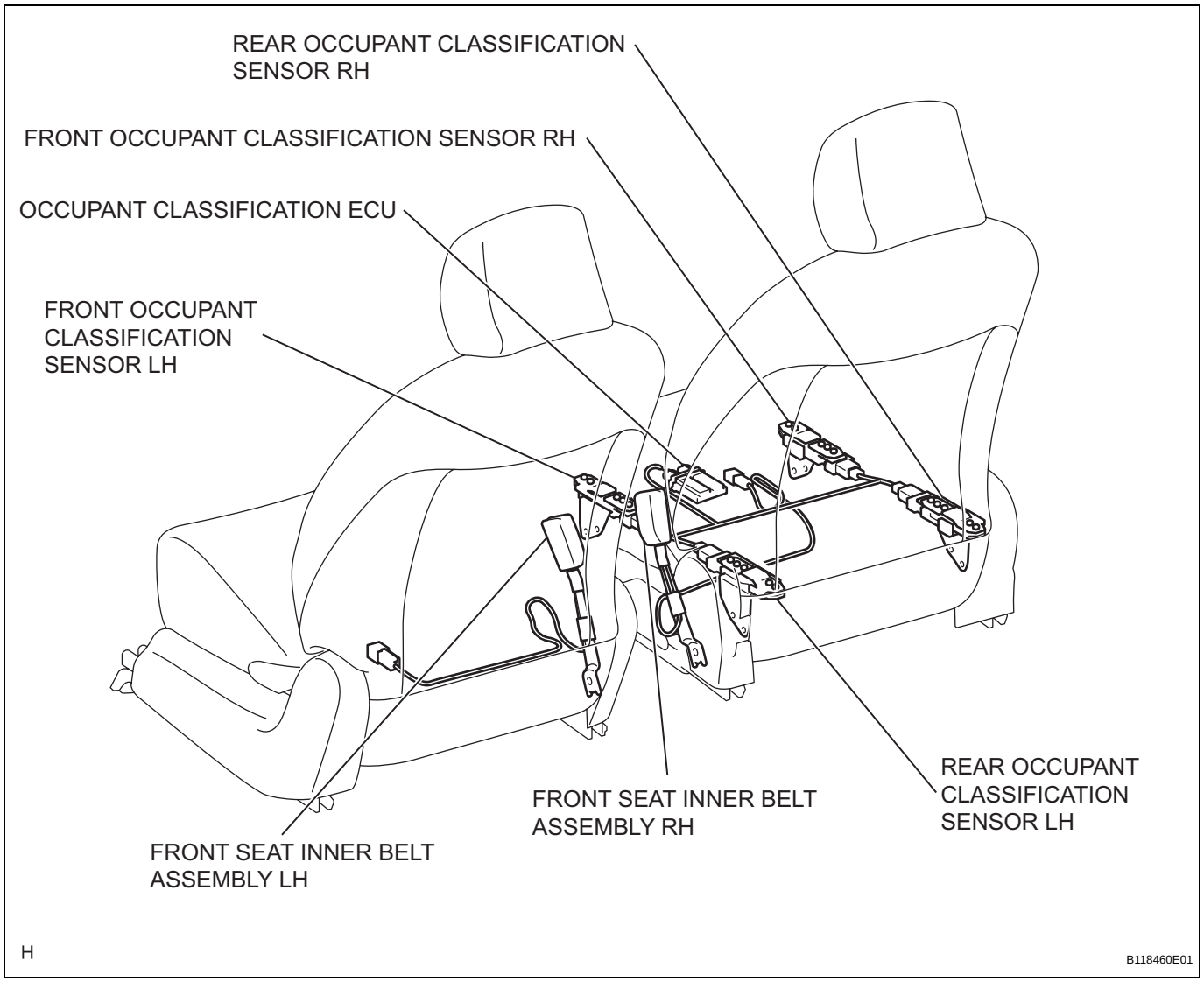
REAR OCCUPANT CLASSIFICATION SENSOR RH
FRONT OCCUPANT CLASSIFICATION SENSOR RH
OCCUPANT CLASSIFICATION ECU
FRONT OCCUPANT CLASSIFICATION SENSOR LH
FRONT SEAT INNER BELT ASSEMBLY RH
REAR OCCUPANT CLASSIFICATION SENSOR LH
FRONT SEAT INNER BELT ASSEMBLY LH
H
B118460E01

SB

# SYSTEM DIAGRAM

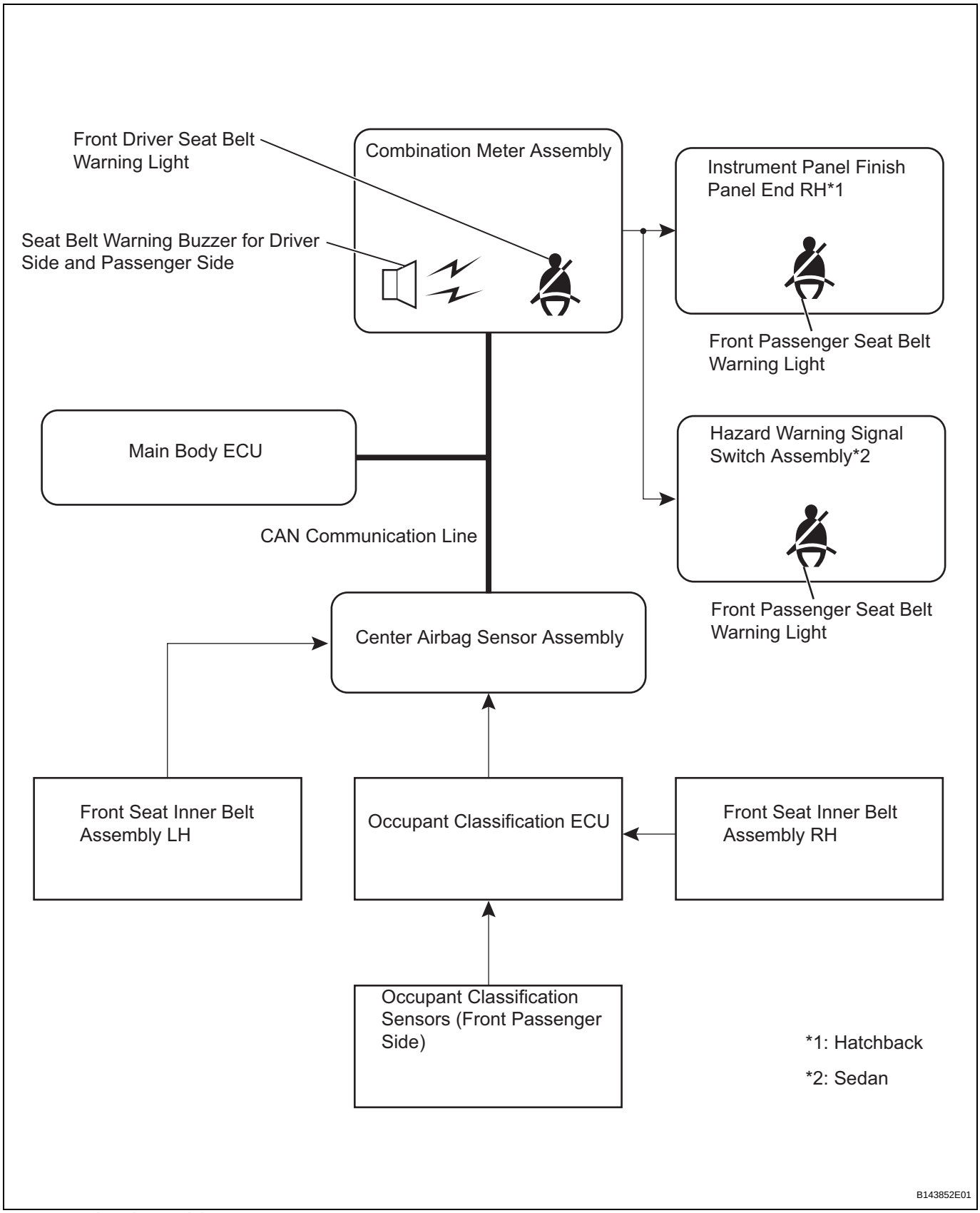


**Communication table:**

| Sender | Receiver | Signal | Line |
|---|---|---|---|
| Center airbag sensor assembly | Main body ECU | Front seat inner belt switch signal (driver side) | CAN communication line |

| Sender | Receiver | Signal | Line |
|---|---|---|---|
| Center airbag sensor assembly | Main body ECU | Front seat inner belt switch signal (passenger side) | CAN communication line |
| Main body ECU | Combination meter assembly | Front seat inner belt switch signal (driver side) | CAN communication line |
| Main body ECU | Combination meter assembly | Front seat inner belt switch signal (passenger side) | CAN communication line |

# SYSTEM DESCRIPTION

## 1. SEAT BELT WARNING SYSTEM DESCRIPTION

If a seat belt is not fastened, this system flashes the seat belt warning light and sounds the seat belt warning buzzer as a reminder.

## 2. FUNCTIONS OF MAIN COMPONENTS

SB

| Components | Function |
|---|---|
| Front Seat Inner Belt Assembly LH | Informs center airbag sensor assembly of front driver seat belt condition (fastened or unfastened) |
| Front Seat Inner Belt Assembly RH | Informs occupant classification ECU of front passenger seat belt condition (fastened or unfastened) |
| Occupant Classification ECU | Informs center airbag sensor assembly of front passenger seat condition (occupied or unoccupied)<br>Informs center airbag sensor assembly of front passenger seat belt condition (fastened or unfastened) |
| Occupant Classification Sensor | Informs occupant classification ECU of front passenger seat condition (occupied or unoccupied) |
| Main Body ECU | Informs combination meter assembly of front driver and front passenger seat belt condition (fastened or unfastened)<br>Informs combination meter assembly of front passenger seat condition (occupied or unoccupied) |
| Front Driver Seat Belt Warning Light | If front driver seat belt is unfastened and ignition switch is ON, combination meter assembly flashes seat belt warning light of combination meter assembly as reminder |
| Front Passenger Seat Belt Warning Light | Hatchback: When front passenger seat is occupied and ignition switch is ON, if passenger seat belt is unfastened, combination meter assembly flashes front passenger seat belt warning light of instrument panel finish panel end RH as reminder<br>Sedan: When front passenger seat is occupied and ignition switch is ON, if passenger seat belt is unfastened, combination meter assembly flashes front passenger seat belt warning light of hazard warning signal switch assembly as reminder |
| Seat Belt Warning Buzzer for Front Driver Side and Front Passenger Side | If front driver or front passenger seat belt is unfastened and ignition switch is ON, combination meter assembly sounds buzzer as reminder |

## 3. SYSTEM OPERATION

- When the ignition switch is ON, this system detects the condition of the seat belts based on signals from the front seat inner belt switches (for driver and front passenger seats) and the occupant classification sensor (front passenger side only).

# HOW TO PROCEED WITH TROUBLESHOOTING

HINT:
- Use these procedures to troubleshoot the seat belt warning system.
- *: Use the intelligent tester.



## 1 VEHICLE BROUGHT TO WORKSHOP

NEXT

## 2 INSPECT BATTERY VOLTAGE

**Standard voltage:**
**11 to 14 V**
If the voltage is below 11 V, recharge or replace the battery before proceeding.

NEXT

## 3 CHECK COMMUNICATION FUNCTION OF CAN COMMUNICATION SYSTEM*

(a) Use the intelligent tester to check if the CAN communication system is functioning normally.
**Result:**

| Result | Proceed to |
|---|---|
| DTC is not output | A |
| DTC is output | B |

B → **GO TO CAN COMMUNICATION SYSTEM**

A

## 4 PROBLEM SYMPTOMS TABLE

**Result:**

| Result | Proceed to |
|---|---|
| Fault is not listed in problem symptoms table | A |
| Fault is listed in problem symptoms table | B |

B → **Go to step 6**

A

## 5 OVERALL ANALYSIS AND TROUBLESHOOTING*

(a) DATA LIST / ACTIVE TEST (see page SB-20)

(b) TERMINALS OF ECU (see page SB-14)

**NEXT**

| | |
|---|---|
| **6** | **REPAIR OR REPLACE** |

**NEXT**



| | |
|---|---|
| **7** | **CONFIRMATION TEST** |

**NEXT**

**END**

# CUSTOMIZE PARAMETERS

HINT:
The following item can be customized.

**Combination Meter Assembly**

| Display (Item) | Default | Function | Setting |
|---|---|---|---|
| SEAT BELT WARN | D/P ON | Changes seat belt warning buzzer setting | D/P ON / D ON / P ON / D/P OFF |



**NOTICE:**

- **When the customer requests the modification of a function, first make sure that the function(s) can be customized.**
- **Record the current settings before customizing.**
- **When troubleshooting a function, first make sure that the function is not set to OFF.**

SB

# PROBLEM SYMPTOMS TABLE

HINT:
Use the table below to help determine the causes of the problem symptom. The potential causes of the symptoms are listed in order of probability in the "Suspected Area" column of the table. Check each symptom by checking the suspected areas in the order they are listed. Replace parts as necessary.

## Seat belt warning system

| Symptom | Suspected area | See page |
|---|---|---|
| Front driver seat belt warning light does not operate | Front seat inner belt assembly LH (for Hatchback) | SB-40 |
| | Front seat inner belt assembly LH (for Sedan) | SB-34 |
| | Wire harness | SB-22 |
| | Center airbag sensor assembly | SB-22 |
| | Main body ECU | SB-22 |
| | Combination meter assembly | SB-22 |
| Front passenger seat belt warning light does not operate | Fuse | SB-24 |
| | Front passenger seat belt warning light (for Hatchback) | SB-6 |
| | Front passenger seat belt warning light (for Sedan) | SB-3 |
| | Front seat inner belt assembly RH (for Hatchback) | SB-40 |
| | Front seat inner belt assembly RH (for Sedan) | SB-34 |
| | Occupant classification sensor | RS-226 |
| | Wire harness | SB-24 |
| | Occupant classification ECU | SB-24 |
| | Center airbag sensor assembly | SB-24 |
| | Main body ECU | SB-24 |
| | Combination meter assembly | SB-24 |
| Seat belt warning buzzer does not sound (Front driver and front passenger seat belt warning lights operate normally) | Combination meter assembly (for Hatchback) | ME-73 |
| | Combination meter assembly (for Sedan) | ME-10 |

# TERMINALS OF ECU

## 1. COMBINATION METER ASSEMBLY

**Hatchback:**

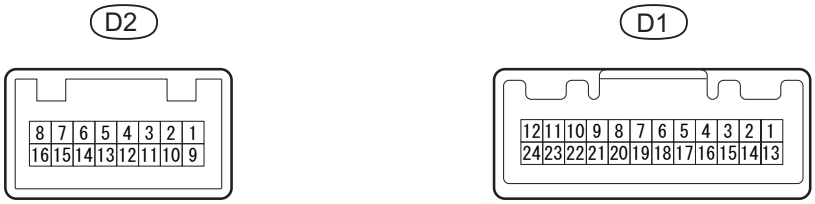


B127205E04

**Sedan:**

E126885E06

(a) Disconnect the D1 combination meter assembly connector.

(b) Measure the voltage and resistance of the wire harness side connector.

### Standard

| Symbols (Terminal No.) | Wiring Color | Terminal Description | Condition | Specified Condition |
|---|---|---|---|---|
| D1-1 - Body ground | B - Body ground | Ignition switch signal | Ignition switch OFF → ON | Below 1 V → 11 to 14 V |
| D1-2 - Body ground | L - Body ground | Battery | Always | 11 to 14 V |
| D1-24 - Body ground | BR - Body ground | Ground | Always | Below 1 Ω |

If the result is not as specified, there may be a malfunction in the wire harness.

(c) Reconnect the combination meter assembly connector.

(d) Measure the voltage of the wire harness side connector.

### Standard voltage

| Symbols (Terminal No.) | Wiring Color | Terminal Description | Condition | Specified Condition |
|---|---|---|---|---|
| D1-20 - Body ground | G - Body ground | CAN communication line | Ignition switch ON | Pulse generation (See waveform 1) |
| D1-21 - Body ground | W - Body ground | CAN communication line | Ignition switch ON | Pulse generation (See waveform 2) |
| D2-9*1 - Body ground | O - Body ground | Seat belt warning light signal (Front passenger side) | Ignition switch ON Front passenger seat is occupied and its seat belt is unfastened | Alternating between 11 to 14 V and below 1 V |
| D2-9*1 - Body ground | O - Body ground | Seat belt warning light signal (Front passenger side) | Ignition switch ON Front passenger seat is occupied and its seat belt is fastened | Below 1 V |

SB

| Symbols (Terminal No.) | Wiring Color | Terminal Description | Condition | Specified Condition |
|---|---|---|---|---|
| D76-9*2 - Body ground | O - Body ground | Seat belt warning light signal (Front passenger side) | Ignition switch ON<br>Front passenger seat is occupied and its seat belt is unfastened | Alternating between 11 to 14 V and below 1 V |
| D76-9*2 - Body ground | O - Body ground | Seat belt warning light signal (Front passenger side) | Ignition switch ON<br>Front passenger seat is occupied and its seat belt is fastened | Below 1 V |

*1: Hatchback
*2: Sedan
If the result is not as specified, the combination meter may have a malfunction.

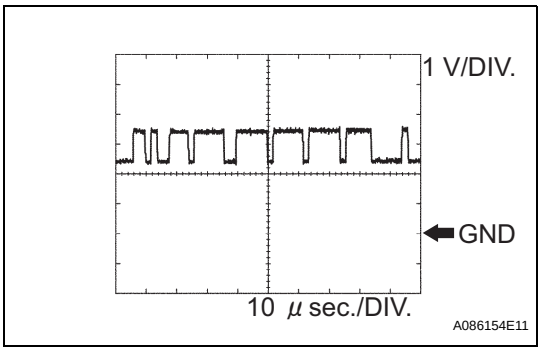


(e) Waveform 1 (Reference): Using an oscilloscope
**CAN communication signal**

| Terminal Name | D1-21 (CANL) - D1-24 (ET) |
|---|---|
| Tester Range | 1V/DIV, 10μs/DIV |
| Condition | Ignition switch ON |

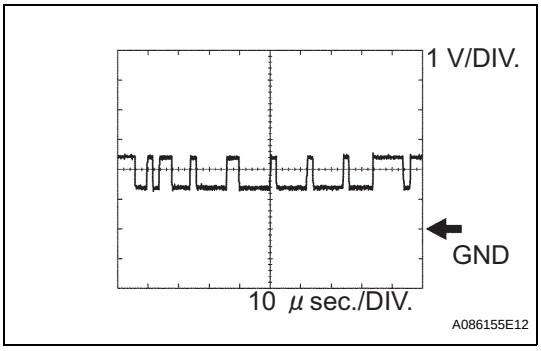


(f) Waveform 2 (Reference): Using an oscilloscope
**CAN communication signal**

| Terminal Name | D1-21 (CANL) - D1-24 (ET) |
|---|---|
| Tester Range | 1V/DIV, 10μs/DIV |
| Condition | Ignition switch ON |

## 2. CENTER AIRBAG SENSOR ASSEMBLY

**Center Airbag Sensor Assembly:**

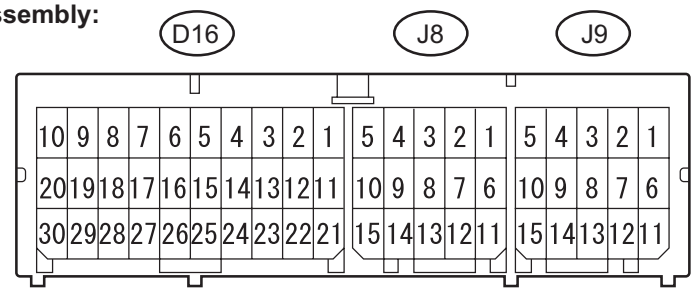


| Terminal No. | Terminal Symbol | Destination |
|---|---|---|
| D16-13 | CANH | CAN communication line |
| D16-21 | IG2 | IGN fuse |
| D16-22 | CANL | CAN communication line |
| D16-25 | E1 | Ground |
| D16-26 | E2 | Ground |
| J8-11 | DBE+ | Front seat inner belt assembly LH |
| J8-12 | DBE- | Front seat inner belt assembly LH |
| J9-12 | FSP+ | Occupant Classification ECU |

| Terminal No. | Terminal Symbol | Destination |
|---|---|---|
| J9-13 | FSP- | Occupant Classification ECU |

### 3. OCCUPANT CLASSIFICATION ECU

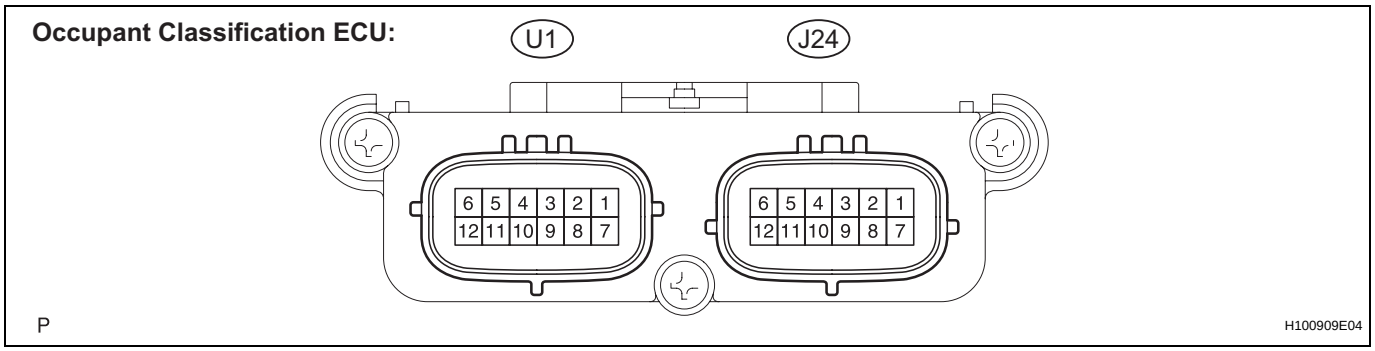


(a) Disconnect the J24 occupant classification ECU connector.
(b) Measure the voltage and resistance of the wire harness side connector.

| Symbols (Terminal No.) | Wiring Color | Terminal Description | Condition | Specified Condition |
|---|---|---|---|---|
| J24-7 (IG) - J24-3 (GND) | O - W-B | Power source (IG2 Fuse) | Ignition switch OFF | Below 1 V |
| J24-7 (IG) - J24-3 (GND) | O - W-B | Power source (IG2 Fuse) | Ignition switch ON | 11 to 14 V |
| J24-1 (+B) - Body ground | V - Body ground | Power source (ECU-B Fuse) | Always | 11 to 14 V |
| J24-3 (GND) - Body ground | W-B - Body ground | Ground | Always | Below 1 Ω |

If the result is not as specified, there may be a malfunction in the wire harness.

(c) Reconnect the occupant classification ECU connector.
(d) Measure the voltage of the connector.

| Symbols (Terminal No.) | Wiring Color | Terminal Description | Condition | Specified Condition |
|---|---|---|---|---|
| BSW (J24-9) - BGND (J24-5) | O - P | Passenger side buckle switch line | Buckle switch ON<br>Buckle switch OFF | Pulse generation |
| FSR+ (J24-8) - FSR- (J24-4) | GR - Y | Center airbag sensor assembly communication line | Ignition switch ON | Pulse generation |

If the result is not as specified, the combination meter may have a malfunction.

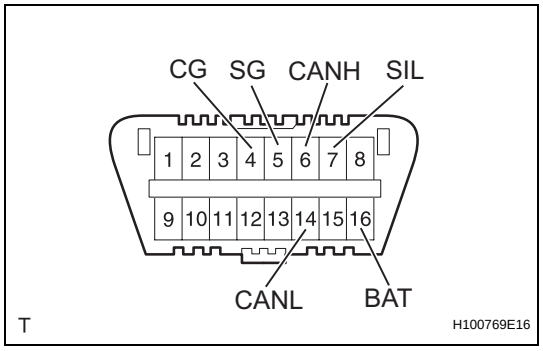


## DIAGNOSIS SYSTEM

### 1. CHECK DLC3

(a) The ECU uses ISO 15765-4 for communication. The terminal arrangement of the DLC3 complies with SAE J1962 and matches the ISO 15765-4 format.

| Symbols (Terminal No.) | Terminal Description | Condition | Specified Condition |
|---|---|---|---|
| SIL (7) - SG (5) | Bus " +" line | During transmission | Pulse generation |
| CG (4) - Body ground | Chassis ground | Always | Below 1 Ω |

SB

| Symbols (Terminal No.) | Terminal Description | Condition | Specified Condition |
|---|---|---|---|
| SG (5) - Body ground | Signal ground | Always | Below 1 Ω |
| BAT (16) - Body ground | Battery positive | Always | 11 to 14 V |
| CANH (6) - CANL (14) | CAN bus line | Ignition switch OFF* | 54 to 69 Ω |
| CANH (6) - CG (4) | HIGH-level CAN bus line | Ignition switch OFF* | 200 Ω or higher |
| CANL (14) - CG (4) | LOW-level CAN bus line | Ignition switch OFF* | 200 Ω or higher |
| CANH (6) - BAT (16) | HIGH-level CAN bus line | Ignition switch OFF* | 6 kΩ or higher |
| CANL (14) - BAT (16) | LOW-level CAN bus line | Ignition switch OFF* | 6 kΩ or higher |

**NOTICE:**
***: Before measuring the resistance, leave the vehicle as is for at least 1 minute and do not operate the ignition switch, any other switches or the doors.**

If the result is not as specified, the DLC3 may have a malfunction. Repair or replace the harness and connector.

HINT:

Connect the cable of the intelligent tester to the CAN VIM, connect the CAN VIM to the DLC3, turn the ignition switch ON and attempt to use the tester. If the display indicates that a communication error has occurred, there is a problem either with the vehicle or with the tester.

- If communication is normal when the tester is connected to another vehicle, inspect the DLC3 of the original vehicle.
- If communication is still not possible when the tester is connected to another vehicle, the problem is probably in the tester itself. Consult the Service Department listed in the tester's instruction manual.

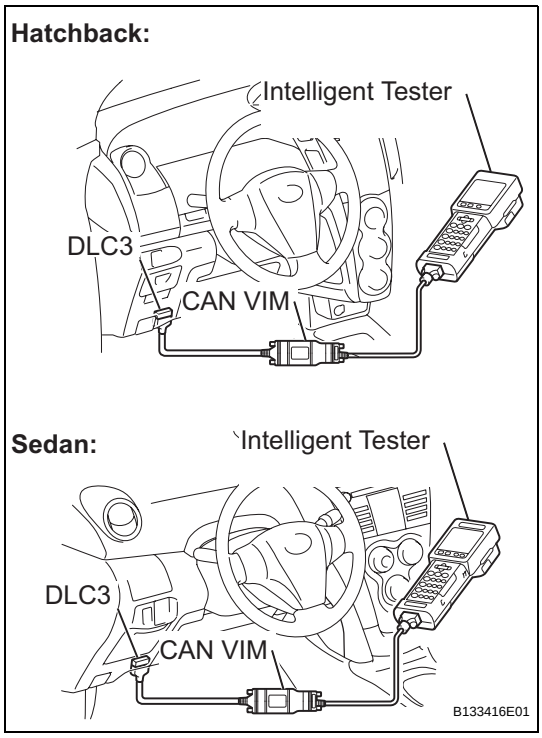


**2. INSPECT BATTERY VOLTAGE**

**Standard voltage:**

**11 to 14 V**

If the voltage is below 11 V, recharge or replace the battery before proceeding.

**3. INSPECT FRONT DRIVER SEAT BELT WARNING LIGHT**

(a) Turn the ignition switch ON.

(b) When the driver seat belt is not fastened, check that the combination meter assembly driver seat belt warning light blinks.

(c) When the seat belt is fastened, check that the combination meter assembly driver side seat belt warning light turns off.

**4. INSPECT FRONT PASSENGER SEAT BELT WARNING LIGHT**

(a) Turn the ignition switch ON.

(b) When the front passenger seat is occupied, but the seat belt is not fastened, check that the front passenger seat belt warning light on the instrument panel finish panel end RH*1 or hazard warning signal switch assembly*2 blinks.
*1: Hatchback
*2: Sedan

(c) When the front passenger seat belt is fastened, check that the front passenger seat belt warning light turns off.



**5. INSPECT SEAT BELT WARNING BUZZER USING DRIVER SEAT BELT**

(a) Turn the ignition switch ON.

(b) When the driver seat belt is not fastened within 1.8 seconds of the ignition switch being turned ON, check that the seat belt warning buzzer sounds at 1.2 second intervals for 6 seconds.

(c) When the driver seat belt is not fastened within 13.8 seconds of the ignition switch being turned ON and the vehicle speed reaches 12.4 mph (20 km/h) or more, check that the buzzer sounds at 1.2 second intervals for 9.6 seconds.

(d) After the buzzer has sounded for 9.6 seconds, check that the buzzer sounds at 0.4 second intervals for a further 20 seconds.

(e) When 29.6 seconds have elapsed since the buzzer started sounding in step (c) above, check that the buzzer stops sounding.

(f) After the buzzer has stopped sounding, turn the ignition switch OFF and then start the engine again. With the driver seat belt unfastened, drive the vehicle at 12.4 mph (20 km/h) or more. Check that the buzzer sounds.

(g) After the buzzer has stopped sounding, fasten the driver seat belt, drive the vehicle at 12.4 mph (20 km/h) or more, and then unfasten the seat belt. Check that the buzzer sounds.

(h) After the buzzer has stopped sounding, move the shift lever to R. Then move the shift lever to D (for A/T only). With the driver seat belt unfastened, drive the vehicle at 12.4 mph (20km/h) or more. Check that the buzzer sounds.

**6. INSPECT SEAT BELT WARNING BUZZER USING FRONT PASSENGER SEAT BELT**

HINT:
If the following inspection is conducted by one person, since the front passenger seat belt warning buzzer function uses signals from the occupant classification sensors, place an object with a weight of 36 kg (79.37 lb) or more on the front passenger seat.

(a) Turn the ignition switch ON.

(b) When the front passenger seat belt is not fastened within 1.8 seconds of the ignition switch being turned ON, check that the seat belt warning buzzer sounds at 1.2 second intervals for 6 seconds.

(c) When the front passenger seat belt is not fastened within 13.8 seconds of the ignition switch being turned ON and the vehicle speed reaches 12.4 mph (20 km/h) or more, check that the buzzer sounds at 1.2 second intervals for 9.6 seconds.

(d) After the buzzer has sounded for 9.6 seconds, check that the buzzer sounds at 0.4 second intervals for a further 20 seconds.

(e) When 29.6 seconds have elapsed since the buzzer started sounding in step (c) above, check that the buzzer stops sounding.

(f) After the buzzer has stopped sounding, turn the ignition switch OFF and then start the engine again. With the front passenger seat belt unfastened, drive the vehicle at 12.4 mph (20 km/h) or more. Check that the buzzer sounds.

(g) After the buzzer has stopped sounding, fasten the front passenger seat belt, drive the vehicle at 12.4 mph (20 km/h) or more, and then unfasten the front passenger seat belt. Check that the buzzer sounds.

(h) After the buzzer has stopped sounding, move the shift lever to R. Then move the shift lever to D. With the front passenger seat belt unfastened, drive the vehicle at 12.4 mph (20km/h) or more. Check that the buzzer sounds.

# DATA LIST / ACTIVE TEST

**1. READ DATA LIST**

HINT:

By accessing the DATA LIST using the intelligent tester, values of the switches and sensors can be read without removing any parts. Reading the DATA LIST is the first step of troubleshooting and is one method of shortening labor time.

(a) Connect the intelligent tester with the CAN VIM to the DLC3.

(b) Turn the ignition switch ON and turn the tester ON.

(c) Enter the DATA LIST by following the prompts displayed on the tester screen.

**Center Airbag Sensor Assembly**

| Item | Measurement Item/ Range (Display) | Normal Condition | Diagnostic Note |
|---|---|---|---|
| D BUCKLE SW | Buckle switch (Driver side)/<br>UNSET: Seat belt not fastened<br>SET: Seat belt fastened<br>NG: Data not determined | UNSET/SET | - |
| P BUCKLE SW | Buckle switch (Passenger side)/<br>UNSET: Seat belt not fastened<br>SET: Seat belt fastened<br>NG: Data not determined | UNSET/SET | - |

**Occupant Classification ECU**

| Item | Measurement Item/ Range (Display) | Normal Condition | Diagnostic Note |
|---|---|---|---|
| P BUCKLE SW | Buckle switch (Front passenger side)/<br>UNSET: Front passenger side seat belt is unfastened<br>SET: Front passenger side seat belt is fastened<br>NG: Front passenger side seat belt is malfunctioning | UNSET/SET | - |
| PASSENGER CLASS | Front passenger classification/<br>AF05: Adult (36 to 54 kg (79.37 to 119.05 lb)) is seated<br>AM50: Adult more than 54 kg (119.05 lb) is seated<br>CHILD: Child (less than 36 kg (79.37 lb)) is seated<br>CRS: Child restraint system (less than 7 kg (15.43 lb)) and front passenger side buckle switch is ON, then 7 to 36 kg (15.43 to 79.37 lb) is set<br>OFF: Vacant | AF05/AM50/CHILD/CRS/OFF | - |

**2. PERFORM ACTIVE TEST**

HINT:

Performing the intelligent tester's ACTIVE TEST allows relays, VSV, actuators and other items to be operated without removing any parts. Performing the ACTIVE TEST early in troubleshooting is one way to save time. The DATA LIST can be displayed during the ACTIVE TEST.

(a) Connect the intelligent tester with the CAN VIM to the DLC3.

(b) Turn the ignition switch ON and turn the tester ON.
(c) Enter the ACTIVE TEST by following the prompts displayed on the tester screen.

**Combination Meter Assembly:**

| Item | Test Details | Diagnostic Note |
|---|---|---|
| D-BELT REMIND | Front driver seat belt warning light / OFF or ON | - |
| P-BELT REMIND | Front passenger seat belt warning light / OFF or ON | - |

# Driver Side Seat Belt Warning Light does not Operate

## DESCRIPTION

When the ignition switch is ON, the center airbag sensor assembly communicates the status of the front seat inner belt assembly LH to the main body ECU using the CAN communication line. The main body ECU receives signals from the center airbag sensor assembly and transmits them to the combination meter assembly. When the seat belt is unfastened, the combination meter assembly flashes the driver seat belt warning light in the combination meter assembly. When the seat belt is fastened, the combination meter assembly stops flashing the front driver seat belt warning light.



## WIRING DIAGRAM

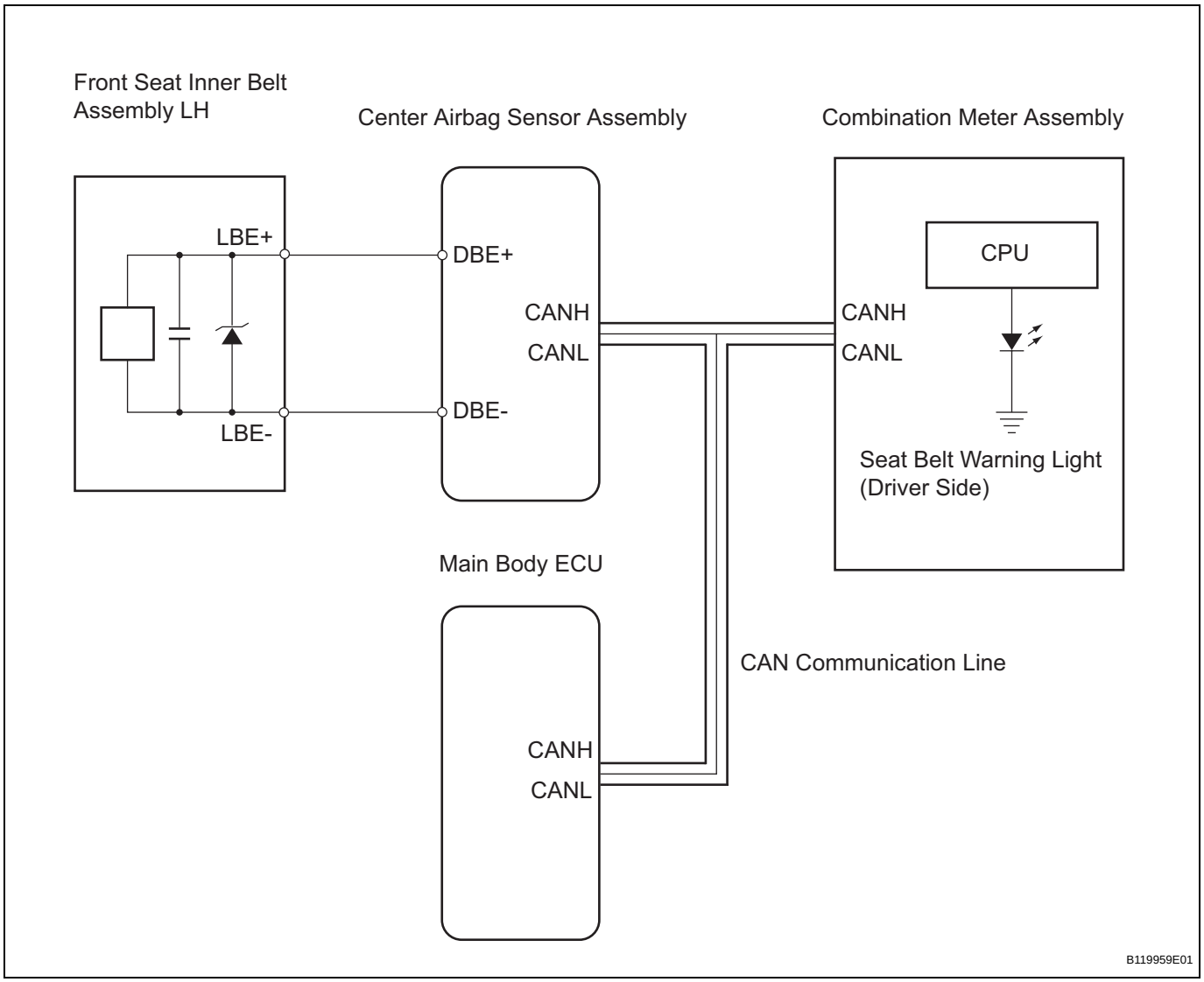


## INSPECTION PROCEDURE

| 1 | CHECK SUPPLEMENTAL RESTRAINT SYSTEM |
|---|---|

(a) Connect the intelligent tester with the CAN VIM to the DLC3.
(b) Turn the ignition switch ON and turn the tester ON.

(c) Enter the following menus: DIAGNOSIS / SRS AIRBAG/ DTC INFO

**Result**

| Result | Proceed to |
|---|---|
| No SRS DTCs are output | A |
| SRS DTCs are output | B |

SB

B → **GO TO SUPPLEMENTAL RESTRAINT SYSTEM**

A

## 2 PERFORM ACTIVE TEST BY INTELLIGENT TESTER (D-BELT REMIND)

(a) Connect the intelligent tester with the CAN VIM to the DLC3.
(b) Turn the ignition switch ON and turn the tester ON.
(c) Enter the following menus: DIAGNOSIS / METER / ACTIVE TEST

**Combination Meter Assembly**

| Item | Test Details | Diagnostic Note |
|---|---|---|
| D-BELT REMIND | Front driver seat belt warning light / OFF or ON | - |

**OK:**
**Front driver seat belt warning light comes on.**

OK → **REPLACE MAIN BODY ECU**

NG

**REPLACE COMBINATION METER ASSEMBLY**

# Front Passenger Side Seat Belt Warning Light Malfunction

## DESCRIPTION

When the ignition switch is ON and the front passenger seat is occupied, the center airbag sensor assembly communicates the status of the front seat inner belt assembly RH to the main body ECU using the CAN communication line. The main body ECU receives signals from the center airbag sensor assembly and transmits them to the combination meter assembly. When the seat belt is unfastened, the combination meter assembly flashes the front passenger seat belt warning light on the instrument panel finish panel end RH*1 or hazard warning signal switch assembly*2. When the seat belt is fastened, the combination meter assembly stops flashing the front passenger seat belt warning light on the instrument panel finish panel end RH*1 or hazard warning signal switch assembly*2.

HINT:

*1: Hatchback

*2: Sedan

SB

## WIRING DIAGRAM

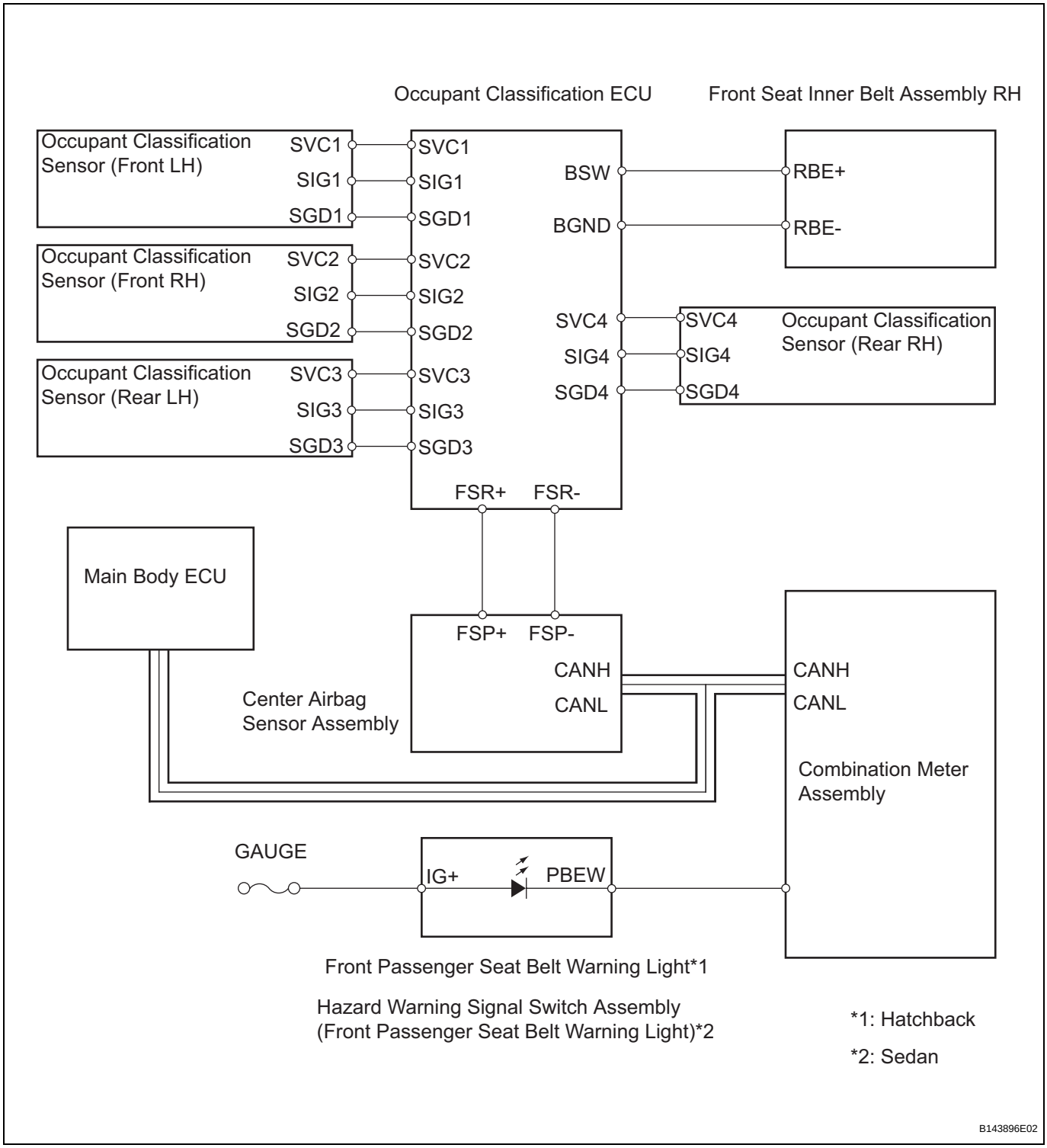


## INSPECTION PROCEDURE

| 1 | CHECK SUPPLEMENTAL RESTRAINT SYSTEM |
|---|---|

(a) Connect the intelligent tester with the CAN VIM to the DLC3.
(b) Turn the ignition switch ON and turn the tester ON.

(c) Enter the following menus: DIAGNOSIS / SRS AIRBAG/ DTC INFO

**Result**

| Result | Proceed to |
|---|---|
| No DTCs are output | A |
| DTCs are output | B |

B → **GO TO SUPPLEMENTAL RESTRAINT SYSTEM**



A

## 2 CHECK OCCUPANT CLASSIFICATION SYSTEM

(a) Connect the intelligent tester with the CAN VIM to the DLC3.
(b) Turn the ignition switch ON and turn the tester ON.
(c) Enter the following menus: DIAGNOSIS / OCCUPANT DETECT / DTC INFO

**Result**

| Result | Proceed to |
|---|---|
| No DTCs are output | A |
| DTCs are output | B |

B → **GO TO OCCUPANT CLASSIFICATION SYSTEM**

A

## 3 READ VALUE OF INTELLIGENT TESTER (P BUCKLE SW)

(a) Connect the intelligent tester with the CAN VIM to the DLC3.
(b) Turn the ignition switch ON and turn the tester ON.
(c) Enter the following menus: DIAGNOSIS / SRS AIRBAG/ DATA LIST

**Center Airbag Sensor Assembly**

| Item | Measurement Item / Display (Range) | Normal Condition | Diagnostic Note |
|---|---|---|---|
| P BUCKLE SW | Buckle switch (Front passenger side)/<br>UNSET: Front passenger side seat belt is unfastened<br>SET: Front passenger side seat belt is fastened<br>NG: Front passenger side seat belt is malfunctioning | UNSET/SET | - |

**OK:**

**Front seat inner belt assembly RH operates normally.**

OK → **Go to step 7**

NG

## 4 CHECK FRONT SEAT INNER BELT ASSEMBLY RH

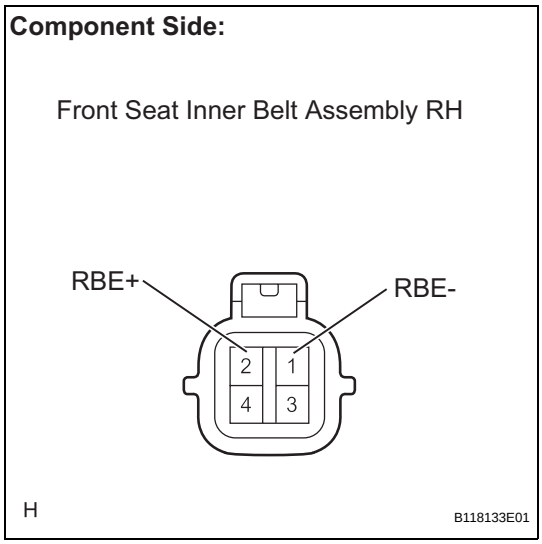


(a) Disconnect the J11 front seat inner belt assembly RH connector.
(b) Measure the resistance.
**Standard resistance**

| Tester Connection | Condition | Specified Condition |
|---|---|---|
| 1 (RBE-) - 2 (RBE+) | Tongue plate fastened | 10 kΩ or higher |
| 1 (RBE-) - 2 (RBE+) | Tongue plate unfastened | Below 1 Ω |

(c) Reconnect the front seat inner belt assembly RH connector.

NG → **REPLACE FRONT SEAT INNER BELT ASSEMBLY RH**

OK

## 5 CHECK HARNESS AND CONNECTOR (ECU - FRONT SEAT INNER BELT ASSEMBLY RH)

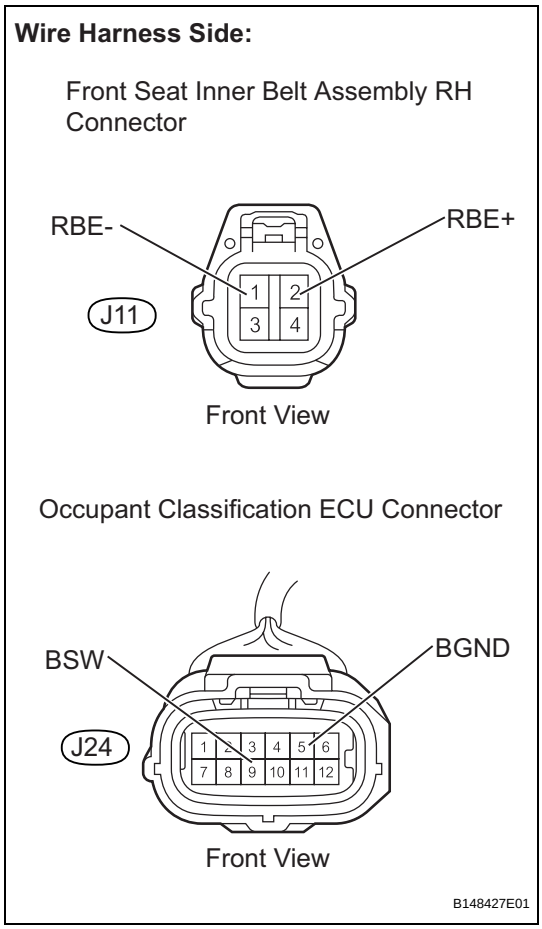


(a) Disconnect the J24 occupant classification ECU connector.
(b) Disconnect the J11 front seat inner belt assembly RH connector.
(c) Measure the resistance.
**Standard resistance**

| Tester Connection | Specified Condition |
|---|---|
| J24-9 (BSW) - J11-2 (RBE+) | Below 1 Ω |
| J24-9 (BSW) or J11-2 (RBE+) - Body ground | 10 kΩ or higher |
| J24-5 (BGND) - J11-1 (RBE-) | Below 1 Ω |
| J24-5 (BGND) or J11-1 (RBE-) - Body ground | 10 kΩ or higher |

(d) Reconnect the occupant classification ECU connector.
(e) Reconnect the front seat inner belt assembly connector.

NG → **REPAIR OR REPLACE HARNESS OR CONNECTOR**

OK

| 6 | CHECK HARNESS AND CONNECTOR (CENTER AIRBAG SENSOR ASSEMBLY - OCCUPANT CLASSIFICATION ECU) |
|---|---|

**Wire Harness Side:**

Center Airbag Sensor Assembly Connector

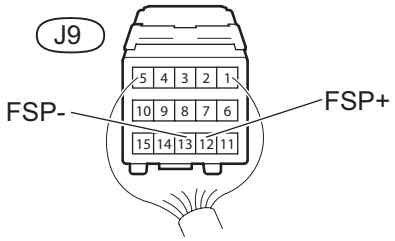


Occupant Classification ECU Connector

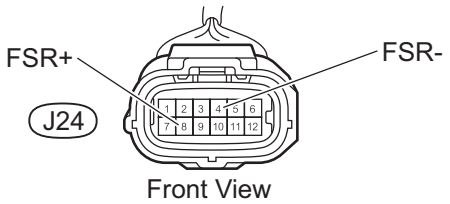


B148428E01

(a) Disconnect the J9 center airbag sensor assembly connector.
(b) Disconnect the J24 occupant classification ECU connector.
(c) Measure the resistance.
**Standard resistance**

| Tester Connection | Specified Condition |
|---|---|
| J9-12 (FSP+) - J24-8 (FSR+) | Below 1 Ω |
| J9-12 (FSP+) or J24-8 (FSR+) - Body ground | 10 kΩ or higher |
| J9-13 (FSP-) - J24-4 (FSR-) | Below 1 Ω |
| J9-13 (FSP-) or J24-4 (FSR-) - Body ground | 10 kΩ or higher |

(d) Reconnect the center airbag sensor assembly connector.
(e) Reconnect the occupant classification ECU connector.

NG → **REPAIR OR REPLACE HARNESS OR CONNECTOR**

OK

**REPLACE OCCUPANT CLASSIFICATION ECU**

| 7 | PERFORM ACTIVE TEST BY INTELLIGENT TESTER (P-BELT REMIND) |
|---|---|

(a) Connect the intelligent tester with the CAN VIM to the DLC3.
(b) Turn the ignition switch ON and turn the tester ON.
(c) Enter the following menus: DIAGNOSIS / METER / ACTIVE TEST

**Combination Meter Assembly**

| Item | Test Details | Diagnostic Note |
|---|---|---|
| P-BELT REMIND | Front passenger seat belt warning light / OFF or ON | - |

**OK:**
**Front passenger seat belt warning light comes on.**

NG → **REPLACE COMBINATION METER ASSEMBLY**

OK

SB

## 8 INSPECT FUSE (GAUGE)

(a) Remove the GAUGE fuse from the main body ECU.
(b) Measure the resistance.
**Standard resistance:**
**Below 1 Ω**
(c) Reinstall the GAUGE fuse.

**NG** → **REPLACE FUSE**

**OK**

## 9 INSPECT FRONT PASSENGER SEAT BELT WARNING LIGHT

**Component Side:**

Front Passenger Seat Belt Warning Light

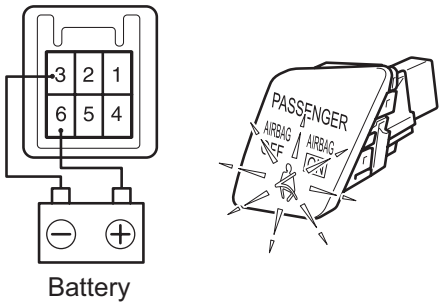


B128414E02

(a) Hatchback:
(1) Remove the front passenger seat belt warning light.
(2) Apply battery voltage to the terminals and check that the indicator illuminates.
**Standard**

| Tester Connection | Specified Condition |
|---|---|
| Positive battery - Terminal 6 (IG+)<br>Negative battery - Terminal 3 (PBEW) | Illuminates |

(3) Reinstall the front passenger seat belt warning light.

**Component Side:**

Hazard Warning Signal Switch Assembly
(Front Passenger Seat Belt Warning Light)

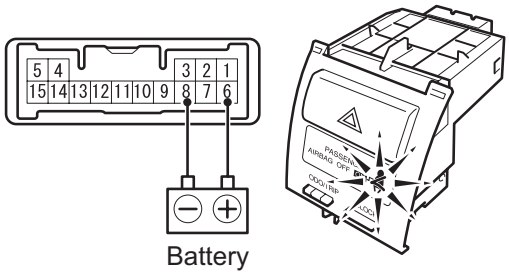


B143890E01

(b) Sedan:
(1) Remove the hazard warning signal switch assembly.
(2) Apply battery voltage to the terminals and check that the indicator illuminates.
**Standard**

| Tester Connection | Specified Condition |
|---|---|
| Positive battery - Terminal 6 (IG+)<br>Negative battery - Terminal 8 (PBEW) | Illuminates |

(3) Reinstall the hazard warning signal switch assembly.

**NG** → **REPLACE FRONT PASSENGER SEAT BELT WARNING LIGHT**

**OK**

| 10 | **CHECK HARNESS AND CONNECTOR (FUSE - FRONT PASSENGER SEAT BELT WARNING LIGHT)** |
|---|---|

**Wire Harness Side:**

Main Body ECU Connector

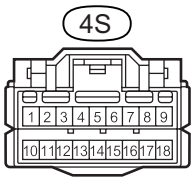


Front View

Front Passenger Seat Belt Warning Light Connector

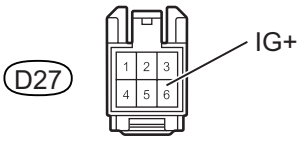


Front View

B143886E01

(a) Hatchback:
  (1) Disconnect the D27 front passenger seat belt warning light connector.
  (2) Disconnect the 4S main body ECU connector.
  (3) Measure the resistance.
  **Standard resistance**

| Tester Connection | Specified Condition |
|---|---|
| 4S-15 - D27-6 (IG+) | Below 1 Ω |
| 4S-15 or D27-6 (IG+) - Body ground | 10 kΩ or higher |

  (4) Reconnect the front passenger seat belt warning light connector.
  (5) Reconnect the main body ECU connector.

**Wire Harness Side:**

Main Body ECU Connector

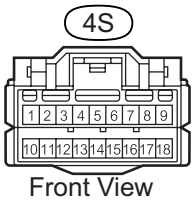


Front View

Hazard Warning Signal Switch Assembly Connector (Front Passenger Seat Belt Warning Light)

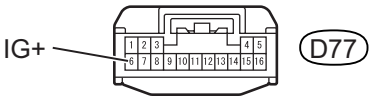


Front View

B143887E01

(b) Sedan:
  (1) Disconnect the D77 hazard warning signal switch assembly connector.
  (2) Disconnect the 4S main body ECU connector.
  (3) Measure the resistance.
  **Standard resistance**

| Tester Connection | Specified Condition |
|---|---|
| 4S-15 - D77-6 (IG+) | Below 1 Ω |
| 4S-15 or D77-6 (IG+) - Body ground | 10 kΩ or higher |

  (4) Reconnect the hazard warning signal switch assembly connector.
  (5) Reconnect the main body ECU connector.

**NG** → **REPAIR OR REPLACE HARNESS OR CONNECTOR**

**OK**

SB

SB

| 11 | CHECK HARNESS AND CONNECTOR (SEAT BELT WARNING LIGHT - COMBINATION METER ASSEMBLY) |
|---|---|

**Wire Harness Side:**

Front Passenger Seat Belt Warning Light Connector

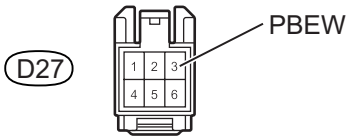


Front View

Combination Meter Assembly Connector

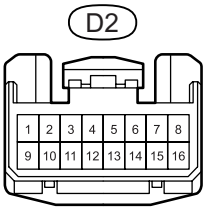


Front View

B147604E01

(a) Hatchback:
(1) Disconnect the D2 combination meter assembly connector.
(2) Disconnect the D27 front passenger seat belt warning light connector.
(3) Measure the resistance.
**Standard resistance**

| Tester Connection | Specified Condition |
|---|---|
| D2-9 - D27-3 (PBEW) | Below 1 Ω |
| D2-9 or D27-3 (PBEW) - Body ground | 10 kΩ or higher |

(4) Reconnect the combination meter assembly connector.
(5) Reconnect the front passenger seat belt warning light connector.

**Wire Harness Side:**

Hazard Warning Signal Switch Assembly Connector (Front Passenger Seat Belt Warning Light)

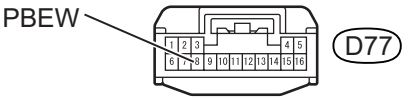


Front View

Combination Meter Assembly Connector

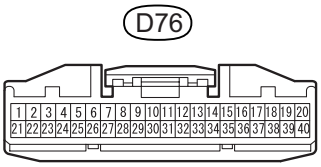


Front View

B147605E01

(b) Sedan:
(1) Disconnect the D76 combination meter assembly connector.
(2) Disconnect the D77 hazard warning signal switch assembly connector.
(3) Measure the resistance.
**Standard resistance**

| Tester Connection | Specified Condition |
|---|---|
| D76-9 - D77-8 (PBEW) | Below 1 Ω |
| D76-9 or D77-8 (PBEW) - Body ground | 10 kΩ or higher |

(4) Reconnect the combination meter assembly connector.
(5) Reconnect the hazard warning signal switch assembly connector.

**NG** → **REPAIR OR REPLACE HARNESS OR CONNECTOR**

**OK**

**REPLACE MAIN BODY ECU**

# FRONT SEAT INNER BELT ASSEMBLY (for Sedan)

## COMPONENTS

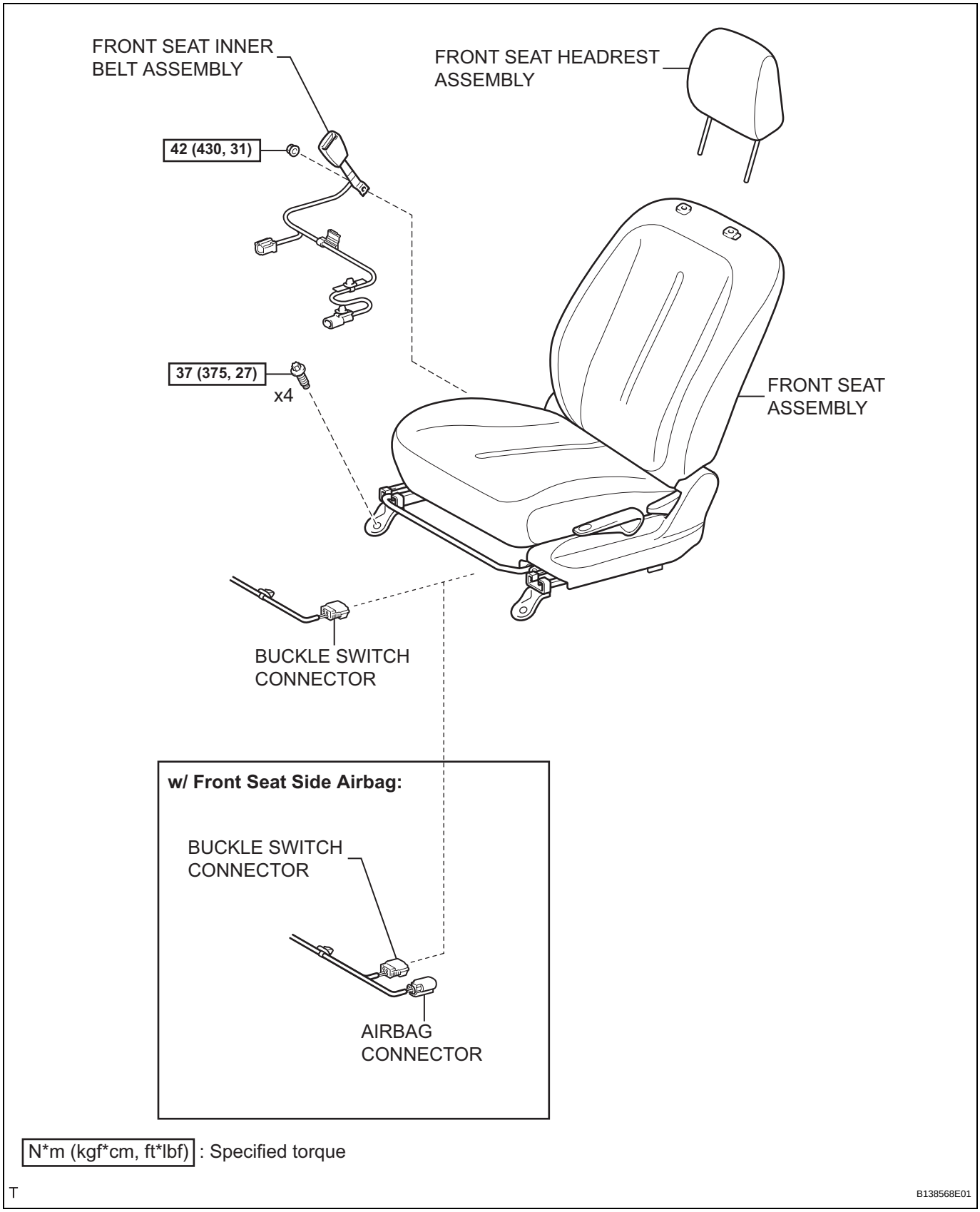

# REMOVAL

**CAUTION:**
**Some of these service operations affect the SRS airbag system. Read the precautionary notices concerning the SRS airbag system before servicing (w/ Front Seat Side Airbag) (See page RS-1).**
**NOTICE:**
**Always use "Torx" socket wrench E10 when removing the front seat.**
HINT:
The procedure described below is for the driver side. Use the same procedure for both the front passenger and driver sides, unless otherwise specified.

1. **DISCONNECT CABLE FROM NEGATIVE BATTERY TERMINAL**
   **CAUTION:**
   **Wait for at least 90 seconds after disconnecting the cable to prevent the airbag from working (w/ Front Seat Side Airbag).**
2. **REMOVE FRONT SEAT HEADREST ASSEMBLY (See page SE-5)**
3. **REMOVE FRONT SEAT ASSEMBLY (See page SE-5)**
4. **REMOVE FRONT SEAT INNER BELT ASSEMBLY**
   (a) for Driver Side:
   (1) Disconnect the seat position sensor connector.
   (2) Using a clip remover, remove the connector.
   (3) Using a clip remover, remove the clamp.
   (4) Remove the clamp.

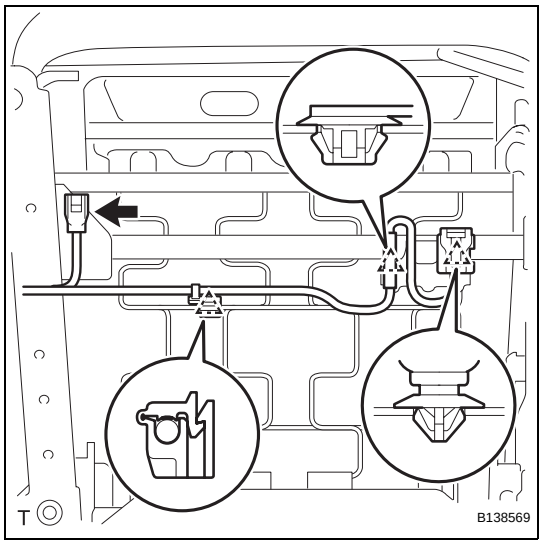

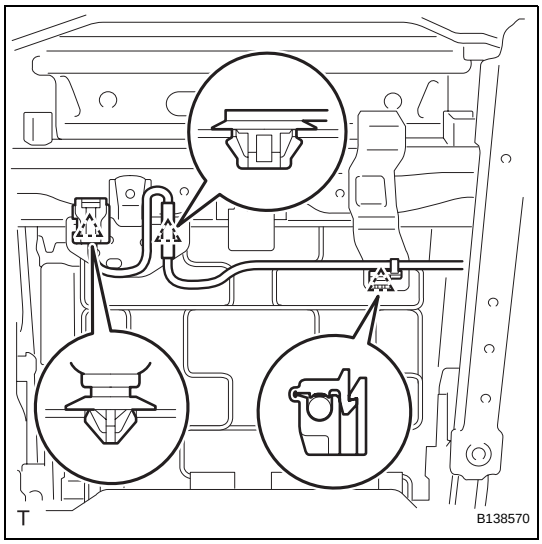


(b) for Front Passenger Seat:
  (1) Using a clip remover, remove the connector.
  (2) Using a clip remover, remove the clamp.
  (3) Remove the clamp.

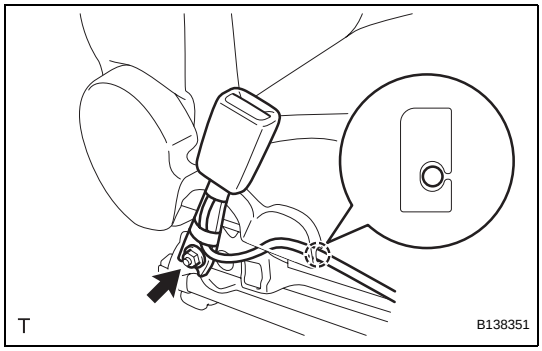


(c) Remove the wire harness from the claw of the front seat cushion inner shield.
(d) Remove the nut and the front seat inner belt.

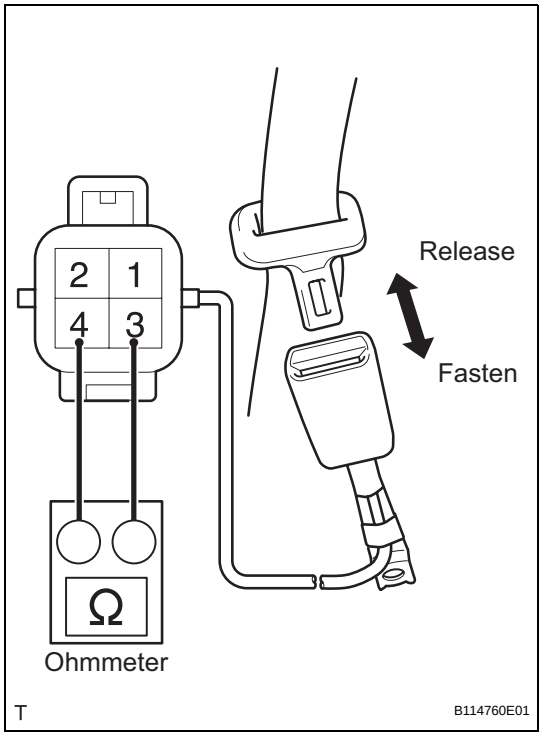


# INSPECTION

**1. INSPECT FRONT SEAT INNER BELT ASSEMBLY**

(a) for Driver Side:
  (1) Check the resistance.
    1. Using an ohmmeter, measure the resistance between the terminals.

**Standard resistance**

| Tester Connection | Condition | Specified Condition |
|---|---|---|
| 3 - 4 | Tongue plate fastened | 10 kΩ or higher |
| | Tongue plate released | Below 1 Ω |

If the result is not as specified, replace the front seat inner belt.

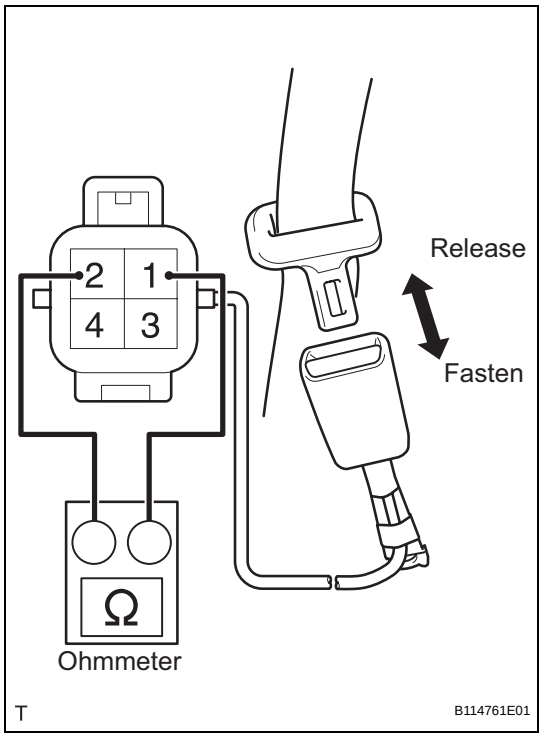


(b) for Front Passenger Side:

(1) Check the resistance.

1. Using an ohmmeter, measure the resistance between the terminals.

**Standard resistance**

| Tester Connection | Condition | Specified Condition |
|---|---|---|
| 1 - 2 | Tongue plate fastened | 10 kΩ or higher |
| | Tongue plate released | Below 1 Ω |

If the result is not as specified, replace the front seat inner belt.

SB

SB

# INSTALLATION

**CAUTION:**
**Some of these service operations affect the SRS airbag system. Read the precautionary concerning the SRS airbag system before servicing (w/ Front Seat Side Airbag) (See page RS-1).**
**NOTICE:**
**Always use "Torx" socket wrench E10 when installing the front seat.**
HINT:
The procedure described below is for the driver side. Use the same procedure for both the front passenger and drive sides, unless otherwise specified.

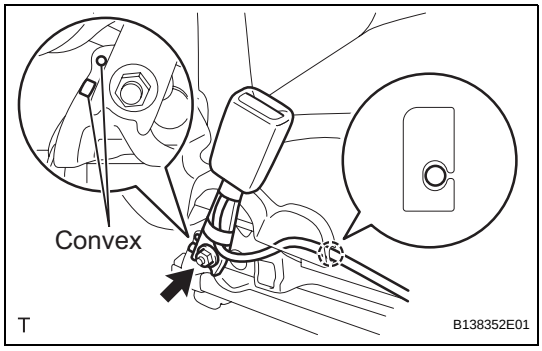


**1. INSTALL FRONT SEAT INNER BELT ASSEMBLY**

(a) Install the front seat inner belt with the nut.
**Torque: 42 N*m (430 kgf*cm, 31 ft.*lbf)**
**NOTICE:**
**Do not place the front seat inner belt over the convex areas of the front seat adjuster frame.**

(b) Install the wire harness into the claw of the front seat cushion inner shield.

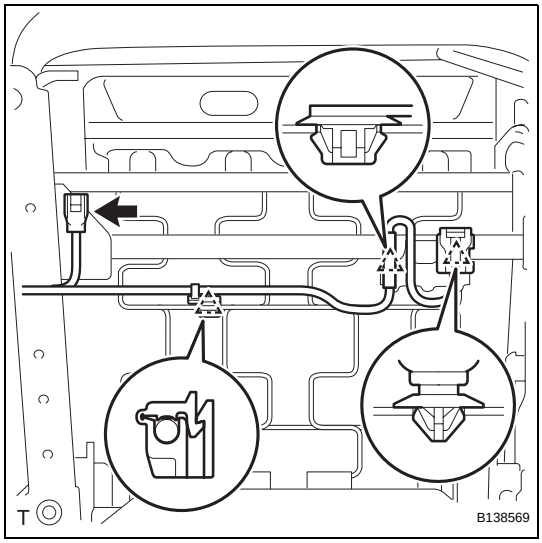


(c) for Driver Side:
(1) Install the 2 clamps.
(2) Install the connector.
(3) Connect the seat position sensor connector.

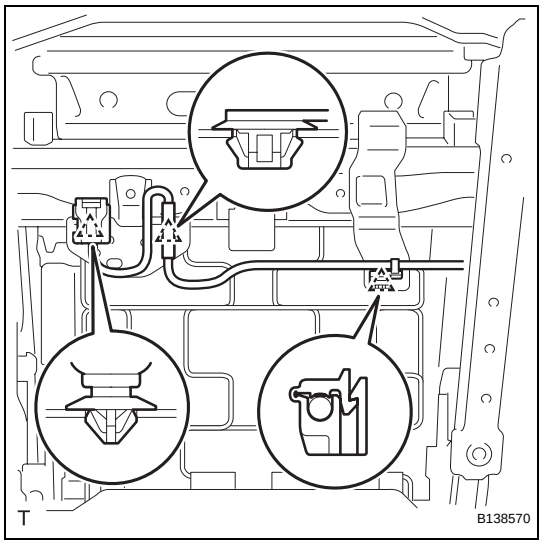


(d) for Front Passenger Side:
  (1) Install the 2 clamps.
  (2) Install the connector.

2. **INSTALL FRONT SEAT ASSEMBLY (See page SE-20)**

3. **INSTALL FRONT SEAT HEADREST ASSEMBLY (See page SE-21)**

4. **CONNECT CABLE TO NEGATIVE BATTERY TERMINAL**
   **Torque: 5.4 N*m (55 kgf*cm, 48 in.*lbf)**

5. **INSPECT SRS WARNING LIGHT (w/ Front Seat Side Airbag)**
   (See page RS-31)

# FRONT SEAT INNER BELT ASSEMBLY (for Hatchback)

## COMPONENTS

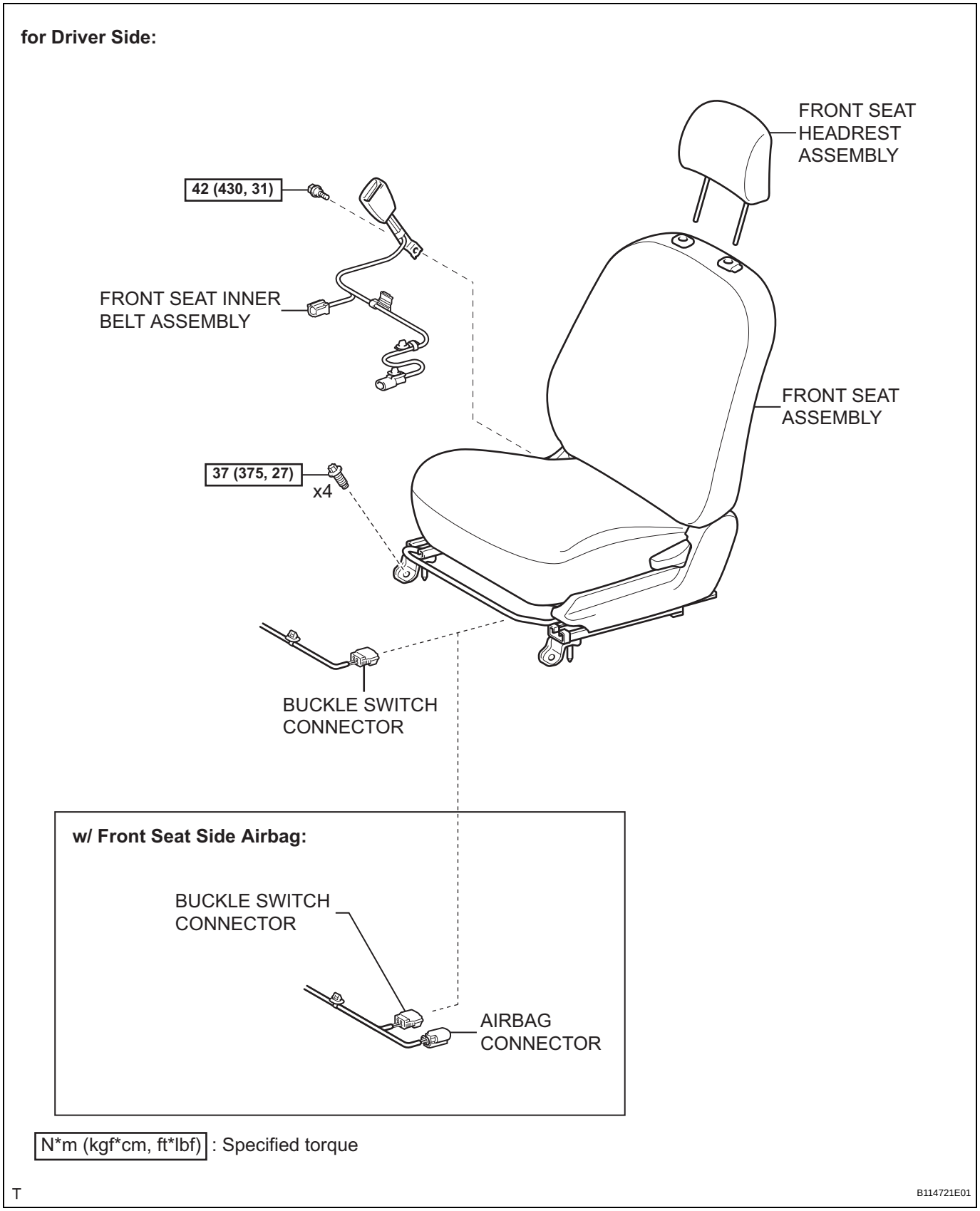


SB

SB

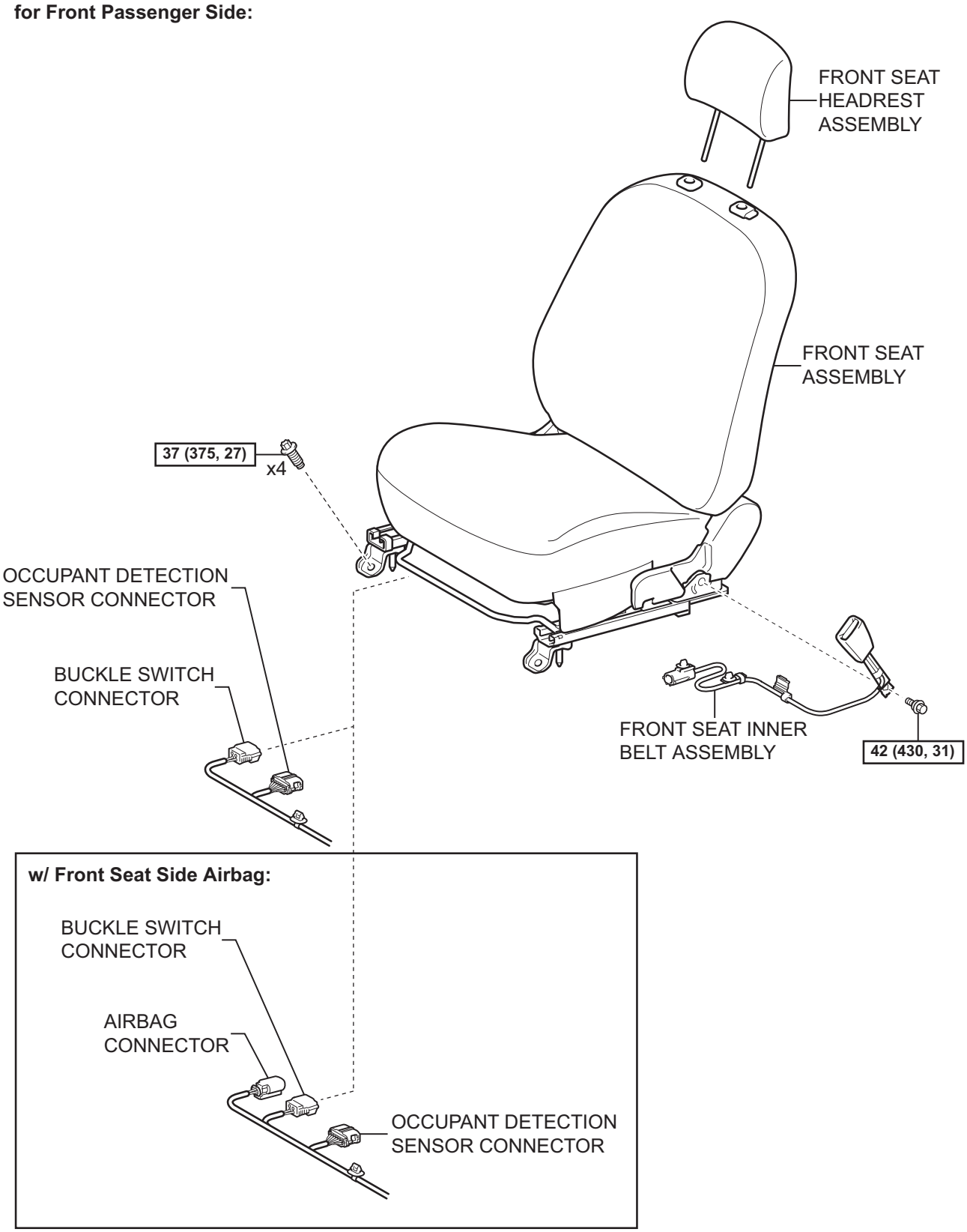


N*m (kgf*cm, ft*lbf) : Specified torque

T

B114722E01

# REMOVAL

**CAUTION:**
**Some of these service operations affect the SRS airbag system. Read the precautionary notices concerning the SRS airbag system before servicing (w/ Front Seat Side Airbag) (See page RS-1).**
**NOTICE:**
**Always use "Torx" socket wrench E10 when removing the front seat.**
HINT:
The procedure described below is for the driver side. Use the same procedure for both the driver and front passenger sides, unless otherwise specified.

1. **DISCONNECT CABLE FROM NEGATIVE BATTERY TERMINAL**
   **CAUTION:**
   **Wait for at least 90 seconds after disconnecting the cable to prevent the airbag from working (w/ Front Seat Side Airbag).**
2. **REMOVE FRONT SEAT HEADREST ASSEMBLY (See page SE-28)**
3. **REMOVE FRONT SEAT ASSEMBLY (See page SE-28)**
4. **REMOVE FRONT SEAT INNER BELT ASSEMBLY**
   (a) for Driver Side:
   (1) Disconnect the seat position sensor connector.
   (2) Remove the buckle switch connector.
   (3) Remove the 2 wiring harness clamps.

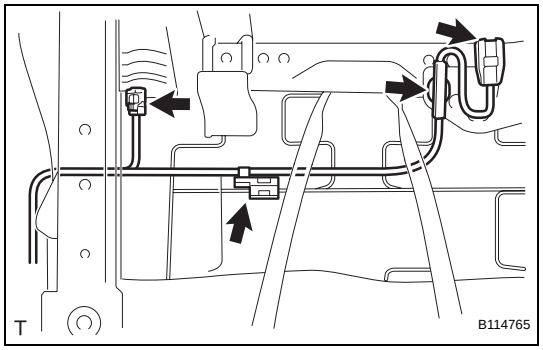


   (4) Remove the wire harness from the claw of the front seat cushion shield.
   (5) Remove the bolt and the front seat inner belt.

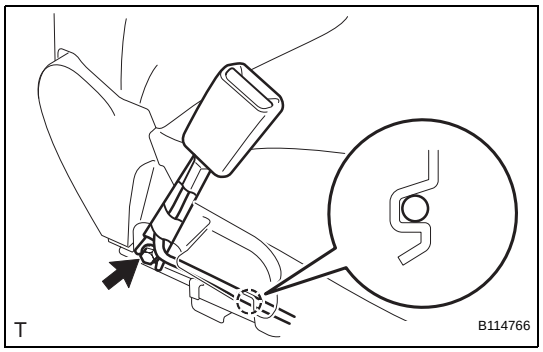

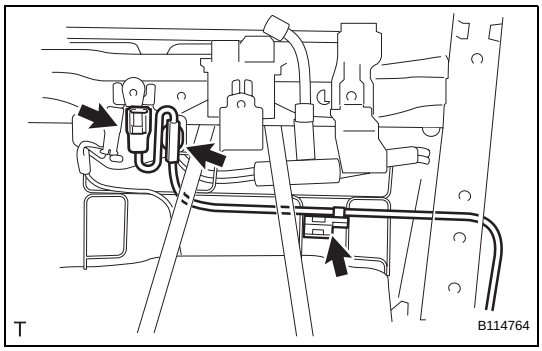


(b) for Front Passenger Side:
  (1) Remove the buckle switch connector.
  (2) Remove the 2 wiring harness clamps.

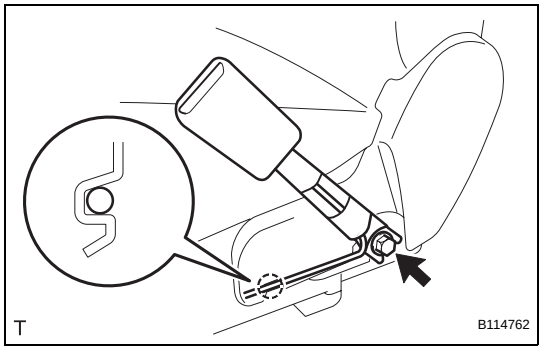


  (3) Remove the wiring harness from the claw of the front seat cushion shield.
  (4) Remove the bolt and the front seat inner belt.

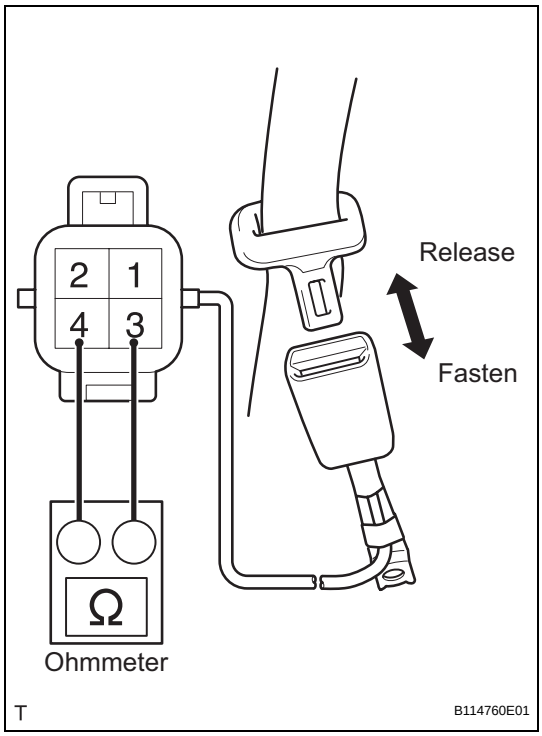


# INSPECTION

**1. INSPECT FRONT SEAT INNER BELT ASSEMBLY**

(a) for Driver Side:
  (1) Check the resistance.
    1. Using an ohmmeter, measure the resistance between the terminals.

**Standard resistance**

| Tester Connection | Condition | Specified Condition |
|---|---|---|
| 3 - 4 | Tongue plate fastened | 10 kΩ or higher |
| | Tongue plate released | Below 1 Ω |

If the result is not as specified, replace the front seat inner belt.

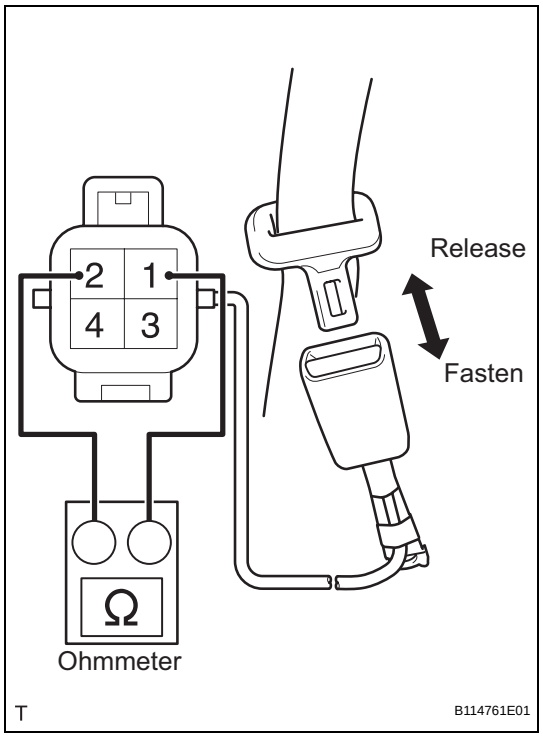


(b) for Front Passenger Side:

(1) Check the resistance.

1. Using an ohmmeter, measure the resistance between the terminals.

**Standard resistance**

| Tester Connection | Condition | Specified Condition |
|---|---|---|
| 1 - 2 | Tongue plate fastened | 10 kΩ or higher |
| | Tongue plate released | Below 1 Ω |

If the result is not as specified, replace the front seat inner belt.

SB

SB

# INSTALLATION

**CAUTION:**
**Some of these service operations affect the SRS airbag system. Read the precautionary notices concerning the SRS airbag system before servicing (w/ Front Seat Side Airbag) (See page RS-1).**
**NOTICE:**
**Always use "Torx" socket wrench E10 when installing the front seat.**
HINT:
The procedure described below is for the driver side. Use the same procedure for both the driver and front passenger sides, unless otherwise specified.

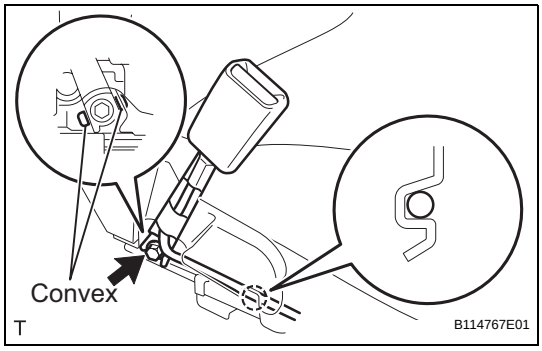


**1. INSTALL FRONT SEAT INNER BELT ASSEMBLY**

(a) for Driver Side:

(1) Install the front seat inner belt with the bolt.
**Torque: 42 N*m (430 kgf*cm, 31 ft.*lbf)**
**NOTICE:**
**Do not place the front seat inner belt over the convex areas of the front seat adjuster frame.**

(2) Install the wire harness into the claw of the front seat cushion shield.

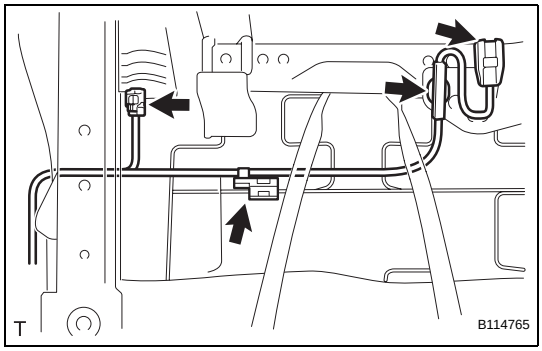


(3) Install the 2 wiring harness clamps.
(4) Install the buckle switch connector.
(5) Connect the seat position sensor connector.

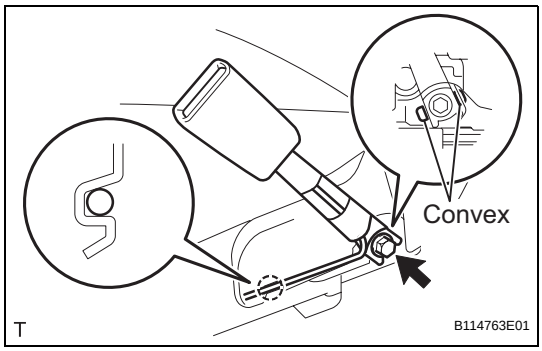


(b) for Front Passenger Side:

(1) Install the front seat inner belt with the bolt.
**Torque: 42 N*m (430 kgf*cm, 31 ft.*lbf)**
**NOTICE:**
**Do not place the front seat inner belt over the convex areas of the front seat adjuster frame.**

(2) Install the wiring harness onto the claw of the front seat cushion shield.

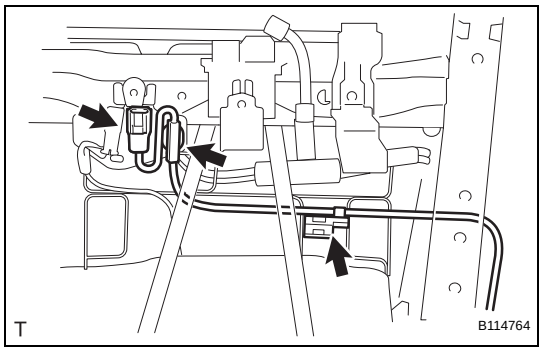


(3) Install the 2 wiring harness clamps.
(4) Install the buckle switch connector.

2. **INSTALL FRONT SEAT ASSEMBLY (See page SE-42)**

3. **INSTALL FRONT SEAT HEADREST ASSEMBLY (See page SE-43)**

4. **CONNECT CABLE TO NEGATIVE BATTERY TERMINAL**
**Torque: 5.4 N*m (55 kgf*cm, 48 in.*lbf)**

5. **INSPECT SRS WARNING LIGHT (w/ Front Seat Side Airbag)**
(See page RS-31)

# FRONT SEAT OUTER BELT ASSEMBLY (for Sedan)

## COMPONENTS

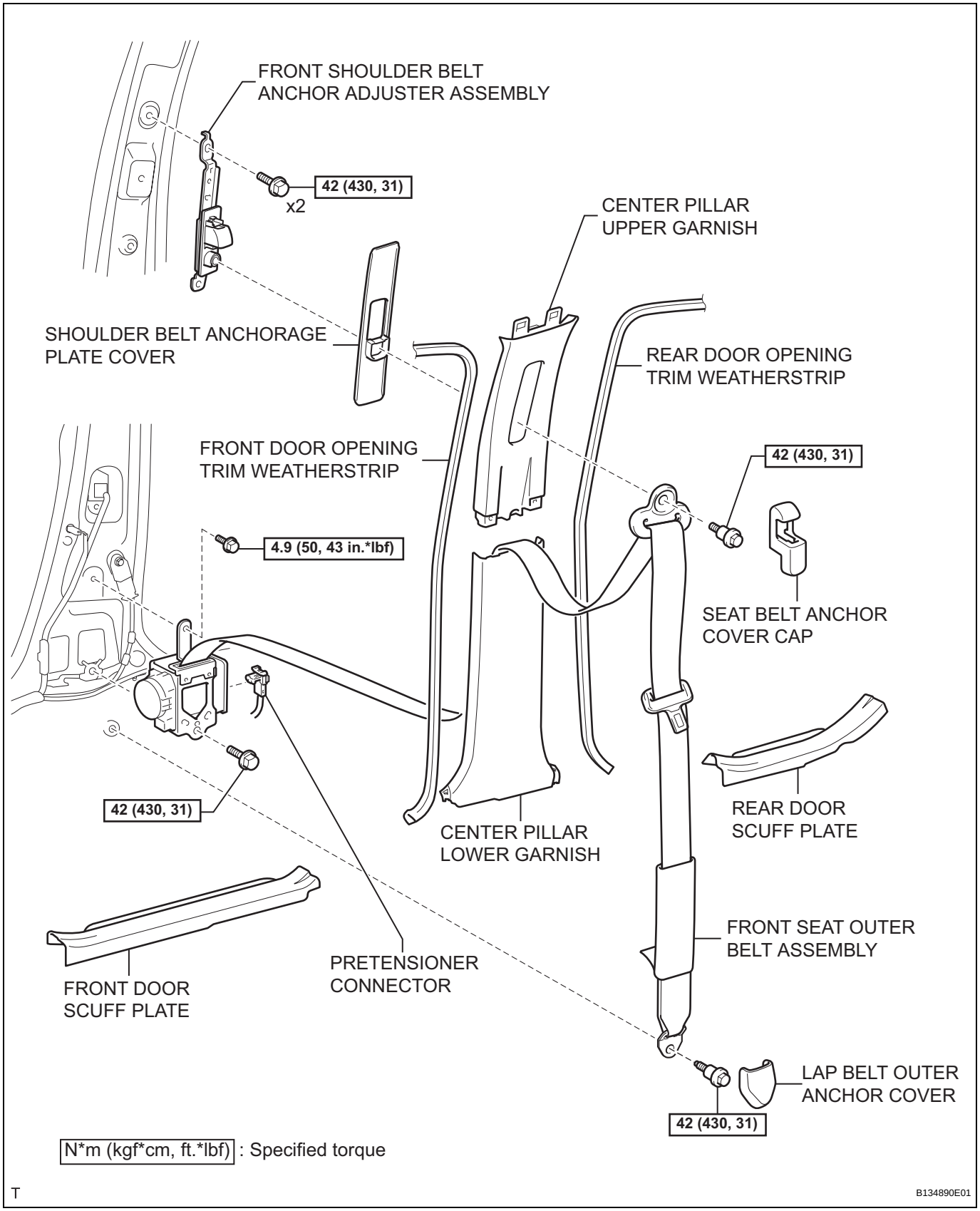


SB

SB

# REMOVAL

**CAUTION:**
**Some of these service operations affect the SRS airbag system. Read the precautionary notices concerning the SRS airbag system before servicing (See page RS-1).**
HINT:
The procedure described below is for the RH side. Use the same procedure for both the RH and LH sides, unless otherwise specified.

1. **DISCONNECT CABLE FROM NEGATIVE BATTERY TERMINAL**
   **CAUTION:**
   **Wait for at least 90 seconds after disconnecting the cable to prevent the airbag from working.**
2. **REMOVE FRONT DOOR SCUFF PLATE (See page IR-14)**
3. **REMOVE REAR DOOR SCUFF PLATE (See page IR-15)**
4. **REMOVE FRONT DOOR OPENING TRIM WEATHERSTRIP**
   (a) Remove the front door opening trim weatherstrip to the extent that the center pillar upper and lower garnishes can be removed.

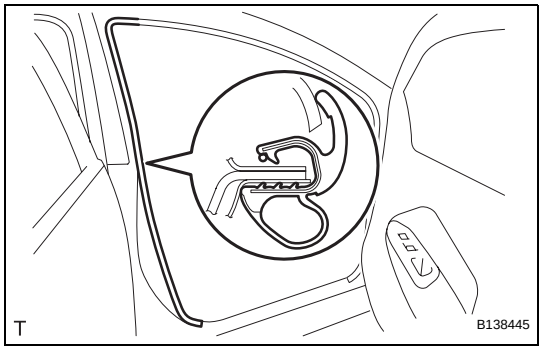


5. **REMOVE REAR DOOR OPENING TRIM WEATHERSTRIP**
   (a) Remove the rear door opening trim weatherstrip to the extent that the center pillar upper and lower garnishes can be removed.
6. **REMOVE CENTER PILLAR LOWER GARNISH (See page IR-16)**

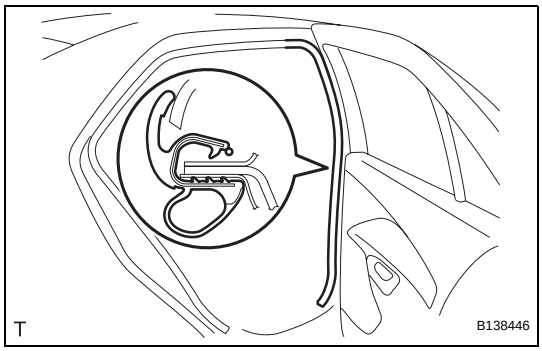


7. **REMOVE SEAT BELT ANCHOR COVER CAP**
   (a) Pull portion A, shown in the illustration, toward you, remove the 2 claws on the lower side followed by the claw on the upper side. Then remove the seat belt anchor cover cap.

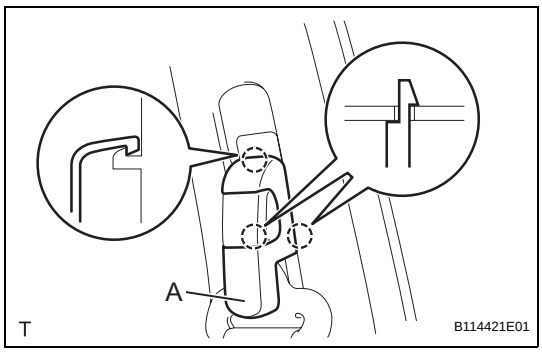

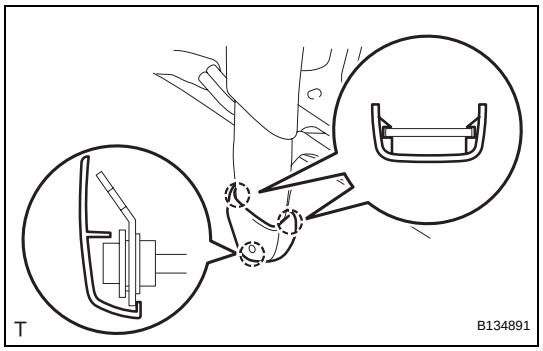


**8. REMOVE LAP BELT OUTER ANCHOR COVER**

(a) Disengage the 3 claws and remove the lap belt outer anchor cover.

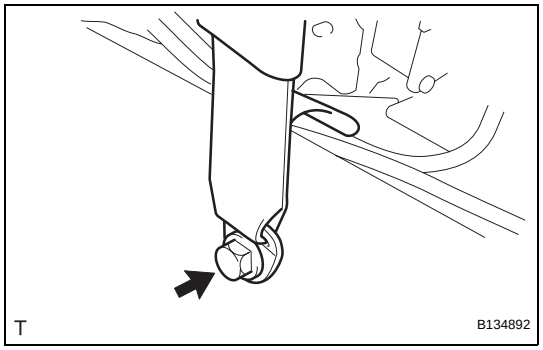


**9. REMOVE FRONT SEAT OUTER BELT ASSEMBLY**

(a) Remove the bolt and the anchor plate.

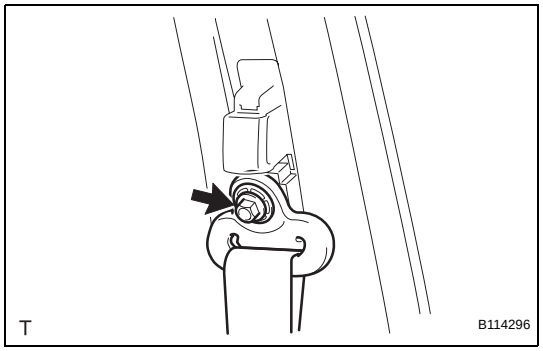


(b) Remove the bolt and the shoulder anchor.

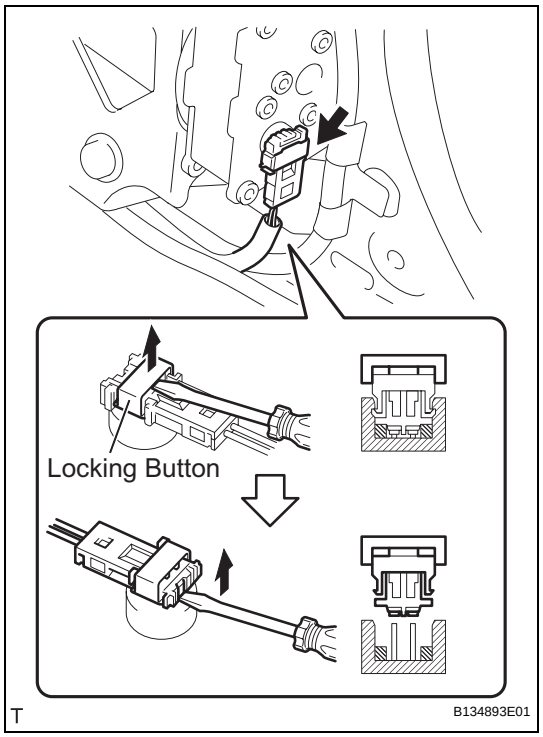


(c) Disconnect the pretensioner connector.
   (1) Using a screwdriver, release the locking button.
   (2) Using a screwdriver, disconnect the pretensioner connector.

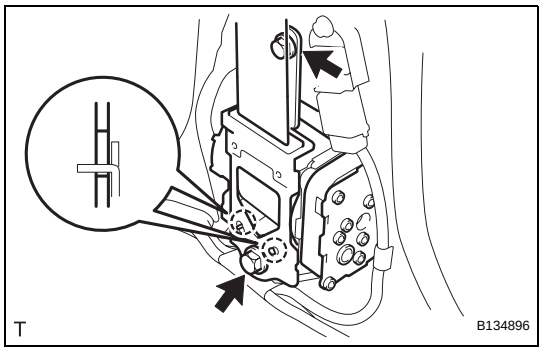


(d) Remove the 2 bolts, the 2 hooks and the retractor.

**10. REMOVE CENTER PILLAR UPPER GARNISH (See page IR-17)**

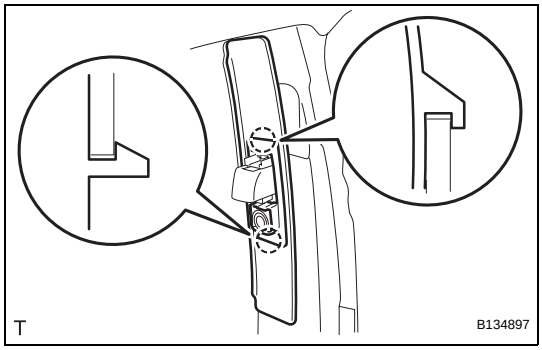


**11. REMOVE SHOULDER BELT ANCHORAGE PLATE COVER**

(a) Disengage the 2 claws and remove the shoulder belt anchorage plate cover.

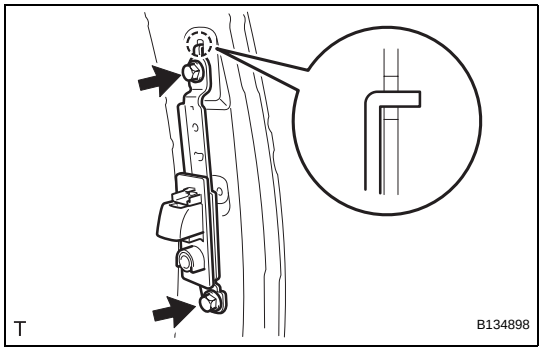


**12. REMOVE FRONT SHOULDER BELT ANCHOR ADJUSTER ASSEMBLY**

(a) Remove the 2 bolts, the hook and the front shoulder belt anchor adjuster.

# INSTALLATION

**CAUTION:**
**Some of these service operations affect the SRS airbag system. Read the precautionary notices concerning the SRS airbag system before servicing (See page RS-1).**
HINT:
The procedure described below is for the RH side. Use the same procedure for both the RH and LH sides, unless otherwise specified.



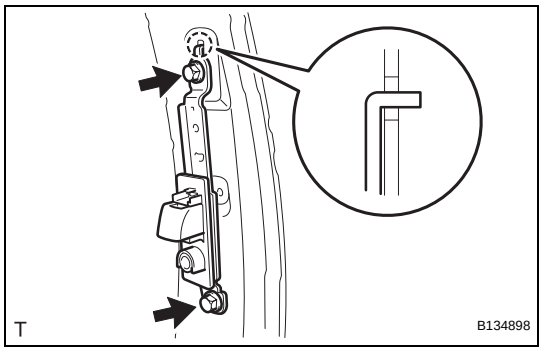


**1. INSTALL FRONT SHOULDER BELT ANCHOR ADJUSTER ASSEMBLY**
(a) Insert the hook into the body hole and install the shoulder belt anchor adjuster with the 2 bolts.
**Torque: 42 N*m (430 kgf*cm, 31 ft.*lbf)**

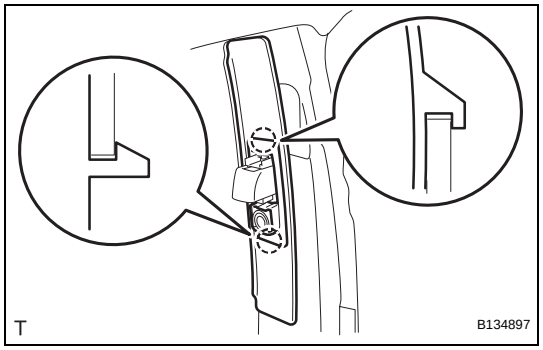


**2. INSTALL SHOULDER BELT ANCHORAGE PLATE COVER**
(a) Engage the 2 claws and install the shoulder belt anchorage plate cover.

**3. INSTALL CENTER PILLAR UPPER GARNISH (See page IR-31)**

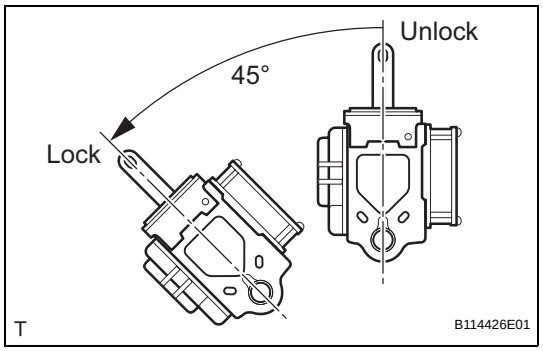


**4. INSTALL FRONT SEAT OUTER BELT ASSEMBLY**
(a) Check the angle of inclination required to lock the retractor.
(1) Gently incline the retractor from its initial position. Check that the belt does not lock when the retractor is inclined 15 ° or less in any direction. Also, check that the belt locks when the inclination of the retractor is 45 ° or more.
**NOTICE:**
**Do not disassemble the retractor.**
If the operation is not as specified, replace the front seat outer belt.

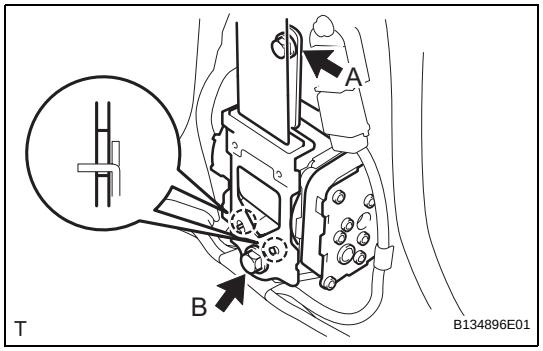


(b) Hook the lower stay of the retractor onto the 2 body hooks and provisionally install the retractor with the 2 bolts.
(c) Tighten bolt A and then bolt B.
**Torque: 4.9 N*m (50 kgf*cm, 43 in.*lbf) for bolt A**
**42 N*m (430 kgf*cm, 31 ft.*lbf) for bolt B**

SB

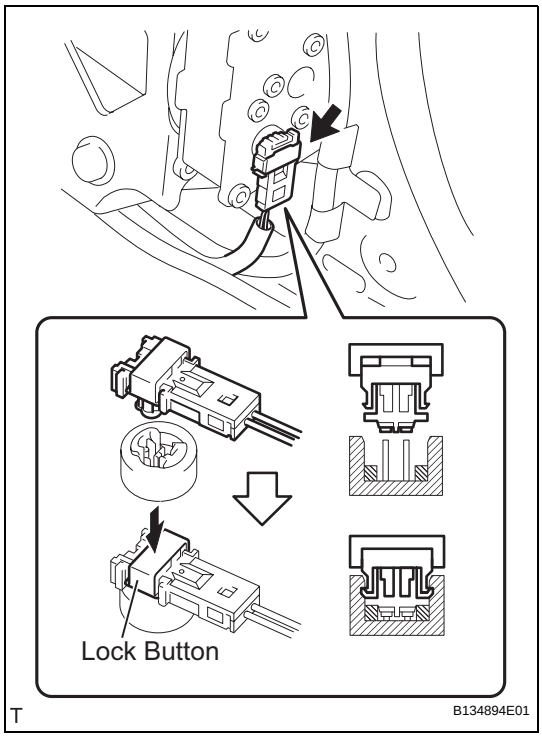


(d) Connect the pretensioner connector.
  (1) Connect the pretensioner connector.
  (2) Lock the locking button.
  **NOTICE:**
  **Securely lock the locking button.**

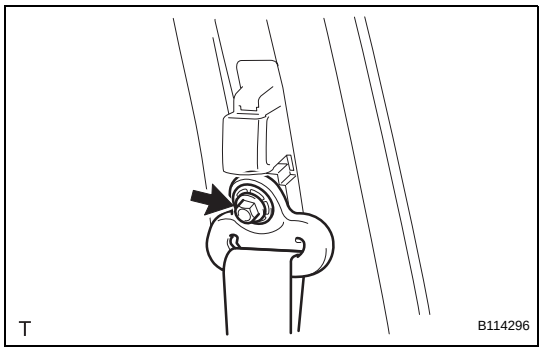


(e) Install the shoulder anchor with the bolt.
  **Torque: 42 N*m (430 kgf*cm, 31 ft.*lbf)**

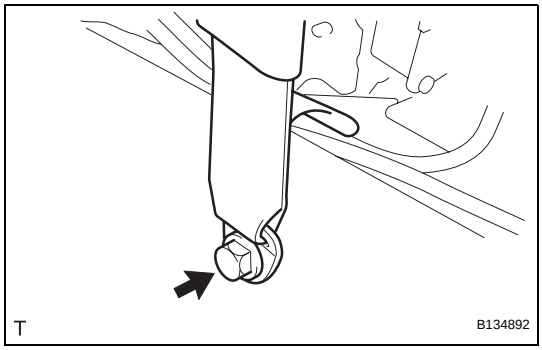


(f) Install the anchor plate with the bolt.
  **Torque: 42 N*m (430 kgf*cm, 31 ft.*lbf)**
(g) Check that the ELR locks.
  **NOTICE:**
  - **The check should be performed with the front seat outer belt installed.**
  - **Do not allow the anchor part of the front seat outer belt and the protruding parts of the floor panel to overlap.**
  (1) With the belt installed, check that the belt locks when it is pulled out quickly.
  If the operation is not as specified, replace the front seat outer belt.

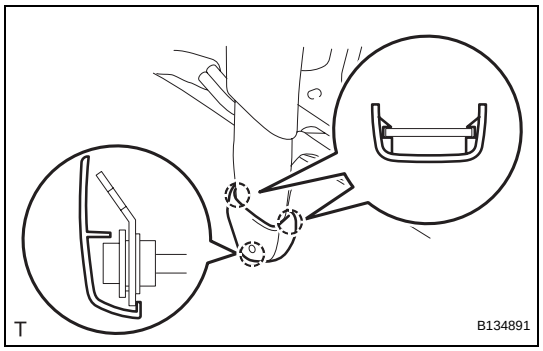


**5. INSTALL LAP BELT OUTER ANCHOR COVER**

(a) Engage the 3 claws and install the lap belt outer anchor cover.

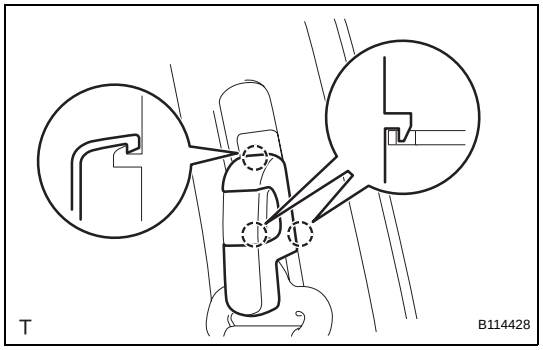


**6. INSTALL SEAT BELT ANCHOR COVER CAP**

(a) Engage the 3 claws and install the seat belt anchor cover cap.

**7. INSTALL CENTER PILLAR LOWER GARNISH (See page IR-32)**

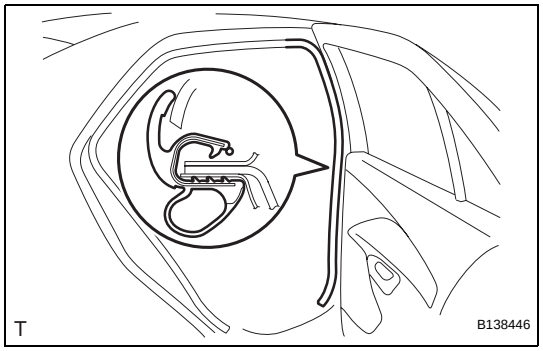


**8. INSTALL REAR DOOR OPENING TRIM WEATHERSTRIP**

(a) Install the rear door opening trim weatherstrip.

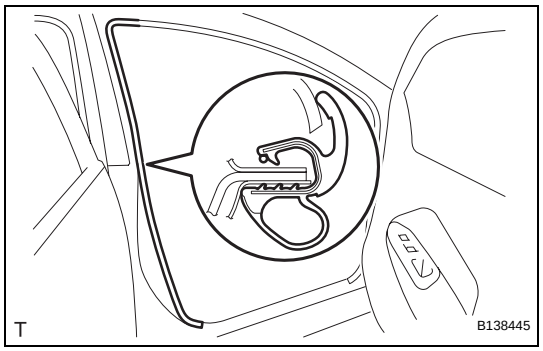


**9. INSTALL FRONT DOOR OPENING TRIM WEATHERSTRIP**

(a) Install the front door opening trim weatherstrip.

**10. INSTALL REAR DOOR SCUFF PLATE (See page IR-34)**

**11. INSTALL FRONT DOOR SCUFF PLATE (See page IR-35)**

**12. CONNECT CABLE TO NEGATIVE BATTERY TERMINAL**

**Torque: 5.4 N*m (55 kgf*cm, 48 in.*lbf)**

**13. INSPECT SRS WARNING LIGHT**

(See page RS-31)

SB

# DISPOSAL

**CAUTION:**

- **Never dispose of a front seat outer belt that has an inactivated pretensioner.**
- **The seat belt pretensioner produces a loud, exploding sound when it activates. Perform the operation outside and where it will not be a nuisance to persons nearby.**
- **When activating a front seat outer belt (with seat belt pretensioner), stand at least 10 m (33 ft) away from the front seat outer belt.**
- **Use gloves and safety glasses when handling a front seat outer belt with an activated pretensioner.**
- **Always wash your hands with water after completing the activation.**
- **Do not apply water to a front seat outer belt that has an activated pretensioner.**
- **When activating the seat belt pretensioner, always use the specified SST (SRS airbag deployment tool).**
- **Perform the operation in a place away from electrical interference.**

HINT:
The procedure described below is for the RH side. Use the same procedure for both the RH and LH sides, unless otherwise specified.

**1. DISPOSE OF FRONT SEAT OUTER BELT ASSEMBLY (When Installed in Vehicle)**

HINT:
Prepare a battery as the power source to activate the seat belt pretensioner.

(a) Check whether SST is functioning.
**SST 09082-00700**
**CAUTION:**
**Always use the specified SST when activating the seat belt pretensioner.**

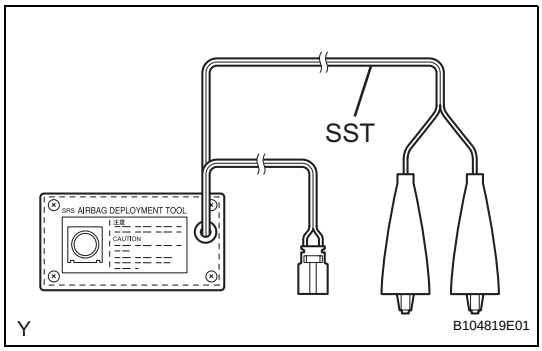


(1) Connect the SST red clip to the positive battery terminal and the black clip to the negative battery terminal.
HINT:
Do not connect the yellow connector. The yellow connector is for connections to the seat belt pretensioner.

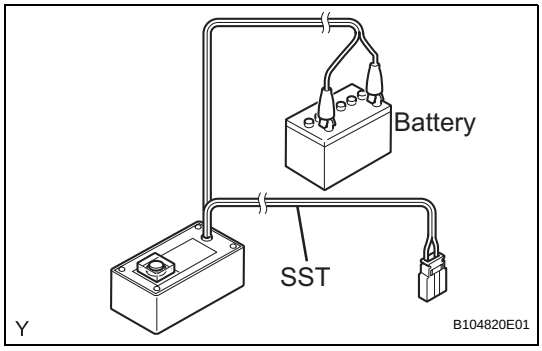

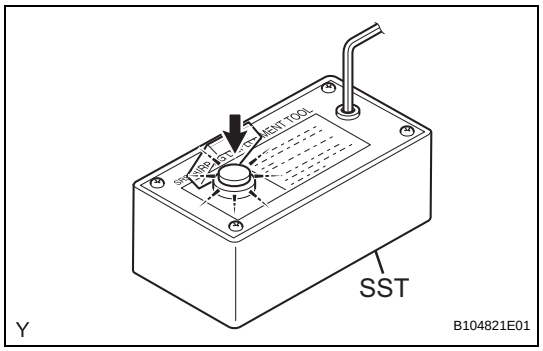


(2) Press the SST activation switch and check that the LED of the SST activation switch turns on.
**CAUTION:**
**If the LED illuminates when the activation switch is not being pressed, SST may be malfunctioning. Do not use SST.**

(b) Disconnect SST from the battery.

(c) Disconnect the pretensioner connector.

(1) Disconnect the cable from the negative battery terminal.

(2) Remove the front door scuff plate (See page IR-14).

(3) Remove the rear door scuff plate (See page IR-15).

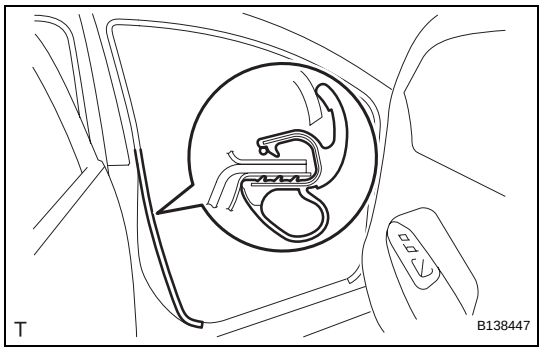


(4) Remove the front door opening trim weatherstrip.

1. Remove the front door opening trim weatherstrip to the extent that the center pillar lower garnish can be removed.

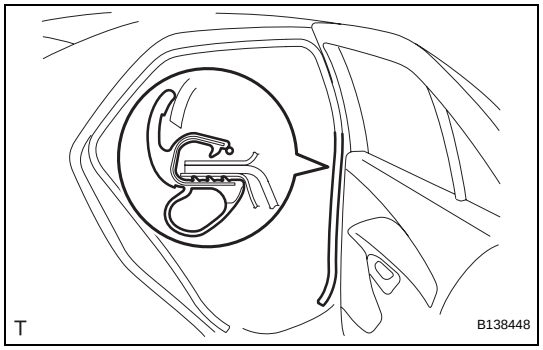


(5) Remove the rear door opening trim weatherstrip.

1. Remove the rear door opening trim weatherstrip to the extent that the center pillar lower garnish can be removed.

(6) Remove the center pillar lower garnish (See page IR-16).

SB

SB

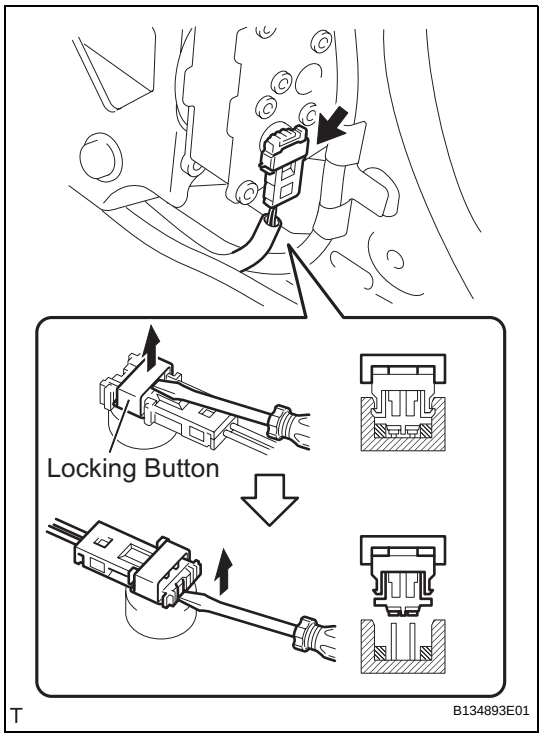


(7) Disconnect the pretensioner connector.
1. Using a screwdriver, release the locking button.
2. Using a screwdriver, disconnect the pretensioner connector.

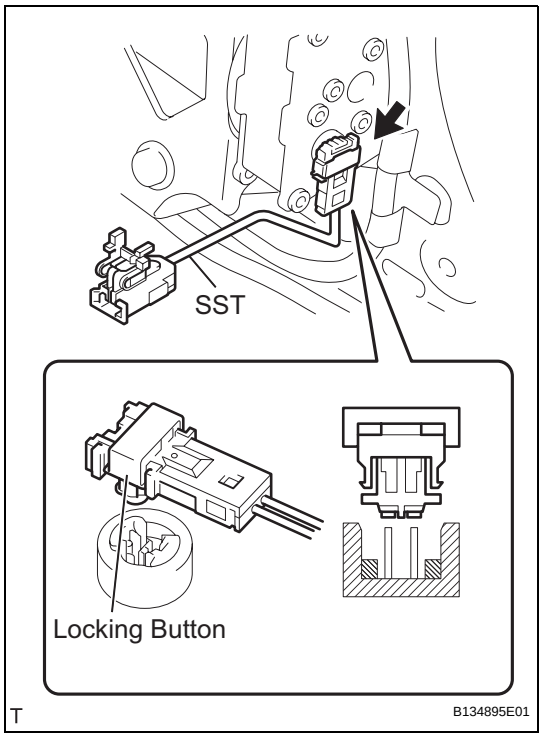


(d) Connect SST.
(1) Connect SST, then the yellow connector to the seat belt pretensioner.
**SST 09082-00770**
**NOTICE:**
**Do not lock the secondary lock of the twin lock to avoid damaging the SST connector and wire harness.**

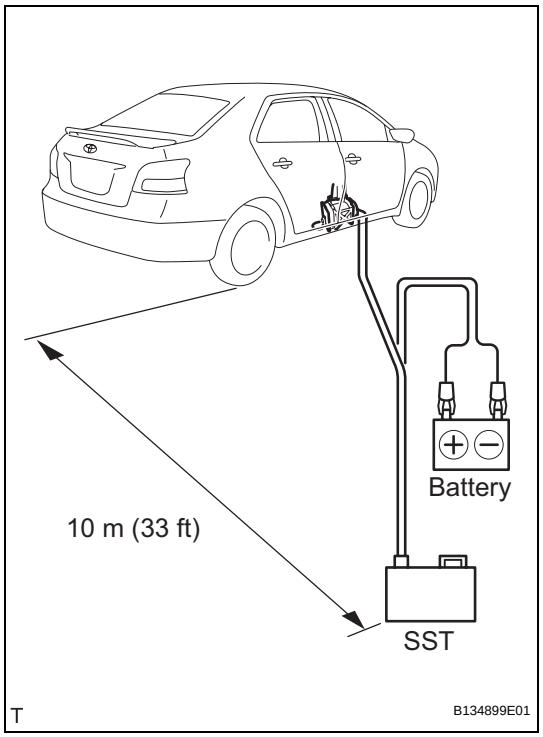


(2) Move SST at least 10 m (33 ft) away from the front of the vehicle.
**SST 09082-00700**

(3) Close the doors and windows of the vehicle.
**NOTICE:**
**Take care not to damage the SST wire harness.**
HINT:
Do not close the windows fully. Leave a gap for inserting the SST wire harness.

(4) Connect the SST red clip to the positive battery terminal and the black clip to the negative battery terminal.

(e) Activate the seat belt pretensioner.

(1) Confirm that no one is inside the vehicle or within 10 m (33 ft) of the vehicle.

(2) Press the SST activation switch and activate the seat belt pretensioner.
HINT:
The seat belt pretensioner operates simultaneously with the SST activation switch LED light.

(f) Disconnect SST.

(g) Dispose of the front seat outer belt (with the seat belt pretensioner).
HINT:
When scrapping a vehicle, activate the seat belt pretensioner, and then scrap the vehicle with the activated front seat outer belt still installed.
**CAUTION:**
- **Do not touch the front seat outer belt for at least 30 minutes after the seat belt pretensioner has been activated. It is very hot.**
- **Use gloves and safety glasses when handling a front seat outer belt with a pretensioner that has been activated.**
- **Always wash your hands with water after completing the operation.**
- **Do not apply water to a front seat outer belt that has an activated pretensioner.**

**2. DISPOSE OF FRONT SEAT OUTER BELT ASSEMBLY (When not Installed in Vehicle)**
HINT:
Prepare a battery as the power source to activate the seat belt pretensioner.
**NOTICE:**
- **When only disposing of the front seat outer belt (with the seat belt pretensioner), never use the customer's vehicle to activate the seat belt pretensioner.**
- **Be sure to follow the procedures described below when activating the seat belt pretensioner.**

(a) Remove the front seat outer belt (See page SB-44).

SB

SB

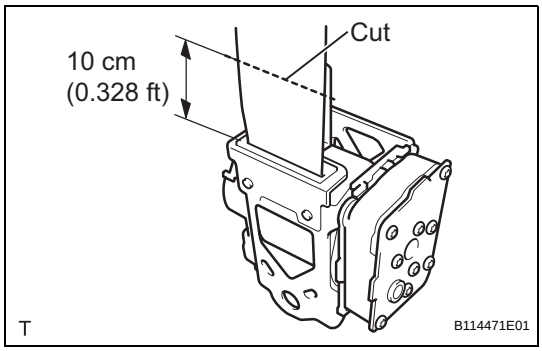


(b) Wind the seat belt with the retractor.

(c) When the seat belt is sufficiently wound, cut the seat belt approximately 10 cm (0.328 ft) from the retractor, as shown in the illustration.
HINT:
The retractor resistance increases in correlation with how much the seat belt is wound.

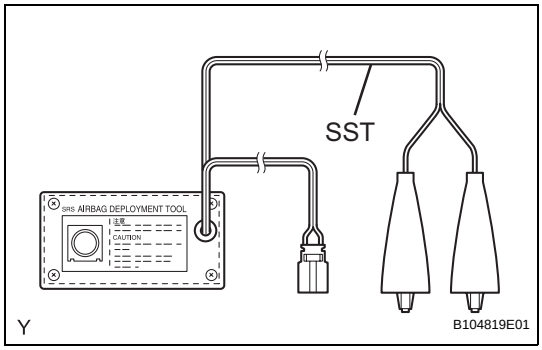


(d) Check whether SST is functioning.
**SST 09082-00700**
**CAUTION:**
**Always use the specified SST when activating the seat belt pretensioner.**

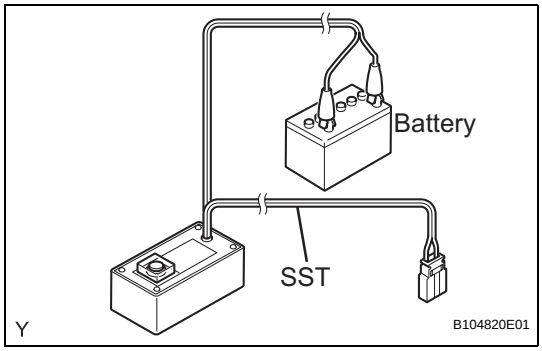


(1) Connect the SST red clip to the positive battery terminal and the black clip to the negative battery terminal.
HINT:
Do not connect the yellow connector. The yellow connector is for connections to the seat belt pretensioner.

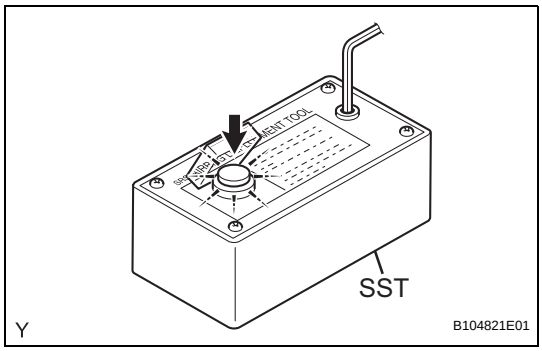


(2) Press the SST activation switch and check that the LED of the SST activation switch turns on.
**CAUTION:**
**If the LED illuminates when the activation switch is not being pressed, SST may be malfunctioning. Do not use SST.**

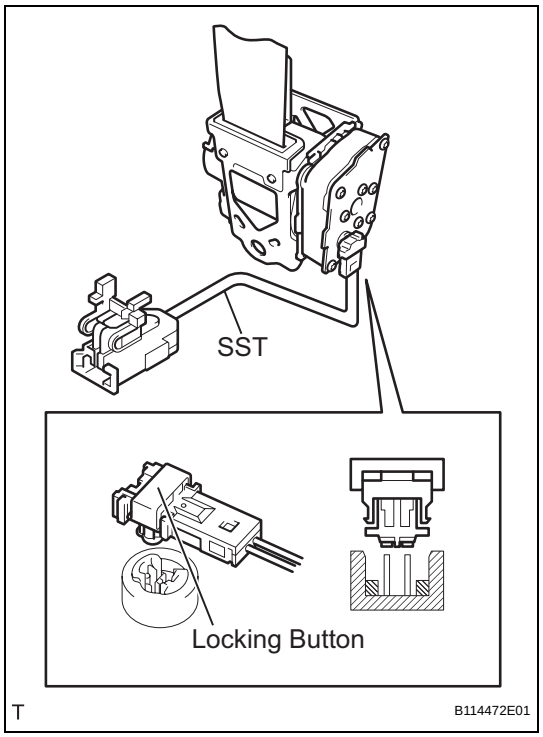


(e) Connect SST.

(1) Connect SST, then the yellow connector to the seat belt pretensioner.

**SST 09082-00770**

**NOTICE:**

**Do not lock the secondary lock of the twin lock to avoid damaging the SST connector and wire harness.**

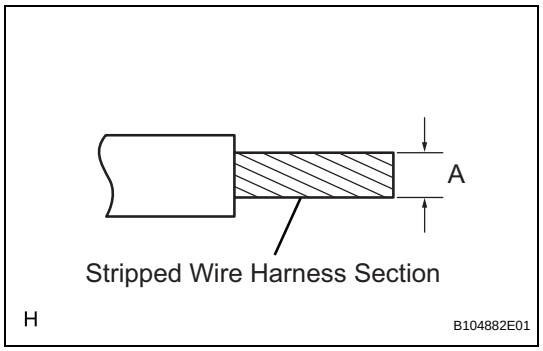


(2) Using a service-purpose wire harness for the vehicle, tie the seat belt pretensioner to the tire with a wheel attached.

**Stripped wire harness section**

| Area | Measurement |
|---|---|
| A | 1.25 $mm^2$ or more (0.0019 $in^2$ or more) |

**CAUTION:**

- **Do not use wire harnesses that are too thin or any other object to tie the seat belt pretensioner because they may snap due to the shock when the pretensioner is deployed.**
- **Always use a wire harness for vehicle use, with a cross section of at least 1.25 $mm^2$ (0.0019 $in^2$).**

HINT:

To calculate the area of the stripped wire harness cross section:

Area = 3.14 x $(Diameter)^2$ divided by 4

SB

SB

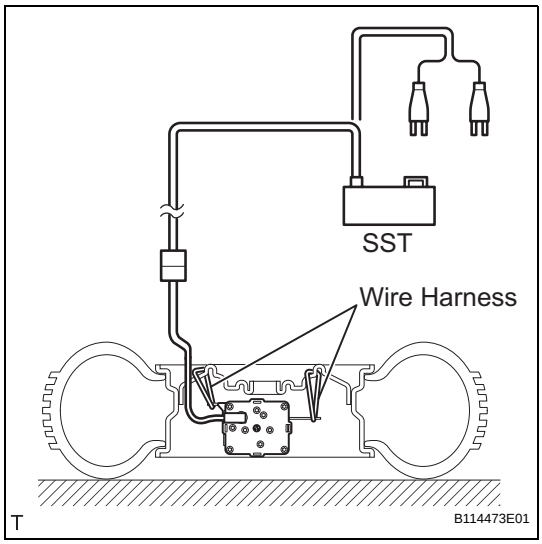


(3) Connect SST.
**SST 09082-00700**
**NOTICE:**
- **Do not lock the secondary lock of the twin lock to avoid damaging the SST connector and wire harness.**
- **Set up the front seat outer belt, as shown in the illustration.**

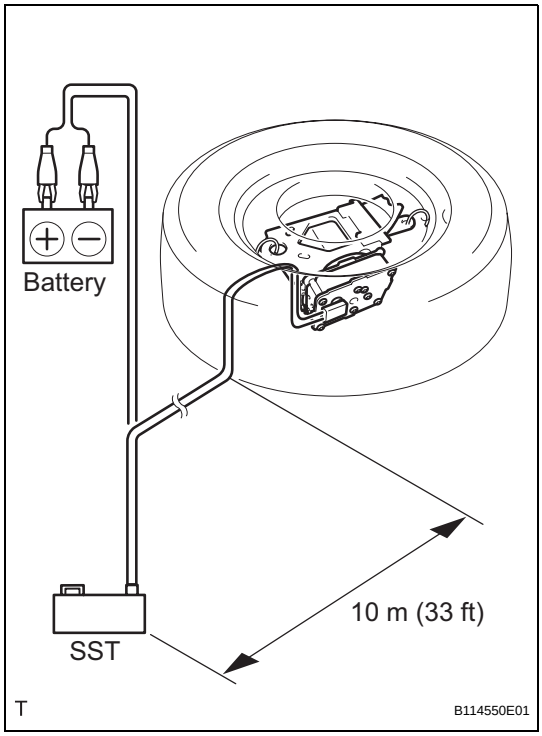


(4) Move SST at least 10 m (33 ft) away from the wheel.
**NOTICE:**
**Take care not to damage the SST wire harness.**

(f) Activate the seat belt pretensioner.
(1) Connect the SST red clip to the positive battery terminal and the black clip to the negative battery terminal.
(2) Check that no one is within 10 m (33 ft) of the wheel.
(3) Press the SST activation switch and activate the seat belt pretensioner.
HINT:
The seat belt pretensioner operates simultaneously with the SST activation switch LED light.

(g) Disconnect SST.

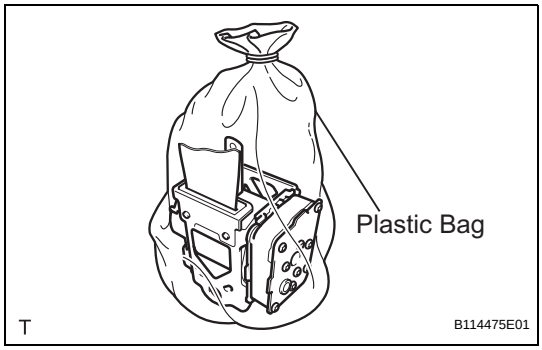


(h) Dispose of the front seat outer belt (with the seat belt pretensioner).
**CAUTION:**
- **Do not touch the front seat outer belt for at least 30 minutes after the seat belt pretensioner has been activated. It is very hot.**
- **Use gloves and safety glasses when handling an front seat outer belt with a pretensioner that has been activated.**
- **Always wash your hands with water after completing the operation.**
- **Do not apply water to a front seat outer belt that has an activated pretensioner.**

(1) Place the front seat outer belt in a plastic bag, tie the end tightly and dispose of it in the same way as other general parts.

# FRONT SEAT OUTER BELT ASSEMBLY (for Hatchback 5 Door)

## COMPONENTS

SB

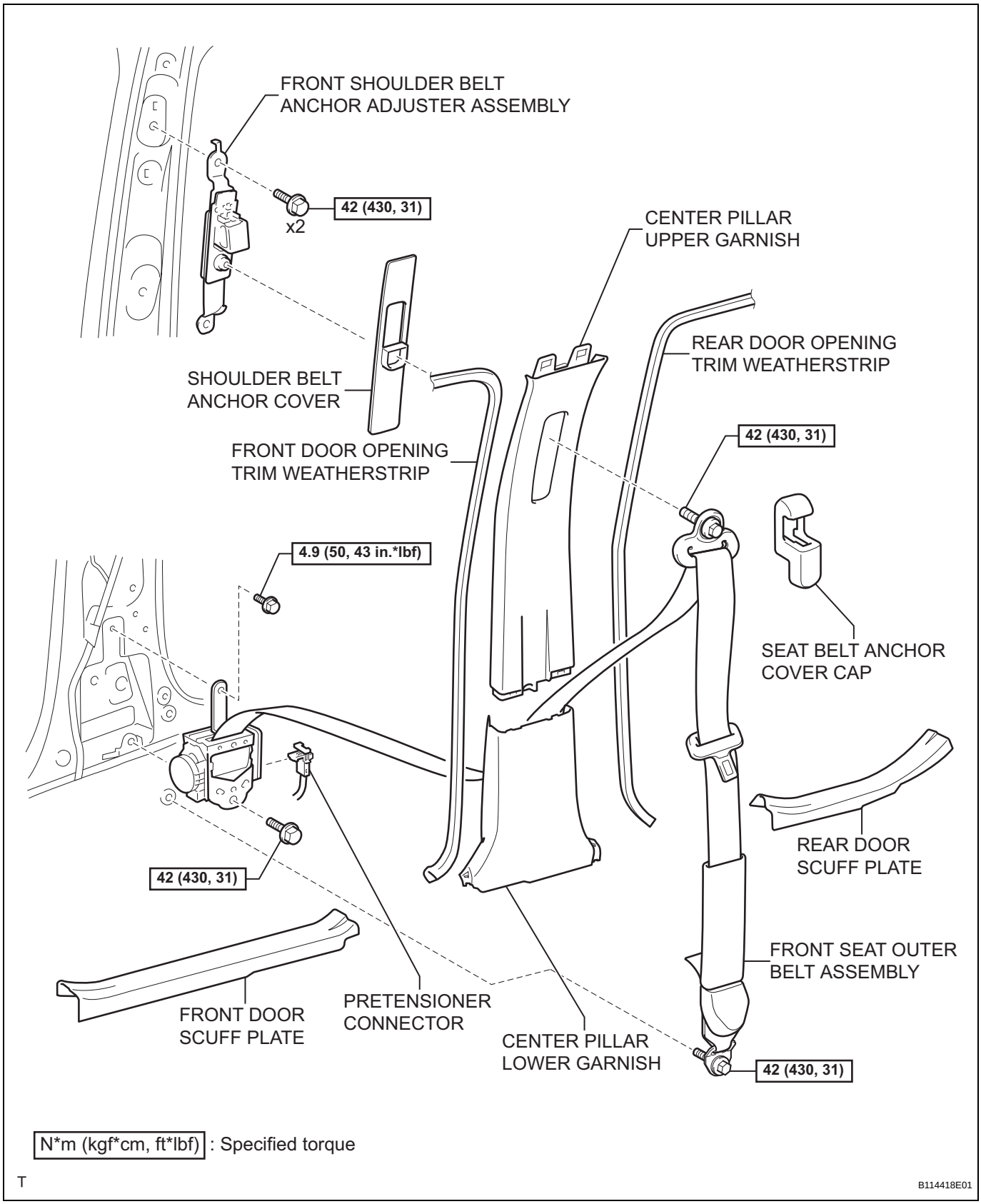

# REMOVAL

**CAUTION:**
**Some of these service operations affect the SRS airbag system. Read the precautionary notices concerning the SRS airbag system before servicing (See page RS-1).**
HINT:
The procedure described below is for the RH side. Use the same procedure for both the RH and LH sides, unless otherwise specified.

1. **DISCONNECT CABLE FROM NEGATIVE BATTERY TERMINAL**
   **CAUTION:**
   **Wait for at least 90 seconds after disconnecting the cable to prevent the airbag from working.**

2. **REMOVE FRONT DOOR SCUFF PLATE (See page IR-49)**

3. **REMOVE REAR DOOR SCUFF PLATE (See page IR-51)**

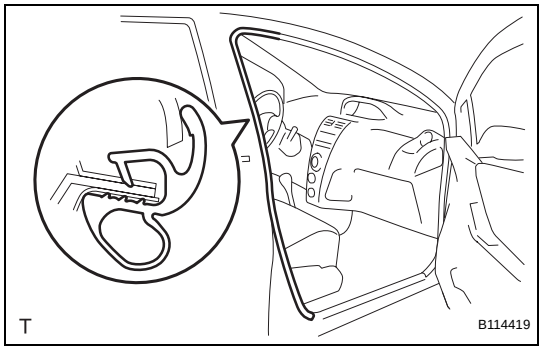


4. **REMOVE FRONT DOOR OPENING TRIM WEATHERSTRIP**
   (a) Remove the front door opening trim weatherstrip to the extent that the center pillar upper and lower garnishes can be removed.

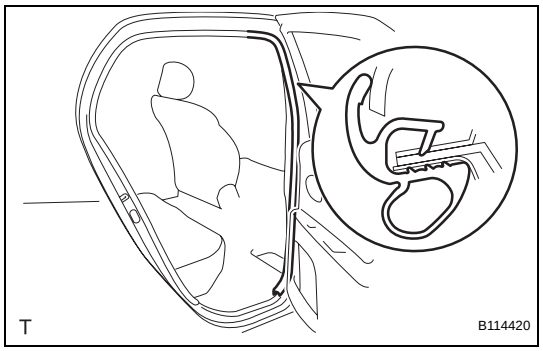


5. **REMOVE REAR DOOR OPENING TRIM WEATHERSTRIP**
   (a) Remove the rear door opening trim weatherstrip to the extent that the center pillar upper and lower garnishes can be removed.

6. **REMOVE CENTER PILLAR LOWER GARNISH (See page IR-55)**

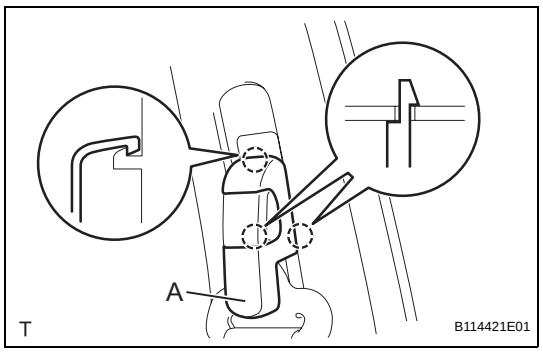


7. **REMOVE SEAT BELT ANCHOR COVER CAP**
   (a) Pull portion A, shown in the illustration, toward you, remove the 2 claws on the lower side followed by the claw on the upper side. Then remove the seat belt anchor cover cap.

SB

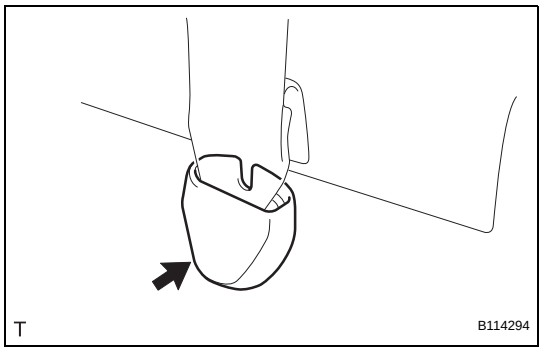


**8. REMOVE FRONT SEAT OUTER BELT ASSEMBLY**

(a) Remove the anchor plate cover.

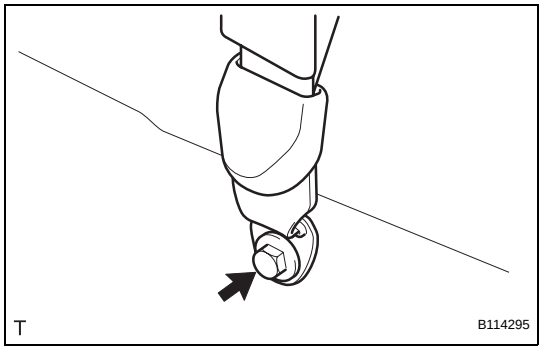


(b) Remove the bolt and the anchor plate.

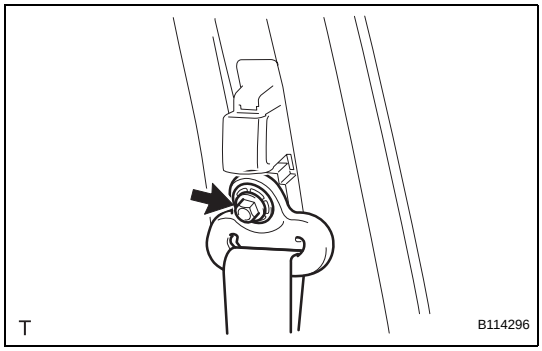


(c) Remove the bolt and the through anchor.

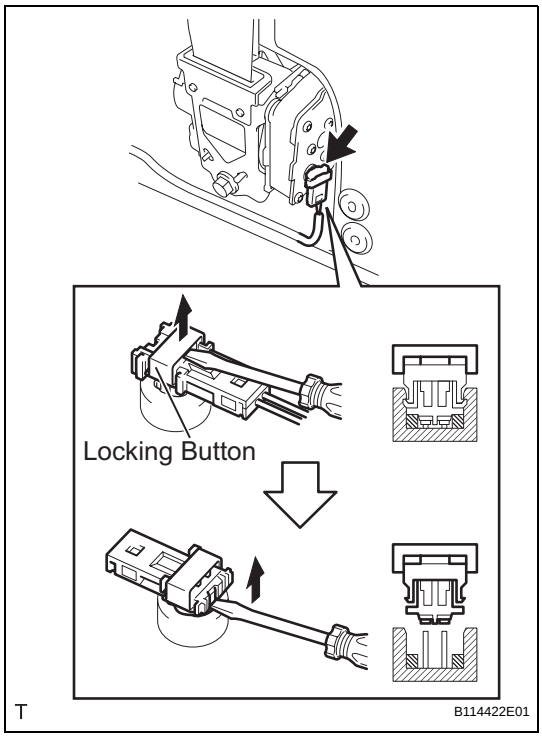


(d) Disconnect the pretensioner connector.
   (1) Using a screwdriver, release the locking button.
   (2) Using a screwdriver, disconnect the pretensioner connector.

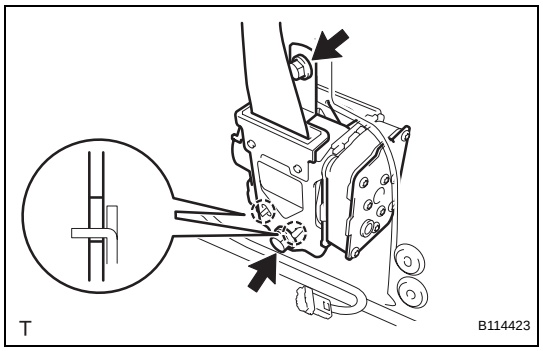


(e) Remove the 2 bolts, the 2 hooks and the retractor.

**9. REMOVE CENTER PILLAR UPPER GARNISH (See page IR-55)**



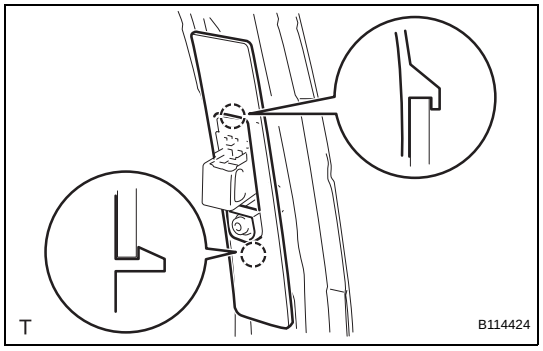


**10. REMOVE SHOULDER BELT ANCHOR COVER**

(a) Disengage the 2 claws and remove the shoulder belt anchor cover.

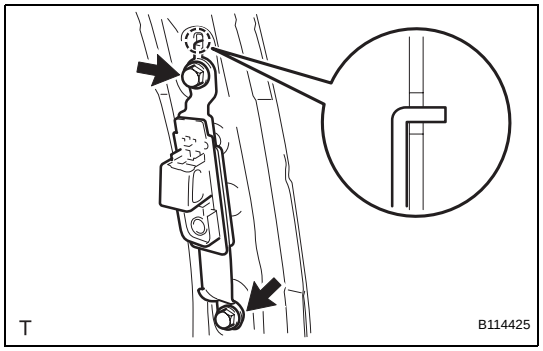


**11. REMOVE FRONT SHOULDER BELT ANCHOR ADJUSTER ASSEMBLY**

(a) Remove the 2 bolts, the hook and the front shoulder belt anchor adjuster.

SB

# INSTALLATION

**CAUTION:**
**Some of these service operations affect the SRS airbag system. Read the precautionary notices concerning the SRS airbag system before servicing (See page RS-1).**
HINT:
The procedure described below is for the RH side. Use the same procedure for both the RH and LH sides, unless otherwise specified.

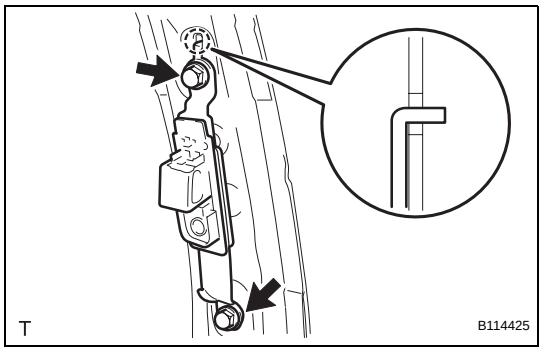


**1. INSTALL FRONT SHOULDER BELT ANCHOR ADJUSTER ASSEMBLY**
(a) Insert the hook into the body hole and install the shoulder belt anchor adjuster with the 2 bolts.
**Torque: 42 N*m (430 kgf*cm, 31 ft.*lbf)**

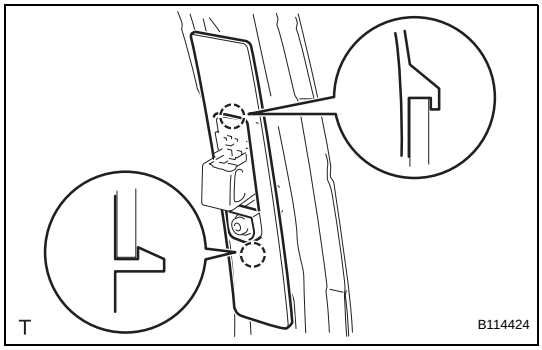


**2. INSTALL SHOULDER BELT ANCHOR COVER**
(a) Engage the 2 claws and install the shoulder belt anchor cover.

**3. INSTALL CENTER PILLAR UPPER GARNISH (See page IR-76)**

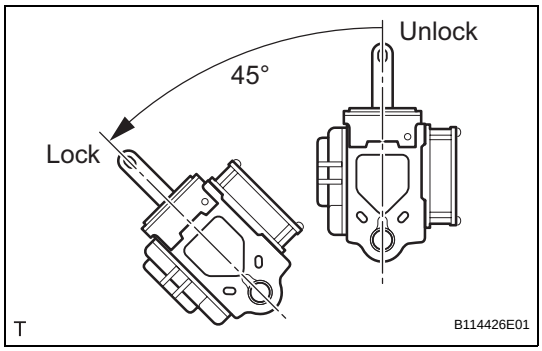


**4. INSTALL FRONT SEAT OUTER BELT ASSEMBLY**
(a) Check the angle of inclination required to lock the retractor.
(1) Gently incline the retractor from its initial position. Check that the belt does not lock when the retractor is inclined 15° or less in any direction. Also, check that the belt locks when the inclination of the retractor is 45° or more.
**NOTICE:**
**Do not disassemble the retractor.**
If the operation is not as specified, replace the front seat outer belt.

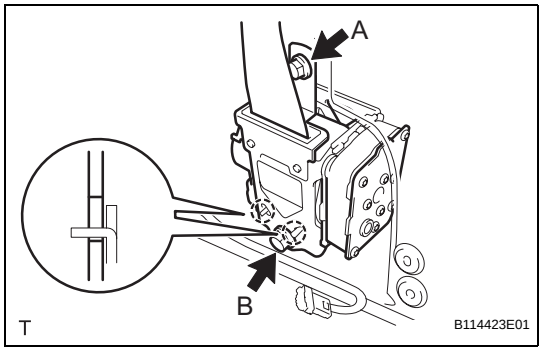


(b) Hook the lower stay of the retractor onto the 2 body hooks and provisionally install the retractor with the 2 bolts.
(c) Tighten bolt A and then bolt B.
**Torque: 4.9 N*m (50 kgf*cm, 43 in.*lbf) for bolt A**
**42 N*m (430 kgf*cm, 31 ft.*lbf) for bolt B**

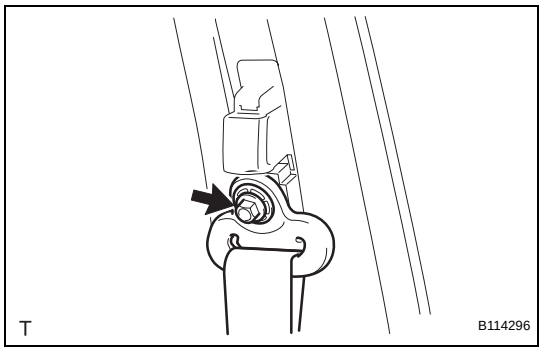


(d) Install the through anchor with the bolt.
**Torque: 42 N*m (430 kgf*cm, 31 ft.*lbf)**

(e) Check that the ELR locks.
**NOTICE:**
**Perform the check with the front seat outer belt installed.**
(1) With the belt installed, check that the belt locks when it is pulled out quickly.
If the operation is not as specified, replace the front seat outer belt.



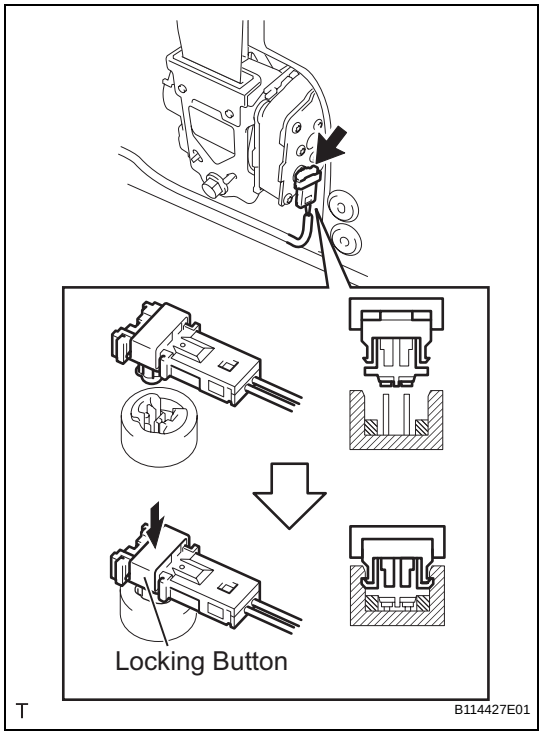


(f) Connect the pretensioner connector.
(1) Connect the pretensioner connector.
(2) Lock the locking button.
**NOTICE:**
**Securely lock the locking button.**

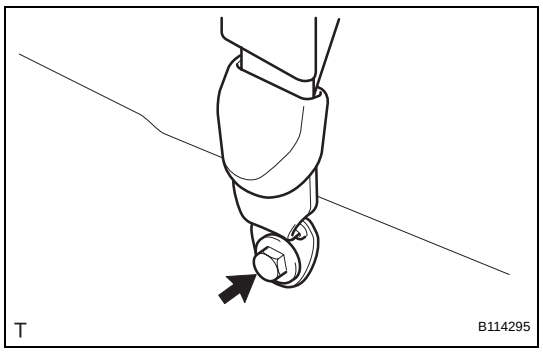


(g) Install the anchor plate with the bolt.
**Torque: 42 N*m (430 kgf*cm, 31 ft.*lbf)**

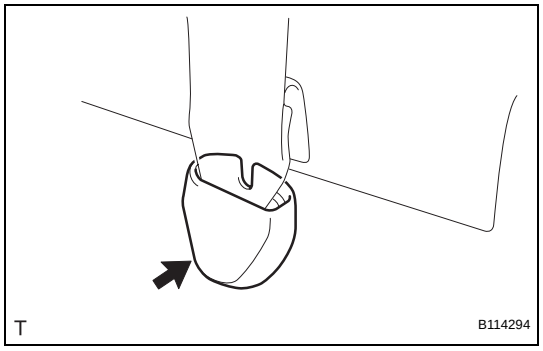


(h) Install the anchor plate cover.

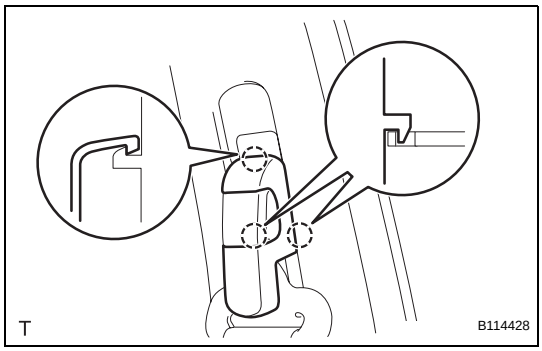


**5. INSTALL SEAT BELT ANCHOR COVER CAP**

(a) Engage the 3 claws and install the seat belt anchor cover cap.

**6. INSTALL CENTER PILLAR LOWER GARNISH (See page IR-76)**

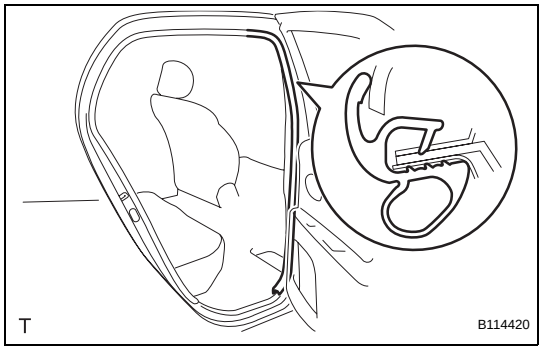


**7. INSTALL REAR DOOR OPENING TRIM WEATHERSTRIP**

(a) Install the rear door opening trim weatherstrip.

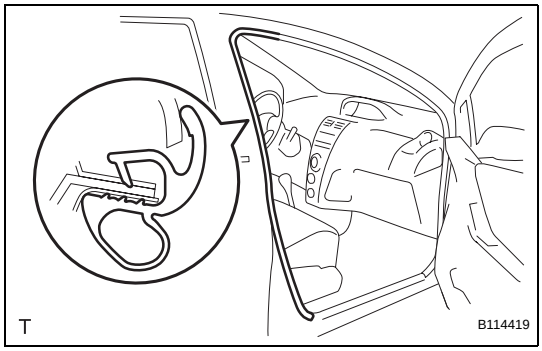


**8. INSTALL FRONT DOOR OPENING TRIM WEATHERSTRIP**

(a) Install the front door opening trim weatherstrip.

**9. INSTALL REAR DOOR SCUFF PLATE (See page IR-80)**

**10. INSTALL FRONT DOOR SCUFF PLATE (See page IR-82)**

**11. CONNECT CABLE TO NEGATIVE BATTERY TERMINAL**

**Torque: 5.4 N*m (55 kgf*cm, 48 in.*lbf)**

**12. INSPECT SRS WARNING LIGHT**

(See page RS-31)

# DISPOSAL

**CAUTION:**

- **Never dispose of a front seat outer belt that has an inactivated pretensioner.**
- **The seat belt pretensioner produces a loud, exploding sound when it activates. Perform the operation outside and where it will not be a nuisance to persons nearby.**
- **Stand at least 10 m (33 ft) away when activating a front seat outer belt (with seat belt pretensioner).**
- **Use gloves and safety glasses when handling a front seat outer belt with an activated pretensioner.**
- **Always wash your hands with water after completing an activation.**
- **Do not apply water to a front seat outer belt that has an activated pretensioner.**
- **Always use the specified SST (SRS airbag deployment tool) when activating the seat belt pretensioner.**
- **Perform the operation in a place away from electrical interference.**

HINT:
The procedure described below is for the RH side. Use the same procedure for the RH and LH sides, unless otherwise specified.

**1. DISPOSE OF FRONT SEAT OUTER BELT ASSEMBLY (When Installed in Vehicle)**

HINT:
Prepare a battery as the power source to activate the seat belt pretensioner.

(a) Check whether SST is functioning.
**SST 09082-00700**
**CAUTION:**
**Always use the specified SST when activating the seat belt pretensioner.**

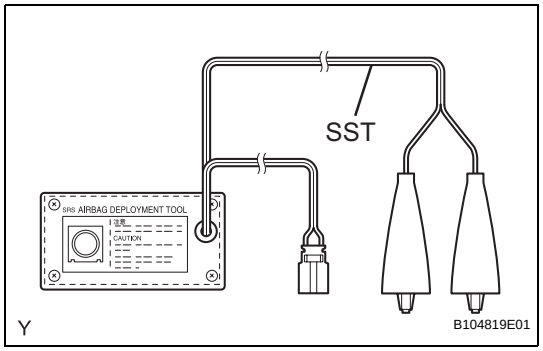


(1) Connect the SST red clip to the positive battery terminal and the black clip to the negative battery terminal.
HINT:
Do not connect the yellow connector. The yellow connector is for connections to the seat belt pretensioner.

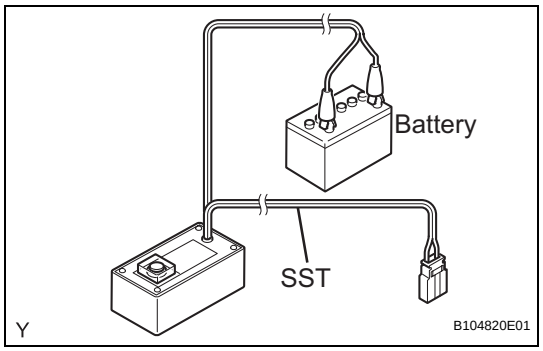

SB

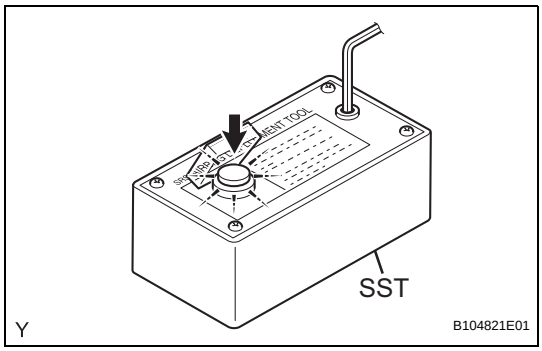


(2) Press the SST activation switch and check that the LED of the SST activation switch turns on.
**CAUTION:**
**If the LED turns on when the activation switch is not being pressed, SST may be malfunctioning. Do not use SST.**

(b) Disconnect SST from the battery.

(c) Disconnect the pretensioner connector.

(1) Disconnect the cable from negative battery terminal.

(2) Remove the front door scuff plate (See page IR-49).

(3) Remove the rear door scuff plate (See page IR-51).

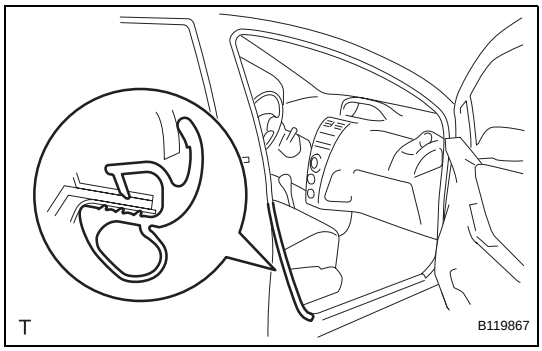


(4) Remove the front door opening trim weatherstrip.

1. Remove the front door opening trim weatherstrip to the extent that the center pillar lower garnish can be removed.

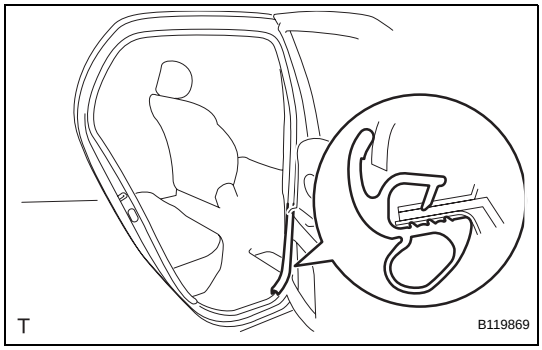


(5) Remove the rear door opening trim weatherstrip.

1. Remove the rear door opening trim weatherstrip to the extent that the center pillar lower garnish can be removed.

(6) Remove the center pillar lower garnish (See page IR-55 ).

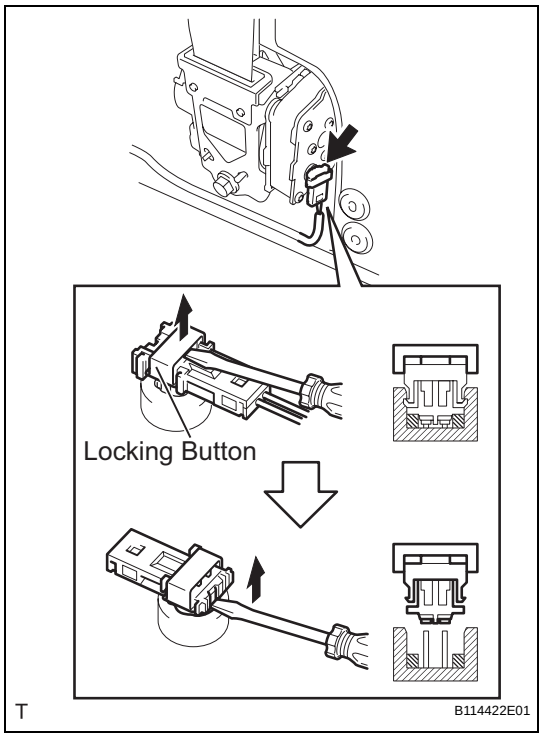


(7) Disconnect the pretensioner connector as shown in the illustration.

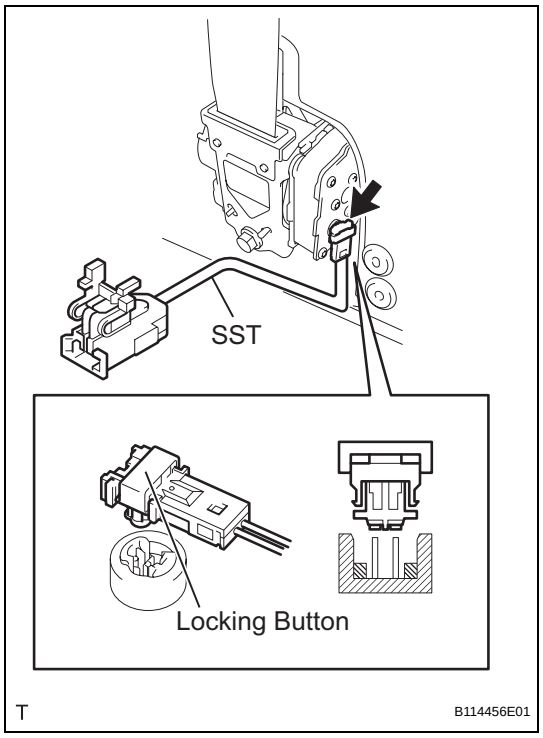


(d) Connect SST.

(1) Connect SST, then connect the yellow connector to the seat belt pretensioner.
**SST 09082-00770**
**NOTICE:**
**Do not lock the secondary lock of the twin lock to avoid damaging the SST connector and wire harness**

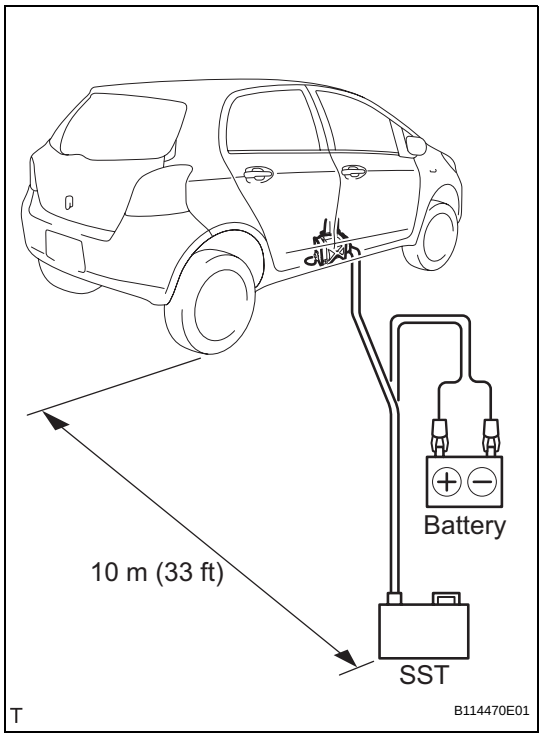


(2) Move SST at least 10 m (33 ft) away from the front of the vehicle.
**SST 09082-00700**

(3) Close the doors and windows of the vehicle.
HINT:
Do not close the windows fully. Leave a gap for inserting the SST wire harness.
**NOTICE:**
**Do not damaging the SST wire harness.**

(4) Connect the SST red clip to the positive battery terminal and the black clip to the negative battery terminal.

(e) Activate the seat belt pretensioner.

(1) Confirm that no one is inside the vehicle or within 10 m (33 ft) of the vehicle.

(2) Press the SST activation switch and activate the seat belt pretensioner.
HINT:
The seat belt pretensioner operates simultaneously with the SST activation switch LED light.

(f) Disconnect SST.

(g) Dispose of the front seat outer belt (with the seat belt pretensioner).
HINT:
When scrapping a vehicle, activate the seat belt pretensioner, and then scrap the vehicle with the activated front seat outer belt still installed.
**CAUTION:**
- **Do not touch the front seat outer belt for at least 30 minutes after the seat belt pretensioner has been activated. It is very hot.**
- **Use gloves and safety glasses when handling a front seat outer belt with a pretensioner that has been activated.**
- **Always wash your hands with water after completing the operation.**
- **Do not apply water to a front seat outer belt that has an activated pretensioner.**

**2. DISPOSE OF FRONT SEAT OUTER BELT ASSEMBLY (When not Installed in Vehicle)**
HINT:
Prepare a battery as the power source to activate the seat belt pretensioner.
**NOTICE:**
- **When only disposing of the front seat outer belt (with the seat belt pretensioner), never use the customer's vehicle to activate the seat belt pretensioner.**
- **Follow the procedure described below when activating the seat belt pretensioner.**

(a) Remove the front seat outer belt assembly (See page SB-59).

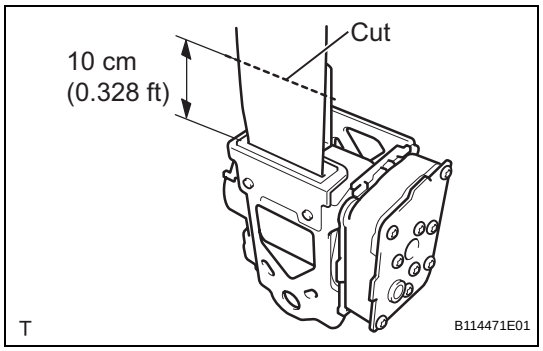


(b) Wind the seat belt with the retractor.

(c) When the seat belt is sufficiently wound, cut the seat belt approximately 10 cm (0.328 ft) from the retractor, as shown in the illustration.
HINT:
The retractor resistance increases in correlation with how much the seat belt is wound.



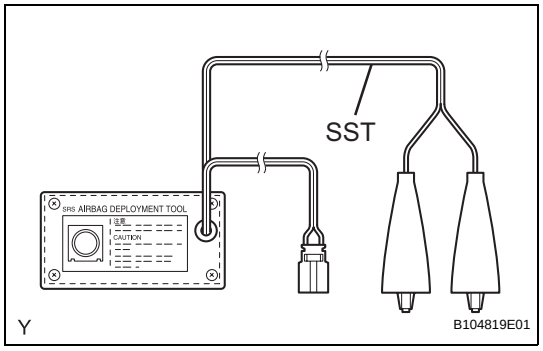


(d) Check whether SST is functioning.
**SST 09082-00700**
**CAUTION:**
**Always use the specified SST when activating the seat belt pretensioner.**

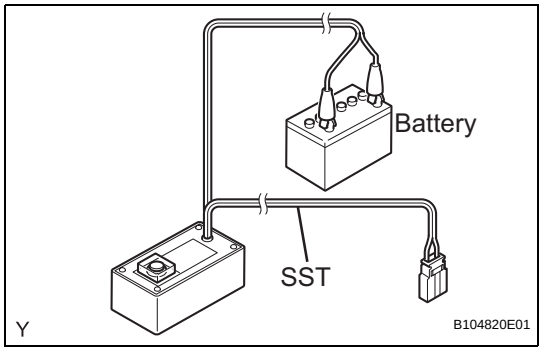


(1) Connect the SST red clip to the positive battery terminal and the black clip to the negative battery terminal.
HINT:
Do not connect the yellow connector. The yellow connector is for connections to the seat belt pretensioner.

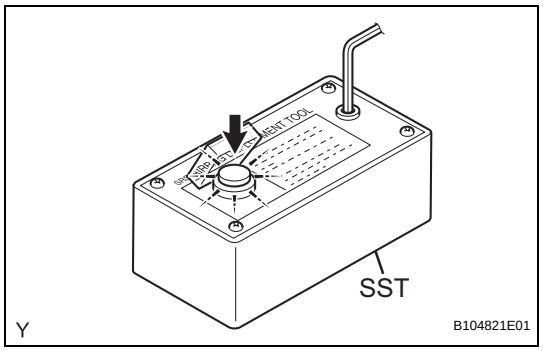


(2) Press the SST activation switch and check that the LED of the SST activation switch turns on.
**CAUTION:**
**If the LED turns on when the activation switch is not being pressed, SST may be malfunctioning. Do not use SST.**

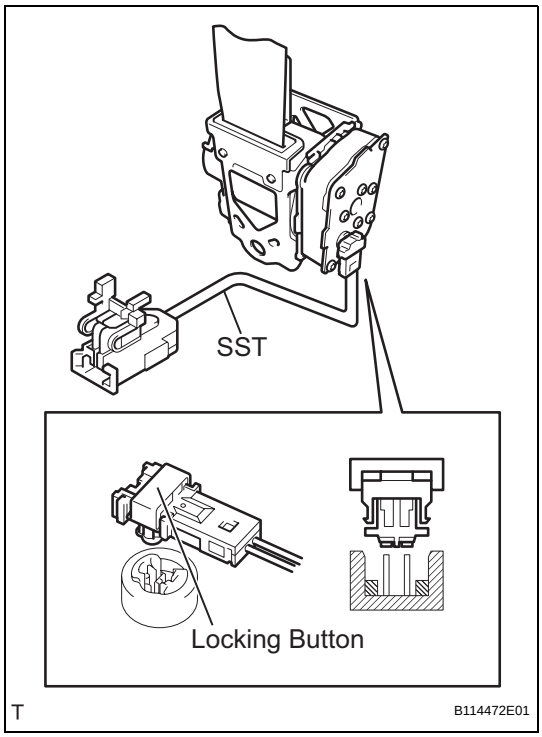


(e) Connect SST.

(1) Connect SST, then connect the yellow connector to the seat belt pretensioner.

**SST 09082-00770**

**NOTICE:**

**Do not lock the secondary lock of the twin lock to avoid damaging the SST connector and wire harness.**

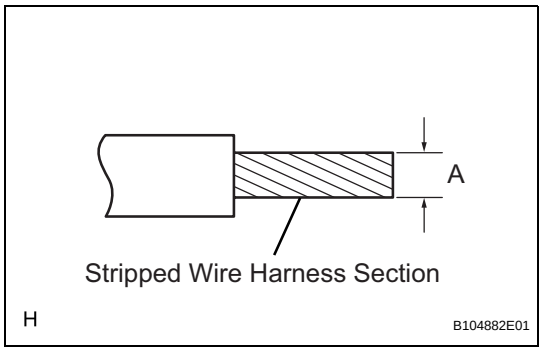


(2) Using a service-purpose wire harness for the vehicle, tie the seat belt pretensioner to the tire with a wheel attached.

**Stripped wire harness section:**

| Area | Measurement |
|---|---|
| A | 1.25 $mm^2$ or more (0.0019 $in^2$ or more) |

**CAUTION:**

- **Do not use wire harnesses that are too thin or any other object to tie the seat belt pretensioner because they may snap due to the shock when the pretensioner is deployed.**
- **Always use a wire harness for vehicle use, with a cross section of at least 1.25 $mm^2$ (0.0019 $in^2$).**

HINT:

To calculate the area of the stripped wire harness cross section:

Area = 3.14 x $(Diameter)^2$ divided by 4

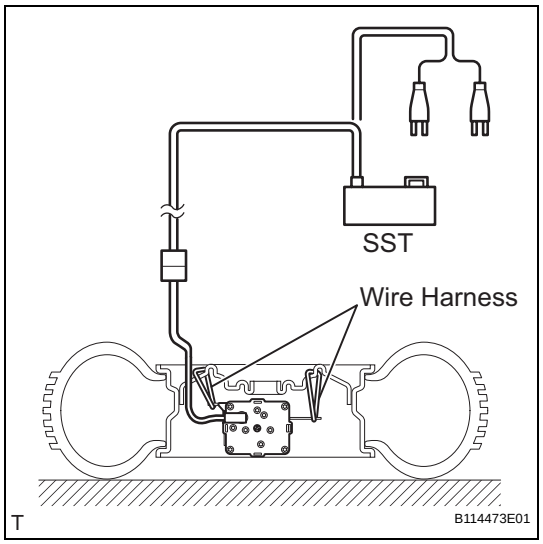


(3) Connect SST.
**SST 09082-00700**
**NOTICE:**
- **Do not lock the secondary lock of the twin lock to avoid damaging the SST connector and wire harness.**
- **Set up the front seat outer belt, as shown in the illustration.**



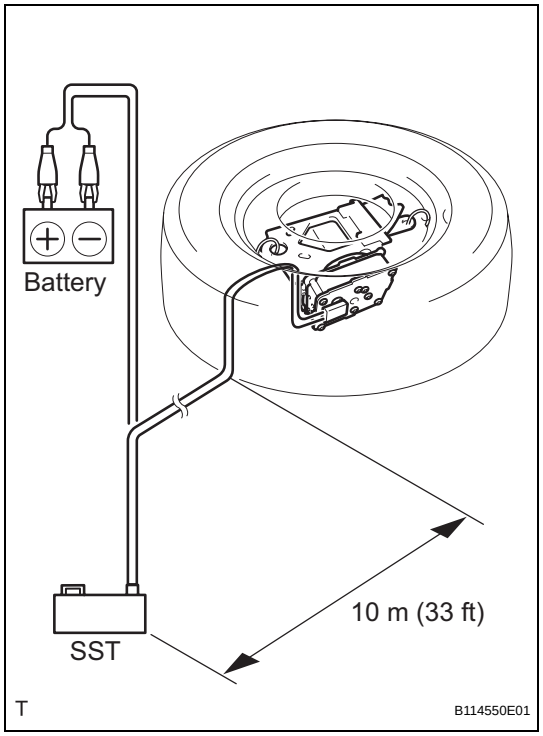


(4) Move SST at least 10 m (33 ft) away from the wheel.
**NOTICE:**
**Do not damage the SST wire harness.**

(f) Activate the seat belt pretensioner.
(1) Connect the SST red clip to the positive battery terminal and the black clip to the negative battery terminal.
(2) Check that no one is within 10 m (33 ft) of the wheel.
(3) Press the SST activation switch and activate the seat belt pretensioner.
HINT:
The seat belt pretensioner operates simultaneously with the SST activation switch LED light.

(g) Disconnect SST.

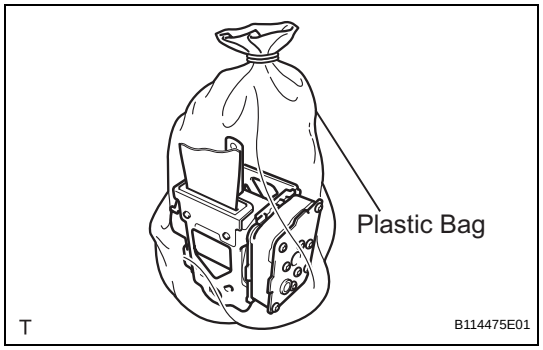


(h) Dispose of the front seat outer belt (with the seat belt pretensioner).
**CAUTION:**
- **Do not touch the front seat outer belt for at least 30 minutes after the seat belt pretensioner has been activated. It is very hot.**
- **Use gloves and safety glasses when handling a front seat outer belt with a pretensioner that has been activated.**
- **Always wash your hands with water after completing the operation.**
- **Do not apply water to a front seat outer belt that has an activated pretensioner.**

(1) Place the front seat outer belt in a plastic bag, tie the end tightly and dispose of it in the same way as other general parts.

# FRONT SEAT OUTER BELT ASSEMBLY (for Hatchback 3 Door)

## COMPONENTS

SB

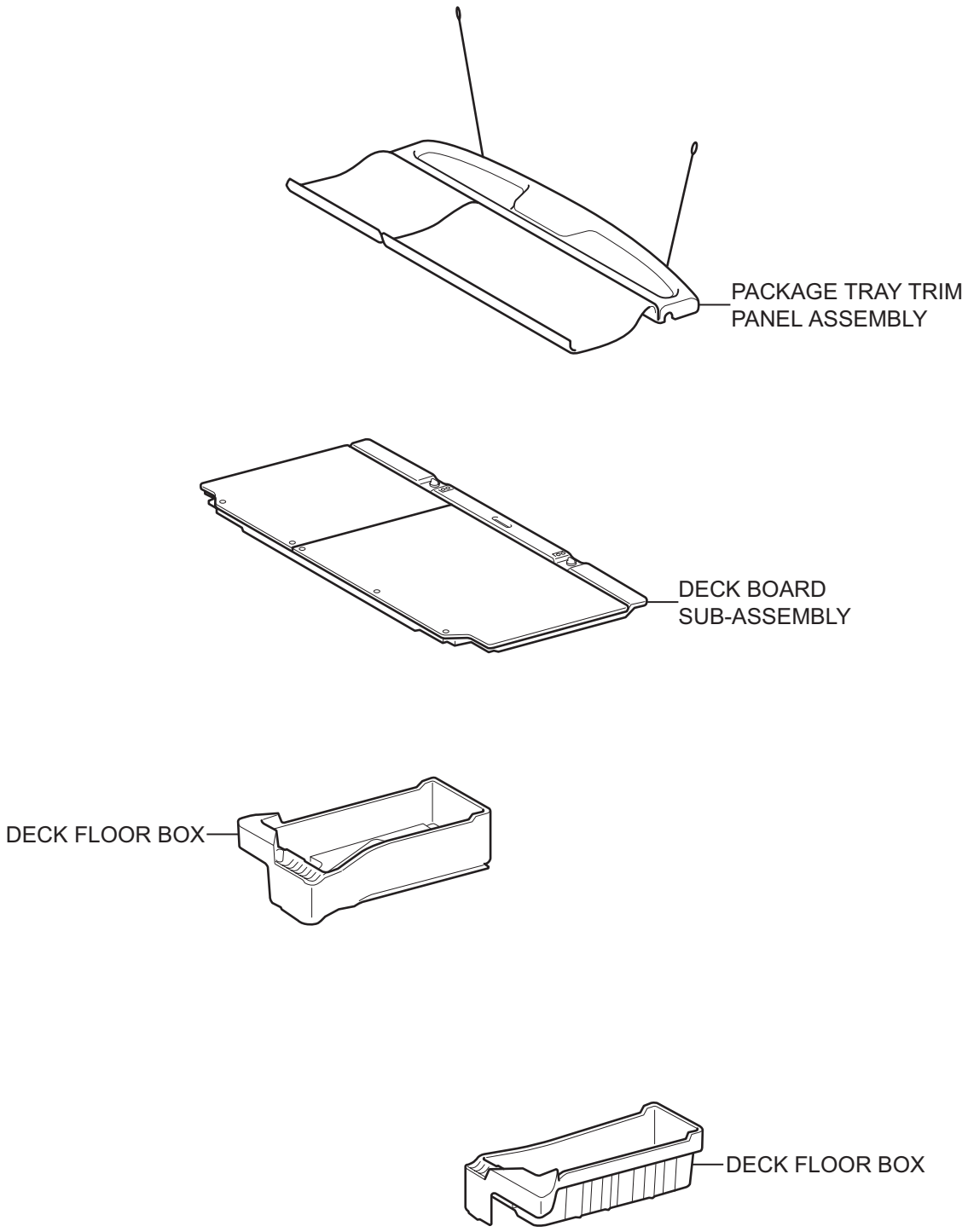


T

B127707E02

**for 60/40 Split Seat Type:**

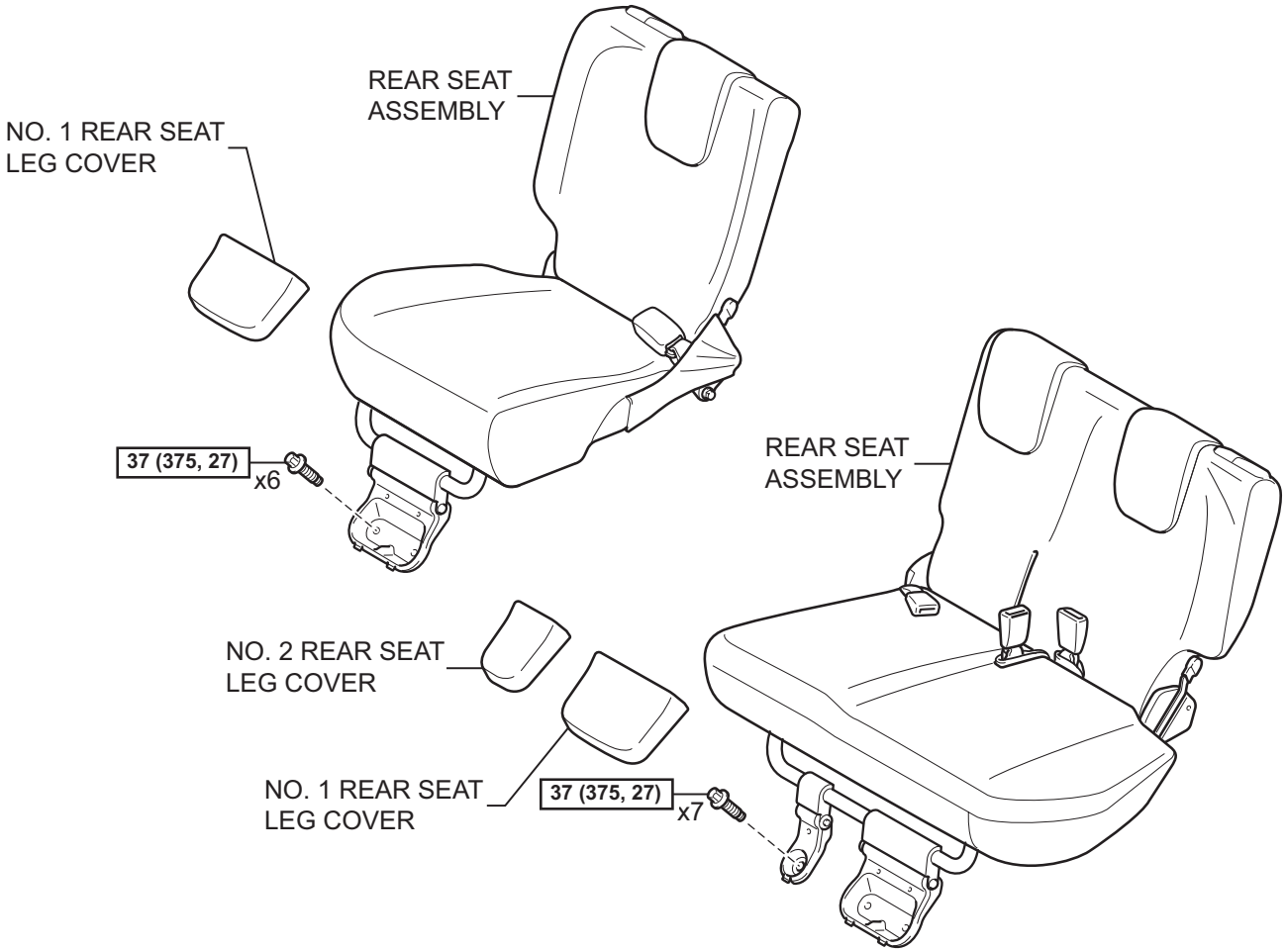


**for Hold Down Seat Type:**

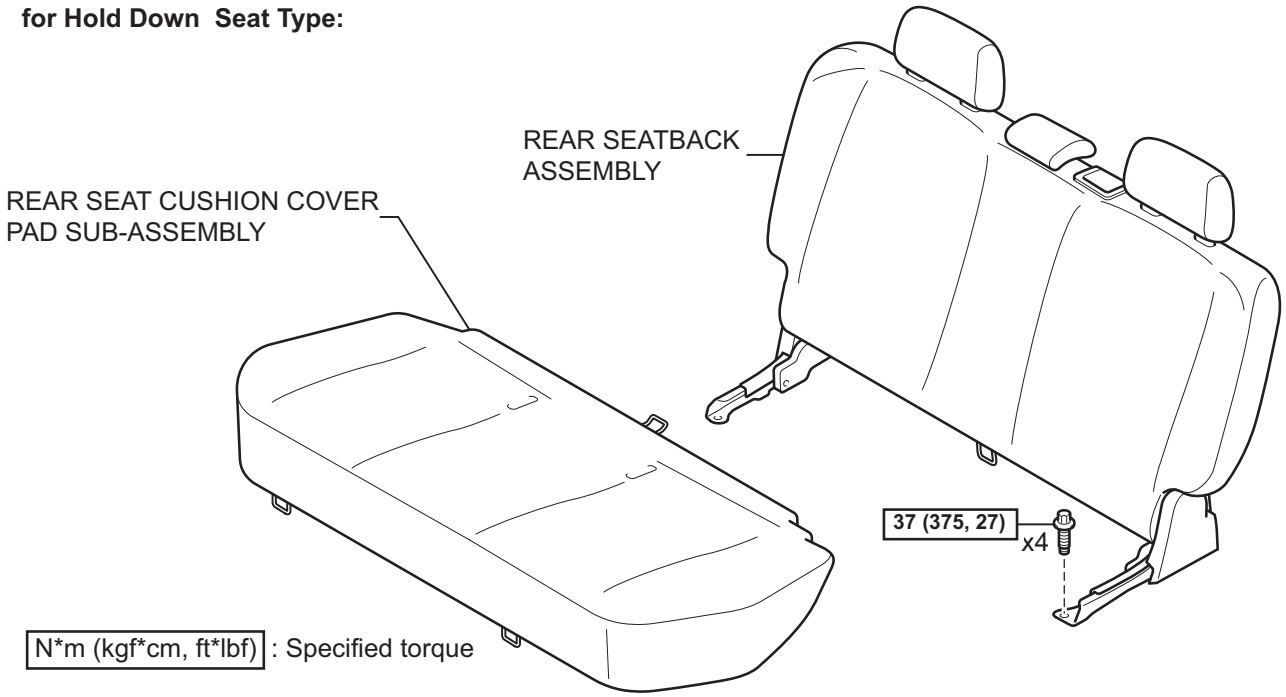


N*m (kgf*cm, ft*lbf) : Specified torque

T

B121713E05

SB

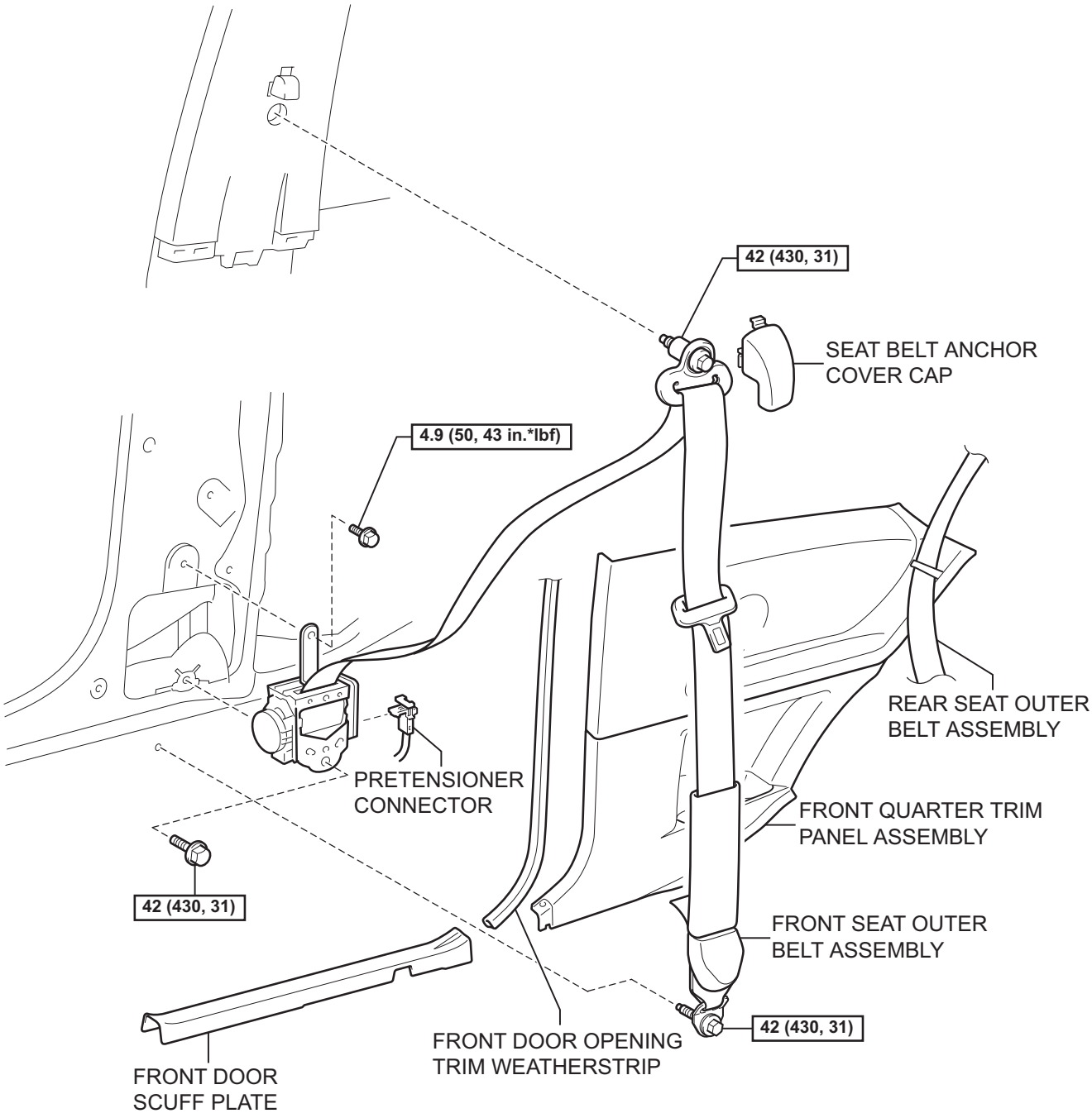


N*m (kgf*cm, ft*lbf) : Specified torque

T

B138697E01

# REMOVAL

**CAUTION:**
**Some of these service operations affect the SRS airbag system. Read the precautionary notices concerning the SRS airbag system before servicing (See page RS-1).**
**NOTICE:**
**Always use "Torx" socket wrench E10 when removing the rear seat.**
HINT:
The procedure described below is for the RH side. Use the same procedure for both the RH and LH sides, unless otherwise specified.

1. **DISCONNECT CABLE FROM NEGATIVE BATTERY TERMINAL**
   **CAUTION:**
   **Wait for at least 90 seconds after disconnecting the cable to prevent the airbag from working.**
2. **REMOVE PACKAGE TRAY TRIM PANEL ASSEMBLY (See page IR-48)**
3. **REMOVE DECK BOARD SUB-ASSEMBLY (See page IR-48)**
4. **REMOVE DECK FLOOR BOX**
   (a) for RH Side:
   (1) Remove the deck floor box (See page IR-48).
   (b) for LH Side:
   HINT:
   Use the same procedure as for the RH side.
5. **REMOVE NO. 1 REAR SEAT LEG COVER (for 60/40 Split Seat Type)**
   (a) for RH Side:
   (1) Remove the No. 1 rear seat leg cover (See page SE-89).
   (b) for LH Side:
   (1) Remove the No. 1 rear seat leg cover (See page SE-70).
6. **REMOVE NO. 2 REAR SEAT LEG COVER (for 60/40 Split Seat Type LH Side) (See page SE-70)**
7. **REMOVE REAR SEAT ASSEMBLY (for 60/40 Split Seat Type)**
   (a) for RH Side:
   (1) Remove the rear seat assembly (See page SE-89).
   (b) for LH Side:
   (1) Remove the rear seat assembly (See page SE-71).
8. **REMOVE REAR SEAT CUSHION COVER PAD SUB-ASSEMBLY (for Hold Down Seat Type) (See page SE-114)**
9. **REMOVE REAR SEATBACK ASSEMBLY (for Hold Down Seat Type) (See page SE-115)**

SB

**10. REMOVE FRONT DOOR SCUFF PLATE (See page IR-97)**

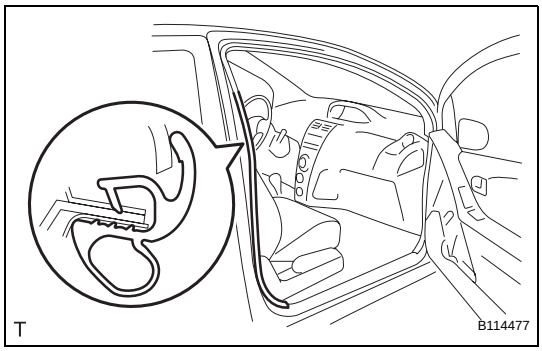


**11. REMOVE FRONT DOOR OPENING TRIM WEATHERSTRIP**

(a) Remove the front door opening trim weatherstrip to the extent that the front quarter trim panel can be removed.

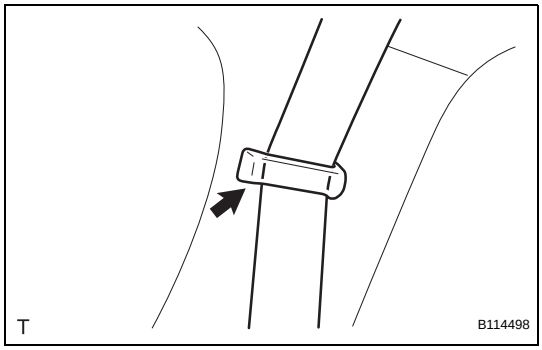


**12. REMOVE REAR SEAT OUTER BELT ASSEMBLY**

(a) Remove the belt.

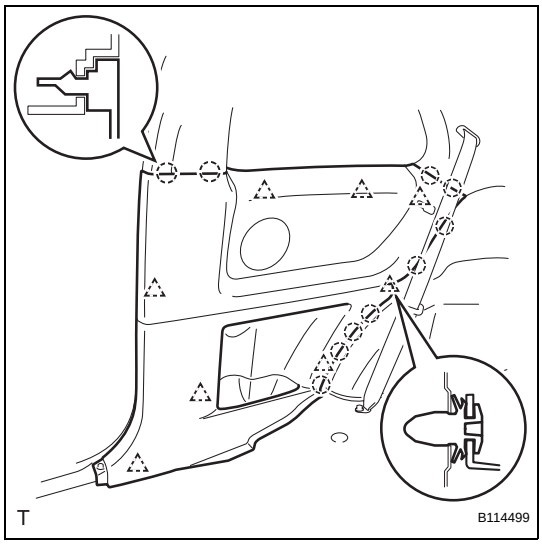


**13. REMOVE FRONT QUARTER TRIM PANEL ASSEMBLY**

(a) Disengage the 8 clips, the retainer and the 10 claws and remove the front quarter trim panel.

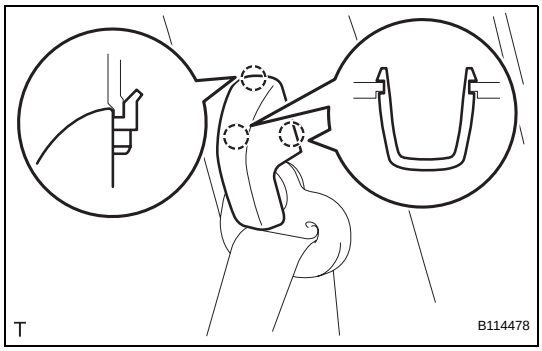


**14. REMOVE SEAT BELT ANCHOR COVER CAP**

(a) Disengage the 3 claws and remove the seat belt anchor cover cap.

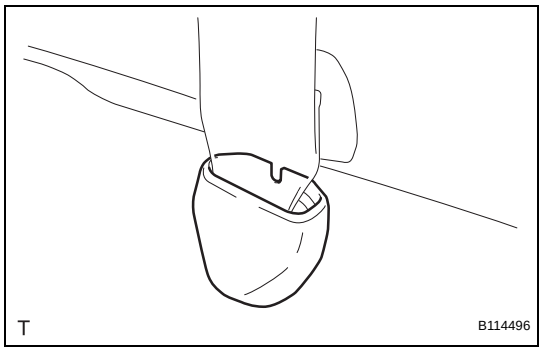


**15. REMOVE FRONT SEAT OUTER BELT ASSEMBLY**

(a) Remove the anchor plate cover.

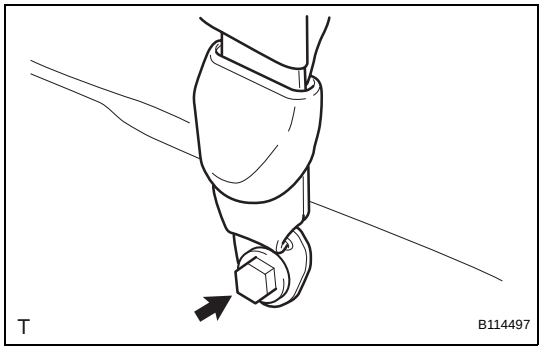


(b) Remove the bolt and the anchor plate.

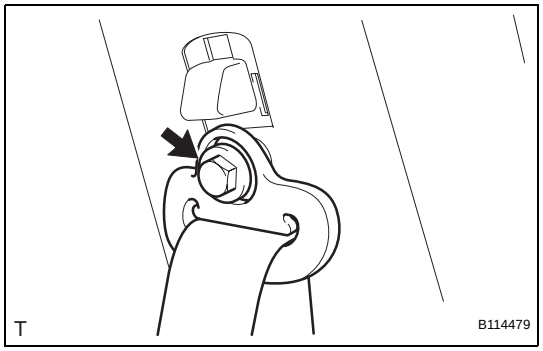


(c) Remove the bolt and the through anchor.

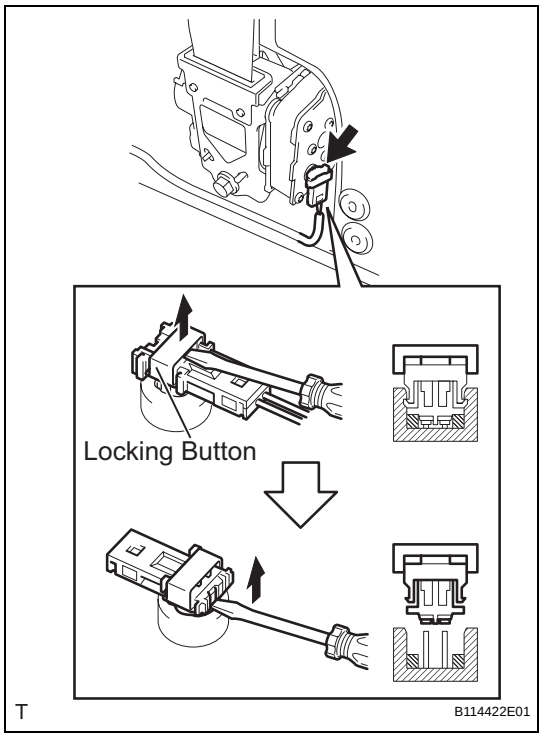


(d) Disconnect the pretensioner connector.
   (1) Using a screwdriver, release the locking button.
   (2) Using a screwdriver, disconnect the pretensioner connector.

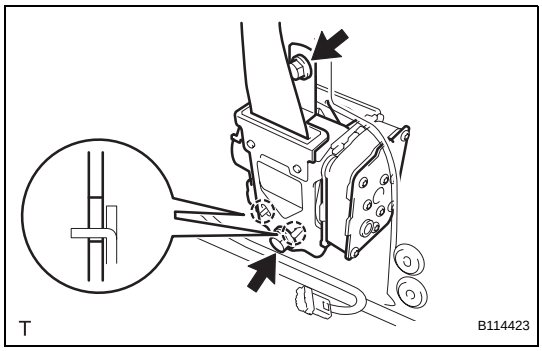


(e) Remove the 2 bolts, the 2 hooks and the retractor.

# INSTALLATION

**CAUTION:**
**Some of these service operations affect the SRS airbag system. Read the precautionary notices concerning the SRS airbag system before servicing (See page RS-1).**
**NOTICE:**
**Always use "Torx" socket wrench E10 when installing the rear seat.**
HINT:
The procedure described below is for the RH side. Use the same procedure for both the RH and LH sides, unless otherwise specified.

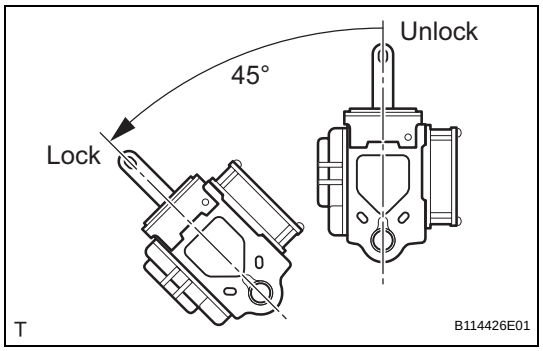


**1. INSTALL FRONT SEAT OUTER BELT ASSEMBLY**

(a) Check the angle of inclination required to lock the retractor.

(1) Gently incline the retractor from its initial position. Check that the belt does not lock when the retractor is inclined 15° or less in any direction. Also, check that the belt locks when the inclination of the retractor is 45° or more.
**NOTICE:**
**Do not disassemble the retractor.**
If the operation is not as specified, replace the front seat outer belt.

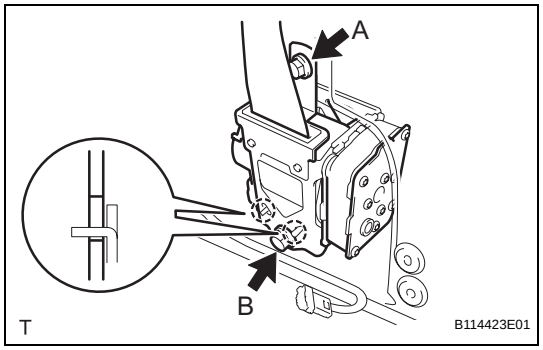


(b) Hook the lower stay of the retractor onto the 2 body hooks and provisionally install the retractor with the 2 bolts.

(c) Tighten bolt A and then bolt B.
**Torque: 4.9 N*m (50 kgf*cm, 43 in.*lbf) for bolt A**
**42 N*m (430 kgf*cm, 31 ft.*lbf) for bolt B**

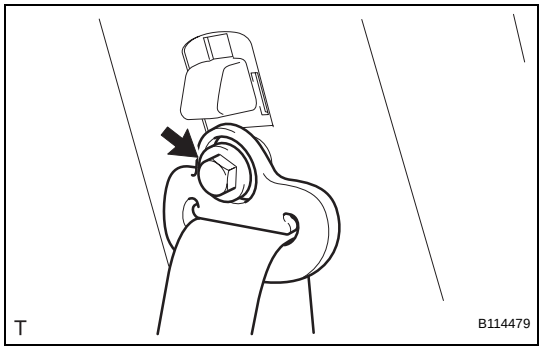


(d) Install the through anchor with the bolt.
**Torque: 42 N*m (430 kgf*cm, 31 ft.*lbf)**

(e) Check that the ELR locks.
**NOTICE:**
**Perform the check with the front seat outer belt installed**

(1) With the belt installed, check that the belt locks when it is pulled out quickly.
If the operation is not as specified, replace the front seat outer belt.

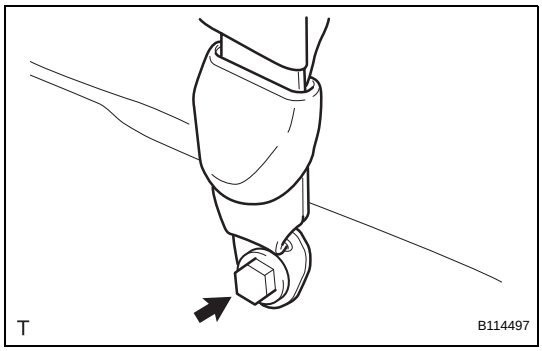


(f) Install the anchor plate with the bolt.
**Torque: 42 N*m (430 kgf*cm, 31 ft.*lbf)**

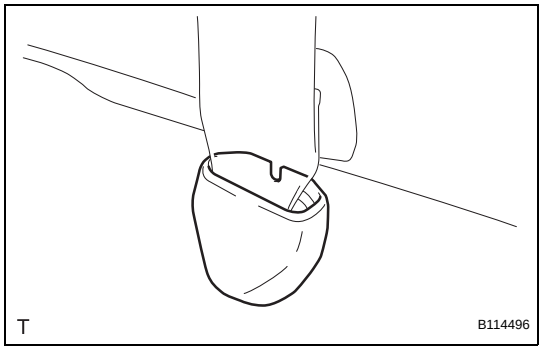


(g) Install the anchor plate cover.

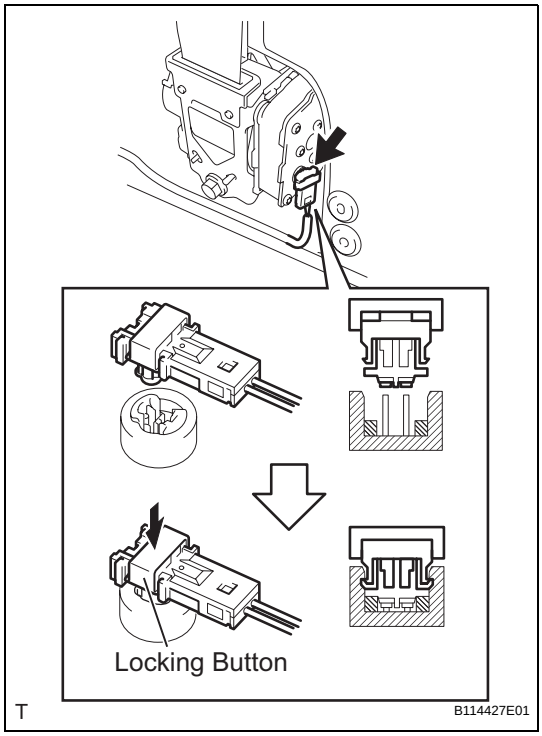


(h) Connect the pretensioner connector.
(1) Connect the pretensioner connector.
(2) Lock the locking button.
**NOTICE:**
**Securely lock the locking button.**

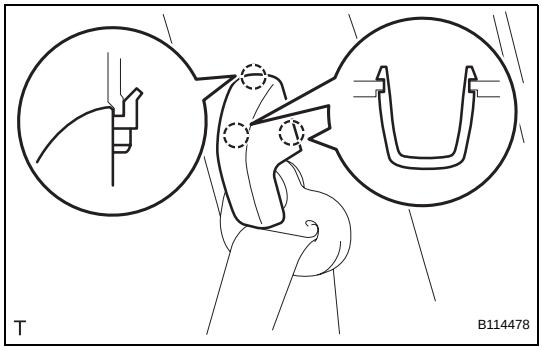


**2. INSTALL SEAT BELT ANCHOR COVER CAP**

(a) Engage the 3 claws and install the seat belt anchor cover cap.

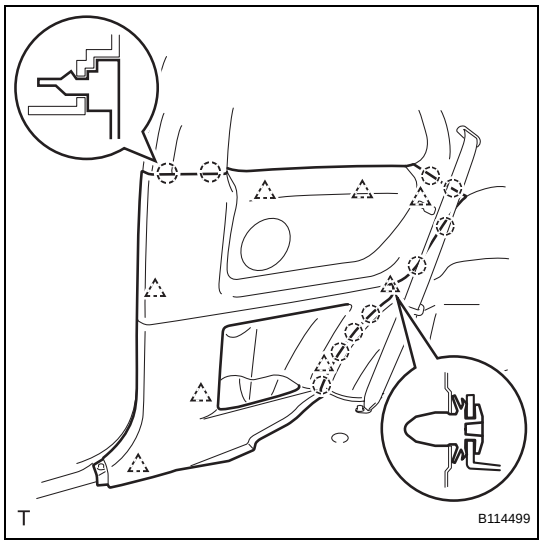


**3. INSTALL FRONT QUARTER TRIM PANEL ASSEMBLY**

(a) Engage the 8 clips, the retainer and the 10 claws and install the front quarter trim panel.

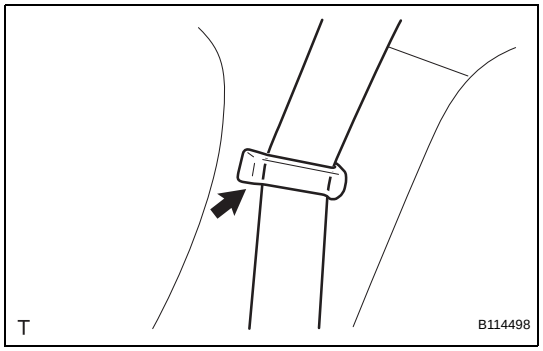


**4. INSTALL REAR SEAT OUTER BELT ASSEMBLY**

(a) Install the belt.

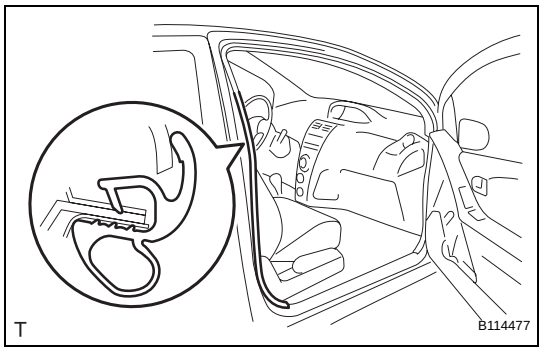


**5. INSTALL FRONT DOOR OPENING TRIM WEATHERSTRIP**

(a) Install the front door opening trim weatherstrip.

**6. INSTALL FRONT DOOR SCUFF PLATE (See page IR-119)**

**7. INSTALL REAR SEAT ASSEMBLY (for 60/40 Split Seat Type)**

(a) for RH Side:

(1) Install the rear seat assembly (See page SE-102).

(b) for LH Side:

(1) Install the rear seat assembly (See page SE-84).

**8. INSTALL NO. 2 REAR SEAT LEG COVER (for 60/40 Split Seat Type LH Side) (See page SE-85)**

**9. INSTALL NO. 1 REAR SEAT LEG COVER (for 60/40 Split Seat Type)**

(a) for RH Side:

(1) Install the No. 1 rear seat leg cover (See page SE-89).

(b) for LH Side:

(1) Install the No. 1 rear seat leg cover (See page SE-85).

**10. INSTALL REAR SEATBACK ASSEMBLY (for Hold Down Seat Type) (See page SE-122)**

**11. INSTALL REAR SEAT CUSHION COVER PAD SUB-ASSEMBLY (for Hold Down Seat Type) (See page SE-123)**

**12. INSTALL DECK FLOOR BOX**

(a) for RH side:

(1) Install the deck floor box (See page IR-83).

(b) for LH Side:

HINT:

Use the same procedure as for the RH side.

**13. INSTALL DECK BOARD SUB-ASSEMBLY (See page IR-83)**

**14. INSTALL PACKAGE TRAY TRIM PANEL ASSEMBLY (See page IR-83)**

**15. CONNECT CABLE TO NEGATIVE BATTERY TERMINAL**

**Torque: 5.4 N*m (55 kgf*cm, 48 in.*lbf)**

**16. INSPECT SRS WARNING LIGHT**

(See page RS-31)

# DISPOSAL

**CAUTION:**

- **Never dispose of a front seat outer belt that has an inactivated pretensioner.**
- **The seat belt pretensioner produces a loud, exploding sound when it activates. Perform the operation outside and where it will not be a nuisance to persons nearby.**
- **Stand at least 10 m (33 ft) away when activating a front seat outer belt (with seat belt pretensioner).**
- **Use gloves and safety glasses when handling a front seat outer belt with an activated pretensioner.**
- **Always wash your hands with water after completing an activation.**
- **Do not apply water to a front seat outer belt that has an activated pretensioner.**
- **Always use the specified SST (SRS airbag deployment tool) when activating the seat belt pretensioner.**
- **Perform the operation in a place away from electrical interference.**

**NOTICE:**

**Always use "Torx" socket wrench E10 when removing the rear seat.**

HINT:

The procedure described below is for the RH side. Use the same procedure for both the RH and LH sides, unless otherwise specified.

**1. DISPOSE OF FRONT SEAT OUTER BELT ASSEMBLY (When Installed in Vehicle)**

HINT:

Prepare a battery as the power source to activate the seat belt pretensioner.

(a) Check whether SST is functioning.

**SST 09082-00700**

**CAUTION:**

**Always use the specified SST when activating the seat belt pretensioner.**

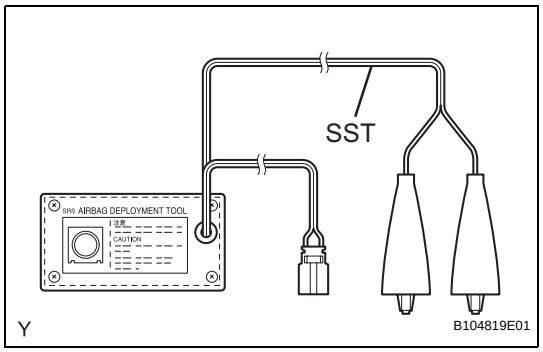


(1) Connect the SST red clip to the positive battery terminal and the black clip to the negative battery terminal.

HINT:

Do not connect the yellow connector. The yellow connector is for connections to the seat belt pretensioner.

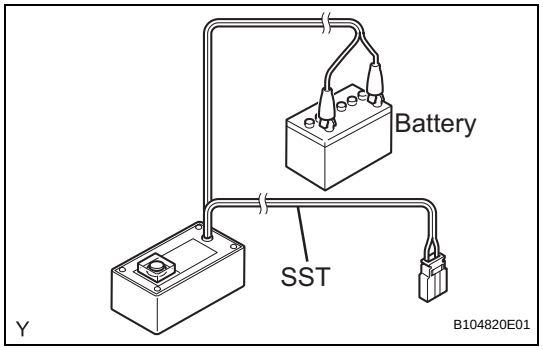

SB

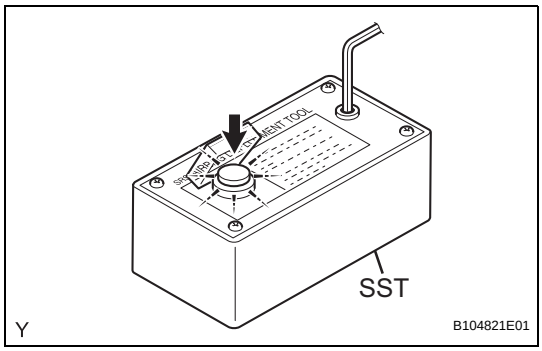


(2) Press the SST activation switch and check that the LED of the SST activation switch turns on.
**CAUTION:**
**If the LED turns on when the activation switch is not being pressed, SST may be malfunctioning. Do not use SST.**

(b) Disconnect SST from the battery.

(c) Disconnect the pretensioner connector.

(1) Disconnect the cable from the negative battery terminal.

(2) Remove the package tray trim panel assembly (See page IR-48).

(3) Remove the deck board sub-assembly (See page IR-48).

(4) Remove the deck floor box RH (See page IR-48).

(5) Remove the deck floor box LH (for 60/40 Split Seat Type and Bench Seat Type).
HINT:
Use the same procedure as for the RH side.

(6) Remove the rear seat No. 1 leg cover (for 60/40 Split Seat Type) (See page SB-75).

(7) Remove the rear seat No. 2 leg cover (for 60/40 Split Seat Type LH Side) (See page SE-70).

(8) Remove the rear seat assembly (for 60/40 Split Seat Type) (See page SB-75).

(9) Remove the rear seat cushion cover pad sub-assembly (for Bench Seat Type) (See page SE-114).

(10) Remove the rear seatback assembly (for Bench Seat Type) (See pageSE-115).

(11) Remove the front door scuff plate (See page IR-97).

(12) Remove the front door opening trim weatherstrip (See page SB-76).

(13) Remove the rear seat outer belt assembly.
1. Remove the belt.

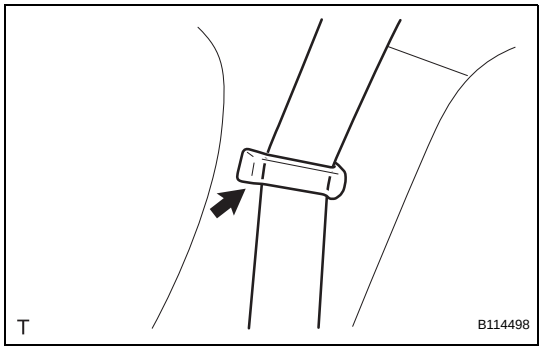

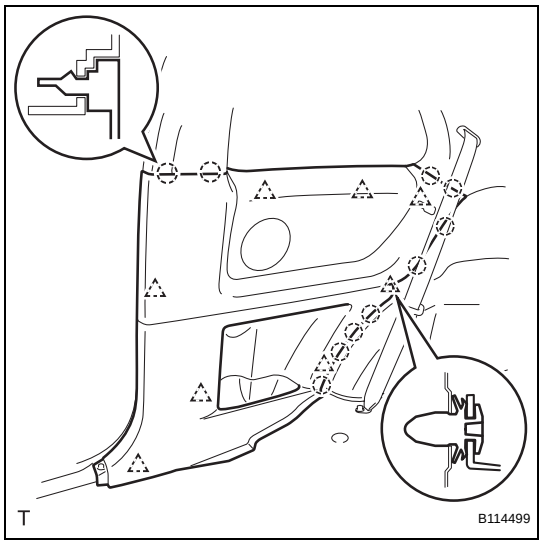


(14) Remove the front quarter trim panel assembly.
1. Disengage the 8 clips, the retainer and the 10 claws and remove the front quarter trim panel.



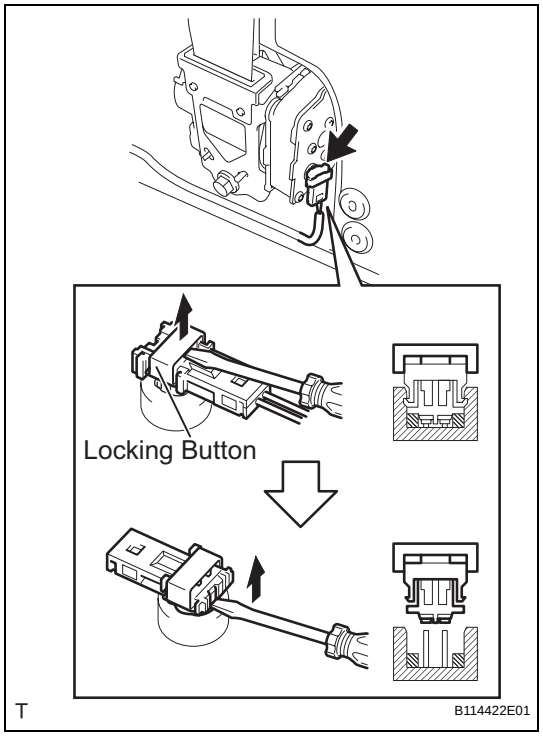


(15) Disconnect the pretensioner connector as shown in the illustration.

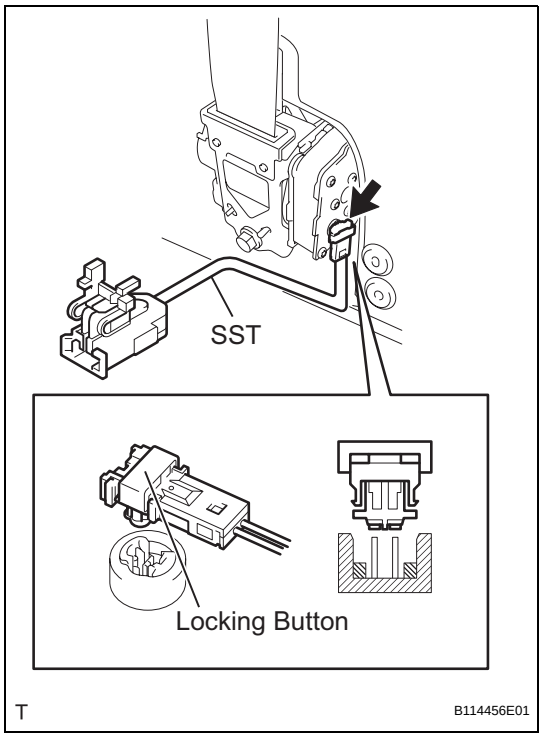


(d) Connect SST.
  (1) Connect SST, then connect the yellow connector to the seat belt pretensioner.
  **SST 09082-00770**
  **NOTICE:**
  **Do not lock the secondary lock of the twin lock to avoid damaging the SST connector and wire harness.**

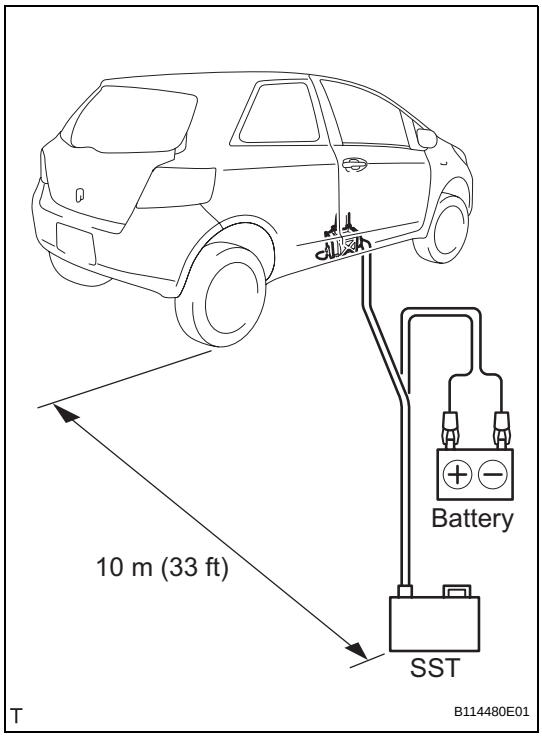


  (2) Move the SST at least 10 m (33 ft) away from the front of the vehicle.
  **SST 09082-00700**
  (3) Close the doors and windows of the vehicle.
  HINT:
  Do not close the windows fully. Leave a gap for inserting the SST wire harness.
  **NOTICE:**
  **Do not damage the SST wire harness.**
  (4) Connect the SST red clip to the positive battery terminal and the black clip to the negative battery terminal.
(e) Activate the seat belt pretensioner.
  (1) Confirm that no one is inside the vehicle or within 10 m (33 ft) of the vehicle.
  (2) Press the SST activation switch and activate the seat belt pretensioner.
  HINT:
  The seat belt pretensioner operates simultaneously with the SST activation switch LED light.
(f) Disconnect SST.
(g) Dispose of the front seat outer belt (with the seat belt pretensioner).
  HINT:
  When scrapping a vehicle, activate the seat belt pretensioner, and then scrap the vehicle with the activated front seat outer belt still installed.

**CAUTION:**

- **Do not touch the front seat outer belt for at least 30 minutes after the seat belt pretensioner has been activated. It is very hot.**
- **Use gloves and safety glasses when handling an front seat outer belt with a pretensioner that has been activated.**
- **Always wash your hands with water after completing the operation.**
- **Do not apply water to a front seat outer belt that has an activated pretensioner.**

**2. DISPOSE OF FRONT SEAT OUTER BELT ASSEMBLY (When not Installed in Vehicle)**

HINT:

Prepare a battery as the power source to activate the seat belt pretensioner.

**NOTICE:**

- **When only disposing of the front seat outer belt (with the seat belt pretensioner), never use the customer's vehicle to activate the seat belt pretensioner.**
- **Follow the procedure described below when activating the seat belt pretensioner.**

(a) Remove the front seat outer belt assembly (See page SB-75).

(b) Wind the seat belt with the retractor.

(c) When the seat belt is sufficiently wound, cut the seat belt approximately 10 cm (0.328 ft) from the retractor, as shown in the illustration.

HINT:

The retractor resistance increases in correlation with how much the seat belt is wound.

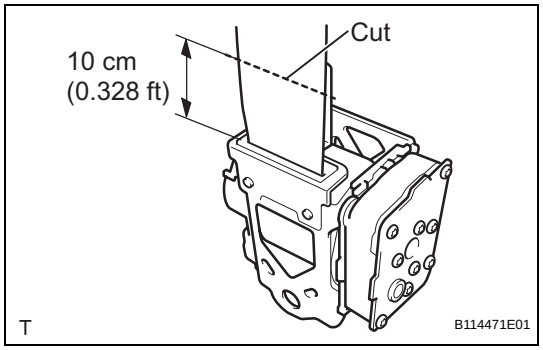


(d) Check whether SST is functioning.

**SST 09082-00700**

**CAUTION:**

**Always use the specified SST when activating the seat belt pretensioner.**

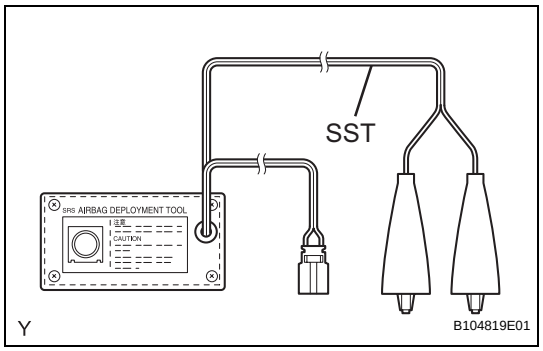

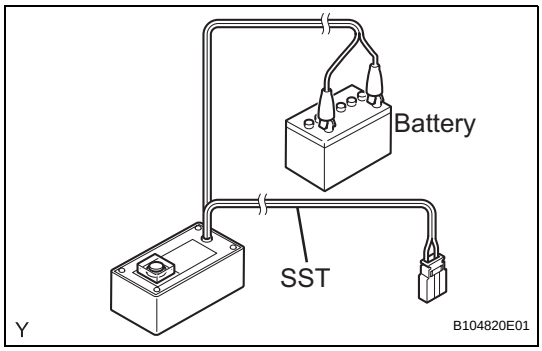


(1) Connect the SST red clip to the positive battery terminal and the black clip to the negative battery terminal.
HINT:
Do not connect the yellow connector. The yellow connector is for connections to the seat belt pretensioner.

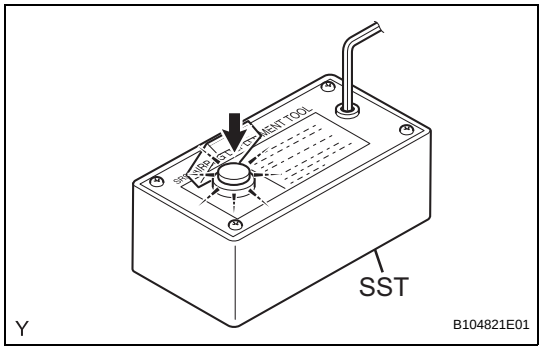


(2) Press the SST activation switch and check that the LED of the SST activation switch turns on.
**CAUTION:**
**If the LED turns on when the activation switch is not being pressed, SST may be malfunctioning. Do not use SST.**

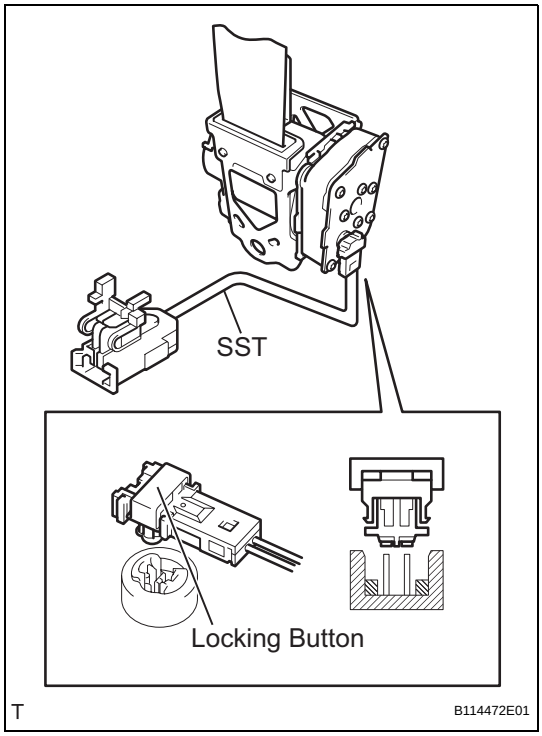


(e) Connect SST.
(1) Connect SST, then connect the yellow connector to the seat belt pretensioner.
**SST 09082-00770**
**NOTICE:**
**Do not lock the secondary lock of the twin lock to avoid damaging the SST connector and wire harness.**

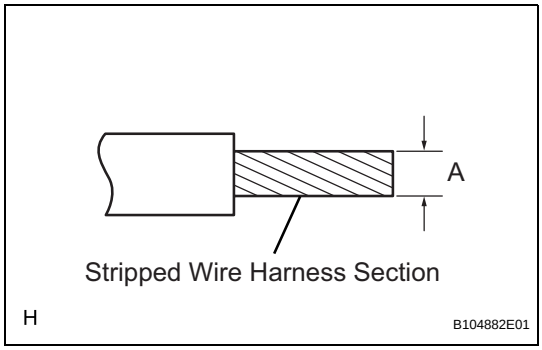


(2) Using a service-purpose wire harness for the vehicle, tie the seat belt pretensioner to the tire with a wheel attached.
**Stripped wire harness section:**

| Area | Measurement |
|---|---|
| A | 1.25 $mm^2$ or more (0.0019 $in^2$ or more) |

**CAUTION:**
- **Do not use wire harnesses that are too thin or any other object to tie the seat belt pretensioner because they may snap due to the shock when the pretensioner is deployed.**
- **Always use a wire harness for vehicle use, with a cross section of at least 1.25 mm$^2$ (0.0019 in$^2$).**

HINT:
To calculate the area of the stripped wire harness cross section:
Area = 3.14 x (Diameter)$^2$ divided by 4

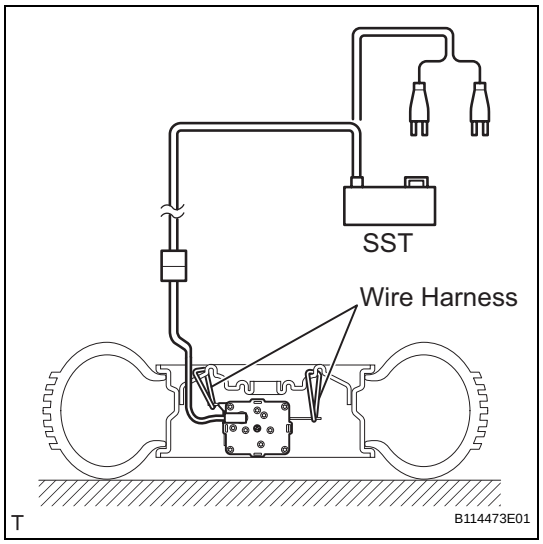


(3) Connect SST.
**SST 09082-00700**
**NOTICE:**
- **Do not lock the secondary lock of the twin lock to avoid damaging the SST connector and wire harness.**
- **Set up the front seat outer belt as shown in the illustration.**

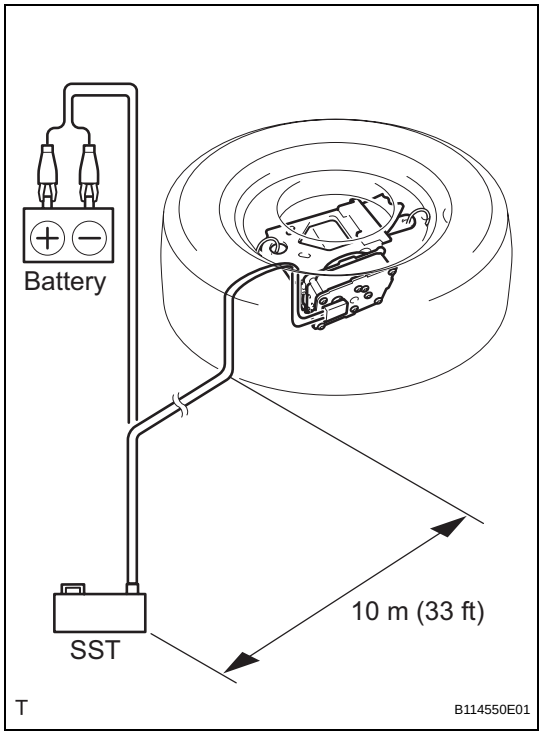


(4) Move SST at least 10 m (33 ft) away from the wheel.
**NOTICE:**
**Do not damage the SST wire harness.**

(f) Activate the seat belt pretensioner.
(1) Connect the SST red clip to the positive battery terminal and the black clip to the negative battery terminal.
(2) Check that no one is within 10 m (33 ft) of the wheel.
(3) Press the SST activation switch and activate the seat belt pretensioner.
HINT:
The seat belt pretensioner operates simultaneously with the SST activation switch LED light.

(g) Disconnect SST.

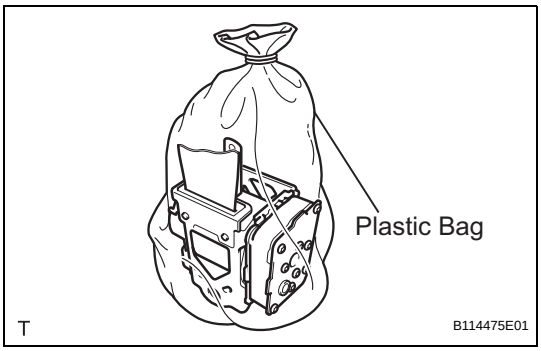


(h) Dispose of the front seat outer belt (with the seat belt pretensioner).

**CAUTION:**

- **Do not touch the front seat outer belt for at least 30 minutes after the seat belt pretensioner has been activated. It is very hot.**
- **Use gloves and safety glasses when handling a front seat outer belt with a pretensioner that has been activated.**
- **Always wash your hands with water after completing the operation.**
- **Do not apply water to a front seat outer belt that has an activated pretensioner.**

(1) Place the front seat outer belt in a plastic bag, tie the end tightly and dispose of it in the same way as other general parts.

# REAR SEAT INNER BELT ASSEMBLY (for Sedan)

## COMPONENTS



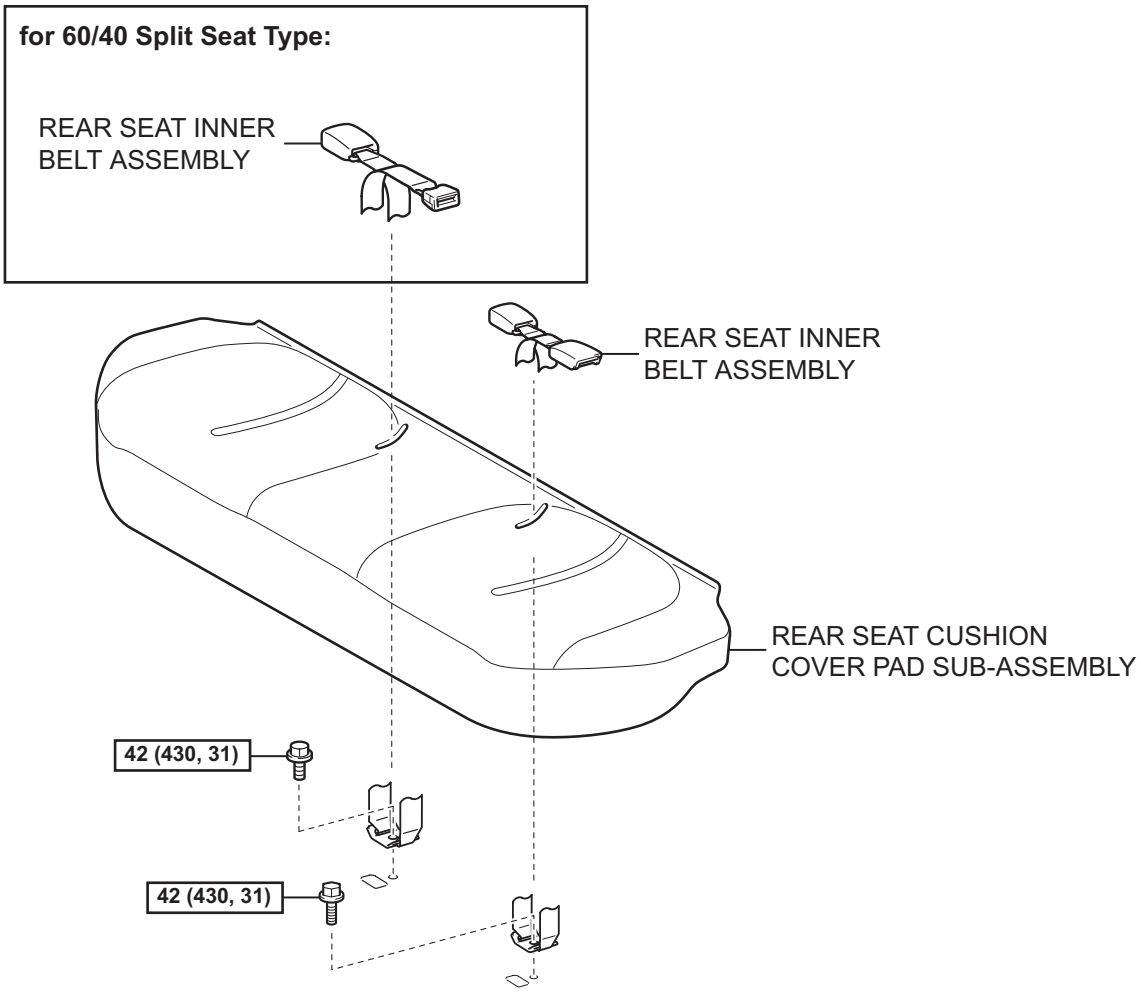


N*m (kgf*cm, ft*lbf) : Specified torque

T

B138566E01

SB

# REMOVAL

**1. REMOVE REAR SEAT CUSHION COVER PAD SUB-ASSEMBLY**

(a) for 60/40 Split Seat Type:

(1) Remove the rear seat cushion cover pad (See page SE-46).

(b) for Fixed Seat Type:

(1) Remove the rear seat cushion cover pad (See page SE-106).

**2. REMOVE REAR SEAT INNER BELT ASSEMBLY**

(a) for RH Side (for 60/40 Split Seat Type):

(1) Remove the bolt and the rear seat inner belt.

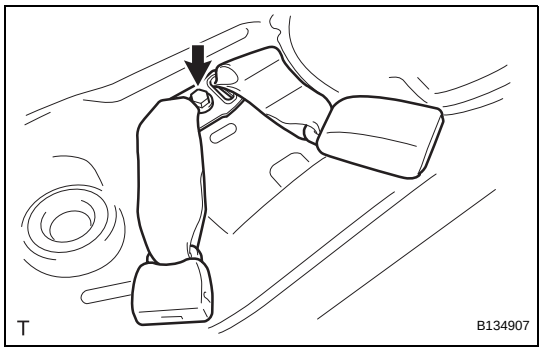


(b) LH Side:

(1) Remove the bolt and the rear seat inner belt.

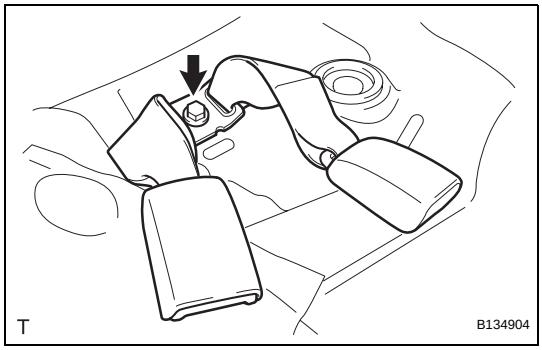


# INSTALLATION

**1. INSTALL REAR SEAT INNER BELT ASSEMBLY**

(a) for RH Side (60/40 Split Seat Type):

(1) Install the rear seat inner belt with the bolt.
**Torque: 42 N*m (430 kgf*cm, 31 ft.*lbf)**
**NOTICE:**
- **Install the anchor plate with the arrow mark facing forward.**
- **Do not place the anchor plate over the locating mark area of the floor panel.**

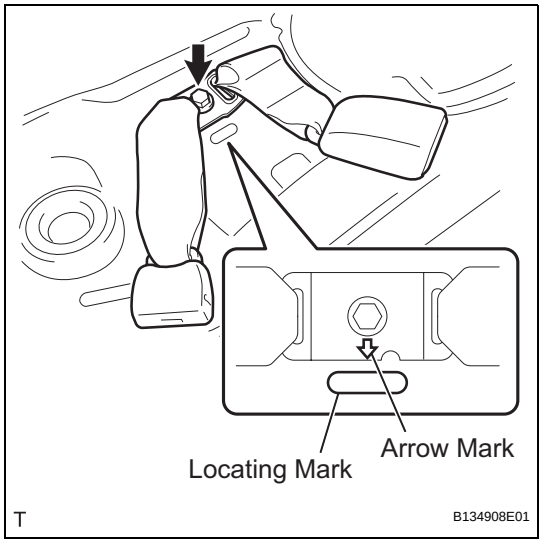

(b) for LH Side:
  (1) Install the rear seat inner belt with the bolt.
  **Torque: 42 N*m (430 kgf*cm, 31 ft.*lbf)**
  **NOTICE:**
  - **Install the anchor plate with the arrow mark facing forward.**
  - **Do not place the anchor plate over the locating mark area of the floor panel.**

**2. INSTALL REAR SEAT CUSHION COVER PAD SUB-ASSEMBLY**

(a) for 60/40 Split Seat Type:
  (1) Install the rear seat cushion cover pad (See page SE-53).

(b) for Fixed Seat Type:
  (1) Install the rear seat cushion cover pad (See page SE-109).

SB

# REAR SEAT INNER BELT ASSEMBLY (for Hatchback LH Side)

## COMPONENTS

SB

**for 60/40 Split Seat Type:**

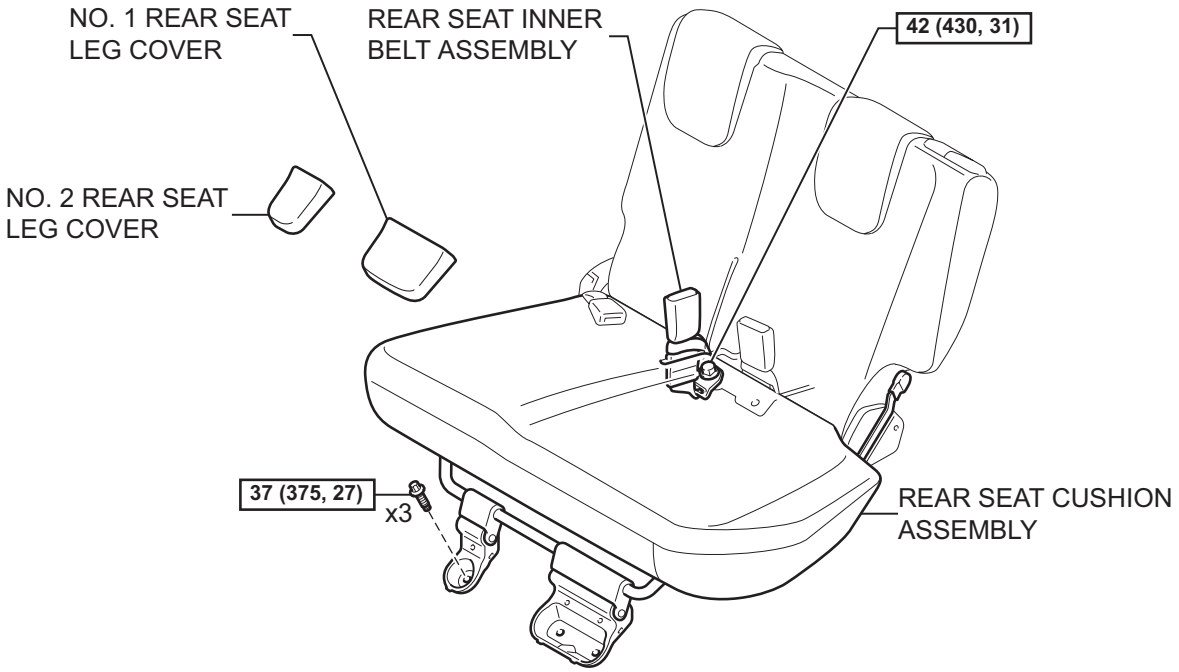


**for Hold Down Seat Type:**

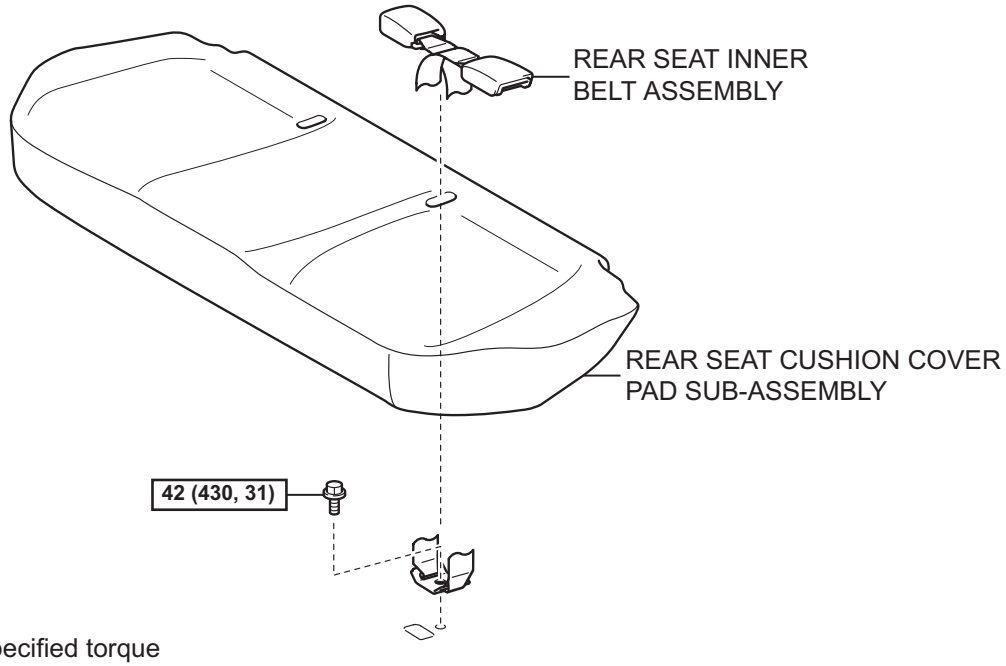


N*m (kgf*cm, ft*lbf) : Specified torque

T

B117789E02

# REMOVAL

**NOTICE:**
**Always use "Torx" socket wrench E10 when removing the rear seat.**

1. **REMOVE NO. 1 REAR SEAT LEG COVER (for 60/40 Split Seat Type) (See page SE-71)**
2. **REMOVE NO. 2 REAR SEAT LEG COVER (for 60/40 Split Seat Type) (See page SE-70)**
3. **REMOVE REAR SEAT CUSHION COVER PAD SUB-ASSEMBLY (for Hold Down Seat Type) (See page SE-114)**
4. **REMOVE REAR SEAT INNER BELT ASSEMBLY**
   (a) for 60/40 Split Seat Type:
      (1) Using "Torx" socket wrench E10, remove the 3 bolts and pull up the rear seat cushion.

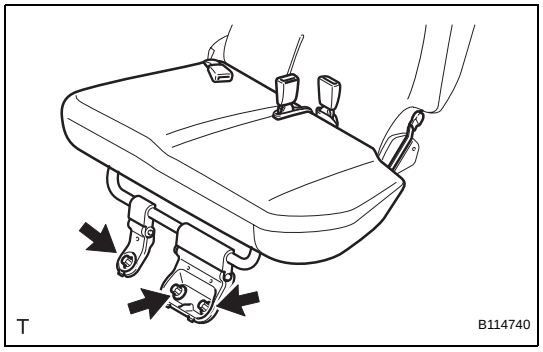


      (2) Remove the belt from the band.
      (3) Remove the bolt and the rear seat inner belt.

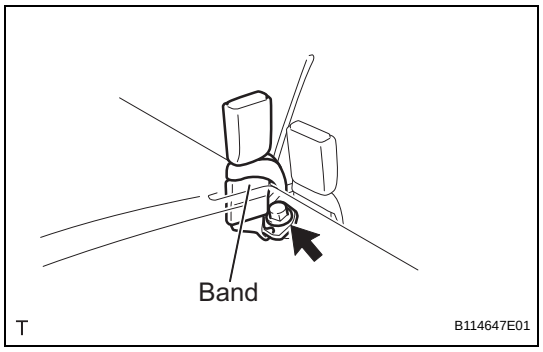


   (b) for Hold Down Seat Type:
      (1) Remove the bolt and the rear seat inner belt.

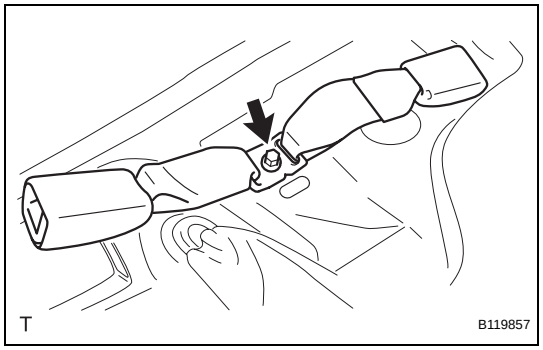

SB

# INSTALLATION

**NOTICE:**
**Always use "Torx" socket wrench E10 when installing the rear seat.**

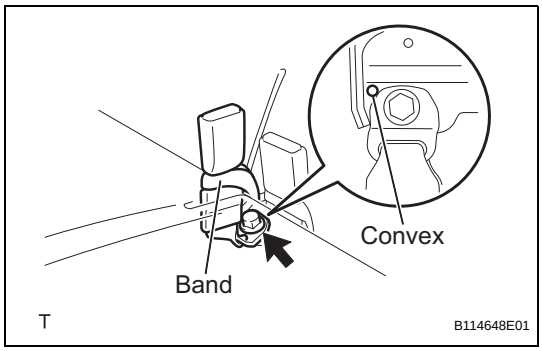


**1. INSTALL REAR SEAT INNER BELT ASSEMBLY**

(a) for 60/40 Split Seat Type:

(1) Install the rear seat inner belt with the bolt.
**Torque: 42 N*m (430 kgf*cm, 31 ft.*lbf)**
**NOTICE:**
**Do not place the anchor plate over the convex area of the rear seat back frame.**

(2) Install the belt into the band.

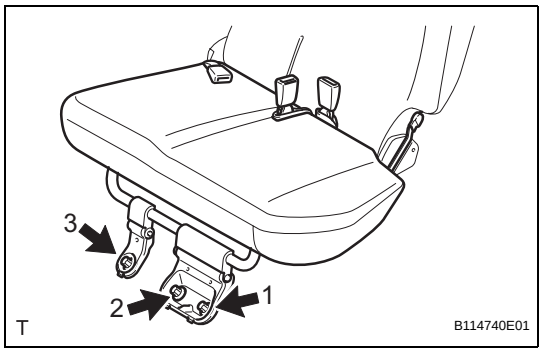


(3) Install the rear seat cushion.

(4) Using "Torx" socket wrench E10, tighten the 3 bolts in the sequence shown in the illustration.
**Torque: 37 N*m (375 kgf*cm, 27 ft.*lbf)**

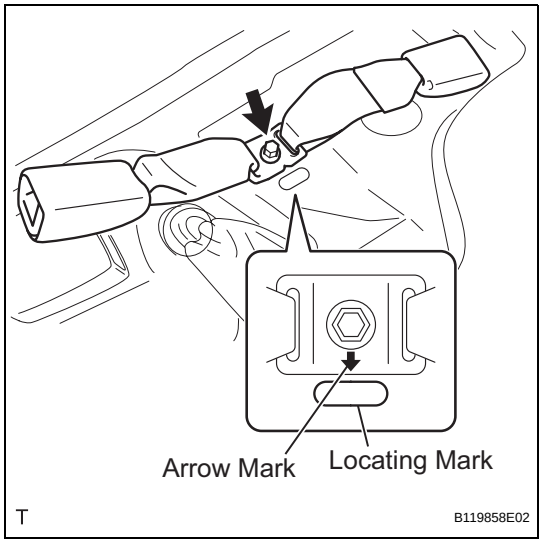


(b) for Hold Down Seat Type:

(1) Install the rear seat inner belt with the bolt.
**Torque: 42 N*m (430 kgf*cm, 31 ft.*lbf)**
**NOTICE:**
- **Install the anchor plate with the arrow mark facing forward.**
- **Do not place the anchor plate over the locating mark area of the floor panel.**

**2. INSTALL NO. 2 REAR SEAT LEG COVER (for 60/40 Split Seat Type) (See page SE-85)**

**3. INSTALL NO. 1 REAR SEAT LEG COVER (for 60/40 Split Seat Type) (See page SE-85)**

**4. INSTALL REAR SEAT CUSHION COVER PAD SUB-ASSEMBLY (for Hold Down Seat Type) (See page SE-123)**

# REAR SEAT INNER BELT ASSEMBLY (for Hatchback RH Side)

## COMPONENTS

**for 60/40 Split Seat Type:**

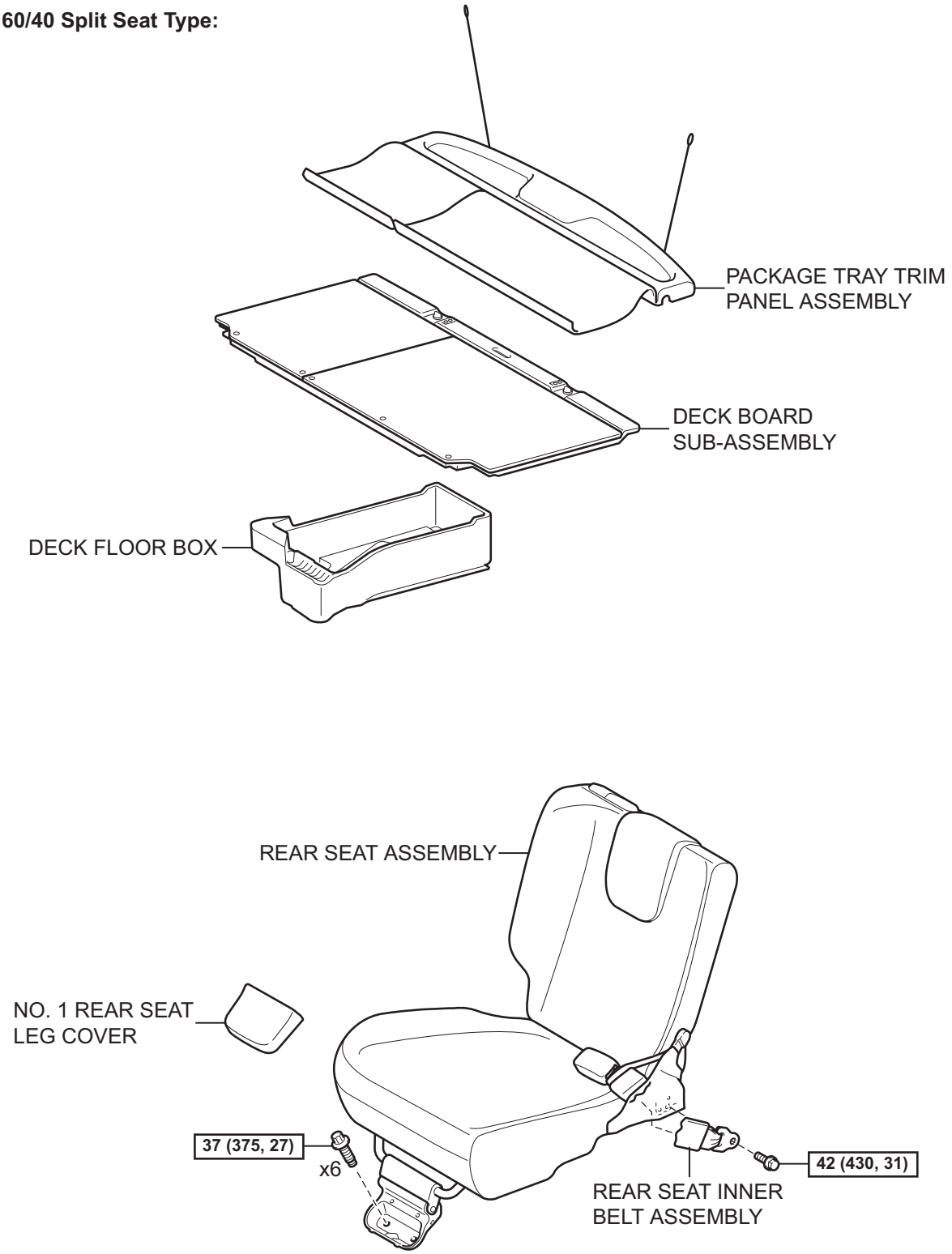


N*m (kgf*cm, ft*lbf) : Specified torque

T

B114642E02

SB

**for Hold Down Seat Type:**

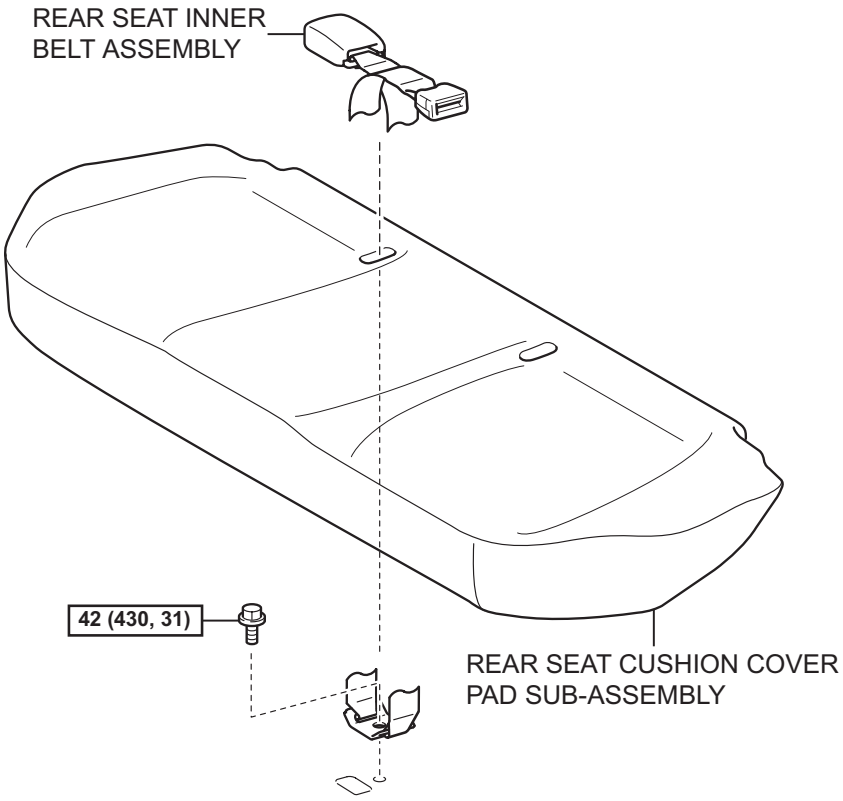


N*m (kgf*cm, ft*lbf) : Specified torque

T

B119856E03

# REMOVAL

**NOTICE:**
**Always use "Torx" socket wrench E10 when removing the rear seat.**

1. **REMOVE PACKAGE TRAY TRIM PANEL ASSEMBLY (for 60/40 Split Seat Type) (See page IR-48)**
2. **REMOVE DECK BOARD SUB-ASSEMBLY (for 60/40 Split Seat Type) (See page IR-48)**
3. **REMOVE DECK FLOOR BOX (for 60/40 Split Seat Type) (See page IR-48)**
4. **REMOVE NO. 1 REAR SEAT LEG COVER (for 60/40 Split Seat Type) (See page SE-89)**
5. **REMOVE REAR SEAT ASSEMBLY (for 60/40 Split Seat Type) (See page SE-89)**
6. **REMOVE REAR SEAT CUSHION COVER PAD SUB-ASSEMBLY (for Hold Down Seat Type) (See page SE-114)**
7. **REMOVE REAR SEAT INNER BELT ASSEMBLY**
   (a) for 60/40 Split Seat Type:
      (1) Remove the belt from the band.
      (2) Remove the bolt and the rear seat inner belt.

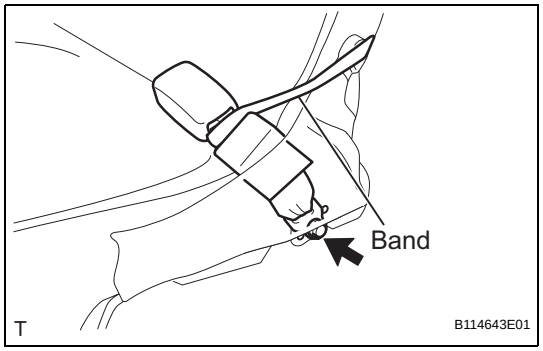


   (b) for Hold Down Seat Type:
      (1) Remove the bolt and the rear seat inner belt.

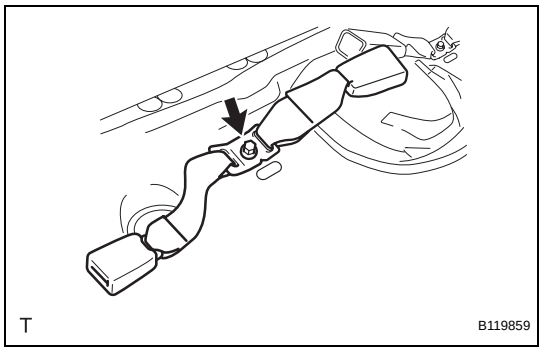

SB

# INSTALLATION

**NOTICE:**
**Always use "Torx" socket wrench E10 when installing the rear seat.**

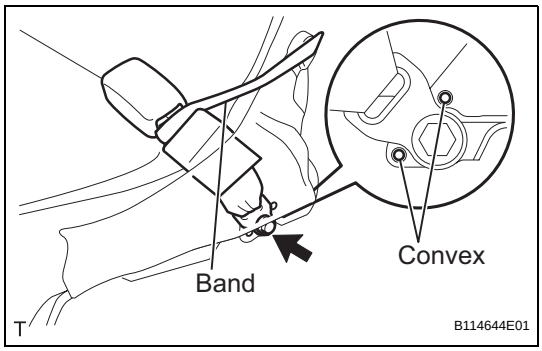


1. **INSTALL REAR SEAT INNER BELT ASSEMBLY**
   (a) for 60/40 Split Seat Type:
      (1) Install the rear seat inner belt with the bolt.
      **Torque: 42 N*m (430 kgf*cm, 31 ft.*lbf)**
      **NOTICE:**
      **Do not place the anchor plate over the convex areas of the rear seat back frame.**
      (2) Install the belt into the band.

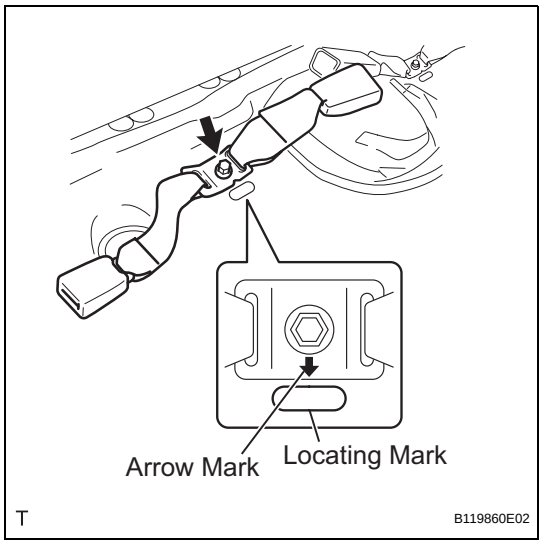


   (b) for Hold Down Seat Type:
      (1) Install the rear seat inner belt with the bolt.
      **Torque: 42 N*m (430 kgf*cm, 31 ft.*lbf)**
      **NOTICE:**
      - **Install the anchor plate with the arrow mark facing forward.**
      - **Do not place the anchor plate over the locating mark area of the floor panel.**

2. **INSTALL REAR SEAT ASSEMBLY (for 60/40 Split Seat Type) (See page SE-102)**
3. **INSTALL NO. 1 REAR SEAT LEG COVER (for 60/40 Split Seat Type) (See page SE-103)**
4. **INSTALL REAR SEAT CUSHION COVER PAD SUB-ASSEMBLY (for Hold Down Seat Type) (See page SE-123)**
5. **INSTALL DECK FLOOR BOX (for 60/40 Split Seat Type) (See page IR-83)**
6. **INSTALL DECK BOARD SUB-ASSEMBLY (for 60/40 Split Seat Type) (See page IR-83)**
7. **INSTALL PACKAGE TRAY TRIM PANEL ASSEMBLY (for 60/40 Split Seat Type) (See page IR-83)**

# REAR SEAT OUTER BELT ASSEMBLY (for Sedan)

## COMPONENTS

**for 60/40 Split Seat Type:**

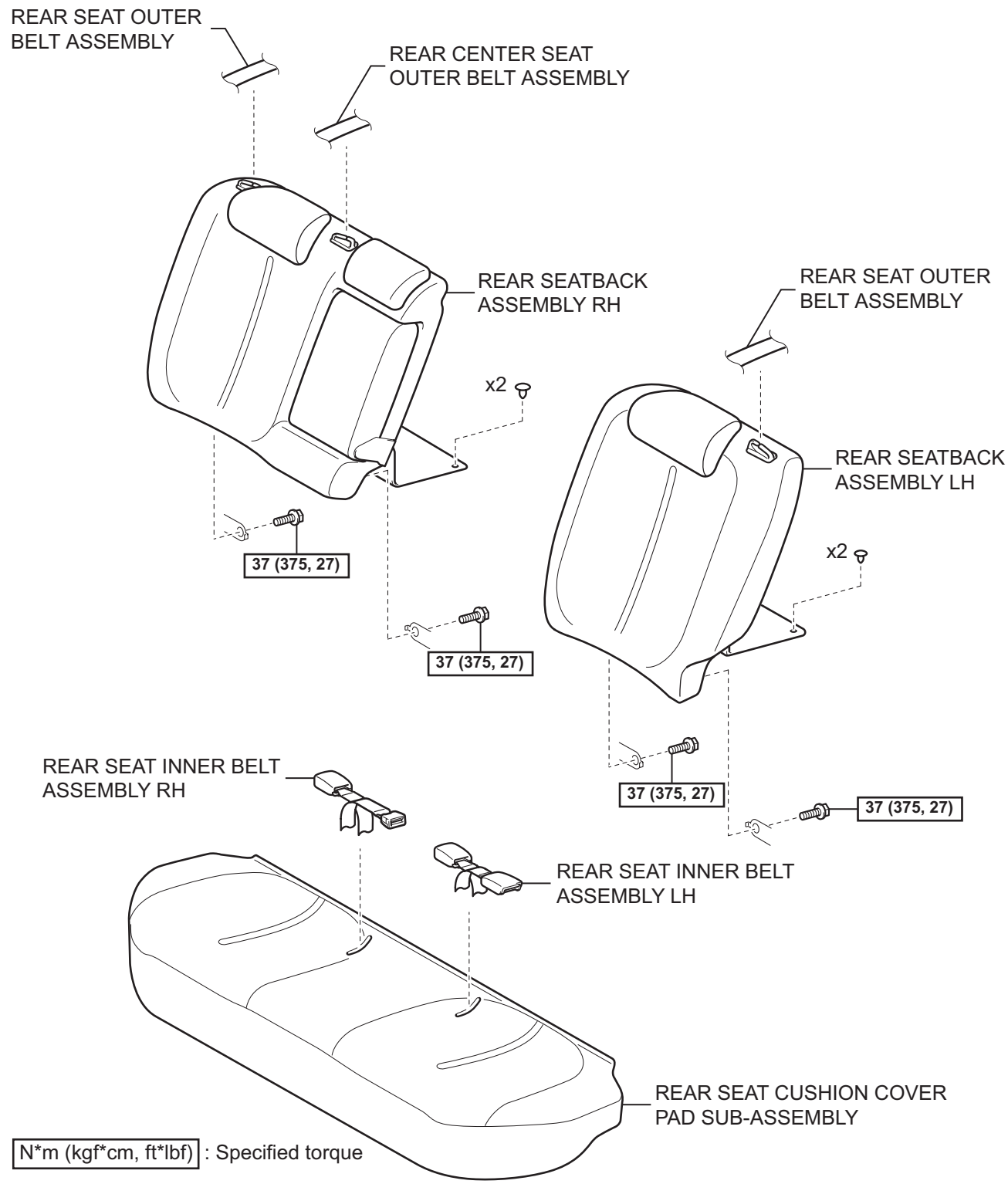

SB

**for Fixed Seat Type:**

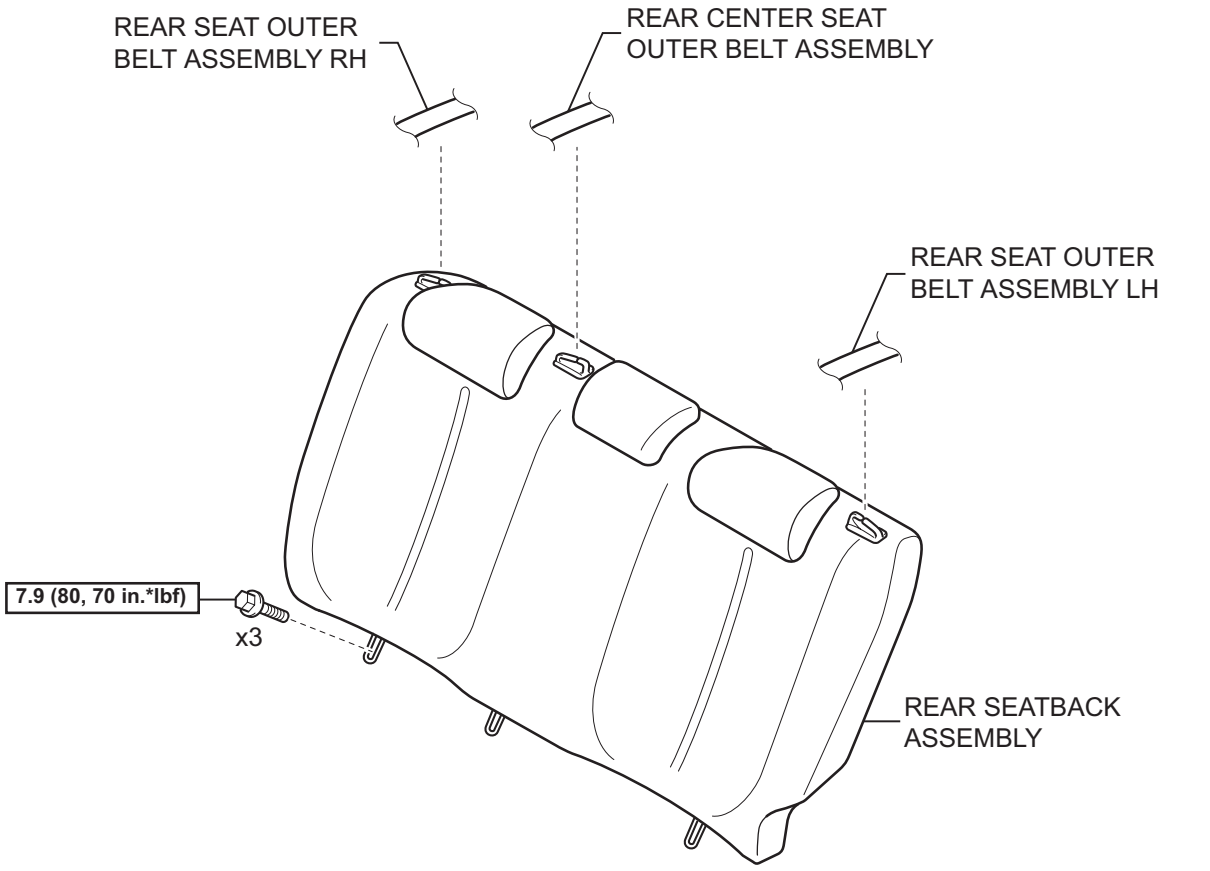


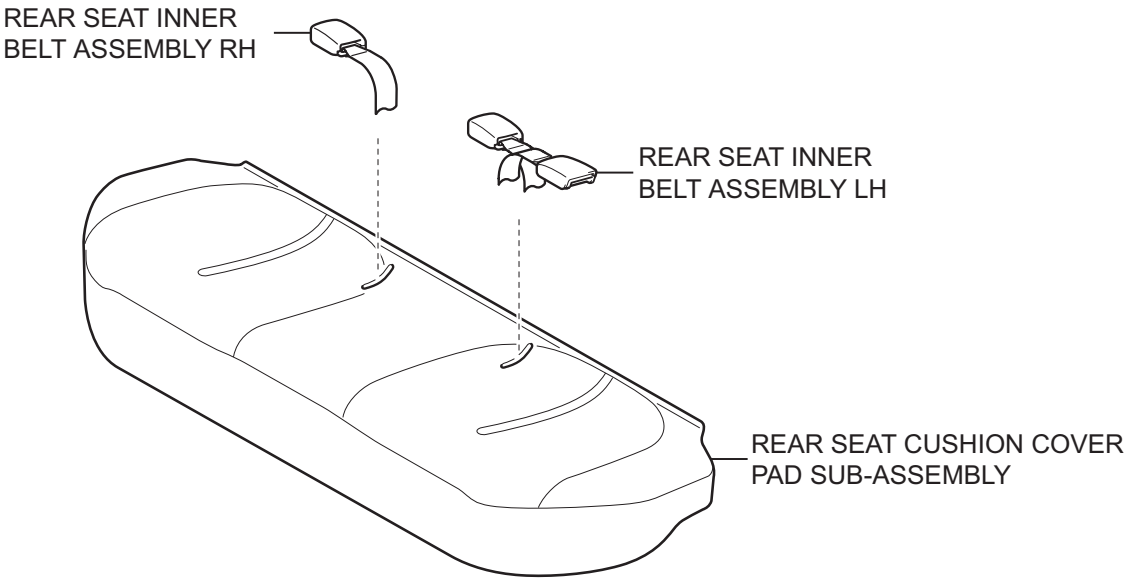


N*m (kgf*cm, ft*lbf) : Specified torque

T

B138611E01

SB

**for 60/40 Split Seat Type:**

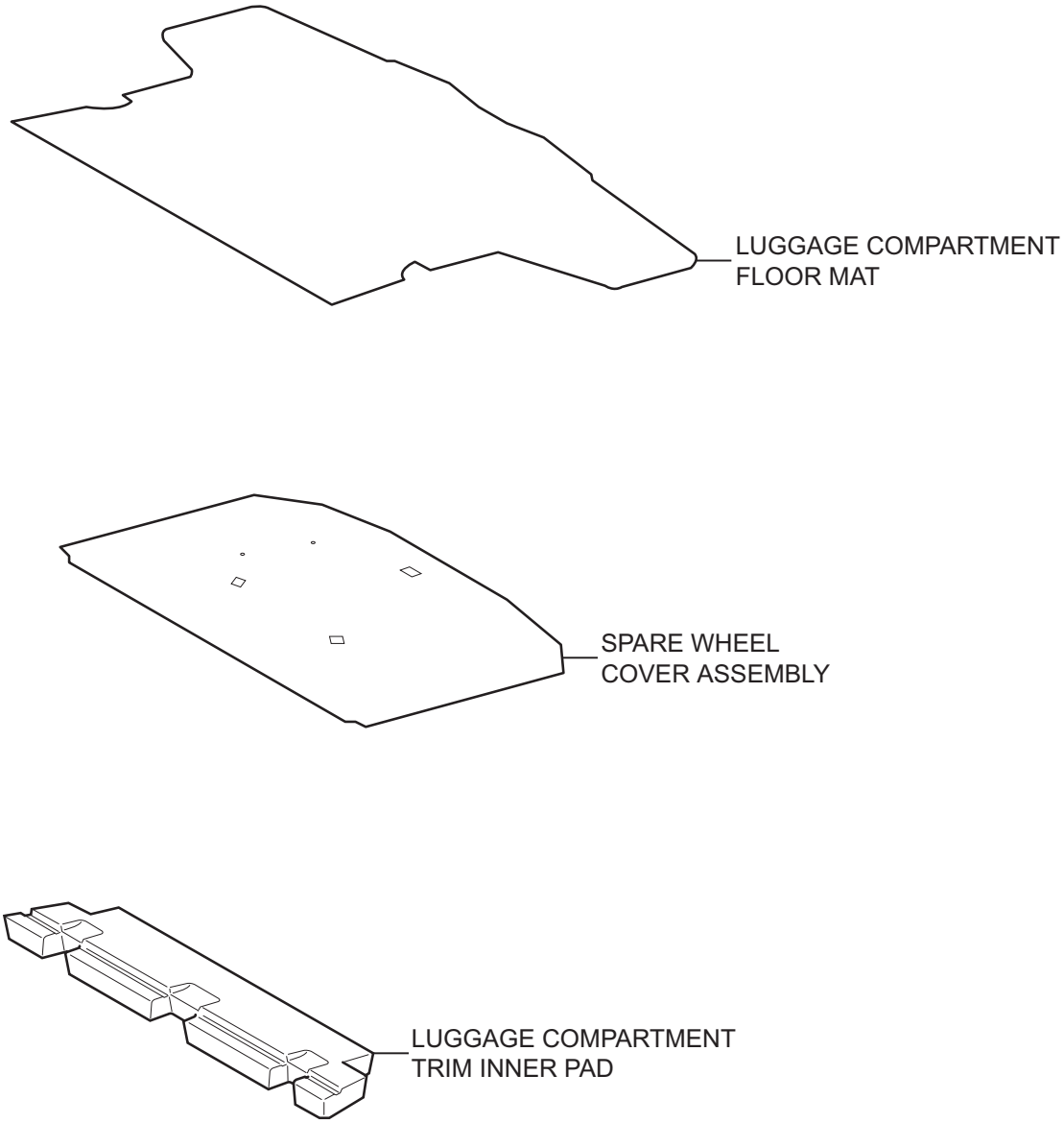


**for Grand Tire:**

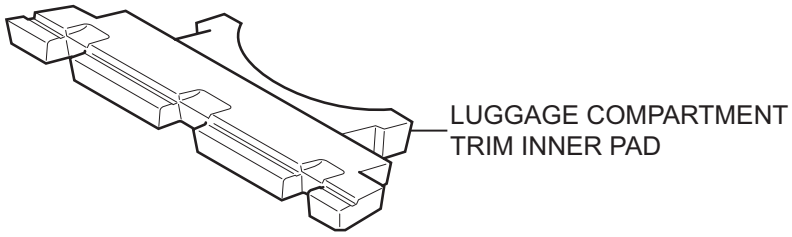


T

B138565E01

SB

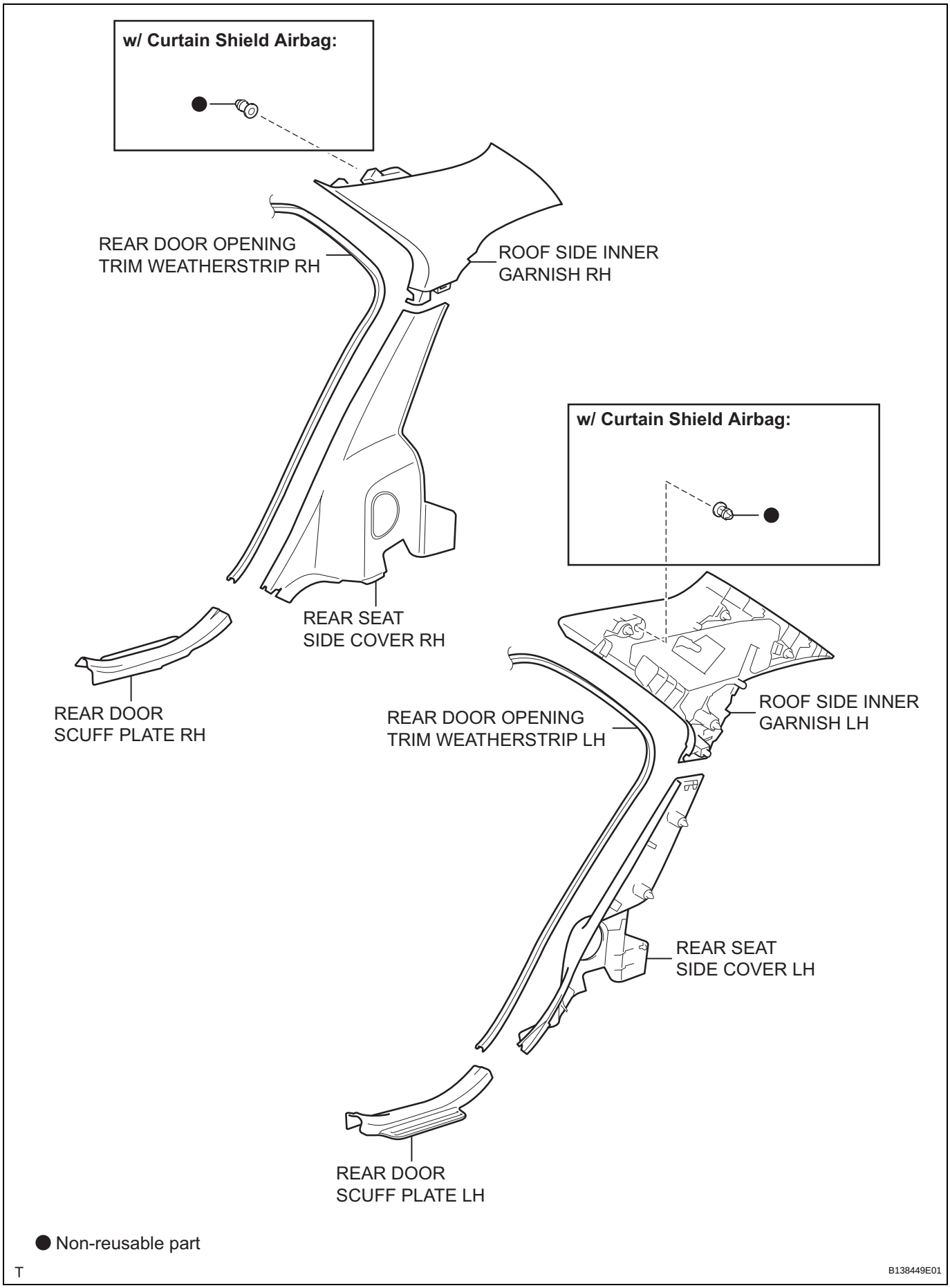
w/ Curtain Shield Airbag:
REAR DOOR OPENING TRIM WEATHERSTRIP RH
ROOF SIDE INNER GARNISH RH
REAR SEAT SIDE COVER RH
REAR DOOR SCUFF PLATE RH
w/ Curtain Shield Airbag:
ROOF SIDE INNER GARNISH LH
REAR DOOR OPENING TRIM WEATHERSTRIP LH
REAR SEAT SIDE COVER LH
REAR DOOR SCUFF PLATE LH
● Non-reusable part
T
B138449E01

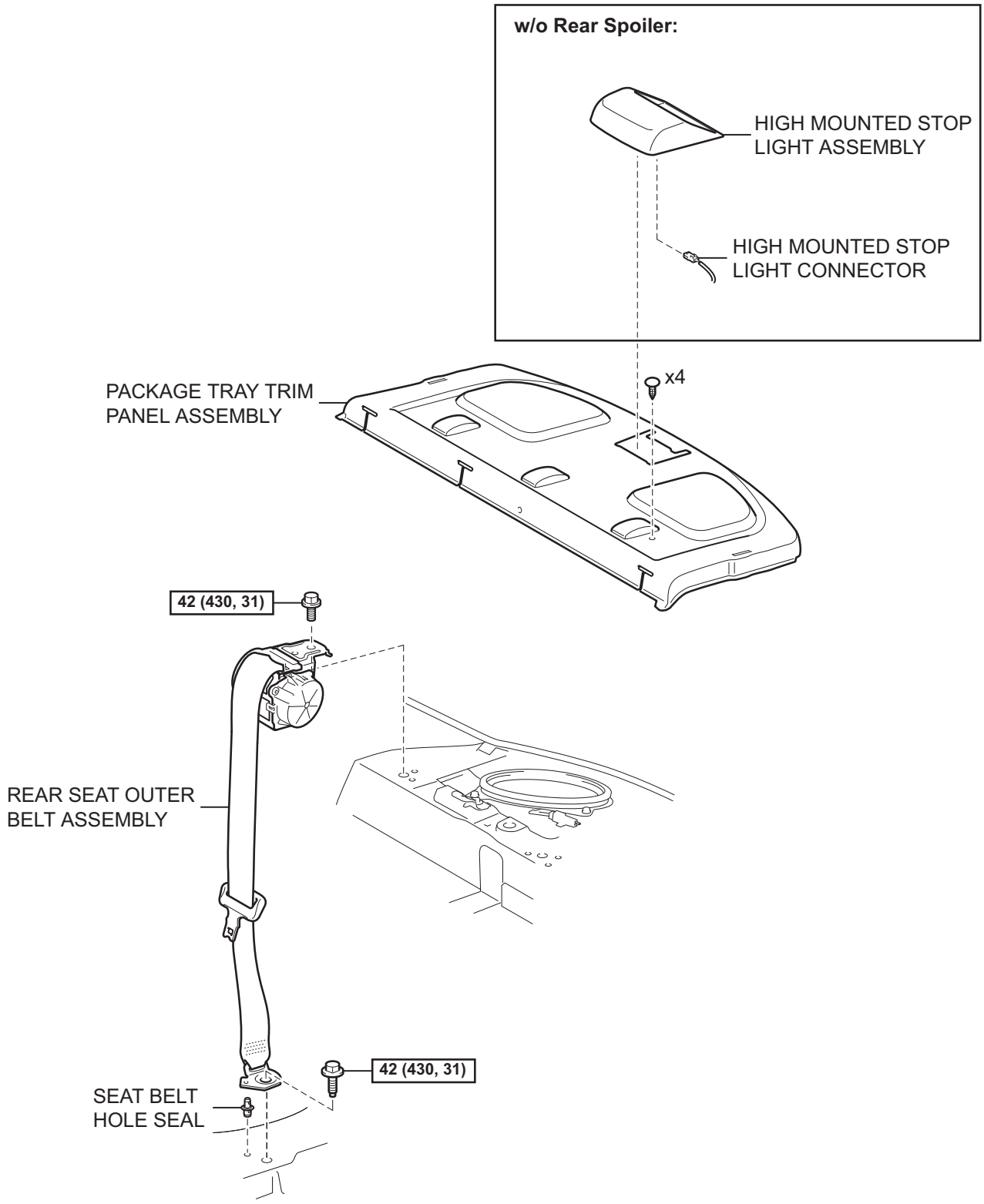


N*m (kgf*cm, ft*lbf) : Specified torque

T

B138567E01

## REMOVAL

HINT:
The procedure described below is for the RH side. Use the same procedure for both the RH and LH sides, unless otherwise specified.

1. **DISCONNECT CABLE FROM NEGATIVE BATTERY TERMINAL (w/o Rear Spoiler)**
2. **REMOVE REAR SEAT CUSHION COVER PAD SUB-ASSEMBLY**
   (a) for 60/40 Split Seat Type:
      (1) Remove the rear seat cushion cover pad (See page SE-46).
   (b) for Fixed Seat Type:
      (1) Remove the rear seat cushion cover pad (See page SE-106).
3. **REMOVE REAR SEATBACK ASSEMBLY RH (for 60/40 Split Seat Type) (See page SE-57)**
4. **REMOVE REAR SEATBACK ASSEMBLY LH (for 60/40 Split Seat Type) (See page SE-46)**
5. **REMOVE REAR SEATBACK ASSEMBLY (for Fixed Seat Type) (See page SE-106)**
6. **REMOVE LUGGAGE COMPARTMENT FLOOR MAT (for 60/40 Split Seat Type) (See page ED-133)**
7. **REMOVE SPARE WHEEL COVER ASSEMBLY (for 60/40 Split Seat Type) (See page ED-133)**
8. **REMOVE LUGGAGE COMPARTMENT TRIM INNER PAD (for 60/40 Split Seat Type) (See page ED-134)**
9. **REMOVE REAR DOOR SCUFF PLATE RH (See page IR-15)**
10. **REMOVE REAR DOOR SCUFF PLATE LH (See page IR-15)**
11. **REMOVE REAR DOOR OPENING TRIM WEATHERSTRIP RH (See page AV-173)**
12. **REMOVE REAR DOOR OPENING TRIM WEATHERSTRIP LH (See page AV-173)**
13. **REMOVE REAR SEAT SIDE COVER RH (See page IR-16)**
14. **REMOVE REAR SEAT SIDE COVER LH (See page IR-16)**
15. **REMOVE ROOF SIDE INNER GARNISH RH (See page IR-16)**
16. **REMOVE ROOF SIDE INNER GARNISH LH (See page IR-16)**
17. **REMOVE HIGH MOUNTED STOP LIGHT ASSEMBLY (w/o Rear Spoiler) (See page LI-141)**

**18. REMOVE PACKAGE TRAY TRIM PANEL ASSEMBLY (See page AV-173)**

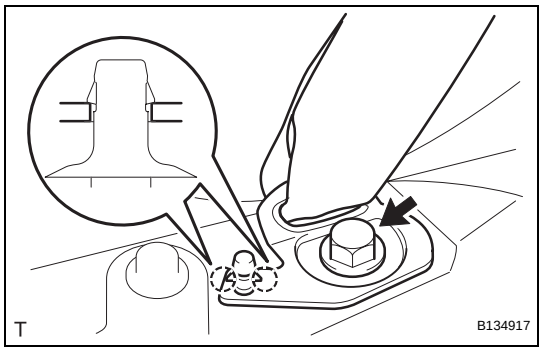


**19. REMOVE REAR SEAT OUTER BELT ASSEMBLY**

(a) Remove the bolt.

(b) Disengage the 2 claws and remove the anchor plate.

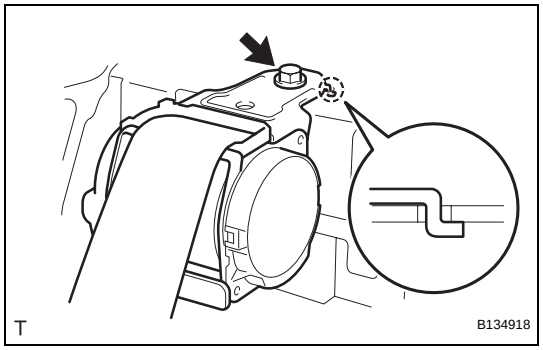


(c) Remove the bolt, the hook and the retractor.

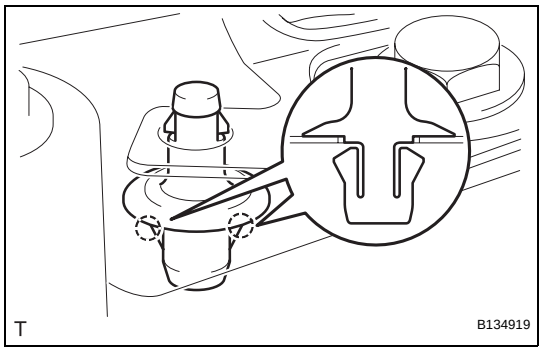


**20. REMOVE SEAT BELT HOLE SEAL**

(a) Disengage the 2 claws and remove the seat belt hole seal.

SB

SB

# INSTALLATION

HINT:
The procedure described below is for the RH side. Use the same procedure for both the RH and LH sides, unless otherwise specified.

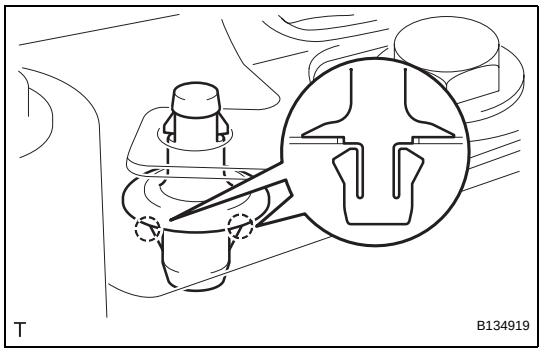


**1. INSTALL SEAT BELT HOLE SEAL**

(a) Engage the 2 claws and install the seat belt hole seal.

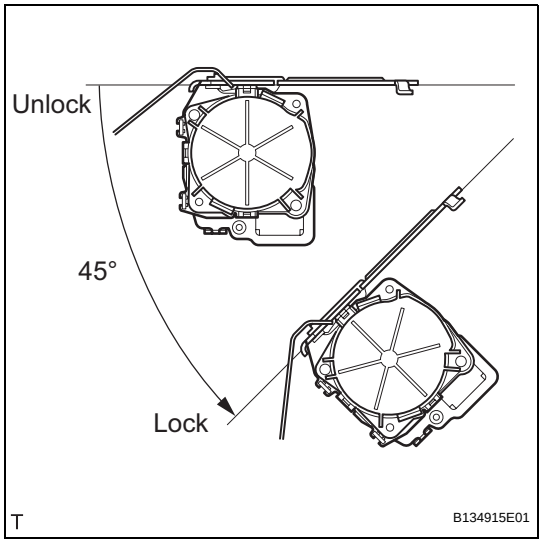


**2. INSTALL REAR SEAT OUTER BELT ASSEMBLY**

(a) Check the angle of inclination required to lock the retractor.

(1) Gently incline the retractor from its initial position. Check that the belt does not lock when the retractor is inclined 15° or less in any direction.
Also, check that the belt locks when the inclination of the retractor is 45° or more.
**NOTICE:**
**Do not disassemble the retractor.**
If the operation is not as specified, replace the rear seat outer belt.

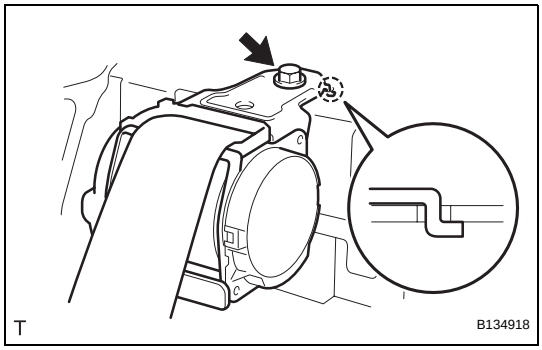


(b) Insert the hook into the body hole and install the retractor with the bolt.
**Torque: 42 N*m (430 kgf*cm, 31 ft.*lbf)**

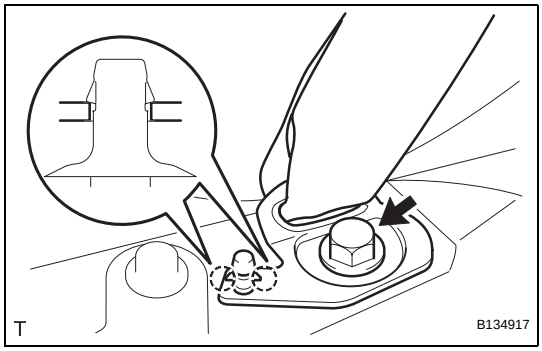


(c) Engage the 2 claws and install the anchor plate.

(d) Tighten the bolt.
**Torque: 42 N*m (430 kgf*cm, 31 ft.*lbf)**

(e) Check that the ELR locks.
**NOTICE:**
- **The check should be performed with the rear seat outer belt installed.**
- **Do not allow the anchor part of the rear seat outer belt and the protruding parts of the floor panel to overlap.**

(1) With the belt installed, check that the belt locks when it is pulled out quickly.
If the operation is not as specified, replace the rear seat outer belt.

**3. INSTALL PACKAGE TRAY TRIM PANEL ASSEMBLY (See page AV-174)**

**4. INSTALL HIGH MOUNTED STOP LIGHT ASSEMBLY (w/o Rear Spoiler) (See page LI-142)**

**5. INSTALL ROOF SIDE INNER GARNISH RH (See page IR-32)**

**6. INSTALL ROOF SIDE INNER GARNISH LH (See page IR-33)**

**7. INSTALL REAR SEAT SIDE COVER RH (See page IR-33)**

**8. INSTALL REAR SEAT SIDE COVER LH (See page IR-33)**

**9. INSTALL REAR DOOR OPENING TRIM WEATHERSTRIP RH (See page AV-175)**

**10. INSTALL REAR DOOR OPENING TRIM WEATHERSTRIP LH (See page AV-175)**

**11. INSTALL REAR DOOR SCUFF PLATE RH (See page IR-34)**

**12. INSTALL REAR DOOR SCUFF PLATE LH (See page IR-34)**

**13. INSTALL LUGGAGE COMPARTMENT TRIM INNER PAD (for 60/40 Split Seat Type) (See page ED-136)**

**14. INSTALL SPARE WHEEL COVER ASSEMBLY (for 60/40 Split Seat Type) (See page ED-137)**

**15. INSTALL LUGGAGE COMPARTMENT FLOOR MAT (for 60/40 Split Seat Type) (See page ED-137)**

**16. INSTALL REAR SEATBACK ASSEMBLY RH (for 60/40 Split Seat Type) (See page SE-65)**

**17. INSTALL REAR SEATBACK ASSEMBLY LH (for 60/40 Split Seat Type) (See page SE-52)**

**18. INSTALL REAR SEATBACK ASSEMBLY (for Fixed Seat Type) (See page SE-108)**

**19. INSTALL REAR SEAT CUSHION COVER PAD SUB-ASSEMBLY**

(a) for 60/40 Split Seat Type:

(1) Install the rear seat cushion cover pad (See page SE-53).

(b) for Fixed Seat Type:

(1) Install the rear seat cushion cover pad (See page SE-109).

**20. CONNECT CABLE TO NEGATIVE BATTERY TERMINAL (w/o Rear Spoiler)**
**Torque: 5.4 N*m (55 kgf*cm, 48 in.*lbf)**

SB

# INSTALLATION

HINT:
The procedure described below is for the RH side. Use the same procedure for both the RH and LH sides, unless otherwise specified.

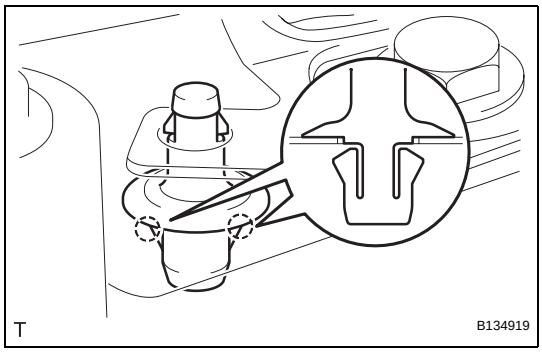


**1. INSTALL SEAT BELT HOLE SEAL**

(a) Engage the 2 claws and install the seat belt hole seal.

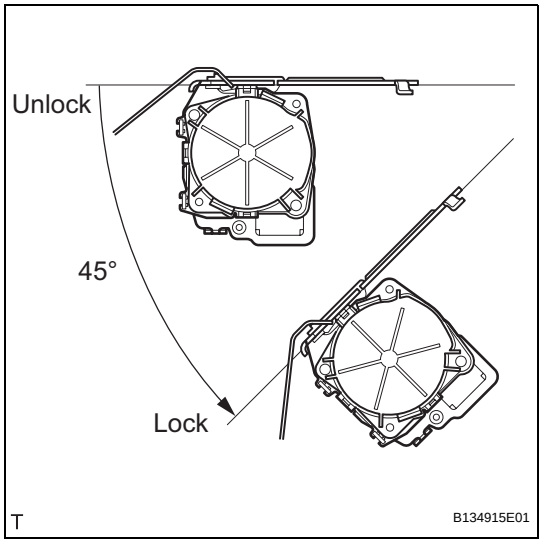


**2. INSTALL REAR SEAT OUTER BELT ASSEMBLY**

(a) Check the angle of inclination required to lock the retractor.

(1) Gently incline the retractor from its initial position. Check that the belt does not lock when the retractor is inclined 15° or less in any direction.
Also, check that the belt locks when the inclination of the retractor is 45° or more.
**NOTICE:**
**Do not disassemble the retractor.**
If the operation is not as specified, replace the rear seat outer belt.

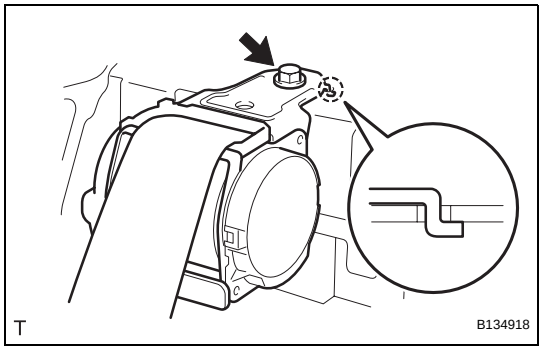


(b) Insert the hook into the body hole and install the retractor with the bolt.
**Torque: 42 N*m (430 kgf*cm, 31 ft.*lbf)**

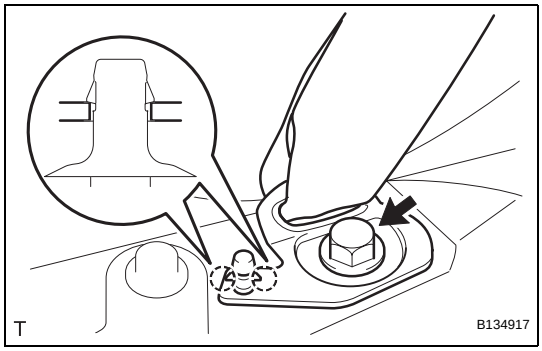


(c) Engage the 2 claws and install the anchor plate.

(d) Tighten the bolt.
**Torque: 42 N*m (430 kgf*cm, 31 ft.*lbf)**

(e) Check that the ELR locks.
**NOTICE:**
- **The check should be performed with the rear seat outer belt installed.**
- **Do not allow the anchor part of the rear seat outer belt and the protruding parts of the floor panel to overlap.**

(1) With the belt installed, check that the belt locks when it is pulled out quickly.
If the operation is not as specified, replace the rear seat outer belt.

**3. INSTALL PACKAGE TRAY TRIM PANEL ASSEMBLY (See page AV-174)**

**4. INSTALL HIGH MOUNTED STOP LIGHT ASSEMBLY (w/o Rear Spoiler) (See page LI-142)**

**5. INSTALL ROOF SIDE INNER GARNISH RH (See page IR-32)**

**6. INSTALL ROOF SIDE INNER GARNISH LH (See page IR-33)**

**7. INSTALL REAR SEAT SIDE COVER RH (See page IR-33)**

**8. INSTALL REAR SEAT SIDE COVER LH (See page IR-33)**

**9. INSTALL REAR DOOR OPENING TRIM WEATHERSTRIP RH (See page AV-175)**

**10. INSTALL REAR DOOR OPENING TRIM WEATHERSTRIP LH (See page AV-175)**

**11. INSTALL REAR DOOR SCUFF PLATE RH (See page IR-34)**

**12. INSTALL REAR DOOR SCUFF PLATE LH (See page IR-34)**

**13. INSTALL LUGGAGE COMPARTMENT TRIM INNER PAD (for 60/40 Split Seat Type) (See page ED-136)**

**14. INSTALL SPARE WHEEL COVER ASSEMBLY (for 60/40 Split Seat Type) (See page ED-137)**

**15. INSTALL LUGGAGE COMPARTMENT FLOOR MAT (for 60/40 Split Seat Type) (See page ED-137)**

**16. INSTALL REAR SEATBACK ASSEMBLY RH (for 60/40 Split Seat Type) (See page SE-65)**

**17. INSTALL REAR SEATBACK ASSEMBLY LH (for 60/40 Split Seat Type) (See page SE-52)**

**18. INSTALL REAR SEATBACK ASSEMBLY (for Fixed Seat Type) (See page SE-108)**

**19. INSTALL REAR SEAT CUSHION COVER PAD SUB-ASSEMBLY**

(a) for 60/40 Split Seat Type:

(1) Install the rear seat cushion cover pad (See page SE-53).

(b) for Fixed Seat Type:

(1) Install the rear seat cushion cover pad (See page SE-109).

**20. CONNECT CABLE TO NEGATIVE BATTERY TERMINAL (w/o Rear Spoiler)**
**Torque: 5.4 N*m (55 kgf*cm, 48 in.*lbf)**

# REAR SEAT OUTER BELT ASSEMBLY (for Hatchback 5 Door)

## COMPONENTS

SB

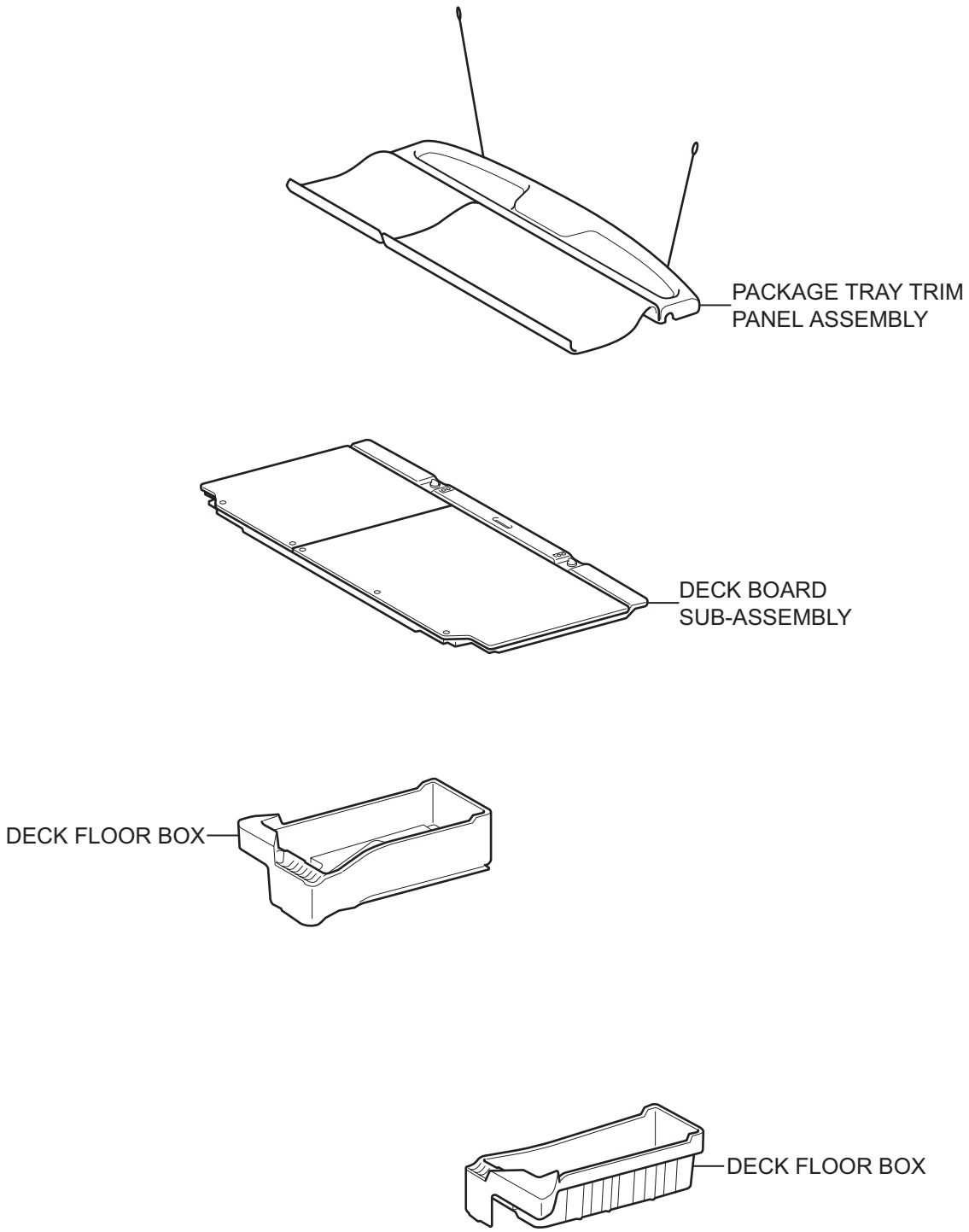


T

B127707E02

**for 60/40 Split Seat Type:**

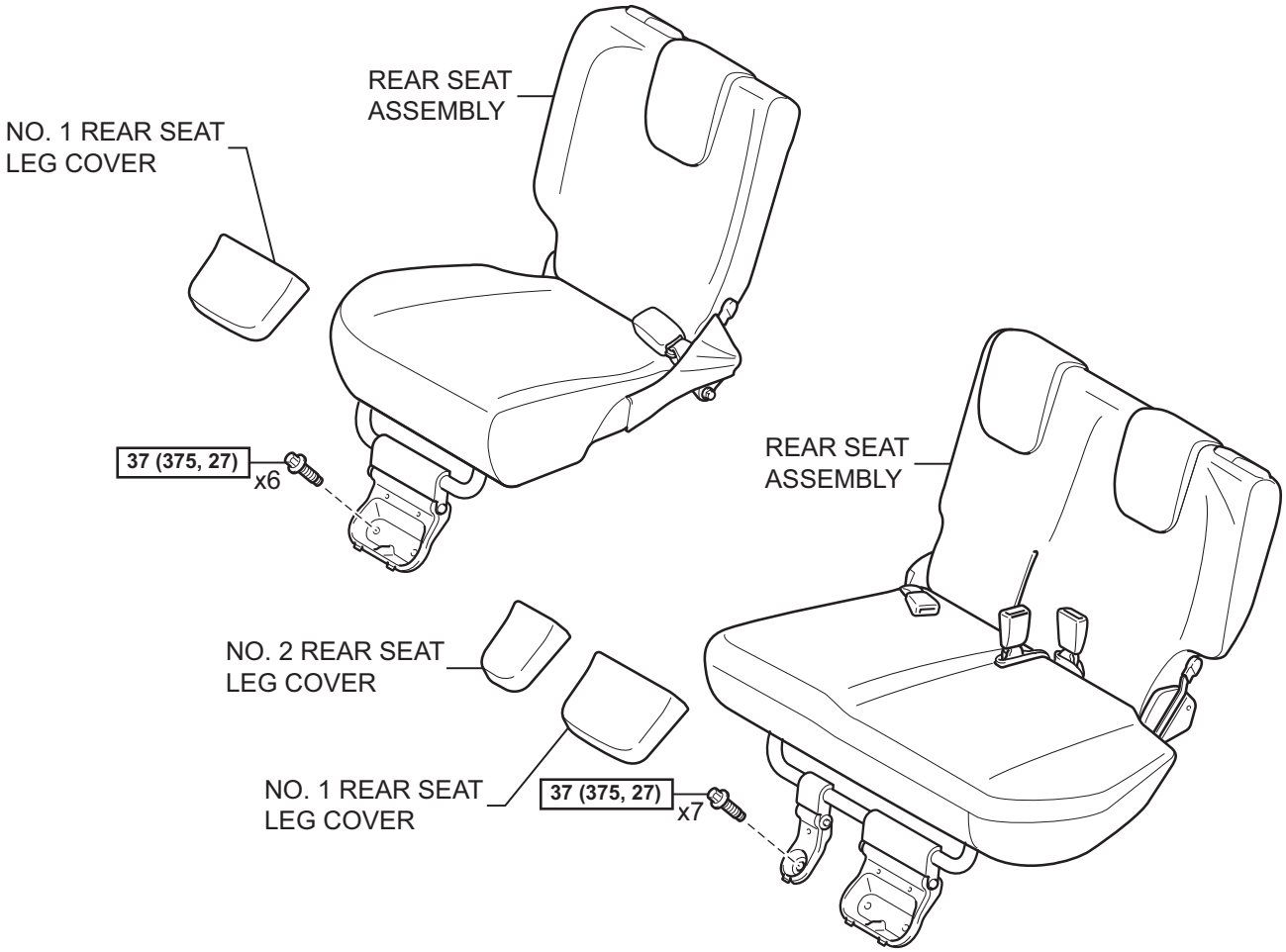


**for Hold Down Seat Type:**

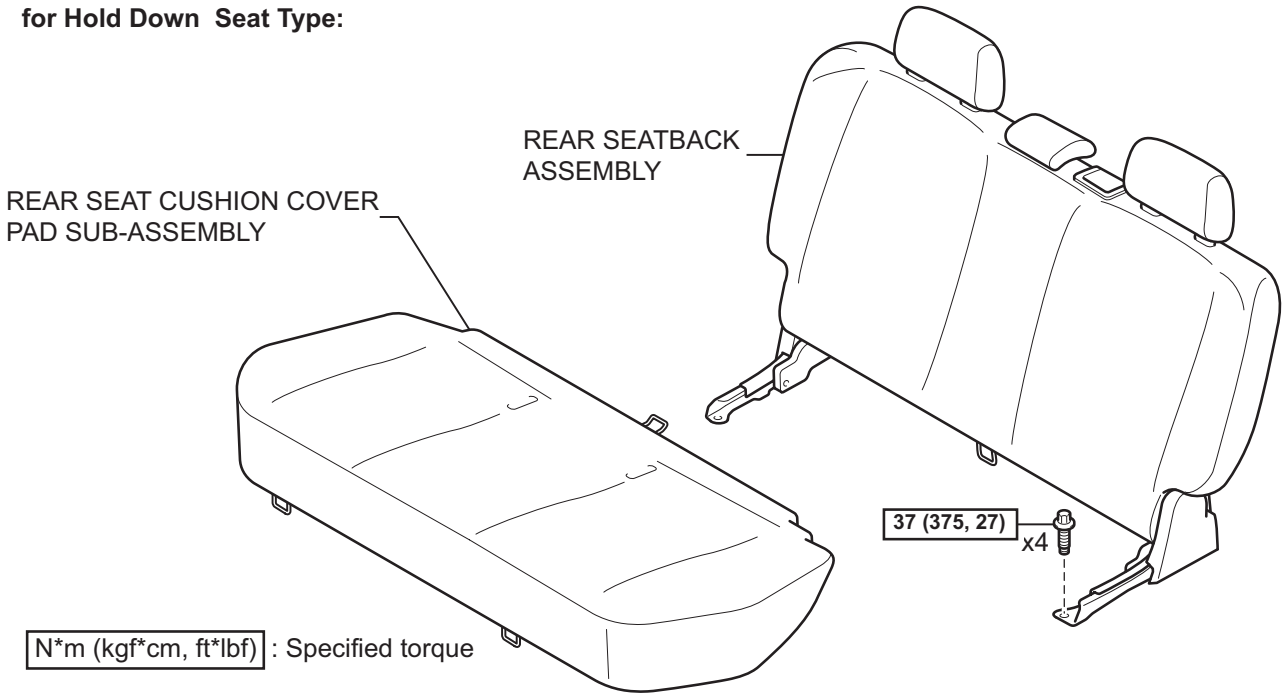


N*m (kgf*cm, ft*lbf) : Specified torque

T

B121713E05

SB

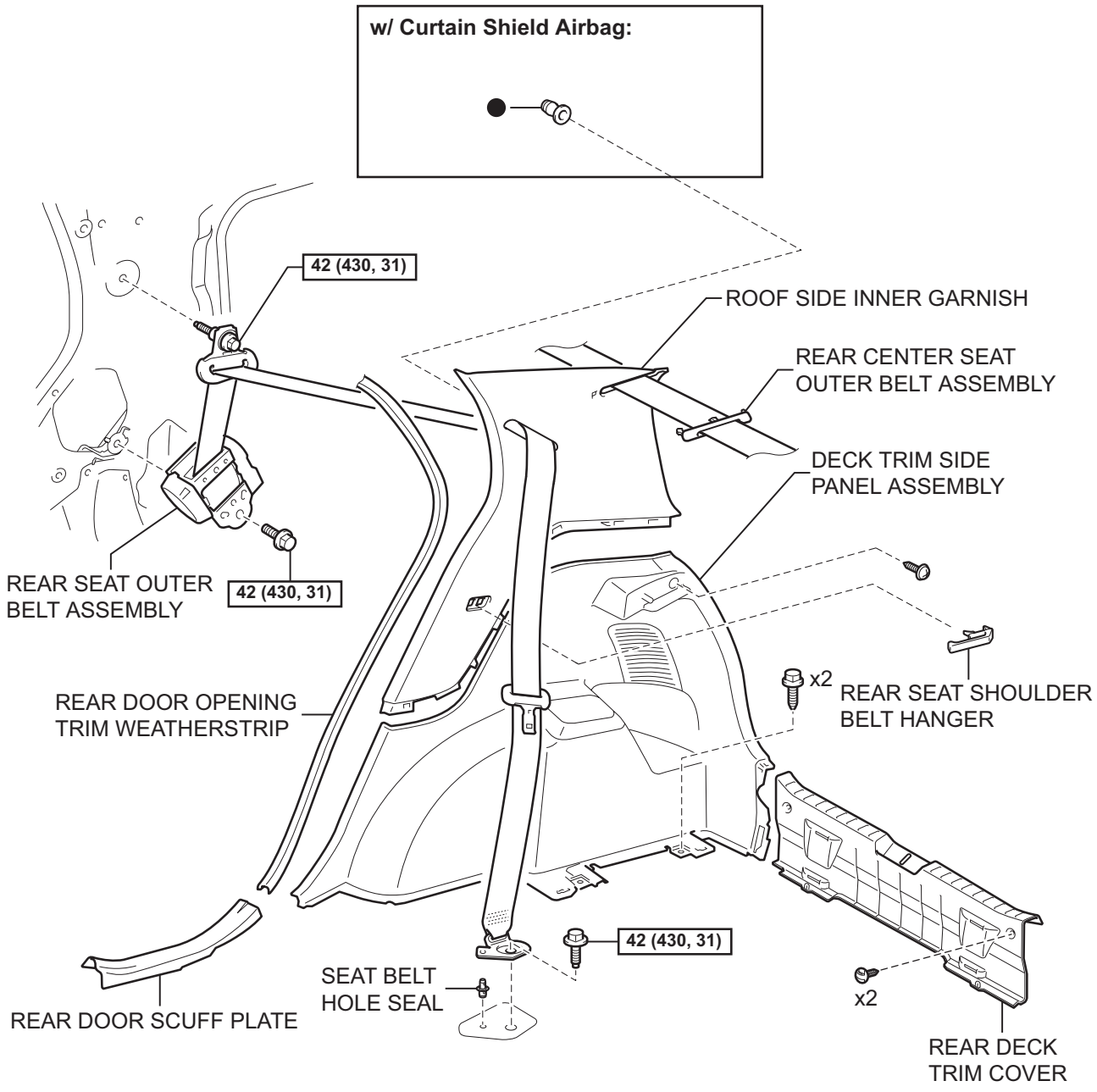


N*m (kgf*cm, ft*lbf) : Specified torque

● Non-reusable part

T

B114430E02

# REMOVAL

**CAUTION:**
**Always use "Torx" socket wrench E10 when removing the rear seat.**
HINT:
The procedure described below is for the RH side. Use the same procedure for both the RH and LH sides, unless otherwise specified.

1. **DISCONNECT CABLE FROM NEGATIVE BATTERY TERMINAL (for LH Side)**
2. **REMOVE PACKAGE TRAY TRIM PANEL ASSEMBLY (See page IR-48)**
3. **REMOVE DECK BOARD SUB-ASSEMBLY (See page IR-48)**
4. **REMOVE DECK FLOOR BOX**
   (a) for RH Side:
      (1) Remove the deck floor box (See page IR-48).
   (b) for LH Side:
      HINT:
      Use the same procedure as for the RH side.
5. **REMOVE NO. 1 REAR SEAT LEG COVER (for 60/40 Split Seat Type)**
   (a) for RH Side:
      (1) Remove the No. 1 rear seat leg cover (See page SE-89).
   (b) for LH Side:
      (1) Remove the No. 1 rear seat leg cover (See page SE-70).
6. **REMOVE NO. 2 REAR SEAT LEG COVER (for 60/40 Split Seat Type LH Side) (See page SE-70)**
7. **REMOVE REAR SEAT ASSEMBLY (for 60/40 Split Seat Type)**
   (a) for RH Side:
      (1) Remove the rear seat assembly (See page SE-89).
   (b) for LH Side:
      (1) Remove the rear seat assembly (See page SE-71).
8. **REMOVE REAR SEAT CUSHION COVER PAD SUB-ASSEMBLY (for Hold Down Seat Type) (See page SE-114)**
9. **REMOVE REAR SEATBACK ASSEMBLY (for Hold Down Seat Type) (See page SE-115)**
10. **REMOVE REAR DOOR SCUFF PLATE (See page IR-51)**

SB

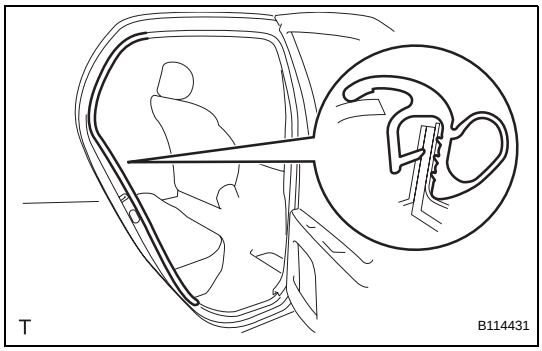


**11. REMOVE REAR DOOR OPENING TRIM WEATHERSTRIP**

(a) Remove the rear door opening trim weatherstrip to the extent that the deck trim side panel and roof side inner garnish can be removed.

**12. REMOVE REAR DECK TRIM COVER (See page IR-49)**

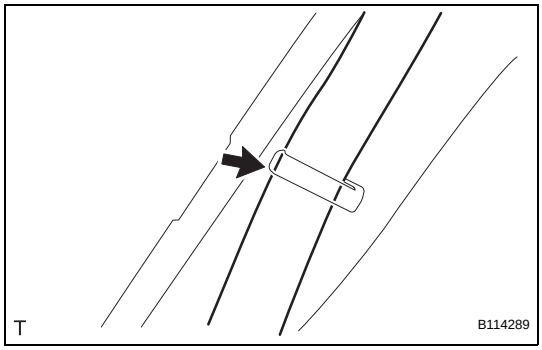


**13. REMOVE DECK TRIM SIDE PANEL ASSEMBLY**

(a) Remove the belt of the rear seat outer belt from the rear seat shoulder belt hanger.

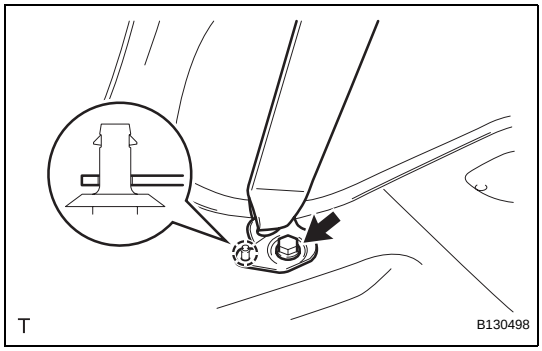


(b) Remove the bolt.

(c) Disengage the clip and remove the anchor plate of the rear seat outer belt.

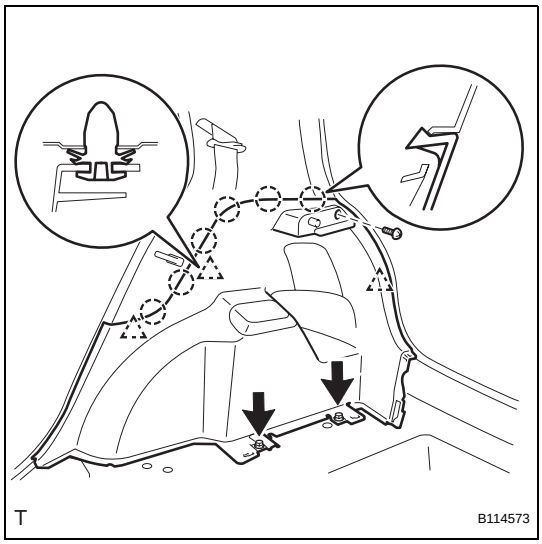


(d) for RH side:

(1) Remove the 3 screws.

(2) Disengage the 3 clips and the 6 claws and remove the deck trim side panel.

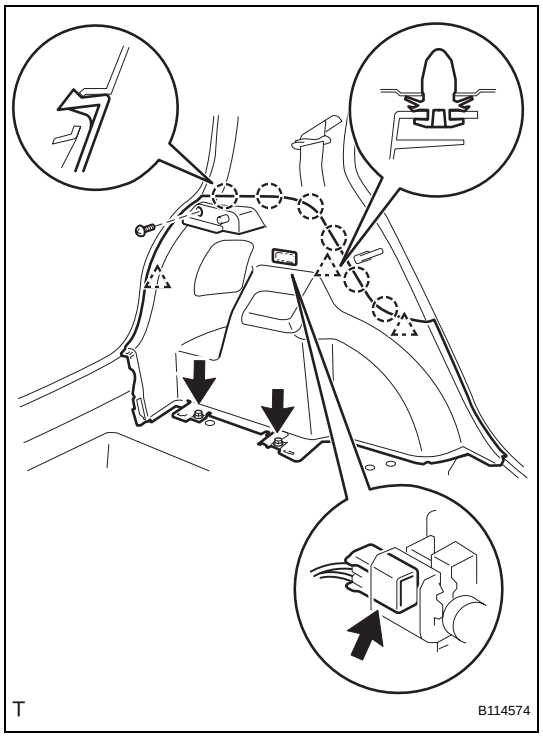


(e) for LH side:
  (1) Remove the 3 screws.
  (2) Disengage the 3 clips and the 6 claws.
  (3) Disconnect the luggage compartment room light connector and remove the deck trim side panel.



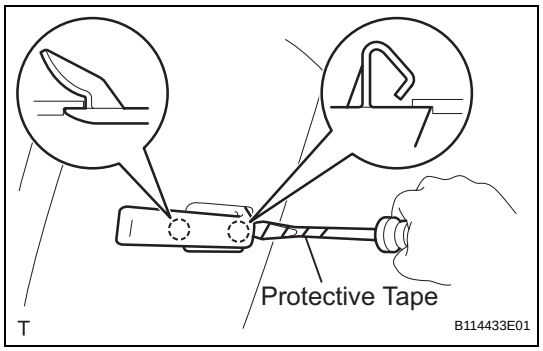


**14. REMOVE REAR SEAT SHOULDER BELT HANGER**

(a) Using a screwdriver with its tip wrapped in protective tape, disengage the 2 claws and remove the rear seat shoulder belt hanger.

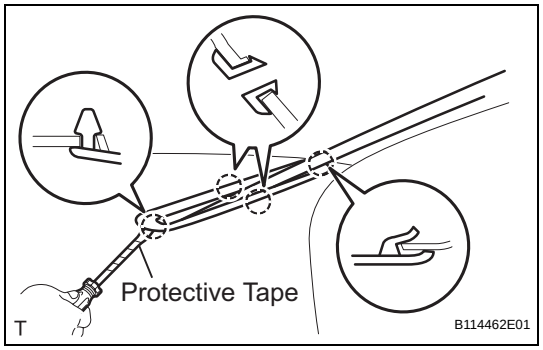


**15. REMOVE REAR CENTER SEAT OUTER BELT ASSEMBLY (for RH Side)**

(a) Using a screwdriver with its tip wrapped in protective tape, disengage the 4 claws and remove the center belt guide.

SB

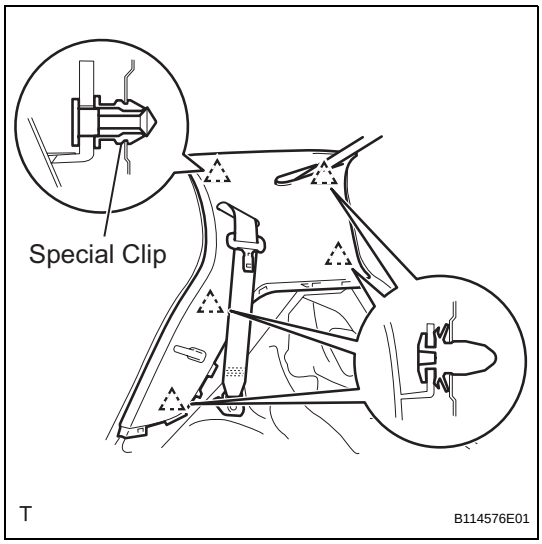


**16. REMOVE ROOF SIDE INNER GARNISH**

(a) for RH Side (w/ Curtain Shield Airbag):

**NOTICE:**

**Replace the special clip with a new one because it is damaged when the roof side inner garnish is removed.**

(1) Disengage the 5 clips.

(2) Pass the rear seat outer and rear center seat outer belts through the slit in the roof side inner garnish and remove the roof side inner garnish.

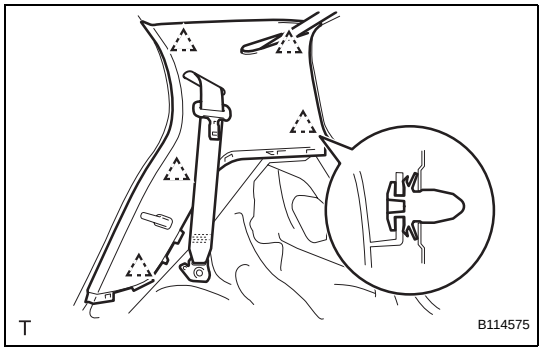


(b) for RH Side (w/o Curtain Shield Airbag):

(1) Disengage the 5 clips.

(2) Pass the rear seat outer and rear center seat outer belts through the slit in the roof side inner garnish and remove the roof side inner garnish.

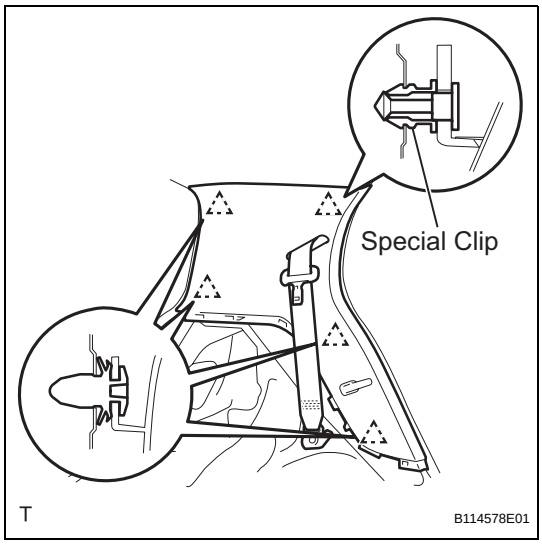


(c) for LH Side (w/ Curtain Shield Airbag):

**NOTICE:**

**Replace the special clip with a new one because it is damaged when the roof side inner garnish is removed.**

(1) Disengage the 5 clips.

(2) Pass the rear seat outer belt through the slit in the roof side inner garnish and remove the roof side inner garnish.

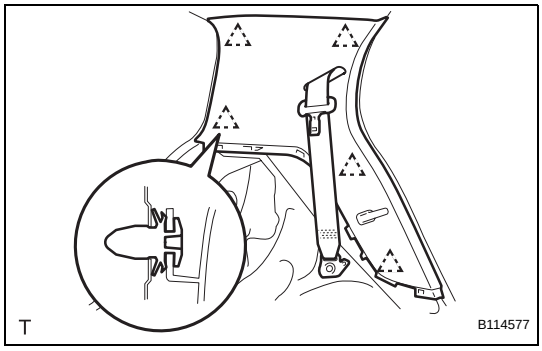


(d) for LH Side (w/o Curtain Shield Airbag):

(1) Disengage the 5 clips.

(2) Pass the rear seat outer belt through the slit in the roof side inner garnish and remove the roof side inner garnish.

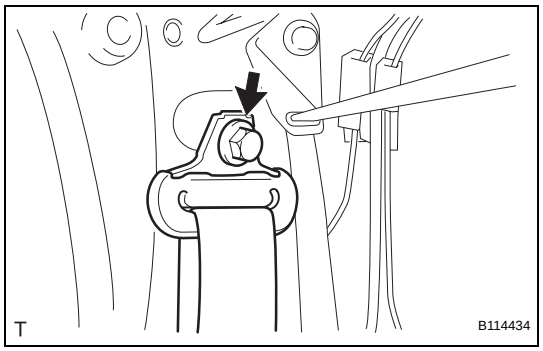


**17. REMOVE REAR SEAT OUTER BELT ASSEMBLY**

(a) Remove the bolt and the through anchor.



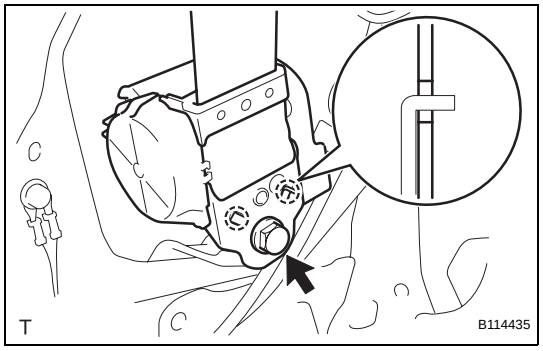


(b) Remove the bolt, the 2 hooks and the retractor.

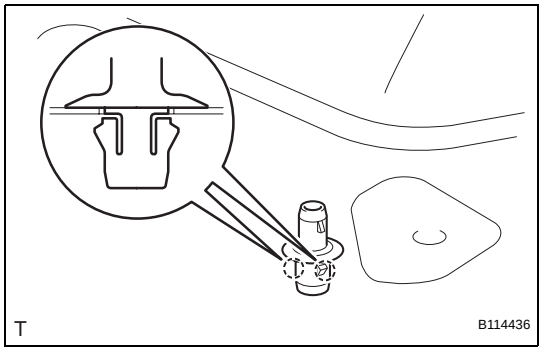


**18. REMOVE SEAT BELT HOLE SEAL**

(a) Disengage the 2 claws and remove the seat belt hole seal.

SB

# INSTALLATION

**CAUTION:**
**Always use "Torx" socket wrench E10 when installing the rear seat.**
HINT:
The procedure described below is for the RH side. Use the same procedure for both the RH and LH sides, unless otherwise specified.

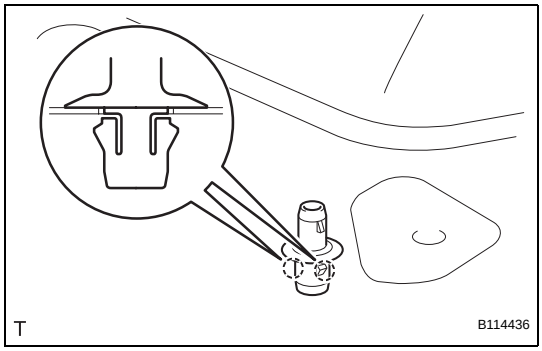


**1. INSTALL SEAT BELT HOLE SEAL**
(a) Engage the 2 claws and install the seat belt hole seal.

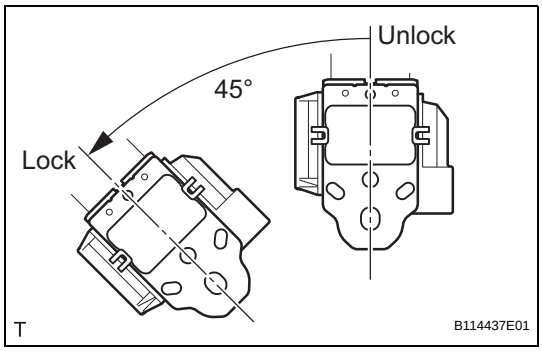


**2. INSTALL REAR SEAT OUTER BELT ASSEMBLY**
(a) Check the angle of inclination required to lock the retractor.
(1) Gently incline the retractor from its initial position. Check that the belt does not lock when the retractor is inclined 15° or less in any direction. Also, check that the belt locks when the inclination of the retractor is 45° or more.
**NOTICE:**
**Do not disassemble the retractor.**
If the operation is not as specified, replace the rear seat outer belt.

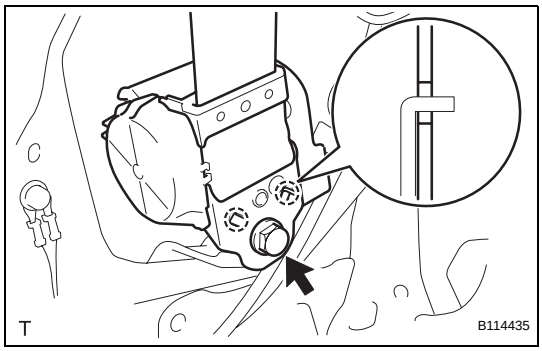


(b) Hook the lower stay of the retractor onto the 2 body hooks and install the retractor with the bolt.
**Torque: 42 N*m (430 kgf*cm, 31 ft.*lbf)**

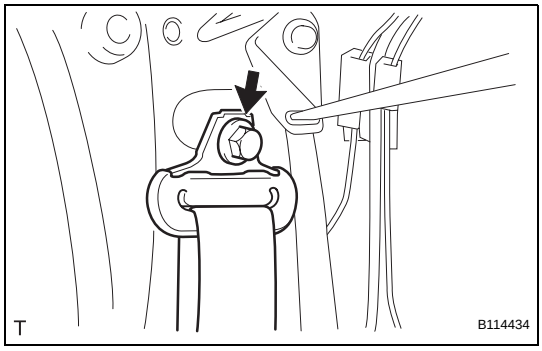


(c) Install the through anchor with the bolt.
**Torque: 42 N*m (430 kgf*cm, 31 ft.*lbf)**
(d) Check that the ELR locks.
**NOTICE:**
**Perform the check with the rear seat outer belt installed.**
(1) With the belt installed, check that the belt locks when it is pulled out quickly.
If the operation is not as specified, replace the rear seat outer belt.

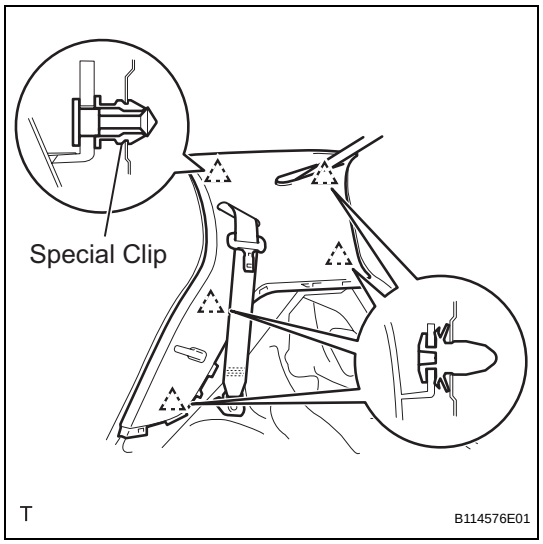


**3. INSTALL ROOF SIDE INNER GARNISH**

(a) for RH Side (w/ Curtain Shield Airbag):
  (1) Install a new special clip.
  (2) Pass the rear seat outer and rear center seat outer belts through the slit in the roof side inner garnish.
  (3) Engage the 5 clips and install the roof side inner garnish.

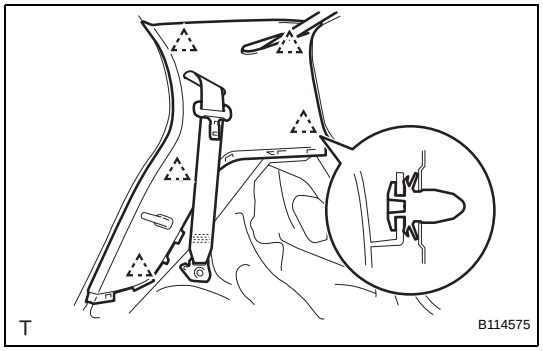


(b) for RH Side (w/o Curtain Shield Airbag):
  (1) Pass the rear seat outer and rear center seat outer belts through the slit in the roof side inner garnish.
  (2) Engage the 5 clips and install the roof side inner garnish.

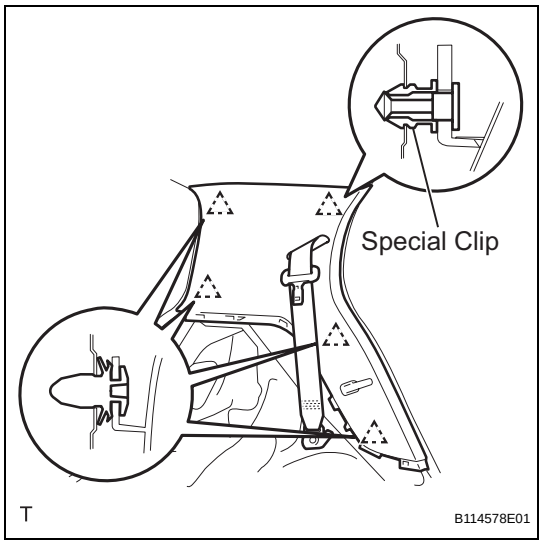


(c) for LH Side (w/ Curtain Shield Airbag):
  (1) Install a new special clip.
  (2) Pass the rear seat outer belt through the slit in the roof side inner garnish.
  (3) Engage the 5 clips and install the roof side inner garnish.

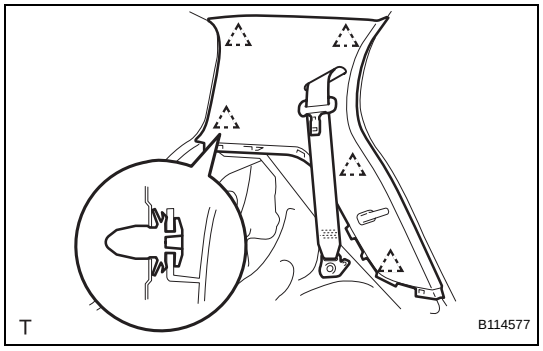


(d) for LH Side (w/o Curtain Shield Airbag):
  (1) Pass the rear seat outer belt through the slit in the roof side inner garnish.
  (2) Engage the 5 clips and install the roof side inner garnish.

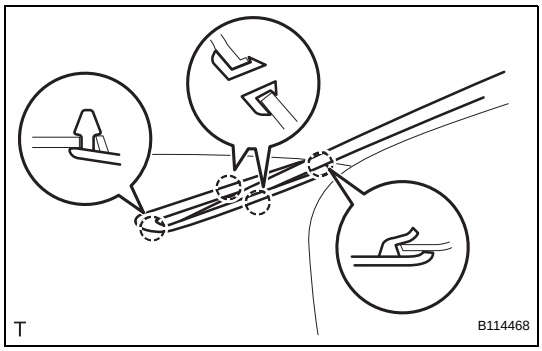


**4. INSTALL REAR CENTER SEAT OUTER BELT ASSEMBLY (for RH Side)**

(a) Engage the 4 claws and install the center belt guide.

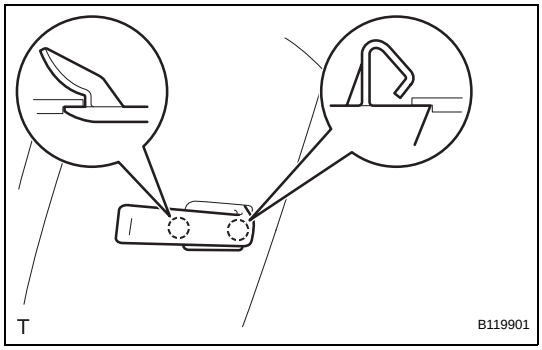


**5. INSTALL REAR SEAT SHOULDER BELT HANGER**

(a) Engage the 2 claws and install the rear seat shoulder belt hanger.

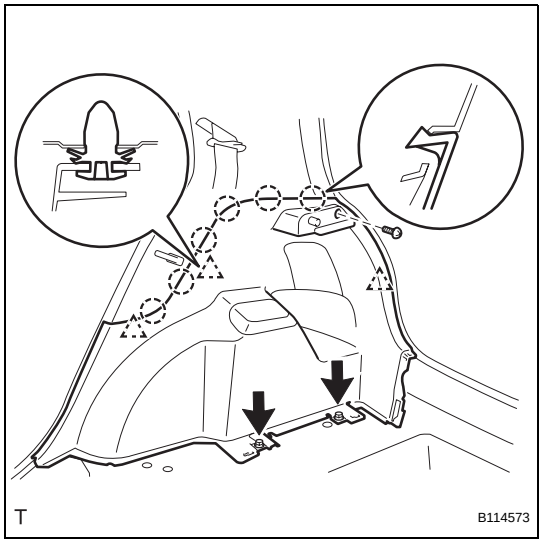


**6. INSTALL DECK TRIM SIDE PANEL ASSEMBLY**

(a) for RH Side:

(1) Engage the 3 clips and the 6 claws and install the deck trim side panel.

(2) Tighten the 3 screws.

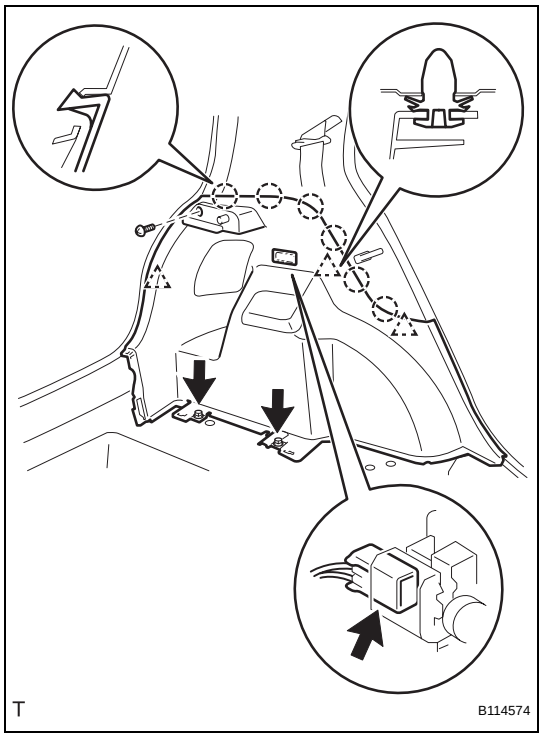


(b) for LH Side:
  (1) Connect the luggage compartment room light connector.
  (2) Engage the 3 clips and the 6 claws and install the deck trim side panel.
  (3) Tighten the 3 screws.

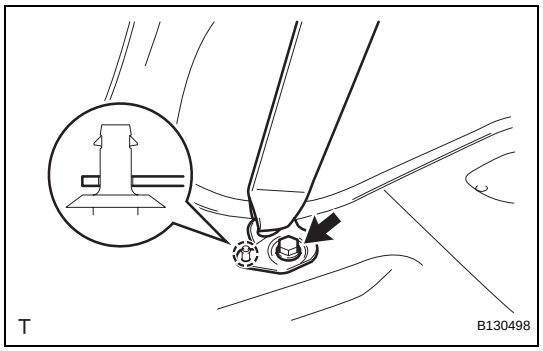


(c) Engage the clip and install the anchor plate of the rear seat outer belt.
(d) Tighten the bolt.
**Torque: 42 N*m (430 kgf*cm, 31 ft.*lbf)**

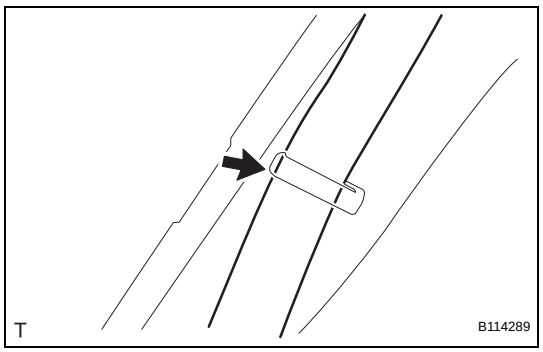


(e) Install the belt of the rear seat outer belt into the rear seat shoulder belt hanger.

**7. INSTALL REAR DECK TRIM COVER (See page IR-82)**

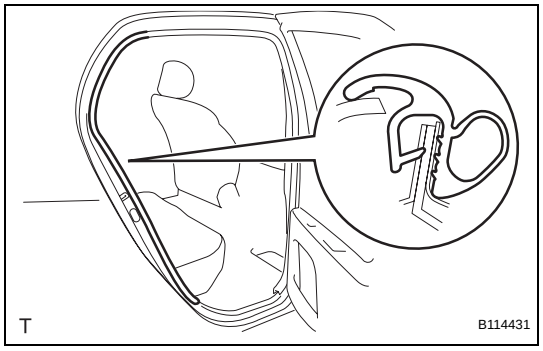


**8. INSTALL REAR DOOR OPENING TRIM WEATHERSTRIP**
(a) Install the rear door opening trim weatherstrip.

**9. INSTALL REAR DOOR SCUFF PLATE (See page IR-80)**

**10. INSTALL REAR SEAT ASSEMBLY (for 60/40 Split Seat Type)**
(a) for RH Side:
  (1) Install the rear seat assembly (See page SE-102).

(b) for LH Side:
(1) Install the rear seat assembly (See page SE-84).

**11. INSTALL NO. 2 REAR SEAT LEG COVER (for 60/40 Split Seat Type LH Side) (See page SE-85)**

**12. INSTALL NO. 1 REAR SEAT LEG COVER (for 60/40 Split Seat Type)**
(a) for RH Side:
(1) Install the No. 1 rear seat leg cover (See page SE-103).
(b) for LH Side:
(1) Install the No. 1 rear seat leg cover (See page SE-85).

**13. INSTALL REAR SEATBACK ASSEMBLY (for Hold Down Seat Type) (See page SE-122)**

**14. INSTALL REAR SEAT CUSHION COVER PAD SUB-ASSEMBLY (for Hold Down Seat Type) (See page SE-123)**

**15. INSTALL DECK FLOOR BOX**
(a) for RH Side:
(1) Install the deck floor box (See page IR-83).
(b) for LH Side:
HINT:
Use the same procedure as for the RH side.

**16. INSTALL DECK BOARD SUB-ASSEMBLY (See page IR-83)**

**17. INSTALL PACKAGE TRAY TRIM PANEL ASSEMBLY (See page IR-83)**

**18. CONNECT CABLE TO NEGATIVE BATTERY TERMINAL (for LH Side)**
**Torque: 5.4 N*m (55 kgf*cm, 48 in.*lbf)**

# REAR SEAT OUTER BELT ASSEMBLY (for Hatchback 3 Door)

## COMPONENTS



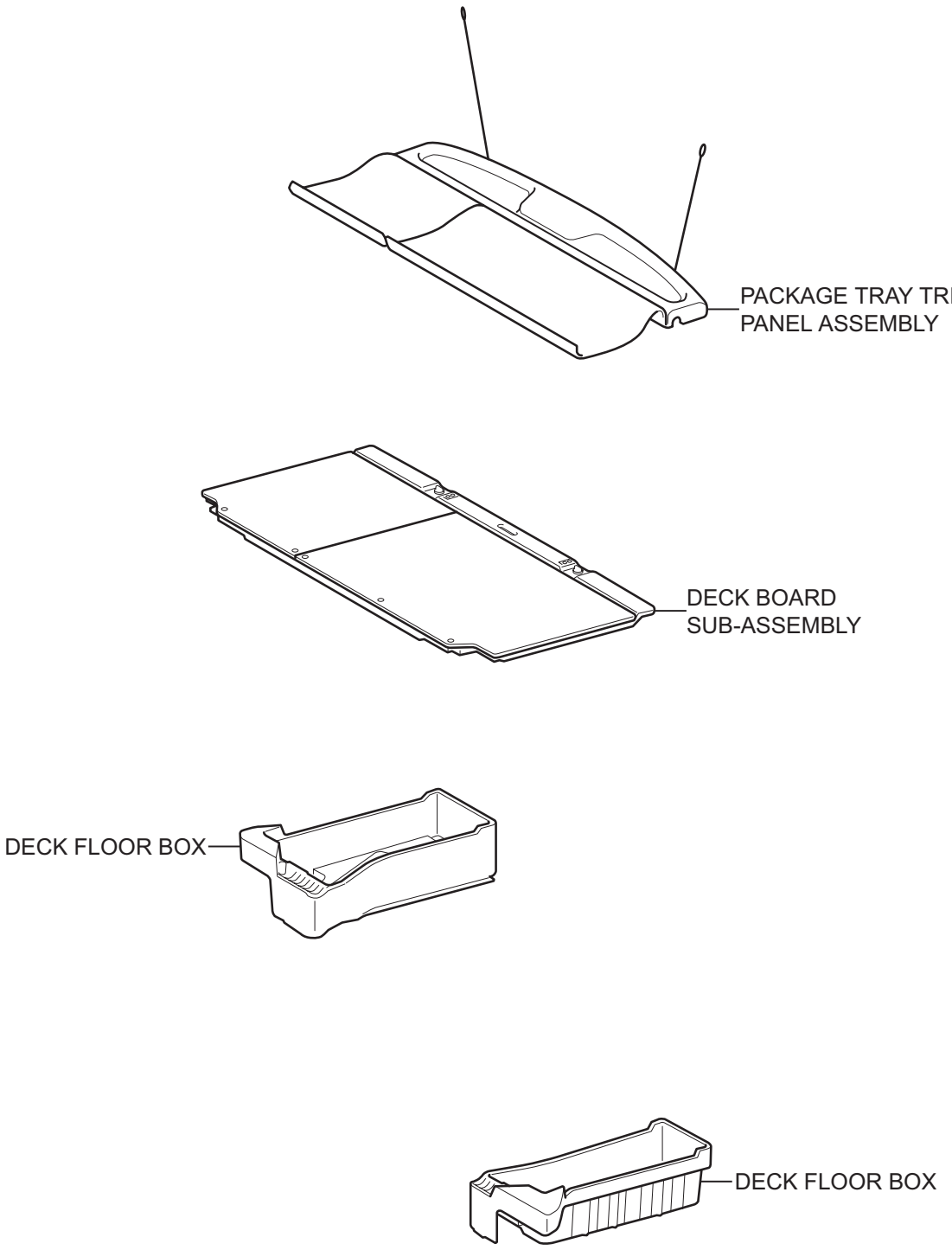


T

B127707E02

SB

**for 60/40 Split Seat Type:**

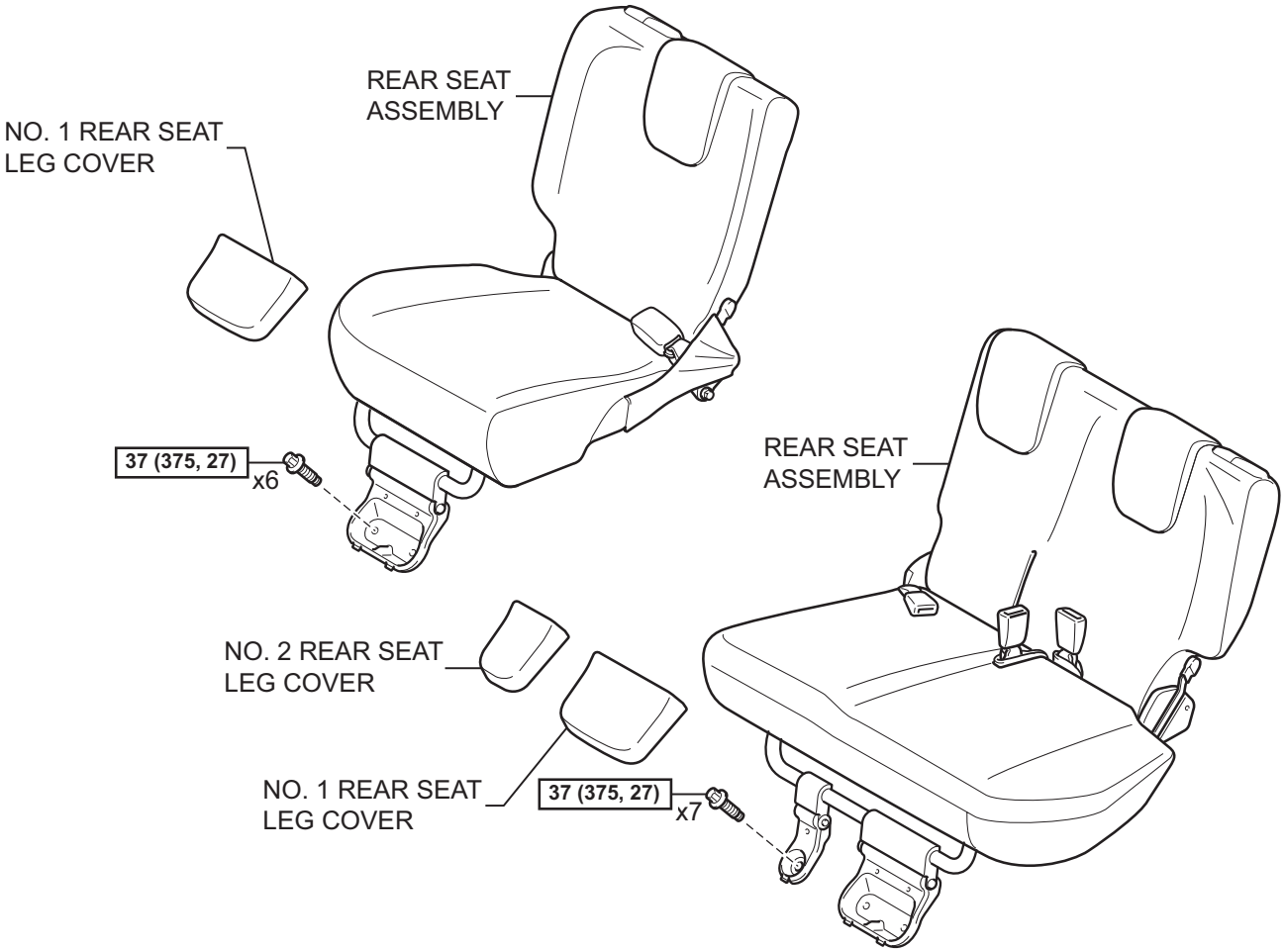


**for Hold Down Seat Type:**

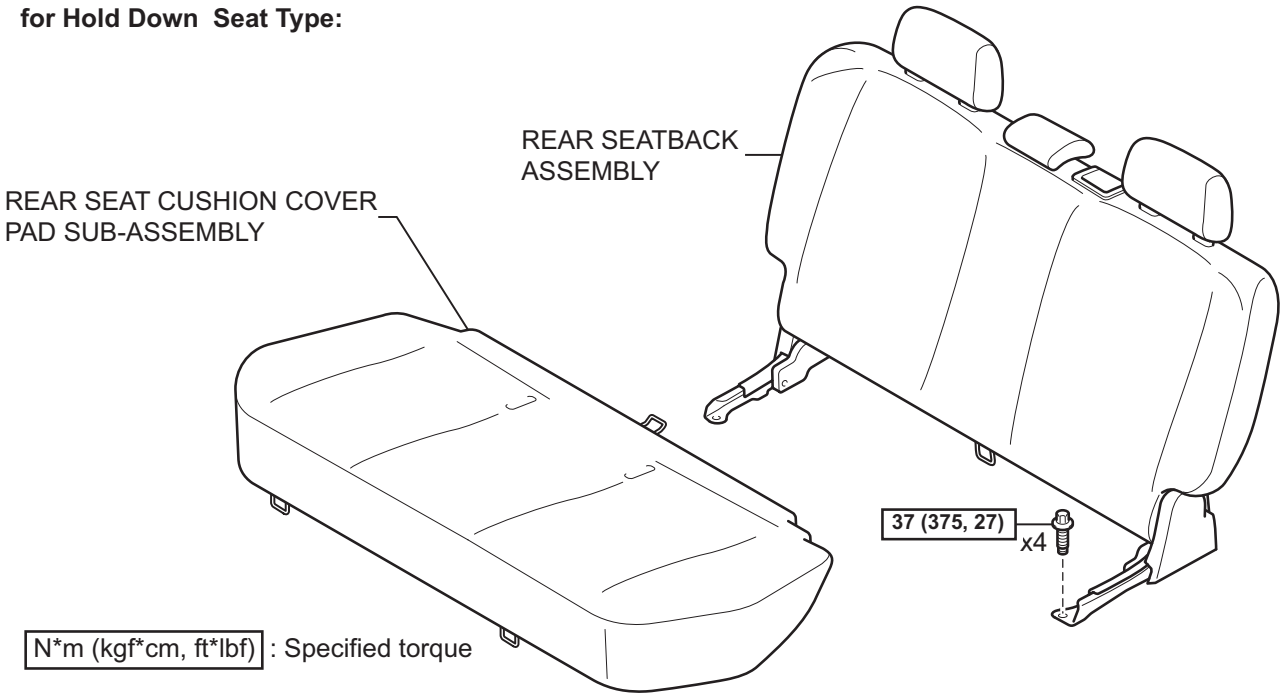


N*m (kgf*cm, ft*lbf) : Specified torque

T

B121713E05

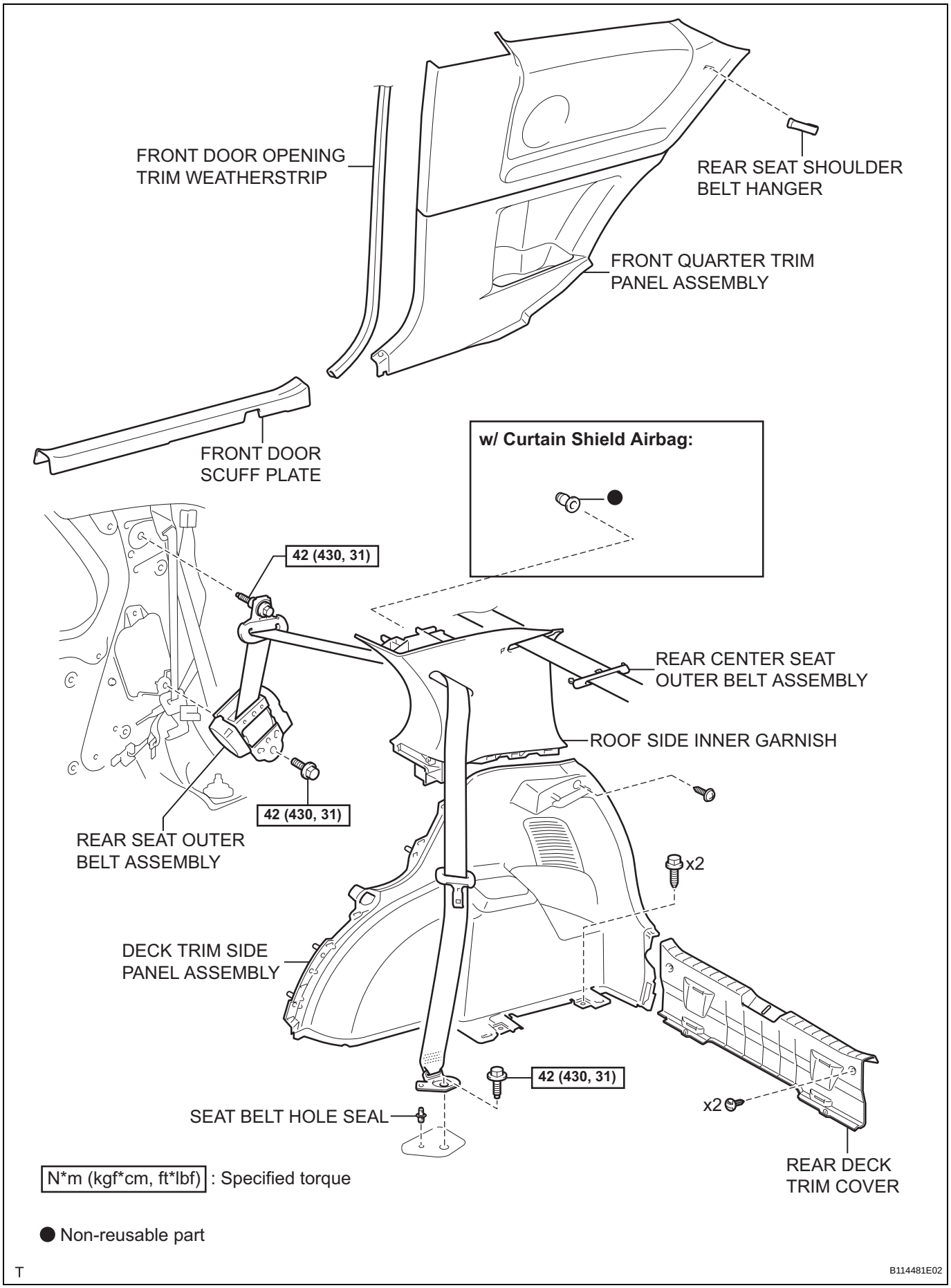
FRONT DOOR OPENING TRIM WEATHERSTRIP
REAR SEAT SHOULDER BELT HANGER
FRONT QUARTER TRIM PANEL ASSEMBLY
FRONT DOOR SCUFF PLATE
w/ Curtain Shield Airbag:
42 (430, 31)
REAR CENTER SEAT OUTER BELT ASSEMBLY
ROOF SIDE INNER GARNISH
42 (430, 31)
REAR SEAT OUTER BELT ASSEMBLY
x2
DECK TRIM SIDE PANEL ASSEMBLY
42 (430, 31)
x2
SEAT BELT HOLE SEAL
REAR DECK TRIM COVER
N*m (kgf*cm, ft*lbf) : Specified torque
● Non-reusable part
T
B114481E02

# REMOVAL

**NOTICE:**
**Always use "Torx" socket wrench E10 when removing the rear seat.**
HINT:
The procedure described below is for the RH side. Use the same procedure for both the RH and LH sides, unless otherwise specified.

1. **DISCONNECT CABLE FROM NEGATIVE BATTERY TERMINAL (for LH Side)**
2. **REMOVE PACKAGE TRAY TRIM PANEL ASSEMBLY (See page IR-48)**
3. **REMOVE DECK BOARD SUB-ASSEMBLY (See page IR-48)**
4. **REMOVE DECK FLOOR BOX**
   (a) for RH Side:
      (1) Remove the deck floor box (See page IR-48).
   (b) for LH Side:
      HINT:
      Use the same procedure as for the RH side.
5. **REMOVE NO. 1 REAR SEAT LEG COVER (for 60/40 Split Seat Type)**
   (a) for RH Side:
      (1) Remove the No. 1 rear seat leg cover (See page SE-89).
   (b) for LH Side:
      (1) Remove the No. 1 rear seat leg cover (See page SE-70).
6. **REMOVE NO. 2 REAR SEAT LEG COVER (for 60/40 Split Seat Type LH Side) (See page SE-70)**
7. **REMOVE REAR SEAT ASSEMBLY (for 60/40 Split Seat Type)**
   (a) for RH Side:
      (1) Remove the rear seat assembly (See page SE-89).
   (b) for LH Side:
      (1) Remove the rear seat assembly (See page SE-71).
8. **REMOVE REAR SEAT CUSHION COVER PAD SUB-ASSEMBLY (for Hold Down Seat Type) (See page SE-114)**
9. **REMOVE REAR SEATBACK ASSEMBLY (for Hold Down Seat Type) (See page SE-115)**
10. **REMOVE FRONT DOOR SCUFF PLATE (See page IR-97)**
11. **REMOVE FRONT DOOR OPENING TRIM WEATHERSTRIP (See page SB-76)**

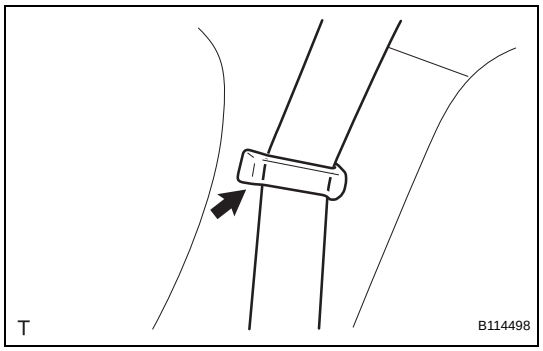


**12. REMOVE REAR SEAT SHOULDER BELT HANGER**

(a) Remove the belt of the rear seat outer belt.

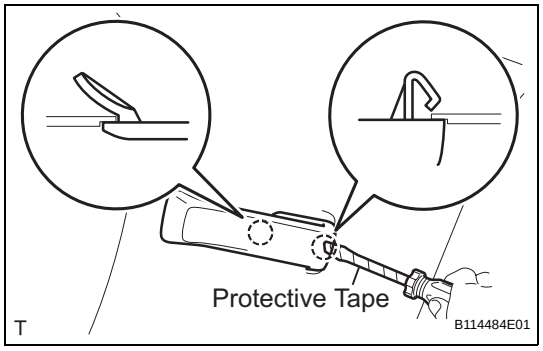


(b) Using a screwdriver with its tip wrapped in protective tape, disengage the 2 claws and remove the rear seat shoulder belt hanger.

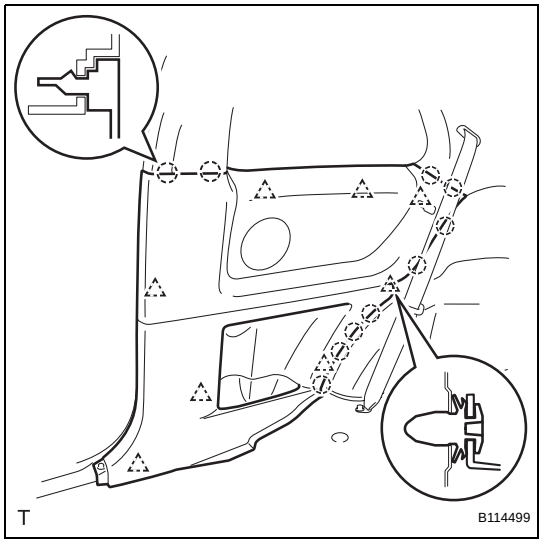


**13. REMOVE FRONT QUARTER TRIM PANEL ASSEMBLY**

(a) Disengage the 8 clips, the retainer and the 10 claws and remove the front quarter trim panel.

**14. REMOVE REAR DECK TRIM COVER (See page IR-49)**

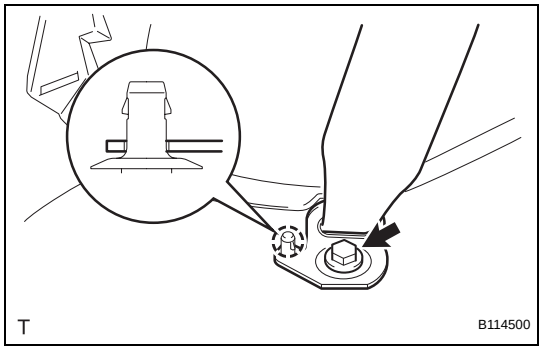


**15. REMOVE DECK TRIM SIDE PANEL ASSEMBLY**

(a) Remove the bolt.

(b) Disengage the clip and the anchor plate of the rear seat outer belt.

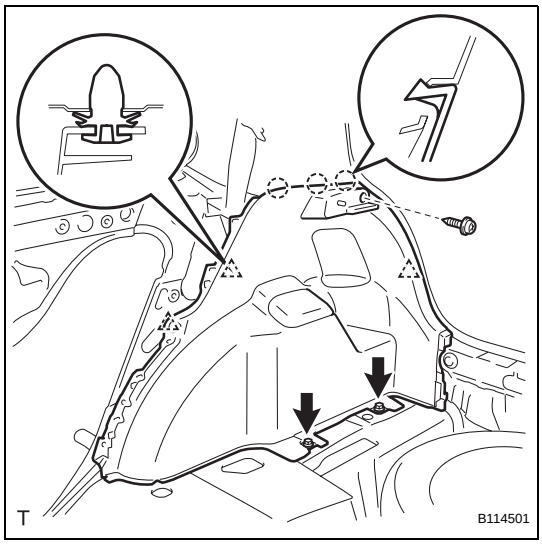


(c) for RH Side:
  (1) Remove the 3 screws.
  (2) Disengage the 3 clips and the 3 claws and remove the deck trim side panel.

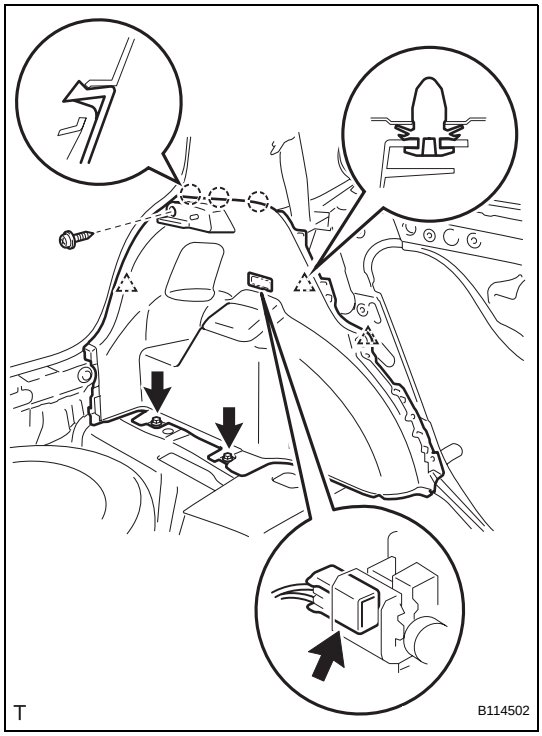


(d) for LH Side:
  (1) Remove the 3 screws.
  (2) Disengage the 3 clips and the 3 claws.
  (3) Disconnect the luggage compartment room light connector and remove the deck trim side panel.

**16. REMOVE REAR CENTER SEAT OUTER BELT ASSEMBLY (for RH Side) (See page SB-113)**

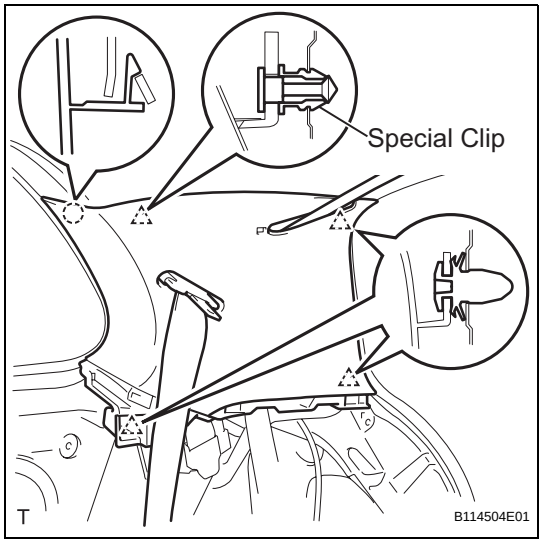


**17. REMOVE ROOF SIDE INNER GARNISH**

(a) for RH Side (w/ Curtain Shield Airbag):

**NOTICE:**
**Replace the special clip with a new one because it is damaged when the roof side inner garnish is removed.**

  (1) Disengage the 4 clips and the claw.
  (2) Pass the rear seat outer and rear center seat outer belts through the slit in the roof side inner garnish and remove the roof side inner garnish.

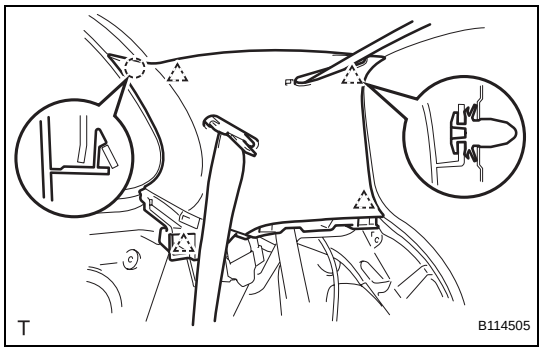


(b) for RH Side (w/o Curtain Shield Airbag):
  (1) Disengage the 4 clips and the claw.
  (2) Pass the rear seat outer and rear center seat outer belts through the slit in the roof side inner garnish and remove the roof side inner garnish.



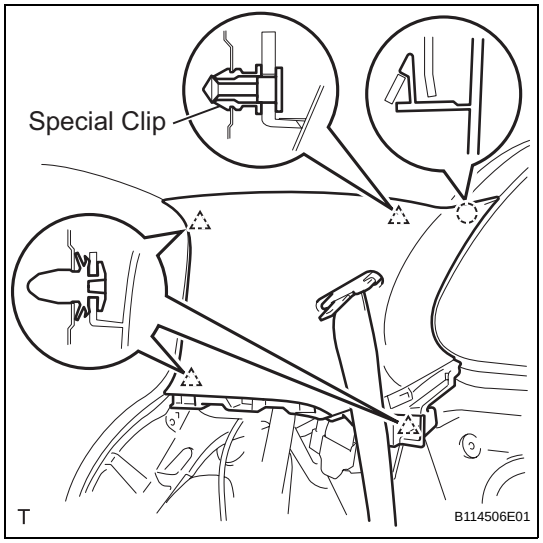


(c) for LH Side (w/ Curtain Shield Airbag):
**NOTICE:**
**Replace the special clip with a new one because it is damaged when the roof side inner garnish is removed.**
  (1) Disengage the 4 clips and the claw.
  (2) Pass the rear seat outer belt through the slit in the roof side inner garnish and remove the roof side inner garnish.

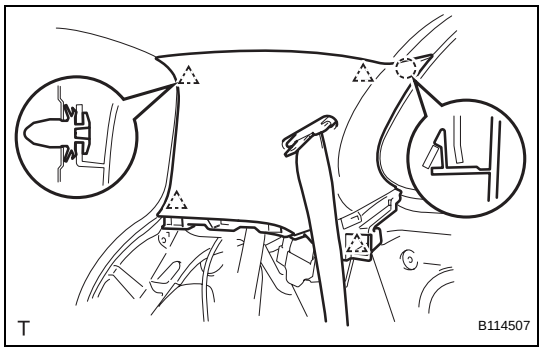


(d) for LH Side (w/o Curtain Shield Airbag):
  (1) Disengage the 4 clips and the claw.
  (2) Pass the rear seat outer belt through the slit in the roof side inner garnish and remove the roof side inner garnish.

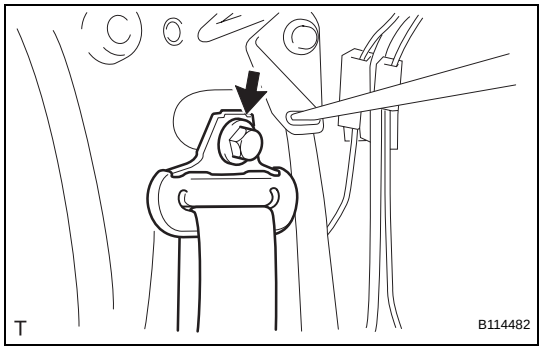


**18. REMOVE REAR SEAT OUTER BELT ASSEMBLY**
(a) Remove the bolt and the through anchor.

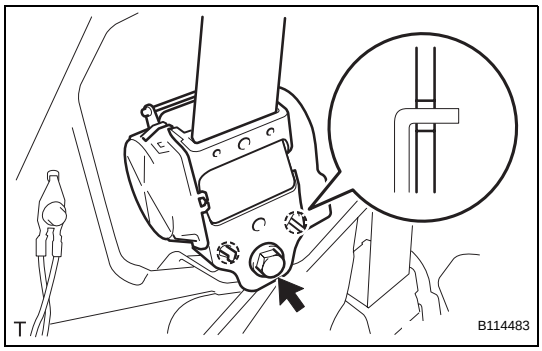


(b) Remove the bolt, the 2 hooks and the retractor.

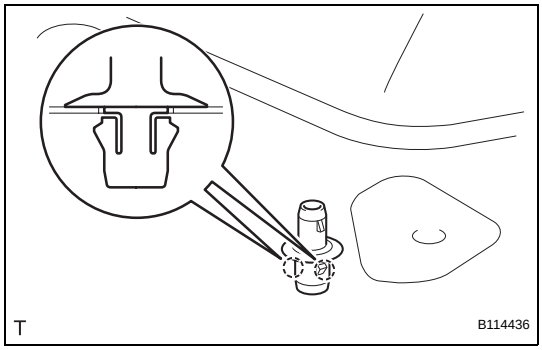


**19. REMOVE SEAT BELT HOLE SEAL**

(a) Disengage the 2 claws and remove the seat belt hole seal.

# INSTALLATION

**NOTICE:**
**Always use "Torx" socket wrench E10 when installing the rear seat.**
HINT:
The procedure described below is for the RH side. Use the same procedure for both the RH and LH sides, unless otherwise specified.

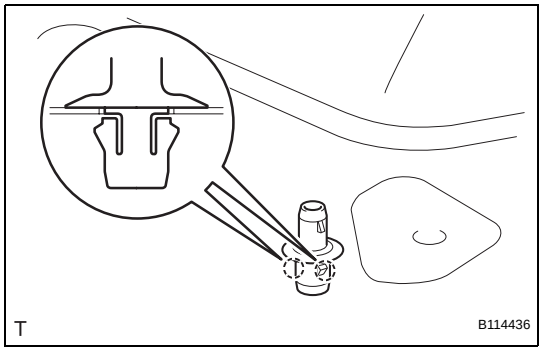


**1. INSTALL SEAT BELT HOLE SEAL**
(a) Engage the 2 claws and install the seat belt hole seal.

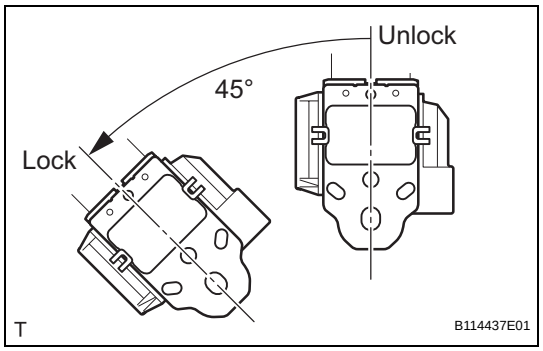


**2. INSTALL REAR SEAT OUTER BELT ASSEMBLY**
(a) Check the angle of inclination required to lock the retractor.
(1) Gently incline the retractor from its initial position. Check that the belt does not lock when the retractor is inclined 15° or less in any direction. Also, check that the belt locks when the inclination of the retractor is 45° or more.
**NOTICE:**
**Do not disassemble the retractor.**
If the operation is not as specified, replace the rear seat outer belt.

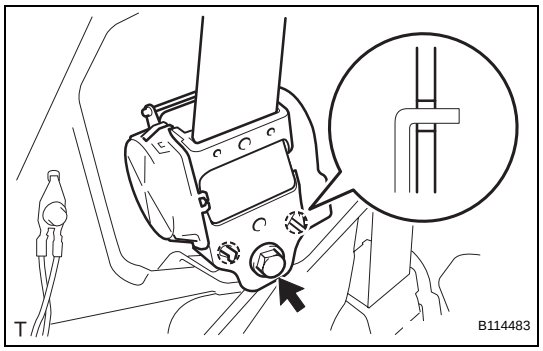


(b) Hook the lower stay of the retractor onto the 2 body hooks and install the retractor with the bolt.
**Torque: 42 N*m (430 kgf*cm, 31 ft.*lbf)**

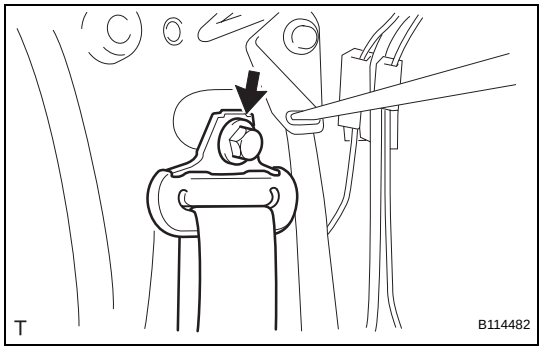


(c) Install the through anchor with the bolt.
**Torque: 42 N*m (430 kgf*cm, 31 ft.*lbf)**
(d) Check that the ELR locks.
**NOTICE:**
**Perform the check with the rear seat outer belt installed.**
(1) With the belt installed, check that the belt locks when it is pulled out quickly.
If the operation is not as specified, replace the rear seat outer belt.

SB

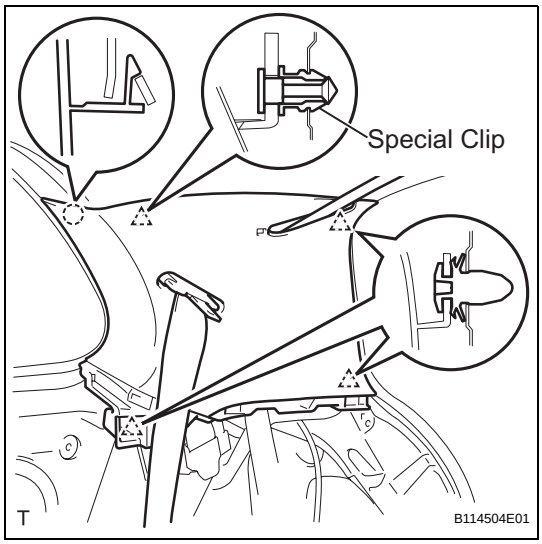


**3. INSTALL ROOF SIDE INNER GARNISH**

(a) for RH Side (w/ Curtain Shield Airbag):
- (1) Install a new special clip.
- (2) Pass the rear seat outer and rear center seat outer belts through the slit in the roof side inner garnish.
- (3) Engage the 4 clips and the claw and install the roof side inner garnish.

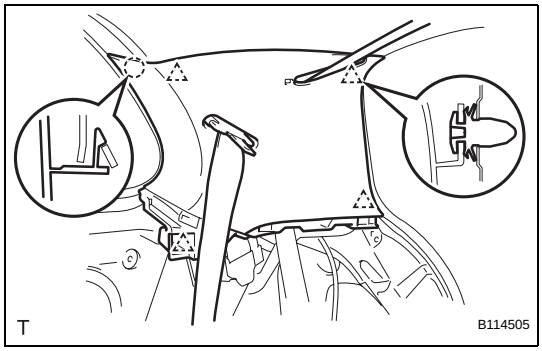


(b) for RH Side (w/o Curtain Shield Airbag):
- (1) Pass the rear seat outer and rear center seat outer belts through the slit in the roof side inner garnish.
- (2) Engage the 4 clips and the claw and install the roof side inner garnish.

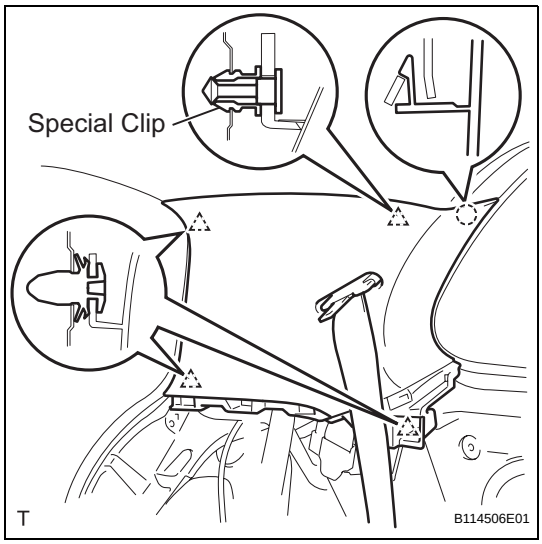


(c) for LH Side (w/ Curtain Shield Airbag):
- (1) Install a new special clip.
- (2) Pass the rear seat outer belt through the slit in the roof side inner garnish.
- (3) Engage the 4 clips and the claw and install the roof side inner garnish.

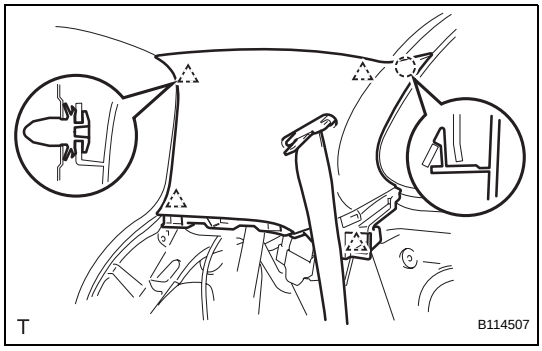


(d) for LH Side (w/o Curtain Shield Airbag):
- (1) Pass the rear seat outer belt through the slit in the roof side inner garnish.
- (2) Engage the 4 clips and the claw and install the roof side inner garnish.

**4. INSTALL REAR CENTER SEAT OUTER BELT ASSEMBLY (for RH Side) (See page SB-117)**

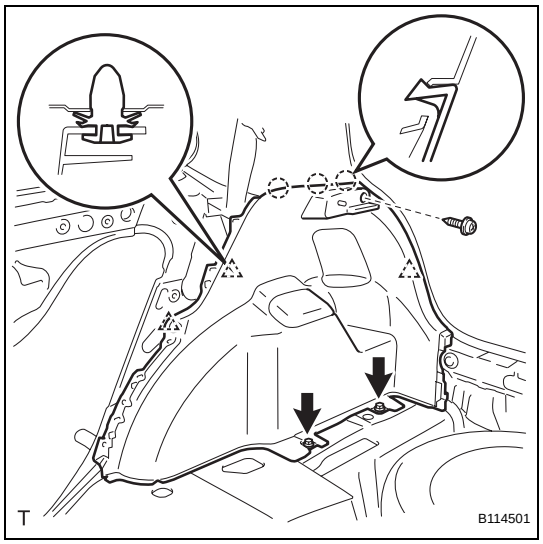


**5. INSTALL DECK TRIM SIDE PANEL ASSEMBLY**

(a) for RH Side:

(1) Engage the 3 clips and the 3 claws and install the deck trim side panel.

(2) Tighten the 3 screws.

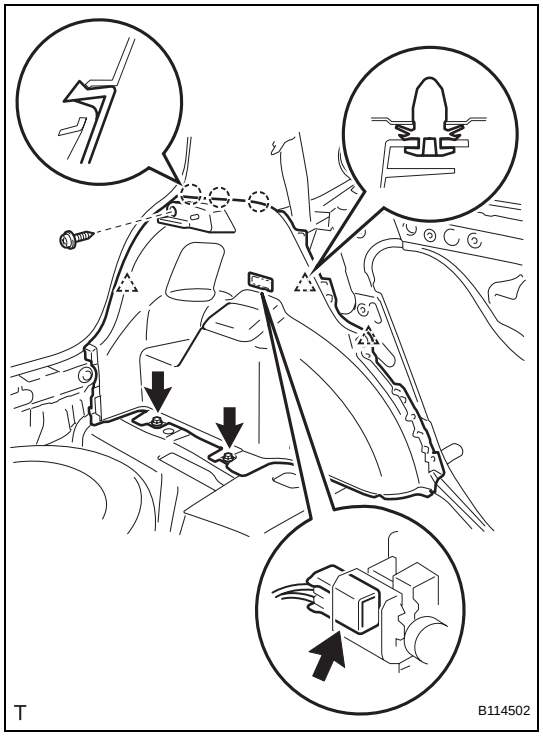


(b) for LH Side:

(1) Connect the luggage compartment room light connector.

(2) Engage the 3 clips and the 3 claws and install the deck trim side panel.

(3) Tighten the 3 screws.

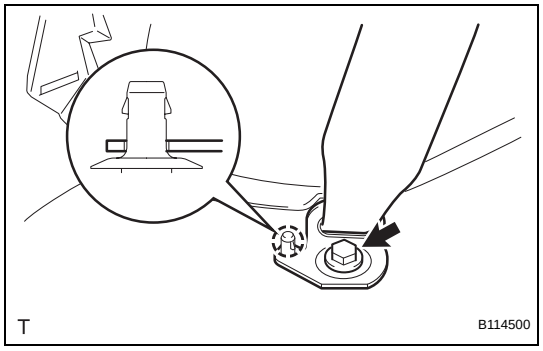


(c) Engage the clip and install the anchor plate of the rear seat outer belt.

(d) Tighten the bolt.
**Torque: 42 N*m (430 kgf*cm, 31 ft.*lbf)**

**6. INSTALL REAR DECK TRIM COVER (See page IR-82)**

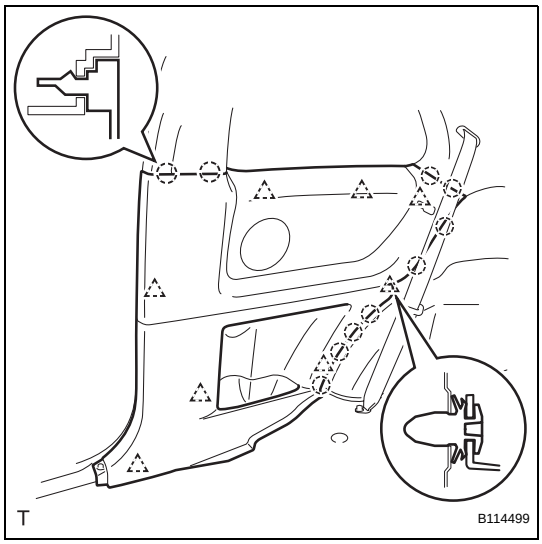


**7. INSTALL FRONT QUARTER TRIM PANEL ASSEMBLY**

(a) Engage the 8 clips, the retainer and the 10 claws and install the front quarter trim panel.

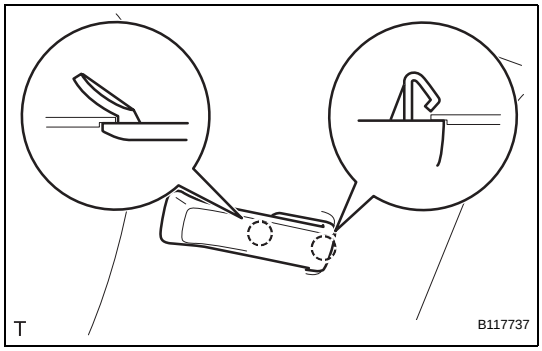


**8. INSTALL REAR SEAT SHOULDER BELT HANGER**

(a) Engage the 2 claws and install the rear seat shoulder belt hanger.

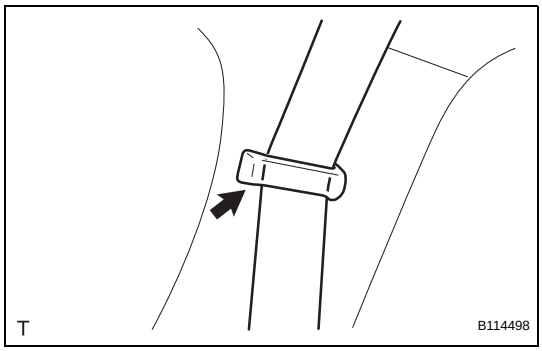


(b) Install the belt of the rear seat outer belt.

**9. INSTALL FRONT DOOR OPENING TRIM WEATHERSTRIP (See page SB-80)**

**10. INSTALL FRONT DOOR SCUFF PLATE (See page IR-119)**

**11. INSTALL REAR SEAT ASSEMBLY (for 60/40 Split Seat Type)**

(a) for RH Side:
  (1) Install the rear seat assembly (See page SE-102).

(b) for LH Side:
  (1) Install the rear seat assembly (See page SE-84).

**12. INSTALL NO. 2 REAR SEAT LEG COVER (for 60/40 Split Seat Type LH Side) (See page SE-85)**

**13. INSTALL NO. 1 REAR SEAT LEG COVER (for 60/40 Split Seat Type)**

(a) for RH Side:
  (1) Install the No. 1 rear seat leg cover (See pageSE-103 ).

(b) for LH Side:
  (1) Install the No. 1 rear seat leg cover (See page SE-85).

**14. INSTALL REAR SEATBACK ASSEMBLY (for Hold Down Seat Type) (See page SE-122)**

**15. INSTALL REAR SEAT CUSHION COVER PAD SUB-ASSEMBLY (for Hold Down Seat Type) (See page SE-123)**

**16. INSTALL DECK FLOOR BOX**

(a) for RH Side:

(1) Install the deck floor box (See page IR-83).

(b) for LH Side:

HINT:

Use the same procedure as for the RH side.

**17. INSTALL DECK BOARD SUB-ASSEMBLY (See page IR-83)**

**18. INSTALL PACKAGE TRAY TRIM PANEL ASSEMBLY (See page IR-83)**

**19. CONNECT CABLE TO NEGATIVE BATTERY TERMINAL (for LH Side)**
**Torque: 5.4 N*m (55 kgf*cm, 48 in.*lbf)**

# REAR CENTER SEAT INNER BELT ASSEMBLY (for Sedan)

## COMPONENTS



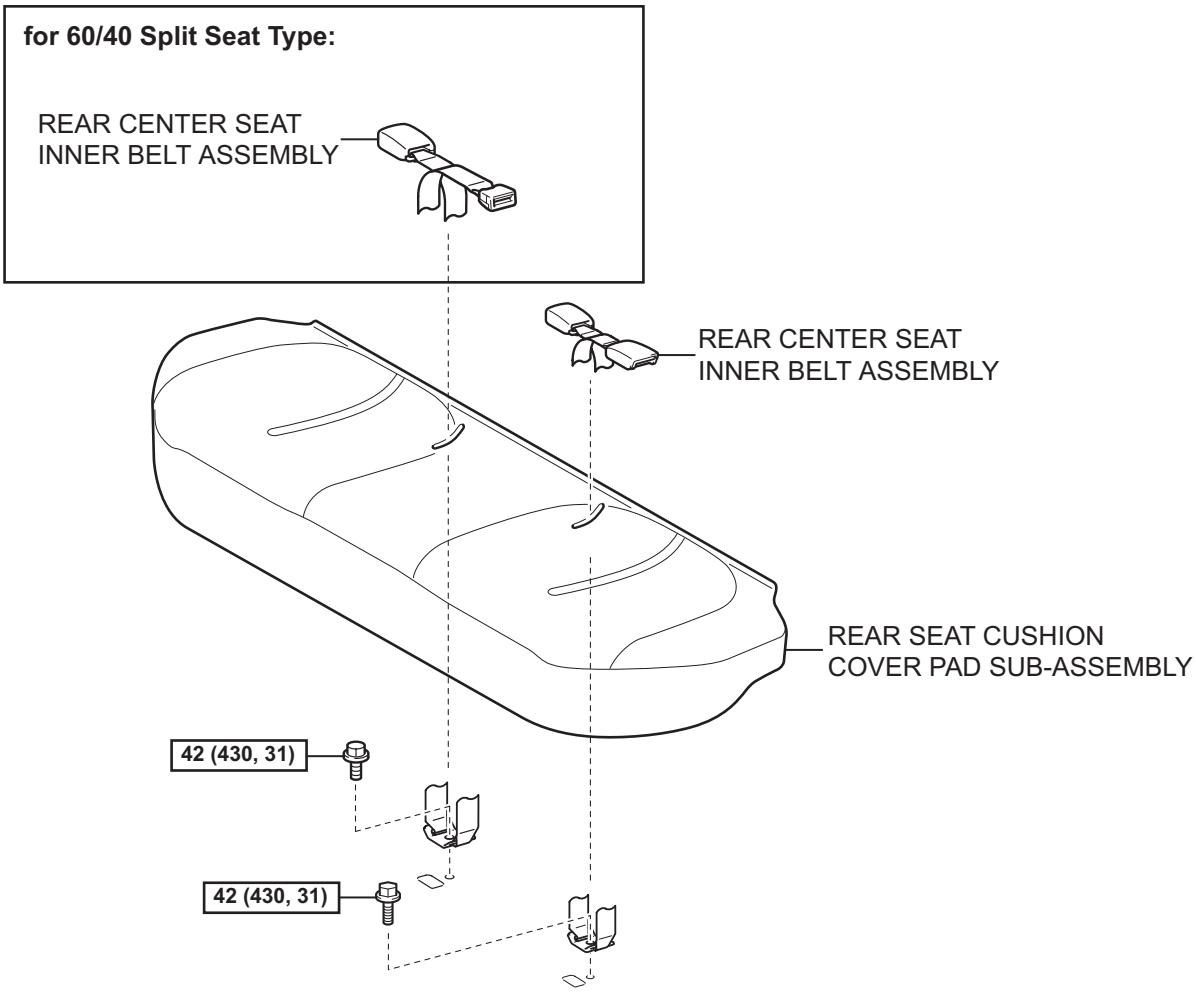


N*m (kgf*cm, ft*lbf) : Specified torque

T

B138566E03

# REMOVAL

**1. REMOVE REAR SEAT CUSHION COVER PAD SUB-ASSEMBLY**

(a) for 60/40 Split Seat Type:

(1) Remove the rear seat cushion cover pad (See page SE-46).

(b) for Fixed Seat Type:

(1) Remove the rear seat cushion cover pad (See page SE-106).

**2. REMOVE REAR CENTER SEAT INNER BELT ASSEMBLY**

(a) for RH Side (for 60/40 Split Seat Type):

(1) Remove the bolt and the rear center seat inner belt.

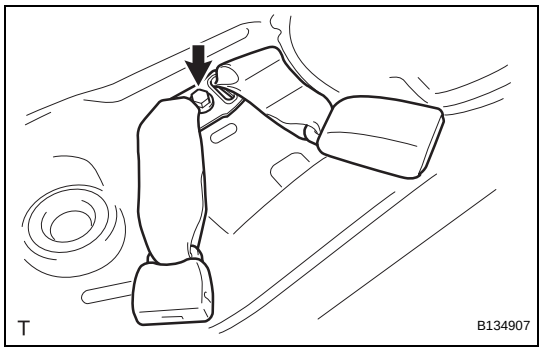


(b) for LH Side:

(1) Remove the bolt and the rear center seat inner belt.

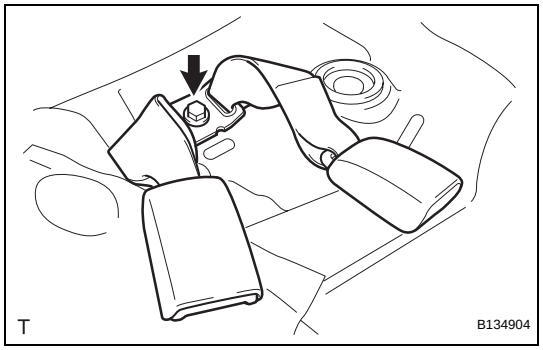


# INSTALLATION

**1. INSTALL REAR CENTER SEAT INNER BELT ASSEMBLY**

(a) for RH Side (for 60/40 Split Seat Type):

(1) Install the rear center seat inner belt with the bolt.

**Torque: 42 N*m (430 kgf*cm, 31 ft.*lbf)**

**NOTICE:**

- **Install the anchor plate with the arrow mark facing forward.**
- **Do not place the anchor plate over the locating mark area of the floor panel.**

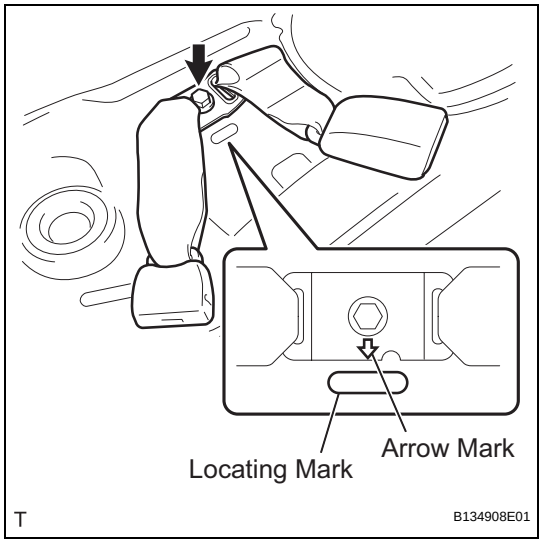

(b) for LH Side:

(1) Install the rear center seat inner belt with the bolt.

**Torque: 42 N*m (430 kgf*cm, 31 ft.*lbf)**

**NOTICE:**

- **Install the anchor plate with the arrow mark facing forward.**
- **Do not place the anchor plate over the locating mark area of the floor panel.**

**2. INSTALL REAR SEAT CUSHION COVER PAD SUB-ASSEMBLY**

(a) for 60/40 Split Seat Type:

(1) Install the rear seat cushion cover pad (See page SE-53).

(b) for Fixed Seat Type:

(1) Install the rear seat cushion cover pad (See page SE-109).

# REAR CENTER SEAT INNER BELT ASSEMBLY (for Hatchback LH Side)

## COMPONENTS



**for 60/40 Split Seat Type:**

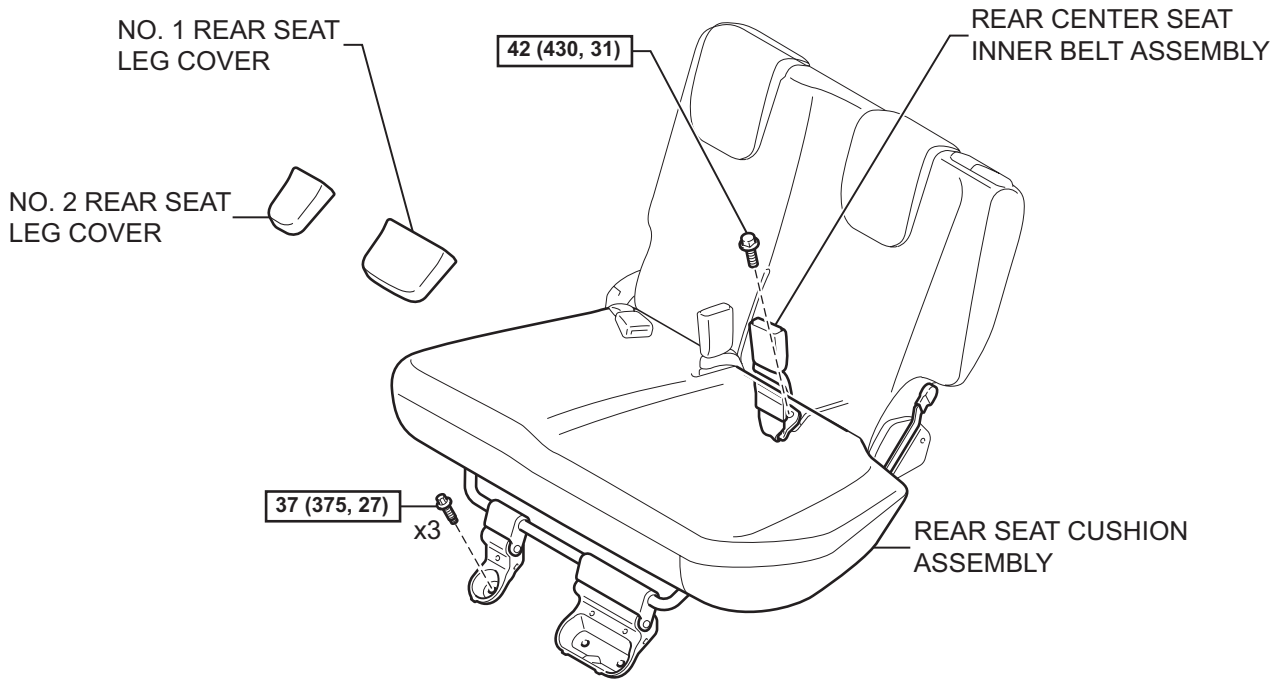


**for Hold Down Seat Type:**

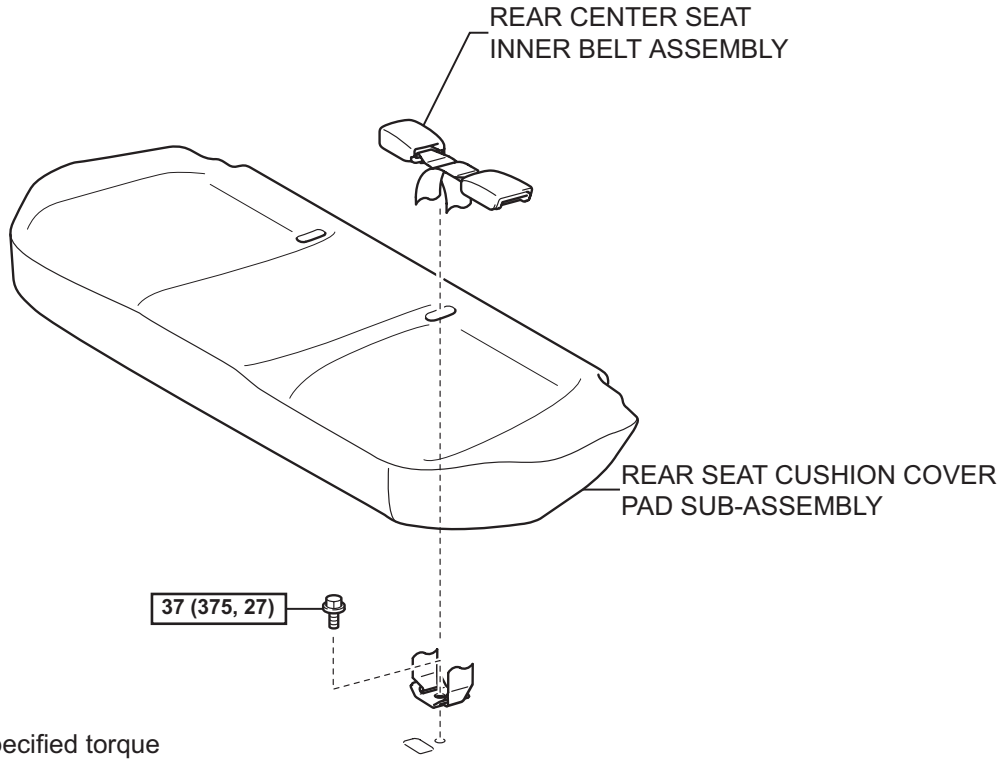


N*m (kgf*cm, ft*lbf) : Specified torque

T

B114645E03

SB

# REMOVAL

**NOTICE:**
**Always use "Torx" socket wrench E10 when removing the rear seat.**

1. **REMOVE NO. 1 REAR SEAT LEG COVER (for 60/40 Split Seat Type) (See page SE-70)**
2. **REMOVE NO. 2 REAR SEAT LEG COVER (for 60/40 Split Seat Type) (See page SE-70)**
3. **REMOVE REAR SEAT CUSHION COVER PAD SUB-ASSEMBLY (for Hold Down Seat Type) (See page SE-114)**
4. **REMOVE REAR CENTER SEAT INNER BELT ASSEMBLY**
   (a) for 60/40 Split Seat Type:
   (1) Using "Torx" socket wrench E10, remove the 3 bolts and pull up the rear seat cushion.

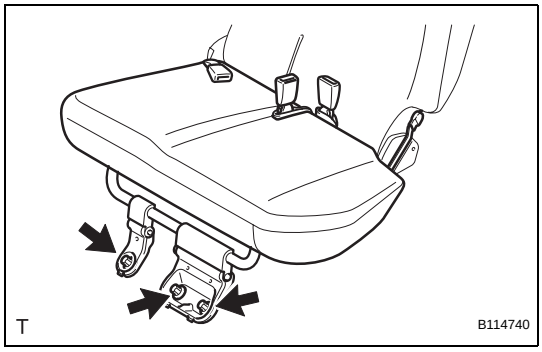


   (2) Remove the belt from the band.
   (3) Remove the bolt and the rear center seat inner belt.

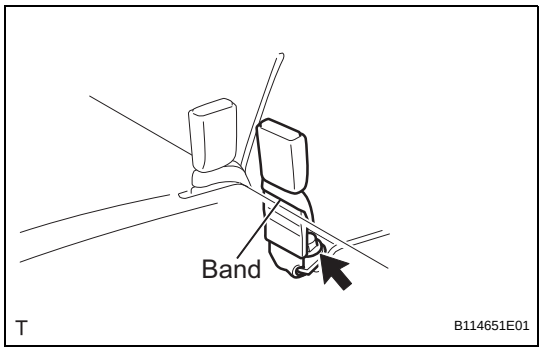


   (b) for Hold Down Seat Type:
   (1) Remove the bolt and the rear center seat inner belt.

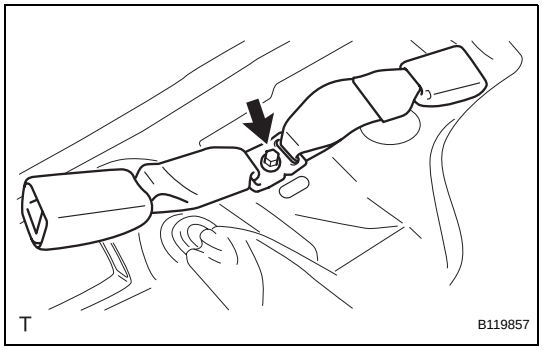

# INSTALLATION

**NOTICE:**
**Always use "Torx" socket wrench E10 when installing the rear seat.**

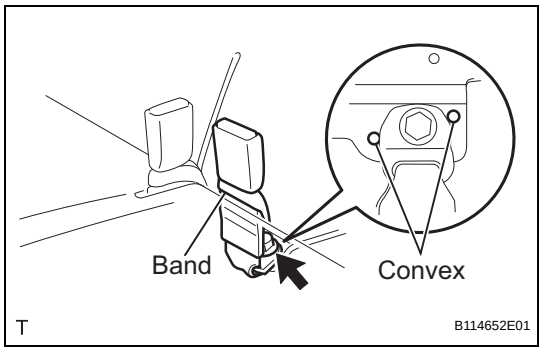


**1. INSTALL REAR CENTER SEAT INNER BELT ASSEMBLY**

(a) for 60/40 Split Seat Type

(1) Install the rear center seat inner belt with the bolt.
**Torque: 42 N*m (430 kgf*cm, 31 ft.*lbf)**
**NOTICE:**
**Do not place the anchor plate over the convex areas of the rear seat back frame.**

(2) Install the belt into the band.

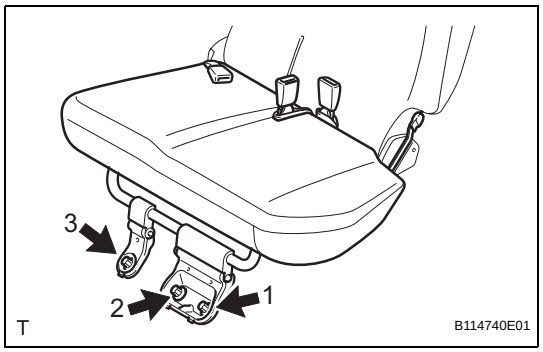


(3) Install the rear seat cushion.

(4) Using "Torx" socket wrench E10, tighten the 3 bolts in the sequence shown in the illustration.
**Torque: 37 N*m (375 kgf*cm, 27 ft.*lbf)**

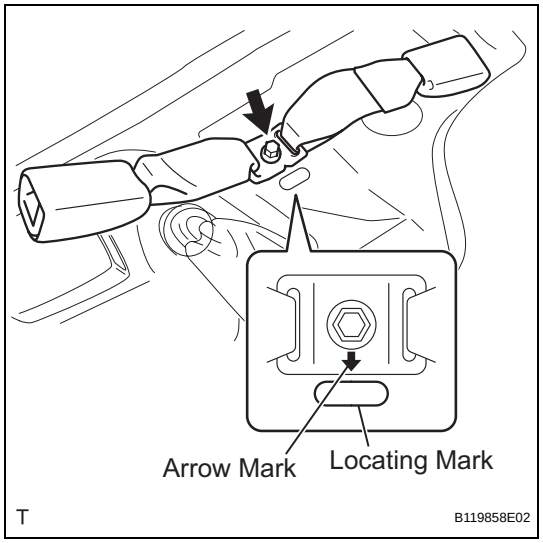


(b) for Hold Down Seat Type:

(1) Install the rear center seat inner belt with the bolt.
**Torque: 42 N*m (430 kgf*cm, 31 ft.*lbf)**
**NOTICE:**
- **Install the anchor plate with the arrow mark facing forward.**
- **Do not place the anchor plate over the locating mark area of the floor panel.**

**2. INSTALL NO. 2 REAR SEAT LEG COVER (for 60/40 Split Seat Type) (See page SE-85)**

**3. INSTALL NO. 1 REAR SEAT LEG COVER (for 60/40 Split Seat Type) (See page SE-85)**

**4. INSTALL REAR SEAT CUSHION COVER PAD SUB-ASSEMBLY (for Hold Down Seat Type) (See page SE-123)**

SB

# REAR CENTER SEAT INNER BELT ASSEMBLY (for Hatchback RH Side)

## COMPONENTS

SB

**for 60/40 Split Seat Type:**

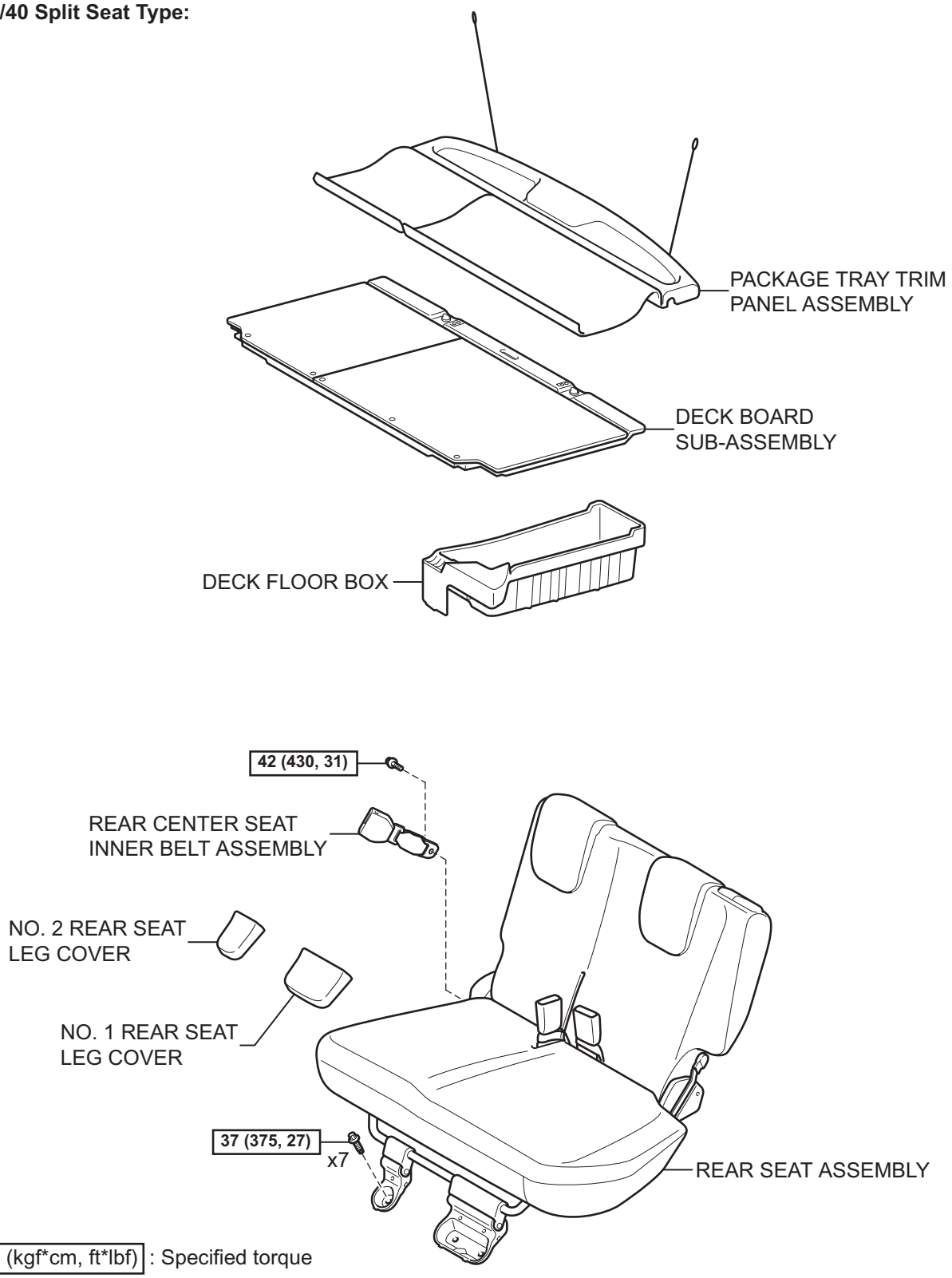


T

B114653E02

**for Hold Down Seat Type:**

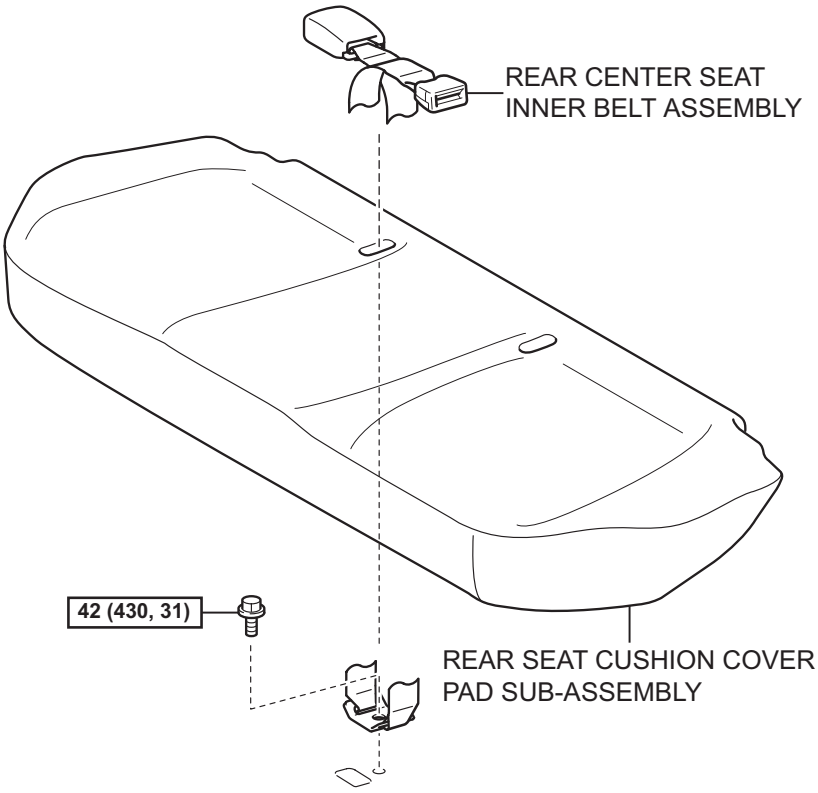


N*m (kgf*cm, ft*lbf) : Specified torque

T

B119856E05

SB

# REMOVAL

**NOTICE:**
**Always use "Torx" socket wrench E10 when removing the rear seat.**

1. **REMOVE PACKAGE TRAY TRIM PANEL ASSEMBLY (for 60/40 Split Seat Type) (See page IR-48)**
2. **REMOVE DECK BOARD SUB-ASSEMBLY (for 60/40 Split Seat Type) (See page IR-48)**
3. **REMOVE DECK FLOOR BOX (for 60/40 Split Seat Type)**
   HINT:
   Use the same procedure as for the RH side (See page IR-48).
4. **REMOVE NO. 1 REAR SEAT LEG COVER (for 60/40 Split Seat Type) (See page SE-70)**
5. **REMOVE NO. 2 REAR SEAT LEG COVER (for 60/40 Split Seat Type) (See page SE-70)**
6. **REMOVE REAR SEAT ASSEMBLY (for 60/40 Split Seat Type) (See page SE-71)**
7. **REMOVE REAR SEAT CUSHION COVER PAD SUB-ASSEMBLY (for Hold Down Seat Type) (See page SE-114)**
8. **REMOVE REAR CENTER SEAT INNER BELT ASSEMBLY**
   (a) for 60/40 Split Seat Type:
   (1) Remove the bolt and the rear center seat inner belt.

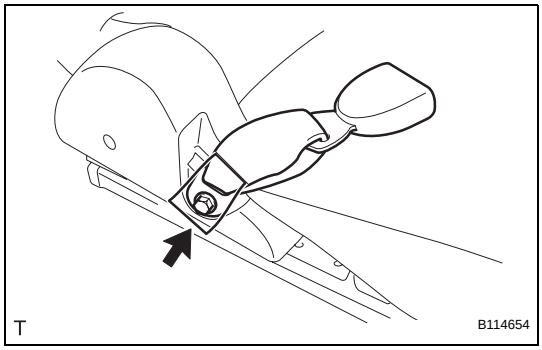


   (b) for Hold Down Seat Type:
   (1) Remove the bolt and the rear center seat inner belt.

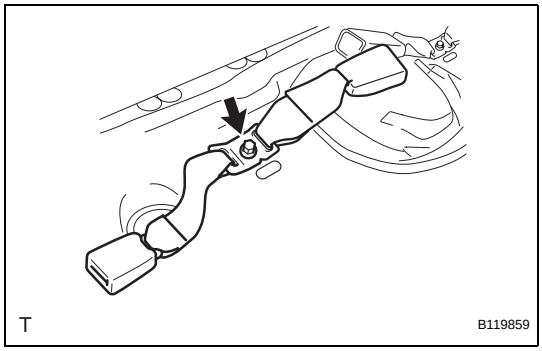

# INSTALLATION

**NOTICE:**
**Always use "Torx" socket wrench E10 when installing the rear seat.**

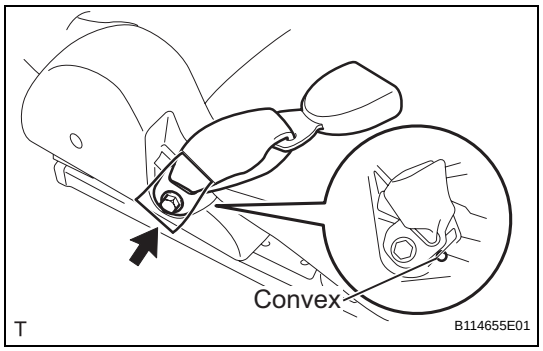


1. **INSTALL REAR CENTER SEAT INNER BELT ASSEMBLY**
   (a) for 60/40 Split Seat Type:
   (1) Install the rear center seat inner belt with the bolt.
   **Torque: 42 N*m (430 kgf*cm, 31 ft.*lbf)**
   **NOTICE:**
   **Do not place the anchor plate over the convex area of the rear seat back frame.**

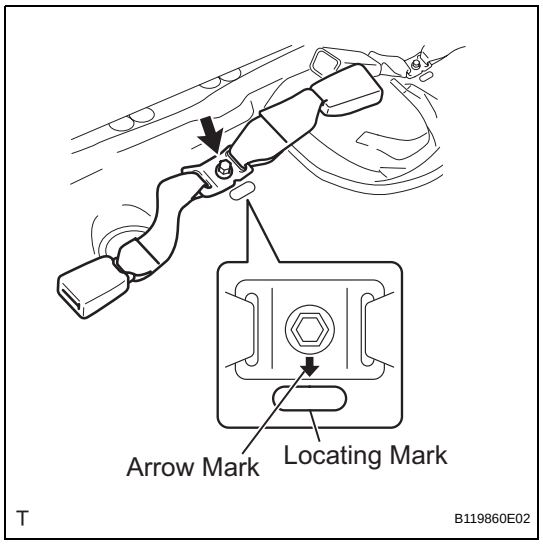


   (b) for Hold Down Seat Type:
   (1) Install the rear center seat inner belt with the bolt.
   **Torque: 42 N*m (430 kgf*cm, 31 ft.*lbf)**
   **NOTICE:**
   - **Install the anchor plate with the arrow mark facing forward.**
   - **Do not place the anchor plate over the locating mark area of the floor panel.**

2. **INSTALL REAR SEAT ASSEMBLY (for 60/40 Split Seat Type) (See page SE-84)**
3. **INSTALL NO. 2 REAR SEAT LEG COVER (for 60/40 Split Seat Type) (See page SE-85)**
4. **INSTALL NO. 1 REAR SEAT LEG COVER (for 60/40 Split Seat Type) (See page SE-85)**
5. **INSTALL REAR SEAT CUSHION COVER PAD SUB-ASSEMBLY (for Hold Down Seat Type) (See page SE-123)**
6. **INSTALL DECK FLOOR BOX (for 60/40 Split Seat Type)**
   HINT:
   Use the same procedure as for the RH side (See page IR-83).
7. **INSTALL DECK BOARD SUB-ASSEMBLY (for 60/40 Split Seat Type) (See page IR-83)**
8. **INSTALL PACKAGE TRAY TRIM PANEL ASSEMBLY (for 60/40 Split Seat Type) (See page IR-83)**

SB

# REAR CENTER SEAT OUTER BELT ASSEMBLY (for Sedan)

## COMPONENTS

**for 60/40 Split Seat Type:**

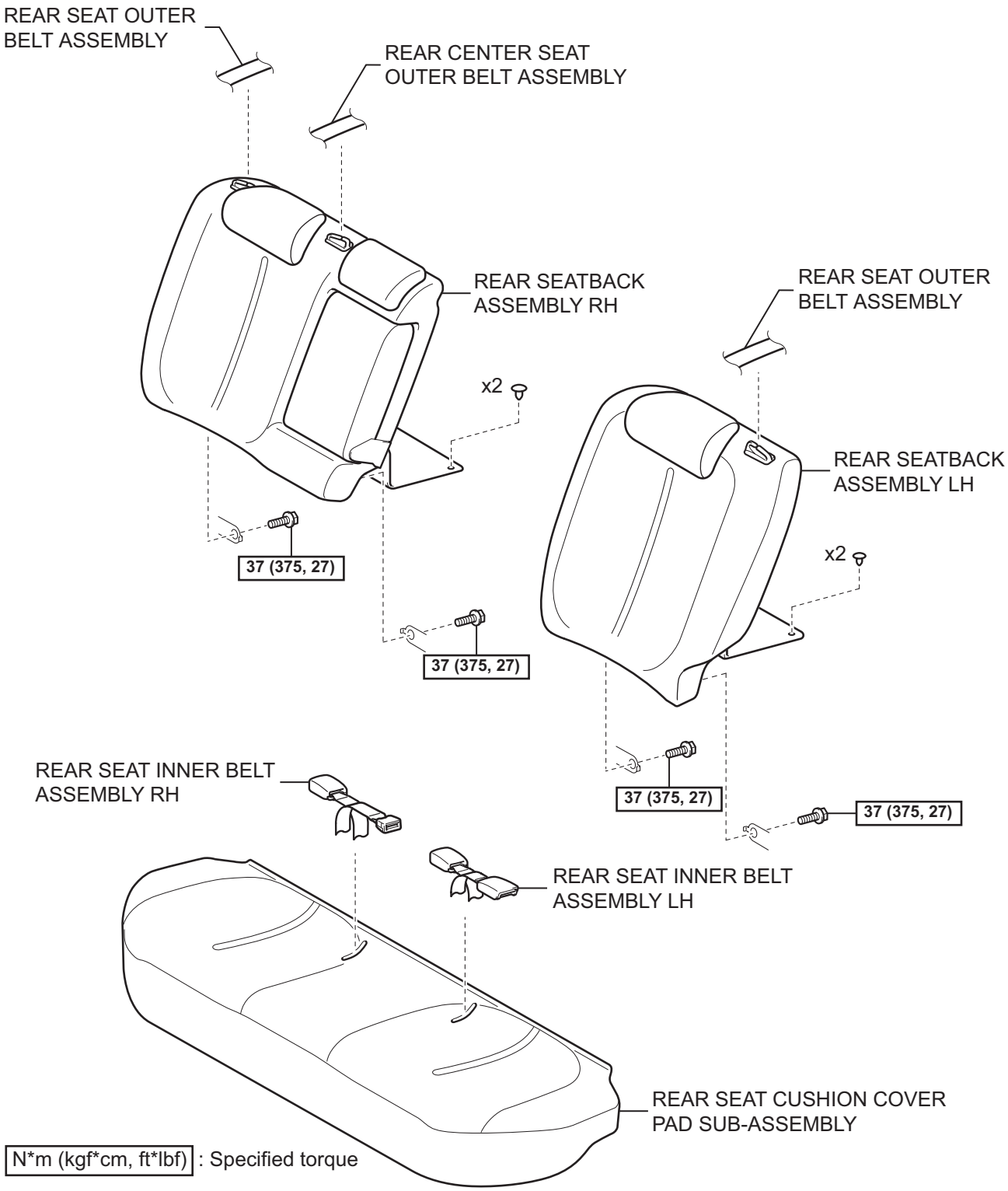

**for Fixed Seat Type:**

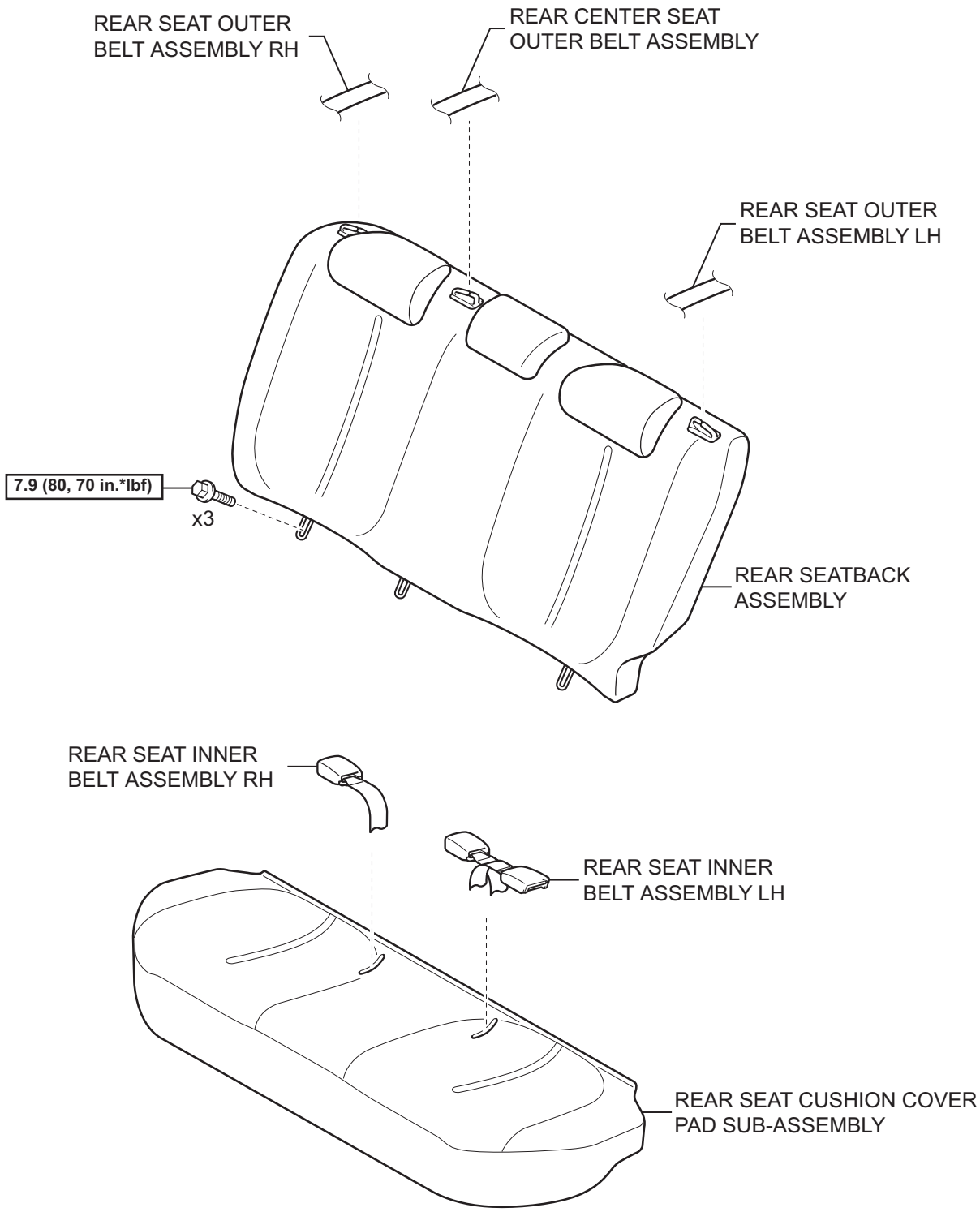


N*m (kgf*cm, ft*lbf) : Specified torque

T

B138611E01

SB

**for 60/40 Split Seat Type:**

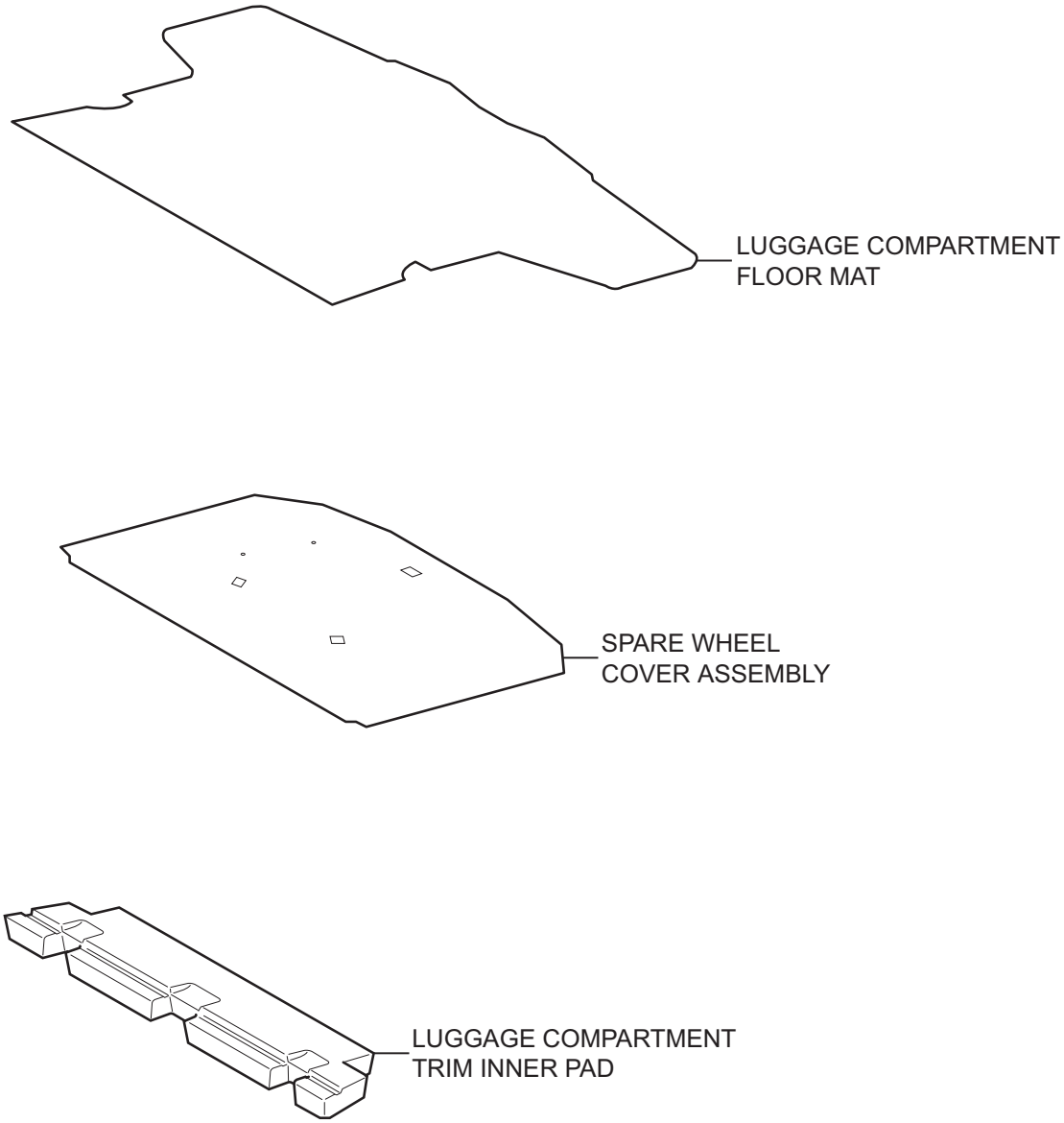


**for Grand Tire:**

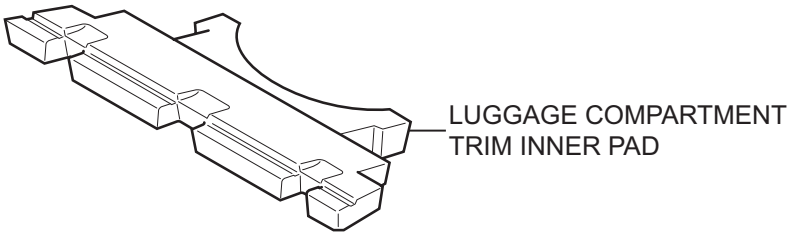


T

B138565E01

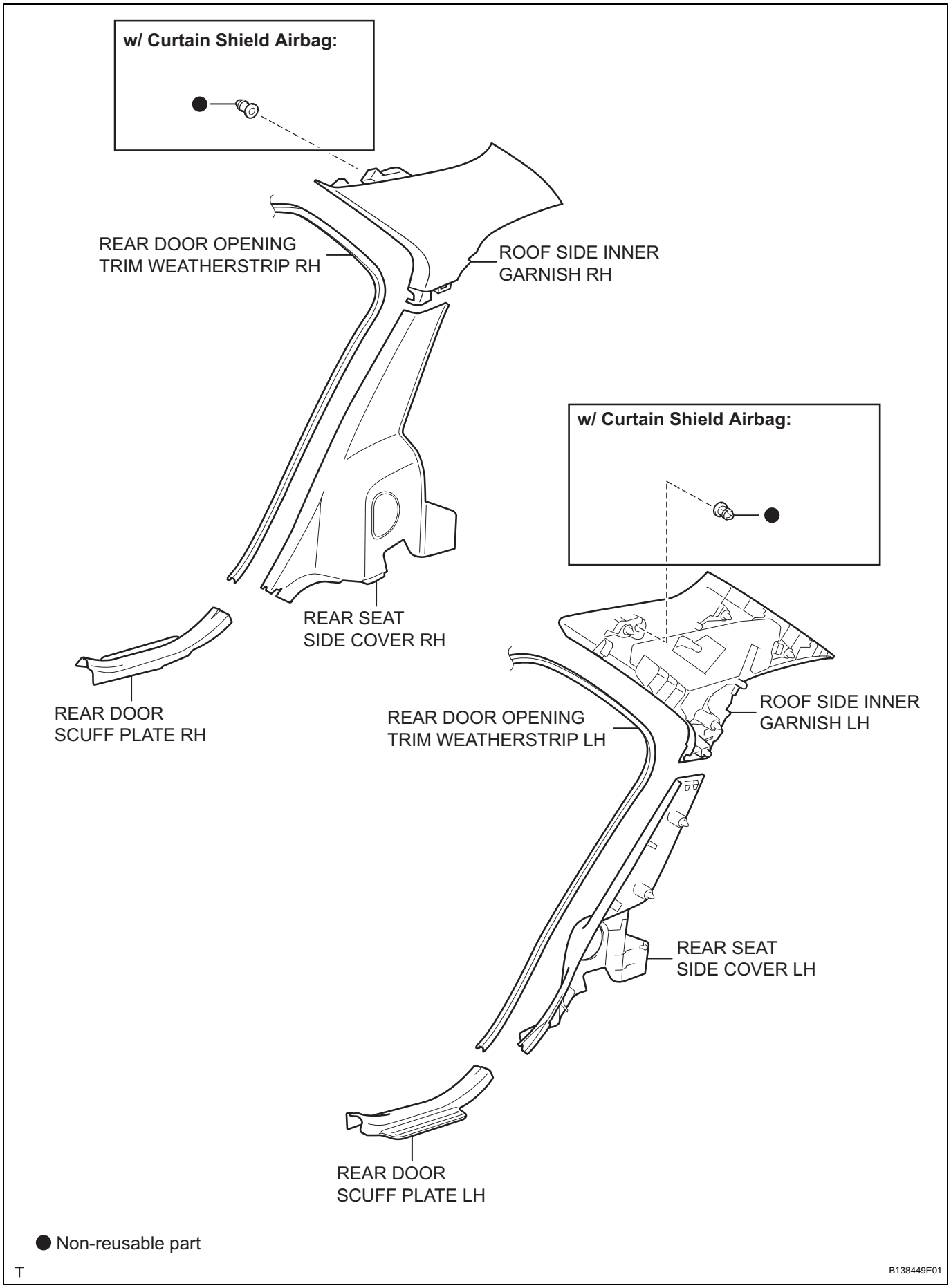
w/ Curtain Shield Airbag:
REAR DOOR OPENING TRIM WEATHERSTRIP RH
ROOF SIDE INNER GARNISH RH
REAR SEAT SIDE COVER RH
REAR DOOR SCUFF PLATE RH
w/ Curtain Shield Airbag:
ROOF SIDE INNER GARNISH LH
REAR DOOR OPENING TRIM WEATHERSTRIP LH
REAR SEAT SIDE COVER LH
REAR DOOR SCUFF PLATE LH
● Non-reusable part
T
B138449E01

SB

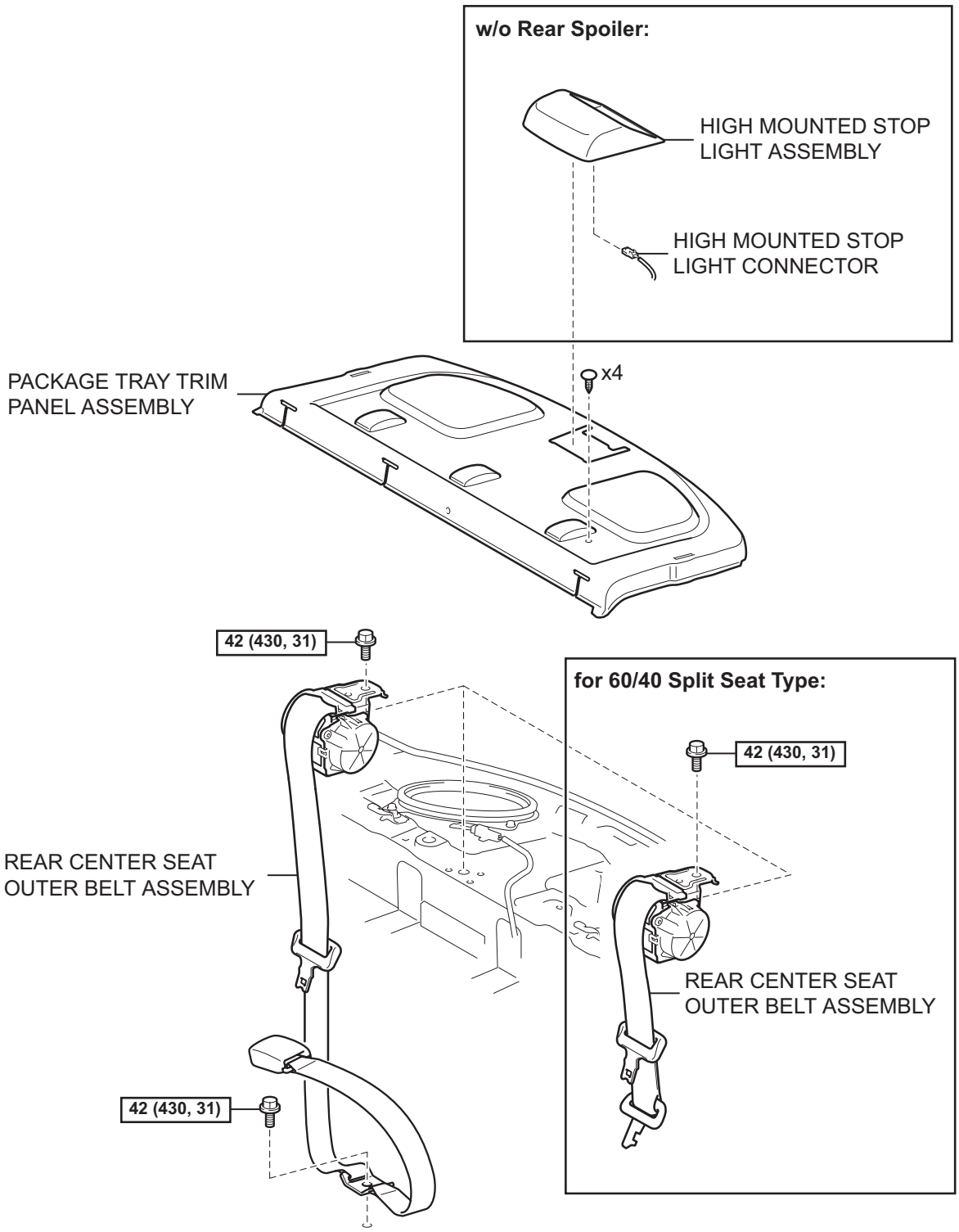


N*m (kgf*cm, ft*lbf) : Specified torque

T

B138564E02

# REMOVAL

1. **DISCONNECT CABLE FROM NEGATIVE BATTERY TERMINAL (w/o Rear Spoiler)**
2. **REMOVE REAR SEAT CUSHION COVER PAD SUB-ASSEMBLY**
   (a) for 60/40 Split Seat Type:
      (1) Remove the rear seat cushion cover pad (See page SE-46).
   (b) for Fixed Seat Type:
      (1) Remove the rear seat cushion cover pad (See page SE-106).
3. **REMOVE REAR SEATBACK ASSEMBLY RH (for 60/40 Split Seat Type) (See page SE-57)**
4. **REMOVE REAR SEATBACK ASSEMBLY LH (for 60/40 Split Seat Type) (See page SE-46)**
5. **REMOVE REAR SEATBACK ASSEMBLY (for Fixed Seat Type) (See page SE-106)**
6. **REMOVE LUGGAGE COMPARTMENT FLOOR MAT (for 60/40 Split Seat Type) (See page ED-133)**
7. **REMOVE SPARE WHEEL COVER ASSEMBLY (for 60/40 Split Seat Type) (See page ED-133)**
8. **REMOVE LUGGAGE COMPARTMENT TRIM INNER PAD (for 60/40 Split Seat Type) (See page ED-134)**
9. **REMOVE REAR DOOR SCUFF PLATE RH (See page IR-15)**
10. **REMOVE REAR DOOR SCUFF PLATE LH (See page IR-15)**
11. **REMOVE REAR DOOR OPENING TRIM WEATHERSTRIP RH (See page AV-173)**
12. **REMOVE REAR DOOR OPENING TRIM WEATHERSTRIP LH (See page AV-173)**
13. **REMOVE REAR SEAT SIDE COVER RH (See page IR-16)**
14. **REMOVE REAR SEAT SIDE COVER LH (See page IR-16)**
15. **REMOVE ROOF SIDE INNER GARNISH RH (See page IR-16)**
16. **REMOVE ROOF SIDE INNER GARNISH LH (See page IR-16)**
17. **REMOVE HIGH MOUNTED STOP LIGHT ASSEMBLY (w/o Rear Spoiler) (See page LI-141)**
18. **REMOVE PACKAGE TRAY TRIM PANEL ASSEMBLY (See page AV-173)**

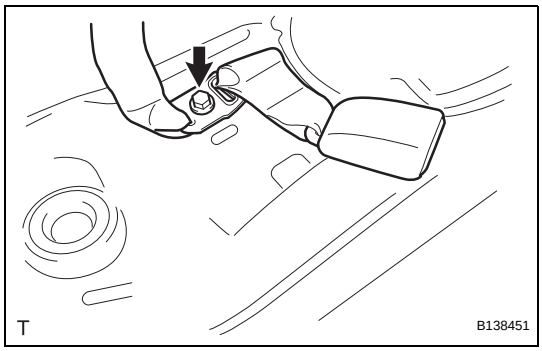


**19. REMOVE REAR CENTER SEAT OUTER BELT ASSEMBLY**

(a) for Fixed Seat Type:

(1) Remove the bolt and the anchor plate.

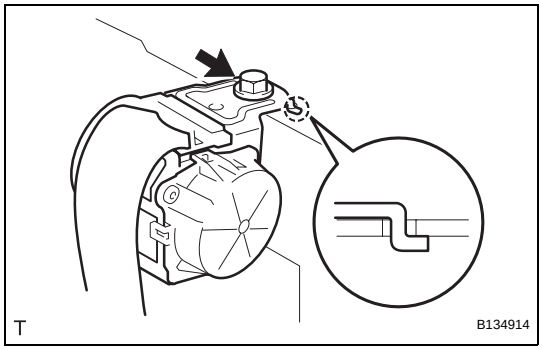


(b) Remove the bolt, the hook and the retractor.

# INSTALLATION

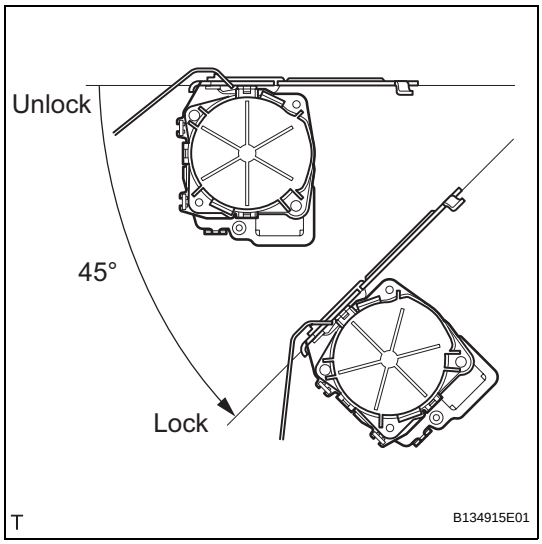


**1. INSTALL REAR CENTER SEAT OUTER BELT ASSEMBLY**

(a) Check the angle of inclination required to lock the retractor.

(1) Gently incline the retractor from its initial position. Check that the belt does not lock when the retractor is inclined 15° or less in any direction. Also, check that the belt locks when the inclination of the retractor is 45° or more.

**NOTICE:**

**Do not disassemble the retractor.**

If the operation is not as specified, replace the rear center seat outer belt.

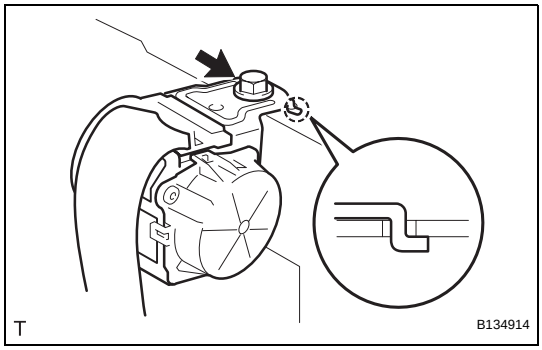


(b) Insert the hook into the body hole and install the retractor with the bolt.

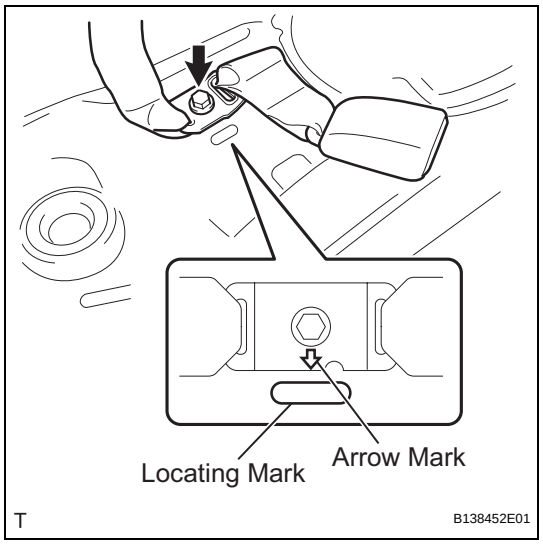


(c) for Fixed Seat Type:

(1) Install the anchor plate with the bolt.

**Torque: 42 N*m (430 kgf*cm, 31 ft.*lbf)**

**NOTICE:**

- **Install the anchor plate with the arrow mark facing forward.**
- **Do not place the anchor plate over the locating mark area of the floor panel.**

(d) Check that the ELR locks.

**NOTICE:**

- **The check should be performed with the rear seat outer belt installed.**
- **Do not allow the anchor part of the rear seat outer belt and the protruding parts of the floor panel to overlap.**

(1) With the belt installed, check that the belt locks when it is pulled out quickly.
If the operation is not as specified, replace the rear center seat outer belt.

2. **INSTALL PACKAGE TRAY TRIM PANEL ASSEMBLY (See page AV-174)**
3. **INSTALL HIGH MOUNTED STOP LIGHT ASSEMBLY (w/o Rear Spoiler) (See page LI-142)**
4. **INSTALL ROOF SIDE INNER GARNISH RH (See page IR-32)**
5. **INSTALL ROOF SIDE INNER GARNISH LH (See page IR-33)**
6. **INSTALL REAR SEAT SIDE COVER RH (See page IR-33)**
7. **INSTALL REAR SEAT SIDE COVER LH (See page IR-33)**
8. **INSTALL REAR DOOR OPENING TRIM WEATHERSTRIP RH (See page AV-175)**
9. **INSTALL REAR DOOR OPENING TRIM WEATHERSTRIP LH (See page AV-175)**
10. **INSTALL REAR DOOR SCUFF PLATE RH (See page IR-34)**
11. **INSTALL REAR DOOR SCUFF PLATE LH (See page IR-34)**
12. **INSTALL LUGGAGE COMPARTMENT TRIM INNER PAD (for 60/40 Split Seat Type) (See page ED-136)**
13. **INSTALL SPARE WHEEL COVER ASSEMBLY (for 60/40 Split Seat Type) (See page ED-137)**
14. **INSTALL LUGGAGE COMPARTMENT FLOOR MAT (for 60/40 Split Seat Type) (See page ED-137)**
15. **INSTALL REAR SEATBACK ASSEMBLY RH (for 60/40 Split Seat Type) (See page SE-65)**

**16. INSTALL REAR SEATBACK ASSEMBLY LH (for 60/40 Split Seat Type) (See page SE-52)**

**17. INSTALL REAR SEATBACK ASSEMBLY (for Fixed Seat Type) (See page SE-108)**

**18. INSTALL REAR SEAT CUSHION COVER PAD SUB-ASSEMBLY**

(a) for 60/40 Split Seat Type:

(1) Install the rear seat cushion cover pad (See page SE-53).

(b) for Fixed Seat Type:

(1) Install the rear seat cushion cover pad (See page SE-109).

**19. CONNECT CABLE TO NEGATIVE BATTERY TERMINAL (w/o Rear Spoiler)**
**Torque: 5.4 N*m (55 kgf*cm, 48 in.*lbf)**

# REAR CENTER SEAT OUTER BELT ASSEMBLY (for Hatchback 5 Door)

## COMPONENTS



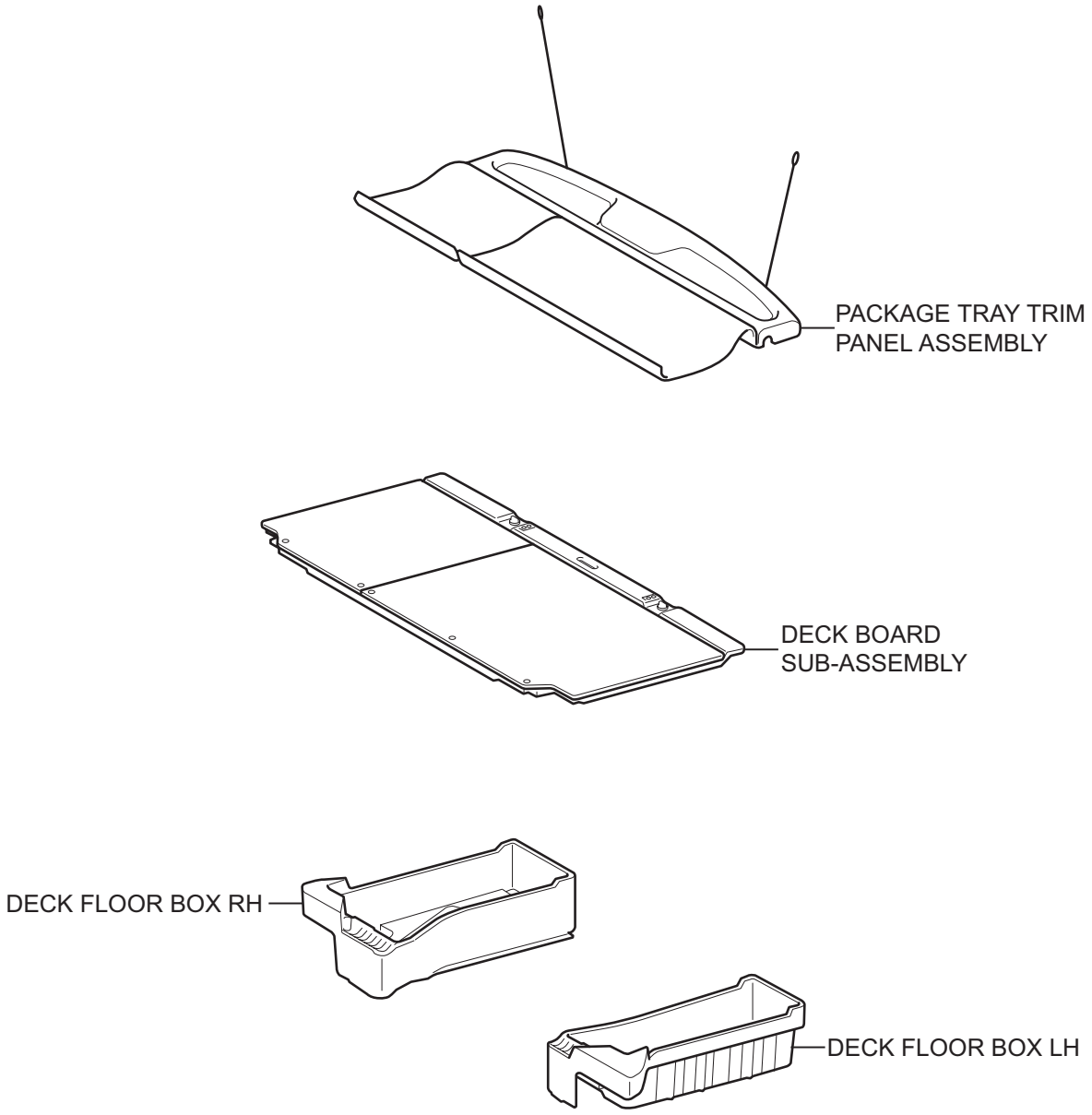


T

B114273E01

SB

**for 60/40 Split Seat Type:**

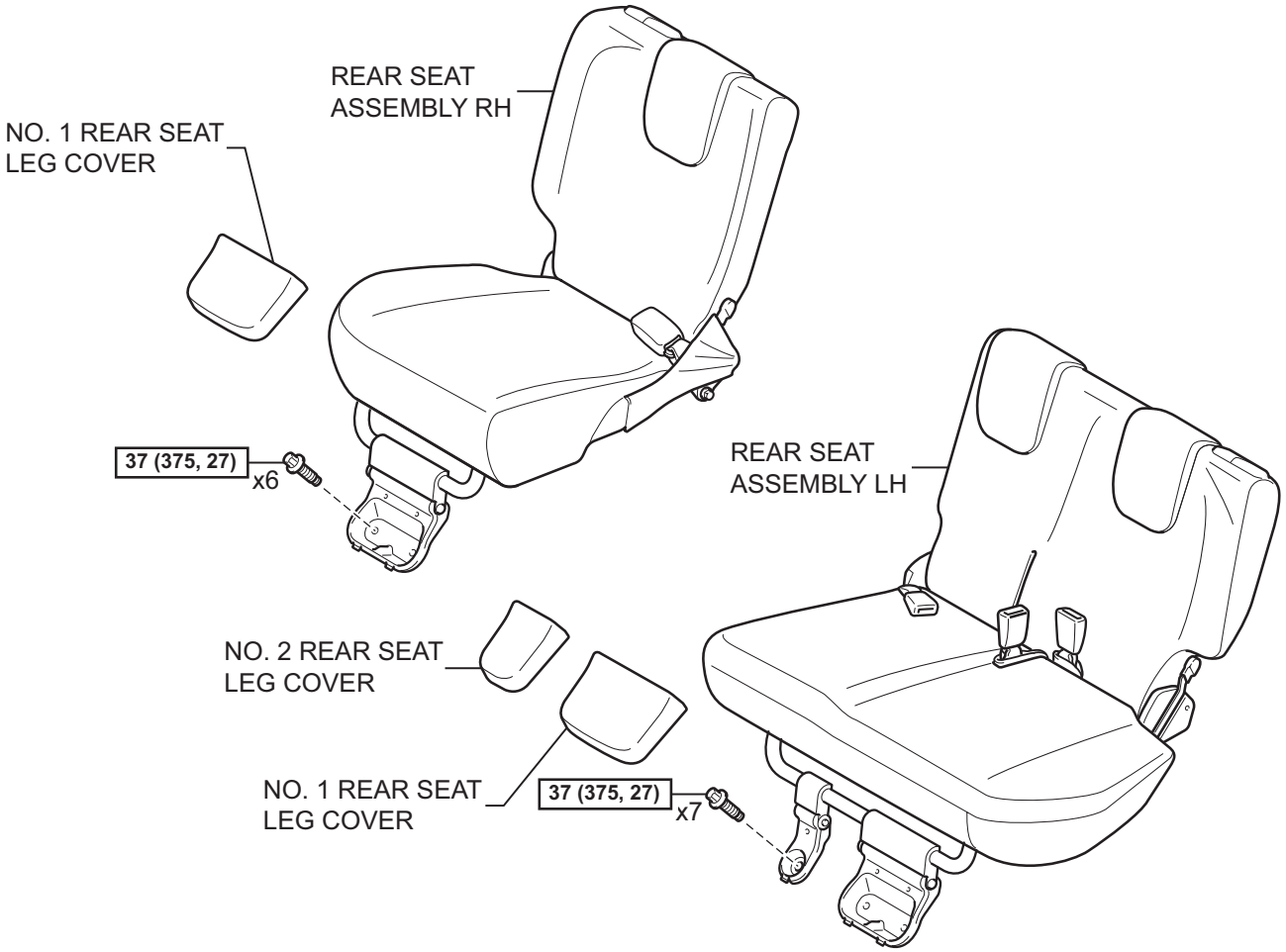


**for Hold Down Seat Type:**

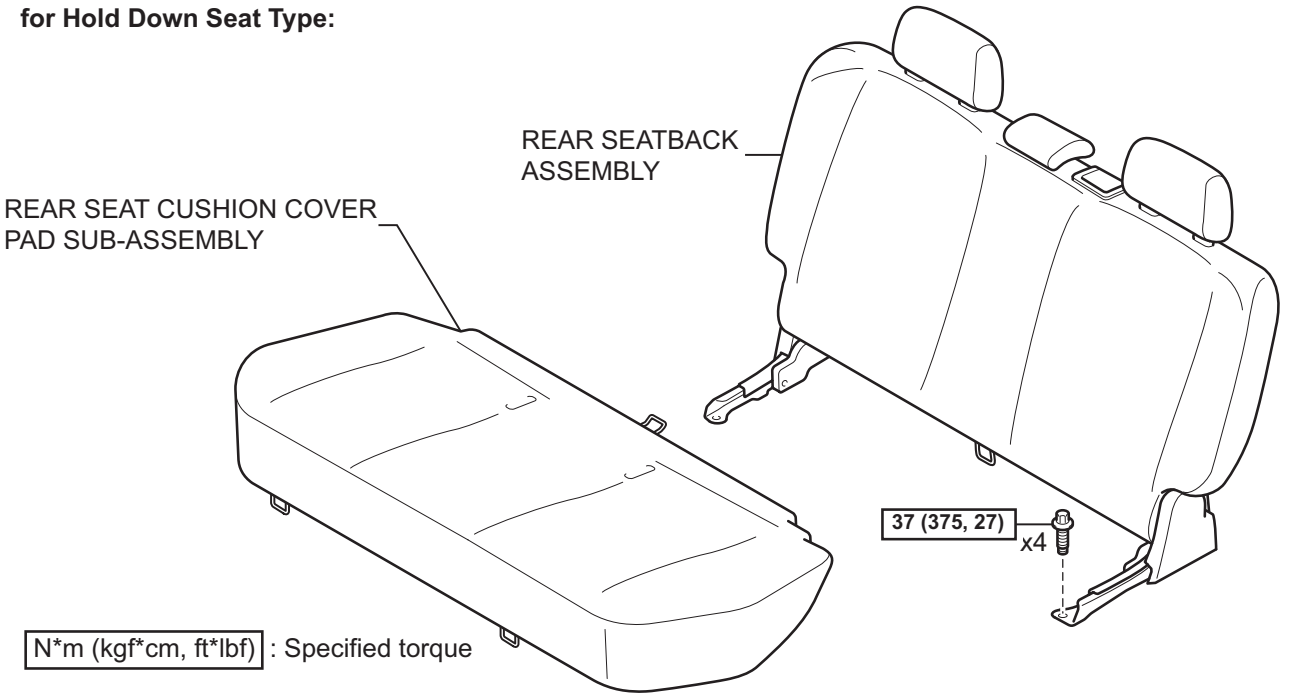


N*m (kgf*cm, ft*lbf) : Specified torque

T

B121713E03

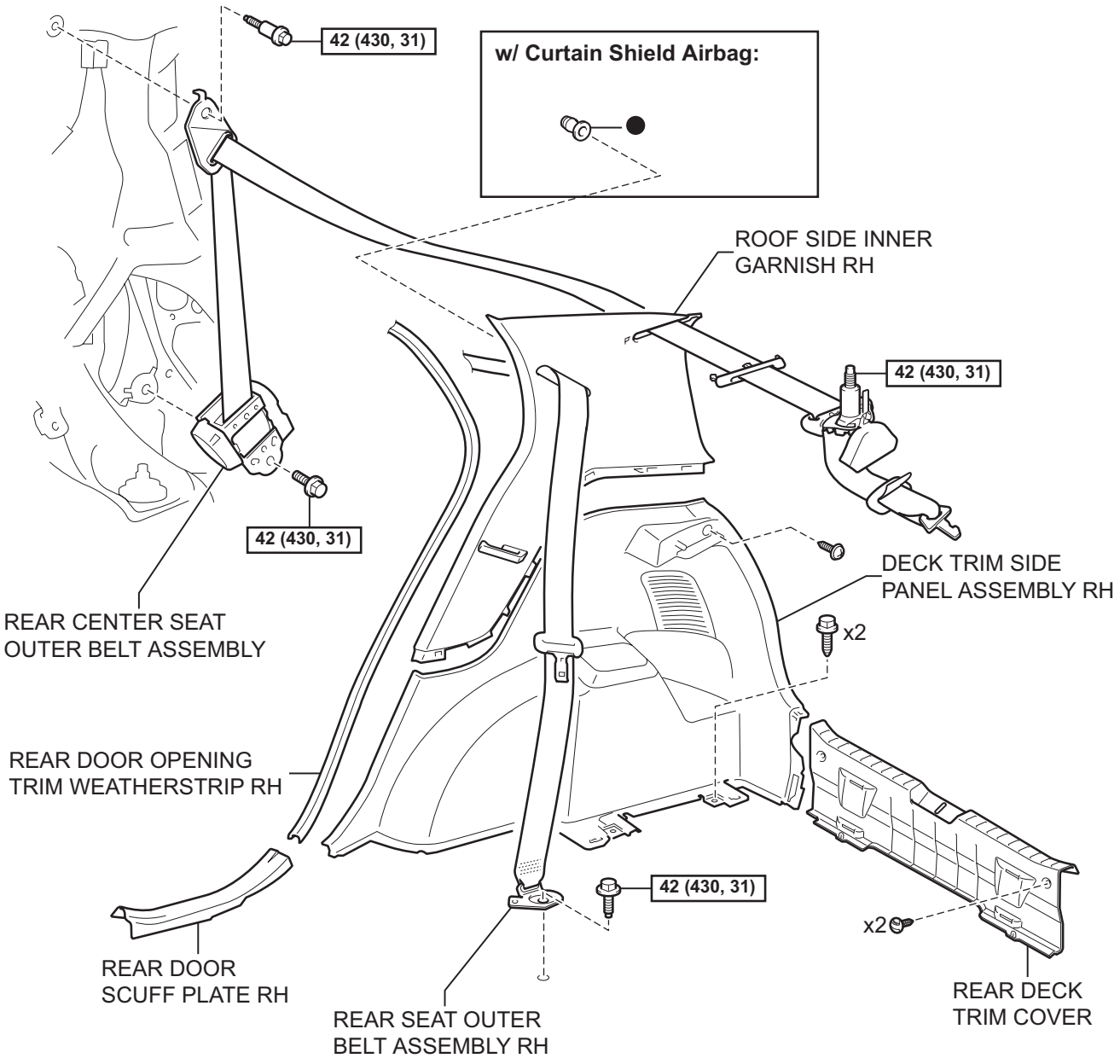


N*m (kgf*cm, ft*lbf) : Specified torque

● Non-reusable part

T

B114457E02

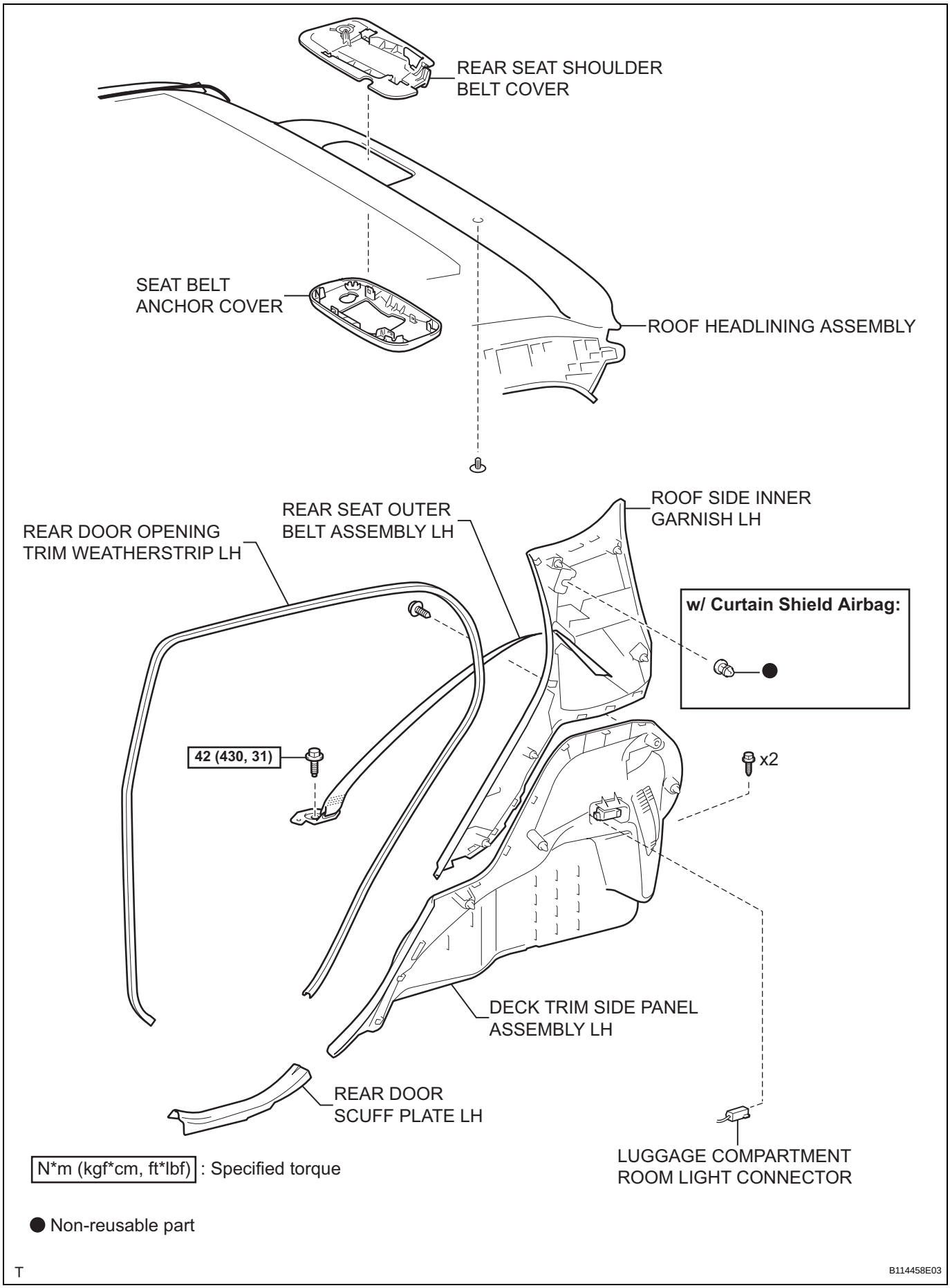
REAR SEAT SHOULDER BELT COVER
SEAT BELT ANCHOR COVER
ROOF HEADLINING ASSEMBLY
ROOF SIDE INNER GARNISH LH
REAR SEAT OUTER BELT ASSEMBLY LH
REAR DOOR OPENING TRIM WEATHERSTRIP LH
w/ Curtain Shield Airbag:
42 (430, 31)
x2
DECK TRIM SIDE PANEL ASSEMBLY LH
REAR DOOR SCUFF PLATE LH
LUGGAGE COMPARTMENT ROOM LIGHT CONNECTOR
N*m (kgf*cm, ft*lbf) : Specified torque
● Non-reusable part
T
B114458E03

## REMOVAL

**CAUTION:**
**Always use "Torx" socket wrench E10 when removing the rear seat.**

1. **DISCONNECT CABLE FROM NEGATIVE BATTERY TERMINAL**
2. **REMOVE PACKAGE TRAY TRIM PANEL ASSEMBLY (See page IR-48)**
3. **REMOVE DECK BOARD SUB-ASSEMBLY (See page IR-48)**
4. **REMOVE DECK FLOOR BOX RH (See page IR-48)**
5. **REMOVE DECK FLOOR BOX LH (See page IR-48)**
6. **REMOVE NO. 1 REAR SEAT LEG COVER (for 60/40 Split Seat Type)**
   (a) for RH side:
      (1) Remove the No. 1 rear seat leg cover (See page SE-89).
   (b) for LH side:
      (1) Remove the No. 1 rear seat leg cover (See page SE-70).
7. **REMOVE NO. 2 REAR SEAT LEG COVER (for 60/40 Split Seat Type) (See page SE-70)**
8. **REMOVE REAR SEAT ASSEMBLY RH (for 60/40 Split Seat Type) (See page SE-89)**
9. **REMOVE REAR SEAT ASSEMBLY LH (for 60/40 Split Seat Type) (See page SE-71)**
10. **REMOVE REAR SEAT CUSHION COVER PAD SUB-ASSEMBLY (for Hold Down Seat Type) (See page SE-114)**
11. **REMOVE REAR SEATBACK ASSEMBLY (for Hold Down Seat Type) (See page SE-115)**
12. **REMOVE REAR DOOR SCUFF PLATE RH (See page IR-51)**
13. **REMOVE REAR DOOR SCUFF PLATE LH (See page IR-51)**
14. **REMOVE REAR DOOR OPENING TRIM WEATHERSTRIP RH (See page SB-112)**
15. **REMOVE REAR DOOR OPENING TRIM WEATHERSTRIP LH**
    HINT:
    Use the same procedure as for the RH side.
16. **REMOVE REAR DECK TRIM COVER (See page IR-49)**
17. **REMOVE REAR SEAT OUTER BELT ASSEMBLY RH (See page IR-51)**
18. **REMOVE REAR SEAT OUTER BELT ASSEMBLY LH (See page IR-51)**

SB

**19. REMOVE DECK TRIM SIDE PANEL ASSEMBLY RH (See page IR-52)**

**20. REMOVE DECK TRIM SIDE PANEL ASSEMBLY LH (See page IR-52)**

**21. REMOVE ROOF SIDE INNER GARNISH RH**

(a) Using a screwdriver with its tip wrapped in protective tape, disengage the 4 claws and remove the center belt guide.

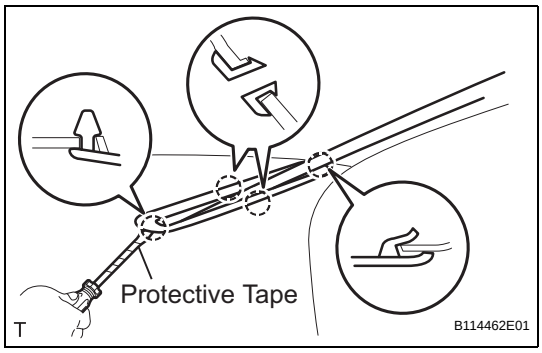


(b) w/ Curtain Shield Airbag:
**NOTICE:**
**Replace the special clip with a new one when the roof side inner garnish is removed.**
(1) Disengage the 5 clips.
(2) Pass the rear seat outer belt and the rear center seat outer belt through the slit in the roof side inner garnish and remove the roof side inner garnish.

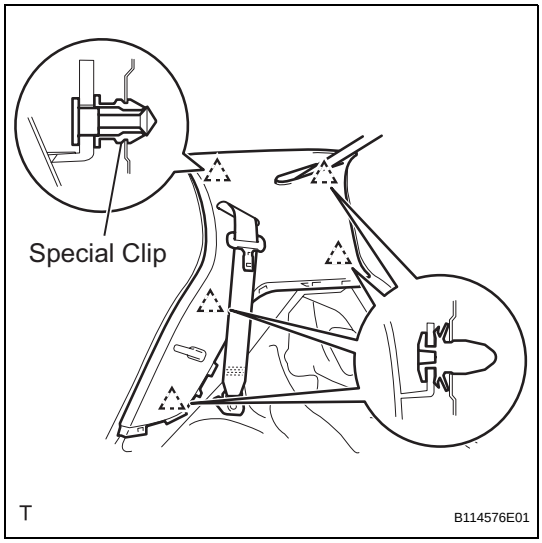


(c) w/o Curtain Shield Airbag:
(1) Disengage the 5 clips.
(2) Pass the rear seat outer belt and the rear center seat outer belt through the slit in the roof side inner garnish and remove the roof side inner garnish.

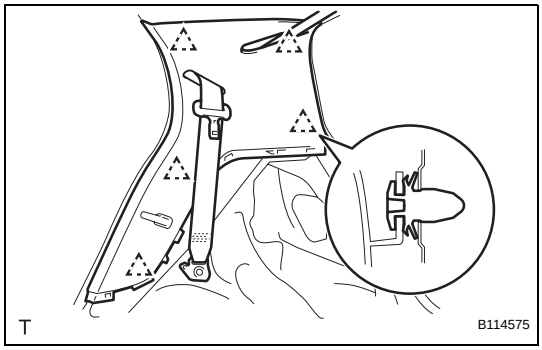


**22. REMOVE ROOF SIDE INNER GARNISH LH (See page IR-54)**

**23. REMOVE REAR CENTER SEAT OUTER BELT ASSEMBLY**

(a) Remove the 2 tongue plates.

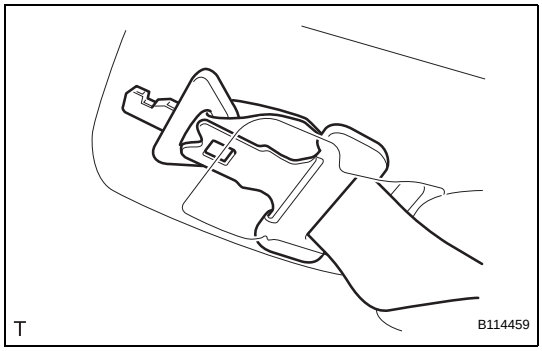

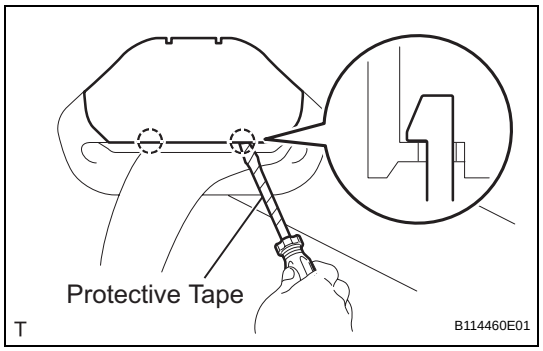


(b) Using a screwdriver with its tip wrapped in protective tape, disengage the 2 claws and open the slip joint cover.

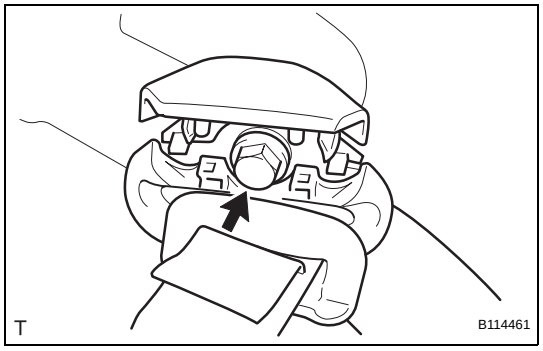


(c) Remove the bolt and the through anchor.

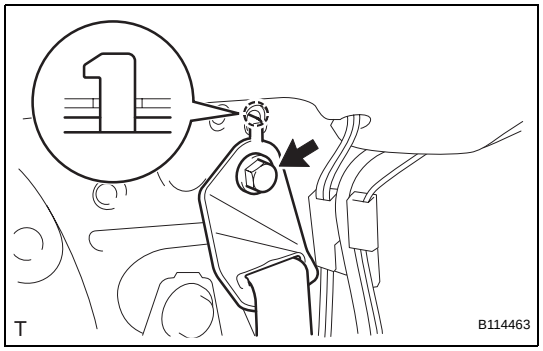


(d) Remove the bolt, the hook and the bracket.

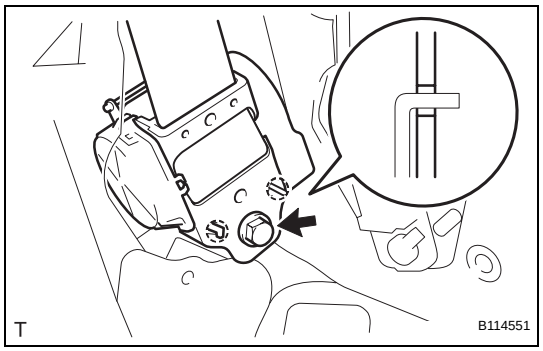


(e) Remove the bolt, the 2 hooks and the retractor.

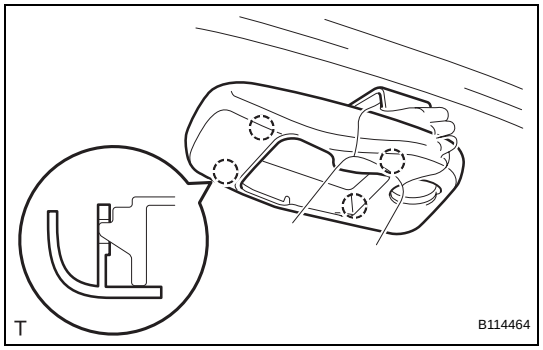


**24. REMOVE SEAT BELT ANCHOR COVER**

(a) Using a moulding remover, disengage the 4 claws and remove the seat belt anchor cover.

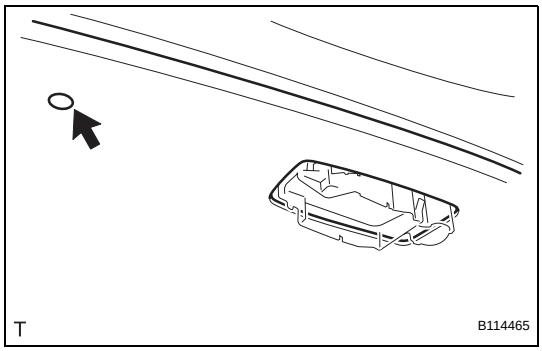


**25. REMOVE ROOF HEADLINING ASSEMBLY**

(a) Using a clip remover, remove the clip and the roof headlining.

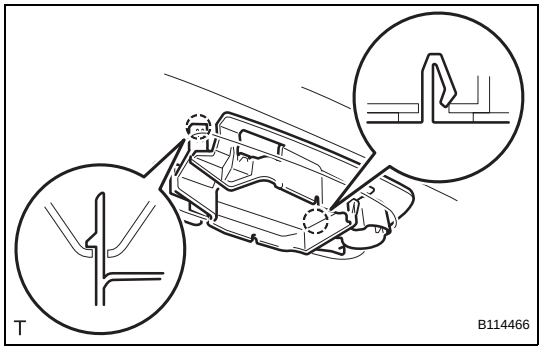


**26. REMOVE REAR SEAT SHOULDER BELT COVER**

(a) Disengage the 2 claws and remove the rear seat shoulder belt cover.

# INSTALLATION

**CAUTION:**
**Always use "Torx" socket wrench E10 when installing the rear seat.**

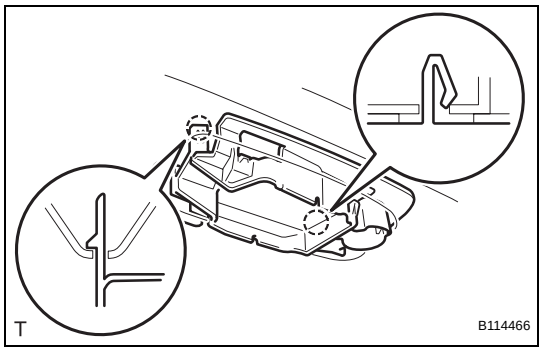


**1. INSTALL REAR SEAT SHOULDER BELT COVER**
(a) Engage the 2 claws and install the rear seat shoulder belt cover.

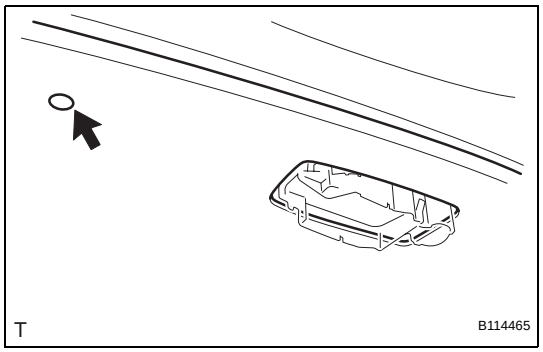


**2. INSTALL ROOF HEADLINING ASSEMBLY**
(a) Install the roof headlining with the clip.

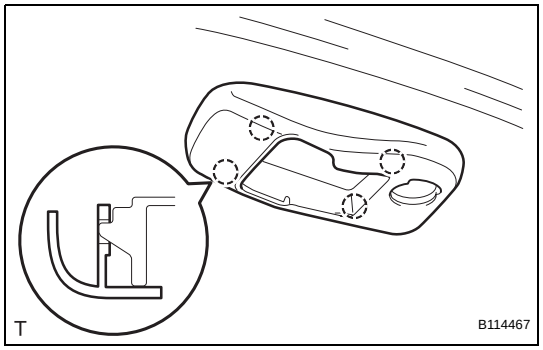


**3. INSTALL SEAT BELT ANCHOR COVER**
(a) Engage the 4 claws and install the seat belt anchor cover.

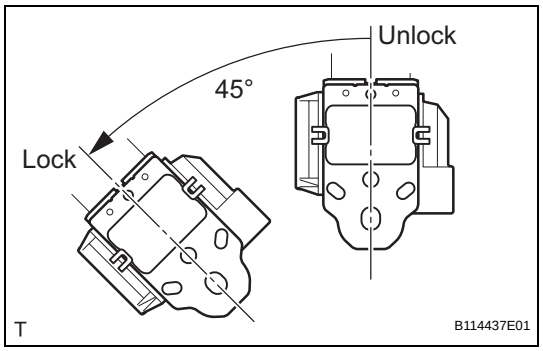


**4. INSTALL REAR CENTER SEAT OUTER BELT ASSEMBLY**
(a) Check the angle of inclination required to lock the retractor.
(1) Gently incline the retractor from its initial position. Check that the belt does not lock when the retractor is inclined 15° or less in any direction. Also, check that the belt locks when the inclination of the retractor is 45° or more.
**NOTICE:**
**Do not disassemble the retractor.**
If the operation is not as specified, replace the rear seat outer belt.

SB

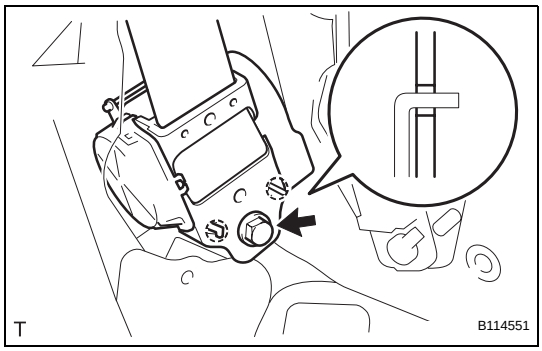


(b) Hook the lower stay of the retractor onto the 2 body hooks and install the retractor with the bolt.
**Torque: 42 N*m (430 kgf*cm, 31 ft.*lbf)**

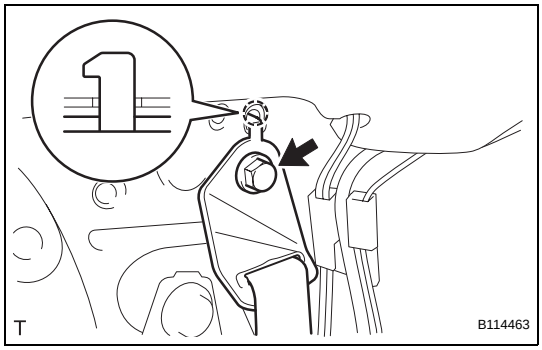


(c) Insert the hook into the body hole and install the bracket with the bolt.
**Torque: 42 N*m (430 kgf*cm, 31 ft.*lbf)**

(d) Check that the ELR locks.
**NOTICE:**
**Perform the check with the rear center seat outer belt installed.**
(1) With the belt installed, check that the belt locks when it is pulled out quickly.
If the operation is not as specified, replace the rear center seat outer belt.

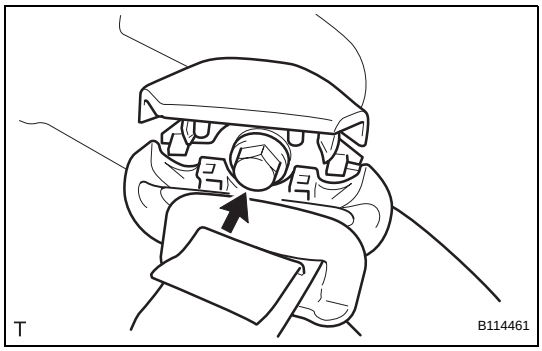


(e) Install the through anchor with the bolt.
**Torque: 42 N*m (430 kgf*cm, 31 ft.*lbf)**

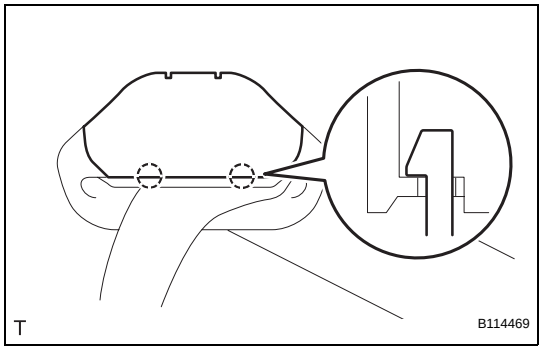


(f) Engage the 2 claws and close the slip joint cover.

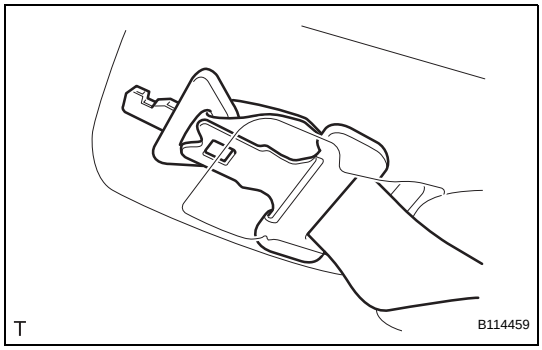


(g) Install the 2 tongue plates.

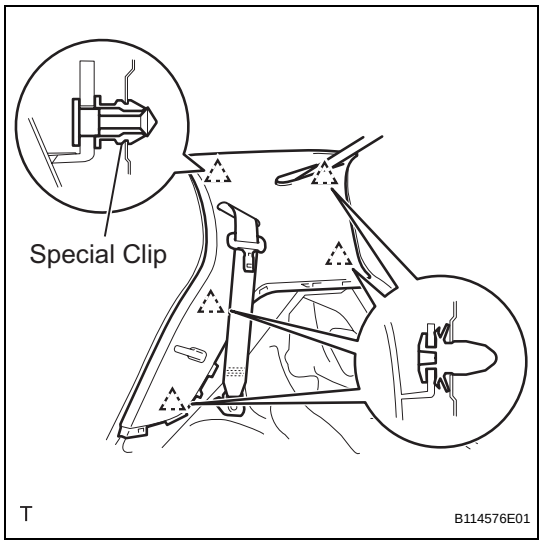


**5. INSTALL ROOF SIDE INNER GARNISH RH**

(a) w/ Curtain Shield Airbag:

(1) Install a new special clip.

(2) Pass the rear seat outer belt and the rear center seat outer belt through the slit in the roof side inner garnish.

(3) Engage the 5 clips and install the roof side inner garnish.

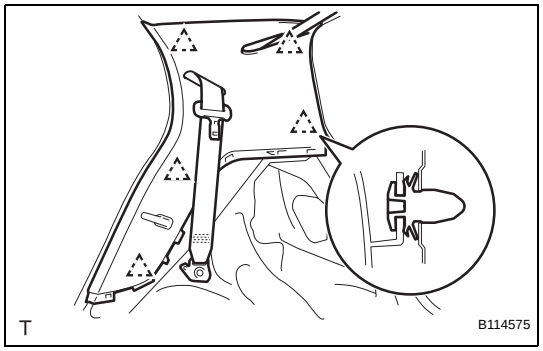


(b) w/o Curtain Shield Airbag:

(1) Pass the rear seat outer belt and the rear center seat outer belt through the slit in the roof side inner garnish.

(2) Engage the 5 clips and install the roof side inner garnish.

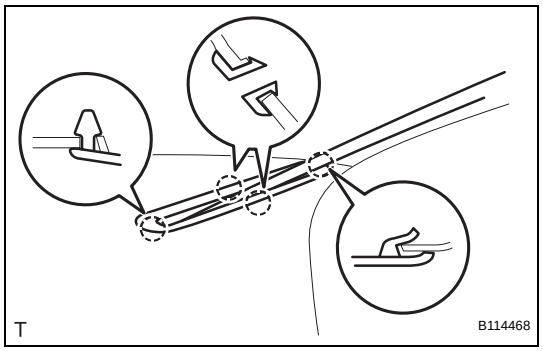


(c) Engage the 4 claws and install the center belt guide.

**6. INSTALL ROOF SIDE INNER GARNISH LH (See page IR-77)**

**7. INSTALL DECK TRIM SIDE PANEL ASSEMBLY RH (See page IR-79)**

**8. INSTALL DECK TRIM SIDE PANEL ASSEMBLY LH (See page IR-79)**

**9. INSTALL REAR SEAT OUTER BELT ASSEMBLY RH (See page IR-79)**

**10. INSTALL REAR SEAT OUTER BELT ASSEMBLY LH (See page IR-80)**

**11. INSTALL REAR DECK TRIM COVER (See page IR-82)**

**12. INSTALL REAR DOOR OPENING TRIM WEATHERSTRIP RH (See page SB-119)**

**13. INSTALL REAR DOOR OPENING TRIM WEATHERSTRIP LH**

HINT:

Use the same procedure as for the RH side.

**14. INSTALL REAR DOOR SCUFF PLATE RH (See page IR-80)**

**15. INSTALL REAR DOOR SCUFF PLATE LH (See page IR-80)**

**16. INSTALL REAR SEAT ASSEMBLY LH (for 60/40 Split Seat Type) (See page SE-84)**

**17. INSTALL REAR SEAT ASSEMBLY RH (for 60/40 Split Seat Type) (See page SE-102)**

**18. INSTALL NO. 2 REAR SEAT LEG COVER (for 60/40 Split Seat Type) (See page SE-85)**

**19. INSTALL NO. 1 REAR SEAT LEG COVER (for 60/40 Split Seat Type)**

(a) for RH Side:

(1) Install the No. 1 rear seat leg cover (See page SE-103).

(b) for LH Side:

(1) Install the No. 1 rear seat leg cover (See page SE-85).

**20. INSTALL REAR SEATBACK ASSEMBLY (for Hold Down Seat Type) (See page SE-122)**

**21. INSTALL REAR SEAT CUSHION COVER PAD SUB-ASSEMBLY (for Hold Down Seat Type) (See page SE-123)**

**22. INSTALL DECK FLOOR BOX RH (See page IR-83)**

**23. INSTALL DECK FLOOR BOX LH (See page IR-83)**

**24. INSTALL DECK BOARD SUB-ASSEMBLY (See page IR-83)**

**25. INSTALL PACKAGE TRAY TRIM PANEL ASSEMBLY (See page IR-83)**

**26. CONNECT CABLE TO NEGATIVE BATTERY TERMINAL**
**Torque: 5.4 N*m (55 kgf*cm, 48 in.*lbf)**

# REAR CENTER SEAT OUTER BELT ASSEMBLY (for Hatchback 3 Door)

## COMPONENTS



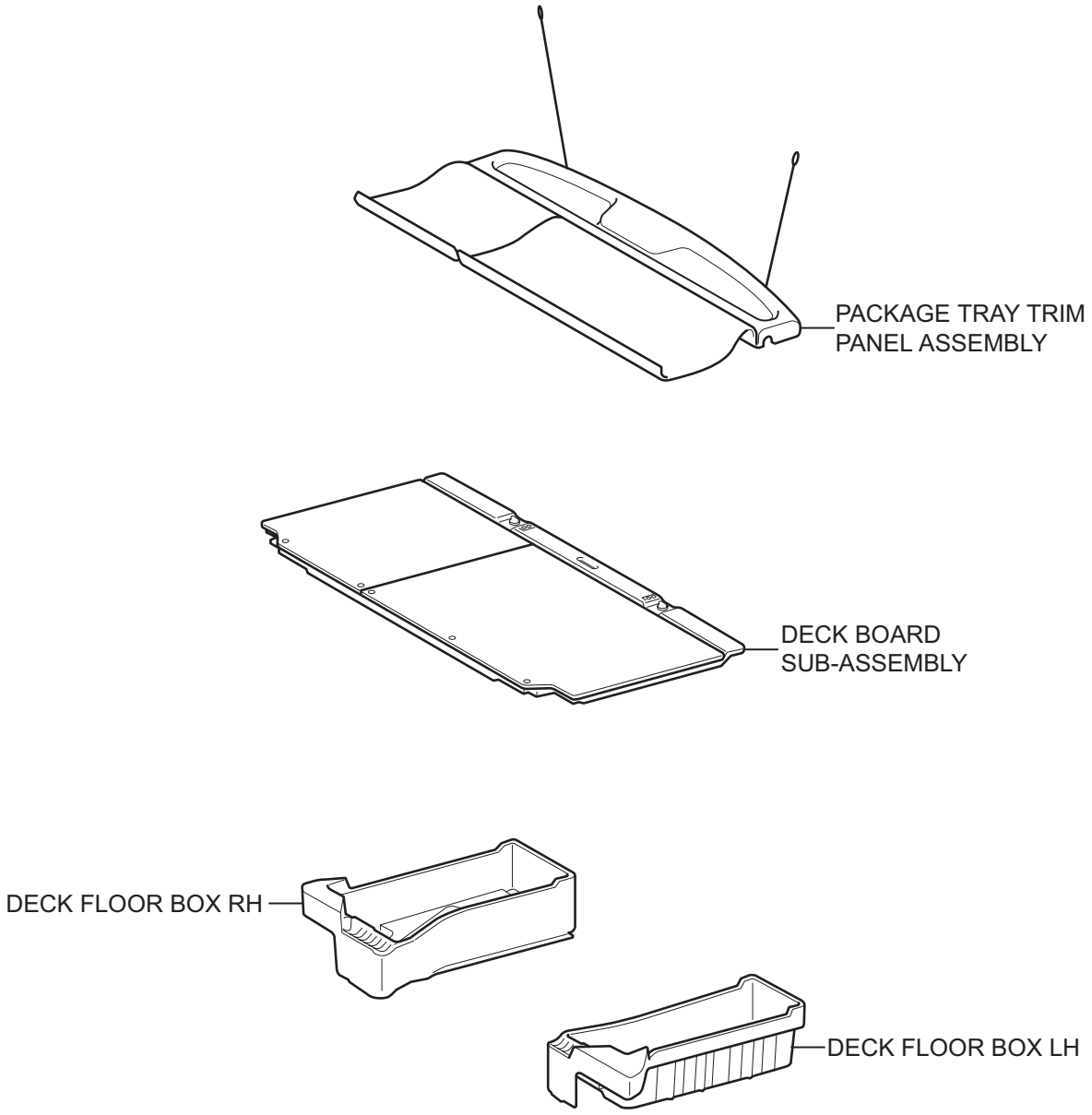


T

B114273E01

SB

**for 60/40 Split Seat Type:**

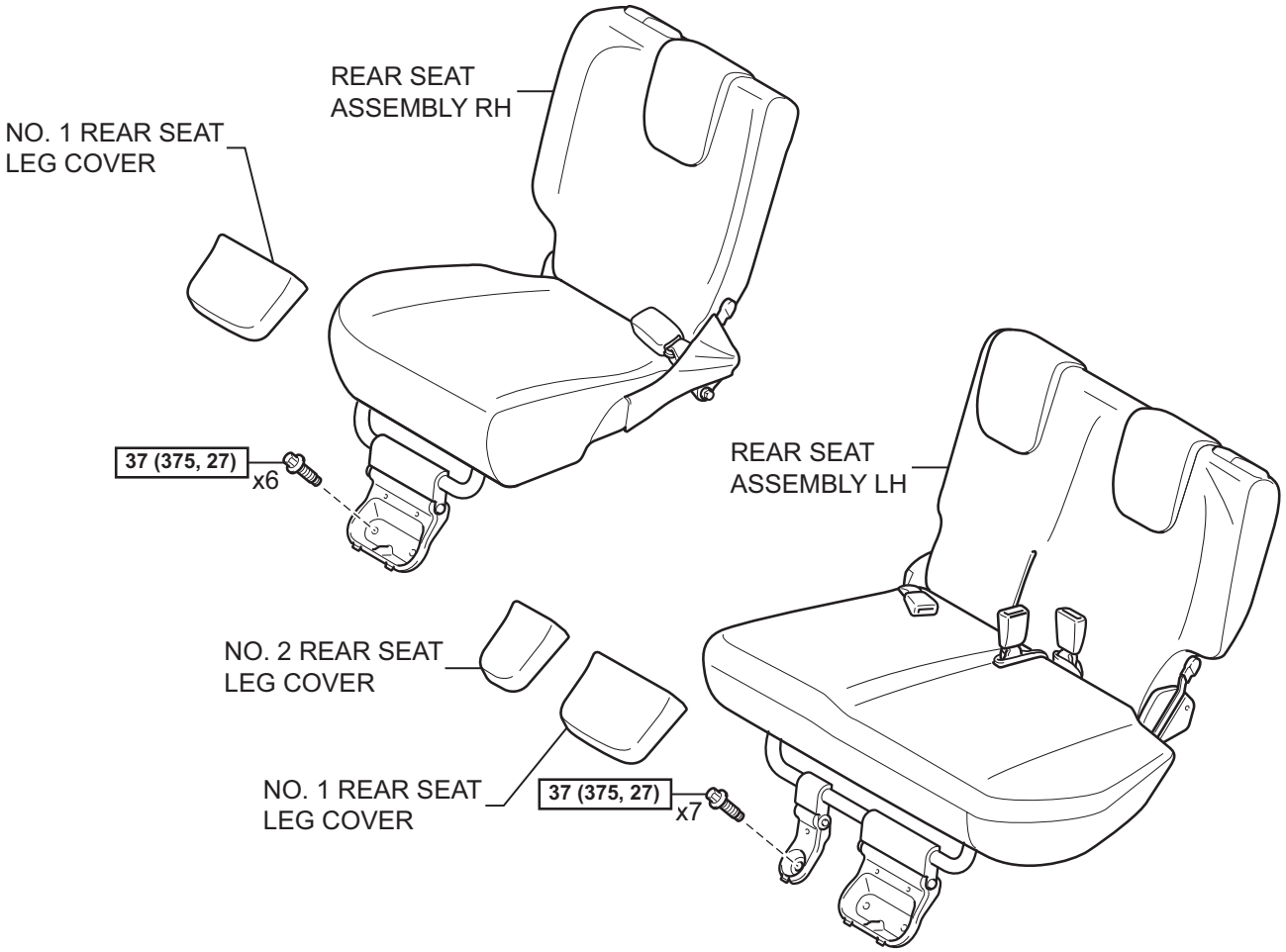


**for Hold Down Seat Type:**

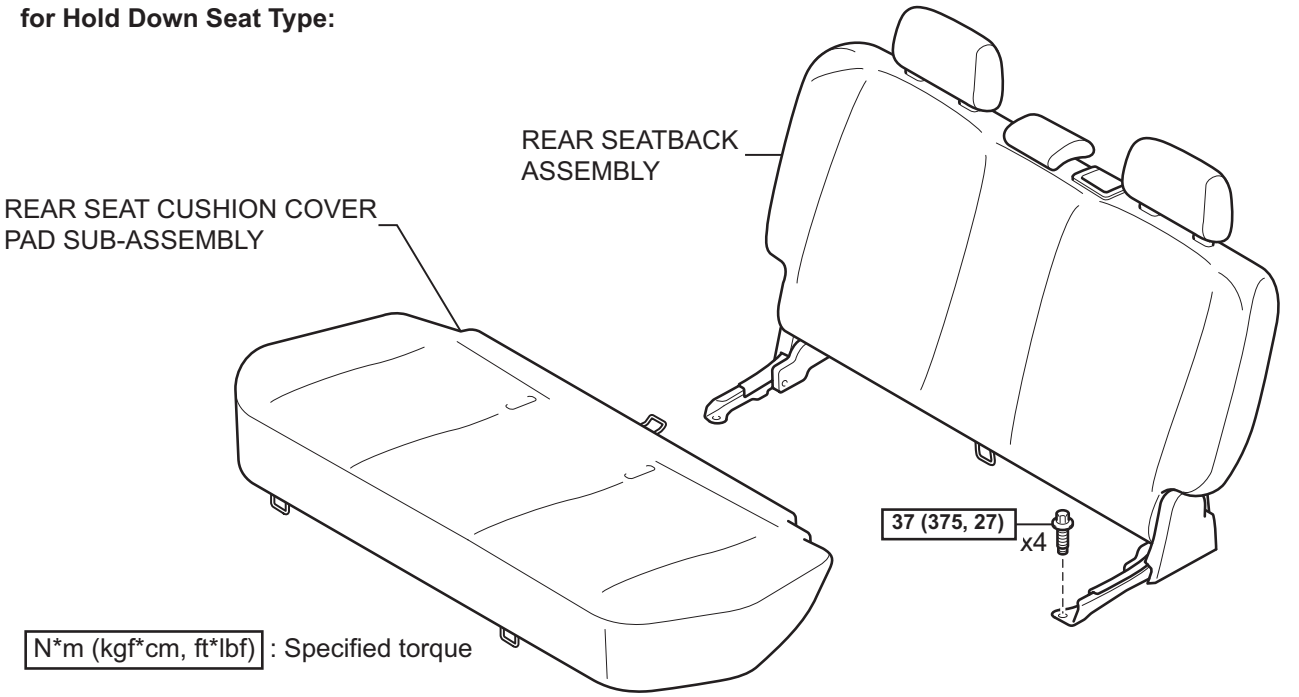


N*m (kgf*cm, ft*lbf) : Specified torque

T

B121713E03

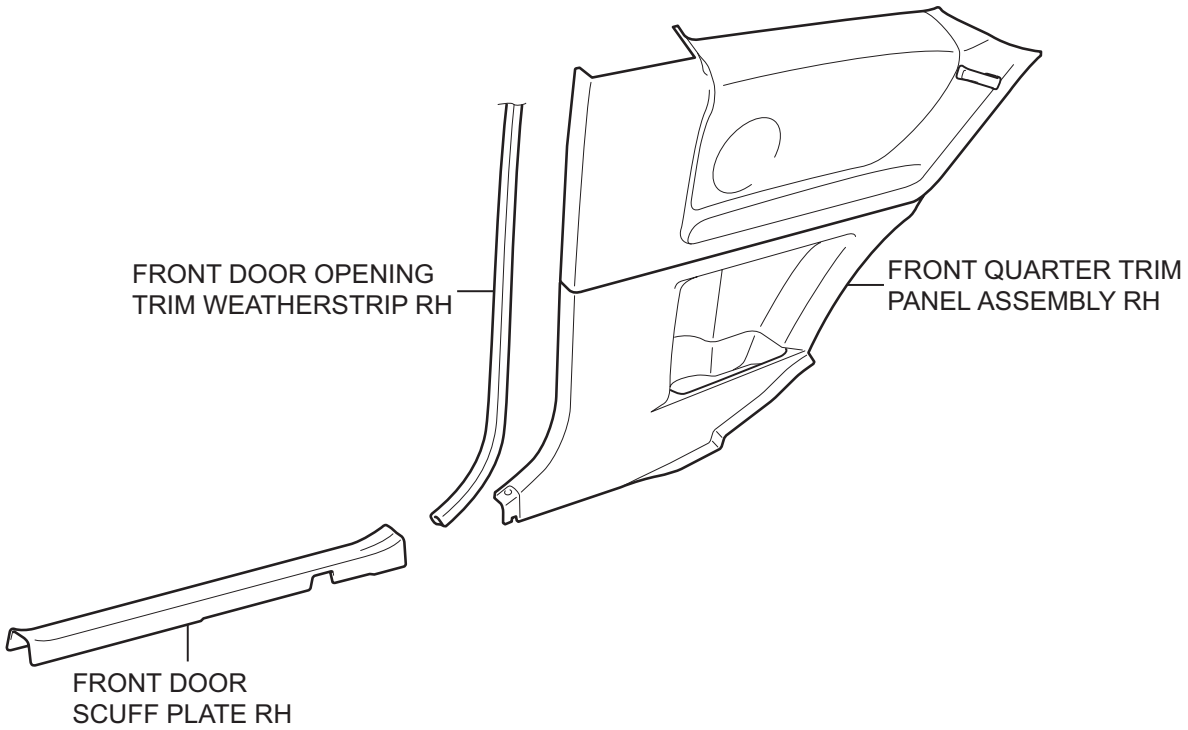


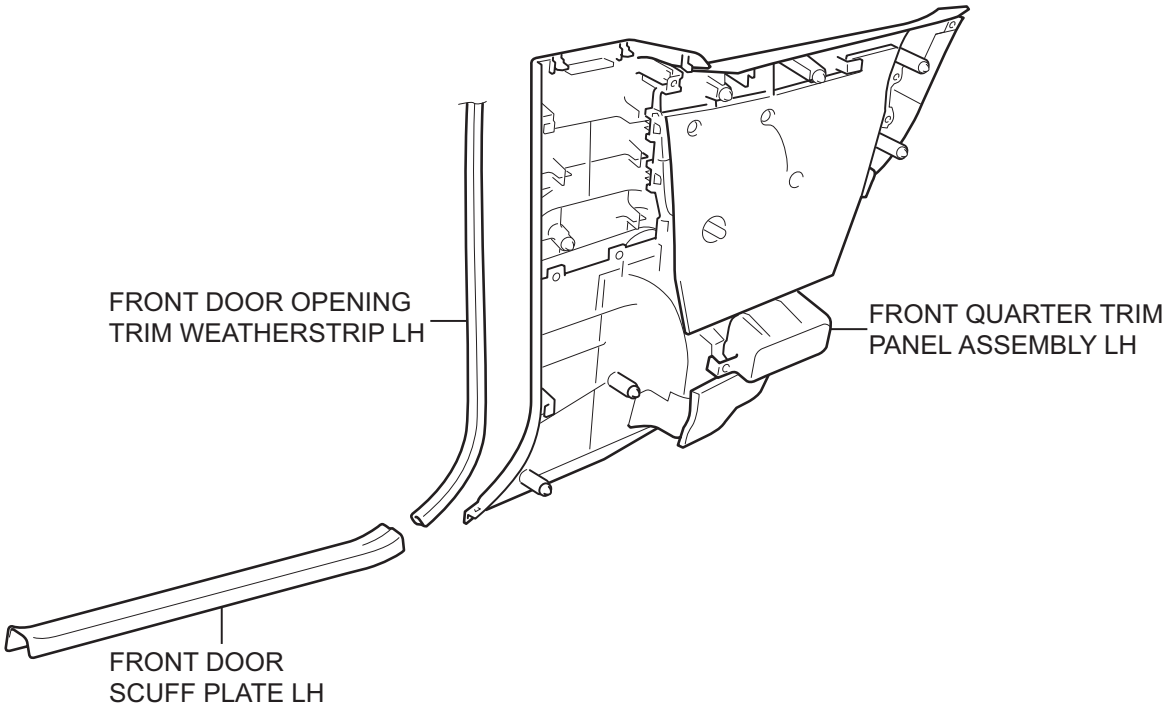


T

B114485E01

SB

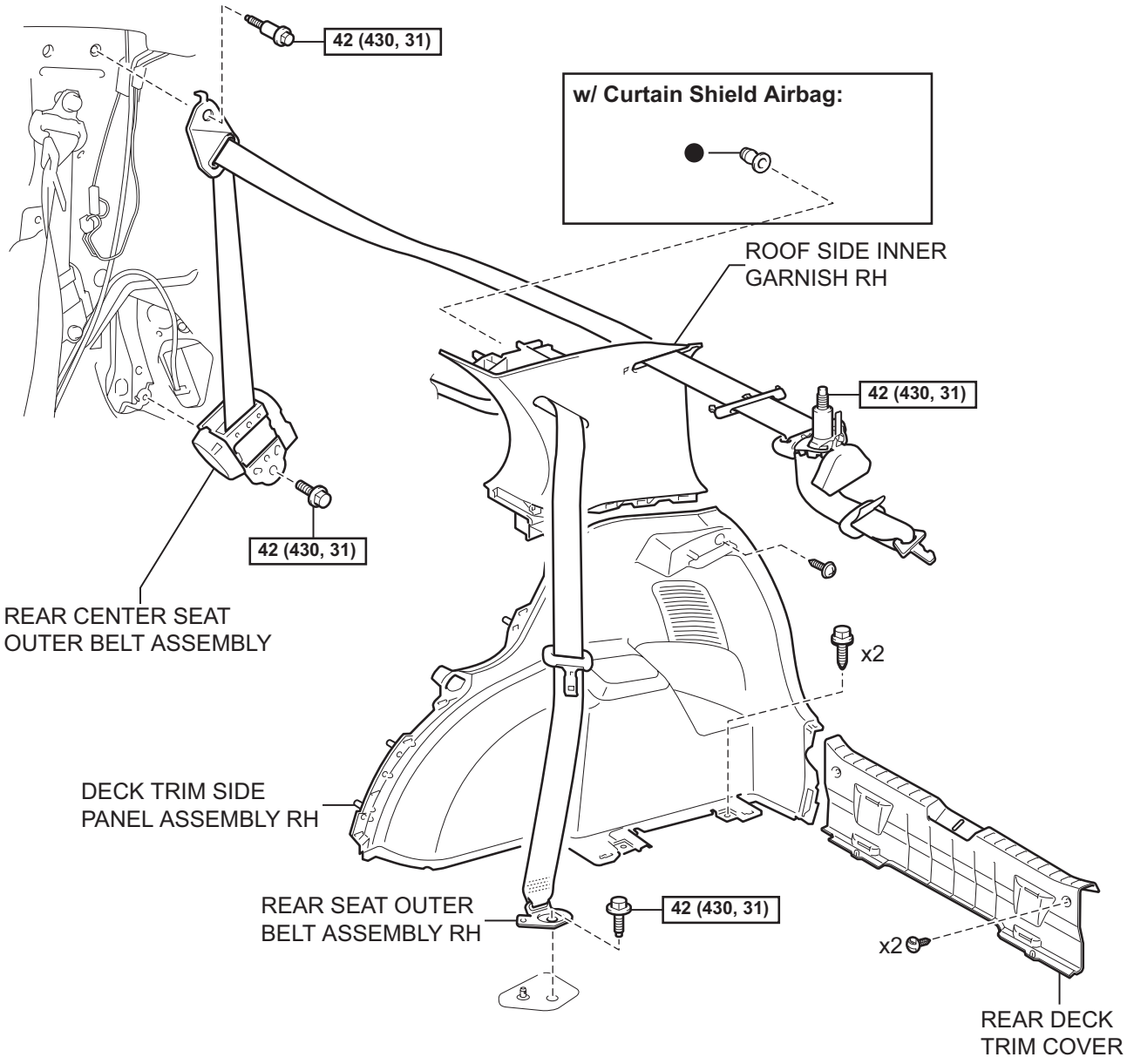


N*m (kgf*cm, ft*lbf) : Specified torque

● Non-reusable part

T

B114486E02

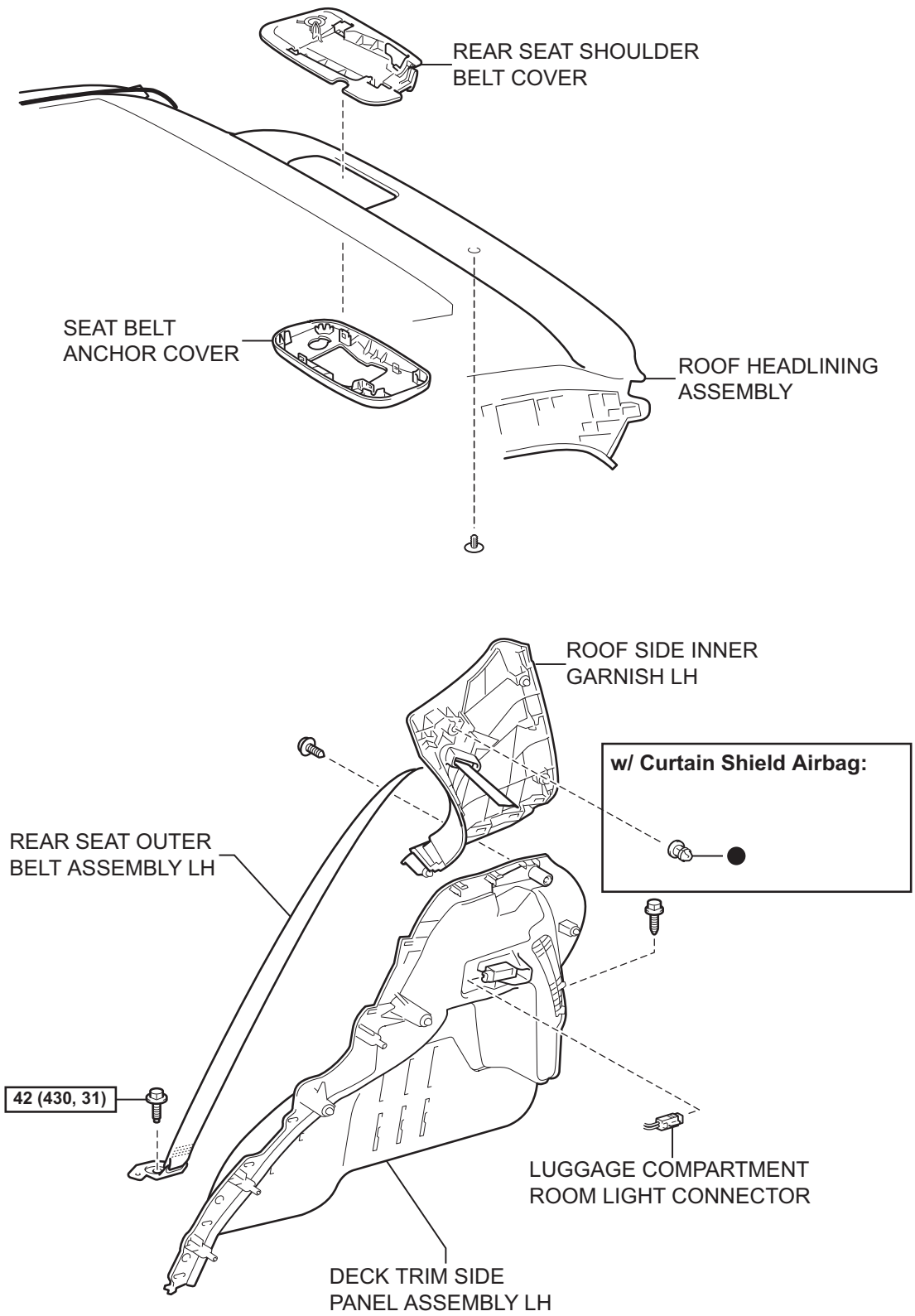


N*m (kgf*cm, ft*lbf) : Specified torque

● Non-reusable part

T

B114487E02

# REMOVAL

**NOTICE:**
**Always use "Torx" socket wrench E10 when removing the rear seat.**

1. **DISCONNECT CABLE FROM NEGATIVE BATTERY TERMINAL**
2. **REMOVE PACKAGE TRAY TRIM PANEL ASSEMBLY (See page IR-48)**
3. **REMOVE DECK BOARD SUB-ASSEMBLY (See page IR-48)**
4. **REMOVE DECK FLOOR BOX RH (See page IR-48)**
5. **REMOVE DECK FLOOR BOX LH (See page IR-48)**
6. **REMOVE NO. 1 REAR SEAT LEG COVER (for 60/40 Split Seat Type)**
   (a) for RH Side:
      (1) Remove the No. 1 rear seat leg cover (See page SE-89).
   (b) for LH Side:
      (1) Remove the No. 1 rear seat leg cover (See page SE-70).
7. **REMOVE NO. 2 REAR SEAT LEG COVER (for 60/40 Split Seat Type) (See page SE-70)**
8. **REMOVE REAR SEAT ASSEMBLY RH (for 60/40 Split Seat Type) (See page SE-89)**
9. **REMOVE REAR SEAT ASSEMBLY LH (for 60/40 Split Seat Type) (See page SE-71)**
10. **REMOVE REAR SEAT CUSHION COVER PAD SUB-ASSEMBLY (for Hold Down Seat Type) (See page SE-114)**
11. **REMOVE REAR SEATBACK ASSEMBLY (for Hold Down Seat Type) (See page SE-115)**
12. **REMOVE FRONT DOOR SCUFF PLATE RH (See page IR-97)**
13. **REMOVE FRONT DOOR SCUFF PLATE LH (See page IR-97)**
14. **REMOVE FRONT DOOR OPENING TRIM WEATHERSTRIP RH (See page SB-76)**
15. **REMOVE FRONT DOOR OPENING TRIM WEATHERSTRIP LH**
    HINT:
    Use the same procedure as for the RH side.
16. **REMOVE FRONT QUARTER TRIM PANEL ASSEMBLY RH (See page IR-97)**
17. **REMOVE FRONT QUARTER TRIM PANEL ASSEMBLY LH (See page IR-97)**
18. **REMOVE REAR DECK TRIM COVER (See page IR-49)**

**19. REMOVE REAR SEAT OUTER BELT ASSEMBLY RH (See page IR-98)**

**20. REMOVE REAR SEAT OUTER BELT ASSEMBLY LH (See page IR-98)**

**21. REMOVE DECK TRIM SIDE PANEL ASSEMBLY RH (See page IR-98)**

**22. REMOVE DECK TRIM SIDE PANEL ASSEMBLY LH (See page IR-98)**

**23. REMOVE ROOF SIDE INNER GARNISH RH**

(a) Using a screwdriver with its tip wrapped in protective tape, disengage the 4 claws and remove the center belt guide.

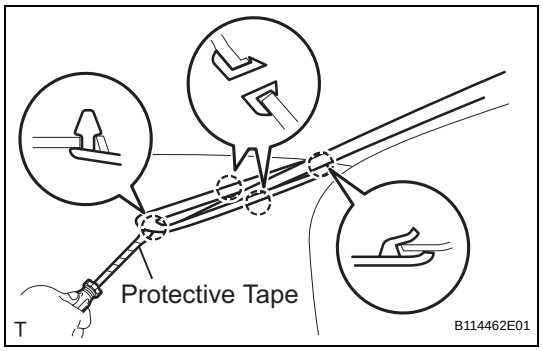


(b) w/ Curtain shield Airbag:

**NOTICE:**

**Replace the special clip with a new one when the roof side inner garnish is removed.**

(1) Disengage the 4 clips and the claw.

(2) Pass the rear seat outer belt and the rear center seat outer belt through the slit in the roof side inner garnish and remove the roof side inner garnish.

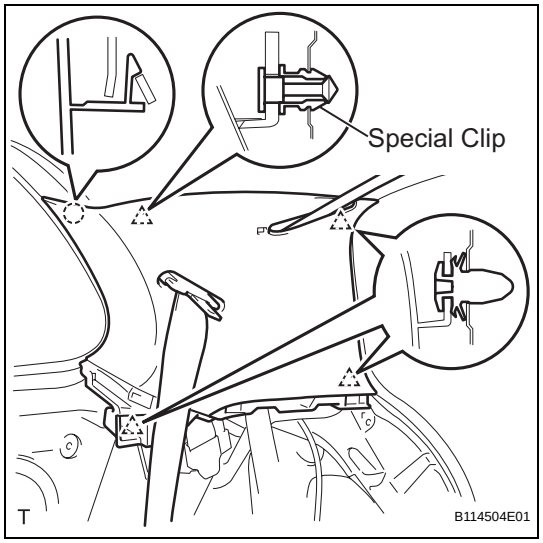


(c) w/o Curtain Shield Airbag:

(1) Disengage the 4 clips and the claw.

(2) Pass the rear seat outer belt and the rear center seat outer belt through the slit in the roof side inner garnish and remove the roof side inner garnish.

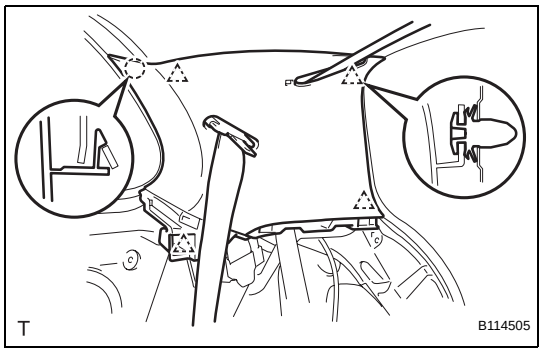


**24. REMOVE ROOF SIDE INNER GARNISH LH (See page IR-100)**

**25. REMOVE REAR CENTER SEAT OUTER BELT ASSEMBLY (See page SB-158)**

**26. REMOVE SEAT BELT ANCHOR COVER (See page SB-159)**

**27. REMOVE ROOF HEADLINING ASSEMBLY (See page SB-160)**

**28. REMOVE REAR SEAT SHOULDER BELT COVER**
**(See page SB-160)**

# INSTALLATION

**CAUTION:**
**Always use "Torx" socket wrench E10 when installing the rear seat.**

1. **INSTALL REAR SEAT SHOULDER BELT COVER (See page SB-160)**
2. **INSTALL ROOF HEADLINING ASSEMBLY (See page SB-160)**
3. **INSTALL SEAT BELT ANCHOR COVER (See page SB-160)**
4. **INSTALL REAR CENTER SEAT OUTER BELT ASSEMBLY (See page SB-161)**
5. **INSTALL ROOF SIDE INNER GARNISH RH**
   (a) w/ Curtain Shield Airbag:
      (1) Install a new special clip onto the roof side inner garnish.
      (2) Pass the rear seat outer belt and the rear center seat outer belt through the slit in the roof side inner garnish.
      (3) Engage the 4 clips and the claw and install the roof side inner garnish.

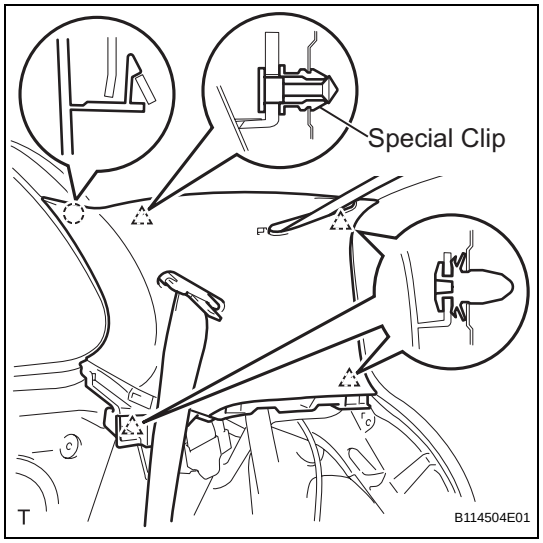


   (b) w/o Curtain Shield Airbag:
      (1) Pass the rear seat outer belt and the rear center seat outer belt through the slit in the roof side inner garnish.
      (2) Engage the 4 clips and the claw and install the roof side inner garnish.

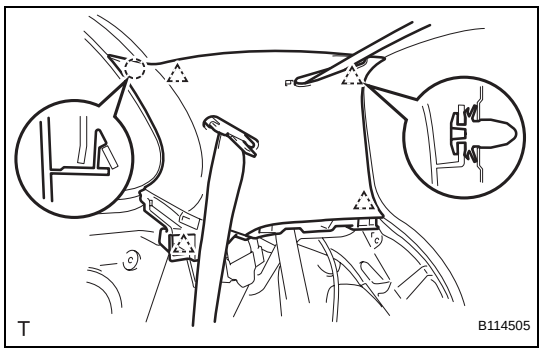


   (c) Engage the 4 claws and install the center belt guide.

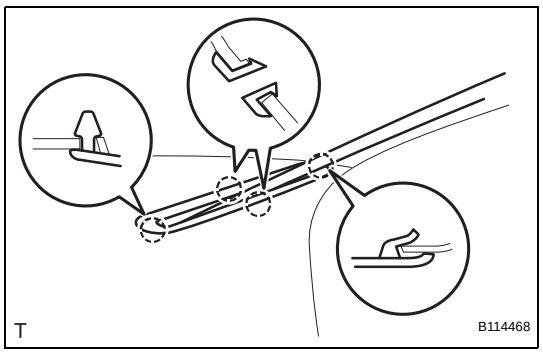


6. **INSTALL ROOF SIDE INNER GARNISH LH (See page IR-116)**
7. **INSTALL DECK TRIM SIDE PANEL ASSEMBLY RH (See page IR-117)**
8. **INSTALL DECK TRIM SIDE PANEL ASSEMBLY LH (See page IR-118)**
9. **INSTALL REAR SEAT OUTER BELT ASSEMBLY RH (See page IR-118)**

10. **INSTALL REAR SEAT OUTER BELT ASSEMBLY LH (See page IR-118)**
11. **INSTALL REAR DECK TRIM COVER (See page IR-82)**
12. **INSTALL FRONT QUARTER TRIM PANEL ASSEMBLY RH (See page IR-118)**
13. **INSTALL FRONT QUARTER TRIM PANEL ASSEMBLY LH (See page IR-119)**
14. **INSTALL FRONT DOOR OPENING TRIM WEATHERSTRIP RH (See page SB-80)**
15. **INSTALL FRONT DOOR OPENING TRIM WEATHERSTRIP LH**
    HINT:
    Use the same procedure as for the RH side.
16. **INSTALL FRONT DOOR SCUFF PLATE RH (See page IR-119)**
17. **INSTALL FRONT DOOR SCUFF PLATE LH (See page IR-119)**
18. **INSTALL REAR SEAT ASSEMBLY LH (for 60/40 Split Seat Type) (See page SE-84)**
19. **INSTALL REAR SEAT ASSEMBLY RH (for 60/40 Split Seat Type) (See page SE-102)**
20. **INSTALL NO. 2 REAR SEAT LEG COVER (for 60/40 Split Seat Type) (See page SE-85)**
21. **INSTALL NO. 1 REAR SEAT LEG COVER (for 60/40 Split Seat Type)**
    (a) for RH Side:
        (1) Install the No. 1 rear seat leg cover (See page SE-103).
    (b) for LH Side:
        (1) Install the No. 1 rear seat leg cover (See page SE-85).
22. **INSTALL REAR SEATBACK ASSEMBLY (for Hold Down Seat Type) (See page SE-122)**
23. **INSTALL REAR SEAT CUSHION COVER PAD SUB-ASSEMBLY (for Hold Down Seat Type) (See page SE-123)**
24. **INSTALL DECK FLOOR BOX RH (See page IR-83)**
25. **INSTALL DECK FLOOR BOX LH (See page IR-83)**
26. **INSTALL DECK BOARD SUB-ASSEMBLY (See page IR-83)**
27. **INSTALL PACKAGE TRAY TRIM PANEL ASSEMBLY (See page IR-83)**
28. **CONNECT CABLE TO NEGATIVE BATTERY TERMINAL**
    **Torque: 5.4 N*m (55 kgf*cm, 48 in.*lbf)**

# CHILD RESTRAINT SEAT ANCHOR BRACKET (for Sedan)

## COMPONENTS



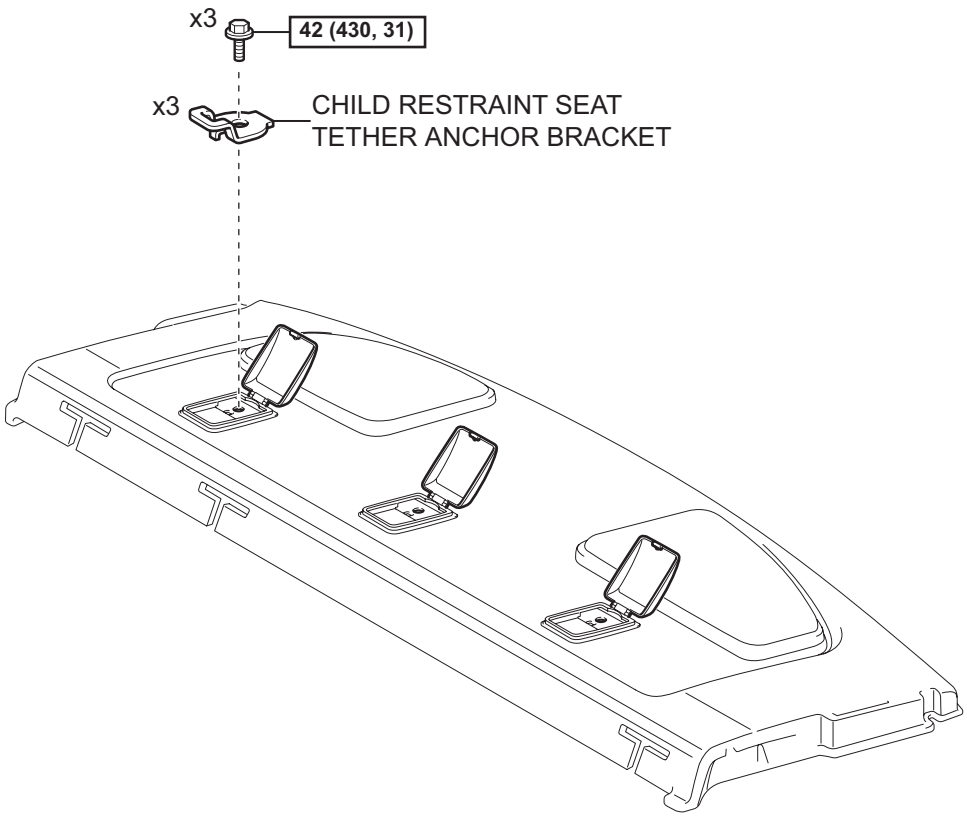


N*m (kgf*cm, ft*lbf) : Specified torque

T

B138377E01

SB

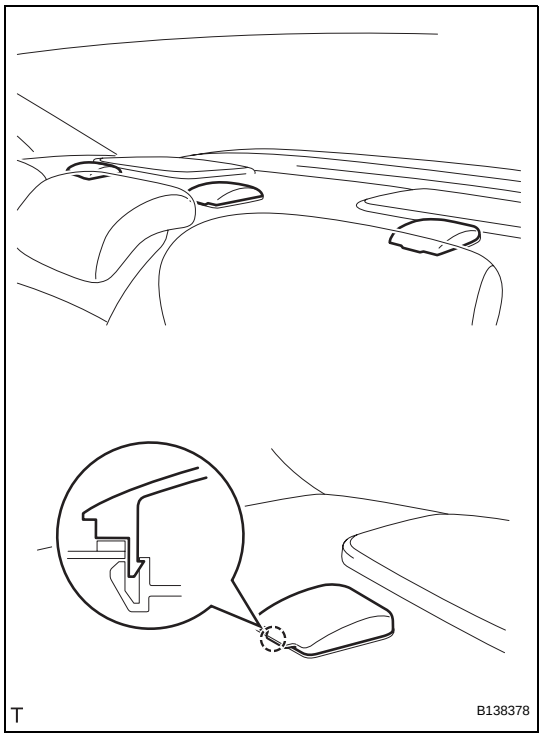


# REMOVAL

**1. REMOVE CHILD RESTRAINT SEAT TETHER ANCHOR BRACKET**

HINT:

Use the same procedure to remove all the child restraint seat tether anchor brackets.

(a) Disengage the claw and open the package tray trim cover.

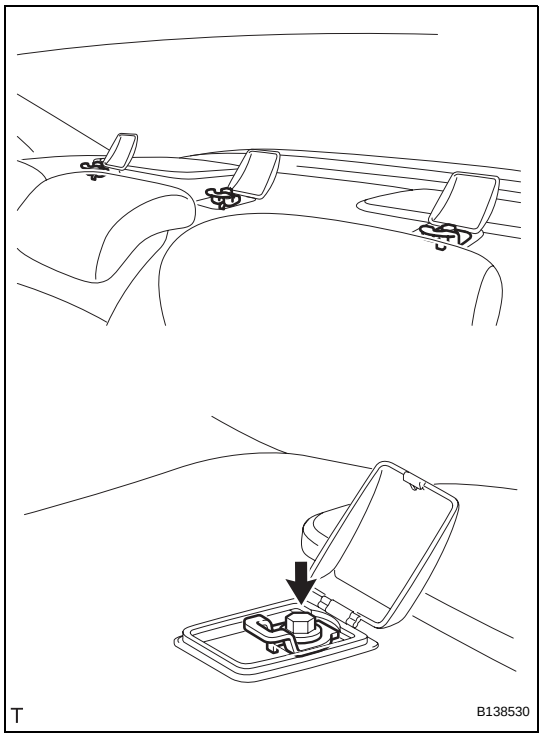


(b) Remove the bolt and the child restraint seat tether anchor bracket.

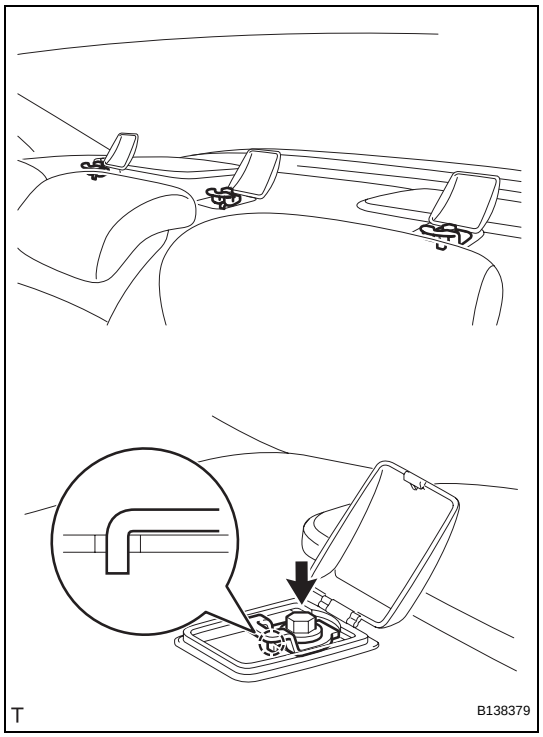


# INSTALLATION

**1. INSTALL CHILD RESTRAINT SEAT TETHER ANCHOR BRACKET**

HINT:

Use the same procedure to install all the child restraint seat tether anchor brackets.

(a) Insert the hook into the body hole and install the child restraint seat tether anchor bracket with the bolt.

**Torque: 42 N*m (430 kgf*cm, 31 ft.*lbf)**

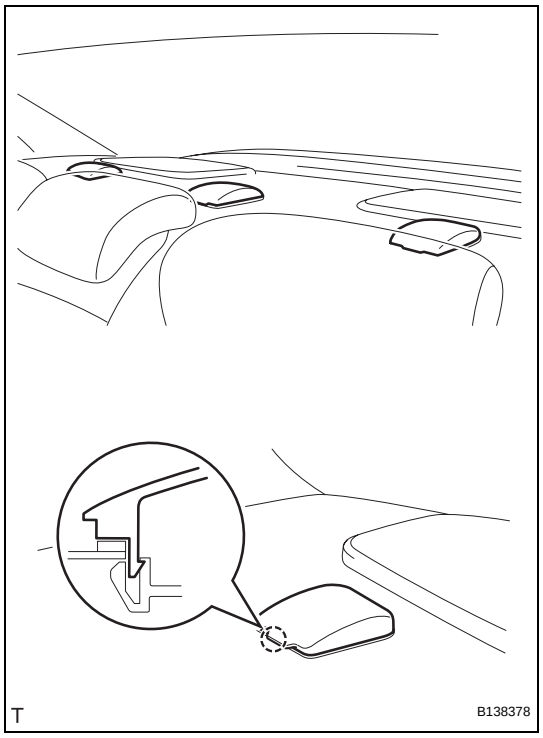


(b) Engage the claw and close the package tray rim cover.