CAN COMMUNICATION SYSTEM

PRECAUTION

1. PRECAUTION

(a) Turn the ignition switch off before measuring the resistances of the CAN main wire and the CAN branch wire.

(b) After the ignition switch is turned off, check that the key reminder warning system and light reminder warning system are not in operation.

(c) Before measuring the resistance, leave the vehicle as is for at least 1 minute and do not operate the ignition switch, any other switches or the doors. If doors need to be opened in order to check connectors, open the doors and leave them open.
HINT:
Operating the ignition switch, any switches or any doors triggers related ECU and sensor communication with the CAN, which causes resistance variation.

2. STEERING SYSTEM HANDLING PRECAUTIONS

(a) Care must be taken when replacing parts. Incorrect replacement could affect the performance of the steering system and result in hazards when driving.

3. SRS AIRBAG SYSTEM HANDLING PRECAUTIONS

(a) This vehicle is equipped with an SRS (Supplemental Restraint System) such as the driver airbag and front passenger airbag. Failure to carry out service operations in the correct sequence could cause unexpected SRS deployment during servicing and may lead to a serious accident. Before servicing (including removal or installation of parts, inspection or replacement), be sure to read the precautionary notice for the Supplemental Restraint System (See page RS-1).

4. BUS LINE REPAIR

(a) After repairing the bus line with solder, wrap the repaired part with vinyl tape (See page IN-34).
NOTICE:
- **The CANL bus line and CANH bus line must always be installed together.**
- **When installing, twist them together.**
- **CAN bus lines are likely to be influenced by noise if the bus lines are not twisted together.**
- **The difference in length between the CANL bus line and CANH bus line should be less than 100 mm (3.937 in.).**
- **Leave approximately 80 mm (3.150 in.) loose in the twisted wires around the connectors.**

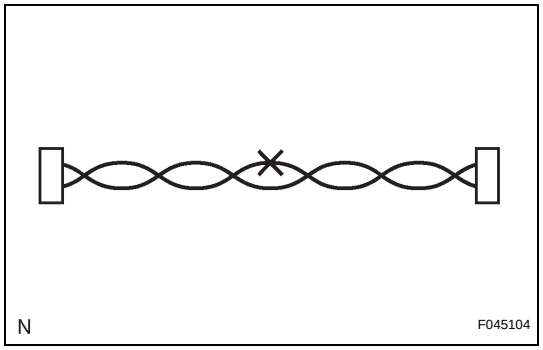

CA

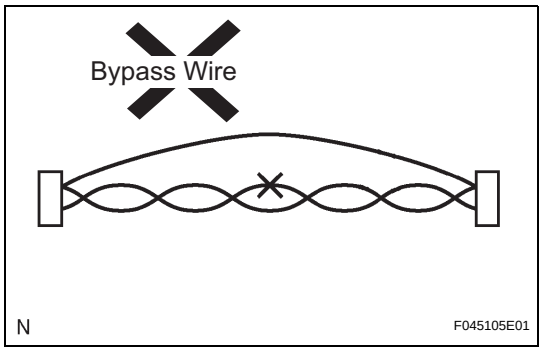

(b) Do not use bypass wiring between the connectors.
NOTICE:
The feature of the twisted wire harness will be lost if bypass wiring is used.

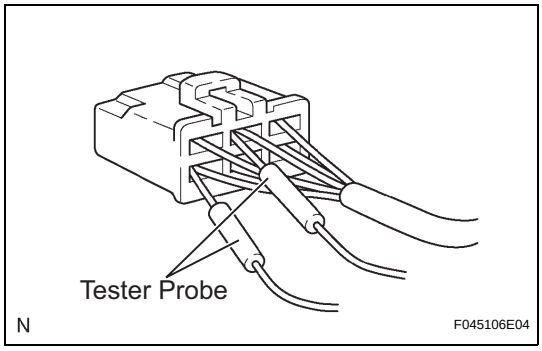

5. CONNECTOR HANDLING

(a) When inserting tester probes into a connector, insert them from the rear of the connector.

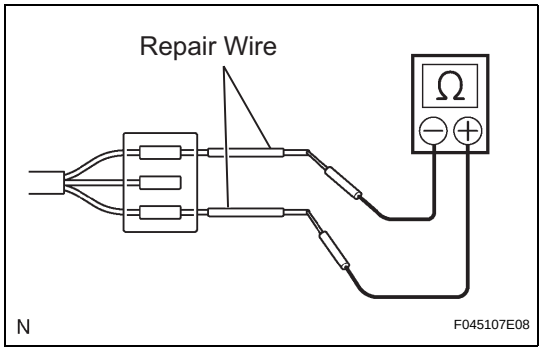

(b) Use a repair wire to check the connector if it is impossible to check resistance from the rear of the connector.

PARTS LOCATION

HATCHBACK:

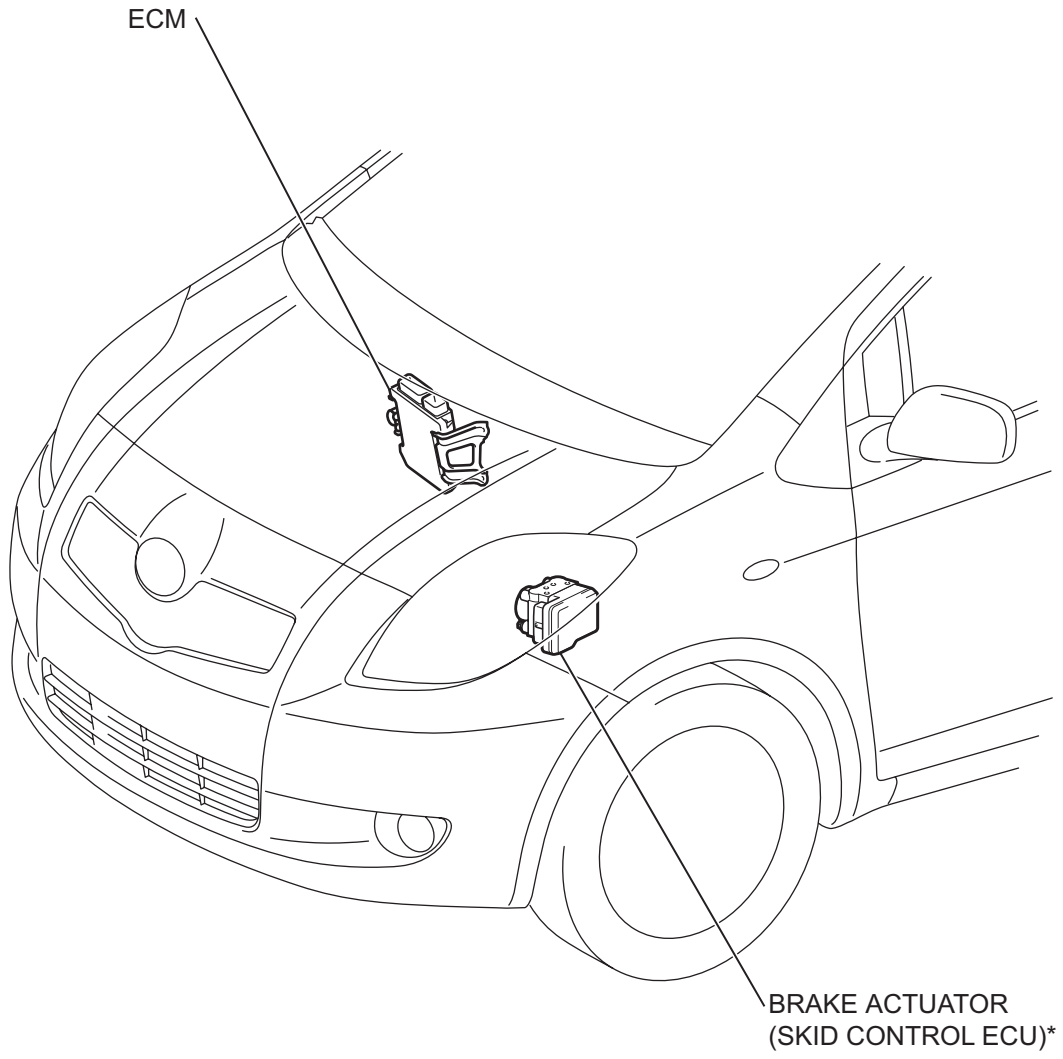

*: W/ ABS

H

C126027E02

SEDAN:

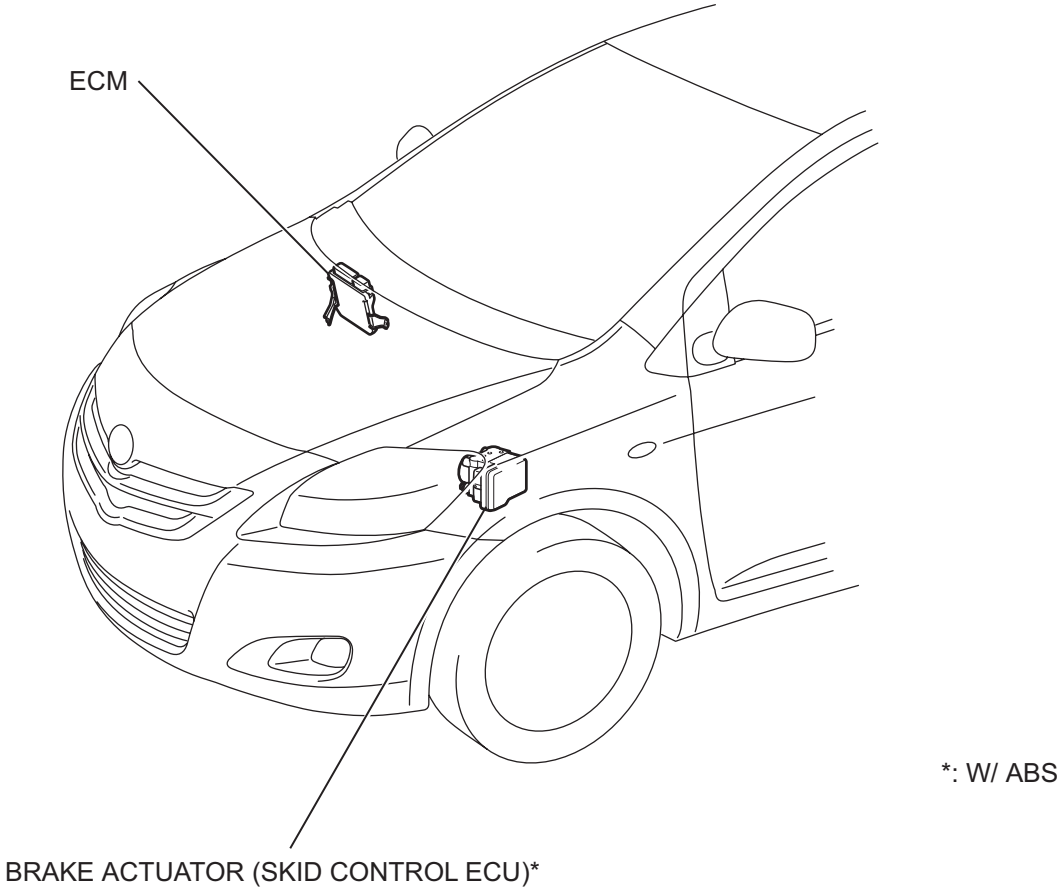

C139123E02

HATCHBACK:

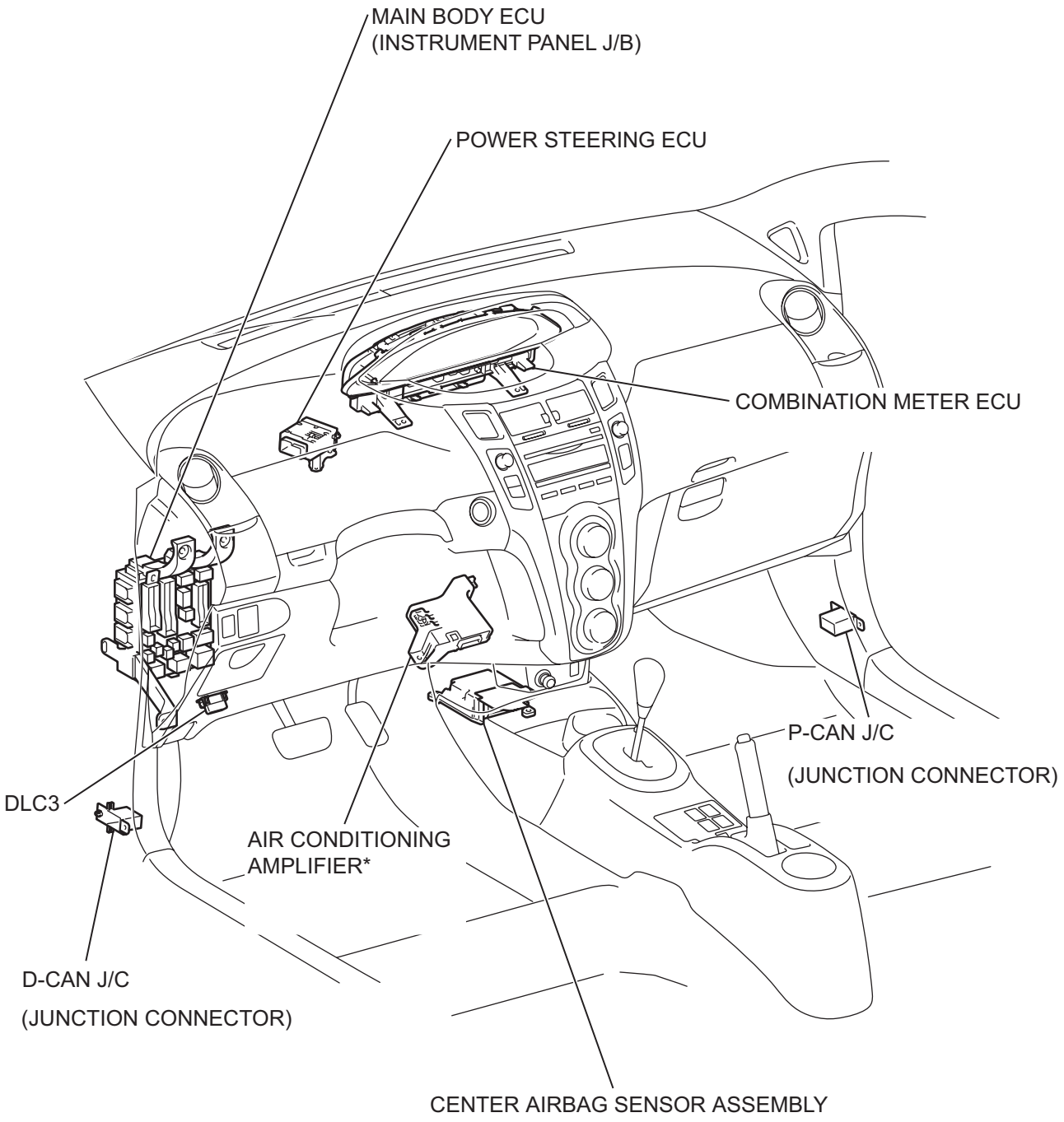

*: W/ AIR CONDITIONING OR PTC HEATER

H

C118152E03

SEDAN:

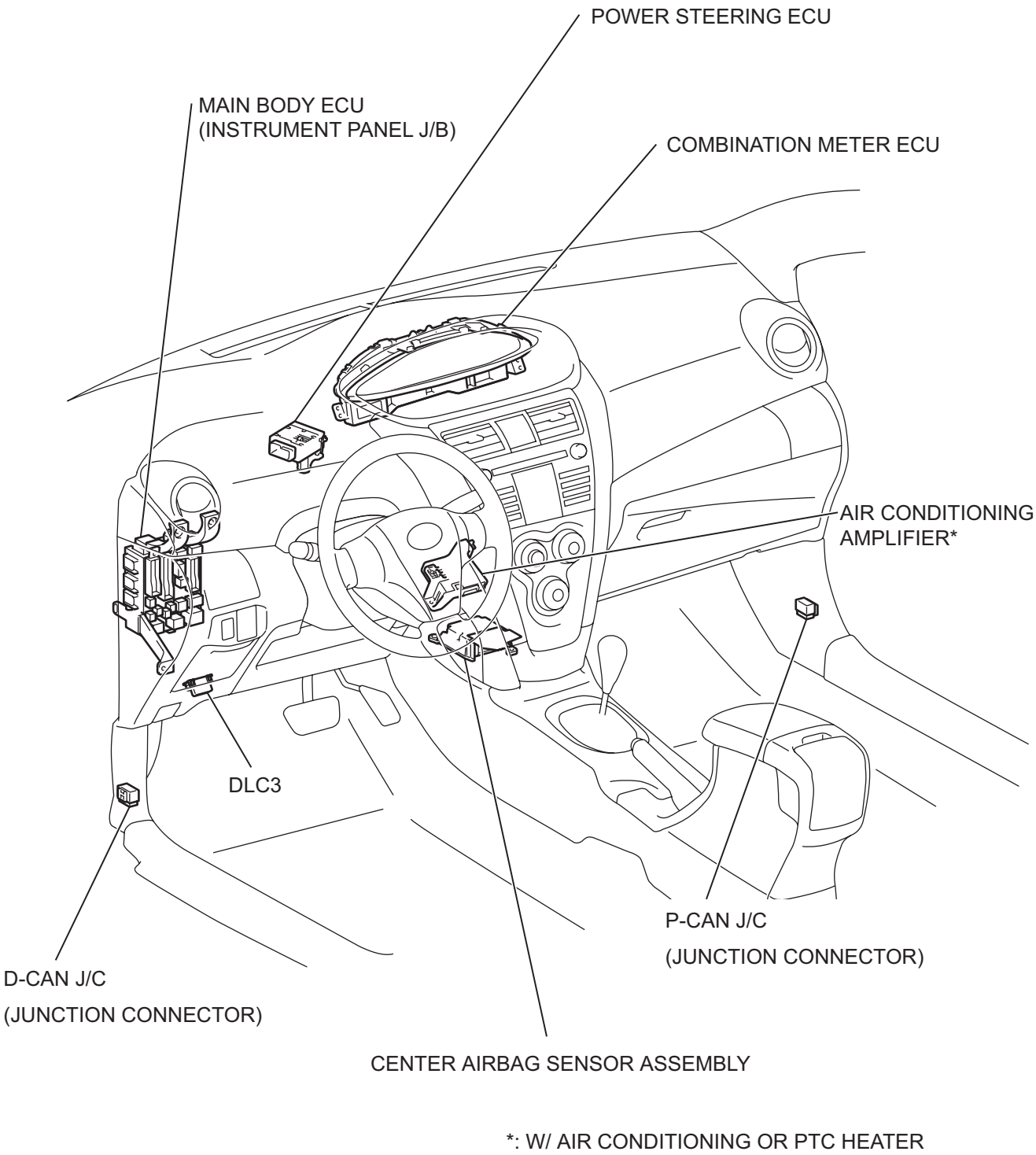

*: W/ AIR CONDITIONING OR PTC HEATER

C139125E02

SYSTEM DIAGRAM

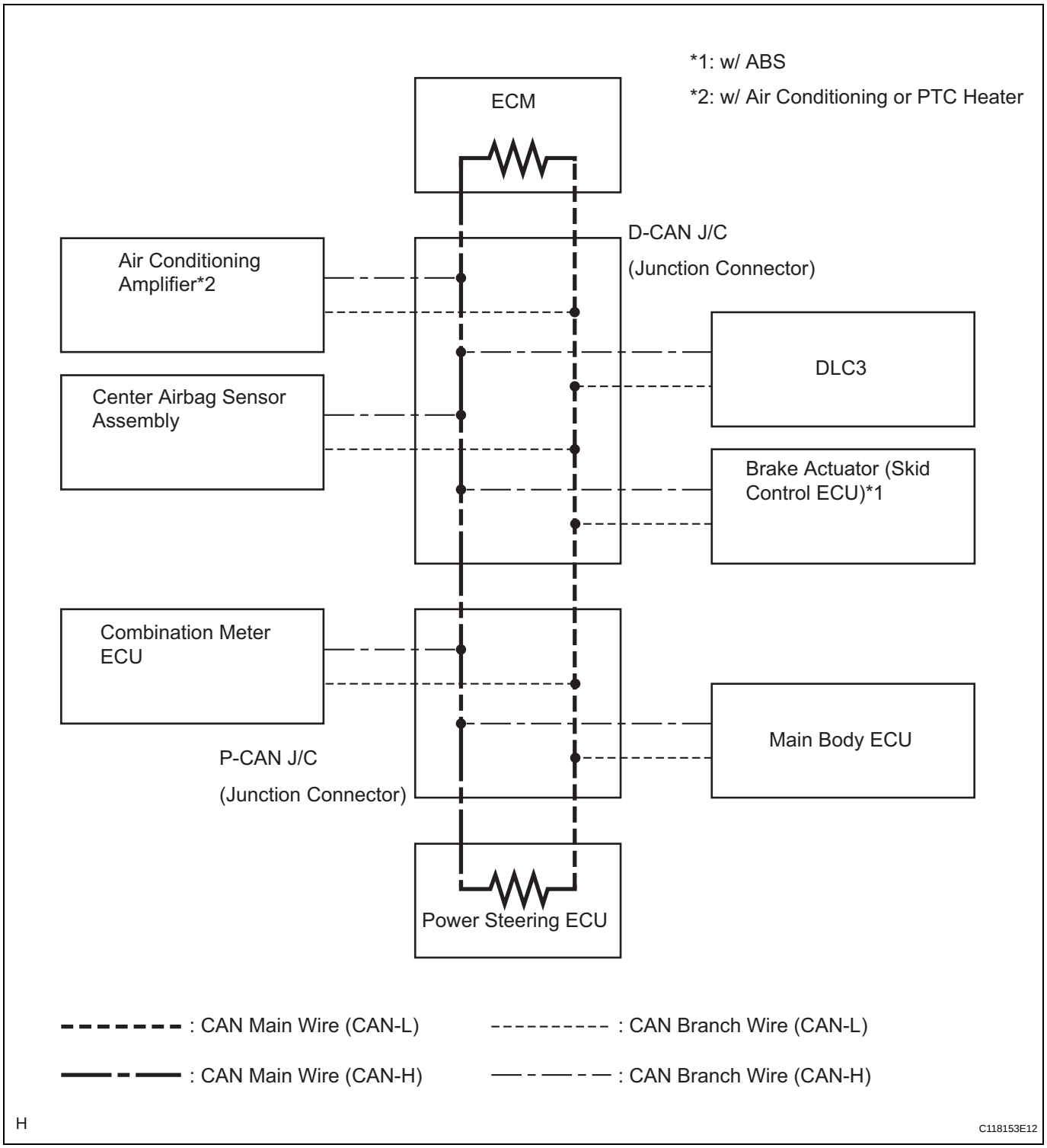

HINT:
The power steering ECU and center airbag sensor assembly use the CAN communication system to perform DTC communication instead of the conventional communication line (SIL).

CA

SYSTEM DESCRIPTION

1. BRIEF DESCRIPTION

(a) The CAN (Control Area Network) is a serial data communication system for real time application. It is a vehicle multiplex communication system which has a high communication speed (500 kbps) and the ability to detect malfunctions.

(b) By pairing the CANH and CANL bus lines, the CAN performs communication based on differential voltages.

(c) Many ECUs (sensors) installed on the vehicle operate by sharing information and communicating with each other.

(d) The CAN has two 120 Ω resistors which are necessary to communicate with the main wire.

2. DEFINITION OF TERMS

(a) Main wire

(1) The main wire is a wire harness between the two terminus circuits on the bus (communication line). This is the main bus in the CAN communication system.

(b) Branch wire

(1) The branch wire is a wire harness which diverges from the main wire to an ECU or sensor.

(c) Terminus circuit

(1) The terminus circuit is a circuit which converts the communication current of the CAN communication into the bus voltage. It consists of a resistor and condenser. Two terminus circuits are necessary on a bus.

(d) CAN J/C

(1) The CAN J/C is a junction designed for CAN communication.

3. ECUs OR SENSORS WHICH COMMUNICATE VIA CAN COMMUNICATION SYSTEM

(a) Brake actuator (Skid control ECU)*1

(b) Power steering ECU

(c) ECM

(d) Center airbag sensor assembly

(e) Air conditioning amplifier*2

(f) Combination meter ECU

(g) Main body ECU

HINT:

*1: w/ ABS

*2: w/ Air conditioning or PTC heater

4. DIAGNOSTIC CODES FOR CAN COMMUNICATION SYSTEM

(a) DTCs for the CAN communication system are as follows: U0073, U0100, U0105, U0121, U0129 and B1499.

5. NOTES REGARDING TROUBLESHOOTING

(a) Trouble in the CAN bus (communication line) can be checked through the DLC3 (except when there is a wire break other than in the branch wire of the DLC3).

NOTICE:

Do not connect the tester directly to the DLC3 connector. Be sure to use a service wire.

(b) DTCs regarding the CAN communication system can be checked using the intelligent tester via the CAN VIM.

(c) The CAN communication system cannot detect trouble in the branch wire of the DLC3 even though the DLC3 is also connected to the CAN communication system.

HOW TO PROCEED WITH TROUBLESHOOTING

NOTICE:

- **DTCs for the CAN communication system are as follows: U0073, U0100, U0105, U0121, U0129 and B1499.**
- **Refer to the troubleshooting section for each system if DTCs regarding the CAN communication system are not output.**
- **Turn the ignition switch off before measuring the resistances of the CAN main wire and the CAN branch wire.**
- **After the ignition switch is turned off, check that the key reminder warning system and light reminder warning system are not in operation.**
- **Before measuring the resistance, leave the vehicle as is for at least 1 minute and do not operate the ignition switch, any other switches or the doors. If doors need to be opened in order to check connectors, open the doors and leave them open.**
  HINT:
  Operating the ignition switch, any switches or any doors triggers related ECU and sensor communication with the CAN, which causes resistance variation.

1	CHECK CAN BUS LINE

(a) Check the CAN bus line (See page CA-42).

NEXT

2	CHECK INSTALLED SYSTEMS (ECUs AND SENSORS) THAT ADOPT CAN COMMUNICATION

NEXT

CA

3	CHECK AND CLEAR DTCs

NEXT

4	CHECK CAN COMMUNICATION USING INTELLIGENT TESTER VIA CAN VIM

(a) Select "BUS CHECK" (See page CA-22).

Result

All ECUs and sensors connected to CAN communication system displayed on screen.	A
One ECU or sensor connected to CAN communication system not displayed on screen.	B

2 or more ECUs and sensors connected to CAN communication system not displayed on screen.	C

NOTICE:

- **The systems (ECUs and sensors) that adopt CAN communication vary depending on the vehicle and option settings. Check which systems (ECUs and sensors) are installed on the vehicle (See page CA-22).**
- **Non-installed ECUs or sensors are not displayed. Do not mistake them for being in communication stop mode.**
- **If 2 or more ECUs or sensors are not displayed on the intelligent tester via the CAN VIM, perform troubleshooting for open in one side of CAN bus line for each undisplayed ECU or sensor.**

B → **GO TO COMMUNICATION STOP MODE TABLE**

C → **GO TO OPEN IN ONE SIDE OF CAN BRANCH WIRE**

A

5	**DTC COMBINATION TABLE**

(a) Confirm trouble according to the combination of output DTCs regarding the CAN communication system.
HINT:
Previous CAN communication system DTCs may be the cause if CAN communication system DTCs are output and all ECUs and sensors connected to the CAN communication system are displayed on the intelligent tester's "BUS CHECK" screen via the CAN VIM.

NEXT

6	**INSPECT CIRCUIT**

NEXT

7	**IDENTIFY PROBLEM**

NEXT

8	**REPAIR OR REPLACE**

NEXT

9	**PERFORM CONFIRMATION TEST**

NEXT

END

PROBLEM SYMPTOMS TABLE

RESULT LIST OF CHECK CAN BUS LINE

Symptom	Suspected area	See page
Open in CAN Main Wire	Check CAN Main Wire for Disconnection	CA-46
Short in CAN Bus Line	Check CAN Bus Lines for Short Circuit	CA-52
Short to +B in CAN Bus Line	Check CAN Bus Line for Short to +B	CA-67
Short to GND in CAN Bus Line	Check CAN Bus Line for Short to GND	CA-82
Open in One Side of CAN Branch Wire	Check for Open in One Side of Branch Wire	CA-97

COMMUNICATION STOP MODE TABLE

Symptom	Suspected area	See page
"EPS" not displayed on intelligent tester via CAN VIM.	Power Steering ECU Communication Stop Mode	CA-31
"ENGINE" not displayed on intelligent tester via CAN VIM.	ECM Communication Stop Mode	CA-33
"SRS AIRBAG" not displayed on intelligent tester via CAN VIM.	Center Airbag Sensor Communication Stop Mode	CA-40
"A/C*1" not displayed on intelligent tester via CAN VIM.	Air Conditioning Amplifier Communication Stop Mode	CA-29
"MAIN BODY" not displayed on intelligent tester via CAN VIM.	Main Body ECU Communication Stop Mode	CA-35
"ABS/VSC/TRAC*2" not displayed on intelligent tester via CAN VIM.	Brake Actuator (Skid Control ECU) Communication Stop Mode	CA-27
"METER" not displayed on intelligent tester via CAN VIM.	Combination Meter ECU Communication Stop Mode	CA-38

*1: w/ Air conditioning or PTC heater
*2: w/ ABS

TERMINALS OF ECU

NOTICE:

- **Turn the ignition switch off before measuring the resistances of the CAN main wire and the CAN branch wire.**
- **After the ignition switch is turned off, check that the key reminder warning system and light reminder warning system are not in operation.**
- **Before measuring the resistance, leave the vehicle as is for at least 1 minute and do not operate the ignition switch, any other switches or the doors. If doors need to be opened in order to check connectors, open the doors and leave them open.**
  HINT:
  Operating the ignition switch, any switches or any doors triggers related ECU and sensor communication with the CAN, which causes resistance variation.

Wire Harness Side:

D-CAN J/C Connector

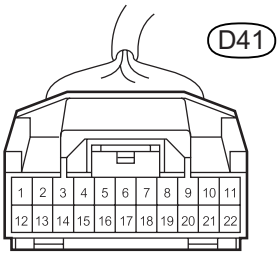

Front View

H

C118162E06

1. JUNCTION CONNECTOR

(a) D-CAN J/C

D-CAN J/C connectors	Terminal	Color
Brake actuator (Skid control ECU*1 (CAN-H))	D41-1 (ABS)	G
Brake actuator (Skid control ECU*1 (CAN-L))	D41-12 (ABS)	W
DLC3 (CAN-H)	D41-3 (OBD)	V
DLC3 (CAN-L)	D41-14 (OBD)	W
ECM (CAN-H)	D41-4 (EFI)	L
ECM (CAN-L)	D41-15 (EFI)	W
Air Conditioning Amplifier*2 (CAN-H)	D41-6 (A/C)	V
Air Conditioning Amplifier*2 (CAN-L)	D41-17 (A/C)	W
Center Airbag Sensor Assembly (CAN-H)	D41-8 (A/B)	B
Center Airbag Sensor Assembly (CAN-L)	D41-19 (A/B)	W
CAN main wire (between D-CAN and P-CAN J/C)	D41-11 (TORH)	Y
CAN main wire (between D-CAN and P-CAN J/C)	D41-22 (TORH)	W

HINT:
*1: w/ ABS
*2: w/ Air conditioning or PTC heater

Wire Harness Side:

P-CAN J/C Connector

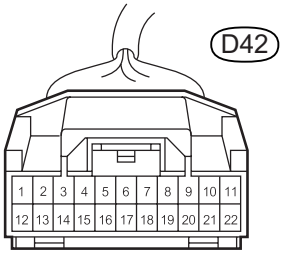

Front View

H

C118162E07

2. JUNCTION CONNECTOR

(a) P-CAN J/C

P-CAN J/C connectors	Terminal	Color
Power Steering ECU (CAN-H)	D42-4 (EPS)	SB
Power Steering ECU (CAN-L)	D42-15 (EPS)	W
Main Body ECU (CAN-H)	D42-5 (JB)	R
Main Body ECU (CAN-L)	D42-16 (JB)	W
Combination Meter ECU (CAN-H)	D42-7 (MET)	G
Combination Meter ECU (CAN-L)	D42-18 (MET)	W
CAN main wire (between P-CAN and D-CAN J/C)	D42-11 (TOLH)	Y
CAN main wire (between P-CAN and D-CAN J/C)	D42-22 (TOLH)	W

(b) Wiring diagram for identifying CAN J/C connectors

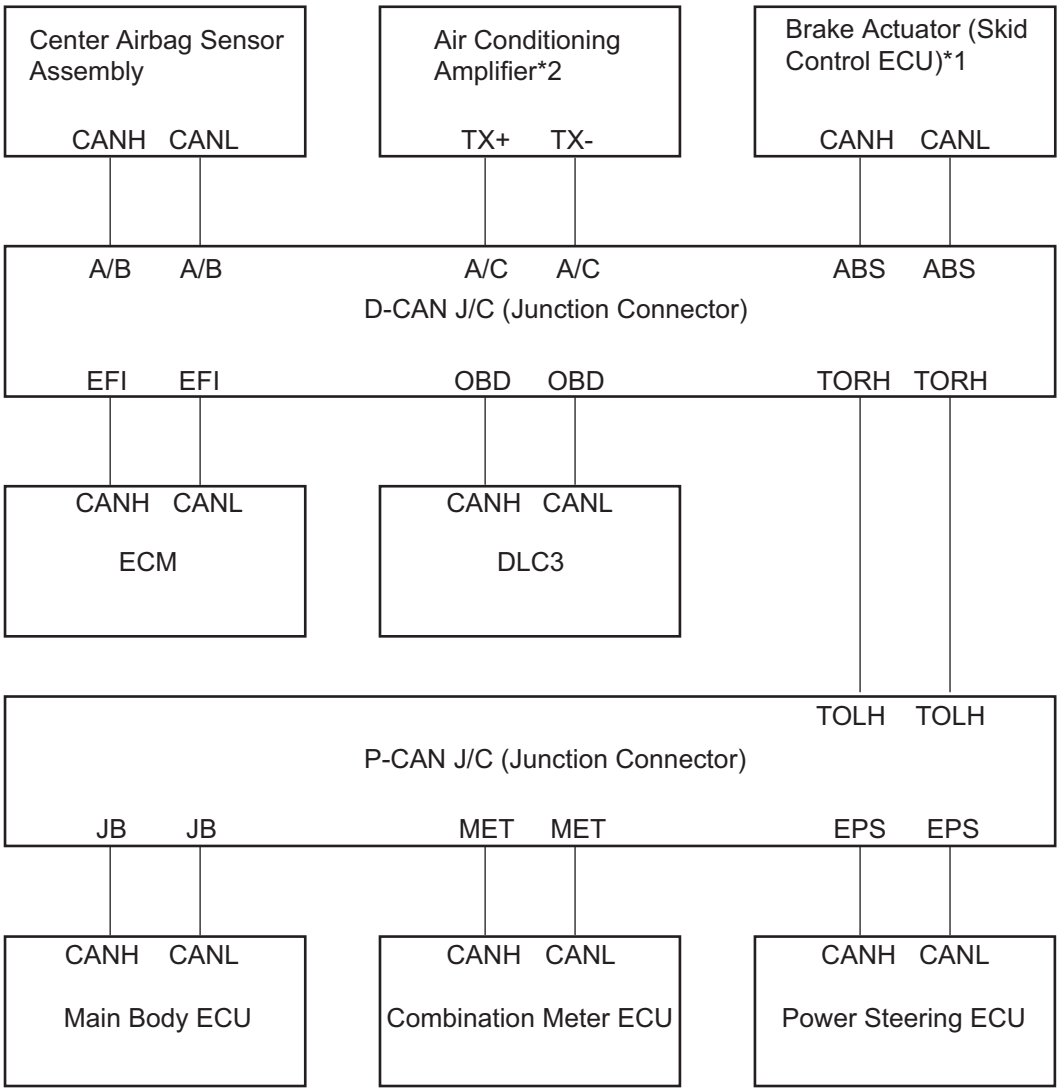

*1: w/ ABS

*2: w/ Air Conditioning or PTC Heater

H

C118154E01

CA

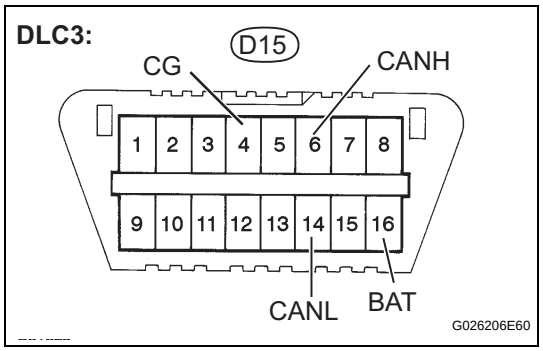

3. DLC3

(a) Turn the ignition switch OFF.

(b) Measure the resistance.

Standard resistance

Terminals	Wiring Color	Condition	Specified Condition
D15-6 (CANH) - D15-14 (CANL)	V - W	Ignition Switch OFF	54 to 69 Ω
D15-6 (CANH) - D15-4 (CG)	V - W-B	Ignition Switch OFF	200 Ω or higher
D15-14 (CANL) - D15-4 (CG)	W - W-B	Ignition Switch OFF	200 Ω or higher
D15-6 (CANH) - D15-16 (BAT)	V - SB	Ignition Switch OFF	6 kΩ or higher
D15-14 (CANL) - D15-16 (BAT)	W - SB	Ignition Switch OFF	6 kΩ or higher

4. BRAKE ACTUATOR (SKID CONTROL ECU)

HINT:

For vehicle with ABS only.

(a) Turn the ignition switch OFF.

(b) Disconnect the A15 brake actuator (skid control ECU) connector.

(c) Measure the resistance.

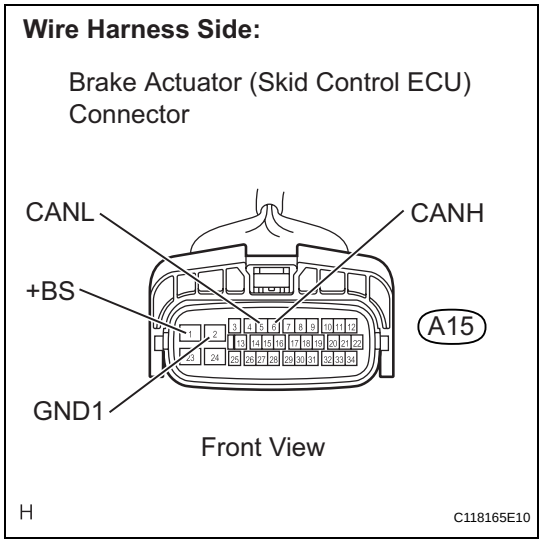

Standard resistance

Terminals	Wiring Color	Condition	Specified Condition
A15-6 (CANH) - A15-5 (CANL)	G - W	Ignition Switch OFF	54 to 69 Ω
A15-6 (CANH) - A15-2 (GND1)	G - W-B	Ignition Switch OFF	200 Ω or higher
A15-5 (CANL) - A15-2 (GND1)	W - W-B	Ignition Switch OFF	200 Ω or higher
A15-6 (CANH) - A15-1 (+BS)	G - W	Ignition Switch OFF	6 kΩ or higher
A15-5 (CANL) - A15-1 (+BS)	W - W	Ignition Switch OFF	6 kΩ or higher

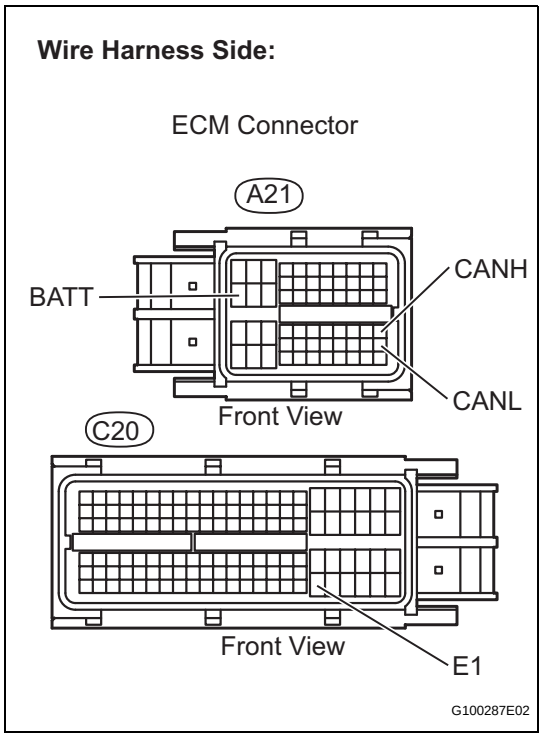

5. ECM

(a) Turn the ignition switch OFF.

(b) Disconnect the A21 and C20 ECM connectors.

(c) Measure the resistance.

Standard resistance

Terminals	Wiring Color	Condition	Specified Condition
A21-41 (CANH) - A21-49 (CANL)	L - W	Ignition switch OFF	108 to 132 Ω
A21-41 (CANH) - C20-104 (E1)	L - W	Ignition switch OFF	200 Ω or higher
A21-49 (CANL) - C20-104 (E1)	W - W	Ignition switch OFF	200 Ω or higher
A21-41 (CANH) - A21-20 (BATT)	L - Y	Ignition switch OFF	6 kΩ or higher
A21-49 (CANL) - A21-20 (BATT)	W - Y	Ignition switch OFF	6 kΩ or higher

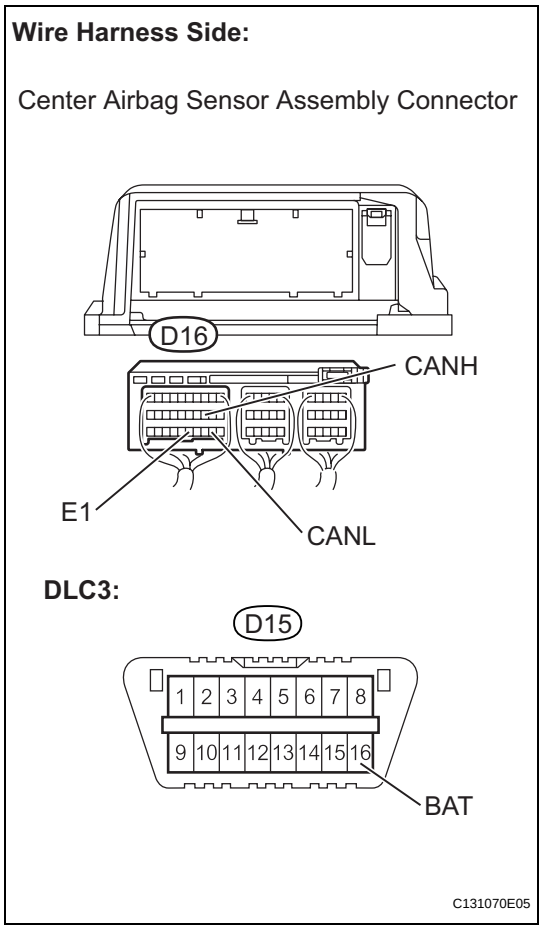

6. CENTER AIRBAG SENSOR ASSEMBLY

(a) Turn the ignition switch OFF.

(b) Disconnect the D16 center airbag sensor assembly connector.

(c) Measure the resistance.

Standard resistance

Terminals	Wiring Color	Condition	Specified Condition
D16-13 (CANH) - D16-22 (CANL)	B - W	Ignition switch OFF	54 to 69 Ω
D16-13 (CANH) - D16-25 (E1)	B - W-B	Ignition switch OFF	200 Ω or higher
D16-22 (CANL) - D16-25 (E1)	W - W-B	Ignition switch OFF	200 Ω or higher
D16-13 (CANH) - D15-16 (BAT)	B - SB	Ignition switch OFF	6 kΩ or higher
D16-22 (CANL) - D15-16 (BAT)	W - SB	ignition switch OFF	6 kΩ or higher

7. AIR CONDITIONING AMPLIFIER

HINT:

For vehicle with air conditioning or PTC heater only.

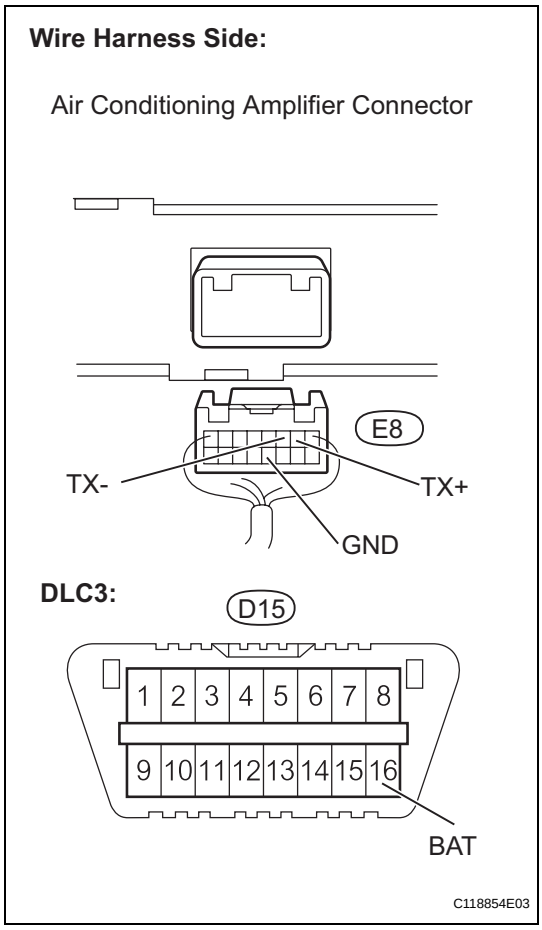

(a) Turn the ignition switch OFF.
(b) Disconnect the E8 air conditioning amplifier connector.
(c) Measure the resistance.

Standard resistance

Terminals	Wiring Color	Condition	Specified Condition
E8-2 (TX+) - E8-3 (TX-)	V - W	Ignition switch OFF	54 to 69 Ω
E8-2 (TX+) - E8-12 (GND)	V - W-B	Ignition switch OFF	200 Ω or higher
E8-3 (TX-) - E8-12 (GND)	W - W-B	Ignition switch OFF	200 Ω or higher
E8-2 (TX+) - D15-16 (BAT)	V - SB	Ignition switch OFF	6 kΩ or higher
E8-3 (TX-) - D15-16 (BAT)	W - SB	Ignition switch OFF	6 kΩ or higher

8. MAIN BODY ECU

Main Body ECU (Rear View):

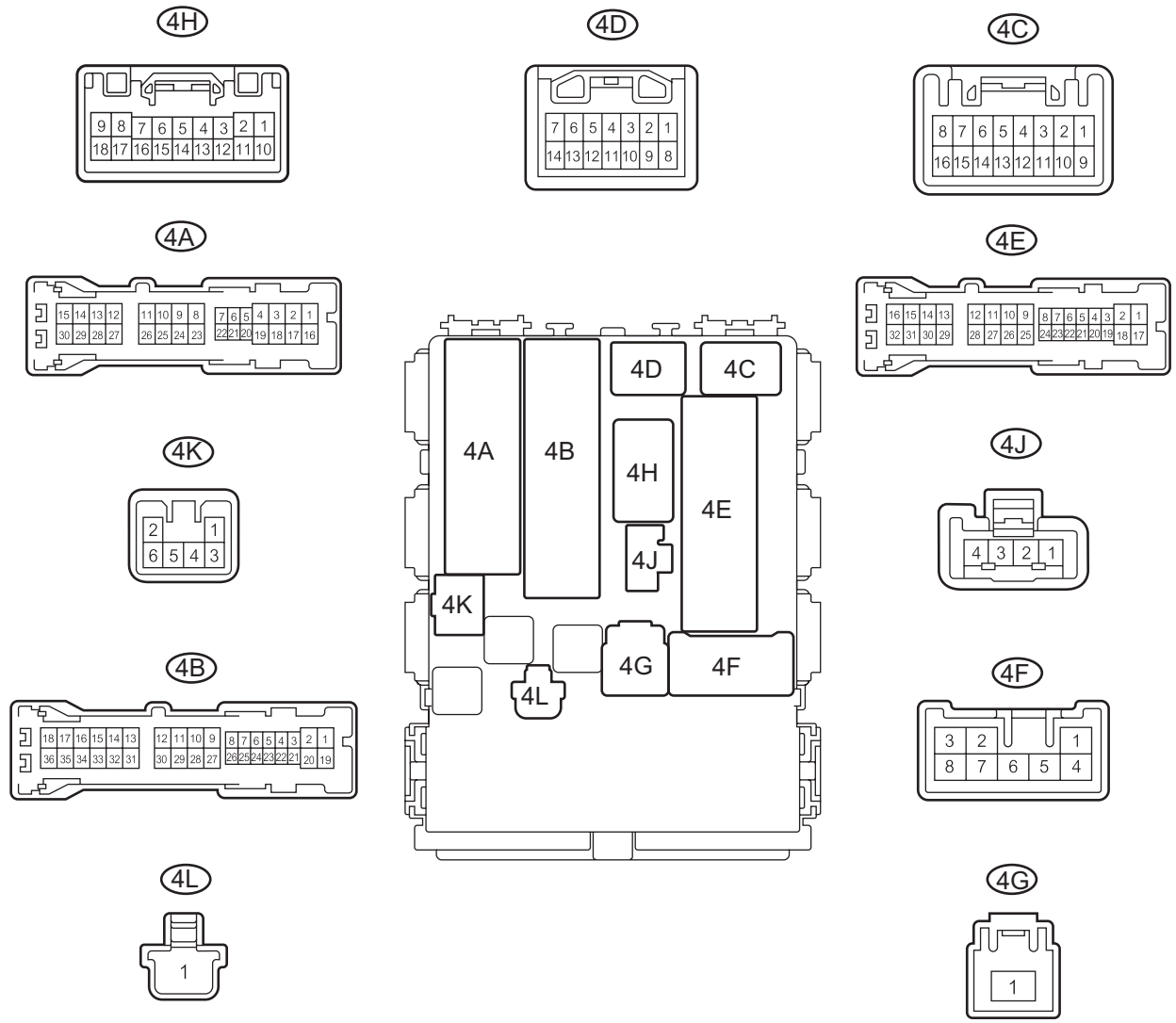

H

E114510E13

Main Body ECU (Front View):

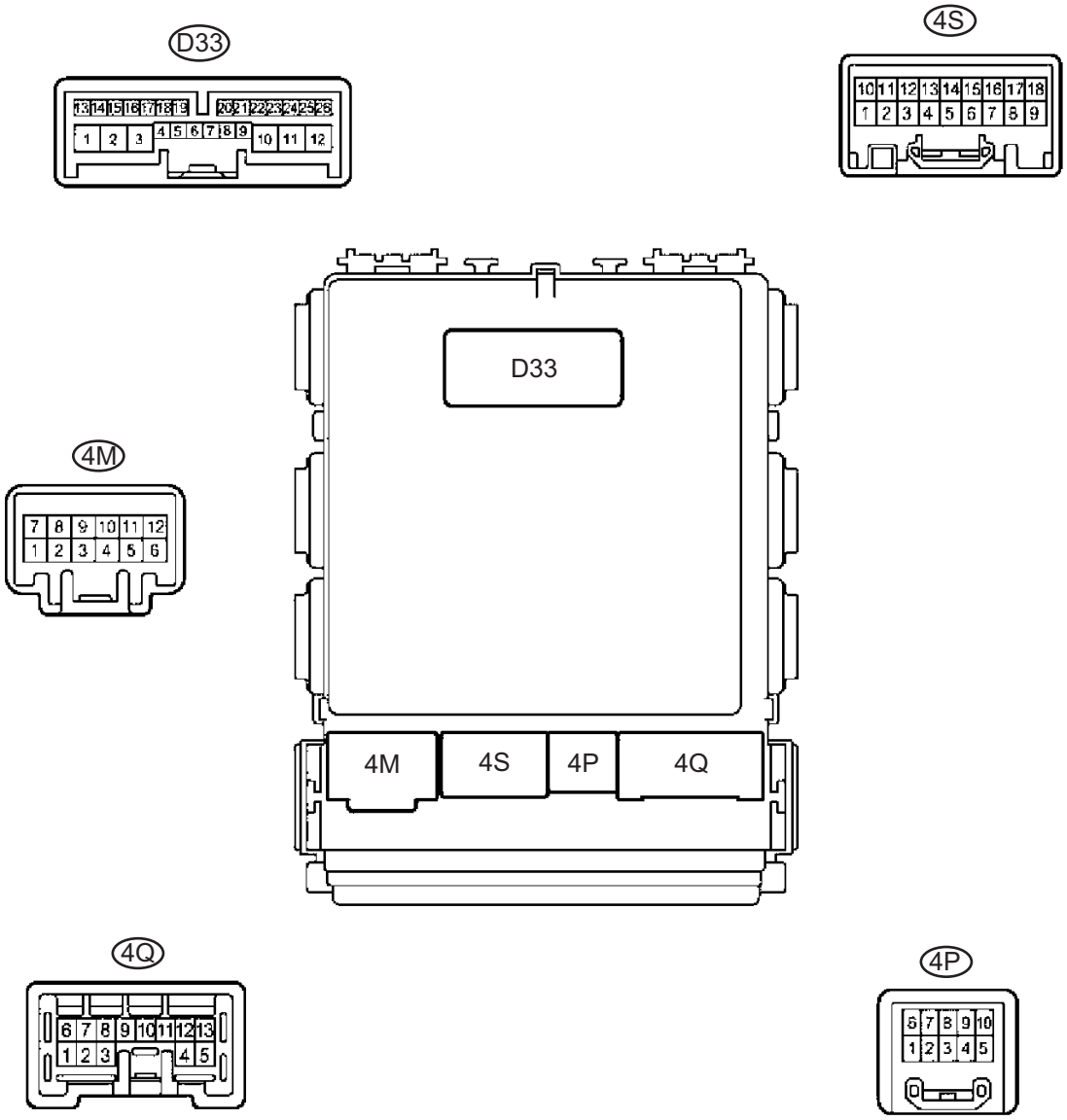

B108641E12

CA

(a) Turn the ignition switch OFF.
(b) Disconnect the 4B and 4E main body ECU connectors.
(c) Measure the resistance.

Standard resistance

Terminals	Wiring Color	Condition	Specified Condition
D33-23 (CANH) - D33-22 (CANL)	R - W	Ignition switch OFF	54 to 69 Ω
D33-23 (CANH) - 4E-17 (GND1)	R - W-B	Ignition switch OFF	200 Ω or higher
D33-22 (CANL) - 4E-17 (GND1)	W - W-B	Ignition switch OFF	200 Ω or higher
D33-23 (CANH) - 4B-30 (BECU)	R - L	Ignition switch OFF	6 kΩ or higher
D33-22 (CANL) - 4B-30 (BECU)	W - L	Ignition switch OFF	6 kΩ or higher

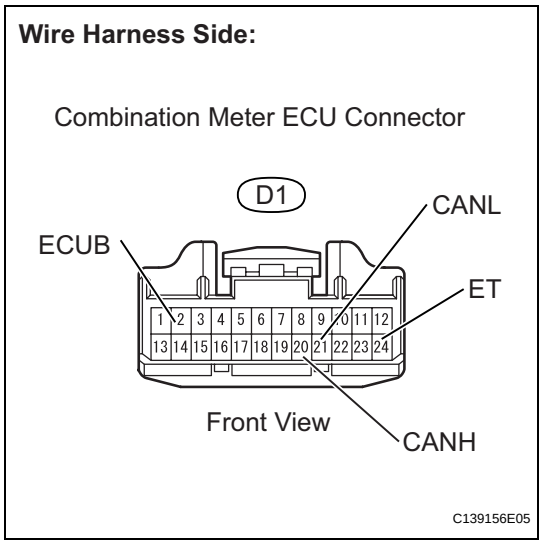

9. COMBINATION METER ECU

(a) Turn the ignition switch OFF.
(b) Disconnect the D1 combination meter ECU connector.
(c) Measure the resistance.

Standard resistance

Terminals	Wiring Color	Condition	Specified Condition
D1-20 (CANH) - D1-21 (CANL)	G - W	Ignition switch OFF	54 to 69 Ω
D1-20 (CANH) - D1-24 (ET)	G - BR	Ignition switch OFF	200 Ω or higher
D1-21 (CANL) - D1-24 (ET)	W - BR	Ignition switch OFF	200 Ω or higher
D1-20 (CANH) - D1-2 (ECUB)	G - L	Ignition switch OFF	6 kΩ or higher
D1-21 (CANL) - D1-2 (ECUB)	W - L	Ignition switch OFF	6 kΩ or higher

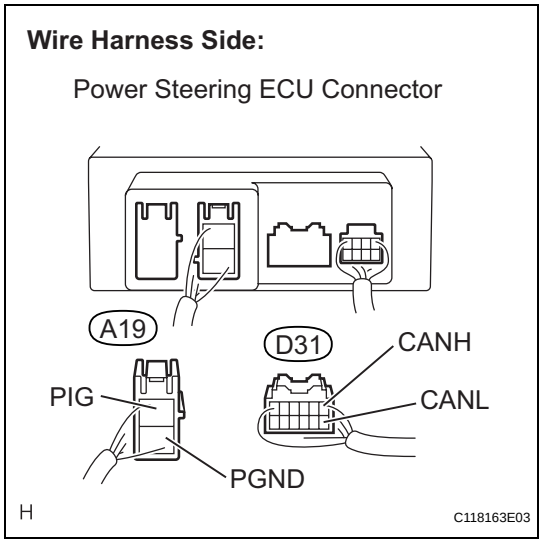

10. POWER STEERING ECU

(a) Turn the ignition switch OFF.
(b) Disconnect the A19 and D31 power steering ECU connectors.
(c) Measure the resistance.

Standard resistance

Terminals	Wiring Color	Condition	Specified Condition
D31-1 (CANH) - D31-7 (CANL)	SB - W	Ignition switch OFF	108 to 132 Ω
D31-1 (CANH) - A19-2 (PGND)	SB - W-B	Ignition switch OFF	200 Ω or higher
D31-7 (CANL) - A19-2 (PGND)	W - W-B	Ignition switch OFF	200 Ω or higher
D31-1 (CANH) - A19-1 (PIG)	SB - W	Ignition switch OFF	6 kΩ or higher
D31-7 (CANL) - A19-1 (PIG)	W - W	Ignition switch OFF	6 kΩ or higher

DIAGNOSIS SYSTEM

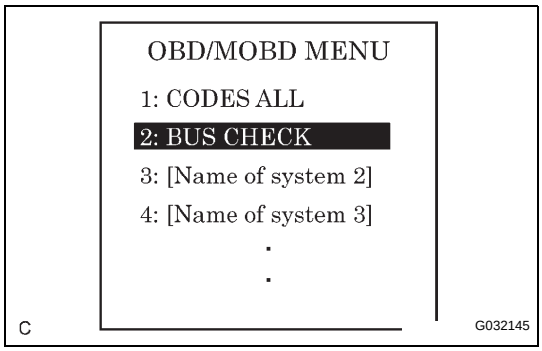

1. BUS CHECK

(a) Select "BUS CHECK" from the "OBD/MOBD MENU" screen.
HINT:
The ECUs and sensors that are properly connected to the CAN communication system can be displayed using the intelligent tester via the CAN VIM.

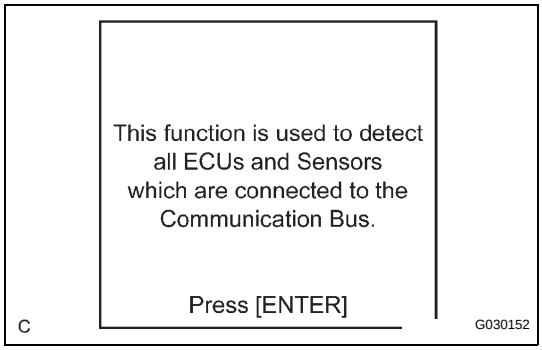

(b) Press "ENTER" on the intelligent tester via the CAN VIM.

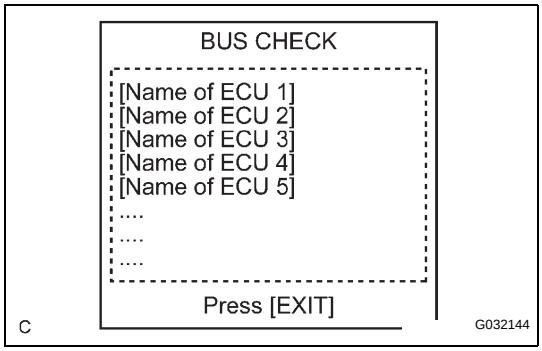

(c) The screen displays the ECUs and sensors that are properly connected to the CAN communication system.
HINT:
- If any properly connected ECUs or sensors are not displayed, there is a communication stop in the system (See page CA-11).
- Display the "BUS CHECK" screen for approximately 1 minute and check for ECUs and sensors that a not indicated on the screen.

2. CHECK INSTALLED SYSTEMS (ECUs AND SENSORS) THAT ADOPT CAN COMMUNICATION

(a) Systems (ECUs and sensors) that adopt CAN communication vary depending on the vehicle's optional settings. Check which systems (ECUs, sensors) are installed on the vehicle.

CA

ECU/Sensor name	Check method
Brake actuator (Skid control ECU)	with ABS
Power steering ECU	Installed on all vehicles
ECM	Installed on all vehicles
Center airbag sensor assembly	Installed on all vehicles
Air conditioning amplifier	with air conditioning or PTC heater
Combination meter ECU	Installed on all vehicles
Main body ECU	Installed on all vehicles

3. DTC TABLE BY ECU

HINT:
- In the CAN communication system, CAN communication system DTCs output by the ECU can be displayed by using the intelligent tester.

- If CAN communication system DTCs are output, trouble cannot be determined solely from the DTCs. Perform troubleshooting according to "HOW TO PROCEED WITH TROUBLESHOOTING" (See page CA-9).

(a) BRAKE ACTUATOR (SKID CONTROL ECU)
HINT:
DTC communication uses the CAN communication system.

DTC No.	Detection Item
U0073/94	Control Module Communication Bus OFF

(b) POWER STEERING ECU
HINT:
DTC communication uses the SIL Line.

DTC No.	Detection Item
U0073	Control Module Communication Bus OFF
U0105	Lost Communication with ECM
U0121*	Lost Communication with Anti-lock Brake System (ABS) Control Module

*: For vehicle with ABS only.

(c) COMBINATION METER ASSEMBLY
HINT:
DTC communication uses the CAN communication system.

DTC No.	Detection Item
U0100	Lost Communication with ECM/PCM "A"
U0129*	Lost Communication with Brake System Control Module

*: For vehicle with ABS only.

(d) AIR CONDITIONING AMPLIFIER
HINT:
DTC communication uses the CAN communication system.

DTC No.	Detection Item
B1499/99	Multiplex Communication Circuit

(e) MAIN BODY ECU
HINT:
- The main body ECU is connected to the CAN communication system but CAN communication DTCs are not output.
- If "MAIN BODY" is not displayed on the "BUS CHECK" screen on the intelligent tester, proceed to "Main Body ECU Communication Stop Mode." (See page CA-35)

(f) CENTER AIRBAG SENSOR ASSEMBLY
HINT:
- The center airbag sensor assembly is connected to the CAN communication system but CAN communication DTCs are not output.

- If "SRS AIRBAG" is not displayed on the "BUS CHECK" screen on the intelligent tester, proceed to "Center Airbag Sensor Communication Stop Mode." (See page CA-40)

(g) ECM

HINT:

- The ECM is connected to the CAN communication system but CAN communication DTCs are not output.
- If "ENGINE" is not displayed on the "BUS CHECK" screen on the intelligent tester, proceed to "ECM Communication Stop Mode." (See page CA-33)

4. DTC COMBINATION TABLE

DTC		Trouble Mode						
Output from	Output DTC	Brake Actuator (Skid Control ECU) Communication Stop Mode	Power Steering ECU Communication Stop Mode	ECM Communication Stop Mode	Center Airbag Sensor Communication Stop Mode	Air Conditioning Amplifier Communication Stop Mode	Combination Meter ECU Communication Stop Mode	Main Body ECU Communication Stop Mode
Brake Actuator (Skid Control ECU)	U0073/94	O*1	X	X	X	X	X	X
Power Steering ECU	U0073	X	O	X	X	X	X	X
	U0105	X	O	O	X	X	X	X
	U0121	O	O	X	X	X	X	X
Combination Meter ECU	U0100	X	X	O	X	X	X	X
	U0129	O	X	X	X	X	X	X
Air Conditioning Amplifier	B1499/99	X	X	O*2	X	X	O*2	X
No DTC		X	X	X	O	O	X	O

HINT:

- O: It is necessary to check for the trouble mode.
- X: Not output
- *1: The brake actuator (skid control ECU) detects U0073/94 when DTC communication fails in succession. However, this DTC may not be output when the CAN communication system malfunctions.
- *2: This DTC is output when communication failures from the ECM and the combination meter ECU occur.

(a) Perform troubleshooting according to the combination of DTCs output.

HINT:

- Brake Actuator (Skid Control ECU) Communication Stop Mode: (See page CA-27)
- Power Steering ECU Communication Stop Mode: (See page CA-31)
- ECM Communication Stop Mode: (See page CA-33)
- Center Airbag Sensor Communication Stop Mode: (See page CA-40)

- Air Conditioning Amplifier Communication Stop Mode: (See page CA-29)
- Combination Meter ECU Communication Stop Mode: (See page CA-38)
- Main Body ECU Communication Stop Mode: (See page CA-35)

FAIL-SAFE CHART

1. FAIL-SAFE FUNCTION

(a) When communication fails in any of the CAN bus lines (communication lines) due to a short circuit or other causes, the fail-safe function, which is specified for each system, operates to prevent the system from malfunctioning.

(b) Relationships between components and system functions and effects of communication failure on these functions. (For further details, see the pages for each system.)

Function	ECM	Brake Actuator (Skid Control ECU)	Power Steering ECU	Center Airbag Sensor Assembly	Air conditioning Amplifier	Combination Meter ECU	Main Body ECU	Condition when communication impossible	DTC detection (Driver detectable)
ABS control (Controls driving force while ABS in operation)	○*1	●						Control inoperative (Gradually stops controlling during ABS control)	Detectable (Light comes on)
Electric power steering (Outputs assist current)	○	○	●					Steering force slightly increased at less than 43.5 mph (70 km/h) Steering force slightly reduced at 43.5 mph (70 km/h) or more	Detectable (Light comes on)
Event recorder (Tracks event data such as vehicle speed and accelerator opening angle and records data)	○			●		○		Data not recorded	None
Air conditioning control PTC heater control	○				●	○*2		Air conditioning function stops PCT heater function stops	None (Air conditioning inoperative)
Meter Display (Displays operation condition and DTCs)	○	○	○	○		●	○	Light dose not come on, illuminates abnormally, or blinks abnormally	Detectable (Abnormal display)

Function	ECM	Brake Actuator (Skid Control ECU)	Power Steering ECU	Center Airbag Sensor Assembly	Air conditioning Amplifier	Combination Meter ECU	Main Body ECU	Condition when communication impossible	DTC detection (Driver detectable)
Buzzer control	○					●	○	Buzzer function stops	None (Buzzer does not sound)
Illumination control						○	●	Light illumination rheostat inoperative	None (Rheostat inoperative)
Power door lock control	○			○		○	●	Unlock permitted	None (Wireless door lock operation)

HINT:
- ●: Control master
- ○: System related
- *1: Hatchback
- *2: Sedan

Brake Actuator (Skid Control ECU) Communication Stop Mode

DESCRIPTION

Detection Item	Symptom	Trouble Area
Brake Actuator (Skid Control ECU) Communication Stop Mode	• "ABS/VSC/TRAC" not displayed on "BUS CHECK" screen of intelligent tester via the CAN VIM • Applies to "Brake Actuator (Skid Control ECU) Communication Stop Mode" in "DTC combination table"	• Power source circuit of brake actuator (skid control ECU) • Brake actuator (skid control ECU) branch wire or connector • Brake actuator (Skid control ECU)

HINT:
For vehicle with ABS only.

WIRING DIAGRAM

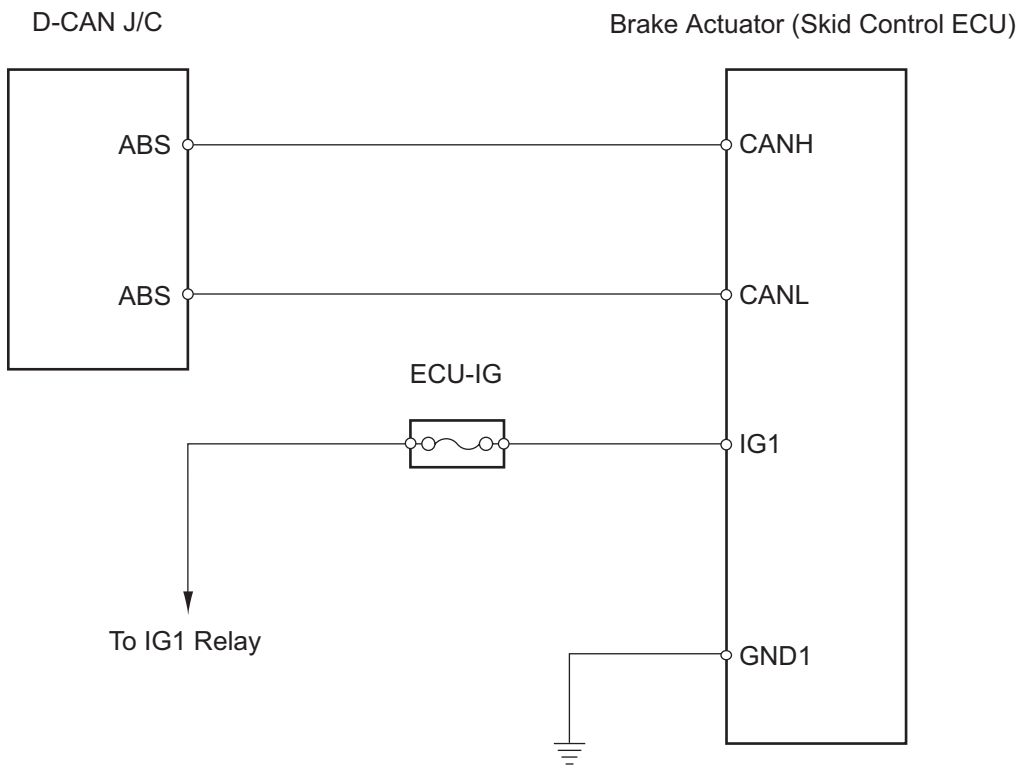

C120497E08

INSPECTION PROCEDURE

NOTICE:

- **Turn the ignition switch OFF before measuring the resistances of the CAN main wire and the CAN branch wire.**

- **After the ignition switch is turned off, check that the key reminder warning system and light reminder warning system are not in operation.**
- **Before measuring the resistance, leave the vehicle as is for at least 1 minute and do not operate the ignition switch, any other switches or the doors. If doors need to be opened in order to check connectors, open the doors and leave them open.**
  HINT:
  Operating the ignition switch, any switches or any doors triggers related ECU and sensor communication with the CAN, which causes resistance variation.

1 CHECK CAN BUS LINE FOR DISCONNECTION (BRAKE ACTUATOR (SKID CONTROL ECU) BRANCH WIRE)

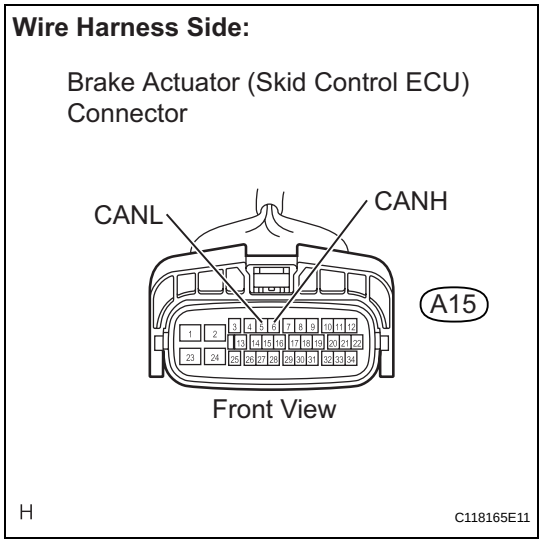

(a) Turn the ignition switch OFF.
(b) Disconnect the A15 brake actuator (skid control ECU) connector.
(c) Measure the resistance.
Standard resistance

Tester Connection	Condition	Specified Condition
A15-6 (CANH) - A15-5 (CANL)	Ignition switch OFF	54 to 69 Ω

NG → **REPAIR OR REPLACE CAN BRANCH WIRE CONNECTED TO BRAKE ACTUATOR (CAN-H, CAN-L)**

OK

2 CHECK HARNESS AND CONNECTOR (IG1, GND1)

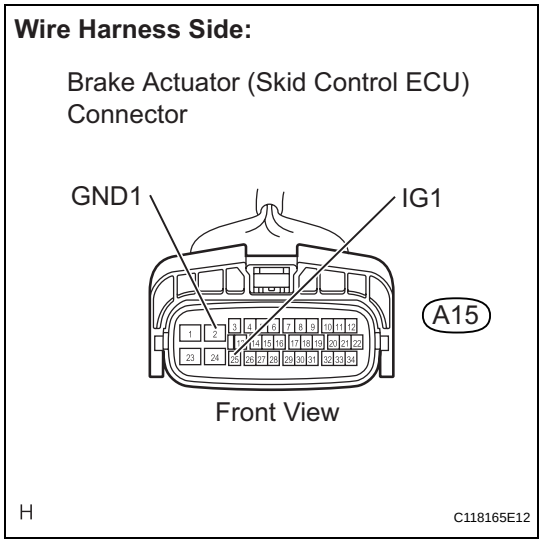

(a) Disconnect the A15 brake actuator (skid control ECU) connector.
(b) Measure the resistance.
Standard resistance

Tester Connection	Condition	Specified Condition
A15-2 (GND1) - Body ground	Always	Below 1 Ω

(c) Measure the voltage.
Standard voltage

Tester Connection	Condition	Specified Condition
A15-25 (IG1) - Body ground	Ignition switch ON	11 to 14 V

NG → **REPAIR OR REPLACE HARNESS OR CONNECTOR**

OK

REPLACE BRAKE ACTUATOR (SKID CONTROL ECU)

CA

Air Conditioning Amplifier Communication Stop Mode

DESCRIPTION

Detection Item	Symptom	Trouble Area
Air Conditioning Amplifier Communication Stop Mode	• "A/C" not displayed on "BUS CHECK" screen of intelligent tester via the CAN VIM • Applies to "Air Conditioning Amplifier Communication Stop Mode" in "DTC combination table"	• Power source circuit of air conditioning amplifier • Air conditioning amplifier branch wire or connector • Air conditioning amplifier

HINT:
For vehicle with air conditioning or PTC heater only.

WIRING DIAGRAM

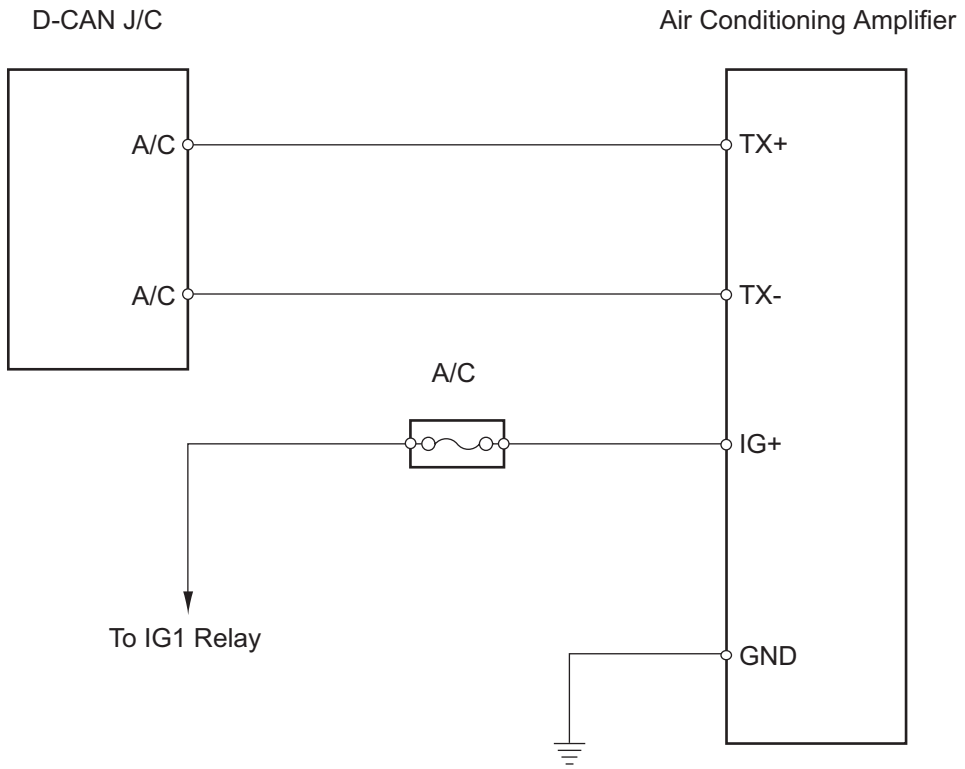

INSPECTION PROCEDURE

NOTICE:

- **Turn the ignition switch OFF before measuring the resistances of the CAN main wire and the CAN branch wire.**

CA

- **After the ignition switch is turned off, check that the key reminder warning system and light reminder warning system are not in operation.**
- **Before measuring the resistance, leave the vehicle as is for at least 1 minute and do not operate the ignition switch, any other switches or the doors. If doors need to be opened in order to check connectors, open the doors and leave them open.**
  HINT:
  Operating the ignition switch, any switches or any doors triggers related ECU and sensor communication with the CAN, which causes resistance variation.

1 CHECK CAN BUS LINE FOR DISCONNECTION (AIR CONDITIONING AMPLIFIER BRANCH WIRE)

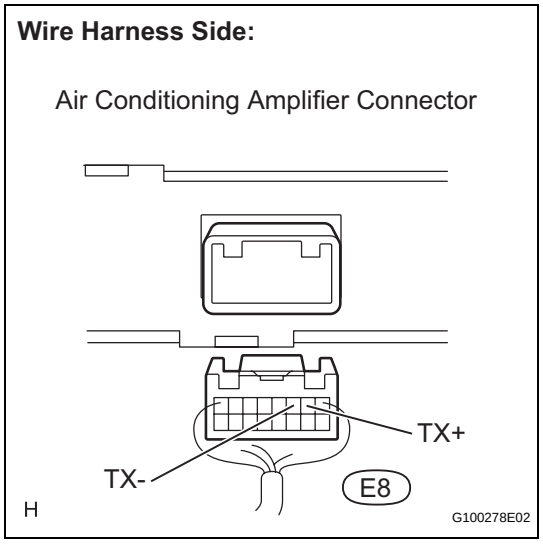

(a) Turn the ignition switch OFF.
(b) Disconnect the E8 air conditioning amplifier connector.
(c) Measure the resistance.
Standard resistance

Tester Connection	Condition	Specified Condition
E8-2 (TX+) - E8-3 (TX-)	Ignition switch OFF	54 to 69 Ω

NG → **REPAIR OR REPLACE CAN BRANCH WIRE CONNECTED TO AIR CONDITIONING AMPLIFIER (CAN-H, CAN-L)**

OK

2 CHECK HARNESS AND CONNECTOR (IG+, GND)

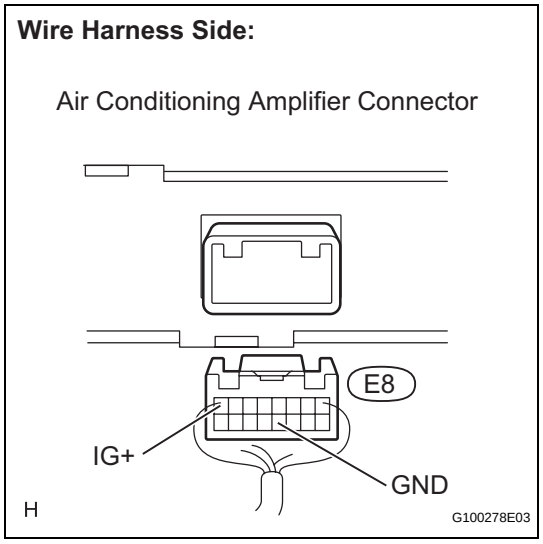

(a) Disconnect the E8 air conditioning amplifier connector.
(b) Measure the resistance.
Standard resistance

Tester Connection	Condition	Specified Condition
E8-12 (GND) - Body ground	Always	Below 1 Ω

(c) Measure the voltage.
Standard voltage

Tester Connection	Condition	Specified Condition
E8-8 (IG+) - Body ground	Ignition switch ON	11 to 14 V

NG → **REPAIR OR REPLACE HARNESS OR CONNECTOR**

OK

REPLACE AIR CONDITIONING AMPLIFIER

Power Steering ECU Communication Stop Mode

DESCRIPTION

Detection Item	Symptom	Trouble Area
Power Steering ECU Communication Stop Mode	• "EPS" not displayed on "BUS CHECK" screen of intelligent tester via the CAN VIM • Applies to "Power Steering ECU Communication Stop Mode" in "DTC combination table"	• Power source circuit of power steering ECU • Power steering ECU main wire or connector • Power steering ECU

WIRING DIAGRAM

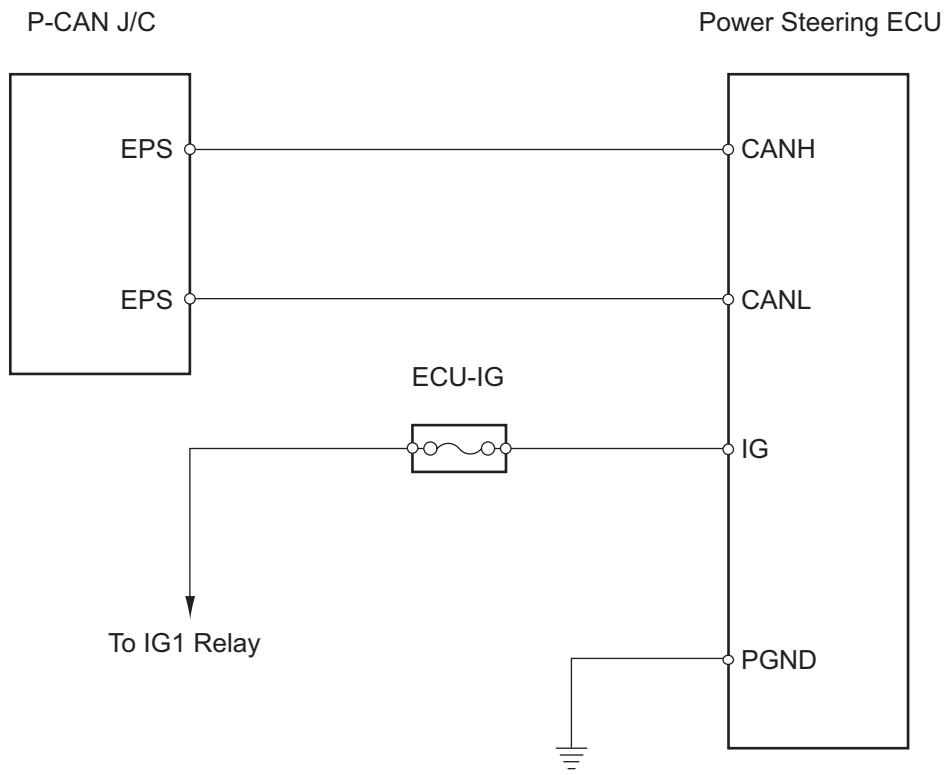

C120497E10

CA

INSPECTION PROCEDURE

NOTICE:

- **Turn the ignition switch OFF before measuring the resistances of the CAN main wire and the CAN branch wire.**
- **After the ignition switch is turned off, check that the key reminder warning system and light reminder warning system are not in operation.**

- **Before measuring the resistance, leave the vehicle as is for at least 1 minute and do not operate the ignition switch, any other switches or the doors. If doors need to be opened in order to check connectors, open the doors and leave them open.**
  HINT:
  Operating the ignition switch, any switches or any doors triggers related ECU and sensor communication with the CAN, which causes resistance variation.

1 CHECK HARNESS AND CONNECTOR (IG, PGND)

Wire Harness Side:

Power Steering ECU Connector

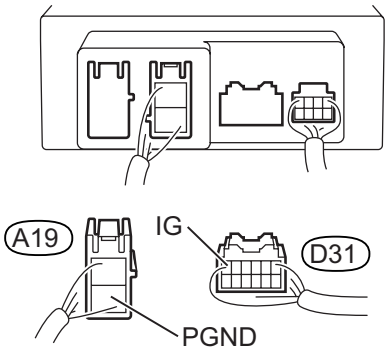

H C118163E04

(a) Disconnect the A19 and D31 power steering ECU connectors.

(b) Measure the resistance.

Standard resistance

Tester Connection	Condition	Specified Condition
A19-2 (PGND) - Body ground	Always	Below 1 Ω

(c) Measure the voltage.

Standard voltage

Tester Connection	Condition	Specified Condition
D31-6 (IG) - Body ground	Ignition switch ON	11 to 14 V

NG → **REPAIR OR REPLACE HARNESS OR CONNECTOR**

OK ↓

REPLACE POWER STEERING ECU

ECM Communication Stop Mode

DESCRIPTION

Detection Item	Symptom	Trouble Area
ECM Communication Stop Mode	• "ENGINE" not displayed on "BUS CHECK" screen of intelligent tester via the CAN VIM • Applies to "ECM Communication Stop Mode" in "DTC combination table"	• Power source circuit of ECM • ECM main wire or connector • ECM

WIRING DIAGRAM

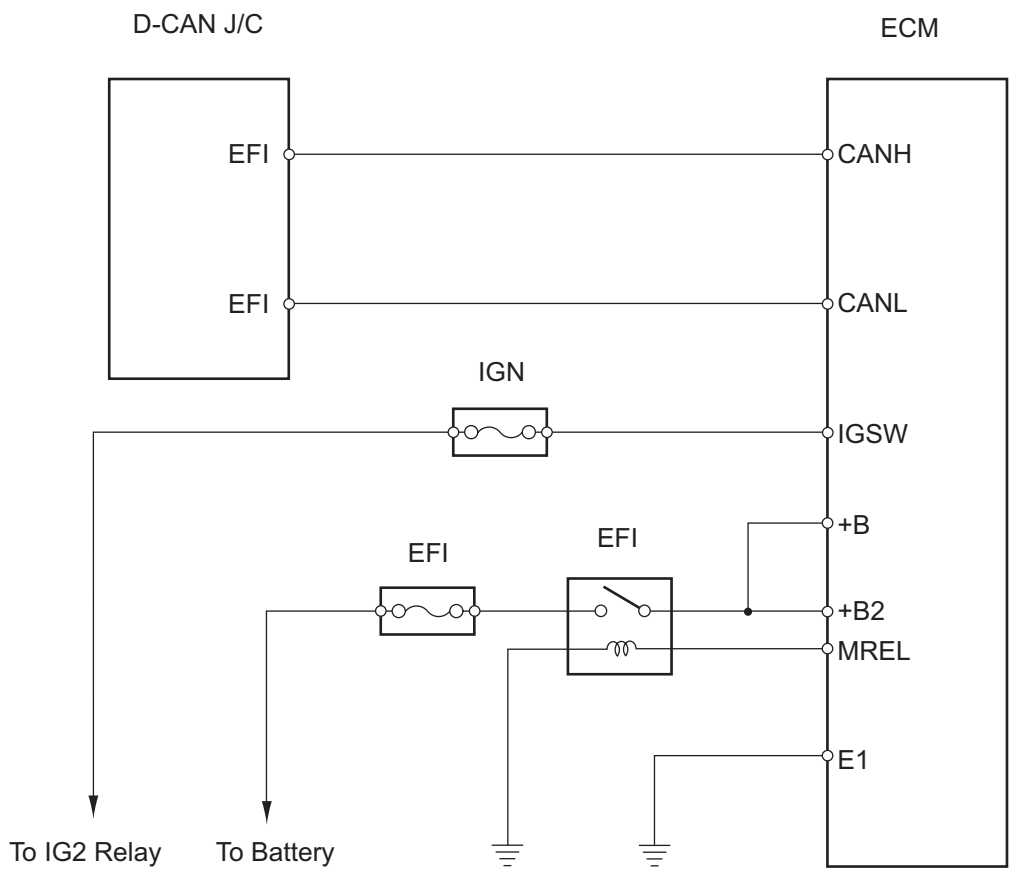

C126001E10

INSPECTION PROCEDURE

NOTICE:

- **Turn the ignition switch OFF before measuring the resistances of the CAN main wire and the CAN branch wire.**
- **After the ignition switch is turned off, check that the key reminder warning system and light reminder warning system are not in operation.**

CA

- **Before measuring the resistance, leave the vehicle as is for at least 1 minute and do not operate the ignition switch, any other switches or the doors. If doors need to be opened in order to check connectors, open the doors and leave them open.**
  HINT:
  Operating the ignition switch, any switches or any doors triggers related ECU and sensor communication with the CAN, which causes resistance variation.

1	INSPECT ECM POWER SOURCE CIRCUIT

(a) Inspect the power source circuit (See page ES-352).

NG → **GO TO POWER SOURCE CIRCUIT**

OK ↓

REPLACE ECM

Main Body ECU Communication Stop Mode

DESCRIPTION

Detection Item	Symptom	Trouble Area
Main Body ECU Communication Stop Mode	• "MAIN BODY" not displayed on "BUS CHECK" screen of intelligent tester via the CAN VIM • Applies to "Main Body ECU Communication Stop Mode" in "DTC combination table"	• Power source circuit of main body ECU • Main body ECU branch wire or connector • Main body ECU

WIRING DIAGRAM

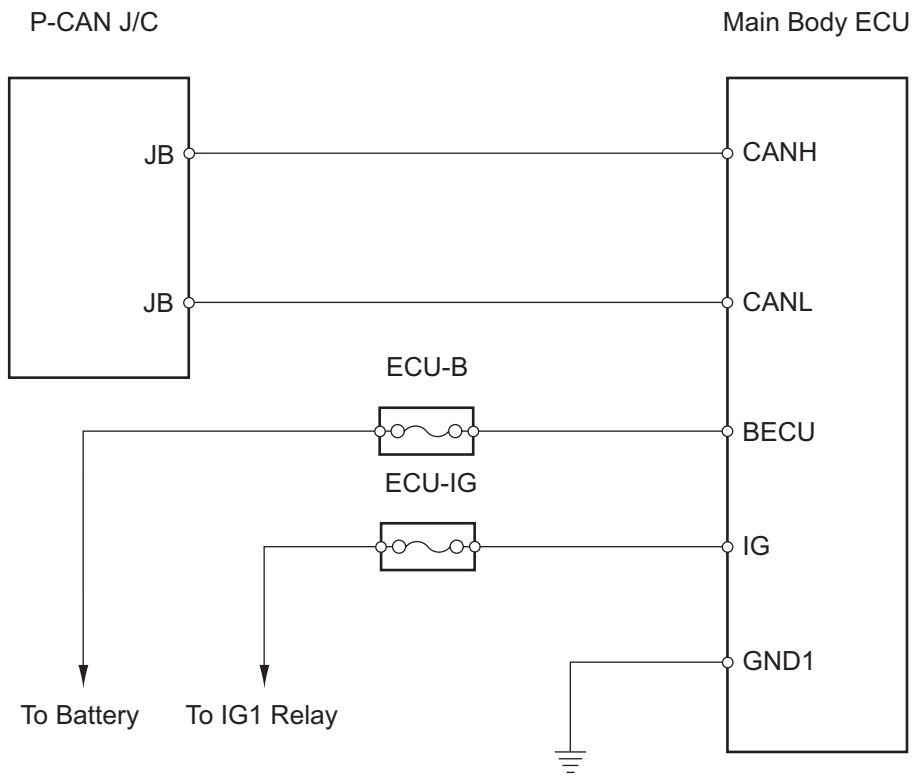

C118189E09

INSPECTION PROCEDURE

NOTICE:

- **Turn the ignition switch OFF before measuring the resistances of the CAN main wire and the CAN branch wire.**
- **After the ignition switch is turned off, check that the key reminder warning system and light reminder warning system are not in operation.**

- **Before measuring the resistance, leave the vehicle as is for at least 1 minute and do not operate the ignition switch, any other switches or the doors. If doors need to be opened in order to check connectors, open the doors and leave them open.**
  HINT:
  Operating the ignition switch, any switches or any doors triggers related ECU and sensor communication with the CAN, which causes resistance variation.

1 CHECK CAN BUS LINE FOR DISCONNECTION (MAIN BODY ECU BRANCH WIRE)

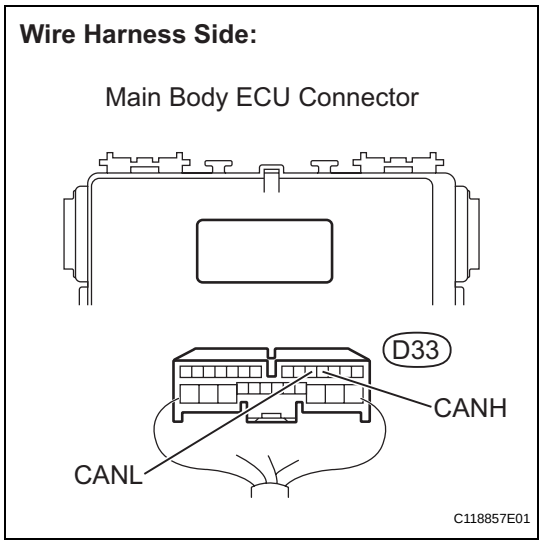

(a) Turn the ignition switch OFF.
(b) Disconnect the D33 main body ECU connector.
(c) Measure the resistance.
Standard resistance

Tester Connection	Condition	Specified Condition
D33-23 (CANH) - D33-22 (CANL)	Ignition switch OFF	54 to 69 Ω

NG → **REPAIR OR REPLACE CAN BRANCH WIRE CONNECTED TO MAIN BODY ECU (CAN-H, CAN-L)**

OK

2 CHECK HARNESS AND CONNECTOR (BECU, IG, GND1)

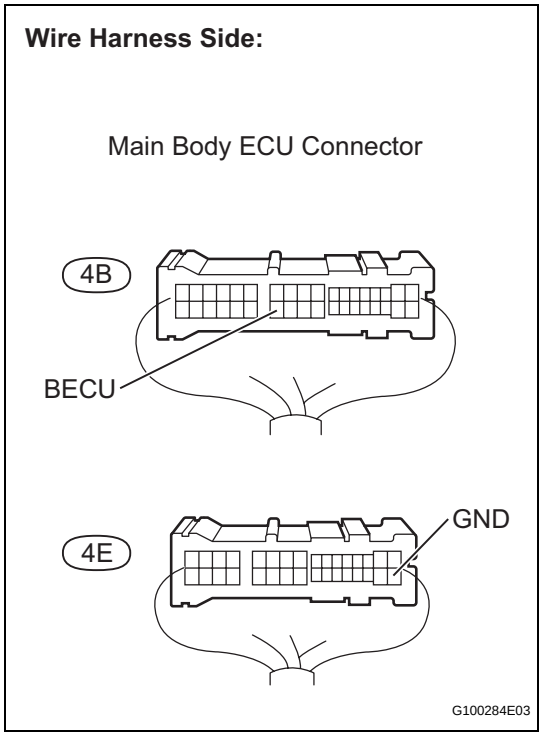

(a) Disconnect the 4B and 4E main body ECU connectors.
(b) Measure the resistance.
Standard resistance

Tester Connection	Condition	Specified Condition
4E-17 (GND1) - Body ground	Always	Below 1 Ω

(c) Measure the voltage.
Standard voltage

Tester Connection	Condition	Specified Condition
4B-30 (BECU) - Body ground	Always	11 to 14 V

(d) Reconnect the main body ECU connectors.

Main Body ECU Rear Side:

Main Body ECU Connector

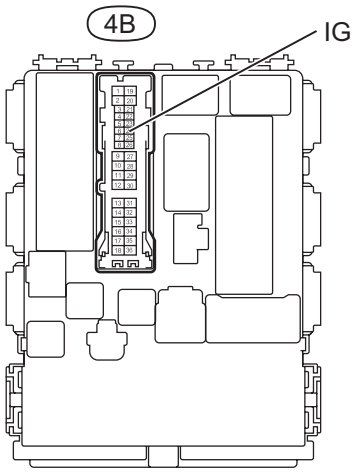

C127390E01

(e) Measure the voltage.
Standard voltage

Tester Connection	Condition	Specified Condition
4B-24 (IG) - Body ground	Ignition switch ON	11 to 14 V

NG → **REPAIR OR REPLACE HARNESS OR CONNECTOR**

OK

REPLACE MAIN BODY ECU

Combination Meter ECU Communication Stop Mode

DESCRIPTION

Detection Item	Symptom	Trouble Area
Combination Meter ECU Communication Stop Mode	• "METER" not displayed on "BUS CHECK" screen of intelligent tester via the CAN VIM • Applies to "Combination Meter ECU Communication Stop Mode" in "DTC combination table"	• Power source circuit of combination meter ECU • Combination meter ECU branch wire or connector • Combination meter ECU

WIRING DIAGRAM

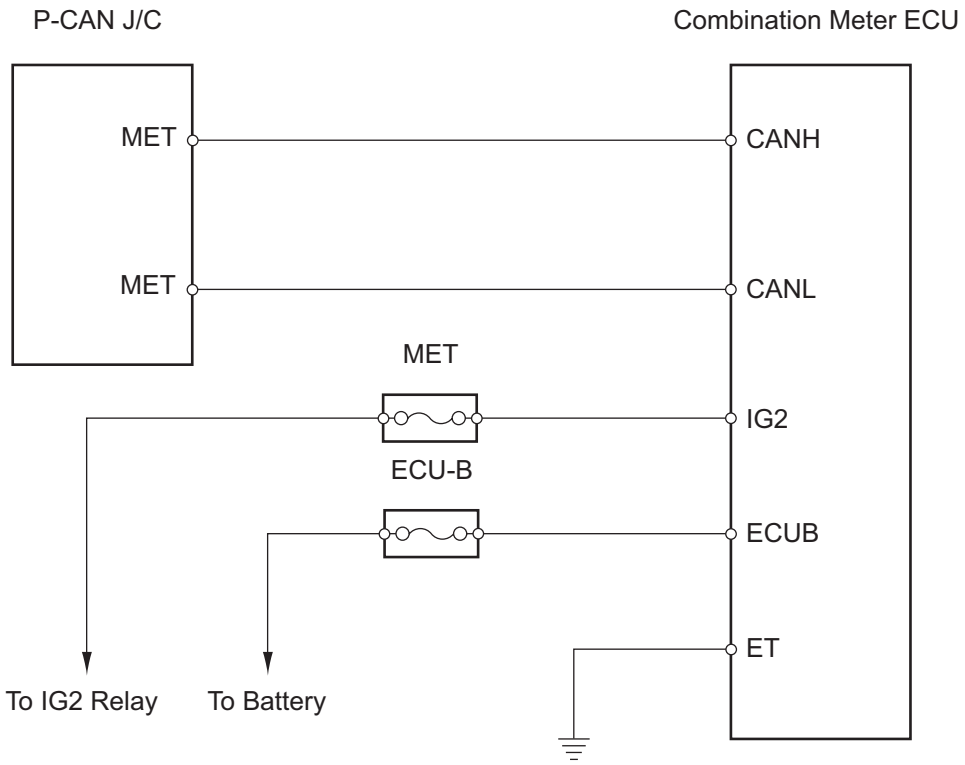

C118189E10

INSPECTION PROCEDURE

NOTICE:

- **Turn the ignition switch OFF before measuring the resistances of the CAN main wire and the CAN branch wire.**
- **After the ignition switch is turned off, check that the key reminder warning system and light reminder warning system are not in operation.**

CA

- **Before measuring the resistance, leave the vehicle as is for at least 1 minute and do not operate the ignition switch, any other switches or the doors. If doors need to be opened in order to check connectors, open the doors and leave them open.**
  HINT:
  Operating the ignition switch, any switches or any doors triggers related ECU and sensor communication with the CAN, which causes resistance variation.

1 CHECK CAN BUS LINE FOR DISCONNECTION (COMBINATION METER ECU BRANCH WIRE)

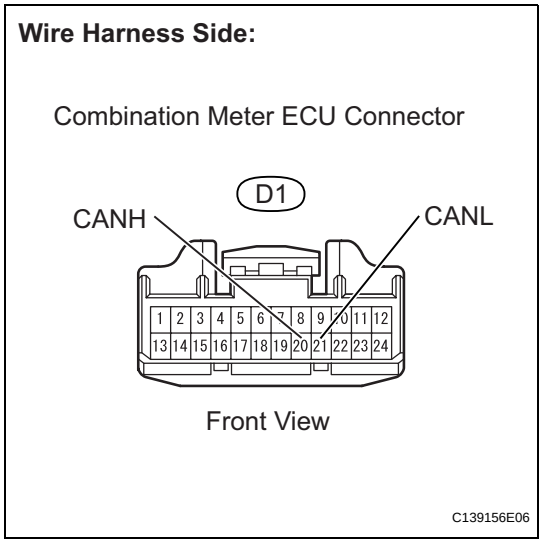

(a) Turn the ignition switch OFF.
(b) Disconnect the D1 combination meter ECU connector.
(c) Measure the resistance.
Standard resistance

Tester Connection	Condition	Specified Condition
D1-20 (CANH) - D1-21 (CANL)	Ignition switch OFF	54 to 69 Ω

NG → **REPAIR OR REPLACE CAN BRANCH WIRE CONNECTED TO COMBINATION METER ECU (CAN-H, CAN-L)**

OK

2 CHECK HARNESS AND CONNECTOR (IG2, ECUB, ET)

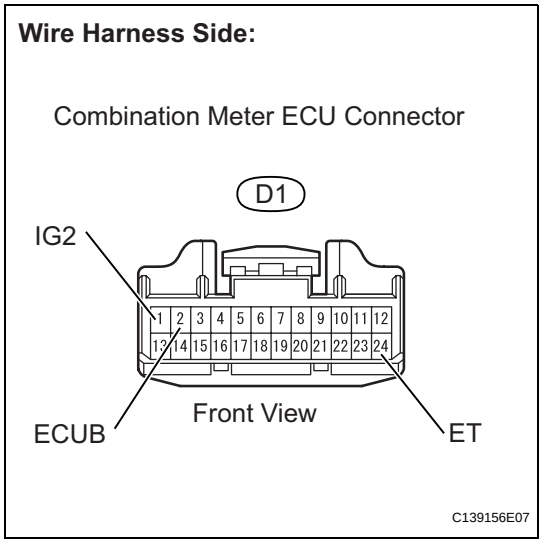

(a) Disconnect the D1 combination meter ECU connector.
(b) Measure the resistance.
Standard resistance

Tester Connection	Condition	Specified Condition
D1-24 (ET) - Body ground	Always	Below 1 Ω

(c) Measure the voltage.
Standard voltage

Tester Connection	Condition	Specified Condition
D1-1 (IG2) - Body ground	Ignition switch ON	11 to 14 V
D1-2 (ECUB) - Body ground	Always	11 to 14 V

NG → **REPAIR OR REPLACE HARNESS OR CONNECTOR**

OK

REPLACE COMBINATION METER ECU

Center Airbag Sensor Communication Stop Mode

DESCRIPTION

Detection Item	Symptom	Trouble Area
Center Airbag Sensor Communication Stop Mode	• "SRS AIRBAG" not displayed on "BUS CHECK" screen of intelligent tester via the CAN VIM • Applies to "Center Airbag Sensor Communication Stop Mode" in "DTC combination table"	• Power source circuit of center airbag sensor assembly • Center airbag sensor assembly branch wire or connector • Center airbag sensor assembly

WIRING DIAGRAM

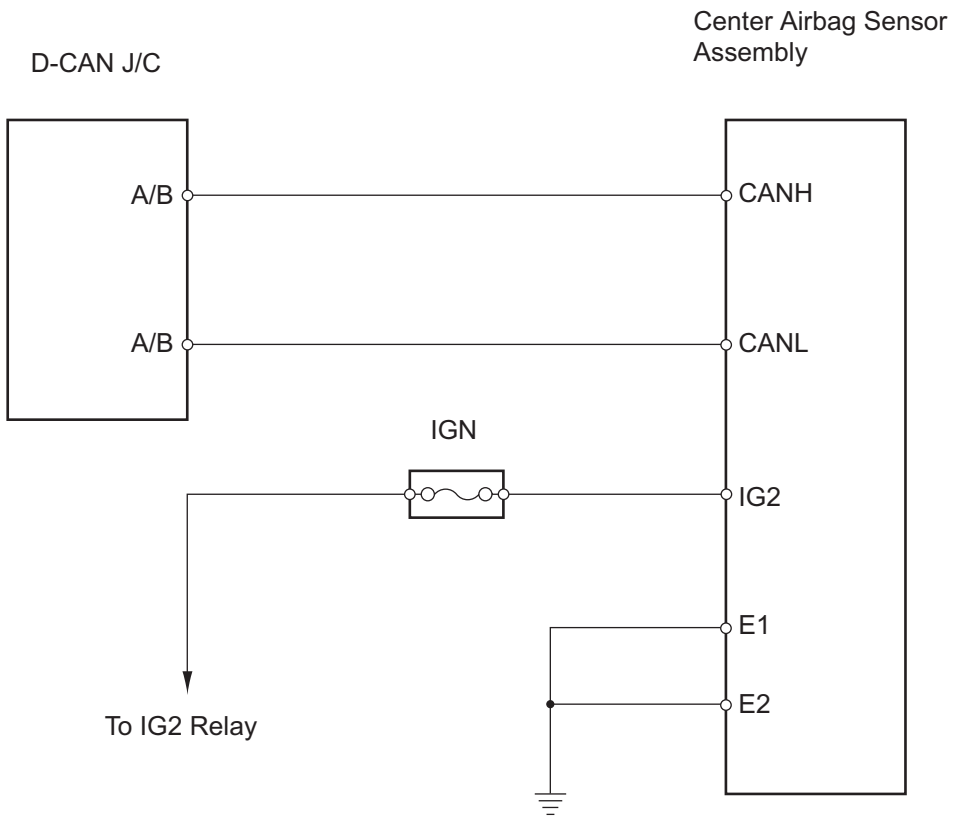

INSPECTION PROCEDURE

NOTICE:

- **Turn the ignition switch OFF before measuring the resistances of the CAN main wire and the CAN branch wire.**
- **After the ignition switch is turned off, check that the key reminder warning system and light reminder warning system are not in operation.**

CA

- **Before measuring the resistance, leave the vehicle as is for at least 1 minute and do not operate the ignition switch, any other switches or the doors. If doors need to be opened in order to check connectors, open the doors and leave them open.**
  HINT:
  Operating the ignition switch, any switches or any doors triggers related ECU and sensor communication with the CAN, which causes resistance variation.

1 CHECK CAN BUS LINE FOR DISCONNECTION (CENTER AIRBAG SENSOR ASSEMBLY BRANCH WIRE)

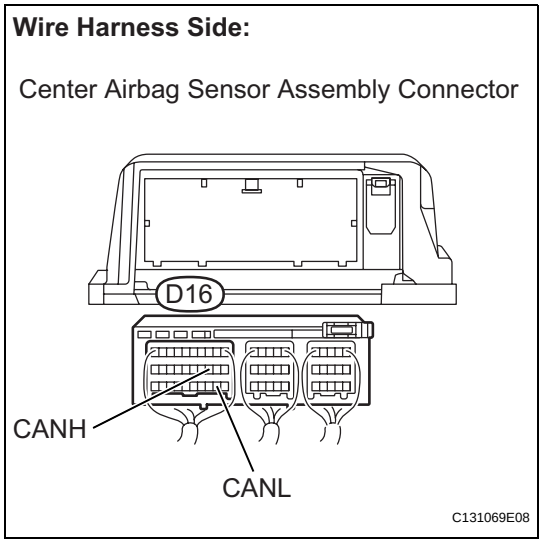

(a) Turn the ignition switch OFF.
(b) Disconnect the D16 center airbag sensor assembly connector.
(c) Measure the resistance.
Standard resistance

Tester Connection	Condition	Specified Condition
D16-13 (CANH) - D16-22 (CANL)	Ignition switch OFF	54 to 69 Ω

NG → **REPAIR OR REPLACE CAN BRANCH WIRE CONNECTED TO CENTER AIRBAG SENSOR ASSEMBLY (CAN-H, CAN-L)**

OK

2 CHECK HARNESS AND CONNECTOR (IG2, E1, E2)

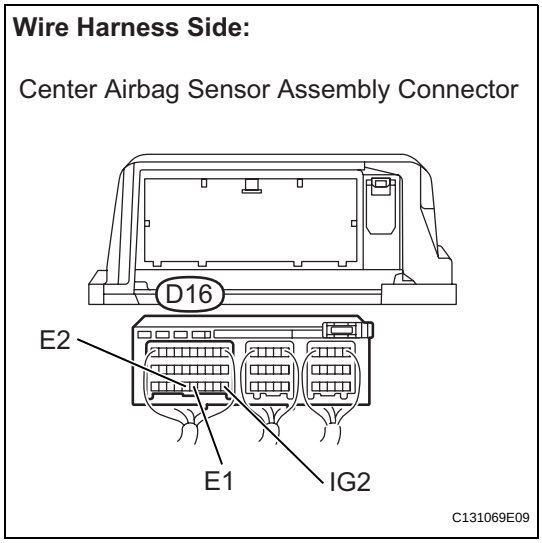

(a) Disconnect the D16 center airbag sensor assembly connector.
(b) Measure the resistance.
Standard resistance

Tester Connection	Condition	Specified Condition
D16-25 (E1) - Body ground	Always	Below 1 Ω
D16-26 (E2) - Body ground	Always	Below 1 Ω

(c) Measure the voltage.
Standard voltage

Tester Connection	Condition	Specified Condition
D16-21 (IG2) - Body ground	Ignition switch ON	11 to 14 V

NG → **REPAIR OR REPLACE HARNESS OR CONNECTOR**

OK

REPLACE CENTER AIRBAG SENSOR ASSEMBLY

CA

CAN Bus Line

DESCRIPTION

When any DTC for the CAN communication system is output, first measure the resistance between the terminals of the DLC3 to specify the trouble area, and check that there is no short in the CAN main wire, between the CAN bus lines, to +B, or to GND.

WIRING DIAGRAM

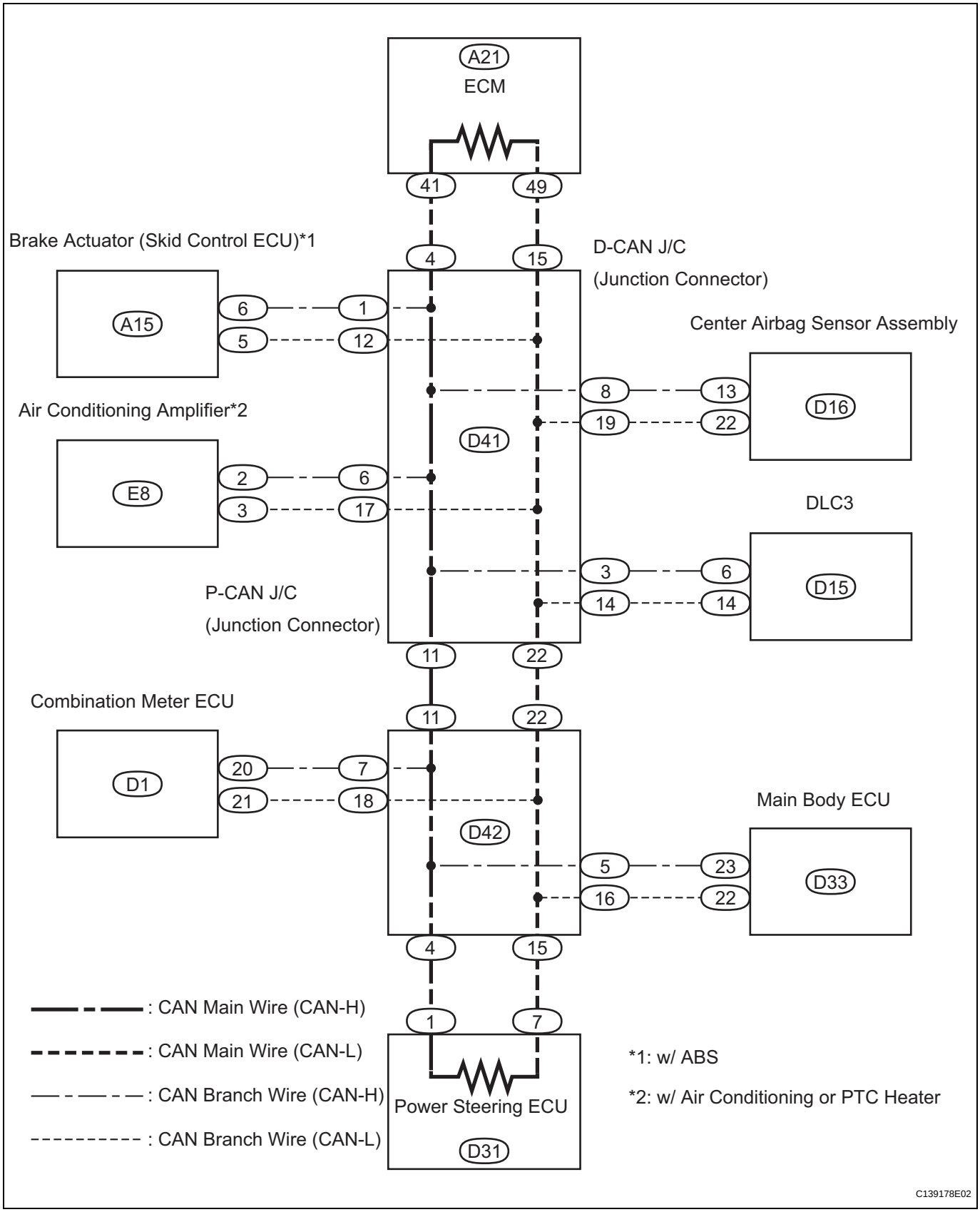

CA

INSPECTION PROCEDURE

NOTICE:

- **Turn the ignition switch OFF before measuring the resistances of the CAN main wire and the CAN branch wire.**
- **After the ignition switch is turned off, check that the key reminder warning system and light reminder warning system are not in operation.**
- **Before measuring the resistance, leave the vehicle as is for at least 1 minute and do not operate the ignition switch, any other switches or the doors. If doors need to be opened in order to check connectors, open the doors and leave them open.**
  HINT:
  Operating the ignition switch, any switches or any doors triggers related ECU and sensor communication with the CAN, which causes resistance variation.

1 CHECK CAN BUS WIRE (MAIN WIRE FOR DISCONNECTION, BUS LINES FOR SHORT CIRCUIT)

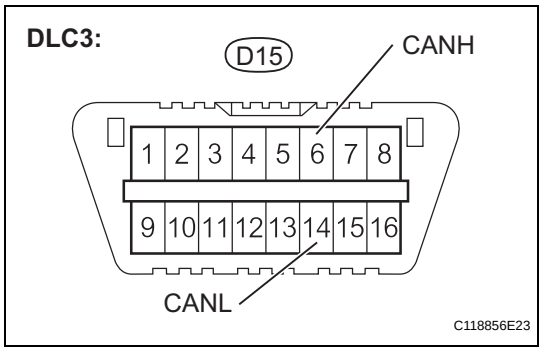

(a) Turn the ignition switch OFF.
(b) Measure the resistance.
Standard resistance

Tester Connection	Condition	Specified Condition	Proceed to
D15-6 (CANH) - D15-14 (CANL)	Ignition switch OFF	54 to 69 Ω	OK
D15-6 (CANH) - D15-14 (CANL)	Ignition switch OFF	69 Ω or higher	NG-A
D15-6 (CANH) - D15-14 (CANL)	Ignition switch OFF	54 Ω or less	NG-B

NG-A → **CHECK CAN MAIN WIRE (FOR OPEN CIRCUIT)**

NG-B → **CHECK CAN BUS WIRE (FOR SHORT CIRCUIT)**

OK

2 CHECK CAN BUS WIRE (FOR SHORT TO +B)

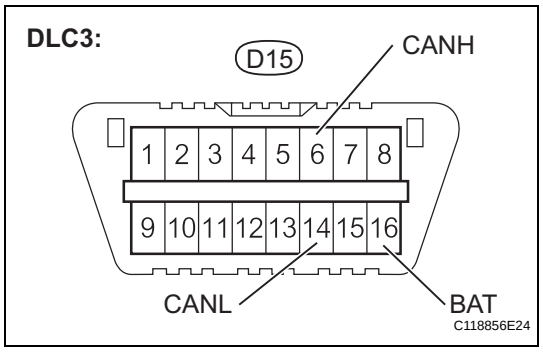

(a) Turn the ignition switch OFF.
(b) Measure the resistance.
Result

Tester Connection	Condition	Specified Condition	Proceed to
D15-6 (CANH) - D15-16 (BAT)	Ignition switch OFF	1 Ω or higher	OK
D15-14 (CANL) - D15-16 (BAT)	Ignition switch OFF	1 Ω or higher	OK
D15-6 (CANH) - D15-16 (BAT)	Ignition switch OFF	Below 1 Ω	NG
D15-14 (CANL) - D15-16 (BAT)	Ignition switch OFF	Below 1 Ω	NG

NG → **CHECK CAN BUS WIRE (FOR SHORT TO +B)**

OK

3 CHECK CAN BUS WIRE (FOR SHORT TO GND)

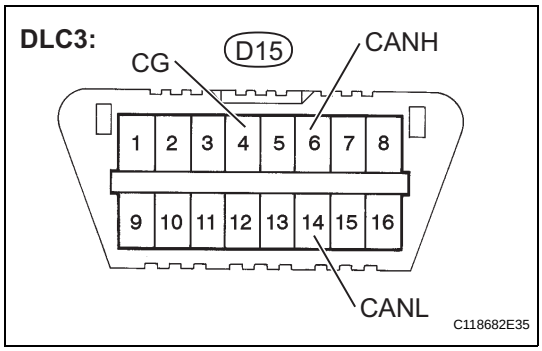

(a) Turn the ignition switch OFF.
(b) Measure the resistance.
Result

Tester Connection	Condition	Specified Condition	Proceed to
D15-6 (CANH) - D15-4 (CG)	Ignition switch OFF	1 Ω or higher	OK
D15-14 (CANL) - D15-4 (CG)	Ignition switch OFF	1 Ω or higher	OK
D15-6 (CANH) - D15-4 (CG)	Ignition switch OFF	Below 1 Ω	NG
D15-14 (CANL) - D15-4 (CG)	Ignition switch OFF	Below 1 Ω	NG

NG → **CHECK CAN BUS WIRE (FOR SHORT TO GND)**

OK

HOW TO PROCEED WITH TROUBLESHOOTING

Open in CAN Main Wire

DESCRIPTION

There may be an open circuit in the CAN main wire and/or the DLC3 branch wire when the resistance between terminals 6 (CANH) and 14 (CANL) of the DLC3 is 69 Ω or higher.

Symptom	Trouble Area
Resistance between terminals 6 (CANH) and 14 (CANL) of DLC3 is 69 Ω or higher.	• CAN main wire or connector • D-CAN J/C (Junction connector) • P-CAN J/C (Junction connector) • ECM • Power steering ECU

WIRING DIAGRAM

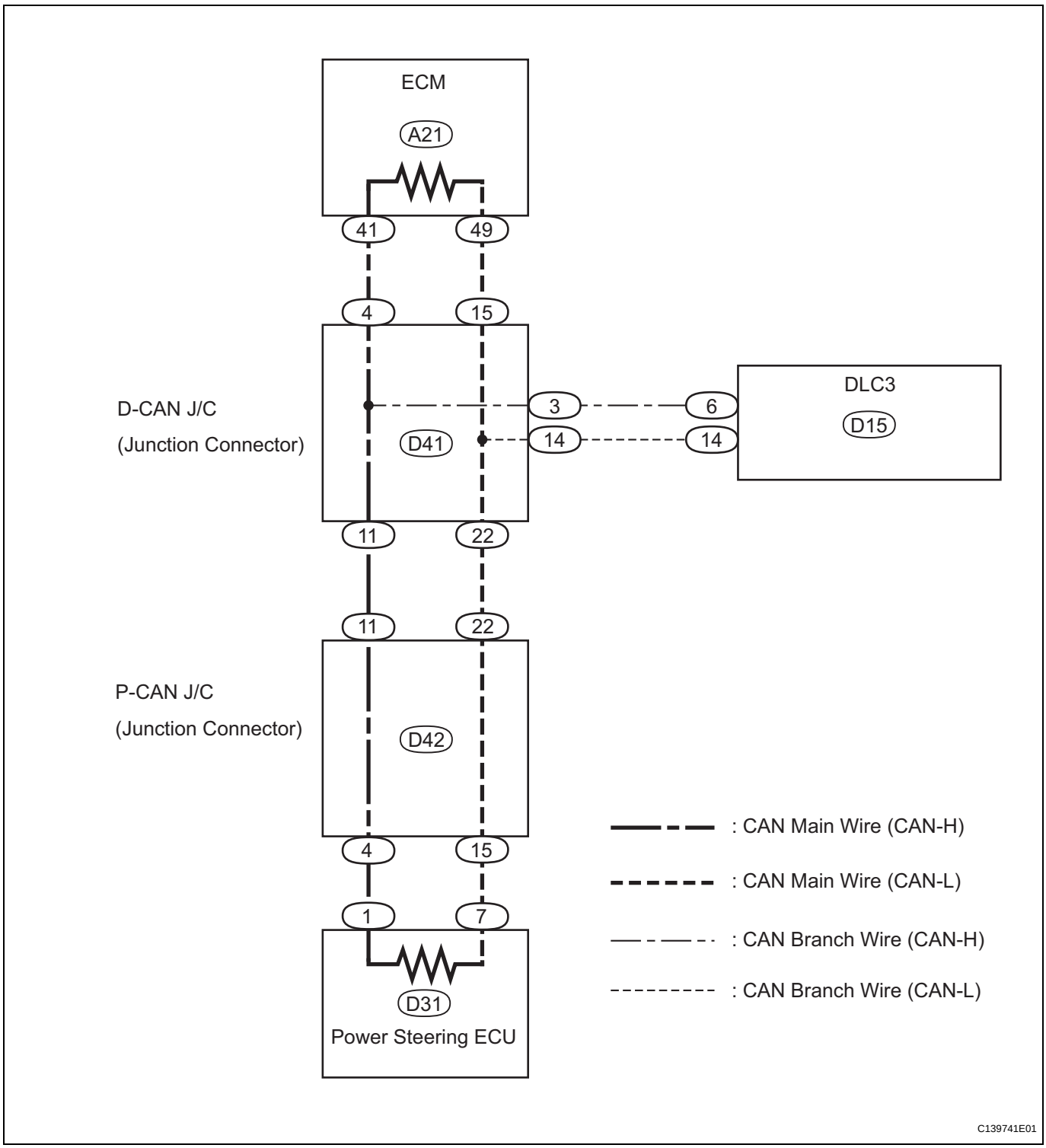

INSPECTION PROCEDURE

NOTICE:

- **Turn the ignition switch OFF before measuring the resistances of the CAN main wire and the CAN branch wire.**
- **After the ignition switch is turned off, check that the key reminder warning system and light reminder warning system are not in operation.**

- **Before measuring the resistance, leave the vehicle as is for at least 1 minute and do not operate the ignition switch, any other switches or the doors. If doors need to be opened in order to check connectors, open the doors and leave them open.**
  HINT:
  Operating the ignition switch, any switches or any doors triggers related ECU and sensor communication with the CAN, which causes resistance variation.

1 CHECK DLC3

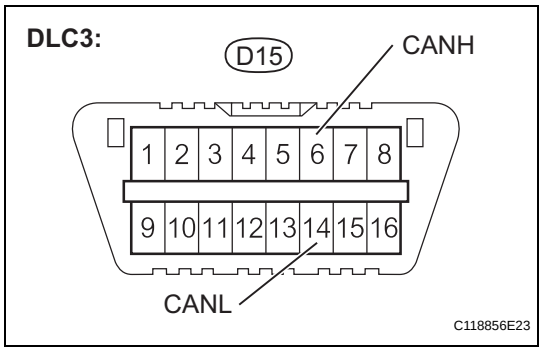

(a) Turn the ignition switch OFF.
(b) Measure the resistance.
Standard resistance

Tester Connection	Condition	Specified Condition	Proceed to
D15-6 (CANH) - D15-14 (CANL)	Ignition switch OFF	108 to 132 Ω	A
D15-6 (CANH) - D15-14 (CANL)	Ignition switch OFF	132 Ω or higher	B

NOTICE:
When the measured value is 132 Ω or higher and a CAN communication system diagnostic trouble code is output, there may be a fault besides disconnection of the DLC3 branch wire. For that reason, troubleshooting should be performed again from "HOW TO PROCEED WITH TROUBLESHOOTING" (See page CA-9) after repairing the trouble area.

B → **REPAIR OR REPLACE CAN BRANCH WIRE CONNECTED TO DLC3 (CAN-H, CAN-L)**

A

2 CHECK CAN MAIN WIRE FOR DISCONNECTION (D-CAN SIDE)

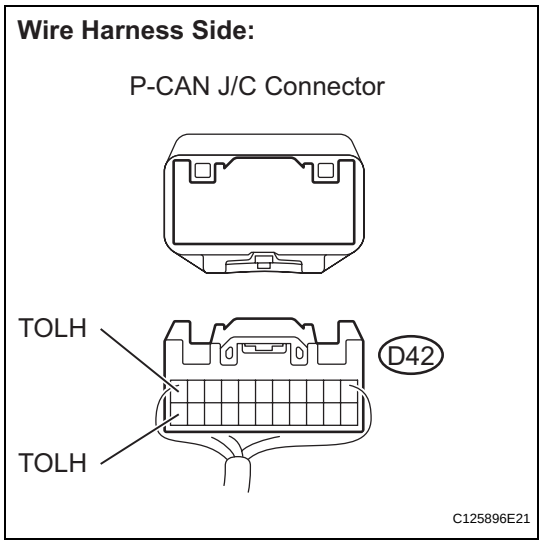

(a) Turn the ignition switch OFF.
(b) Disconnect the D42 P-CAN J/C connector.
(c) Measure the resistance.
Standard resistance

Tester Connection	Condition	Specified Condition
D42-11 (TOLH) - D42-22 (TOLH)	Ignition switch OFF	108 to 132 Ω

OK → **Go to step 8**

NG

CA

3 CONNECT CONNECTOR

(a) Reconnect the P-CAN J/C connector.

NEXT

4 CHECK CAN MAIN WIRE FOR DISCONNECTION (ECM)

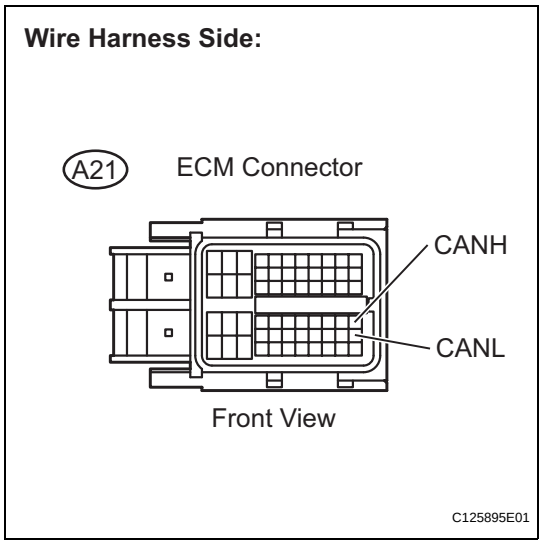

(a) Turn the ignition switch OFF.
(b) Disconnect the A21 ECM connector.
(c) Measure the resistance.
Standard resistance

Tester Connection	Condition	Specified Condition
A21-41 (CANH) - A21-49 (CANL)	Ignition switch OFF	108 to 132 Ω

OK → **REPLACE ECM**

NG

5 CONNECT CONNECTOR

(a) Reconnect the ECM connector.

NEXT

6 CHECK CAN MAIN WIRE FOR DISCONNECTION (D-CAN J/C - ECM)

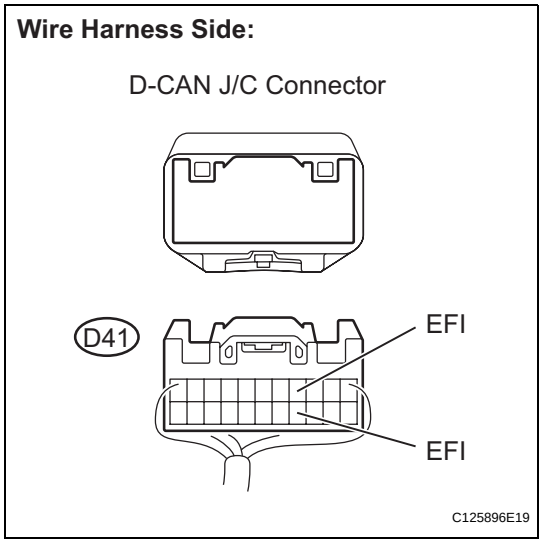

(a) Turn the ignition switch OFF.
(b) Disconnect the D41 D-CAN J/C connector.
(c) Measure the resistance.
Standard resistance

Tester Connection	Condition	Specified Condition
D41-4 (EFI) - D41-15 (EFI)	Ignition switch OFF	108 to 132 Ω

NG → **REPAIR OR REPLACE CAN MAIN WIRE OR CONNECTOR (D-CAN J/C - ECM (CAN-H, CAN-L))**

OK

7 CHECK CAN MAIN WIRE FOR DISCONNECTION (D-CAN J/C - P-CAN J/C)

Wire Harness Side:

D-CAN J/C Connector

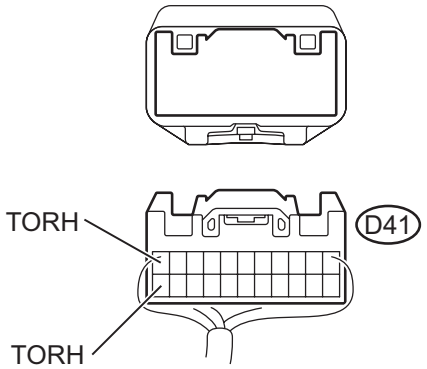

C125896E20

(a) Turn the ignition switch OFF.
(b) Disconnect the D41 D-CAN J/C connector.
(c) Measure the resistance.
Standard resistance

Tester Connection	Condition	Specified Condition
D42-11 (TORH) - D42-22 (TORH)	Ignition switch OFF	108 to 132 Ω

NG → **REPAIR OR REPLACE CAN MAIN WIRE OR CONNECTOR (D-CAN J/C - P-CAN J/C (CAN-H, CAN-L))**

OK

REPLACE D-CAN J/C (JUNCTION CONNECTOR)

8 CONNECT CONNECTOR

(a) Reconnect the P-CAN J/C connector.

NEXT

9 CHECK CAN MAIN WIRE FOR DISCONNECTION (POWER STEERING ECU)

Wire Harness Side:

Power Steering ECU Connector

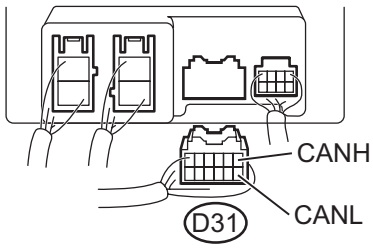

C125897E01

(a) Turn the ignition switch OFF.
(b) Disconnect the D31 power steering ECU connector.
(c) Measure the resistance.
Standard resistance

Tester Connection	Condition	Specified Condition
D31-1 (CANH) - D31-7 (CANL)	Ignition switch OFF	108 to 132 Ω

OK → **REPLACE POWER STEERING ECU**

CA

NG

10	CONNECT CONNECTOR

(a) Reconnect the power steering ECU connector.

NEXT

11	CHECK CAN MAIN WIRE FOR DISCONNECTION (P-CAN J/C - POWER STEERING ECU)

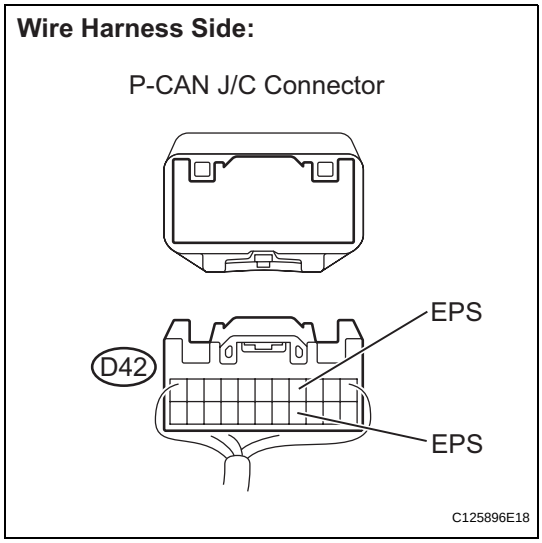

(a) Turn the ignition switch OFF.
(b) Disconnect the D42 P-CAN J/C connector.
(c) Measure the resistance.
Standard resistance

Tester Connection	Condition	Specified Condition
D42-4 (EPS) - D42-15 (EPS)	Ignition switch OFF	108 to 132 Ω

NG → **REPAIR OR REPLACE CAN MAIN WIRE OR CONNECTOR (P-CAN J/C - POWER STEERING ECU (CAN-H, CAN-L))**

OK

REPLACE P-CAN J/C (JUNCTION CONNECTOR)

Short in CAN Bus Lines

DESCRIPTION

There may a short circuit in the CAN main wire and/or CAN branch wire when the resistance between terminals 6 (CANH) and 14 (CANL) of the DLC3 is below 54 Ω.

Symptom	Trouble Area
Resistance between terminals 6 (CANH) and 14 (CANL) of DLC3 below 54 Ω	• Short between CAN bus lines • Brake actuator (Skid control ECU)*1 • Power steering ECU • ECM • Center airbag sensor assembly • Air conditioning amplifier*2 • Combination meter ECU • Main body ECU • D-CAN J/C (Junction connector) • P-CAN J/C (Junction connector)

HINT:
- *1: w/ ABS
- *2: w/ Air conditioning or PTC heater

WIRING DIAGRAM

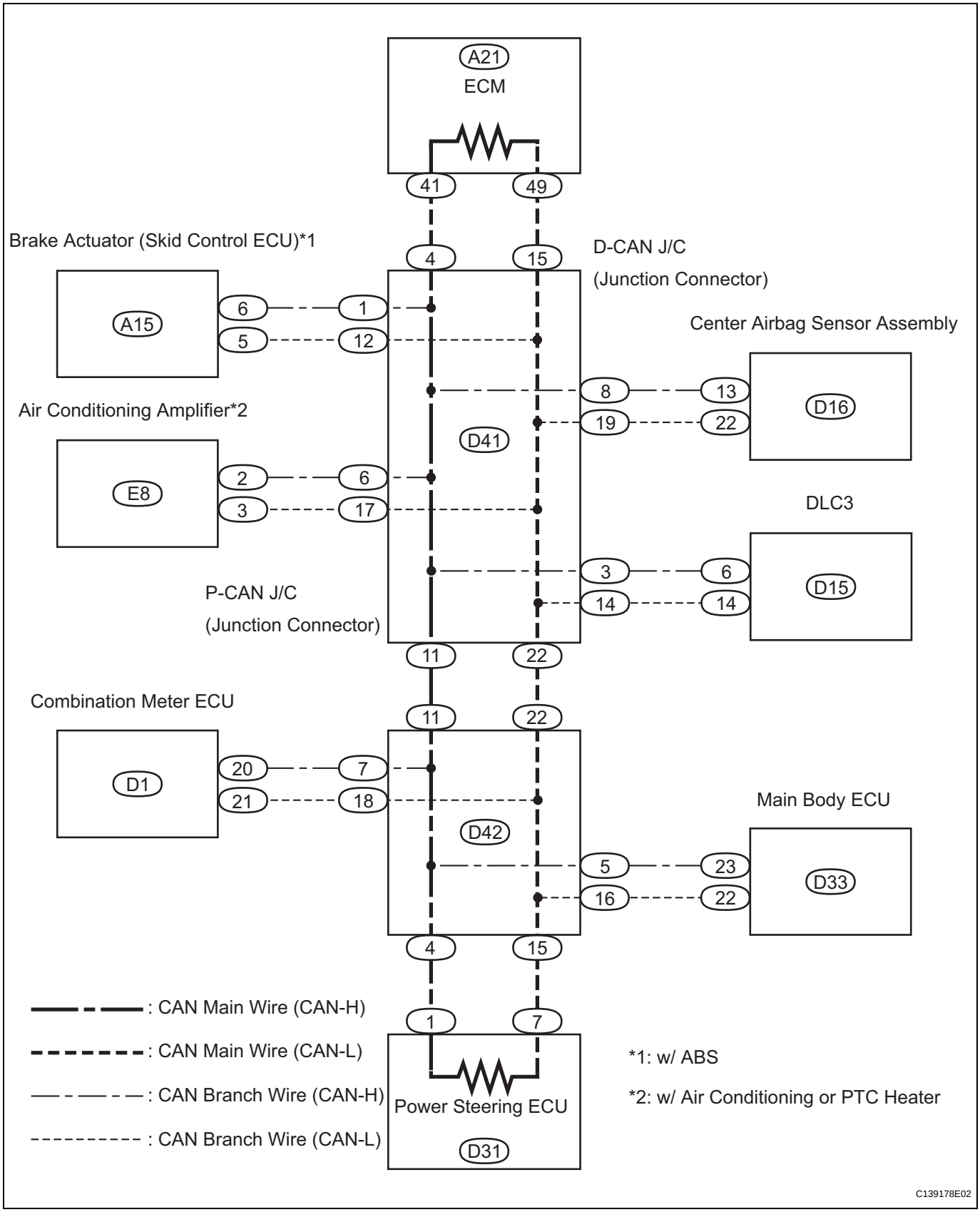

CA

INSPECTION PROCEDURE

NOTICE:

- **Turn the ignition switch OFF before measuring the resistances of the CAN main wire and the CAN branch wire.**
- **After the ignition switch is turned off, check that the key reminder warning system and light reminder warning system are not in operation.**
- **Before measuring the resistance, leave the vehicle as is for at least 1 minute and do not operate the ignition switch, any other switches or the doors. If doors need to be opened in order to check connectors, open the doors and leave them open.**
  HINT:
  Operating the ignition switch, any switches or any doors triggers related ECU and sensor communication with the CAN, which causes resistance variation.

1	CHECK CAN BUS LINES FOR SHORT CIRCUIT (DLC3 BRANCH WIRE)

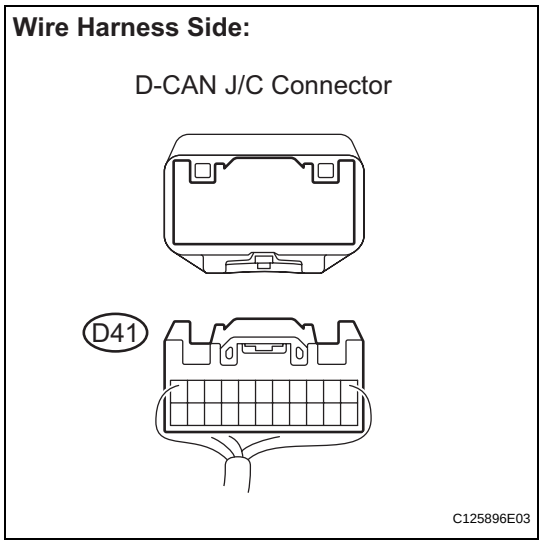

(a) Turn the ignition switch OFF.
(b) Disconnect the D41 D-CAN J/C connector.

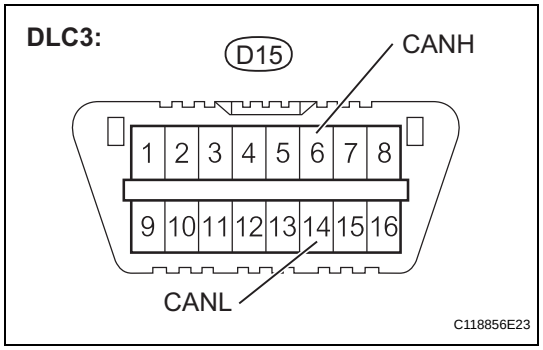

(c) Measure the resistance.
Result

Tester Connection	Condition	Specified Condition	Proceed to
D15-6 (CANH) - D15-14 (CANL)	Ignition switch OFF	1 Ω or higher	OK
D15-6 (CANH) - D15-14 (CANL)	Ignition switch OFF	Below 1 Ω	NG

NG → **REPAIR OR REPLACE CAN BRANCH WIRE CONNECTED TO DLC3 (CAN-H, CAN-L)**

OK

2	CONNECT CONNECTOR

(a) Reconnect the D-CAN J/C connector.

NEXT

CA

3 CHECK CAN BUS LINES FOR SHORT CIRCUIT (P-CAN J/C SIDE)

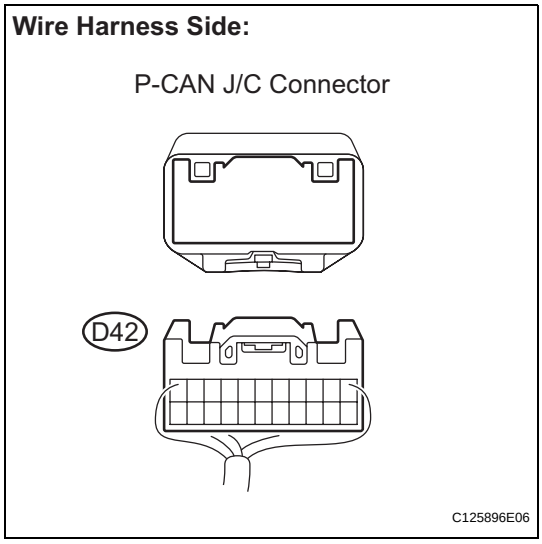

(a) Turn the ignition switch OFF.
(b) Disconnect the D42 P-CAN J/C connector.

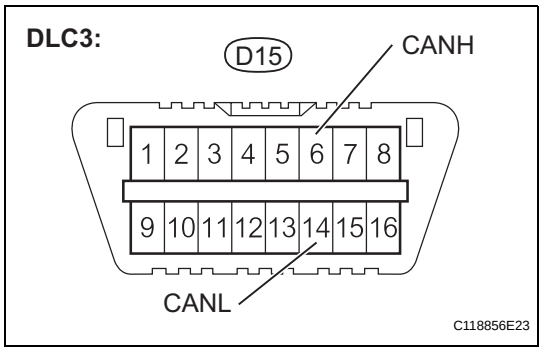

(c) Measure the resistance.
Standard resistance

Tester Connection	Condition	Specified Condition
D15-6 (CANH) - D15-14 (CANL)	Ignition switch OFF	108 to 132 Ω

OK → **Go to step 14**

NG

4 CHECK CAN BUS LINES FOR SHORT CIRCUIT (D-CAN J/C - P-CAN J/C)

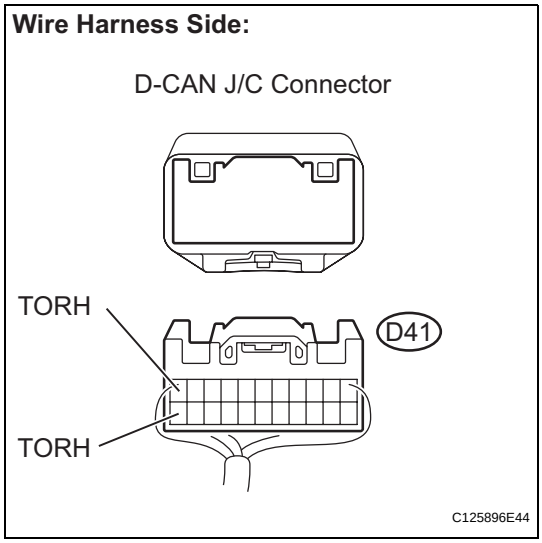

(a) Turn the ignition switch OFF.
(b) Disconnect the D41 D-CAN J/C connector.
(c) Measure the resistance.
HINT:
The resistance must be measured after the D42 P-CAN J/C connector is disconnected.
Result

Tester Connection	Condition	Specified Condition	Proceed to
D41-11 (TORH) - D41-22 (TORH)	Ignition switch OFF	1 Ω or higher	OK
D41-11 (TORH) - D41-22 (TORH)	Ignition switch OFF	Below 1 Ω	NG

NG → **REPAIR OR REPLACE CAN MAIN WIRE OR CONNECTOR (D-CAN J/C - P-CAN J/C (CAN-H, CAN-L))**

OK

5	CONNECT CONNECTOR

(a) Reconnect the P-CAN J/C connector.

NEXT

6	CHECK CAN BUS LINES FOR SHORT CIRCUIT (D-CAN J/C - ECM)

Wire Harness Side:

D-CAN J/C Connector

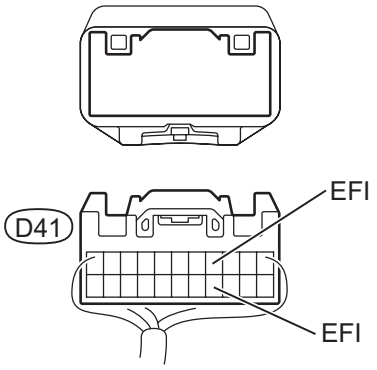

C125896E23

(a) Measure the resistance.
HINT:
The resistance must be measured after the D41 D-CAN J/C connector is disconnected.
Standard resistance

Tester Connection	Condition	Specified Condition
D41-4 (EFI) - D41-15 (EFI)	Ignition switch OFF	108 to 132 Ω

OK → **Go to step 10**

NG

7	CHECK CAN BUS LINES FOR SHORT CIRCUIT (D-CAN J/C - BRAKE ACTUATOR (SKID CONTROL ECU))

NOTICE:
For vehicles without ABS, go to step 8.

Wire Harness Side:

D-CAN J/C Connector

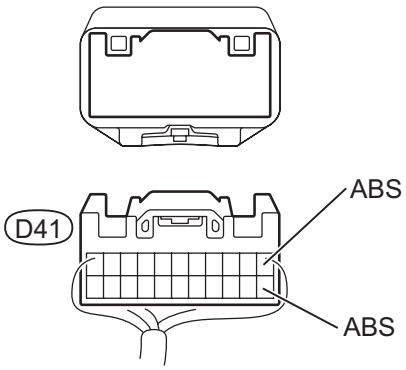

C125896E24

(a) Measure the resistance.
HINT:
The resistance must be measured after the D41 D-CAN J/C connector is disconnected.
Result

Tester Connection	Condition	Specified Condition	Proceed to
D41-1 (ABS) - D41-12 (ABS)	Ignition switch OFF	Below 1 Ω	A
D41-1 (ABS) - D41-12 (ABS)	Ignition switch OFF	1 Ω or higher	B

A → **Go to step 11**

B

CA

8 CHECK CAN BUS LINES FOR SHORT CIRCUIT (D-CAN J/C - AIR CONDITIONING AMPLIFIER)

NOTICE:
For vehicles without air conditioning or PTC heater, go to step 9.

(a) Measure the resistance.
HINT:
The resistance must be measured after the D41 D-CAN J/C connector is disconnected.
Result

Tester Connection	Condition	Specified Condition	Proceed to
D41-6 (A/C) - D41-17 (A/C)	Ignition switch OFF	Below 1 Ω	A
D41-6 (A/C) - D41-17 (A/C)	Ignition switch OFF	1 Ω or higher	B

Wire Harness Side:

D-CAN J/C Connector

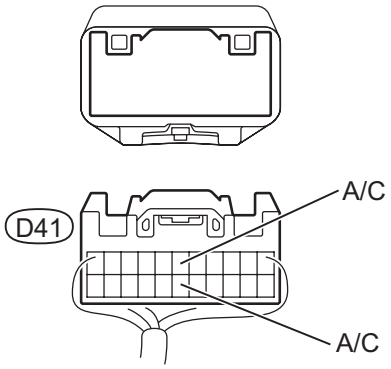

C125896E26

A → **Go to step 12**

B

9 CHECK CAN BUS LINES FOR SHORT CIRCUIT (D-CAN J/C - CENTER AIRBAG SENSOR ASSEMBLY)

(a) Measure the resistance.
HINT:
The resistance must be measured after the D41 D-CAN J/C connector is disconnected.
Result

Tester Connection	Condition	Specified Condition	Proceed to
D41-8 (A/B) - D41-19 (A/B)	Ignition switch OFF	Below 1 Ω	A
D41-8 (A/B) - D41-19 (A/B)	Ignition switch OFF	1 Ω or higher	B

Wire Harness Side:

D-CAN J/C Connector

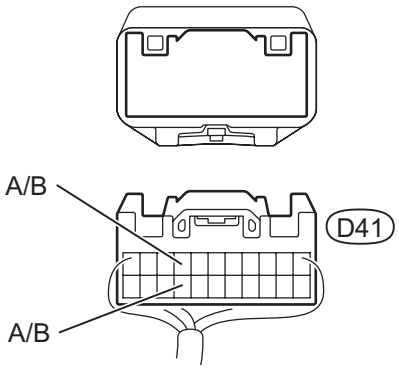

C125896E27

A → **Go to step 13**

B

REPLACE D-CAN J/C (JUNCTION CONNECTOR)

10 CHECK CAN BUS LINES FOR SHORT CIRCUIT (ECM MAIN WIRE)

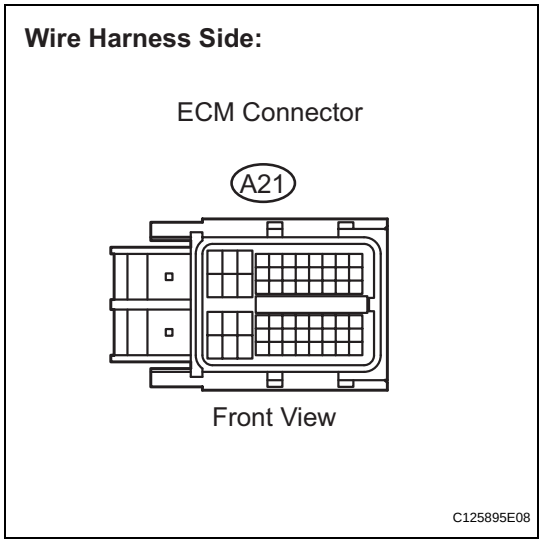

(a) Disconnect the A21 ECM connector.

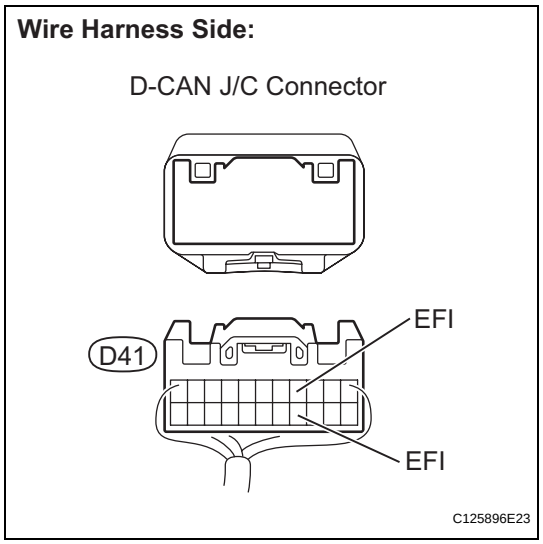

(b) Measure the resistance.
HINT:
The resistance must be measured after the D41 D-CAN J/C connector is disconnected.

Result

Tester Connection	Condition	Specified Condition	Proceed to
D41-4 (EFI) - D41-15 (EFI)	Ignition switch OFF	1 Ω or higher	OK
D41-4 (EFI) - D41-15 (EFI)	Ignition switch OFF	Below 1 Ω	NG

OK → **REPLACE ECM**

NG

REPAIR OR REPLACE CAN MAIN WIRE CONNECTED TO ECM (D-CAN J/C - ECM (CAN-H, CAN-L))

11	**CHECK CAN BUS LINES FOR SHORT CIRCUIT (BRAKE ACTUATOR (SKID CONTROL ECU) BRANCH WIRE)**

Wire Harness Side:

Brake Actuator (Skid Control ECU) Connector

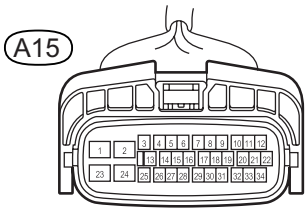

H

C118165E05

(a) Disconnect the A15 brake actuator (skid control ECU) connector.

Wire Harness Side:

D-CAN J/C Connector

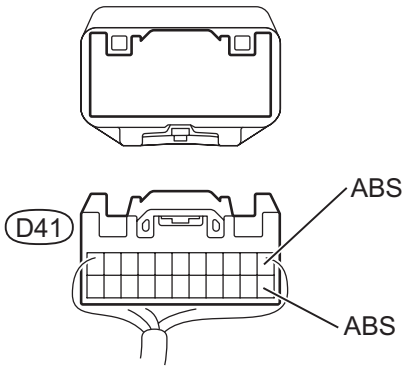

C125896E24

(b) Measure the resistance.
HINT:
The resistance must be measured after the D41 D-CAN J/C connector is disconnected.

Result

Tester Connection	Condition	Specified Condition	Proceed to
D41-1 (ABS) - D41-12 (ABS)	Ignition switch OFF	1 Ω or higher	OK
D41-1 (ABS) - D41-12 (ABS)	Ignition switch OFF	Below 1 Ω	NG

OK → **REPLACE BRAKE ACTUATOR ASSEMBLY (SKID CONTROL ECU)**

NG

CA

REPAIR OR REPLACE CAN BRANCH WIRE CONNECTED TO BRAKE ACTUATOR (D-CAN J/C - BRAKE ACTUATOR (SKID CONTROL ECU) (CAN-H, CAN-L))

12	CHECK CAN BUS LINES FOR SHORT CIRCUIT (AIR CONDITIONING AMPLIFIER BRANCH WIRE)

Wire Harness Side:

Air Conditioning Amplifier Connector

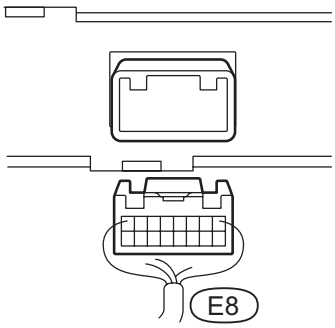

C131847E04

(a) Disconnect the E8 air conditioning amplifier connector.

Wire Harness Side:

D-CAN J/C Connector

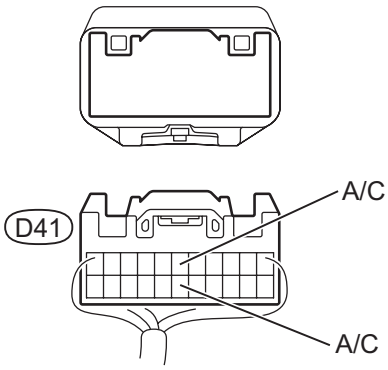

C125896E26

(b) Measure the resistance.
HINT:
The resistance must be measured after the D41 D-CAN J/C connector is disconnected.

Result

Tester Connection	Condition	Specified Condition	Proceed to
D41-6 (A/C) - D41-17 (A/C)	Ignition switch OFF	1 Ω or higher	OK
D41-6 (A/C) - D41-17 (A/C)	Ignition switch OFF	Below 1 Ω	NG

OK → **REPLACE AIR CONDITIONING AMPLIFIER**

NG

REPAIR OR REPLACE CAN BRANCH WIRE CONNECTED TO AIR CONDITIONING AMPLIFIER (D-CAN J/C - AIR CONDITIONING AMPLIFIER (CAN-H, CAN-L))

13	**CHECK CAN BUS LINES FOR SHORT CIRCUIT (CENTER AIRBAG SENSOR ASSEMBLY BRANCH WIRE)**

Wire Harness Side:

Center Airbag Sensor Assembly Connector

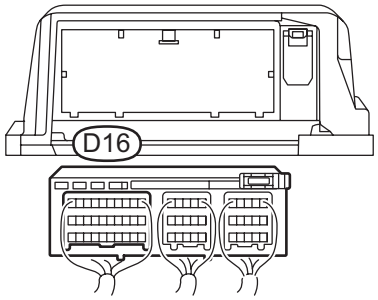

C131069E01

(a) Disconnect the D16 center airbag sensor assembly connector.

Wire Harness Side:

D-CAN J/C Connector

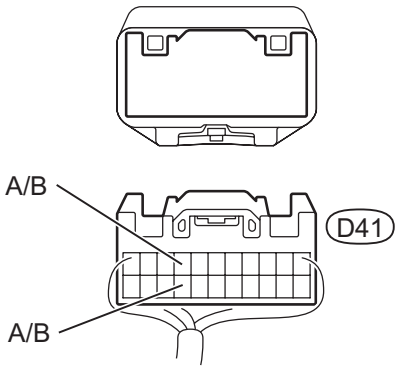

C125896E27

(b) Measure the resistance.
HINT:
The resistance must be measured after the D41 D-CAN J/C connector is disconnected.

Result

Tester Connection	Condition	Specified Condition	Proceed to
D41-8 (A/B) - D41-19 (A/B)	Ignition switch OFF	1 Ω or higher	OK
D41-8 (A/B) - D41-19 (A/B)	Ignition switch OFF	Below 1 Ω	NG

OK → **REPLACE CENTER AIRBAG SENSOR ASSEMBLY**

NG

CA

REPAIR OR REPLACE CAN BRANCH WIRE CONNECTED TO CENTER AIRBAG SENSOR ASSEMBLY (D-CAN J/C - CENTER AIRBAG SENSOR ASSEMBLY (CAN-H, CAN-L))

14 CHECK CAN BUS LINES FOR SHORT CIRCUIT (P-CAN J/C - POWER STEERING ECU)

Wire Harness Side:

P-CAN J/C Connector

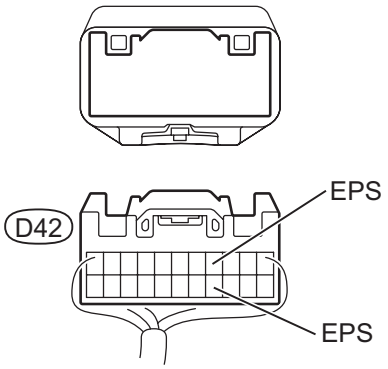

C125896E28

(a) Measure the resistance.
HINT:
The resistance must be measured after the D42 P-CAN J/C connector is disconnected.

Standard resistance

Tester Connection	Condition	Specified Condition
D42-4 (EPS) - D42-15 (EPS)	Ignition switch OFF	108 to 132 Ω

OK → **Go to step 17**

NG

15 CHECK CAN BUS LINES FOR SHORT CIRCUIT (P-CAN J/C - MAIN BODY ECU)

Wire Harness Side:

P-CAN J/C Connector

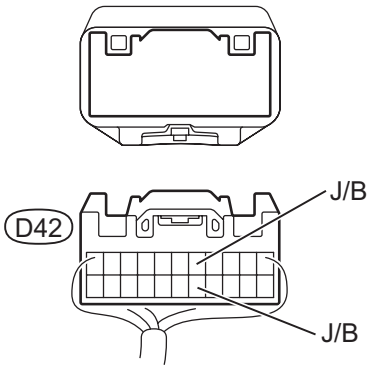

C125896E29

(a) Measure the resistance.
HINT:
The resistance must be measured after the D42 P-CAN J/C connector is disconnected.

Result

Tester Connection	Condition	Specified Condition	Proceed to
D42-5 (J/B) - D42-16 (J/B)	Ignition switch OFF	Below 1 Ω	A
D42-5 (J/B) - D42-16 (J/B)	Ignition switch OFF	1 Ω or higher	B

A → **Go to step 18**

B

16 CHECK CAN BUS LINES FOR SHORT CIRCUIT (P-CAN J/C - COMBINATION METER ECU)

Wire Harness Side:

P-CAN J/C Connector

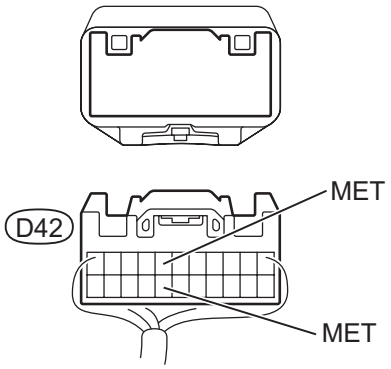

C125896E32

(a) Measure the resistance.
HINT:
The resistance must be measured after the D42 P-CAN J/C connector is disconnected.
Result

Tester Connection	Condition	Specified Condition	Proceed to
D42-7 (MET) - D42-18 (MET)	Ignition switch OFF	Below 1 Ω	A
D42-7 (MET) - D42-18 (MET)	Ignition switch OFF	1 Ω or higher	B

A → **Go to step 19**

B

REPLACE P-CAN J/C (JUNCTION CONNECTOR)

17 CHECK CAN BUS LINES FOR SHORT CIRCUIT (POWER STEERING ECU MAIN WIRE)

Wire Harness Side:

Power Steering ECU Connector

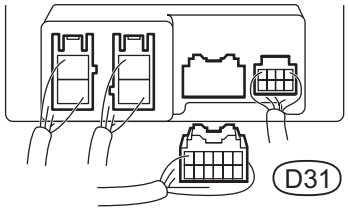

G100242E11

(a) Disconnect the D31 power steering ECU connector.

Wire Harness Side:

P-CAN J/C Connector

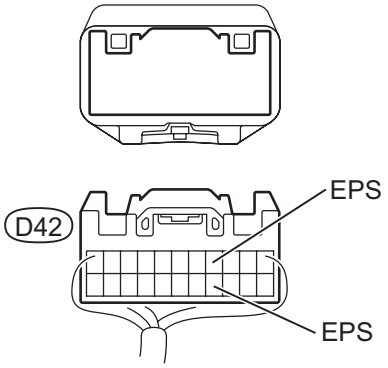

C125896E28

(b) Measure the resistance.
HINT:
The resistance must be measured after the D42 P-CAN J/C connector is disconnected.

Result

Tester Connection	Condition	Specified Condition	Proceed to
D42-4 (EPS) - D42-15 (EPS)	Ignition switch OFF	1 Ω or higher	OK
D42-4 (EPS) - D42-15 (EPS)	Ignition switch OFF	Below 1 Ω	NG

OK → **REPLACE POWER STEERING ECU**

NG

REPAIR OR REPLACE CAN MAIN WIRE CONNECTED TO POWER STEERING ECU (P-CAN J/C - POWER STEERING ECU (CAN-H, CAN-L))

18 CHECK CAN BUS LINES FOR SHORT CIRCUIT (MAIN BODY ECU BRANCH WIRE)

Wire Harness Side:

Main Body ECU Connector

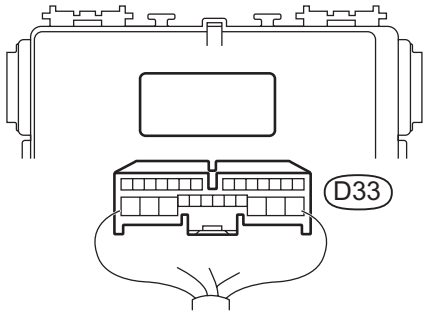

C131840E02

(a) Disconnect the D33 main body ECU connector.

Wire Harness Side:

P-CAN J/C Connector

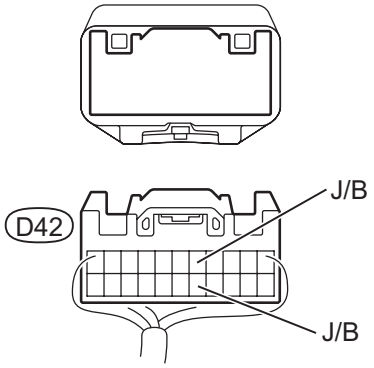

C125896E29

(b) Measure the resistance.
HINT:
The resistance must be measured after the D42 P-CAN J/C connector is disconnected.
Result

Tester Connection	Condition	Specified Condition	Proceed to
D42-5 (J/B) - D42-16 (J/B)	Ignition switch OFF	1 Ω or higher	OK
D42-5 (J/B) - D42-16 (J/B)	Ignition switch OFF	Below 1 Ω	NG

OK → **REPLACE MAIN BODY ECU**

NG

REPAIR OR REPLACE CAN BRANCH WIRE CONNECTED TO MAIN BODY ECU (P-CAN J/C - MAIN BODY ECU (CAN-H, CAN-L))

19	CHECK CAN BUS LINES FOR SHORT CIRCUIT (COMBINATION METER ECU BRANCH WIRE)

Wire Harness Side:

Combination Meter ECU Connector

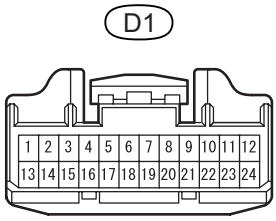

Front View

C139156E04

(a) Disconnect the D1 combination meter ECU connector.

CA

Wire Harness Side:

P-CAN J/C Connector

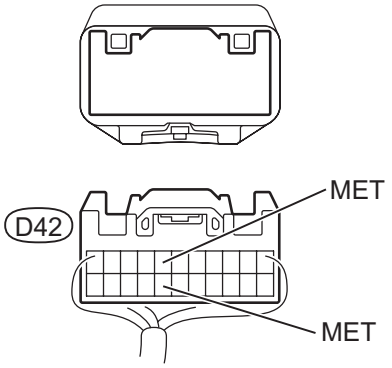

C125896E32

(b) Measure the resistance.
HINT:
The resistance must be measured after the D42 P-CAN J/C connector is disconnected.

Result

Tester Connection	Condition	Specified Condition	Proceed to
D42-7 (MET) - D42-18 (MET)	Ignition switch OFF	1 Ω or higher	OK
D42-7 (MET) - D42-18 (MET)	Ignition switch OFF	Below 1 Ω	NG

OK → **REPLACE COMBINATION METER ECU**

NG

REPAIR OR REPLACE CAN BRANCH WIRE CONNECTED TO COMBINATION METER ECU (P-CAN J/C - COMBINATION METER ECU (CAN-H, CAN-L))

Short to B+ in CAN Bus Line

DESCRIPTION

There may be a short circuit between the CAN bus line and +B when no resistance exists between terminals 6 (CANH) and 16 (BAT) or terminals 14 (CANL) and 16 (BAT) of the DLC3.

Symptom	Trouble Area
No resistance exists between terminals 6 (CANH) and 16 (BAT) or 14 (CANL) and 16 (BAT) of DLC3.	• Short to +B • Brake actuator (Skid control ECU)*1 • Power steering ECU • ECM • Center airbag sensor assembly • Air conditioning amplifier*2 • Combination meter ECU • Main body ECU

HINT:
- *1: w/ ABS
- *2: w/ Air conditioning or PTC heater

WIRING DIAGRAM

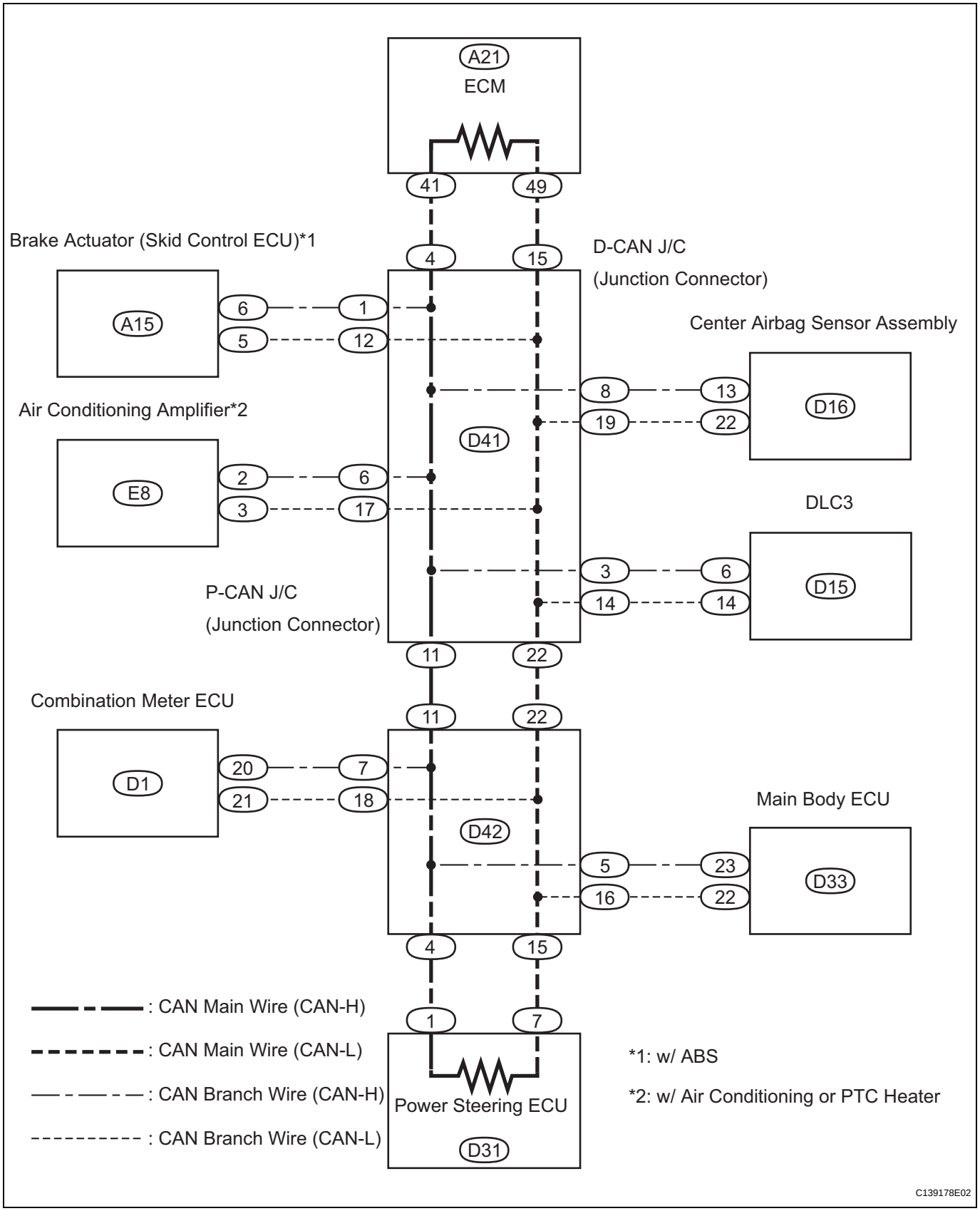

CA

INSPECTION PROCEDURE

NOTICE:

- **Turn the ignition switch OFF before measuring the resistances of the CAN main wire and the CAN branch wire.**
- **After the ignition switch is turned off, check that the key reminder warning system and light reminder warning system are not in operation.**
- **Before measuring the resistance, leave the vehicle as is for at least 1 minute and do not operate the ignition switch, any other switches or the doors. If doors need to be opened in order to check connectors, open the doors and leave them open.**
  HINT:
  Operating the ignition switch, any switches or any doors triggers related ECU and sensor communication with the CAN, which causes resistance variation.

1	CHECK CAN BUS LINE FOR SHORT TO +B (DLC3 BRANCH WIRE)

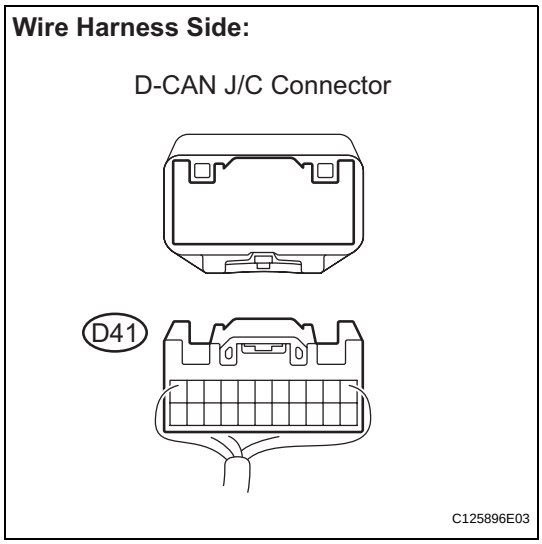

(a) Turn the ignition switch OFF.
(b) Disconnect the D41 D-CAN J/C connector.

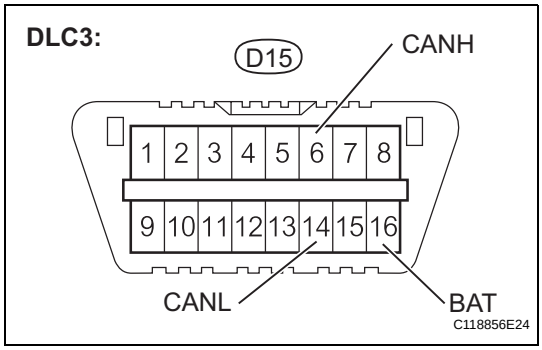

(c) Measure the resistance.
Result

Tester Connection	Condition	Specified Condition	Proceed to
D15-6 (CANH) - D15-16 (BAT)	Ignition switch OFF	1 Ω or higher	OK
D15-14 (CANL) - D15-16 (BAT)	Ignition switch OFF	1 Ω or higher	OK
D15-6 (CANH) - D15-16 (BAT)	Ignition switch OFF	Below 1 Ω	NG
D15-14 (CANL) - D15-16 (BAT)	Ignition switch OFF	Below 1 Ω	NG

NG → **REPAIR OR REPLACE CAN BRANCH WIRE CONNECTED TO DLC3 (CAN-H, CAN-L)**

OK

2	CONNECT CONNECTOR

(a) Reconnect the D-CAN J/C connector.

NEXT

3 CHECK CAN BUS LINE FOR SHORT TO +B (P-CAN J/C SIDE)

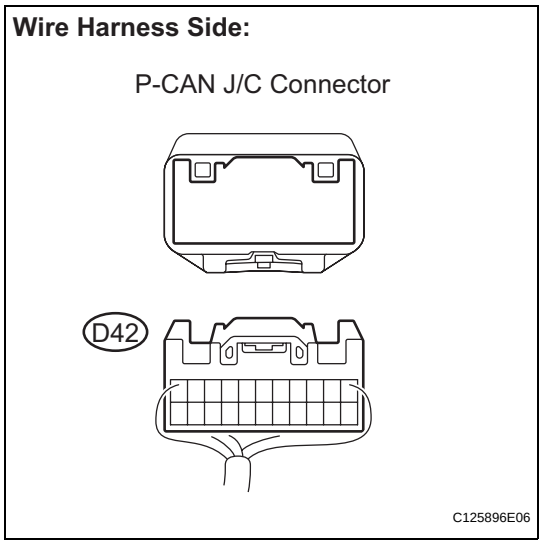

(a) Turn the ignition switch OFF.
(b) Disconnect the D42 P-CAN J/C connector.

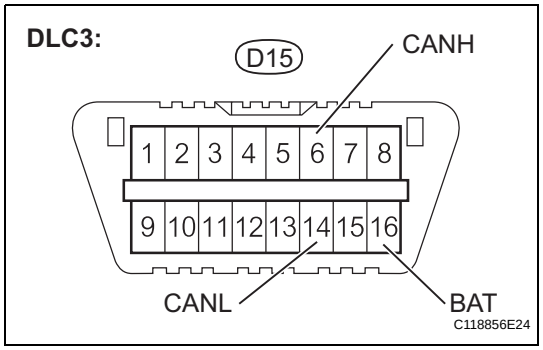

(c) Measure the resistance.
Result

Tester Connection	Condition	Specified Condition	Proceed to
D15-6 (CANH) - D15-16 (BAT)	Ignition switch OFF	1 Ω or higher	OK
D15-14 (CANL) - D15-16 (BAT)	Ignition switch OFF	1 Ω or higher	OK
D15-6 (CANH) - D15-16 (BAT)	Ignition switch OFF	Below 1 Ω	NG
D15-14 (CANL) - D15-16 (BAT)	Ignition switch OFF	Below 1 Ω	NG

OK → **Go to step 13**

NG

4 CONNECT CONNECTOR

(a) Reconnect the P-CAN J/C connector.

NEXT

5 CHECK CAN BUS LINE FOR SHORT TO +B (D-CAN J/C - ECM)

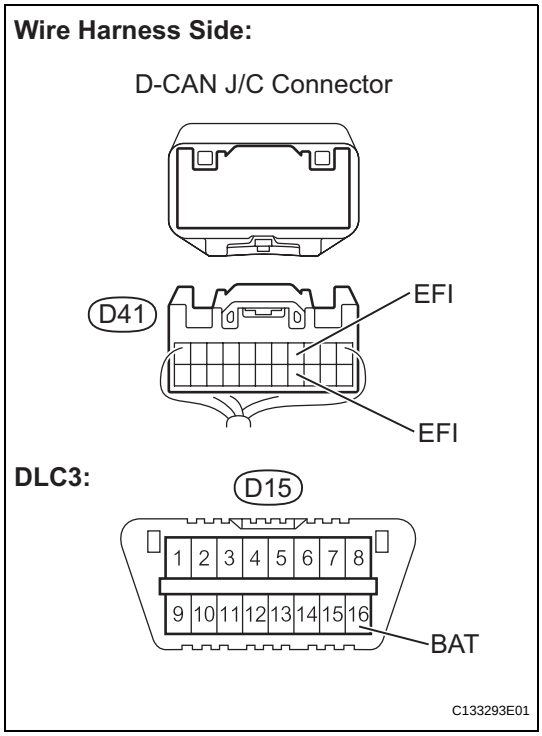

(a) Disconnect the D41 D-CAN J/C connector.
(b) Measure the resistance.
Result

Tester Connection	Condition	Specified Condition	Proceed to
D41-4 (EFI) - D15-16 (BAT)	Ignition switch OFF	1 Ω or higher	OK
D41-15 (EFI) - D15-16 (BAT)	Ignition switch OFF	1 Ω or higher	OK
D41-4 (EFI) - D15-16 (BAT)	Ignition switch OFF	Below 1 Ω	NG
D41-15 (EFI) - D15-16 (BAT)	Ignition switch OFF	Below 1 Ω	NG

NG → **Go to step 9**

OK

6 CHECK CAN BUS LINE FOR SHORT TO +B (D-CAN J/C - BRAKE ACTUATOR (SKID CONTROL ECU))

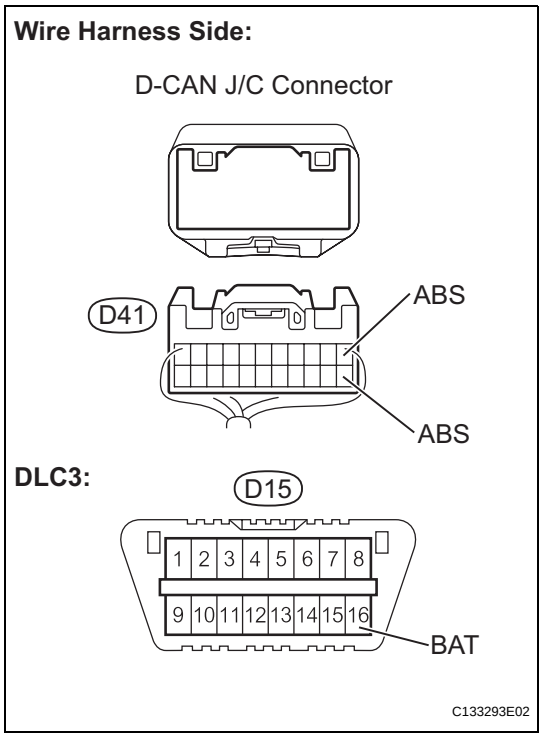

NOTICE:
For vehicles without ABS, go to step 7.

(a) Measure the resistance.
HINT:
The resistance must be measured after the D41 D-CAN J/C connector is disconnected.
Result

Tester Connection	Condition	Specified Condition	Proceed to
D41-1 (ABS) - D15-16 (BAT)	Ignition switch OFF	1 Ω or higher	OK
D41-12 (ABS) - D15-16 (BAT)	Ignition switch OFF	1 Ω or higher	OK
D41-1 (ABS) - D15-16 (BAT)	Ignition switch OFF	Below 1 Ω	NG
D41-12 (ABS) - D15-16 (BAT)	Ignition switch OFF	Below 1 Ω	NG

NG → **Go to step 10**

OK

7	CHECK CAN BUS LINE FOR SHORT TO +B (D-CAN J/C - AIR CONDITIONING AMPLIFIER)

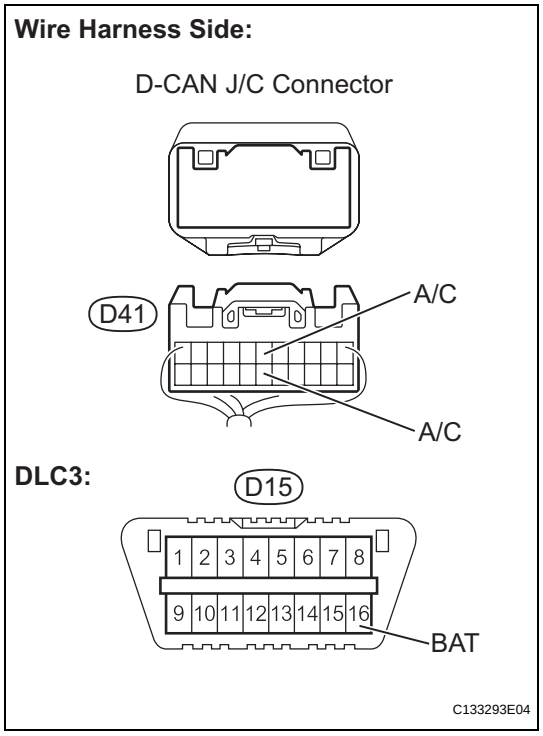

NOTICE:
For vehicles without air conditioning or PTC heater, go to step 8.

(a) Measure the resistance.
HINT:
The resistance must be measured after the D41 D-CAN J/C connector is disconnected.

Result

Tester Connection	Condition	Specified Condition	Proceed to
D41-6 (A/C) - D15-16 (BAT)	Ignition switch OFF	1 Ω or higher	OK
D41-17 (A/C) - D15-16 (BAT)	Ignition switch OFF	1 Ω or higher	OK
D41-6 (A/C) - D15-16 (BAT)	Ignition switch OFF	Below 1 Ω	NG
D41-17 (A/C) - D15-16 (BAT)	Ignition switch OFF	Below 1 Ω	NG

NG → **Go to step 11**

OK

8 CHECK CAN BUS LINE FOR SHORT TO +B (D-CAN J/C - CENTER AIRBAG SENSOR ASSEMBLY)

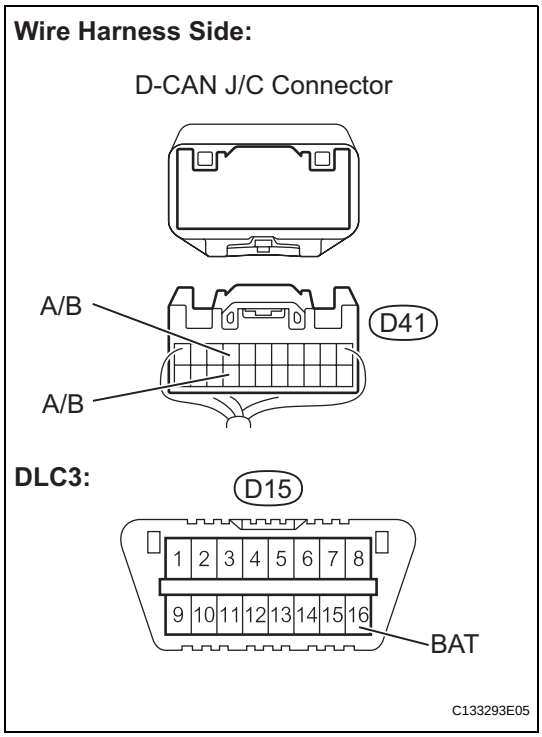

(a) Measure the resistance.
HINT:
The resistance must be measured after the D41 D-CAN J/C connector is disconnected.
Result

Tester Connection	Condition	Specified Condition	Proceed to
D41-8 (A/B) - D15-16 (BAT)	Ignition switch OFF	1 Ω or higher	OK
D41-19 (A/B) - D15-16 (BAT)	Ignition switch OFF	1 Ω or higher	OK
D41-8 (A/B) - D15-16 (BAT)	Ignition switch OFF	Below 1 Ω	NG
D41-19 (A/B) - D15-16 (BAT)	Ignition switch OFF	Below 1 Ω	NG

NG → **Go to step 12**

OK

REPAIR OR REPLACE CAN MAIN WIRE OR CONNECTOR (D-CAN J/C - P-CAN J/C)

9 CHECK CAN BUS LINE FOR SHORT TO +B (ECM MAIN WIRE)

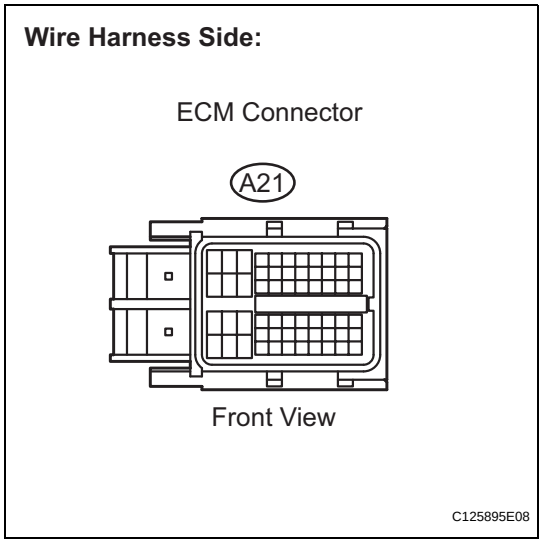

(a) Disconnect the A21 ECM connector.

Wire Harness Side:

D-CAN J/C Connector

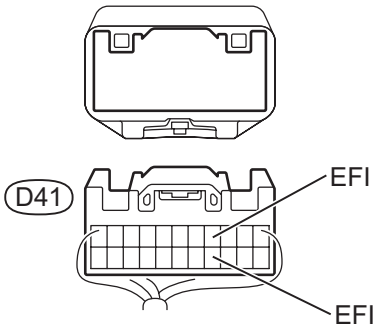

DLC3:

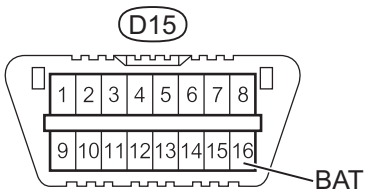

C133293E01

(b) Measure the resistance.
HINT:
The resistance must be measured after the D41 D-CAN J/C connector is disconnected.

Result

Tester Connection	Condition	Specified Condition	Proceed to
D41-4 (EFI) - D15-16 (BAT)	Ignition switch OFF	1 Ω or higher	OK
D41-15 (EFI) - D15-16 (BAT)	Ignition switch OFF	1 Ω or higher	OK
D41-4 (EFI) - D15-16 (BAT)	Ignition switch OFF	Below 1 Ω	NG
D41-15 (EFI) - D15-16 (BAT)	Ignition switch OFF	Below 1 Ω	NG

OK → **REPLACE ECM**

NG

REPAIR OR REPLACE CAN MAIN WIRE CONNECTED TO ECM (D-CAN J/C - ECM (CAN-H, CAN-L))

10 CHECK CAN BUS LINE FOR SHORT TO +B (BRAKE ACTUATOR (SKID CONTROL ECU) BRANCH WIRE)

Wire Harness Side:

Brake Actuator (Skid Control ECU) Connector

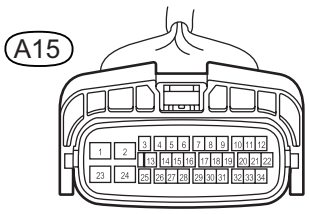

Front View

H

C118165E05

(a) Disconnect the A15 brake actuator (skid control ECU) connector.

CA

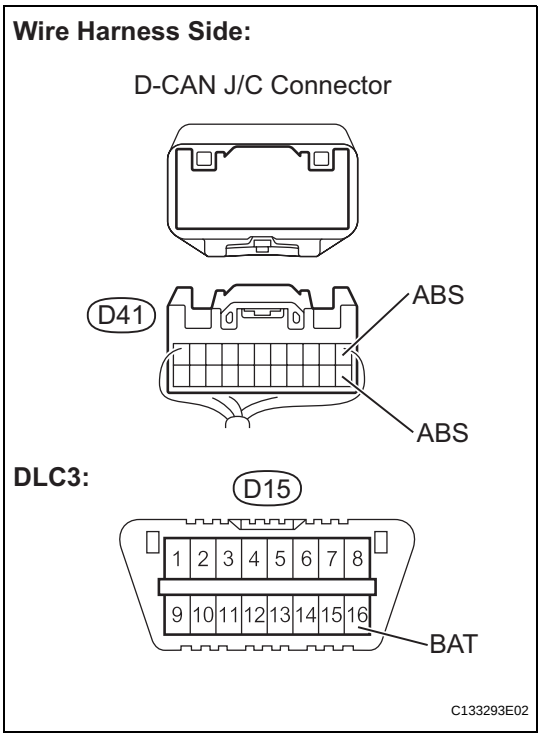

(b) Measure the resistance.
HINT:
The resistance must be measured after the D41 D-CAN J/C connector is disconnected.

Result

Tester Connection	Condition	Specified Condition	Proceed to
D41-1 (ABS) - D15-16 (BAT)	Ignition switch OFF	1 Ω or higher	OK
D41-12 (ABS) - D15-16 (BAT)	Ignition switch OFF	1 Ω or higher	OK
D41-1 (ABS) - D15-16 (BAT)	Ignition switch OFF	Below 1 Ω	NG
D41-12 (ABS) - D15-16 (BAT)	Ignition switch OFF	Below 1 Ω	NG

OK → **REPLACE BRAKE ACTUATOR (SKID CONTROL ECU)**

NG

REPAIR OR REPLACE CAN BRANCH WIRE CONNECTED TO BRAKE ACTUATOR (D-CAN J/C - BRAKE ACTUATOR (SKID CONTROL ECU) (CAN-H, CAN-L))

11	CHECK CAN BUS LINE FOR SHORT TO +B (AIR CONDITIONING AMPLIFIER BRANCH WIRE)

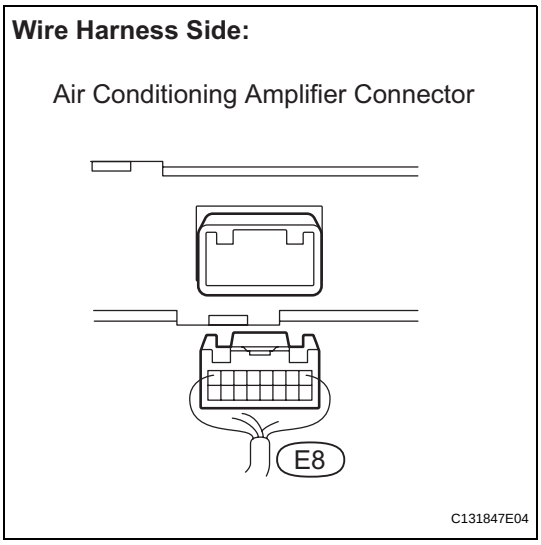

(a) Disconnect the E8 air conditioning amplifier connector.

Wire Harness Side:

D-CAN J/C Connector

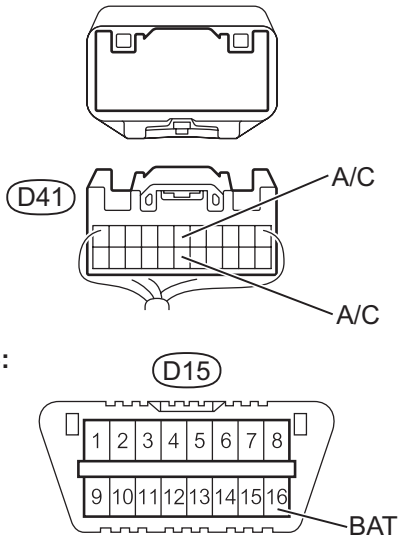

(b) Measure the resistance.
HINT:
The resistance must be measured after the D41 D-CAN J/C connector is disconnected.

Result

Tester Connection	Condition	Specified Condition	Proceed to
D41-6 (A/C) - D15-16 (BAT)	Ignition switch OFF	1 Ω or higher	OK
D41-17 (A/C) - D15-16 (BAT)	Ignition switch OFF	1 Ω or higher	OK
D41-6 (A/C) - D15-16 (BAT)	Ignition switch OFF	Below 1 Ω	NG
D41-17 (A/C) - D15-16 (BAT)	Ignition switch OFF	Below 1 Ω	NG

OK → **REPLACE AIR CONDITIONING AMPLIFIER**

NG

REPAIR OR REPLACE CAN BRANCH WIRE CONNECTED TO AIR CONDITIONING AMPLIFIER (D-CAN J/C - AIR CONDITIONING AMPLIFIER (CAN-H, CAN-L))

12 CHECK CAN BUS LINE FOR SHORT TO +B (CENTER AIRBAG SENSOR ASSEMBLY BRANCH WIRE)

Wire Harness Side:

Center Airbag Sensor Assembly Connector

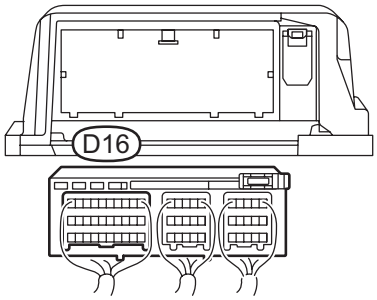

(a) Disconnect the D16 center airbag sensor assembly connector.

CA

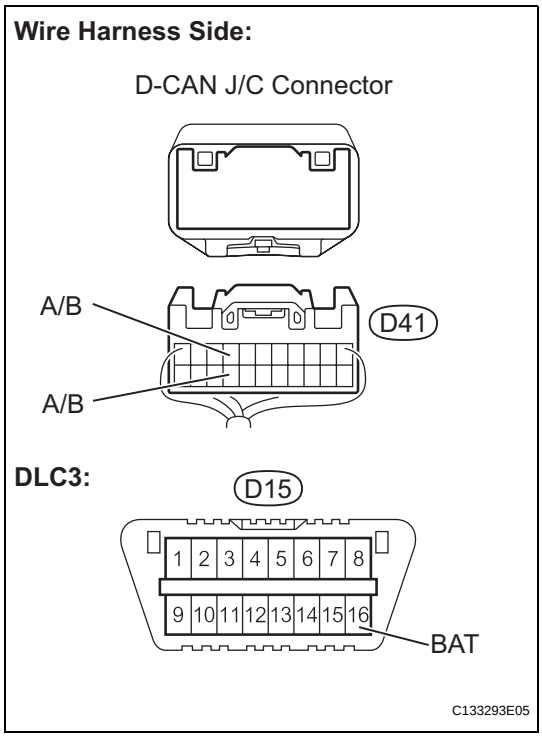

(b) Measure the resistance.
HINT:
The resistance must be measured after the D41 D-CAN J/C connector is disconnected.
Result

Tester Connection	Condition	Specified Condition	Proceed to
D41-8 (A/B) - D15-16 (BAT)	Ignition switch OFF	1 Ω or higher	OK
D41-19 (A/B) - D15-16 (BAT)	Ignition switch OFF	1 Ω or higher	OK
D41-8 (A/B) - D15-16 (BAT)	Ignition switch OFF	Below 1 Ω	NG
D41-19 (A/B) - D15-16 (BAT)	Ignition switch OFF	Below 1 Ω	NG

OK → **REPLACE CENTER AIRBAG SENSOR ASSEMLBY**

NG

REPLACE CAN BRANCH WIRE CONNECTED TO CENTER AIRBAG SENSOR ASSEMBLY (D-CAN J/C - CENTER AIRBAG SENSOR ASSEMBLY (CAN-H, CAN-L))

13 CHECK CAN BUS LINE FOR SHORT TO +B (P-CAN J/C - POWER STEERING ECU)

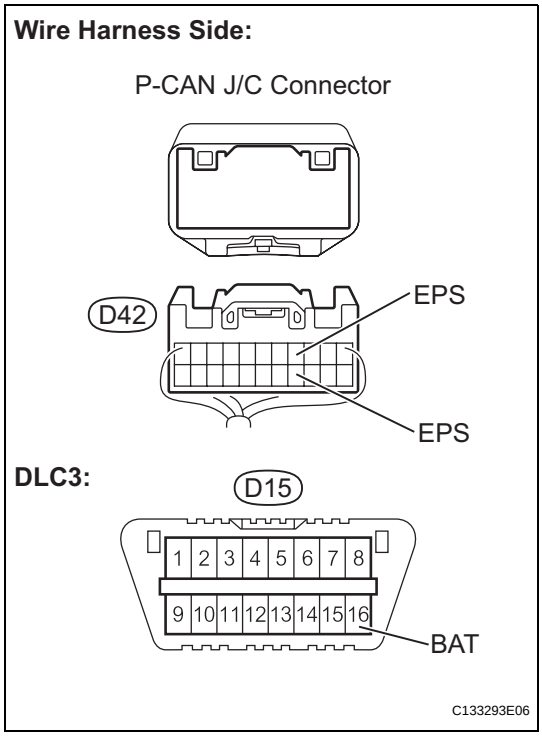

(a) Measure the resistance.
HINT:
The resistance must be measured after the D42 P-CAN J/C connector is disconnected.
Result

Tester Connection	Condition	Specified Condition	Proceed to
D42-4 (EPS) - D15-16 (BAT)	Ignition switch OFF	1 Ω or higher	OK
D42-15 (EPS) - D15-16 (BAT)	Ignition switch OFF	1 Ω or higher	OK
D42-4 (EPS) - D15-16 (BAT)	Ignition switch OFF	Below 1 Ω	NG
D42-15 (EPS) - D15-16 (BAT)	Ignition switch OFF	Below 1 Ω	NG

NG → **Go to step 16**

CA

OK

14 CHECK CAN BUS LINE FOR SHORT TO +B (P-CAN J/C - MAIN BODY ECU)

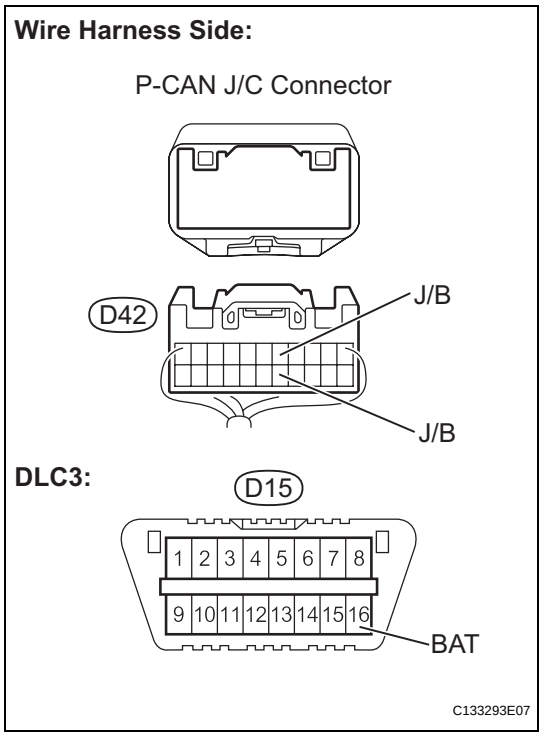

(a) Measure the resistance.
HINT:
The resistance must be measured after the D42 P-CAN J/C connector is disconnected.
Result

Tester Connection	Condition	Specified Condition	Proceed to
D42-5 (J/B) - D15-16 (BAT)	Ignition switch OFF	1 Ω or higher	OK
D42-16 (J/B) - D15-16 (BAT)	Ignition switch OFF	1 Ω or higher	OK
D42-5 (J/B) - D15-16 (BAT)	Ignition switch OFF	Below 1 Ω	NG
D42-16 (J/B) - D15-16 (BAT)	Ignition switch OFF	Below 1 Ω	NG

NG → **Go to step 17**

OK

15 CHECK CAN BUS LINE FOR SHORT TO +B (P-CAN J/C - COMBINATION METER ECU)

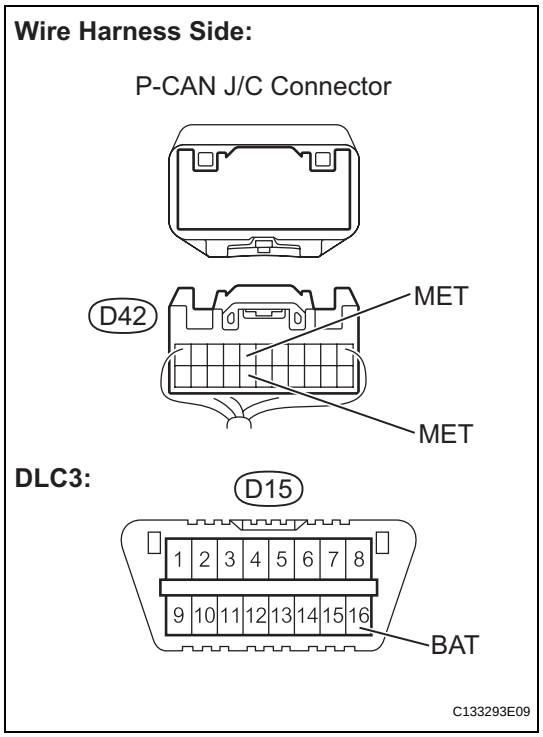

(a) Measure the resistance.
HINT:
The resistance must be measured after the D42 P-CAN J/C connector is disconnected.
Result

Tester Connection	Condition	Specified Condition	Proceed to
D42-7 (MET) - D15-16 (BAT)	Ignition switch OFF	1 Ω or higher	OK
D42-18 (MET) - D15-16 (BAT)	Ignition switch OFF	1 Ω or higher	OK
D42-7 (MET) - D15-16 (BAT)	Ignition switch OFF	Below 1 Ω	NG
D42-18 (MET) - D15-16 (BAT)	Ignition switch OFF	Below 1 Ω	NG

NG → **Go to step 18**

OK

REPAIR OR REPLACE CAN MAIN WIRE OR CONNECTOR (D-CAN J/C - P-CAN J/C (CAN-H, CAN-L))

16 CHECK CAN BUS LINE FOR SHORT TO +B (POWER STEERING ECU MAIN WIRE)

Wire Harness Side:

Power Steering ECU Connector

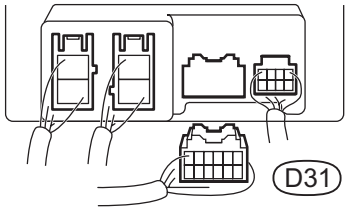

G100242E11

(a) Disconnect the D31 power steering ECU connector.

Wire Harness Side:

P-CAN J/C Connector

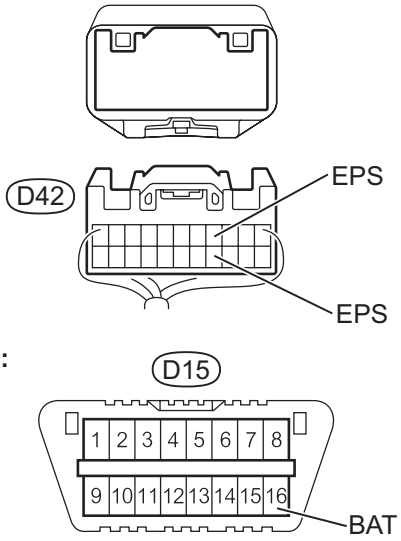

C133293E06

(b) Measure the resistance.
HINT:
The resistance must be measured after the D42 P-CAN J/C connector is disconnected.

Result

Tester Connection	Condition	Specified Condition	Proceed to
D42-4 (EPS) - D15-16 (BAT)	Ignition switch OFF	1 Ω or higher	OK
D42-15 (EPS) - D15-16 (BAT)	Ignition switch OFF	1 Ω or higher	OK
D42-4 (EPS) - D15-16 (BAT)	Ignition switch OFF	Below 1 Ω	NG
D42-15 (EPS) - D15-16 (BAT)	Ignition switch OFF	Below 1 Ω	NG

OK → **REPLACE POWER STEERING ECU**

CA

NG

REPAIR OR REPLACE CAN MAIN WIRE CONNECTED TO POWER STEERING ECU (P-CAN J/C - POWER STEERING ECU (CAN-H, CAN-L))

17	CHECK CAN BUS LINE FOR SHORT TO +B (MAIN BODY ECU BRANCH WIRE)

Wire Harness Side:

Main Body ECU Connector

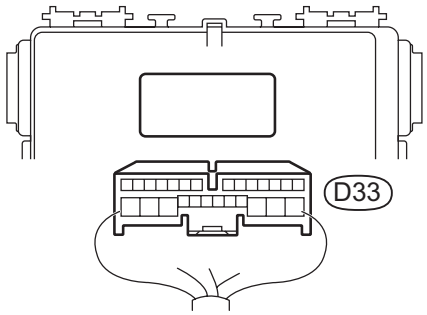

C131840E02

(a) Disconnect the D33 main body ECU connector.

Wire Harness Side:

P-CAN J/C Connector

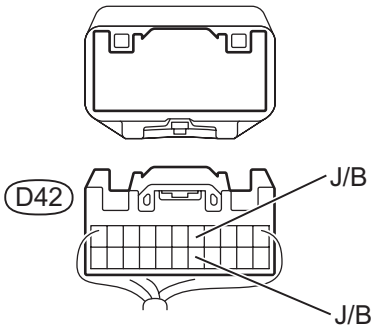

DLC3:

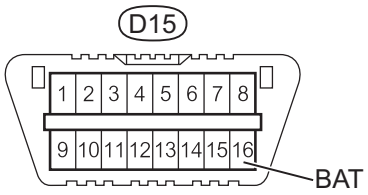

C133293E07

(b) Measure the resistance.
HINT:
The resistance must be measured after the D42 P-CAN J/C connector is disconnected.

Result

Tester Connection	Condition	Specified Condition	Proceed to
D42-5 (J/B) - D15-16 (BAT)	Ignition switch OFF	1 Ω or higher	OK
D42-16 (J/B) - D15-16 (BAT)	Ignition switch OFF	1 Ω or higher	OK
D42-5 (J/B) - D15-16 (BAT)	Ignition switch OFF	Below 1 Ω	NG
D42-16 (J/B) - D15-16 (BAT)	Ignition switch OFF	Below 1 Ω	NG

OK → **REPLACE MAIN BODY ECU**

NG

REPAIR OR REPLACE CAN BRANCH WIRE CONNECTED TO MAIN BODY ECU (P-CAN J/C - MAIN BODY ECU (CAN-H, CAN-L))

18 CHECK CAN BUS LINE FOR SHORT TO +B (COMBINATION METER ECU BRANCH WIRE)

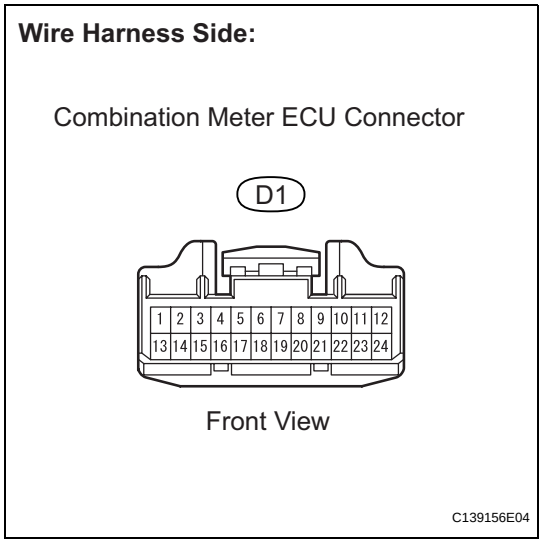

(a) Disconnect the D1 combination meter ECU connector.

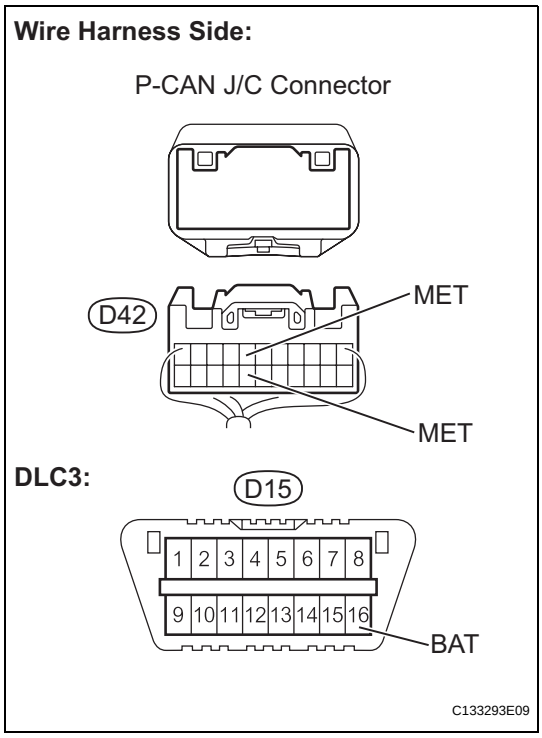

(b) Measure the resistance.
HINT:
The resistance must be measured after the D42 P-CAN J/C connector is disconnected.

Result

Tester Connection	Condition	Specified Condition	Proceed to
D42-7 (MET) - D15-16 (BAT)	Ignition switch OFF	1 Ω or higher	OK
D42-18 (MET) - D15-16 (BAT)	Ignition switch OFF	1 Ω or higher	OK
D42-7 (MET) - D15-16 (BAT)	Ignition switch OFF	Below 1 Ω	NG
D42-18 (MET) - D15-16 (BAT)	Ignition switch OFF	Below 1 Ω	NG

OK → **REPLACE COMBINATION METER ECU**

NG

REPAIR OR REPLACE CAN BRANCH WIRE CONNECTED TO COMBINATION METER (P-CAN J/C - COMBINATION METER ECU (CAN-H, CAN-L))

Short to GND in CAN Bus Line

DESCRIPTION

There may be a short circuit between the CAN bus line and GND when there is resistance between terminals 6 (CANH) and 4 (CG) or terminals 14 (CANL) and 4 (CG) of the DLC3.

Symptom	Trouble Area
Resistance exists between terminals 6 (CANH) and 4 (CG) or terminals 14 (CANL) and 4 (CG) of DLC3.	• Short to GND • Brake actuator (Skid control ECU)*1 • Power steering ECU • ECM • Center airbag sensor assembly • Air conditioning amplifier*2 • Combination meter ECU • Main body ECU

HINT:
- *1: w/ ABS
- *2: w/ Air conditioning or PTC heater

WIRING DIAGRAM

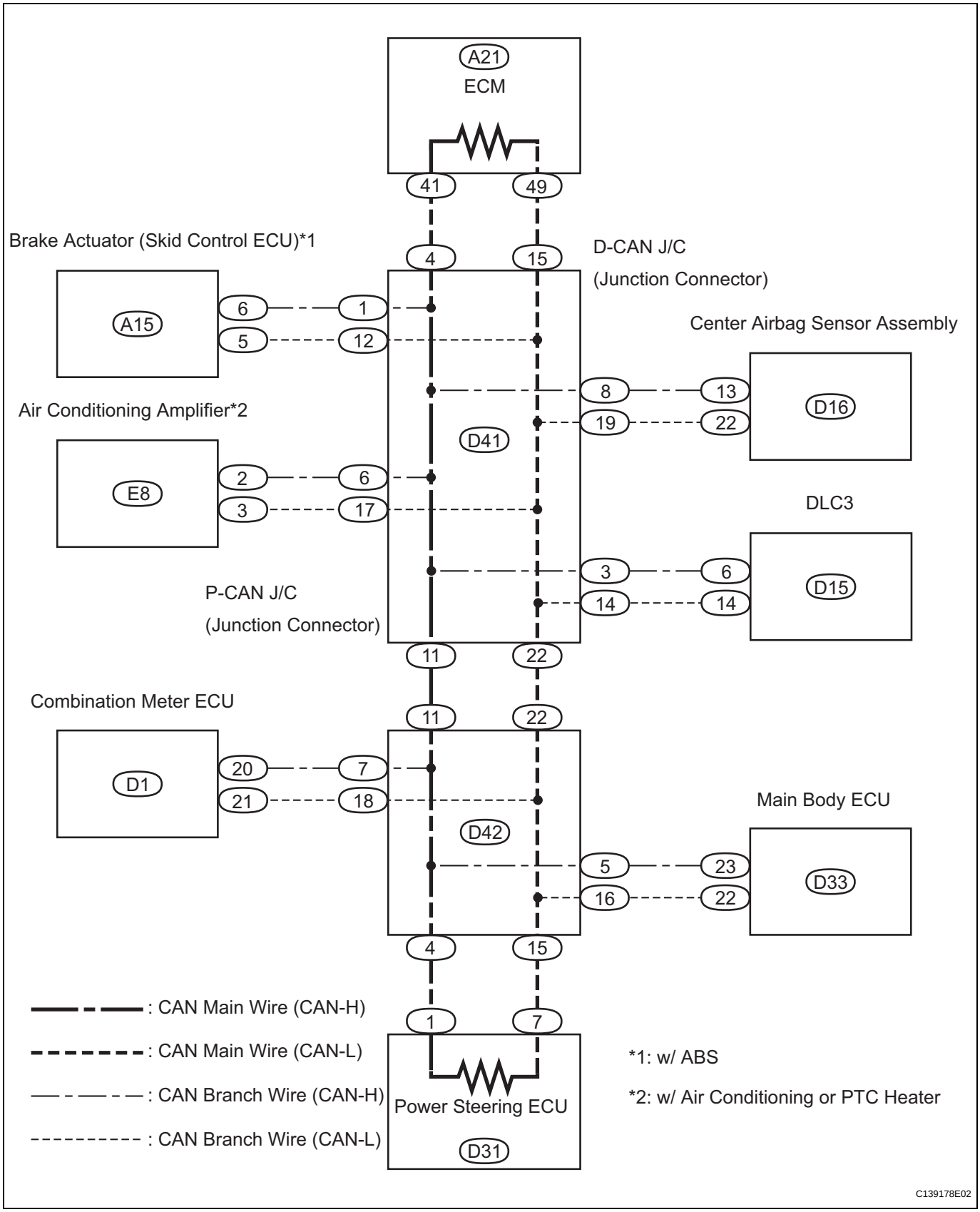

CA

INSPECTION PROCEDURE

NOTICE:

- **Turn the ignition switch OFF before measuring the resistances of the CAN main wire and the CAN branch wire.**
- **After the ignition switch is turned off, check that the key reminder warning system and light reminder warning system are not in operation.**
- **Before measuring the resistance, leave the vehicle as is for at least 1 minute and do not operate the ignition switch, any other switches or the doors. If doors need to be opened in order to check connectors, open the doors and leave them open.**
  HINT:
  Operating the ignition switch, any switches or any doors triggers related ECU and sensor communication with the CAN, which causes resistance variation.

1	CHECK CAN BUS LINE FOR SHORT TO GND (DLC3 BRANCH WIRE)

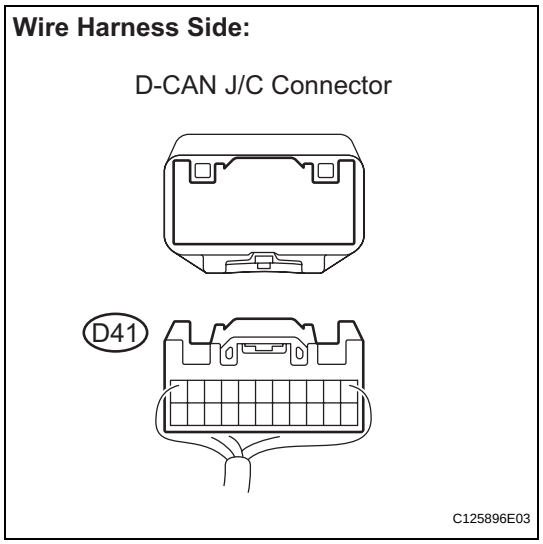

(a) Turn the ignition switch OFF.
(b) Disconnect the D41 D-CAN J/C connector.

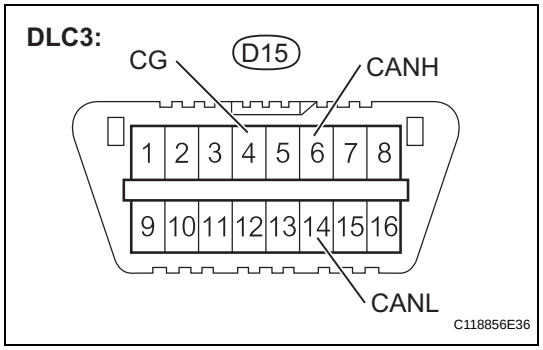

(c) Measure the resistance.
Result

Tester Connection	Condition	Specified Condition	Proceed to
D15-6 (CANH) - D15-4 (CG)	Ignition switch OFF	1 Ω or higher	OK
D15-14 (CANL) - D15-4 (CG)	Ignition switch OFF	1 Ω or higher	OK
D15-6 (CANH) - D15-4 (CG)	Ignition switch OFF	Below 1 Ω	NG
D15-14 (CANL) - D15-4 (CG)	Ignition switch OFF	Below 1 Ω	NG

NG → **REPAIR OR REPLACE CAN BRANCH WIRE CONNECTED TO DLC3 (CAN-H, CAN-L)**

OK

2	CONNECT CONNECTOR

(a) Reconnect the D-CAN J/C connector.

CA

NEXT

3 CHECK CAN BUS LINE FOR SHORT TO GND (P-CAN J/C SIDE)

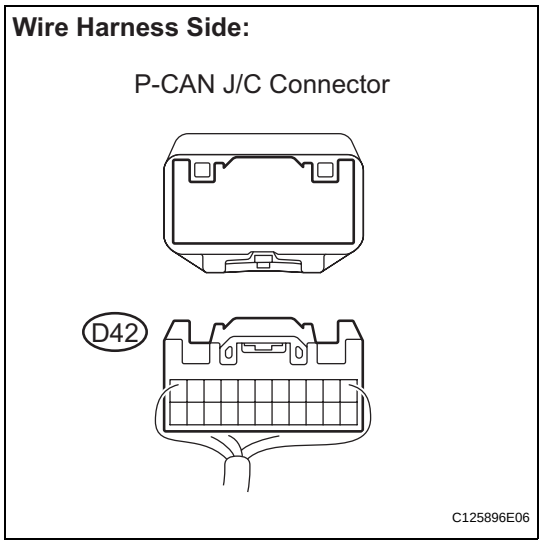

(a) Turn the ignition switch OFF.
(b) Disconnect the D42 P-CAN J/C connector.

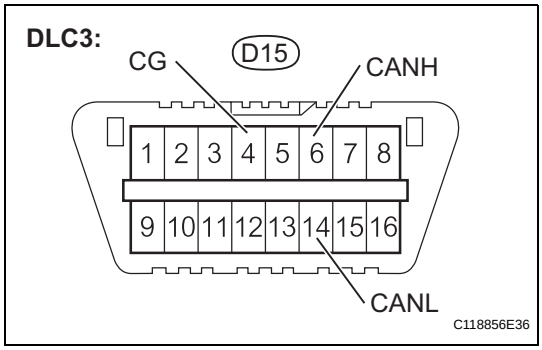

(c) Measure the resistance.
Result

Tester Connection	Condition	Specified Condition	Proceed to
D15-6 (CANH) - D15-4 (CG)	Ignition switch OFF	1 Ω or higher	OK
D15-14 (CANL) - D15-4 (CG)	Ignition switch OFF	1 Ω or higher	OK
D15-6 (CANH) - D15-4 (CG)	Ignition switch OFF	Below 1 Ω	NG
D15-14 (CANL) - D15-4 (CG)	Ignition switch OFF	Below 1 Ω	NG

OK → **Go to step 13**

NG

CA

4 CONNECT CONNECTOR

(a) Reconnect the P-CAN J/C connector.

NEXT

5 CHECK CAN BUS LINE FOR SHORT TO GND (D-CAN J/C - ECM)

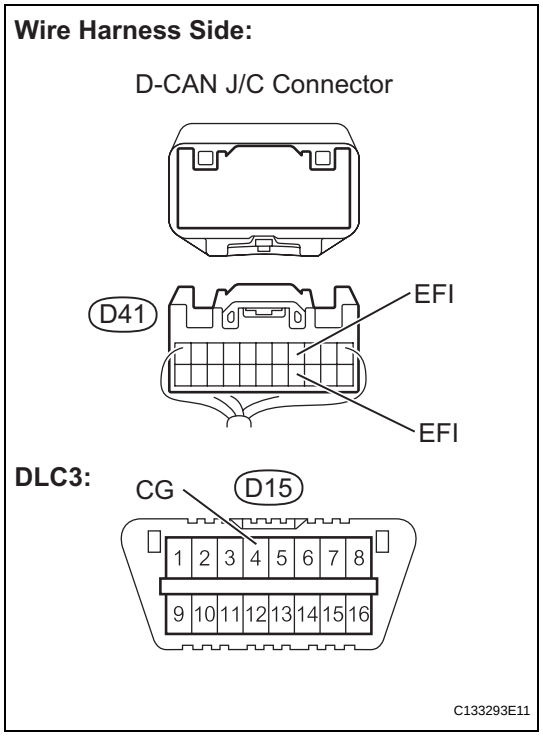

(a) Disconnect the D41 D-CAN J/C connector.
(b) Measure the resistance.
Result

Tester Connection	Condition	Specified Condition	Proceed to
D41-4 (EFI) - D15-4 (CG)	Ignition switch OFF	1 Ω or higher	OK
D41-15 (EFI) - D15-4 (CG)	Ignition switch OFF	1 Ω or higher	OK
D41-4 (EFI) - D15-4 (CG)	Ignition switch OFF	Below 1 Ω	NG
D41-15 (EFI) - D15-4 (CG)	Ignition switch OFF	Below 1 Ω	NG

NG → **Go to step 9**

OK

6 CHECK CAN BUS LINE FOR SHORT TO GND (D-CAN J/C - BRAKE ACTUATOR (SKID CONTROL ECU))

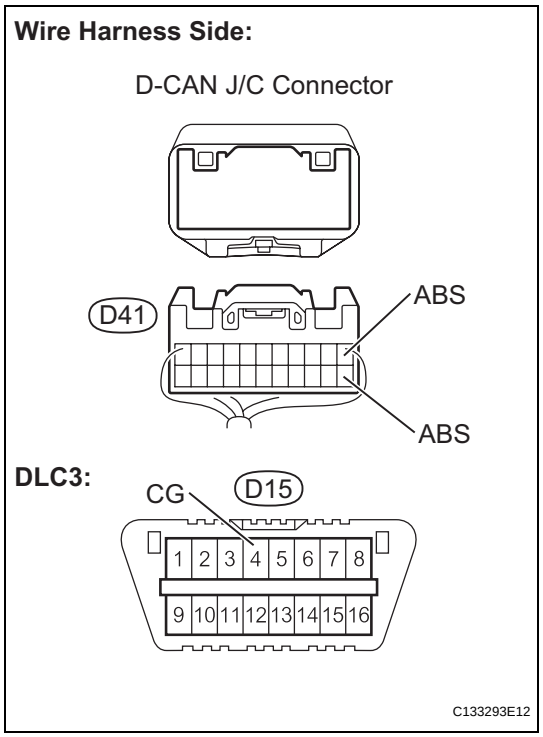

NOTICE:
For vehicles without ABS, go to step 7.

(a) Measure the resistance.
HINT:
The resistance must be measured after the D41 D-CAN J/C connector is disconnected.
Result

Tester Connection	Condition	Specified Condition	Proceed to
D41-1 (ABS) - D15-4 (CG)	Ignition switch OFF	1 Ω or higher	OK
D41-12 (ABS) - D15-4 (CG)	Ignition switch OFF	1 Ω or higher	OK
D41-1 (ABS) - D15-4 (CG)	Ignition switch OFF	Below 1 Ω	NG
D41-12 (ABS) - D15-4 (CG)	Ignition switch OFF	Below 1 Ω	NG

NG → **Go to step 10**

OK

7	CHECK CAN BUS LINE FOR SHORT TO GND (D-CAN J/C - AIR CONDITIONING AMPLIFIER)

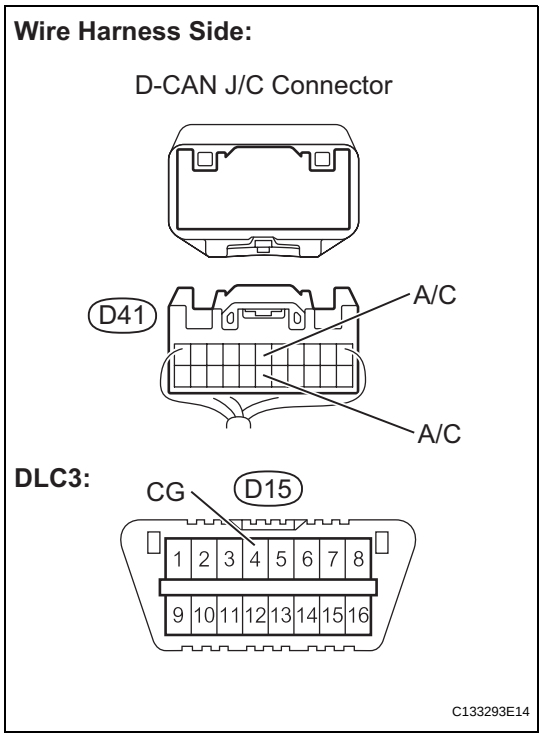

NOTICE:
For vehicles without air conditioning or PTC heater, go to step 8.

(a) Measure the resistance.
HINT:
The resistance must be measured after the D41 D-CAN J/C connector is disconnected.

Result

Tester Connection	Condition	Specified Condition	Proceed to
D41-6 (A/C) - D15-4 (CG)	Ignition switch OFF	1 Ω or higher	OK
D41-17 (A/C) - D15-4 (CG)	Ignition switch OFF	1 Ω or higher	OK
D41-6 (A/C) - D15-4 (CG)	Ignition switch OFF	Below 1 Ω	NG
D41-17 (A/C) - D15-4 (CG)	Ignition switch OFF	Below 1 Ω	NG

NG → **Go to step 11**

OK

CA

8 CHECK CAN BUS LINE FOR SHORT TO GND (D-CAN J/C - CENTER AIRBAG SENSOR ASSEMBLY)

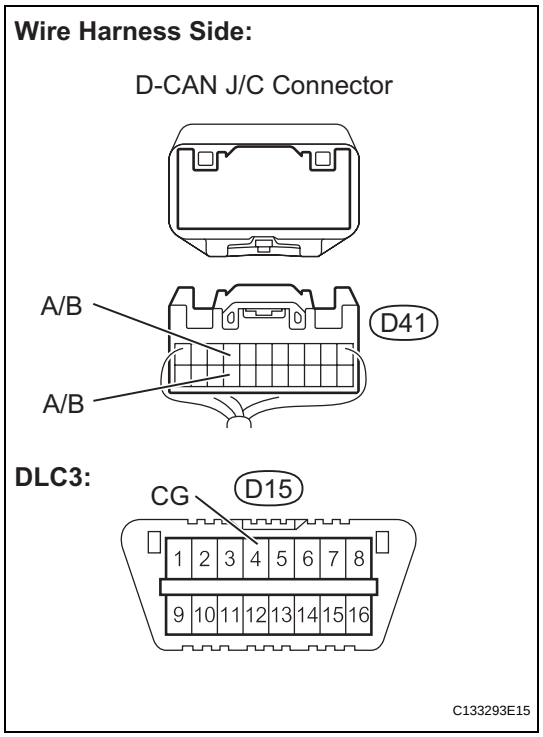

(a) Measure the resistance.
HINT:
The resistance must be measured after the D41 D-CAN J/C connector is disconnected.

Result

Tester Connection	Condition	Specified Condition	Proceed to
D41-8 (A/B) - D15-4 (CG)	Ignition switch OFF	1 Ω or higher	OK
D41-19 (A/B) - D15-4 (CG)	Ignition switch OFF	1 Ω or higher	OK
D41-8 (A/B) - D15-4 (CG)	Ignition switch OFF	Below 1 Ω	NG
D41-19 (A/B) - D15-4 (CG)	Ignition switch OFF	Below 1 Ω	NG

NG → **Go to step 12**

OK

REPAIR OR REPLACE CAN MAIN WIRE OR CONNECTOR (D-CAN J/ C - P-CAN J/C)

9 CHECK CAN BUS LINE FOR SHORT TO GND (ECM MAIN WIRE)

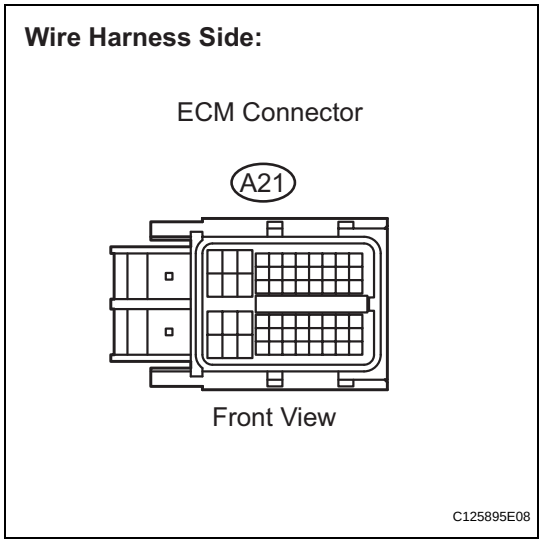

(a) Disconnect the A21 ECM connector.

CA

Wire Harness Side:

D-CAN J/C Connector

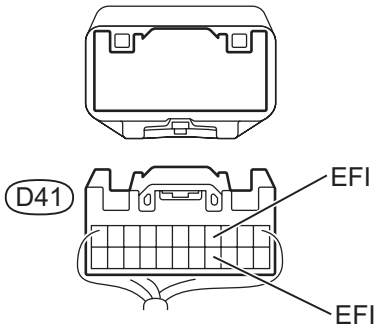

DLC3:

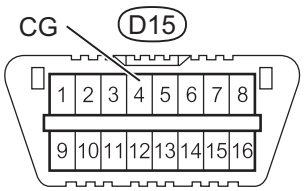

C133293E11

(b) Measure the resistance.
HINT:
The resistance must be measured after the D41 D-CAN J/C connector is disconnected.
Result

Tester Connection	Condition	Specified Condition	Proceed to
D41-4 (EFI) - D15-4 (CG)	Ignition switch OFF	1 Ω or higher	OK
D41-15 (EFI) - D15-4 (CG)	Ignition switch OFF	1 Ω or higher	OK
D41-4 (EFI) - D15-4 (CG)	Ignition switch OFF	Below 1 Ω	NG
D41-15 (EFI) - D15-4 (CG)	Ignition switch OFF	Below 1 Ω	NG

OK → **REPLACE ECM**

NG

REPAIR OR REPLACE CAN MAIN WIRE CONNECTED TO ECM (D-CAN J/C - ECM (CAN-H, CAN-L))

10 CHECK CAN BUS LINE FOR SHORT TO GND (BRAKE ACTUATOR (SKID CONTROL ECU) BRANCH WIRE)

Wire Harness Side:

Brake Actuator (Skid Control ECU) Connector

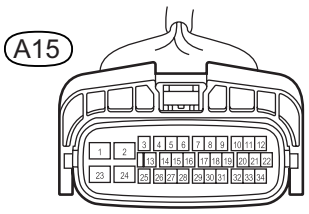

Front View

H

C118165E05

(a) Disconnect the A15 brake actuator (skid control ECU) connector.

CA

Wire Harness Side:

D-CAN J/C Connector

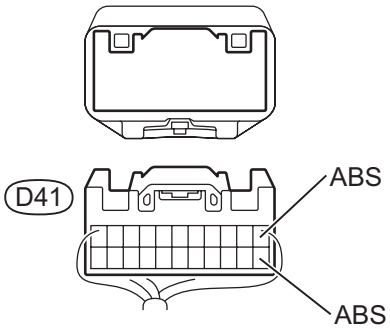

DLC3:

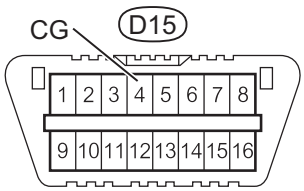

C133293E12

(b) Measure the resistance.
HINT:
The resistance must be measured after the D41 D-CAN J/C connector is disconnected.

Result

Tester Connection	Condition	Specified Condition	Proceed to
D41-1 (ABS) - D15-4 (CG)	Ignition switch OFF	1 Ω or higher	OK
D41-12 (ABS) - D15-4 (CG)	Ignition switch OFF	1 Ω or higher	OK
D41-1 (ABS) - D15-4 (CG)	Ignition switch OFF	Below 1 Ω	NG
D41-12 (ABS) - D15-4 (CG)	Ignition switch OFF	Below 1 Ω	NG

OK → **REPLACE BRAKE ACTUATOR (SKID CONTROL ECU)**

NG

REPAIR OR REPLACE CAN BRANCH WIRE CONNECTED TO BRAKE ACTUATOR (D-CAN J/C - BRAKE ACTUATOR (SKID CONTROL ECU) (CAN-H, CAN-L))

11 CHECK CAN BUS LINE FOR SHORT TO GND (AIR CONDITIONING AMPLIFIER)

Wire Harness Side:

Air Conditioning Amplifier Connector

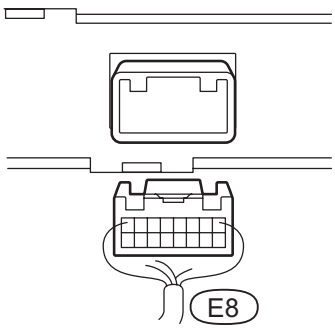

C131847E04

(a) Disconnect the E8 air conditioning amplifier connector.

CA

Wire Harness Side:

D-CAN J/C Connector

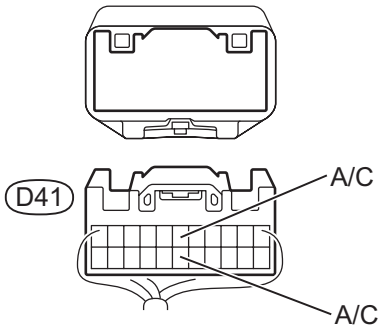

DLC3:

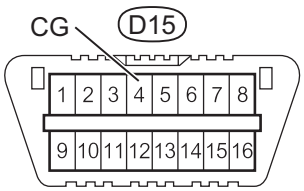

C133293E14

(b) Measure the resistance.
HINT:
The resistance must be measured after the D41 D-CAN J/C connector is disconnected.

Result

Tester Connection	Condition	Specified Condition	Proceed to
D41-6 (A/C) - D15-4 (CG)	Ignition switch OFF	1 Ω or higher	OK
D41-17 (A/C) - D15-4 (CG)	Ignition switch OFF	1 Ω or higher	OK
D41-6 (A/C) - D15-4 (CG)	Ignition switch OFF	Below 1 Ω	NG
D41-17 (A/C) - D15-4 (CG)	Ignition switch OFF	Below 1 Ω	NG

OK → **REPLACE AIR CONDITIONING AMPLIFIER**

NG

REPAIR OR REPLACE CAN BRANCH WIRE CONNECTED TO AIR CONDITIONING AMPLIFIER (D-CAN J/C - AIR CONDITIONING AMPLIFIER (CAN-H, CAN-L))

12 CHECK CAN BUS LINE FOR SHORT TO GND (CENTER AIRBAG SENSOR ASSEMBLY BRANCH WIRE)

Wire Harness Side:

Center Airbag Sensor Assembly Connector

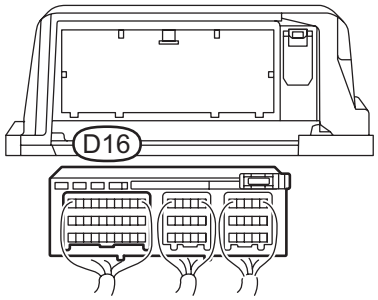

C131069E01

(a) Disconnect the D16 center airbag sensor assembly connector.

CA

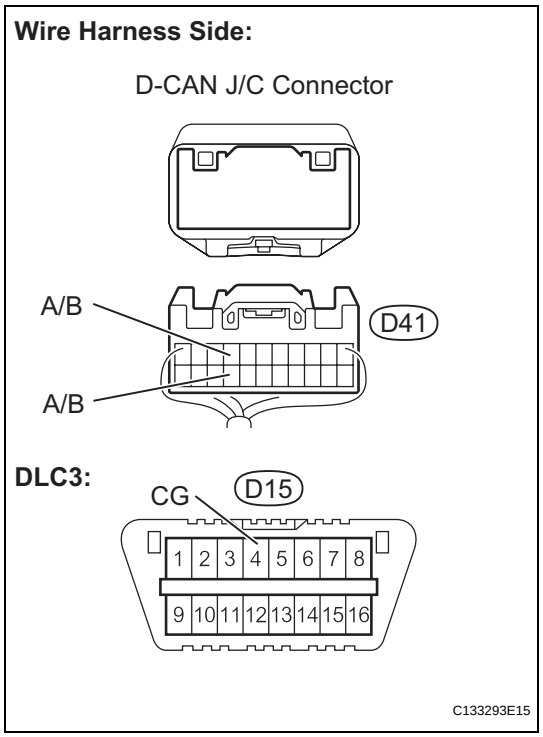

(b) Measure the resistance.
HINT:
The resistance must be measured after the D41 D-CAN J/C connector is disconnected.
Result

Tester Connection	Condition	Specified Condition	Proceed to
D41-8 (A/B) - D15-4 (CG)	Ignition switch OFF	1 Ω or higher	OK
D41-19 (A/B) - D15-4 (CG)	Ignition switch OFF	1 Ω or higher	OK
D41-8 (A/B) - D15-4 (CG)	Ignition switch OFF	Below 1 Ω	NG
D41-19 (A/B) - D15-4 (CG)	Ignition switch OFF	Below 1 Ω	NG

OK → **REPLACE CENTER AIRBAG SENSOR ASSEMBLY**

NG

REPAIR OR REPLACE CAN BRANCH WIRE CONNECTED TO CENTER AIRBAG SENSOR ASSEMBLY (D-CAN J/C - CENTER AIRBAG SENSOR ASSEMBLY (CAN-H, CAN-L))

13 CHECK CAN BUS LINE FOR SHORT TO GND (P-CAN J/C - POWER STEERING ECU)

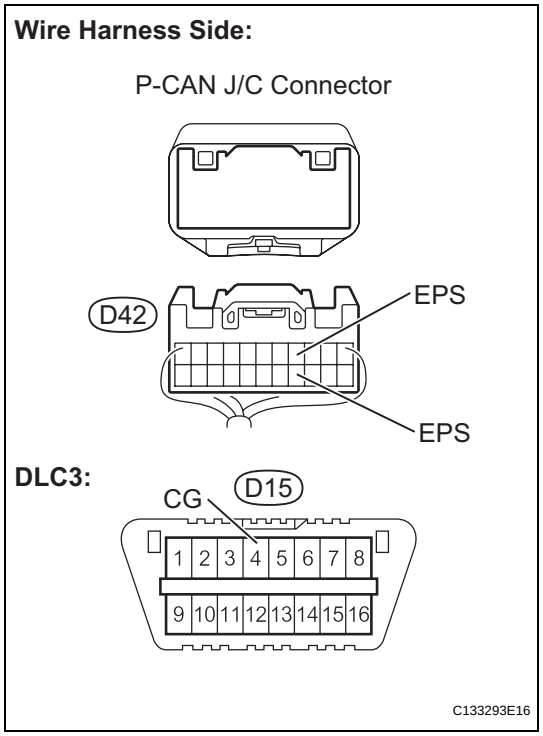

(a) Measure the resistance.
HINT:
The resistance must be measured after the D42 P-CAN J/C connector is disconnected.
Result

Tester Connection	Condition	Specified Condition	Proceed to
D42-4 (EPS) - D15-4 (CG)	Ignition switch OFF	1 Ω or higher	OK
D42-15 (EPS) - D15-4 (CG)	Ignition switch OFF	1 Ω or higher	OK
D42-4 (EPS) - D15-4 (CG)	Ignition switch OFF	Below 1 Ω	NG
D42-15 (EPS) - D15-4 (CG)	Ignition switch OFF	Below 1 Ω	NG

NG → **Go to step 16**

CA

OK

14 CHECK CAN BUS LINE FOR SHORT TO GND (P-CAN J/C - MAIN BODY ECU)

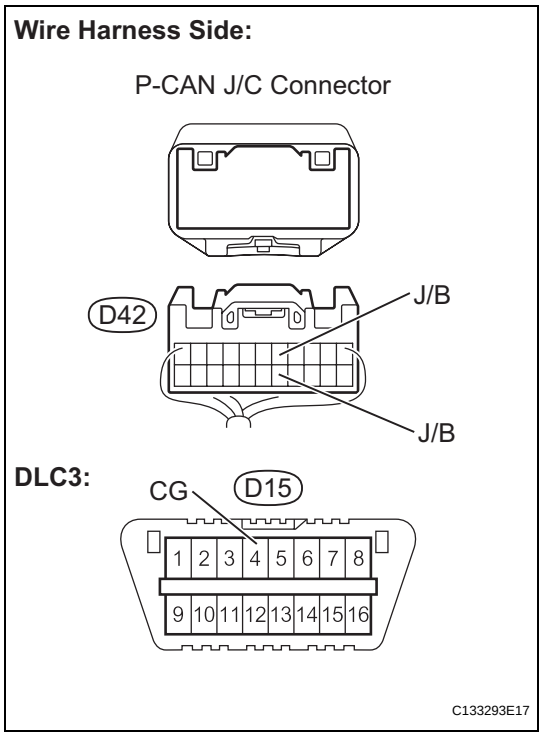

(a) Measure the resistance.
HINT:
The resistance must be measured after the D42 P-CAN J/C connector is disconnected.
Result

Tester Connection	Condition	Specified Condition	Proceed to
D42-5 (J/B) - D15-4 (CG)	Ignition switch OFF	1 Ω or higher	OK
D41-16 (J/B) - D15-4 (CG)	Ignition switch OFF	1 Ω or higher	OK
D42-5 (J/B) - D15-4 (CG)	Ignition switch OFF	Below 1 Ω	NG
D41-16 (J/B) - D15-4 (CG)	Ignition switch OFF	Below 1 Ω	NG

NG → **Go to step 17**

OK

15 CHECK CAN BUS LINE FOR SHORT TO GND (P-CAN J/C - COMBINATION METER ECU)

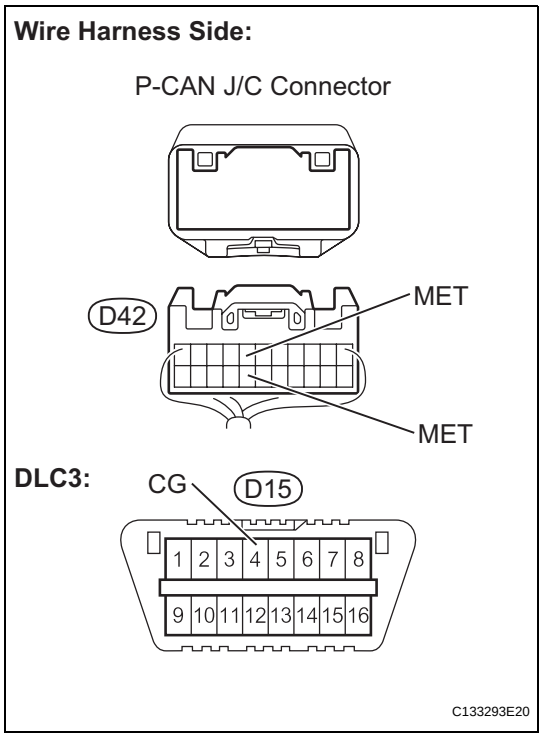

(a) Measure the resistance.
HINT:
The resistance must be measured after the D42 P-CAN J/C connector is disconnected.
Result

Tester Connection	Condition	Specified Condition	Proceed to
D42-7 (MET) - D15-4 (CG)	Ignition switch OFF	1 Ω or higher	OK
D41-18 (MET) - D15-4 (CG)	Ignition switch OFF	1 Ω or higher	OK
D42-7 (MET) - D15-4 (CG)	Ignition switch OFF	Below 1 Ω	NG
D41-18 (MET) - D15-4 (CG)	Ignition switch OFF	Below 1 Ω	NG

NG → **Go to step 18**

OK

REPAIR OR REPLACE CAN MAIN WIRE OR CONNECTOR (D-CAN J/C - P-CAN J/C (CAN-H, CAN-L))

16	CHECK CAN BUS LINE FOR SHORT TO GND (POWER STEERING ECU MAIN WIRE)

Wire Harness Side:

Power Steering ECU Connector

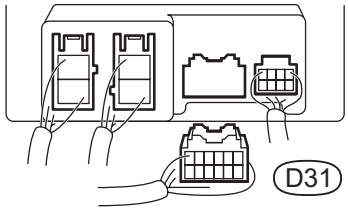

G100242E11

(a) Disconnect the D31 power steering ECU connector.

Wire Harness Side:

P-CAN J/C Connector

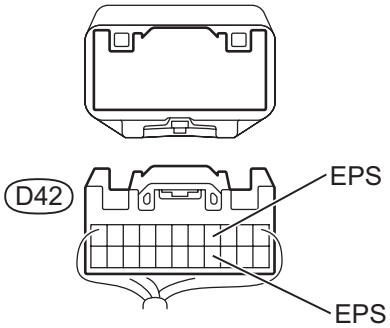

DLC3:

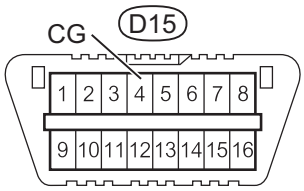

C133293E16

(b) Measure the resistance.
HINT:
The resistance must be measured after the D42 P-CAN J/C connector is disconnected.

Result

Tester Connection	Condition	Specified Condition	Proceed to
D42-4 (EPS) - D15-4 (CG)	Ignition switch OFF	1 Ω or higher	OK
D42-15 (EPS) - D15-4 (CG)	Ignition switch OFF	1 Ω or higher	OK
D42-4 (EPS) - D15-4 (CG)	Ignition switch OFF	Below 1 Ω	NG
D42-15 (EPS) - D15-4 (CG)	Ignition switch OFF	Below 1 Ω	NG

OK → **REPLACE POWER STEERING ECU**

NG

REPAIR OR REPLACE CAN MAIN WIRE CONNECTED TO POWER STEERING ECU (P-CAN J/C - POWER STEERING ECU (CAN-H, CAN-L))

17	CHECK CAN BUS LINE FOR SHORT TO GND (MAIN BODY ECU BRANCH WIRE)

Wire Harness Side:

Main Body ECU Connector

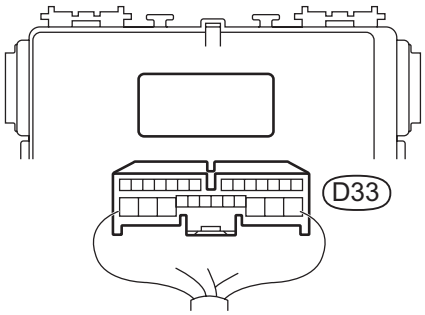

C131840E02

(a) Disconnect the D33 main body ECU connector.

Wire Harness Side:

P-CAN J/C Connector

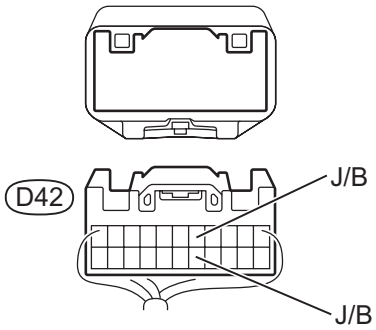

DLC3:

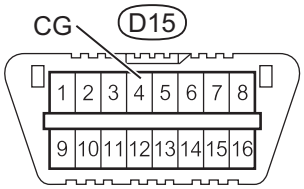

C133293E17

(b) Measure the resistance.
HINT:
The resistance must be measured after the D42 P-CAN J/C connector is disconnected.

Result

Tester Connection	Condition	Specified Condition	Proceed to
D42-5 (J/B) - D15-4 (CG)	Ignition switch OFF	1 Ω or higher	OK
D41-16 (J/B) - D15-4 (CG)	Ignition switch OFF	1 Ω or higher	OK
D42-5 (J/B) - D15-4 (CG)	Ignition switch OFF	Below 1 Ω	NG
D41-16 (J/B) - D15-4 (CG)	Ignition switch OFF	Below 1 Ω	NG

OK → **REPLACE MAIN BODY ECU**

CA

NG

REPAIR OR REPLACE CAN BRANCH WIRE CONNECTED TO MAIN BODY ECU (P-CAN J/C - MAIN BODY ECU (CAN-H, CAN-L))

18	CHECK CAN BUS LINE FOR SHORT TO GND (COMBINATION METER ECU BRANCH WIRE)

Wire Harness Side:

Combination Meter ECU Connector

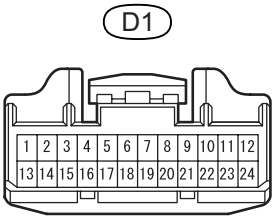

Front View

C139156E04

(a) Disconnect the D1 combination meter ECU connector.

Wire Harness Side:

P-CAN J/C Connector

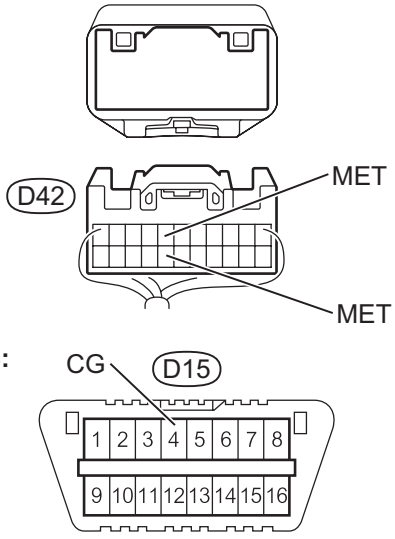

C133293E20

(b) Measure the resistance.
HINT:
The resistance must be measured after the D42 P-CAN J/C connector is disconnected.

Result

Tester Connection	Condition	Specified Condition	Proceed to
D42-7 (MET) - D15-4 (CG)	Ignition switch OFF	1 Ω or higher	OK
D41-18 (MET) - D15-4 (CG)	Ignition switch OFF	1 Ω or higher	OK
D42-7 (MET) - D15-4 (CG)	Ignition switch OFF	Below 1 Ω	NG
D41-18 (MET) - D15-4 (CG)	Ignition switch OFF	Below 1 Ω	NG

OK → **REPLACE COMBINATION METER ECU**

NG

REPAIR OR REPLACE CAN BRANCH WIRE CONNECTED TO COMBINATION METER ECU (P-CAN J/C - COMBINATION METER ECU (CAN-H, CAN-L))

Open in One Side of CAN Branch Line

DESCRIPTION

If 2 or more ECUs and/or sensors do not appear on the intelligent tester "BUS CHECK" screen via the CAN VIM, one side of the CAN branch wire may be open. (one side of the CAN-H [branch wire] / CANL [branch wire] of the ECU and/or sensor is open.)

Symptom	Trouble Area
2 or more ECUs and/or sensors do not appear on intelligent tester "BUS CHECK" screen via the CAN VIM.	• Open in one side of CAN branch wire • Brake actuator (Skid control ECU)*1 • Power steering ECU • ECM • Center airbag sensor assembly • Air conditioning amplifier ECU*2 • Combination meter ECU • Main body ECU • D-CAN J/C (Junction connector) • P-CAN J/C (Junction connector)

HINT:
- *1: w/ ABS
- *2: w/ Air conditioning or PTC heater

WIRING DIAGRAM

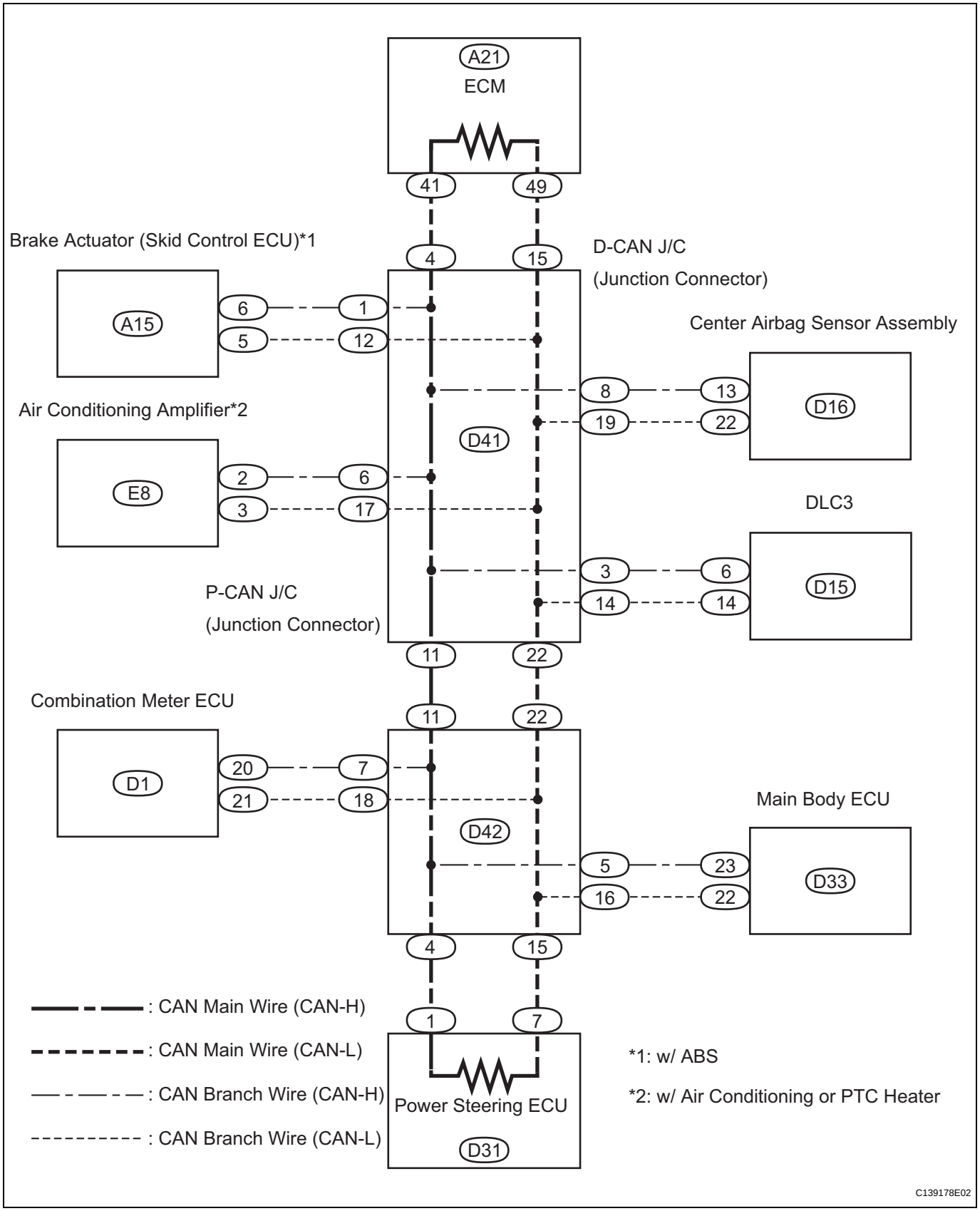

CA

INSPECTION PROCEDURE

NOTICE:

- **Turn the ignition switch OFF before measuring the resistances of the CAN main wire and the CAN branch wire.**
- **After the ignition switch is turned off, check that the key reminder warning system and light reminder warning system are not in operation.**
- **Before measuring the resistance, leave the vehicle as is for at least 1 minute and do not operate the ignition switch, any other switches or the doors. If doors need to be opened in order to check connectors, open the doors and leave them open.**
  HINT:
  Operating the ignition switch, any switches or any doors triggers related ECU and sensor communication with the CAN, which causes resistance variation.

HINT:

- Perform the following inspection for the ECUs (sensors) which are not displayed on the intelligent tester. If malfunction cannot be identified, then perform the following inspections for the ECUs (sensors) connected to CAN communication.
- Do not remove the power steering ECU and ECM, as they are the end parts of the circuit. If removed, CAN communication will not be possible.
- The open circuit confirmation of the power steering ECU, ECM and main wire is performed in the CHECK CAN BUS LINE procedure of HOW TO PROCEED WITH TROUBLESHOOTING. This inspection only has procedures for checking for an open circuit on one side of the CAN branch wire.

1	CHECK OPEN IN ONE SIDE OF CAN BRANCH WIRE (BRAKE ACTUATOR (SKID CONTROL ECU))

Wire Harness Side:

Brake Actuator (Skid Control ECU) Connector

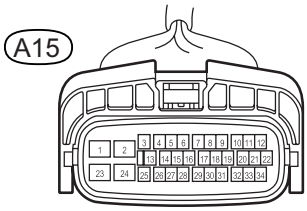

H

C118165E05

NOTICE:
For vehicles without ABS, go to step 3.

(a) Disconnect the A15 brake actuator (skid control ECU) connector.

(b) Select "BUS CHECK" on the intelligent tester via the CAN VIM (See page CA-22).
Result

Result	Proceed to
"ABS/VSC/TRAC" not displayed on intelligent tester.	A
Several ECUs and sensors other than "ABS/VSC/TRAC" not displayed on intelligent tester.	B

B → **Go to step 3**

A

CA

2 CHECK OPEN IN ONE SIDE OF CAN BRANCH WIRE (BRAKE ACTUATOR (SKID CONTROL ECU) BRANCH WIRE)

Wire Harness Side:

Brake Actuator (Skid Control ECU) Connector

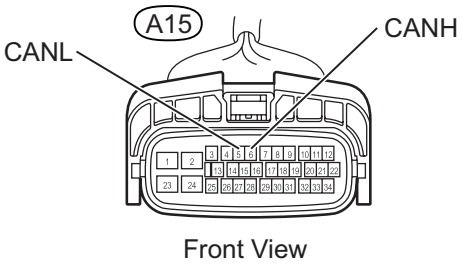

(a) Measure the resistance.
HINT:
The resistance must be measured after the A15 brake actuator (skid control ECU) connector is disconnected.
Standard resistance

Tester Connection	Condition	Specified Condition
A15-6 (CANH) - A15-5 (CANL)	Ignition switch OFF	54 to 69 Ω

NG → **REPAIR OR REPLACE CAN BRANCH WIRE CONNECTED TO BRAKE ACTUATOR (SKID CONTROL ECU) (CAN-H, CAN-L)**

OK

REPLACE BRAKE ACTUATOR (SKID CONTROL ECU)

3 CHECK OPEN IN ONE SIDE OF CAN BRANCH WIRE (AIR CONDITIONING AMPLIFIER)

Wire Harness Side:

Air Conditioning Amplifier Connector

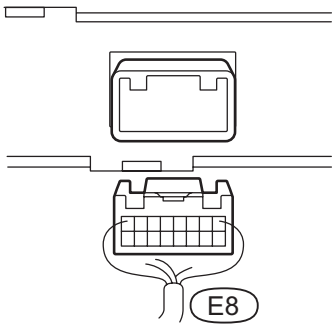

NOTICE:
For vehicles without air conditioning or PTC heater, go to step 5.

(a) Disconnect the E8 air conditioning amplifier connector.
(b) Select "BUS CHECK" on the intelligent tester via the CAN VIM (See page CA-22).
Result

Result	Proceed to
"A/C" not displayed on intelligent tester.	A
Several ECUs and sensors other than "A/C" not displayed on intelligent tester.	B

B → **Go to step 5**

A

CA

4 CHECK OPEN IN ONE SIDE OF CAN BRANCH WIRE (AIR CONDITIONING AMPLIFIER BRANCH WIRE)

Wire Harness Side:

Air Conditioning Amplifier Connector

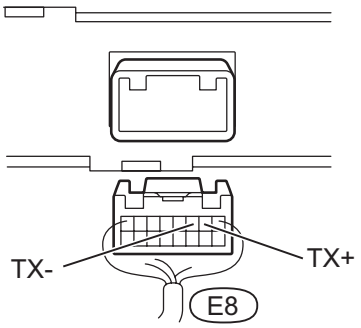

C131847E01

(a) Measure the resistance.
HINT:
The resistance must be measured after the E8 air conditioning amplifier connector is disconnected.
Standard resistance

Tester Connection	Condition	Specified Condition
E8-2 (TX+) - E8-3 (TX-)	Ignition switch OFF	54 to 69 Ω

NG → **REPAIR OR REPLACE CAN BRANCH WIRE CONNECTED TO AIR CONDITIONING AMPLIFIER (CAN-H, CAN-L)**

OK

REPLACE AIR CONDITIONING AMPLIFIER

5 CHECK OPEN IN ONE SIDE OF CAN BRANCH WIRE (CENTER AIRBAG SENSOR ASSEMBLY)

Wire Harness Side:

Center Airbag Sensor Assembly Connector

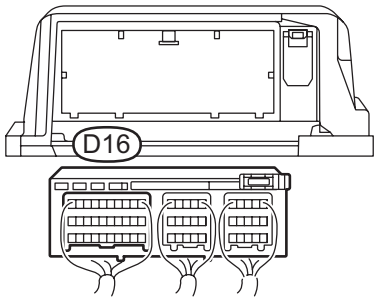

C131069E01

(a) Disconnect the D16 center airbag sensor assembly connector.
(b) Select "BUS CHECK" on the intelligent tester via the CAN VIM (See page CA-22).
Result

Result	Proceed to
"SRS AIRBAG" not displayed on intelligent tester.	A
Several ECUs and sensors other than "SRS AIRBAG" not displayed on intelligent tester.	B

B → **Go to step 7**

A

CA

6 CHECK OPEN IN ONE SIDE OF CAN BRANCH WIRE (CENTER AIRBAG SENSOR ASSEMBLY BRANCH WIRE)

Wire Harness Side:

Center Airbag Sensor Assembly Connector

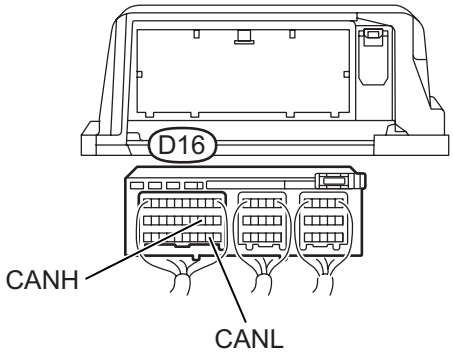

C131069E06

(a) Measure the resistance.
HINT:
The resistance must be measured after the D16 center airbag sensor assembly connector is disconnected.
Standard resistance

Tester Connection	Condition	Specified Condition
D16-13 (CANH) - D16-22 (CANL)	Ignition switch OFF	54 to 69 Ω

NG → **REPAIR OR REPLACE CAN BRANCH WIRE CONNECTED TO CENTER AIRBAG SENSOR ASSEMBLY (CAN-H, CAN-L)**

OK

REPLACE CENTER AIRBAG SENSOR ASSEMBLY

7 CHECK OPEN IN ONE SIDE OF CAN BRANCH WIRE (MAIN BODY ECU)

Wire Harness Side:

Main Body ECU Connector

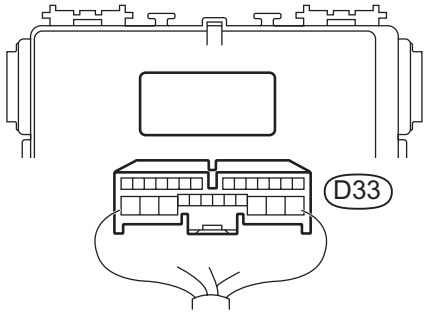

C131840E02

(a) Disconnect the D33 main body ECU connector.
(b) Select "BUS CHECK" on the intelligent tester via the CAN VIM (See page CA-22).
Result

Result	Proceed to
"MAIN BODY" not displayed on intelligent tester.	A
Several ECUs and sensors other than "MAIN BODY" not displayed on intelligent tester.	B

B → **Go to step 9**

A

CA

8 CHECK OPEN IN ONE SIDE OF CAN BRANCH WIRE (MAIN BODY ECU BRANCH WIRE)

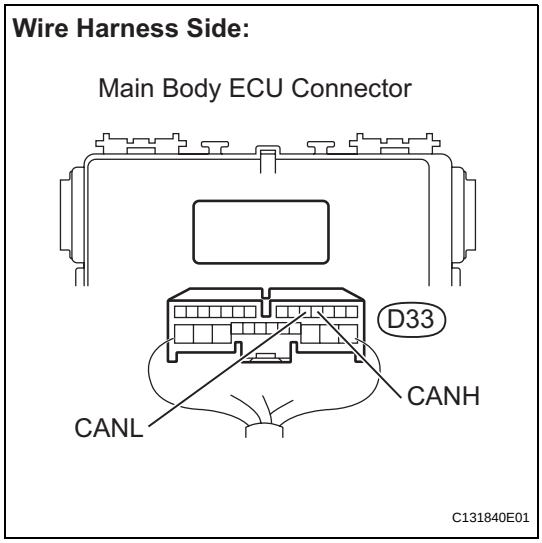

(a) Measure the resistance.
HINT:
The resistance must be measured after the D33 main body ECU connector is disconnected.
Standard resistance

Tester Connection	Condition	Specified Condition
D33-23 (CANH) - D33-22 (CANL)	Ignition switch OFF	54 to 69 Ω

NG → **REPAIR OR REPLACE CAN BRANCH WIRE CONNECTED TO MAIN BODY ECU (CAN-H, CAN-L)**

OK

REPLACE MAIN BODY ECU

9 CHECK OPEN IN ONE SIDE OF CAN BRANCH WIRE (COMBINATION METER ECU)

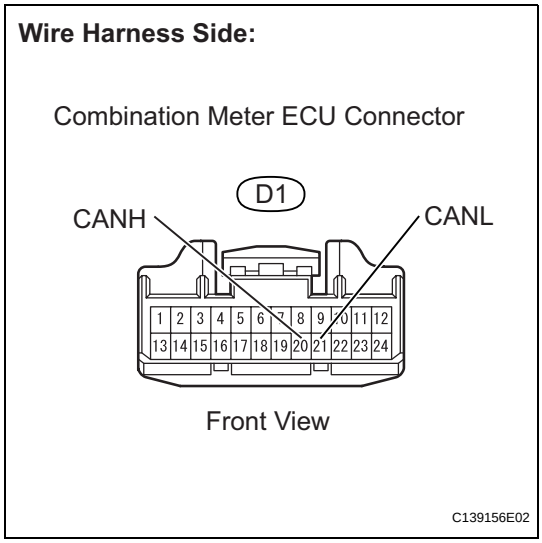

(a) Disconnect the D1 combination meter ECU connector.
(b) Measure the resistance.
Standard resistance

Tester Connection	Condition	Specified Condition
D1-20 (CANH) - D1-20 (CANL)	Ignition switch OFF	54 to 69 Ω

NG → **REPAIR OR REPLACE CAN BRANCH WIRE CONNECTED TO COMBINATION METER ECU (CAN-H, CAN-L)**

OK

REPLACE COMBINATION METER ECU