Driving Position Memory System (DPMS)

Component Location Index

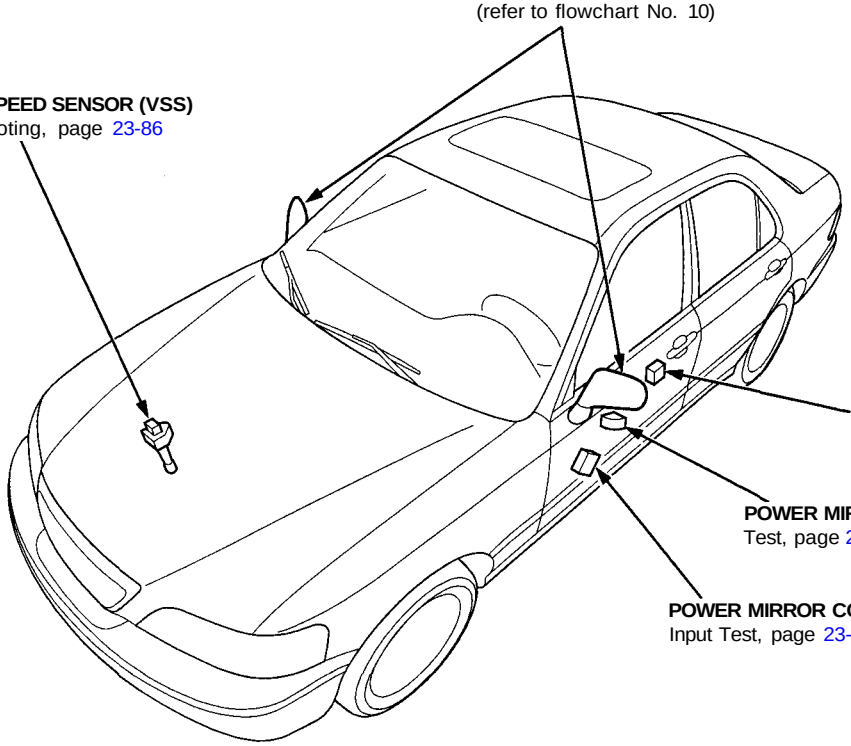

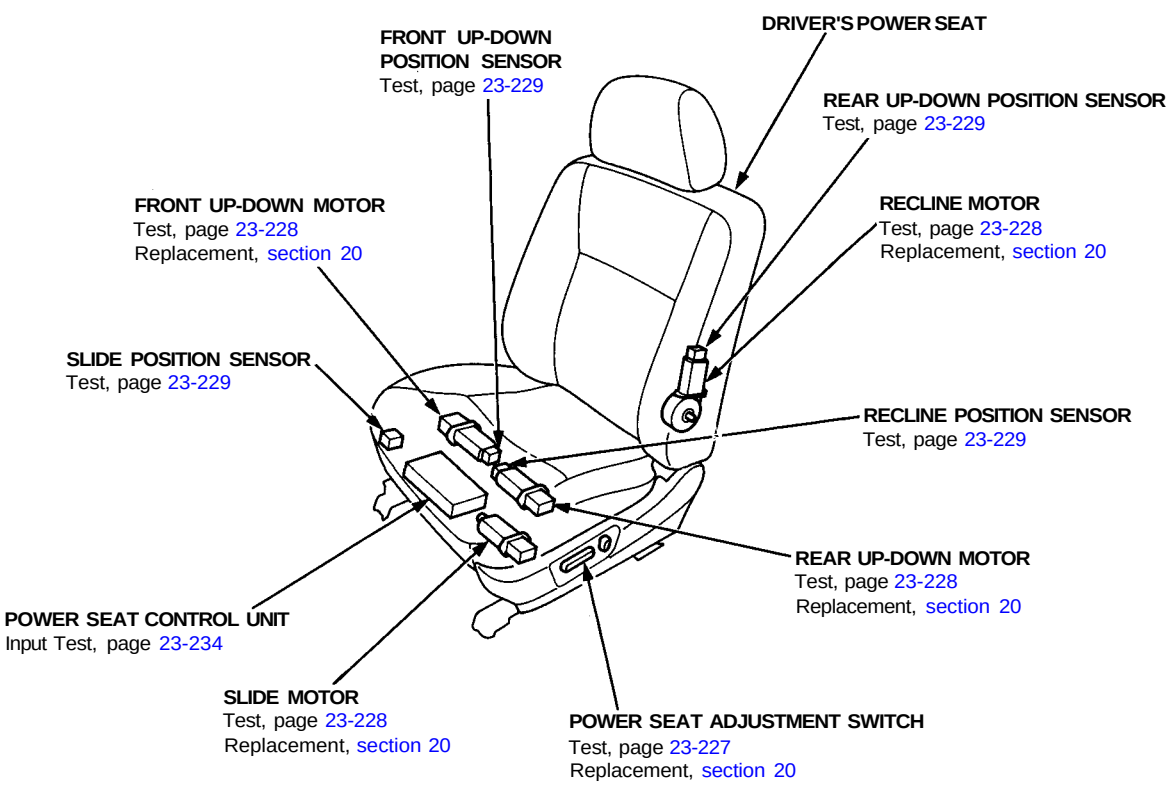

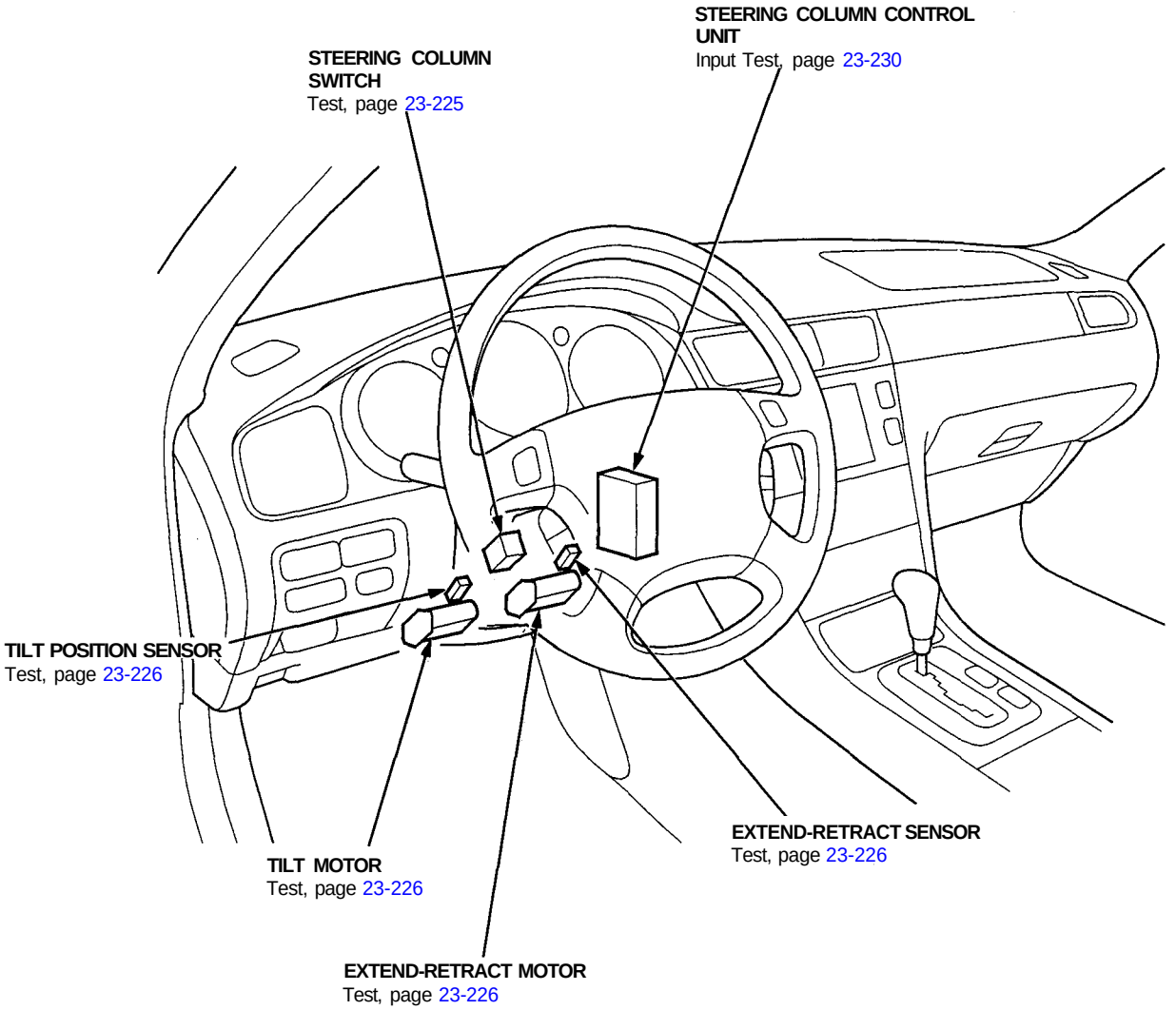
STEERING COLUMN CONTROL UNIT
Input Test, page 23-230
STEERING COLUMN SWITCH
Test, page 23-225
TILT POSITION SENSOR
Test, page 23-226
TILT MOTOR
Test, page 23-226
EXTEND-RETRACT MOTOR
Test, page 23-226
EXTEND-RETRACT SENSOR
Test, page 23-226