Rear Bumper

Removal

CAUTION: Put on gloves to protect your hands.

NOTE:
- An assistant is helpful when removing and installing the rear bumper.
- Take care not to scratch the rear bumper and body.
- To remove the rear bumper beam, remove the rear trim panel and trunk side trim (see page 20-44).
- '96 - 98 models: When reinstalling the rear bumper molding, replace the adhesive tape.
- '96 - 98 models: Before reinstalling the rear bumper molding, clean the rear bumper bonding surface with a sponge dampened in alcohol.

Adhesive tape
Thickness: 1.2 mm (0.05 in.)
Width: 6 mm (0.24 in.)

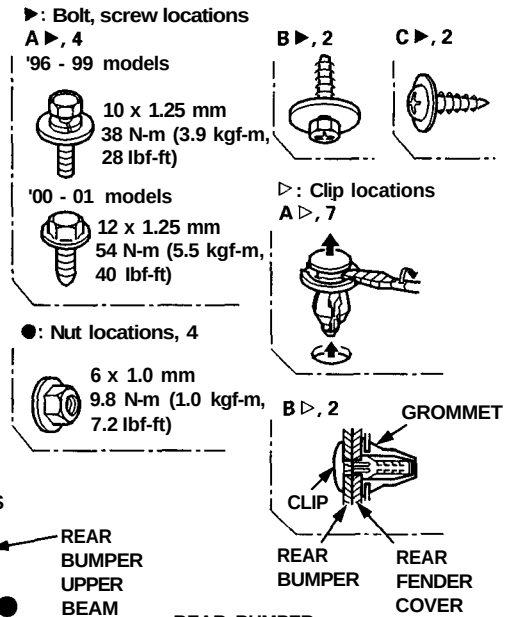

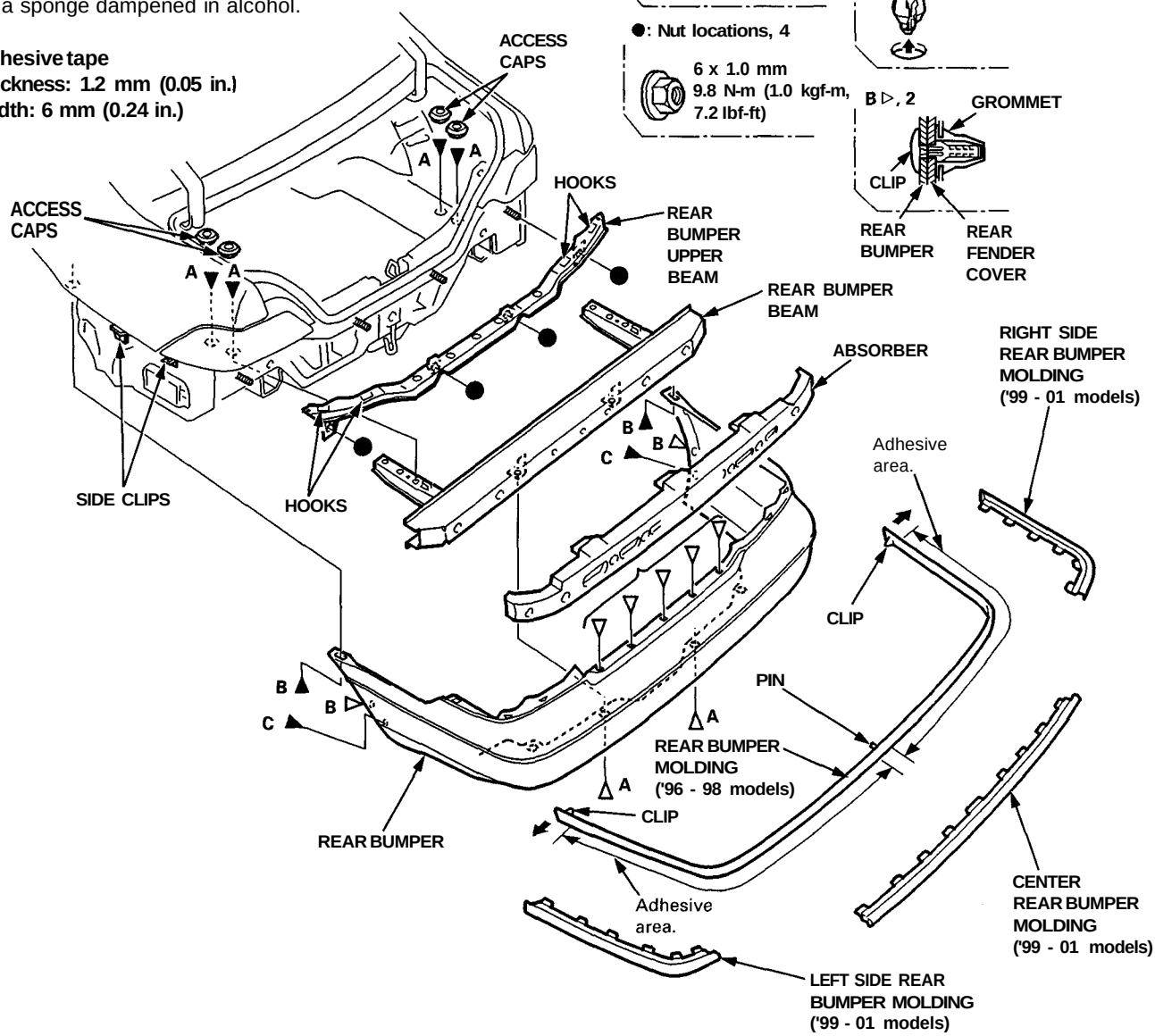

Installation is the reverse of the removal procedure.

NOTE: If necessary, replace any damaged clips.