FIAT ULYSSE

OWNER HANDBOOK

Dear Customer,

Thank you for selecting Fiat and congratulations on your choice of a Ulysse.
We have written this booklet to help you get to know all your new Ulysse's features and use it in the best possible way.
You should read it right through before taking to the road for the first time.
You will find information, tips and important warnings regarding the driving of the vehicle to help you derive the maximum from your Ulysse's technological features. You will also find very valuable tips for your own safety, the car's weelbeing and about how to protect the environment.

The Warranty Booklet lists the services that Fiat offers its Customers:
• the Warranty Certificate, with terms and conditions for maintaining its validity
• the range of additional services available to Fiat Customers.

Best regards and good motoring!

This Owner Handbook describes all the Fiat Ulysse versions. As a consequence, you should consider only the information which is related to the engine and bodywork version of the car you purchased.

MUST BE READ!

REFUELLING

JTD engines: only refuel with diesel fuel conforming to the European specification EN590.

The use of other products or mixtures may irreparably damage the engine with invalidation of the warranty due to the damage caused.

ENGINE START-UP

JTD engines: make sure the handbrake is pulled up; put the gear lever into neutral; press the clutch pedal down to the floor without touching the accelerator; then turn the ignition key to **M** and wait for the instrument panel warning light to go out, then turn the ignition key to **D** and release it as soon as the engine starts.

JTD enegines with automatic gearbox: make sure the handbrake is pulled up and the gear lever is in **P** or **N**; then turn the ignition key to **M** and wait for the instrument panel warning light to go out, then turn the key to **D**, without touching the accelerator and release it as soon as the engine starts.

PARKING OVER INFLAMMABLE MATERIAL

When functioning normally, the catalytic converter reaches high temperatures. For this reason do not park the vehicle over inflammable material, grass, dry leaves, pine needles, etc.: fire hazard.

PROTECTING THE ENVIRONMENT

A system for continuosly monitoring emission system components to ensure greater environmental protection is fitted in your car.

ELECTRICAL ACCESSORIES

If, after buying the car, you decide to add electrical accessories (that will gradually drain the battery), visit a **Fiat Dealership**. They can calculate the overall electrical requirement and check that the car's electric system can support the required load.

CODE CARD

Keep the code card in a safe place, not in the car. You should always keep the electronic code written on the CODE card with you in case you need to carry out an emergency start-up procedure.

SCHEDULED SERVICING

Correct maintenance of the car is essential for ensuring it stays in tip-top condition and safeguards its safety features, its environmental friendliness and low running costs for a long time to come.

THE OWNER HANDBOOK CONTAINS...

...information, tips and important warnings regarding the safe, correct driving of your car, and its maintenance. Pay particular attention to the symbols ⚠ (personal safety) ⚠ (environmental protection) ⚠ (the car's wellbeing).

WELCOME ABOARD Fiat Ulysse

Fiat Ulysse is a compact saloon with an original bodyline, designed to offer great driving satisfaction, ensure safety and be as friendly as possible to the environment.

Everything, from its new engines to its safety devices, from its improved comfort for driver and passengers alike to its practical solutions, contributes to make you appreciate your Fiat Ulysse's personality.

And you will realise it later when you discover that its driving style and performance goes hand in hand with new manufacturing processes that help cut running costs.

The Fiat Ulysse, for example, no longer needs to be taken in for its first servicing after the traditional 1,500 km... but after 30,000 km.

THE SIGNS TO HELP YOU DRIVE CORRECTLY

The signs you see on this page are very important. They highlight those parts of the handbook where, more than anywhere else, you should stop for a minute and read carefully.

As you can see, each sign has a different symbol to make it immediately clear and easy to identify the subjects in the different areas:

Personal safety.
Important. Total or partial failure to follow these instructions can place driver, passengers or others in serious danger.

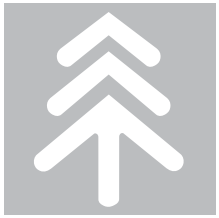

Environmental protection.
This shows you the correct procedures to follow to ensure the vehicle will not harm the environment.

The car's wellbeing.
Important. Total or partial failure to follow these instructions will result in the risk of serious damage to the car and may invalidate the warranty as well.

SYMBOLS

Special coloured labels have been attached near or actually on some of the components of your Ulysse. These labels bear symbols that remind you of the precautions to be taken as regards that particular component.

A list of the symbols to be found on your Ulysse is given below, with the name of the component to which it relates at the side of it.

These symbols are divided into the following four categories: danger, prohibition, warning, obligation.

DANGER SYMBOLS

Battery

Corrosive fluid.

Battery

Explosion.

Fan

May cut in automatically when the engine is off.

Expansion tank

Do not remove the cap when the coolant is boiling.

Front headlights

Danger - Electric shocks.

Belts and pulleys

Moving parts; keep parts of the body and clothes away.

Climate control system tubing

Do not open. Gas under high pressure.

Coil

High voltage.

PROHIBITION SYMBOLS

Battery

Keep away from open flames.

Battery

Keep away from children.

Heat shields - belts - pulleys - fan

Do not touch.

WARNING SYMBOLS

Catalytic converter

Do not park over inflammable materials. See chapter: “Protecting the emission control devices”.

Power steering

Do not exceed the maximum fluid level in the reservoir. Use only the fluid specified in section “Capacities”.

Brake circuit

Do not exceed the maximum fluid level in the reservoir. Use only the fluid specified in the section “Capacities”.

Windscreen wiper

Only use fluid of the type specified in section “Capacities”.

Engine

Use only the oil specified in section “Capacities”.

OBLIGATION SYMBOLS

Diesel vehicle

Use diesel fuel only.

Battery

Protect your eyes.

Expansion tank

Use only fluid of the type specified in section "Capacities".

Battery
Jack

See the Owner handbook.

DASHBOARD fig. I

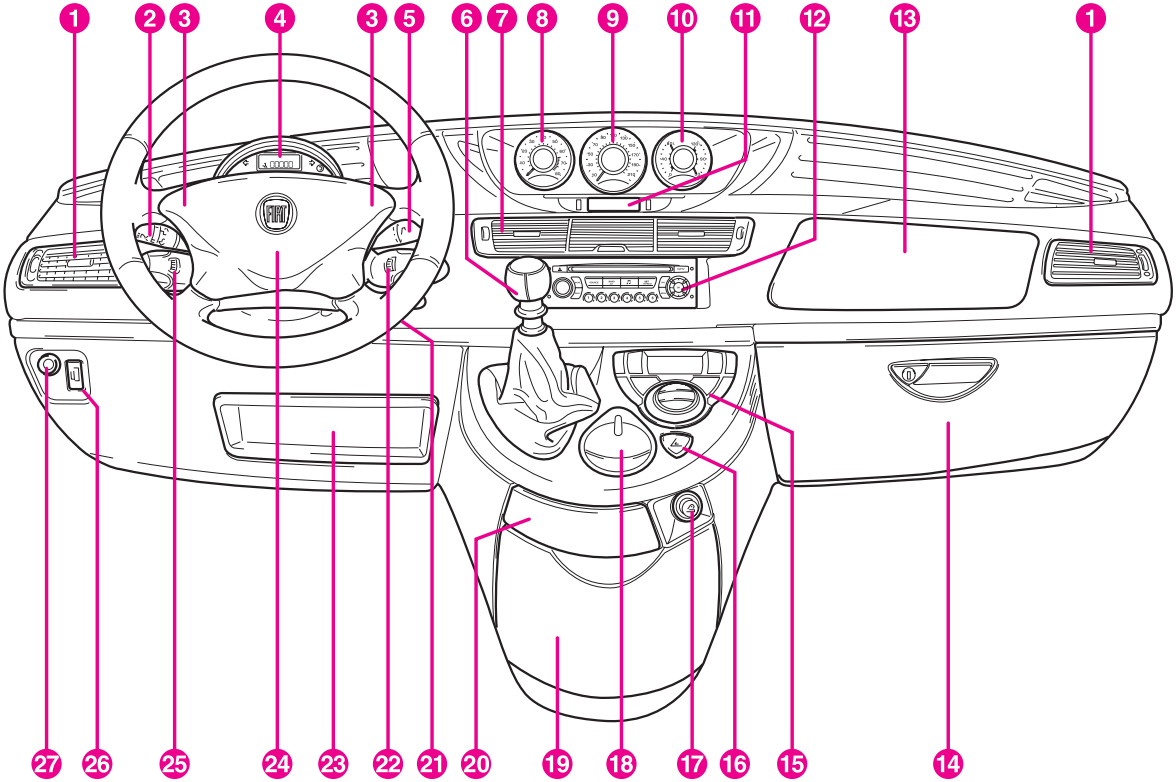

fig. I

1. Side vents
2. Left-hand stalk: headlight control
3. Horn
4. Instrument panel: odometer display and warning lights
5. Right-hand stalk, windscreen washer, rear window washer and trip computer
6. Gear lever
7. Central vents
8. Revolution counter
9. Speedometer
10. Fuel gauge with low fuel warning light and engine coolant temperature gauge with warning light showing when the temperature is too high
11. Sound system/Infotelematic Connect system display (where fitted)
12. Sound system/Infotelematic Connect system (where fitted)
13. Passenger air bag
14. Glove compartment
15. Climate system automatic controls
16. Hazard lights
17. Cigar lighter
18. Glove compartment/Infotelematic Connect system remote controls (where fitted)
19. Console
20. Ashtray and glove compartment
21. Ignition switch
22. Sound system controls on steering wheel
23. Document compartment
24. Driver air bag
25. Cruise control control lever
26. Headlight beam adjuster (Xeno light versions excluded)
27. ASR system on/off.

THE FIAT CODE SYSTEM

To further protect your vehicle from attempted theft, it has been fitted with an electronic engine immobiliser system (called Fiat CODE) which is automatically activated when the ignition key is removed. Each ignition key, in fact, contains an electronic device, which modulates a radio-frequency signal emitted by a special aerial, built into the ignition switch, during ignition. The modulated signal is a "password" with which the control unit recognises the key. Engine ignition is enabled only if the key is recognised by the system.

THE KEYS fig. 2

The following keys are supplied with the car:

– two keys **A** if the car is fitted with remote central door locking system and electronic alarm.

– two keys **B** if the car is fitted with remote central door locking system, electronic alarm and powered side sliding doors.

The keys shall be used to:

– ignition switch;

– lock/unlock the driver and passenger door

– operate remote door locking/unlocking

– operate the alarm system (where fitted)

– deactivate the passenger side airbag

– lock/unlock the fuel filler cap

– lock/unlock the glove compartment.

F0B0401b

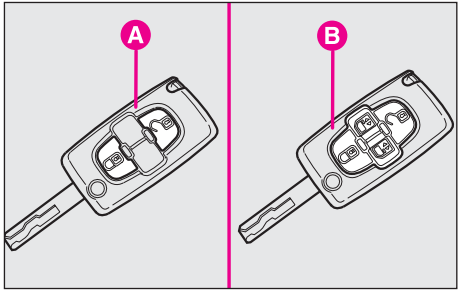

fig. 2

The key **fig. 3**, is fitted with 2 buttons:

A - to activate the central locking system, the alarm and the localisation function;

B - to activate the central unlocking system and deactivate the alarm.

By pressing button **A** the so-called "localisation" function is turned on: all the passenger compartment lights and direction indicators are switched on for a couple of seconds. Such function is recognised by the system up to a distance of around 30 meters from the vehicle.

The key is also fitted with a metal insert **D** which can be pushed inside the key grip by pressing button **C**.

Press button **C** again to let it come out from the key grip.

When pressing the button C, take care to prevent the metal insert from causing harm or damage when it comes out. The button C should only be pressed when the key is away from the body, in particular from the eyes and from objects that can be spoilt (e.g. clothes). Make sure the key can never be touched by others, especially children, who may inadvertently press button C.

F0B0402b

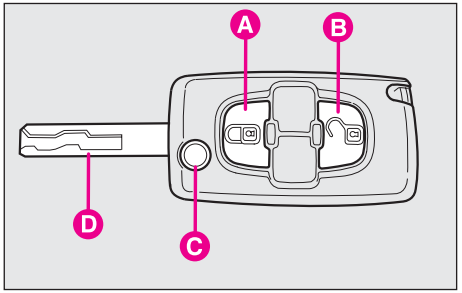

fig. 3

The key **fig. 4** is fitted with 4 buttons:

A - to activate the central locking system, the alarm and the localisation function;

B - to activate the central unlocking system and deactivate the alarm;

C - to lock/unlock the right-hand side sliding door;

D - to lock/unlock the left-hand side sliding door.

By pressing button **A** the so-called "localisation" function is turned on: all the passenger compartment lights and direction indicators are switched on for a couple of seconds. Such function is recognised by the system up to a distance of around 30 meters from the vehicle.

The key is also fitted with a metal insert **F** which can be pushed inside the key grip by pressing button **E**.

Press button **E** again to let it come out from the key grip.

When pressing the button E, take care to prevent the metal insert from causing harm or damage when it comes out. The button E should only be pressed when the key is away from the body, in particular from the eyes and from objects that can be spoilt (e.g. clothes). Make sure the key can never be touched by others, especially children, who may inadvertently press button E.

F0B0403b

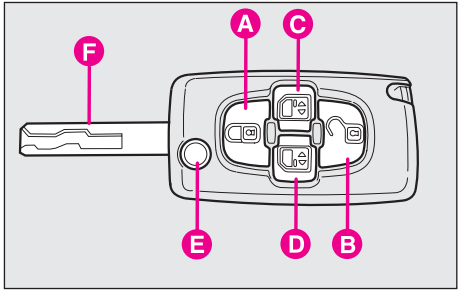

fig. 4

The remote control inside the key works on radio-frequency.

IMPORTANT In order to ensure perfect efficiency of the electronic devices contained inside the keys, they should never be exposed to direct sunlight.

The electronic components inside the key may get damaged if the key is submitted to sharp knocks.

A CODE card **fig. 5** is provided with the keys. This CODE card bears the electronic code used by the **Fiat Dealerships** whenever the vehicle cannot be started.

This code is masked by a special paint, which should be removed when the CODE card is used. The CODE card should therefore be kept in a safe place and not in the vehicle.

All the keys and the CODE card must be handed over to the new owner when selling the car.

REPLACING THE KEY BATTERIES fig. 6-7

If the doors do not lock and the direction indicators do not come on when the button on the remote control is pressed, replace the batteries with others of the same time:

– open the metal insert;

– open the plastic casing **A** by forcing recess **B**;

– remove the printed circuit **C** with the battery;

– extract the battery **D** and replace it respecting the polarity;

– refit the printed circuit **C** with the battery facing inwards;

– close the plastic casing **A**.

Used batteries pollute the environment. Dispose of them in the special containers as specified by current legislation or take them to your nearest Fiat Dealership, which will deal with their disposal. Do not expose them to naked flames and high temperatures. Keep out of children's reach.

Since the electronic alarm absorbs electricity, if you will not be using the vehicle for more than a month, you are advised to switch the system off with the remote control. This will prevent the battery from going flat.

F0B0404b

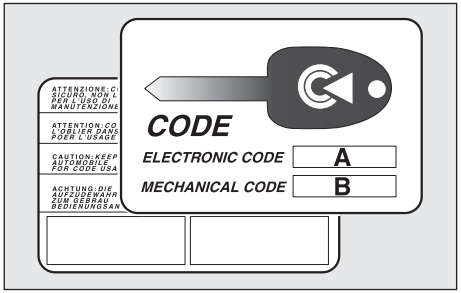

fig. 5

F0B0440b

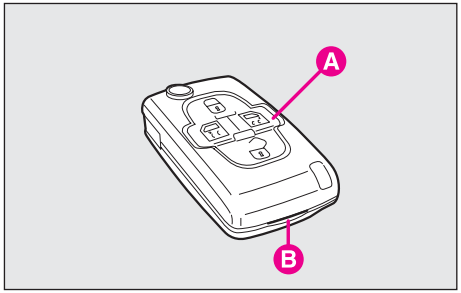

fig. 6

F0B0441b

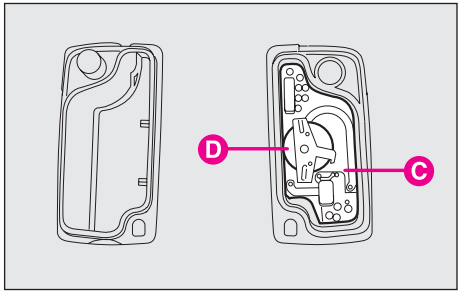

fig. 7

DUPLICATE KEYS

Go directly to your **Fiat Dealership**, taking all the keys in your possession and the CODE card with you.

The codes of any keys that are not available when the new storage procedure is carried out will be deleted from the memory to prevent any lost or stolen keys being used to start the engine.

All the keys and the CODE card must be handed over to the new owner when selling the car.

OPERATION

When the ignition switch is turned to **S** the Fiat CODE system deactivates the engine control unit functions.

After the engine is started by turning the key to **M**, the Fiat CODE system control unit sends the code for the function lock deactivation to the engine control unit. The crypted and varying code is sent only if the system control unit has recognised the code sent by the electronic device contained in each ignition key, through the signal emitted by a special aerial built into the ignition switch.

If the code is not recognised, you are recommended to turn the key to **S** and then again to **M**; if the lock cannot be deactivated, repeat the operation with the other key provided with the vehicle.

If you are still not able to start the engine contact a **Fiat Dealership**.

IMPORTANT Each key supplied with the vehicle has its own code which is different from all the others and which must be stored in the memory of the system control unit. Contact a **Fiat Dealership** for the new key storage procedure, taking with you the CODE card, a personal identity document and the vehicle ownership documents.

The codes of any keys that are not available when the new storage procedure is carried out will be deleted from the memory when all the keys are stored again, in order to prevent any mislaid keys being used to start the vehicle.

ELECTRONIC ALARM (where fitted)

The vehicle is equipped with an electronic alarm with perimeter (external) protection and volumetric (internal) protection. To switch on the alarm, press the button **A-fig. 8** on the remote control.

This will be accompanied by the direction indicator flashing and then the red led on the dashboard **A-fig. 9** flashing.

Door locking by turning the key does not activate the alarm.

When the alarm is triggered

The siren comes on, the direction indicators and the headlights flash for about 30 seconds when:

– - the doors, bonnet, boot or sunroof (where provided) are opened;

– a variation in the volume inside the vehicle is experienced (do not leave the windows open or animals inside the vehicle when the alarm is switched on);

– if an attempt is made to neutralise the alarm system without the remote control.

Switching the alarm system off

To switch the alarm system off, press button **B-fig. 8** on the remote control.

The direction indicators will flash rapidly for about 2 seconds.

If the alarm system has triggered, led **A-fig. 9** will flash rapidly.

F0B0405b

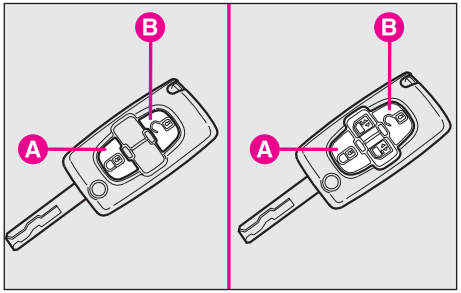

fig. 8

F0B0003b

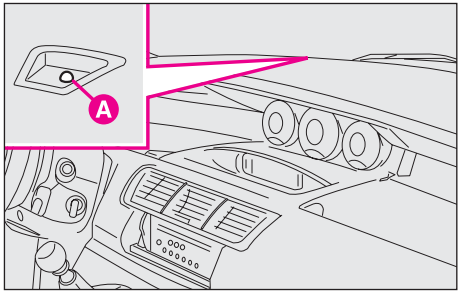

fig. 9

Switching the volumetric protection off

Before turning on the alarm system, press button **A-fig. 10**, which can be reached when the door is open, and red led **A-fig. 9**, placed on the instrument panel, will light up.

In this case only the perimeter protection (external) system will be active.

Press the button **A-fig. 9** again to return to the normal external and internal protection mode.

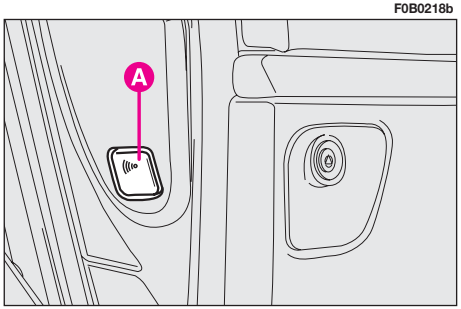

fig. 10

Deactivation without the remote control

Proceed as follows:

– open the door with the key (the siren will come on);

– within 10 seconds, from when the siren sounds, turn the ignition key to **M** and then press button **A-fig. 10**. The siren will be switched off.

If it is necessary to repeat the operation, wait for the siren to come on.

PROGRAMMING THE SYSTEM

When your new vehicle is handed over to you the electronic alarm will have already been programmed by your **Fiat Dealership**. Any subsequent programming should also be carried out by a **Fiat Dealership**.

REQUEST FOR ADDITIONAL REMOTE CONTROLS

If you ever need a new remote control, go to your nearest **Fiat Dealership**, taking with you all the vehicle keys in your possession, the CODE card, a personal identity document and the vehicle ownership documents.

IGNITION SWITCH

fig. 11

The key can turn through 4 different positions:

S - engine off, key can be removed and the steering column is locked;

M - drive position;

D - starting the engine.

If the ignition switch has been tampered with (e.g. someone has tried to steal your vehicle), get a Fiat Dealership to check it over before you start driving again.

F0B0406b

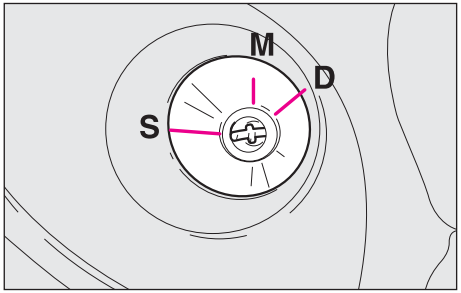

fig. 11

When you get out of the vehicle, always remove the ignition key. This will prevent anyone from accidentally working controls. Remember to apply the handbrake and, if the vehicle is pointing uphill, first gear. Put the vehicle into reverse if it is pointing downhill. Never leave children in the vehicle by themselves.

STEERING COLUMN LOCK

To engage the lock: when the ignition switch is in position **S**, remove the ignition key and turn the steering wheel until it locks.

To release the lock: move the steering wheel slightly as you turn the ignition key to **M**.

It is absolutely forbidden to carry out whatever after-market operation involving steering system or steering column modifications (e.g.: installation of anti-theft Device) that could badly affect performance and safety, cause the lapse of warranty and also result in non-compliance of the car with homologation requirements.

Never remove the ignition key while the vehicle is moving. The steering wheel would automatically lock as soon as you tried to turn it. This always applies, even when the vehicle is being towed.

DOORS

Before opening a door make sure that the operation can be performed in safety conditions.

A buzzer will sound to inform the driver that the outside lights are on when a door is opened and the ignition key is removed. Switch off the lights, close the door or start the engine to stop the buzzer. The vehicle is fitted with button **A-fig. 12**, placed next to the front ceiling lamp, to lock/unlock the doors from the inside.

The vehicle is delivered to the customer with the "autoclose" system on. It means that when a speed above 10 km/h is reached, the doors and the tailgate are automatically locked. When the key is turned to **M**, the activation of this function is signalled by a sound ("beep"). Press and keep button **A-fig.12** pressed for more than 3 seconds to deactivate the above mentioned function.

SECOND ROW CONTROL ELECTRIC DEACTIVATION fig. 13

Next to the electric window locking/unlocking controls on the driver's side, there is button **A** which prevents rear row controls from being used and therefore windows, sunroof (where fitted) and side sliding doors from being opened by the passengers in the second row.

Always use these locks when transporting children.

FRONT DOORS

Opening/closing by hand from the outside fig. 14

Opening: turn the key to position **1** and pull the door handle in the direction of the arrow.

Closing: close the door and turn the key to position **2**.

IMPORTANT Insert the key right into the lock before turning it.

F0B0012b

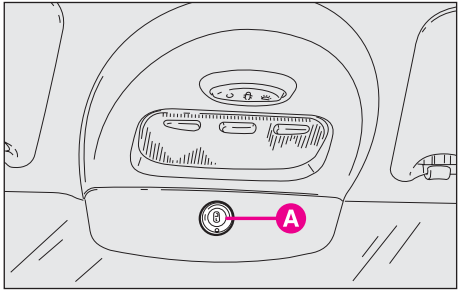

fig. 12

F0B0013b

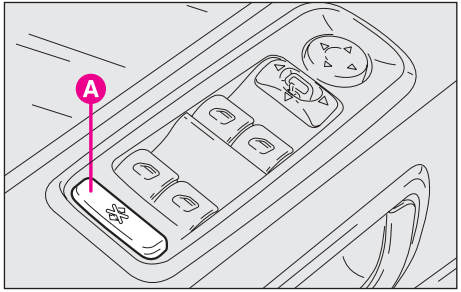

fig. 13

F0B0407b

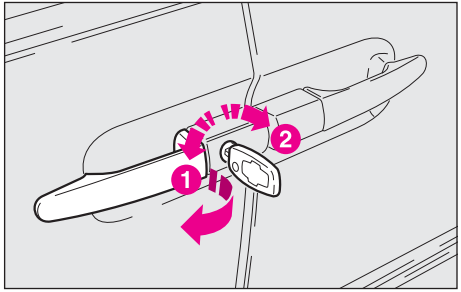

fig. 14

Front door manual opening/ closing from inside fig. 15

Opening: pull lever **A**.

Closing: close the door and press button **A-fig. 13**.

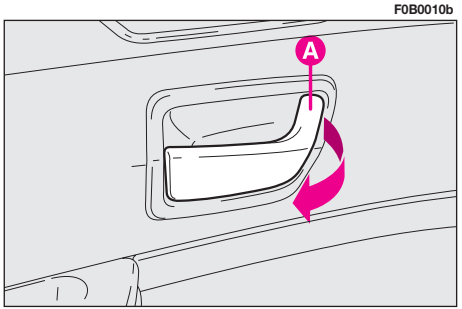

fig. 15

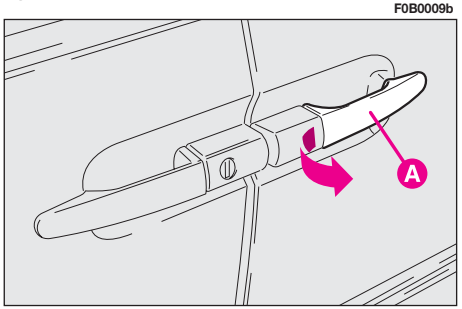

fig. 16

REAR SLIDING DOORS

Manual opening from outside fig. 16

Pull the handle **A** in the direction of the arrow. The side sliding doors have a stopper that stops the door at a maximum opening.

Manual closing from outside fig. 17

Press the button inside **A** even when the door is open and close the door.

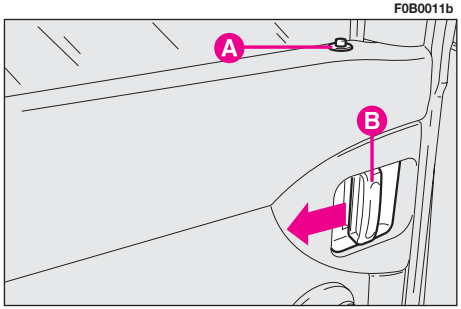

fig. 17

Manual opening/closing of rear doors from the inside fig. 17

Rear doors can be opened only if the "child safety" device is released.

Opening: make sure that the child safety device is released, then push the lever **B** in the direction indicated by the arrow.

Closing: press the sill button **A**, even before closing the door.

An automatic stop device stops the left side sliding door being opened when the fuel filler flap is open.

Door lock/unlock with the remote control from outside (where fitted) fig. 18

Right door: operate the key button **A** with the remote control.

Left door: operate the key button **B** with the remote control.

F0B0408b

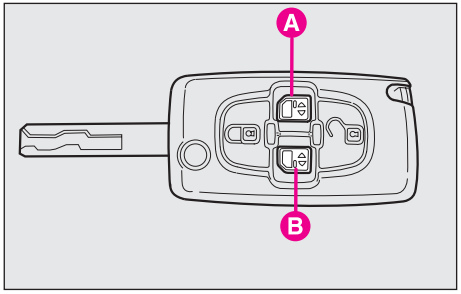

fig. 18

F0B0409b

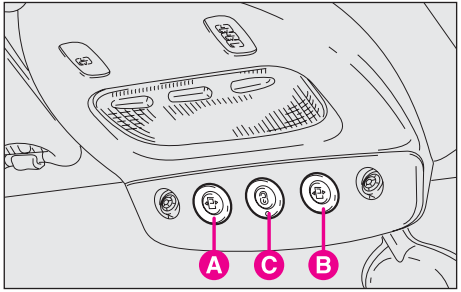

fig. 19

Electric lock/unlock from inside (where fitted) fig. 19-20

From the first row:

– press button **A** to open the left sliding door, so the latch will unlock and the door will open;

– press again button **A** to close the left sliding door, but the latch will not lock. To do it, press button **C**;

– press button **B** to open the right sliding door, so the latch will unlock and the door will open;

– press again button **B** to close the right sliding door, but the latch will not lock. To do it, press button **C**.

From the second row:

– to lock/unlock press button **D** connected to each sliding door.

Both doors are fitted with a safety anticrushing device working as follows:

– **during opening**: when an obstacle is detected the door stops automatically;

– **during closing**: when an obstacle is detected the door stops and automatically reverse its operation, thus going back to a fully open position. In this case, press one of the buttons on the remote control, the front ceiling lamp or the door panel to restore the door operation.

Both stages are accompanied by buzzer sound

F0B0221b

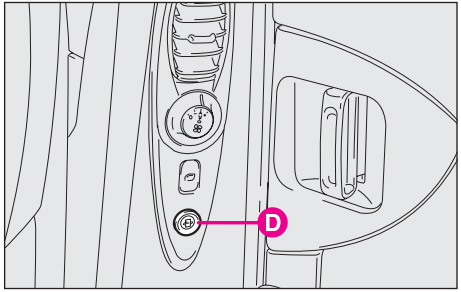

fig. 20

CENTRAL DOOR LOCKING SYSTEM

From the outside

With the doors closed: insert and turn the key in the lock of one of the front doors.

From the inside

With the doors closed: press button **C-fig. 19** placed next to the front ceiling lamp.

Pressing or lifting one of the rear sill buttons only locks or unlocks the particular door involved.

IMPORTANT If one of the doors is not shut properly or there is a failure in the system, the central locking feature will not work and the direction indicators will not flash; after some attempts, the device stops working for around 20 seconds. In these 20 seconds, the door can be locked or unlocked manually without the electrical system coming into play. After the 20-second period, the control unit is ready to receive commands once more.

If the reason for the malfunction has been removed, the device will start to work properly again. If not, it will cut out once more.

"Door open" alarm

If, with engine running, one of the doors is not shut properly, the multifunction display will show a dedicated message and the buzzer will sound.

SUPER DOOR LOCK (where fitted)

To engage the super door lock using the remote control, press button **A-fig. 8** once and then press it again within 5 seconds. After the first click they will click again to signal that they have been engaged.

To activate the super door lock with the key, place it in the lock and hold it in the locking position for a few seconds until you hear the second click indicating that the doors have been locked.

This operation is necessary if you do not wish to engage the electronic alarm.

When the super door lock has been activated it is impossible to open the doors even from the inside; for this reason do not use the super door lock when there are passengers in the vehicle.

The super door lock is deactivated when the doors are unlocked with a key or remote control by pressing the pushbutton **B-fig. 8**.

CHILD SAFETY LOCK

There can be 2 types of "Children safety": electric safety or mechanical safety.

ELECTRICAL LOCK fig. 21

Next to the electric window locking/unlocking controls on the driver's side, there is button **A** which prevents rear row controls from being used and therefore windows, sunroof (where fitted) and side sliding doors from being opened by the passengers in the second row.

Always use these locks when transporting children.

MECHANICAL LOCK fig. 22

They are designed to prevent the rear sliding doors being opened from the inside:

position 1 - lock off (the door can be opened from the inside);

position 2 - lock set (door locked).

The lock remains in the set position even when the doors are unlocked electrically.

IMPORTANT These device works only for the relative door.

Always use these locks when transporting children.

After activating the safety lock on both sliding doors, operate the inside lever to check the lock is really on.

Any adjustments should be made when the vehicle is stationary.

F0B0014b

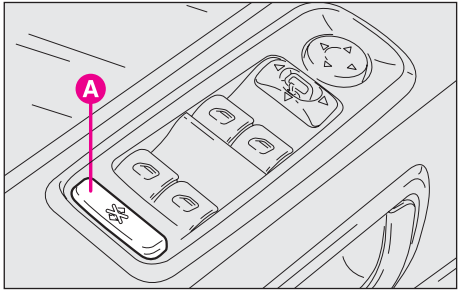

fig. 21

F0B0014b

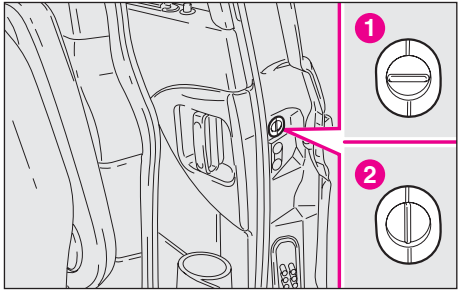

fig. 22

FRONT SEATS

MOVING THE SEAT BACKWARDS OR FORWARDS fig. 23

Lift lever **A** and push the seat backwards or forwards.

Once you have released the lever, check that the seat is firmly locked in the runners by trying to move it back and forth. Failure to lock the seat in place could result in the seat moving suddenly and the driver losing control of the car.

TO ADJUST THE RECLINING SEAT BACK fig. 24

Pull out the lever **A** to its full extent and move it up or down to get the required position, then release it.

HEIGHT ADJUSTMENT (DRIVER'S SEAT) fig. 24

To lift the seat, pull out the lever **B** to its full extent and move it up or down to get the required position. To lower the seat, pull down the lever **B** and move it up or down to get the required position.

IMPORTANT The adjustment can only be made sitting in the driving seat. Do not remove the seats or carry out maintenance and/or repairs on them: any operations that are not carried out properly may affect the safety devices; always take your vehicle to a **Fiat Dealership**.

LUMBAR ADJUSTMENT (WHERE FITTED) fig. 25

That provides better support for the back. Turn knob **A** to make the adjustment.

F0B0016b

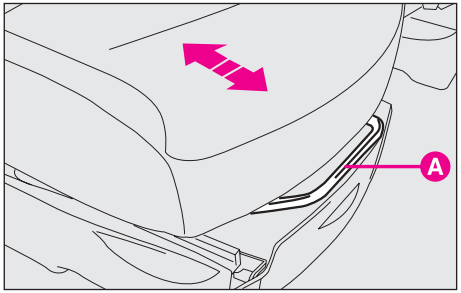

fig. 22

F0B0015b

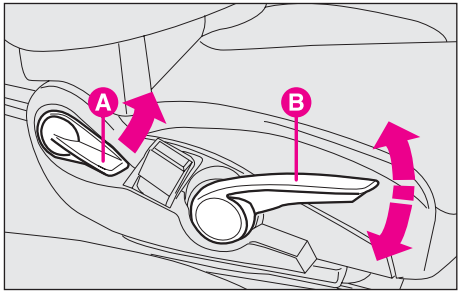

fig. 23

F0B0188b

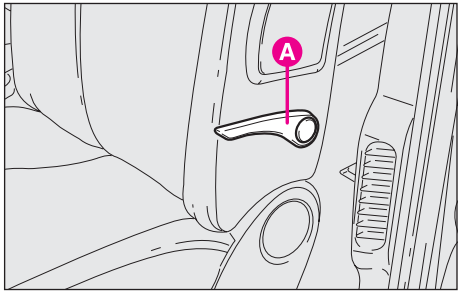

fig. 24

ELECTRICALLY ADJUSTABLE HEATED FRONT SEATS (WHERE FITTED) fig. 26-27

Adjustments can be made when the key is at **M**, and for about 1 minute after turning the key to **S**.

A - button for moving the seat backwards and forwards;

B - button for adjusting the angle of the seat back;

C - seat heating on/off switch with the engine running. The seat heating can be adjusted according to 4 different levels: **0** (off), **1** (minimum heating), **2** (medium heating), **3** (maximum heating);

D - Controls for the driver's seat position storing.

STORING PROCEDURE FOR DRIVER'S SEAT (where fitted) fig. 27

The system makes it possible to store 2 different driver's seat positions connected to buttons 1 and 2.

Proceed as follows to store the adjustments available with button **1** and **2** and the ignition key at **M**:

– put the seat in the required position;

– press button **M** and then, within 4 seconds, press button **1** to store the adjustment in "memory **1**" or button **2** to store the adjustment in "memory **2**".

A sound signal accompanies successful storing.

Recalling a stored position

When the engine is off: briefly press button **1** or **2**.

F0B0020b

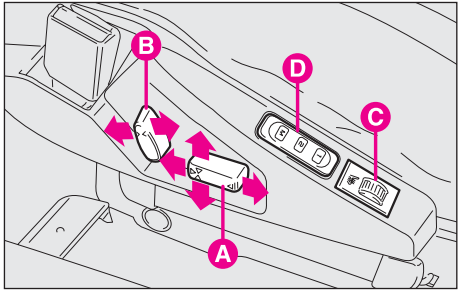

fig. 26

F0B0285b

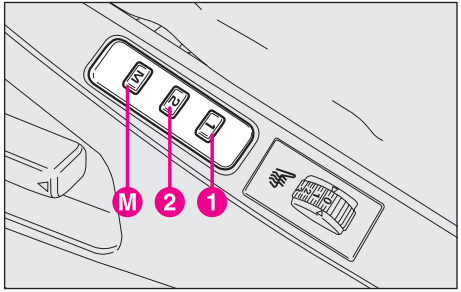

fig. 27

IMPORTANT After 5 unsuccessful recalls, the system locks the relative control which will be restored when the engine is started.

When the engine is on: press and keep button **1** or **2** pressed until the stored position is reached.

FRONT SWIVEL SEATS (where provided) fig. 28-29-30

The front seats (driver and passenger) can be turned through 180° to create a "front parlour" effect.

To do this from outside the vehicle, proceed as follows:

– put the seat back in vertical position;

– take the seat "almost completely forwards";

– driver's seat: lift the seat up to the highest position and adjust the steering wheel "completely forwards". The seats cannot be turned 180° if the handbrake lever is up. In this case, pull button **B** outwards and lower the lever. The brakes of the vehicle are still on in this position;

– lift the release lever **A** and, at the same time, turn the seat 180° inwards until the "parlour" effect is reached; the system makes it possible to released lever **A** during the seat rotation.

Reverse the above mentioned procedure to put the seat back in driving position.

Before starting off again, make sure that the seats are facing the front of the vehicle and are properly fastened to their anchorage points. The seat belts can only be used effectively in this position.

F0B0290b

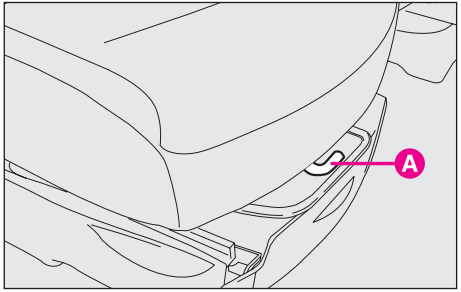

fig. 28 - Mechanic control versions

F0B0223b

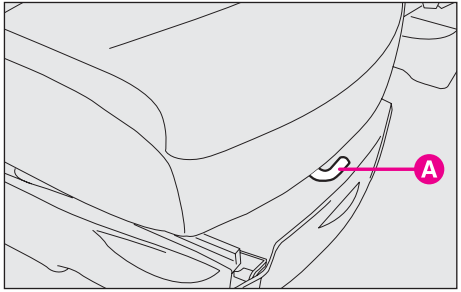

fig. 29 - Electric control versions

F0B0224b

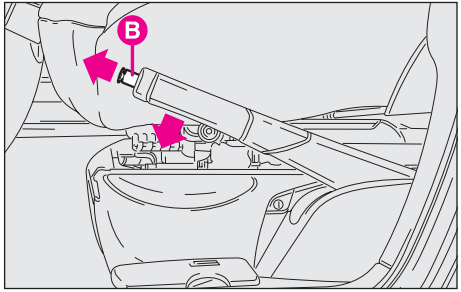

fig. 30

REAR SEATS

All seat adjustments must be made when the vehicle is stationary.

MOVING THE SEAT BACKWARDS OR FORWARDS fig. 31-32

To adjust the rear seats (second-third row), lift lever **A** and move the seat forward or back to get the required position.

From the third row it is possible to move the second row seat forward or back by pulling handle **B** and moving the seat at the same time.

When the tailgate is open, operate handle **B** of the third row seats as above mentioned and the luggage compartment will be widened.

F0B0025b

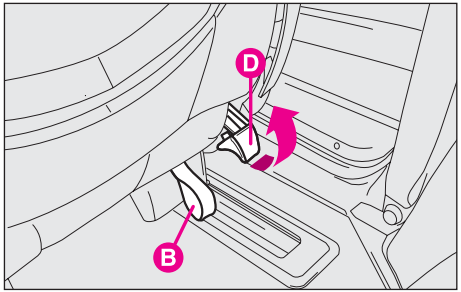

fig. 32

F0B0203b

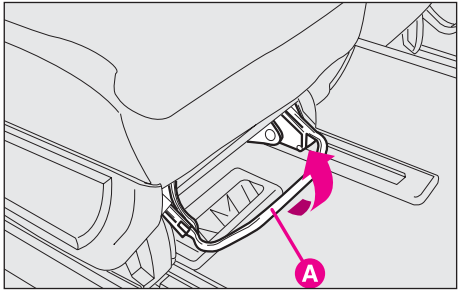

fig. 31

F0B0019b

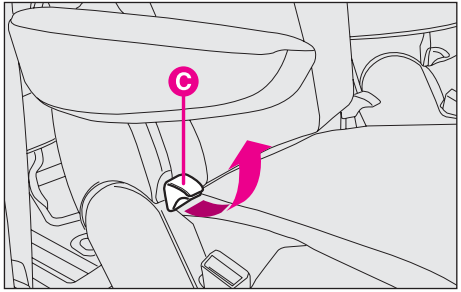

fig. 33

TO ADJUST THE RECLINING SEAT BACK fig. 33

The adjustment can only be made sitting in the seat. Pull out lever **C** and adjust the seat back in the required position, then release the lever.

"TABLE" POSITION

To use the side seat back as a supporting plane ("table" position), operate release lever **C-fig. 33** and guide the seat to the cushion.

To use the central seat back as a supporting plane, operate release lever **A-fig. 34** and guide the seat to the cushion.

F0B0021b

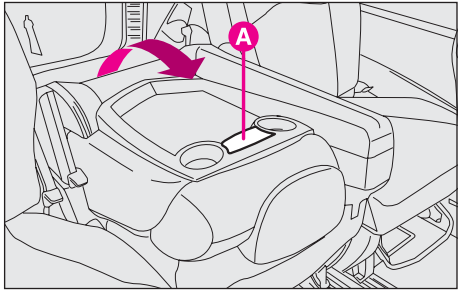

fig. 34

To put the seat back into vertical position, push it upwards until it clicks and locks in that position.

"WALLET" POSITION

Side seats

Operate release lever **C-fig. 33** and guide the seat back until the "table" position is reached; then turn the tipped seat again until the "wallet" position illustrated in **fig. 36** is reached.

If difficult, use the release lever **A – fig. 34b** set rear the seats on the left side.

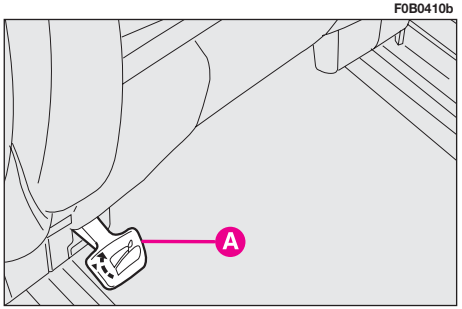

fig. 34b

When the second row seat is tipped in "wallet" position, it is not possible to transport passengers on the third row seats, as illustrated on label fig. 36 placed on the seats themselves. This is a precaution to avoid any risk of contact with the articulation mechanisms of the seat itself.

To restore the seat normal position, guide it until it engages the runners on the floor and place the seat back into vertical position until it clicks and locks in that position.

Central seat

Operate release lever **A-fig. 34** and guide the seat back until the "table" position is reached;

Lift lever **B-fig. 35** and guide the tipped seat until the "wallet" position is reached.

To restore the seat normal position, guide it until it engages the runners on the floor and place the seat back into vertical position until it clicks and locks in that position.

USING THIRD ROW SEATS

To get at the rear seats (third row), lift lever **C-fig. 33** from the outside and tip the whole seat forward.

To get out of the car, lift lever **D-fig. 32** and tip the seat forward.

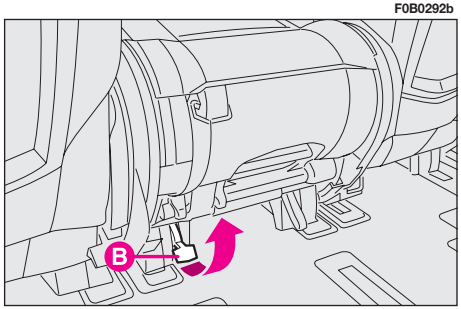

fig. 35

DISMANTLING THE SECOND AND THIRD ROW SEATS

To dismantle:

– operate release lever **C-fig. 33** and guide the seat back until the "table" position is reached; turn the tipped seat again until the "wallet" position is reached **fig. 36**;

– take belt **E** and pull it upwards then remove the whole seat from its housings on the floor runners.

Reverse the above mentioned procedure to reassemble the seat.

Before starting off again, make sure that the seats are facing the front of the vehicle and are properly fastened to their anchorage points. The seat belts can only be used effectively in this position.

Make sure the anchorage holes are always clean; if debris has got into them it interferes with the seats being locked securely into place.

F0B0411b

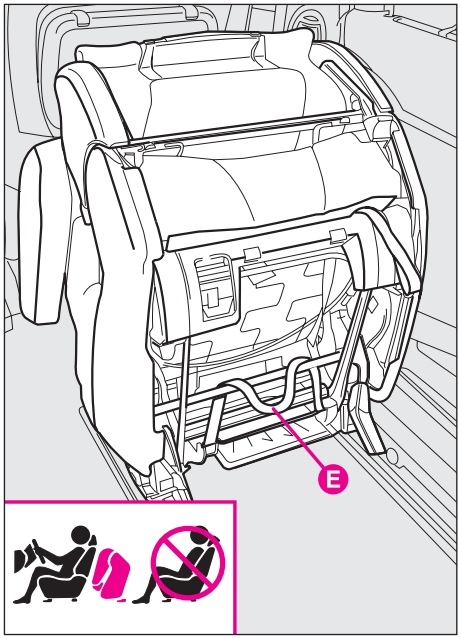

fig. 36

THIRD ROW BENCH SEAT

Moving the seat backwards or forwards fig. 37

Lift lever **A** and push the seat backwards or forwards.

It is possible to widen the luggage compartment capacity from the outside by pulling handle **B** and pushing the bench forwards.

F0B0286b

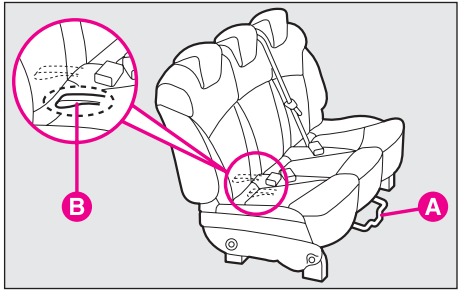

fig. 37

"Table" position fig. 38

Proceed as follows to tip the bench seat back in "table" position:

– flatten the head restraints;

– lift lever **C** and guide the seat back to the cushion.

To restore the seat back vertical position, push it upwards until it clicks and locks in that position.

"Wallet" position fig. 38

Proceed as follows to tip the bench seat in "wallet" position:

– flatten the head restraints;

– lift lever **C** and guide the seat back to the cushion;

– pull handle **D** and release the anchorages from their housing on the floor, then fold the bench seat as a "wallet".

To restore the bench seat normal position, guide the tipped seat until it engages the runners on the floor, then put the seat back into vertical position until it clicks and locks in that position.

Dismantling the bench seat fig. 38

To dismantle:

– fold the bench seat as a "wallet" according to the above mentioned procedure;

– lift lever **E** while making it closer to bar **F**, then grip them both and remove the bench seat from its housing on the floor runners.

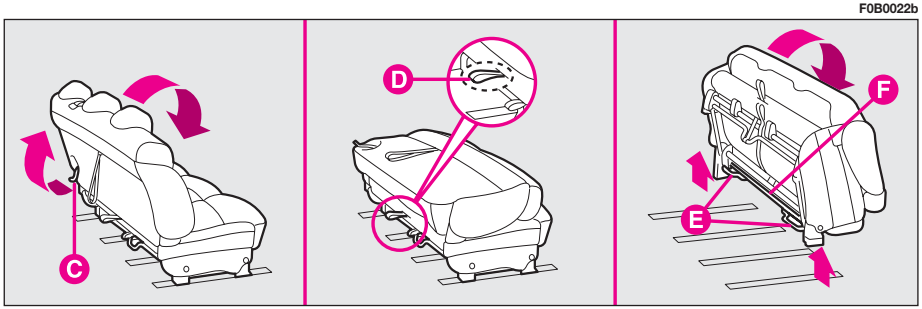

fig. 38

To disassemble and thereafter reassemble the bench seat, it is necessary to keep the backrest firmly folded and flattened onto the cushion, in order to avoid any risk of contact with the articulation mechanisms of the seat itself.

Make sure the anchorage holes are always clean; if debris has got into them it interferes with the seats being locked securely into place.

Before starting off again, make sure that the seats are facing the front of the vehicle and are properly fastened to their anchorage points. The seat belts can only be used effectively in this position.

INTERIOR SETTINGS

Depending on the various outfits that can be ordered, it is possible to vary the internal arrangement of the second and third row seats as required, bringing them forwards or moving them backwards or sideways using the relative holes in the floor.

If following illustrations show a few of the basic configurations supplied on request:

fig. 39 - basic five-seat version

fig. 40 - basic five-seat plus 2 seats version

fig. 41 - basic five-seat plus rear seat bench version

fig. 42 - basic six-seat version

fig. 43 - arrangement along the left-hand side

fig. 44 - "Game room" arrangement with central table

fig. 45 - "Back parlour" arrangement

fig. 46 - Arrangement for "carrying long objects".

F0B0028b

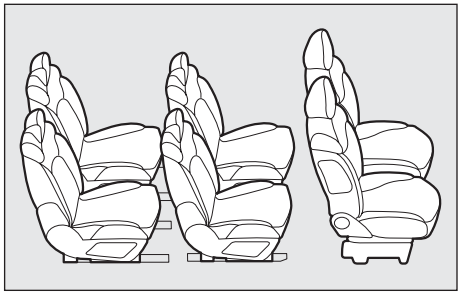

fig. 42

F0B0027b

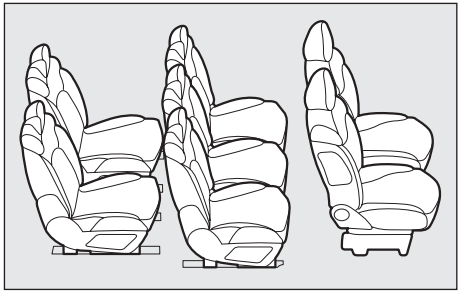

fig. 40

F0B0030b

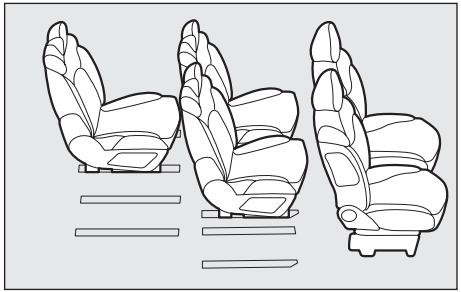

fig. 43

F0B0026b

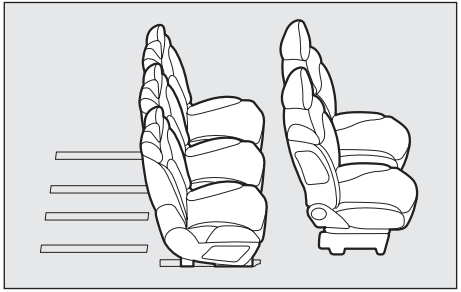

fig. 39

F0B0029b

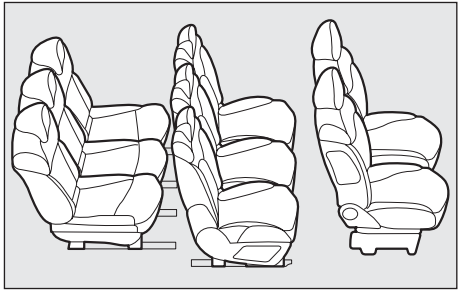

fig. 41

F0B0031b

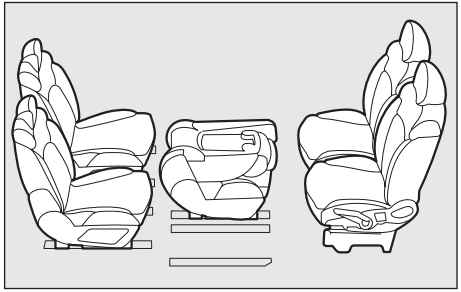

fig. 44

The seats can be arranged in other ways by removing the middle row and thus increasing the space available between the first and third row.

Make sure the anchorage holes are always clean; if debris has got into them it interferes with the seats being locked securely into place.

Before starting off again, make sure that the seats are facing the front of the vehicle and are properly fastened to their anchorage points. The seat belts can only be used effectively in this position.

HEAD RESTRAINTS

Remember the head restraints must be positioned so that they support the back of the head and not the neck. Only in this position will they protect you properly in the event of an end-shunt collision.

In order to use the head restraint in the correct way, adjust the seat back so that the chest is in upright position and the head is as closest to the head restraint as possible.

Front seats fig. 47

The head restraints can be adjusted for height and tilt.

To adjust height, lift or lower the head restraint to get the required position.

To make the adjustment operate the head restraint as shown in the figure.

F0B0032b

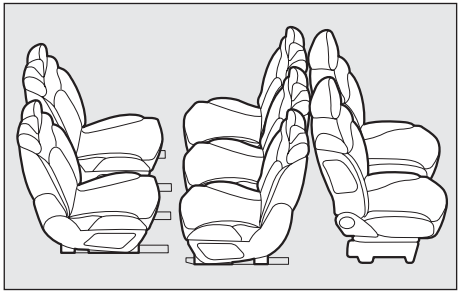

fig. 45

F0B0033b

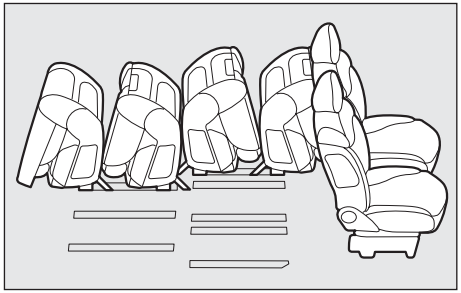

fig. 46

F0B0025b

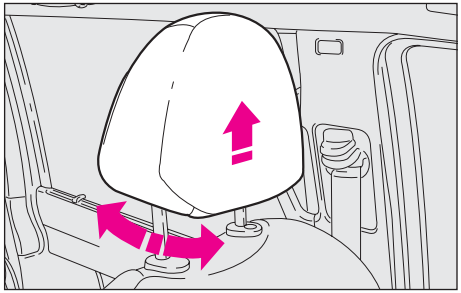

fig. 47

Rear seats fig. 48-49

They can be adjusted for height. To adjust it, lift or lower the head restraint to get the required position.

Lift the head restraint up to its maximum height, operate device **A-fig. 49** and pull the rear head restraint upwards to remove it.

F0B0227b

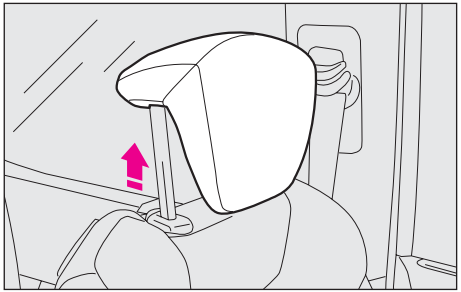

fig. 48

F0B0024b

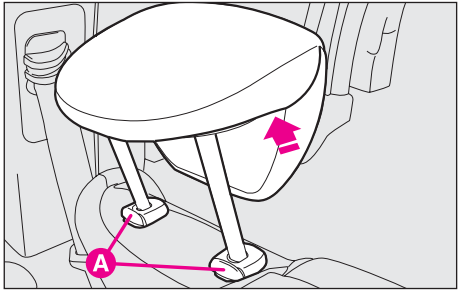

fig. 49

ARMREST fig. 50

To adjust the armrest apply the following procedure:

– lift the armrest up to position **1**;

– lower the armrest fully, position **2**;

– lift the armrest to the required position **3**.

F0B0017b

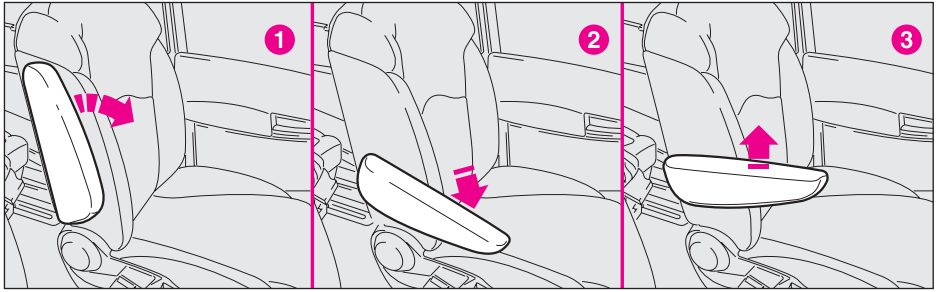

fig. 50

INDIVIDUAL SETTINGS

STEERING WHEEL fig. 51

All adjustments must be made when the vehicle is stationary.

The steering wheel can be adjusted for height and axis. Proceed as follows:

– lower lever to position **1**.

– adjust the steering wheel.

– return the lever to position **2** to lock the wheel into position again.

It is absolutely forbidden to carry out whatever after-market operation involving steering system or steering column modifications (e.g.: installation of anti-theft Device) that could badly affect performance and safety, cause the lapse of warranty and also result in non-compliance of the car with homologation requirements.

DRIVING MIRROR fig. 52

You can adjust the mirror by moving the lever:

A - anti-dazzle position;

B - normal position.

ELECTRO-CHROMATIC DRIVING MIRROR fig. 53

The car is fitted with an electro-chromatic mirror adapting to the day or night light.

To activate the automatic function, the key must be turned to **M**, then press button **A** and led **B** will lit to signal its activation.

When the reverse gear is engaged, the driving mirror switches over to the automatic function, thus making the operation easier.

F0B0037b

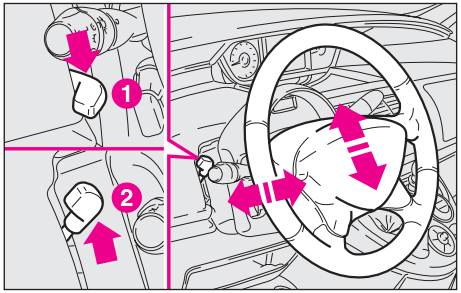

fig. 51

F0B0038b

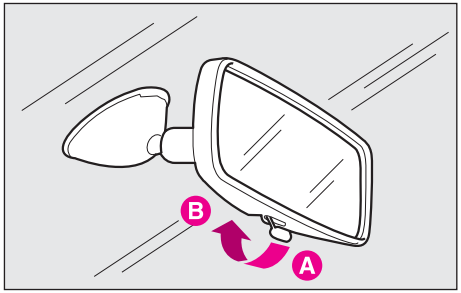

fig. 52

F0B0039b

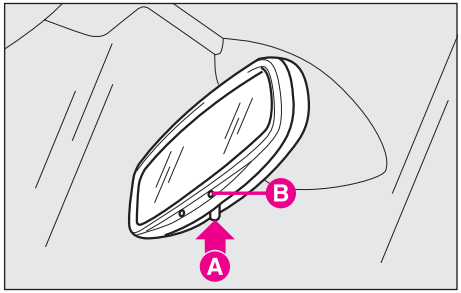

fig. 53

CHILD SURVEILLANCE MIRROR fig. 54

It is placed next to the front roof lamp and enables the driver and the first row passenger to view rear seats and check the passengers seated in the second or third row.

To use the surveillance mirror move it from position **A** to position **B** as shown in the figure.

F0B0185b

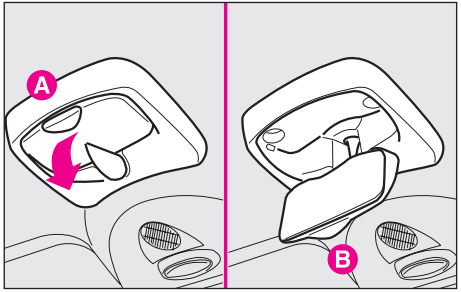

fig. 54

DOOR MIRRORS

During driving door mirrors must always be open.

The driver's door mirror, being curve, slightly alters the distance perception.

Electric adjustment fig. 55

Adjustment is possible only when the key is at **M**.

All you need to do is press the four directions on switch **A**, as required.

Use switch **B** to choose the mirror (◀ right or left ▶) you want to adjust.

The electrical mirror demister equipment works for a limited length of time, and turns on automatically when you press the heated rear window demister button. It turns off automatically after some minutes.

F0B0040b

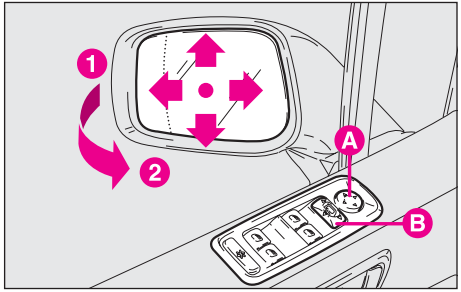

fig. 55

Adjustment by hand fig. 55

If the mirror makes it difficult to get through narrow gaps, fold it from position **1** to position **2**.

Electric folding (where fitted) fig. 55

Folding is possible only when the ignition key is at **M**.

To tilt the mirrors use button **B** next to arrow ▼.

Locking the doors, door mirrors will set automatically to locking position; unlocking the doors, door mirrors will set automatically to opening position.

If door mirrors were folded by pressing button **B** before locking the doors, next time doors are unlocked the mirrors will not set automatically to opening position but you will have to press button **B** again.

During adjustment, avoid touching the mirror and its support to prevent finger pinching.

SEAT BELTS

HOW TO USE THE SEAT BELTS (FRONT AND REAR)

The belt should be worn keeping the chest straight and rested against the seat back.

To fasten the seat belt, take hold the tongue **A-fig. 56** and insert it into the buckle **B**, until you hear it click.

Pull the seat belt gently. If it jams, let it rewind a little and pull it out again without jerking.

To unfasten the belts, press button **C**. Guide the belt with your hand as it rewinds to prevent twisting.

Never press button C when travelling.

The seat belt reel mechanism will adapt the belt to the body of the person wearing it offering freedom of movement.

When the car is parked on a steep slope the reel mechanism may block; this is normal.

The reel mechanism prevents the webbing coming out when it is jerked or if the car brakes sharply, as in collision or when cornering at high speed.

F0B0229b

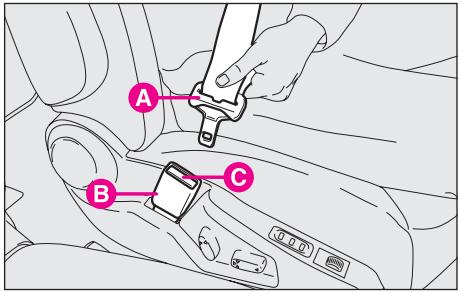

fig. 56

Remember that in the case of a violent collision, back seat passengers not wearing seat belts, in addition to being personally exposed to serious risk, also represent a serious danger to the passengers in the front.

ADJUSTING SEAT BELT HEIGHT fig. 57

Make the height adjustment when the car is stationary.

Always adjust the height of the seat belt to fit the person wearing it. This could greatly reduce the risk of injury in the case of collision. The belt is adjusted properly when the webbing passes approximately halfway between the edge of the shoulder and the neck.

Correct adjustment is obtained when the belt passes half way between the end of the shoulder and the neck.

Three height adjustment are possible.

To adjust, press button **A** (as shown by the arrows) and raise or lower the grip.

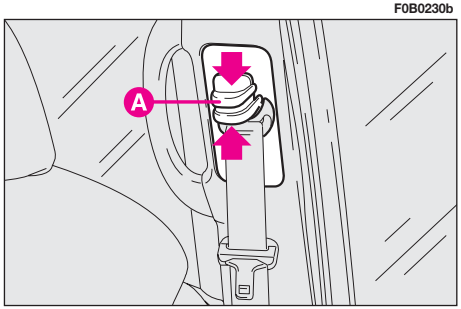

fig. 57

After you have made the adjustment, always make sure that the loop is attached firmly in one of the fixed positions and cannot move. To do this, with the button released, exert a further pressure to allow the anchor device to catch if release did not take place at one of the preset positions.

HOW TO USE THE THIRD ROW SIDE SEAT BELTS

The belts should be worn keeping the chest straight and rested against the seat back.

The belts are fitted with a double fastening tongue.

To fasten the seat belts: pull the seat belt out gently from the reel and let it unwind carefully to prevent it from twisting, then push tongue **A-fig. 58** into fastener **B** (through the related spring catch) until you hear it click. Let the belt further unwind and push tongue **C** into buckle **D**.

To unfasten the belts: press button **E**, guide the seat belt to retainer **B** and release the spring catch by freeing tongue **A**. Hang the unfastened seat belt to the retainer illustrated in **fig. 59**.

Never press button E when travelling.

The seat belt reel mechanism will adapt the belt to the body of the person wearing it offering freedom of movement.

When the car is parked on a steep slope the reel mechanism may block; this is normal. The reel mechanism prevents the webbing coming out when it is jerked or if the car brakes sharply, as in collision or when cornering at high speed.

Remember that in the case of a violent collision, back seat passengers not wearing seat belts, in addition to being personally exposed to serious risk, also represent a serious danger to the passengers in the front.

F0B0231b

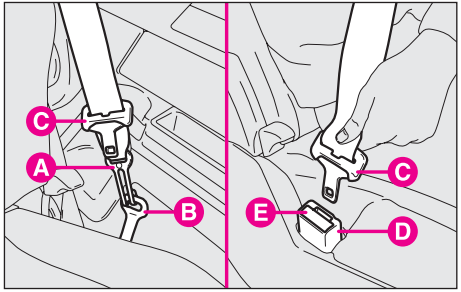

fig. 58

F0B0232b

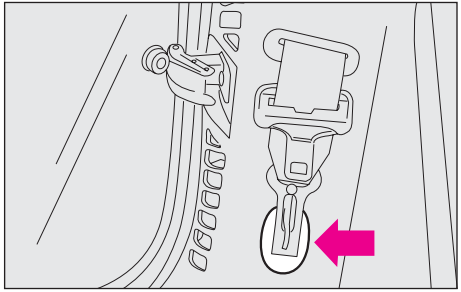

fig. 59

USE OF THE SEAT BELT IN THE CENTRE POSITION

The three point centre seat belt is fitted with reel **A-fig. 60**.

This seat belt is fastened as for the front seat belts.

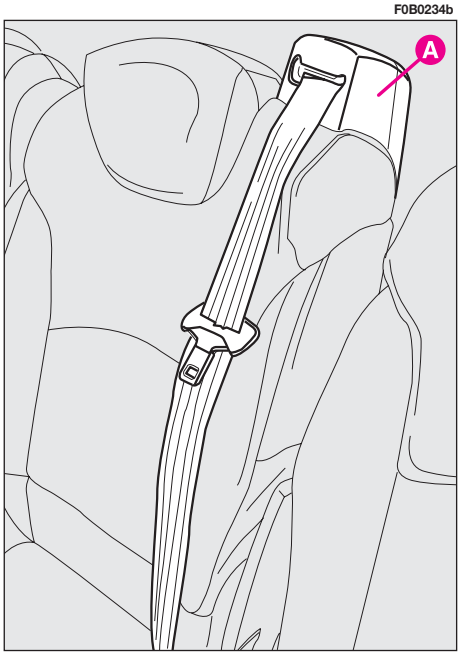

fig. 60

Remember that in the case of a violent collision, back seat passengers not wearing seat belts, in addition to being personally exposed to serious risk, also represent a serious danger to the passengers in the front.

PRETENSIONERS

The Ulysse is fitted with pretensioners to enable the seat belts to offer even more effective protection.

These devices "feel" that a violent collision is in progress via a sensor and pull back a few inches of webbing. In this way the pretensioner ensures that the belt is adhering perfectly to the body before the belt begins to hold back the wearer.

When the pretensioner has been triggered the reel mechanism will lock. The seat belt cannot be drawn back up even when guiding it manually.

IMPORTANT To obtain the highest degree of protection from the action of the pretensioning device, wear the seat belt keeping it firmly close to the chest and pelvis.

Pretensioners are triggered only if the relative seat belts are correctly pushed into the buckles.

Some smoke might come out. This is not harmful and does not signal the beginning of a fire.

The pretensioners need no maintenance or lubrication. Any modification to its original features will nullify the pretensioner's effectiveness. If water or mud accidentally get into the pretensioner as a result of floods or storms, the device must be replaced.

The pretensioner can only be used once. After a collision that has triggered it, have it replaced at a Fiat Dealership. The device will last for 10 years from the date of production. Contact a Fiat Dealership to replace the pretensioners as this date approaches.

Operations involving banging, vibrations or heating (exceeding 100°C for a maximum of 6 hours) in the area around the pretensioner may trigger or damage the device. Vibrations from rough road surfaces or accidental jolting cause by mounting pavements etc. do not have any effect on the pretensioner. If, however, you need any assistance, go to a Fiat Dealership.

LOAD LIMITING DEVICES

This device reduces the load which is normally exerted by the seat belts on the passenger's shoulder and chest in a collision. It increases protection by preventing the micro traumas which are inevitable in road accidents. The device is built into the front and second row side seat belt reels.

GENERAL INSTRUCTIONS FOR THE USE OF THE SEAT BELTS

The driver must make sure that all occupants use their seat belts properly in accordance with local legislation.

Always fasten the seat belts before starting.

For maximum safety, keep the back of your seat upright, lean back into it and make sure the seat belt fits closely across your chest and hips.

Make sure the seat belts on the front and rear passengers are fastened at all times. You increase the risk of serious injury or death in a collision if you travel with the belts unfastened.

The webbing must not be twisted. The upper section must pass across the shoulder and chest diagonally. The lower part must fit closely across the hips fig. 61 and not abdomen. Do not use devices (clips, fasteners, etc.) that prevent the belts from adhering to the wearer's body.

Under no circumstances should the components of the seat belts and the pretensioners be tampered with or removed. Any interventions should be carried out by qualified and authorised personnel. Always contact a Fiat Dealership.

If the belt has been subjected to heavy stress, for example after an accident, it should be changed completely together with the anchors, anchor fastening screws and the pretensioners. In fact, even if the belt has no visible defects, it could have lost its resilience.

Never travel with a child sitting on the passenger's lap with a single belt to protect them both. As a general rule, do not fasten other objects to the body.

F0B0190b

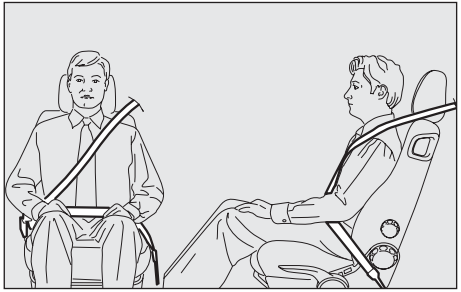

fig. 61

F0B0191b

fig. 62

Seat belts must also be worn by expectant mothers: the risk of injury in the case of accident is much greater for them, too, if they do not have a seat belt on.

Of course, they must position the lower part of the belt very low down so that it passes under the abdomen **fig. 63**.

F0B0192b

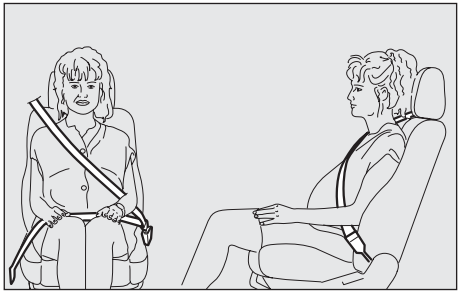

fig. 63

HOW TO KEEP THE SEAT BELTS IN PROPER WORKING ORDER AT ALL TIMES

1) When wearing the seat belts, always ensure they are not twisted and are free to wind in and out.

2) Following a serious accident, replace the belt being worn at the time, even if it does not seem damaged. Always replace the seat belts if pretensioners have been activated.

3) When cleaning the belts, wash them by hand with water and neutral soap, rinse them and let them dry in the shade. Do not use industrial strength detergents, bleach, colouring or any other chemical substance that could weaken the fibres.

4) Do not allow the reels to get wet: they are only guaranteed to work properly if they remain dry.

5) Replace the seat belt when showing significant wear or cut signs.

TRANSPORTING CHILDREN IN SAFETY

SERIOUS DANGER: Never place cradle child's seats on the front passenger seat of cars fitted with passenger air bag since the air bag activation could cause serious injuries, even mortal. You are advised to carry children always on the rear seat, as this is the most protected position in the case of a crash, as illustrated by the labels fig. 64 on the seats. In any case, children's seats must absolutely not be fitted on the front seat of cars with passenger's air bag, which during inflation could cause serious in-

F0B0288b

fig. 64

jury, even mortal, regardless of the seriousness of the crash that triggered it. Children may be placed on the front seat of cars fitted with passenger's air bag deactivation.

In this case, it is absolutely necessary to check the warning light on the cluster to make sure deactivation has actually taken place (see paragraph Front and side air bags at item Front air bags). The front passenger seat shall be adjusted in the most backward position to prevent any contact between child's seat and dashboard.

For optimal protection in the event of a crash, all passengers must be seated and wearing adequate restraint systems.

This is especially relevant for children.

This prescription is compulsory in all EC countries according to EC Directive 2003/20/EC.

A child's head is larger and heavier than an adult's head with respect to their body weight. Moreover, a child's head muscular and bone structure is not fully developed. For these reasons, children require specific restraint systems, different from those required by adult passengers.

The results of research on the best child restraint systems are contained in the European Standard ECE-R44. This Standard enforces the use of restraint systems classified in five groups:

Group 0	weight 0-10 kg
Group 0+	weight 0-13 kg
Group I	weight 9-18 kg
Group 2	weight 15-25 kg
Group 3	weight 22-36 kg

The groups partially overlap. This is because there are systems which cover more than one weight group **fig. 65**.

F0B0193b

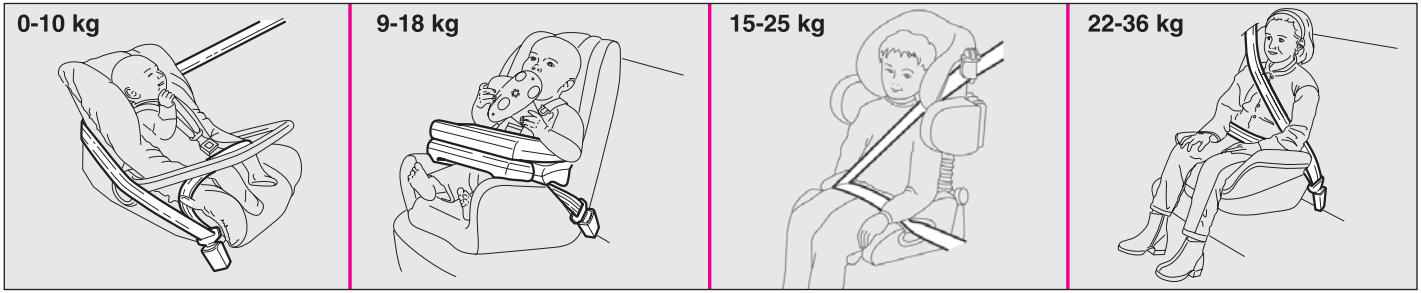

fig. 65

All restraint systems must show homologation data and control markings on a tag which is solidly fastened to the system and cannot be removed.

Children weighing than 1.5 m are, with reference to restrain systems, considered adults and can wear normal seat belts.

We recommend using Lineaccessori Fiat child restraint systems for each weight group. These systems were specifically designed and tested for Fiat vehicles.

GROUP 0 and 0+

Babies up to 13 kg are to be seated in a cot type seat supporting the child's head facing backwards. This ensures there is no stress on the child's neck in sudden decelerations.

The cot is secured with the seat belts as shown in **fig. 66**. Furthermore, the child must be strapped to the cot.

The figure is only an example. Follow the instructions for fastening the specific child restraint system you are using.

F0B0194b

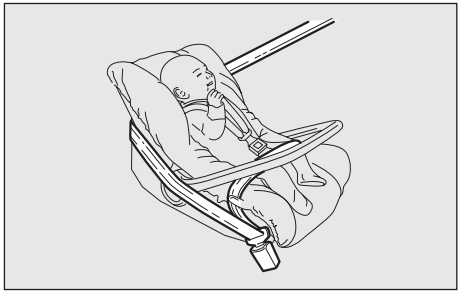

fig. 66

GROUP I

Children from 9 to 18 kg are to be seated facing forward in child seats with front cushions, **fig. 67**. The vehicle seat belt secures both seat and child.

The figure is only an example. Follow the instructions for fastening the specific child restraint system you are using.

There are child restraints for Groups 0 and 1 which are fastened with the vehicle seat belts by means of an attachment on the seat back. The child is then secured to the seat with specific straps. Due to their weight, child seats can be dangerous if they are fitted incorrectly (e.g. placing a cushion between the seat and the belts). Always follow the specific installation instructions for the child restraint system you are using.

GROUP 2

Children from 15 to 25 kg can be seated directly with the vehicle seat belts. The seat has the purpose of positioning the child correctly with respect to the seat belt so that the diagonal section crosses the child's chest (never the child's throat) and the horizontal section fits snugly on the child's hips (and not the child's abdomen) **fig. 68**.

The figure is only an example. Follow the instructions for fastening the specific child restraint system you are using.

GROUP 3

For children from 22 to 36 kg, the size of the chest no longer requires a support to space the child's back from the seat back.

Fig. 69 shows proper child seat positioning on the rear seat.

Children taller than 1.5 m can wear seat belts like adults.

F0B0195b

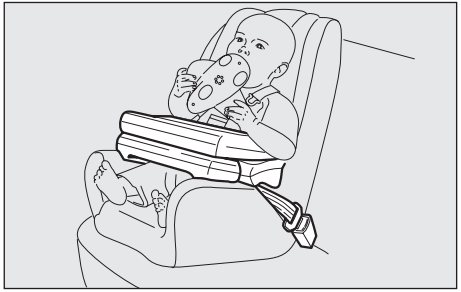

fig. 67

F0B0196b

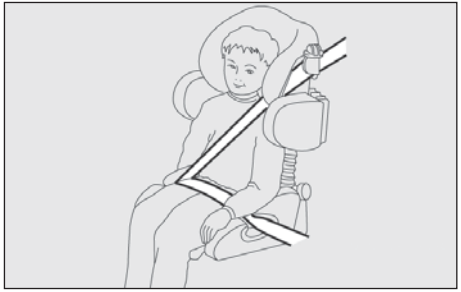

fig. 68

F0B0197b

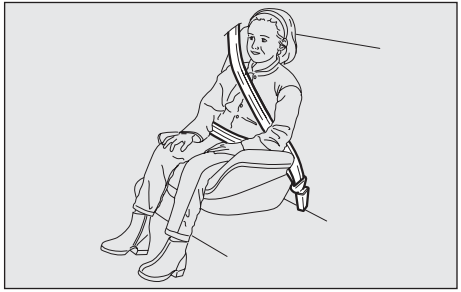

fig. 69

PASSENGER SEAT COMPLIANCE WITH REGULATIONS ON CHILD'S SEAT USE

The car complies with the new European Standard 2000/3/CE which enforces the use of restraint systems classified according to the following tables:

Group	Weight groups	Seats				Third row, 3-seat bench	
		Front passenger	Second row, rear side passenger	Second row, central front passenger	Third row, rear side passenger	Side seats	Central seats
Group 0, 0+	up to 13 kg	U	U L (Type Isofix)	U	U	U	–
Group I	9-18 kg	U	U L (Type Isofix)	U	U	U	–
Group 2	15-25 kg	U	U	U	U	U	U
Group 3	22-36 kg	U	U	U	U	U	U

Legend:

U = suitable for "Universal" restraint systems according to the European Standard ECE-R44 for the above mentioned "Groups".

L = suitable for certain child's restraint systems available at Lineaccessori for the specified group.

To sum up the safety precautions to follow when transporting children:

1) Child restraint systems should be installed on the rear seat as this is the most protected area in the vehicle in the event of a crash.

Children must never be seated in the front passenger seat in cars with passenger's front airbag.

2) When deactivating the passenger front air bag, always check that the system has actually been deactivated by looking at the specific warning light that shall be on with fixed light on the instrument panel.

3) Keep to the instructions for fastening the specific child restraint system you are using which must be provided by the manufacturer. Keep the child restraint system installation instructions with the vehicle documents and the Handbook. Never use a child restraint system without installation instructions.

4) Always check that the seat belt is well fastened by pulling the webbing.

5) Only one child can be secured to a child restraint at a time. Never carry two children in one restraint system.

6) Always check that the seat belts are not positioned on the child's throat.

7) While travelling, do not let the child seat incorrectly or release the belts.

8) Passengers should never carry children or babies on their laps. No-one, however strong they are, can hold a child in the event of a crash.

9) In case of an accident, replace the seat with a new one.

Presetting for mounting the "Type Isofix" child restraint system

The car is equipped for Type Isofix child restraint system installation. Type Isofix is a new European unified system to carry children on the seats which does not prevent using traditional child restraint systems. This system must be fastened using the appropriate brackets set on the car.

Mixed fitting is possible, with a traditional child restraint system on the left and an Type Isofix restraint system on the right. Being their size different, it is possible to fit on the seats up to a maximum of three traditional child restraint systems, while only two Isofix restraint systems can be attached to the fasteners.

Lineaccessori Fiat includes Kiddy Isofix restraint system for children weighing up to 18 kg with the child seat placed in the driving direction and up to 13 kg with the child seat placed in the opposite direction (groups **0**, **0+** and **I**).

The seat fitted with child restraint system shall be set in the most backward position.

You are recommended to choose Kiddy Isofix since this seat has been designed and tested specifically for this vehicle. Kiddy Isofix has been type approved according to the European Standard ECE-R44/03.

Type Isofix restraint systems are fastened to two metal brackets **A-fig. 70**, between the seat back and the cushion.

F0B0235b

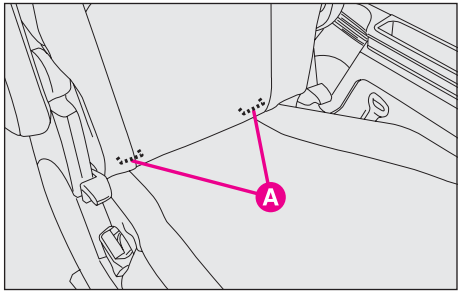

fig. 70

Mount the child restraint system only with the car stationary. The Isofix child restraint system is properly anchored to the mounting brackets when clicks are heard. In any case, keep to the installation instructions that must be provided by the child restraint system's Manufacturer.

The Kiddy Isofix seat shall not be fitted on third row rear side seats.

The Kiddy Type Isofix seat can however be fitted to the front passenger seat even if not provided with Isofix mounts: in this case, the child's seat must be fastened by means of the three-anchoring point seat belt both in the ahead and backward positions

The Type Isofix child's seat covers three weight groups: **0**, **0+** and **I**.

Fitting the seat for the 0 and 0+ group fig. 71

For children included in groups **0** and **0+**, the restraint system faces back (for children with weight up to 13 kg) and the child is held by the restraint system belts **D**.

Proceed as follows to fit the child restraint system in the correct way:

– the release lever **B** must be at rest position (inward);

– find the presetting brackets **A**, then position the child restraint system with the fastening devices **C** aligned with the brackets;

– push the child restraint system until hearing the locking clicks;

– check proper locking by moving the child's seat with force: the built-in safety mechanism actually inhibit improper coupling with only one coupling locked.

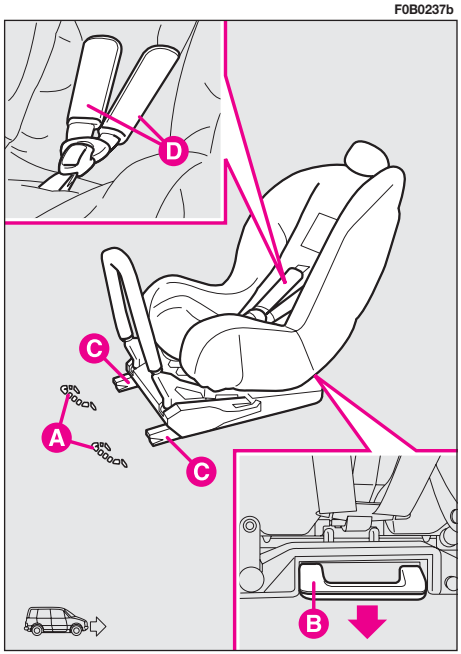

fig. 71

As the child grows, passing to the next weight group (**group I**) the child safety chair must be fitted in the ahead direction; perform this operation by following the instructions provided by the child seat's Manufacturer.

With the child's seat in this position, adjust the corresponding front seat in such a way that the Kiddy Isofix seat structure leans against the front seat backrest.

Fitting the seat for group I fig. 72-73

For proper mounting proceed as follows:

– check whether the release lever **B** is at rest position (inward);

– find the presetting brackets **A**, then position the child restraint system with the fastening devices **C** aligned with the brackets;

– push the child restraint system until hearing the locking clicks;

– for seats positioned facing the running direction, fasten the upper belt (in the upper seat pocket) to the ring **A-fig. 72** located on the floor immediately behind the seat:

– check proper locking by moving the child's seat with force: the built-in safety mechanism actually inhibit improper coupling with only one coupling locked.

With this configuration, the child is secured also by the car seat belts **fig. 73** and by the upper belt.

Keep to the instructions provided by the child restraint system Manufacturer for fastening the specific child restraint system you are using.

F0B0236b

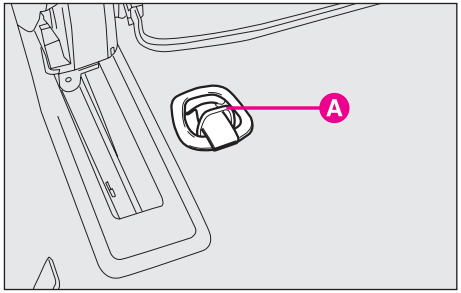

fig. 72

With the child seat in this position, the corresponding front seat must be positioned halfway the sliding guides travel, with the backrest in vertical position.

F0B0238b

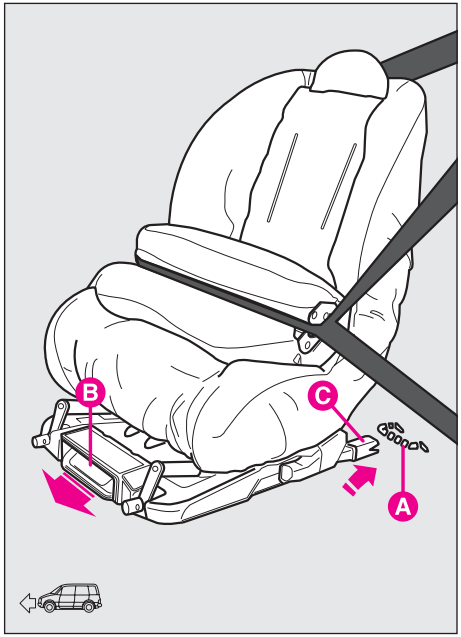

fig. 73

INSTRUMENTS

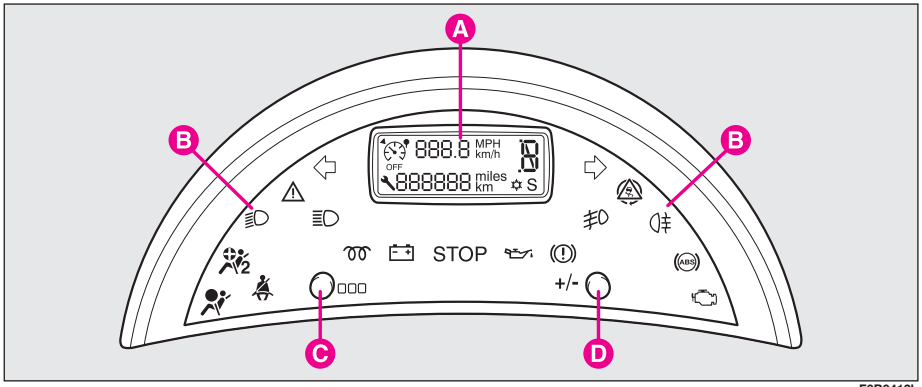

fig. 74

F0B0412b

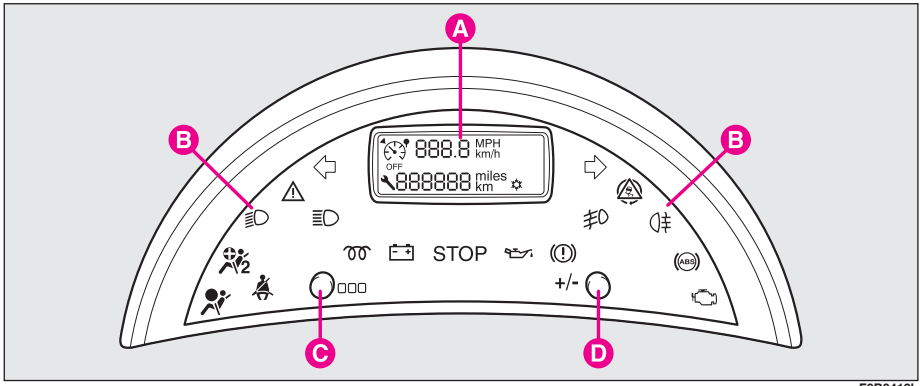

fig. 75

F0B0413b

A - Odometer display: speedometer, kilometre counter, maintenance indicator, engine oil level gauge (where fitted) and, for versions with automatic gear, engaged gear indicator and symbol for presence of ice on the road, if any.

B - Warning lights

C - Trip kilometre counter reset button

D - Button for instrument panel brightness adjustment

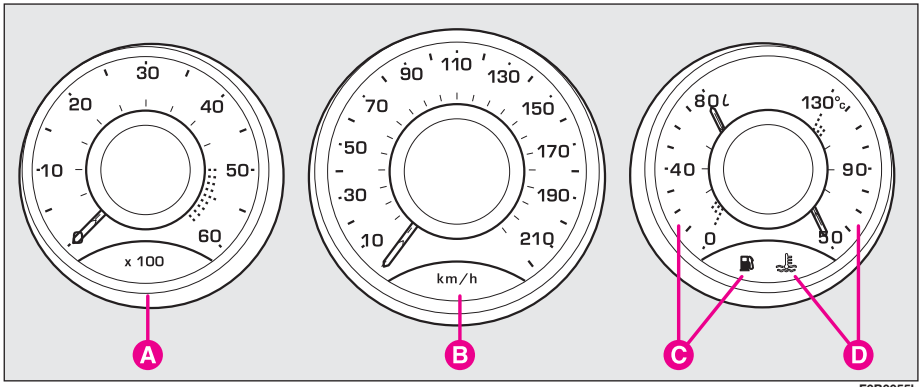

fig. 78

F0B0055b

A - Rev counter

B - Speedometer

C - Fuel gauge with reserve tank warning light

D - Coolant temperature gauge with warning light showing when the temperature is too high

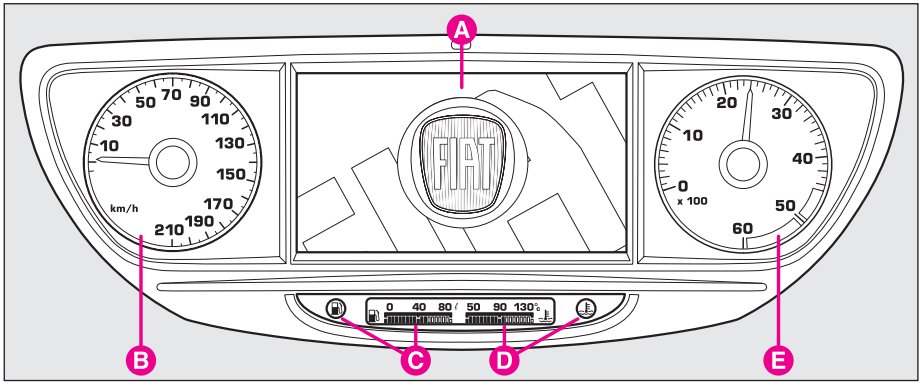

fig. 79

F0B0451b

A - Infotelematic Connect system display

B - Speedometer

C - Fuel gauge with reserve tank warning light

D - Coolant temperature gauge with warning light showing when the temperature is too high

E - Rev counter

REV COUNTER

If the needle is in the red zone, it shows your vehicle is overrevving.

This is only acceptable for a few moments.

IMPORTANT The electronic injection control system cuts off the flow of fuel when the engine is "overrevving". This will lead to a loss of engine power.

When the engine is running idle, the revolution counter can indicate a gradual or sudden revolution increase. This is normal and should not worry you, since it usually happens during normal operations, such as the climate system activation or the fan activation. In particular, a slow revolution variation is needed to preserve the battery charge.

ENGINE COOLANT TEMPERATURE GAUGE

Under normal conditions, the needle of the temperature gauge should hover around the middle of the scale. If it approaches the red section it means the engine is being overtaxed and you should reduce your demands on it.

Warning light comes on when the coolant is too hot.

Even travelling too slowly when the outside temperature is very hot can cause the needle to approach the red sector. In this case it is better to stop and turn off the engine. After a few moments you can start the engine again and accelerate slightly.

FUEL GAUGE

This gauge indicates the litres of fuel present in the tank.

When warning light comes on, it indicates that between 5 and 8 litres of fuel are left in the tank.

Do not travel with the fuel tank almost empty: the gaps in fuel delivery could damage the catalyser.

MULTIFUNCTION DISPLAY (with sound system) CONTROLS fig. 79a

A – button for opening the main menu

B – buttons for surfing the main menu

C – button for confirming the selected function or for confirming set values

D – button for canceling the function / going back to previous screen

E – button for selecting the type of information displayed on the right side of the screen (date, radio – CD, trip computer)

Main menu

Press button **A** to open the main menu and to display the following functions:

– **Radio/CD** (see the corresponding functions on the attached "Sound System" Supplement);

– **Trip computer**: to display info concerning: range, instant consumption, distance covered, average consumption, average speed, distance to destination; to display also info con-

F0B0434b

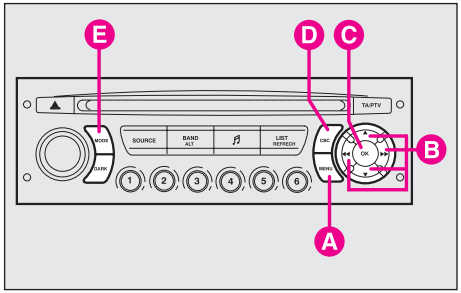

fig. 79a

cerning: automatic light turning on, ESP, rain sensor.

To reset the trip computer data, keep pressed the button set at the end of the right stalk **fig. 79b**;

– **Personal/set-up menu**: to activate/deactivate electric rear wheel lock, to activate/deactivate rear window wiper, to activate/deactivate automatic light turning on and to set date, clock, display brightness, units and language.

MULTIFUNCTION DISPLAY (with infotelematic Connect / Connect Nav+ system) CONTROLS fig. 79c

A – button for opening the main menu

B – buttons for surfing the main menu

C – button for confirming the selected function or for confirming set values

D – button for canceling the function / going back to previous screen

E – button for selecting the type of information displayed on the right side of the screen (date, radio – CD, trip computer)

Main menu

Press button **A** to open the main menu and to display the following functions:

– **Navigation**

– **Audio**

– **Trip computer**: to display info concerning: range, instant consumption, distance covered, average consumption, average speed, distance to destination; to display also info concerning: automatic light turning on, ESP, rain sensor.

To reset the trip computer data, keep pressed the button set at the end of the right stalk **fig. 79b**;

– **Address book**

– **Personal/set-up menu**: to activate/deactivate electric rear wheel lock, to activate/deactivate rear window wiper, to activate/deactivate automatic light turning on and to set date, clock, display brightness, units and language.

– **Map**

– **Video**

For Navigation, Audio, Address book, Telematic, Map and Video functions, refer to the attached "Connect Nav+" Supplement.

F0B0435b

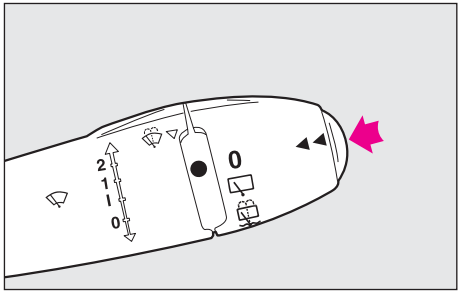

fig. 79b

F0B0452b

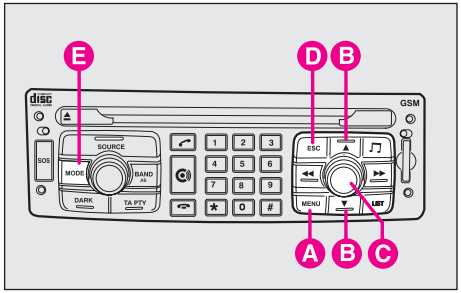

fig. 79c

ODOMETER DISPLAY

This instrument displays the following values:

on the upper line: partial kilometres and engine oil level gauge (where fitted)

on the lower line: total kilometres and programmed maintenance indicator; versions with automatic gear are also fitted with engaged gear indicator (for further details see the chapter "Automatic gear").

Trip kilometre counter fig. 80

Press button **A** to display the trip kilometres. Keep it pressed to reset.

Engine oil level gauge (where fitted)

After turning the ignition key to **M**, this indicator first displays the kilometres to be reached before carrying out the next maintenance operation and then displays the engine oil level in the engine sump for a limited time. **Fig. 81** shows the correct oil level condition. Flashing of the wording "OIL", together with the sound of the buzzer and the dedicated message indicate low engine oil level. Flashing of wording "OIL –" indicates an engine oil level sensor failure.

Scheduled maintenance indicator fig. 82

The maintenance indicator uses warning lamp **A** and kilometre counter **B** to indicate when oil and oil filter are to be replaced in accordance with the service schedule. To keep the warranty valid, go to a **Fiat Dealership** (see also the "Car maintenance" chapter).

F0B0244b

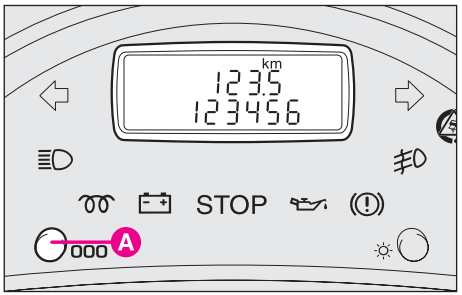

fig. 80

F0B0415b

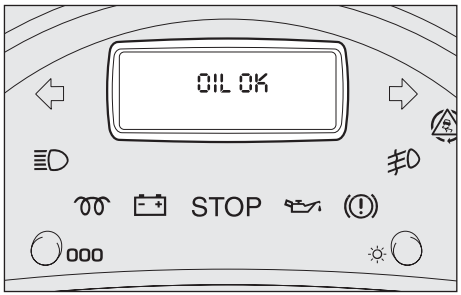

fig. 81

F0B0246b

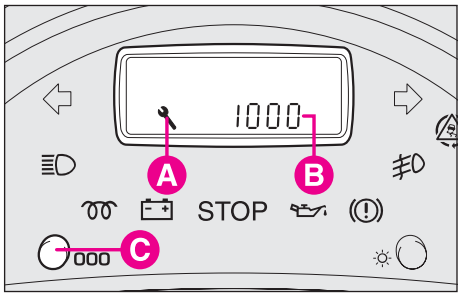

fig. 82

IMPORTANT Any anomalies should be reported to your **Fiat Dealership** immediately without waiting for the next servicing coupon to be carried out.

A - Maintenance warning lamp.

B - Kilometre counter.

C - Configuration and reset button.

Operation

When the key is turned to **M**, warning lamp **A** will light up for some seconds and the kilometre counter **B** will display the number of kilometres (rounded down) still to be travelled before the next servicing is due. After this period the engine oil level (where fitted) will be automatically displayed and then the total kilometres travelled will be displayed as well;

– **maintenance due after 2000 km until the maintenance deadline**: when the key is turned to **M**, warning lamp **A** will light up and the kilometre counter **B** will display the number of kilometres (rounded down) still to be travelled before the next servicing is due. After some seconds the warning lamp will remain lit and the total travelled kilometres will be displayed;

– **maintenance overdue**: when the key is turned to **M**, warning lamp **A** will flash for some seconds and the number of kilometres over the maintenance limit will be displayed; after this period the warning lamp will remain lit and the total travelled kilometres will be displayed.

IMPORTANT If, after about 12 months, the kilometres indicated in the Service Schedule have not been reached yet, when the key is turned to **M**, warning lamp **A** will light up and the kilometre counter will show 0 km. In this case contact a **Fiat Dealership**.

Configuration procedure

If the vehicle is used in particularly difficult conditions, you are recommended to reset the system and reduce the maintenance frequency from 30,000 to 20,000 km.

To alter the maintenance frequency:

– turn the key to **M**;

– press button **C** and keep it pressed, so the number of kilometres still remaining or already passed since the scheduled servicing will flash;

– release the button immediately to display the preset maintenance frequency;

– a repeated press on button **C** will change the maintenance frequency to the one required:

30,000 km (recommended in normal use conditions);

20,000 km (recommended in severe use conditions);

– when the selected maintenance frequency is displayed, press button **C** for 10 seconds (the maintenance frequency selected will flash for 10 seconds);

– release the button to confirm as soon as the display stops flashing.

RESETTING

To reset the maintenance indicator:

– turn the ignition key to **S**;

– press and keep button **C** pressed;

– turn the key to **M**;

– press and keep button **C** pressed for around 10 seconds so that the maintenance indicator starts progressive resetting until **= 0** will be displayed;

– release button **C** and warning lamp **A** will go off to confirm successful resetting.

Your Fiat Dealership will reset the maintenance indicator after each control carried out.

INFOTELEMATIC CONNECT SYSTEM (where fitted)

The vehicle can be fitted with the infotelematic CONNECT system which includes a radio with CD-ROM/Audio player, GSM cell phone, navigator and on-board computer, designed in accordance with the specific features of the passenger compartment and with a personalised design that blends with the styling of the dashboard.

The system is installed in an user-friendly position for the driver and the graphics on the front panel make it easy to quickly locate the controls which facilitate the use of them.

To use the system keep to the instructions and warnings concerning both its functions and the relative road safety rules contained in the specific Annex provided with the present Owner Handbook.

The navigation system helps the driver while driving by suggesting, vocally and graphically, the best route to be followed to reach the preset destination. The suggestions given by the navigation system do not exempt the driver from fully responsibility due to driving behaviour and compliance with road and other traffic regulations. The responsibility for road safety always and anyway lies with the vehicle's driver.

WARNING LIGHTS

IMPORTANT When a malfunction warning lamp lights up, the related message can be viewed on the display and two or more sound warnings ("gong") are emitted.

The indicator and warning lights come on in the following circumstances:

BATTERY NOT RECHARGED PROPERLY (Red)

When there is a malfunction in the current generating system.

The light comes on when you turn the ignition key to **M**, but it should go out when the engine starts.

A delay in the light going out is acceptable only when the engine is idling.

If the warning light remains lit contact immediately a **Fiat Dealership**.

HANDBRAKE ON/BRAKE FLUID LEVEL TOO LOW (Red)

The light comes on when you turn the ignition key to **M**, but it should go out after a couple of seconds. The warning light comes on when the brake fluid level falls below the minimum due to a possible leakage in the circuit, and when the handbrake is applied.

If the warning lamp lights up while the vehicle is moving, switch the engine off and get in touch with a Fiat Dealership.

ANTILOCK BRAKING SYSTEM (ABS) MALFUNCTION (Amber)

The warning light comes on when you turn the ignition key to **M**, but it should go out after a couple of seconds.

The warning light comes on when the ABS is not working properly. The normal braking system continues to function normally without ABS, but it is as well to have the vehicle checked at a **Fiat Dealership** as soon as possible.

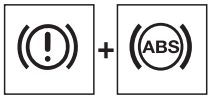

ELECTRONIC BRAKING DEVICE (EBD) MALFUNCTION (Red)

The car is fitted with an electronic braking device (EBD). These warning lights will come on at the same time when the engine is running to indicate that there is an EBD system failure.

In this case violent braking may be accompanied by early rear wheel locking with the possibility of skidding. Drive the car extremely carefully to the nearest Fiat Dealership to have the system checked.

OIL PRESSURE TOO LOW (Red)

The light comes on when you turn the ignition key to **M**, but it should go out when the engine starts. A delay in the light going out is acceptable only when the engine is idling.

If the engine has been taxed heavily, the light may flash when idling. It should, however, go out when you accelerate slightly.

If the warning lamp lights up while the vehicle is moving, switch the engine off and get in touch with a Fiat Dealership.

ENGINE COOLANT LEVEL TOO LOW (Red)

The light comes on when you turn the ignition key to **M**, but it should go out after a couple of seconds. The light comes on when the engine is overheated. If the warning lamp lights up while the vehicle is moving, stop the vehicle with the engine running slightly accelerated, to facilitate the coolant circulation.

If the warning lamp does not go out within the next 2 or 3 minutes, switch the engine off and get in touch with a Fiat Dealership.

STOP (Red)

Comes on at the same time with any other warning light.

SEAT BELTS UNFASTENED (Amber)

The light comes on when you turn the ignition key to **M** and the driver's or passenger's seat belt (if any) is not fastened correctly.

When the pilot lamp turns on, the multifunction display, provides for 8 seconds, the display of a dedicated message.

Warning light comes on together with a warning beep (for 90 seconds) when the car speed exceeds 25 km/h.

EOBD ENGINE FAILURE CONTROL SYSTEM (Amber)

In normal conditions, the warning light will come on when the ignition is turned to **M** and should go out as soon as the engine is started. The initial lighting up shows that the warning light is working properly.

If the warning light either stays on or comes on while travelling:

fixed light - warning of a fuel feed/ignition system failure which may increase emissions in exhaust or cause possible drops in performance, poor handling and high consumption.

In such conditions, you can continue driving but you should not tax the engine and you should moderate the speed. Prolonged use with the warning light on can cause damage. Contact a **Fiat Dealership** as soon as possible.

The warning light goes off if the fault disappears but it is however stored by the system.

flashing (only petrol versions) - warning that the catalyser can be damaged (see "EOBD system" in this chapter).

If the warning light starts flashing, release the accelerator pedal and slow the engine until the warning light stops flashing. Continue driving at moderate speed, preventing the warning light from coming on again. Contact a **Fiat Dealership** as soon as possible.

Contact a Fiat Dealership as soon as possible if the warning light either does not come on when the key is turned to M or comes on, with fixed or flashing light, when travelling.

AIR BAG MALFUNCTION (Amber)

When the system is inefficient.

When you turn the ignition key to the **M** position the light comes on. It should, however, go out after about 4 seconds.

If the warning light does not turn on when turning the ignition key to M or if it stays on when travelling, this could indicate a failure in safety retaining systems; under this condition air bags or pretensioners could not trigger in the event of collision or, in a restricted number of cases, they could trigger accidentally. Stop the car and contact Fiat Dealership to have the system checked immediately.

FRONT PASSENGER AIR BAG DEACTIVATED (Amber)

With the front passenger air bag activated, the light comes on when you turn the ignition key to **M**, but it should go out after about 4 seconds.

Warning light indicates also warning light failure. This is indicated by intermittent flashing, over 4 seconds, of warning light . In this event, warning light could be not up to indicate restraint system failures, if any. Stop the car and contact Fiat Dealership to have the system checked.

The warning light will come on when the front passenger air bag is deactivated.

REAR FOG LIGHTS (Amber)

When the rear fog lights are turned on.

ESP SYSTEM (Amber)

The light comes on when you turn the ignition key to **M**, but it should go out after a couple of seconds.

If the warning light either stays on or comes on while travelling contact a **Fiat Dealership**.

Warning light flashing when driving indicates that the ESP system is active.

SERVICE WARNING LIGHT (Red)

This warning light will turn on in the following cases: low coolant level, particulate filter failure, low particulate filter additive level, risk of clogged particulate filter.

GLOW PLUGS (Amber)

The light comes on when the ignition key is turned to **M** and then goes off when the glow plugs have reached the set temperature.

Start the engine immediately after the warning light goes off.

IMPORTANT When the environment temperature is very high, the warning light might come on for less than a second.

FUEL RESERVE (Amber)

The warning light comes on when 8 litres of fuel have remained in the tank.

DIPPED HEADLIGHTS (Green)

When the dipped-beam headlamps are turned on.

RIGHT DIRECTION INDICATOR (Green)

The warning light starts flashing when the direction indicator control stalk is lifted or together with the left direction indicator, when the hazard light button is pressed.

LEFT DIRECTION INDICATOR (Green)

The warning light starts flashing when the direction indicator control stalk is lifted or together with the right direction indicator, when the hazard light button is pressed.

FRONT FOG LIGHTS (Green)

When the front fog lights are turned on.

FULL BEAM HEADLAMPS (Blue)

When the full-beam headlamps are turned on or when the "Follow me home" device is on (see the relative chapter).

FLAT TYRES

The warning light on the dial turns on (together with message on the display and the buzzer), when there is a pressure drop in one or more tyres.

In this way the T.P.M.S. system warns the driver that one or more tyre/s is/are flat (i.e. punctured).

IMPORTANT Stop travelling with one or more flat tyre/s since road holding could be jeopardised. Stop the car without braking or steering sharply. Change immediately punctured wheel with space-saver spare wheel (where provided - see section "In an emergency") and contact **Fiat Dealership** as soon as possible.

TYRE PRESSURE MONITORING SYSTEM FAILURE

The warning light on the dial turns on (together with the message on the display) when a failure is detected in the T.P.M.S. system (where provided).

Contact **Fiat Dealership** as soon as possible.

Should one or more wheels without sensor be fitted, the instrument panel warning light will come on (together with the message on the display) and stay on until fitting again the four wheels with sensors.

CLIMATE CONTROL SYSTEM fig. 83

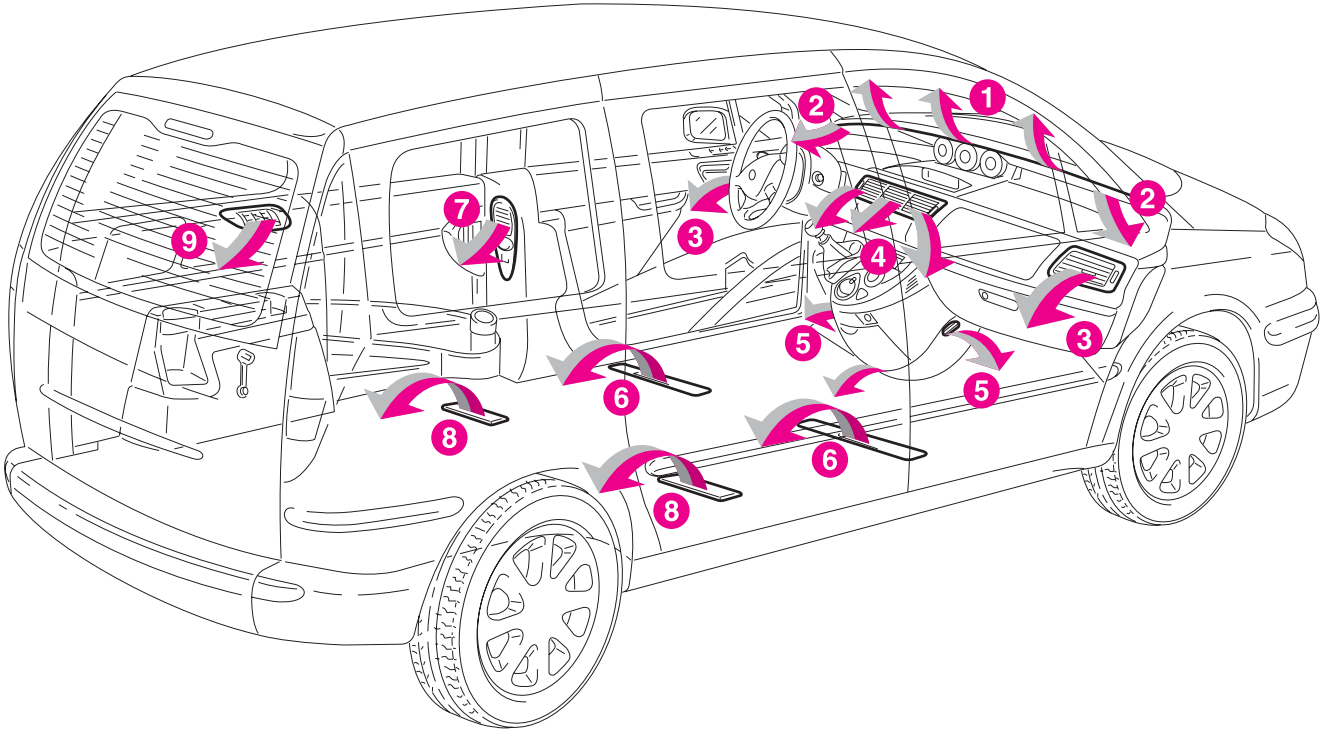

fig. 83

F0B0247b

Legend fig. 83

1 Front windscreen defroster/demister - **2** Side window defroster or demister - **3** Directional side vents - **4** Directional central vents - **5** Lower vents to send air towards the feet of front passengers - **6** Lower vents to send air towards the feet of second row passengers - **7** Second row directional vents - **8** Lower vents to send air towards the feet of third row passengers - **9** Third row directional vents.

DIRECTIONAL CENTRAL VENT ADJUSTMENT fig. 84

The two external vents are fitted with lever **A** to direct the air flow (upwards, downwards, on the left, on the right), while the central vent is fixed.

Control **B** for regulating the air flow:

▢ = vent closed

⇦ = vent open.

DIRECTIONAL SIDE VENT ADJUSTMENT fig. 85

Use lever **A** to direct the air flow.

Use slider **B** to adjust the air flow capacity:

▢ = vent closed

⇦ = vent open.

SECOND ROW DIRECTIONAL VENT ADJUSTMENT fig. 86

Use lever **A** to direct the air flow.

Use slider **B** (**+** or **–**) to adjust the air flow capacity.

F0B0064b

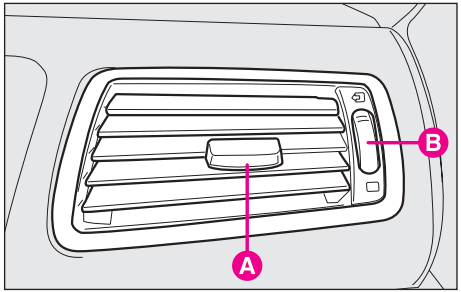

fig. 85

F0B0063b

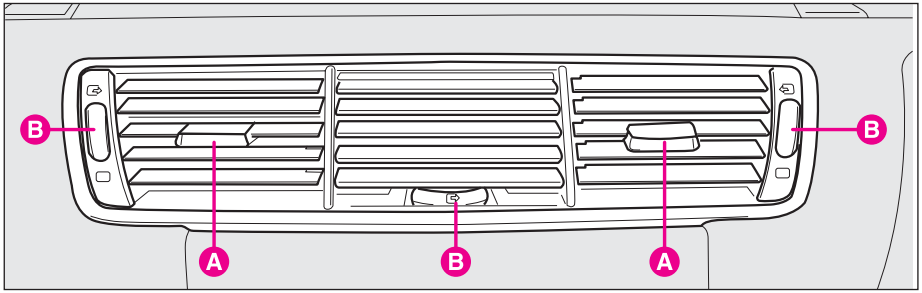

fig. 84

F0B0065b

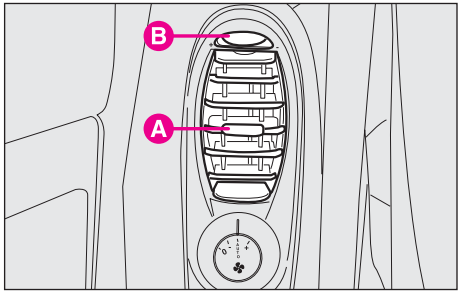

fig. 86

THIRD ROW DIRECTIONAL VENT ADJUSTMENT fig. 87

Use lever **A** to direct the air flow.

Use slider **B** (**+** o **–**) to adjust the air flow capacity.

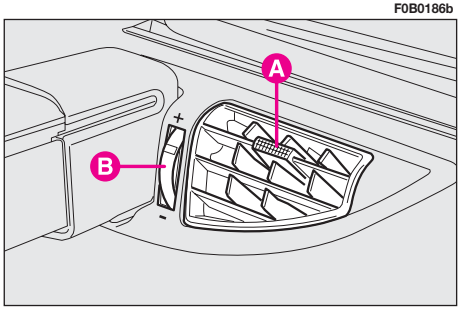

fig. 87

MANUAL CLIMATE CONTROL SYSTEM

The car can be fitted with manual climate control system to control temperature, air flow, distribution and recirculation.

AIR DISTRIBUTION

Air distribution options are the following:

– ventilation (front)

– bilevel (front/feet)

– feet

– windscreen/feet

– MAX-DEF function.

Air is also delivered to second and third row seat.

Ventilation

The treated air flow passes through 5 front vents placed on the edge and in the middle of the dashboard. The air flow can be directed both horizontally and vertically by adjusting manually the tab position and the control lever.

Air capacity can be adjusted by rotating the vent sliders.

Bilevel function

The air flow is distributed in the following way: 45% ventilation, 45% feet, 10% windscreen.

With this setting treated air is directed towards the feet of front and rear seat passengers and towards the dashboard vents.

Feet

Air is directed towards the feet through:

– three front vents for the first row (2 on the driver's side and 1 on the passenger's side);

– four vents on the floor (2 for the second row and 2 for the third row).

Windscreen/feet

Air is distributed with the same percentage to the feet (40%) and windscreen vents (40%), but a small percentage is devoted to ventilation (20%) in order to guarantee the passenger compartment heating and to prevent frosting.

This type of air distribution is applied by the climate control system automatic operation, especially when the external temperature is very low and it is necessary to direct some warm air towards the driver's hands.

MAX-DEF function

Air is completely directed to the windscreen and front side windows.

This function is used for the windscreen/side window rapid defrosting/demisting and rear heated window activation with only one operation.

Such function is activated manually and enables the following functions:

– ventilation with maximum air capacity;

– air mixing completely hot;

– air recirculation off (outside air);

– compressor on;

– air distribution to the windscreen;

– rear heated window on.

When the MAX-DEF function is on it is possible to alter the air capacity and to deactivate the rear heated window.

The rear heated window works for a limited time and turns off automatically.

AIR QUALITY

The system is fitted with a pollen filter which prevents dust particles and pollen coming from the outside from getting into the system.

Have the pollen filter checked at a **Fiat Dealership** at least once a year, possibly at the beginning of spring/summer.

If the car is often used in dusty or highly polluted areas, you should check or change the pollen filter more frequently.

Failure to replace the filter can reduce the climate control system's efficiency considerably.

CONTROLS

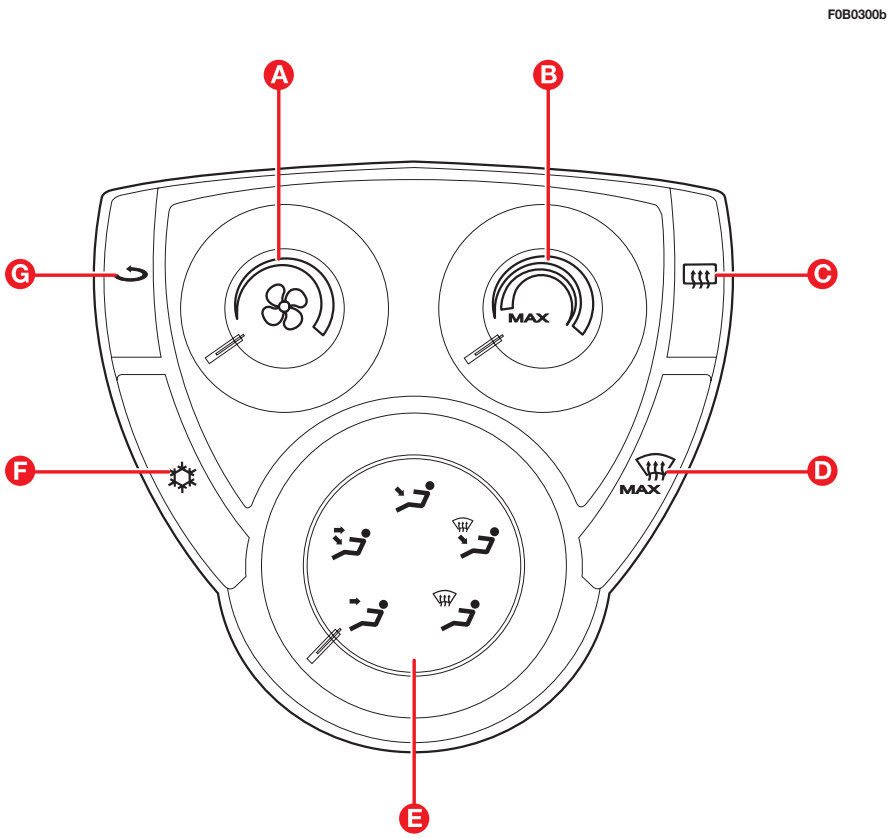

fig. 87a

A Air flow slider

B Temperature control slider

C Heated rear window on/off button

D MAX – DEF function on/off button (max. defrosting/demisting for windscreen, front side windows, rear heated window and door mirrors)

E Air vent slider

F Climate control compressor on/off button

G Inside air recirculation on/off button

CLIMATE CONTROL (cooling)

Proceed as follows:

- turn the slider pointer **B** to the blue section;

- press button **F** to turn the climate control compressor on and button **G** to turn on inside air recirculation;

- turn the slider pointer **A** to the required speed.

• **fan speed setting**: this is possible by turning slider **A**.

• **air distribution selection**: this is possible by this is possible by turning slider **E**.

Air can be distributed in five ways: ventilation (front), bilevel (front/feet), feet, windscreen/feet, windscreen (MAX-DEF).

• **compressor on/off**: if the compressor is turned off by pressing button **N** when the led is lit, the related led will go off; if the same button is pressed when the led is switched off, the compressor (on/off) is on.

• **MAX-DEF on**: this is possible by pressing button **D** and window demisting will be quickly reached.

• **rear heated window on**: this is possible by pressing button **C**, and the related led comes on. In this way the rear window electrical resistances are activated to heat and demist the rear window. To stop it, press the button again and the related led will go off. Anyway, the rear heated window works for a limited time and turns off automatically.

Be careful not to damage the rear heated window resistances when cleaning it from inside.

• **recirculation on**: when button **G** is pressed it is possible to select the following travelling conditions: closed recirculation (relative led on), air coming from outside (led off) recirculation open, or having the system automatic control on (led off even if activated).

It is easier to reach the wished air temperature conditions with inside air recirculation. Anyway, it is better not to use this function in rainy/cold days because inside window misting may increase, especially if the compressor is off.

You are recommended to use the inside air recirculation function in the traffic jam (car lines inside or outside galleries) to prevent outside polluted air from getting into the vehicle. Anyway, do not use this function when several people are onboard, to prevent inside window misting.

AUTOMATIC CLIMATE CONTROL SYSTEM

The car is fitted with an automatic climate control system to control temperature, air capacity, distribution and recirculation according to two definition levels:

• automatic system called **multi-zone**, with split temperature (left/right) for the first and second row;

• automatic system called **three-zone** with additional rear fans which can be controlled by the second row passengers to change the second and third row vent air capacity.

IMPORTANT Manual selections prevail over automatic selections and are stored in the memory until the user activates the system automatic mode (AUTO). Manual settings are stored when the engine is turned off and restored when the engine is started again.

The system uses refrigerant R134a as it will not pollute the environment if it accidentally leaks. Under no circumstance use other fluids which are incompatible with the system's component parts.

AIR FLOW

The system manual operation has 8 different air capacity levels which are displayed with half blackening of each main fan symbol stake.

When the automatic function has been enabled (AUTO) the air capacity varies and can be controlled by the system. This is indicated on the display by 4 half blackened stakes.

IMPORTANT When the engine is started with the climate control system in automatic mode and the external temperature is very low, the fan may not be activated. Do not consider it a malfunction; the system will restore the normal operation as soon as the temperature threshold set by the system is reached.

AIR DISTRIBUTION

Air distribution options, controlled automatically or manually, are the following:

– ventilation (front)

– bilevel (front/feet)

– feet

– windscreen/feet

– MAX-DEF function.

Air is also delivered to second and third row seat.

Ventilation

The treated air flow passes through 5 front vents placed on the edge and in the middle of the dashboard. The air flow can be directed both horizontally and vertically by adjusting manually the tab position and the control lever.

Air capacity can be adjusted by rotating the vent sliders.

With this setting the system enables air capacity variation for the second and third row.

Bilevel function

The air flow is distributed in the following way: 45% ventilation, 45% feet, 10% windscreen.

With this setting treated air is directed towards the feet of front and rear seat passengers and towards the dashboard vents. It also enables air capacity variation for the second and third row.

Feet

Air is directed towards the feet through:

– three front vents for the first row (2 on the driver's side and 1 on the passenger's side);

– four vents on the floor (2 for the second row and 2 for the third row).

Windscreen/feet

Air is distributed with the same percentage to the feet (40%) and windscreen vents (40%), but a small percentage is devoted to ventilation (20%) in order to guarantee the passenger compartment heating and to prevent frosting.

This type of air distribution is applied by the climate control system automatic operation, especially when the external temperature is very low and it is necessary to direct some warm air towards the driver's hands.

In addition, still with the climate control system working in automatic mode, when the external temperature is lower than 18°C, supplementary fans can be used to direct some warm air to the second and third row.

If cold air is required, treated air directed to the feet is distributed to all three rows.

MAX-DEF function

Air is completely directed to the windscreen and front side windows.

This function is used for the windscreen/side window rapid defrosting/demisting and rear heated window activation with only one operation.

Such function is activated manually and enables the following functions:

– ventilation with maximum air capacity;

– air mixing completely hot;

– air recirculation off (outside air);

– compressor on;

– air distribution to the windscreen;

– rear heated window on.

When the MAX-DEF function is on it is possible to alter the air capacity (the minimum corresponds to 1 fan notch) and to deactivate the rear heated window.

The rear heated window works for a limited time and turns off automatically.

MIXING

Temperature can be adjusted ranging from a minimum of 14°C to a maximum of 28°C, i.e. “completely cold” and “completely hot”.

AIR QUALITY

The system is fitted with a pollen filter which prevents dust particles and pollen coming from the outside from getting into the system.

Have the pollen filter checked at a **Fiat Dealership** at least once a year, possibly at the beginning of spring/summer.

If the car is often used in dusty or highly polluted areas, you should check or change the pollen filter more frequently.

Failure to replace the filter can reduce the climate control system’s efficiency considerably.

SENSORS

The system is fitted not only with outside and inside temperature sensors, but also with a sunlight sensor which transmits the sunlight value to the control unit, thus making the temperature control by the system more accurate.

The sunlight sensor is placed in the middle of the dashboard, while the outside temperature sensor is on the passenger side door mirror.

CONTROLS fig. 88-89

Versions with standard equipment

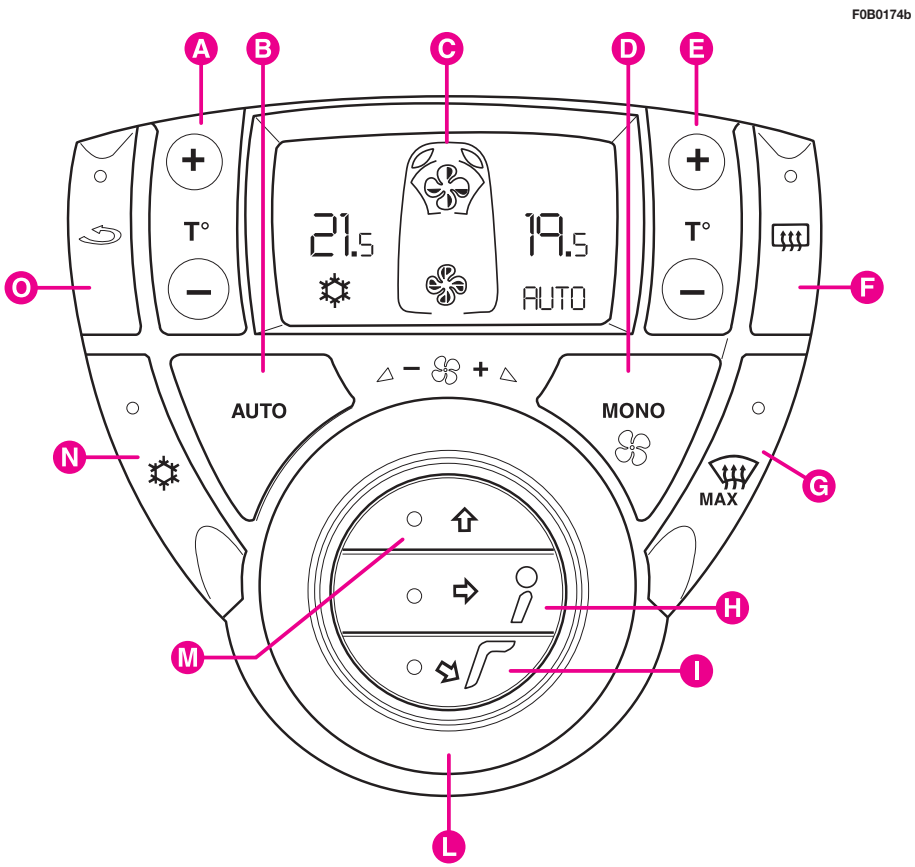

fig. 88

Legend fig. 88

A Internal temperature adjustment button on driver's side

B "AUTO" mode button

C Display

D MONO button for driver's and passenger's side temperature alignment

E Internal temperature adjustment button on passenger's side

F Rear heated window on/off

G Maximum defrosting/demisting on/off for windscreen and front side windows, rear heated window and door mirrors (MAX-DEF function)

H Air flow adjustment button for central vents

I Air flow adjustment button for lower vents

L Rotating slider for air capacity adjustment (main fan)

M Air flow adjustment button for upper vents

N Climate control system compressor on/off

O Inside air recirculation on/off.

Versions with additional rear fans

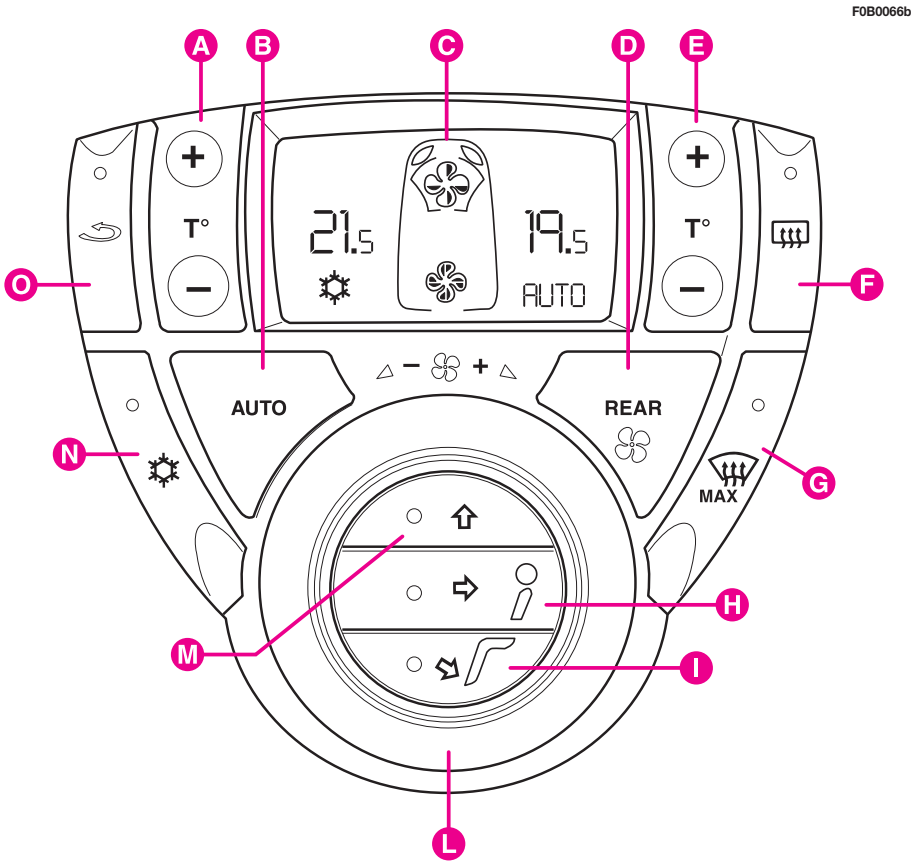

fig. 89

A Internal temperature adjustment button on driver's side

B "AUTO" mode button

C Display

D Additional REAR fans on/off

E Internal temperature adjustment button on passenger's side

F Rear heated window on/off

G Maximum defrosting/demisting on/off for windscreen and front side windows, rear heated window and door mirrors (MAX-DEF function)

H Air flow adjustment button for central vents

I Air flow adjustment button for lower vents

L Rotating slider for air capacity adjustment (main fan)

M Air flow adjustment button for upper vents

N Climate control system compressor on/off

O Inside air recirculation on/off.

SYSTEM OPERATION fig. 88-89

The system can be activated in several ways:

– turning the main fan slider clockwise (**L**);

– or pressing button **A** (+/–) or **E** (+/–);

– or pressing one of buttons (**H**, **I**, **M**);

In these three cases the system restores all the operation functions stored before turning it off.

– or pressing one of buttons **B**, **D**, **N**; in this case the automatic mode is selected;

– or pressing button **G**; in this case the MAX-DEF function is selected.

The system automatically stores the settings prior to the system switching off, but it also takes into consideration the vehicle stop and other external parameters, i.e.:

– if the engine is turned off for 20 minutes with the same internal temperature, the system is restored keeping the same settings. If in that period temperature changes considerably, the system restores the temperature prior to switching off;

– if the engine is turned off for more than 20 minutes, the system is switched on in automatic mode, even it was off before the vehicle stop, without changing the temperature value.

SETTINGS fig. 88-89

The user can choose the following options:

• **wished temperature setting**: this is possible pressing button **A** (+/–) or **E** (+/–) and checking the temperature value on the display (**C**). It is also possible to split temperature and set different values for the driver and the passenger; the maximum difference is 5°C.

Temperature can be increased or decreased by setting different steps which can be viewed on the display: 1°C between 14°C and 18°C and between 24°C and 28°C, 0.5°C between 18°C and 24°C.

• **“completely cold” setting**: this option can be selected automatically by pressing and keeping button **A** (–) or **E** (–) pressed until 14°C are reached; in this case the system performance is at the highest. With this option the system works in mono conditions and the following settings are active:

– slider turned to “completely cold”;

– air distribution during ventilation;

– maximum air capacity value;

– compressor on;

– automatic recirculation off, even if it is possible to activate it manually without leaving the wished setting.

• **“completely hot” setting**: this option can be selected automatically by pressing and keeping button **A** (+) or **E** (+) pressed until 28°C are reached; in this case the system performance is at the highest. The following settings are active as well:

– slider turned to “completely hot”;

– air directed to windscreen/feet or feet, according to the outside temperature;

– maximum air capacity value;

– compressor controlled by the system;

– automatic recirculation closed even if it possible to activate manually the open recirculation without leaving the required setting.

• **fan speed setting**: this is possible by turning slider **L**; the wished speed value is displayed through the front fan stake blackening **C**.

IMPORTANT When the engine is started with the climate control system in automatic mode (AUTO) and the external temperature is very low, the fan may not be activated. Do not consider it a malfunction; the system will restore the normal operation as soon as the temperature threshold set by the system is reached.

• **air distribution selection**: this is possible by pressing altogether **H**, **I**, **M** on the central rotating slider **L**.

Air can be distributed in five ways: ventilation (front), bilevel (front/feet), feet, windscreen/feet, windscreen (MAX-DEF).

To select the wished air distribution press the related button and turn off other possible selections. The connected led switching on and off confirm the selection.

When the automatic mode (AUTO) is on, air distribution is controlled by the system, thus the related leds are all turned off.

• **compressor on/off**: if the compressor is turned off by pressing button **N** when the led is lit, the related led will go off; if the same button is pressed when the led is switched off, the system will control the compressor (on/off).

If the system is working in automatic mode the compressor is controlled by the system according to the outside temperature.

When the compressor is turned off with the related led off, air recirculation keeps the conditions prior to switching off (closed or open) and it is still possible to activate the open recirculation. Even with recirculation closed, there is still a given quantity of not treated air depending on the fan setting and the vehicle speed, so that window misting is prevented in normal conditions (spring-summer).

• **automatic mode (AUTO) setting**: this is possible by pressing button **B** and the system will be controlled automatically. AUTO and symbol ❄ (ice) are displayed. It means that the system will control temperature, air distribution and the main fan speed.

If button **N** is pressed when the system is in automatic mode, the compressor and switchover to cold air are deactivated, the related led and symbol ❄ (ice) go off and the system keeps working in automatic mode.

• **MAX-DEF on**: this is possible by pressing button **G** and window demisting will be quickly reached.

To exit this function press button **G** again or one of the following buttons: **A**, **B**, **D**, **E**, **H**, **I**, **M**, **O**.

• **rear heated window on**: this is possible by pressing button **F**, and the related led comes on. In this way the rear window electrical resistances are activated to heat and demist the rear window. To stop it, press the button again and the related led will go off. Anyway, the rear heated window works for a limited time and turns off automatically.

Be careful not to damage the rear heated window resistances when cleaning it from inside.

• **recirculation on**: when button **O** is pressed it is possible to select the following travelling conditions: closed recirculation (relative led on), air coming from outside (led off) recirculation open, or having the system automatic control on (led off even if activated).

It is easier to reach the wished air temperature conditions with inside air recirculation. Anyway, it is better not to use this function in rainy/cold days because inside window misting may increase, especially if the compressor is off.

You are recommended to use the inside air recirculation function in the traffic jam (car lines inside or outside galleries) to prevent outside polluted air from getting into the vehicle. Anyway, do not use this function when several people are onboard, to prevent inside window misting.

• **driver's and passenger's side temperature alignment (MONO) fig. 88 (for versions without additional fans)**: this is possible by pressing button **D**, so a single temperature is reached inside the passenger compartment.

• **rear seat air capacity adjustment (REAR) fig. 89 (for versions without additional fans)**: this is possible by pressing button **D**, thus the second row passengers can adjust air capacity with the additional fan knobs **A-fig. 90**. The rear fan symbol will be viewed on the display **C**.

The additional fan effect depends on the position of knobs **A**:

0 = additional fan with minimum capacity;

– = additional fan air capacity equal to 50% of the main fan current capacity;

AUTO = additional fan capacity equal to the main fan capacity;

+ = additional fan air capacity equal to 70% of the main fan current capacity.

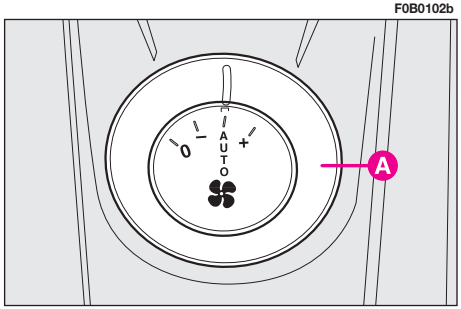

fig. 90

TURNING THE SYSTEM OFF

The system can be switched off by turning knurled knob **L** anticlockwise until the car shape is displayed without the fan symbol.

When the system is turned off it makes the following operations:

– storing of conditions prior to switching off;

– the graphics on display **C** go off except for the car shape;

– the air recirculation is taken to open position (outside air intake);

– the compressor is excluded;

– the fan is excluded;

– the air is distributed to the windscreen;

– the air mixing is in "completely cold" position.

FAILURE INDICATION

If any failures are detected (locked switches, sensor malfunction, electrical failures, etc.) the system automatically sets the "recovery" mode, which is displayed by the flashing points separating the temperature decimals on the display **C**. In this case contact a **Fiat Dealership** as soon as possible.

Recovery mode

The system will work in the following way:

– **driver's and passenger's temperatures**: aligned and evolving in the same way;

if buttons **A** or **E** are locked temperature is set at 21°C by the system;

– **main fan, distribution, compressor, recirculation**: they work in automatic mode (AUTO);

– **AUTO function:** main fan, air distribution, compressor and air recirculation are automatically controlled by the system and the impulses on the relative switches have no effect;

– **MAX-DEF function**: the system directs air to the windscreen and the air distribution, compressor, AUTO and air recirculation switches are not active, while the main fan and temperature functions are still active;

– **REAR function**: additional fans cannot be switched on;

– **rear window**: cannot be switched on.

INDEPENDENT ADDITIONAL HEATER

To improve your comfort, cars with JTD engines, can be fitted with an independent additional heater.

After switching the engine off or with engine idling, the additional heater could stay on hissing and exhaling smoke and smell.

STEERING COLUMN STALKS

LEFT-HAND STALK

The left-hand stalk controls most of the outside lights. If you leave the lights on when you take the key out of the ignition an alarm will sound.

Outside lighting is possible with the ignition key at **M**.

Side lights fig. 91

These lights turn on when you turn the knurled knob **A** from O to ☼.

Dipped-beam headlights fig. 92

To switch on: turn the knurled knob **A** from ☼ to ≡D/≡D.

Instrument panel indicator light ≡D comes on.

Follow me home (where fitted) fig. 93

This function works for a set time (45 seconds) and illuminates the area in front of the vehicle. It is activated by turning the ignition key to **S** or, if the ignition key has been removed, by pushing the stalk towards the dashboard. This function can be activated by operating the stalk within 2 minutes after the engine has been turned off.

If the vehicle is fitted with the sidelight and dipped-beam headlight automatic switching on device, the "follow me home" function is automatically activated when the doors are opened.

F0B0416b

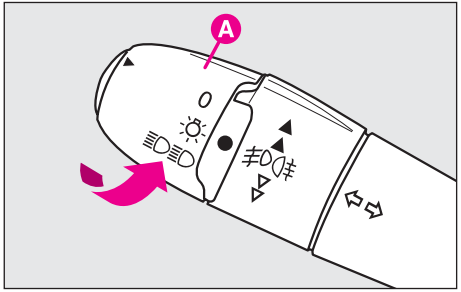

fig. 91

F0B0417b

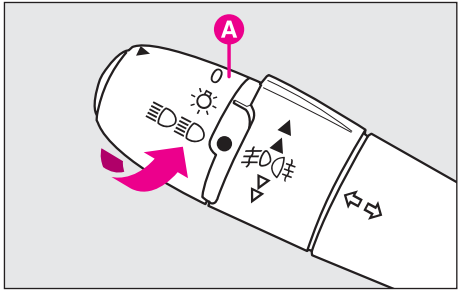

fig. 92

F0B0418b

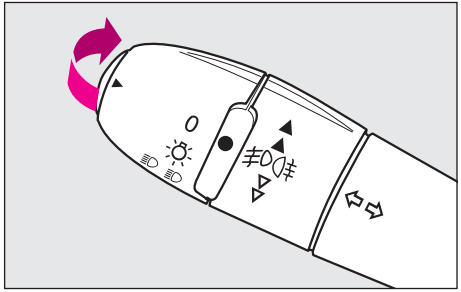

fig. 93

Side light and dipped-beam headlight automatic switching on (where fitted)

This device is fitted with an infrared sensor installed on the windscreen and is able to detect the outside light brightness variations.

To activate /deactivate automatic light turning on, use the display set-up menu (see paragraph "Info display" in this section).

The light sensor is not able do detect fog, therefore in this case it is necessary to turn the lights on manually.

IMPORTANT When the device is on and the windscreen wiper is working, lights are automatically turned on.

When the lights come on automatically it is also possible to turn on front and rear foglights; when the lights are turned off automatically, the latter ones will be turned off as well.

IMPORTANT When the sensor is on it is possible to have only the lights flashing, therefore full-beam headlights will have to be turned on manually, if needed.

Main beam headlights fig. 95

To switch on: push the knurled knob **A** into position ≣D/≣D and pull it up towards the steering wheel.

Instrument panel indicator light ≣D comes on.

To turn off: pull the stalk towards the steering wheel again.

F0B0419b

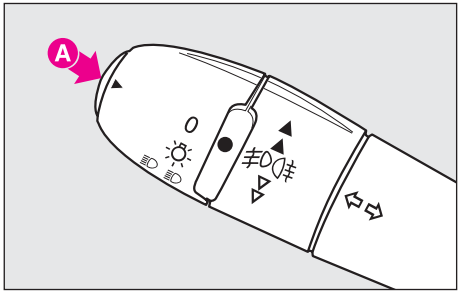

fig. 94

F0B0420b

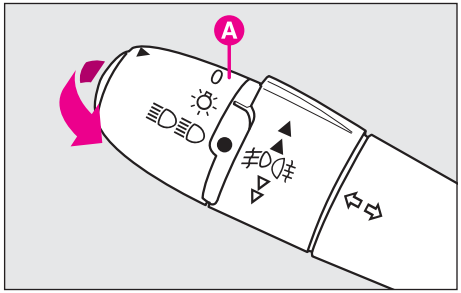

fig. 95

Flashing the headlights fig. 96

Pull the stalk towards the steering wheel (temporary position) to flash the lights, regardless of the knurled knob **A** position.

Switching on the front (where fitted) and rear fog lights fig. 97-98

To switch on fig. 97:

– turn knurled knob **B** in the arrow direction:

– first impulse (temporary position): front fog lights on. The instrument panel indicator light comes on;

– second impulse (temporary position): rear fog lights on.

To switch off fig. 98:

– turn knurled knob **B** in the arrow direction (temporary position).

Front and rear fog lights are turned off automatically when the lights are switched off or when sidelights are restored; if rear fog lights should be turned on again, repeat the above mentioned operation.

The lights on before the engine turning off will automatically come back on when the engine is started again.

IMPORTANT The rear foglight may annoy the drivers following you. For this reason, do not use the light when the visibility is good.

F0B0421b

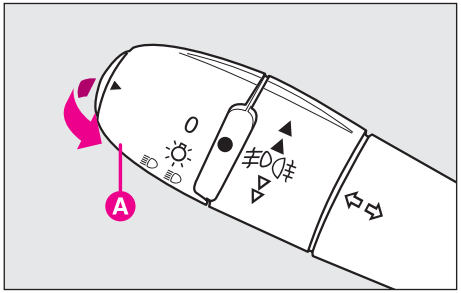

fig. 96

F0B0422b

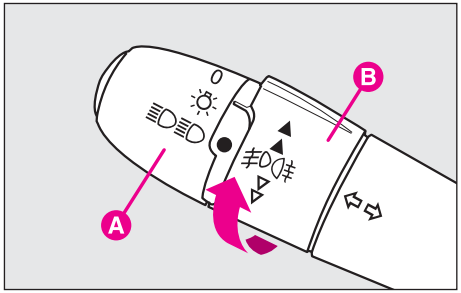

fig. 97

F0B0423b

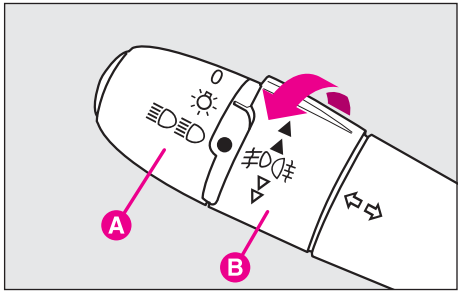

fig. 98

Direction indicators fig. 99

Move the stalk as follows:

upwards (position 1): for the right indicator;

downwards (position 2): for the left indicator.

Instrument panel indicator light ➡ or ⬅ flashes.

The direction indicators turn off automatically when the vehicle straightens up.

If you want to use the indicator briefly (e.g. change of lane) move the stalk up or down without it clicking into position.

When you let it go, it will return to the neutral position again.

F0B0424b

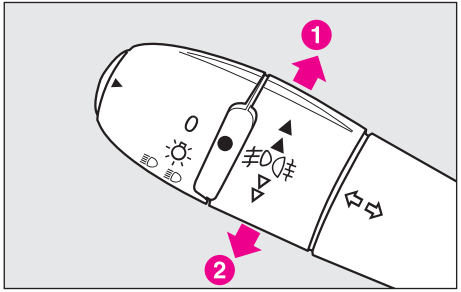

fig. 99

RIGHT-HAND STALK

Windscreen wiper fig. 100

This feature can only work with the ignition key at **M**.

0 - Windscreen wiper off.

I - Flick wipe.

1 - Slow continuous wipe.

2 - Fast continuous wipe.

↓ - Temporary wipe: on releasing the stalk it returns to position **0** and the windscreen wiper turns off automatically.

To make maintenance easier, wash the windscreen or replace the windscreen washer blades, for example, when the ignition key is at **S** or removed and turn the stalk downwards (impulse) in 60 seconds; the windscreen wipers will stop in a vertical position, thus making it possible to be lifted for replacing the blades or washing the windscreen.

IMPORTANT Do not lift the windscreen wipers if they are not in vertical position as above mentioned, otherwise the bodywork might get damaged.

F0B0268b

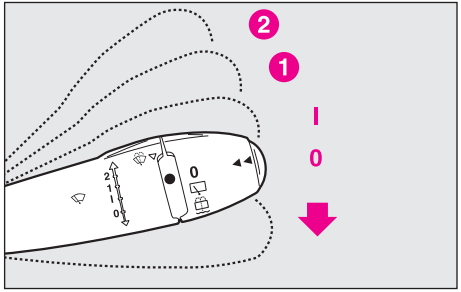

fig. 100

Windscreen wiper with rain sensor (where fitted) fig. 101

It works only when the ignition key is at **M**.

0 - Windscreen wiper off.

I - Flick wipe.

I - Slow continuous wipe.

2 - Fast continuous wipe.

AUTO – Rain sensor activation (automatic operation). On releasing the stalk it returns to position **0**.

To make maintenance easier, e.g. to wash the windscreen or replace the wiper blades when the ignition key is at **S** or has been removed, pull the stalk downwards, so that the blades stay up and stop in that position. Thus it will be possible to lift the blades and clean or replace them.

This function works only for 60 seconds after turning the key to **S** or removing it.

The rain sensor is provided only with some versions. It is an electronic device connected to the windscreen wiper and its function is to adapt flick wipe to the rain intensity.

All the functions controlled by the right-hand stalk are not altered.

The rain sensor is switched on automatically and turns the stalk to AUTO position. It gradually passes from the windscreen wiper off, when the windscreen is dry, to the slow continuous wipe when the rain is intense.

The rain sensor activation is signalled by one flick wipe.

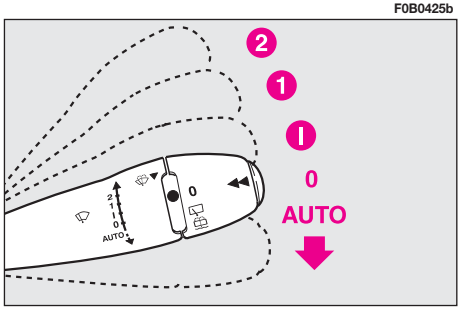

fig. 101

When the windscreen wiper is turned on with the rain sensor already working, the windscreen wiper washes the windscreen regularly and, at the end of its operation, the rain sensor keeps on working automatically.

To switch off the rain sensor turn the key to **S** and when the engine is started again, the rain sensor will not be turned on even if the stalk remained in AUTO position.

To switch on the rain sensor, move the stalk to another position and then back to AUTO.

Do not switch on the rain sensor when the car is washed at an automatic car-wash station.

Check the sensor is off before cleaning the windscreen.

The rain sensor can recognize and automatically adapt to particular weather conditions which require different operations:

– surface impurities (salt, dirt,…);

– water lines due to worn out windscreen wiper blades;

– difference between night and day (the human eye is particularly annoyed by the windscreen wet surface at night rather than in the day).

Turn the rain sensor on if there is ice on the windscreen.

Windscreen washer fig. 102

This feature can only work with the ignition key at **M**.

Pulling slightly the stalk towards the steering wheel (unstable position), regardless of the ring knob **A** position, will operate the windscreen washer and (where provided) also the headlight washer, provided that dipped beams or main beams are on. The windscreen wiper will then flick thrice.

F0B0426b

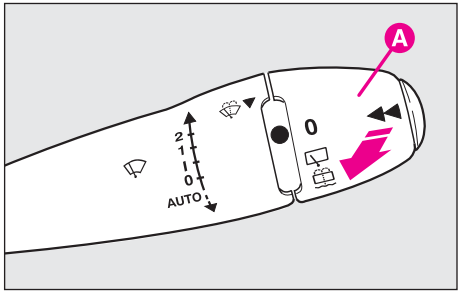

fig. 102

Rear window wiper fig. 103

This feature can only work with the ignition key at **M**.

– Turn knurled knob **A** from **0** to ⊡.

When the windscreen wiper is working and the reverse gear is engaged, the rear window wiper is automatically turned on to improve rear visibility.

Rear window washer fig. 104

This feature can only work with the ignition key at **M**.

– Turn knurled knob **A** from ⊡ to ⊡ (temporary position) and a jet of rear window washer fluid is sent to the rear window.

At the same time, the rear window wiper will flick wipe thrice.

TRIP COMPUTER

The trip computer is device for displaying the following information by pressing repeatedly button **A-fig. 105** on the stalk edge:

range, current fuel consumption, distance from destination, trip 1 (kilometres travelled, average consumption, average speed) e **trip 2 (kilometres travelled, average consumption, average speed)**.

This information will be viewed on the infotelematic CONNECT system display.

Reset: press and keep button **A** pressed for more than 2 seconds.

F0B0427b

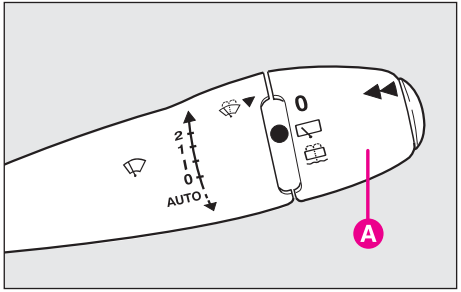

fig. 103

F0B0428b

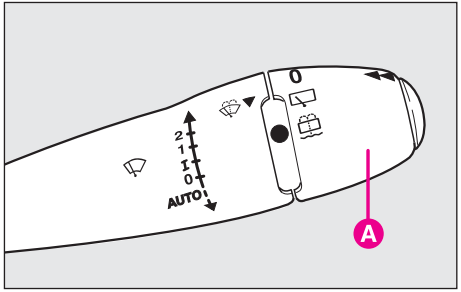

fig. 104

F0B0269b

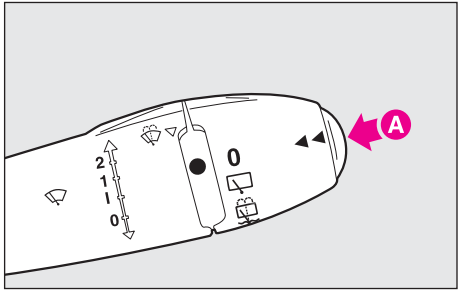

fig. 105

Range

This is the estimated distance which can be driven with the fuel remaining in the tank, provided that the conditions of consumption are the same.

Current fuel consumption

This shows the average fuel consumption based on the last few seconds of driving.

Distance from destination

This shows the distance to be covered before reaching destination in active navigation conditions.

Kilometres travelled

This shows the kilometres travelled by the vehicle from the beginning of trip after resetting previous values.

Average consumption

This shows the average fuel consumption from the beginning of trip after resetting previous values.

Average speed

This shows average speed from the beginning of trip after resetting previous values.

HAZARD LIGHTS

fig. 106

The hazard lights are turned on by pressing button **A** regardless of the position of the ignition key.

When the device is on, the button starts flashing and panel indicator lights ➡ and ⬅ come on.

Press the button again to turn the hazard lights off.

The vehicle is fitted with the automatic hazard light switching on device. In the event of sudden and prolonged braking, the system automatically turns on hazard lights, so that the driver can focus on the vehicle control.

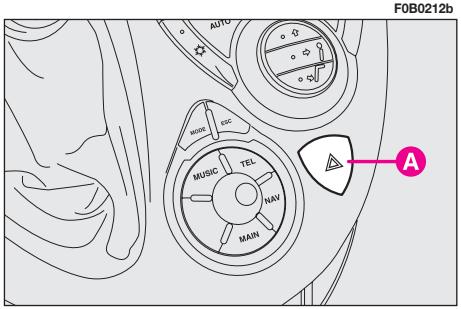

fig. 106

The use of the hazard lights is governed by local traffic regulations. Always comply with these regulations.

FUEL CUT-OFF SWITCH

This is a safety switch controlled by the Airbag control unit. Such switch cuts in on collision and cuts off the fuel supply. This results in the engine stalling.

The multifunction display informs the driver that the fuel has been cut off with a dedicated message.

If, after a collision, you can smell fuel or notice leaks from the fuel-feed system, to avoid the risk of fire, do not re-enable the switch.

If you do not notice fuel leaks and the vehicle is in a fit state to continue on its way, proceed as follows:

– turn the key to S;

– extract the ignition key; reintroduce it and start the engine as usual.

HANDBRAKE

fig. 107

The handbrake lever is situated next to the driver's seat.

Pull the handbrake lever **A** upwards as far as it will go to apply the handbrake.

When the ignition key is at **M** the panel indicator light (!) will come on.

It should not be possible to move the vehicle after the lever has gone through three or four "clicks". If this is not the case, have it adjusted at a Fiat Dealership.

To release the handbrake:

– slightly lift the handbrake lever **A** and press release button **B**;

– keep the button pressed in and lower the lever. The instrument panel indicator light (!) will go out.

To prevent the vehicle from moving accidentally, release the handbrake with the foot brake pedal depressed.

IMPORTANT The handbrake lever **A** is fitted with a safety device which prevents the handbrake disengaging when button **B** is pressed with the lever pulled. Therefore, to release the handbrake, not only press button **B**, but also pull the lever **A** upwards so that the safety device is released, then lower the lever.

When the handbrake lever is engaged, if you pull button **B-fig. 108** forward and then you lower the lever, the vehicle is still braked.

F0B0072b

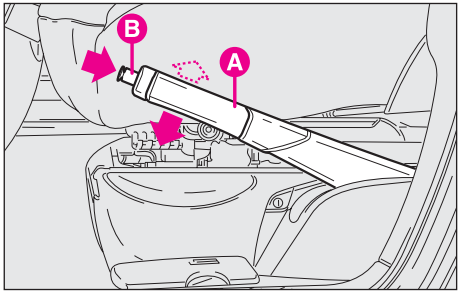

fig. 107

F0B0224b

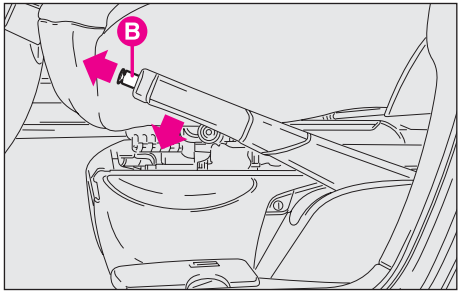

fig. 108

CRUISE CONTROL

(where fitted) fig. 109

GENERAL

This is an electronic device (**CRUISE CONTROL**) which makes it possible to maintain vehicle cruising speed constant without using any of the traditional controls except for the steering wheel. Thus, the engine taxing on road is reduced, especially during long journeys, because the stored speed is maintained automatically.

IMPORTANT The Cruise Control can only be switched on when speed exceeds 40 km/h in 4th or 5th gear.

Use the speed control system only when the traffic or road conditions make it possible to maintain a constant speed for quite a long way safely.

Memorisation of a speed: (only in 4th or 5th gear and at speeds above 40 km/h): Move lever **A** to ON, the current speed of the vehicle is maintained and memorised and wording "ON" under the speedometer symbol will turn on, on the odometer display.

If necessary, the speed set may be increased by pressing the accelerator pedal (e.g. when overtaking); when the pedal is released the system will return the speed of the vehicle to that memorised previously.

Acceleration or deceleration (using lever only): when the vehicle is travelling at an automatic regulated speed, move the lever **B** to decelerate or **C** to accelerate.

Disengagement of the device: press button **D** on the lever edge.

The device will switch itself off automatically when the brake or clutch pedal is pressed.

Restoring the memorised speed: after pressing the brake or clutch pedal or after the device has been disengaged, press button **D** to restore the last speed memorised.

Memory deletion: turn button from ON to OFF to clear all the memories.

IMPORTANT Use the speed control system only when the traffic or road conditions make it possible to maintain a constant speed.

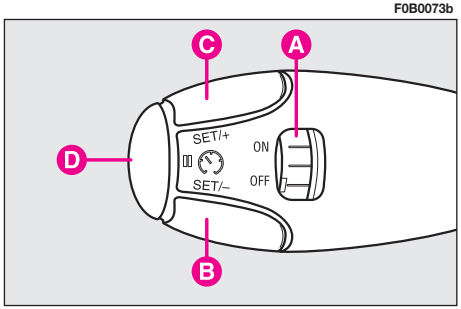

fig. 109

MANUAL GEARBOX

To engage the gears, press down the clutch and put the gear lever into one of the positions shown in the diagram on the gear lever knob.

IMPORTANT To put the vehicle in reverse, the vehicle must be stationary. Then with the engine running, shift into reverse and wait at least 2 seconds with the clutch pedal pressed fully to avoid scraping and damaging the gears and back.

To engage the reverse gear (**R**) from the neutral position:

– lift the sliding ring **A-fig. 111-112** under the knob and move the lever on the left and then forward.

Press the clutch pedal fully when changing gear. The floor under the pedal must therefore be clear and any floor mats must lie flat and not get in the way of the pedals.

ELECTRONIC AUTOMATIC TRANSMISSION

It has four gears and a reverse which adapt to the driver's driving style according to the road conditions and the vehicle load.

IMPORTANT To use the automatic electronic gear (and the relative Shift-lock safety device) in the correct way, read carefully the following instructions.

F0B0075b

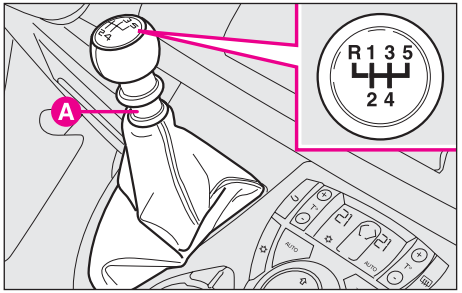

fig. 111

F0B0302b

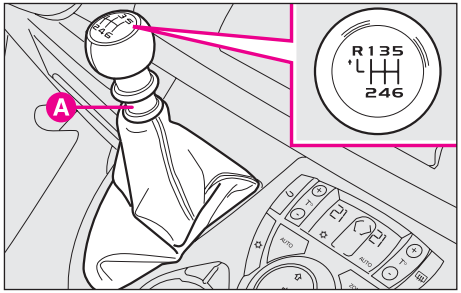

fig. 112

SELECTION LEVER fig. 113

P = Parking.

R = Reverse.

N = Neutral.

D = Drive, automatic forward gear.

M = Sequence mode.

+ = Shift to a higher gear in sequence mode.

– = Shift to a lower gear in sequence mode.

F0B0252b

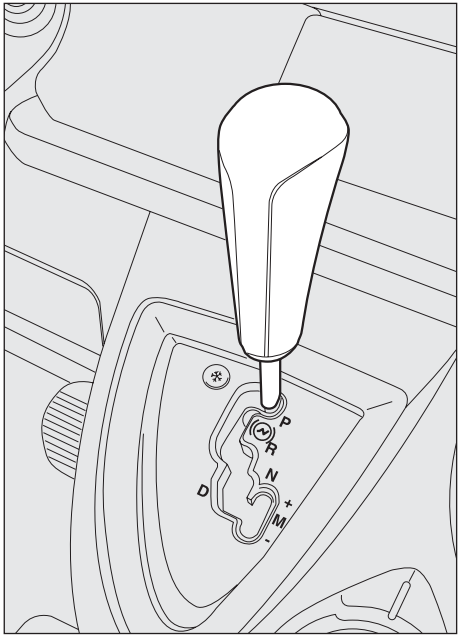

fig. 113

F0B0253b

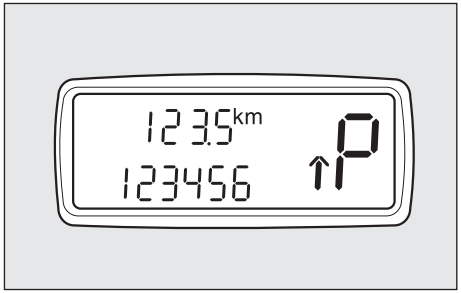

fig. 114

DISPLAY fig. 114

It is possible to view on the display:

– the selected gear (**P**, **R**, **N**, **D**), when driving with the automatic gear;

– the selected gear, when driving in sequence mode, through ↑ or ↓.

LEVER POSITION

Drive, automatic gear forward (D)

Position **D** is used on urban and extra-urban roads.

Shifting the lever from P to D (P→D), from N to D (N→D) and from R to D (R→D) should be made only when the vehicle is stationary, the engine idling and the brake pedal fully pressed (shift - lock safety device).

Neutral (N)

It corresponds to the neutral position of a traditional mechanic gear.

To move the lever from N, release the accelerator pedal, let the engine idling and follow the instructions given in "Engine starting" paragraph in this chapter.

When the lever is at **N** it is possible to start the engine.

Reverse (R)

To engage the reverse the vehicle must be stationary, the engine idling and the accelerator pedal released. Then follow the instructions given in "Engine starting" paragraph in this chapter.

When the engine is at **R** it is not possible to start the engine.

Parking (P)

P position locks drive wheels.

Engage this gear only when the vehicle is stationary and apply also the handbrake. Then follow the instructions given in "Engine starting" paragraph in this chapter.

IMPORTANT If the lever is not positioned correctly, the last stable engaged gear flashes on the display.

STARTING THE ENGINE

It is dangerous to let the engine run in a garage or other closed area. The engine consumes oxygen and gives off carbon dioxide, carbon monoxide and other poisonous fumes.

– Make sure the handbrake is up and the gear lever in **P** or **N**: the engine can be started only with the gear in these two positions.

– Turn the ignition key to **D** without pressing the accelerator pedal.

If the engine does not start at the first attempt, return the ignition key to **S** before trying to start the engine again.

If the instrument panel warning light stays on when the ignition key is at **M**, turn the key to **S** and then back to **M**; if the warning light still remains lit, try with the other keys provided with the vehicle.

If you are still unable to start the engine (see "In an emergency" chapter) contact a **Fiat Dealership** as soon as possible.

IMPORTANT Do not leave the ignition key at **M** when the engine is off to prevent draining the battery charge.

MOVING THE CAR

Proceed as follows:

– press fully the brake pedal;

– select the required gear lever position;

– accelerate progressively; the vehicle is started and the gear shift depends on the position selected.

When the ignition key is at M, it is possible to shift the gear lever from P only when the brake pedal is fully depressed (Shift-lock safety device).

SEQUENCE DRIVING MODE

Shift the lever from **D** to the right, into **M** position:

• if the lever is shifted to **+**: higher gear engaged;

• if the lever is shifted to **–**: lower gear engaged.

Each gear shift can be viewed on the display and any mistake is automatically excluded by the control unit which allows to engage a lower gear only if the engine revolutions make it possible.

With sequence driving the automatic electronic gearbox works as a fixed gearbox controlled in sequence mode.

The electronic control shifts the gear when the engine revolutions are lower than the rpm allowed.

AUTOMATIC DRIVING MODE

It is possible to select **D** in any driving condition.

The optimal gear shift is selected by the control unit according to the speed and the engine load (position of the accelerator pedal).

When no power is required by the engine, longer gear shifts are selected so that consumption is reduced. When the accelerator pedal is pressed, more power is required, thus lower gear shifts are selected and the car performance is improved in terms of acceleration and pickup: in this case consumption raises.

For a rapid car pickup:

– press the accelerator pedal fully until the kick-down device is activated so that maximum performance is reached (obviously, consumption raises).

IMPORTANT When driving on roads covered in snow, ice, etc. (low grip) do not activate the kick-down device.

Driving on snow or ice

When driving on snow or ice (low grip) we recommend to press button **A-fig. 115**:

– Symbol ❄ is displayed **fig. 116** and the car is started with the second gear.

IMPORTANT This is is possible only when the lever is at **D**; if the lever is shifted from **D**, it is excluded automatically. This function can be activated also when the car is travelling, provided that speed in lower than 45 km/h.

F0B0254b

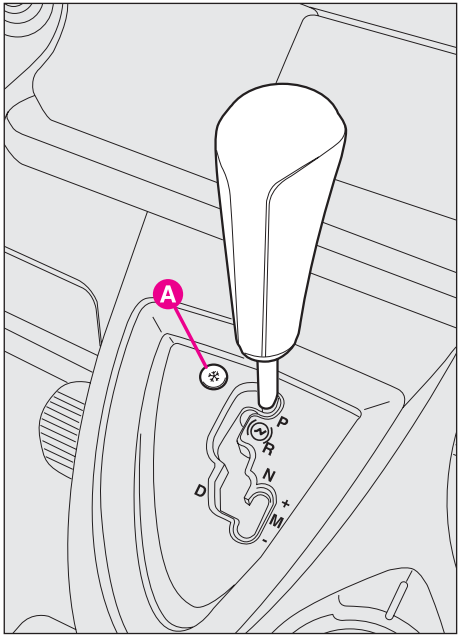

fig. 115

FAILURE INDICATIONS

The electronic automatic transmission failure is warned by the display of a dedicated message on the Connect infotelematic system screen.

The electronic automatic transmission failure is warned by the display of a dedicated message on the infotelematic display and symbol ❄ flashing on the display **fig. 116**.

Contact as soon as possible the **Fiat Dealership** to have the failure removed.

F0B0255b

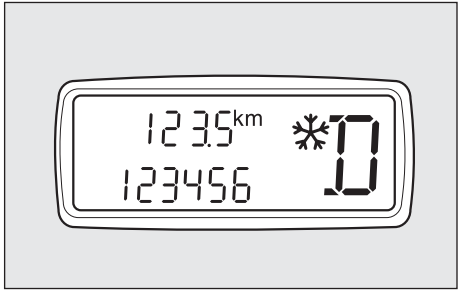

fig. 116

STOPPING THE ENGINE

Proceed as follows:

– release the accelerator pedal;

– press the brake pedal.

IMPORTANT On a downhill and the engine started, keep the vehicle stopped only with the brake pedal; do not press the accelerator pedal.

When stationary, the engine started and the gear lever at **D**, **R** or **M** (sequence mode), keep the brake pedal depressed to prevent the car moving with the engine idling.

If the car is stationary for a long time, shift the gear lever to **P**.

PARKING

Apply the handbrake and shift the gear lever to **P**. Steer the wheels and place a wedge or a stone under them if the car is parked on a slope.

Do not leave the ignition key at **M** to prevent draining the battery charge. Always take the ignition key with you when leaving the car.

Do not leave children unsupervised in the vehicle.

SOUND WARNINGS (BUZZERS)

If you open the doors when the ignition key has been removed or is at **S**, a sound warning is emitted if the gear lever is not in **P** position.

INTERIOR EQUIPMENT

GLOVE COMPARTMENT fig. 117

Pull handle **A** to open the glove compartment.

Turning the key locks or unlocks the compartment (where fitted).

Do not travel with the glove compartment open as this could cause injury in the event of an accident.

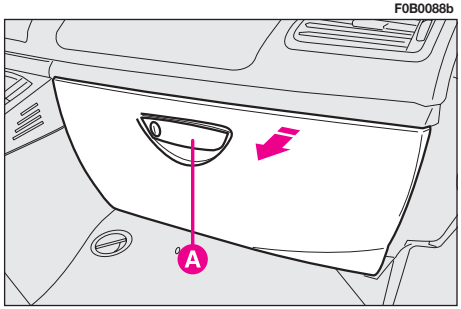

fig. 117

AUDIO-VIDEO SOCKET (where fitted)

Inside the glove compartment there is a pre-arranged AUDIO-VIDEO **A-fig. 118** outlet for connecting a TV camera to the CONNECT infotelematic System (this function is not currently available). This connection will enable directly displaying previously filmed images on the screen itself.

F0B0293b

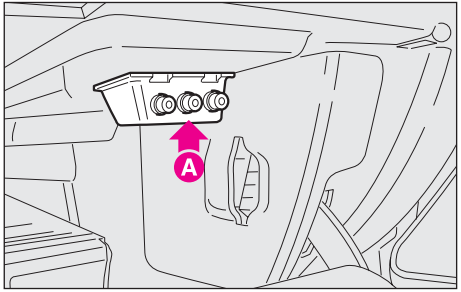

fig. 118

UPPER RETRACTABLE COMPARTMENTS fig. 119-120

Press button **A** to open the compartments.

Do not travel with the compartments open as this could cause injury in the event of an accident.

F0B0256b

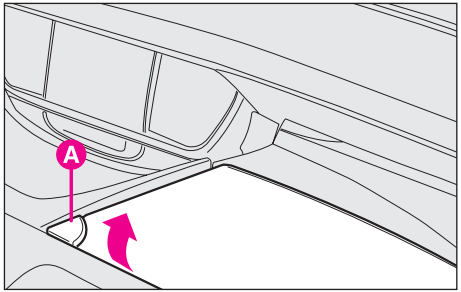

fig. 119

F0B0257b

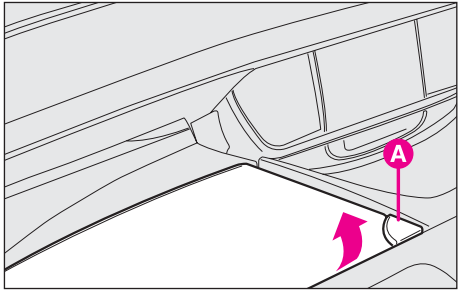

fig. 120

CENTRAL GLASS/CAN HOLDER fig. 121

Open it following the direction shown by the arrow. The compartment is glass/can-shaped inside **A**.

Do not travel with the glove compartment open as this could cause injury in the event of an accident.

F0B0090b

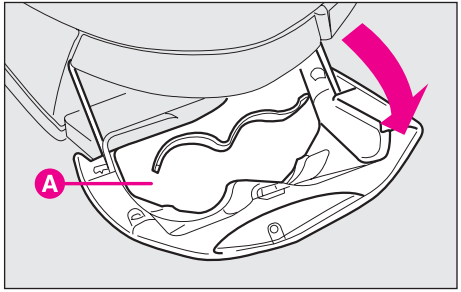

fig. 121

COMPARTMENT UNDER THE FRONT PASSENGER'S SEAT (where fitted) fig. 123

Pull handle **A** upwards and then outwards to take it out.

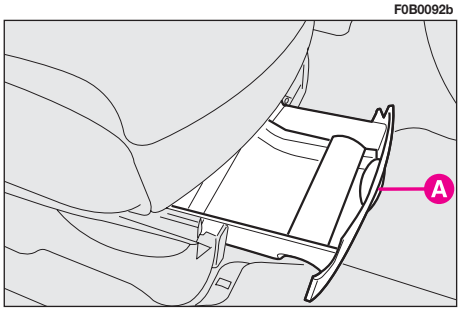

fig. 123

ODDMENT COMPARTMENTS

The following compartments complete the Ulysse interior fittings:

– open document compartment **A-fig. 124** under the steering wheel;

– bottle - glass - can holders on the second **fig. 125** and third row side panels **fig. 126**; bottle compartments can also be used to contain a removable waste container **C-fig. 125**;

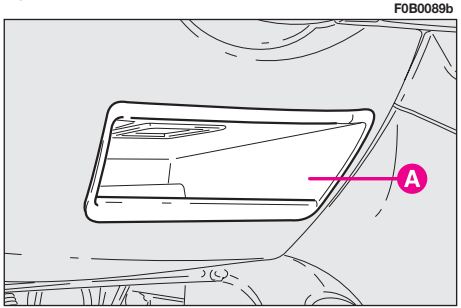

fig. 124

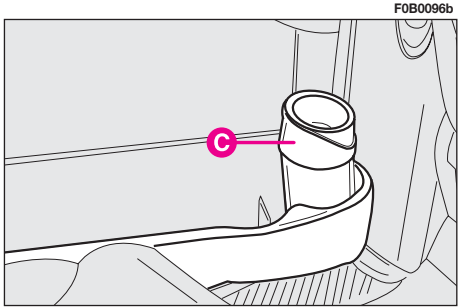

fig. 125

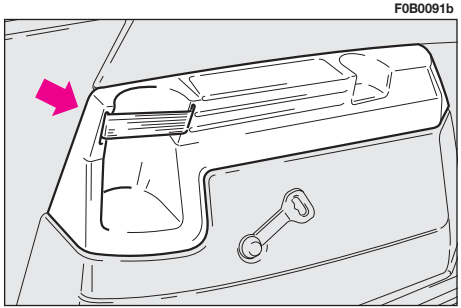

fig. 126

– document compartments **D-fig. 127** on the third row side panels (where fitted). Follow the direction shown by the arrow to open them.

COLLAPSIBLE SHELF (where fitted) fig. 128

There is a collapsible shelf **A** on the back of each front seat; bring it to a horizontal position as shown in the figure.

Do not travel with the shelf open as this could cause injury in the event of an accident.

SUN VISORS fig. 129

These are positioned to the sides of the driving mirror. They can be swung up, down or sideways as illustrated.

On the back of both the visors there is a vanity mirror with courtesy lights **A** (where fitted) protected by a flap **B**.

F0B0094b

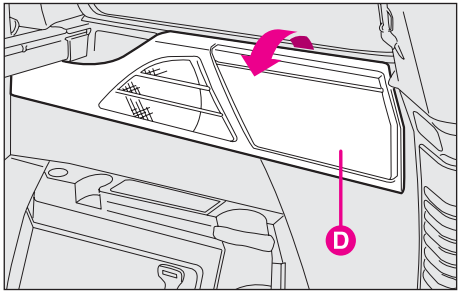

fig. 127

F0B0095b

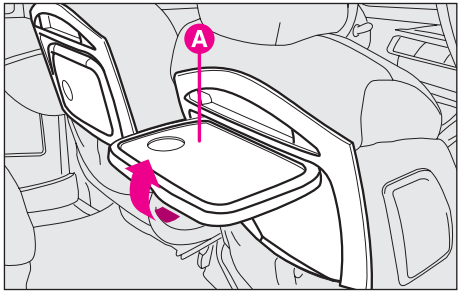

fig. 128

F0B0084b

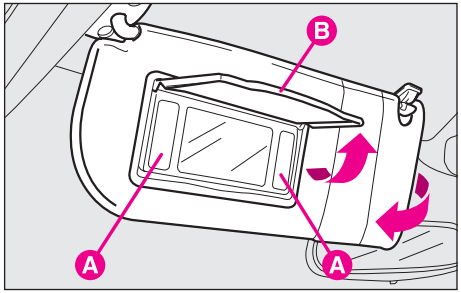

fig. 129

TOGGLES fig. 130

Interior fittings include also toggles **A**. Rear toggles are fitted with clothes hooks **B**.

F0B0085b

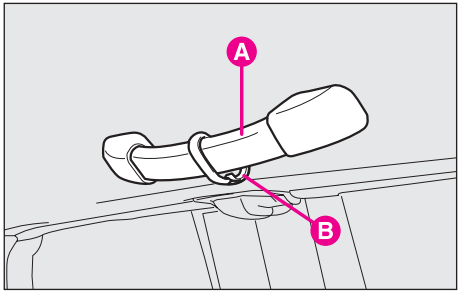

fig. 130

WINDOW SHADES (where fitted) fig. 131

Window shades are sliding devices fitted with reels and relative springs. To use them fasten them to the upper retainers **A**.

F0B0036b

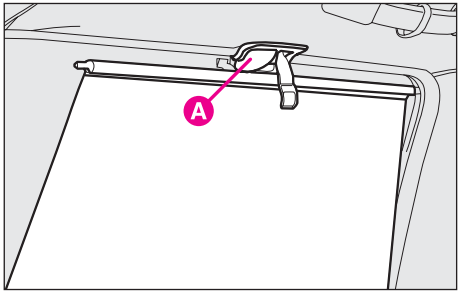

fig. 131

LUGGAGE RETAINING NET (where fitted) fig. 132-133

It is placed behind the second row seats and can be secured to the fasteners on the floors as illustrated in **fig. 132**, or positioned as a "hammock" fastened on the side as illustrated in **fig. 133**.

F0B0108b

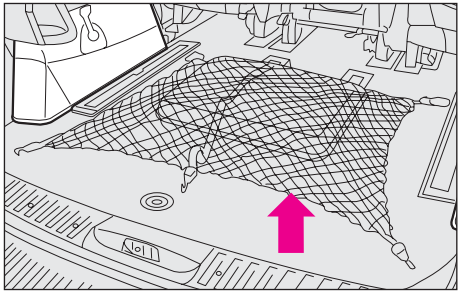

fig. 132

F0B0289b

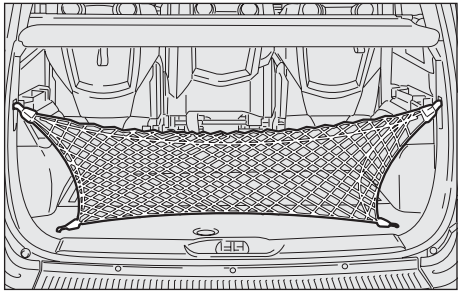

fig. 133

ELASTIC BANDS (where fitted) fig. 134

Front seats are fitted with elastic bands **A** to hold small objects (e.g. shopping bag).

Fasten them to their housing on the seats as illustrated in the figure.

F0B0018b

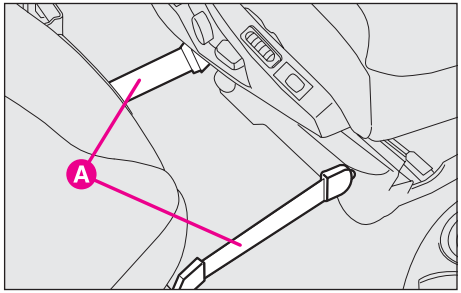

fig. 134

CIGAR LIGHTER fig. 135

To use the cigar lighter, with the ignition key at **M**, press button **A**; after about 15 seconds the button automatically pops back into its original position and the cigar lighter is ready for use.

The cigar lighter gets very hot. Be careful how you handle it and make sure children do not use it: danger of fire or burns. Always make sure that the cigar lighter does in fact pop out after it has been pushed in.

ASHTRAY fig. 135-136

Do not use the ashtray for waste paper: lighted cigarette ends could set it on fire.

Extract compartment **B** and lift tab **C** to use the ashtray. Remove cup **D** to empty the ashtray. When the cup is extracted the compartment can be used as a glass holder.

The passengers in the rear seats can use the ashtray by placing cup **D** in the removable litter container **E** as illustrated in **fig. 135**.

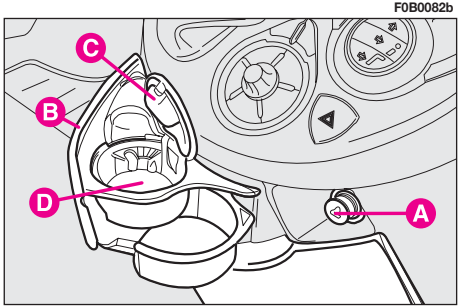

fig. 135

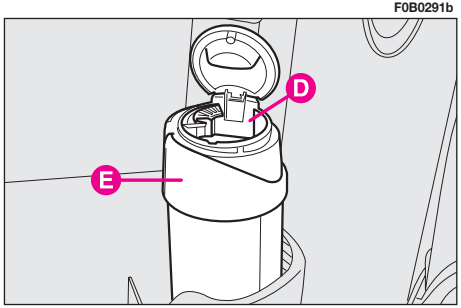

fig. 136

CEILING LIGHT UNITS

All the ceiling lights come on for a limited time, i.e. they turn on and off gradually.

Ceiling light operation

All the ceiling lights come on automatically when the doors are opened with the remote control or when the key is introduced in the door lock. After some seconds, the lights will go out gradually, without opening the doors.

When the door lock button on the remote control is pressed for a long time, the so-called "localisation" function is activated: all the ceiling lights in the passenger compartment come on together with the direction indicators. This function is recognised by the system up to a distance of about 30 meters from the vehicle.

If the ignition key is turned to **S** (or removed) the first row ceiling light comes on. It will stay on only for a limited time and will go out gradually.

When one of the front doors is opened, the central ceiling light, without the spot lights, and the puddle lights on the doors come on. They remain lit for a set time and after a couple of seconds the door have been closed, they go off gradually. When the engine is started, the lights will go off progressively after a couple of seconds.

When one of the rear doors is opened the central ceiling light, without the spot lights, come on. It remains lit for a set time and after a couple of seconds the door have been closed, it goes off gradually.

When the tailgate is opened the luggage compartment lights come on (one or two lights according to the model). The lights will go off gradually when the tailgate is closed.

Front ceiling light fig. 137

The front ceiling light includes a central light and two side spot lights with relative control switch.

By operating buttons **A**, **B**, **C** the lights are turned on singularly.

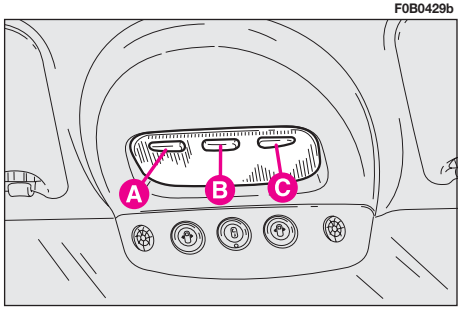

fig. 137

Central ceiling light fig. 138

The front ceiling light includes a central light and two side spot lights with relative control switch.

By operating buttons **A**, **B**, **C** the lights are turned on singularly.

F0B0077b

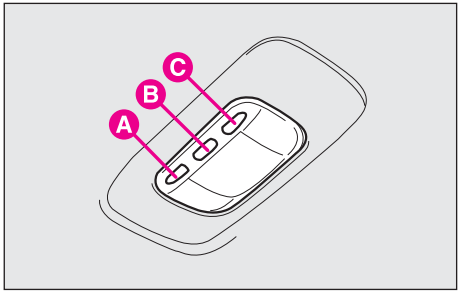

fig. 138

Rear ceiling light (where fitted) fig. 139

To turn it on: operate button **A**.

Courtesy lights fig. 140

With the ignition key at **M**, open flap **B** and courtesy lights **A** next to the vanity mirror (where fitted) will come on. Such lights make it possible to use the vanity mirror also when there is not much light coming from outside.

Glove compartment light fig. 141

With the ignition key at **M**, the glove compartment light will come on when the compartment is opened.

F0B0078b

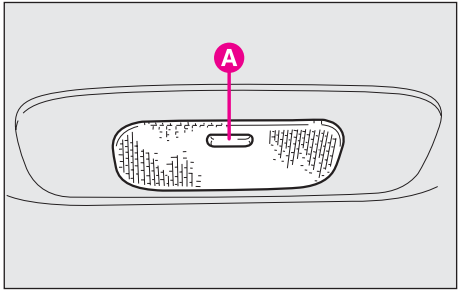

fig. 139

F0B0086b

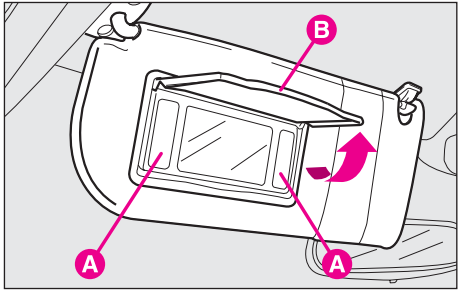

fig. 140

F0B0258b

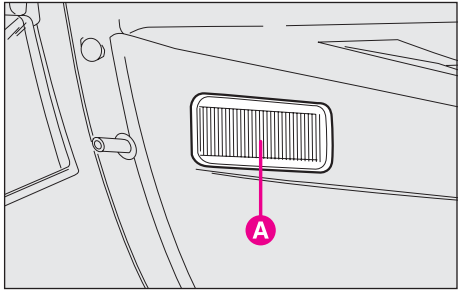

fig. 141

Puddle lights fig. 142 (where fitted)

Light **A** placed on the front doors comes on when the relative door is opened, regardless of the ignition key position.

Luggage compartment lights fig. 143

When the tailgate is opened, lights **A** placed on the luggage compartment side coating come on (one or two lights according to the model).

When the tailgate is closed, the lights go out automatically.

IMPORTANT The lights go out automatically after a couple of seconds, even if the tailgate remains open, to maintain the battery charge.

ELECTRICAL SOCKET

It only works when the ignition key is at **M** and it is housed on the third row right panel.

To use it lift the relative protective cap.

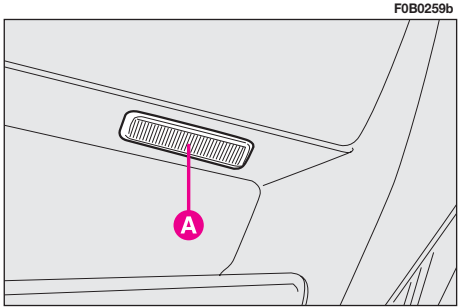

fig. 142

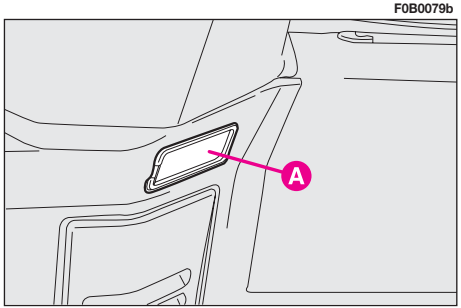

fig. 143

ELECTRIC WINDOWS

Electric windows are fitted with safety anti-crushing gaskets. The system control unit can feel the presence of an obstacle when winding up the window: in this case it stops the window winding up and reverses it immediately.

IMPORTANT With the ignition key at **S** or removed, electric windows work for 1 minute.

IMPORTANT If, after disconnecting the battery, the electric window winder does not work, initialize the system; release the control and operate it again until the window is completely closed and keep it pressed for one second after the limit switch. The system will start working properly again.

Incorrect use of the electric windows could be dangerous. Before and when pressing the switches, always make sure that passengers cannot be injured either directly by moving glass or by personal effects being dragged along or hit by the glass. Always remove the ignition key when getting out of the vehicle to make sure that the electric windows cannot be accidentally operated and constitute a hazard for passengers remaining in the vehicle.

Do not keep the button pressed when the window has reached the end of its travel.

VERSIONS WITH FRONT DOOR ELECTRIC WINDOWS

Driver's door fig. 145

There are two buttons on the driver's door inner panel. When the ignition is key at **M** they control:

A - front left window opening/closing;

B - front right window opening/closing.

To open or close the window, press the relative button. When the button is released, the window will stop in the position it has reached.

F0B0045b

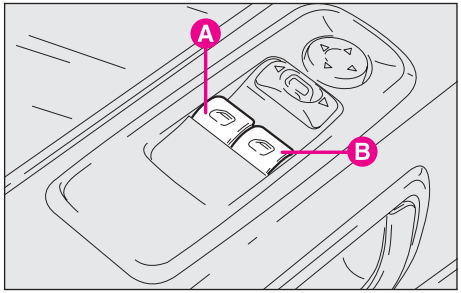

fig. 145

The driver's window winder is fitted with an "automatic continuous operation" (working only when the engine is started) to wind up or lower the window. Press **A** briefly and the window will automatically reach its travel end. If you press the button a second time, the window will stop in the required position.

Passenger's door fig. 146

Button **A** is housed on the door inner panel to operate the relative window.

Sliding doors

They are fitted with a crank handle for operating the window manually.

F0B0046b

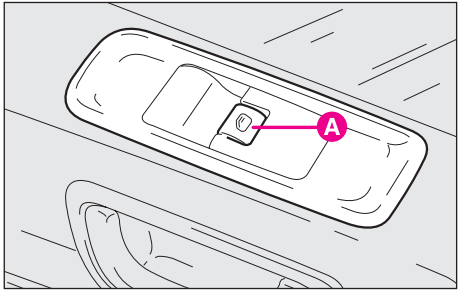

fig. 146

VERSIONS WITH REAR DOOR ELECTRIC WINDOWS

Driver's door fig. 147

There are five buttons on the driver's door inner panel. When the ignition key is at **M** they control:

A - front left window opening/closing;

B - front right window opening/closing;

C - rear left window opening/closing;

D - rear right window opening/closing;

E - window control lock on rear doors, sliding door opening/closing rear control lock and (where fitted) rear sunroof control lock.

To open or close the window, press the relative button. When the button is released, the window will stop in the position it has reached.

The driver's window winder is fitted with an "automatic continuous operation" (working only when the engine is started) to wind up or lower the window. Press **A** briefly and the window will automatically reach its travel end. If you press the button a second time, the window will stop in the required position.

F0B0047b

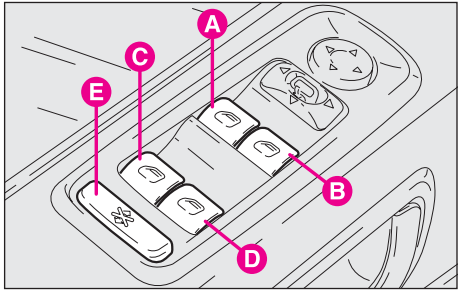

fig. 147

Passenger's door fig. 146

Button **A** is housed on the door inner panel to operate the relative window.

Sliding doors fig. 148

Press button **A** open/close the relative window.

REAR CORNER WINDOWS (3rd row) fig. 149

To open:

– move lever **A** as illustrated and then push it outwards to open the window fully;

– pull back the lever until it clicks and locks the window open.

To close:

– reverse the above mentioned procedure until lever **A** clicks and locks the window closed.

ELECTRIC SUNROOFS

(where fitted)

The car can be fitted with three electric sunroofs: front, rear and central. They can be operated when the ignition key is at **M**.

IMPORTANT With the ignition key at **S** or removed, electric windows work for 1 minute.

They are fitted with a sliding window shade and safety anti-squashing gaskets. The system control unit can feel the presence of an obstacle when closing the sunroof: in this case it stops the sunroof movement and reverses it immediately.

F0B0048b

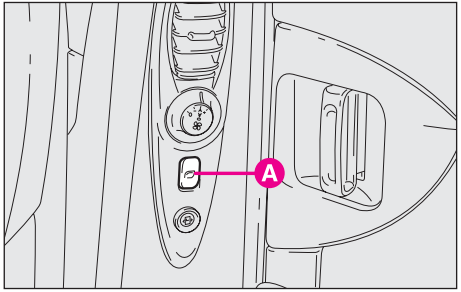

fig. 148

F0B0049b

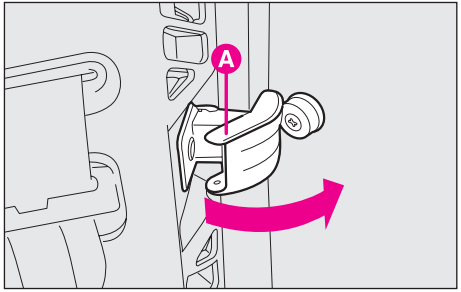

fig. 149

Incorrect use of the sunroof could be dangerous. Before and when pressing the switches, always make sure that passengers cannot be injured either directly by moving sunroof or by personal effects being dragged along or hit by the sunroof.

Always remove the ignition key when getting out of the vehicle to make sure that the sunroof cannot be accidentally operated and constitute a hazard for passengers remaining in the vehicle.

Do not open the sunroof when it is covered with snow or ice: it might get damaged.

IMPORTANT If, after disconnecting the battery, the sunroof closing control does not work, initialize the system; release the control and operate it again until the sunroof is completely closed and keep it pressed for one second after the limit switch. The system will start working properly again.

FIRST ROW CONTROLS

Front sunroof

"Caliper" opening/closing **fig. 150**

To open: press button **A** on side **1** for the whole travel.

To close: press button **A** on side **2**.

F0B0430b

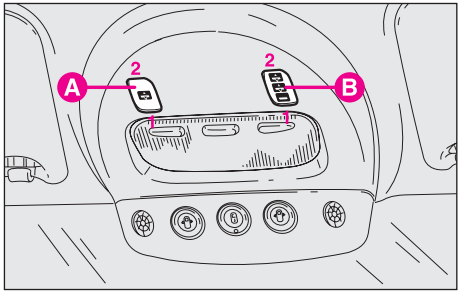

fig. 150

Complete opening/closing **fig. 150**

To open: from sunroof "caliper" opening, press button **A** again on side **1**.

To close: press button **A** on side **2** until the "caliper" opening position is reached, then press again button **A** on side **2**.

Central and rear sunroof fig. 150

The central and rear sunroof can be activated at the same time from the first row.

Press button **B** as for the front sunroof.

SECOND AND THIRD ROW CONTROLS

"Caliper" opening/closing fig. 151

To open: press button **A** on side **1** for the whole travel.

To close: press button **A** on side **2**.

Complete opening/closing fig. 151

To open: from sunroof "caliper" opening, press button **A** again on side **1**.

To close: press button **A** on side **2** until the "caliper" opening position is reached, then press again button **A** on side **2**.

By pressing the safety lock button **E-fig. 147** on the driver's door panel, next to the electric window switches, it is possible to prevent second and third row controls from being used by rear passengers (children).

LUGGAGE COMPARTMENT

OPENING/LOCKING THE TAILGATE FROM THE OUTSIDE fig. 152-153

To open:

– unlock doors;

– pull handle **A** as illustrated. Gas filled struts help the hatchback to open smoothly and easily.

To close:

– lower it by using handle **B-fig. 153**, then press on the lock until you hear the door catch.

F0B0100b

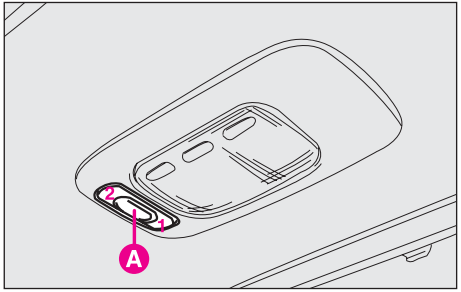

fig. 151

F0B0453b

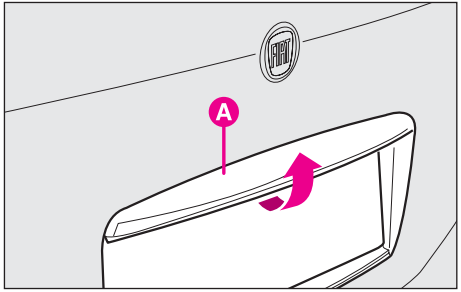

fig. 152

F0B0103b

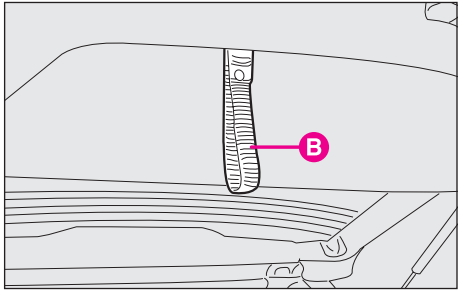

fig. 153

Do not travel with the hatchback open: the exhaust fumes could enter the vehicle.

The addition of objects (spoilers, etc.) on the rear shelf or boot lid, except those envisaged by the manufacturer, may prevent the tailgate from working properly.

TAILGATE EMERGENCY OPENING fig. 154

To unlock the tailgate in the event of an electric failure, proceed as follows:

– introduce a screw driver into hole **A** from inside the car

– to unlock the latch mechanically, turn it on the left.

TRANSPORTING LUGGAGE

IMPORTANT For vehicle versions without Xenon lights travelling at night with the luggage compartment loaded it is necessary to adjust the dipped beam headlight position (see "Headlamps" paragraph in this chapter).

Anchoring the load fig. 155

The load can be secured with the belts fastened to the appropriate rings **A** inside the luggage compartment.

These rings can also be used to fix the luggage retaining net, where fitted.

When loading the luggage compartment, do not exceed the permitted weight limits (see "Technical specifications" chapter). Also ensure that any objects in the luggage compartment are firmly secured and that they cannot be thrown forward causing injury to passengers if the vehicle brakes suddenly.

Heavy loads which are not securely anchored could seriously injure passengers in the event of an accident.

F0B0169b

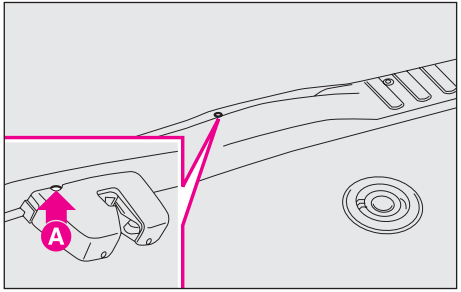

fig. 154

F0B0105b

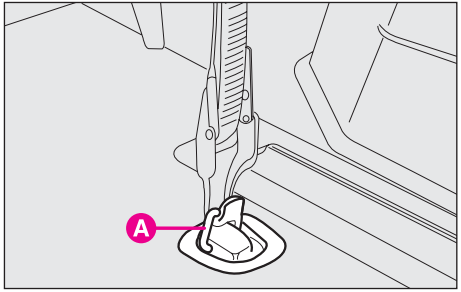

fig. 155

If you need to carry a petrol can when travelling in areas in which refuelling is problematic, attain to the legislation in force. Only use a homologated can and fasten it suitably to the load. Even given these precautions, the risk of fire in the event of an accident is high.

RIGID PARCEL-SHELF (where provided) fig. 156

The rigid parcel-shelf is fitted with an umbrella-shaped pocket.

It is possible to extend the luggage compartment by removing the rigid parcel-shelf.

To remove the parcel-shelf, unfasten it from side retainers **E** and pull it towards the car back.

SLIDING LUGGAGE COVER (where provided) fig. 157-158

To use the luggage cover, take handle **A** to unroll it from reel **B** and then secure it to the relevant retainers.

If it is necessary to remove the reel, operate the inside spring in direction **1**, and take the reel out by pulling in direction **2**.

F0B0261b

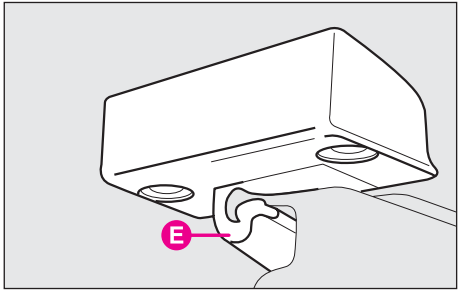

fig. 156

F0B0303b

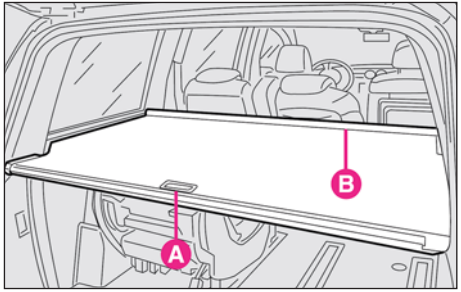

fig. 157

F0B0262b

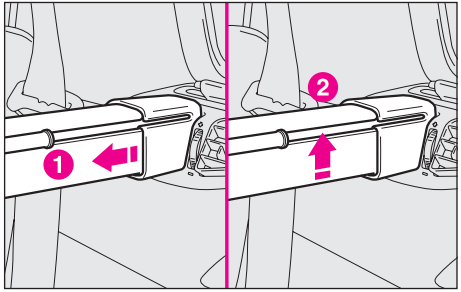

fig. 158

LUGGAGE SEPARATING NET (where fitted) fig. 159

To install the luggage separating net, proceed as follows:

– lift caps **A**, one on each side, next to the second row supporting handles;

– fasten the net hooks **B** to retainers **C**;

– insert hooks **D**, one on each side, in holes **E** on the floor behind the second row seats.

BONNET

To open the bonnet:

– lift cover **A-fig. 160** with the lever next to the driver's seat;

– pull lever **B-fig. 160** in the direction of the arrow;

– press lever **C-fig. 161** on the bonnet;

– lift the bonnet and, at the same time, release the support rod **D-fig. 162** from its clip **E**;

– place the tip of the rod **D** in recess **F-fig. 162** in the engine compartment.

Open the bonnet only when the vehicle is stationary.

Warning. The bonnet might fall violently if the support rod is not positioned properly.

F0B0109b

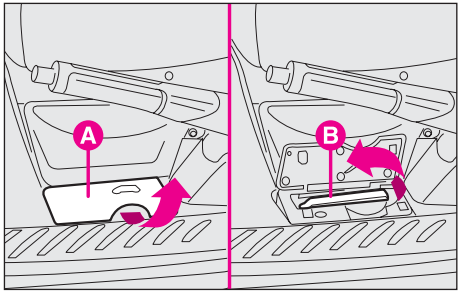

fig. 160

F0B0106b

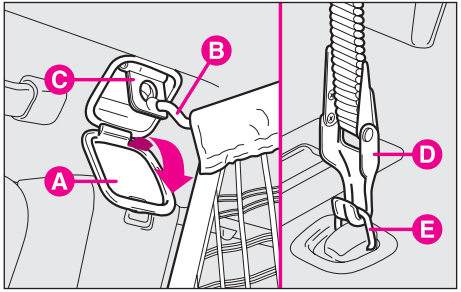

fig. 159

F0B0454b

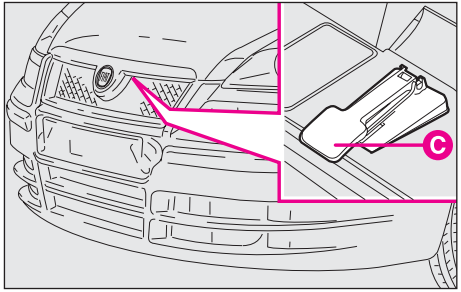

fig. 161

F0B0110b

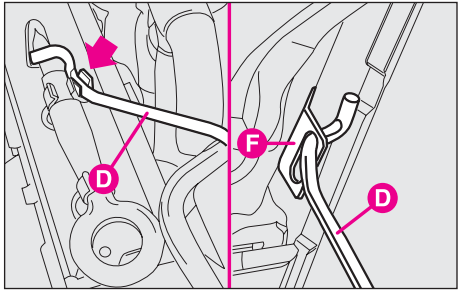

fig. 162

Absolutely prevent shoes, ties and loose garments from coming into contact with moving parts: they could become entangled and cause body harm.

If the engine is hot, be very careful when you put your hands under the bonnet as you risk burning yourself. Remember that while the engine is hot, the electric fan can start up and cause injury. Wait for the engine to cool.

For safety reasons the bonnet shall always be perfectly closed when travelling. Always check for proper bonnet locking. If the bonnet is left inadvertently open, stop the car immediately and close the bonnet.

To close the bonnet:

– keep the bonnet up with one hand and with the other remove the support rod from the recess and replace it in its clip;

– Lower the bonnet at approx. 20 cm from the engine compartment and then let it drop, ensuring that it is fully closed and not just held in position by the safety catch. If the bonnet does not close properly do not push it down but open it again and repeat the above procedure.

Always make sure the bonnet is closed properly so as to prevent it from opening while travelling.

"Bonnet open" indication (only available together with alarm optional)

If, with engine running, the bonnet is not shut properly, the multifunction display will show a dedicated message and the buzzer will sound.

LUGGAGE AND SKI RACKS

(where fitted) fig. 163

To use them, proceed as follows:

– hooks are arranged in a special runner along the roof of the vehicle;

– attach the roof rack with the brackets **A** placed at the rack inside base (2 for each bar).

F0B0179b

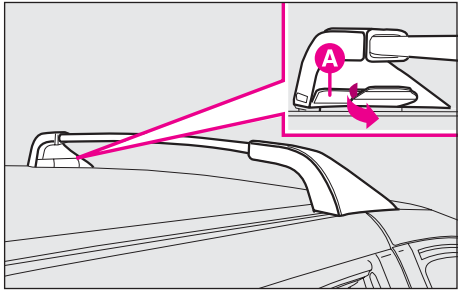

fig. 163

After travelling a few miles, check that the anchorage bolts of the attachments are still fully tight.

Never load the rack with more than the weight allowed (see the "Technical specifications" section).

Be careful not to knock the tailgate into objects on the roof rack.

HEADLAMPS

XENON LAMPS (where fitted)

Xenon lamps work with a voltaic arc in a pressure Xenon saturated environment, in place of the traditional filament.

The produced light is far greater than that of traditional lamps, both for its quality (lighter) and its lighting range.

The advantages in using such lamps are the following: less eyes fatigue, improved driver's orientation and driving safety, especially with the bad weather, with fog and/or inadequate road signs, illumination of side bands usually in the shadow.

Illumination of side bands considerably improves driving safety because the driver is able to identify other road users on the road margins (pedestrians, bikers and motor-bikers).

When the lights come on, the voltaic arc tension is very high, but then it falls.

The maximum light is obtained after 0.5 seconds after turning the headlamps on.

The great light produced by this type of headlamps requires an automatic system for maintaining the headlight beam constant and preventing dazzling other vehicles in the event of sudden braking, acceleration or while carrying heavy loads.

The electro-mechanic automatic control system for the light beam position is enough to maintain the light beam constant and makes the slant compensating device useless.

Xenon light duration is very long and a malfunction is unlikely to happen.

IMPORTANT Have them replace only at a **Fiat Dealership**.

HEADLAMP BEAM POSITIONING (Xenon light versions excluded)

The correct positioning of the headlamp beams is very important for the comfort and safety, not only of the person driving the vehicle, but also all other road users.

This is also covered y a specific law.

To ensure that you and other drivers have the best visibility conditions when travelling with the headlamps on, the headlamps must be set properly.

Have the headlamp positioning checked at a **Fiat Dealership**.

SLANT COMPENSATION (Xenon light versions excluded)

When the vehicle is loaded, it "slopes" backwards. This means that the headlight beam rises. In this case it is necessary to return the beam to the correct position.

Check the positioning of the headlight beams every time you change the load to be carried.

Use the electric adjuster **A-fig. 164**:

Position **0** - on or two people in the front seats;

Position **1** - five people;

Position **2** - five people + luggage in the luggage compartment;

Position **3** - eight people + luggage in the luggage compartment or driver + the full load allowed all stowed in the luggage compartment.

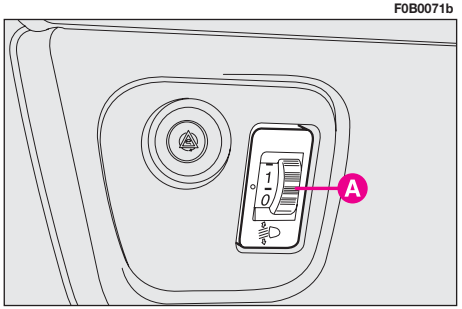

fig. 164

FOG LIGHT POSITIONING

Have the headlamp positioning checked at a **Fiat Dealership**.

ABS

The car is equipped with an ABS brake system which prevents the wheels from locking when braked and exploits grip to the maximum making the car controllable even in emergency braking.

The operation of ABS is felt by the driver through a light pulsation of the brake pedal and a noise.

This should not be considered as a fault in the brake system but rather indicates the ABS has intervened. It warns the driver that the car has reached grip limits and consequently the speed should be changed according to the road conditions.

The ABS system is in addition to the basic braking system of the car. In the event of a failure, the ABS will be disabled and the car can be driven as with a normal braking system without ABS.

In the event of a failure, the braking capacity of the car will not be penalised in any way although the antilocking effect cannot be relied upon.

If this is the first time you are driving a car with ABS, we recommend you learn how to use it by testing the brakes on slippery ground - obviously in conditions of safety and respecting the highway code enforced in the country you are driving in - and read the following notes carefully.

The advantage of ABS with respect to the traditional braking system is the fact that maximum drivability is ensured even when braking to the grip limit and wheel locking is prevented.

You should, however, not always expect the braking distance to decrease. For example, on soft surfaces - i.e. gravel or fresh snow on a slippery road - the braking distance could, in fact, increase.

To make the most of the possibilities offered by the anti-locking system when it is required, attain to the following advice.

The ABS makes the most of the available grip but cannot increase it. Consequently, drive very carefully on slippery roads without taking unnecessary risks.

When the ABS intervenes, you have reached the grip limit between tyres and road surface: slow down to suit speed to the available grip.

If there is a fault, the instrument panel warning light (ABS) will come on. At this point, reduce speed and go to a Fiat Dealership to have your car checked and full system operation restored.

In any case, always pay the utmost care when braking and cornering even with ABS.

The most important piece of advice is, however, the following:

When the ABS intervenes and you feel the brake pedal pushing, do not release the pressure on the pedal but hold it down without hesitation. This will ensure the car stops in the shortest time compatibly to the road surface conditions.

By following these indications you will be able to brake in the best conditions in all events.

IMPORTANT Vehicles fitted with ABS may only be fitted with wheel rims, tyres and brake pads of the make and model approved by the vehicle manufacturer.

The system is completed with an Electronic Brake Distributor EBD which increases the brake system performance and employs the ABS control unit and sensors.

The car is fitted with an electronic braking device (EBD). The (!) and (ABS) warning lights will come on at the same time when the engine is running to indicate that there is an EBD system failure. In this case violent braking may be accompanied by early rear wheel locking with the possibility of skidding. Drive the car extremely carefully to the nearest Fiat Dealership to have the system checked.

Warning light (ABS) alone, with the engine running, normally indicates a fault in the ABS system. In this case, the braking system is still efficient, though without the antilocking device. Under these conditions, performance of the EBD system may be reduced. Also in this case, you are advised to go immediately to the nearest Fiat Dealership, driving in such a way to avoid sharp braking to have the system checked.

If the (!) brake fluid low warning light comes on, stop the vehicle immediately and contact the nearest Fiat Dealership. Fluid leaks from the hydraulic system, in fact, can compromise brake system operation, both traditional systems and systems with ABS.

MBA AND HBA SYSTEMS (where fitted)

The MBA (Mechanic Brake Assistance) and HBA (Hydraulic Brake Assistance) systems increase braking pressure in emergency braking. When the driver is forced by the critical driving conditions to press violently the brake pedal, the system increases the braking pressure to assure the quickest vehicle stop.

These two systems behave in the same way, the only difference is that one increases braking pressure through the ESP control unit and the other with a mechanic action.

ESP SYSTEM

(where fitted)

The ESP (Electronic Stability Program) system controls the vehicle stability. It brakes drive wheels in a different way from the other wheels and if grip is lost, it helps the car recover stability and the correct travelling direction.

While travelling the vehicle is subject to side and longitudinal forces which can be controlled by the driver as long as the tyre grip is good. When the tyre grip falls below the minimum level, the vehicle starts deviating from the driver's wished direction.

Especially when travelling on uneven roads (paving, water, ice or earth) or irregular roads (bends or other obstacles) the tyre grip may be greatly reduced.

When the sensors detect such conditions, the ESP system intervenes on the engine and the brakes and makes the vehicle recover stability.

The system performance, in terms of active safety, should not make the driver run useless risks. Driving must suit road conditions, visibility and traffic. Nevertheless it is always the behaviour of the driver that determines road safety.

The ESP system helps the driver keep the vehicle control in the event of tyre grip loss. Anyway, the ESP operation depends on the grip between tyre and roadbed.

ESP SYSTEM OPERATION

The ESP system is activated whenever the engine is started; it can be turned on/off manually by pressing button **A-fig. 165** on the dashboard.

F0B0112b

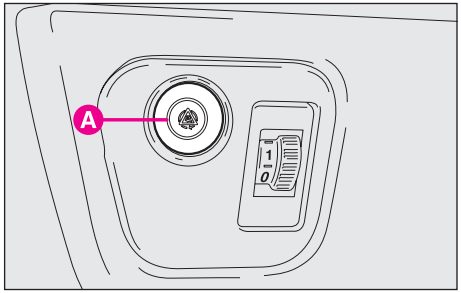

fig. 165

The ESP main components are:

– an electronic control unit which processes the sensor signals and applies the best strategy;

– an angle sensor which detects the steering position;

– four sensors which detect each wheel rotation speed;

– a braking system pressure sensor;

– a yawing sensor which detects the vehicle spinning around a vertical axis;

– a sensor which detects side acceleration (centrifugal force).

The ESP heart is the control unit which processes the centrifugal forces deriving from cornering on the basis of the data coming from the sensors installed on the vehicle. The yawing sensor detects the vehicle spinning around its vertical axis. Centrifugal forces resulting from cornering are detected by a highly sensible side acceleration sensor.

The ESP stabilising action is based on the control unit processing of data coming from the steering wheel rotation sensors, side acceleration sensors and wheel rotation speed sensors. These signals make the control unit recognise the driver's manoeuvre when he/she turns the steering wheel.

The control unit processes such information and is able to detect the vehicle position at any time and compare it with the driver's wished direction. If they do not match, the control unit is able to adjust the vehicle's position instantly, by choosing the best strategy: it can brake one or more wheels with different force and reduce the engine power, if needed.

Adjustments are made for continuously adapting to the driver's wished travelling direction.

The ESP system action improves the vehicle safety in many critical situations and is useful especially when the roadbed grip changes.

ESP SYSTEM ACTION

The ESP system action is signalled by warning light flashing to inform the driver that the vehicle stability and grip are critical.

ESP failure indication

In the event of an ESP system failure, it turns off automatically and warning light comes on together with the relative message on the multifunction display.

In the event of an ESP system failure, the vehicle behaves as the version without this type of system. We recommend you to contact a **Fiat Dealership** as soon as possible.

Cars with ESP may only be fitted with tyres of the same make, model and size and be in good conditions.

TC and ASR FUNCTIONS

The TC (Traction Control) and ASR (Anti Slip Regulation), integrated in the ESP system, prevent drive wheel slip in poor grip conditions.

Two different control systems intervene:

– if both drive wheels slip because of excessive power, the ASR system reduces the engine power;

– if only one drive wheel slips, the TC function brakes the slipping wheel as a self-locking differential would do.

The TC and ASR functions are particularly useful in the following conditions:

– inside wheel slipping due to load variations and excessive acceleration; too much power to the wheels depending also on the road conditions;

– acceleration on snowy or icy roads;

– wet road grip loss.

The TC and ASR system performance, in terms of active safety, should not make the driver run useless risks. Driving must suit road conditions, visibility and traffic. Nevertheless it is always the behaviour of the driver that determines road safety.

Cars with TC and ASR functions may only be fitted with tyres of the same make, model and size and be in good conditions.

IMPORTANT When travelling on snowy roads with the snow chains applied, we suggest turning the ESP system off and switching on the TC and ASR functions, so that the drive action is increased in the event the drive wheels slip.

MSR FUNCTION

The MSR (Motor Schleppmoment Regelung) function controls automatically the engine braking torque while shifting the gears. In the event of sudden gear shifting, this function prevents the drive wheel dragging, especially in poor grip conditions, and restores the vehicle stability.

EOBD SYSTEM

The EOBD (European On Board Diagnosis) system fitted in this car complies with Directive 98/69/CE (EURO 3).

This system continuously monitors the engine emission system components. Furthermore, the system warns the driver of deterioration concerning the emission system components by means of warning light on the instrument panel.

The objective is to:

– monitor system efficiency;

– warn when failures can increase emissions over the threshold established by the European regulations;

– warn of the need to replace deteriorated components.

Furthermore, the system is equipped with a connector for interfacing with specific tools used to read the error codes stored in the control unit memory along with a set of diagnostic and engine specific parameters.

This check can also be performed by traffic controller agents.

If, turning the ignition key to M, the warning light does not turn on or if, while travelling it turns on glowing steadily or flashing, contact a Fiat Dealership as soon as possible. Dealership as soon as possible. Warning light operation can be checked by traffic controller agents by means of special equipment. Always comply with the traffic regulations in force in the country where you are travelling.

IMPORTANT After eliminating the problem, your **Fiat Dealership** will run a bench test to fully check the system. In some cases, a long road test may be required.

TYRE PRESSURE MONITORING SYSTEM - T.P.M.S. (where provided)

The car can be equipped with the T.P.M.S. (Tyre Pressure Monitoring System). This system consists of a radio-frequency sensor, installed on each wheel (on the rim inside the tyre) that sends pressure information to the control unit.

IMPORTANT System control unit monitors the pressure of the four car tyres but not the space-saver spare wheel. It is therefore recommended to always check also the space-saver spare wheel pressure.

IMPORTANT Pay the attention when checking or inflating tyres. Excessive pressure impairs road holding, increases suspension and wheel stress and causes abnormal tyre wear.

IMPORTANT Tyre pressure should be checked with tyres rested and cold. Should it become necessary for whatever reason to check pressure with hot tyres, do not reduce pressure although it is higher than the prescribed value but repeat the check when tyres are cold.

The T.P.M.S. system does not exempt the driver to check tyre and space-saver spare wheel pressure at regular intervals.

IMPORTANT NOTES ABOUT THE T.P.M.S. SYSTEM

Failure indications will not be stored and therefore will not be displayed when turning the engine off and on again. If failure persists, the control unit will send warning indications to the instrument panel only after a few seconds when the car is moving.

IMPORTANT T.P.M.S. system cannot indicate sudden tyre pressure drops (e.g.: tyre burst). In this event, brake the car cautiously and avoid sudden steering.

IMPORTANT Replacing standard tyres with winter tyres and vice versa involves T.P.M.S. system set-up that shall be performed at **Fiat Dealerships** only.

IMPORTANT The T.P.M.S. system requires special equipment. Consult **Fiat Dealership** to know what type of accessories are compatible with the system (wheels, wheel caps, etc.). Using other accessories could cause system malfunctioning.

IMPORTANT Tyre pressure could change according to outside temperature. For this reason the T.P.M.S. system could temporarily indicate low tyre pressure. In this event check pressure with cold tyres and restore proper inflation values if required.

IMPORTANT If the car is fitted with T.P.M.S. system, tyre and/or rim removal and refitting operations involve special precautions; to prevent damages or wrong sensor refitting, contact **Fiat Dealership** to have tyre and/or rim changed.

IMPORTANT If the car is fitted with T.P.M.S. system, when changing a tyre, change also the rubber seal of the valve. Contact a **Fiat Dealership**.

IMPORTANT Strong radio-frequency disturbances could inhibit proper TPMS system operation. This condition is indicated by a dedicated massage on the display. This indication will go off automatically as soon as the radio-frequency disturbance ceases.

FRONT AND SIDE AIR BAGS

The car is fitted with front air bags for the driver **fig. 166** and for the passenger **fig. 167** and side air bags, side bag **fig. 169** and window bag **fig. 168**.

FRONT AIR BAGS

Description and operation

The front air bag (driver and passenger) is a safety device which comes into action in the event of a front impact.

It consists of an instantly inflatable double-layer bag housed in a special compartment:

– in the centre of the steering wheel on the driver's side;

F0B0455b

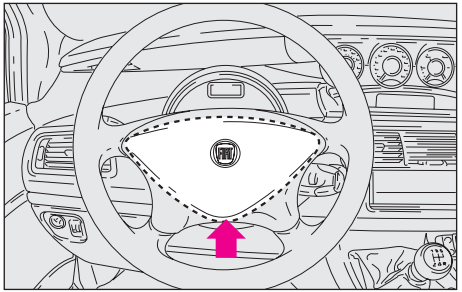

fig. 166

F0B0097b

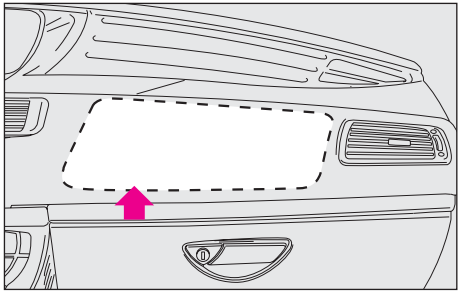

fig. 167

F0B0111b

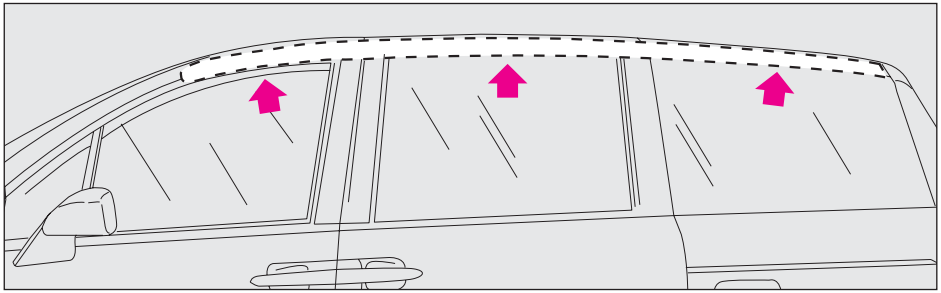

fig. 168

F0B0099b

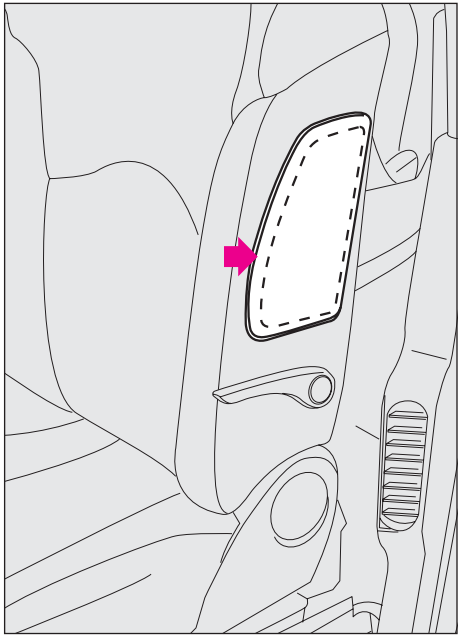

fig. 169

– in the dashboard and with a bigger cushion for the passenger.

The front air bag (driver and passenger) has been designed to protect the occupants in the event of head-on crashes of medium-high severity, by placing the cushion between the occupant and the steering wheel or dashboard.

In case of a crash, an electronic control unit processes the signals from a deceleration sensor and, when required, triggers the inflation of the cushion.

The bag inflates instantly and acts as a protective barrier between the front seat passengers and the structures in front of them that could cause injury. The bags deflate immediately afterwards.

In case of crash, a person not wearing the seat belt moves forward and may come into contact with the cushion while it is still inflating. Under this circumstance the protection offered by the air bag is reduced. The front air bag (driver and passenger) is therefore not a replacement of but a complementary to the use of belts, which should always be worn, as specified by law in Europe and most non-European countries.

In the case of minor head-on collisions (for which the restraining action of the seat belt is sufficient), the air bag is not triggered.

In collisions against highly deformable or mobile objects (such as road signs, heaps of gravel or snow, parked vehicles, etc.), in rear crashes (such as bumps from behind by another vehicle), side impacts, and in case of wedging under other vehicles or protective barriers (for example under a truck or guard rail), the air bag is not triggered as it offers no additional protection compared with the seat belts, consequently, it would be pointless.

The fact that the airbag is not triggered in these situations, this does not signify a malfunction.

PASSENGER'S FRONT AIRBAG

The passenger's airbag was designed and calibrated to protect a person wearing seat belts.

When fully inflated the bag will fill most of the space between the dashboard and the passenger.

SERIOUS DANGER The car is fitted with an Air bag on the passenger's side. Do not place a child's seat on the front seat. In the case of need, always deactivate the passenger's Air bag when a child's seat is placed on the front seat. Even if not compulsory by law, you are recommended to reactivate the Air bag immediately as soon as child transport is no longer necessary.

Deactivating the passenger's front air bag manually

The passenger's front airbag can be deactivated if it is absolutely necessary to carry a child in the front passenger seat.

Deactivation takes place using the vehicle ignition key in the special key switch on the right-hand side of the dashboard **fig. 170**. Access to the switch is only possible with the door open.

F0B0113b

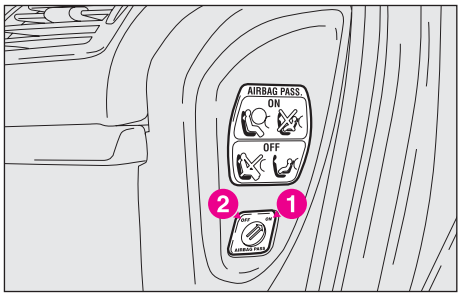

fig. 170

The key operated switch has two positions:

POSITION 1 (ON): passenger's front air bag activated, warning light on instrument cluster off; it is absolutely prohibited to carry a child on the front seat;

POSITION 2 (OFF): passenger's front air bag activated, warning light on instrument cluster on; it is possible to carry a child protected by special restraint system on the front seat.

The warning light on the cluster stays on permanently until the passenger's air bag is reactivated.

The side airbag will work although the front airbag is deactivated.

When the door is open, the key can be inserted and removed in both positions.

SIDE AIR BAGS (SIDE BAG - WINDOW BAG)

Purpose of the side airbags is to increase passenger protection in the event of a side impact of medium to high severity.

They consist of two instantly inflatable bag types:

– side bags are housed in the back rest of the front seats; this solution makes it possible to always have the cushion in the optimum position with respect to the passenger, regardless of the seat position;

– window bags, being a "curtain" system, are housed in the side roof lining and are covered by a special trim that enables bag deflation downwards. This solution, designed to protect the head, offers the occupants the highest degree of protection in the case of a side crash due to the wide deflation surface of the bags.

In the event of a side collision the electronic control unit processes the signals coming from a deceleration sensor and, if required, triggers the inflation of the bags.

The bags inflate immediately, setting as a protective barrier between the passengers and the car door. The bags deflate immediately afterwards.

In minor side crashes (for which the restraining action of the seat belts is sufficient), the air bags are not deployed.

Therefore the side air bags are not a replacement of but complementary to the belts, which you are recommended to always wear, as specified by law in Europe and most non-European countries.

Operation of the side air bags is not disabled by the passenger's front air bag deactivation switch, as described in the previous paragraph.

IMPORTANT The front and/or side air bags may be deployed if the car is subject to heavy knocks or accidents involving the underbody area, such as for example violent shocks against steps, kerbs or low obstacles, falling of the car in big holes or sags in the road.

IMPORTANT Triggering of the air bags releases a small amount of powder. This powder is not harmful and does not indicate the start of fire; also the surface of the deployed bag and the vehicle interior may be covered by dusty residue: this may irritate the skin and eyes. In the event of exposure, wash with neutral soap and water.

The airbag system has a validity of 14 years for the pyrotechnic charge and 10 years for the coil contact . As this date approaches, contact a **Fiat Dealership.**

WARNINGS Should an accident occur in which the Airbag is activated, take the vehicle to a **Fiat Dealership** to have the safety device, the electronic control unit, the seat belt, the pretensioners and the electric system checked.

All control, repair and replacement operations concerning the air bags must only be carried out c/o **Fiat Dealership**.

If the car is to be demolished, **Fiat Dealership** should be contacted to have the system deactivated.

If the vehicle changes ownership, the new owner must be informed of the method of use of air bags and the above warnings and also be given this "Owner handbook".

IMPORTANT The triggering of pretensioners, front air bags and side air bags is decided in a differentiated manner by the electronic control unit, depending on the type of crash. The failure to deploy one or more of them does not mean that the system is not working properly.

GENERAL NOTES

If the warning light does not turn on when turning the ignition key to M or if it stays on when travelling, this could indicate a failure in safety retaining systems; under this condition air bags or pretensioners could not trigger in the event of collision or, in a restricted number of cases, they could trigger accidentally. Stop the car and contact Fiat Dealership to have the system checked immediately.

When the ignition key is turned to M, the warning light (with the passenger's front air bag deactivation switch in the ON position) turns on for about 4 seconds and flashes for another 4 seconds to remind that the passenger's air bag and side air bags will be deployed in a crash, after which it should go off.

Always keep you hands on the steering wheel rim when driving, so that if the air bag is triggered, it can inflate without meeting any obstacles which could cause serious harm to you. Do not drive with the body bent forward, keep the seat back rest in the erect position and lean your back well against it.

Do not apply stickers or other objects to the steering wheel or to the air bag cover on the passenger's side or on the side roof lining. Never put objects (e.g. mobile phones) on the dashboard on passenger side since they could interfere with proper passenger air bag inflation and also cause serious injury.

Never travel with objects on your lap, in front of your chest or with a pipe, pencil, etc. between your lips; injury may result in the event of the air bag being triggered.

Remember that with the key engaged and in M position, even with the engine not running, the air bags may be triggered on a stationary vehicle if it is bumped by another moving car. Therefore, never seat children on the front seat even when the vehicle is stationary.

On the other hand, remember that with the vehicle stationary, without the key engaged and turned, the air bags are not triggered in the event of an impact; in these cases, failure to come into action of the air bags cannot be considered as a sign that the system is not working properly.

If the car has been stolen or an attempt to steal it has been made, if it has been subjected to vandals or floods, have the air bag system checked by Fiat Dealership.

Do not wash the seat back rest with pressurised water or steam at automatic seat washing stations.

Do not cover the backrest of front seats with trims or covers that are not suitable to be used with side bags.

The air bag does not substitute the seat belts, but only increases their effectiveness. Moreover, since the air bag does not come into operation in the event of front impact at low speed, side collisions, bumps from behind or overturning, in these circumstances the occupants would be only be protected by the seat belts which must therefore always be fastened.

The airbag is set to be fired in the event of collisions which are greater than the pretensioner settings. Consequently, for collisions in the bracket between the two thresholds, it is normal for only the pretensioners to be fired.

PARKING SENSORS

(where fitted)

Parking sensors inform the driver about the presence of obstacles behind the vehicle.

They are a valid support to identify fences, walls, poles, plant-pots and alike, together with children playing behind the car.

The system uses the four sensors on the bumper **fig. 171** to detect the distance between the vehicle and possible obstacles. When the reverse is engaged, the system is automatically turned on with a sound signal (“beep”).

The driver is therefore warned that the distance between the vehicle and the rear obstacle is getting reduced by the increasing of the sound warning frequency.

The sound warning becomes continuous when the distance between the vehicle and the obstacle is lower than 25 cm.

The sound warning stops as soon as the distance increases. The sequence of sound warnings remains constant if the distance is not changed.

If the car features the CONNECT Nav+ infotelematic system, the parking sensor buzzer will be completed with graphic information on the colour display.

IMPORTANT In the event a the system failure, the driver is informed of it by a repeated alarm consisting of a short sound followed by long one; in this case contact a **Fiat Dealership**.

If the sensor detects more than one obstacle, the control unit signals the obstacle having the shortest distance from the vehicle.

Anyway, parking depends on the driver's ability and it is important to make always sure that there are no people or animals in the parking area. The system should be considered as a help for the driver who, however, must always be very careful during parking operations, even if carried out at low speed.

When cleaning parking sensors make sure they do not get damaged. Do not use dry, rough or hard cloth, but clean water with the addition of some car washing detergent, if possible. At seat washing stations where pressurised water or steam are used to wash the car, have the sensors cleaned rapidly, with the nozzle at a distance of 10 cm.

The sensors on the bumper must always be cleared from mud, dirt, snow or ice to ensure the system works properly.

TOWING A TRAILER

Parking sensors are automatically deactivated when the trailer is connected electrically to the vehicle.

When the trailer is disconnected, the sensors turn on automatically.

F0B0023b

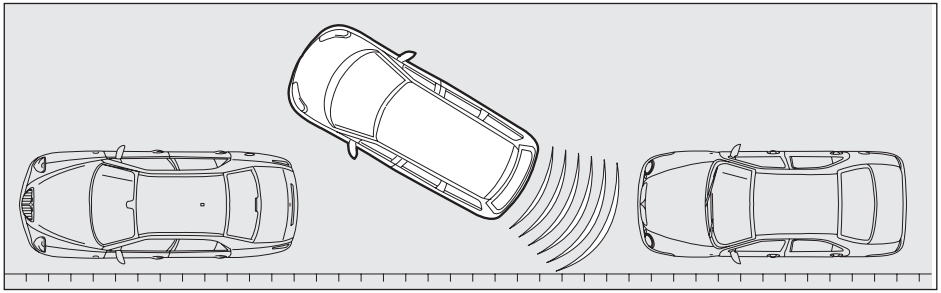

fig. 171

GENERAL NOTES

While parking, pay attention to obstacles above or below the sensors. In fact certain objects very close to the vehicle rear part are not detected by the system and so the car or the sensors might get damaged.

Warnings coming from the damaged sensors may be altered and no longer reliable, also when they are covered with dirt, mud, snow or ice, or confounded by nearby ultrasound systems (e.g. air brakes of trucks or rivetting hammers).

SOUND SYSTEM

For the sound system, see the "Sound system" handbook enclosed to this "Owner handbook".

ACCESSORIES PURCHASED BY THE OWNER

If, after purchasing your car, you wish to add electric accessories (alarm, satellite antitheft device, etc.) that require permanent power supply or high feed accessories, visit a **Fiat Dealership**. The staff of experts, beside suggesting the most suitable accessories in the Lineaccessori Fiat range, will also check whether the car electrical system can support the the required load or if a larger size battery needs to be installed.

Take care when fitting additional spoilers, alloy rims and non-standard wheel caps: they might reduce ventilation of the brakes, thus their efficiency, during abrupt and repeated braking, or long downhill slopes. Make sure that nothing (mats, etc.) gets in the way of the pedals when they are pushed down.

INSTALLATION OF ELECTRIC/ ELECTRONIC DEVICES

Electric/electronic devices installed after buying the vehicle or in aftermarket shall bear the and marking:

Fiat Auto S.p.A. authorizes the installation of transceivers provided that installation is carried out at a specialized shop, workmanlike performed and in compliance with manufacturer's specifications.

IMPORTANT Installation of devices resulting in modifications of vehicle characteristics may cause driving license seizing by traffic agents and also the lapse of the warranty as concerns defects due to the abovementioned modification or traceable back to it directly or indirectly.

Fiat Auto S.p.A. declines all responsibility for damages caused by the installation of non-genuine accessories or not recommended by Fiat Auto S.p.A. and installed not in compliance with the specified requirements.

RADIO TRANSMITTERS AND CELLULAR TELEPHONES

Radio transceiver equipment (e.g.: e-tacs mobile phones, HAM radio systems and the like) shall not be used inside the vehicle unless a separate aerial is mounted on the roof.

IMPORTANT The use of similar devices inside the passenger compartment (without separated aerial) produces radio-frequency electromagnetic fields which, amplified by the resonance effects inside the passenger compartment, may cause electrical systems equipping the vehicle to malfunction. This could compromise safety in addition to constituting a potential hazard for the passengers.

In addition, transmission and reception of these devices may be affected by the shielding effect of the vehicle body.

As concerns EC-approved mobile phones (GSM, GPRS, UMTS), strictly comply with the instructions for use provided by the mobile phone’s manufacturer.

AT THE FILLING STATION

OPERATION AT LOW TEMPERATURES

If the outside temperature is very low, the diesel thickens due to the formation of paraffin and could cause the malfunctioning of the fuel system.

In order to avoid these problems, different types of diesel are distributed according to the season: summer type, winter type and arctic type (cold, mountain areas). If refuelling with diesel fuel not suitable for the current temperature, mix diesel fuel with TUTELA DIESEL ART additive in the proportions stated on the can, putting first the antifreeze in the tank and then the diesel fuel.

If driving or parking the vehicle for a long period in cold areas/mountains, refuel with the diesel fuel available at local filling stations.

In this situation you are also recommended to have in the tank an amount of fuel 50% higher than usable capacity.

The vehicle must only be filled with diesel fuel for motor vehicles, in compliance with European Standard EN590. The use of other products or mixtures may irreparably damage the engine with invalidation of the warranty due to the damage caused. In the event of accidentally filling with another type of fuel, do not start the engine and empty the tank. If the engine has been run even for only a very short time, in addition to the tank, it is also necessary to drain out the whole fuel circuit.

REFUELLING

To guarantee full tank filling, carry out two refuelling operations after the first click of the fuel delivery gun. Avoid further topping up operations that could cause damages to the fuel system.

FUEL FILLER CAP fig. 172

The fuel filler cap **A** is locked; to access it, open the fuel tank flap **B** with the ignition key and turn it anticlockwise while releasing the cap.

During filling, hang the cap to the hook inside the flap, as illustrated.

F0B0116b

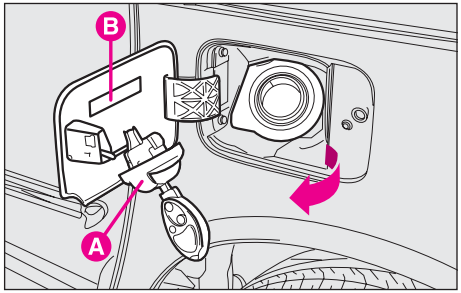

fig. 172

IMPORTANT The waterproof fuel filler cap lock may be slightly pressurised. Therefore, do not worry if some air comes out when the cap is released.

After filling, drive in the cap by turning it clockwise until it clicks twice or thrice, then turn the key clockwise and remove it. Close the flap.

Do not put open flames or lighted cigarettes near the fuel filler hole as there is a danger of fire. Do not lean out too close to the hole either so as not to breathe in harmful vapours.

Where necessary, to avoid compromising the efficiency of the fuel vapour recovery system, replace the fuel cap with another genuine spare part.

PROTECTING THE ENVIRONMENT

Protecting the environment has been a constant guiding factor of the Ulysse's design and manufacture at every stage. The result of this attention is to be seen in the choice of materials and installation of devices able to drastically limit or reduce harmful influences on the environment.

Devices for reducing emissions from JTD engines are:

– oxidising catalytic converter;

– exhaust gas recirculation system (E.G.R.);

– particulate filter (where fitted): its purpose is to trap and burn particulate (unburnt particles) to reduce harmful exhaust emissions.

The vehicle, therefore, has great advantages with respect to the strictest international anti-pollution directives.

DRIVING YOUR CAR

STARTING THE ENGINE

IMPORTANT The vehicle is fitted with an electronic engine locking device. If the engine cannot be started, see the "Fiat CODE system" in "Getting to know your car" chapter.

We recommend that during the initial period you do not drive to full vehicle performance (e.g.: excessive acceleration, long journeys at top speed, hard braking, etc.).

It is dangerous to let the engine run in a garage or other closed area. The engine consumes oxygen and gives off dioxide, carbon monoxide and other poisonous fumes.

IMPORTANT The ignition switch is fitted with a safety device which obliges the driver to return the key to **S** before repeating the starting operation if the engine does not start immediately.

When the engine is switched off never leave the ignition key at M to prevent pointless current absorption from draining the battery.

PROCEDURE FOR STARTING

1) Make sure the handbrake is up.

2) Put the gear lever in neutral.

3) Press down the clutch pedal.

4) Turn the ignition key to **M** and instrument panel warning light ⌇⌇ will come on.

5) Wait for the warning light ⌇⌇ to go out. The hotter the engine is, the quicker this will happen.

6) Turn the ignition key to **D** immediately after the ⌇⌇ warning light goes out. If you wait too long, you will lose the benefit of the work done by the glow plugs.

High current absorption electric devices (climate control system, rear heated window, etc.) are automatically deactivated during start-up.

If the engine does not start at the first attempt, return the ignition key to **S** and then again to **M**. If it is still impossible to start the engine, try with the other key provided with the car.

If you are still unable to start the engine, contact a **Fiat Dealership**.

HOW TO WARM UP THE ENGINE AFTER IT HAS JUST STARTED

– Begin to move forward slowly letting the engine turning at medium revs. Do not accelerate abruptly.

– Do not push the engine to its limit for the first kilometres. You are recommended to wait until the water temperature has reached 50° to 60°C.

BUMP STARTING

For versions with a catalytic converter, bump starting by pushing, towing or rolling downhill must be avoided at all costs. This manoeuvre could cause a rush of fuel into the catalytic exhaust pipe and damage it beyond repair.

Remember that as long as the engine is not running, the power brakes and power steering do not work. You therefore have to use considerably more effort on both the brake pedal and the steering wheel than you would do otherwise.

STOPPING THE ENGINE

Turn the ignition key to **S** while the engine is idling.

Gunning the accelerator before turning off the engine serves absolutely no practical purpose, wastes fuel and is damaging, particularly to turbocharged engines.

IMPORTANT After a taxing drive, it is better to allow the engine to "catch its breath" before turning it off by letting it idle to allow the temperature in the engine compartment to fall.

PARKING

Proceed as follows:

– turn the engine off;

– pull up the handbrake;

– put the vehicle in gear (1st if the vehicle is pointing uphill, reverse if downhill);

– leave the wheels steered to block the vehicle in the event the handbrake is released.

For vehicles with automatic electronic gearbox refer to "Getting to know your car" chapter.

Do not leave the ignition key at M to prevent draining the battery.

Never leave children unattended in the car. Always remove the ignition key when leaving the car and take it out with you.

SAFE DRIVING

In designing the Ulysse, Fiat has made every effort to come up with a vehicle able to provide driver and passengers with top-class levels of safety. Nevertheless it is always the behaviour of the person at the wheel that determines road safety.

Below you will find some simple tips to help you travel in safety under different conditions. You will no doubt be already familiar with many of them but it will be useful to read them all carefully.

BEFORE GETTING BEHIND THE WHEEL

The main suggestions are the following:

– make sure all lights including the headlights are working properly;

– adjust the position of the seat, steering wheel, driving and door mirrors properly for the best driving position;

– adjust the head restraints carefully so that they support the head and not the neck;

– make sure that nothing (mats, etc.) gets in the way of the pedals when they are pushed down;

– make sure that any child restraint systems (child seats, carriers, etc.) are properly fixed, preferably on the back seat as this is the safest place in the event of an accident;

– make sure that objects being transported are carefully arranged so they will not fly forward if you have to brake sharply;

– do not eat a heavy meal before travelling. Light eating will help keep your reflexes prompt. Above all, do not have anything alcoholic to drink. Using certain prescription drugs can reduce your ability to drive: read instructions for use carefully.

Periodically, remember to check:

– tyre pressure and conditions;

– engine oil level;

– coolant level and conditions of the system;

– brake fluid level;

– power steering fluid level;

– windscreen washer liquid level.

WHEN TRAVELLING

The main suggestions are the following:

– the first rule of safe driving is prudence. Prudence also means putting yourself into a position where you can predict wrong or imprudent behaviour from other drivers;

– stick closely to the rules of the road in the particular country where the vehicle is being driven and, above all, do not exceed speed limits;

– ensure that, besides yourself, all the other passengers in the vehicle have their seat belts fastened, that children are sitting in the appropriate child seats and any animals in the car are placed in suitable compartments;

– you should be physically fit and mentally alert before setting out on long journeys;

– do not drive too many hours at a time but stop at intervals to stretch your legs and recoup your energies;

– make sure the air in the vehicle is being changed continuously;

– never coast downhill (i.e. with the engine off): if you do, you lose the aid of the engine brake, power brakes and power steering, so that braking and steering require greater effort.

Driving while drunk or under the influence of drugs or certain medicines is dangerous for both you and other road users.

Water, ice and road salt may deposit on brake discs making it difficult to brake the first time this is necessary.

Be careful when fitting additional spoilers, light alloy rims and optional wheel caps: these devices could reduce brake ventilation and efficiency in the event of repeated and sudden braking or long downhill drives.

Never drive with objects on the floor in front of the driver's seat. The objects could get jammed under the pedals making braking or accelerating impossible.

Pay attention to mats: if you note even a small problem in braking, the pedal stroke may need to be adjusted.

Always fasten both front and back seat belts, including child restraint systems. Travelling with the seat belts unfastened increases the risk of injury or death if you are in a collision.

DRIVING AT NIGHT

The main suggestions are the following:

– drive especially carefully: it is harder to drive at night;

– slow down especially if the road is not lit;

– at the first signs of sleepiness, stop: continuing would be a risk to yourself and everybody else. Only start driving again when you have had enough rest;

– keep a greater safety distance from the cars in front of you than during daylight hours: it is hard to judge how fast other cars are going when all you can see are their lights;

– make sure the headlight beams are properly positioned: if they are too low, they reduce visibility and are hard on the eyes. If they are too high they can dazzle other drivers;

– only use full-beam headlights when you are driving outside the city and when you are sure they do not annoy other drivers;

– if the headlights are on full, dip them when you meet cars going in the other direction and pass them with the headlights dipped;

– keep all lights clean;

– be careful of animals crossing the road when driving in the country.

DRIVING IN THE RAIN

Rain and wet road surfaces spell danger.

All manoeuvres are more difficult on a wet road because the friction of the wheels on the tarmac is greatly reduced. This is why braking distances are much longer and roadholding on bends is lower.

The main suggestions are the following:

– reduce speed and keep a greater safety distance from the cars in front;

– if it is raining particularly heavily, visibility is also reduced. In these cases, switch on the dipped headlights even if it is still daylight, to make yourself easier to be seen;

– do not drive through puddles at speed and hold on tightly to the wheel: the loss of grip caused by taking a puddle at speed can make you lose control of the vehicle (“aquaplaning”);

– move the ventilation controls to the position for demisting the windows (see the section “Getting to know your car”), to avoid visibility problems;

– periodically check the condition of the windscreen wiper blades.

DRIVING IN FOG

If the fog is thick, do not start out on a journey unless you absolutely have to.

If driving in mist, blanket fog or when there is the danger of fog patches:

– keep your speed down;

– turn on the dipped headlights, rear fog lights and front fog lights, if fitted, even during the day. Do not drive with your headlights at full-beam.

IMPORTANT On stretches of road with good visibility, switch off your rear foglights; the brightness of these lights could annoy the people travelling in the cars behind.

Remember that fog also means the tarmac is wet and therefore manoeuvres of all kinds are more difficult and stopping distances are longer:

– keep a good distance from the cars in front of you;

– when possible, avoid spurts of speed or sudden deceleration;

– do not overtake other vehicles if you can help it;

– if you are forced to stop your vehicle (breakdown, limited visibility, etc.), first try to stop off the road. Then turn on the hazard lights and, if possible, the dipped headlights;

– rhythmically sound the horn if you realise another vehicle is approaching.

DRIVING IN THE MOUNTAINS

The main suggestions are the following:

– when driving downhill use the engine brake by engaging a low gear so as not to overheat the brakes;

– under no circumstances should you drive downhill with the engine off or with the vehicle in neutral, let alone with the ignition key out;

– drive at moderate speed without "cutting" corners;

– remember that overtaking while going uphill is slower and therefore requires more clear road. If you are being overtaken while driving uphill, make it easier for the other vehicle to pass.

DRIVING ON SNOW AND ICE

The main suggestions are the following:

– keep you speed down;

– keep a good distance from the cars in front of you;

– use chains if the roads are covered in snow. See "Snow chains" in this chapter;

– do not keep the engine running for long periods in deep snow as the snow could push exhaust gases into the passenger compartment;

– mainly use the engine brake and under all circumstances avoid braking sharply;

– do not accelerate suddenly and avoid swerving;

– in the winter, even apparently dry roads may have icy patches. Be careful therefore when driving over stretches that do not get much exposure to the sun or that are lined by trees and rocks, where ice might not have melted.

DRIVING WITH ABS

ABS is a part of the braking system offering 2 advantages:

1) it prevents wheel lock-up and consequent skidding in emergency stops, particularly when the road does not offer much grip;

2) it makes it possible to brake and steer at the same time so you can avoid sudden objects on the road and direct the vehicle where you want while braking; this compatibly with the physical limits of overall tyre grip.

To get the most out of ABS:

– during emergency stops or when grip conditions are poor, you will feel a slight pulsation on the brake pedal. This is the sign that the ABS is in action. Do not release the brake pedal but continue to press so as not to interrupt the braking action;

– ABS prevents the wheels from locking but it does not increase actual grip conditions between tyre and road. Therefore, even if your vehicle is fitted with ABS, respect the safety distance from the vehicle in front of you and keep your speed down when driving into bends.

ABS serves to increase the controllability of the vehicle, not to enable you to go faster.

CONTAINING RUNNING COSTS AND POLLUTION

Some suggestions which may help you to keep the running costs of the car down and lower the amount of toxic emissions released into the atmosphere are given below.

GENERAL CONSIDERATIONS

Car maintenance

The overall state of the vehicle is an important factor that has a marked influence over fuel consumption, driving comfort and on the life span of your vehicle. For this reason, care should be taken to maintain your vehicle by carrying out the necessary checks and observing regulations in accordance with the specifications given in the Scheduled Maintenance Programme (see section, idling, air cleaners, timing).

Tyres

Tyre pressure should be checked at least once every four weeks: if the pressure is too low fuel consumption increases as the resistance to the rolling movement of the tyre is greater. In this state, tyre wear is increased and vehicle handling suffers, which will effect safety.

Unnecessary loads

Do not travel with too much luggage stowed in the boot. The weight of the vehicle (especially when driving in the city) and its trim greatly effects consumption and stability.

Roof rack/ski rack

Remove the roof/ski rack from the roof when no longer necessary. These accessories reduce the vehicle's aerodynamic penetration, which affects consumption. Use a trailer, if particularly heavy objects are to be transported.

Electrical devices

Use electric devices for the necessary time only. The heated rear window, supplementary lights, windscreen wipers, heating system blower require large amounts of electricity; this means an increase in the request for power and consequently an increase in fuel consumption (up to +25% when driving in built-up areas).

Climate control system

The climate control unit is an additional load that greatly affects the engine leading to higher consumption (on average +20%). When the temperature outside allows it, use the air vents.

Spoilers

The use of optional extras which are not certified for specific use on the car may reduce the aerodynamic penetration of the car and increase consumption.

DRIVING STYLE

Starting

Do not warm the engine when the vehicle is stationary or at high or low revs: in this way the engine will warm up gradually increasing consumption and emissions. You should drive off slowly straight away avoiding high revs so that the engine will warm up more quickly.

Unnecessary actions

Avoid revving the engine when stopped at traffic lights or before switching off the engine and avoid double-clutching as these actions have no purpose on modern vehicles and serve only to increase consumption and pollution.

Gear selections

As soon as the traffic and road conditions allow it, shift to a higher gear. Using a lower gear to liven up acceleration greatly increases consumption.

In the same way, improper use of the higher gears will increase consumption, emissions and wear and tear on the engine.

Top speeds

Fuel consumption increases considerably as speed increases. For example, when accelerating from 90 to 120 Kph, fuel consumption increases by about +30%. Your speed should be kept as even as possible and superfluous braking and acceleration avoided as this increases both consumption and emissions. A "soft" way of driving should be adopted by attempting to anticipate manoeuvres to avoid imminent danger and to keep a safe distance from the vehicle in front to avoid braking sharply.

Acceleration

Accelerating violently increasing the revs will greatly effect consumption and emission: acceleration should be gradual and not exceed the maximum torque.

CONDITIONS OF USE

Cold starting

Short trips and frequent cold starting will not enable the engine to reach optimal running temperature (from +15 to +30% in built up areas) as will the production of toxic emissions.

Traffic and road conditions

Heavy traffic and higher consumption are synonymous: for example, when driving slowly with frequent use of lower gears or in large towns where there are numerous traffic lights. Winding roads, mountain roads and bumpy roads also have a negative effect on consumption.

Enforced halts

During prolonged stops (traffic lights, level crossings, etc.) the engine should be switched off.

CHEAP RUNNING THAT RESPECTS THE ENVIRONMENT

Environmental protection has been one of the guiding principles in the production of the Ulysse. It is no accident that its pollution control equipment is much more effective than that required by current legislation.

Nonetheless, the environment cannot get by without a concerted effort from everyone.

By following a few simple rules the motorist can avoid harming the environment and often cut down fuel consumption at the same time.

On this subject, a number of useful tips have been given below to supplement those marked by symbol ⌃, at various points of the manual.

You are asked to read both the former and latter carefully.

LOOKING AFTER EMISSION CONTROL DEVICES

The correct use of pollution control devices not only ensures respect for the environment but also has an effect on the car's performance. Keeping these devices in good condition is therefore a fundamental rule for driving that is easy on your pocket and on the environment too.

The first step to take is to follow the Service Schedule to the letter.

Only use diesel for motor vehicles (EN590 specification).

If you have trouble starting, do not turn the ignition key for long periods. Be especially careful to avoid bump starting the vehicle by pushing, towing or rolling downhill: these are all manoeuvres that can damage the catalytic exhaust.

For emergency starts only use an auxiliary battery.

If the engine begins to "lose its smoothness" when travelling, continue your journey but reduce the demands you are making on the engine and have the vehicle checked at a **Fiat Dealership**.

When the instrument panel fuel reserve warning light comes on, fill up as soon as possible. A fuel level that is too low can cause an uneven supply of fuel with the inevitable increase in exhaust temperature; this would seriously damage the catalytic converter.

Do not warm up the engine by letting it idle for a while before moving off unless the outside temperature is very low and, even in this case, only do so for less than thirty seconds.

When functioning normally the catalytic converter develops high temperatures. For this reason, do not park the vehicle over inflammable material (grass, dry leaves, pine needles, etc.): fire hazard.

Do not install other heat shields and do not remove those already fitted to the catalytic converter and exhaust pipe.

Do not spray anything on the Lambda sensor and exhaust pipe.

Failure to heed these precautions could cause a fire.

TOWING A TRAILER

IMPORTANT

The car must be fitted with a homologated tow hitch and suitable electrical system for towing a caravan or trailer.

To prevent damages to the electric system of the car, it is recommended to install a dedicated trailer electronic control unit.

Have the tow hitch fitted by an expert who will issue specific documentation for use on roads.

Fit special and/or additional rearview mirrors in accordance with the Highway Code.

Remember that towing a trailer makes it harder for the car to climb the maximum gradients specified, increases braking and overtaking distance, proportionally to the overall weight of the trailer.

Engage a low gear when driving downhill rather than constantly braking.

The weight the trailer exerts on the vehicle's tow hitch coupling reduces the vehicle's payload capacity by the same amount.

In order to be sure you are not exceeding the maximum towing weight (shown in the vehicle's registration papers) you have to take into account the trailer's weight fully laden including the accessories and personal luggage.

Do not exceed the speed limits for towing a trailer either abroad or at home. In any case, do not exceed the top speed of 100 km/h.

The ABS system does not control the trailer braking system. Particular care must therefore be taken on slippery road surfaces.

Under no circumstances modify the vehicle's braking system for trailer braking control. The trailer's braking system must be completely independent of the vehicle's hydraulic system.

WINTER TYRES

These tyres have been specifically designed for use on snow and ice and should be fitted in place of the existing tyres.

Use winter tyres of the same size as the tyres provided with the car.

Fiat Dealership will be glad to offer advice on the right type of tyres according to your needs.

The performance of winter tyres is greatly reduced when the depth of the tread is less than 4 mm. In this situation it would be safer to have them replaced.

The specific characteristics of the winter tyres mean that under normal driving conditions or when driving long distances on motorways, their performance is greatly reduced in comparison to those normally fitted to the car.

The use of these tyres should therefore be limited to the conditions for which they were designed and certified.

IMPORTANT When using winter tyres with a maximum speed rating lower than the speed which can be reached by the car (plus 5%), place a suitable notice in the passenger compartment to inform the driver of the top speed which the winter tyre can run at (as per Directive CE).

All four tyres should be the same (brand and track) to ensure greater safety when driving, braking and cornering.

Remember not to invert the tyre direction of rotation.

The max speed for snow tyres with "Q" marking is 160 km/h, 190 Km/h for tyres with "T" marking and 210 Km/h for tyres with "H" marking. The Road Traffic Code speed limits must however be always strictly observed.

SNOW CHAINS

The use of snow chains is regulated by the legislation in force in the country the car is driven in.

The chains may only be applied to the front wheel (drive wheel) tyres.

Use only low profile chains (maximum 12 mm off the tyre).

We recommend using Lineaccessori Fiat snow chains.

Check the tautness of the chains after driving some ten meters.

STORING THE CAR

The following precautions should be taken if the car will not be used for several months:

– park the vehicle in covered, dry and if possible well-ventilated premises;

– engage a gear (**P** for versions with automatic electronic gear);

– make sure the handbrake is not engaged;

– clean and protect the painted parts using protective wax;

– sprinkle talcum powder on the rubber windscreen and rear window wiper blades and lift them off the glass;

– slightly open the windows;

– inflate the tyres to 0.5 bar above the normal specified pressure and check it at intervals;

– switch off the electronic car alarm;

– disconnect the terminals (–) from the battery poles (negative pole first) and check the battery charge. When the vehicle is in storage, this check should be carried out once a month. If no-load voltage is less than 12.5V, recharge the battery;

– do not drain the engine cooling system;

– cover the vehicle with a cloth or perforated plastic sheet. Do not use sheets of non-perforated plastic as they do not allow moisture on the car body to evaporate.

RESTARTING THE CAR AFTER STORAGE

Before restarting the vehicle after a long storage, make the following operations:

– do not take dust off the bodywork without water;

– check if there are fluid leakages (oil, brake and clutch fluid, engine coolant, etc.);

– have the engine oil and the filter replaced;

– check the level of: brake and clutch fluid, engine coolant;

– check the air cleaner and have it replaced, if needed;

– check the tyre pressure and possible damages, cuts or cracks on their surfaces. If present, have them replaced;

– check the engine belt conditions;

– connect the battery negative (–) terminal after checking the battery charge.

USEFUL ACCESSORIES fig. 1

In addition to the legal requirements we recommend keeping the following in the car:

– first-aid kit with non-alcoholic base disinfectant, sterile gauze, a roll of gauze bandage, plasters, etc.;

– electric torch;

– round-nosed scissors;

– work gloves;

– fire extinguisher.

These articles are all available from Lineaccessori Fiat range.

F0B0202b

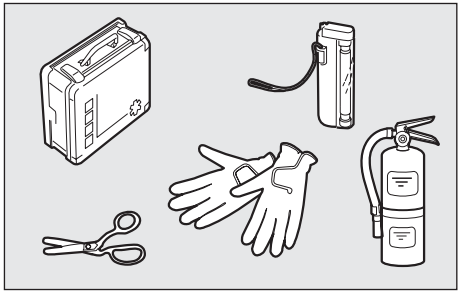

fig. 1

JUMP STARTING

The battery is in the scuttle on the floor in front of the passenger's seat.

If the battery is flat, you can use another battery to start the engine. Its capacity must be the same or slightly greater than the flat battery.

Proceed as follows **fig. 1-2**:

1) Lift the protective cover **A**.

2) Connect positive terminals **B** (**+** sign near terminal) of the two batteries with a jump lead.

3) With a second lead, connect the negative terminal **C** (**–** sign near the terminal) of the auxiliary battery and to an earthing point **D** ⏚ on the engine or gearbox of the vehicle to be started.

Do not directly connect the two negative terminals: sparks could ignite the flammable gas from the battery. If the other battery is fitted in a vehicle, prevent accidental contact between the metal parts of the two vehicles.

4) Start the engine.

5) When the engine has been started, remove the leads reversing the order above.

If the engine fails to start after a few attempts, do not keep turning the key but have the car seen to at a **Fiat Dealership**.

F0B0042b

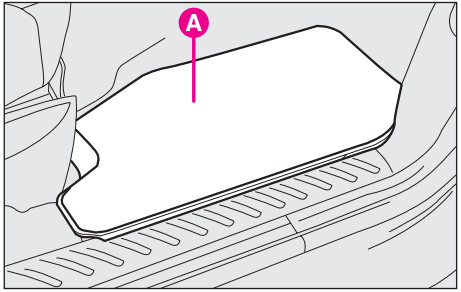

fig. 1

F0B0117b

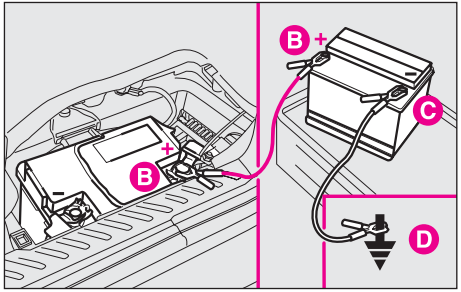

fig. 2

Do not carry out this procedure if you lack experience; if it is not done correctly it can cause very intense electrical discharges. In addition, the fluid contained in the battery is poisonous and corrosive. Avoid contact with skin and eyes. You are also advised not to put naked flames or lighted cigarettes near the battery and not to cause sparks.

Under no circumstances should a battery charger be used to start the engine: it could damage the electronic systems and in particular the ignition and injection control units.

BUMP STARTING

Do not bump start by pushing, towing or coasting downhill. This way of starting could cause a rush of fuel into the catalytic converter and damage it beyond repair.

Remember that until the engine has started the brake booster and electrical power steering systems will not work and a greater effort will therefore be required to press the brake pedal or turn the steering wheel.

IF A TYRE IS PUNCTURED

Certain versions (where provided) are fitted with wheel identification and tyre inflation sensors; pressure loss is signalled to the driver in the following way:

pressure loss - the infotelematic CONNECT system displays the related message and a “gong” is emitted by the system. Contact a **Fiat Dealership**;

punctured tyre - warning light “**STOP**” comes on and the infotelematic CONNECT system displays the related message together with 3 consecutive “gong” sounds. Change the wheel in the following way.

The system can also display a dedicated message in the event it should not be able to detect the tyre pressure.

GENERAL INSTRUCTIONS

Observe the instructions on this and the following pages to use the jack and space-saver spare wheel correctly.

An incorrectly positioned jack may cause the vehicle to fall. Do not use the jack to lift loads exceeding that indicated on the label attached to the jack itself.

The jack should only be used to change a wheel on the vehicle for which it was designed. It should not be put to other uses or employed to raise other models. Under no circumstances should it be used when carrying out repairs under the vehicle.

Do not lubricate the bolt threads before fitting them back: they could come loose.

Never start the engine when the vehicle is jacked up.

If you are towing a trailer, remove the trailer before jacking up the vehicle.

Check the inflation pressure of the tyres and the spare wheel regularly. If you change the type of wheels (alloy rims instead of steel rims) you will have to change the entire set of fastening bolts with another set of suitably sized bolts.

You should keep the bolts in case you decide to use the original type of wheel later on.

Never tamper with the inflation valve. Never place tools between the rim and the tyre.

Check the tyre and space-saver spare wheel pressure regularly. The tyre inflation pressure is shown in the "Technical specifications" chapter.

Signal the presence of the stopped car according to the laws in force: hazard lights, reflecting triangle, etc.

Any passengers on board should leave the car, especially if it is heavily laden. Passengers should stay away from oncoming traffic while the wheel is being changed.

If the wheel is being changed on a steep or badly surfaced road, place wedges or other suitable material under the wheels to stop the car.

CHANGING A WHEEL

Please note:

– the jack weighs 3.4 kg;

– the jack requires no adjustments;

– the jack cannot be repaired. If it breaks it must be replaced with a new jack;

– no tool with the exception of the handle can be fitted on the jack.

Proceed as follows:

1) Stop the car in a position that is not dangerous for oncoming traffic where you can change the wheel safely. The ground should be flat and adequately firm.

2) Turn the engine off and pull up the handbrake.

3) Engage first gear or reverse or, for versions with automatic electronic gear, select **P**.

4) Lift the boot mat (see the relative instructions in the "Bonnet" paragraph of "Getting to know your car" chapter).

5) Remove lever **A-fig. 3**.

6) Remove protective cover **B** and use ring **C** to release the elastic band **D**, then extract jack **E**.

7) Close the bonnet and place the tools next to the wheel to be changed.

8) Open the tailgate and use ring **A-fig. 4** to lift and turn cap **B** protecting the spare wheel lock bolt **C**.

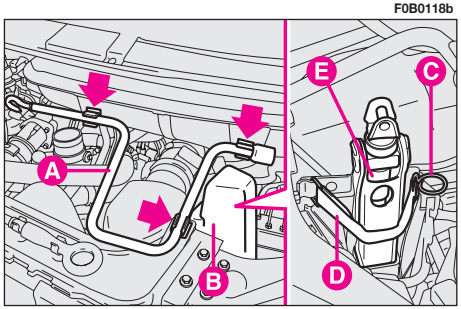

fig. 3

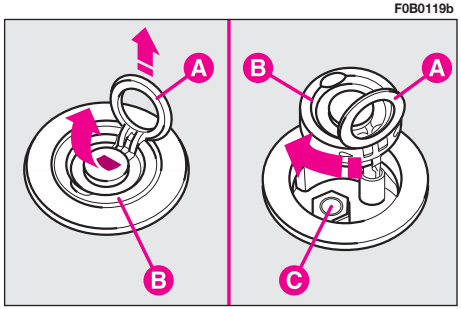

fig. 4

9) Use handle **A-fig. 5** to loosen the spare wheel bolt **B**.

10) Release support **C** to remove the spare wheel and close the tailgate.

11) Remove the wheel cap **A-fig. 6** (for versions with steel rims) or the clipped wheel hub cap (for versions with alloy rims) by means of tool **B** supplied with the car and housed in the jack container.

12) Loosen the bolts fastening the wheel to be changed by approximately one turn. Use the specific supplied tool **A-fig. 7** to remove the antitheft bolt.

13) Turn the jack handle to open it partially and position the jack near the wheel to be changed.

14) Make sure that the groove **A-fig. 8** on the jack is well fitted on the ribbing **B** on the side member.

F0B0120b

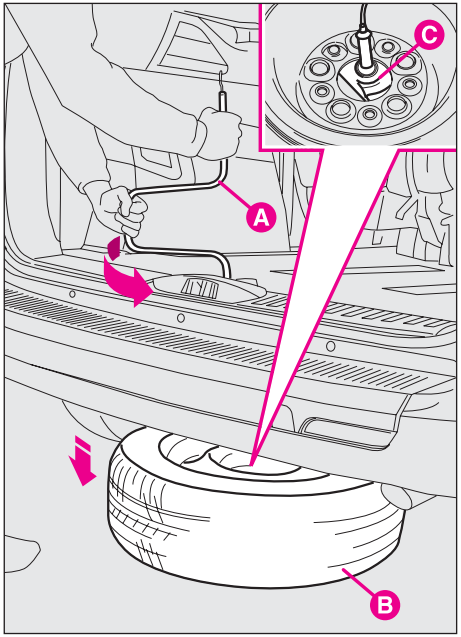

fig. 5

F0B0121b

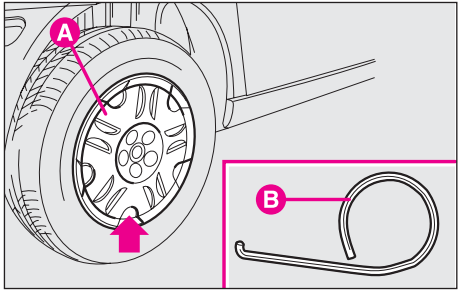

fig. 6

F0B0122b

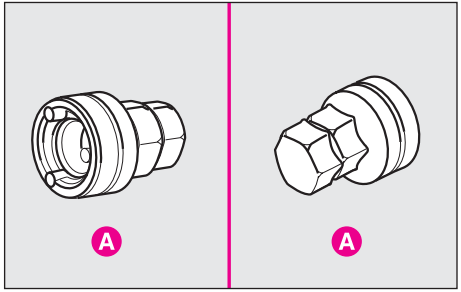

fig. 7

15) Warn other passengers that the vehicle is about to be raised; all persons should be kept away from the vehicle until it has been lowered.

16) Turn the jack handle and raise the vehicle until the wheel is a few inches off the ground. Make sure the jack handle can be turned easily and take care not to scrape your hand against the ground.

17) The moving parts of the jack (screw and joints) may also cause injury if touched. Clean off any grease.

18) Loosen the five bolts completely and remove the wheel.

19) When fitting the spare wheel, make sure the hub is clean so that the bolts will not loosen.

20) Fit the spare wheel making one of the holes **A-fig. 9** coincide with pin **B**. Now tighten the five wheel bolts with the handle .

21) Lower the vehicle by turning the handle and remove the jack.

22) Fasten bolts completely, working in a criss-cross fashion as shown in **fig. 10**.

23) Refit the wheel cap (where fitted) and make groove **A-fig. 11** match with the wheel inflation valve.

F0B0124b

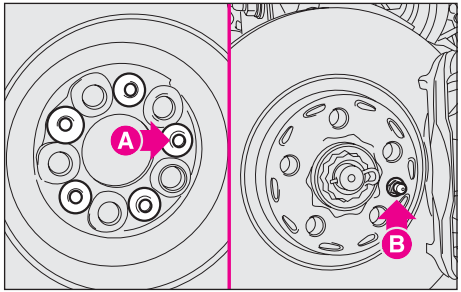

fig. 9

F0B0123b

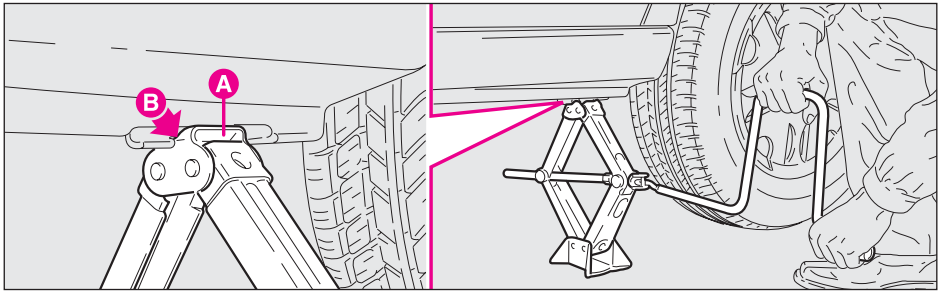

fig. 8

F0B0125b

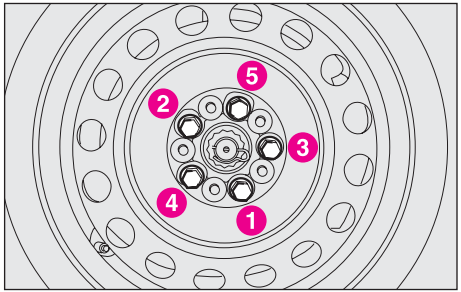

fig. 10

When you have finished:

1) Arrange the replaced wheel in the support under the floor.

2) Tighten the bolt with the jack handle until the wheel support is well positioned and then put the cover back to its place.

3) Close the tailgate.

4) Refit the jack and the jack handle in the compartment.

5) Close the compartment with the covering panel.

F0B0126b

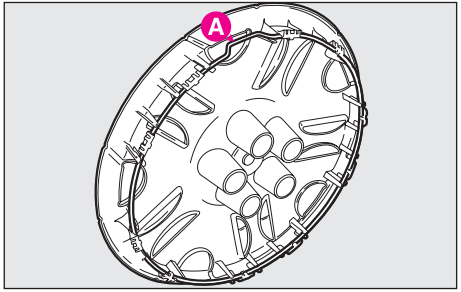

fig. 11

IF A BULB BURNS OUT

Modifications or repairs to the electrical system carried out incorrectly and without bearing the features of the system in mind can cause malfunctions with the risk of fire.

You should, where possible, have your bulbs changed at a Fiat Dealership. Correct operation of external light beams are essential for safe driving and compliance with legal requirements.

Only touch the metal part when handling halogen bulbs. If the transparent bulb is touched it reduces the intensity of the light emitted and can also reduce the life of the bulb. If you touch the bulb accidentally, rub it with a cloth moistened with alcohol and leave it to dry.

Halogen bulbs contain pressurised gas which, if broken, may cause small fragments of glass to be projected outwards.

GENERAL INSTRUCTIONS

– When a light is not working, check that it has not fused before changing the bulb.

– For the location of the fuses, refer to "If a fuse blows" in this chapter.

– Before replacing a bulb that does not work, check that the contacts are not oxidised.

– Burnt-out bulbs must be replaced with ones of the same type and power.

– Always check the height of the headlight beam after changing a bulb.

TYPES OF BULBS fig. 12

Several types of bulbs are installed in the vehicle:

A - Glass bulbs: clipped into position. Pull to remove.

B - Bayonet bulbs: remove from the bulb holder by pressing the bulb and turning it anticlockwise.

C-D - Halogen bulbs: to remove the bulb, release the clip holding the bulb in place.

E - Xenon bulbs.

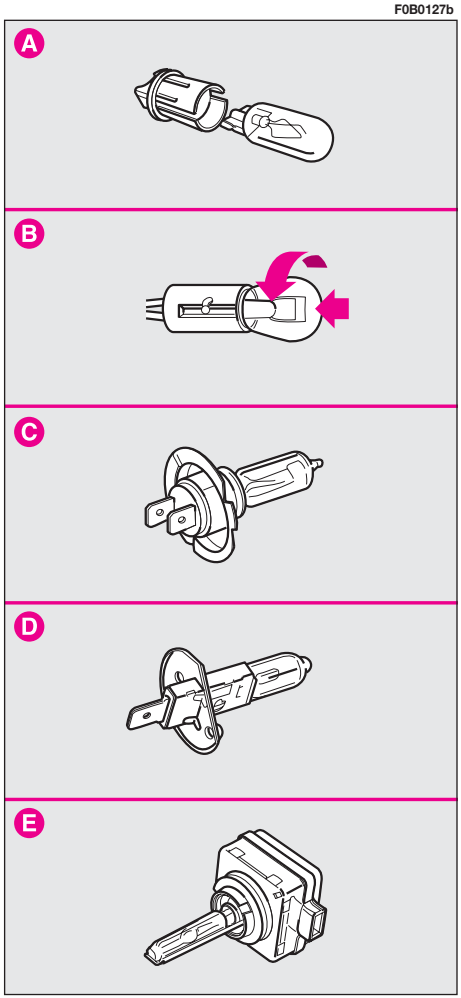

fig. 12

BULBS	FIGURE 12	TYPE	POWER
Front side lights	**A**	W5W	5W
Dipped beam headlights:			
– halogen bulbs	**C**	H7	55W
– Xenon lights	**E**	D15	35W
Main beam headlights	**C**	H7	55W
Front fog lights	**D**	H3	55W
Direction indicators:			
– front	**B**	PY21W	21W
– side	**A**	WY5W	5W
– rear	**B**	PY21W	21W
Taillights and brake lights	**B**	P21/5W	21W/5W
Third brake lights	**A**	W5WF14	5W
Reversing light	**B**	P21W	21W
Rear fog lights	**B**	P21W	21W
Number plate light	**A**	W5W	5W
Passenger compartment lights	**A**	W5W	5W
Ceiling lights	**A**	W5W	5W
Glove compartment lights	**A**	W5W	5W
Courtesy lights	**A**	W5W	5W
Puddle light	**A**	W5W	5W

IF AN EXTERIOR LIGHT BURNS OUT

Modifications or repairs to the electrical system carried out incorrectly and without bearing the features of the system in mind can cause malfunctions with the risk of fire.

IMPORTANT See "If a bulb burns out" for information on bulb types and power when changing a bulb.

FRONT LIGHT CLUSTER

Front headlights include front side lights, main beam headlights, dipped beam headlights, direction indicators and front fog lights **fig. 13**:

A - main beam headlights;

B - front side lights;

C - dipped beam headlights;

D - direction indicators;

E - front fog lights.

To replace a dipped beam headlight remove the rubber cover **1-fig. 14** by turning it anticlockwise.

To replace front side lights and main beam headlights remove the cover **2** by turning it anticlockwise.

To replace front fog lights remove the cover **3** by turning it anticlockwise.

To replace direction indicator bulbs remove the bulb holder **4** by turning it anticlockwise.

F0B0130b

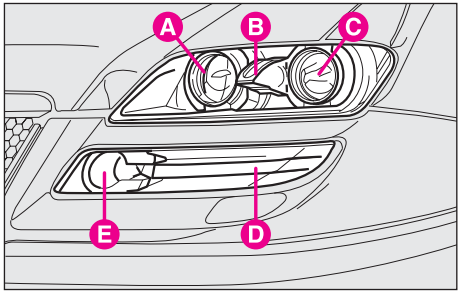

fig. 13

F0B0131b

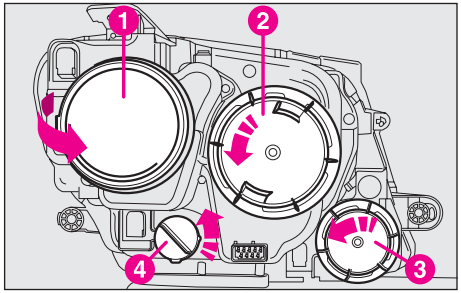

fig. 14

FRONT SIDE LIGHTS fig. 15

To replace a bulb:

– Remove the cover as **2** previously described.

– Remove the bulb holder **A** by turning it slightly.

– Take off the clipped bulb **B** and replace it.

– Put the bulb holder back to its place.

MAIN BEAM HEADLIGHTS fig. 16

To replace a bulb:

– Remove the cover as **2** previously described.

– Disconnect the electrical connection **A**.

– Release clip **B**.

– Take off bulb **C** and replace it.

– Fit the new bulb by matching the metal tab with the groove on the lamp.

– Refit clip **B**.

– Reconnect connector **A**.

DIPPED BEAM HEADLIGHTS

With halogen bulbs fig. 17

To replace a bulb proceed as follows:

– Remove the rubber cap **1** as described previously.

– Turn the bulb holder **A** clockwise or counter-clockwise to release it from the catches.

– Remove the snap fitted bulb **B** and replace it

F0B0135b

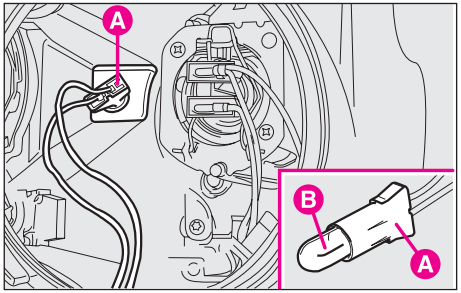

fig. 15

F0B0134b

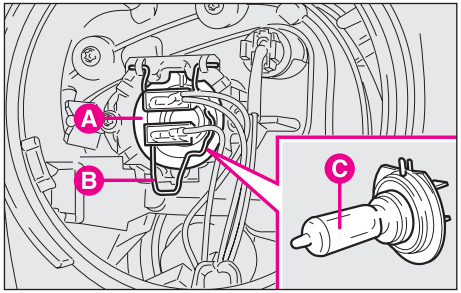

fig. 16

F0B0446b

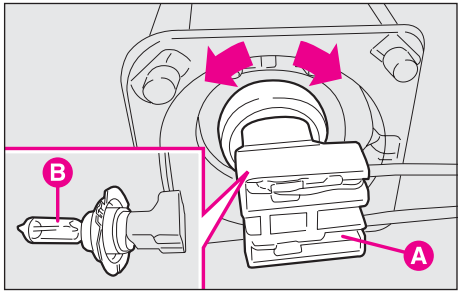

fig. 17

– Fit the new bulb into the bulb holder (with protrusion facing upwards), push the bulb forwards along the vehicle axis until hearing the locking click that indicates proper bulb securing.

– Refit the bulb holder into its seat turning it clockwise or counter-clockwise to lock it to catches.

Xenon bulbs fig. 18

We recommend you to have the bulb changed at a Fiat Dealership.

IMPORTANT The bulb replacement procedure is described only as information.

To replace a bulb:

– Remove the rubber cap **1** as previously described.

– Release clip **A**.

– Disconnect connector **B**.

– Take off bulb **C** and replace it.

– Fit the new bulb and connect connector **B**.

– Refit clip **A**.

Only touch the metal part when handling Xenon bulbs. If you touch the transparent bulb accidentally, rub it with a cloth moistened with alcohol and leave it to dry.

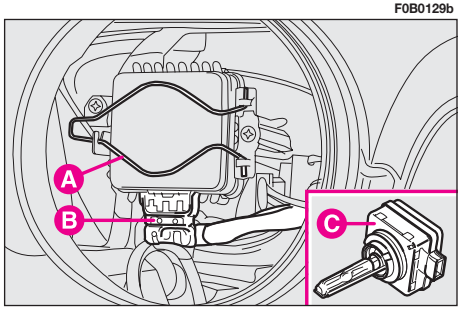

fig. 18

FRONT DIRECTION INDICATORS fig. 19

To replace a bulb:

– Turn the bulb holder **A** anticlockwise and remove it.

– Remove bulb **B** by pushing it slightly and turning it anticlockwise (bayonet coupling).

– Replace the bulb.

– Refit the bulb holder by turning it clockwise and check it is well fastened.

FRONT FOG LIGHTS fig. 20

To replace a bulb:

– Remove cap **3** as previously described.

– Disconnect connector **A**.

– Release clip **B**.

– Take off bulb **C** and replace it.

– Fit the new bulb by matching the metal tab with the groove on the lamp.

– Refit clip **B**.

– Reconnect connector **A**.

SIDE DIRECTION INDICATORS fig. 21-22

To replace a bulb:

– Press the lens **A** in direction **1** so to compress the inside clip **B**, then remove the unit by pulling it in direction **2**.

– Turn bulb holder **C** anticlockwise.

– Take off clipped bulb **D** and replace it.

– Refit bulb holder **C** and the transparent unit.

F0B0136b

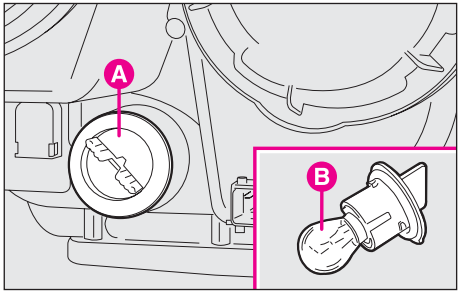

fig. 19

F0B0132b

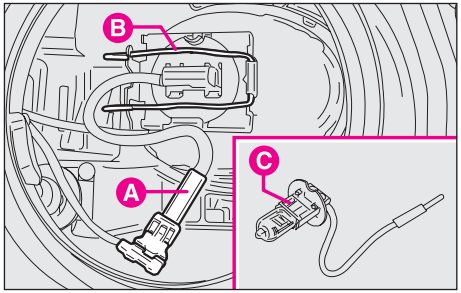

fig. 20

F0B0128b

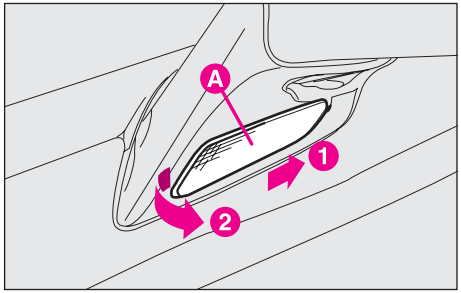

fig. 21

Be careful when removing the side direction indicator unit not to damage the bodywork or the transparent glass.

REAR LIGHT CLUSTER

The rear light cluster includes brake lights and taillights, direction indicators, reversing light and rear fog lights **fig. 23**:

A - direction indicators;

B - brake lights/taillights;

C - reversing light;

D - rear fog lights.

To replace a bulb **fig. 24-25**:

– Remove cover **A** by lifting it in the points and direction shown by the arrows.

– Disconnect connector **B** and release the two fasteners **C**.

– Release wing nut **D** and remove the rear cluster.

F0B0137b

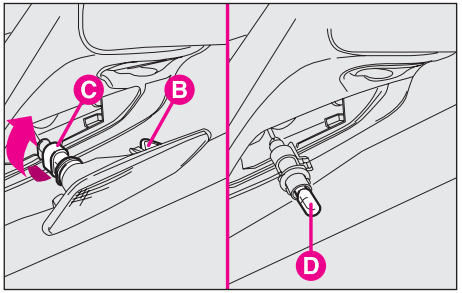

fig. 22

F0B0115b

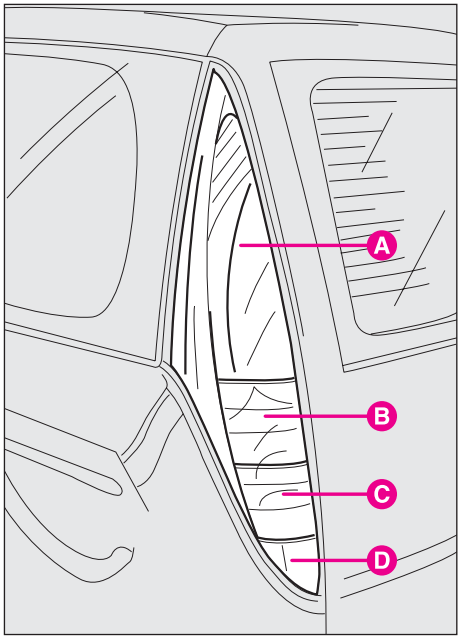

fig. 23

F0B0041b

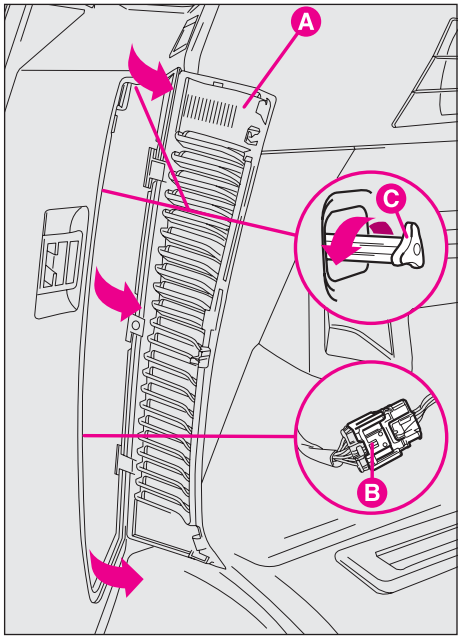

fig. 24

– Take off the bulb holders by turning them slightly anticlockwise **fig. 26**:

A - Direction indicator bulb;

B - Brake light/taillight bulb;

C - Reversing light bulb;

D - Rear fog light bulb.

F0B0263b

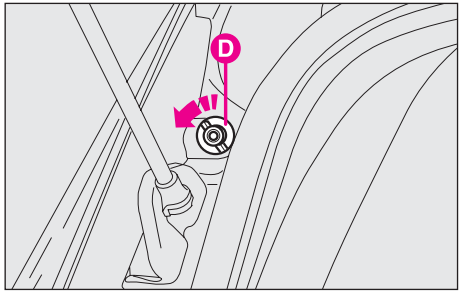

fig. 25

– Remove the bulbs by pushing them slightly and turning them anticlockwise as shown in the figure.

– After replacement, refit the bulb holder by turning it clockwise and check it is well fastened.

– Refit the unit and drive in wing nut **D** (outside) and the two inside fastening devices **C**.

– Reconnect the electrical connector **B** and refit finish **A**.

F0B0138b

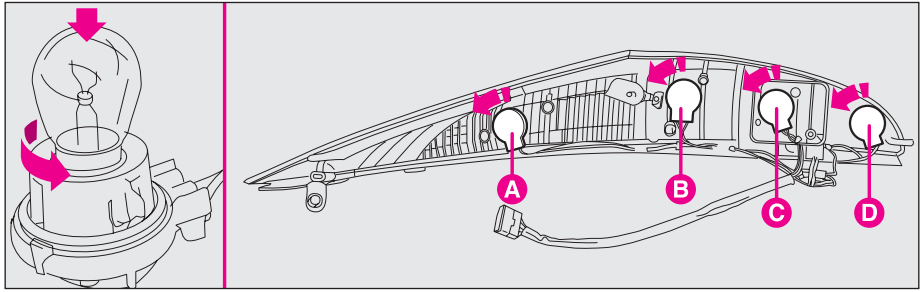

fig. 26

NUMBER PLATE LIGHTS fig. 27

The number plate lights are next to the tailgate handle (one for each side).

To replace a bulb:

– Remove the clipped transparent unit **A** as shown in the figure.

– Take off clipped bulb **B** and replace it.

– Refit the transparent unit.

F0B0144b

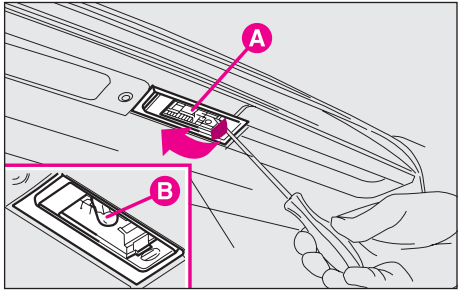

fig. 27

THIRD BRAKE LIGHTS fig. 28-29

To replace a bulb:

– Open the tailgate.

– Remove clipped cap **A**.

– Press tabs **B** and take off the bulb holder **C** from the unit.

– Identify the burnt bulb and replace it.

– Refit bulb holder **C**.

– Refit cap **A** and check it is well fastened.

F0B0143b

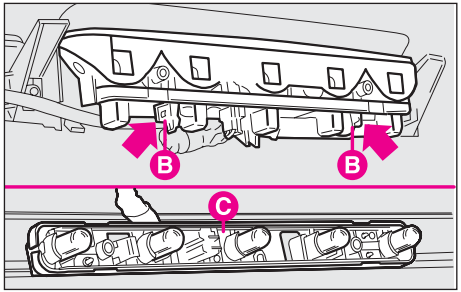

fig. 29

F0B0142b

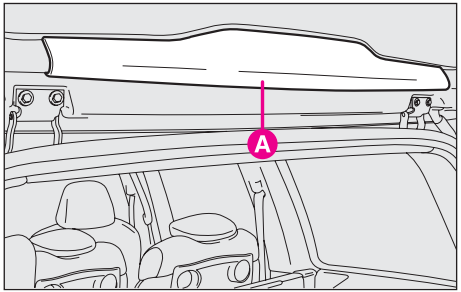

fig. 28

F0B0146b

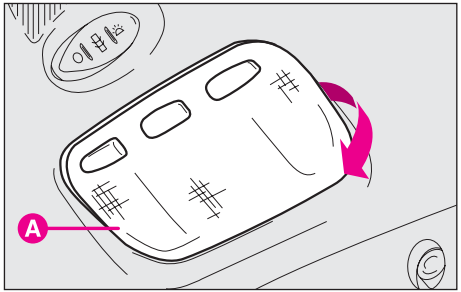

fig. 30

IF AN INTERIOR LIGHT BURNS OUT

FRONT-REAR-CENTRAL CEILING LIGHT fig. 30-31

To replace a bulb:

– Remove the clipped transparent unit **A** by levering as shown in the figure.

– Identify the burnt bulb and replace it.

F0B0147b

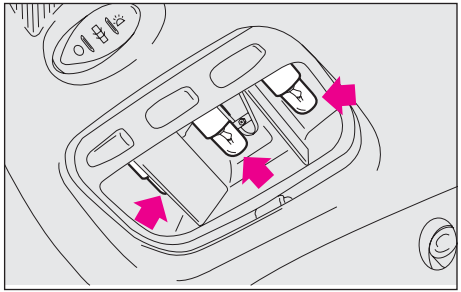

fig. 31

– Refit the transparent unit **A** and check it is well fastened.

The replacement procedure is the same for the three ceiling lights. The figure refers to the front one.

COURTESY CEILING LIGHT fig. 32

To replace a bulb:

– Open the mirror cover **A**.

– Remove the clipped transparent unit **B** by levering in the direction shown by the arrow.

– Take off clipped bulb **C** and replace it.

– Refit the transparent unit **B**.

GLOVE COMPARTMENT LIGHT fig. 33

To replace a bulb:

– Open the compartment and remove the transparent unit partially **A**.

– Extract it in the direction shown by the arrow (towards the compartment end) so not to damage the switch **B**.

– Take off clipped bulb **C** and replace it.

– Refit the transparent unit **A** without damaging the switch housing **B** until it clicks.

F0B0151b

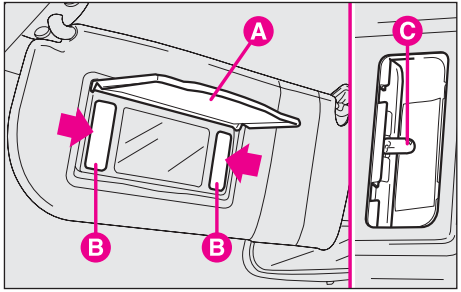

fig. 32

F0B0152b

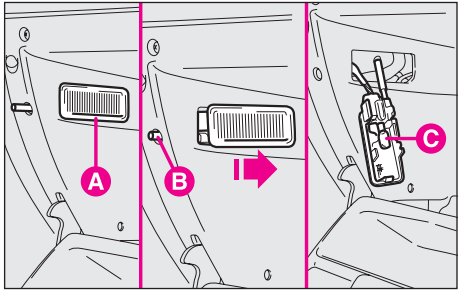

fig. 33

PUDDLE LIGHT fig. 34

To replace a bulb:

Remove the clipped transparent unit **A** by levering in the direction shown by the arrow.

Take off clipped bulb **B** and replace it.

Refit the transparent unit **A**.

BOOT LIGHT fig. 35

To replace a bulb:

Remove the clipped transparent unit **A** by levering in the direction shown by the arrow.

Take off clipped bulb **B** and replace it.

Refit the transparent unit **A**.

IF A FUSE BLOWS

GENERAL INSTRUCTIONS

The fuse is a protective device for the electric system. It comes into action (i.e. it cuts off) in the event of a failure or improper actions on the electric system.

If an electric device is not working, check whether the respective fuse is blown (i.e. the conductor is broken). If required, replace the blown fuse with another with the same amperage (same colour).

A - Undamaged fuse.

B - Fuse with broken filament.

F0B0145b

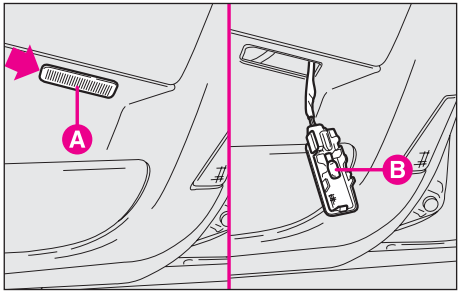

fig. 34

F0B0153b

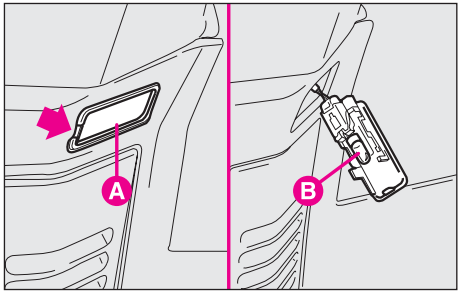

fig. 35

Remove the blown fuse with the tongs **C** provided.

If the fuse blows again, have the car inspected at a Fiat Dealership.

Never replace a broken fuse with anything other than a new fuse. Always use a fuse of the same colour.

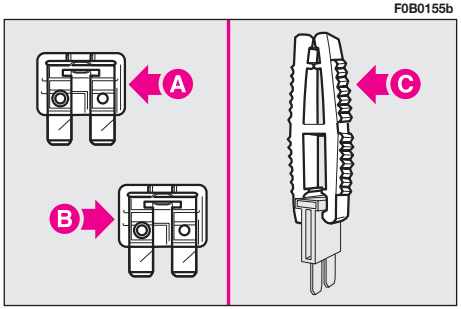

fig. 36

Never change a fuse with another amperage: FIRE RISK!

If a main fuse (MIDI-FUSE, MAXI-FUSE o MEGA-FUSE) blows do not repair it, but contact a Fiat Dealership.

Before changing a fuse check the ignition key has been removed and that all the other electric devices have been turned off/disabled.

FUSE LOCATION fig. 37-38-39

The fuses are contained in three fuseboxes placed respectively:

– in the glove compartment; to access it remove the protective cover **A**;

– in the scuttle on the floor in front of the passenger's seat, next to the battery; to access it remove the protective cover **B**;

– in the engine compartment; to access it remove the protective cover **C**.

F0B0148b

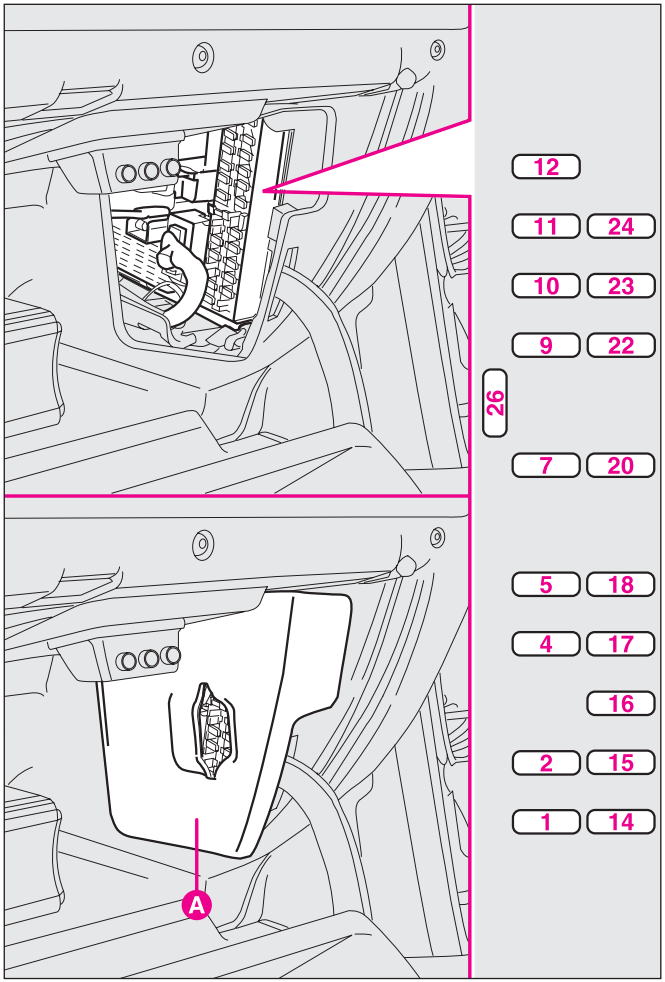

fig. 37

F0B0149b

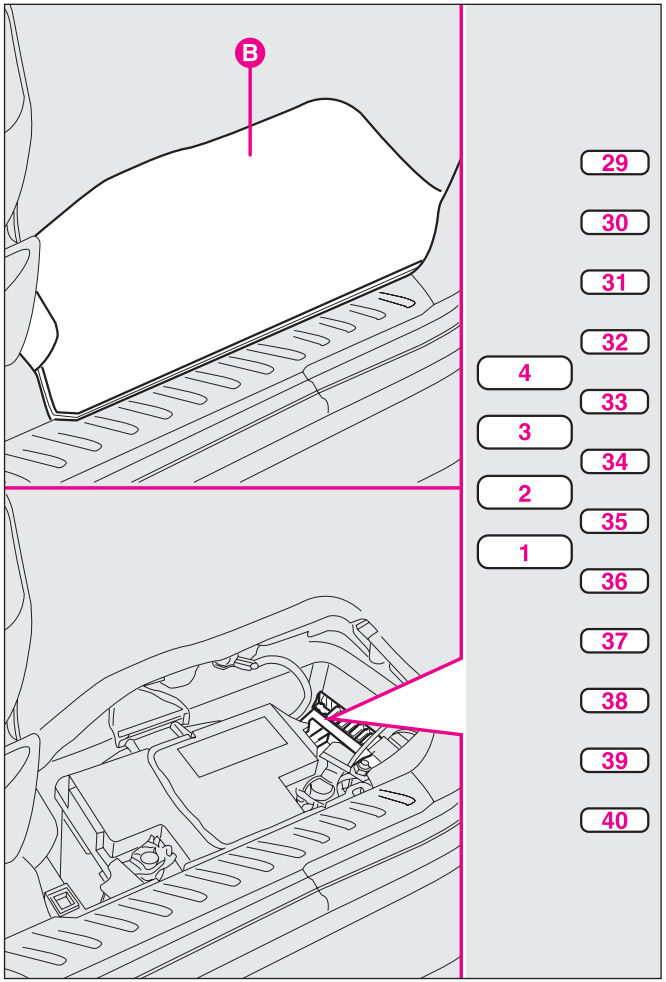

fig. 38

F0B0154b

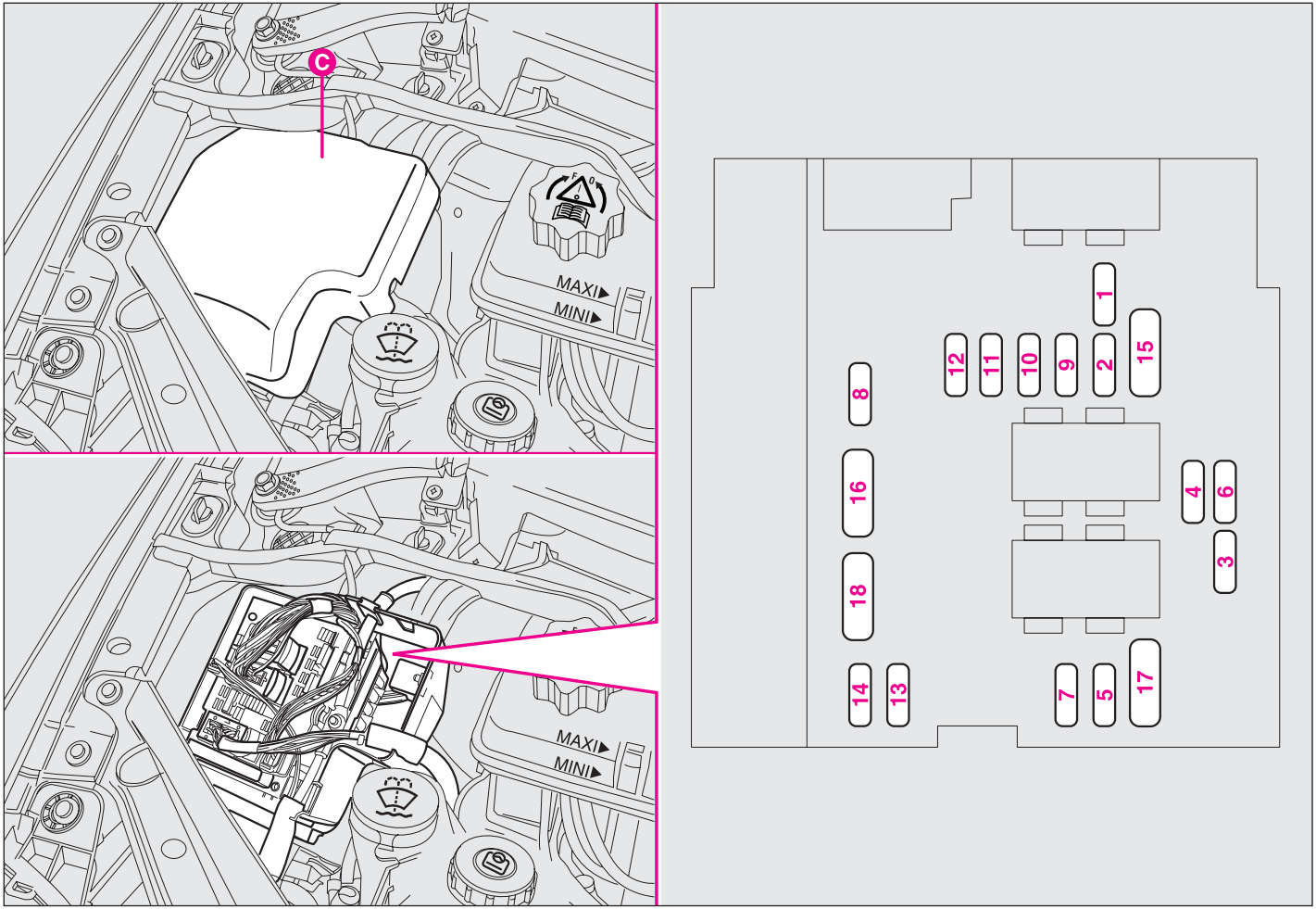

fig. 39

FUSEBOX IN THE GLOVE COMPARTMENT fig. 37

1	10A	Rear fog lights
2	15A	Rear heated window
4	15A	Main electronic control unit power supply
5	10A	Left brake light
7	20A	Spot light, cigar lighter, glove compartment light on passenger's side, automatic rear view mirror
9	30A	Front sunroof, front windscreen wipers
10	20A	Diagnosis socket
11	15A	Electronic alarm, infotelematic Connect system, sound system, multifunction display, steering column controls, particulate filter
12	10A	Right side light, number plate lights, climate system control lights, ceiling lights (first, second and third row)
14	30A	Door locking system, Super door lock
15	30A	Rear window wiper
16	5A	Air bag system power supply, main electronic control unit power supply
17	15A	Right brake light, third brake light, trailer brake lights
18	10A	Diagnosis socket power supply, brake and clutch pedal switch
20	10A	Sound system power supply for main electronic control unit
22	10A	Left side light; trailer side light
23	15A	Electronic alarm siren
24	15A	Parking sensor power supply for main electronic control unit
26	40A	Heated rear window

FUSEBOX NEXT TO THE BATTERY fig. 38

1	40A	Right electric sliding door
2	40A	Left electric sliding door
3	30A	Hi-fi amplifier
4	–	Free
29	–	Free
30	–	Free
31	–	Free
32	25A	Driver's seat with electric adjustment
33	25A	Passenger's seat with electric adjustment
34	20A	Third row sunroof
35	20A	Second row sunroof
36	10A	Passenger's heated seat
37	10A	Driver's heated seat
38	15A	Children safety electric device
39	20A	Third row 12V rear electric socket
40	20A	Driver's seat electric 12V socket

FUSEBOX IN THE ENGINE COMPARTMENT fig. 39

1	10A	Reverse light switch, Xenon lights, electric fan controls, engine coolant level, heated diesel filter, preheating spark plugs, speed control system, air debit gauge
2	15A	Fuel pump, exhaust gas recirculation and turbo-compressor control system
3	10A	ABS, ESP
4	10A	Keyed service power supply, for main electronic control unit
5	10A	Particulate filtering system
6	15A	Front fog lights
7	20A	Headlight washers
8	20A	Relay power supply for main electronic control unit, electric fan relay controls , diesel pressure adjusting solenoid valve and exhaust gas recirculation
9	15A	Left dipped beam headlight, headlight beam corrector
10	15A	Right dipped beam headlight
11	10A	Left main beam headlight
12	10A	Right main beam headlight
13	15A	Horn
14	10A	Windscreen wiper pump - rear window wiper
15	30A	Lambda sensor, injectors, spark plugs, canister solenoid valve, injection pump solenoid valve
17	30A	Windscreen wiper
18	40A	Additional fans

The following MAXI-FUSES are also contained in this fusebox:

MAXI-FUSE	50A	Electric fan (second speed)
MAXI-FUSE	50A	ABS, ESP
MAXI-FUSE	30A	ESP electric fan
MAXI-FUSE	60A	Main electronic control unit power supply 1
MAXI-FUSE	70A	Main electronic control unit power supply 2
MAXI-FUSE	30A	Electric fan (first speed)
MAXI-FUSE	40A	Fiat CODE system
MAXI-FUSE	50A	Climate control system additional fans

IF THE BATTERY IS FLAT

First of all, read the "Car maintenance" section for steps to be taken to avoid the battery running down and to ensure it has a long life.

IMPORTANT Battery recharging procedure is given as information only since this operation shall be only performed at a **Fiat Dealership**.

RECHARGING THE BATTERY

You are advised to recharge the battery slowly for a period of approximately 24 hours at a low amperage. Charging for too long could damage the battery.

Proceed as follows:

1) disconnect the terminal from the battery negative pole.

IMPORTANT If the vehicle is equipped with an alarm, switch it off with the remote control.

2) Connect the charger cables to the battery terminals.

3) Turn on the charger.

4) When you have finished, turn the charger off before disconnecting the battery.

5) Reconnect the cables to the battery terminals. Make sure the polarity is correct.

The liquid in the battery is poisonous and corrosive. Do not let it touch the skin or eyes. Recharging the battery should be done in a well-ventilated area away from naked flames or possible sources of sparks: explosion and fire risk.

Do not attempt to charge a frozen battery: it must firstly be thawed, otherwise it may burst. If freezing has occurred, the battery should be checked by skilled personnel to make sure that the internal elements are not damaged and that the body is not cracked, with the risk of leaking poisonous and corrosive acid.

JUMP STARTING

See "Jump starting" in this chapter.

JACKING THE CAR

WITH THE JACK

See “If a tyre is punctured”, in this chapter.

Please note:

– the jack requires no adjustments;

– the jack cannot be repaired. If it breaks it must be replaced with a new jack;

– no other tool, apart from the handle shown in this chapter, can be fitted to the jack.

An incorrectly positioned jack may cause the vehicle to fall. Do not use the jack to lift loads exceeding that indicated on the label attached to the jack itself.

The jack should only be used to change a wheel on the vehicle for which it was designed. It should not be put to other uses or employed to raise other models. Under no circumstances should it be used when carrying out repairs under the vehicle.

WITH A SHOP JACK

Front

Jack up the vehicle only by positioning the jack arm on the specific plate, as shown in **fig. 40**.

From the rear

The vehicle cannot be lifted from the rear.

F0B0139b

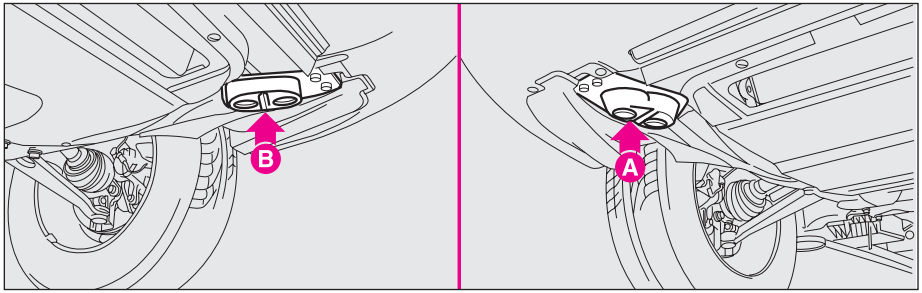

fig. 40

WITH AN ARM HOIST

Jack up the vehicle by arranging the ends of the arms in the areas shown in **fig. 41**:

A - front arm;

B - rear arm.

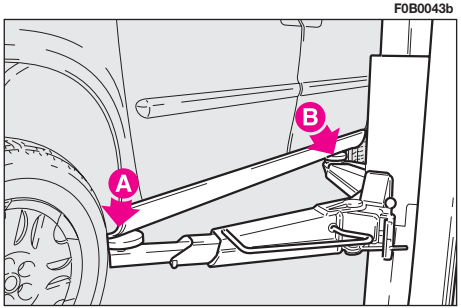

fig. 41

TOWING THE CAR

A tow hitch is provided with the car and is placed in the engine compartment.

To fasten the tow hitch:

– open the bonnet (see the instructions given in the "Bonnet" paragraph of "Getting to know your car" chapter);

– remove the tow hitch **A-fig. 42** from its supports **B**;

– remove cap **C** clipped on the front **fig. 43** or rear bumper **fig. 44**;

– fasten the hitch **A** on the threaded pin.

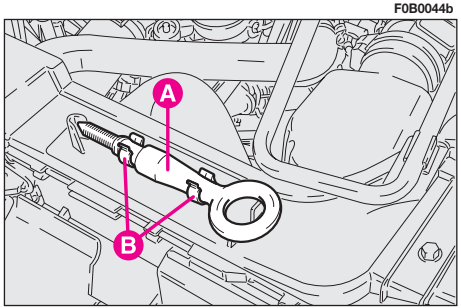

fig. 42

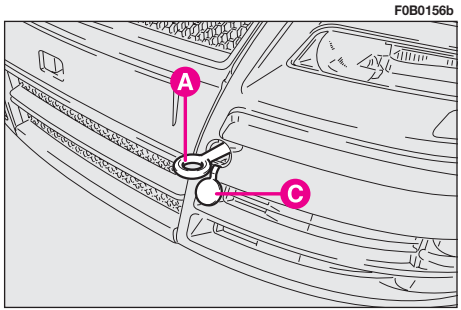

fig. 43

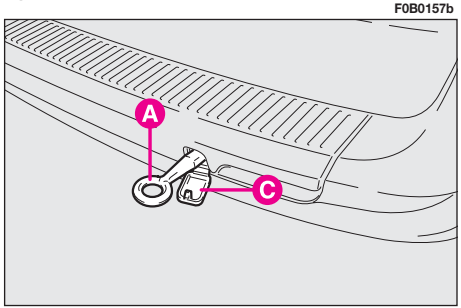

fig. 44

Before fastening the tow hitch clean the threaded housing accurately. Before starting to tow, make sure the tow hitch is well fastened on the threaded pin.

Before starting to tow, turn the ignition key to M and then to S. Do not remove the key. If the key is removed, the steering lock engages automatically which prevents the wheels being turned.

When towing the vehicle, you must comply with the specific traffic regulations regarding the tow hitch and how to tow on the road.

While the vehicle is being towed with the engine off, remember that the brake pedal and steering will require more effort as you no longer have the benefit of the power brakes and power steering. Do not use flexible cables to tow. Avoid jerking. Whilst towing, ensure that the coupling to the vehicle does not damage the surrounding components.

Do not start the engine when being towed.

IMPORTANT For versions with automatic gearbox, make sure the gear is in neutral position (**N**) and proceed as described for vehicles with mechanical gearbox. If the gear cannot be put in neutral position (**N**) do not tow the vehicle and contact a **Fiat Dealership**.

IF AN ACCIDENT OCCURS

– It is important to keep calm.

– If you are not directly involved in the accident, stop at least ten meters away from the accident.

– If you are on a motorway do not obstruct the emergency lane with your car.

– Turn off the engine and turn on the hazard lights.

– At night, illuminate the scene of the accident with your headlights.

– Act carefully, you must not risk being run over.

– Mark the accident by putting the red triangle at the regulatory distance from the car where it can be clearly seen.

– Call for rescue making the information you give as accurate as you can. One the motorway use the special column-mounted emergency phones.

– In pile-ups on the motorway, particularly when visibility is bad, there is a high risk of other vehicles running into those already stopped. Get out of the car immediately and take refuge behind the guard-rail.

– Remove the ignition keys from the vehicles involved.

– If you can smell petrol or other chemicals, do not smoke and make sure all cigarettes are extinguished.

– Use a fire extinguisher, blanket, sand or earth to put out fires no matter how small they are. Never use water.

– If the doors are blocked, do not attempt to smash the windscreen to get out of the car. It is made of layered glass and is very hard. Side and rear window are much more easily broken.

IF ANYONE IS INJURED

– Never leave the injured person alone. The obligation to provide assistance exists even for those not directly involved in the accident.

– Do not congregate around the injured person.

– Reassure the injured person that help is on its way and will arrive soon. Stay close by to calm him/her down in case of panic.

– Unfasten or cut seat belts holding injured parties.

– Do not give an injured person anything to drink.

– Do not move an injured person unless the following situations arise.

– Pull the injured person from the car only if it risks catching fire, it is sinking in water or is likely to fall over a cliff or similar. Do not pull his/her arms or legs, do not bend the head and, as far as possible, keep the body horizontal.

FIRST-AID KIT fig. 45

The first-aid kit must at least contain:

– sterile gauze, to cover and clean wounds;

– bandages of various sizes;

– medicated plasters of various sizes;

– a plaster tape;

– a pack of cotton wool;

– a bottle of disinfectant;

– a pack of tissues;

– a pair of round-nose scissors;

– pincers;

– two haemostatic loops.

It is a good idea to keep a fire extinguisher and blanket in the car in addition to the first-aid kit.

The first-aid kit and the fire extinguisher are included in the Lineaccessori Fiat range.

F0B0198b

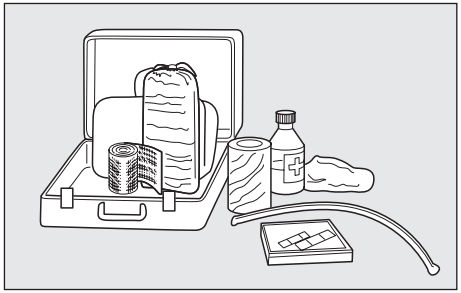

fig. 45

CAR MAINTENANCE

SCHEDULED SERVICING

Correct maintenance of the car is essential for ensuring it stays in tip-top condition for a long time to come.

This is why Fiat has programmed a number of service operations every 30,000 km.

Remember, however, that Scheduled Servicing is not enough. Even before 30,000 km are reached, and also in between service coupons, you should still check the level of the various liquids and tyre pressure regularly.

IMPORTANT The Manufacturer requires the Service Schedule coupons-related checks to be carried out. Failure to do so could result in the warranty being cancelled for those defects that can be attributed to such failure.

Scheduled Servicing is performed at a **Fiat Dealership** and there is a set time scale for such operations.

If it is seen that further replacements or repairs are necessary in addition to the work being carried out, these will only be done after the customer has his/her consent.

IMPORTANT You are recommended to get in touch with a **Fiat Dealership** immediately if any small running problems crop up without waiting for the next coupon.

If the vehicle is frequently used to tow trailers, carry out the scheduled service operations more frequently than shown.

SERVICE SCHEDULE

Thousands of kilometres	30	60	90	120	150	180
Check tyre conditions/wear and adjust pressure if required	●	●	●	●	●	●
Check light system operation (headlights, direction indicators, hazard lights, boot lights, passenger compartment lights, glovebox lights, warning lights, horn)	●	●	●	●	●	●
Check windscreen wiper/washer operation, adjust nozzles if required	●	●	●	●	●	●
Check windscreen/rear window blade position/wear	●	●	●	●	●	●
Check front disk brake pad conditions and wear and pad wear indicator operation	●	●	●	●	●	●
Check rear disk brake pad conditions and wear		●		●		●
Sight inspect the conditions of: body external parts, underbody protection, pipes and hoses (exhaust - fuel - brakes), rubber parts (boots, sleeves, bushes, etc.)	●	●	●	●	●	●
Check cleanness of locks, bonnet and boot and lever cleanness and lubrication	●	●	●	●	●	●
Check and top up, if required, fluid levels (brakes/hydraulic clutch, windscreen/rear window washer, battery, engine coolant, etc.)	●	●	●	●	●	●
Check and adjust handbrake lever stroke, if required	●		●		●	
Sight inspect accessory drive belt conditions	●	●	●	●	●	●
Check accessory drive belt tension (for engines without automatic belt tightener)		●		●		●
Sight inspect timing belt conditions				●		
Check exhaust emissions/smoke	●	●	●	●	●	●

Thousand of kilometres	30	60	90	120	150	180
Check engine control system operation (through diagnostic socket)	●	●	●	●	●	●
Top up special particulate filter fluid (2.0 JTD 136 HP and 2.2 JTD version)				●		
Replace particulate filter (2.0 JTD 136 HP and 2.2 JTD version)						●
Replace timing belt*						
Replace diesel fuel filter		●		●		●
Bleed diesel fuel filter	●	●	●	●	●	●
Change air cleaner cartridge		●		●		●
Change engine oil and oil filter	●	●	●	●	●	●
Change brake fluid (or every 2 years)		●		●		●
Change pollen filter (or every 2 years)	●	●	●	●	●	●

(*) The timing belt shall be replaced every 180.000 km or 10 years..

ROUTINE MAINTENANCE

Every 1,000 km or before long journeys, check and top up if required:

– engine coolant fluid level;

– brake fluid level;

– windscreen washer fluid level;

– yre pressure and conditions;

– light system operation (headlights, direction indicators, hazard lights, etc.);

– windscreen wiper/washer operation and windscreen/rear window blade position/wear;

Every 3,000 km check and top up if required: engine oil level.

You are recommended to use **FL Selenia**, products, designed and produced specifically for Fiat vehicles (see table "Capacities" in section "Technical specifications").

HEAVY-DUTY

Should prevailing use of the vehicle be under one of the following specially heavy conditions:

– trailer or caravan towing;

– dusty roads;

– short distances (less than 7-8 km) repeated and with external temperatures below zero;

– frequently idling engines or long distance low speed driving (e.g. door-to-door deliveries) or in case of a long term inactivity;

– driving in the city;

carry out the following checks more frequently than required in the Service Schedule:

– check front disk brake pad conditions and wear;

– check cleanness of locks, bonnet and boot and lever cleanness and lubrication;

– sight inspect the conditions of: engine, gearbox, transmission, pipes and hoses (exhaust - fuel - brakes), rubber parts (boots, sleeves, bushes, etc.);

– check battery charge and fluid level (electrolyte);

– visual check on various drive belt conditions;

– check and replace pollen filter, if required;

– check and replace air cleaner, if required.

CHECKING FLUID LEVELS

IMPORTANT Open the engine compartment according to the procedure described in the "Bonnet" paragraph in the chapter "Getting to know your vehicle".

Important. If the bonnet support rod is not positioned correctly the bonnet may fall violently.

Do not smoke while working in the engine compartment: the presence of flammable gas and vapour could cause a fire.

Be careful not to mix up the various types of fluids when you are topping up: they are all mutually incompatible and could damage the vehicle.

Scarves, ties and loose clothing may be caught in the moving parts.

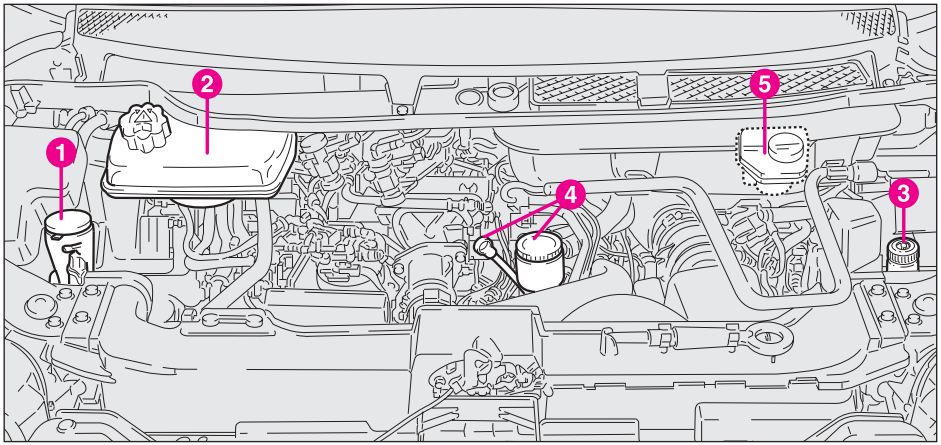

fig. 1 - Versions 2.0 JTD 120 HP - 136 HP

1. Windscreen/rear window and headlight (where fitted) washer fluid - **2.** Engine coolant - **3.** Power steering fluid - **4.** Engine oil - **5.** Brake and hydraulic clutch fluid.

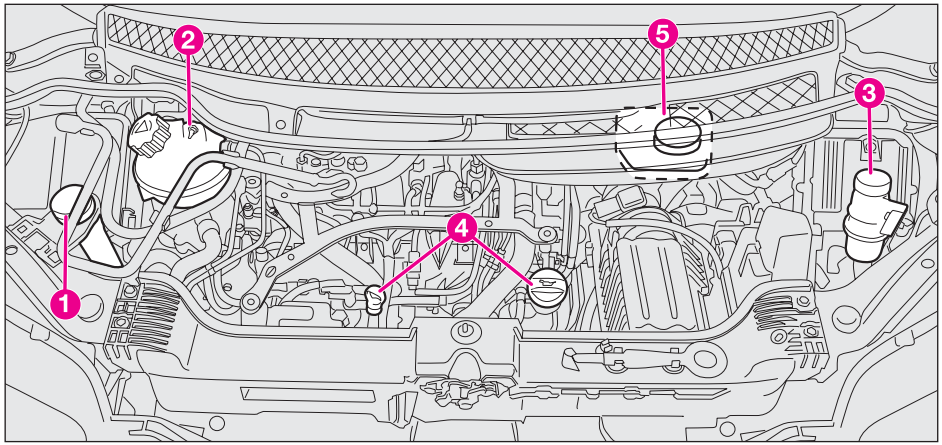

fig. 2 - Versions 2.2 JTD

1. Windscreen/rear window and headlight (where fitted) washer fluid - **2.** Engine coolant - **3.** Power steering fluid - **4.** Engine oil - **5.** Brake and hydraulic clutch fluid.

ENGINE OIL fig. 3-4

Check engine oil with the car on level ground and while the engine is still warm (approximately five minutes after stopping the engine).

Extract dipstick **A** and clean it, then fully insert it again and check that the level is between the **MIN** and **MAX** reference lines on the dipstick.

The space between the **MIN** and the **MAX** reference corresponds to approximately one litre of oil.

If the engine is hot, be very careful when you put your hands under the bonnet as you risk burning yourself. Remember that when the engine is hot, the fan can start up and cause injuries.

Do not add oil with different specifications from the oil already in the engine.

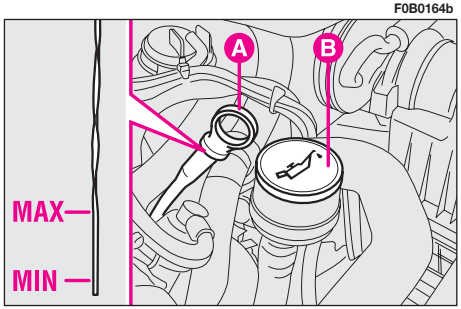

fig. 3

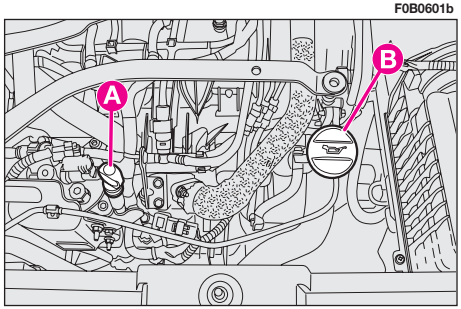

fig. 4 - Versions 2.2 JTD

If the oil level is near or even below the **MIN** line, pour in oil through the filler hole **B**, until it reaches the **MAX** level.

IMPORTANT If the oil results to be over the **MAX** line, go to a **Fiat Dealership** and have the correct oil level restored.

IMPORTANT After topping up or changing the oil, let the engine turn for a few seconds and wait a few minutes after stopping it before you check the level.

The oil level must never exceed the **MAX** line.

Engine oil consumption

The maximum oil consumption is approximately 400 grams every 1,000 km.

When the car is new, the engine needs to run in, therefore the engine oil consumption can only be considered stabilised after the first 5,000 - 6,000 km.

IMPORTANT Oil consumption depends on the driving style and the conditions of use.

Used engine oil and replaced oil filters contain substances which can harm the environment. We recommend you have the vehicle seen to at a Fiat Dealership for the oil and filter change. It is suitably equipped for disposing of used oil and filters in an environmentally-friendly way that complies with the law.

ENGINE COOLANT fig. 5-6

Do not remove the reservoir cap when the engine is hot: you risk scalding yourself.

Check coolant level when the engine is cold. The level should be included between the **MIN** and **MAX** reference line on the reservoir.

If the level is low, loosen the header tank cap **A** and slowly pour a mixture of the fluid specified in the "Lubricant and fluid specifications" table in section "Technical Specifications", through the filler neck until nearing the **MAX** mark.

The antifreeze mixture contained in the cooling circuit guarantees protection down to –40°C.

F0B0444b

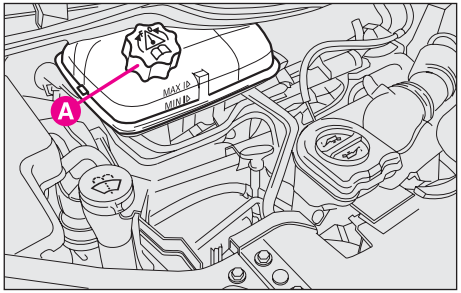

fig. 5 - Versions 2.0 JTD 120 HP - 136 HP

F0B0602b

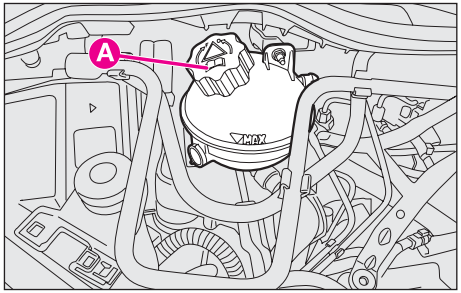

fig. 6 - Versions 2.2 JTD

The cooling system is pressurised. If necessary, replace the cap only with another genuine one, otherwise system efficiency could be compromised.

Top up only with the same fluid contained in the cooling circuit. PARAFLU UP (red) cannot be mixed with PARAFLU 11 (blue) or with other fluids. Should this take place, do not start the engine and contact Fiat Dealership.

WINDSCREEN - REAR WINDOW - HEADLIGHT WASHER FLUID (where fitted) fig. 7-8

Remove cap **A** and check the fluid level.

If it is necessary to top up the fluid, pour in a mixture of water and **TUTELA PROFESSIONAL SC 35** fluid in the following proportions:

– 30% of **TUTELA PROFESSIONAL SC 35** and 70% of water in summer;

– 50% of **TUTELA PROFESSIONAL SC 35** and 50% of water in winter;

– use undiluted **TUTELA PROFESSIONAL SC 35** for temperatures below –20°C.

F0B0445b

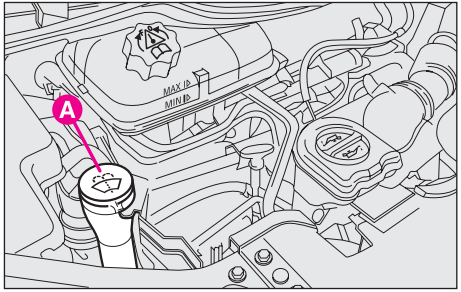

fig. 7 - Versions 2.0 JTD 120 HP - 136 HP

F0B0603b

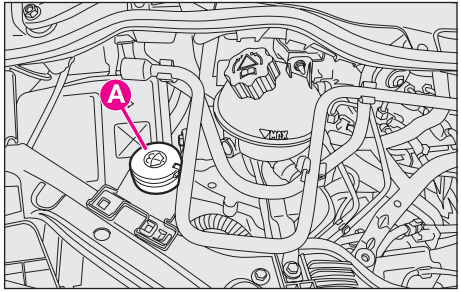

fig. 8 - Versions 2.2 JTD

Do not travel with the windscreen washer reservoir empty. The windscreen washer is fundamental for improving visibility.

Certain commercial additives for windscreen washers are inflammable. The engine compartment contains hot components which may set it on fire.

Do not start the windscreen washer when the fluid is finished to prevent damaging the pump engine.

POWER STEERING FLUID
fig. 9

The oil level, with the vehicle on level ground and the engine cold should correspond to the **MAX** reference line.

This check should be performed when the engine is cold and with the car on level ground.

When topping up (where necessary) make sure that the oil has the same specifications as the oil in the system. Apply the following procedure:

– when the engine has been started, turn the steering wheel repeatedly on the left and on the right; then bring it back to its central position;

– remove cap **A** and wait for the oil level in the reservoir to stabilize;

– top up to reach the **MAX** reference line and put the cap back to its place.

F0B0443b

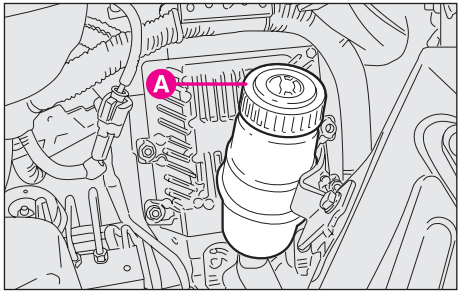

fig. 9 - Versions 2.0 JTD 120 HP - 136 HP
Versions 2.2 JTD 170 HP

Do not let the power steering fluid come into contact with hot engine parts. It catches fire very easily.

Oil consumption is extremely low. If the oil level needs topping up again in a short period of time, have the system checked for leakage at a Fiat Dealership.

BRAKE AND HYDRAULIC CLUTCH FLUID fig. 10

Remove cap **A** and check that the fluid in the reservoir is at the maximum level.

Make sure that the highly corrosive brake fluid does not trip onto the paintwork. If it does, wash it off immediately with water.

The brake fluid is poisonous and very corrosive. In the event of accidental contact, immediately wash the affected parts with water and mild soap and rinse under running water. Immediately call a doctor if the fluid is swallowed.

The symbol ⊚ on the container indicates synthetic brake fluid distinguishing it from mineral fluid. Using mineral type fluid would damage the special rubber braking system gaskets beyond repair.

IMPORTANT Brake fluid is hygroscopic (meaning it absorbs humidity). This is why the fluid should be changed more frequently than shown in the Service Schedule if the vehicle is mainly driven in areas with a high percentage of humidity in the air.

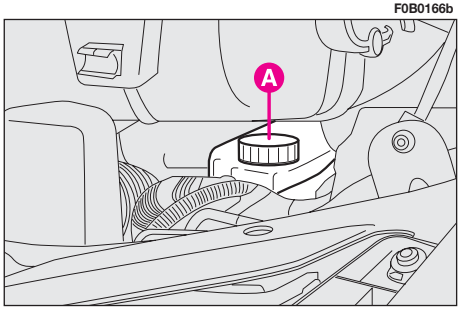

fig. 10

AIR CLEANER

The air cleaner is connected to temperature and air flow sensors which send the electrical signals needed for the correct system injection and starting to the control unit.

For this reason and to limit consumption and exhaust emissions the air cleaner must always be efficient.

The filter replacement procedure is just for information. Go to a Fiat Dealership to carry it out in the correct way.

If the following filter replacement operations are not carried out in the correct way and without taking the necessary precautions, the vehicle driving safety may be compromised.

If the car is often used in dusty roads, you should change the filter element more frequently than shown in the Service Schedule.

The cleaner can be damaged if it is cleaned and consequently the engine can be damaged.

REPLACEMENT fig. 11

Make the following operations:

– remove the jack lever;

– drive off side screws **A** and remove cap **B**;

– extract the inside filter and replace it.

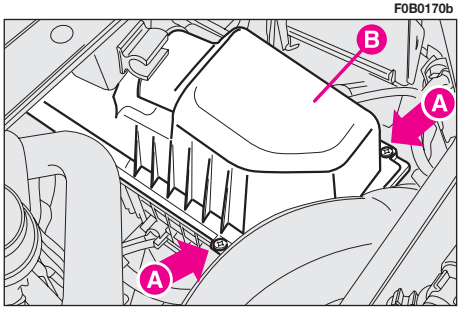

fig. 11

POLLEN FILTER

This filter has a mechanical/electrostatic air filtering action, provided that windows and doors are closed.

Have the pollen filter checked at a **Fiat Dealership**, preferably at the beginning of spring/summer.

If the car is often used in dusty or extremely polluted environments, you should change the filter element more frequently than shown in the Service Schedule.

IMPORTANT If the pollen filter is not replaced the climate control system efficiency may be reduced.

Have the filter replaced at a Fiat Dealership.

DIESEL FUEL FILTER

DRAINING THE CONDENSE

fig. 12

The presence of water in the fuel feed circuit can severely damage the injection system and make the engine misfire. For this reason, drain the condense every 5,000 km.

Contact a **Fiat Dealership** to have this operation carried out.

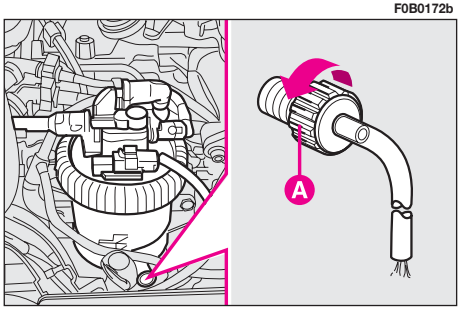

fig. 12

The following procedure is only for information:

– loosen knob **A** in the filter lower part;

– tighten **A** up again when diesel without water starts flowing out.

Dispose of the water and diesel fuel drained from the filter correctly. You should have the operation carried out by a Fiat Dealership which is properly equipped for disposing of it out in a way that respects nature and the current legislation.

BATTERY

The battery, placed in a scuttle on the floor in front of the passenger's seat, is of the "Limited Maintenance" type. Under normal conditions it will not need to be topped up with distilled water.

REPLACING THE BATTERY

If required, replace the battery with a genuine spare part having the same specifications. If a battery with different specifications is fitted, the service intervals given in the Service Schedule in this section will no longer be valid. Refer to the instructions provide by the battery manufacturer.

Batteries contain substances that are very harmful for the environment. You are advised to have the battery changed at a Fiat Dealership, which is properly equipped for disposing of used batteries respecting nature and the law.

IMPORTANT Make sure the battery is correctly secured from a mechanical point view when removing and refitting it.

CHECKING THE BATTERY FLUID LEVEL (electrolyte)

Check and top up the electrolyte level, if needed, in accordance with the Service Schedule contained in this chapter. Have this operation carried out at a **Fiat Dealership**.

The liquid in the battery is poisonous and corrosive. Avoid contact with eyes and skin. Do not bring naked flames or possible sources of sparks near to the battery: risk of fire and explosion.

When working on the battery or near it, always wear the proper goggles.

If the car is left inactive for long periods at cold, remove the battery and store it in a warm place to prevent freezing.

Incorrect fitting of electrical and electronic accessories can seriously damage the vehicle. If after buying the car, you want to install other accessories, contact a Fiat Dealership whose qualified personnel, in addition to suggesting the most suitable devices, will evaluate whether the car's electric system should be integrated with a more powerful battery.

Running the battery with low fluid level can damage the battery beyond repair and could also cause its explosion.

Do not attempt to recharge a frozen battery. Thaw it first otherwise it could explode. If the battery froze, make sure the internal elements are not broken (short-circuit risk) and that the casing is not cracked (risk of spilling the poisonous and corrosive fluid).

USEFUL ADVICE FOR LENGTHENING THE LIFE OF YOUR BATTERY

To preserve the battery charge and its functions, observe the following instructions:

– when you park the car, ensure the doors, tailgate and bonnet are closed properly. The ceiling lights must be off;

– the battery cables must be well fastened;

– do not keep accessories (e.g.: sound system, hazard lights, etc.) switched on for a long time when the engine is not running;

– before performing any operation on the electrical system, disconnect the battery negative cable.

IMPORTANT A battery which is kept at a charge of less than 50% for any length of time will be damaged by sulphation leading to a reduction in cranking power and a higher risk of the battery electrolyte freezing (this may even occur at –10°C). If the car is inactive for a long period of time, refer to "Storing the car", in "Getting to know your car" section.

If after buying the car, you want to install electric accessories which require permanent electric supply, contact a **Fiat Dealership**, whose qualified personnel, in addition to suggesting the most suitable devices belonging to the Lineaccessori Fiat, will evaluate the overall electric absorption, checking whether the vehicle's electric system is capable of withstanding the load required, or whether it should be integrated with a more powerful battery.

These devices will, in fact, run off the battery even when the key is not inserted (car parked) and can deploy the battery.

The total intake of these systems (factory and after-market) must be less than a 0.6 mA x Ah (of the battery), as shown in the following table:

Battery:	Maximum admitted stand-by intake:
50 Ah	30 mA
60 Ah	36 mA
70 Ah	42 mA

Furthermore, remember that high intake electric devices (such as baby bottle warmers, vacuum cleaners, cellular phones, mini-fridges, etc.) powered when the engine is off can deploy the battery.

IMPORTANT If you need to fit additional systems in the car, remember that improper wiring connections, in particular if they affect safety devices, are dangerous.

ELECTRONIC CONTROL UNITS

When the car is being used normally, special measures are not necessary.

The following instructions must be followed very carefully, however, if you work on the electrical system or in cases where emergency starting is necessary:

– never disconnect the battery from the electrical system while the engine is running.

– disconnect the battery from the electrical system if you are recharging it.

– never perform emergency start-ups with a battery charger. Always use an auxiliary battery.

– be particularly careful when connecting the battery to the electrical system. Make sure that the polarity is correct and that the connection is efficient.

– before connecting/disconnecting the electronic unit terminals make sure the ignition key.

– do not check polarity through sparking.

– disconnect the electronic units if you are electrically welding the car body. Remove the units if temperatures exceed 80°C.

Modifications or repairs to the electrical system carried out incorrectly and without bearing the features of the system in mind can cause malfunctions with the risk of fire.

WHEELS AND TYRES

TYRE PRESSURE

Check the pressure of each tyre, including the spare, every two weeks and before long journeys.

The pressure should be checked with the tyre rested and cold.

It is normal for the pressure to rise when you are driving. If you have to check or restore the pressure when the tyres are warm, remember that the pressure value must be 0.3 bar above the specified value.

See “Wheels” in “Technical specifications” chapter for the correct tyre inflation pressure.

Tyre pressure must be correct to ensure good road holding.

Wrong pressure causes uneven wear of the tyres **fig. 13**:

A - Correct pressure: tyre wears evenly.

B - Under inflated tyre: shoulder tread wear.

C - Over-inflated tyre: centre tread wear.

If the pressure is too low the tyre overheats and this can cause it serious damage.

Tyres must be replaced when the tread wears down to 1.6 mm. In any case, comply with the laws in the country where the car is being driven.

F0B0178b

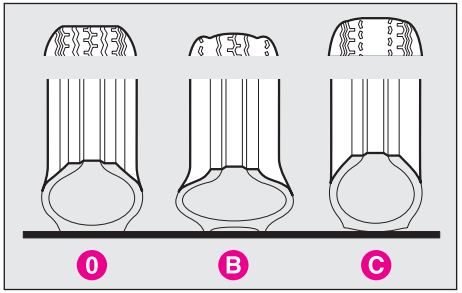

fig. 13

IMPORTANT

As far as possible avoid sharp braking and screech starts.

Be careful not to hit the kerb, potholes or other obstacles hard. Driving for long stretches over bumpy roads can damage the tyres.

Periodically check that the tyres have no cuts in the sidewall, abnormal swelling or irregular tyre wear. If any of these occur, have the car seen to at a **Fiat Dealership**.

Avoid overloading your car: this can seriously damage wheels and tyres.

If you get a flat tyre, stop immediately and change it so as not to damage the tyre, the wheel, the suspension and the steering.

Tyres age even if they are not used very much. Cracking of the tread rubber and the sidewalls are a sign of this ageing. In any case, if the tyres have been fitted for more than six years they should be examined by an expert who can judge whether they are still fit for use. Remember to check the spare tyre particularly carefully too.

If a replacement is necessary, always use new tyres and avoid using ones the origin of which you are not certain about.

The vehicle fits Tubeless tyres. Under no circumstances use an inner tube with these tyres.

If you replace a tyre it is a good idea to change the inflation valve, too.

To ensure the front and rear tyres all wear evenly, you are advised to change the tyres every 10-15 thousand kilometres keeping them on the same side of the car so as not to reverse the direction of rotation.

Do not change the tyres over in criss-cross fashion by moving a tyre from the left hand side of the car to the right and vice versa.

RUBBER TUBING

Follow the Service Schedule to the letter as concerns braking, power steering and fuel line rubber tubing. Ozone, high temperatures and long absence of fluid in the system can in fact cause the hardening and cracking of the pipes with possible loss of fluid. A careful check is therefore essential.

WINDSCREEN/ REAR WINDOW WIPERS

BLADES

Periodically clean the rubber part with suitable products. We recommend **TUTELA PROFESSIONAL SC 35**.

Change the blades if the rubber edge is warped or worn out. You should in any case change them approximately once a year.

Travelling with worn wiper blades is dangerous because it reduces visibility in bad weather.

Some simple steps can reduce potential damage to the blades:

– if the temperature falls to below zero, make sure the rubber blade is not frozen to the windscreen. If necessary, free it with a de-icing compound;

– remove any snow that has settled on the glass: besides saving the blades you will avoid straining the electric windscreen wiper motor and causing it to overheat;

– do not operate the windscreen or rear window wipers on dry glass.

Changing the windscreen wiper blade fig. 14-15

Proceed as follows:

– with the ignition key at **S** or removed, turn the right-hand stalk down (impulse) within 60 seconds, so the windscreen wipers **A** will stop in vertical position;

– remove nozzle **B** pressure fitted in the blade;

– lift the windscreen wiper arm **C**, keep it in that position and position the blade to make it form a 90° angle with the arm itself;

– press the retainer tab **D** and, at the same time, push the blade downwards until the arm **C** is released from the blade;

– refit a new blade, inserting it on the arm and pushing it upwards, until tab **D** clicks;

– make sure the blade is fastened.

Keep the windscreen arm lifted during the blade replacement to avoid damaging the windscreen. After changing the blade, guide the arm to its correct position on the windscreen.

F0B0175b

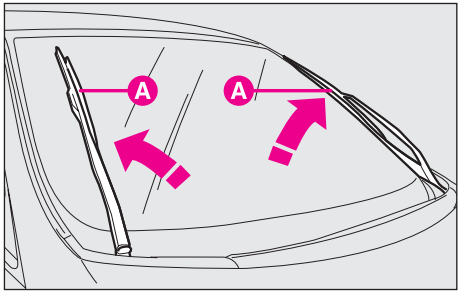

fig. 14

F0B0176b

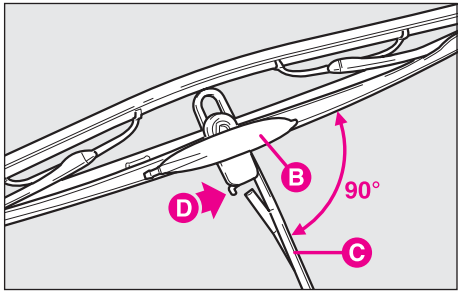

fig. 15

Changing the rear window wiper blade fig. 16

Proceed as follows:

– lift the rear window wiper arm **A** off the glass and position the blade so as to form a right angle with the arm;

– remove the pressure fitted blade **B** following the arrow direction;

– fit the new blade in the opposite direction and make sure it is properly locked into place.

F0B0177b

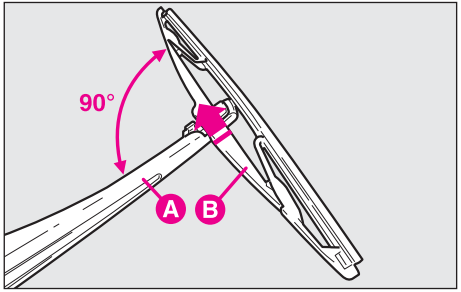

fig. 16

SPRAY NOZZLES

If there is no jet of liquid, first make sure that there is liquid in the reservoir (see "Checking fluid levels" in this chapter).

Then make sure that the holes in the nozzles are not clogged up. Use a pin for this if necessary.

HEADLIGHT WASHERS

(where fitted) fig. 17

Regularly check that the nozzles are intact and clean.

The headlight washers are automatically switched on when the windscreen washer is operated and the headlights are on.

F0B0181b

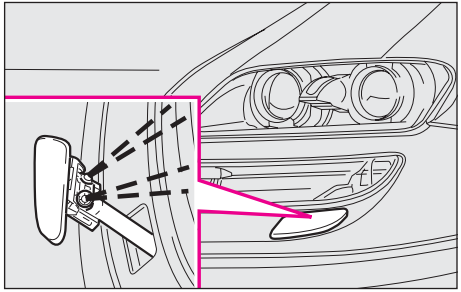

fig. 17

BODYWORK

PROTECTING THE CAR FROM ATMOSPHERIC AGENTS

The main causes of rust are:

– atmospheric pollution;

– salt and humidity in the atmosphere (coastal or very hot and humid areas);

– environmental conditions that specific to the season.

In addition, the abrasiveness of dust in the atmosphere and sand carried by the wind as well as mud and stones kicked up by other cars must not be underestimated.

For your Ulysse, Fiat has used leading-edge technological solutions to effectively protect the body from rust.

These are the most important:

– painting systems and products that make the vehicle particularly resistant to rust and scratching;

– the use of zinc-plated sheet steel which is highly resistant to rust;

– the spraying of the underbody, engine compartment, inside the wheel-arches and other parts with wax-based products with a high protective capacity;

– spraying plastic-coating materials to protect the most exposed points: under the door, inside the wings, the edges, etc.;

– the use of "open" box sections to prevent condensation and water from building up and rusting the inside of the parts.

BODY AND UNDERBODY WARRANTY

Your Ulysse is covered by warranty against any original structural or body part being perforated by rust. Refer to the Warranty Booklet for the general terms.

TIPS FOR KEEPING THE BODY IN GOOD CONDITIONS

Paintwork

The paintwork is not only to make your car look attractive but also to protect the steel.

If the paint is scuffed or scratched deeply you are therefore advised to touch up as necessary to prevent rust from forming.

Only use genuine products when touching up the paintwork (see the "Technical specifications" chapter).

Ordinary maintenance of the paintwork means washing it. The frequency you should do this depends on the conditions and the environment the vehicle is driven in. For example: areas with high level of air pollution, roads sprinkled with road saltwash, parking under trees which drop resin. In these cases, wash your vehicle more frequently.

Detergents pollute water. For this reason, the vehicle must be washed in an area equipped for the collection and purification of the liquids used while washing.

To wash the vehicle properly:

1) wash the body using a low pressure jet of water;

2) wipe a sponge with a slightly soapy solution over the bodywork, frequently rinsing the sponge;

3) rinse well with water and dry with a jet of air or a chamois leather.

When drying the vehicle, be careful to get at those parts which are not so easily seen e.g. the door frames, bonnet and around the headlights where water can most readily collect. You should leave the vehicle out in the open so that any water remaining can evaporate more easily.

Do not wash the car after it has been parked in the sun or while the bonnet is hot: it could take the shine off the pain.

Outside plastic parts must be cleaned following the usual car washing procedure.

IMPORTANT If you wish having the car washed at an automatic washing station remove the antenna from the roof to prevent damaging it.

Where possible avoid parking the vehicle under trees; the resinous substances that certain species of tree shed dull the paintwork and increase the possibility of rust forming.

IMPORTANT Bird droppings must be washed off immediately and with great care as their acid is particularly aggressive.

Windows

Use specific window cleaners to clean the windows. Use very clean cloths to avoid scratching the glass or damaging the transparency.

IMPORTANT To prevent damage to the electric heater element, wipe the inside of the heated rear window gently in the same direction as the elements.

Engine compartment

At the end of each winter season, carefully clean the engine compartment. Have this done at a garage.

Detergents pollute water. The vehicle must therefore be washed in an area equipped for the collection and purification of the liquids used while washing.

IMPORTANT The engine compartment should be washed while the engine is cold and with the ignition key at **S**. After washing, make sure that the various protections (e.g. rubber boots and various guards) have not been removed or damaged.

INTERIORS

From time to time check that water has not collected under the mats (from dripping shoes, umbrellas, etc.) which could cause the steel to rust.

Never use flammable products (petroleum ether or petrol) to clean the inside of the vehicle. Electrostatic charges generated by rubbing while cleaning could cause fires.

CLEANING SEATS AND FABRICS

Remove dust with a soft brush and vacuum cleaner.

Brush the seats with a damp sponge with water and a neutral soap.

CLEANING LEATHER SEATS

Remove the dry dirt with a chamois leather or very slightly moist cloth without exerting too much pressure.

Remove liquid or grease stains with a dry absorbent cloth without rubbing. Then wipe with a chamois leather or soft cloth moistened with water and neutral soap.

IMPORTANT Never use alcohol or alcohol-based products.

STEERING WHEEL/GEAR LEVER KNOB WITH GENUINE LEATHER COVERING

These components shall only be cleaned with water and neutral soap. Never use spirit or alcohol-based products.

Before using special products for cleaning interiors, read carefully label instructions and indications to make sure they are free from spirit and/or alcohol-based substances.

If when cleaning the windscreen with special glass products, some drops fall on the leather covering of the steering wheel/gear lever knob remove them immediately and then clean with water and neutral soap.

IMPORTANT Take the utmost care when engaging the steering lock to prevent scratching the leather covering.

PLASTIC PARTS INSIDE THE CAR

Use special products designed not to alter the appearance of the components.

IMPORTANT Do not use alcohol or petrol to clean the instrument panel.

Do not keep aerosol cans in the vehicle. There is the risk they might explode. Aerosol cans must never be exposed to a temperature above 50°C; when the weather starts to get hot the temperature inside the vehicle might go well beyond that figure.

TECHNICAL SPECIFICATIONS

F0B0456b

VEHICLE IDENTIFICATION DATA

You are recommended to write down the vehicle identification data. They are printed on the related plates. Their position is shown in **fig. 1**:

1 - model plate;

2 - chassis marking;

3 - paint identification plate;

4 - engine marking.

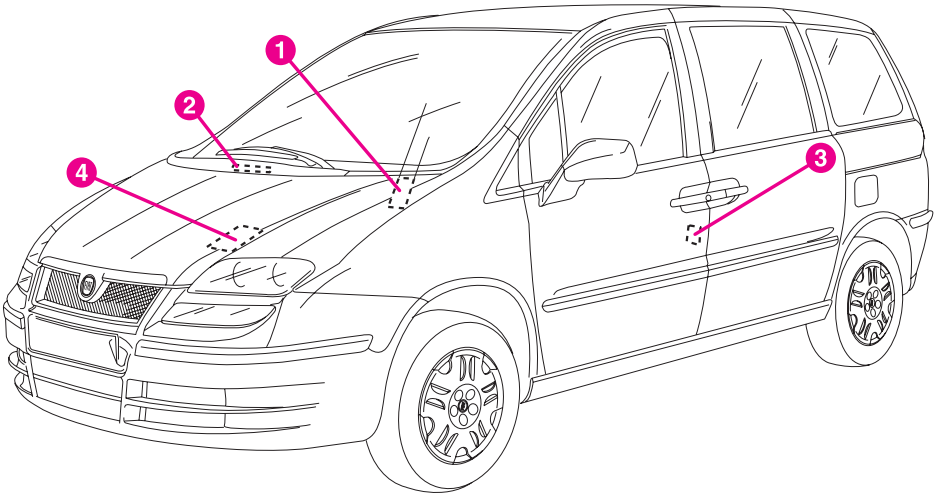

fig. 1

MODEL PLATE fig. 2

The plate **1** is applied to the front right-hand door frames. The following identification data is provided:

A - Manufacturer's name;

B - National homologation number;

C - Vehicle type code and chassis number;

D - Maximum vehicle weight fully loaded;

E - Maximum vehicle weight fully loaded with trailer;

F - Maximum vehicle weight on front axle;

G - Maximum vehicle weight on rear axle;

H - Vehicle type identification code;

I - Smoke opacity index;

J - Serial number.

F0B0183b

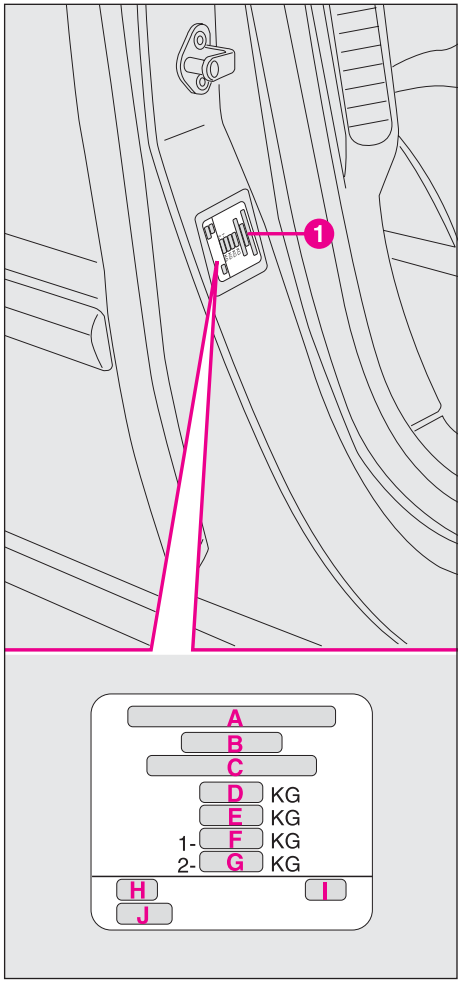

fig. 2

CHASSIS MARKING fig. 3

This **2** is printed on the windscreen base, in central position.

BODYWORK PAINT IDENTIFICATION PLATE fig. 4-5

The bodywork paint code is shown on plate **3** located on the front left door in point **H**.

F0B0182b

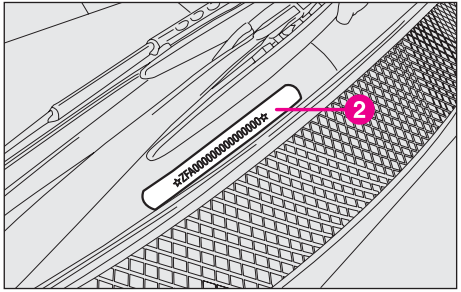

fig. 3

F0B0184b

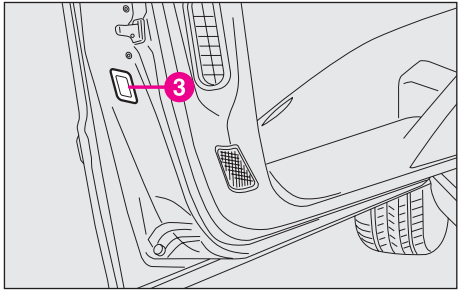

fig. 4

F0B0264b

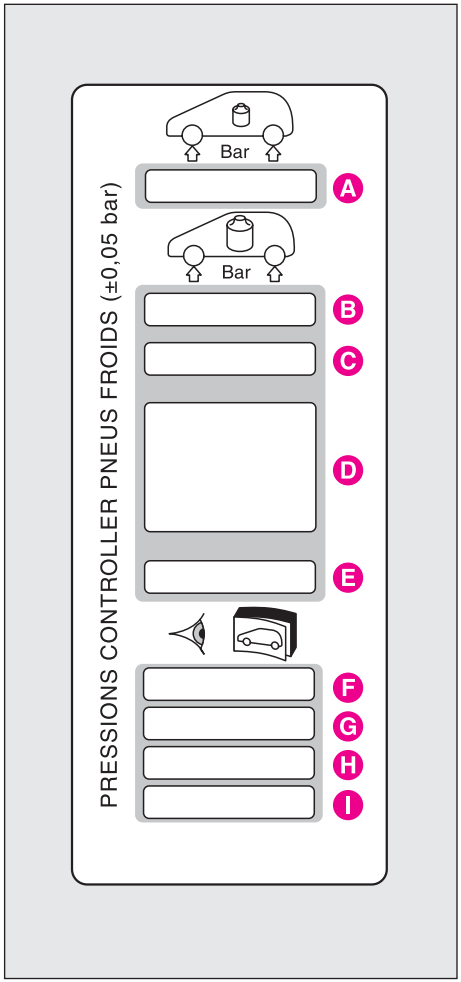

fig. 5

The colour coding is illustrated in the following table:

Code Fiat	Paint colour	Code
249	AMBIENT WHITE	P0WP
455	CLASSIC BLUE	P04P

Code Fiat	Metal-based colours	Code
685	FUSION GREY	M0ZR
667	BIG BEAT GREY	M0YJ
424	ACOUSTIC BLUE	M02M
453	POP AZURE	M04F
691	STREETPUNK GREY	M0ZW
723	PSYCHOBILLY BLUE	M03P
690	COLDVAWE GREY	M09E
506	WORLD MUSIC BEIGE	M0H8

ENGINE CODES - BODYWORK VERSIONS

	Engine code	Bodywork code	
		6/7 seats	5/8 seats
2.0 JTD 120 HP	RHK	179AXH1B1A	179BXH1B1A
2.0 JTD 136 HP	RHR	179AXL1B1A	179BXL1B1A
2.2 JTD 170 HP	4HT	179AXM1B	179BXM1B
2.2 JTD 163 HP (*)	4HP	179AXN1B	179BXN1B

(*) Versions for specific markets

ENGINE

		2.0 JTD 120 HP	2.0 JTD 136 HP	2.2 JTD 170 HP	2.2 JTD 163 HP (*)
Engine code		RHK	RHR	4HT	4HP
Cycle		Diesel	Diesel	Diesel	Diesel
Diameter x stroke	mm	85 x 88	85 x 88	85 x 96	85 x 96
Total displacement	cm^3	1997	1997	2179	2179
Compression ratio		17.5:1	17.5:1	–	–
Max power (EEC)	kW	88	100	125	120
corresponding ratio	HP	120	136	170	163
	rpm	4000	4000	4000	4000
Max torque (EEC)	Nm	300	320	370	370
corresponding ratio	kgm	30.5		37.5	37.5
	rpm	2000	2000	1500	1500
Fuel		Diesel for motor vehicles (EN590 specifications)	Diesel for motor vehicles (EN590 specifications)	Diesel for motor vehicles (EN590 specifications)	Diesel for motor vehicles (EN590 specifications)

(*) Versions for specific markets

FUEL SUPPLY

MULTIJET Common Rail direct injection with overboost and intercooler.

Modifications or repairs to the fuel feed system that are not carried out properly or do not take the system's technical specifications into account can cause malfunctions leading to the risk of fire.

TRANSMISSION

CLUTCH

Hydraulically controlled.

MANUAL GEARBOX

Five forward gears and reverse with synchromesh for front gear engagement.

ELECTRONIC AUTOMATIC GEARBOX

Two driving methods:

– sequence;

– automatic.

BRAKES

SERVICE AND EMERGENCY BRAKES

Front and rear disc brakes with two operating cylinders for each wheel and floating shoe.

Crossed hydraulic circuit control fitted with:

– ABS with EBD;

– HBA

– TC + ASR

– MSR

– ESP.

HANDBRAKE

Controlled by a lever, it works mechanically on the rear brake shoes.

SUSPENSIONS

FRONT

Independent wheel, McPherson suspension with:

– telescopic hydraulic dampers with flexible anchorage on the body side and rubber dust guards;

– coil and knock-guard buffers offset with the shock absorber;

– stabiliser anchored to the shock absorber and the swivel arms.

REAR

The suspension is fitted with:

– cross member;

– pulled arms;

– hydraulic shock absorbers;

– coil springs;

– stabiliser.

STEERING

Energy-absorbing jointed steering wheel.

Jointed steering column with angle and longitudinal adjustment system.

Rack and pinion with hydraulic power steering.

Minimum steering circle between pavements: 11.60 m.

WHEELS

RIMS AND TYRES

Steel or alloy rims on request.

Tubeless tyres with radial carcass.

Standard size spare wheel with steel rim.

The homologated tyres are listed in the log book.

IMPORTANT In the event of discrepancies between the information provided in this Owner Handbook and the Log Book, consider the specifications shown in the Log Book only.

To ensure safety of the car in movement, it must be fitted with tyres of specified size and of the same brand and type on all wheels.

IMPORTANT Do not use inner tubes with tubeless tyres.

WHEEL GEOMETRY

Front wheel toe-in measured from rim to rim with vehicle empty:

– toe-in: 2 mm.

Rear wheel toe-in measured from rim to rim with vehicle empty:

– toe-in: 5 mm ±1.

WINTER TYRES

See instructions in the "Getting to know your car" chapter.

SNOW CHAINS

See instructions in the "Getting to know your car" chapter.

UNDERSTANDING TYRE MARKING

Example: **205/65 R 15 94 H**

205 = Nominal width (distance between bodysides in mm).

65 = Height/width percentage ratio.

R = Radial tyre.

15 = Rim diameter (in inches).

94 = Load rating.

H = Maximum speed rating.

Load rating

60 = 250 kg
61 = 257 kg
62 = 265 kg
63 = 272 kg
64 = 280 kg
65 = 290 kg
66 = 300 kg
67 = 307 kg
68 = 315 kg
69 = 325 kg
70 = 335 kg
71 = 345 kg
72 = 355 kg
73 = 365 kg
74 = 375 kg
75 = 387 kg
76 = 400 kg
77 = 412 kg
78 = 425 kg
79 = 437 kg
80 = 450 kg
81 = 462 kg
82 = 475 kg
83 = 487 kg
84 = 500 kg
85 = 515 kg
86 = 530 kg
87 = 545 kg
88 = 560 kg
89 = 580 kg
90 = 600 kg
91 = 615 kg
92 = 630 kg
93 = 650 kg
94 = 670 kg
95 = 690 kg
96 = 710 kg
97 = 730 kg
98 = 750 kg
99 = 775 kg
100 = 800 kg
101 = 825 kg
102 = 850 kg
103 = 875 kg
104 = 900 kg
105 = 925 kg
106 = 950 kg

Maximum speed index

Q = up to 160 km/h

R = up to 170 km/h

S = up to 180 km/h

T = up to 190 km/h

U = up to 200 km/h

H = up to 210 km/h

V = over 210 km/h

ZR = over 240 km/h

W = up to 270 km/h

Y = up to 300 km/h.

Maximum speed rating for snow tyres

Q M + S = up to 160 km/h.

T M + S = up to 190 km/h.

H M + S = up to 210 km/h.

UNDERSTANDING RIM MARKINGS

The following are the necessary instructions to understand the meaning of the markings on the rim, as shown in **fig. 6**.

Example: **6 1/2 J x 15 H2 ET43**

6 1/2 = rim width in inches **1-fig. 6**;

J = rim drop centre outline (side projection where the tyre bead rests) **2-fig. 6**;

15 = rim nominal diameter in inches (corresponds to diameter of the tyre to be mounted) **3-fig. 6**;

H2 = "hump" shape and number (relief on the circumference holding the Tubeless tyre bead on the rim);

ET43 = wheel camber angle (distance between the disc/rim supporting plane and the wheel rim centre line).

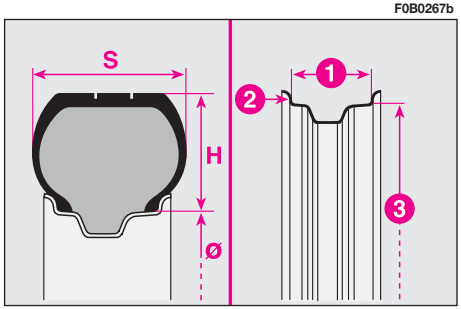

fig. 6

	2.0 JTD - 2.2 JTD
Rims (*)	6.5J x 15” 7J x 16”
Tyres	215/65 R15 215/60 R16
Spare wheel	standard size with steel rim

(*) Steel or alloy on request.

COLD TYRE INFLATION PRESSURE

Add +0.3 bars to the prescribed inflation pressure when the tyres are warm. In any case, check the correct value again when the tyres are cold.

Tyre	Empty		Full load	
	Front	Rear	Front	Rear
205/60 R16	2.5	2.5	2.5	3.4
215/65 R15	2.5	2.5	2.5	3.0

The plate on the front left door **fig. 7** carries the following data: **A -** empty vehicle tyre inflation pressure; **B -** fully loaded vehicle tyre inflation pressure; **C -** tyre dimension; **D -** rim dimension; **E -** type of tyre fitted; **F -** vehicle manufacturing date identification code; **G -** spare box; **H -** paint colour code; **I -** serial number.

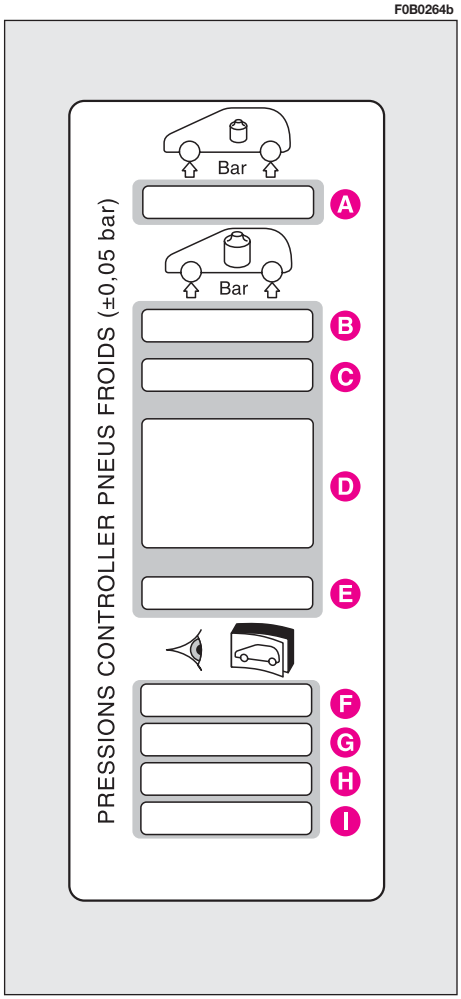

fig. 7

DIMENSIONS

The sizes are in mm and refer to the car fitted with standard tyres.

Luggage compartment volume with unladen vehicle (V.D.A. rules): 2948 dm^3.

F0B0457b

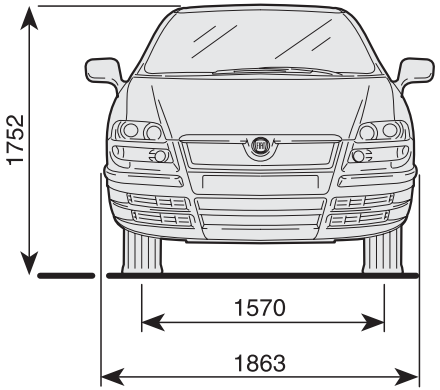

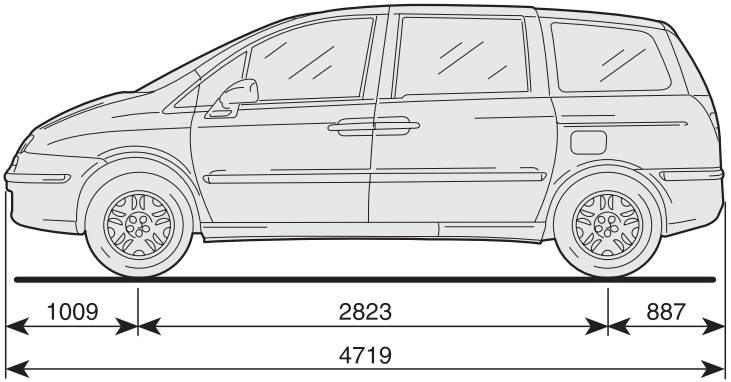

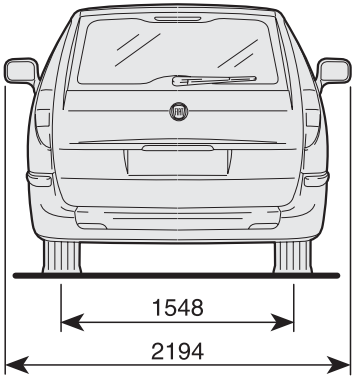

fig. 8

PERFORMANCE

		2.0 JTD 120 HP	2.0 JTD 136 HP	2.2 JTD 170 HP
Max speed (*)	km/h	180	190	200
Acceleration from 0 to 100 km/h	sec.	12.9	12.5	10.8
Kilometre with standing start	sec.	34.3	34.0	32.3

(*) Acceptable after the first period of use.

WEIGHTS

(kg)	2.0 JTD 120 HP		2.0 JTD 136 HP		2.2 JTD 170 HP	
	6 seats	5/7/8 seats	6 seats	5/7/8 seats	6 seats	5/7/8 seats
Weight empty (including fluids, 90% fuel in the tank and no optional)	1846÷1949	1811÷1976	1854÷1957	1818÷1983	1902÷1988	1875÷2017
Maximum allowed loads (1)						
– front axle:	1253	1259	1256	1263	1304	1318
– rear axle:	1277	1271	1274	1267	1266	1252
– total:	2530	2530	2530	2530	2570	2570
Maximum load on roof:	100	100	100	100	100	100
Towable weight						
– trailer with brakes:	–	–	–	–	–	–
– trailer without brakes:	750	750	750	750	750	750
Maximum load on ball coupling (trailer with brakes):	73	72	76	76	75	75

(1) Loads not to be exceeded. The driver is responsible for arranging the loads so that they comply with these limits.

CAPACITIES

	2.0 JTD 120 HP	2.0 JTD 136 HP	2.2 JTD 170 HP	Recommended fluids and lubricants Recommended products
	litres	litres	litres	
Fuel tank: – including a reserve of:	80 8	80 8	80 8	Diesel for motor vehicles (EN590 specifications)
Engine cooling system:	9	9	9	Mixture of distilled water and **PARAFLU11** (blue) at 50% or **PARAFLU UP** (red) at 50%
Engine sump and filter:	5.25	5.25	4.75	**SELENIA TURBO DIESEL (❑)**
Transaxle:	1.9	1.9	–	**TUTELA MATRYX**
Automatic gearbox	–	–	–	**TUTELA GI/E**
Hydraulic power steering:	1.2	1.2	1.2	**TUTELA GI/A**
Electro-hydraulic power steering	1.2	1.2	1.2	**TUTELA GI/R**
Hydraulic brake circuit with: ABS (with ESP)	0.519	0.519	0.93	**TUTELA TOP 4**
Windscreen, rear mirror and headlight liquid reservoir:	7.5	7.5	7.5	50-50 mixture of distilled water and **TUTELA PROFESSIONAL SC 35**

(❑) For temperatures lower than –15°C we recommend using **SELENIA WR DIESEL SAE** 5W-40.

LUBRICANT AND FLUID SPECIFICATIONS

PRODUCTS WHICH MAY BE USED AND THEIR SPECIFICATIONS

Use	Fluid and lubricant specifications for correct car operation	Recommended fluids and lubricants	Applications
Lubricants for diesel engines (❑)	Synthetic lubricants SAE 10W-40 complying with ACEA B3 and API CD specifications	**SELENIA TURBO DIESEL**	
	Synthetic lubricants SAE 5W-40 complying with ACEA B3 and API CF specifications	**SELENIA WR DIESEL**	

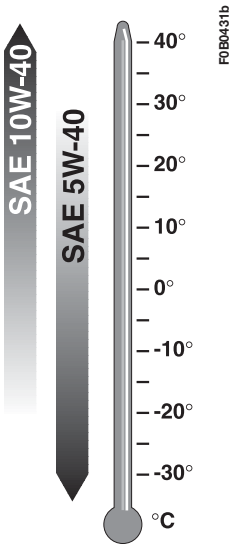

(❑) For temperatures lower than –15°C we recommend using **SELENIA WR DIESEL** 5W-40.

Use	Fluid and lubricant specifications for correct car operation	Recommended fluids and lubricants	Applications
Drive lubricants and grease	Synthetic oil SAE 75W-85 complying with API GL4 and MIL-L-2105 D LEV specifications	**TUTELA MATRYX**	Mechanical gearbox and differential
	ATF DEXRON II D oil, LEV	**TUTELA GI/A**	Hydraulic power steering
	Synthetic fluid for hydraulic and electro-hydraulic systems	**TUTELA GI/R**	Electro Hydraulic power steering
	ATF DEXRON III oil	**TUTELA GI/E**	Electronic automatic gearbox
	Molybdenum disulphide grease high temperature resistant specific for homocinetic joints, NLGI 1-2consistency.	**TUTELA ALL STAR**	CV joints
Brake fluid	Synthetic fluid, F.M.V.S.S. n° 116, DOT 4, ISO 4925, SAE J-1704, CUNA NC 956-01	**TUTELA TOP 4**	Hydraulic brakes and clutch
Radiator antifreeze	Protective with antifreeze action, blue color, based on inhibited monoethylene glycol, CUNA NC 956-16	**PARAFLU 11 (*)** or **PARAFLU UP (*)**	Cooling ducts Percentage: 50% down to –35°C
	Protective with antifreeze action, red colour, based on inhibited monoethylen glycol, with O.A.T.-based organic formula, that passes CUNA NC 956-16, ASTM D 3306 specifications		
Windscreen / rear window/ headlight washer fluid	Mixture of alcohol, water and surfactants CUNA NC 956-11	**TUTELA PROFESSIONAL SC 35**	To be used diluted or neat in windscreen washer/wiper systems

(*) **IMPORTANT** Do not add or mix with fluids with specifications other than the specified ones.

FUEL CONSUMPTION

The fuel consumption values shown in the tables below here were defined on the basis of the type-approval tests specified in European Directives.

Consumption values are defined by means of the following procedures:

– **an urban cycle** consisting of a cold start and simulated drive in city streets;

– **an extra-urban cycle** consisting in frequent acceleration, in alla gears, simulating normal conditions from 0 to 120 km/h;

– **combined consumption** is calculated as approximately 37% of the urban cycle and approximately 63% of the extra-urban cycle.

IMPORTANT Road and traffic conditions, weather, general conditions of the vehicle, driving style, fittings and accessories, use of the climate control system, load, roof racks and other situations penalising aerodynamic penetration and affecting rolling resistance will influence fuel consumption rates which can be different from the values shown in the table (see Cheap running that respects the environment in chapter Driving your car).

Consumption as per Directive 1999/100/CE (litres x 100 km)

	2.0 JTD 120 HP	2.0 JTD 136 HP	2.2 JTD 170 HP
Urban	8.8	9.0	9.2
Extra-urban	5.8	6.0	6.1
Combined	6.9	7.1	7.2

CO_2 EMISSIONS IN EXHAUST

The CO_2 emissions shown in the following table refer to the combined consumption as per Directive 1999/100/CE (g/km):

2.0 JTD 120 HP	2.0 JTD 136 HP	2.2 JTD 170 HP
182	188	191

RIGHT-HAND DRIVE VERSIONS

DASHBOARD fig. I

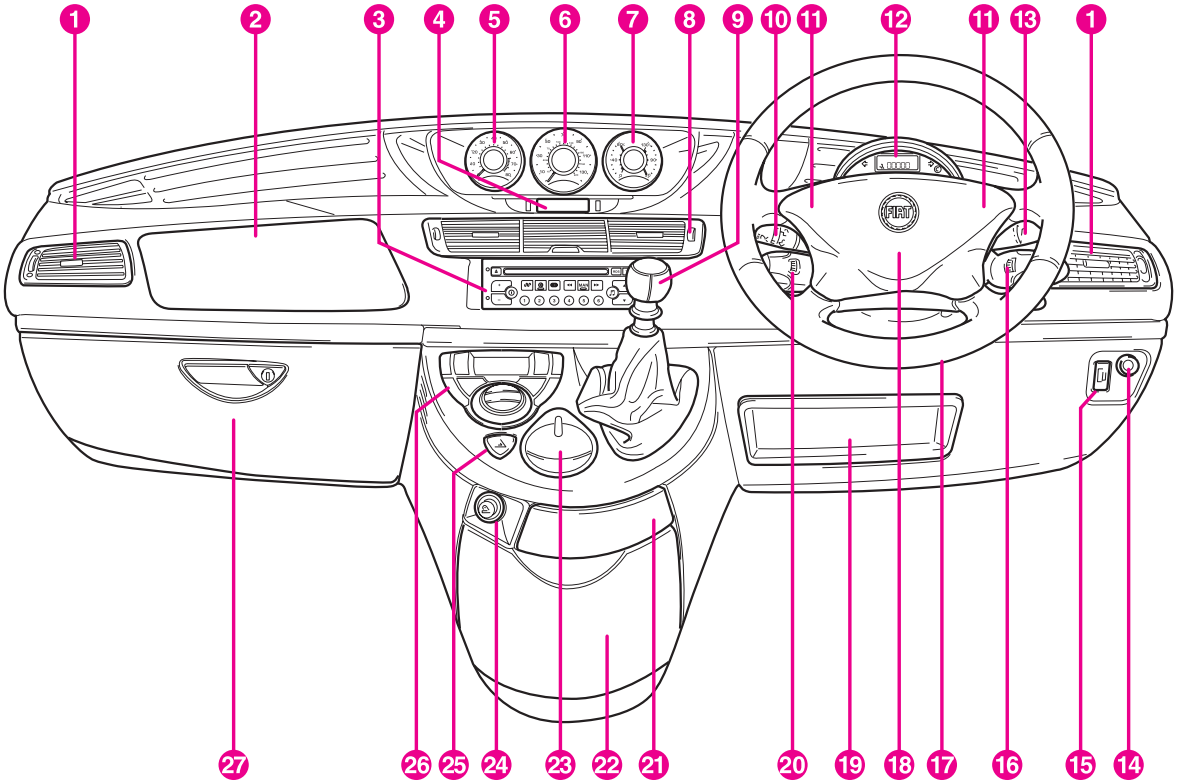

 fig. I

1. Side vents
2. Passenger air bag
3. Sound system/Infotelematic Connect system (where fitted)
4. Sound system/Infotelematic Connect system display (where fitted)
5. Revolution counter
6. Speedometer
7. Fuel gauge with low fuel warning light and engine coolant temperature gauge with warning light showing when the temperature is too high
8. Central vents
9. Gear lever
10. Left-hand stalk: headlight control
11. Horn
12. Instrument panel: odometer display and warning lights
13. Right-hand stalk, windscreen washer, rear window washer and trip computer
14. ASR system on/off.
15. Headlight beam adjuster (Xeno light versions excluded)
16. Sound system controls on steering wheel
17. Ignition switch
18. Driver air bag
19. Document compartment
20. Cruise control control lever
21. Ashtray and glove compartment
22. Console
23. Glove compartment/Infotelematic Connect system remote controls (where fitted)
24. Cigar lighter
25. Hazard lights
26. Climate system automatic controls
27. Glove compartment

INSTRUMENTS

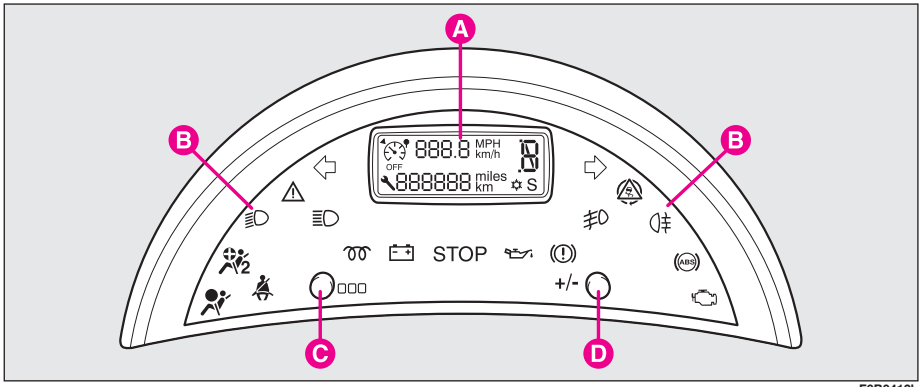

fig. 2

F0B0412b

A - Odometer display: speedometer, miles counter, maintenance indicator, engine oil level gauge (where fitted) and, for versions with automatic gear, engaged gear indicator

B - Warning lights

C - Trip miles counter reset button

D - Button for instrument panel brightness adjustment

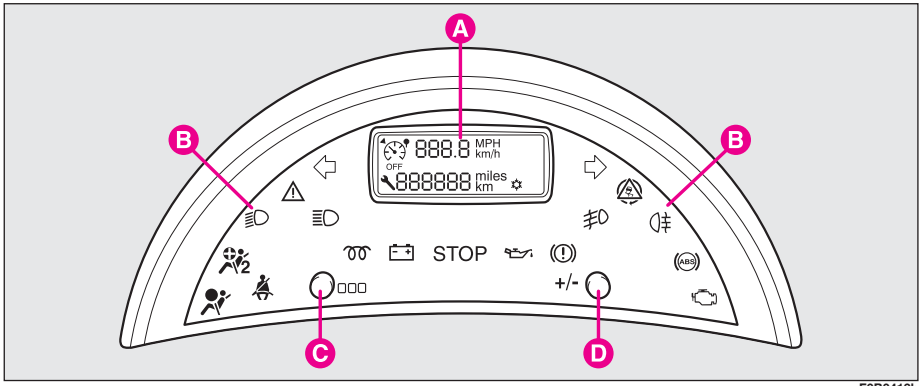

fig. 3

F0B0413b

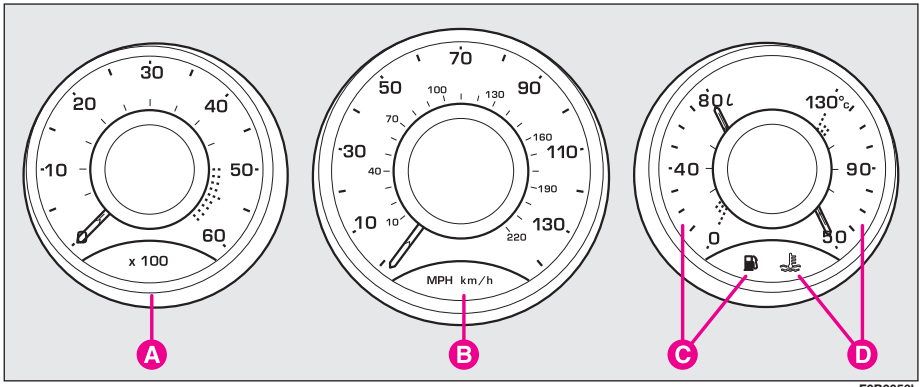

fig. 6

F0B0056b

A - Rev counter

B - Speedometer

C - Fuel gauge with reserve tank warning light

D - Coolant temperature gauge with warning light showing when the temperature is too high

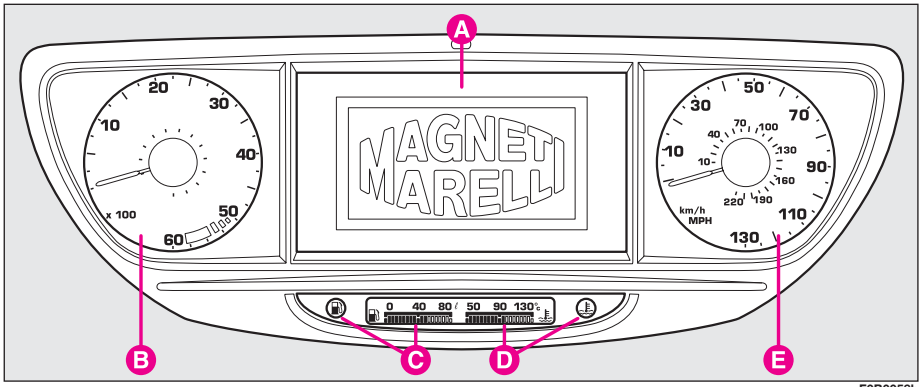

fig. 6

F0B0058b

A - Infotelematic Connect system display

B - Speedometer

C - Fuel gauge with reserve tank warning light

D - Coolant temperature gauge with warning light showing when the temperature is too high

E - Rev counter

REV COUNTER

If the needle is in the red zone, it shows your vehicle is overrevving.

This is only acceptable for a few moments.

IMPORTANT The electronic injection control system cuts off the flow of fuel when the engine is "overrevving". This will lead to a loss of engine power.

When the engine is running idle, the revolution counter can indicate a gradual or sudden revolution increase. This is normal and should not worry you, since it usually happens during normal operations, such as the climate system activation or the fan activation. In particular, a slow revolution variation is needed to preserve the battery charge.

ENGINE COOLANT TEMPERATURE GAUGE

Under normal conditions, the needle of the temperature gauge should hover around the middle of the scale. If it approaches the red section it means the engine is being overtaxed and you should reduce your demands on it.

Warning light comes on when the coolant is too hot.

Even travelling too slowly when the outside temperature is very hot can cause the needle to approach the red sector. In this case it is better to stop and turn off the engine. After a few moments you can start the engine again and accelerate slightly.

FUEL GAUGE

This gauge indicates the litres of fuel present in the tank.

When warning light comes on, it indicates that between 5 and 8 litres of fuel are left in the tank.

Do not travel with the fuel tank almost empty: the gaps in fuel delivery could damage the catalyser.

INDEX

ABS system 116
- electronic braking force distributor EBD 118
Accessories purchased by the owner 132
Aerosol cans (warning) 213
Air cleaner 190-198
Anchoring the load 110
Armrests 33
Ashtray 101
ASR system 121
Audio – video socket 97
Autoclose (function) 17
Automatic climate control system 68
- additional rear controls 77
- failure indication 78
- front controls 71
- general instructions 68-69-70-71
- sensors 71
- settings 74
- switching on 74
Automatic electronic transmission display 91
Automatic headlight sensor (daylight sensor)
- control 80

Battery
- advice 203
- fluid level (electrolyte) 201
- if the battery is flat 178
- jump starting 153
- maintenance 201
- recharging 178
- replacing the battery 201
Bodywork
- maintenance 210
- version code 218
Boot
- anchoring the load 110
- luggage compartment light 104
- luggage cover 111
- luggage retaining net 100
- luggage transportation 110
- opening/locking the tailgate from the outside 109
- passenger/luggage separating net 112
- tailgate emergency opening . 110
Bonnet 112
Bottle/glass/can holder 98
Brake and hydraulic clutch fluid level 198
Brake lights 166
- third brake light 168
Brakes
- fluid level 198
- technical specification 221
Bulbs (replacement) 159
- bulb list 160
- front light cluster 162
- general instructions 159
- if an exterior bulb burns out 162
- rear light cluster 166
- types of bulbs 160

Capacities 229
Car maintenance 184
- heavy-duty 188
- routine maintenance 187

- maintenance indicator 54
- scheduled servicing 184
- service schedule 185-186
Ceiling lights (central and rear) 103
- bulb replacement 168
Central door locking system 22
Central glass/can holder 97
Chassis marking 216
Cheap running that respects the environment 145
Checking fluid levels 189
- brake and hydraulic clutch fluid 197
- engine coolant 195
- engine oil 193
- power steering fluid 196
- windscreen/rear window/ headlight washer fluid 195
Child restraint systems 42
- passenger seat compliance with regulations on child's seat use 46
- presetting for mounting "Isofix Type" child' seat 47
Child safety lock
- electrical 23
- mechanical 23
Child surveillance (mirrors) 35
Cigar lighter 101
Climate control system 62
- air vents 63-64
Clutch
- technical specifications 221
CO_2 emissions in exhaust 233
CODE card (Fiat CODE system) 11
Compartments under front seats 98
CONNECT 56
Containing running costs and pollution 145
Cruise Control 88

Dashboard 48
Diesel fuel filter (draining the condense) .. 190-200
Dimensions 226
Dipped beam headlights
- control 79
- halogen bulb replacement 163
- Xenon light replacement 164
Direction indicators
- control 82
- replacing front bulbs 162
- replacing side bulbs 165
- types 161
Document compartment 98
Door lights 104
Doors super lock 22
Driving your car 136

EBD (Electronic braking force distributor) 118
Elastic bands 100
Electric windows 105
- anti-crushing system 105
- driver's door controls 105
- passenger's door controls 106
- sliding door controls 106
Electrical sockets 104
Electro-chromatic mirror 34
Electronic alarm 14
- deactivation without the remote control 17
- programming the system 17
- request for additional remote controls 17
- switching the volumetric protection off 17

- switching the alarm system off 16
- when the alarm is triggered.. 16
Electronic automatic transmission 90
- display 91
- driving in automatic mode 94
- driving in sequence mode 94
- failure indication 95
- lever position 91
- moving the car 93
- selection lever 91
- sound warnings (buzzers) 96
- starting the engine 93
- stopping the engine 96
- technical specifications 221
- towing the car 180
Electronic braking force distributor EBD 118
Electronic control units (warnings) 204
Engine
- engine marking 218
- identification code 219
- technical specifications 219
Engine compartment (washing) 212
Engine coolant level 194
Engine coolant temperature gauge 53
Engine oil
- checking the level 193
Engine oil consumption 193
Engine oil level 193
EOBD system 122
ESP system 119
- ASR function 121
- ESP action 121
- failure indication 121
- MSR function 122
- operation 120
- TC function 121
Exterior lights (controls) 79

Fiat CODE system 11
- CODE card 14
Flashing (main beam headlights) 81
Follow me home 79
Front and side airbags 124
- deactivating the passenger's front air bag manually 127
- general notes 128
- passenger's front airbag 125
- side airbags (side bag -window bag) 127
Front ceiling light 102
- bulb replacement 168
Front doors
- autoclose 19
- opening/closing 19
- super lock 22
Front fog lights
- bulb replacement 165
- control 81
Front seats 24
- adjustment 24-25
- armrests 33
- head restraints 32
- heating 25
- interior settings 31-32
- storing the driver's seat position 25
- swivel 26
Fuel
- consumption 232
- fuel cut off switch 87
- fuel filler cap 134
- fuel level gauge 53
Fuel consumption 232
Fuel cut off switch 87

Fuel filler cap 134
Fuel gauge..... 53
Fuel supply/ignition
- technical specifications 220
Fuses (replacement) 170
- fusebox in the engine compartment..... 173-176
- fusebox in the glove compartment 172-174
- fuse list 174-175-176-177
- fusebox next to battery..... 172-175
- general instructions 170

Getting to know your car..... 9
Glove compartment 98
Glove compartment light
- bulb replacement 169

Handbrake..... 87
Hazard lights..... 85-86
HBA system..... 118
Headlight automatic switching on 80
Headlamp washer
- control 209
- liquid level 192
Headlamps
- automatic switching on..... 80
- headlamp beam positioning 115
- slant compensation..... 115
- Xenon lights 114

If a tyre is punctured (changing the wheel) 154
If an accident occurs 182
- first-aid kit 183
- if anyone is injured 182
Ignition switch 18
In an emergency 153
Infotelematic CONNECT system..... 56
Instrument panel 50-51-52
- brightness adjustment..... 50
Instruments 50-51-52
Interior equipment 96
Interiors (maintenance) 212
- cleaning..... 213
“Isofix Type” child's seat (presetting for mounting) 47

Jack 156-157-158
Jacking the car 179
- with an arm hoist or a shop jack..... 179-180
- with the jack 179

Keys 11
- duplicate keys..... 15
- remote control functions 12-13
- replacing the battery 14
- request for additional remote controls 17

Litter container..... 98
Load anchorage 110
Load limiting devices 38
Lower glove compartment 96
Lubricant and fluid specifications 230-231
Luggage and ski racks 113
Luggage compartment
- emergency opening..... 110
- opening/closing 109
Luggage compartment lights
- bulb replacement 170
Luggage retaining net 100

Main beam headlights
- bulb replacement 163
- control 79
- flashing 81

Maintenance indicator 54
- operation 55
- reconfiguration 55
- resetting 56

Manual climate control system 64
- Air distribution 64
- Air quality 65
- Climate control 67
- Controls 66

Manual gearbox 89
- technical specifications 221

MBA system..... 118
Model plate..... 215
MSR system 122

Number plate lights
- bulb replacement 167

Oddment compartments..... 98
Odometer display 54
- engine oil level gauge..... 54
- scheduled maintenance indicator 54
- trip kilometre counter..... 54

Paint
- maintenance 210

Paint identification plate 216
Parking 139
Parking sensor 130
- general notes..... 131
- towing a trailer 131

Passenger's compartment air vents..... 63-64
Performance 227
Pollen filter..... 190-199
- maintenance 190

Power steering fluid level 197
Pretensioners (seat belts) 37
Protecting the environment 135
Puddle lights
- bulb replacement 170

Rain sensor 83
Rear fog lights
- bulb replacement 166
- controls 81

Rear heated window 72-73
Rear seats 27
- adjustment 27-28
- armrests 33
- dismantling..... 29
- head restraints 32
- interior settings 31-32
- third row bench seat..... 29

Rearview mirrors
- adjustment..... 36
- door mirrors 35
- driving mirror 34

Rear window blades
- replacement..... 209

Rear window opening/ closing..... 106
Rear window washer
- control..... 85

Rear window wiper
- blade replacement 209
- control 85

Rear windows
- calliper opening 107

Refuelling 229
Rev counter..... 53
Reverse lights
- bulb replacement 166

Roof rack bars..... 113
Rubber tubing (maintenance) 207

Safe driving 139
- before getting behind the wheel 140
- driving at night 142
- driving in the fog 143
- driving in the mountains 143
- driving in the rain 142
- driving on snow and ice 144
- driving with ABS 144
- when travelling 140
Seat belts
- general instructions 40
- height adjustment..... 37
- load limiting devices 40
- maintenance 42
- pretensioners..... 39
- use 36-38-39
Side lights
- control 79
- front bulb replacement..... 165
Sliding doors
- opening/closing 20
Snow chains 150
Spectacles holder 98
Speedometer 51-52-53
Starting the engine 136
- bump starting 138-154
- ignition switch 16
- jump starting 153
- stopping the engine 138
- warming up the engine 138
Steering
- technical specifications..... 222
Steering column lock 18
Steering column stalks 79
- left-hand stalk 79
- right-hand stalk 82
Steering wheel
-adjustment 34
Stopping the engine 138
Storing the car 151
- restarting the car after storage..... 151
Sunroof (electric) 107
- opening/closing 107-108
Sun curtains 100
Sun visors 99
Suspensions
- specifications 221
Symbols 6

TC system 121
Technical specifications 214
The signs to help you drive correctly 5
Tilting loading shelf 99
Toggles 100
Tools 156
Total and partial kilometre counter 54
Total and partial kilometre counter display 54
Towing a trailer 148
Towing the car 180
Transmission
- technical specifications..... 221
Transporting children in safety 40
Transporting luggage 110
- luggage cover 111
Trip computer 85
Tyre pressure 205
Tyres
- changing a wheel 156
- general notes..... 205
- maintenance 205
- snow chains 150
- tyre pressure..... 225
- understanding tyre marking.. 223
- winter tyres 149

T.P.M.S. System 122

Upper retractable compartments 97
Useful accessories 152

Vanity mirrors 103
Vanity mirror lights..... 103
- bulb replacement 169
Vehicle identification data 214
- chassis marking 216
- engine marking 216
- model plate 215
- paint identification plate 216
Volumetric protection 17

Warming the engine up 138
Warning lights..... 57
Weights 228
Wheel geometry 222
Wheels
- changing 156
- geometry 222
- specifications 222
- tyre pressure 225
Wheel rims
- general notes 222
- type..... 225
- understanding rim marking... 223
Windows bag 127
Windows
- cleaning..... 212
Windscreen blades
- replacement 88-208
Windscreen/rear window/ headlight washer fluid level..... 196
Windscreen washer
- control 82
- liquid level 192
Windscreen wiper
- blade replacement 88-208
- control 82
- nozzle (maintenance) 207

PROVISIONS FOR THE PROCESSING OF A VEHICLE AT THE END OF ITS LIFE-CYCLE

For years now Fiat has been developing its global commitment towards the safeguarding and protection of the Environment through the continuous improvement of its production processes and the making of increasingly more "eco friendly" products. With a view to guaranteeing the best possible service to clients in full observance of environmental norms and in response to the obligations imposed by European Directive 2000/53/EC on end-of-life vehicles, Fiat offers its clients the possibility to hand in their vehicle* at the end of its life span without additional costs.

The European Directive, in fact, provides for the collection of the vehicle without the last holder or owner of the same incurring expenses due to the fact that the market value of the vehicle is zero or negative. In particular, in almost all of the countries of the European Union, up until 1st January 2007, collection of the vehicle free of charge only applies to vehicles registered from 1 July 2002 on, while, from 2007 on collection will be carried out free of charge independently of the year of registration, provided that the vehicle still contains its essential component parts (especially engine and body) and is free from additional waste materials.

To have your end-of-life vehicle collected at no additional cost, simply contact one of our dealers or one of the collection and demolition centres authorised by Fiat. These centres have been carefully selected with a view to guaranteeing a good quality service for the collection, processing and recycling of discarded vehicles while protecting the Environment.

Information on collection and demolition centres may be obtained from the network of Fiat and Fiat Commercial Vehicle dealers, by calling the toll free number 00800 3428 0000 or by consulting the Fiat web site.

* Passenger transportation vehicles to seat a max. of nine persons, having a total admissible weight of 3.5 t

NOTES

SELÈNIA®

At the heart of your engine.

Always ask your mechanic for SELÈNIA®

Oil change? The experts reccomend Selenia.

*The engine of your car is factory filled with **Selenia.** This is an engine oil range which satisfies the most advanced international specifications. Its superior technical characteristics allow **Selenia** to guarantee the **highest performance** and **protection of your engine**.*

The Selenia range includes a number of technologically advanced products:

SELENIA PERFORMER MULTIPOWER
Particularly ideal for the protection of new generation petrol engines, very effective even in the most severe weather conditions. It guarantees a reduction in fuel consumption (Energy conserving) and it is also ideal for alternative engines.

SELENIA K
is the synthetic lubricant with innovative technology, which ensures improved cold starting for petrol engines and the utmost protection also under typically “urban” conditions of use. Owing to its 5W-40 viscosimetric grade and its special formulation it more effectively meets the emission limits required by new European regulations and exceeds the major international specifications.

SELENIA WR
Oil specifically designed for common rail Multijet engines. Particularly effective during cold starts, it guarantees maximum wear protection and hydraulic tappets control, reduction in consumption and stability at high temperatures.

SELENIA DIGITECH
Fully synthetic lubricant for petrol and diesel engines.
Its advanced technology guarantees maximum protection, a reduction in consumption and reliability in extreme climate conditions.

The range also includes Selenia StAR, Selenia Racing, Selenia 20K Alfa Romeo, Selenia TD, Selenia Performer 5W-40
For further information on Selenia products visit the web site www.flselenia.com.

COLD TYRE INFLATION PRESSURE (bar)

Tyre	Empty		Full load	
	Front	Rear	Front	Rear
215/60 R16	2.5	2.5	2.5	3.4
215/65 R15	2.5	2.5	2.5	3.0

Add +0.3 bars to the prescribed inflation pressure when the tyres are warm. In any case. check the correct value again when the tyres are cold.

ENGINE OIL CHANGE

		2.0 JTD	2.2 JTD
Engine sump and filter	litres	5.25	4.75

Dispose of waste oil properly.

FUEL CAPACITIES

		2.0 JTD - 2.2 JTD
Tank capacity	litres	80
Reserve	litres	8

Refuel diesel engines with diesel fuel for motor vehicles (EN590 specifications) only.

Fiat Group Automobiles S.p.A.
Quality - Assistenza Tecnica - Ingegneria Assistenziale
Largo Senatore G. Agnelli, 5 - 10040 Volvera - Torino (Italia)
Print no. 603.81.281 - 09/2007 - 1st edition

ENGLISH

The data contained in this publication is intended merely as a guide. FIAT reserves the right to modify the models and versions described in this booklet at any time for technical and commercial reasons.
If you have any further questions please consult your FIAT dealer.
Printed in recycled paper without chlorine.