Table of Contents

E70 Introduction

Subject Page

New X5 SAV 3
Technical Comparisons (E53 vs E70) 5
Technical Data 6

E70 Body Overview 8
Repair Solution 11
Frontal Impact 12
Side Impact 14
Rigidity 15
Pedestrian Protection 16
Side Panel Module 17
Alignment of the Side Panel with the Hood 17
Changing the Light Source 17
Front End 18
Cast Aluminum Spring Support 20
High-strength Materials 21
Leak-tightness 22
Driving Through Water 22
Shower Test 22
Dust-tightness 22
Customer Benefit 22
Panorama Glass Sunroof 23
Front Seats 24
Partially electric basic seat for driver and front passenger 24
Fully electric basic seat for driver and front passenger 24
Sports seat for driver and front passenger 25
Front Luxury Seats 26
Active Seat Ventilation (Front Seat - option) 26
Rear Seats 28
Basic Variant (with 2 rows of seats) 28
3rd Row Seating (optional) 29
2nd Row of Seats (in conjunction with 3rd row of seats) 29
3rd Row of Seats 30
Center Console 31
Door Trim 32
Glove Box 34
Roller Sunblind (Rear Doors) 34
Luggage Compartment 36
Tailgate 40
Modified Wedge System 40

cardiagn.com

Introduction

Model: E70

Production: From Start of Production

OBJECTIVES

After completion of this module you will be able to:

- Understand changes to the X5 body
- Understand E70 pedestrian protection system

cardiagn.com

New X5 SAV

Since the first X5 SAV, the world has been anxiously awaiting the successor to the E53. The E70 marks the second generation of the X5 and includes many new features and functions not available in the previous X5.

As one would expect, the new E70 raises the standard for the SAV driving experience. The propulsion for the new SAV is provided by new 6-cylinder and V-8 engines with more performance than the previous power units.

Since the introduction of the original X5 (E53), there have been more than 580,000 units produced, half of which (240,000) have been sold in the U.S. market. The new X5 continues the tradition of a luxury appointed, premium SAV. The E70 interior combines sophisticated materials with innovative options and class leading technology.

The overall ground clearance has been increased and there is a new front suspension to complement the BMW patented integral IV rear suspension. The BMW active steering system has been added for the first time on a X-drive equipped vehicle. There is also an optional “Adaptive Drive” package which combines Active Roll Stabilization (ARS) and Electronic Damping Control (EDC) for improved ride quality and handling. The new EDC system features the world debut of FlexRay, a new high speed data transmission system developed with the leadership of BMW and a major consortium of development companies.

cardiagn.com

The highlights of the new E70 X5 include:

- Weight optimized body shell with improved torsional stiffness
- Standard Runflat tires
- Active Steering
- Adaptive Drive package (EDC and ARS)
- New 6-speed gearbox with electronic gear selector
- Full time AWD - X-drive technology
- Improved power and efficiency with new engines - N52B30O1 and N62B48O1
- Larger interior with 3rd row seating (up to 7 seats)
- Optional Head-up display
- New i-Drive control concept with six programmable keys
- Exclusive interior with innovative options
- Improved handling and driving dynamics

cardiagn.com

Technical Comparisons (E53 vs E70)

The E70 represents the logical development of the proportions of the E53. The vehicle's external dimensions are bigger than those of the E53. The wheelbase has been lengthened significantly, making the E70 appear more stable and lending it a sovereign presence.

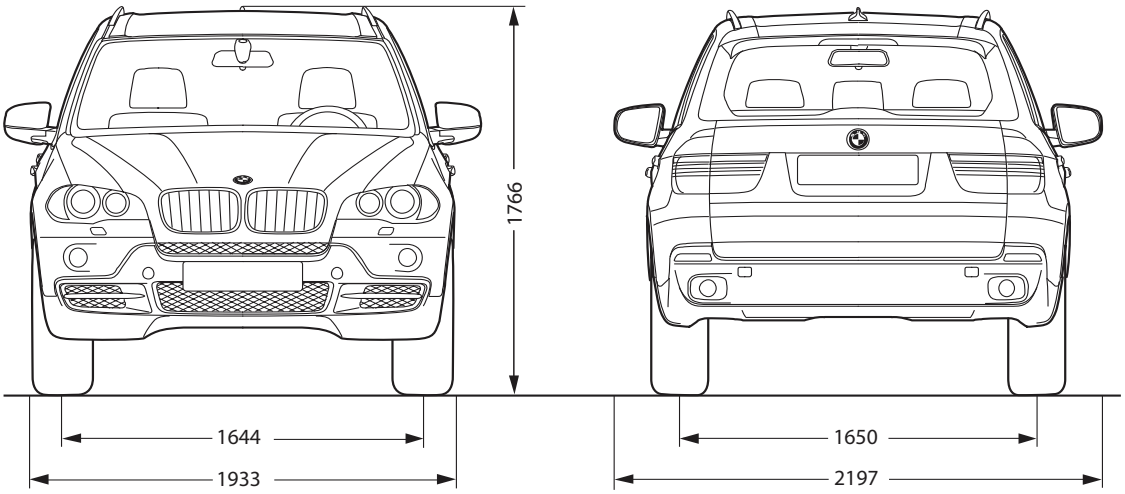

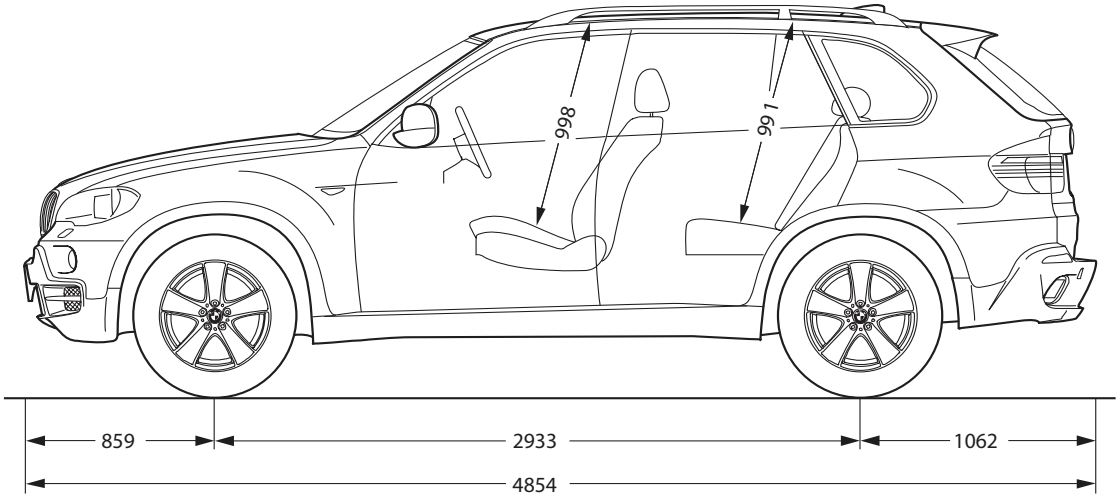

Specification	E70	E53
Unladen weight (kg)	2,125	2,095
Length (mm)	4,854	4,667
Width (mm)	2,197	2,180
Height (mm)	1,766	1,707
Wheelbase (mm)	2,933	2,820
Track width, front (mm)	1,644	1,576
Track width, rear (mm)	1,650	1,576

cardiagn.com

Technical Data

Specification	units	X5 3.0i SAV N52B30O1	X5 4.8i N62B48O1
Number of doors/seats		5/5	5/5
Vehicle length/width/height, unladen	mm	4,854/1,933/1,728	4,854/1,933/1,728
Wheelbase/turning circle	mm/m	2,933/12.8	2,933/12.8
Track width, front/rear	mm	1,644/1,650	1,644/1,650
Load volume (DIN 70020)	ltrs.	602-1,692	602-1,692
Fuel tank capacity	ltrs	85	85
Unladen weight (DIN/EU)	kg	2,085/2,160	2,215/2,290
Permissible total weight/payload	kg		
Permissible front/rear axle load	kg	1,240/1,525	1,350/1,545
Permissible trailer load braked 12%/8%	kg	2,300/2,700	2,300/2,700
Permissible trailer load, un-braked/roof load	kg	750/100	750/100
Engine type/number of cylinders		6-cylinder in-line	V-8 engine
Valves/cylinder		4	4
Engine management system		MSV80	ME9.2.3
Engine displacement	cm^3	2,996	4,799
Engine output/RPM	bhp	260 @6600	350 @ 6300
Torque/RPM	Nm	315 @ 3000	460 @ 3500
Compression ratio		10.7 to 1	10.5 to 1
Fuel type		RON 91-98	RON 91-98
Transmission type (auto)		GA6HP19TU	GA6HP26TU
Final drive ratio		4.44	3.91

cardiagn.com

Specification	units	X5 3.0i SAV N52B30O1	X5 4.8i N62B48O1
Steering type/ratio		Rack and pinion/variable	Rack and pinion/variable
Front brakes-diameter/thickness	mm	Disc 332/30	Disc 365/36
Rear brakes-diameter/thickness	mm	320/20	345/24
Air resistance (coefficient of drag)	cd	0.341	0.351
Top speed (electronically limited)		130	150
Front tires		255/55 R18 H XL RSC	255/55 R18 H XL RSC
Rear tires		255/55 R18 H XL RSC	255/55 R18 H XL RSC
Front rims		8.5J x 18 LM	8.5J x 18 LM
Rear rims		8.5J x 18 LM	8.5J x 18 LM
Battery/location	Ah	70/luggage comp	70/luggage comp
Alternator	A/W	150/2,100	185/2,590
Ground clearance	mm	215	215
Overhang, front/rear	mm	859/1,062	859/1,062
Width (mirror to mirror)	mm	2,197	2,197
Rim offset	mm	46	46
Nose weight	kg	120	120

cardiagn.com

E70 Body Overview

The E70 bodyshell has a number of technical highlights. For example, the B-pillar consists of tailor rolled blanks, which are hot formed and enable a high-strength weight saving of 2 kg per vehicle.

This also increases performance in a crash. The torsional strength has been increased from 23,500 Nm/° (E53) to 27,000 Nm/° (E70). The bodyshell played a key role in achieving a rating of 5 stars in the NCAP crash test. Many reinforcements were made to the front end, Bpillar and rear end. This involved using high strength steels.

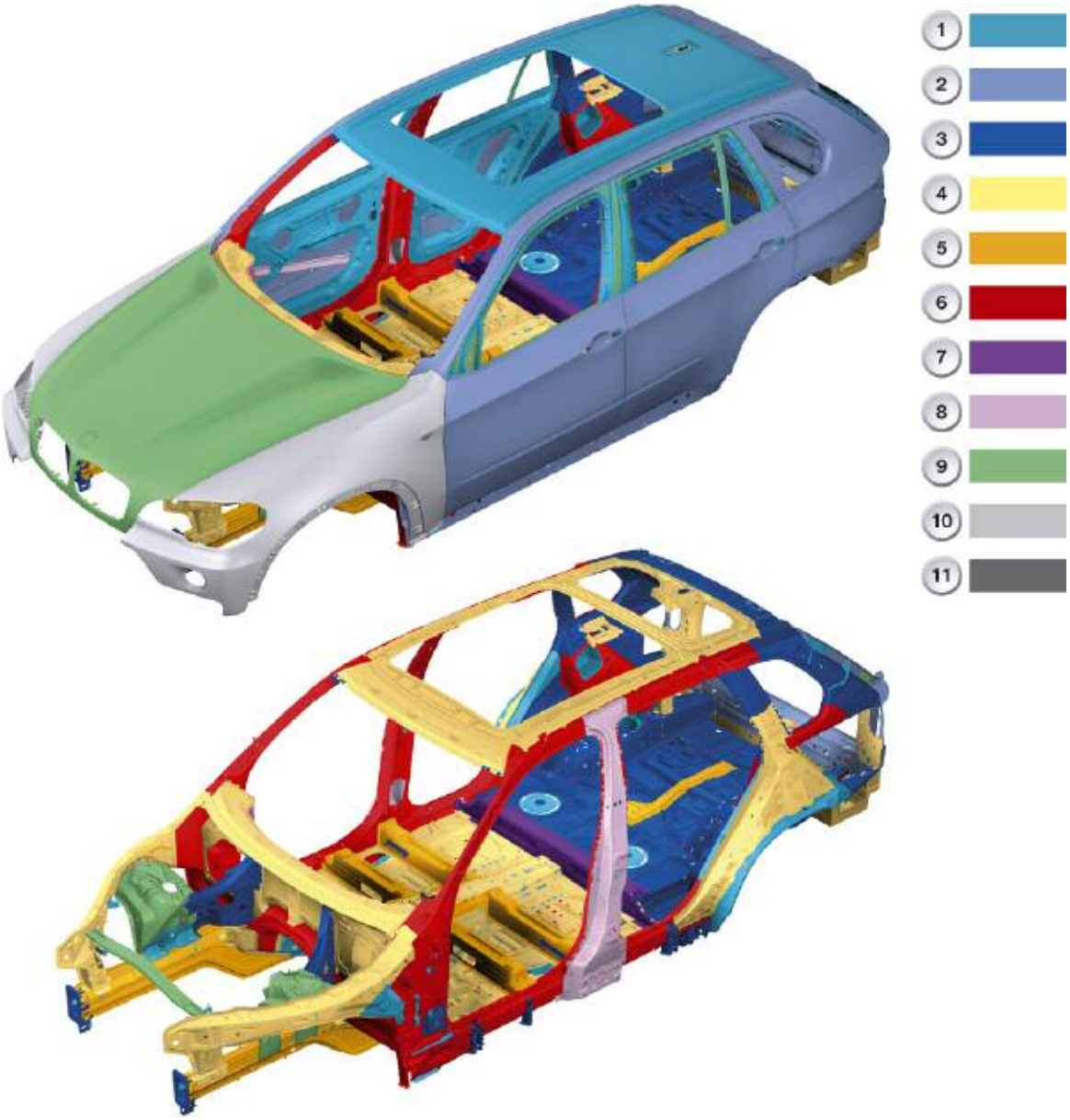

Legend to graphic on next page.

cardiagn.com

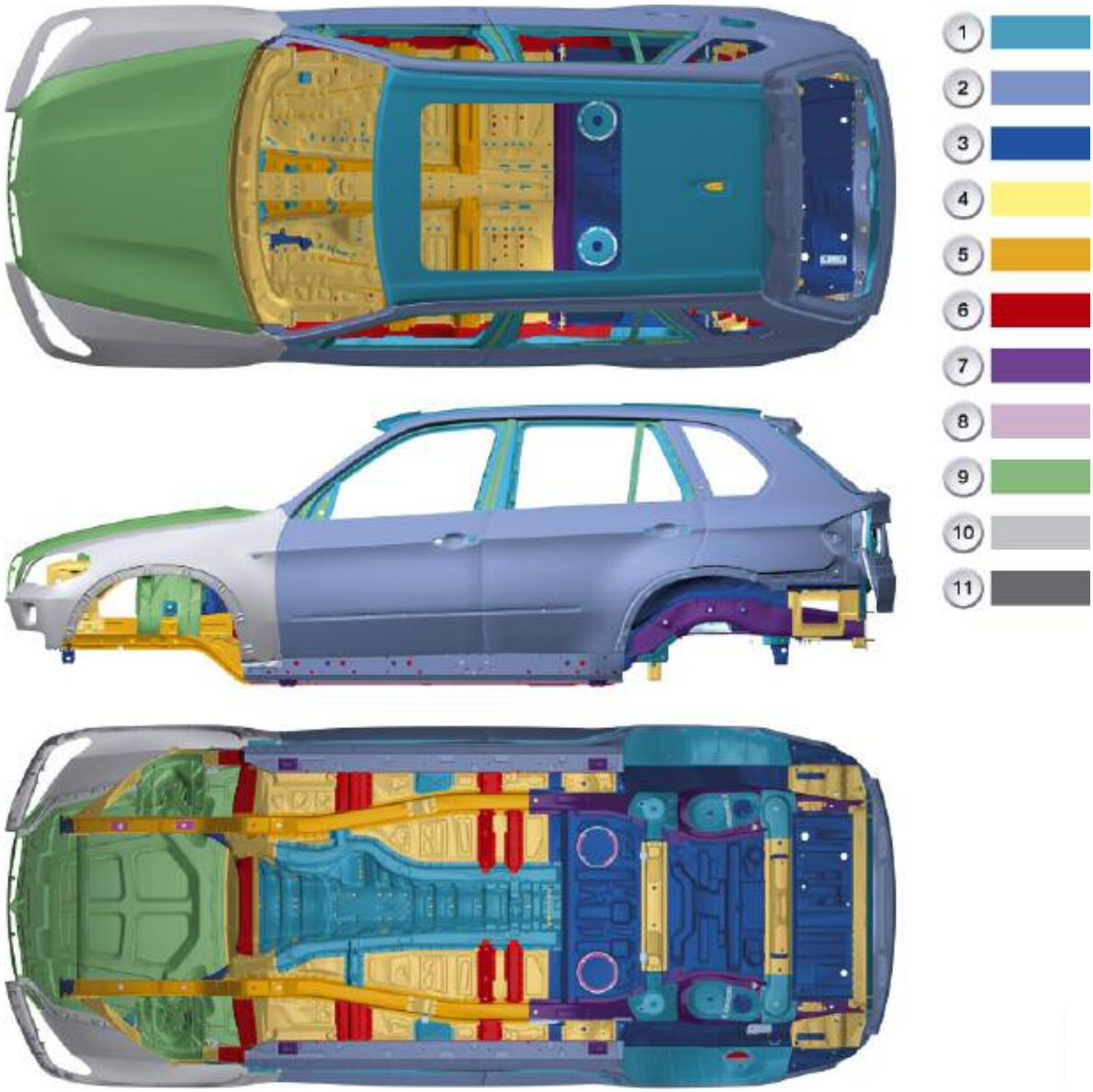

Index	Explanation	Index	Explanation
1	DX54D, DX56D, HC180BD, HC180YD	7	HC680C, HC540X
2	HC220BD, HC220YD	8	22MnB5
3	HC260BD, HC260YD	9	AlMg3Mn, AlMg4,5Mn0,4AC46000, AlMgSi AlMg0,4Si1,2, AlSi10MgMn
4	HC300BD	10	Plastics
5	HC380LAD	11	Other metals
6	HC420LAD		

cardiagn.com

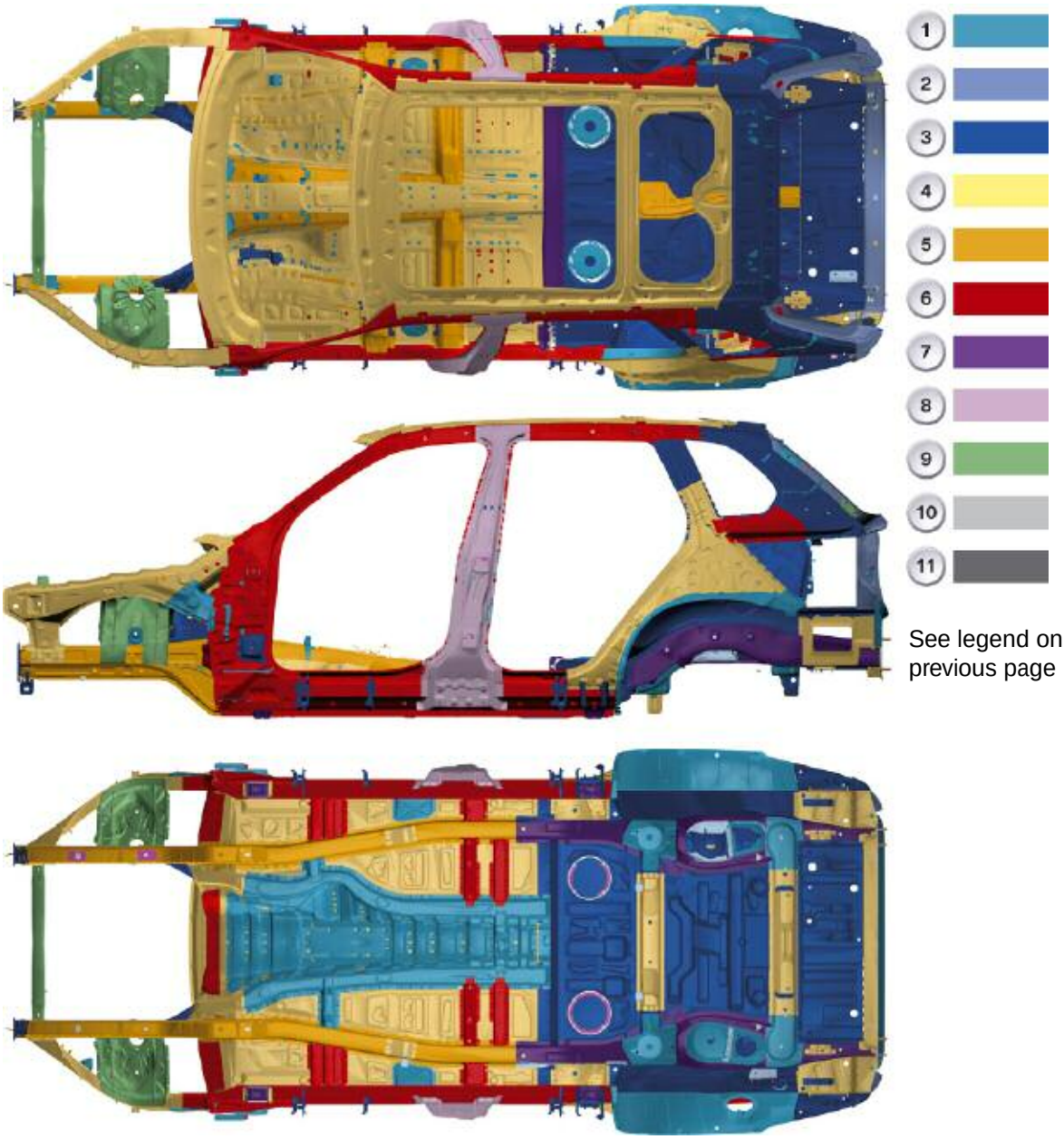

See legend on previous page

The body structure is designed in line with the Euro NCAP front impact test, the Euro NCAP pole test and the LINCAP side impact test as well as the IIHS side impact and high-speed rear impact tests in the USA.

Wherever possible, all situations occurring outside of legal requirements, and intended to ensure the protection of the passengers have been taken into consideration.

In an impact at up to 15 km/h, the body structure remains undamaged. The separating cuts for repair are outside the B-pillar. To prevent corrosion, the sill beam is dried.

cardiagn.com

At the front end, a sheet metal shell design modeled on the E53 has been used, but with a cast aluminum spring support. The advantages of this construction, in addition to the weight saving of 7-8 kg, include the smaller dimensions and the improved force input through different thicknesses and rib distribution.

In addition, the sheet metal shell design is easier to repair, as individual components can be replaced.

Repair Solution

- Planned solution modeled on the E60
- The punched rivet connections are drilled out, and then a blind rivet is used per punched rivet connection
- Repair adhesive: Betamate BM 2096
- Ensure corrosion protection (PVC coating).

cardiagn.com

Frontal Impact

In terms of passive safety, the developers of the E70 focused on developing an extremely stable passenger cell, which offers the passengers a greater level of safety in a crash at high speeds.

This was achieved by distributing the forces exerted on the structure over the engine bracket and chassis to the passenger cell through several load paths, in order to keep the load peaks low in the individual carrier structures.

Specifically, this means the consistent use of the lead path from the wheel to the sill beam and distribution of the engine bracket loads to the A-pillar, sill beam and end-to-end side member structures.

Regardless of the type of front impact, it was attempted to move the wheel in a straight line backwards to the sill beam. This results in a massive load path from the barrier/object hit through the wheel to the sill beam, which has been provided with a strong additional profile for this purpose (attachment of lateral side members).

The engine bracket loads are routed from the bulkhead through the carrier support on the lower bulkhead and the tunnel cover to both the A-pillar and the respective other side of the vehicle. In addition, the carrier support on the lower bulkhead is also braced at the back by the closing plate on the tunnel.

The connection between the engine bracket and the transmission carrier represents yet another load path. This means profiles that were required anyway have been optimally incorporated in achieving and increasing the performance.

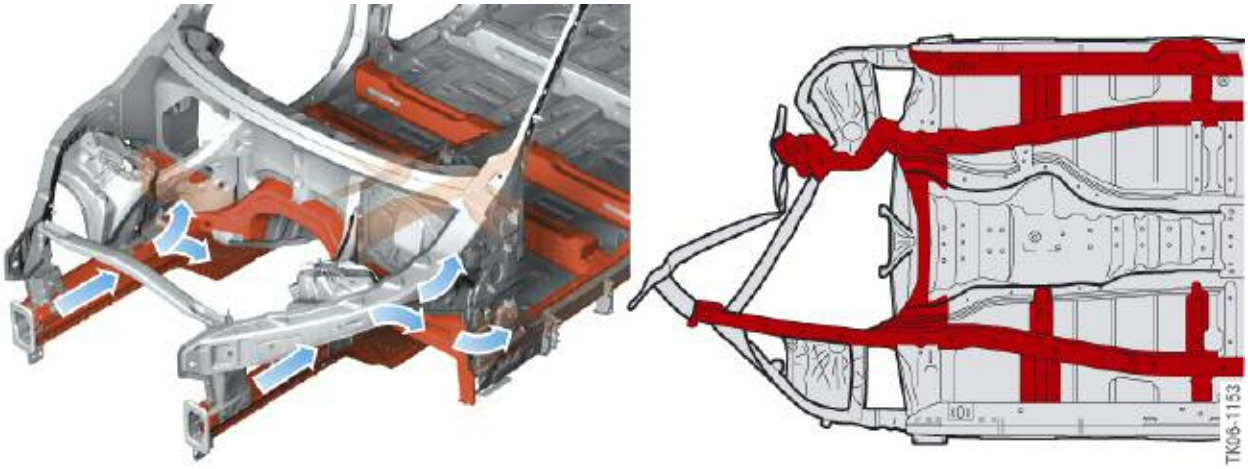

cardiagn.com

To keep the load on the bulkhead and thus the height of the bulkhead intrusion generally low, the engine bracket has been designed so that it buckles in a specific place and triggers a deformation path. Loads that are routed through the wheel arch carrier supports to the bodyshell are distributed to the A-pillar and through the wheel arch carrier support reinforcement to the sill beam.

This reduces the impact on the A-pillar and minimizes backwards movement.
This design ensures, on the one hand, that the doors can still be opened even after high crash loads, and, on the other hand, prevents the doors from opening independently following overloading during the crash.

The end-to-end side members beneath the floorpan make a significant contribution to the stability of the passenger cell. The bodyshell has been coordinated with the bumper system in such a way that the loads occurring during low speed crashes are completely absorbed by the bumper system.

As soon as a critical crash speed is exceeded, the engine bracket begins to deform from the front. This behavior is the prerequisite for low repair costs.

cardiagn.com

Side Impact

In side impacts too, the bodyshell helps provide optimum protection of the passengers against injury. This is achieved by the precisely coordinated behavior of the sheet metal structure and the restraint system. The design of the E70 allows the B-pillar to remain as straight as possible in every tested load case and to penetrate the vehicle uniformly.

The loads that occur are at their highest in the center of the B-pillar. To cope with this and yet not dispense with the idea of lightweight construction, the B-pillar reinforcement, which significantly influences the crash functionality, has been produced from a high-strength material which also exhibits a much higher wall thickness in the middle area than at the top and bottom ends due to the rolling process.

The rest of the load is then distributed through the vehicle's cross-member structures. Thus, loads that occur above the base plate are routed to the opposite side of the vehicle from the impact side via the seat cross-members. Beneath the base plate, various other cross members perform this same function.

In the roof area the same role is performed by the roof mirror or, on the panorama roof version, the roof system with its stiff side members and cross-members.

cardiagn.com

Rigidity

It was also possible to significantly improve the rigidity of the vehicle while still satisfying the notion of lightweight construction by using the deep-lying wheel arch carrier supports, which are deflected to the center of the vehicle and have a rigid connection to the engine bracket.

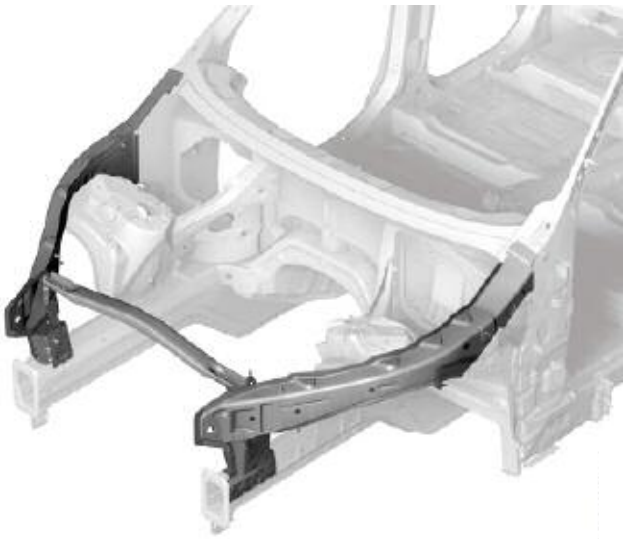

Another potential for increasing torsional strength was realized by connecting the wheel arch carrier support with the bumper cross member via the diagonal supports. This means the torsional strength of the entire front end of the E70 has been improved through new carrier processes, without requiring more components or adding weight.

It was also possible to significantly improve the rigidity by using a closed torsion ring around the D-pillar.

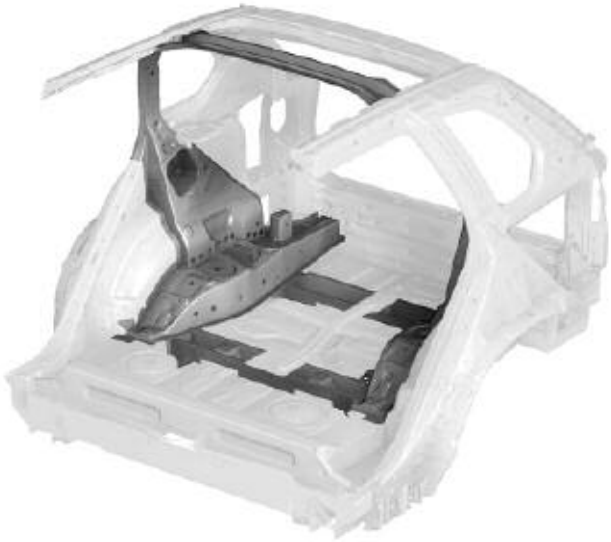

The torsion ring essentially consists of the following components: rear roof brace, C-pillar, lateral side members and the cross-members in the base plate area.

Another feature used to increase the torsional strength is the load-sharing, wedged tailgate.

By applying tension to the hatch between the D-pillars, the hatch shell, with its profiles, increases the rigidity.

cardiagn.com

Pedestrian Protection

In the E70, various measures have been taken towards pedestrian protection.

1. The aluminum bonnet has a flexible design in case of head impact.
2. The bonnet hinges have a disengaging mechanism in the direction of impact
3. The module carrier of the side panel module is made of plastic and is very flexible in the direction of impact.

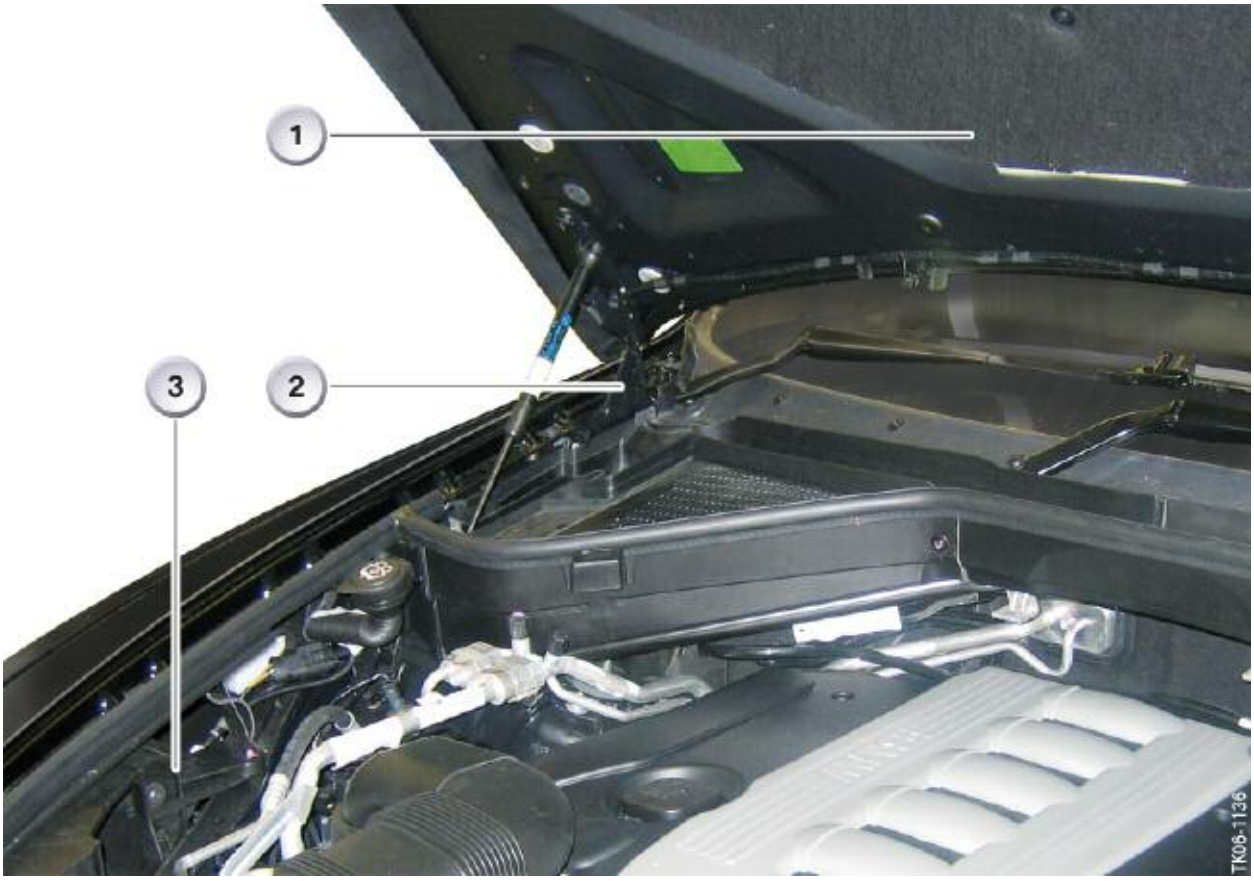

Index	Explanation	Index	Explanation
1	Hood	3	Side panel module
2	Hood Hinge		

cardiagn.com

Side Panel Module

The side panel module consists of the plastic side panel and the plastic module carrier. In addition, the side panel module also contains the washer tank, the front headlight, the fog lamp, the auxiliary turn signal light, the wheel arch cover and the wheel arch finisher.

Index	Explanation	Index	Explanation
1	Auxiliary turn signal	5	Front headlight
2	Washer tank	6	Front fog lamp
3	Module carrier	7	Washer pump
4	Side panel module support		

Alignment of the Side Panel with the Hood

The eccentric cam sets the position of the side panel between the side panel and the module carrier.

Changing the Light Source

The light source of the front headlight is changed through the engine compartment. To do this, insert your hand between the ribs of the module carrier and remove the cover from the headlight housing. The light source of the fog light is changed by first removing the side grill on the decorative strip. Through these openings, you can now reach in to change the light source.

cardiagn.com

Front End

The bodyshell structure has been lowered and the resulting space filled in with a plastic carrier structure (module carrier) with a plastic side panel. This separates the "soft" requirements of design and pedestrian protection from the "hard" requirements of rigidity, stability, high and low-speed crash performance.

The lower wheel arch carrier support creates a space which is filled with a plastic module carrier. This module carrier holds various components:

- Plastic side panel
- Plastic module carrier
- Water tank
- Front headlight
- Front fog lamp
- Auxiliary turn signal light
- Wheel arch cover
- Wheel arch trim.

cardiagn.com

Side Panel Module

Index	Explanation	Index	Explanation
1	Auxiliary turn signal	5	Front headlight
2	Washer tank	6	Front fog lamp
3	Module carrier	7	Washer pump
4	Side panel module support		

cardiagn.com

Cast Aluminum Spring Support

The cast aluminum spring support of the E70 is distinguished primarily by the following features:

- Lower weight through intelligent light-weight construction
- Improved driving dynamics through increased rigidity
- Fewer components and thus lower production costs.

With the E70 a cast aluminum spring support has been used in the car front end, for the first time in the X-series. The cast aluminum spring support absorbs the chassis forces and directs them to the body.

Both the spring strut and the upper transverse link are attached to the spring support. This requires the component to be extremely rigid.

This rigidity is achieved through improved material distribution, by only clustering material where it is necessary. The spring support thus makes a significant contribution to the driving characteristics, as it supports static and dynamic wheel forces.

Since the casting construction method makes it possible to integrate many individual functions and components into a single part, this design is significantly more compact than the conventional shell-type design and helps reduce the weight.

- Weight reduction of approximately 50% through lightweight construction using cast aluminum compared with conventional sheet metal design
- Extra space compared with conventional sheet metal construction: 80 mm shorter front end
- Functional design through specific local reinforcements; contribution to lightweight construction; robustness of the construction
- Integration of various brackets for mounting assemblies, etc. in the component.

cardiagn.com

The spring support is connected to the neighboring steel parts with a rivet and adhesive construction (e.g. longitudinal engine bracket).

This construction reduces the weight and makes it possible to use fewer parts (no additional metal bracket).

Despite this, the body is more stable with greater torsional strength and local rigidity is increased.

This has a positive impact on improving driving dynamics.

On the E53, this support was not made of aluminum, but rather from a conventional metal shell construction.

High-strength Materials

Compared with its predecessor, the E70 body plays a significant role in achieving the functional crash requirements through the consistent use of an innovative lightweight construction and the use of new materials technologies.

In the chassis/body interface area, diecast aluminum was used to achieve stability and rigidity requirements. In the structure parts, micro-alloyed and dual phase steels were used for the respective front and rear impact requirements.

The B-pillar reinforcement has been designed in hot-formed BTR material in order to meet the side impact requirements.

cardiagn.com

Leak-tightness

The vehicle's leak-tightness against water, dust and gas affects the passenger compartment, luggage compartment, engine compartment and all sensitive components and assemblies.

Driving Through Water

When driving through water at high speeds, skidpan tests have shown that with water levels of up to 80 mm water shock does not cause any damage to the underbody area, to the body parts or to the front and rear aprons.

When driving through water at low speeds, tests have shown that with water levels of up to 500 mm no water leaks into the passenger compartment or luggage compartment and that operating safety, in particular of all engine functions, is guaranteed.

Shower Test

In the so-called "shower test", the numerous environmental conditions exerted on the vehicle during storage, transportation and operation are re-enacted. This includes, for example, sprinkling under airstream conditions, tropical rain, flooding and the US car wash test.

Dust-tightness

With this check, the vehicle is driven for around 20 km at a maximum speed of between 30 km/h and 80 km/h on a dusty road. The ideal conditions are a very hot, dry climate with wind speeds of less than 18 km/h.

This check is used to ascertain how well seals on moving parts prevent the penetration of dust, how much dust can enter through the ventilation system and how much dust can settle on external surfaces and in the engine compartment.

Customer Benefit

Protection of the body and its attachment parts against corrosion and preventing water and dust from entering the vehicle interior are key requirements of the complete vehicle, as every customer will notice if they are not fulfilled.

At SOP, the E53 only offers 6 years' warranty against rust damage, while the E70 offers a 12 year warranty against rust damage.

cardiagn.com

Panorama Glass Sunroof

By increasing the glass surface area when compared with the conventional sliding sunroof by approximately 140%, the panorama glass sunroof improves the sense of space felt by the front, and for the first time, the rear passengers.

The use of two movable roof panel headliners means that when the panorama roof is closed, the noise level inside the car is comparable to that of a car with a normal roof.

With the roof open, a controlled net wind deflector ensures an acceptable background noise level at all driving speeds. The panorama roof is an internally operating slide/tilt sunroof with two glass lids and two roof panel headliners.

The glass lids, roof panel headliners and wind deflector are fully electric and are addressed by the standard BMW sliding sunroof operations logic through a switch integrated in the FZD.

- Open roof - Pull switch backwards
- Close roof - Push switch forwards
- Roof in ventilation setting - lift switch upwards.

The direction of operation corresponds to the direction in which the component moves, and is thus easily comprehensible for the customer.

The speed-controlled net wind deflector offers two different adjustment heights which counteract the possible interference noise (low frequency "whining" at approximately 70 km/h or high frequency "hissing" from approximately 120 km/h).

The 50mm wide ventilation gap is at the front. The wind deflector is also moved by the sliding sunroof motor by means of a sophisticated mechanism. This means a further drive is not necessary (weight advantage). Between the outer roof panel and the glass lid, a special process means it is possible to achieve a gap of just 5.8 mm.

cardiagn.com

Front Seats

The following seat variants are offered for the E70:

- Fully electric basic seat
- Multifunction seat
- Sports seat

All seat variants have an integrated side airbag and a belt tensioner. The partially electric basic seat is operated by an operating lever and a switch on the seat, and the additional functions of the option are controlled via the switch center.

The remaining three seat variants are operated via a control switch in conjunction with the control unit on the seat.

Fully electric basic seat for driver and front passenger

In addition to the functions of the partially electric basic seat, the fully electric basic seat also has:

- electric forward / back adjustment of the seat
- electric base cushion tilt adjustment (driver and front passenger)
- memory function (for driver)
- electric head restraint height adjustment.

cardiagn.com

In addition to the options for the partially electric basic seat, the following additional options are also available for the driver and front passenger:

- seat heating
- lumbar support (height-adjustable).
- ISOFIX front passenger's seat with key switch for front passenger's airbag.

Sports seat for driver and front passenger

- electric forward / back adjustment of the seat
- electric seat height adjustment
- electric backrest angle adjustment
- electric base cushion tilt adjustment
- electric head restraint height adjustment
- manual head restraint angle adjustment
- manual depth adjustment of the seat
- memory function (driver's seat only).

Possible options for the sports seat (driver and front passenger):

- seat heating
- lumbar support (height-adjustable).
- ISOFIX front passenger's seat with key switch for front passenger's airbag.

cardiagn.com

Front Luxury Seats

In addition to the functions of the fully electric basic seat, the multifunction seat also has:

- electric backrest-head adjustment
- pneumatic lumbar support depth and height adjustment
- electric head restraint height adjustment
- luxury head restraint with manual lateral adjustment ("rest head restraint")
- pyrotechnic active head restraint (from 09/08)
- electric seat back width adjustment
- electric depth adjustment of the seat
- memory function for driver and front passenger.

Possible options (driver and front passenger):

- four-circuit seat heating
- active seat
- active seat ventilation including. seat heating.

Active Seat Ventilation (Front Seat - option)

This system ensures:

- optimum seat climate
- less sweat formation between seat and occupant.

The improved cushion and cover design and active ventilation of the seats increases the climate-physiological well-being of the passengers. It is actuated via a control switch in the switch cluster. The indicator for activation is a blue LED.

This option is only available in conjunction with the electrically adjustable front luxury option and the seat heating option for driver and front passenger.

Active seat ventilation is split into the following components:

- perforated cover in Nasca leather
- seat heating
- interlay knitted fabric for optimum air distribution
- nine axial fans (4 in the backrest, 5 in the seat).

Fans integrated in the foam part distribute the air inside the car across the seat and through the air permeable interlay of the seat heating and the perforated leather cover to the passenger/seat bearing surface. The seat heating is automatically activated by the seat control device and prevents the occupant from over-cooling.

cardiagn.com

Sweat formation in the area between the occupant and the seat surface is avoided, as the humidity of the occupant is transported away. The seat climate is improved and prevents the driver from becoming tired.

cardiagn.com

Rear Seats

It was possible to reconcile the requirements for a larger passenger compartment (rear leg room, larger luggage compartment) and the desire for a 3rd row of seats in the vehicle's basic design.

By increasing the leg room in the 2nd row of seats by approximately 40mm and the length of the luggage compartment by approximately 100 mm, the most part of the increase in vehicle length is of benefit inside the vehicle and makes it possible to offer a 3rd row of seats.

The seat systems of the E70 are consistently differentiated in 2 directions:

- Series production: 5-seater
- Option: 3rd row of seats with adjustable rear seats and fully collapsible 3rd row of seats in the luggage compartment.

Thus, for the first time, BMW is offering a larger transport capacity for up to 7 people.

Basic Variant (with 2 rows of seats)

This is a full foam seat with backrest and seat separation and a torso angle of 27° +/-1°. The separation ratio is 60/40. The backrest is unlocked via a handle on the backrest. The folding center arm rest contains a rigidly integrated, height-optimized head restraint and cup holder.

The outer head restraints on the rear seats are manually adjustable. An insert block in each detent prevents the head restraints from dropping in the event of a crash.

Option:

- seat heating (three-stage switch, heat output as on E38; only in conjunction with front seat heating).

cardiagn.com

3rd Row Seating (optional)

This option is only available as ordered during production. A retrofitting option is not planned.

cardiagn.com

2nd Row of Seats (in conjunction with 3rd row of seats)

With this option, forward / back adjustment of the seat by 80 mm and a four-stage (12 °) backrest angle adjustment are possible. The Compact Fold function means the row of seats can be folded fully flat in the luggage floor. When the handle is activated, the seat backrest folds forwards and the seat cushion is lowered.

With the additional Easy Entry function, a lever is activated to unlock the rear edge of the seat so that it folds forward as a whole, in order to enable easier access to the 3rd row of seats. If the row of seats is not locked properly, an indicator appears in the instrument cluster.

The slightly shorter folding center armrest also contains the cup holder, while the head restraint is located in the backrest.

3rd Row of Seats

The 3rd row of seats is integrated into the luggage compartment. The seats can be fully recessed, individually if desired, to obtain a level luggage compartment floor.
The ventilation or heater and 2 cup holders are integrated in the center console (in cold countries, these are included in the 3rd row of seats option, otherwise they come as an additional option), the arm rests are in the outside wall trim.

On the C-pillar there are recessed handles, which make it particularly easy for shorter people or children to climb in. Very good functional efficiency in terms of individual seat adjustments. Improved passenger compartment space/leg room in conjunction with the 3rd row of seats. The 3rd row of seats is ideal for people up to 160 cm tall.

cardiagn.com

Center Console

The new butterfly lid system offers better operating convenience, as when one lid is opened, the other can simultaneously be used as an armrest.

- Butterfly lid for storage tray in center console
- Accentuation with decor strips
- Large cup holder.

The center console contains the iDrive button, the electric gear selection switch, the switch for the hand brake and a small storage tray. In addition, there are concealed cup holders with a storage tray or ashtray and a cigarette lighter as well as the storage tray under the butterfly lid.

The ventilation grill for the rear area and, optionally, the screen for the rear seat entertainment system are also integrated into the center console. The roomy storage tray in the center console has an audio Aux-In socket as standard, for connecting an external audio device (e.g. MP3 player), and a storage package with lighting and 12 V socket can also be integrated as an option.

A telephone with upwards folding eject box is also available as an option.

- Butterfly lid

The two lids can be opened separately at the push of a button. The buttons are located on the front of the console, each directly to the right or left beneath the lid. The lid opens automatically with a spring, either from the center to the left or to the right respectively. The lids are closed manually, also separately.

- Cup holder and storage tray/smoker pack - In the front part of the center console there is a 2 compartment tray, covered by sliding rolls. These meet in the middle and can be opened to the front or back with two small handles. In the front area, there is a storage tray or, optionally, an ashtray with a cigarette lighter (smoker pack). In the rear part there are two large cup holders.

cardiagn.com

Door Trim

The door trim has the following features:

- 2-part decor strip for high-quality appearance
- Leather trim handle (option: Nevada leather and option: Nappa exclusive leather), basic: soft paint; Handle bracket in 2-component technology.
- Ambient lighting in the door handle and in the door pocket (option)
- Handle shell for driver's door. The new handle shell in the driver's door has improved the ergonomics. The arrangement of the door switch cluster for operating the power windows, for example, is significantly improved. The new ambient lighting (option) gives a better impression of space at night.
- Door handle and decor strip - Both components form one unit within the capping. There are no visible screw connections.
- Ambient lighting (option)

  Indirect lighting, as soon as the driving light is switched on, by LED on rear door handle and strip light in door pocket in Bernstein color tone.

cardiagn.com

- Trim options - Capping always black (laminated with PVCPP film) with 2-part decor strip (top: aluminum, painted plastic or real wood; bottom, decor strip: pearlescent chrome), door handle lever: pearlescent chrome, decor strip with central cover, softpad, door pull shell, handle: 4 variants of material for center cover (standard: fabric; Option: Nevada leather, artificial leather, Nappa exclusive leather), 3 variants of softpad (standard: artificial leather; Option: Nevada leather, Nappa exclusive leather), 4 world colors (beige, tobacco, grey, black), decor strip laminated with PVC-PP film. Handle, see above

  2 variants of loudspeaker finisher strip (number and variants depend on option and country) for front mid-range speaker, rear mid-range speakers and tweeters: expanded metal, metal-effect plastic. Tweeter cover only in expanded metal.

The new design focuses on quality, variety and functional efficiency. In addition, the customer has more design options through the new 2-part strip. The ambient lighting creates a more pleasant atmosphere, and access to the control panel is made easier.

cardiagn.com

Glove Box

The glove box has also been further developed in comparison to the E53.

- Better position
- Greater volume
- Easier to open and close

There are two lids for opening and closing the glove box. It locks automatically when the vehicle is locked. The volume of the glove box is bigger, as the airbag has been moved closer to the windshield. The new position makes it easier to look into, easier to access and allows for better storage. The glove box no longer has its own lock cylinder.

As an option, a multimedia changer or a CD changer are offered, which are fitted in the left hand area. When open, the glove box is illuminated. The on-board folder can be accommodated in the glove box.

Both lids are opened via a button on the left next to the glove box. This is located under the center grill, integrated in the right-hand end of the lower accent strip. The lids are coupled with each other, they automatically open upwards or downwards at the push of a button thanks to the integrated electronics.

They are closed manually. The link between them means it is only necessary to push one of the two lids. They are automatically locked when the vehicle is closed. The view into and access to the glove box is improved due to its higher position. The glove box also offers a larger volume for storing various objects. It is easier to keep tidy.

The glove box in the E70 offers greater security in the event of a break-in, as it can only be opened in conjunction with normal unlocking of the vehicle. There is significantly better access to the CD/DVD changer in comparison with the E53.

Roller Sunblind (Rear Doors)

The roller sunblind is available as a part for the rear door windows. It is operated manually in a simple process. The roller sunblind offers protection from the sun's rays and camouflage of the rear area from outside. The position is either fully closed or fully open.
The roller sunblind covers the retractable and fixed side windows in the rear door.

cardiagn.com

NOTES PAGE

cardiagn.com

Luggage Compartment

Compared with the E53, the E70 offers the following advantages:

- Larger load volume
- Improved functional efficiency
- Extensive additional storage options.

The design and size of the luggage compartment have been significantly improved compared with the E53. The design of the two-part tailgate has been retained and improved.

The use of run flat tires as standard means a spare wheel is no longer necessary (emergency wheel on 5-seater available as an option). This means the "lift over" height has been lowered, and generous storage spaces created under the flat luggage compartment floor (not with emergency wheel option).

The luggage floor is opened with the help of a gas spring. The 3rd row of seats option can be fully recessed into the luggage compartment floor. The optional storage package includes useful items such as lashing rails with 4 adjustable lashing eyes, a lockable luggage compartment floor, as well as stowage nets, bag hooks, a light for the storage compartment in the center console and anti-slip inserts in the front door pockets.

Instead of the luggage compartment cover, it is possible to fit a combi-roller with additional integrated load-area separating net behind the 2nd row of seats.

If the 2nd row of seats is folded, a loose net can be fitted to protect against loads behind the 1st row of seats. This is available as a special accessory. The options can be combined entirely according to owner specification, except for combining the 3rd row of seats and the emergency wheel.

cardiagn.com

Index	Explanation	Index	Explanation
1	Hatch for access to change bulb, hazard warning triangle, and control units. Storage option depending on equipment level	3	Large storage tray. Not in conjunction with emergency wheel option/3rd row of seats option
2	Storage tray		

cardiagn.com

Index	Explanation
1	Storage shelf
2	On-board tool kit
3	Installation area for control units: Hi-fi amplifier, TCU, reversing camera etc.

cardiagn.com

Specifications	E70	E53 (w/o levelling system)
Liftover height (mm)	769	803
Garage dimensions, open tailgate	1,879	1,869
Tailgate storage shelf dimensions	2,124	2,083
Largest luggage compartment width	1,258	1,250
Smallest width between wheel arches	1,098	1,065
Height of the load area	863	845
Width of the load area	1,114	1,180
Load volume	589	510
Same with 3rd row seats	516	
Load volume, maximum	1,680	1,550

Improved practicality and variability. Thanks to the integrated gas spring, it is easy to load the additional storage space, as the luggage floor can be opened with one hand and little effort.

In general, the storage space is therefore easily accessible. The load volume has increased by 79 liters or 130 liters compared with the E53.

cardiagn.com

Tailgate

Modified Wedge System

The tailgate of the E70 is split in two in exactly the same way as the tailgate on the E53. However, the wedge system is different from that of the E53. This wedge system was copied from the E61 and must be adjusted correctly.

It is important to note that there must be a system or initial stress between the wedge and the limit position in order to guarantee the full effectiveness of the system.

This adjustment can be carried out from inside with the tailgate closed. However, it can also be carried out from outside with the tailgate open.

As the tailgate is relatively heavy, a combination of gas springs and barrel springs is used to ensure operating convenience (spindle system). The hinges for the lower hatch can be separated at the lower part of the hinge.

cardiagn.com

The lower tailgate is no longer unlocked electrically as on the E53, but mechanically via a release lever. The automatic soft-close on the tailgate above is not integrated into the lock as on the E53, but is designed as an automatic soft-close clamping bracket.

cardiagn.com