Alfa Romeo Alfetta

table of contents

Alfetta 4
BODY 4
LIGHTNING 4
REPAIR PANELS 5
ENGINE 6
V-BELTS 6
ENGINE BLOCK 7
ENGINE BLOCK 7
PISTON/LINER 8
CON ROD/BEARING 9
CRANKSHAFT 10
ENGINE MOUNT 11
FUEL SYSTEM 12
FUEL PUMP 12
FUEL MANAGEMENT 13
INTAKE MANIFOLD 13
ENGINE GASKETS 14
GASKETS ENGINE 14
HEADGASKET SET 15
FULL SET 16
COOLING SYSTEM 17
HOSES 17
RADIATOR 18
1.6 18
1.8 19
2.0 20
2.0 TD 21
2.4 TD 22
THERMOSTAT 23
1.6 23
1.8 24
2.0 25
2.0 TD 26
2.4 TD 27
WATERPUMP 28
1.6 28
1.8 29
2.0 30
2.0 TD 31
2.4 TD 32
VALVE GEAR 33
CAMSHAFT 33
TIMING CHAIN 34
VALVE MECHANISM 35
FILTER 36
FILTER 36
EXHAUST SYSTEM 37

1.6 ... 37
1.8 ... 38
2.0 ... 39
2.0 TD ... 40
2.4 TD ... 41
INTERIOR ... 42
CAR MAT ... 42
DRIVETRAIN ... 43
DIFFERENTIAL ... 43
DRIVESHAFT 1.6/1.8/2.0 ... 44
GEAR MOUNT 1.6/1.8/2.0 ... 45
CLUTCH SET 1.6/1.8/2.0/2.4/TD ... 46
CLUTCH ACTUATION 1.6/1.8/2.0/2.4 TD ... 47
SIDE SHAFT 1.6/1.8/2.0 ... 48
SUSPENSION ... 49
SPRINGS ... 49
SHOCK ABSORBER ... 50
ATTACHMENT FRONT ... 51
ATTACHMENT REAR ... 52
FRONT STABILISER ... 53
REAR STABILISER ... 54
WHEEL BEARING ... 55
STEERING ... 56
STEERING PARTS ... 56
BRAKE ... 57
FRONT BRAKE ... 57
REAR BRAKE ... 58
CALIPER ... 59
BRAKE SERVO/BRAKE MASTER CYL. ... 60
BRAKE VALVE ... 61
BRAKE HOSES ... 62
BRAKE CABLE ... 63
ELECTRIC ... 64
INTERIOR ... 64
FUEL TANK SENDING UNIT ... 65
Zündschloss ... 66
ENGINE ELECTRICAL SYSTEMS ... 67
SENSORS/SWITCHES ... 67
DISTRIBUTOR ... 68
IGNITION PARTS ... 69
AGGREGATS ... 70
WIPERS ... 71
WIPERS ... 71
LITERATURE ... 72

Beleuchtung/Lightning Alfetta

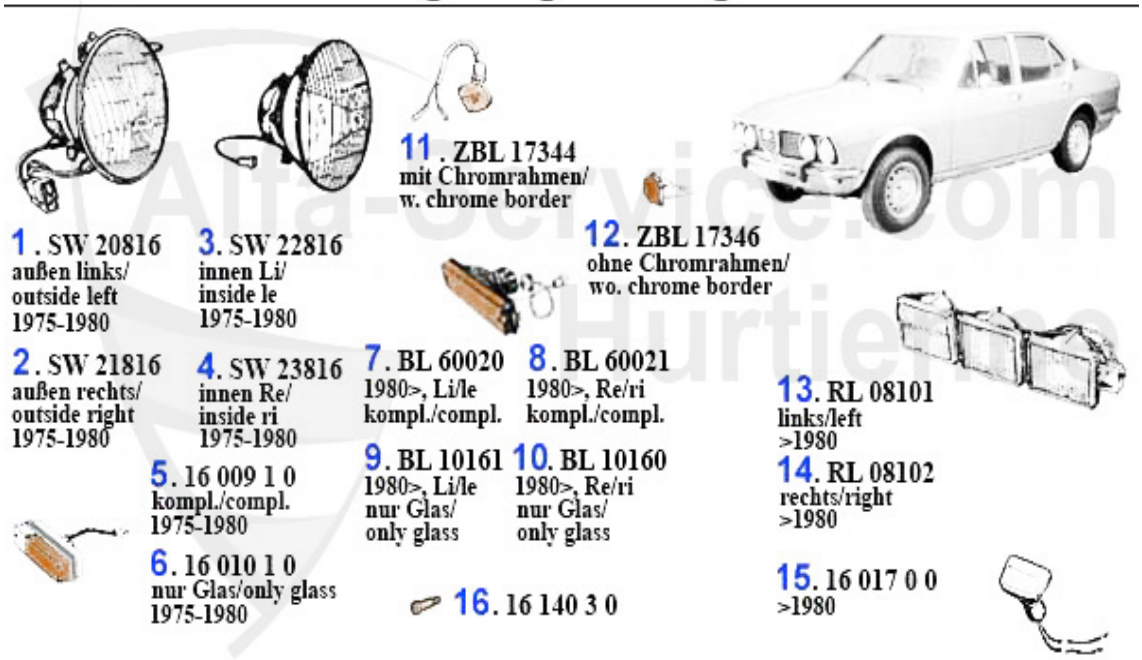

1	SW20816	OUTER HEADLAMP ALFETTA BERLINA 1974> RIGHT ALFETTA COUP• ALL MODELS WITHOUT PARKING LIGHT	70.78 EUR
2	SW21816	OUTER HEADLAMP ALFETTA BERLINA 1974> RIGHT ALFETTA COUP• ALL MODELS LEFT	70.78 EUR
4	SW23816	OE.60703450 HEAD LAMP ALFETTA BERLINA 1974> RIGHT ALFETTA COUPE LEFT ALL MODELS	70.78 EUR
4	SW22816	HIGH-BEAM HEADLAMP GTV 116 right	70.78 EUR
5	16 009 1 0	INDICATOR LAMP FRONT GIULIA NUOVA	59.00 EUR
6	16 010 1 0	INDICATOR LAMP Giulia Nuova	19.50 EUR
7	BL60020	INDICATOR LAMP LEFT GTV6 (116) 2.SERIES	***
8	BL60021	INDICATOR LAMP RIGHT GTV6 (116) 2.SERIES	***
9	BL10161	LEFT FLASHER GLASS ALFETTA, GTV/6 2. SERIES 1980>	22.55 EUR
10	BL10160	RIGHT FLASHER GLASS ALFETTA, GTV/6 2. SERIES 1980>	22.55 EUR
11	ZBL17344	SIDE DIRECTION INDICATOR ALFETTA/GTV (116) >75 WITH CHROME FRAME	29.70 EUR
12	ZBL17346	FRONT FENDER SIDE LAMP ALFETTA/GTV (116) YEAR 75>,SUD SPRINT(901/2)	***
13	RL08101	REAR LAMP LEFT ALFETTA 1. series	***
14	RL08102	TAILLAMP ALFETTA RIGHT 1. SERIES	***
15	16 017 0 0	LICENSE PLATE LIGHT, std. 1970-82	33.50 EUR
16	16 140 3 0	SCREW INDICATOR LENSE yellow - SPIDER	2.70 EUR

Alfetta > BODY > REPAIR PANELS

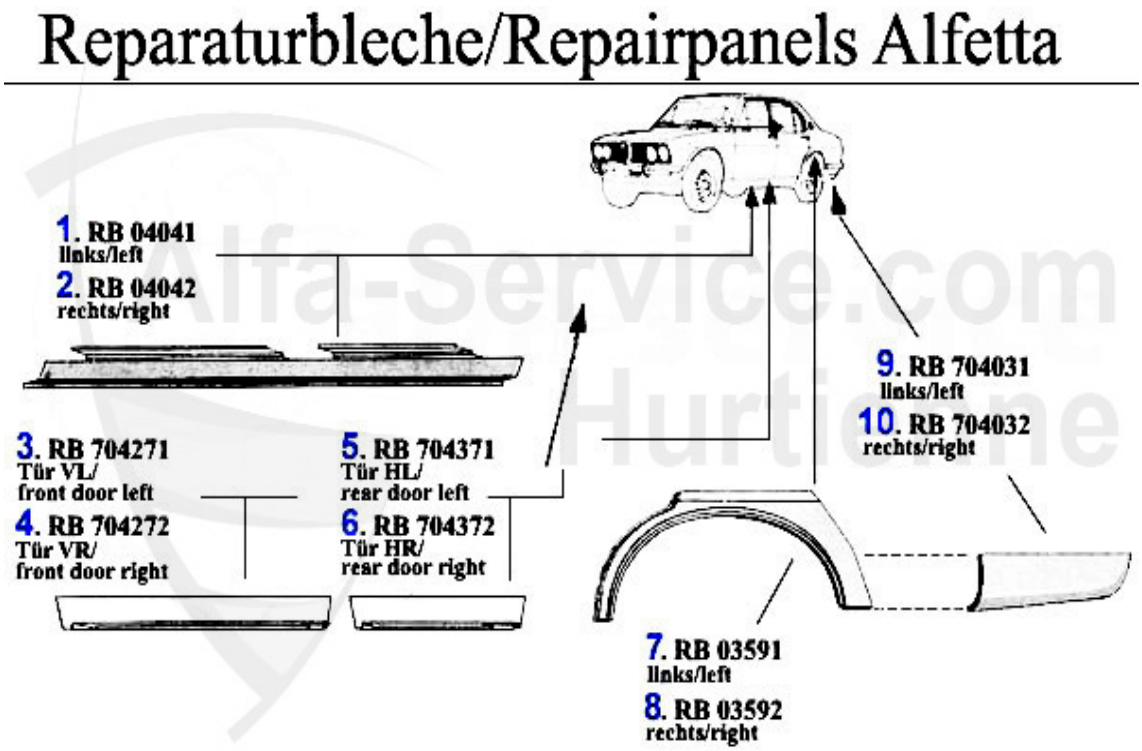

1	RB04041	ROCKER PANEL LEFT ALFETTA	49.24 EUR
2	RB04042	ROCKER PANEL RIGHT ALFETTA	49.24 EUR
3	RB704272	REPAIR PANEL FRONT RIGHT ALFETTA	22.05 EUR
3	RB704271	REPAIR PANEL FRONT DOOR LEFT ALFETTA	22.05 EUR
5	RB704371	REPAIR PANEL REAR DOOR LEFT ALFETTA	22.05 EUR
6	RB704372	REPAIR PANEL REAR DOOR RIGHT ALFETTA	22.05 EUR
7	RB03591	WHEEL HOUSING ALFETTA REAR LEFT	***
8	RB03592	ALFETTA WHEELHOUSE REAR WING REPAIR PANEL,RIGHT	***
9	RB704031	CONNECTION PLATE LEFT ALFETTA	***
10	RB704032	ALFETTA REAR WING REPAIR PANEL RIGHT	17.85 EUR

Alfetta > ENGINE > V-BELTS

Keilriemen/V-Belt Alfetta

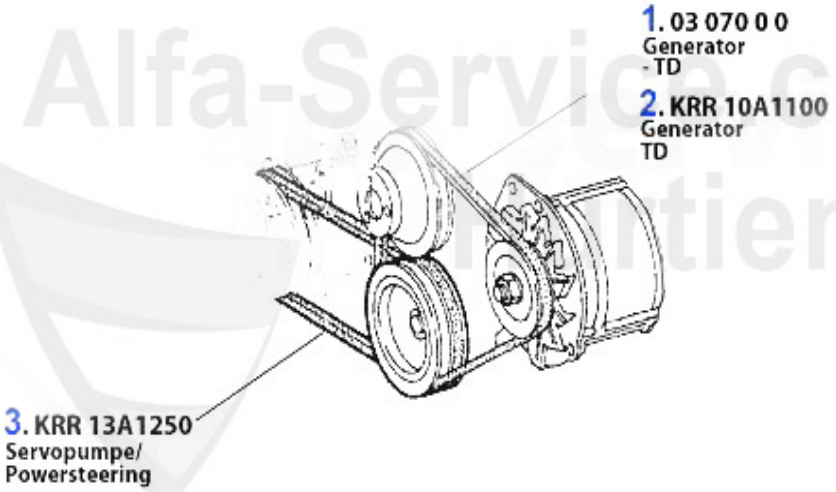

1	03 070 0 0	V-BELT 9.5X825 (SPIDER, GT)	8.70 EUR
1	KR10A1100	V-BELT 9.5X100 ALFETTA,75,90 2.4 TD	9.95 EUR
2	KR13A1250	V-BELT 12.5X1250 ALFETTA,GIULIETTA,GTV (116) 4 CYL. CLIMACOMPRESSOR	17.39 EUR

Alfetta > ENGINE > ENGINE BLOCK > ENGINE BLOCK

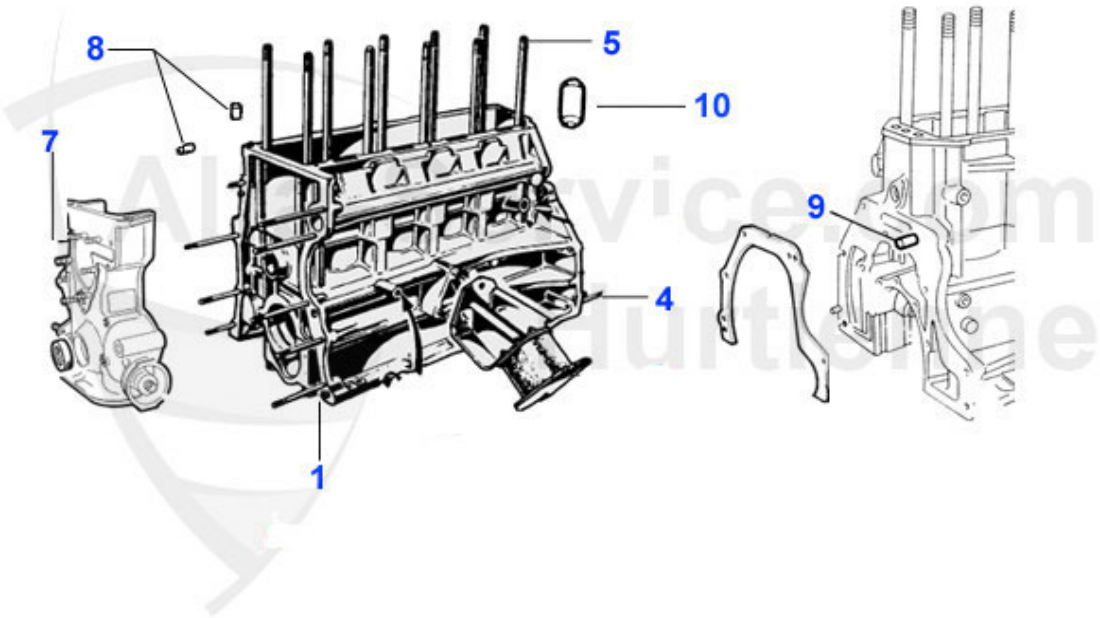

1	03 228 0 0	1600 ENGINE MOUNT used Type 116 with oilfilter cartridge	***
1	03 232 0 0	2000 ENGINE MOUNT used type 116 with oilfilter cartridge	345.00 EUR
1	03 230 0 0	1800 ENGINE BLOCK USED TYPE 116 WITH OILFILTER CARTRIDGE	215.00 EUR
2	ML880721	OE. 60723675 ENGINE MOUNT LEFT 116 4-CYL.	49.00 EUR
3	ML875461	OE. 60521085 ENGINE MOUNT RIGHT 116 4-CYL.	49.00 EUR
4	03 143 0 0	STUD ENGINE GEARBOX Type 105/116	5.60 EUR
5	03 236 0 0	1600, 1750, 2000 (M 12) STUD ENGINE- CYLINDER HEAD Alfetta: 1.6,1.8,2.0	29.90 EUR
7	03 272 0 0	CONTROL CASING COVER, USED PLEASE INDICATE TYPE	59.30 EUR
8	03 165 0 0	DOWEL BOLT BLOCK-HEAD	***
9	03 198 0 0	OE. 10842220 DOWEL	1.59 EUR
10	03 166 0 0	DOWEL FOR OIL RING CYLINDERHEAD	***

Alfetta > ENGINE > ENGINE BLOCK > PISTON/LINER

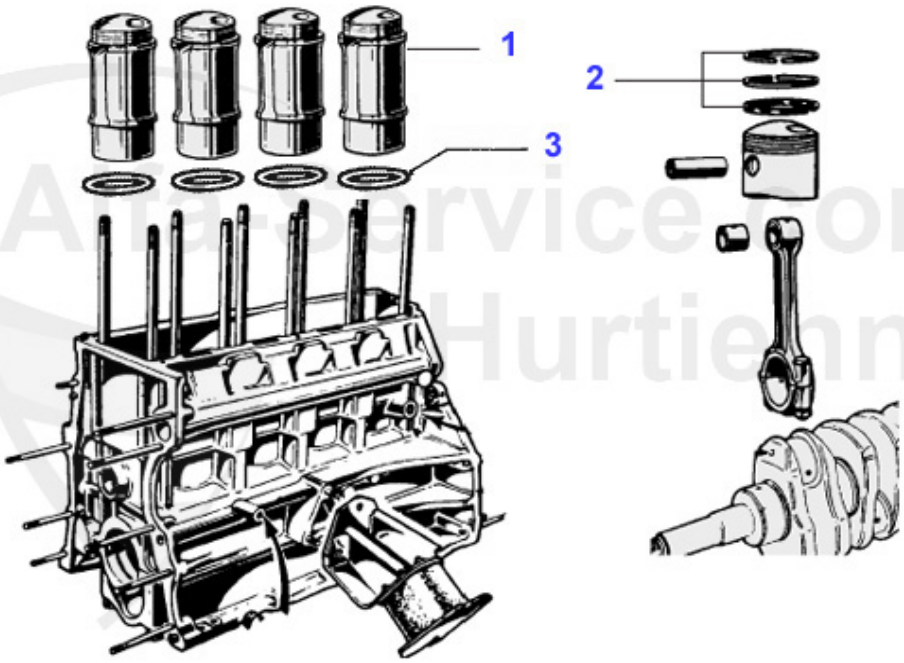

1	03 210 0 0	PISTON + LINER SET 2000, ALFETTA MOTRONIC, 105 MODELS 2000 >1990	***
1	03 288 0 0	LINER FOR PISTON 1600 78mm	99.50 EUR
1	03 281 0 0	LINER 2000 84mm d.	89.90 EUR
1	03 002 0 0	PISTON + LINER SET 1600, 4 pieces	539.00 EUR
1	03 003 0 0	PISTON + LINER SET 1750 3002 001 4 pieces	539.00 EUR
1	03 004 0 0	PISTON + LINER SET 2000 3003 000 4 pieces	539.00 EUR
1	03 289 0 0	LINER 1750 80 mm d.	99.50 EUR
1	03 140 0 0	PISTON + LINER SET 2000 HIGH COMPRESSION (10.4:1) 3004 600	559.00 EUR
2	03 293 0 0	PISTON RING SET 2000 1.5/1.75/4mm (FOR 4 PISTONS)	141.50 EUR
2	03 091 0 0	PISTON RING SET 1600 1.5/1.75/4.0mm FOR 4 PISTONS)	141.50 EUR
2	03 092 0 0	PISTON RING SET 2000 1.5/1.75/4.5mm (FOR 4 PISTONS)	141.50 EUR
2	03 223 0 0	PISTON RING SET 1750 1.5/1.75/3.5mm (FOR 4 PISTONS)	141.50 EUR
2	03 224 0 0	PISTON RING SET 1750 1.5/1.75/4.0mm (FOR 4 PISTONS)	141.50 EUR
2	03 271 0 0	PISTON RING SET 1600 1.5/1.75/3.5mm (FOR 4 PISTONS)	141.50 EUR
3	03 088 0 0	LINER RUBBER SEAL 1600/1750	2.30 EUR
3	03 090 0 0	LINER RUBBER SEAL 2000	2.30 EUR

Alfetta > ENGINE > ENGINE BLOCK > CON ROD/BEARING

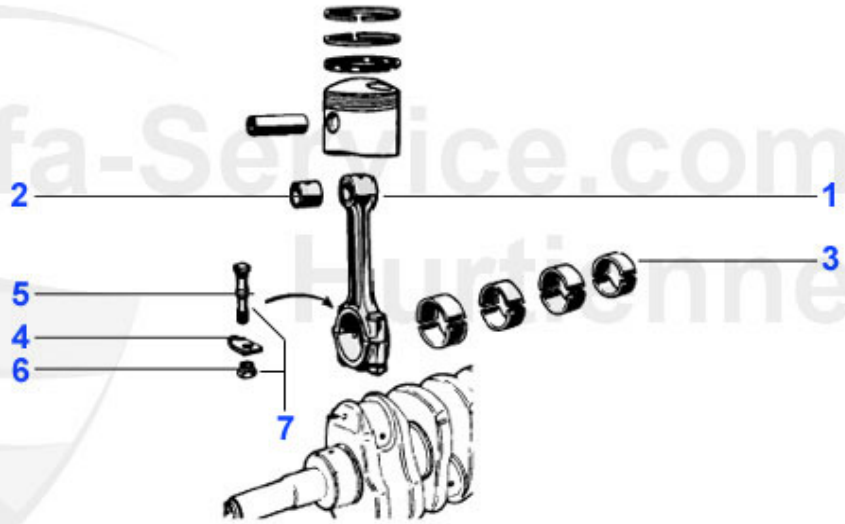

1	03 013 0 0	1600 CONNECTING ROD USED PLEASE ADVISE WEIGHT	59.00 EUR
1	03 014 0 0	1750 CONNECTING ROD USED PLEASE ADVISE WEIGHT	59.00 EUR
1	03 015 0 0	2000 CONNECTING ROD USED PLEASE ADVISE WEIGHT	59.00 EUR
1	03 286 0 0	DRIVING ROD SET 2000	238.00 EUR
2	03 112 0 0	1600 - 2000 BUSHING CONNECTING ROD	12.50 EUR
3	03 080 0 0	BIG END BEARINGS 1600-2000 0.40	50.00 EUR
3	03 018 0 0	BIG END BEARINGS STANDARD	48.00 EUR
3	03 020 0 0	BIG END BEARINGS,10 OVERSIZE 1600-2000	54.00 EUR
3	03 022 0 0	BIG END BEARINGS .20 O/SIZE (1600 - 2000)	59.00 EUR
3	03 078 0 0	BIG END BEARINGS 0.30 (1600 - 2000)	79.00 EUR
4	03 139 0 0	1600, 1750 LOCK TAB FOR ROD NUT	1.30 EUR
5	03 105 0 0	CONROD BOLT 2000	***
6	03 108 0 0	1600, 2000 ROD NUT	4.25 EUR
7	03 103 0 0	BIG END BEARING BOLT KIT WITH NUT 1750,2000.ALSO APPLICABLE FOR 1600	189.00 EUR

Alfetta > ENGINE > ENGINE BLOCK > CRANKSHAFT

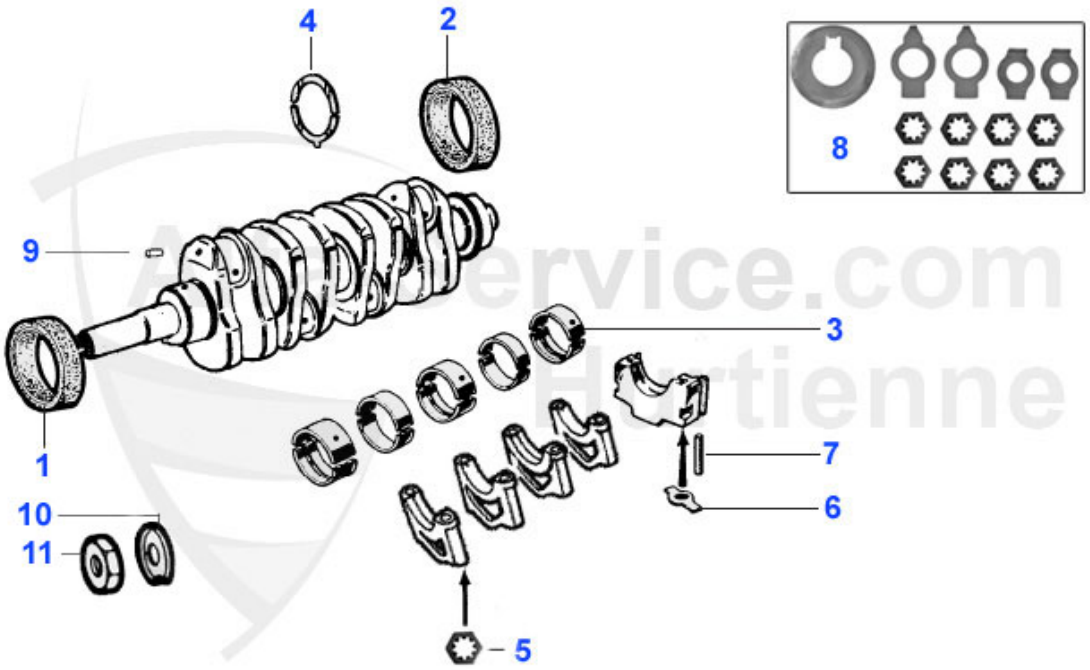

1	02 022 0 0	OIL SEAL (35/50/10) CRANKSHAFT FRONT	7.95 EUR
2	02 023 0 0	OIL SEAL (82/105/12) CRANKSHAFT REAR 105 MODELS >1989, ALFETTA, GIULIETTA, 75, 90, GTV (116), MONTREAL	18.30 EUR
3	03 011 0 0	1300 - 2000 MAIN BEARING 0.20	53.00 EUR
3	03 009 0 0	1300 - 2000 MAIN BEARING SET STD.	47.50 EUR
3	03 075 0 0	1300 - 2000 MAIN BEARING 0.30	71.40 EUR
3	03 076 0 0	MAIN BEARING 1300-2000 0.40	71.40 EUR
3	03 010 0 0	MAIN BEARINGS 1300 - 2000 0,10 OVERSIZE	53.00 EUR
4	03 081 0 0	OE. 60743567 THRUST WASHER STD.	18.00 EUR
5	03 270 0 0	LOCKING PLATE 1/2/3/4 main bearing set	1.70 EUR
6	03 149 0 0	LOCKING PLATE 5th Main Bearing 5th main bearing set	1.50 EUR
7	03 158 0 0	RUBBERBAND 5th MAIN BEARING	***
8	03 273 0 0	LOCKING PLATE SET main bearing set, cam shaft, pulley in front	19.50 EUR
9	03 096 0 0	CRANK SHAFT dowel plug 6,25 mm	1.95 EUR
9	03 095 0 0	CRANK SHAFT dowel plug 6 mm	1.95 EUR
9	03 115 0 0	Alustopfen Kurbelwelle 6mm kurz 6/7/12mm	1.95 EUR
10	03 097 0 0	TAB WASHER CRANKSHAFT/PULLEY 1300-2000	5.20 EUR
11	03 094 0 0	NUT FOR PULLEY	17.30 EUR

Alfetta > ENGINE > ENGINE BLOCK > ENGINE MOUNT

Motorlager/Engine Mount Alfetta

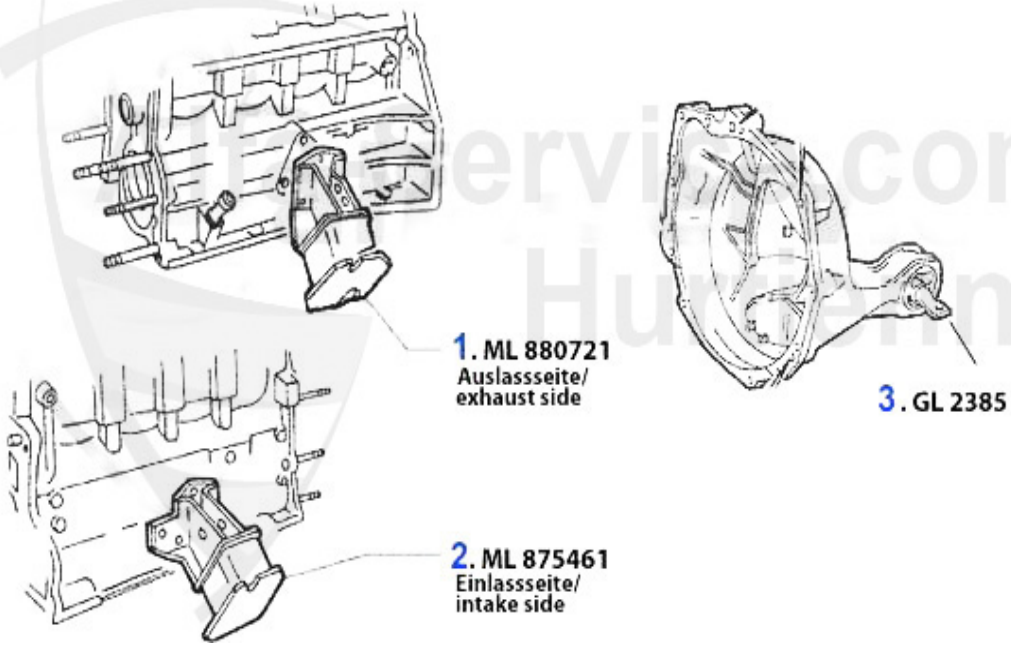

1	ML880721	OE. 60723675 ENGINE MOUNT LEFT 116 4-CYL.	49.00 EUR
2	ML875461	OE. 60521085 ENGINE MOUNT RIGHT 116 4-CYL.	49.00 EUR
3	GL2385	OE. 60522199 ENGINE MOUNT REAR 4 CYL. (62mm)	32.50 EUR

Kraftstoffpumpe/Fuel Pump Alfetta

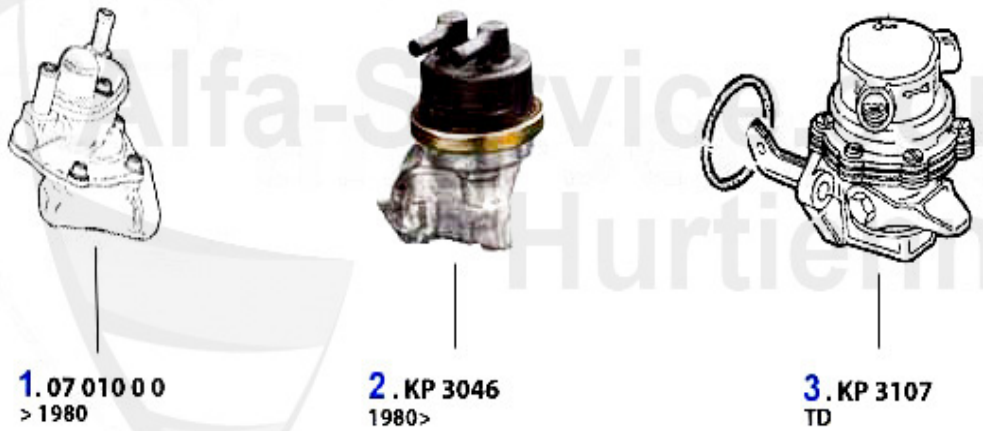

1	07 010 0 0	FUEL PUMP 1300 - 2000 105 carburetor model ALFETTA (76-80)/GIULIETTA 1.3 (80-83) 75 1.6, 1.8, 2.0 (88-89)	35.85 EUR
2	KP3046	FUEL PUMP (116) CARB. 1980>	35.39 EUR
3	KP3107	FUEL PUMP 6,75,90,ALFETTA TD	80.33 EUR

Ansaugbrücke/Intake Manifold Alfetta (116)

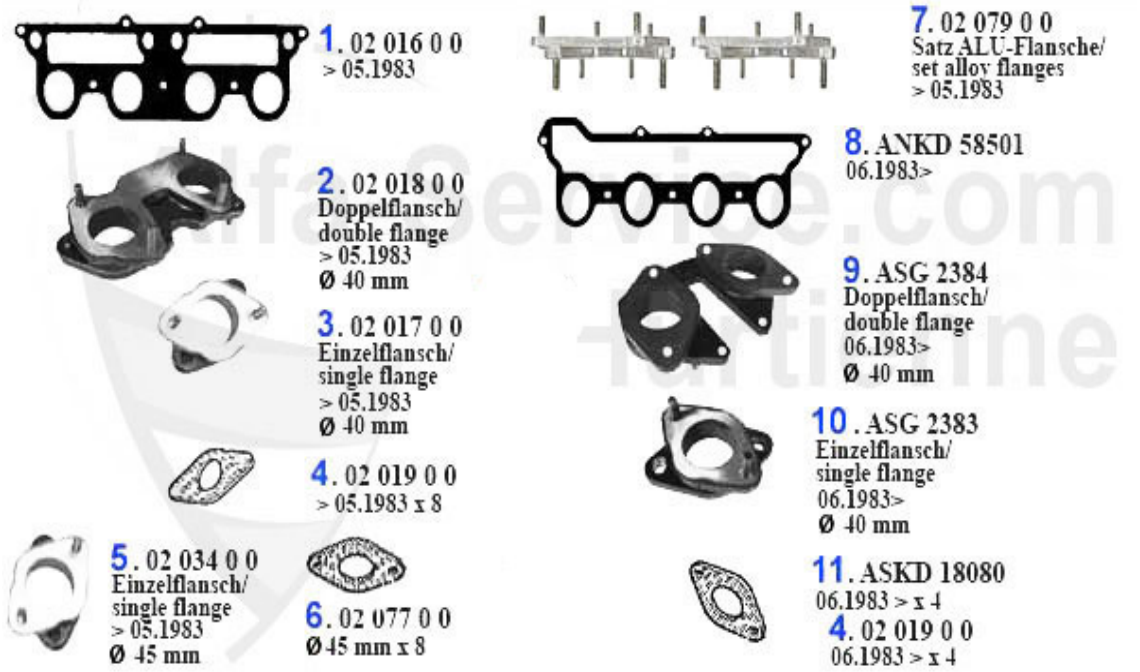

1	02 016 0 0	INTAKE MANIFOLD GASKET CARBURETTOR MODELS 1600-2000	10.50 EUR
2	02 018 0 0	DOUBLE CARBURETOR MOUNT 40mm	***
3	02 017 0 0	SINGLE CARBURETTOR MOUNT 40mm	23.49 EUR
3	02 084 0 0	CARBURATOR MOUNT KIT (4 PCS) ALUMINIUM 40MM TYPE 105,115,116 UNTIL 05.1983	145.00 EUR
4	02 019 0 0	PAPER GASKET CARBURETTOR MOUNT 40mm	0.87 EUR
5	02 034 0 0	CARBURETOR MOUNT 45mm	52.37 EUR
6	02 077 0 0	PAPER GASKET CARBURETTOR MOUNT 45mm	1.95 EUR
7	02 079 0 0	SOLID CARBURETTOR MOUNTS ALUMINIUM 40mm	189.00 EUR
8	ANKD58501	Ansaugbrückendichtung Alfetta/Giuli etta,GT/V (116),Spider'90,75,90 Vergaser Neuer Preis!!	17.15 EUR
9	ASG2384	DOUBLE INTAKE RUBBER 116 4 CYL. 06.83>, Spider 1.6 90-93	70.21 EUR
10	ASG2383	SINGLE INTAKE RUBBER 116 4 CYL. 06.83>, SPIDER 1.6 90-93	32.50 EUR
11	ASKD18080	INFERIOR PAPER GASKET FOR INTAKE RUBBER 116	1.79 EUR

Alfetta > ENGINE > ENGINE GASKETS > GASKETS ENGINE

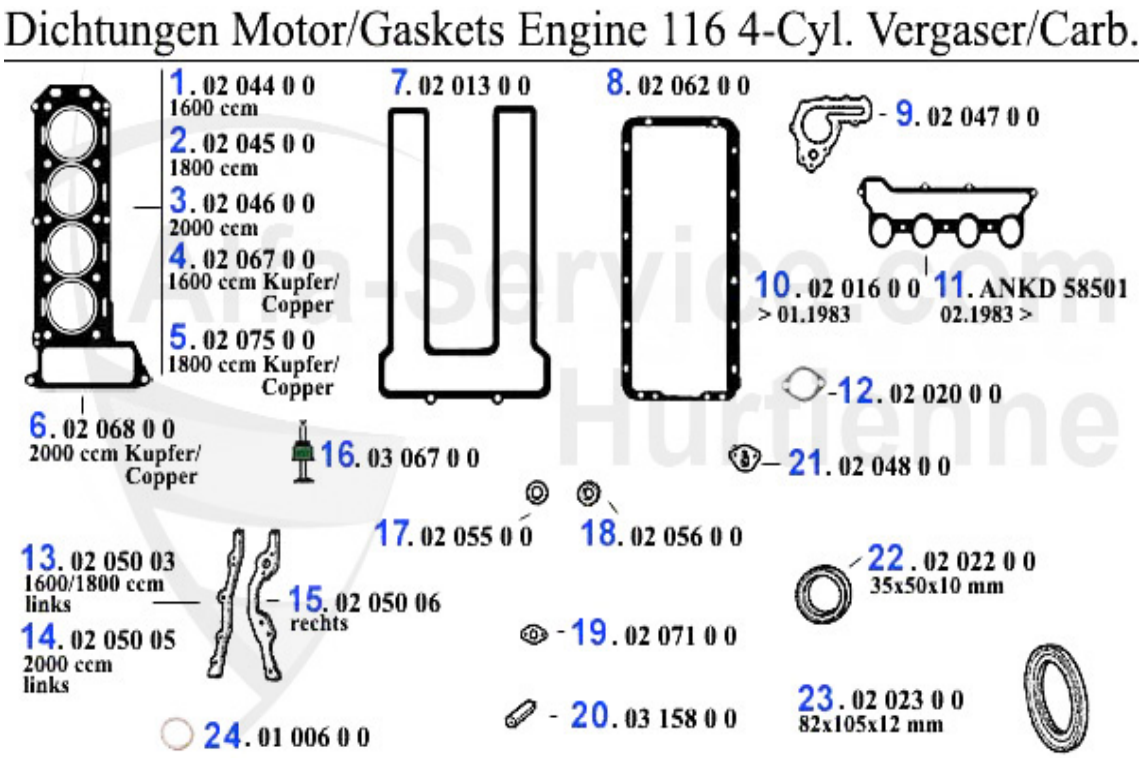

1	02 044 0 0	CYLINDER HEAD GASKET 1600 REINZ	41.50 EUR
2	02 045 0 0	CYLINDER HEAD GASKET 1750 REINZ ALFETTA, GIULIETTA, GTV (116), 75 1800 >1982	44.90 EUR
4	02 046 0 0	CYLINDER HEAD GASKET 2000 REINZ	55.50 EUR
5	02 075 0 0	COPPER CYLINDER HEAD GASKET 1750	***
6	02 068 0 0	COPPER CYLINDER HEAD GASKET 2000	61.55 EUR
7	02 036 0 0	REINZ CAM COVER GASKET GIULIETTA,GTV4, 75,90	25.89 EUR
7	02 013 0 0	CAM COVER GASKET WITH SILICON STRIP 105, ALFETTA, GIULITTA, GTV(116) 75,90 div. 4-cylinders	22.90 EUR
8	02 062 0 0	UPPER OIL PAN GASKET WITH METAL	29.50 EUR
9	02 047 0 0	WATER PUMP GASKET	2.80 EUR
10	02 016 0 0	INTAKE MANIFOLD GASKET CARBURETTOR MODELS 1600-2000	10.50 EUR
11	ANKD58501	Ansaugbrückendichtung Alfetta/Giuli etta,GT/V (116),Spider'90,75,90 Vergaser Neuer Preis!!	17.15 EUR
12	02 020 0 0	GASKET EXHAUST MANIFOLD-CYLINDER HEAD	2.50 EUR
13	02 050 0 3	TIMING COVER GASKET 1600 LEFT MODELS WITH SPIN-ON OIL FILTER	4.40 EUR
14	02 050 0 5	TIMING COVER GASKET 105 2000, LEFT, ALFETTA, GIULIETTA, GTV(116), 75 1600/1800	4.40 EUR
15	02 050 0 6	TIMING COVER GASKET 1300-2000 RIGHT	4.90 EUR
16	03 067 0 0	VALVE SEAL REINFORCED INLET/BLACK	4.80 EUR
17	02 055 0 0	ALUMINIUM WASHER	1.50 EUR
18	02 056 0 0	FIBER WASHER	1.30 EUR
19	02 071 0 0	GASKET TACHOMETER DRIVE	1.84 EUR
20	03 158 0 0	RUBBERBAND 5th MAIN BEARING	***
21	02 048 0 0	FUEL PUMP GASKET	2.18 EUR
22	02 022 0 0	OIL SEAL (35/50/10) CRANKSHAFT FRONT	7.95 EUR
23	02 023 0 0	OIL SEAL (82/105/12) CRANKSHAFT REAR 105 MODELS >1989, ALFETTA, GIULIETTA, 75, 90, GTV (116), MONTREAL	18.30 EUR
24	01 006 0 0	COPPER WASHER SUMP PLUG	1.50 EUR

Kopfdichtsatz/Head Set Giulietta (116) Vergaser/Carb.

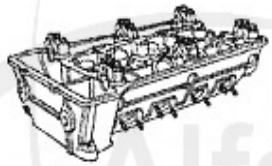

Achtung/Attention:
Dichtsatz ohne Kopfdichtung, bitte separat bestellen!/Headset without HEADGASKET, please order seperate!

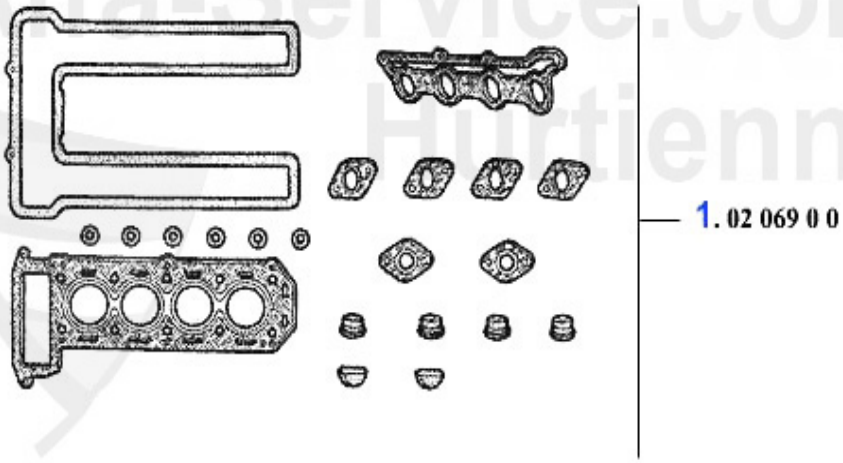

Alfa-Service.com Hurtienne

1	02 069 0 0	HEAD GASKET SET 1300-2000 WITHOUT HEAD GASKET ALL 105/116 CARBURETTOR MODELS	45.01 EUR

Alfetta > ENGINE > ENGINE GASKETS > FULL SET

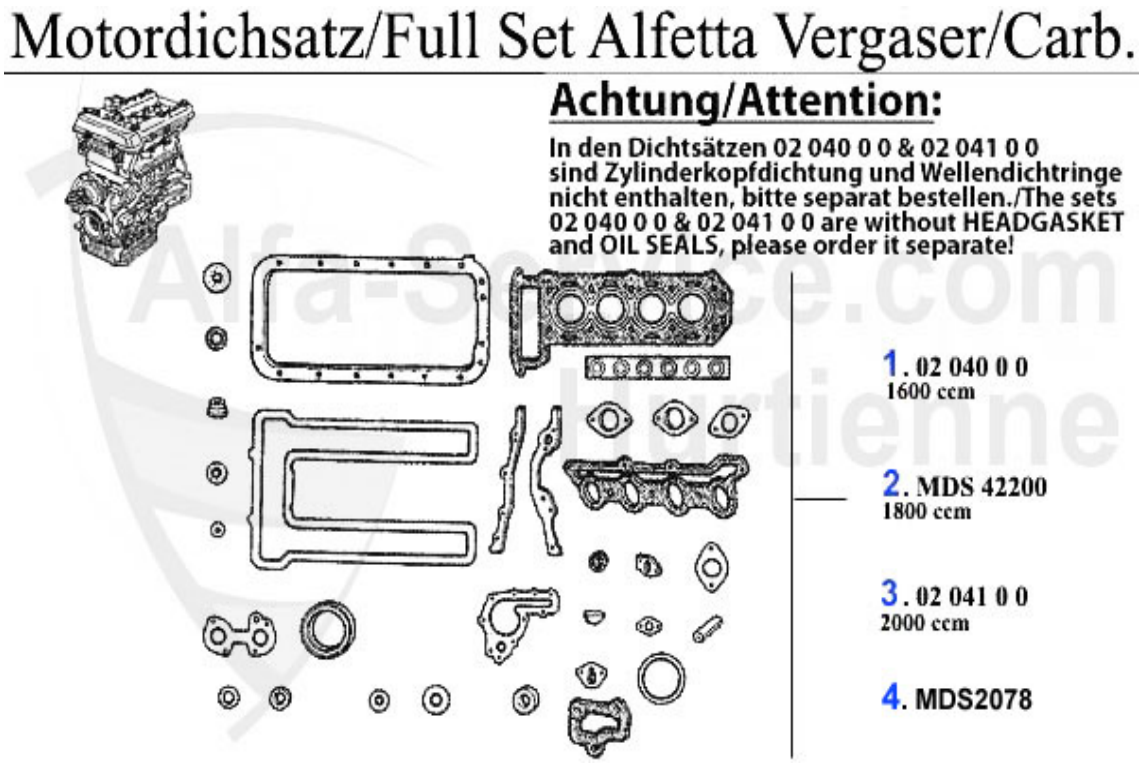

1	02 040 0 0	ENGINE GASKET SET 1600 WITHOUT HEAD GASKET AND OIL SEALS	73.49 EUR
2	MDS42200	ENGINE GASKET SET ALFETTA,GIULIETTA, 75,90 1.8 85 & 90 KW 79-89	152.86 EUR
3	02 041 0 0	ENGINE GASKET SET 2000 WITHOUT HEAD GASKET AND OIL SEALS	73.49 EUR
4	MDS16100	ENGINE GASKET SET ALFETTA,GIULIETTA,75 1.6, 1.8 81 KW COMPLETE 83-89	204.99 EUR
4	MDS2078	ENGINE GASKET SET 75/90 2.0/ALFETTA 2.0/ GIULIETTA/GTV 2.0 WITH HEAD GASKET (CARBURATOR MODELS)	190.00 EUR

Alfetta > ENGINE > COOLING SYSTEM > HOSES

1	KWS24262	LOWER RADIATOR HOSE UP TO 87'	20.72 EUR
2	KWS30559	Lower radiator hose Alfetta 2. series from 82> 1,8/2,0 Giulietta 79>	22.05 EUR
3	KWS30558	Kühlwasserschlauch unten Alfetta 2. Serie 1.6 Bj. 82>/Giulietta 1.Serie Bj. >3.79	22.05 EUR
4	KWS30560	UPPER RADIATOR HOSE ALFETTA 2. series 82>	18.36 EUR
5	KWS24264	UPPER RADIATOR HOSE, 1.SERIES UP TO12/81	17.96 EUR
6	KWS30914	HEATER HOSE RETURN ALFETTA (116)	12.83 EUR
7	KWS17641	HEATER HOSE INTAKE ALFETTA (116)	***
8	KWS16845	WATER HOSE WATERPUMP/THERMOSTAT FOR ALFETTA/GIULIETTA/GTV4 116	12.41 EUR

Alfetta > ENGINE > COOLING SYSTEM > RADIATOR > 1.6

Kühler/Radiator Alfetta 1.6

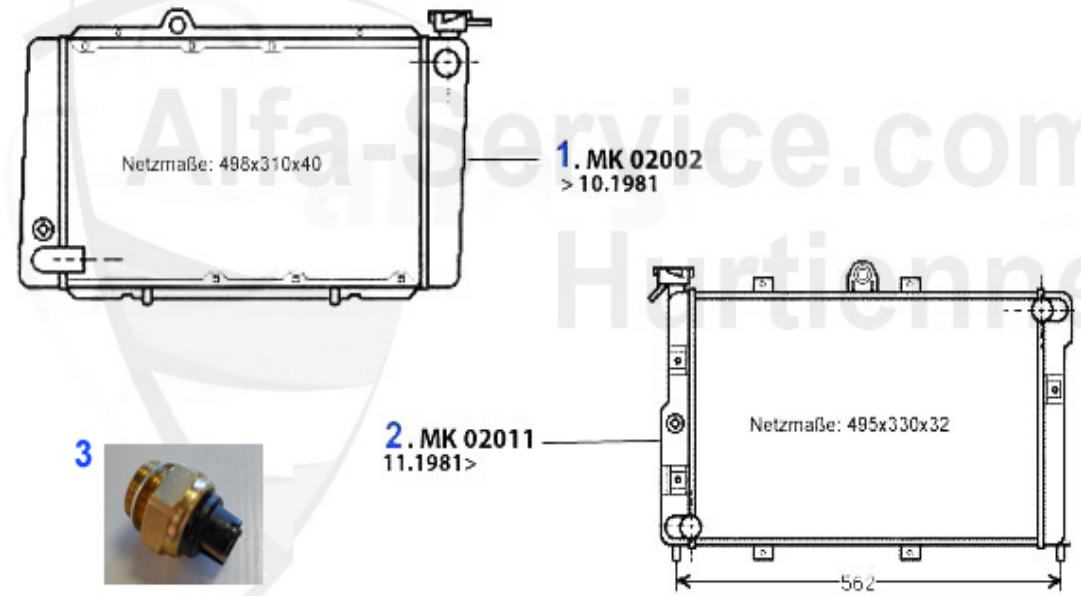

1	MK02002	OE.60726026 RADIATOR ALFETTA 1.6/1.8 75-84,2.0 77-84,GTV(116) 2.0,IMPORTANT: PAY ATTENTION TO RADIATOR-BLOG SIZE!!!	399.00 EUR
2	MK02011	Motorkühler Alfetta 1.6 Bj. 75-84 G iulietta 1.3/1.6 Bj. 10.77> ACHTUNG: auf Netzmaße achten	***
3	14 104 3 0	THERMOSWITCH for fan motor	14.90 EUR

Alfetta > ENGINE > COOLING SYSTEM > RADIATOR > 1.8

Kühler/Radiator Alfetta 1.8

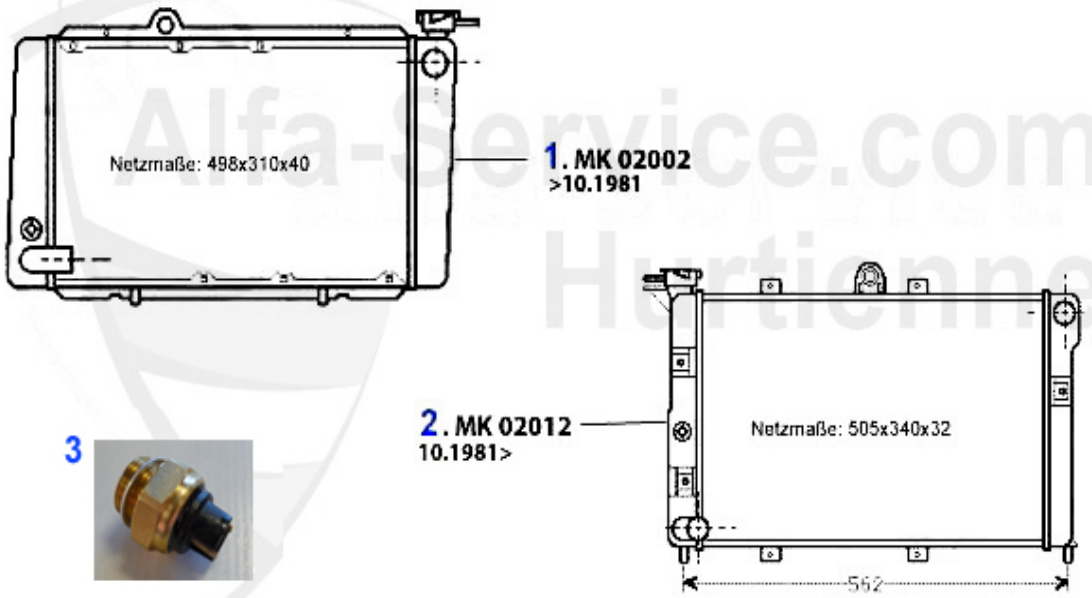

1	MK02002	OE.60726026 RADIATOR ALFETTA 1.6/1.8 75-84,2.0 77-84,GTV(116) 2.0,IMPORTANT: PAY ATTENTION TO RADIATOR-BLOG SIZE!!!	399.00 EUR
2	MK02012	OE.60719302 RADIATOR ALFETTA/ GIULETTA 1.8/2.0-IMPORTANT:PLEASE CHECK WEB DIMENSIONS	***
3	14 104 3 0	THERMOSWITCH for fan motor	14.90 EUR

Alfetta > ENGINE > COOLING SYSTEM > RADIATOR > 2.0

Kühler/Radiator Alfetta 2.0

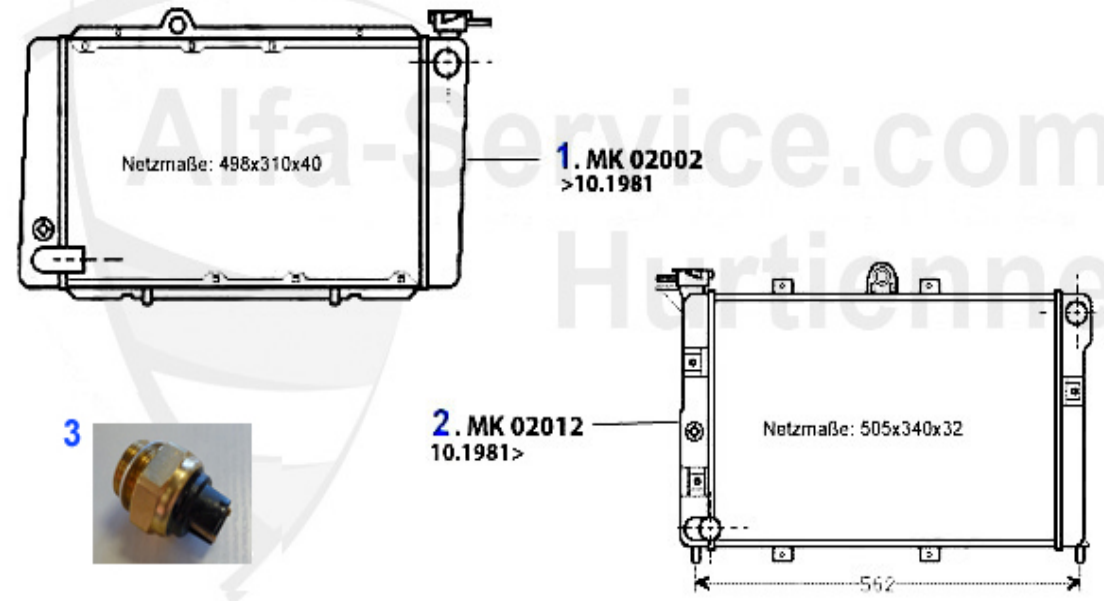

1	MK02002	OE.60726026 RADIATOR ALFETTA 1.6/1.8 75-84,2.0 77-84,GTV(116) 2.0,IMPORTANT: PAY ATTENTION TO RADIATOR-BLOG SIZE!!!	399.00 EUR
2	MK02012	OE.60719302 RADIATOR ALFETTA/ GIULETTA 1.8/2.0-IMPORTANT:PLEASE CHECK WEB DIMENSIONS	***
3	14 104 3 0	THERMOSWITCH for fan motor	14.90 EUR

Kühler/Radiator Alfetta 2.0 TD

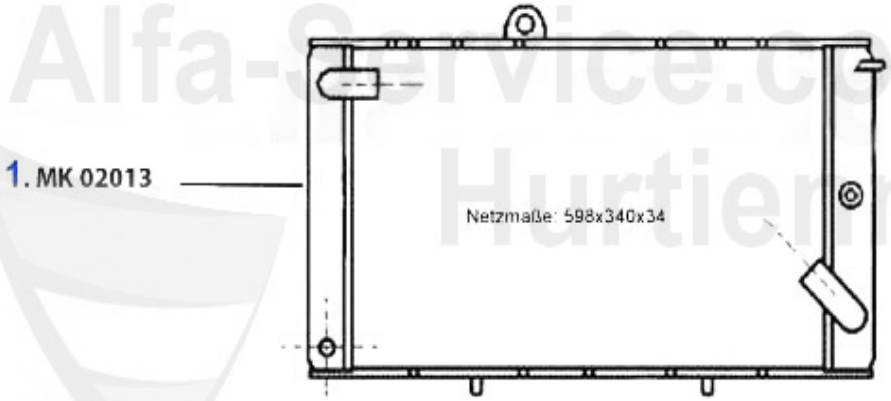

1	MK02013	RADIATOR ALFETTA 2.0 TD	470.87 EUR

Kühler/Radiator Alfetta 2.4 TD

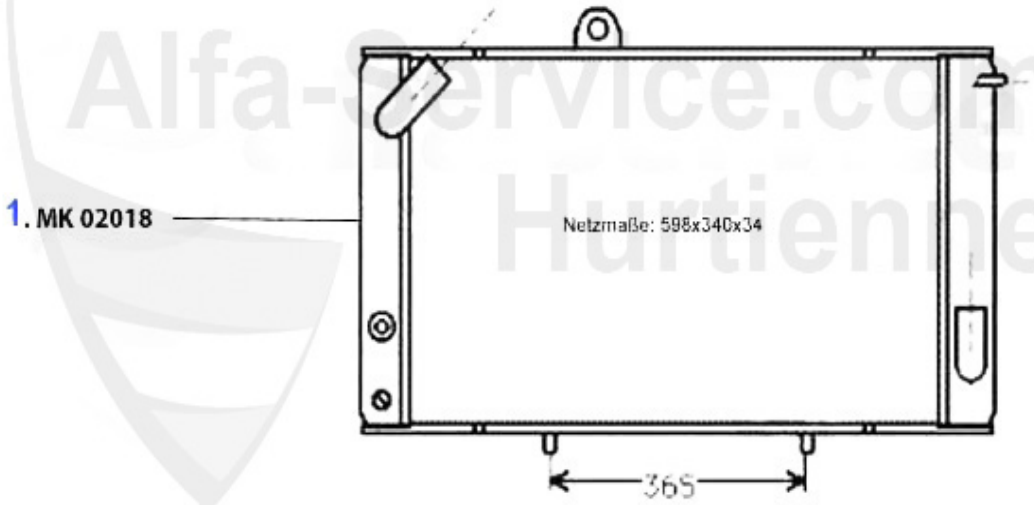

1	MK02018	RADIATOR ALFETTA 2.4 TD	470.87 EUR

Thermostat Alfetta 1.6

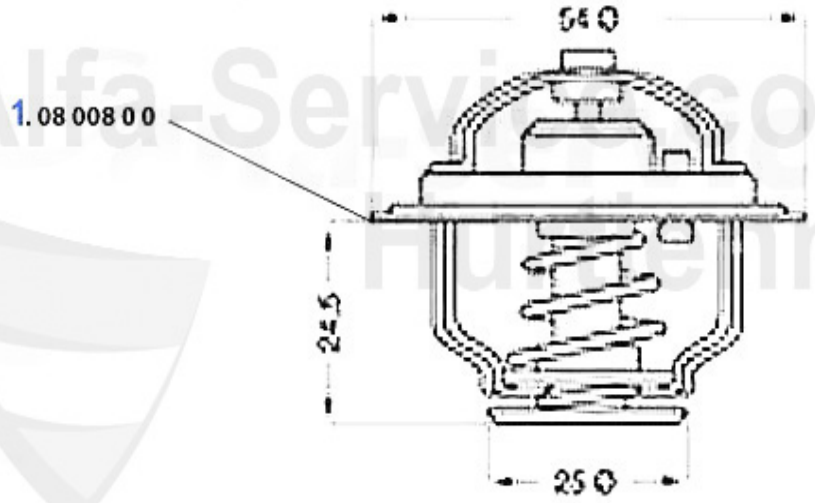

1	08 008 0 0	1300 - 2000 THERMOSTAT, PLUG IN VERSION	21.00 EUR

Thermostat Alfetta 1.8

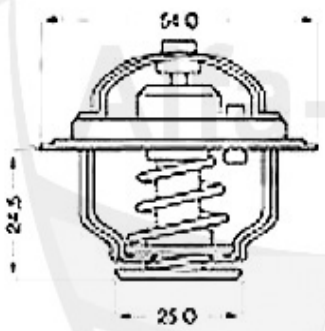

1. 08 008 0 0

2. 08 009 0 0

1	08 008 0 0	1300 - 2000 THERMOSTAT, PLUG IN VERSION	21.00 EUR
2	08 009 0 0	2000 THERMOSTAT with housing (carburetor model)	31.29 EUR

Thermostat Alfetta 2.0

1	08 009 0 0	2000 THERMOSTAT with housing (carburetor model)	31.29 EUR

Thermostat Alfetta 2.0 TD

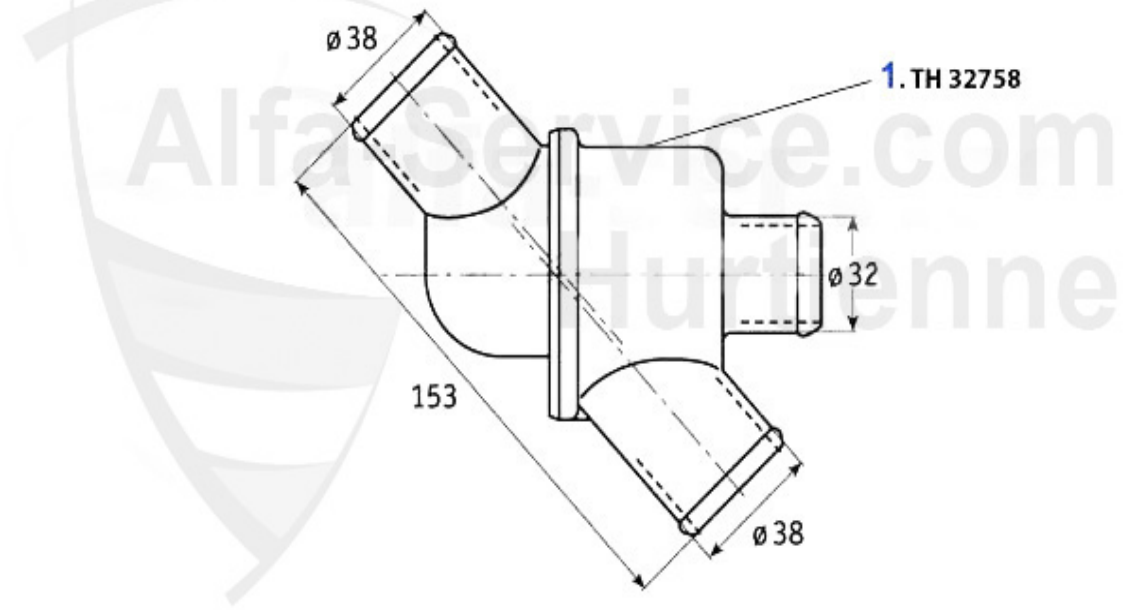

1	TH32758	OE. 60732758 THERMOSTAT Alfetta 2.0/2.4 TD	94.89 EUR

Thermostat Alfetta 2.4 TD

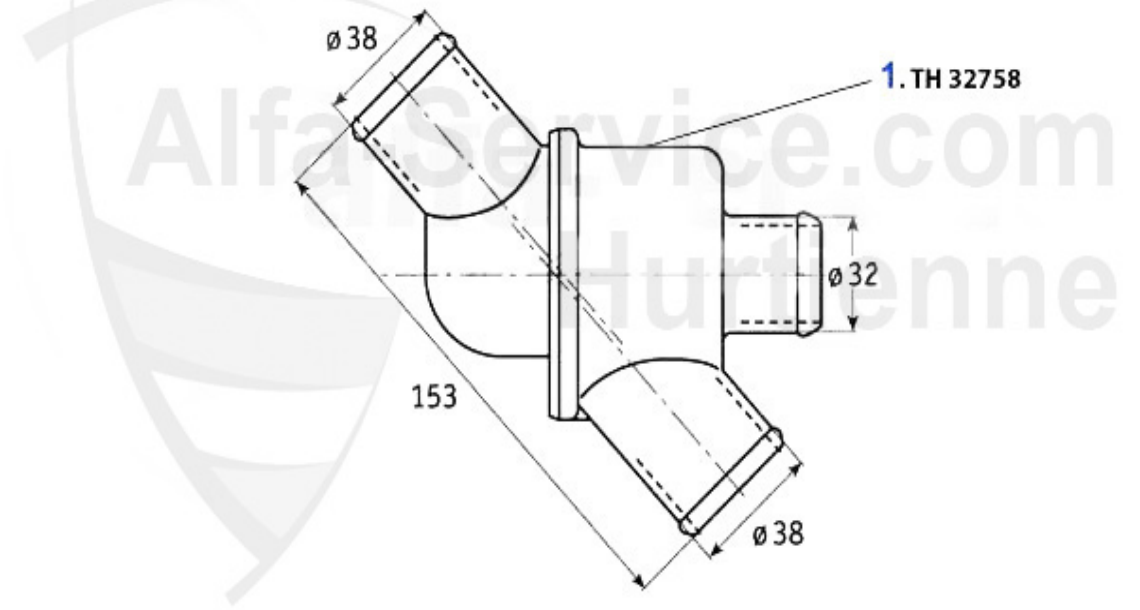

1	TH32758	OE. 60732758 THERMOSTAT Alfetta 2.0/2.4 TD	94.89 EUR

Wasserpumpe/Waterpump Alfetta 1.6

1	WP02510	WATER PUMP ALFETTA/GIULIETTA/GTV (116), MECHANICAL TACHOMETER 1.6/1.8/2.0 WITH BELT PULLEY	65.65 EUR
2	WP00510	OE. 60730469/60523035 WATERPUMP 116 w. PULLEY, wo. CONNECTION f. REV METER	98.48 EUR
3	WP00210	WATER PUMP ALFETTA,GIULIETTA,GTV (116) 1.6/1.8/TURBO/2.0,75,90 1.6/1.8/2.0/IE/ TS	71.75 EUR

Wasserpumpe/Waterpump Alfetta 1.8

1	WP02510	WATER PUMP ALFETTA/GIULIETTA/GTV (116), MECHANICAL TACHOMETER 1.6/1.8/2.0 WITH BELT PULLEY	65.65 EUR
2	WP00510	OE. 60730469/60523035 WATERPUMP 116 w. PULLEY, wo. CONNECTION f. REV METER	98.48 EUR
3	WP00210	WATER PUMP ALFETTA,GIULIETTA,GTV (116) 1.6/1.8/TURBO/2.0,75,90 1.6/1.8/2.0/IE/ TS	71.75 EUR

Wasserpumpe/Waterpump Alfetta 2.0

1	WP02510	WATER PUMP ALFETTA/GIULIETTA/GTV (116), MECHANICAL TACHOMETER 1.6/1.8/2.0 WITH BELT PULLEY	65.65 EUR
2	WP00510	OE. 60730469/60523035 WATERPUMP 116 w. PULLEY, wo. CONNECTION f. REV METER	98.48 EUR
3	WP00210	WATER PUMP ALFETTA,GIULIETTA,GTV (116) 1.6/1.8/TURBO/2.0,75,90 1.6/1.8/2.0/IE/ TS	71.75 EUR

Wasserpumpe/Waterpump Alfetta 2.0 TD

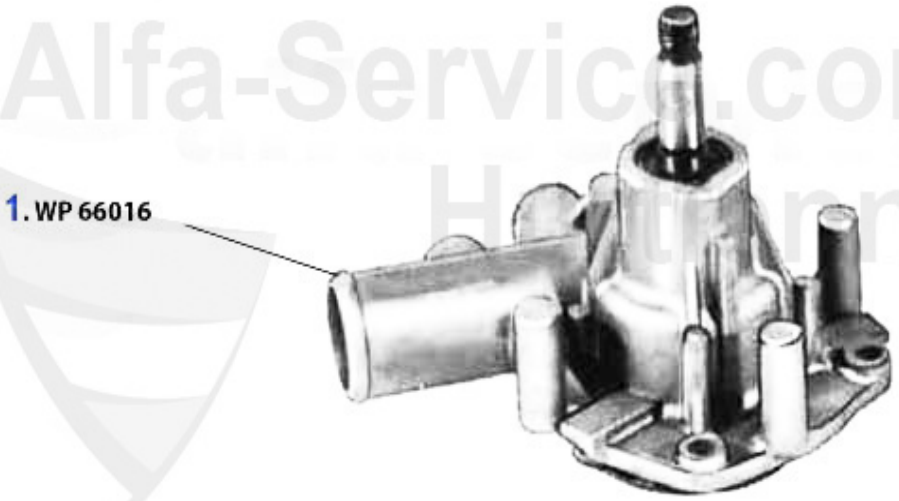

1	WP66016	WATERPUMP Alfetta 2.0 TD	85.68 EUR

Wasserpumpe/Waterpump Alfetta 2.4 TD

1	WP66014	OE. 60533507/60704056/60732127 WATERPUMP Alfetta,6,75,90 2.4 TD	85.68 EUR
2	WP00710	WATER PUMP 6,75,90,ALFETTA 2.4/2.5 TD, GIULIETTA 2.0 TD	117.98 EUR

Nockenwelle/Camshaft Alfetta

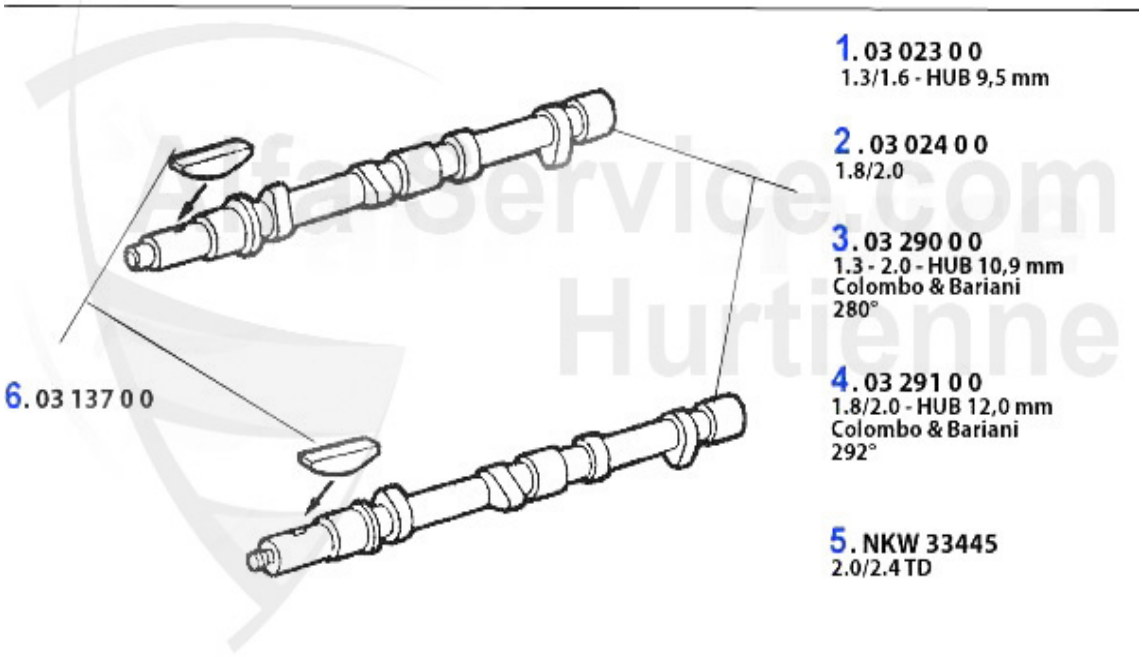

1	03 023 0 0	1300 - 1600 CAMSHAFT / Hub= 9.50 mm	***
2	03 024 0 0	CAM SHAFT - EXHAUST	***
3	03 290 0 0	SPORT CAMSHAFT COLOMBO&BARIANI 1300-2000, Lift=10.9mm, 280ø	253.39 EUR
4	03 291 0 0	SPORT CAMSHAFT COLOMBO & BARIANI 1750-2000, hub 12.0mm, 292ø	253.39 EUR
5	NKW33445	CAMSHAFT ALFETTA,75,90 2.0/2.4 TD	511.90 EUR
6	03 137 0 0	WEDGE FOR CAMSHAFTS	3.70 EUR

Steuerkette/Timing Chain Alfetta

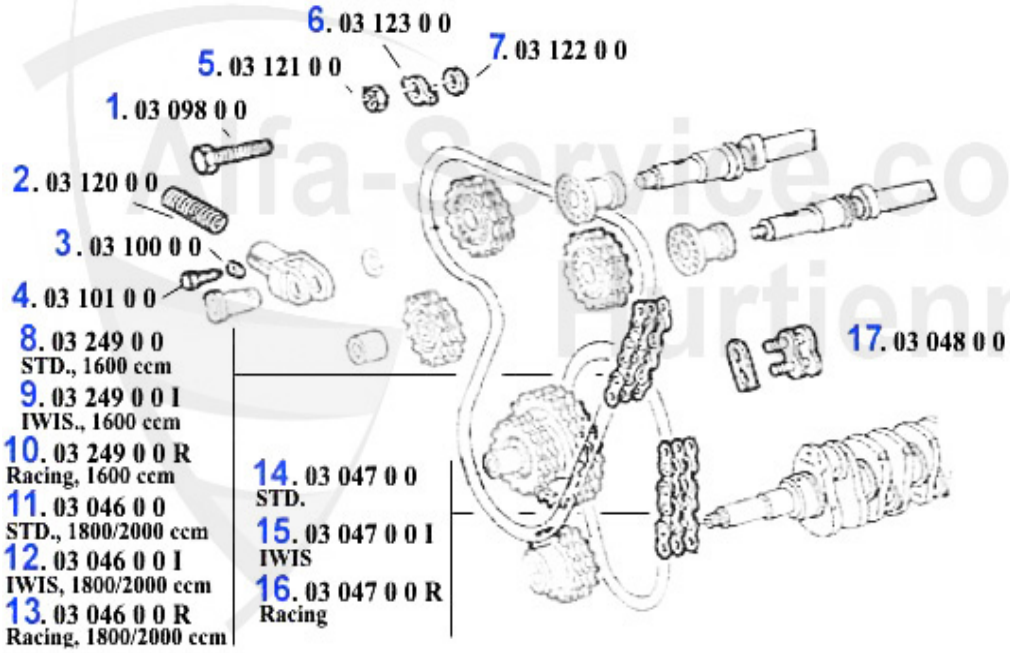

1	03 098 0 0	SAFETY BOLT FOR CAMSHAFTS	2.30 EUR
2	03 120 0 0	TIMING CHAIN TENSIONER SPRING	6.95 EUR
3	03 100 0 0	LOCK PLATE CHAIN TENSIONER	4.00 EUR
4	03 101 0 0	SCREW FOR TRACK TENSIONER	6.50 EUR
5	03 121 0 0	MOUNTING NUT-CHAIN WHEEL-CAMSHAFT	***
6	03 123 0 0	LOCK TAB CAMSHAFT	1.70 EUR
7	03 122 0 0	THRUST WASHER MOUNTING NUT	***
8	03 249 0 0	TIMING CHAIN 1600 LONG INCL. MASTER LINK	36.75 EUR
9	03 249 0 0 I	TIMING CHAIN IWIS 1600 LONG INCL. MASTER LINK	75.01 EUR
10	03 249 0 0 R	IWIS TIMING CHAIN 1600 INCL. CHAIN LOCK RACING VERSION	89.00 EUR
11	03 046 0 0	TIMING CHAIN 1750-2000 LONG INCL. MASTER LINK	37.85 EUR
12	03 046 0 0 I	TIMING CHAIN IWIS 1750-2000 INCL. MASTER LINK	74.90 EUR
13	03 046 0 0 R	TIMING CHAIN IWIS RACING 1750-2000 INCLUDED MASTER LINK	86.17 EUR
14	03 047 0 0	TIMING CHAIN 1300-2000 SHORT ENDLESS	20.35 EUR
15	03 047 0 0 I	TIMING CHAIN IWIS 1300-2000 SHORT ENDLESS	40.60 EUR
16	03 047 0 0 R	TIMING CHAIN IWIS RACING 1300-2000 SHORT ENDLESS	45.85 EUR
17	03 048 0 0	MASTER LINK	3.20 EUR

Ventiltrieb/Valve Mechanism Alfetta

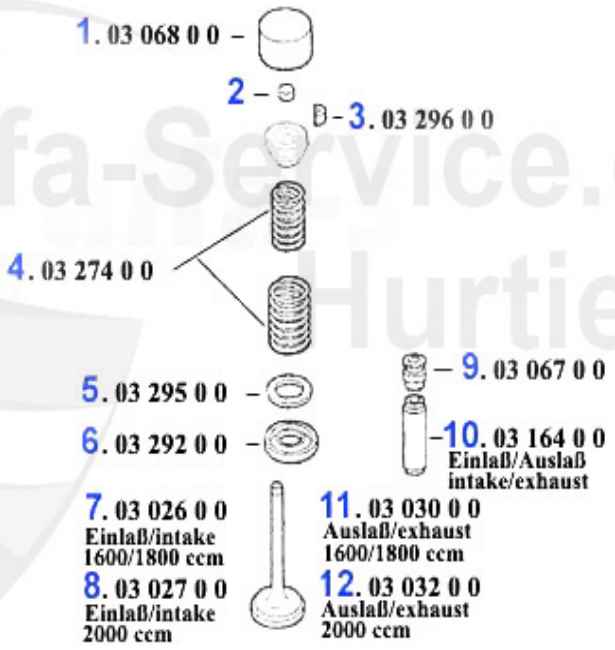

1	03 068 0 0	CAM FOLLOWER orig. ALFA ROMEO	23.50 EUR
2	03 043 0 0	VALVE ADJUSTING SHIMS	5.40 EUR
2	03 114 0 0	VALVE ADJUSTING SHIMS 200 pcs per box 2.525 - 3.500 mm	315.00 EUR
2	03 084 0 0	VALVE ADJUSTING SHIMS 205 pcs per box 1.500 - 2.500 mm	279.00 EUR
3	03 296 0 0	VALVE COTTERS 9mm	1.20 EUR
4	03 274 0 0	VALVE SPRING SET 16 pcs	59.80 EUR
5	03 295 0 0	OE.60502912 WASHER INSIDE LOWER VALVE SPRING PLATE	1.61 EUR
6	03 292 0 0	CUP FOR VALVE WASHER	***
7	03 026 0 0	INLET VALVE 1600-1750 std	10.25 EUR
8	03 027 0 0	INLET VALVE 2000 ALL MODELS EXC. SPIDER 1990-93 INJECTION	11.19 EUR
9	03 255 0 0	VALVE SEAL WITH SPRING INTAKE AND EXHAUST SIDE (GREEN)	4.86 EUR
10	03 164 0 0	INLET & EXHAUST VALVE GUIDE FUEL-INJECTED MOTOR - SPIDER	11.19 EUR
11	03 030 0 0	EXHAUST VALVE 1600 - 1750 std.	16.45 EUR
12	03 032 0 0	EXHAUST VALVE 2000 std.	17.26 EUR

Alfetta > FILTER > FILTER

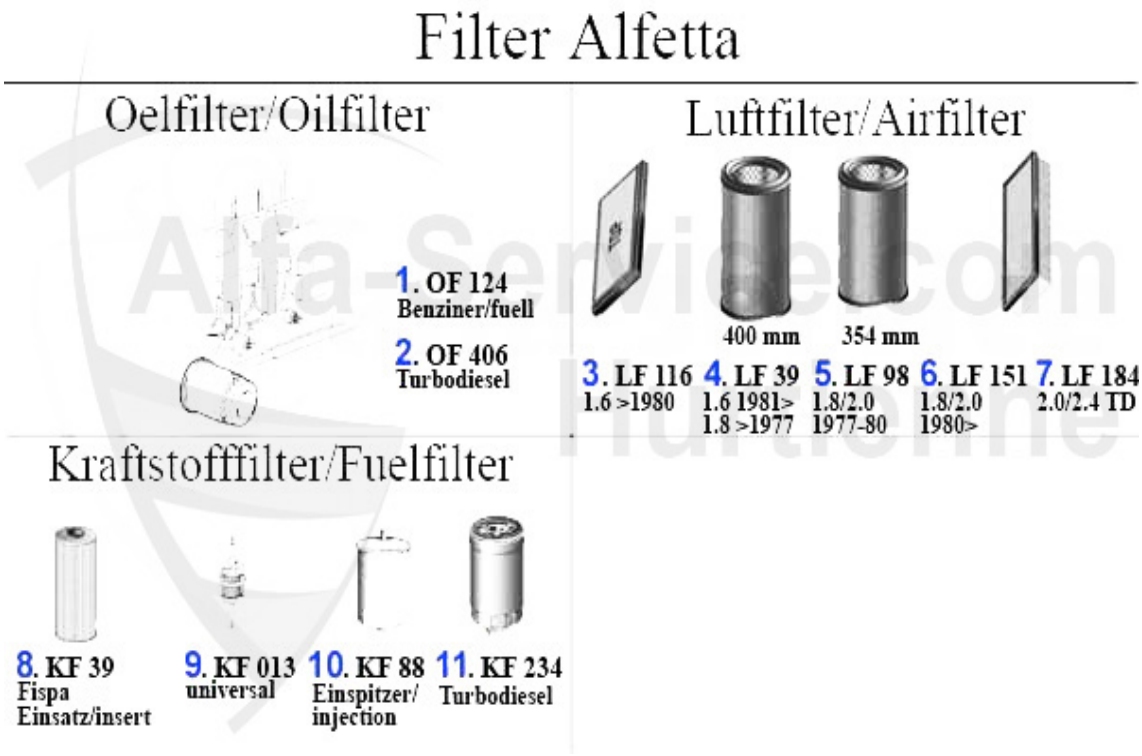

1	OF124	OE. 46805830 OILFILTER	9.13 EUR
2	OF406	Ölfilter 6,75,90,Alfetta TD Anschraubpatrone	16.31 EUR
3	LF116	AIR FILTER ALFETTA,GIULIETTA,GTV4 (116) 1.3/1.6, FIRM	***
4	LF39	Luftfilter Alfetta,GTV/4 1.6/1.8 diverse 105er rund	12.83 EUR
5	LF98	AIR FILTER ALFETTA,GIULIETTA,GTV4 (116) 1.8/2.0,VARIOUS 105 SERIES, ROUND	12.83 EUR
6	LF151	AIR FILTER 75,90,ALFETTA,GIULIETTA,GTV4 (116), 2.0, FIRM	20.00 EUR
7	LF184	Luftfilter 75,90,Alfetta TD eckig	26.57 EUR
8	KF39	Kraftstofffilter Alfetta,Giulietta, GTV/4 (116),diverse 105 Einsatz	7.08 EUR
9	KF013	Kraftstoffleitungsfilter diverse Modelle (universal)	4.62 EUR
10	KF88	FUEL FILTER 75, 90, 164, ALFETTA GIULIETTA, SPIDER (115), GTV (116), RZ, SZ, in-line filter	20.52 EUR
11	KF234	Kraftstoff-Filter 6,33,75,90,145/6 155,164 Alfetta,Giulietta 1.8/1.9/2 .0/2.4/2.5 TD Anschraubpatrone	19.08 EUR

Alfetta > EXHAUST SYSTEM > 1.6

Abgasanlage/Exhaust System Alfetta 1.6

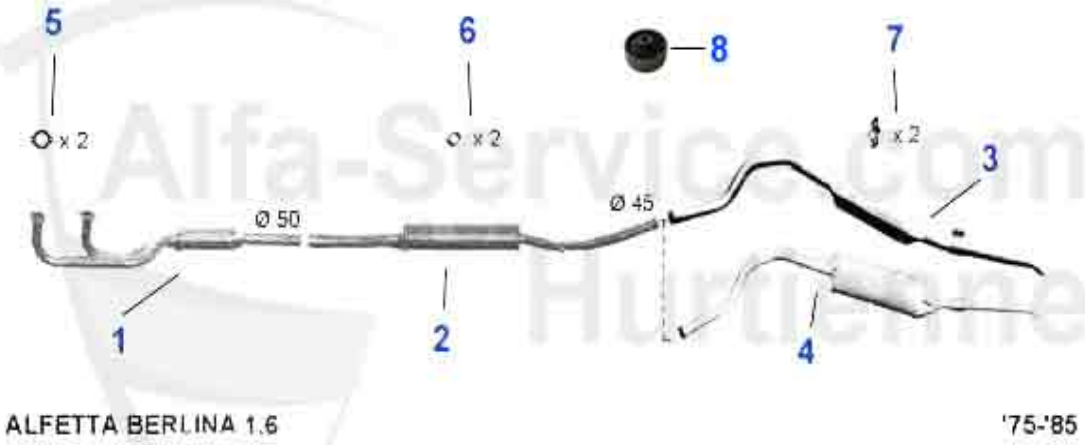

1	VSD103503	FRONT MUFFLER ALFETTA 1. SERIES 1.6 75-78	97.46 EUR
1	VSD101703	FRONT MUFFLER ALFETTA 1.6 2. series 79-85,GIULIETTA 1.3,1.6 75 1.6 85-92	96.89 EUR
2	MSD101476	OE.60730551 CENTER MUFFLER ALFETTA 1.6,1.8,2.0L YEAR 79-85, GIULIETTA 1.3-2.0L,75 1.6 YEAR 85-92	88.23 EUR
2	MSD103576	CENTER MUFFLER ALFETTA 1.6,1.8,2.0 1. SERIES 75-78	88.23 EUR
3	NSD103507	END MUFFLER ALFETTA 1.6/1.8/2.0 1.SERIES 72-78	116.54 EUR
4	NSD117999	Endtopf Alfetta GT 1,6-2,0 Sportendtopf Doppelendst. 2 x 45mm	220.15 EUR
4	NSD103907	END MUFFLER ALFETTA 1.6/1.8/2.0 2.SERIES 79-85	94.61 EUR
5	SAT094413	OE 60777697, GASKET VSD ALFETTA, GIULIETTA,75,90,155,164	3.89 EUR
6	SAT091011	OE 60521386, RUBBER RING EXHAUST MOUNTING DIVERSE TYPES	1.23 EUR
7	SAT091024	OE 60521407, RUBBER/ EXHAUST MOUNTING ALFETTA, GIULIETTA, 75,90	5.30 EUR
8	11 028 0 0	SILENT BUSHING EXHAUST HANGER OE.60515936	8.50 EUR

Abgasanlage/Exhaust System Alfetta 1.8

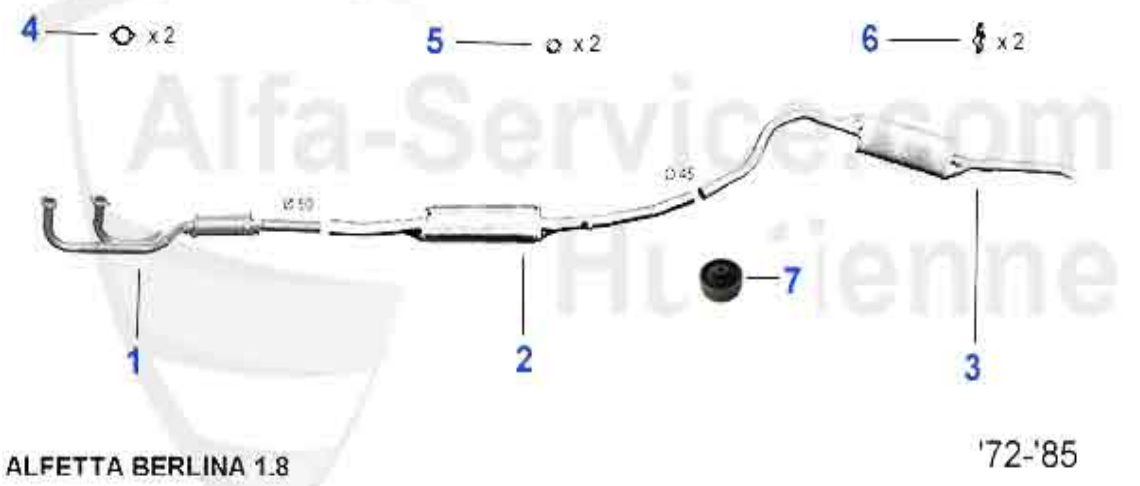

1	VSD101803	FRONT SILENCER ALFETTA,GIULIETTA 2. SERIE 79-85 1.8/2.0 75/90 1.8/2.0 85-88	96.89 EUR
1	VSD103603	FRONT MUFFLER ALFETTA 1.8,2.0 1. SERIES 72-78	97.46 EUR
2	MSD101476	OE.60730551 CENTER MUFFLER ALFETTA 1.6,1.8,2.0L YEAR 79-85, GIULIETTA 1.3-2.0L,75 1.6 YEAR 85-92	88.23 EUR
2	MSD103576	CENTER MUFFLER ALFETTA 1.6,1.8,2.0 1. SERIES 75-78	88.23 EUR
3	NSD117999	Endtopf Alfetta GT 1,6-2,0 Sportendtopf Doppelendst. 2 x 45mm	220.15 EUR
3	NSD103907	END MUFFLER ALFETTA 1.6/1.8/2.0 2.SERIES 79-85	94.61 EUR
3	NSD103507	END MUFFLER ALFETTA 1.6/1.8/2.0 1.SERIES 72-78	116.54 EUR
4	SAT094413	OE 60777697, GASKET VSD ALFETTA, GIULIETTA,75,90,155,164	3.89 EUR
5	SAT091011	OE 60521386, RUBBER RING EXHAUST MOUNTING DIVERSE TYPES	1.23 EUR
6	SAT091024	OE 60521407, RUBBER/ EXHAUST MOUNTING ALFETTA, GIULIETTA, 75,90	5.30 EUR
7	11 028 0 0	SILENT BUSHING EXHAUST HANGER OE.60515936	8.50 EUR

Alfetta > EXHAUST SYSTEM > 2.0

Abgasanlage/Exhaust System Alfetta 2.0

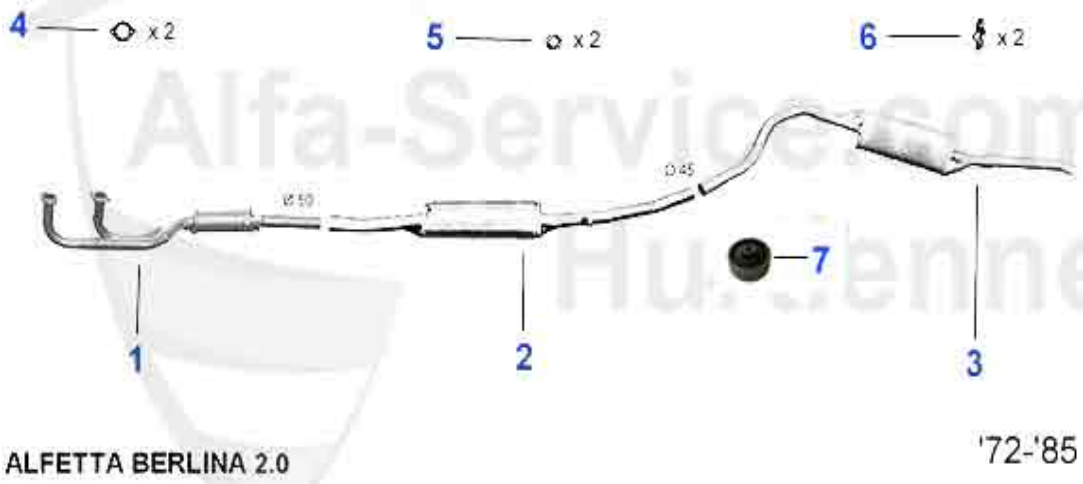

1	VSD101803	FRONT SILENCER ALFETTA,GIULIETTA 2. SERIE 79-85 1.8/2.0 75/90 1.8/2.0 85-88	96.89 EUR
1	VSD103603	FRONT MUFFLER ALFETTA 1.8,2.0 1. SERIES 72-78	97.46 EUR
2	MSD101476	OE.60730551 CENTER MUFFLER ALFETTA 1.6,1.8,2.0L YEAR 79-85, GIULIETTA 1.3-2.0L,75 1.6 YEAR 85-92	88.23 EUR
2	MSD103576	CENTER MUFFLER ALFETTA 1.6,1.8,2.0 1. SERIES 75-78	88.23 EUR
3	NSD117999	Endtopf Alfetta GT 1,6-2,0 Sportendtopf Doppelendst. 2 x 45mm	220.15 EUR
3	NSD103907	END MUFFLER ALFETTA 1.6/1.8/2.0 2.SERIES 79-85	94.61 EUR
3	NSD103507	END MUFFLER ALFETTA 1.6/1.8/2.0 1.SERIES 72-78	116.54 EUR
4	SAT094413	OE 60777697, GASKET VSD ALFETTA, GIULIETTA,75,90,155,164	3.89 EUR
5	SAT091011	OE 60521386, RUBBER RING EXHAUST MOUNTING DIVERSE TYPES	1.23 EUR
6	SAT091024	OE 60521407, RUBBER/ EXHAUST MOUNTING ALFETTA, GIULIETTA, 75,90	5.30 EUR
7	11 028 0 0	SILENT BUSHING EXHAUST HANGER OE.60515936	8.50 EUR

Abgasanlage/Exhaustsystem Alfetta 2.0 TD

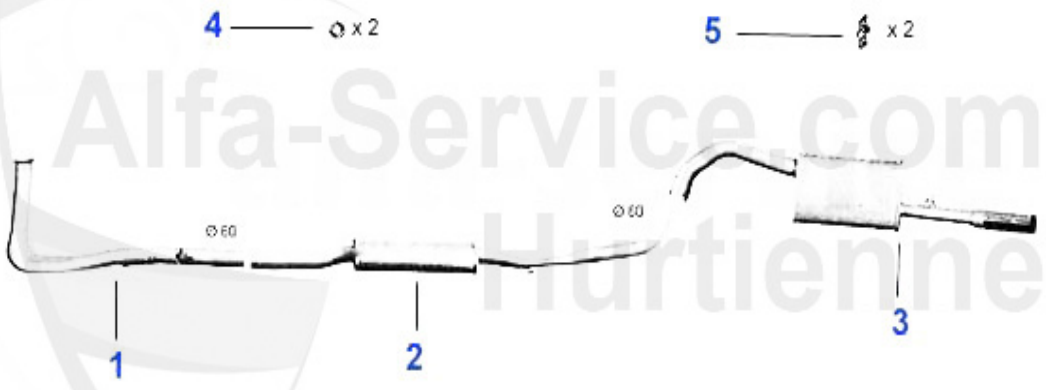

ALFETTA 2.0 TURBO D

'79-3/'83

1	VR104201	Vorderrohr Alfetta,Giulietta bj. 83-85 2.0,2.4 TD (org. einteilig mit Mitteltopf)	***
1	VR104101	Vorderrohr Alfetta 2.0 TD bj. 79-83 (org. einteilig mit Mitteltopf)	***
2	MSD104176	CENTER MUFFLER ALFETTA,GIULIETTA 2.0 2.4 TD 79-85	141.57 EUR
3	NSD104177	END MUFFLER ALFETTA 2.9/2.4 TD 79-85	115.41 EUR
4	SAT091011	OE 60521386, RUBBER RING EXHAUST MOUNTING DIVERSE TYPES	1.23 EUR
5	SAT091024	OE 60521407, RUBBER/ EXHAUST MOUNTING ALFETTA, GIULIETTA, 75,90	5.30 EUR

Alfetta > EXHAUST SYSTEM > 2.4 TD

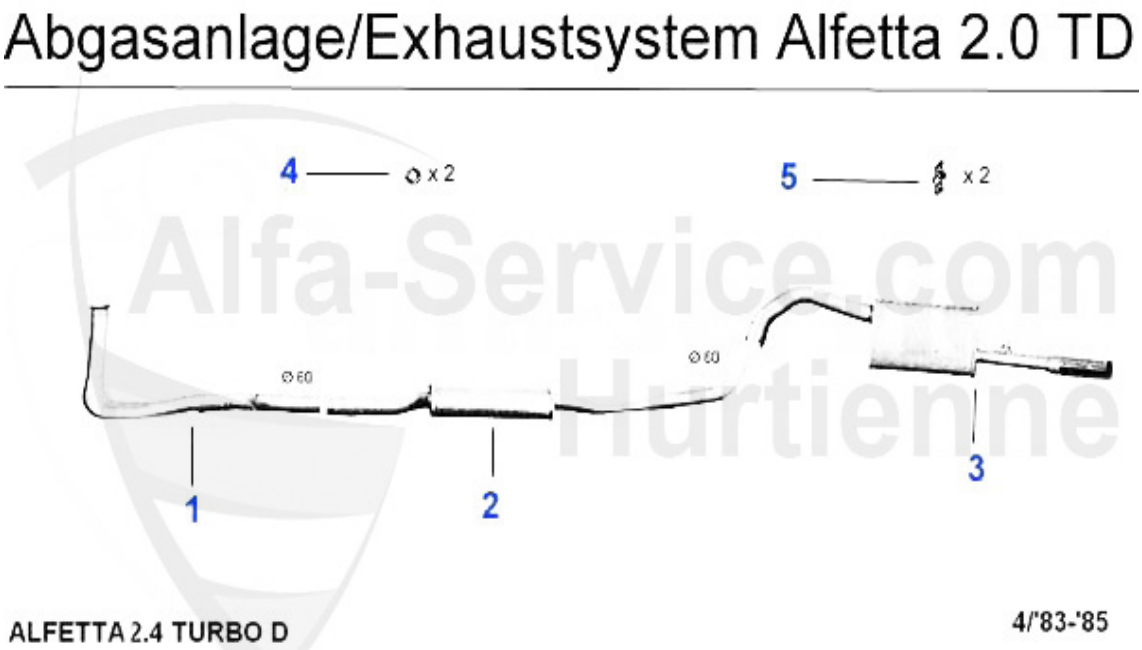

1	VR104201	Vorderrohr Alfetta,Giulietta bj. 83-85 2.0,2.4 TD (org. einteilig mit Mitteltopf)	***
2	MSD104176	CENTER MUFFLER ALFETTA,GIULIETTA 2.0 2.4 TD 79-85	141.57 EUR
3	NSD104177	END MUFFLER ALFETTA 2.9/2.4 TD 79-85	115.41 EUR
4	SAT091011	OE 60521386, RUBBER RING EXHAUST MOUNTING DIVERSE TYPES	1.23 EUR
5	SAT091024	OE 60521407, RUBBER/ EXHAUST MOUNTING ALFETTA, GIULIETTA, 75,90	5.30 EUR

Alfetta > INTERIOR > CAR MAT

1	FMS 116	FLOOR MATS GTV6/ALFETTA LIM. (116),BLACK WITH RED LOGO	61.04 EUR

Alfetta > DRIVETRAIN > DIFFERENTIAL

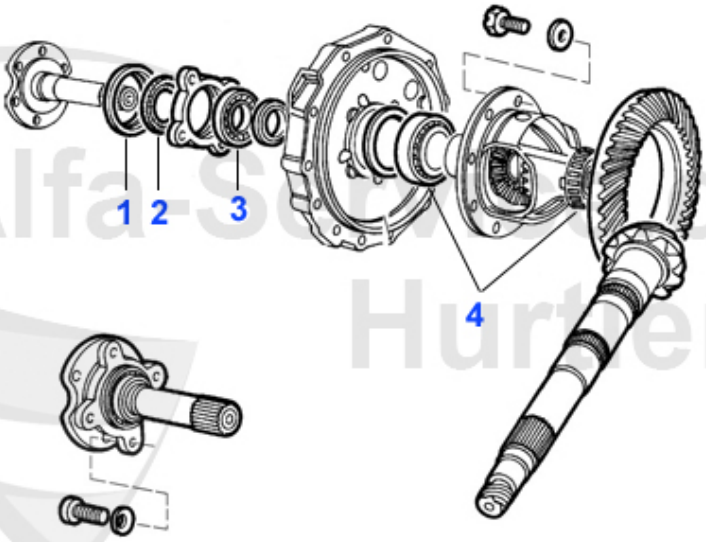

1	WD21228	JOINT RING REAR DIFF. 116,AR 75 4 AND 6 CYL.,RZ/SZ	4.90 EUR
2	WD21231	JOINT RING REAR DIFFENRENTIAL 116,AR 75 4 AND 6 CYLINDER,RZ/SZ	29.00 EUR
3	GL8685	SHOULDER BEARING DIFF. AR75 + GTV6 OE 71728685	23.80 EUR
4	GL8680	Schulterlager Diff.AR116	43.99 EUR

Alfetta > DRIVETRAIN > DRIVESHAFT 1.6/1.8/2.0

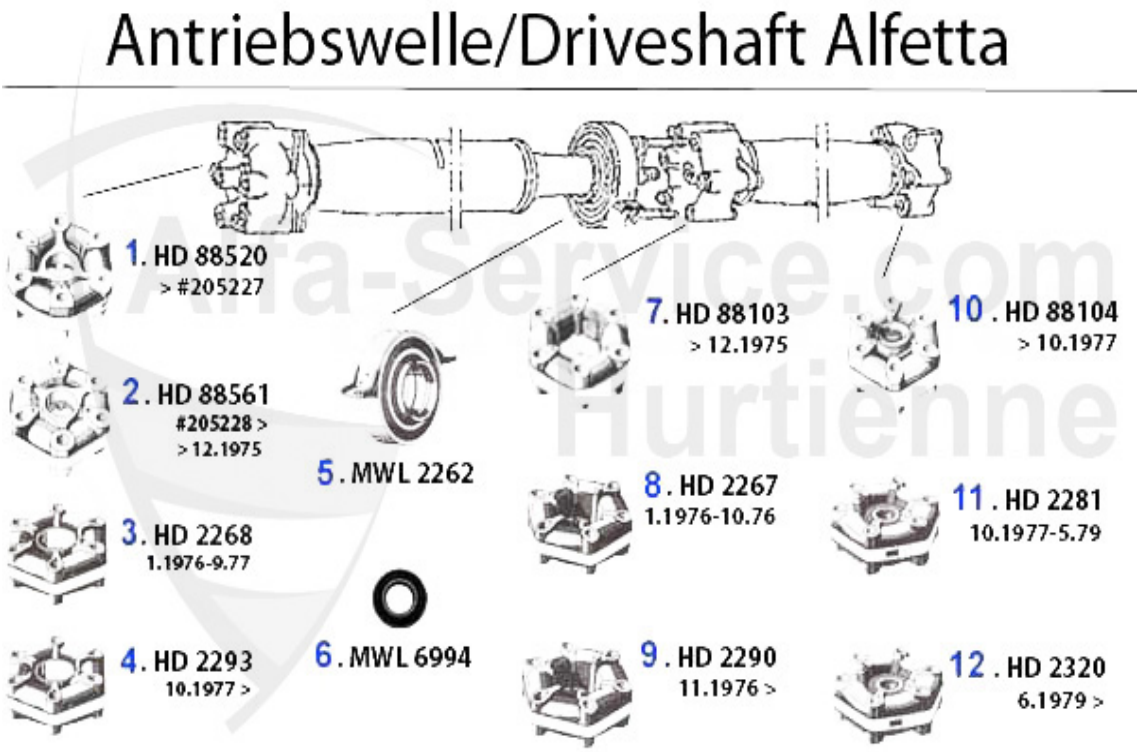

1	HD88520	DRIVE SHAFT MOUNTING FRONT ALFETTA OE. 60725180/116231530110	***
2	HD88561	HD-Scheibe vorne Alfetta # 205228> Bj. >12.75	***
3	HD2268	FRONT PROPSHAFT ALFETTA 1.76-9-77	***
4	HD2293	FRONT FLEX DISC 116 4-Cylind. OE. 60521648	81.04 EUR
5	MWL2262	OE.60505302 drive shaft support 75,90 4 cyl. 33 4x4 alfetta,giulietta	47.71 EUR
6	MWL6994	OE.60505303 OUTER BEARING CLUTCH HOUSING 116, 4 CYL.	23.80 EUR
7	HD88103	HD-Scheibe mitte Alfetta Bj. >12.75	81.04 EUR
8	HD2267	CENTER PROPSHAFT ALFETTA >10.76, GIULIETTA 81>	89.00 EUR
9	HD2290	MIDDLE FLEX DISC ALFETTA, GIULIETTA 11.1976 > , 75,90	89.00 EUR
10	HD88104	DRIVE SHAFT MOUNTING MIDDLE ALFETTA OE. 60723970/116001502309 NOT AVAILABLE ANYMORE	***
11	HD2281	DRIVE SHAFTMOUNTING REAR ALFETTA OE. 60725177/116081504402	101.55 EUR
12	HD2320	REAR FLEX DISC 116 4-Cylind. OE. 60521631	81.04 EUR

Alfetta > DRIVETRAIN > GEAR MOUNT 1.6/1.8/2.0

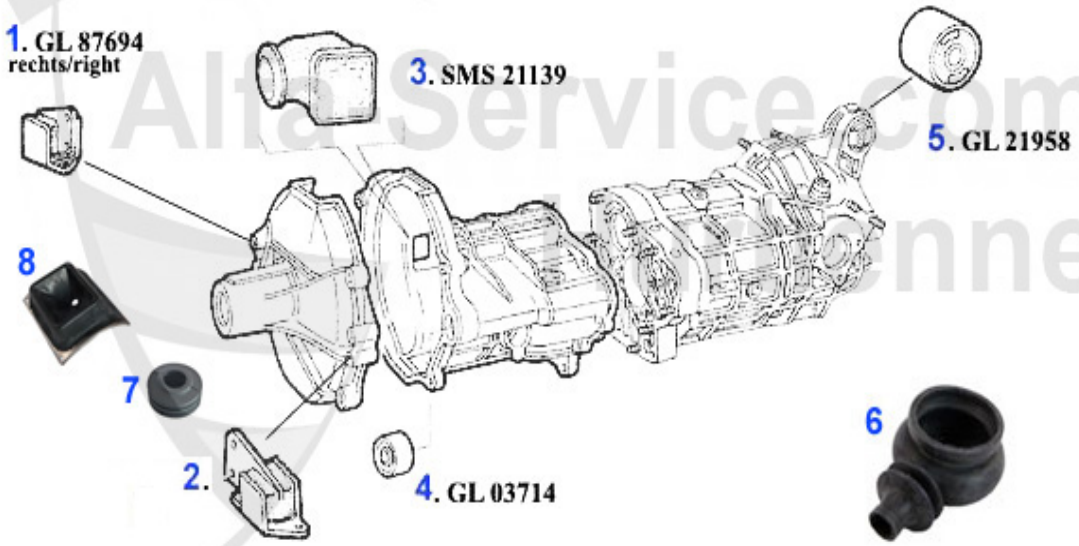

1	GL87694	OE. 60521143 GEAR MOUNT 116 4-CYLINDER RIGHT	22.05 EUR
2	GL87688	OE. 60723913 GEAR MOUNT 116, 4-CYL LEFT SIDE OLD VERSION	29.24 EUR
3	SMS21139	CAP FOR RELEASE LEVER ALFETTA, GIULIETTA,GTV(116),75,90	***
4	GL03714	OE.60703714 GEARBOX MOUNT 75,90 RZ,SZ	***
5	GL21958	OE. 60521958 GEAR MOUNT REAR 75,90, RZ/SZ,ALFETTA,GIULIETTA,GT/V(116)	22.05 EUR
6	SMS2345	GEAR LEVER BOOT ALFETTA,GIULIETTA,GTV (116)	9.78 EUR
7	SMS26078	RUBBER BOTH FOR SHIFT LEVER/ALFETTA/GTV/ GIULIETTA (116)	***
8	SMS2346	OE. 60701783 COVER f. GEARSTICK 116	***

Alfetta > DRIVETRAIN > CLUTCH SET 1.6/1.8/2.0/2.4/TD

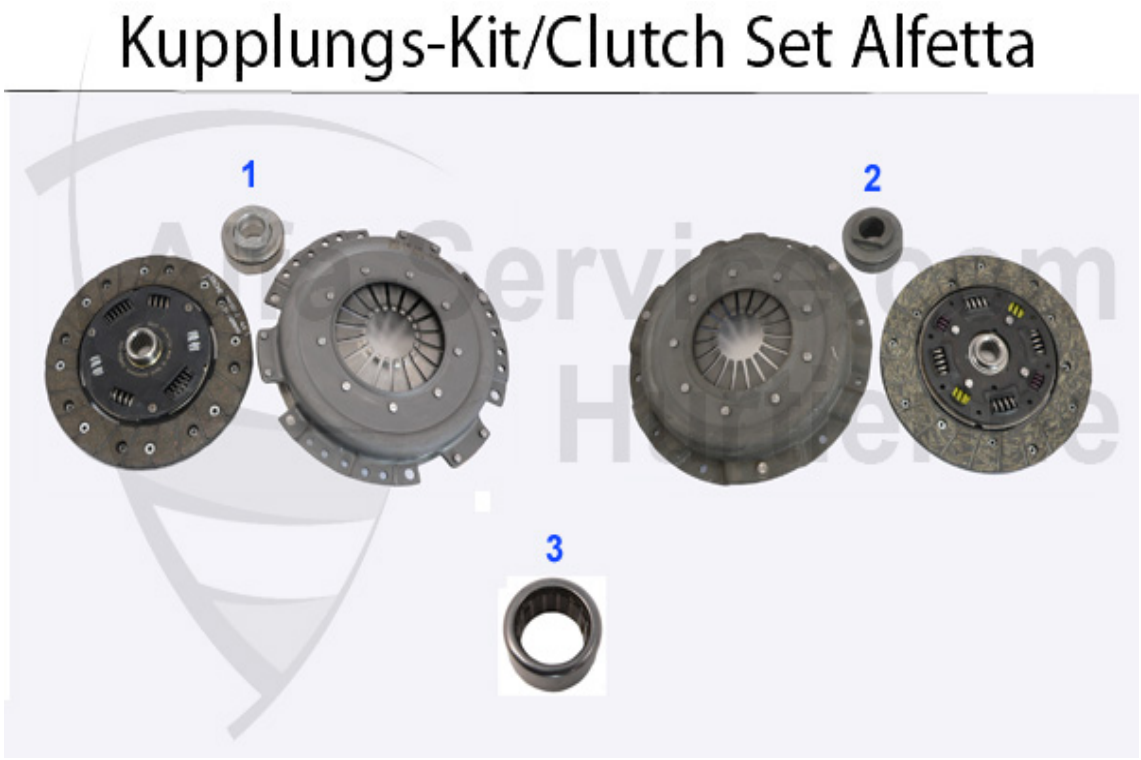

1	KK427001	CLUTCH KIT ALFETTA,GIULIETTA,75 1.3-1.6 75-89 (200mm)	***
2	KK009003	CLUTCH-KIT,ALFETTA,GUILIETTA,75, GT/V (116),1.6/1.8/2.0/IE/TS/TD 1974-1992, 215mm	256.85 EUR
3	KKNL024	NEEDLE BEARING 75,RZ/SZ,ALFETTA, GIULIETTA,GTV (116)	***

Alfetta > DRIVETRAIN > CLUTCH ACTUATION 1.6/1.8/2.0/2.4 TD

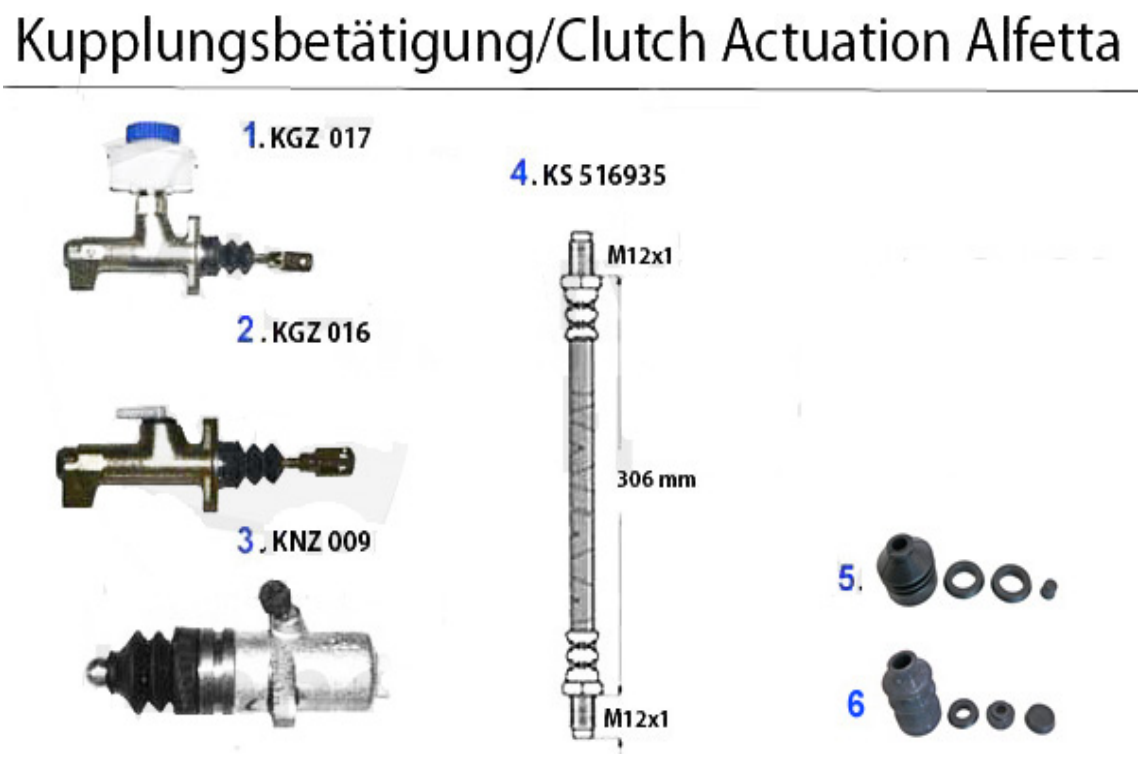

1	KGZ017	CLUTCH MASTER CYLINDER, ALFETTA, GIULIETTA, GTV, GTV/6(116), WITH RESERVOIR	97.46 EUR
2	KGZ016	OE. 60518194 CLUTCH MASTER CYLINDER 116 1983>	81.04 EUR
3	KNZ009	CLUTCH SLAVE CYLINDER,75,90 ALFETTA, GIULIETTA, GTV,GTV/6(116)	60.52 EUR
4	KS516935	CLUTCH HOSE 116	17.96 EUR
5	RKG1134	REPAIR KIT MASTER CYLINDER 116 RZ/SZ	26.18 EUR
6	RKN3156	REPAIR KIT SLAVE CYLINDER 116 RZ/SZ	26.18 EUR

Seitenwelle/Side Shaft Alfetta 1.6/1.8/2.0

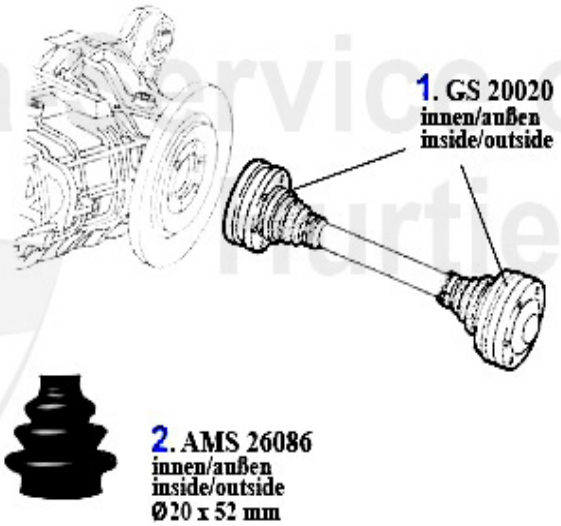

1	GS20020	INNER/OUTER DRIVESHAFT JOINT 116 4-CYLINDER	111.82 EUR
2	AMS26086	OE. 60729242 SIDE SHAFT BOOT inside/outside 116-4Cyl.	16.31 EUR

Alfetta > SUSPENSION > SPRINGS

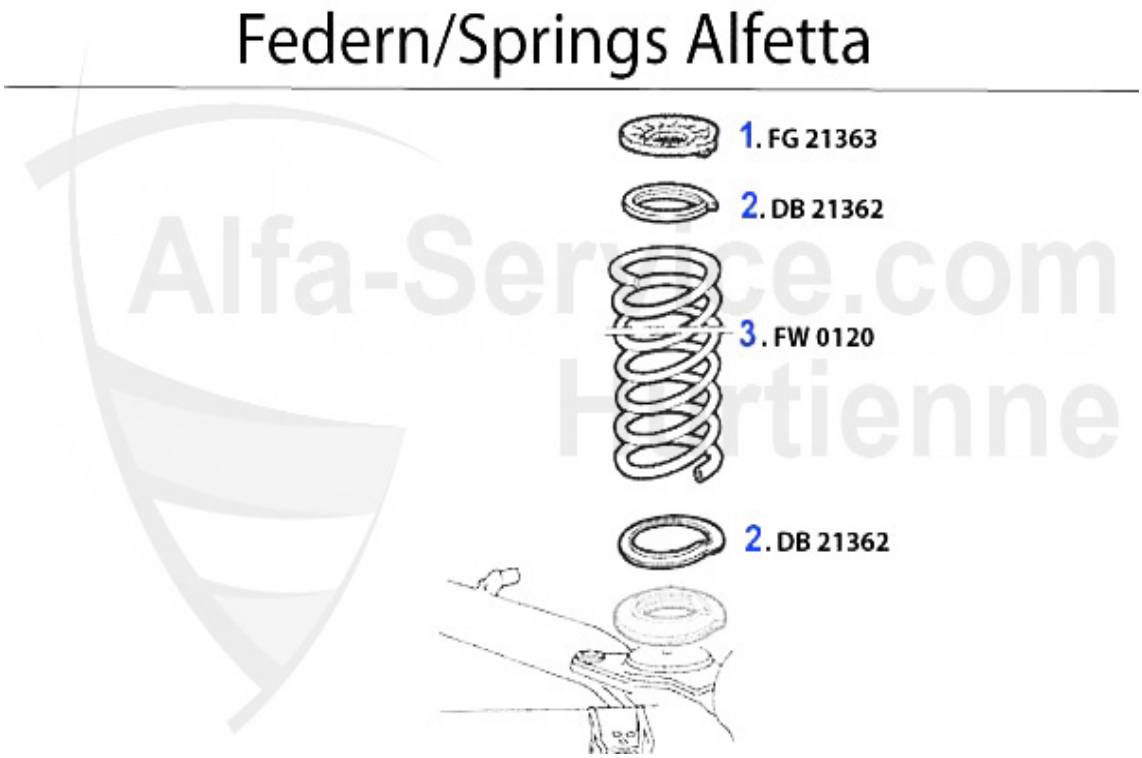

1	FG21363	OE. 60521363 SPACER REAR AXLE 116	13.49 EUR
2	DB21362	OE. 60521362 PLATE	7.90 EUR
3	FW0120	OE. 60701617 REAR SPRING ALFETTA/GTV (116)	79.00 EUR

Alfetta > SUSPENSION > SHOCK ABSORBER

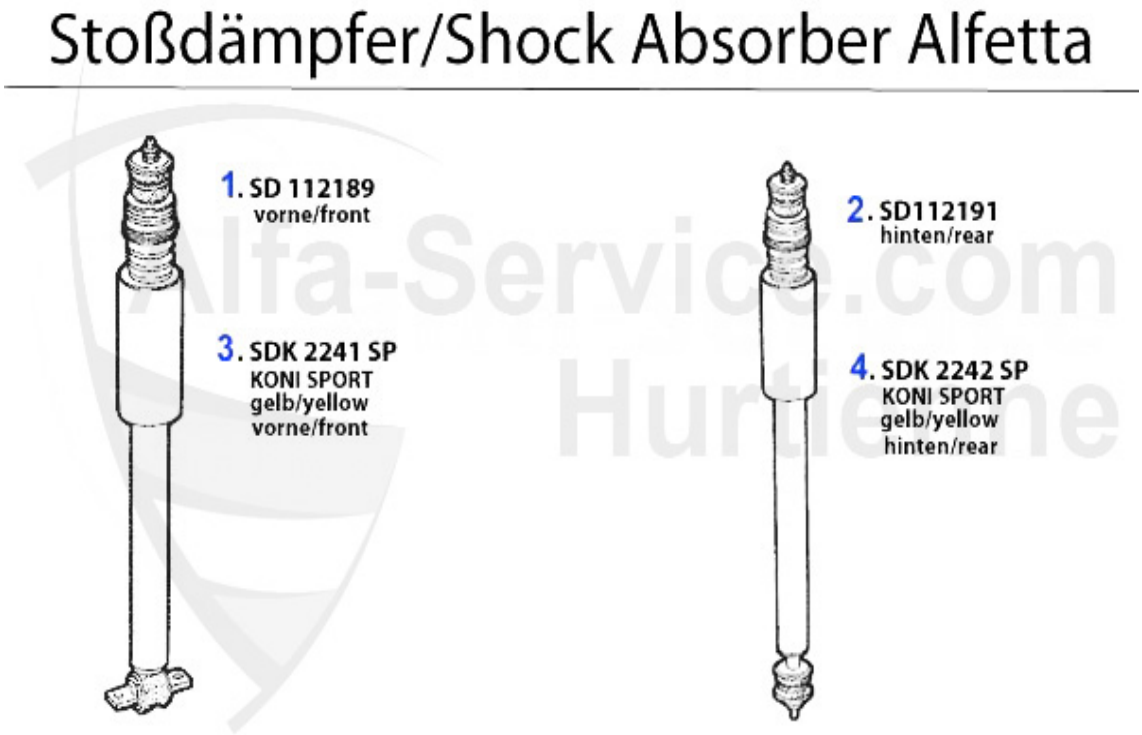

1	SD112189	Stossdämpfer vorne 6,Alfetta,Giulie tta oben Stift/unten Brücke,2-Rohr Gas	81.04 EUR
2	SD112191	REAR SHOCK ABSORBER ALFETTA,GIULIETTA, GTV (116), DOUBLE GAS EFFECT	81.04 EUR
3	SDK2241SP	KONI YELLOW FRONT ALFETTA,GTV6 (116)	113.05 EUR
4	SDK2242SP	KONI YELLOW REAR ALFETTA,GTV6 (116) >84	113.05 EUR

Alfetta > SUSPENSION > ATTACHMENT FRONT

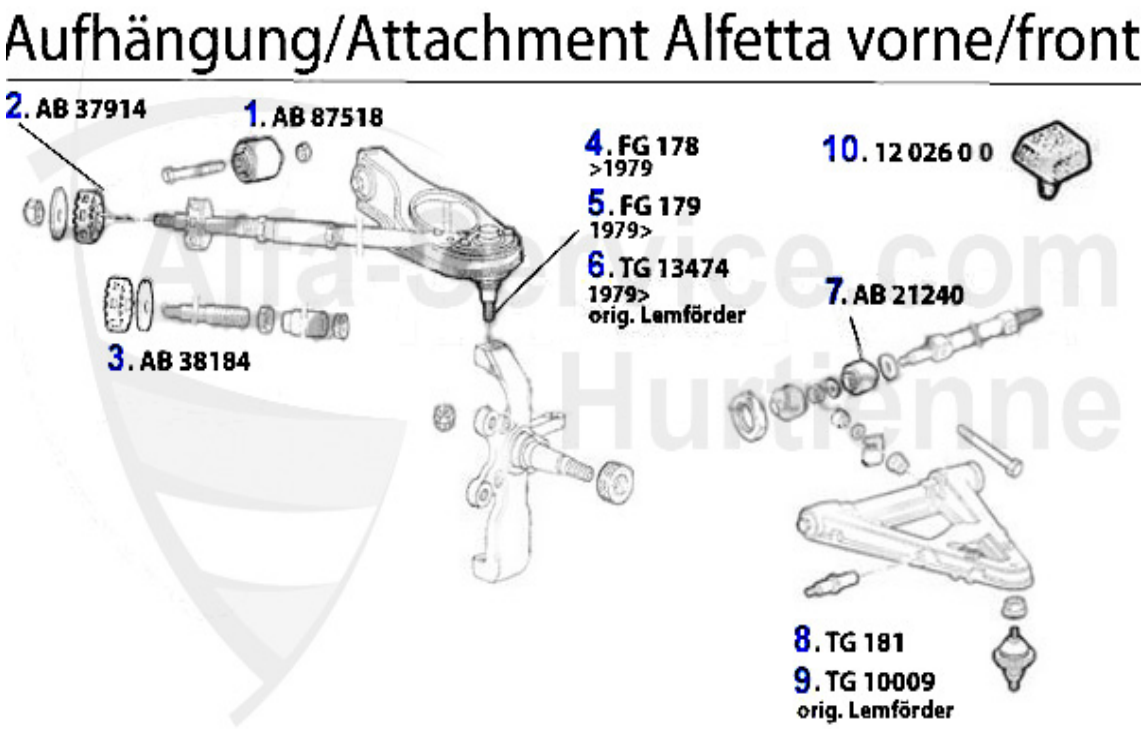

1	AB87518	OE.60521269 SUSPENSION ARM BUSH FRONT, 75,GT/V/6 (116), RZ/SZ	8.21 EUR
2	AB37914	RUBBER MOUNTING 75,GTV6 (116) pieces required:2	3.59 EUR
3	AB38184	SILENT BLOCK 75,GTV6 (116) required parts: 2	3.08 EUR
4	FG178	SUPERIOR SUPPORTING HINGE ALFETTA/ GIULIETTA/GTV (116) >79	***
5	FG179	UPPER BALL JOINT 116 f	40.01 EUR
6	TG13474	OE. 60728429 Front upper ball joint LMI	***
7	AB21240	OE. 60521240 LOWER ARM BUSH 116 FA 2 PIECES EACH SIDE NEEDED	40.01 EUR
8	TG181	LOWER BALL JOINT F. 116	40.01 EUR
9	TG10009	OE. 60521236/7 LOWER BALL JOINT LEMFÖRDER	45.65 EUR

Alfetta > SUSPENSION > ATTACHMENT REAR

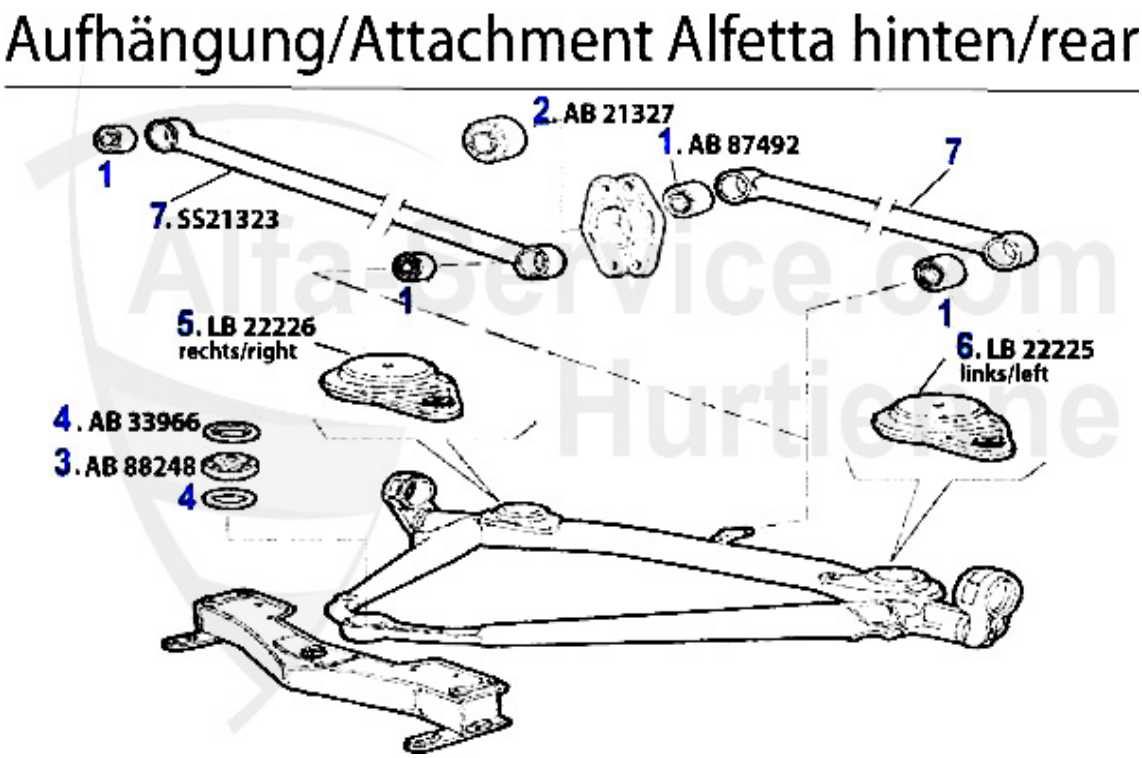

1	AB87492	CHASIS MOUNTING RUBBER REAR AXLE 75, ALFETTA,GIULIETTA,GTV6 needed pieces: 4	7.40 EUR
1	AB1970SF	SUPERFLEX BUSHES SET f. RAER TORSION BAR 116	87.00 EUR
2	AB21327	REAR AXLE BUSH MIDDLE 116	17.90 EUR
3	AB88248	Aufhängungsbuchse hinten Alfetta,Gi ulietta,GT/V (116),75 4-Zylinder	12.72 EUR
4	AB33966	OE. 60533966 RING f. PANHARD/GEAR 116	9.00 EUR
5	LB22226	BEARING SUPPORT REAR-AXLE-FRAME RIGHT 75,GTV/6	79.00 EUR
6	LB22225	BEARING SUPPORT REAR-AXLE- FRAME LEFT 75, GTV/6	79.00 EUR
7	SS21323	OE.60521323 TORSION BAR 116	***

Alfetta > SUSPENSION > FRONT STABILISER

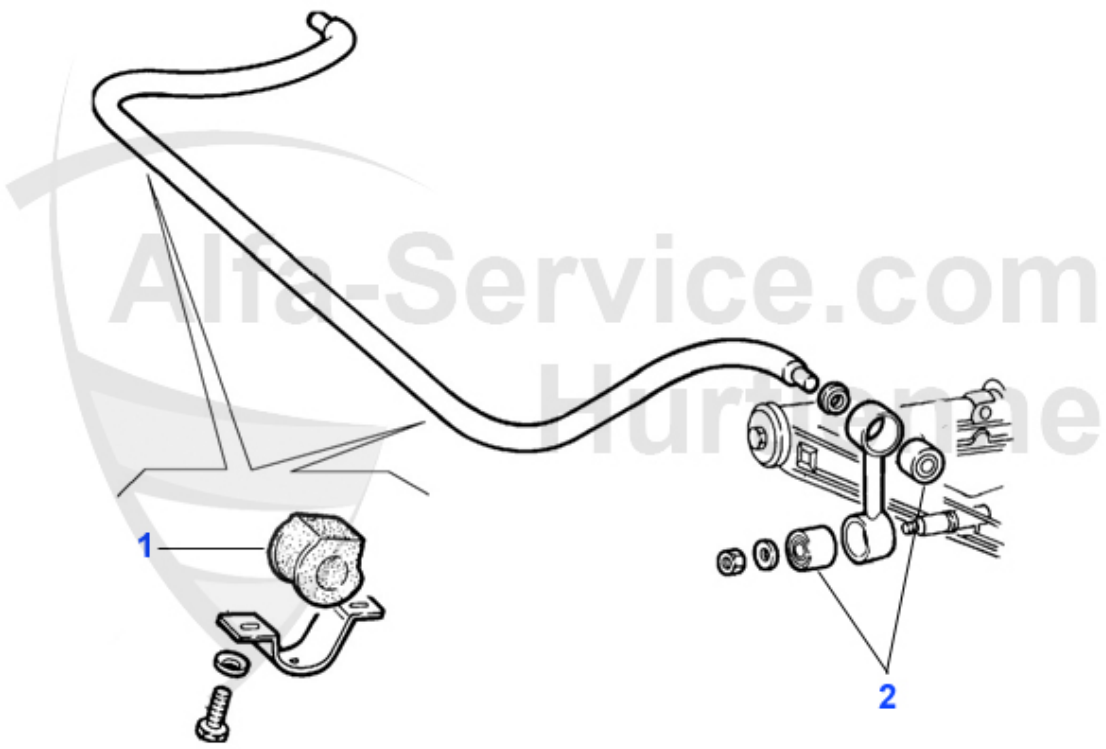

1	AB9303	Gummi f. Stabilisator VA 75 3.0 V6	16.01 EUR
1	AB21287	Stabilager vorne Alfetta,Giulietta, GTV/6 (116),75 22mm	***
2	AB92733	Lager für Pendelstütze VA 116 benötigte Stückzahl: 4	11.90 EUR

Alfetta > SUSPENSION > REAR STABILISER

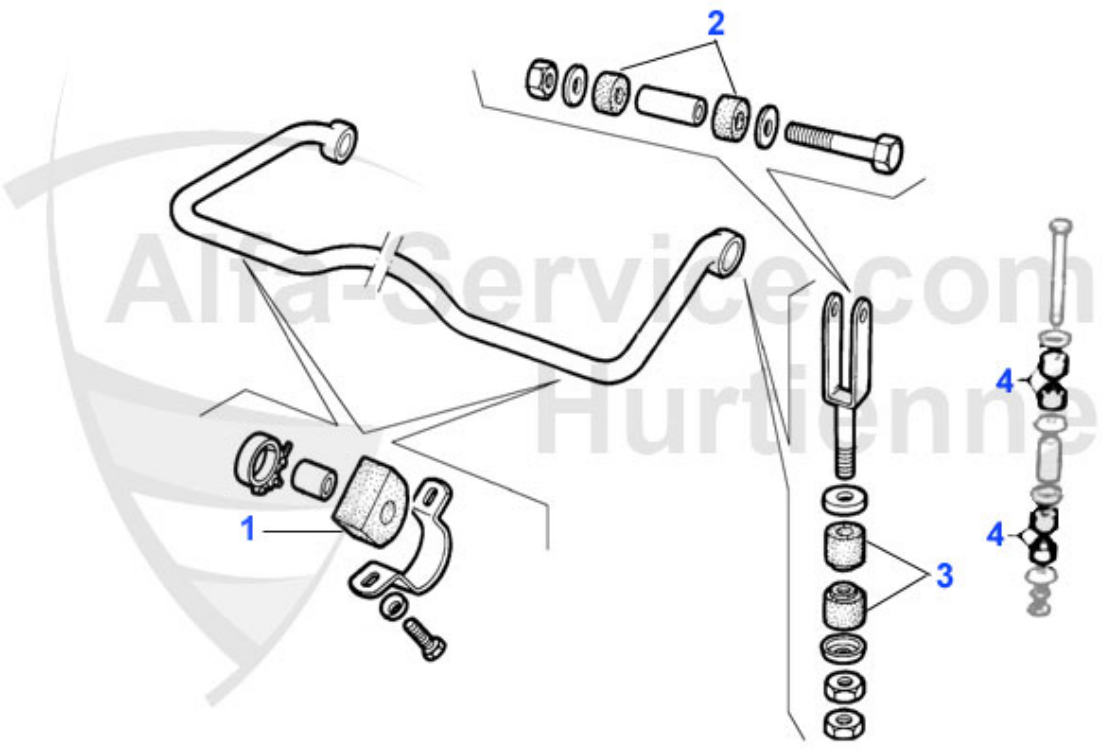

1	AB2394	REAR ANTI-ROLL BAR BEARING ALFETTA, GIULIETTA,75 (21mm) REQUIRED PIECES: 2	7.90 EUR
1	AB2395	Gummipuffer Stabilisator HA 75 1.6-1.8 ie benötigte Stückzahl: 2	***
2	AB21366	BUSHING FOR REAR UPPER ANTI-ROLL BAR ALFETTA,GIULIETTA,GTV6 (116),75,90 (PENDULUM SUPPORT 4 PCS PER SIDE)	6.06 EUR
4	AB21364	REAR CONNECTING ROD BUSHING ALFETTA, GIULIETTA,GTV6 (116),75	2.87 EUR

Radlager/Wheel Bearing

1	RL0612	WHEEL BEARING SET FRONT ALFETTA/GT (116) 1.6/1.8 YEAR >12.76	61.00 EUR
1	SIRI4830	OIL SEAL FRONT WHEEL BEARING ALFETTA, GIULIETTA,GT,GTV TYPE 116 (40/52/7mm)	9.22 EUR
2	RL0613	WHEEL BEARING SET FRONT ALFETTA/GT (116) 1.6 77-2.80,1.8/2.0/TD >2.80,GIULIETTA 1.3/1.6/1.8 >2.80	48.99 EUR
3	RL0614	WHEEL BEARING SET FRONT,75,90 ALFETTA/GIULIETTA/GT/V (116), 03.80>	46.16 EUR
4	RL1733R	WHEEL BEARING SET REAR RIGHT SIDE ALFA 6,75 05.85-09.85, 90 84-09.85 ALFETTA/GIULIETTA, GT/V/6 81-84	87.00 EUR
5	RL1733L	WHEEL BEARING SET REAR LEFT SIDE ALFA 6,75 05.85-09.85,90, 84-9.85 ALFETTA/GIULIETTA, GT/V/6 81-84	87.00 EUR

Alfetta > STEERING > STEERING PARTS

1	AG1300	STEERING ROD, ALFETTA,GIULIETTA (116),75,90, RIGHT-HAND THREAD	40.83 EUR
2	AG13ZF	STEERING ROD ALFETTA,GIULIETTA, GTV/6,(116),75,90,RIGHT-HAND THREAD,OE MANUFACTURER LEMFOERDER	101.04 EUR
3	SSK180	TIE ROD END ALFETTA,GIULIETTA,GTV/6 (116)75,90,RZ/SZ	32.83 EUR
4	SSK18ZF	OE: 60521320 TIE ROD END 116 Lemförder	***
5	LMS2269	STEERING SLEEVE SPICA GIULIETTA ALL, ALFETTA FROM 01/79	25.66 EUR
6	LMS2270	STEERING SLEEVE SPICA ALFETTA UNTIL YEAR 1987	25.66 EUR

Alfetta > BRAKE > FRONT BRAKE

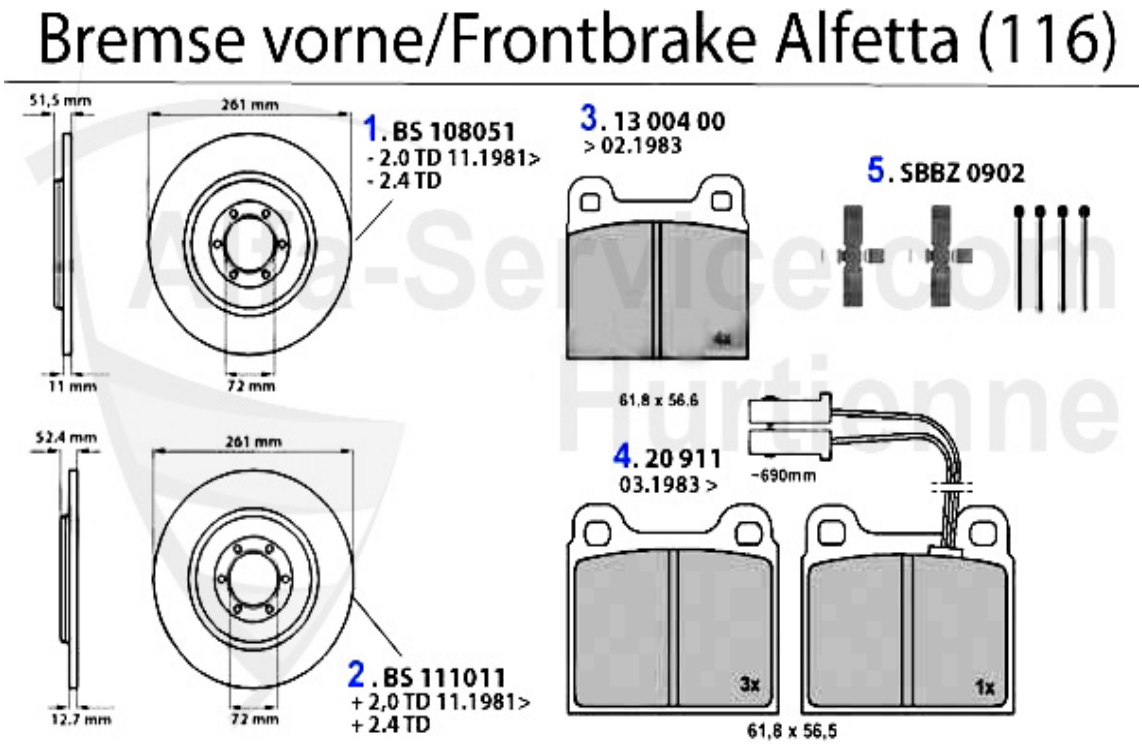

1	BS108051	OE.60703487,FRONT BRAKE DISC ALFETTA 1.6/1.8/2.0L 72-84/2.0 TD 79-81,GTV 116,1.6/1.8/2.0 YEAR 76-82	48.73 EUR
2	BS111011	Bremsscheibe VA Alfetta 2.0/2.4 TD bj. 81-84,GTV (116) bj. 78-86, 75 2.0 bj. 05.85-10.88/2.4 TD bj. 09.85-09.88,90 1.8/2.0/ie/V6 bj. 09.84-08.87	56.42 EUR
3	13 004 0 0	1300-1600 FRONT BRAKE PADS	23.18 EUR
4	20911 150 05	FRONT BRAKE PADS 116 4 CYL. 75 1.6/ 1.8 IE >09.89, ATE BRAKE SYSTEM	60.52 EUR
5	SBBZ0902	SBB-Zubehör für 1300400/20034 4x stift 2x kreuzfeder	8.21 EUR

Alfetta > BRAKE > REAR BRAKE

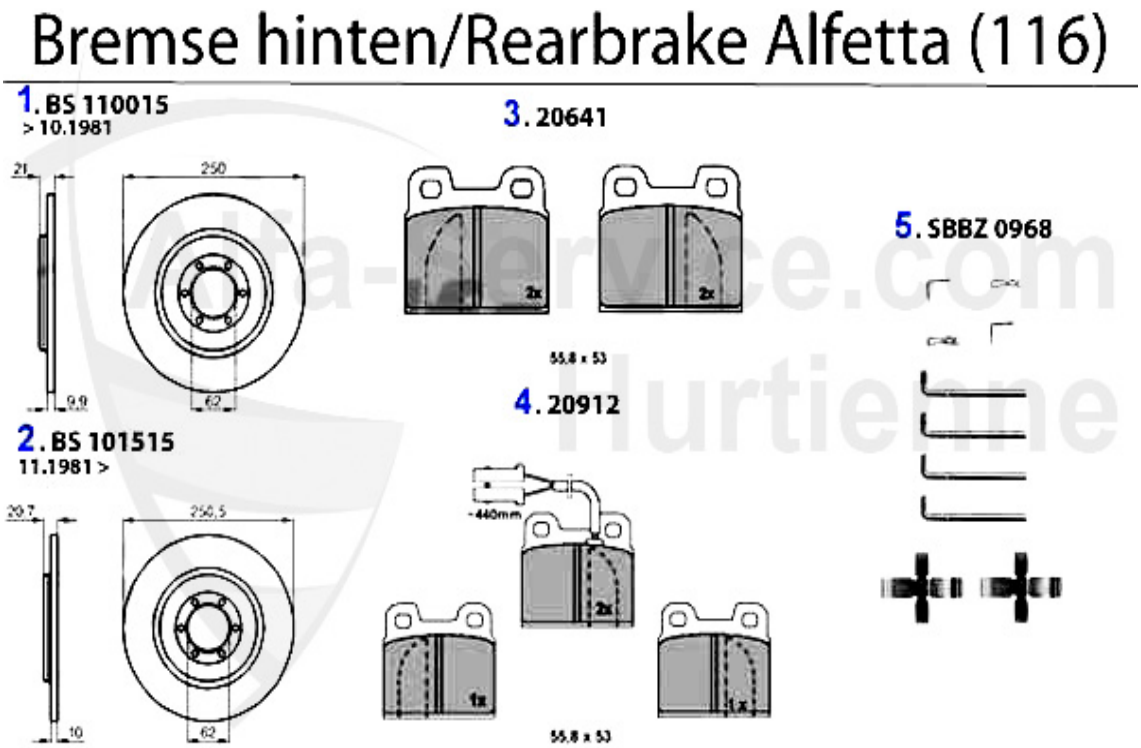

1	BS110015	OE.60703170 REAR BRAKE DISC ALFETTA 1.6/1.8/2.0 YEAR >10.81,GTV(116) 1.6 1.8/2.0 YEAR > 10.81	41.03 EUR
2	BS101515	OE 60701786, BRAKE DISC REAR ALFETTA YEAR 11.81>, GIULIETTA ALL, GTV (116) YEAR 11.80>, 75 1.6/1.8/ie/2.0/TD YEAR 85-92 2.4 TD/2.5 V6 YEAR 90-92, 90 1.8/2.0/2.0 V6 YEAR 84-87	39.65 EUR
3	20641 150 04	REAR BRAKE PADS ALFETTA,GIULIETTA GT/V(116),ATE BRAKE SYSTEM	37.66 EUR
4	20912 150 05	REAR BRAKE PADS WITH WARNING UNIT 1.6/ 1.8/TURBO/2.0 BRAKE SYSTEM:ATE	70.21 EUR
6	SBBZ0968	SBB-Zubehör 116 HA f. 20641,20912	16.65 EUR

Alfetta > BRAKE > CALIPER

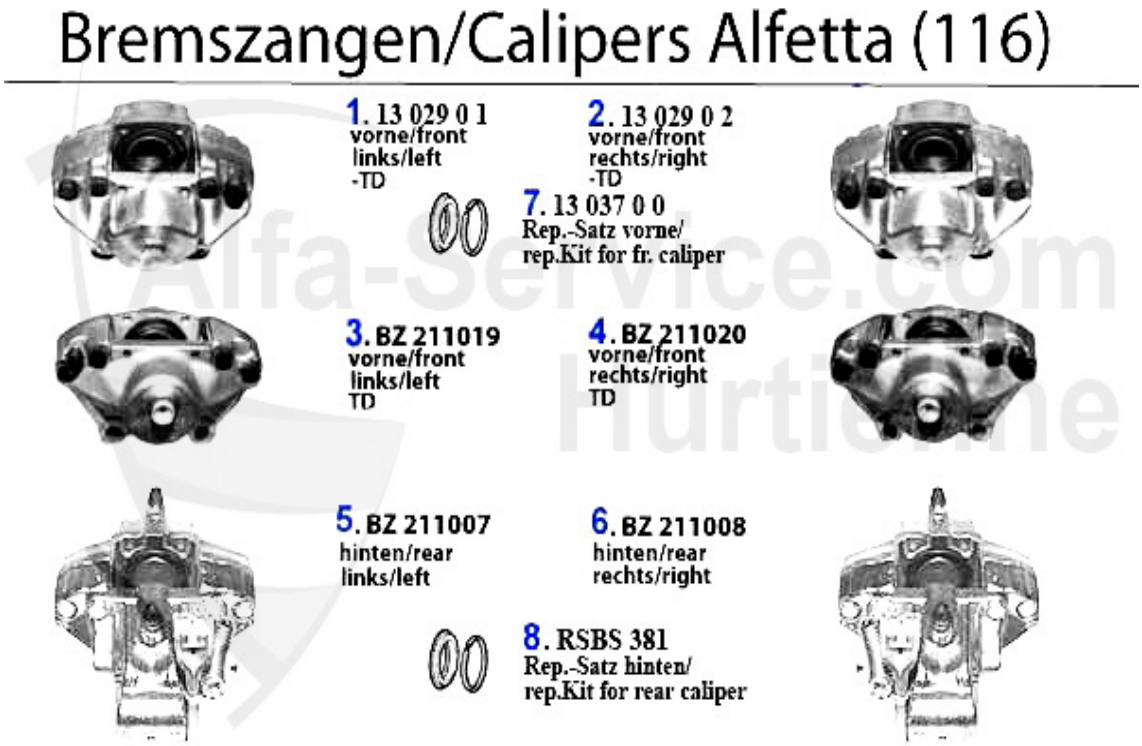

1	13 029 0 1	FRONT CALIPER 1300-1600 LEFT, ALFETTA, GUILIETTA ATE FRONT LEFT EXCHANGE PART	149.00 EUR
1	13 200 0 1	BRAKE CALIPER FRONT LEFT 1300-1600 (67-93) NEW PART, NO DEPOSIT!	165.01 EUR
2	13 200 0 2	BRAKE CALIPER FRONT RIGHT 1300-1600 (67-93) NEW PART, NO DEPOSIT!	165.01 EUR
2	13 029 0 2	FRONT CALIPER 1300-1600 RIGHT, ALFETTA, GIULIETTA ATE FRONT RIGHT EXCHANGE PART	149.00 EUR
3	BZ211019	Bremssattel vl 75 1.7/2.0 bj. 84-88 90 2.0 ie/2.4 TD bj. 84-87 Alfetta 2.0/2.4 TD bj. 79-84 Bremssystem: Ate 2-kolben Austauschteil	117.98 EUR
4	BZ211020	Bremssattel vr 75 1.8/2.0 bj. 84-88 90 2.0 ie/2.4 TD bj. 84-87 Alfetta 2.0/2.4 TD bj. 79-84 Bremssystem: Ate 2-kolben Austauschteil	117.98 EUR
5	BZ211007	OE. 60760085 BRAKE CALIPPER REAR LEFT ALFETTA/GIULIETTA/GTV6 (116),75,90 ATE BRAKE SYSTEM	204.68 EUR
6	BZ211008	OE. 60760086 BRAKE CALIPPER REAR RIGHT ALFETTA/GIULIETTA/GTV6 (116),75,90 ATE BRAKE SYSTEM	204.68 EUR
7	13 037 0 0	REPAIR KIT FRONT BRAKE CALIPERS SET FOR 2 CALIPERS, 48MM PISTONS DIA	20.50 EUR
8	RSBS381	REPAIR KIT f. REAR CALIPPER ATE ALFETTA, GIULIETTA, GTV/6 (116), 75,90	20.83 EUR

Alfetta > BRAKE > BRAKE SERVO/BRAKE MASTER CYL.

BKV/Hauptbremszylinder/Brakeservo/Brake master cylinder Alfetta (116)

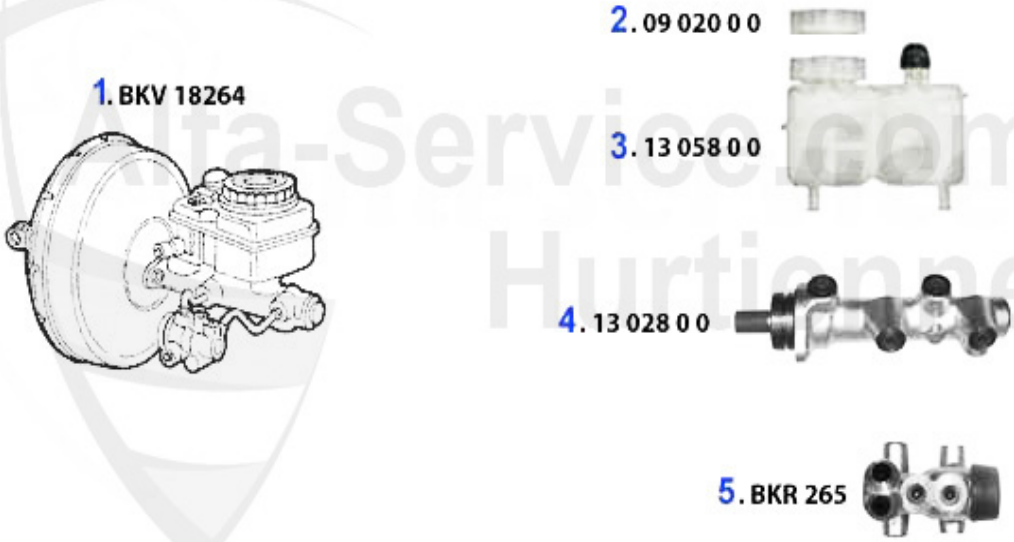

Alfa-Service.com Hurtienne

1	BKV18264	Bremskraftverstärker 75 1.6/1.8/2.0 /ie/TS/2.5/3.0 V6/2.0/2.4 TD Bj. > 9.89,90 1.8/2.0 ie/2.4 TD,Alfetta,G iulietta,GT/V/6 (116) Bremssystem: Bendix	***
2	09 020 0 0	COVER FOR HYDRAULIC OIL RESERVOIRE BRAKE AND CLUTCH MASTER CYLINDER	7.50 EUR
3	13 058 0 0	BRAKE FLUID RESERVOIR (late model)	85.00 EUR
4	13 028 0 0	BRAKE MASTER CYLINDER 1300-2000 hanging pedals, 116 1300-2500	120.50 EUR
5	BKR265	BRAKING GOVERNOR 75,90,GIULIETTA,GTV 2.0 (116) 84>	168.99 EUR

Bremskraftregler/Brake Valve Alfetta

1	13 020 0 0	BRAKE VALVE REAR AXLE	99.00 EUR

Alfetta > BRAKE > BRAKE HOSES

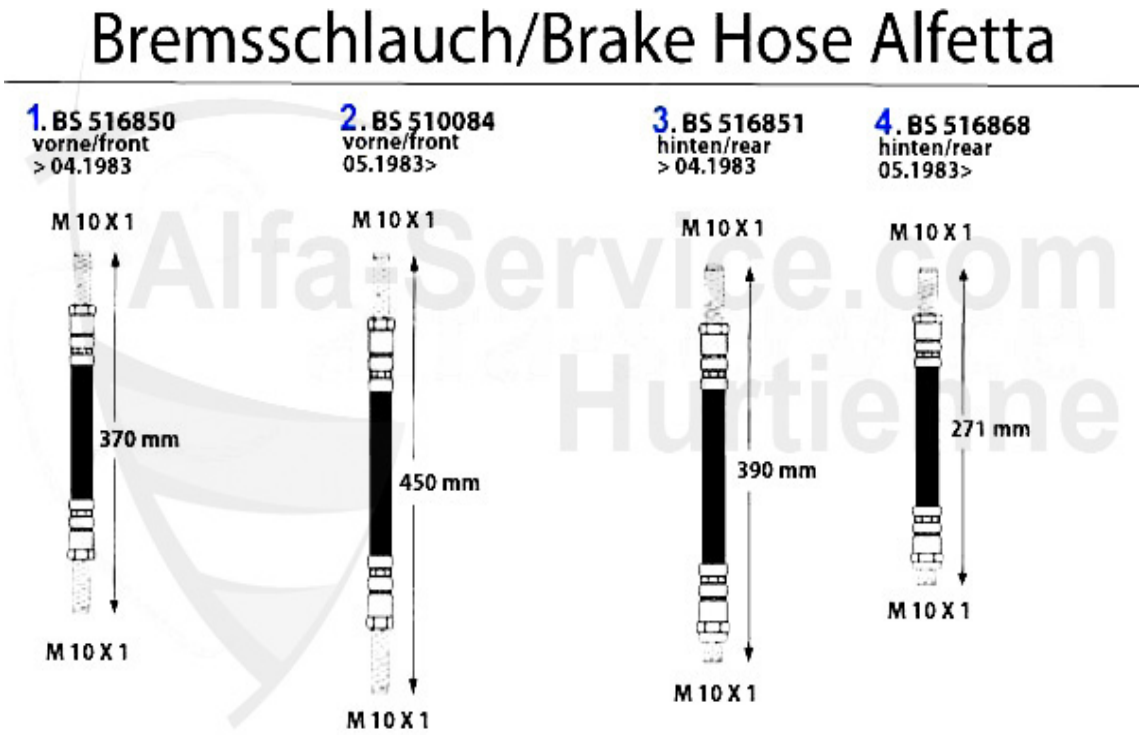

1	BS516850	OE. 60727319 BRAKEHOSE 116 4-CYL. >1983	15.28 EUR
2	BS510084	BRAKE HOSE FRONT ALFETTA 1.6/1.8/2.0/2.4 TD, GIULIETTA 1.3/1.6/1.8/TURBO YEAR 05.83>,GTV 2.0/2.5 V6 YEAR 02.81>,75,90 6,RZ,SZ ALL, 445MM LENGTH	17.74 EUR
3	BS516851	OE. 60728512 BRAKEHOSE REAR 116 >1983	16.92 EUR

Alfetta > BRAKE > BRAKE CABLE

Handbremsseil/Brake Cable Alfetta

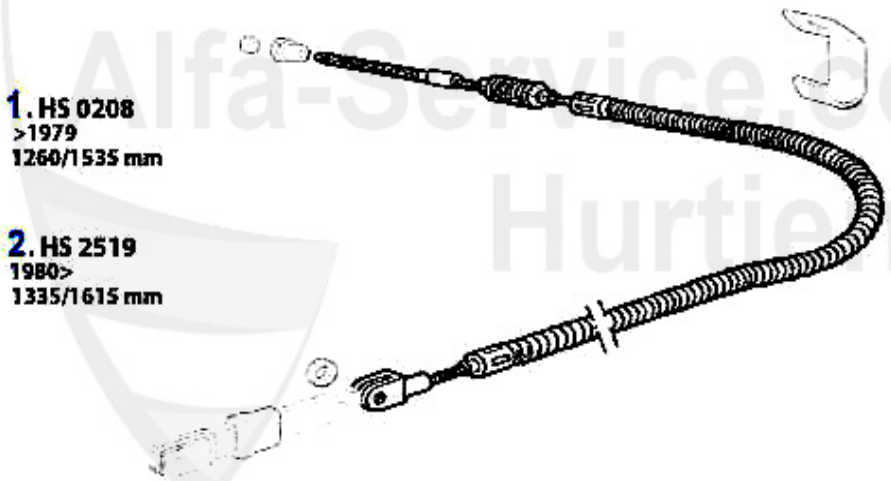

1	HS0208	OE.60521838,HANDBRAKE CABLE ALFETTA/GT YEAR >79	30.26 EUR
2	HS2519	OE. 60521838 BRAKE CABLE 116 1980>	24.62 EUR

Alfetta > ELECTRIC > INTERIOR

Alfa Service.com
Hurtienne

1	SCH500	INTERIOR LAMP ALFETTA GTV (116) 1. SERIES WITH CHROME FRAME AND SWITCH	59.20 EUR
2	SCH501	INTERIOR LAMP ALFETTA GTV (116) 2. SERIES MILK GLASS WITH SWITCH	54.50 EUR

Alfetta > ELECTRIC > FUEL TANK SENDING UNIT

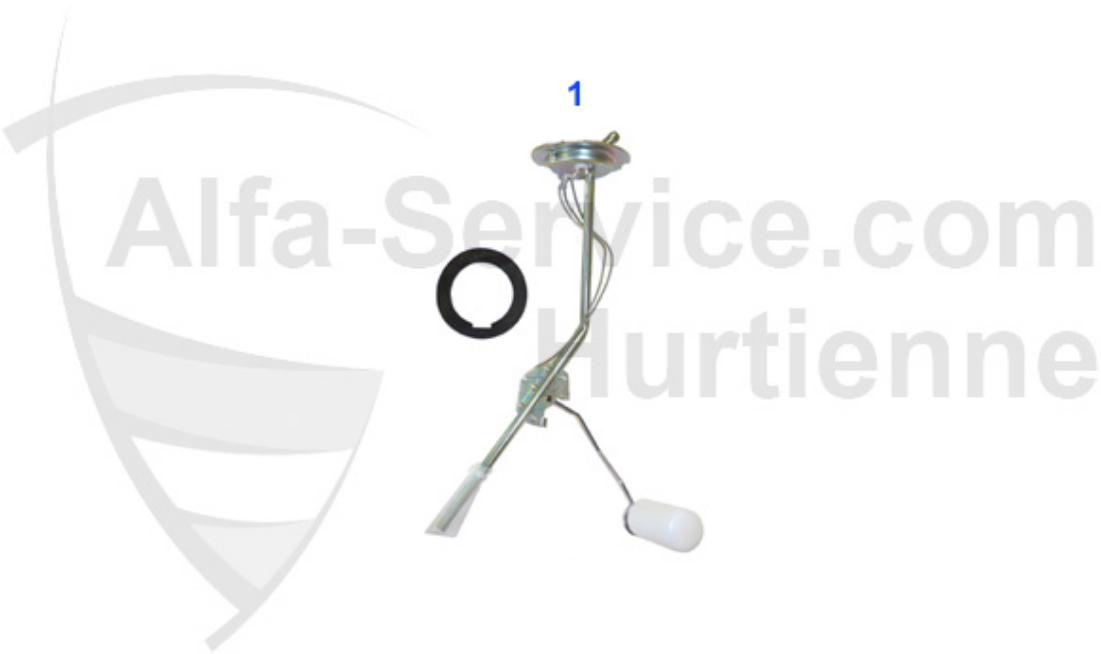

1	TG01129	OE. 116003205005 FUEL SENDING UNIT ALFETTA SALOON, GTV/4 (116)	85.00 EUR

Alfetta > ELECTRIC > Zündschloss

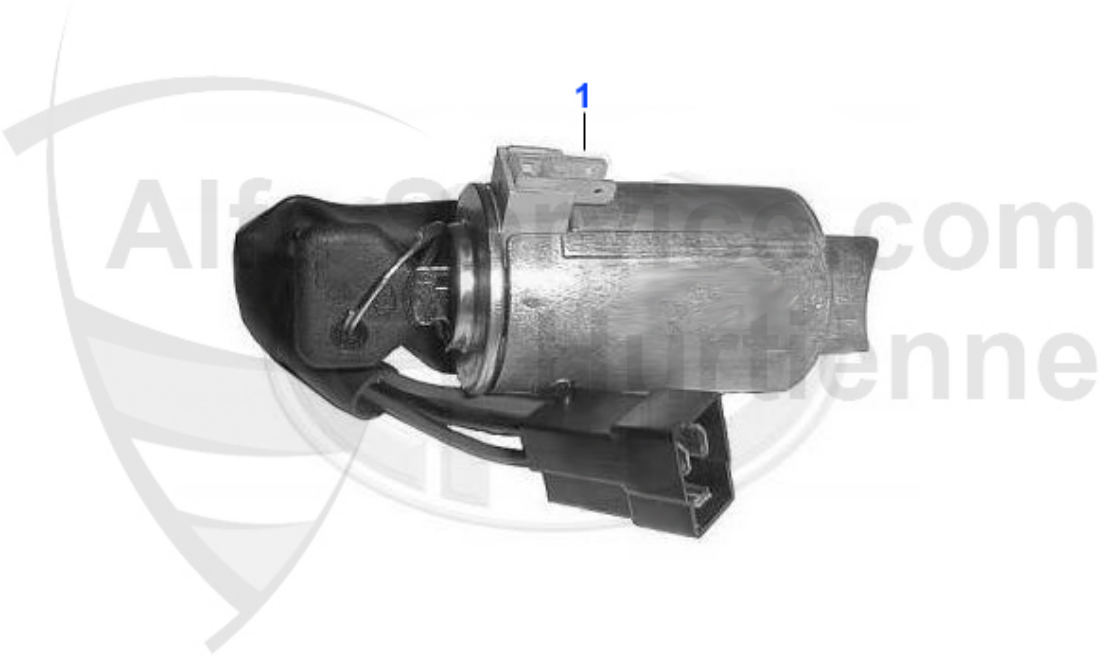

1	ZS01027	IGNITION SWITCH ALFETTA/GIULIETTA/SUD SPRINT 1983>, 33 (905)	105.55 EUR

Alfetta > ELECTRIC > ENGINE ELECTRICAL SYSTEMS > SENSORS/SWITCHES

1	14 041 0 0	MECHANICAL STOP-LAMP SWITCH 105/115 alfetta,giulietta, gtv(116), spider	10.77 EUR
2	WTG60183	COOLING TEMPERATURE SENDER UNIT 6,75 V6, ALFETTA 2.4 TD,GTV6 (116)	14.99 EUR

1	14 028 0 0	IGNITION CONTACT BOSCH-DISTRIBUTOR 68-89 sud, spider, giulia, bertone, alfetta, giulietta, gtv (116)	6.30 EUR
2	14 036 0 0	ROTOR BOSCH 64-93	8.10 EUR
3	14 032 0 0	DISTRIBUTOR CAP BOSCH 1974-93 carburetor alfetta, giulietta, giulia, spider, bertone,33,75,90, arna, sud,75, 90, 164	8.62 EUR
4	14 073 0 0	CONDENSER BOSCH beg. 1974 spider, bertone, giulia, alfetta giulietta gtv(116)	9.50 EUR
5	14 003 0 0	POINTS MARELLI alfetta, giuletta, gtv(116) 1.6	6.70 EUR
6	14 007 0 0	ROTOR MARELLI with points alfetta, gtv	11.31 EUR
7	14 081 0 0	ROTOR MARELLI - without points 75,90, alfetta, giulietta	6.88 EUR
8	14 005 0 0	DISTRIBUTOR CAP MARELLI WITH CONTACT alfetta, giulietta, gtv (116) 1.6	13.30 EUR
9	14 080 0 0	DISTRIBUTOR CAP MARELLI CONTACTLESS IGNITION	11.50 EUR

Alfetta > ELECTRIC > ENGINE ELECTRICAL SYSTEMS > IGNITION PARTS

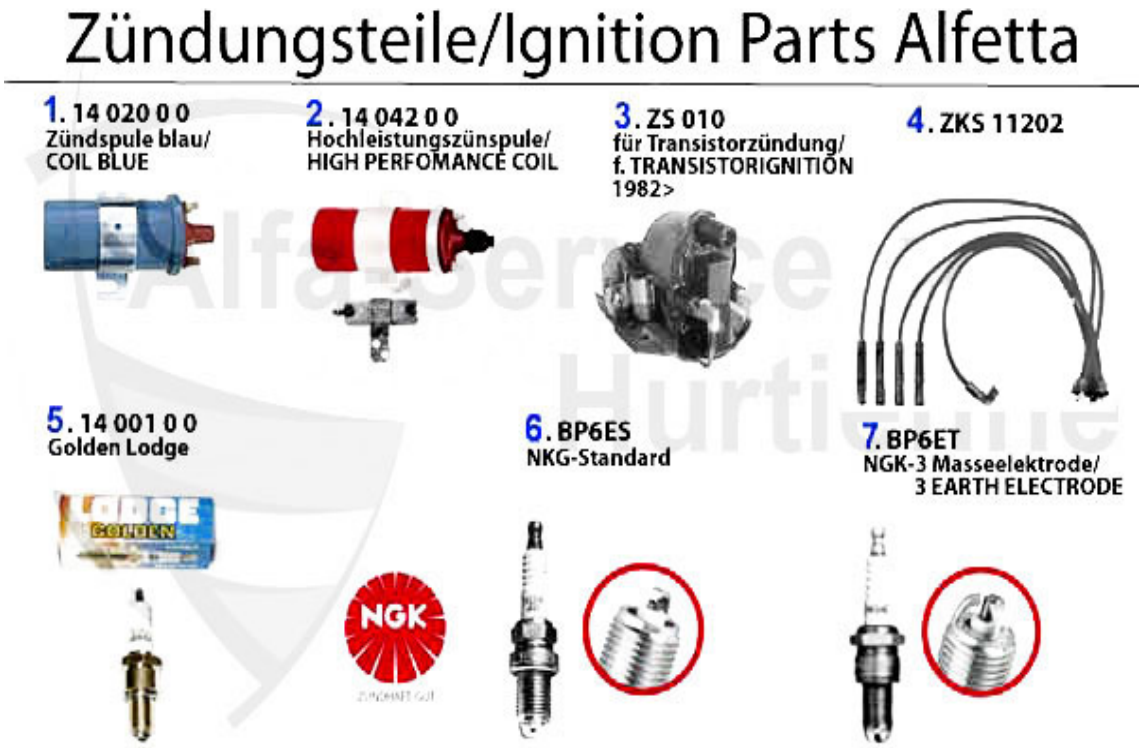

1	14 020 0 0	IGNITION COIL STANDARD	32.73 EUR
2	14 042 0 0	IGNITION COIL WITH SERIES RESISTANCE	107.50 EUR
3	ZS010	Zündspule elektronisch 33,75,90,Arn a,Sud/Sprint,Alfetta,Giulietta Bj. >86 System: Marelli	245.18 EUR
4	ZKS11202	IGNITION WIRE SET ALFETTA/GTV (116)	26.78 EUR
5	14 001 0 0	SPARK PLUG GOLDEN LODGE 2HL	***
6	BP 6 ES	SPARK PLUG NGK 33 1.3/1.4/1.7 ie 1.6/1.8/TURBO/2.0ie/3.0 V6, 90 1.8/ 90 1.8/2.0ie, 145/6 1.4/1.6IE ALFETTA GT/V(116)1.8/2.0 SUD/SPRINT 1.2/1.3/1.5 TI,ARNA 1.2/1.3/TI,SPIDER(115)1.6/2.0 79>,166 2.0 V6 TURBO	2.67 EUR
7	BP 6 ET	Zündkerze NGK m. 3 Masseelektroden 155 2.0 16V Turbo,105er alle Typen anstelle 2 HL	5.80 EUR

Alfetta > ELECTRIC > ENGINE ELECTRICAL SYSTEMS > AGGREGATS

1	14 017 0 0	STARTER, 9 TEETHS GIULIA,SPIDER,GT, GIULIETTA,ALFETTA,75,90	171.32 EUR
2	AN10680	STARTER ALFETTA,GIULIETTA,GTV (116) 2.0	193.89 EUR
3	AN71130	STARTER ALFETTA 2.0 TD	332.38 EUR
4	AN71120	STARTER ALFETTA 2.0/2.4 TD 83>	332.38 EUR
5	14 043 0 0	Generator 45A external controller Alfetta,Giulietta,GTV(116),Giulia,Spider Bertone	173.37 EUR
5	14 018 0 0	GENERATOR 45A - external controller alfetta, giulietta, GTV (116), giulia, spider, bertone	173.37 EUR
6	14 077 0 0	GENERATOR 55A 75,90, alfetta, giulietta, GTV (116), spider (115), 105 er EXCHANGE PART-PLEDGE EUR 43,10	183.12 EUR
7	LI33230	ALTERNATOR ALFETTA 2.0 TD >3.82	163.11 EUR
8	LI30970	ALTERNATOR 6,75,90,ALFETTA 2.0/2.4 TD	151.83 EUR
9	14 070 0 0	VOLTAGE REGULATOR FOR 45A GENERATOR	34.06 EUR
10	14 044 0 0	HIGH POWER STARTER 9 TEETH (1 KW) huge increase in cranking power draws less current ensuring starts engine even direct replacement for original	329.00 EUR

Alfetta > WIPERS > WIPERS

1	WM46138	Wischermotor 6,Alfetta,Giulietta,GT V/6 (116)	159.00 EUR
2	25 011 3 0	SET WIPER BLADES BLACK SPIDER 1986-93 HOOK END AND SPIDER 70-85 7mm STICK-IN	18.90 EUR

Alfetta > LITERATURE

1

1	26 409 0 0	ALFA ROMEO MANUAL,274 PAGES WITH 250 PICTURES	39.95 EUR