Table of Contents

E60 Engines

Subject **Page**

E60 Engines
Objectives 2

M54 Engine
Purpose of the System 3
Technical Data 3
System Components 4
Electric Fan - Removal 8

N62 Engine
Purpose of the System 9
Technical Data 10
System Components 11
Valvetronic - Overview 12

cardiagn.com

E60 Engines

Model: E60 - 525i, 530i, 545i

Engines: M54B25, M54B30, N62B44

Production: Start of Production MY 2004

Objectives:

After completion of this module you will be able to:

- Identify the changes on the M54 Engine as applied to the E60.
- Remove and install the Electric fan.
- Familiarize yourself with the N62B44 from the E65.

cardiagn.com

M54 Engine

Purpose of the System

The E60 530i is equipped with the M54 engine. The M54 engine is adapted for use in the E60 and the changes include:

- Engine peripherals:
  - Fresh air system Cooling system
  - Exhaust system
  - Ancillary components and belt drive
  - Cooling module (without viscous fan)

- MS45.1 Engine Management System

- Fuel system

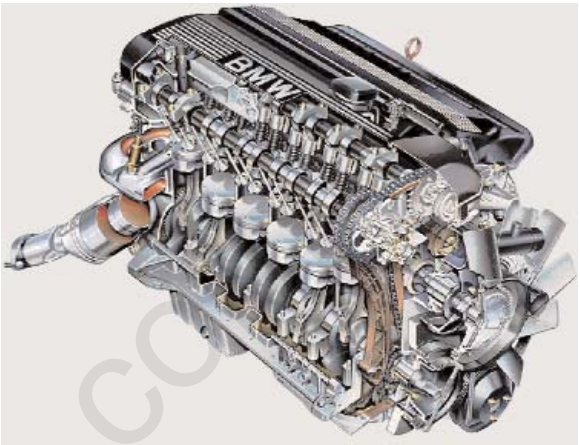

KT-10146

Technical Data

Engine	M54B25 / M54B30
Configuration	6-cylinder in-line
Displacement (cc)	2494 / 2979
Bore / stroke (mm)	84 x 75 / 84 x 89.6
Power output (bhp) at engine speed (rpm)	184 / 225 6000 / 5900
Torque (ft lb) at engine speed (rpm)	175 / 214 3500
Idle speed (rpm) Max. engine speed (rpm)	640 6500
Compression ratio (:1)	10.5 / 10.2
Valves per cylinder	4
Fuel requirement	Premium unleaded
Knock control	yes
Engine management system	Siemens MS45.1 (US)
Emission compliance	ULEV II (US)
Firing order	1-5-3-6-2-4

cardiagn.com

System Components

Fresh Air System

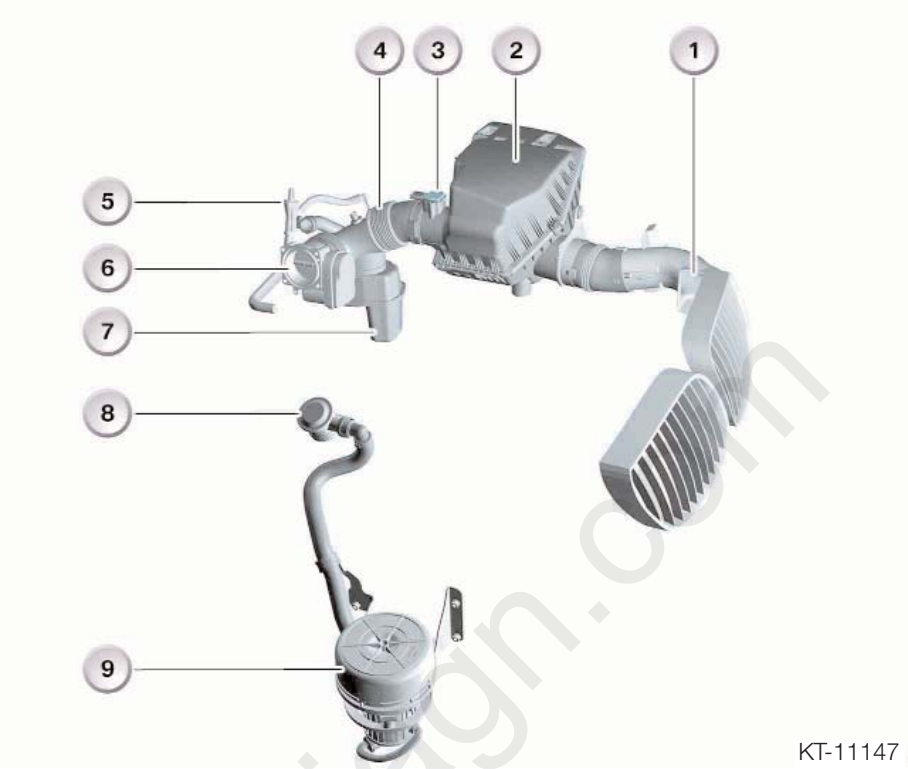

1. Intake snorkel
2. Air filter housing
3. Hot film air mass sensor (HFM)
4. Intake air boot
5. Suction-jet pump
6. Electronic throttle (EDK)
7. Intake noise resonator
8. Secondary air valve
9. Secondary air pump

cardiagn.com

Hot Film Air Mass Sensor (HFM)

The HFM is a compact plug in design, it is mounted directly into the clean air outlet of the air filter housing. This design eliminates the grille in front of the HFM. This reduces flow resistance in the air intake ducting, resulting in lower fuel consumption.

Air Filter

The intake air filter housing has a volume of approximately 13 litres.

Exhaust System

The E60 exhaust system has been specifically developed for the M54 engine.

1. Front pipe
2. Middle silencer
3. Rear silencer

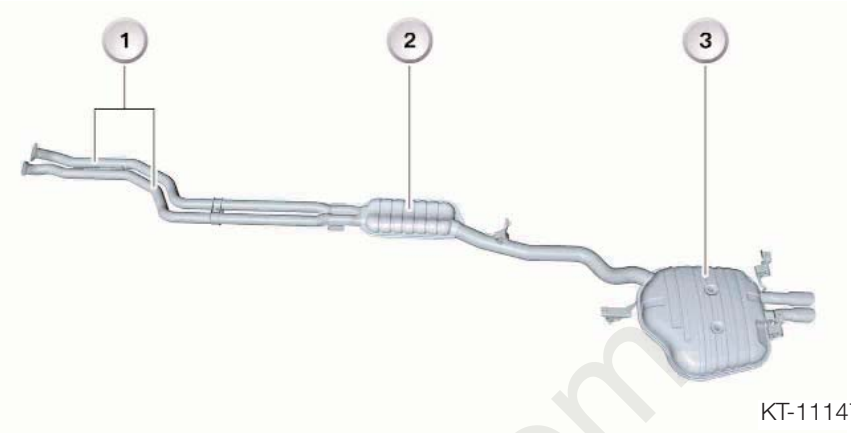

KT-11147

Silencer

The exhaust system is made of stainless steel and is designed as a single unit up to the exhaust manifolds. The exhaust system consists of a middle silencer with a volume of 4.8 litres and a rear silencer with a volume of 26.2 litres.

Note: Regarding service repairs, the middle and rear silencers can be ordered and replaced separately.

Variants

The shape of the stainless steel exhaust system is the same up to the exhaust manifolds for all engine (M54) and transmission variants.

Exhaust Manifolds

The exhaust manifolds with upstream catalytic converters have been used in previous M54 applications.

1. Oxygen sensors (pre-catalyst)
2. Catalytic converters
3. Catalyst Monitoring (post) oxygen sensors

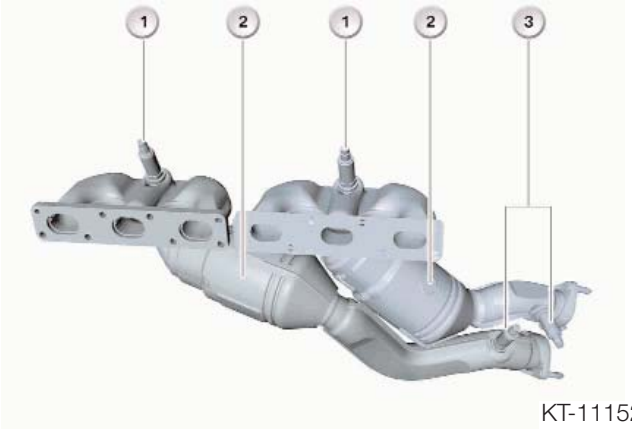

KT-11152

Variants

Depending on the exhaust emissions legislation, the exhaust manifolds have different catalyst coatings (world wide).

cardiagn.com

Ancillary Components and Belt Drive

Modifications

The alternator is fitted with a deflection pulley. The width of the ribbed V-belt for the A/C compressor drive has been reduced from 5 to 4 ribs.

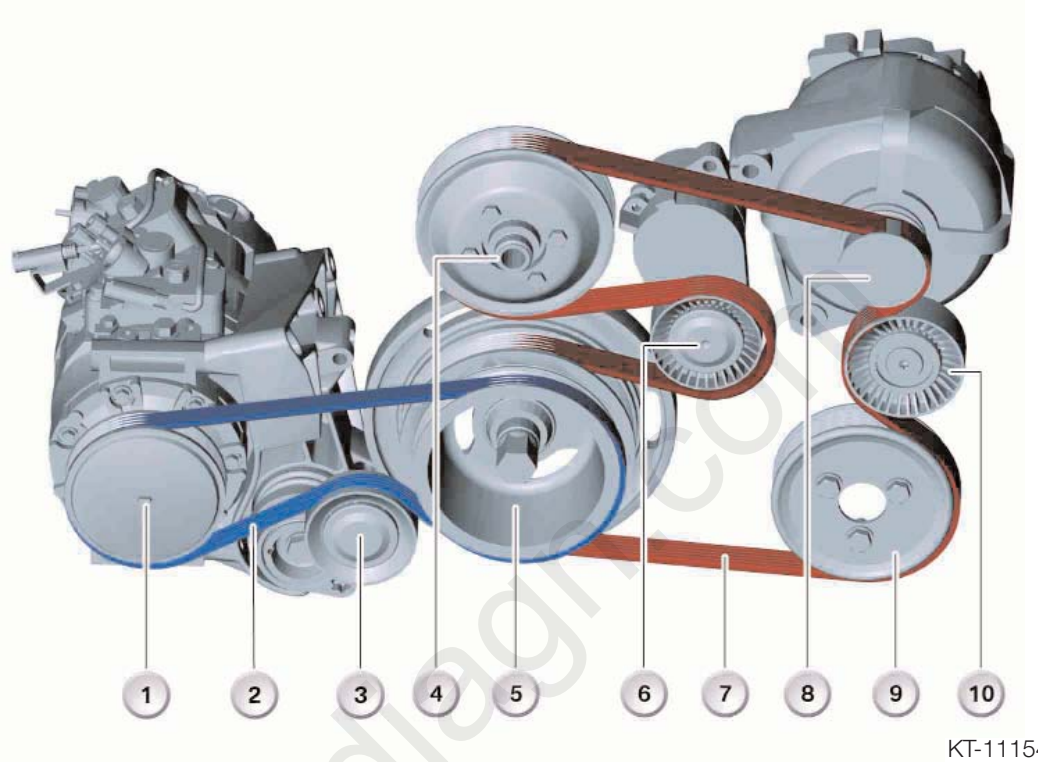

KT-11154

1. A/C compressor
2. Ribbed V-belt, A/C compressor drive
3. Tensioning pulley
4. Belt pulley, water pump
5. Vibration damper
6. Tensioning pulley
7. Ribbed V-belt, main drive
8. Alternator
9. Belt pulley, power-steering pump
10. Deflection pulley

Alternator

A Bosch alternator (1) with a charging current of 140 A is used on the M54. Due to the high alternator output, the alternator is fitted with a deflection pulley (2) for the ribbed V-belt.

The deflection pulley is a component part of the alternator and ensures that the ribbed V-belt is looped to better effect round the alternator pulley. Refer to the ST045 E85 Training Handout for alternator control.

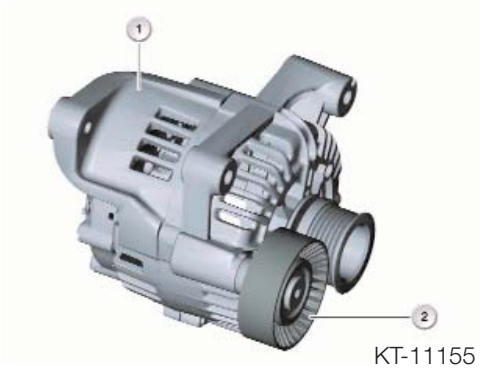

KT-11155

Cooling System

Only the modifications to the cooling system of the M54 for use in the E60 are addressed. The cooling module is similar in design to the E65. The transmission oil cooler for the automatic transmission is identical to that of the E65. ***An engine oil cooler and viscous fan are not used in the E60 with M54 engine.*** No modifications have been made to the cooling system on the engine side.

New Features

- Coolant expansion tank with facility for draining off leakage at the expansion tank cap.
- Lifetime coolant, routine flushing is not required.

1. Coolant connection (upper radiator hose)
2. Electric fan motor
3. Mounting plate with thermostat (transmission-oil cooler)
4. Transmission oil cooler
5. A/C condenser
6. Power steering cooler
7. Cooler for active steering (AFS)

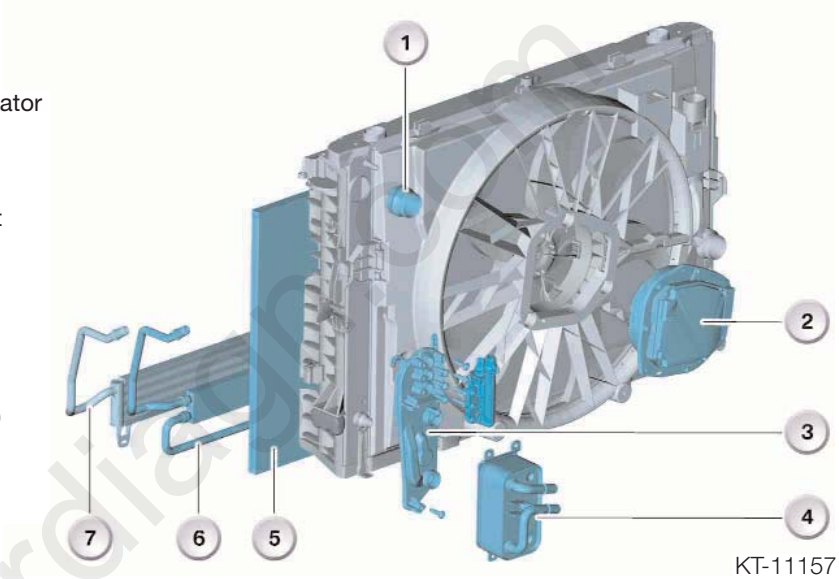

The electric fan is mounted on the fan cowl and acts by drawing air through the radiator. The speed is variably regulated by the ECM.

Note: Automatic transmission equipped E60's with M54 have a 600 W fan.

The coolant expansion tank is located outside the cooling module on the right hand strut tower. The tank is made of black plastic and incorporates a float rod with min. and max. markings to determine the coolant level. A float with a reed contact is located in the base of the tank for the low level warning.

The cap on the expansion tank limits the pressure in the cooling system. The cap incorporates two valves. The pressure relief valve opens from a cooling system pressure of 2 bar. The vacuum valve opens in the event of a small vacuum pressure in the cooling system.

Note: The opening pressures of the cap for the coolant expansion tank differ depending on the type of engine used. The caps for the coolant expansion tank are engine specific and must not be mixed up. The value of the opening pressure is cast into the inside of the cap and can be read off there (e.g. 200 = 2 bar opening pressure).

When the cap opens at a system pressure of 2 bar, it allows pressure to escape and with it coolant from the side. In the previous model series, the coolant left behind contaminants on the expansion tank.

The coolant expansion tank of the E60 is provided with a drain edge all round the cap. This drain edge serves to catch the escaping coolant.

Inside the drain edge is a drain channel which passes through the expansion tank. The escaping coolant is routed through this drain channel to the right-hand wheel-arch trim, where it evaporates.

KT-061603

cardiagn.com

Workshop Exercise - Electric Fan Removal

The electric fan can be removed without removing the coolant connection (1) and the mounting plate with thermostat (3).

With Instructor's assistance, remove the electric fan.

1. *Remove the top connecting plate (complete vehicle section) and radiator top cover.*
2. *Lift the fan (slightly) out of the "U" shaped retaining brackets (left and right) and fold in the "hinged" tab (left side - arrow) to gain clearance.*
3. *Then the electric fan can be removed the rest of the way. The electric fan motor (2) remains in place until the fan assembly is removed from vehicle.*

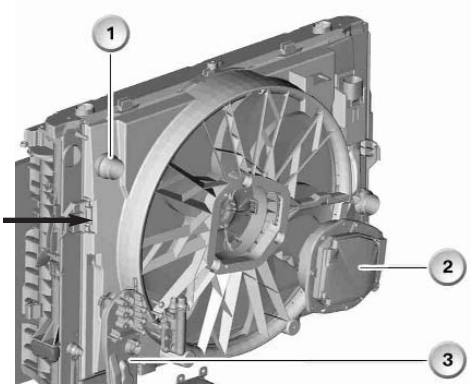

KT-11157 B

Note: When installing electric fan, remember to unfold the "hinged" tab before fitting into "U" shaped brackets.

N62 Engine

Purpose of The System

The E60 545i is equipped with the N62B44 (NG - New Generation) engine used in the E65. Please refer to ST042 E65 Complete Vehicle Part 2 for additional details and information.

The development objectives were:

- Reduction in fuel consumption
- Reduction in emissions
- Increased power
- Improved torque and torque curve
- Improved engine acoustics

To achieve these objectives, enhancements were made in the following areas:

- Engine mechanicals
- Treatment of exhaust emissions
- Valve timing
- Engine management control
- Intake air flow
- Electric fan only (no viscous fan)

The most important features of the new N62 engine are:

- 8 cylinders in a 90º V configuration
- 2 four-valve cylinder heads
- Light-alloy design
- Newly-developed variable intake manifold
- Valvetronic system

43-02-01

In conjunction with the Variable Intake Manifold, the Valvetronic system adapts the intake valve lift to ensure optimum cylinder filling. The throttle valve use is limited during engine operation to maintain a constant intake manifold vacuum.

Technical Data

Engine	N62B44
Design	8 Cylinder V
V Angle	90°
Displacement (cm3)	4,398
Bore/Stroke (mm)	92/82.7
Cylinder Gap (mm)	98
Main Crankshaft Bearing Diameter (mm)	70
Output (HP) at speed (rpm)	325 5,900
Torque (FT.LBS) at Speed (RPM)	330 3,600
Cut-off speed (RPM)	6.500
Compression Ratio	10.0
Valves / Cylinders	4
Intake Valve Diameter (mm)	35
Exhaust Valve Diameter (mm)	29
Intake Valve Lift (mm)	0.3 – 9.85
Exhaust Valve Lift (mm)	9.7
Cams Open Period (º crankshaft)	282/254
Engine Weight (kg)	213
Fuel	Premium unleaded
Firing Order	1-5-4-8-6-3-7-2
Knock Sensor	Yes
Variable Intake Manifold	Yes
Digital Motor Electronics	ME 9.2 with Valvetronic Control Unit
Complies with Exhaust Emission Regulations	EU-3 EU-4 LEV (US)
Engine Length (mm)	704
Fuel Consumption Saving Compared with the M62	14%

cardiagn.com

System Components

1. Starter Motor
2. Valvetronic Motor
3. Evaporative Emission Valve
4. VANOS Solenoid Valve
5. Thermostat Housing
6. Throttle Unit
7. Vacuum Pump

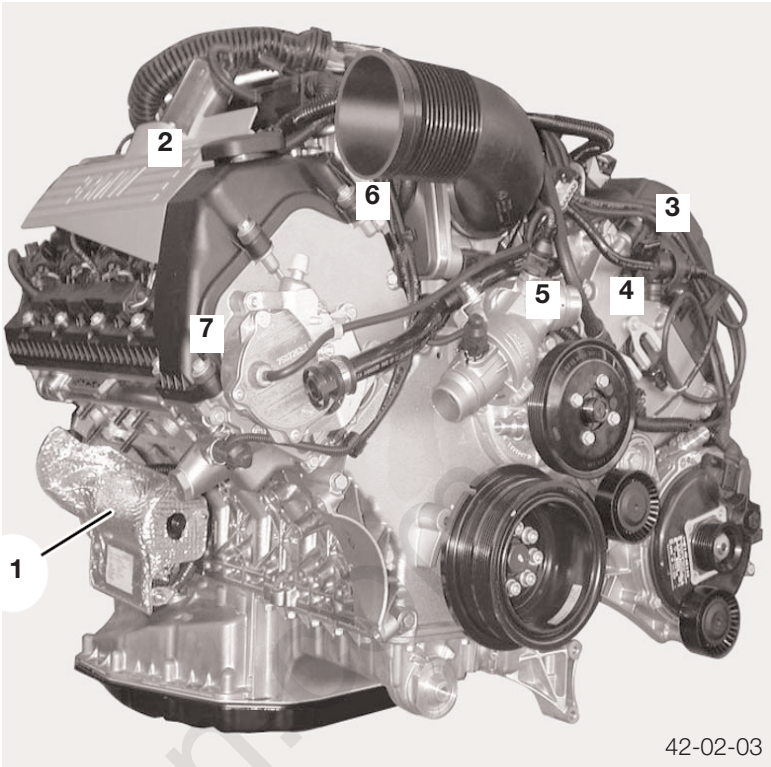

N62B44 Engine (Front View)

1. Camshaft Position Sensor Cylinder Bank 5-8
2. Valvetronic Eccentric Shaft Position Sensor, Cylinder Bank 5-8
3. Valvetronic Eccentric Shaft Position Sensor, Cylinder Bank 1-4
4. Camshaft Position Sensor Cylinder Bank 1-4
5. Secondary Air Non-return Valves
6. Servomotor for Variable Intake Manifold

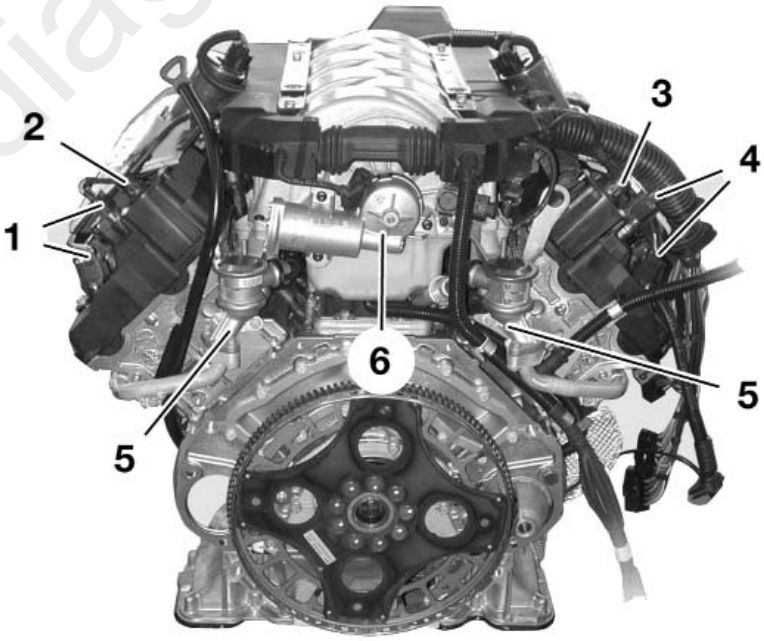

N62B44 Engine (Rear View)

42-02-04

cardiagn

Valvetronic

Over the entire speed and load range, the gasoline engine needs a combustible fuel-air mixture within the ideal ratio (Lambda = 1). The mixture quantity must be altered to vary the speed and output. This variation is effected by the throttle valve. The mixture, which falls within the narrow range of Lambda = 1, is formed outside the combustion chamber using the fuel injection system (external mixture formation).

The mixture control is influenced by the throttle valve and is not optimal in all the different load ranges. This is particularly true in the idle to part-load ranges, since the throttle valve is only opened slightly in these ranges. The consequences are less than optimal cylinder filling, torque and increased fuel consumption.

Technical measures were previously introduced; such as the optimization of air/fuel mixing, improved valve overlap, introduction of DISA and the steady improvement of mixture control all depend on the throttle valve. This is where the completely unique Valvetronic design comes in.

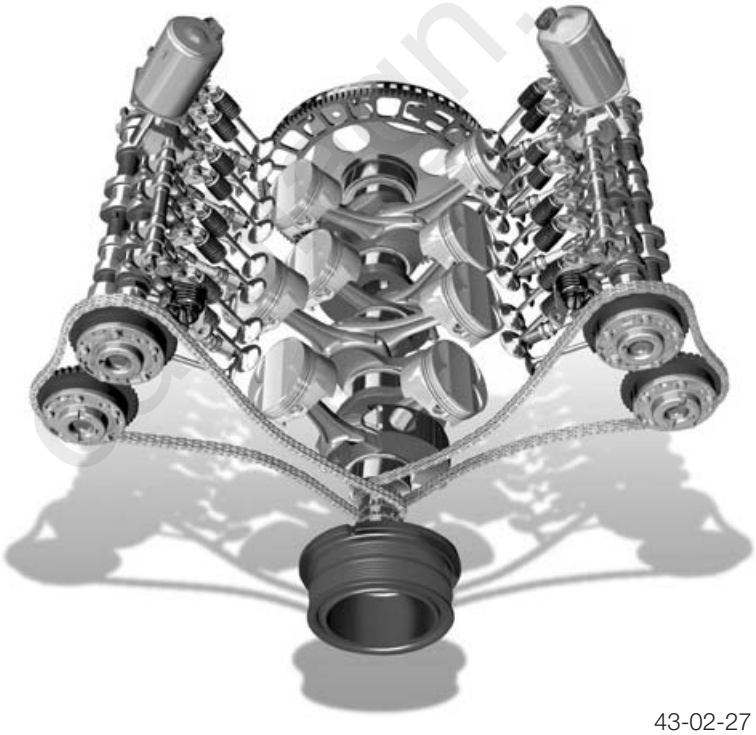

43-02-27

The Valvetronic system simultaneously varies the valve opening time and the valve opening lift between 0.3 mm and 9.85 mm, according to engine speed and load. This means that the air/fuel mixture volume is controlled according to engine requirements. This type of mixture and volume control makes the typical throttle valve control unnecessary.