1997-2005 AUTOMATIC TRANSMISSIONS

Servicing - A5S 325Z & A5S 360R/390R

APPLICATION

For transmission application, see **AUTOMATIC TRANSMISSION APPLICATION** table. For transmission application and oil recommendation, see **Fig. 1** -**Fig. 5** . Also see **LUBRICATION** .

AUTOMATIC TRANSMISSION APPLICATION

Application	Transmission Model
3-Series (E46)	A5S 325Z (5HP19), A5S 360R/390R (GM5)
525i (E39)	A5S 325Z (5HP19)
528i (E39)	A5S 360R/390R (GM5)
530i (E39)	A5S 325Z (5HP19)
X3 (E83)	A5S 360R/390R (GM5)
X5 3.0L (E53)	A5S 360R/390R (GM5)
Z4 (E85)	A5S 325Z (5HP19)

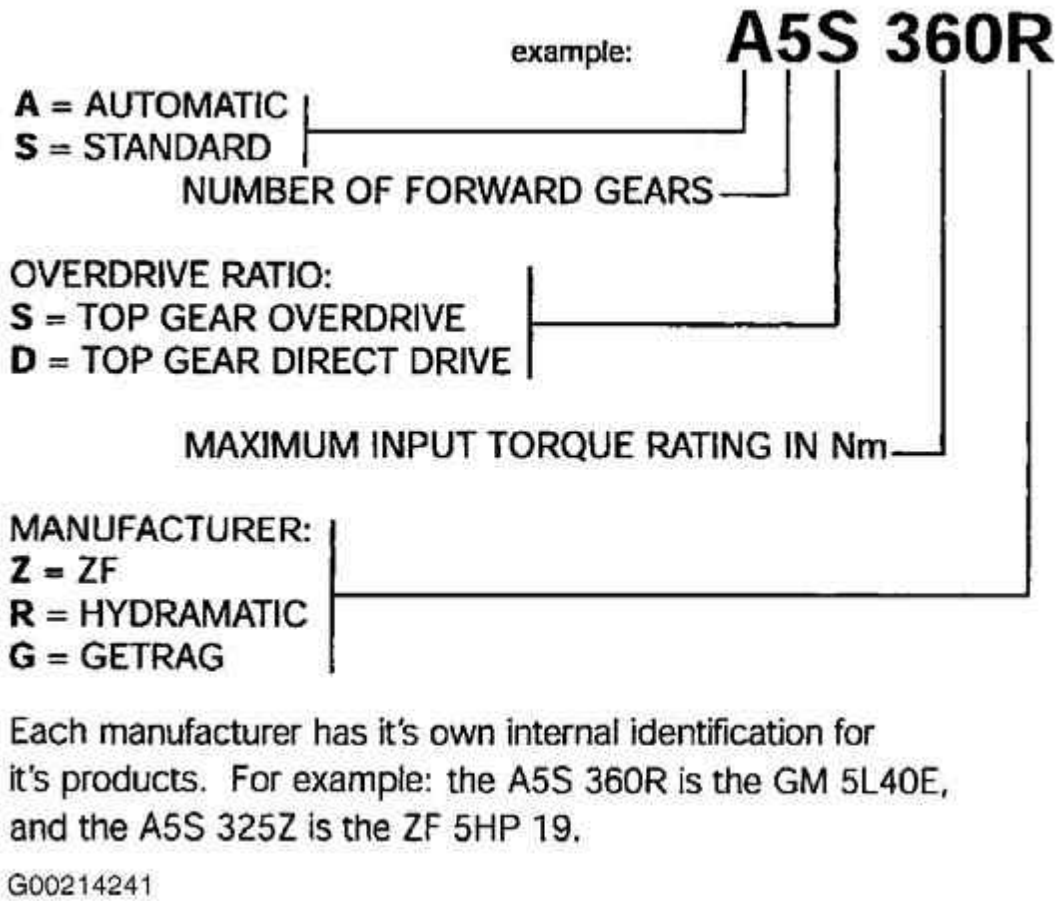

Fig. 1: BMW Transmission Identification Code (1 Of 2)
Courtesy of BMW OF NORTH AMERICA, INC.

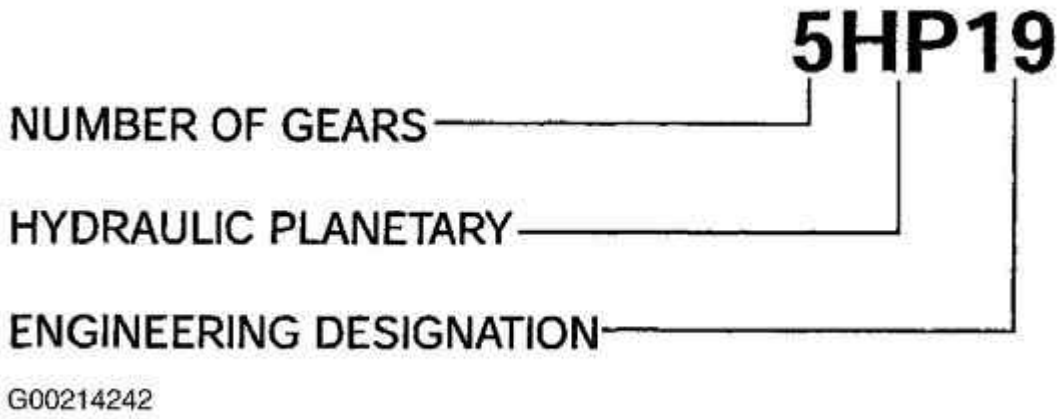

Fig. 2: BMW Transmission Identification Code (2 Of 2)
Courtesy of BMW OF NORTH AMERICA, INC.

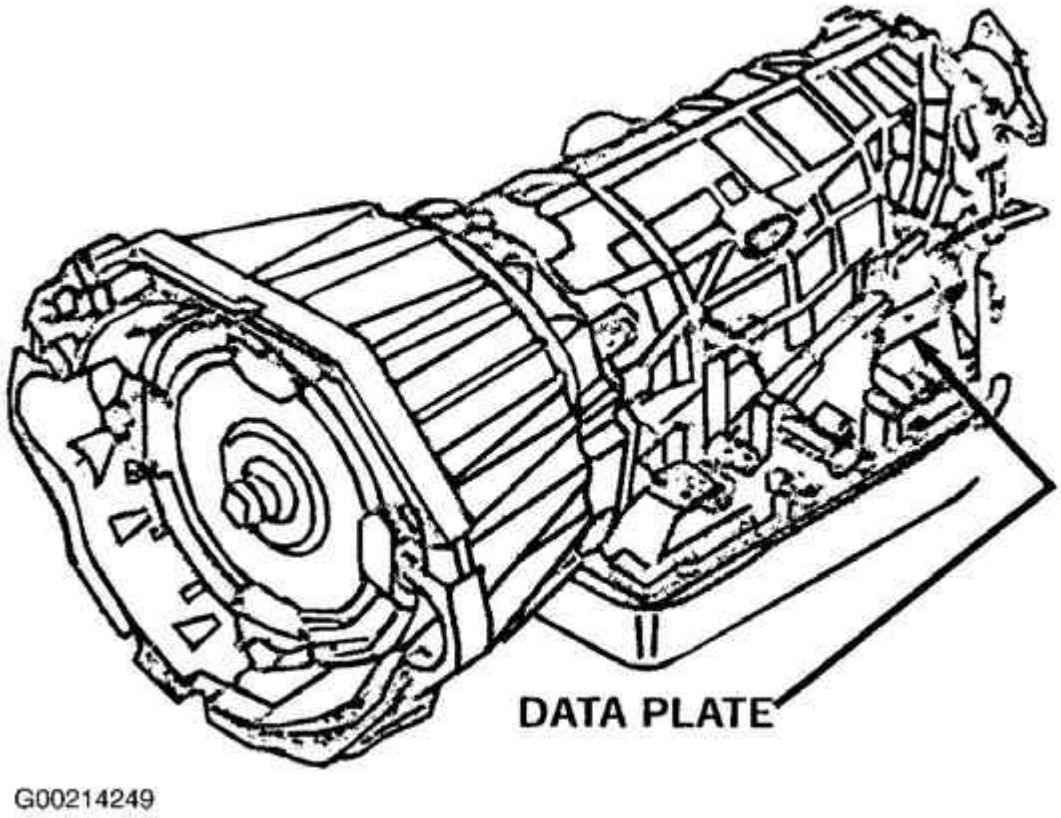

Fig. 3: BMW Transmission Specification Plate

Courtesy of BMW OF NORTH AMERICA, INC.

GM TRANSMISSION AND OIL APPLICATION CHART (2000-2002)

	2000		2001	2002
E46 323i/Ci	GM5 (A5S360R) 7/98 3/00			
E46 328i/Ci	GM5 (A5S 360R) 6/98 5/00			
E46 325xi/xiT		GM5 (A5S 360R) 6/00		
E46 325iT		GM5 (A5S 390R) 6/00 3/01		
E46 330xi		GM5 (A5S 360R) 6/00		
E39 528iT	GM5 (A5S 360R) 9/99 6/00			
E39 525iT		GM5 (A5S 390R) 6/00 3/01		
E39 530i		GM5 (A5S 390R) 6/00 3/01		
E53 X5 (3.0)		4/00 GM5 (A5S 360R)		
E36 Z3 (2.3i / 2.8i / coupe)	THM-R1 (A4S 270R) 10/96 & (A4S 310R) 6/00			
E36 Z3 (2.5i / 3.0i / coupe)		6/00 GM5 (A5S 360R)		

USE OF ANY OTHER OIL WILL CAUSE A NON-WARRANTABLE TRANSMISSION FAILURE !

APPROVED OILS:	UNICAL DEXRON III - D - "MULTI - PURPOSE ATF" CASTROL DEXRON III - MERCON TEXACO ATF MERCON - DEXRON III LIFETIME FILL AS OF 6/98 VEHICLE PRODUCTION	USE ONLY TEXACO ETL 7045E (REPLACES TEXACO ETL 7045) BMW PART NUMBER 83 22 0 026 922 25 LITER CONTAINER LIFETIME FILL	USE ONLY TEXACO ETL 8072 B BMW PART NUMBER 83 22 0 024 359 25 LITER CONTAINER LIFETIME FILL

FILL CAPACITY:	TRANSMISSION MODEL	WITH TORQUE CONVERTER	WITHOUT TORQUE CONVERTER
	THM-R1 (A4S 270R)	6.8 LITERS	7.8 LITERS
	THM-R1 (A4S 310R)	6.8 LITERS	7.8 LITERS
	5L40-E/GM5 (A5S 360R)	9.0 LITERS	8.0 LITERS
	5L40-E/GM5 (A5S 390R)	9.0 LITERS	8.0 LITERS
	5L40-E/GM5 (A5S 360R) FOR X5	9.6 LITERS	8.6 LITERS

G00217000

Fig. 4: BMW GM Transmission & Oil Application Chart (2000-02)
Courtesy of BMW OF NORTH AMERICA, INC.

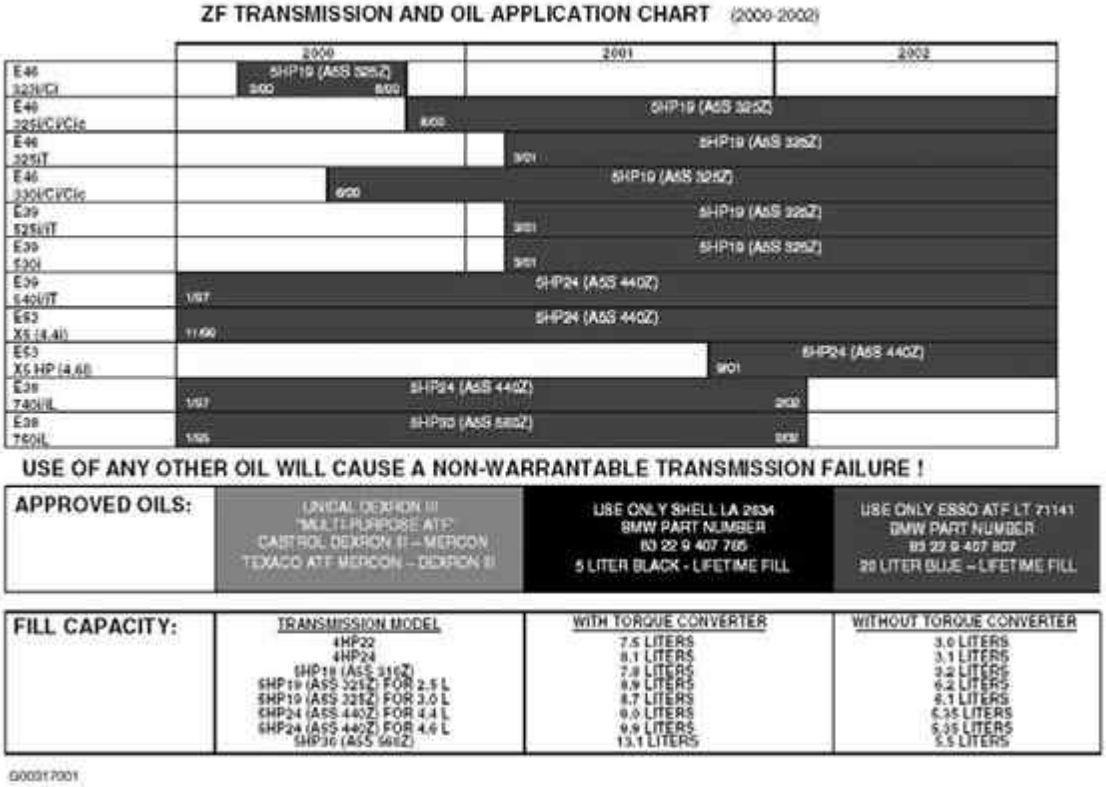

Fig. 5: BMW ZF Transmission & Oil Application Chart (2000-02)
Courtesy of BMW OF NORTH AMERICA, INC.

LUBRICATION

NOTE: **Transmission is sealed at factory for life of transmission. If any leaks are found, factory recommends replacing transmission assembly.**

SERVICE INTERVALS

Transmission fluid replacement is not necessary, except for some newer model vehicles with Condition Based Service. See **AUTOMATIC TRANSMISSION** overview article.

CHECKING/TOPPING UP FLUID LEVEL IN AUTOMATIC TRANSMISSION (A5S 325Z)

CAUTION: **It is absolutely essential to use the approved automatic transmission fluid in this automatic transmission. Failure to comply with this requirement will result in serious damage to the automatic transmission. See RECOMMENDED FLUID .**

NOTE: **Before releasing filler plug (1), make sure temperature of automatic transmission fluid is at least 30 °C.**

NOTE: Numbers in text refer to numbers in figures.

Add ATF After Repairs

Selector lever to setting "P". The vehicle must be horizontal and should be secured to prevent it from rolling away. Connect BMW Diagnosis and Information System (DIS) or BMW MoDiC to car.

Release filler plug (1). See **Fig. 6** . Top up automatic transmission fluid until it flows over. Screw in filler plug (1) by hand. Start engine and run at idle speed. Operate brake and shift through all gears at idle speed several times (hold gears for 3 sec. in each case).

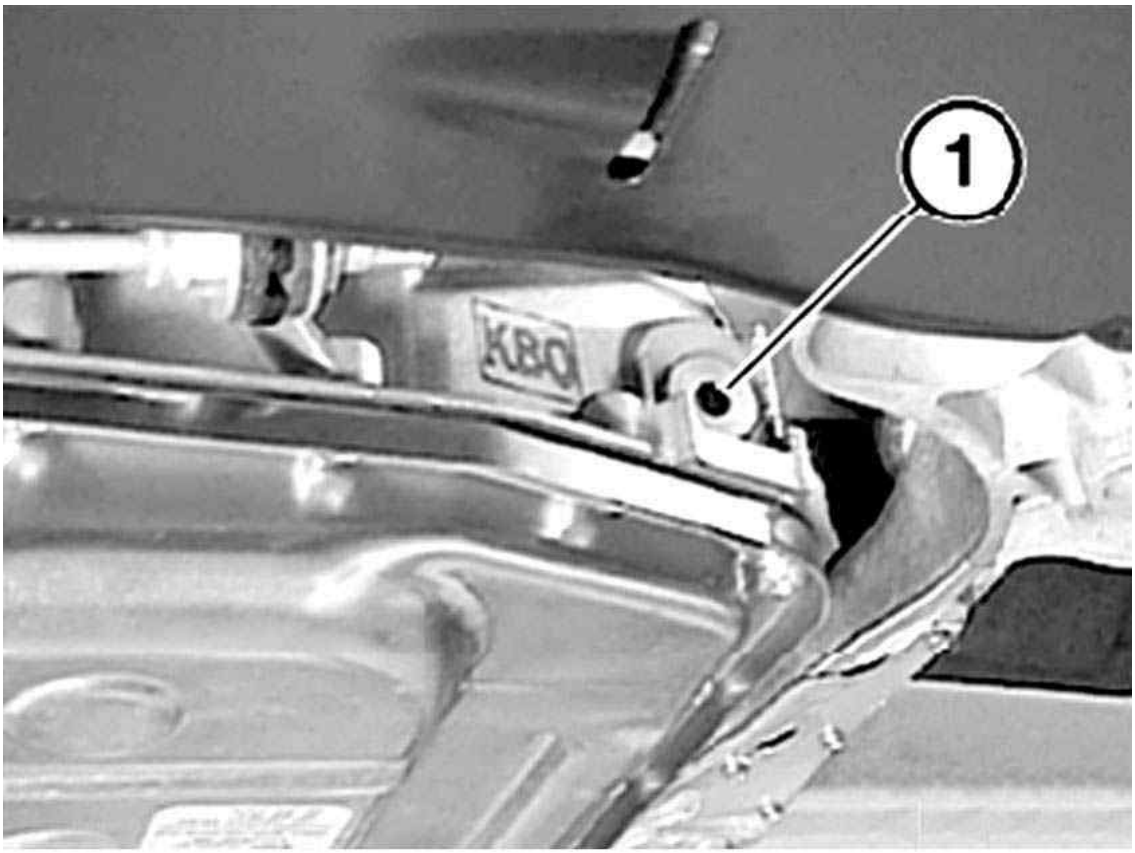

G00382297

Fig. 6: Locating Filler Plug
Courtesy of BMW OF NORTH AMERICA, INC.

Release filler plug (1) again. Top up automatic transmission fluid until it flows over. Increase temperature of automatic transmission fluid to 40-50°C. Check temperature of automatic transmission fluid with MoDiC or DIS. Screw in filler plug (1).

Installation: replace filler plug (1). Tighten to specification. See **TORQUE SPECIFICATIONS** .

Check Fluid Level

Connect BMW Diagnosis and Information System (DIS) and/or BMW MoDiC to vehicle and perform fluid level check in accordance with instructions.

CHECKING/TOPPING UP FLUID LEVEL IN AUTOMATIC TRANSMISSION (A5S 360R/390R, A4S 200R/310R)

NOTE: Numbers in text refer to numbers in figures.

CAUTION: Use only the approved transmission fluid in this automatic transmission. See RECOMMENDED FLUID . Failure to comply with this requirement will result in serious damage to the automatic transmission. Refer also to adhesive label on transmission fluid sump.

Move selector lever to park position "P". The vehicle must be horizontal and secured against rolling off.

Connect BMW Diagnosis and Information System (DIS) or BMW MoDiC to vehicle. Release filler plug (1). See **Fig. 7** . Top up automatic transmission fluid until overflowing. Screw in filler plug (1) by hand. Start engine and run at idle speed. Actuate brake and shift through all gears at idle speed. Open filler plug (1) again. Increase temperature of transmission fluid to 30-50°C. Interrogate temperature of transmission fluid with MoDiC or DIS. Top up automatic transmission fluid until overflowing. Screw in filler plug (1).

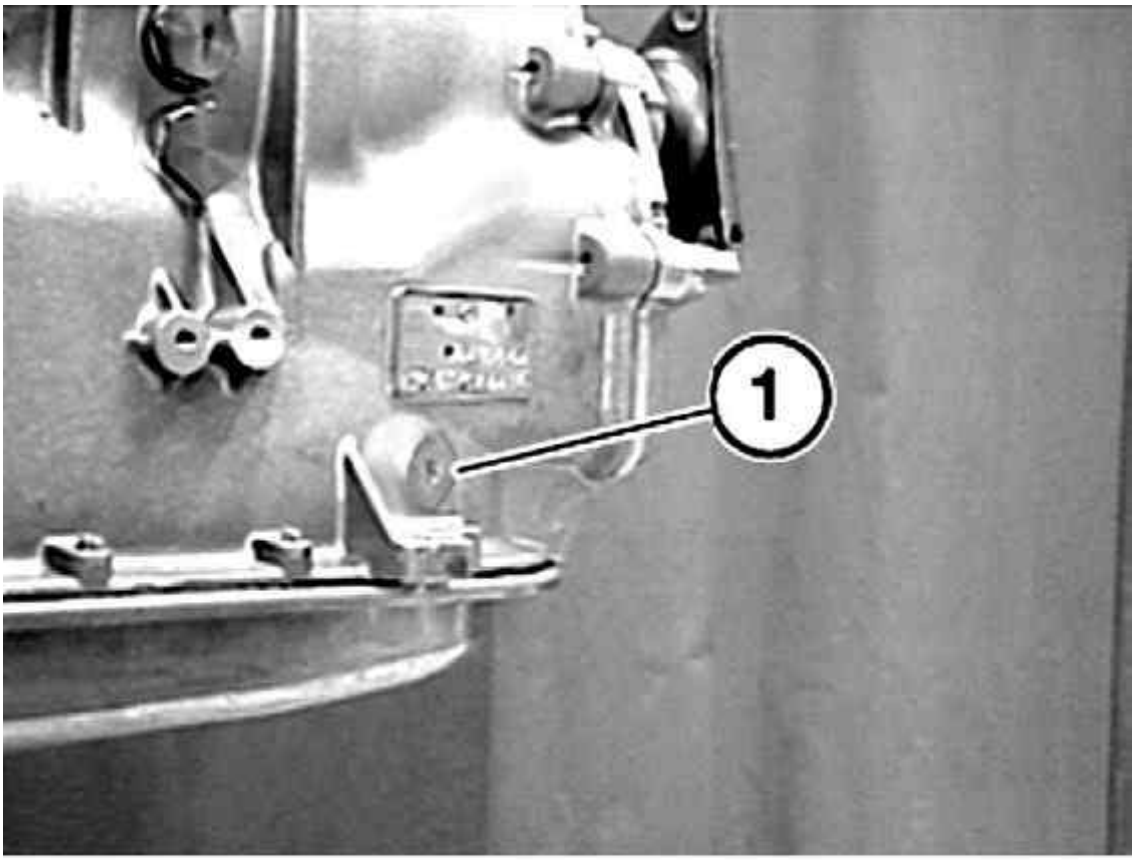

G00382343

Fig. 7: Removing Filler Plug
Courtesy of BMW OF NORTH AMERICA, INC.

Installation: check sealing ring on filler plug (1) for damage and, if necessary, replace sealing ring and filler plug. Tighten to specification. See **TORQUE SPECIFICATIONS** .

RECOMMENDED FLUID

A5S 360R/390R (GM5)

330xi (6/00 To Present)

The transmission oil pan will be labeled with either Texaco ETL-7045 or Dexron III. Fill or top off with the proper fluid only. Do not mix Texaco ETL-7045 and Dexron fluids.

A5S 325Z (5HP19)

330i & 330Ci (6/00 To Present) & 325i & 325Ci (9/00 To Present)

No fluid changes are necessary. Never mix any other oil with this transmission when doing repair or when topping off. Use ESSO (LT 711441) BMW part No. (83 22 9 407 807).

ADJUSTMENTS

GEARSHIFT SELECTOR LEVER CABLE (A5S 325Z)

NOTE: Numbers in text refer to numbers in figures.

Check cable for ease of movement. More selector lever to "P" setting. Grip clamp bushing (1). Loosen nut (2). Press selector lever (3) forward (park position). Press cable (4) in direction of arrow and release again. Grip clamping piece (1). Tighten nut (2) to 88 INCH lbs. (10 N.m). See **Fig. 8** . Move selector lever to "P" position. Check whether parking lock is engaged by rotating shaft or pushing car.

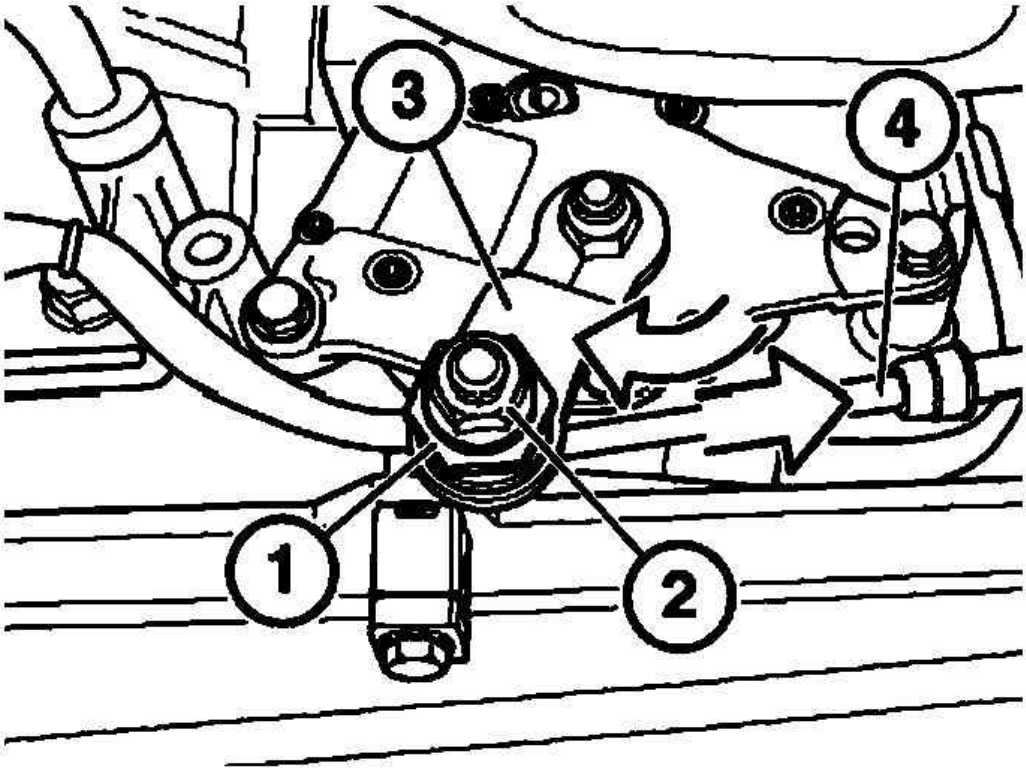

1. Clamp Bushing
2. Nut
3. Selector Lever
4. Cable

G00317004

Fig. 8: Adjusting Selector Lever Cable (A5S 325Z)
Courtesy of BMW OF NORTH AMERICA, INC.

ADJUSTING SELECTOR LEVER (A5S 360R/390R, A4S 200R, 6HP26Z/19Z)

NOTE: Numbers in text refer to numbers in figures.

Check cable for ease of movement. Move selector lever to "P" position.

Grip clamping sleeve (1). See **Fig. 9** . Slacken nut (2). Press selector lever (3) forwards into park position. Press cable (4) in direction of arrow and release again. Grip clamping sleeve (1). Tighten down nut (2) to

specification. See **TORQUE SPECIFICATIONS** .

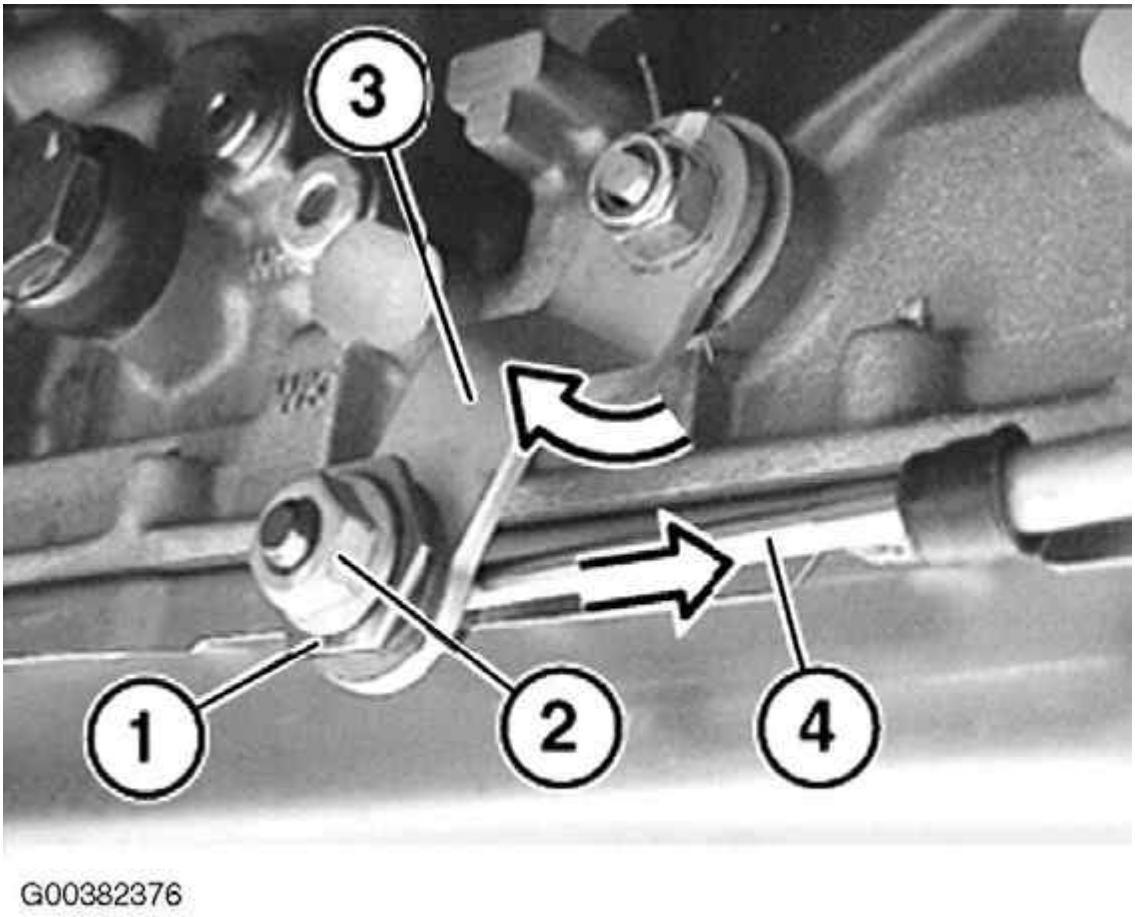

Fig. 9: Adjusting Selector Lever
Courtesy of BMW OF NORTH AMERICA, INC.

Installation: move selector lever to "P" position. Check whether parking gear is engaged by turning propeller shaft.

PROGRAMMING

CONTROL UNIT

Turn off ignition. Connect MoDiC or DIS Tester. Turn on ignition. Select "Programming". For subsequent procedure, follow MoDiC or DIS instructions. Installation location of control unit, refer to DIS Tester.

REMOVAL & INSTALLATION

CAUTION: It is absolutely essential to use the approved automatic transmission fluid

in this automatic transmission. Failure to comply with this requirement will result in serious damage to the automatic transmission.

REMOVING AND INSTALLING OR REPLACING PARKING LOCK (A5S 325Z)

NOTE: Numbers in text refer to numbers in figures.

NOTE: After completing work, top up ATF level. Check/top up fluid level in automatic transmission. See CHECKING/TOPPING UP FLUID LEVEL IN AUTOMATIC TRANSMISSION (A5S 325Z) .

Remove and install transmission oil sump. See **REMOVING AND INSTALLING/SEALING OR REPLACING TRANSMISSION OIL SUMP (A5S 325Z)** .

Push in detent disk (1) in direction of arrow up to stop. See **Fig. 10** . Unfasten screws (2). Remove guide bracket (3). Upon installation, tighten fasteners to specification. See **TORQUE SPECIFICATIONS** .

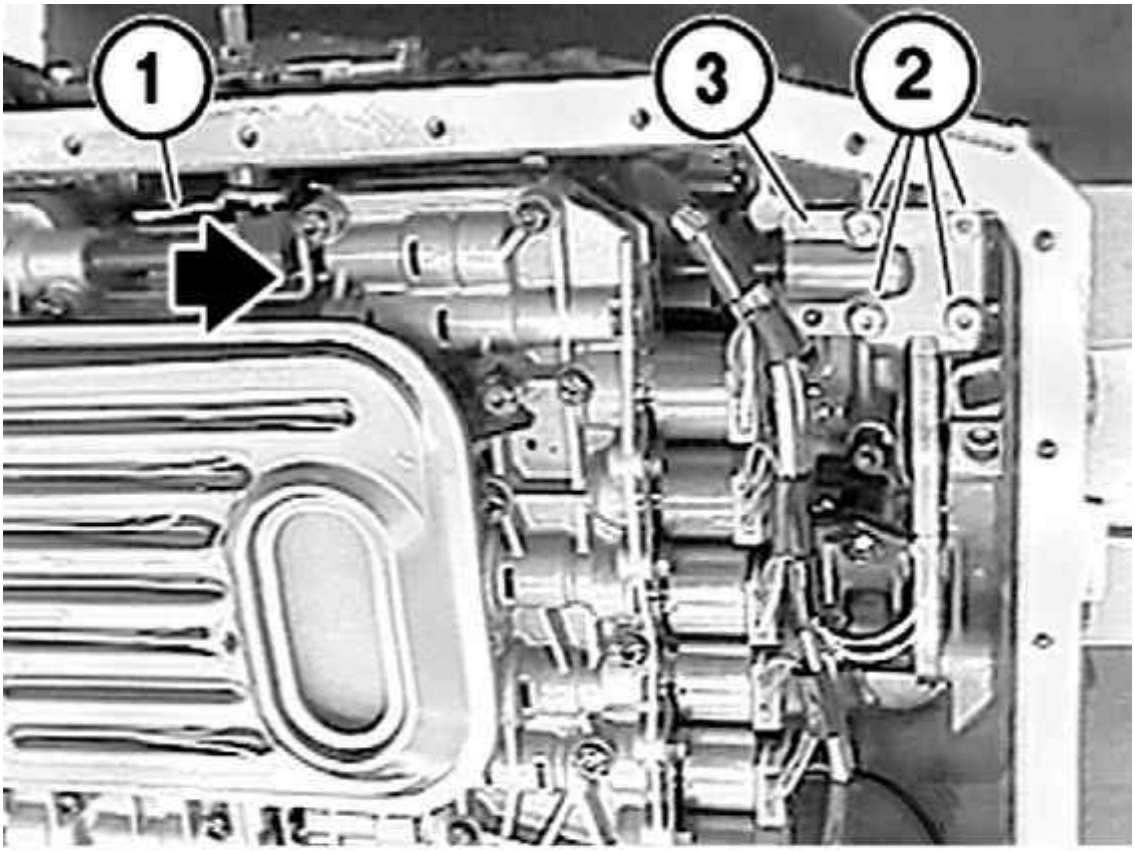

G00382298

Fig. 10: Removing Guide Bracket

Courtesy of BMW OF NORTH AMERICA, INC.

Unscrew bolt (1). See **Fig. 11** . With an offset tool (2) (e.g. hexagon socket screw key 5 A/F), push out guide pin of locking pawl (4). Remove spring (3) and locking pawl (4). Upon installation, tighten fasteners to specification. See **TORQUE SPECIFICATIONS** .

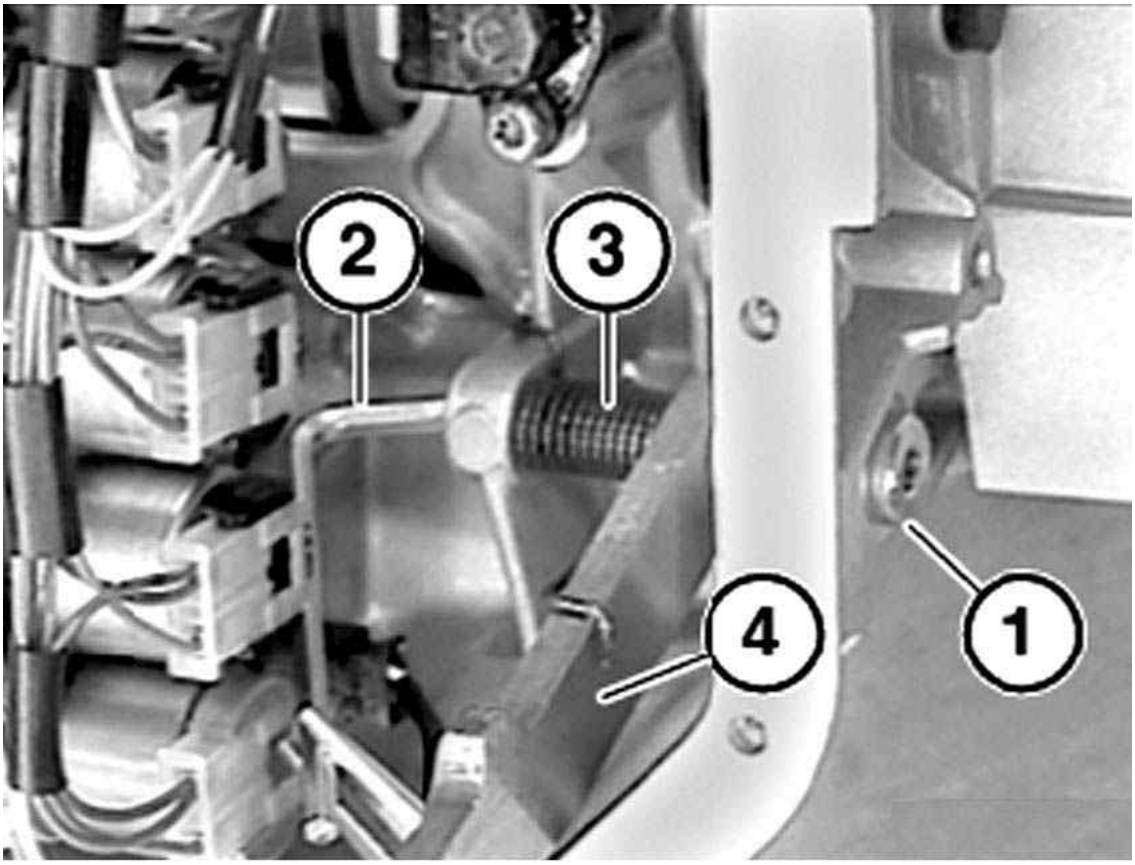

G00382299

Fig. 11: Removing Spring & Locking Pawl
Courtesy of BMW OF NORTH AMERICA, INC.

Installation: check function of parking lock. Move selector lever into "P" setting. Check whether parking lock is engaged by rotating Cardan shaft or by pushing car.

REMOVING AND INSTALLING/REPLACING POSITION SWITCH (A5S 325Z)

NOTE: Numbers in text refer to numbers in figures.

Move selector lever into "P" setting. Unlock cable plug (1) and disconnect. See **Fig. 12** .

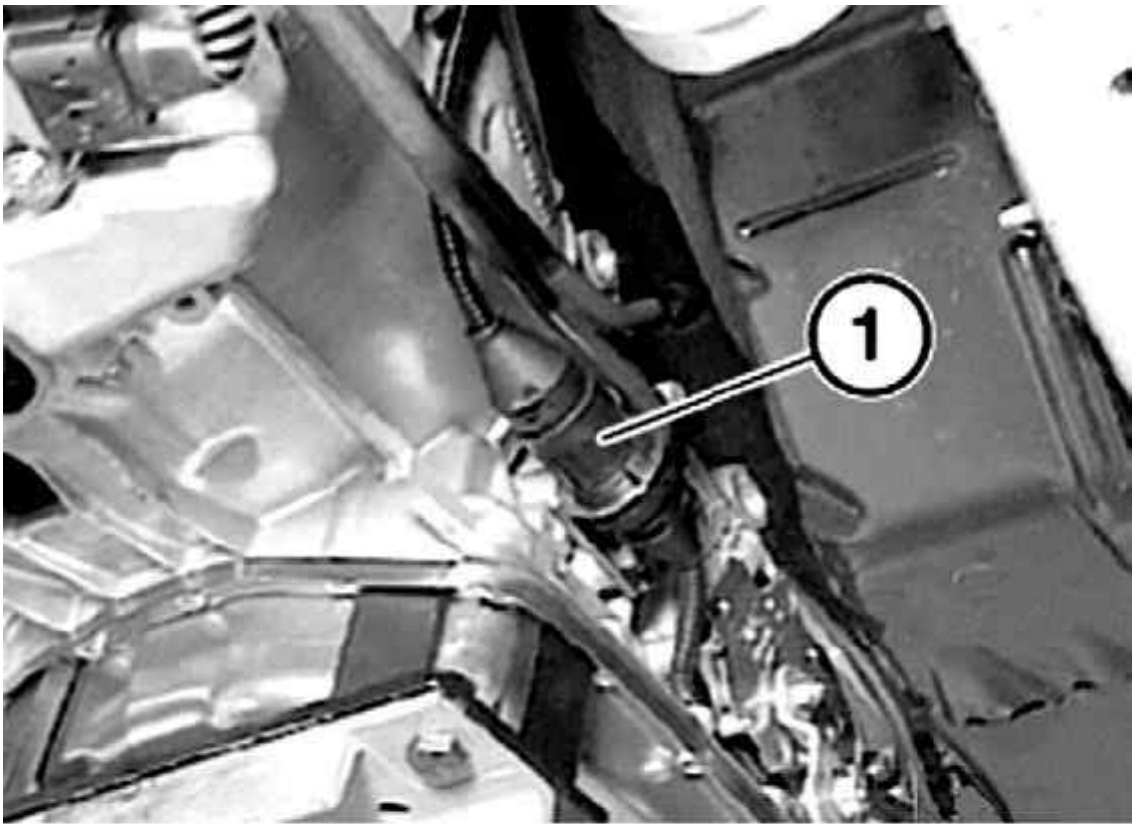

G00382316

Fig. 12: Locating Cable Plug
Courtesy of BMW OF NORTH AMERICA, INC.

Release screw. Remove cable plug (1) with retaining bracket. See **Fig. 13** .

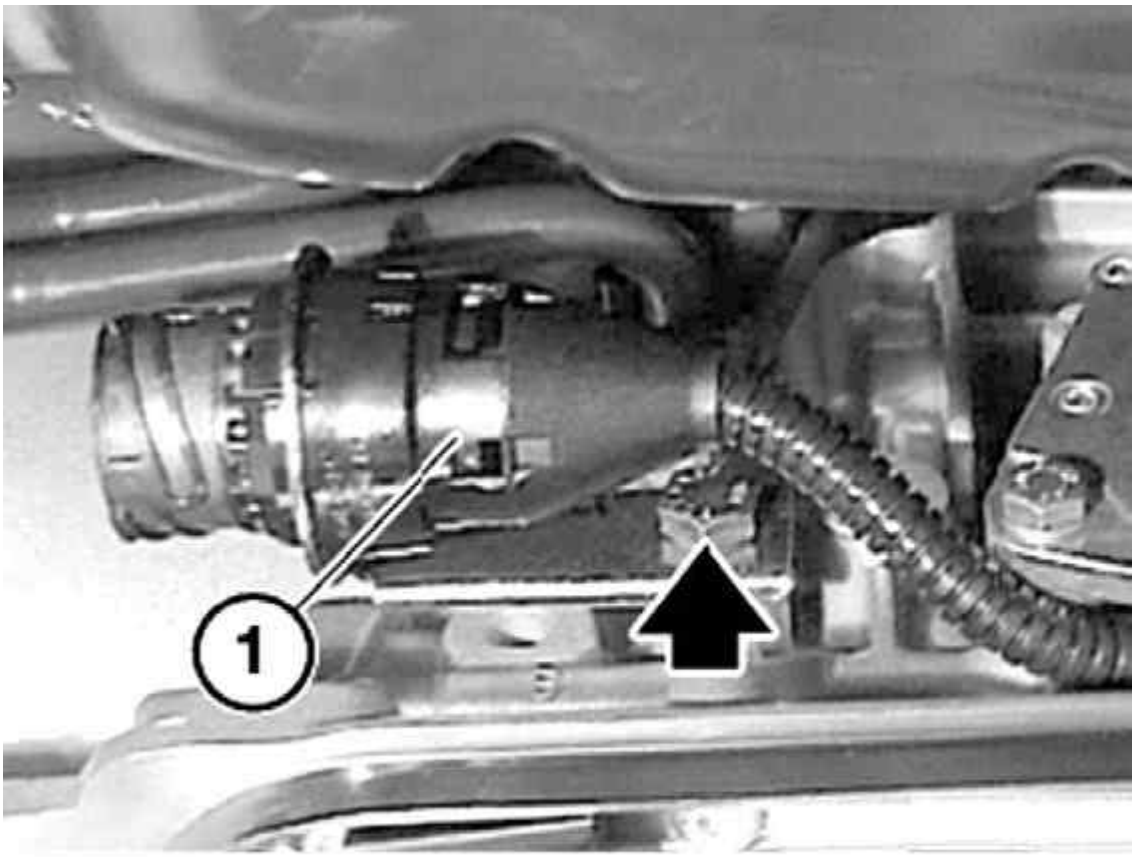

Fig. 13: Removing Cable Plug
Courtesy of BMW OF NORTH AMERICA, INC.

Grip clamping sleeve (1). See **Fig. 14** . Loosen nut (2). Installation: adjust selector lever. See **GEARSHIFT SELECTOR LEVER CABLE** .

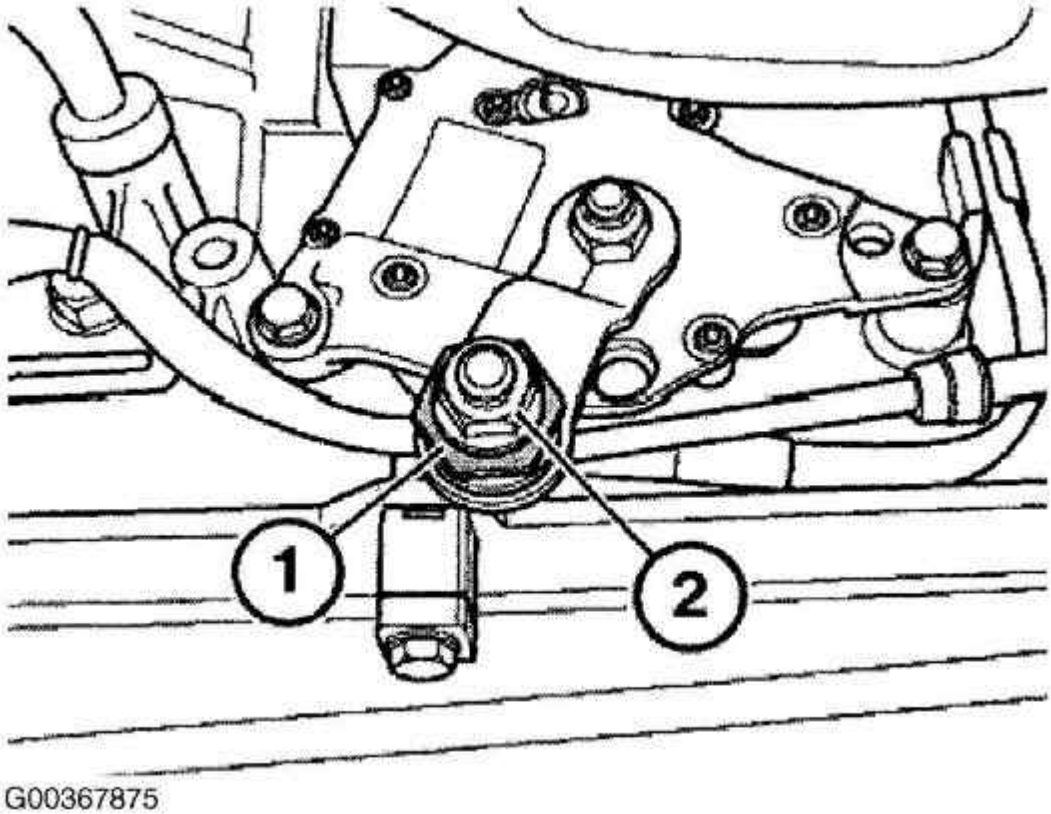

Fig. 14: Locating Shift Lever Nut
Courtesy of BMW OF NORTH AMERICA, INC.

Grip cable at hexagon head (1). Unscrew nut (2). See **Fig. 15** . Remove cable from bracket. Upon installation, tighten to specification. See **TORQUE SPECIFICATIONS** .

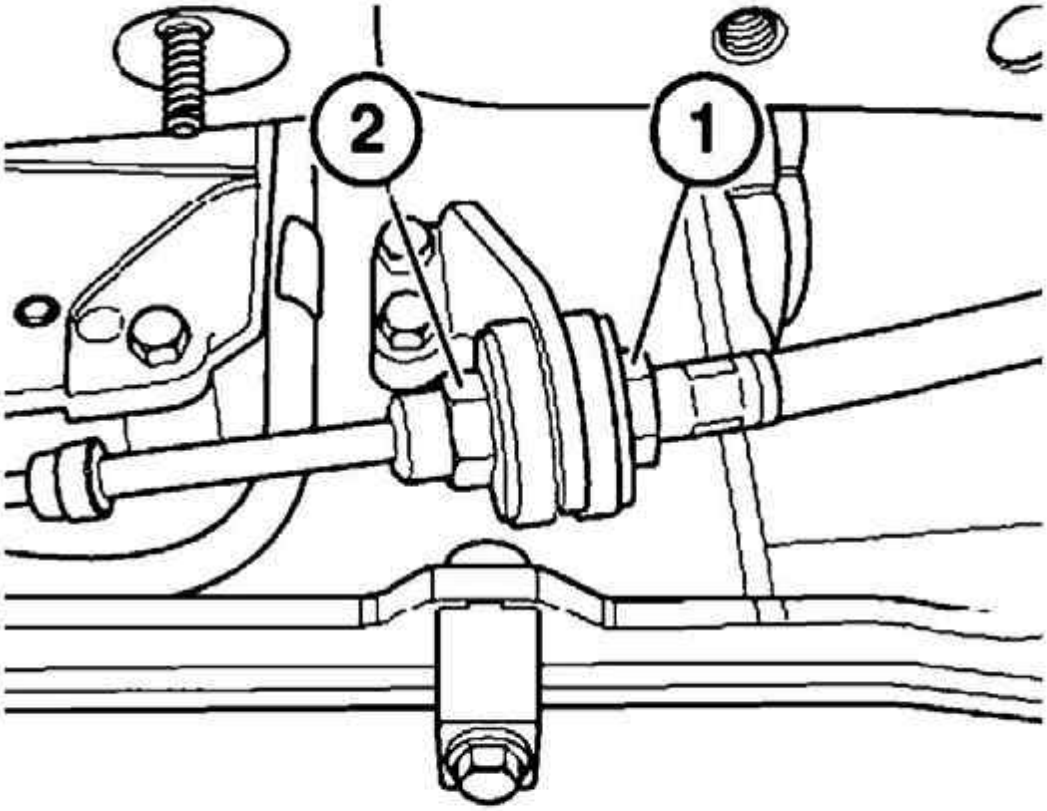

G00382318

Fig. 15: Removing Cable From Bracket
Courtesy of BMW OF NORTH AMERICA, INC.

Unscrew nut (1). See **Fig. 16** . Remove gearshift lever (2). Upon installation, tighten to specification. See **TORQUE SPECIFICATIONS** .

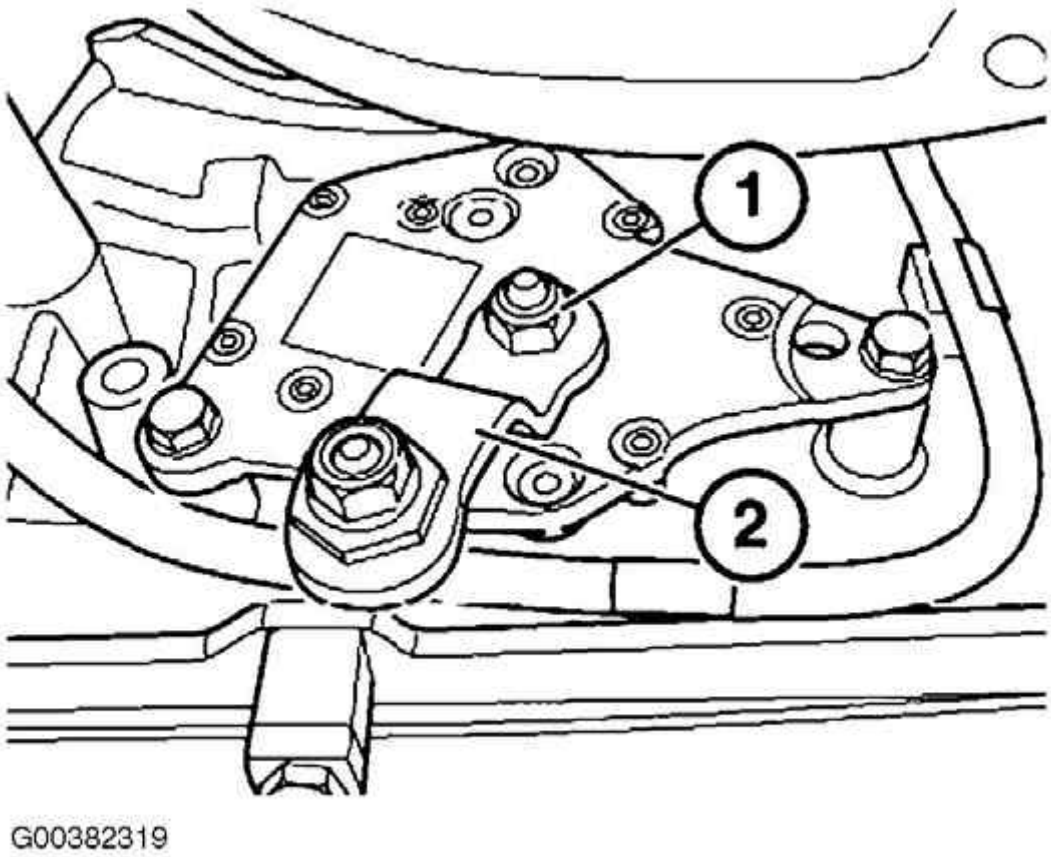

Fig. 16: Removing Gearshift Lever
Courtesy of BMW OF NORTH AMERICA, INC.

Unfasten screws. Detach position switch from manual shift valve shaft. See **Fig. 17** . Upon installation, pay attention to locating pin and cable routing.

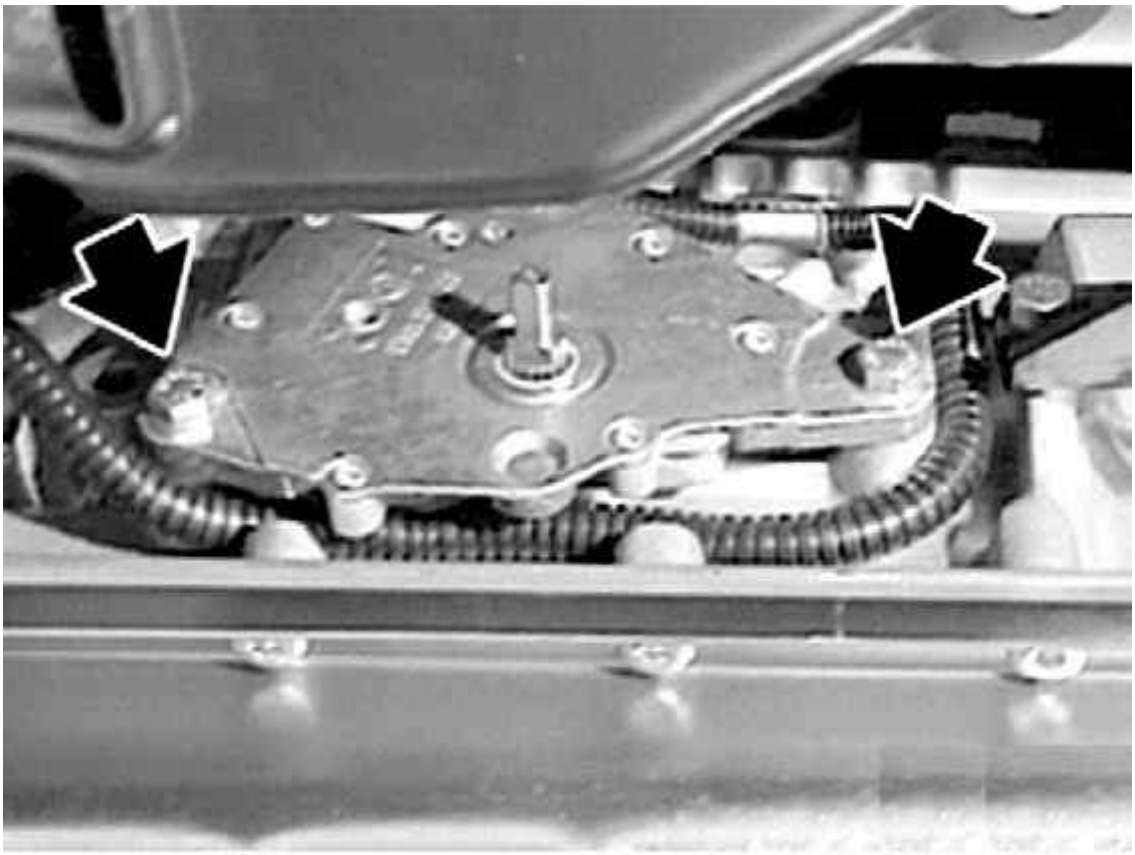

G00382320

Fig. 17: Detaching Position Switch
Courtesy of BMW OF NORTH AMERICA, INC.

To install, reverse removal procedure.

REMOVING AND INSTALLING/REPLACING SHIFT UNIT (A5S 325Z)

NOTE: Numbers in text refer to numbers in figures.

NOTE: After completing work, top up ATF level. Check/top up fluid level in automatic transmission. See CHECKING/TOPPING UP FLUID LEVEL IN AUTOMATIC TRANSMISSION (A5S 325Z) .

Remove and install transmission sump. See **REMOVING AND INSTALLING/SEALING OR REPLACING TRANSMISSION OIL SUMP (A5S 325Z)** .

Remove and install/replace transmission fluid screen. See **REMOVING AND INSTALLING/REPLACING TRANSMISSION OIL SCREEN (A5S 325Z)** .

Remove retaining clip with screwdriver (2). See **Fig. 18** . Insert transmission plug (1) in transmission. Upon installation: to facilitate assembly, coat O-ring with Vaseline. See **Fig. 19** .

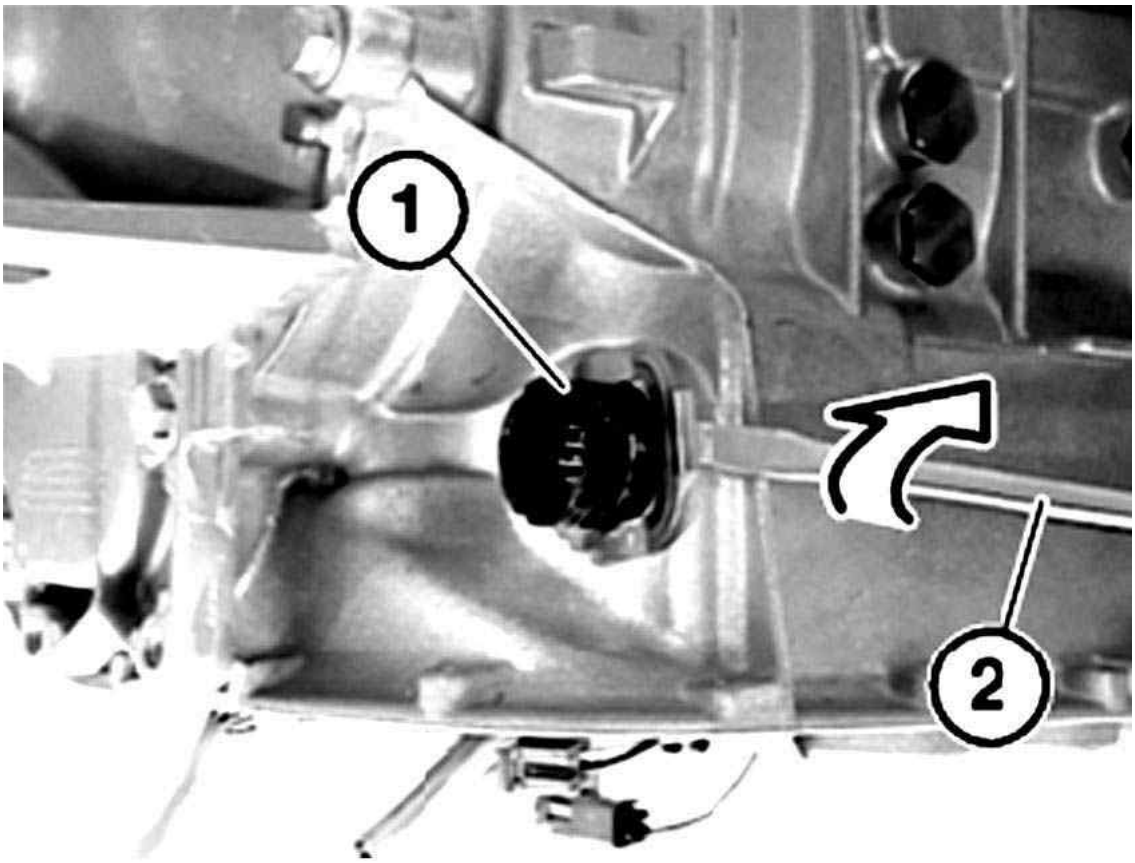

G00382322

Fig. 18: Removing Retaining Clip
Courtesy of BMW OF NORTH AMERICA, INC.

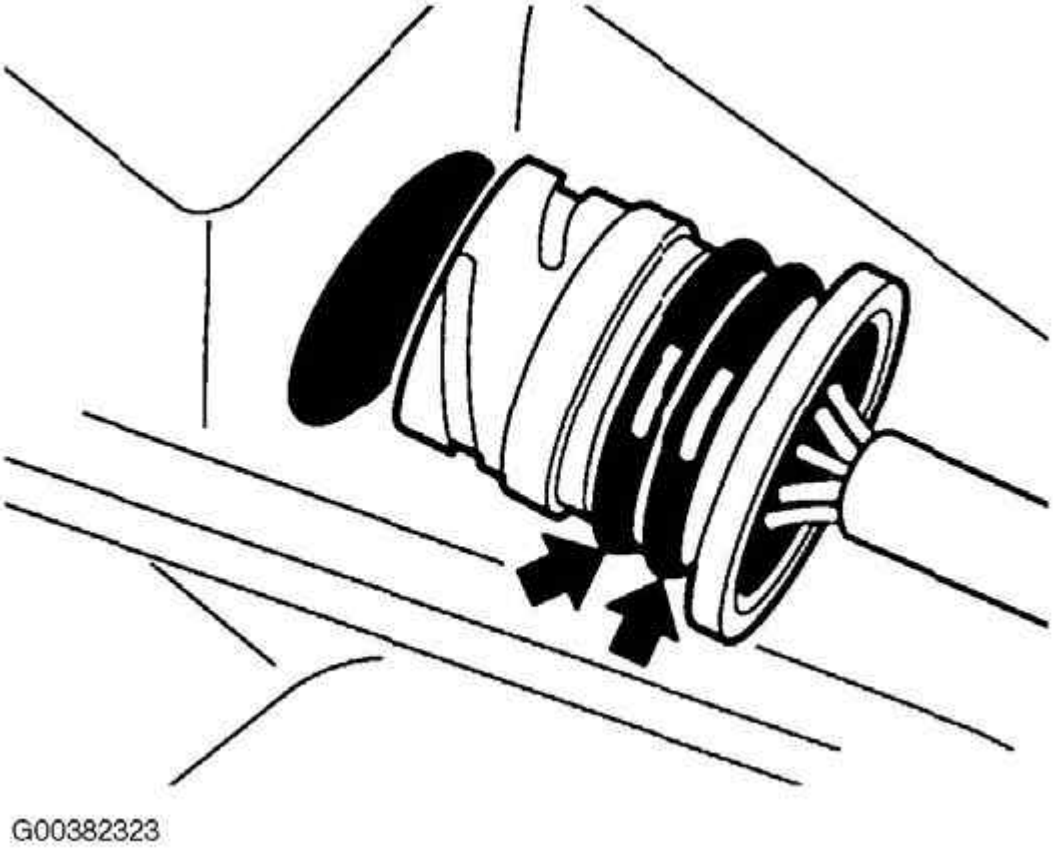

Fig. 19: Locating O-Ring
Courtesy of BMW OF NORTH AMERICA, INC.

Release screws (1). See **Fig. 20** . Remove pulse generator (2). Pull off connector (3).

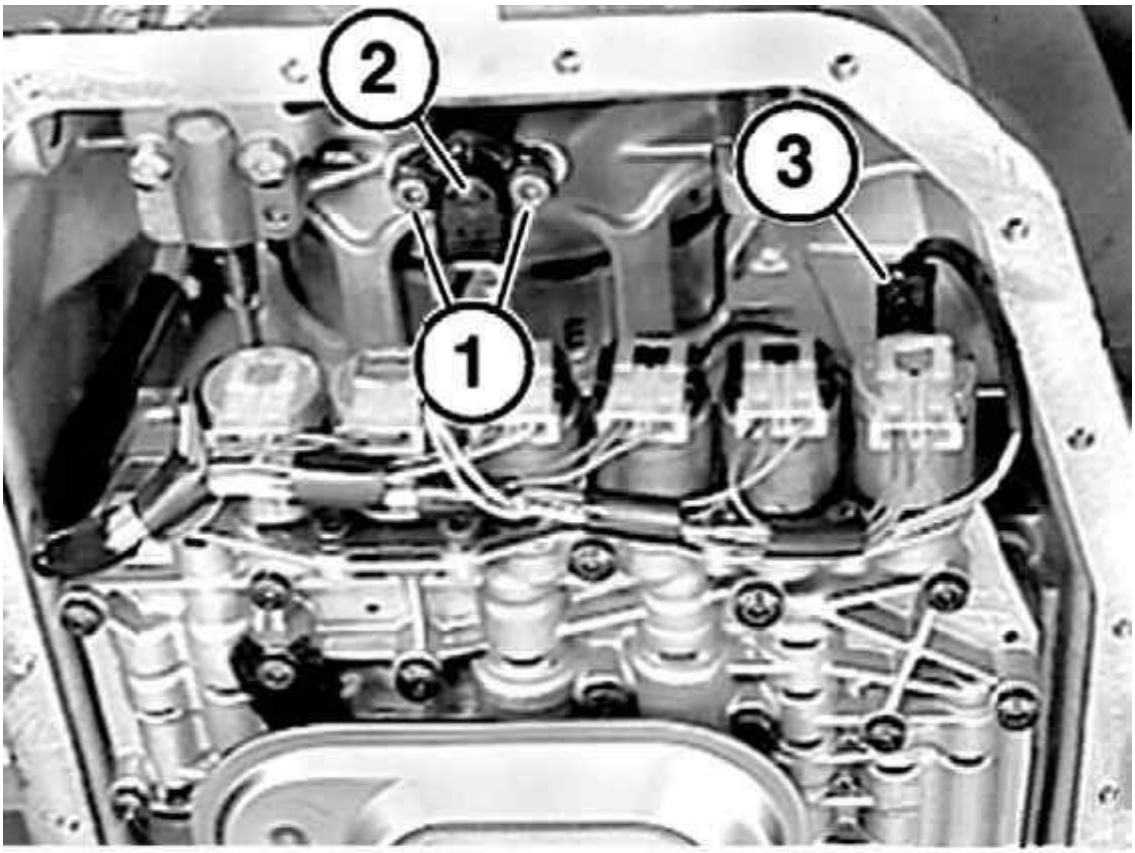

G00382324

Fig. 20: Removing Pulse Generator
Courtesy of BMW OF NORTH AMERICA, INC.

Unfasten screws. See **Fig. 21** . Take off valve body. Upon installation, tighten fasteners to specification. See **TORQUE SPECIFICATIONS** .

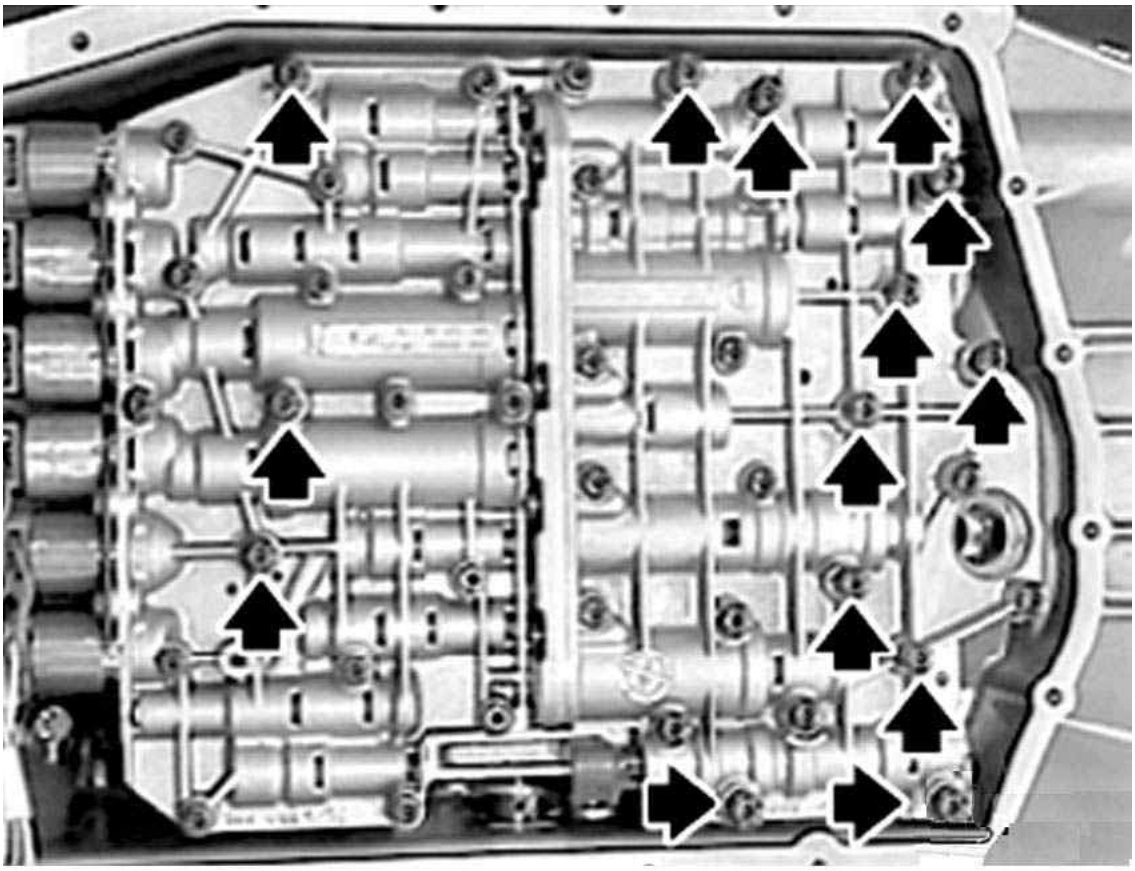

G00382325

Fig. 21: Removing Valve Body
Courtesy of BMW OF NORTH AMERICA, INC.

Installation: coat O-rings (1) with automatic transmission fluid. See **Fig. 22** .

CAUTION: Journal (1) of detent disk must be located in groove (2) of slide valve. See Fig. 23 .

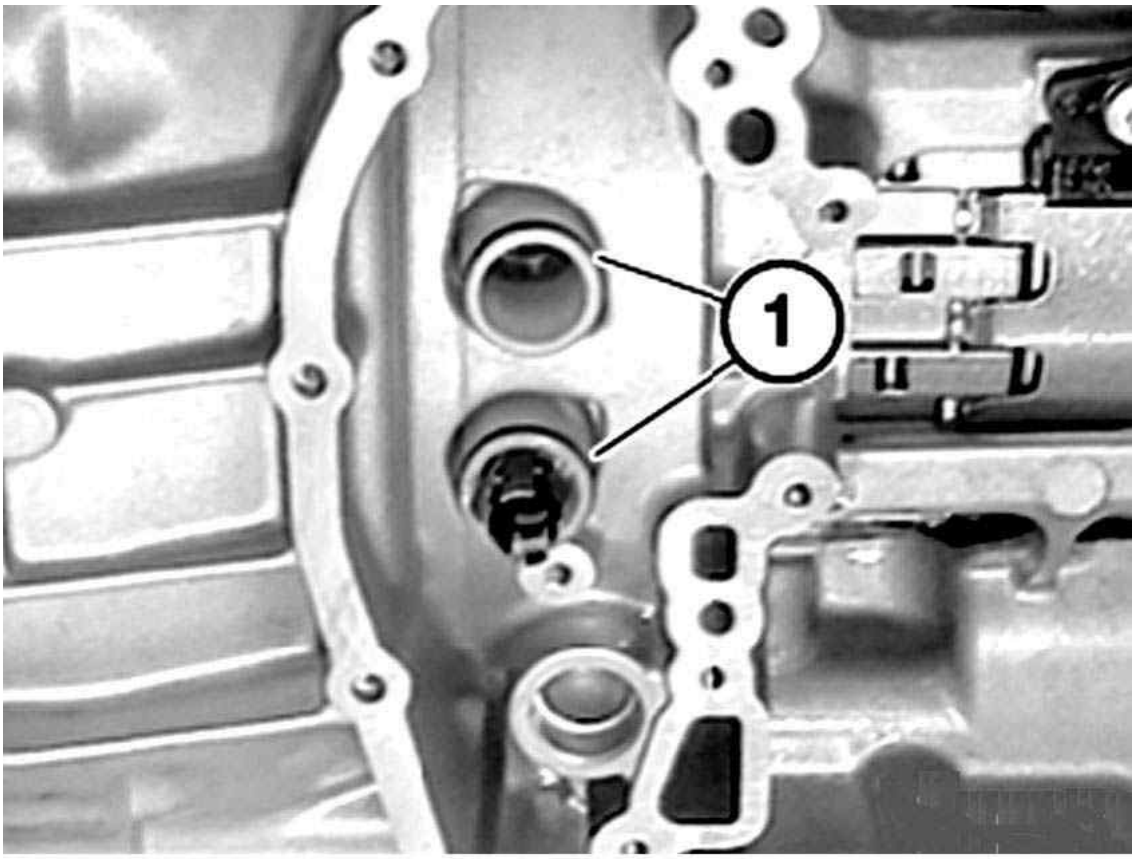

G00382326

Fig. 22: Locating O-Rings
Courtesy of BMW OF NORTH AMERICA, INC.

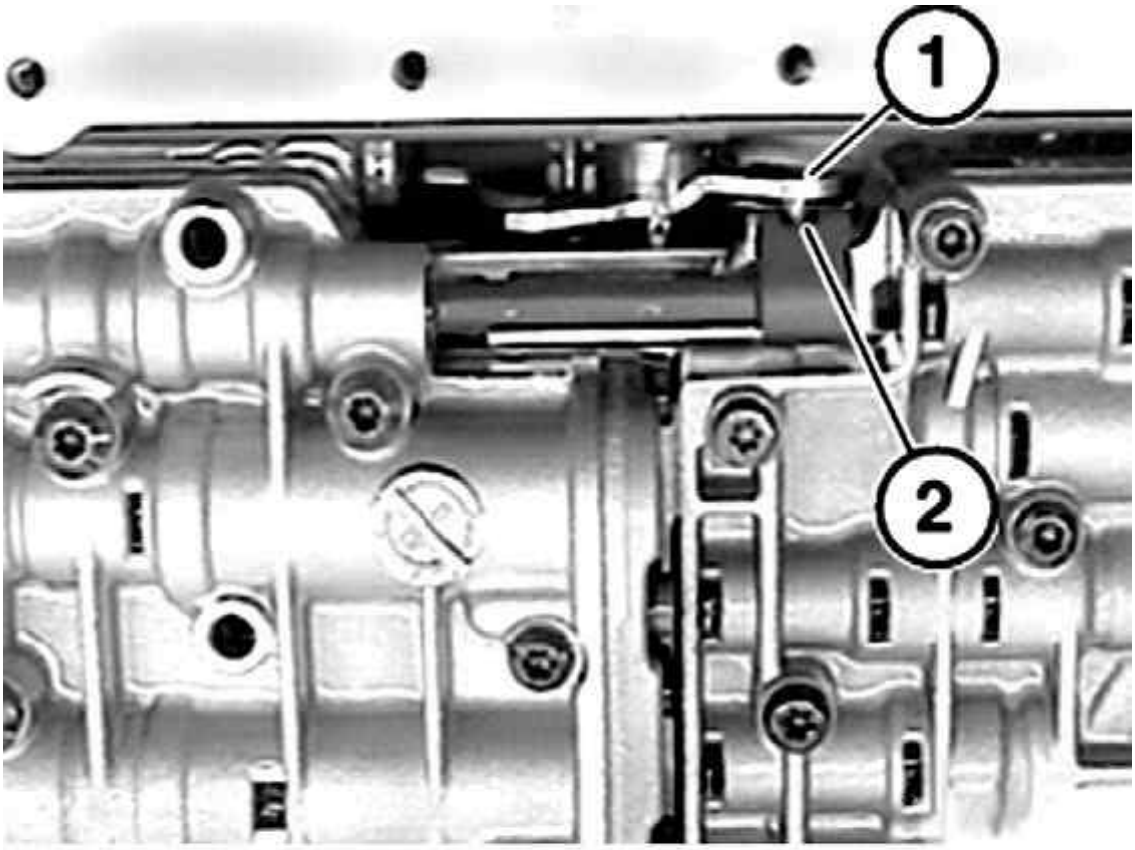

G00382327

Fig. 23: Locating Detent Disk
Courtesy of BMW OF NORTH AMERICA, INC.

REPLACING SOLENOID VALVE OR PRESSURE REGULATOR (A5S 325Z)

NOTE: **Numbers in text refer to numbers in figures.**

NOTE: **After completing work, top up ATF level. Check/top up fluid level in automatic transmission. See CHECKING/TOPPING UP FLUID LEVEL IN AUTOMATIC TRANSMISSION (A5S 325Z) .**

Remove and install transmission oil sump. See **REMOVING AND INSTALLING/SEALING OR REPLACING TRANSMISSION OIL SUMP (A5S 325Z)** .

To locate solenoid valve and pressure regulator components, see **Fig. 24** .

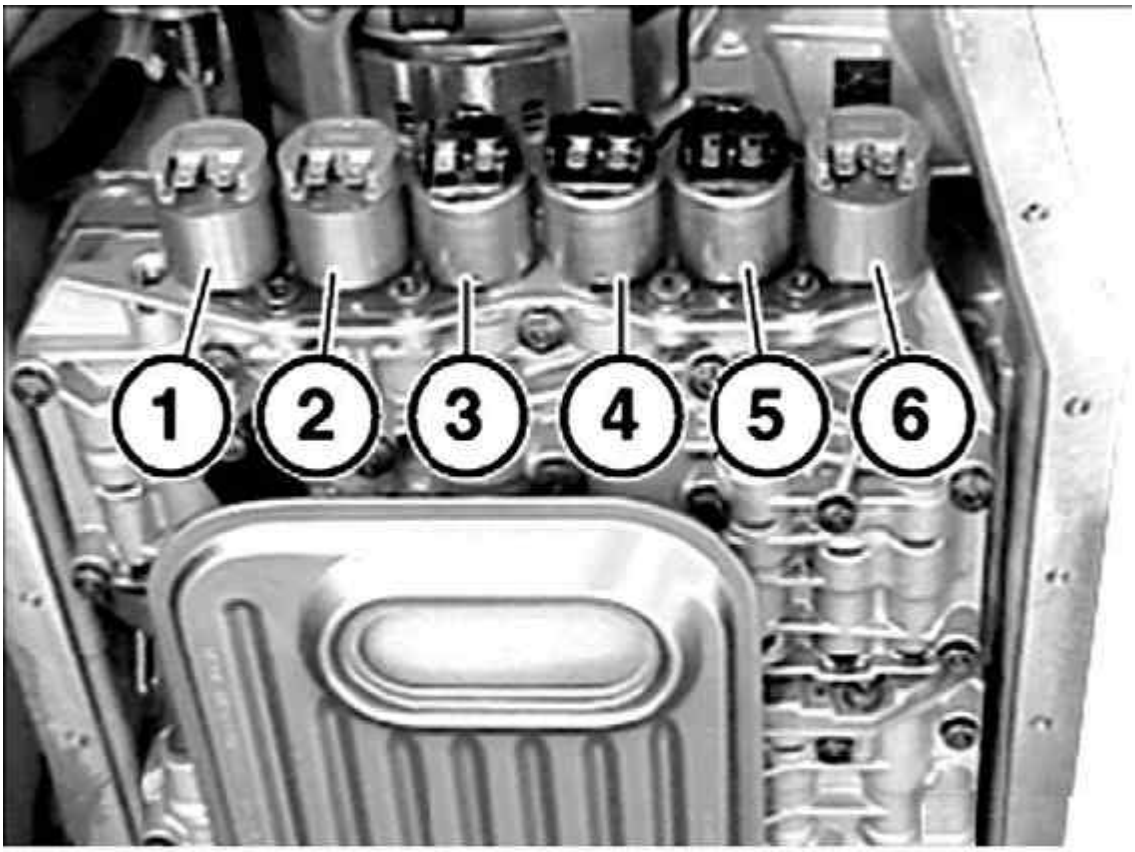

G00382328

Fig. 24: Locating Solenoid Valve & Pressure Regulator Valve Components
Courtesy of BMW OF NORTH AMERICA, INC.

Detach plug (1) from solenoid valve or pressure regulator. See **Fig. 25** .

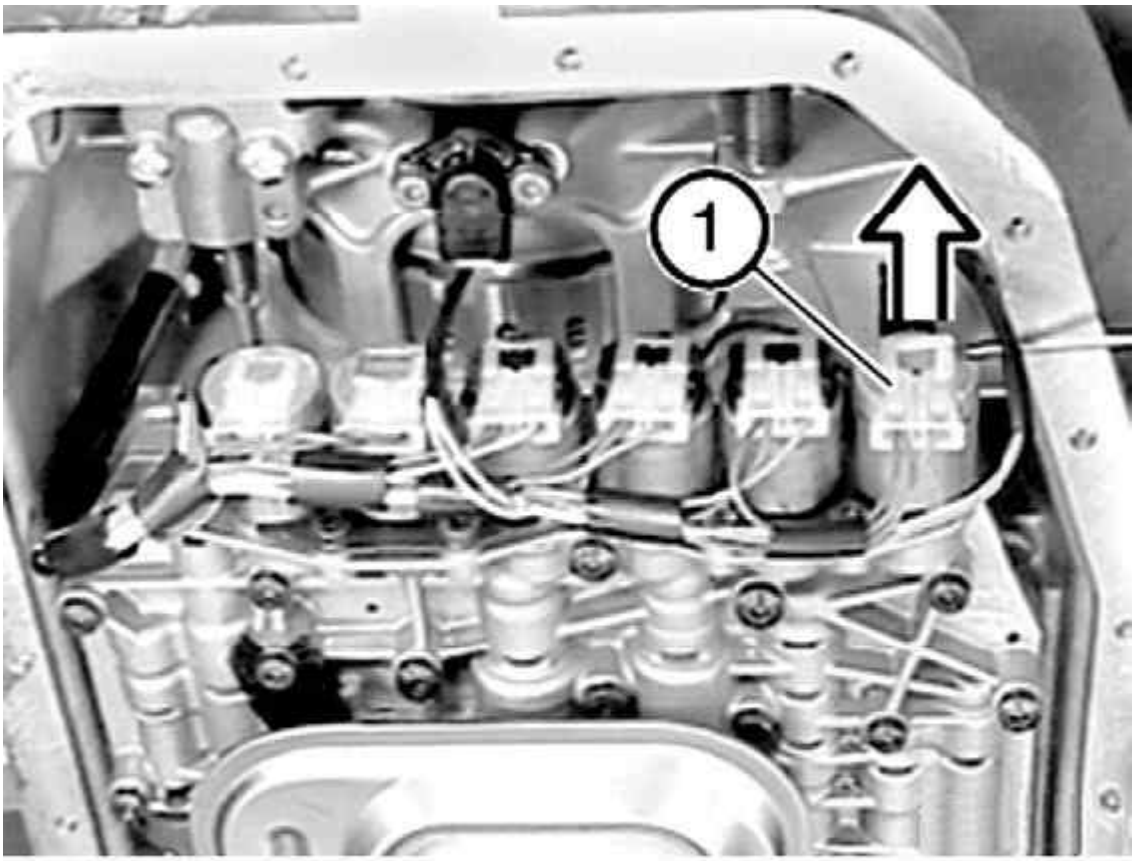

G00382329

Fig. 25: Detaching Plug
Courtesy of BMW OF NORTH AMERICA, INC.

Release screws (1). See **Fig. 26** . Remove retaining plate (2). Withdraw solenoid valve (1, 2 or 3) or pressure regulator (2, 3 or 4). Upon installation: coat new solenoid valve with ATF.

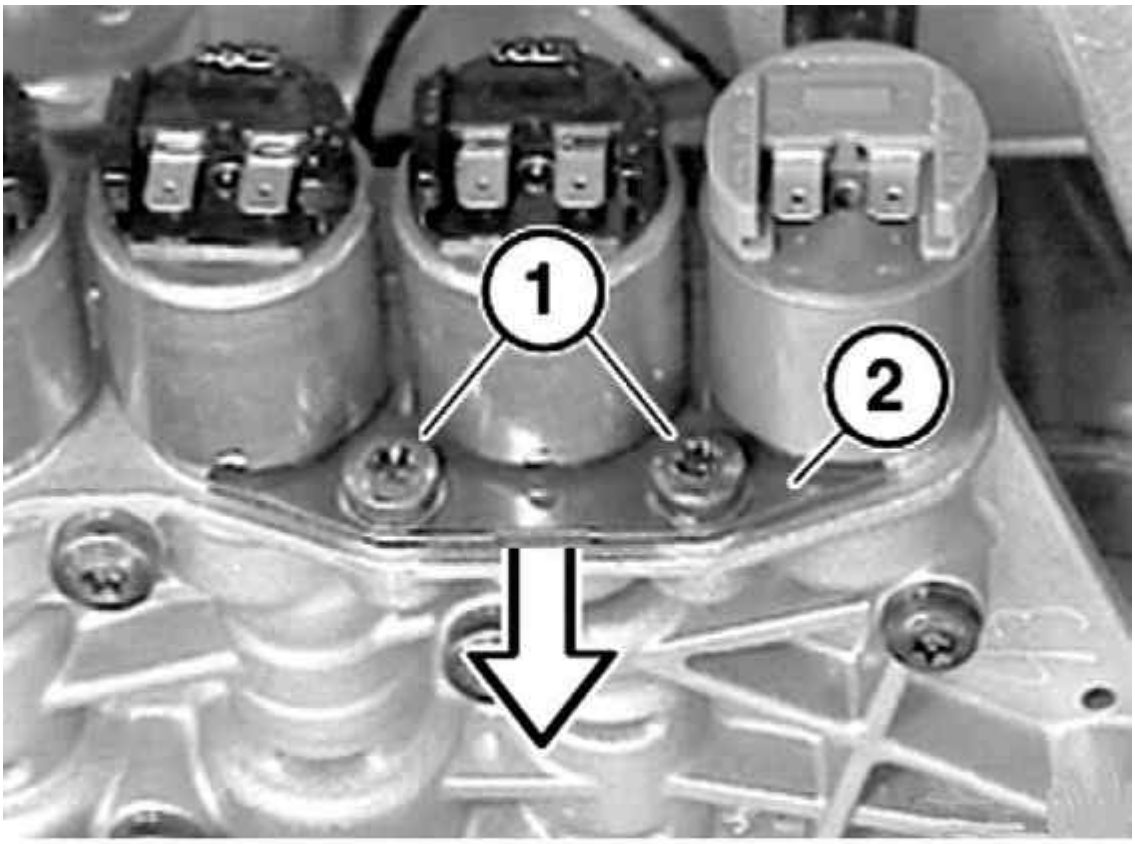

G00382330

Fig. 26: Removing Solenoid Valve Or Pressure Regulator
Courtesy of BMW OF NORTH AMERICA, INC.

Installation: note installation position of retaining plate (2). See **Fig. 27** . Curved surface of retaining plate (2) must point to solenoid valve or pressure regulator. Install screws (1). Tighten to specification. See **TORQUE SPECIFICATIONS** .

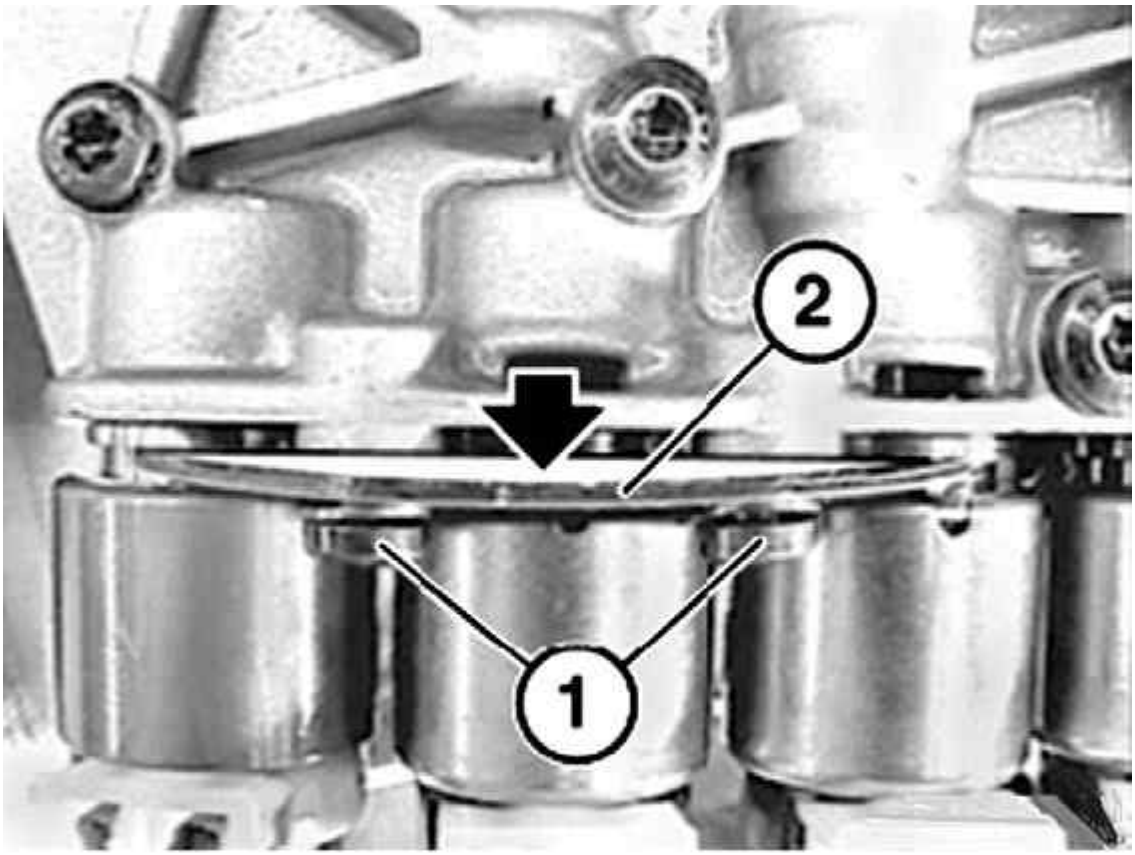

G00382331

Fig. 27: Installing Retaining Plate
Courtesy of BMW OF NORTH AMERICA, INC.

REMOVING AND INSTALLING/REPLACING SELECTOR UNIT (A5S 360R/390R, A4S 200R)

NOTE: Numbers in text refer to numbers in figures.

NOTE: After completing work, top up ATF level. Check/top up fluid level in automatic transmission. See CHECKING/TOPPING UP FLUID LEVEL IN AUTOMATIC TRANSMISSION (A5S 360R / 390R, A4S 200R / 310R) .

Remove and install transmission fluid sump. See **REMOVING AND INSTALLING/SEALING OR REPLACING TRANSMISSION FLUID SUMP (A5S 360R / 390R, A4S 200R)** .

Remove and install/replace transmission fluid screen. See **REMOVING AND INSTALLING/REPLACING TRANSMISSION SCREEN (A5S 360R / 390R, A4S 200R)** .

NOTE: As of model year 2001 (04/2000), the temperature sensor is integrated in the

wiring harness.

Disconnect all plug connections on shift unit. See **Fig. 28** . Unclip temperature sensor (1) from holder.

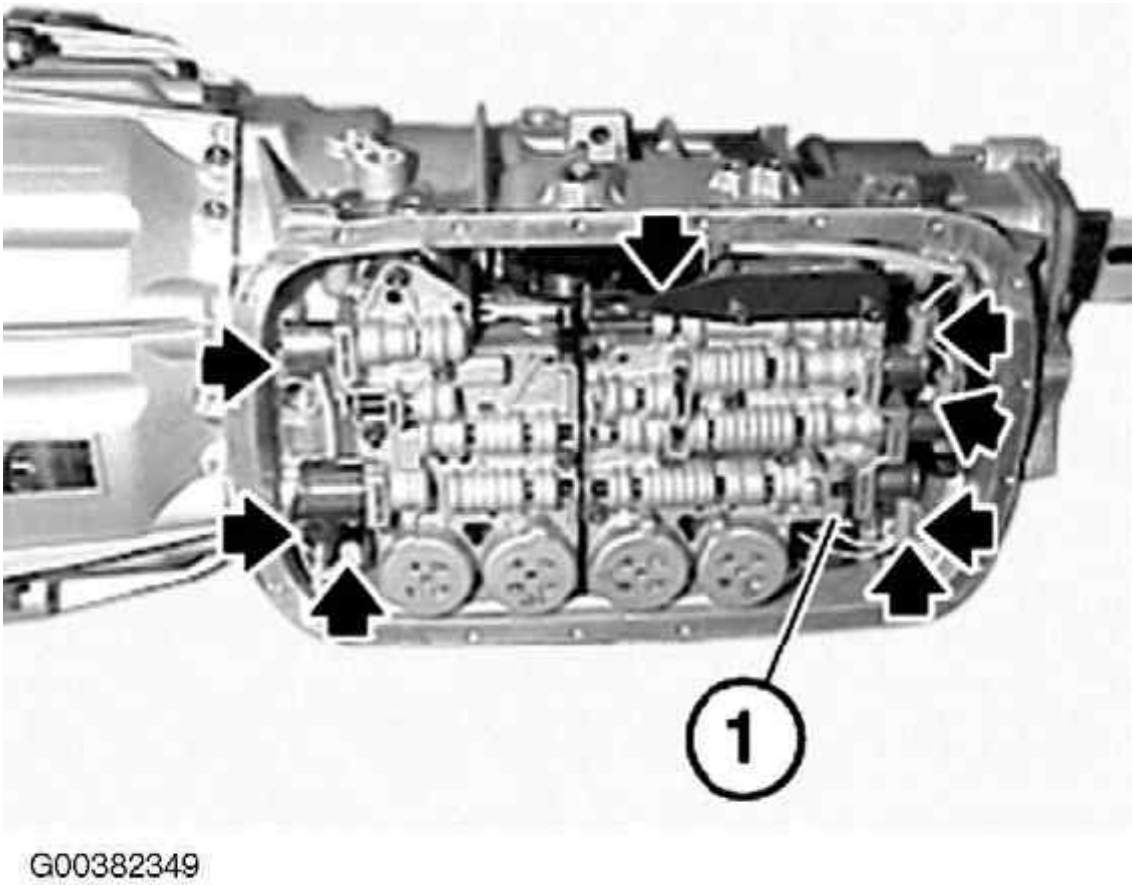

Fig. 28: Locating Plug Connections & Temperature Sensor
Courtesy of BMW OF NORTH AMERICA, INC.

NOTE:

DO NOT release screws (1). See **Fig. 29** . Release all other screws, with outside Torx E8, on shift unit and remove shift unit.

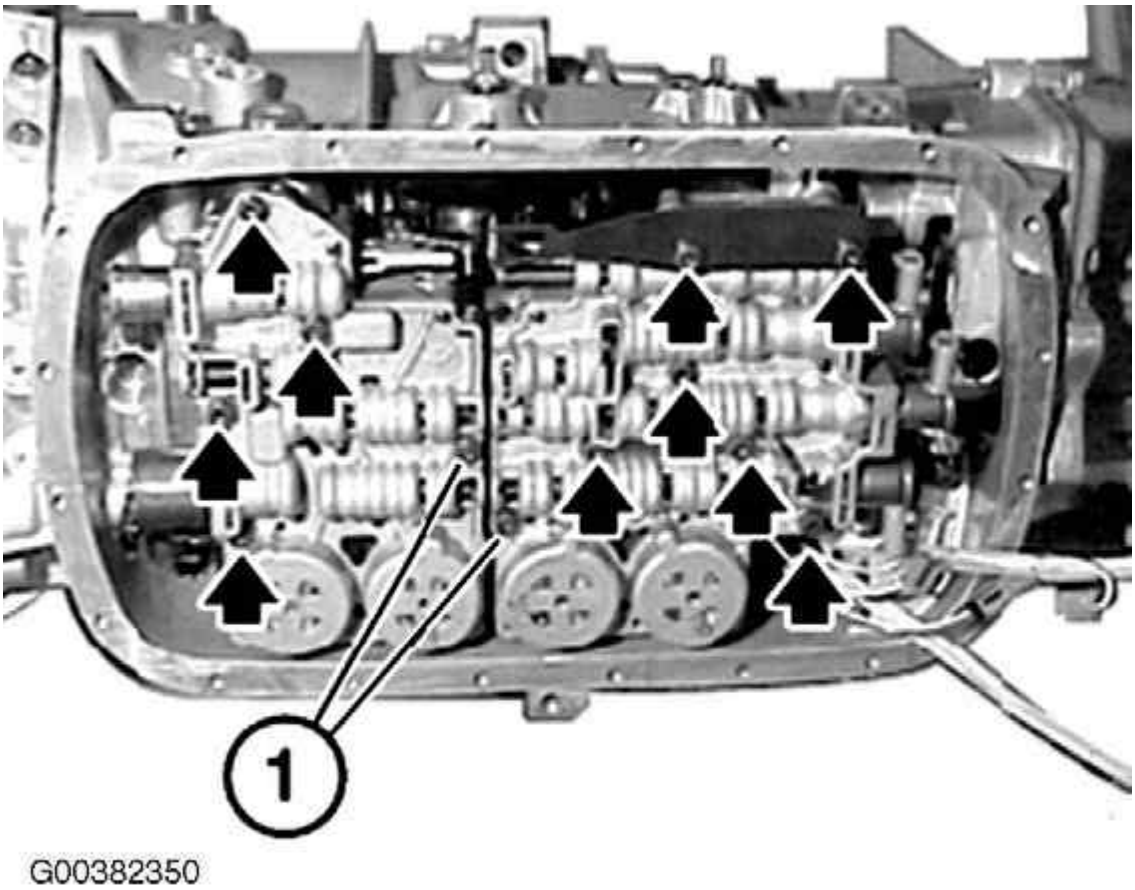

Fig. 29: Removing Shift Unit
Courtesy of BMW OF NORTH AMERICA, INC.

Pull out seals (1), (2) and (3). See **Fig. 30** . Coat new seals with automatic transmission fluid and install.

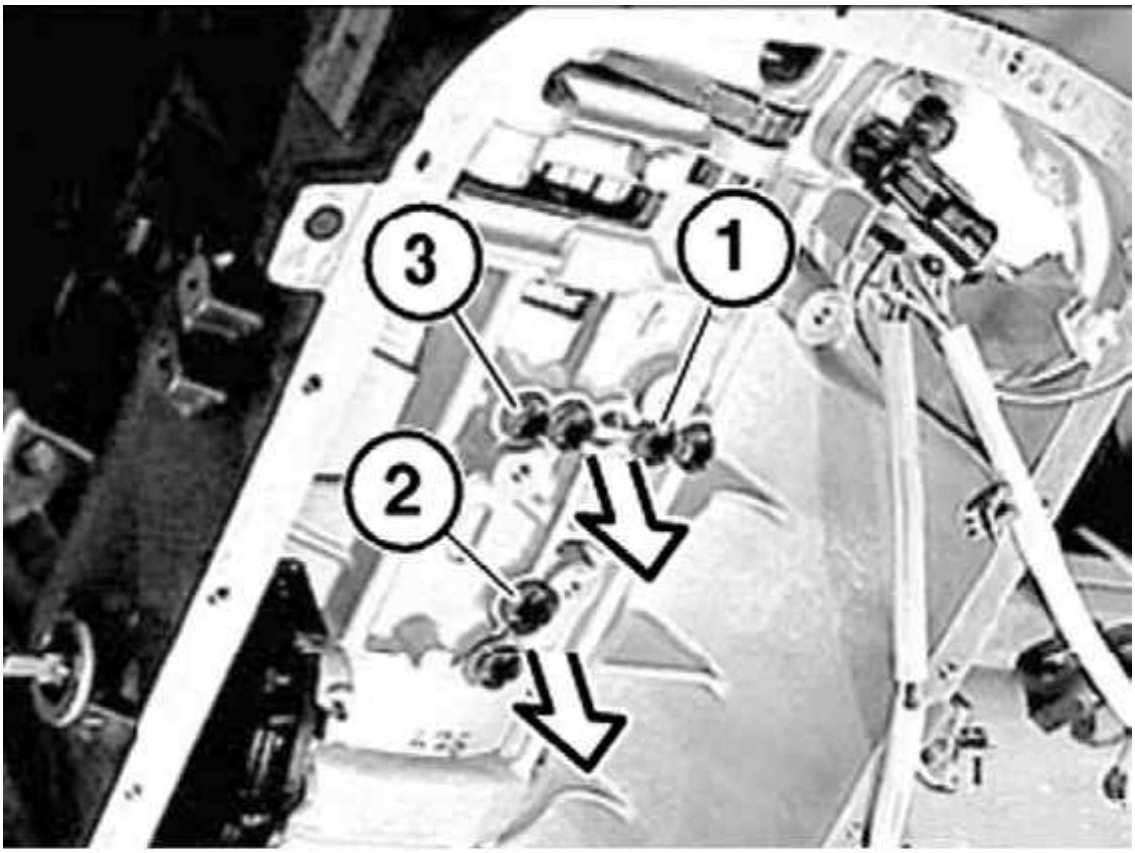

G00382351

Fig. 30: Locating Seals
Courtesy of BMW OF NORTH AMERICA, INC.

Installation: blow out tapped holes with compressed air gun. Insert set screws (1) from seal set into tapped holes. See **Fig. 31** .

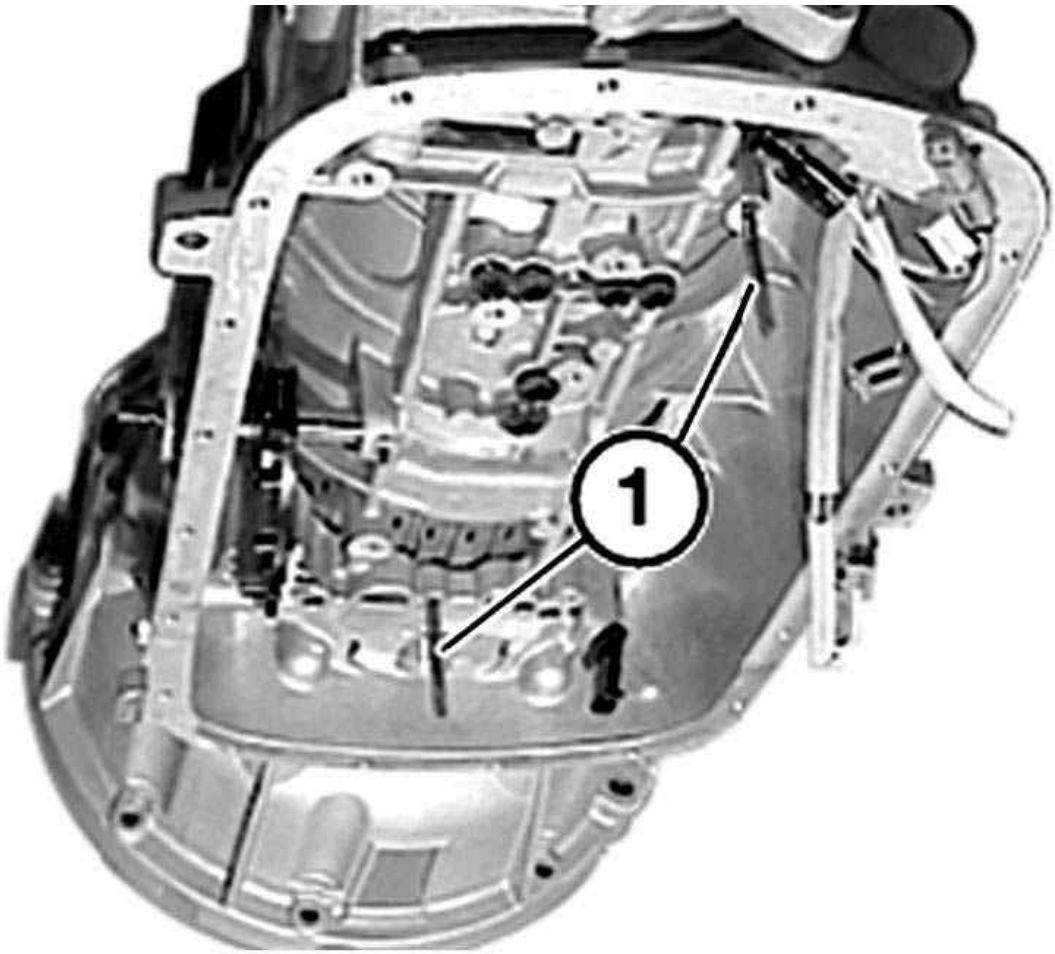

Fig. 31: Inserting Set Screws
Courtesy of BMW OF NORTH AMERICA, INC.

Length of screws: (1) = (2) = 68 mm, all others = 58 mm. Install shift unit with aid of both set screws and secure in place with screws. See **Fig. 32** . Remove both set screws. Tighten all screws until hand-tight. When tightening screws: follow sequence without fail. Tighten to specification. See **TORQUE SPECIFICATIONS** . Do not tighten screws (1) and (2) yet.

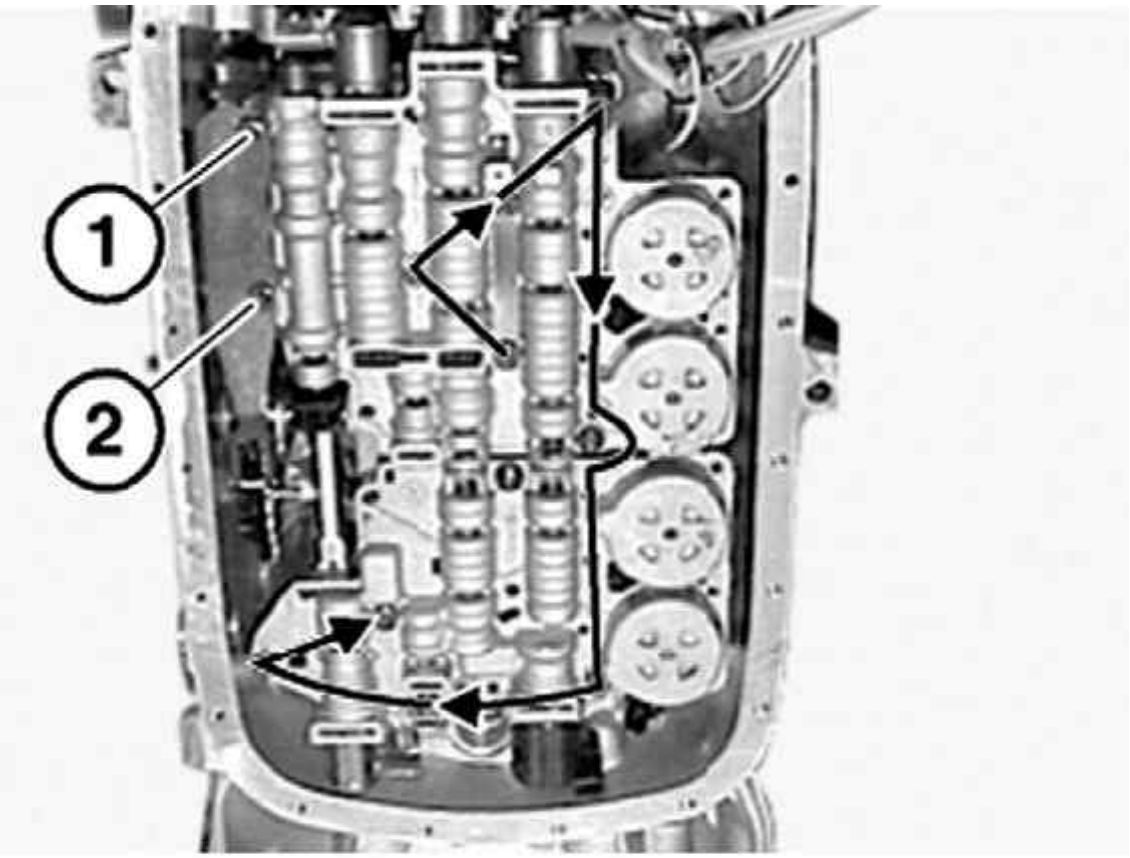

G00382353

Fig. 32: Locating Set Screws
Courtesy of BMW OF NORTH AMERICA, INC.

Suspend guide (1) of transmission switch in detent spring (2). See **Fig. 33** . Journal (3) of detent disk must be located in groove (4) of slide valve.

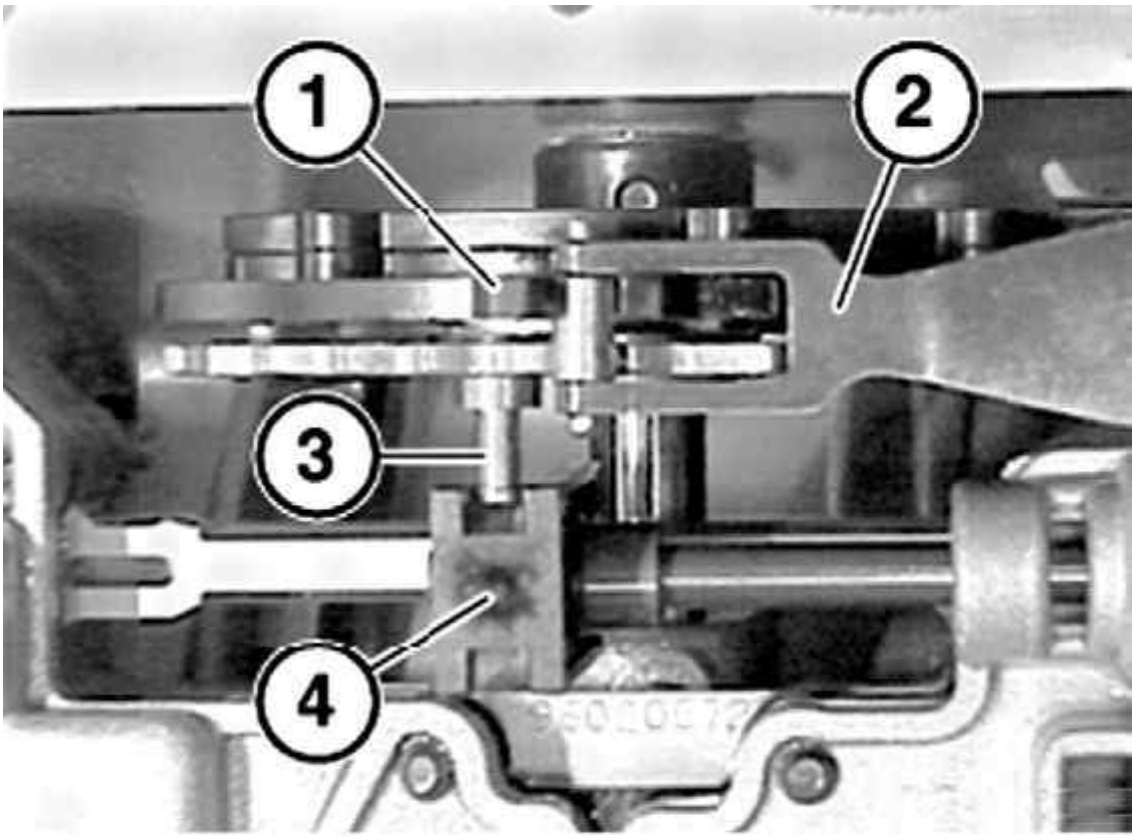

G00382354

Fig. 33: Suspending Guide Of Transmission Switch In Detent Spring
Courtesy of BMW OF NORTH AMERICA, INC.

Insert feeler gauge (1) between detent spring (2) and detent disk (3) and set gap of 0.80 mm by moving detent spring (2). See **Fig. 34** . Tighten down screws (4). See **TORQUE SPECIFICATIONS** .

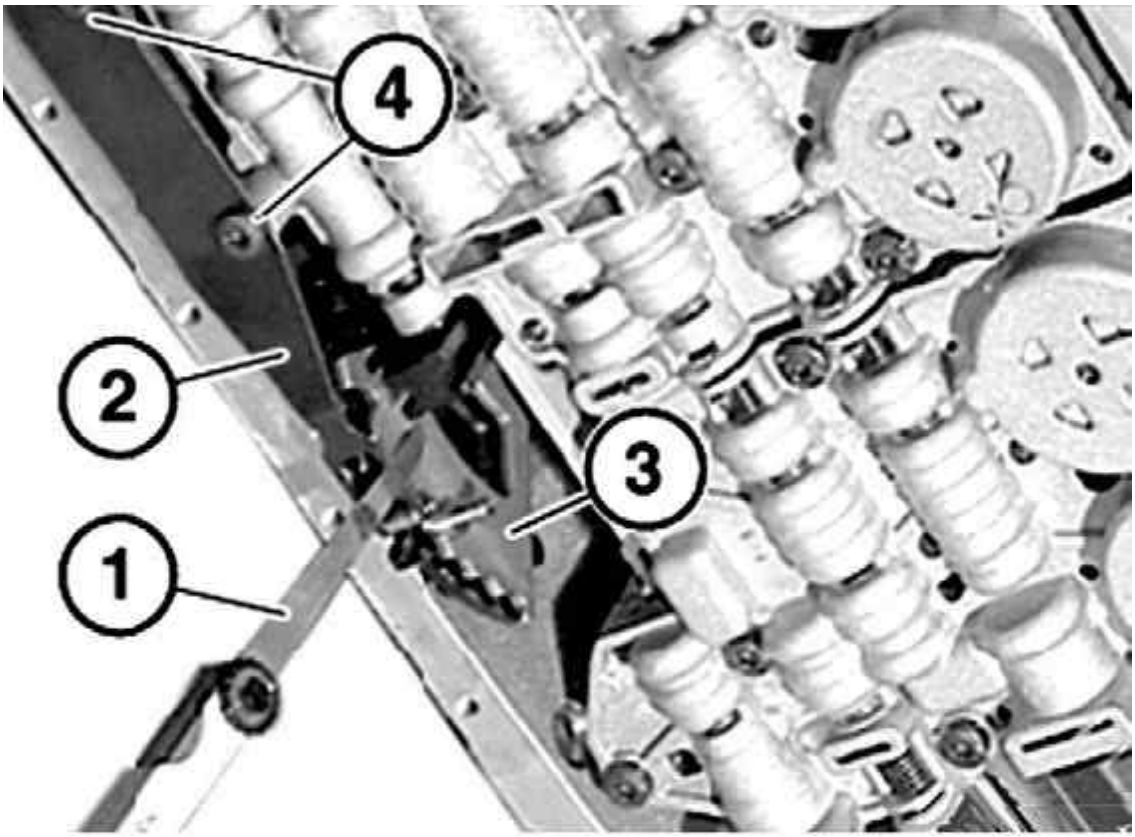

G00382355

Fig. 34: Setting Gap Between Detent Spring & Detent Disk
Courtesy of BMW OF NORTH AMERICA, INC.

REMOVING AND INSTALLING/SEALING OR REPLACING TRANSMISSION FLUID SUMP (A5S 360R / 390R, A4S 200R)

NOTE: **Numbers in text refer to numbers in figures.**

NOTE: **After completing work, top up ATF level. Check/top up fluid level in automatic transmission. See CHECKING/TOPPING UP FLUID LEVEL IN AUTOMATIC TRANSMISSION (A5S 360R / 390R, A4S 200R / 310R) .**

Open drain plug (1). See **Fig. 35** . Drain off automatic transmission fluid. Unscrew all bolts. Remove oil sump (2). Detach gasket from oil sump (2). Clean sealing faces. Upon installation, replace sealing ring on drain plug. Tighten drain plug to specification. See **TORQUE SPECIFICATIONS** .

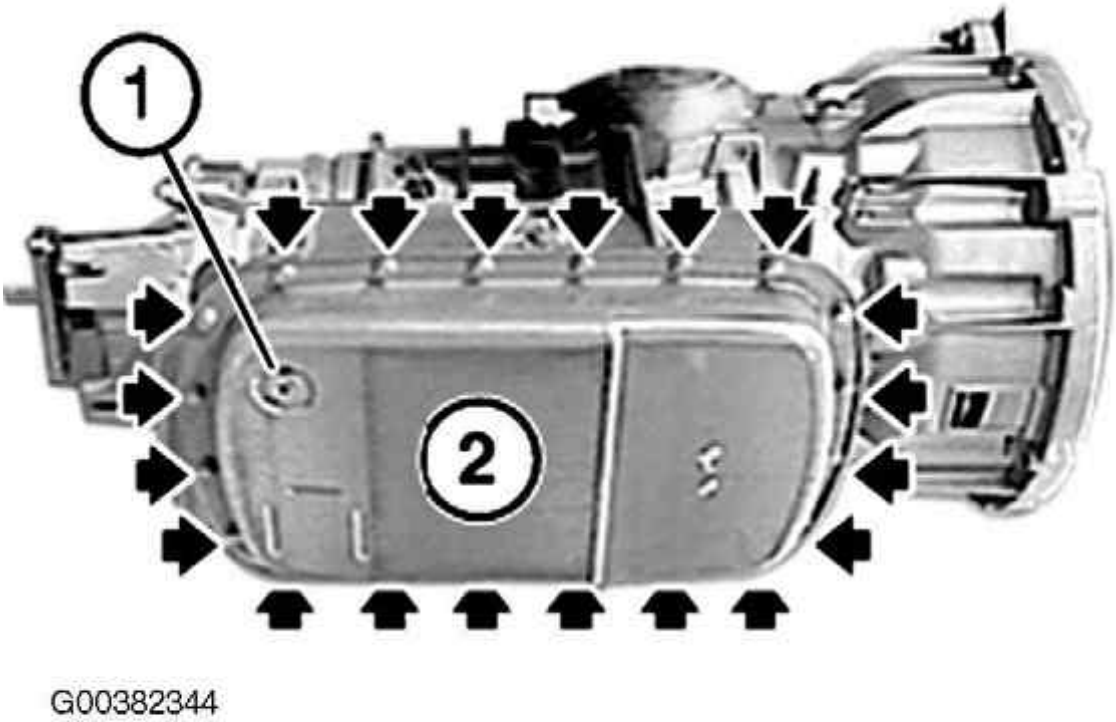

Fig. 35: Locating Drain Plug
Courtesy of BMW OF NORTH AMERICA, INC.

CAUTION: Tighten down screws, not in diagonal sequence but rather in order, one time to specified torque.

Fit new gasket on oil sump. Clean magnets (1) and reinstall in oil sump. See **Fig. 36** . Install oil sump. Insert all screws until contact is made with screw head in each case. Tighten to specification. See **TORQUE SPECIFICATIONS** .

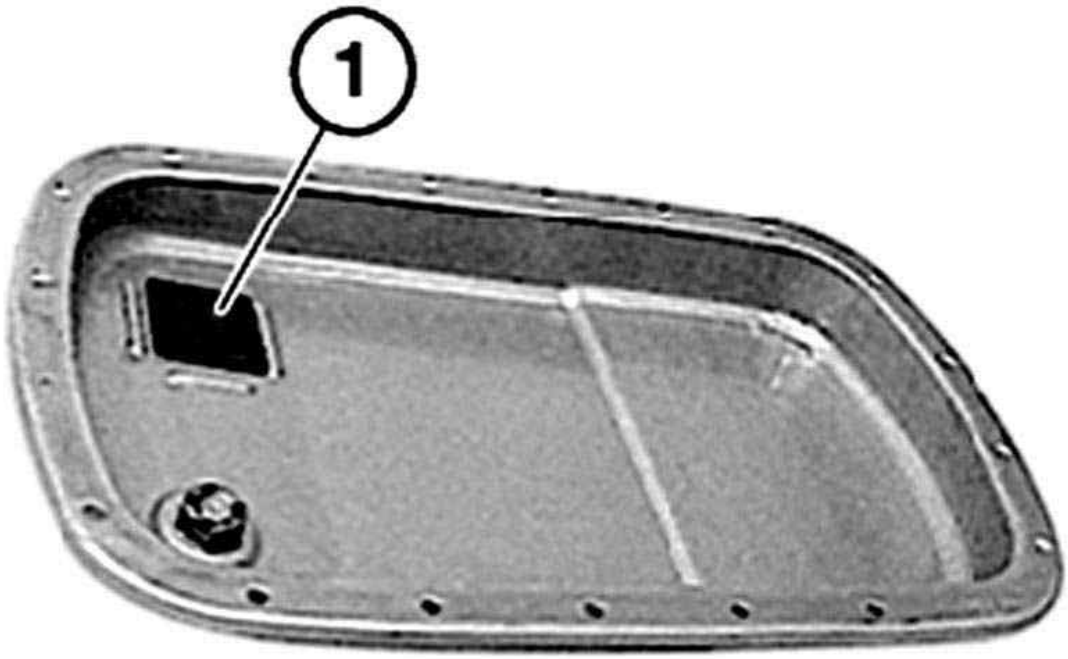

G00382345

Fig. 36: Installing Oil Sump
Courtesy of BMW OF NORTH AMERICA, INC.

REMOVING AND INSTALLING/REPLACING TRANSMISSION OIL SCREEN (A5S 325Z)

NOTE: Numbers in text refer to numbers in figures.

NOTE: After completing work, top up ATF level. Check/top up fluid level in automatic transmission. See CHECKING/TOPPING UP FLUID LEVEL IN AUTOMATIC TRANSMISSION (A5S 325Z) .

Remove and install transmission oil sump. See **REMOVING AND INSTALLING/SEALING OR REPLACING TRANSMISSION OIL SUMP (A5S 325Z)** .

Release screws (1). See **Fig. 37** . Pull transmission oil screen (2) towards bottom and remove.

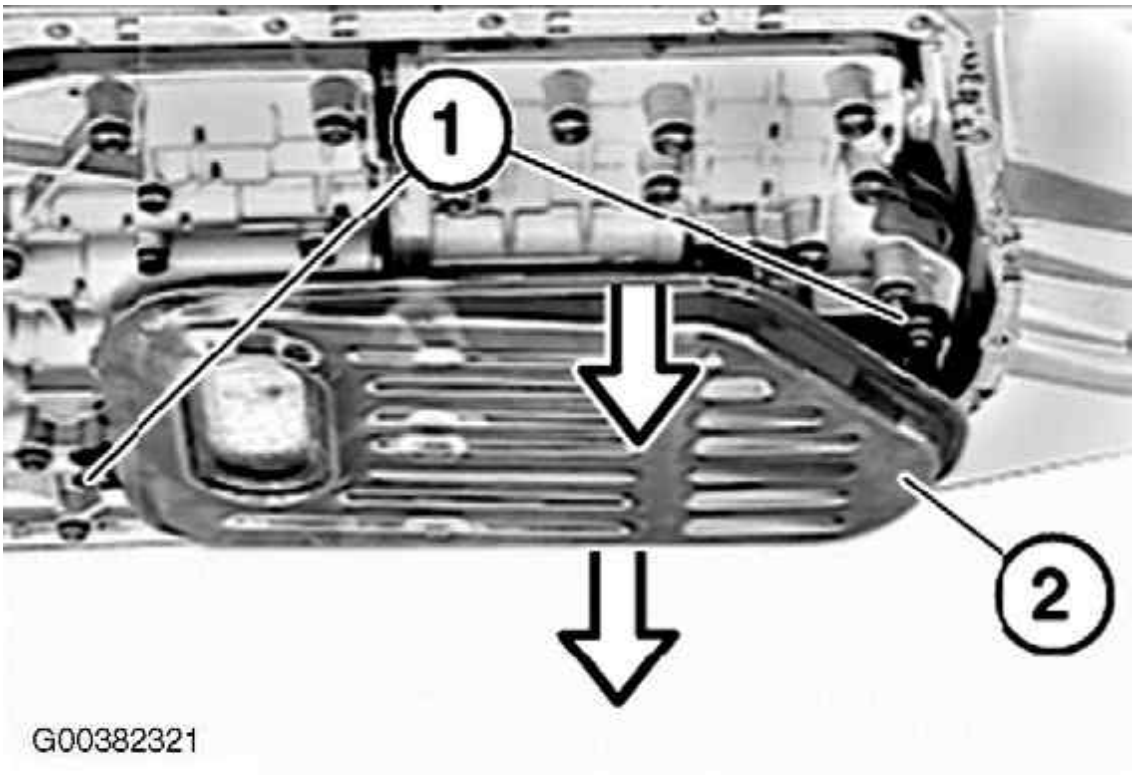

Fig. 37: Removing Transmission Oil Screen
Courtesy of BMW OF NORTH AMERICA, INC.

Installation: coat sealing ring with ATF. Tighten fasteners to specification. See **TORQUE SPECIFICATIONS** .

REMOVING AND INSTALLING/REPLACING TRANSMISSION SCREEN (A5S 360R / 390R, A4S 200R)

NOTE: **Numbers in text refer to numbers in figures.**

NOTE: **After completing work, top up ATF level. Check/top up fluid level in automatic transmission. See CHECKING/TOPPING UP FLUID LEVEL IN AUTOMATIC TRANSMISSION (A5S 360R / 390R, A4S 200R / 310R) .**

Remove transmission oil sump. See **REMOVING AND INSTALLING/SEALING OR REPLACING TRANSMISSION FLUID SUMP (A5S 360R / 390R, A4S 200R)** .

Pull off transmission fluid screen (1) towards bottom and remove. See **Fig. 38** .

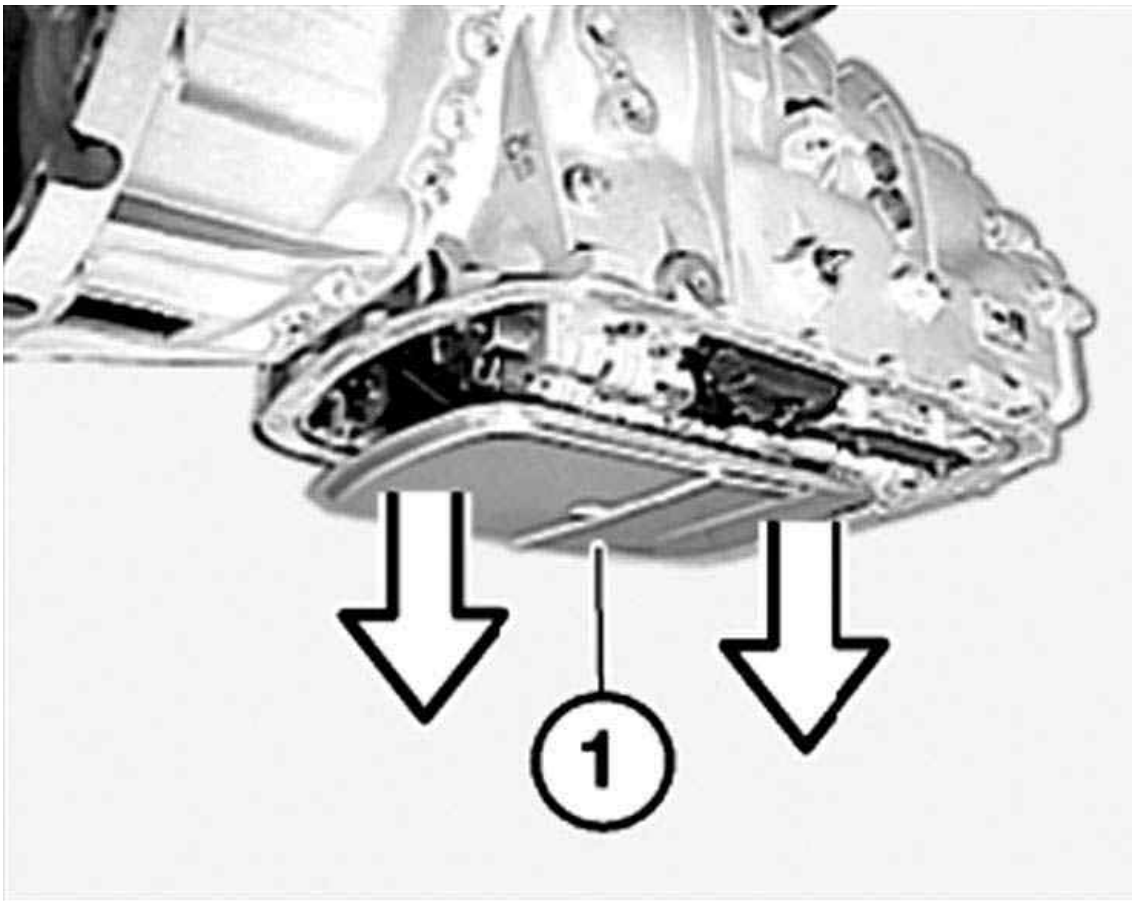

G00382346

Fig. 38: Pulling Off Transmission Fluid Screen
Courtesy of BMW OF NORTH AMERICA, INC.

If the sealing ring (1) has remained in the pump housing, it must be removed and the transmission fluid screen replaced. See **Fig. 39** .

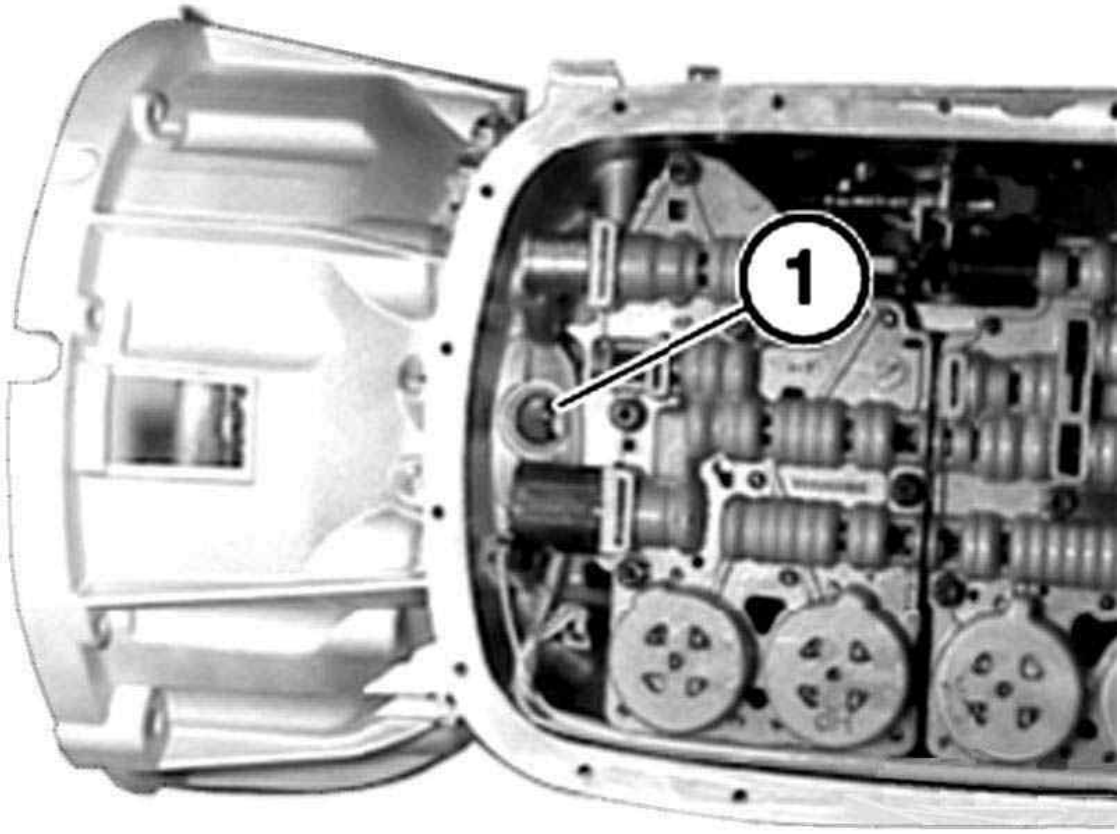

G00382347

Fig. 39: Locating Sealing Ring
Courtesy of BMW OF NORTH AMERICA, INC.

Installation: different transmission fluid screens are used in petrol/gasoline and diesel engines. Therefore check specified measurement A prior to installation. See **Fig. 40** . Measurement A: Gasoline engine:

- M52TU = 38-40 mm
- M43TU = 29-31 mm

Diesel engine: M57 = 29-31 mm. Position (1): Two gaskets are fitted.

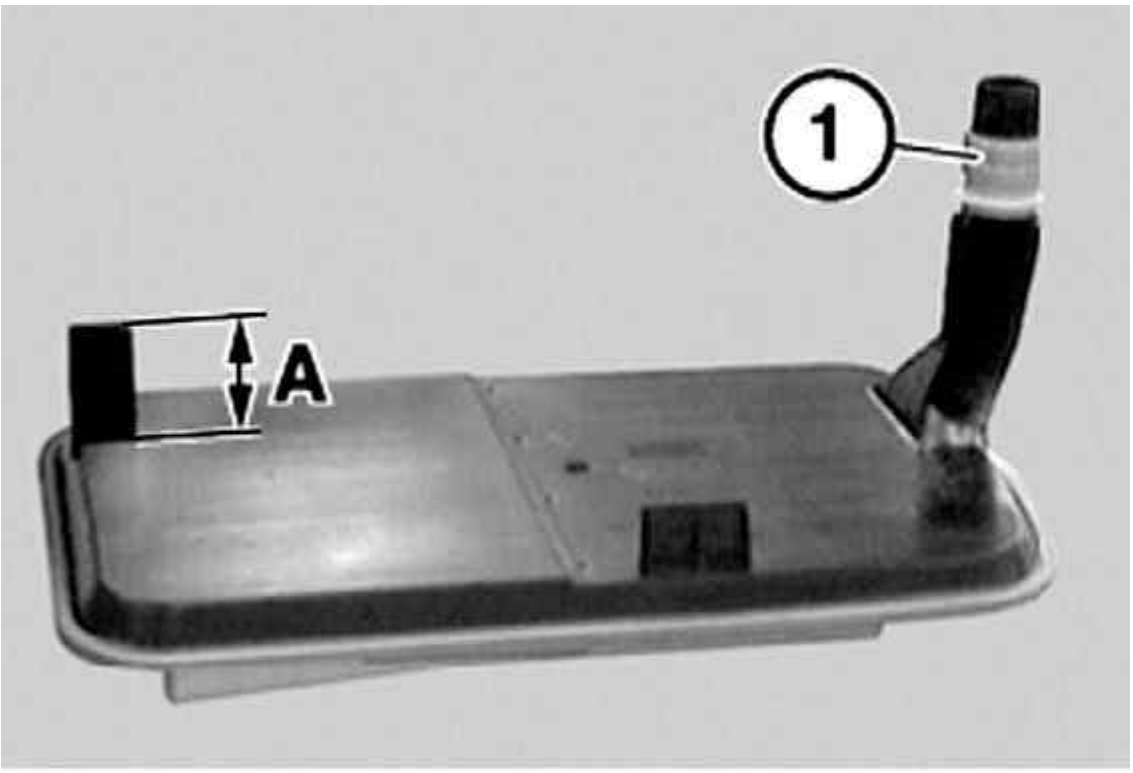

G00382348

Fig. 40: Identifying Transmission Screen
Courtesy of BMW OF NORTH AMERICA, INC.

REMOVING AND INSTALLING/SEALING OR REPLACING TRANSMISSION OIL SUMP (A5S 325Z)

NOTE: Numbers in text refer to numbers in figures.

CAUTION: It is absolutely essential to use the approved automatic transmission fluid in this automatic transmission. Failure to comply with this requirement will result in serious damage to the automatic transmission.

Release drain plug (1). See **Fig. 41** . Drain automatic transmission fluid. Unscrew all bolts. Remove oil sump (2). Upon installation, tighten fasteners to specification. See **TORQUE SPECIFICATIONS** .

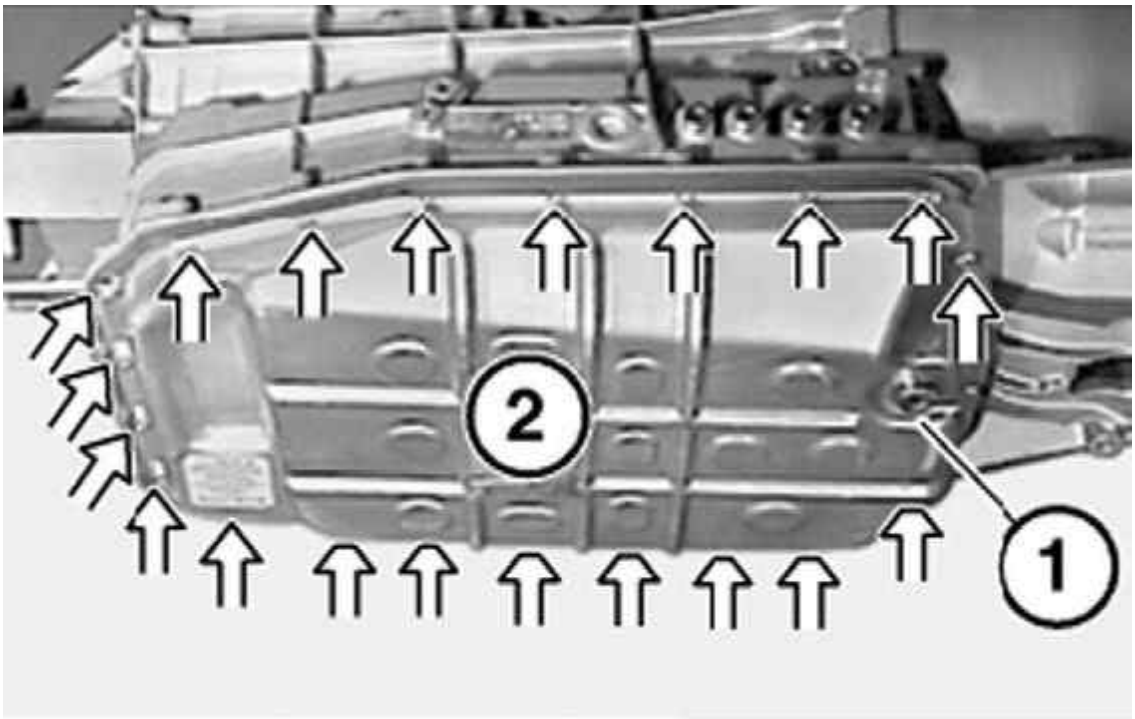

G00382300

Fig. 41: Removing Oil Sump
Courtesy of BMW OF NORTH AMERICA, INC.

Remove gasket (1). See **Fig. 42** . Clean sealing surface (2). Upon installation, replace seal.

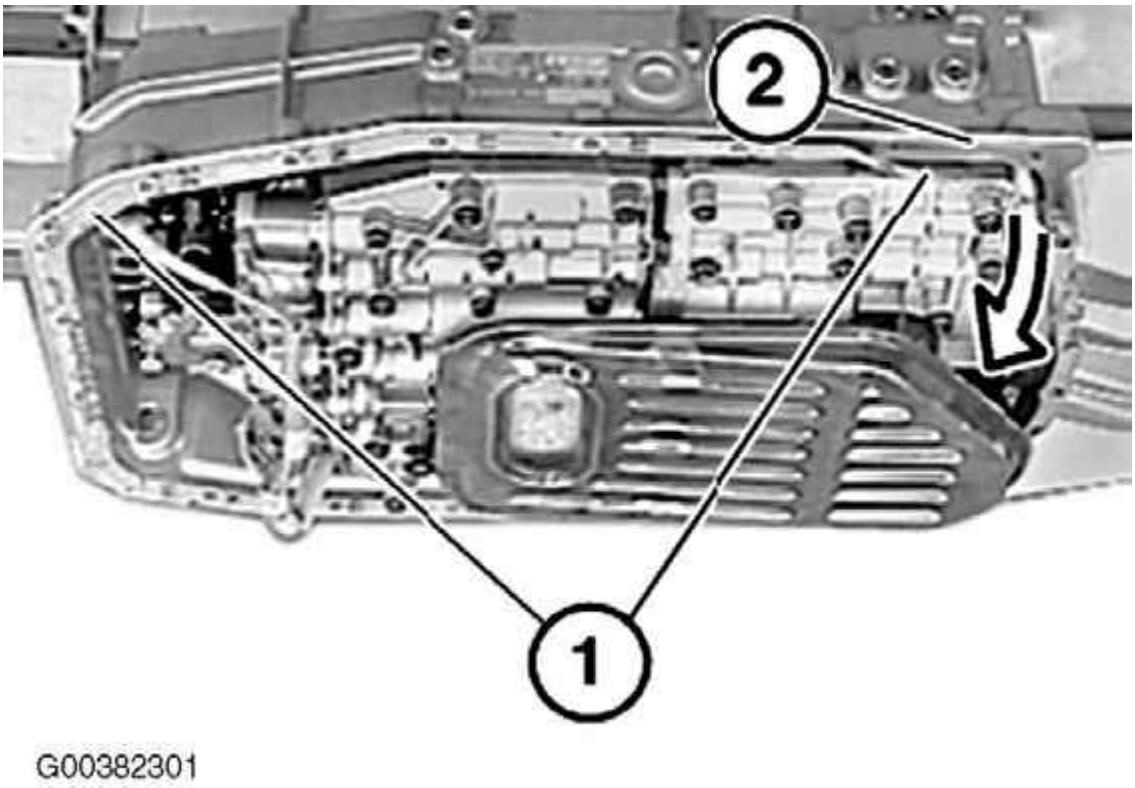

Fig. 42: Locating Gasket
Courtesy of BMW OF NORTH AMERICA, INC.

CAUTION: Using torque wrench, do not tighten screws diagonally but once one after the other. DO NOT tighten screws further.

Clean magnets (1) and insert in oil sump again (2). See **Fig. 43** . Install oil sump (2). Insert all screws until contact is made with screw head in each case. Tighten to specification. See **TORQUE SPECIFICATIONS** .

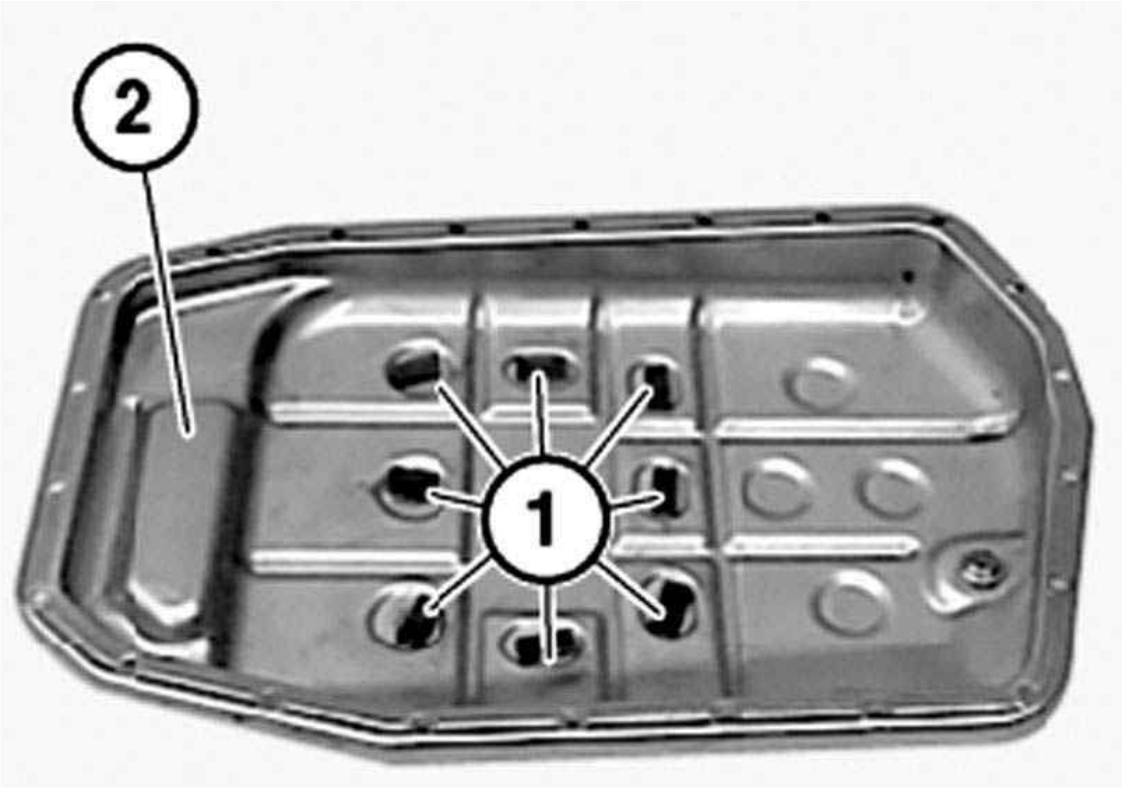

G00382302

Fig. 43: Locating Magnets
Courtesy of BMW OF NORTH AMERICA, INC.

REMOVING & INSTALLING TRANSMISSION EXTENSION (A5S 325Z)

NOTE: Numbers in text refer to numbers in figures.

Remove heat shield (1). See **Fig. 44** .

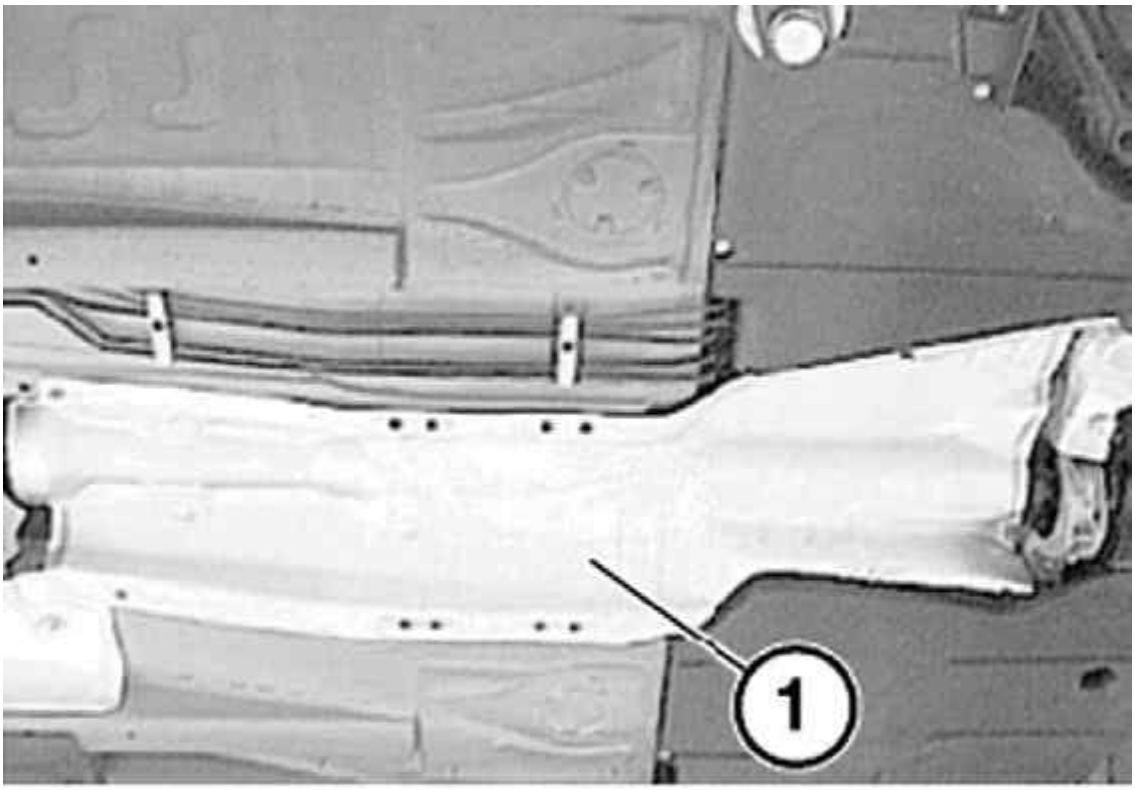

G00367851

Fig. 44: Removing First Heat Shield
Courtesy of BMW OF NORTH AMERICA, INC.

Remove heat shield (1). See **Fig. 45** .

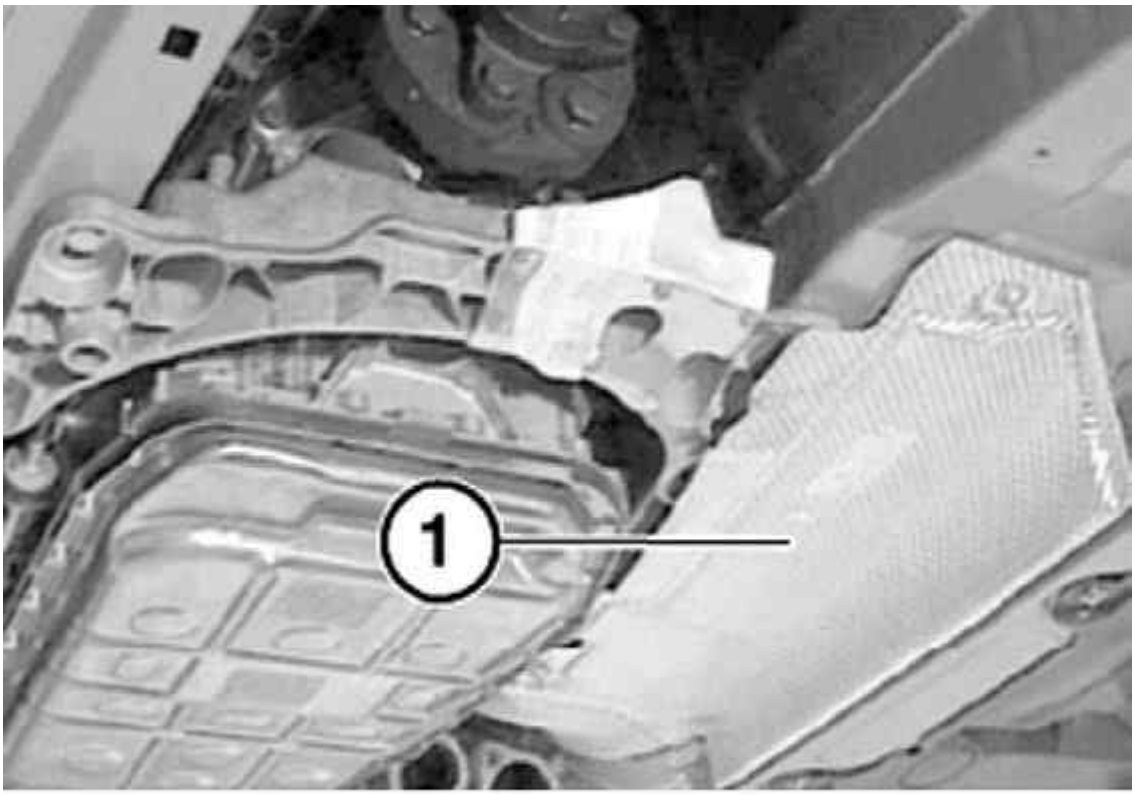

G00367852

Fig. 45: Removing Second Heat Shield
Courtesy of BMW OF NORTH AMERICA, INC.

Support transmission with Special Tool (00 2 030 / 24 5 301 / 24 5 304). See **Fig. 46** .

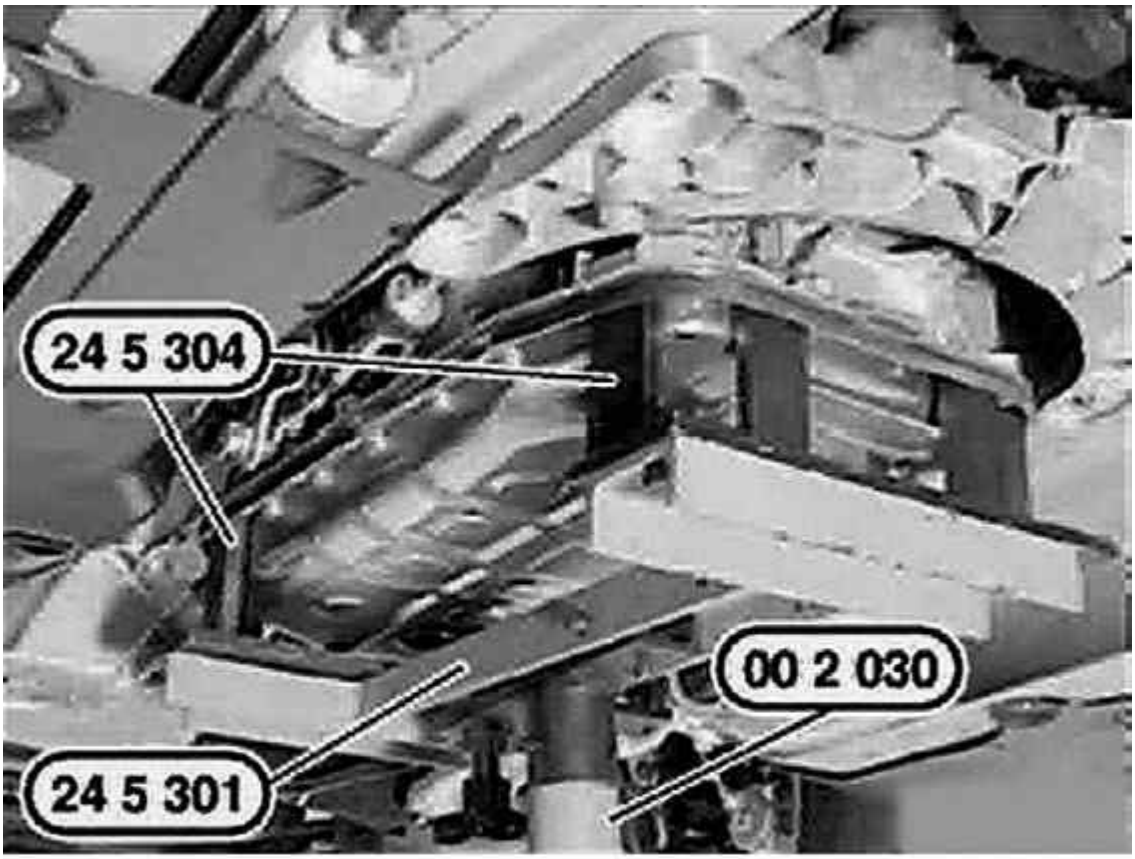

G00367901

Fig. 46: Supporting Transmission With Special Tool
Courtesy of BMW OF NORTH AMERICA, INC.

Release screws and remove cross-member (1). See **Fig. 47** . Upon installation, tighten screws to specification. See **TORQUE SPECIFICATIONS** .

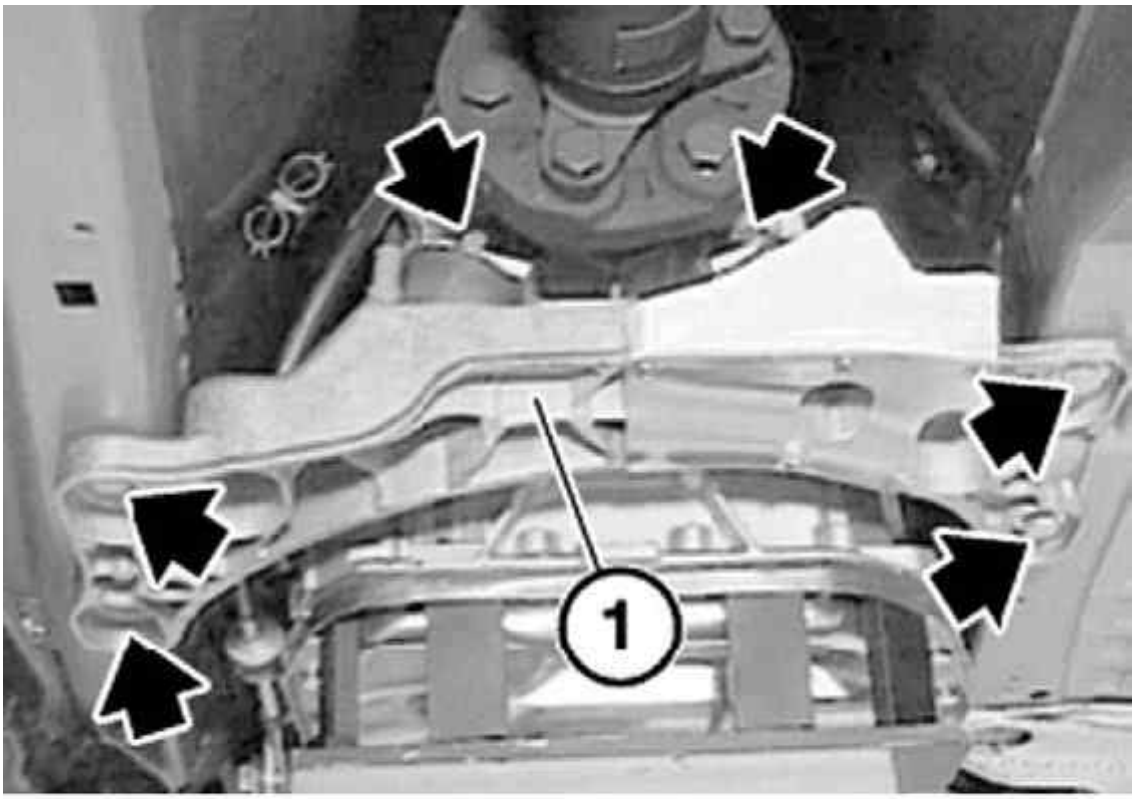

G00367856

Fig. 47: Removing Cross-Member
Courtesy of BMW OF NORTH AMERICA, INC.

Unfasten screws. See **Fig. 48** . Upon installation, replace self-locking nuts. Tighten to specification. See **TORQUE SPECIFICATIONS** .

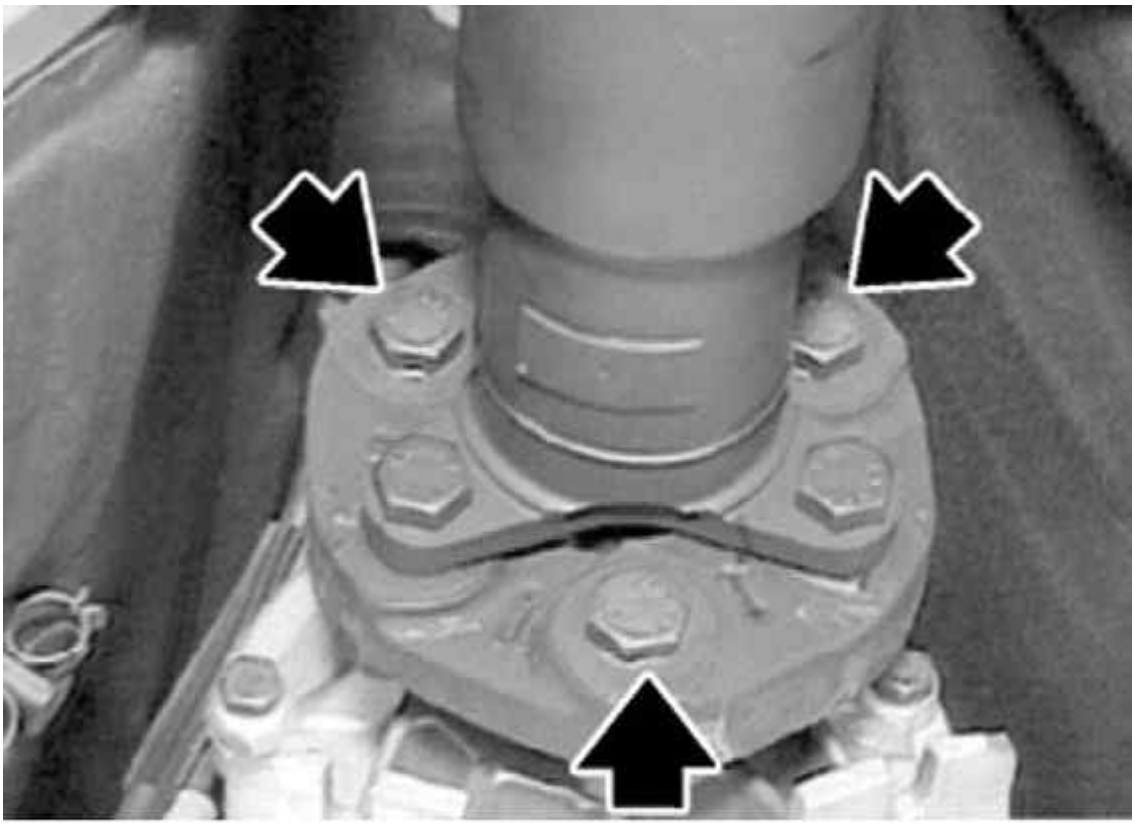

Fig. 48: Locating Flexible Disk To Propeller Shaft Screws
Courtesy of BMW OF NORTH AMERICA, INC.

Grip propeller shaft and release nuts. See **Fig. 49** . Bend propeller shaft downwards at center mount (1), detach from transmission output flange and tie back to one side on underbody of vehicle. Upon installation, tighten screws to specification. See **TORQUE SPECIFICATIONS** .

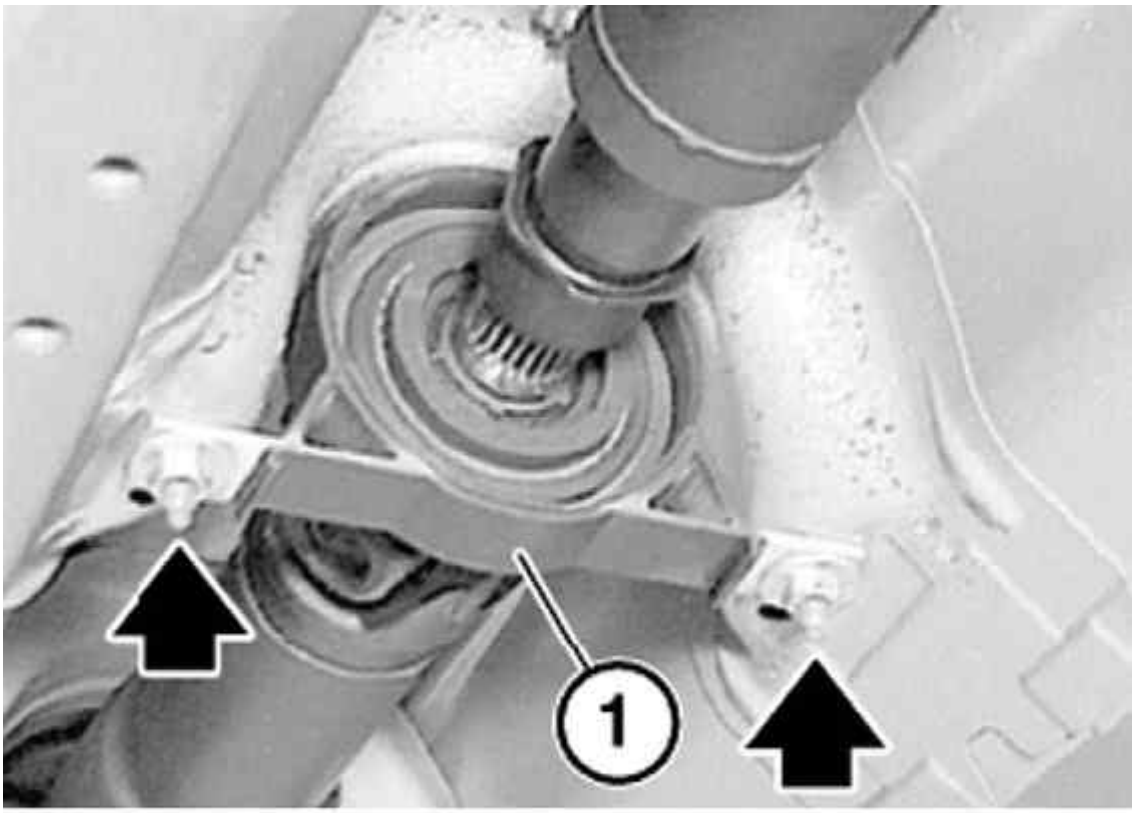

Fig. 49: Detaching Propeller Shaft From Transmission Output Shaft
Courtesy of BMW OF NORTH AMERICA, INC.

Unfasten screws. See **Fig. 50** . Upon installation, tighten screws to specification. See **TORQUE SPECIFICATIONS** .

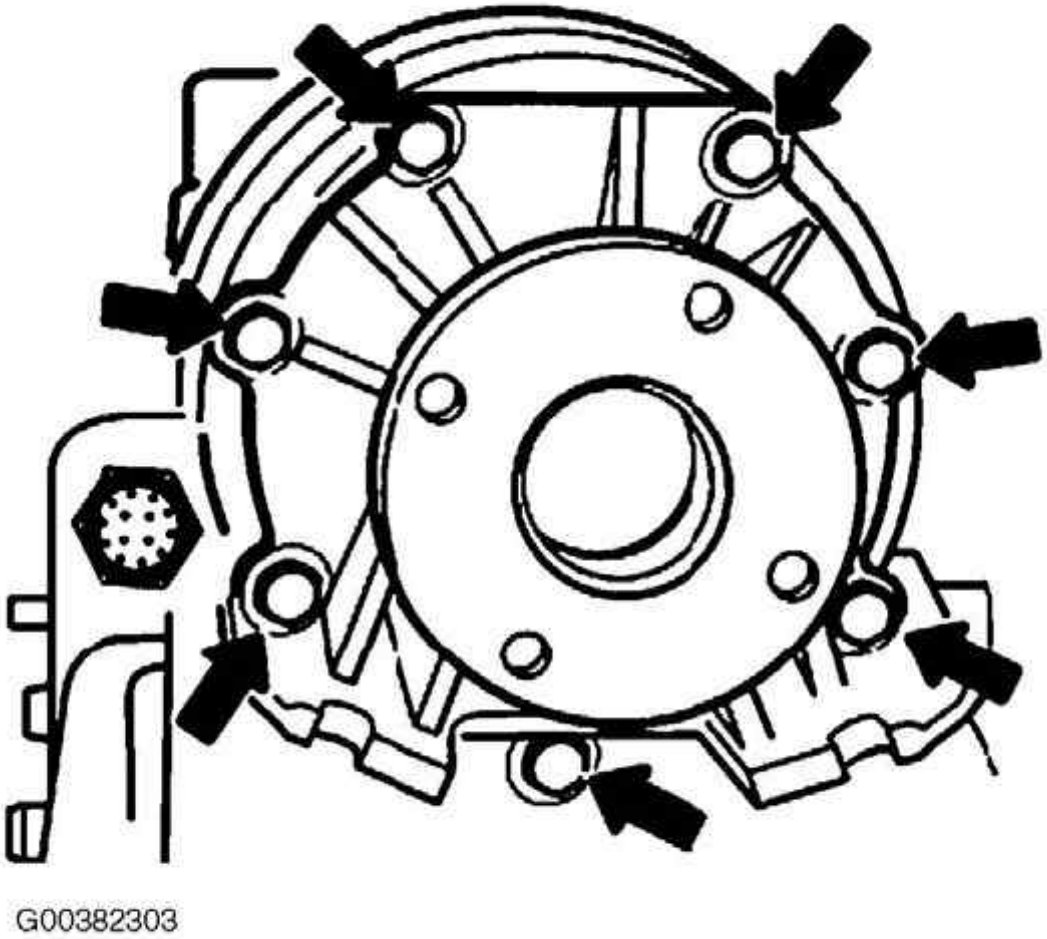

Fig. 50: Locating Transmission Extension Screws
Courtesy of BMW OF NORTH AMERICA, INC.

Remove transmission extension. Upon installation, install shim (1). Replace O-ring (2). See **Fig. 51** .

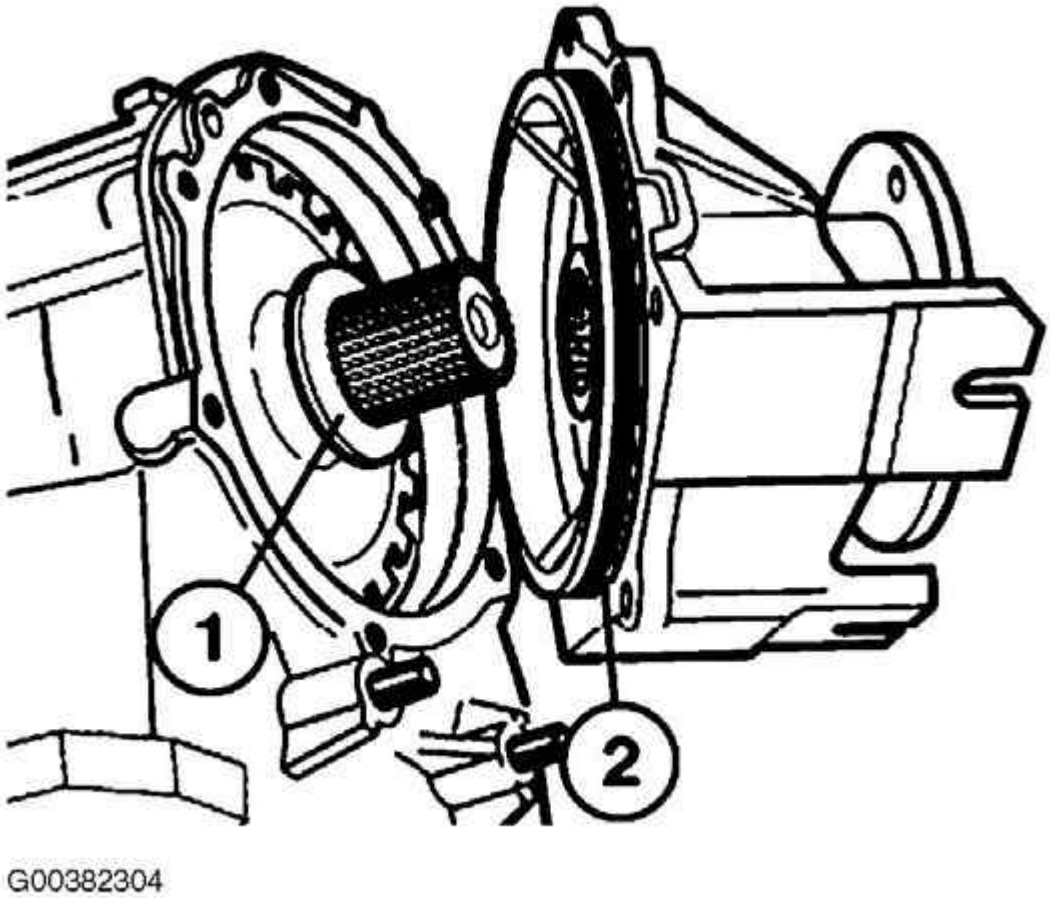

Fig. 51: Locating Shim & O-Ring
Courtesy of BMW OF NORTH AMERICA, INC.

To install, reverse removal procedure.

REMOVING AND INSTALLING OR REPLACING TRANSMISSION EXTENSION HOUSING (A5S 360R / 390R)

NOTE: **Numbers in text refer to numbers in figures.**

NOTE: **After completing work, top up ATF level. Check/top up fluid level in automatic transmission. See CHECKING/TOPPING UP FLUID LEVEL IN AUTOMATIC TRANSMISSION (A5S 360R / 390R, A4S 200R / 310R) .**

Remove complete exhaust system.

Remove heat shields. See **Fig. 44** and **Fig. 45** .

Support transmission with special tools 00 2 030 / 24 5 301 / 24 5 305. See **Fig. 46** .

Release screws. Remove cross-member (1). See **Fig. 47** . Upon installation, tighten screws to specification. See **TORQUE SPECIFICATIONS** .

Release screws. See **Fig. 48** . Upon installation, replace self-locking nuts. Tighten to specification. See **TORQUE SPECIFICATIONS** .

Grip propeller shaft and release nuts. See **Fig. 49** . Bend propeller shaft downwards at center bearing (1). Detach propeller shaft from transmission output flange and tie back to side on vehicle underbody. Upon installation, tighten nuts to specification. See **TORQUE SPECIFICATIONS** .

Version 1 without spring washer: grip output flange (1) with Special Tool (23 0 020). See **Fig. 52** . Release hexagon nut. Detach output flange (1). Upon installation, replace sealing ring in output flange (1). Install hexagon nut with screw retaining compound. Tighten to specification. See **TORQUE SPECIFICATIONS** .

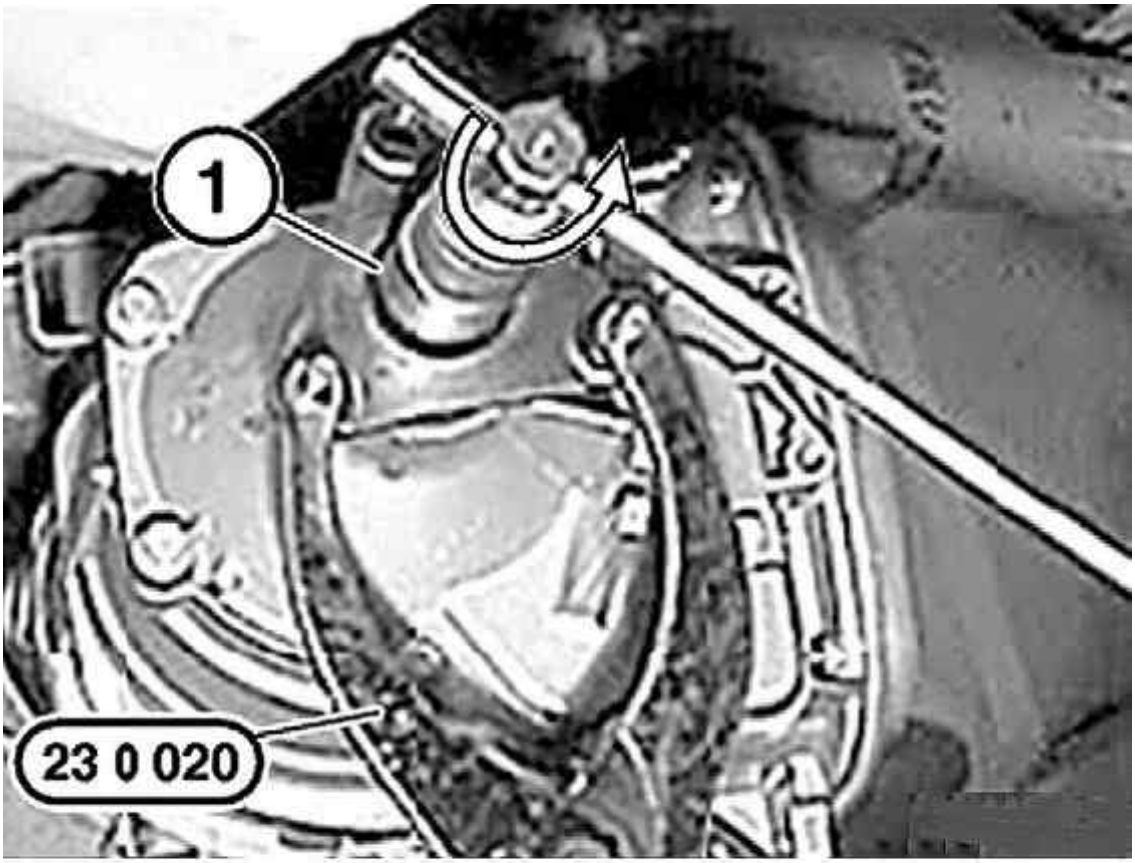

G00382356

Fig. 52: Detaching Output Flange (Version 1)
Courtesy of BMW OF NORTH AMERICA, INC.

Version 2 with spring washer: release hexagon nut (1) on output flange (2). See **Fig. 53** . Upon installation, install hexagon nut with screw retaining compound and tighten to specification. See **TORQUE SPECIFICATIONS** .

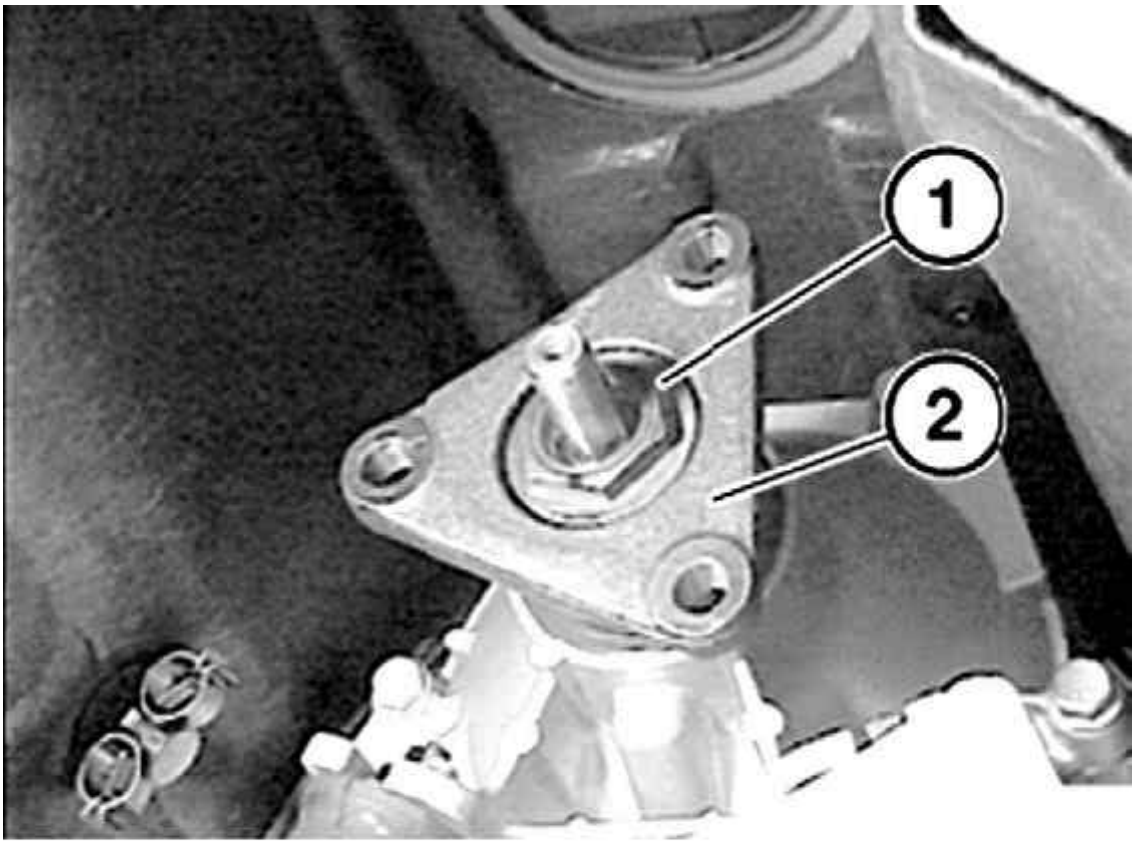

G00382357

Fig. 53: Releasing Hexagon Nut On Output Flange
Courtesy of BMW OF NORTH AMERICA, INC.

Version 2 with spring washer: remove spring washer (1). See **Fig. 54** . Remove output flange (2). Upon installation: note installation direction of spring washer (1). Replace sealing ring in output flange (2).

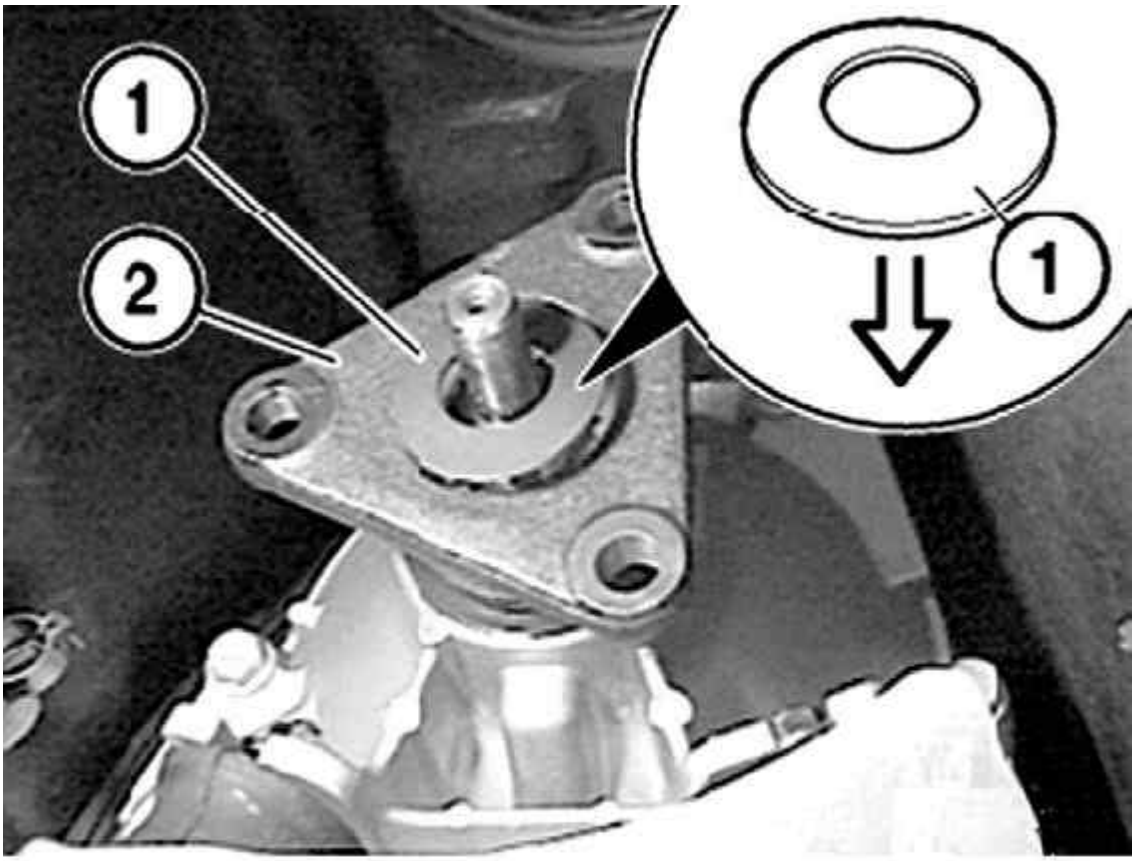

G00382358

Fig. 54: Removing Output Flange (Version 2)
Courtesy of BMW OF NORTH AMERICA, INC.

Withdraw radial seal (1) with Special Tool (00 5 010). See **Fig. 55** .

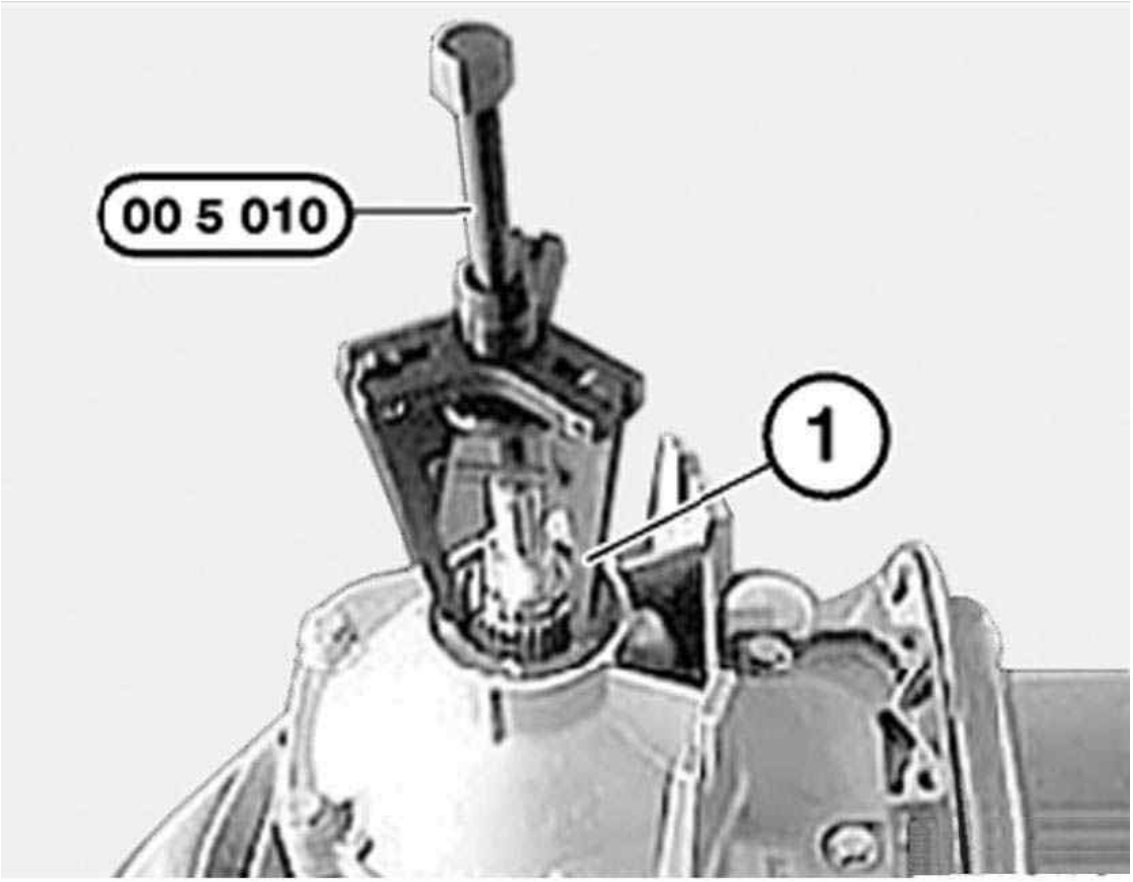

G00382359

Fig. 55: Removing Radial Seal
Courtesy of BMW OF NORTH AMERICA, INC.

Release screws on transmission extension housing (1). See **Fig. 56** . Carefully pull off transmission extension housing (1). Upon installation, tighten screws to specification. See **TORQUE SPECIFICATIONS** .

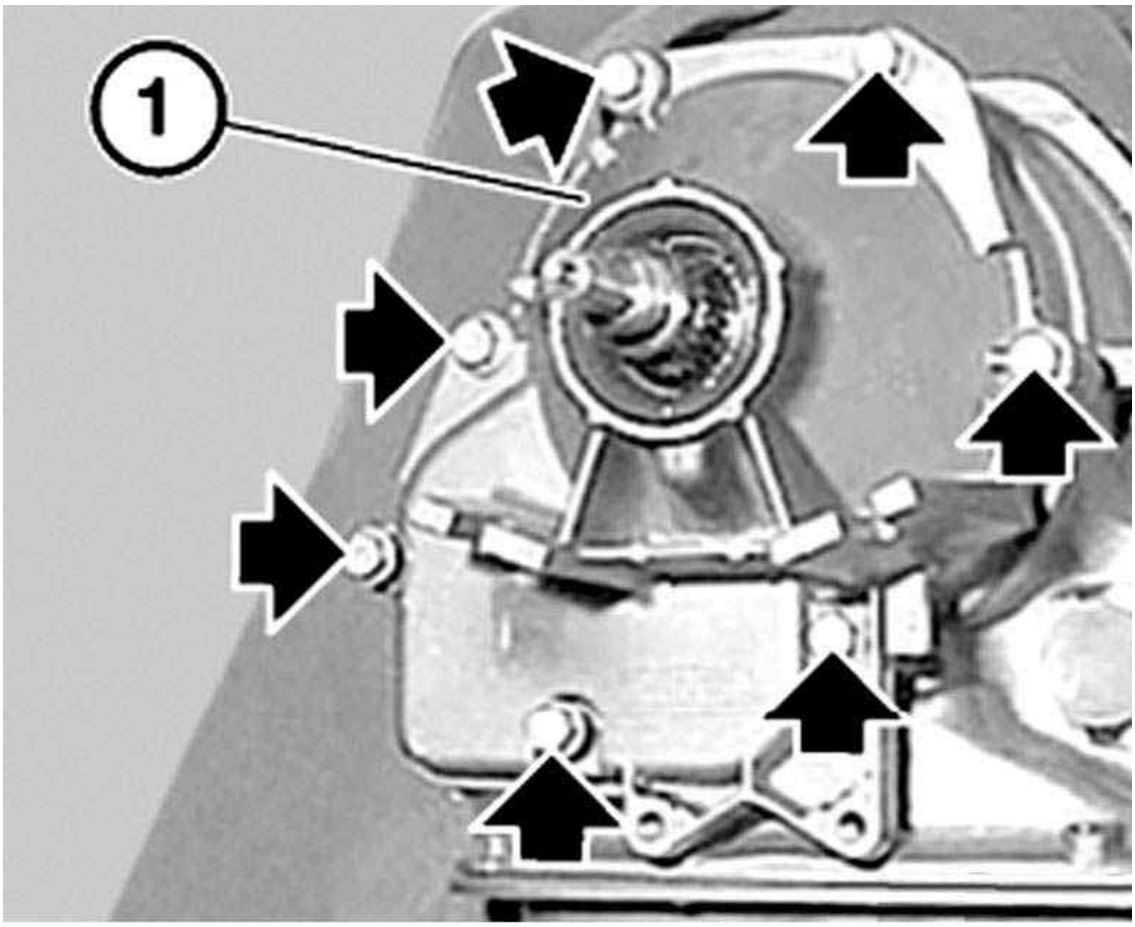

G00382360

Fig. 56: Locating Screws On Transmission Extension Housing
Courtesy of BMW OF NORTH AMERICA, INC.

CAUTION: Existing shim (2) remains fitted and is not recalculated.

Replace gasket between transmission housing (1) and end cover. See **Fig. 57** .

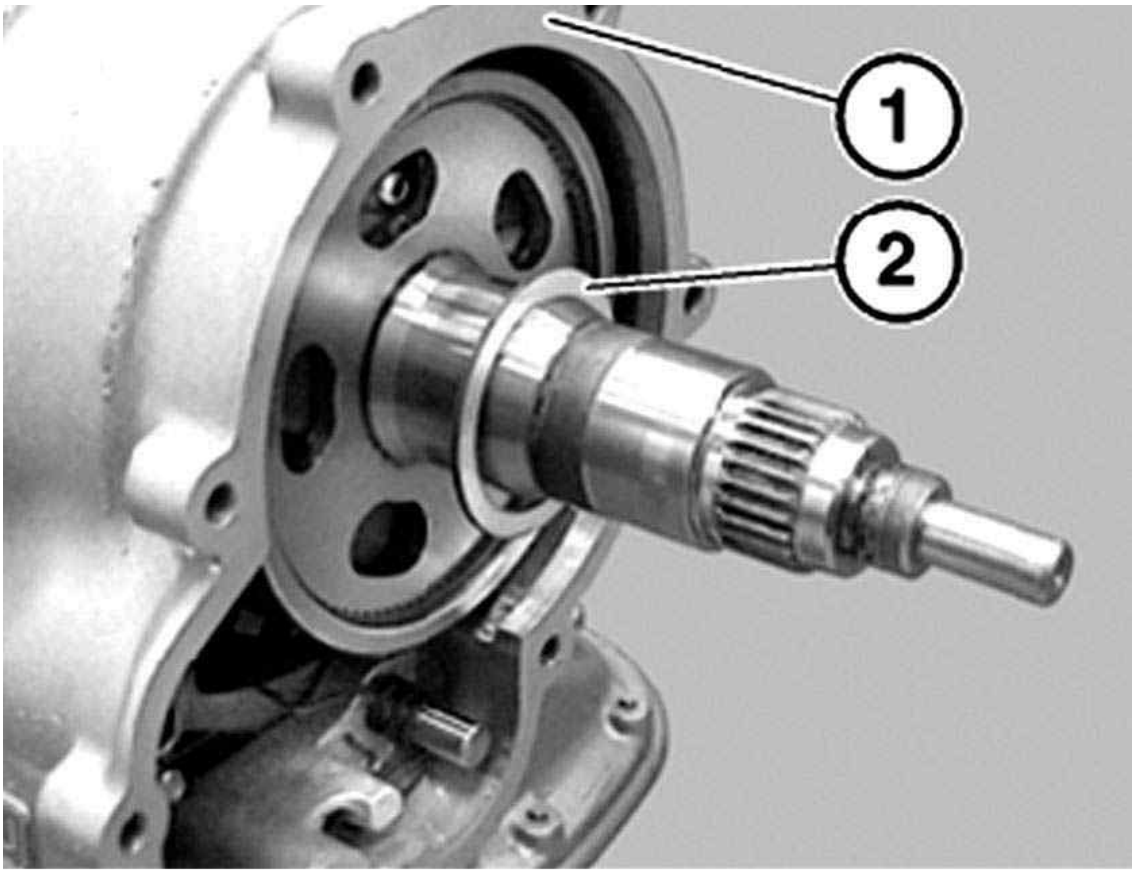

G00382361

Fig. 57: Replacing Gasket Between Transmission Housing & End Cover
Courtesy of BMW OF NORTH AMERICA, INC.

CAUTION: If shim is lost: Calculate new shim.

Calculate measurement between contact face (1) and parking gear (2) with Special Tool (00 2 550). See **Fig. 58** . Calculate the new shim with this measurement from the following figure. See **Fig. 59** .

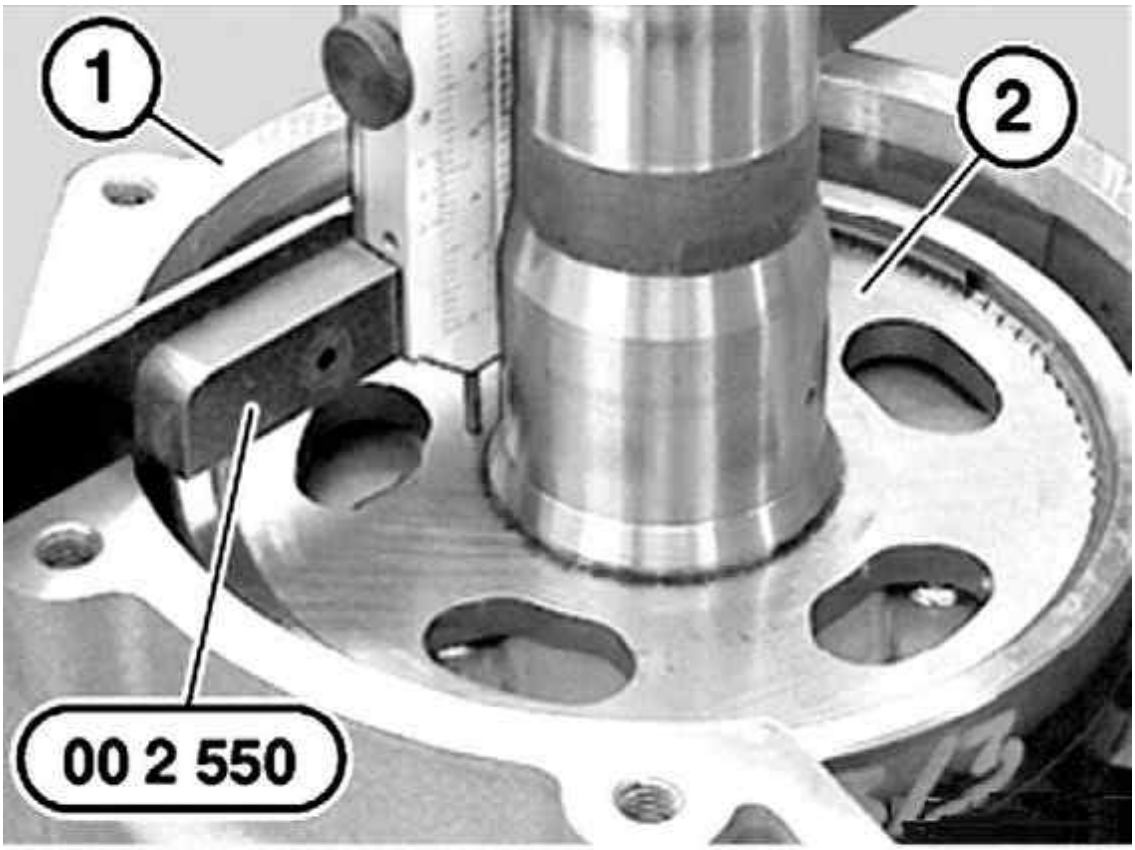

G00382362

Fig. 58: Measuring Between Contact Face & Parking Gear
Courtesy of BMW OF NORTH AMERICA, INC.

Calculated measurement in mm	Shim
15,99 - 16,27	0.95/1.05
16,27 - 16,47	1.15/1.25
16,47 - 16,67	1.35/1.45
16,67 - 16,87	1.55/1.65
16,87 - 17,07	1.75/1.85
17,07 - 17,27	1.95/2.05
17,27 - 17,47	2.15/2.25
17,47 - 17,67	2.35/2.45
17,67 - 17,87	2.55/2.65
17,87 - 18,07	2.75/2.85

G00382363

Fig. 59: Calculating Shim Measurement
Courtesy of BMW OF NORTH AMERICA, INC.

Installation: coat sealing lips of new radial seal with automatic transmission fluid. Drive in radial seal with Special Tool (24 1 090) until flush. See **Fig. 60** .

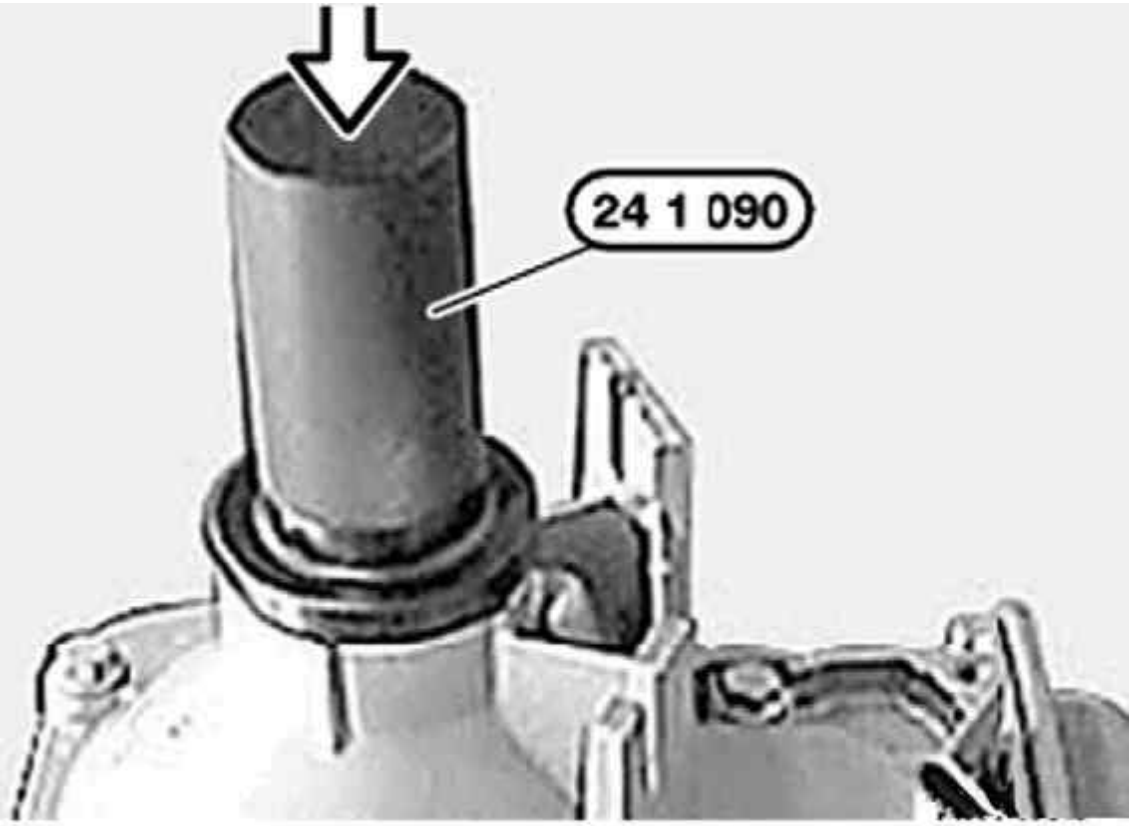

G00382364

Fig. 60: Driving In Radial Seal
Courtesy of BMW OF NORTH AMERICA, INC.

REPLACING BEARING ON TRANSMISSION EXTENSION (A5S 325Z)

NOTE: Numbers in text refer to numbers in figures.

CAUTION: After completion of work, check transmission oil level. Use only approved transmission fluid. Failure to comply with this instruction will result in serious damage to the transmission. End play must be checked and, if necessary, adjusted. See REPLACING OUTPUT FLANGE (A5S 325Z) .

Remove output flange. See **REMOVING & INSTALLING TRANSMISSION EXTENSION (A5S 325Z)** .

Lift out circlip (1). See **Fig. 61** . Remove ball ring (2).

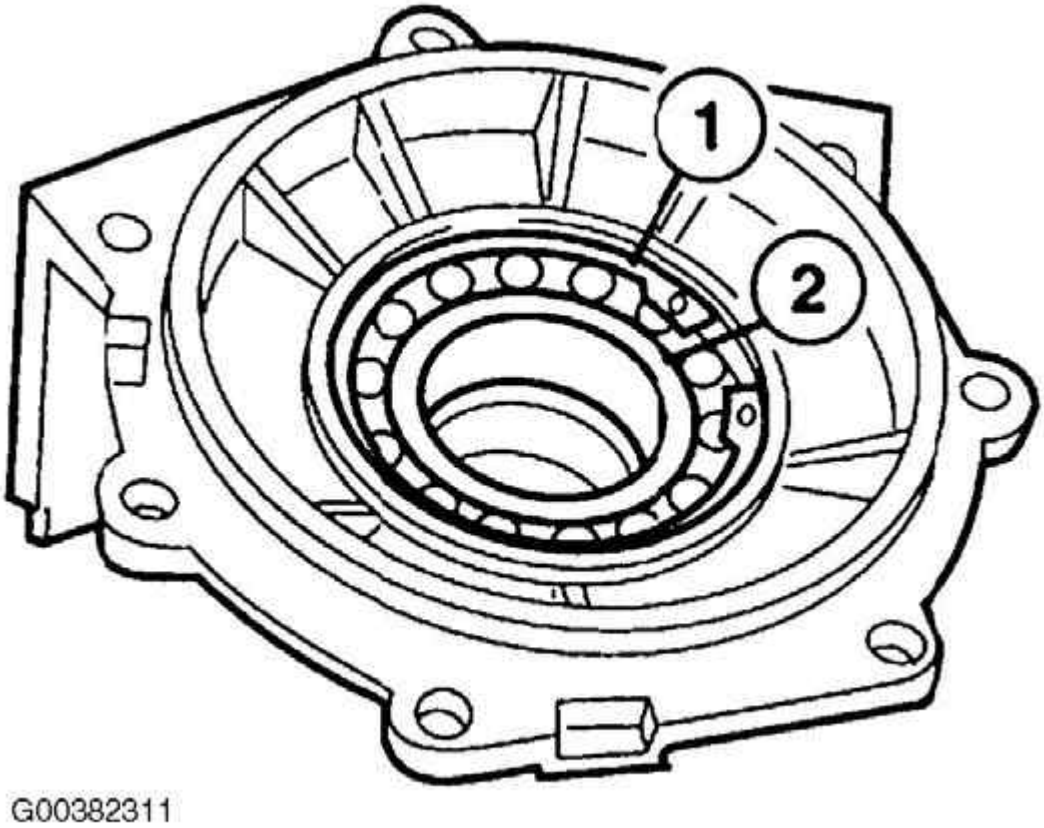

Fig. 61: Locating Circlip
Courtesy of BMW OF NORTH AMERICA, INC.

Heat transmission extension in area of bearing race to approx. 80°C (hot air blower). See **Fig. 62** . Remove bearing race (3). Installation: install first ball ring (4), then bearing race.

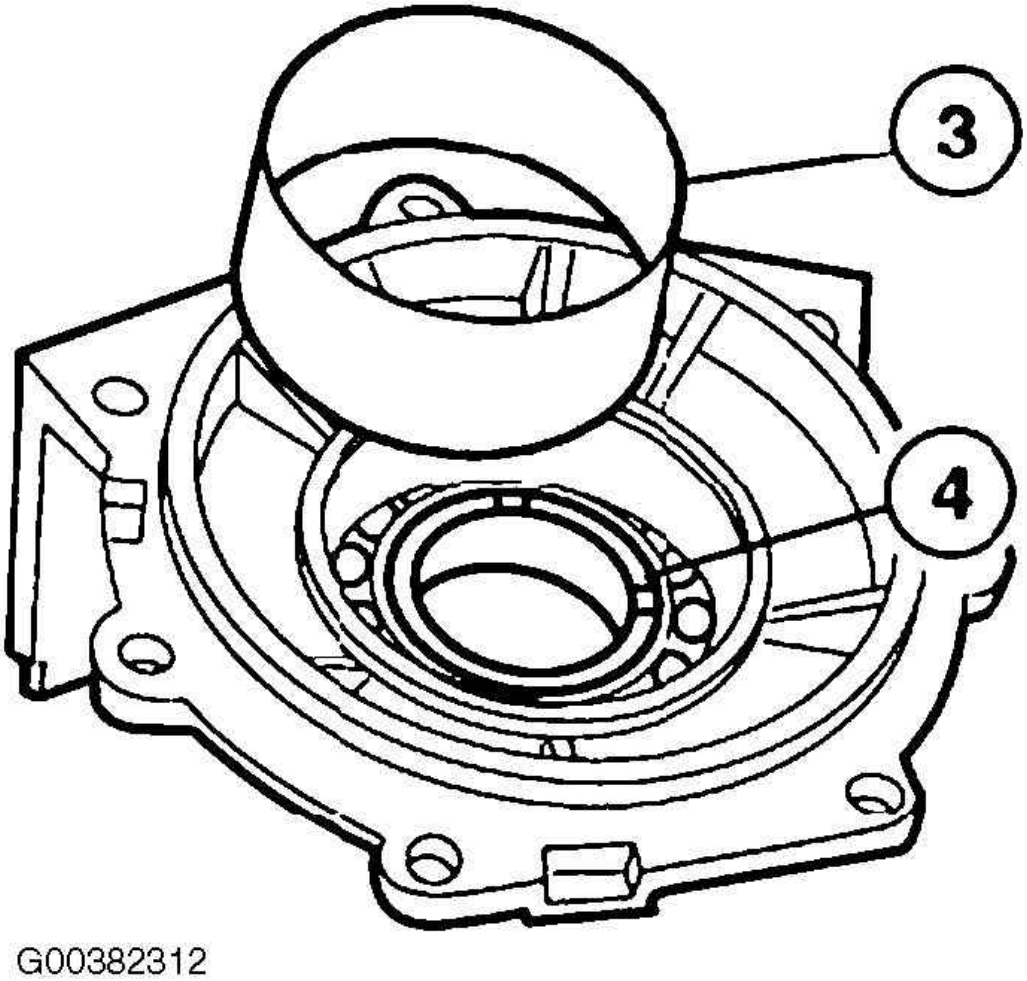

Fig. 62: Removing Bearing Race
Courtesy of BMW OF NORTH AMERICA, INC.

REPLACING OUTPUT FLANGE (A5S 325Z)

NOTE: Numbers in text refer to numbers in figures.

Remove output flange from mounting. See **REPLACING RADIAL SEAL FOR OUTPUT FLANGE (A5S 325Z)** . Installation: coat sealing lip of radial seal and sealing surface of output flange with ATF.

Installation: an end float of 0.15 - 0.35 mm is required between parking interlock gear and end face of output flange. End play is adjusted with shim (1). See **Fig. 92** . Replace sealing ring.

NOTE: Output flange must be free.

Determining thickness of shim: clamp transmission extension in a vise. Press output flange in direction of arrow. See **Fig. 63** .

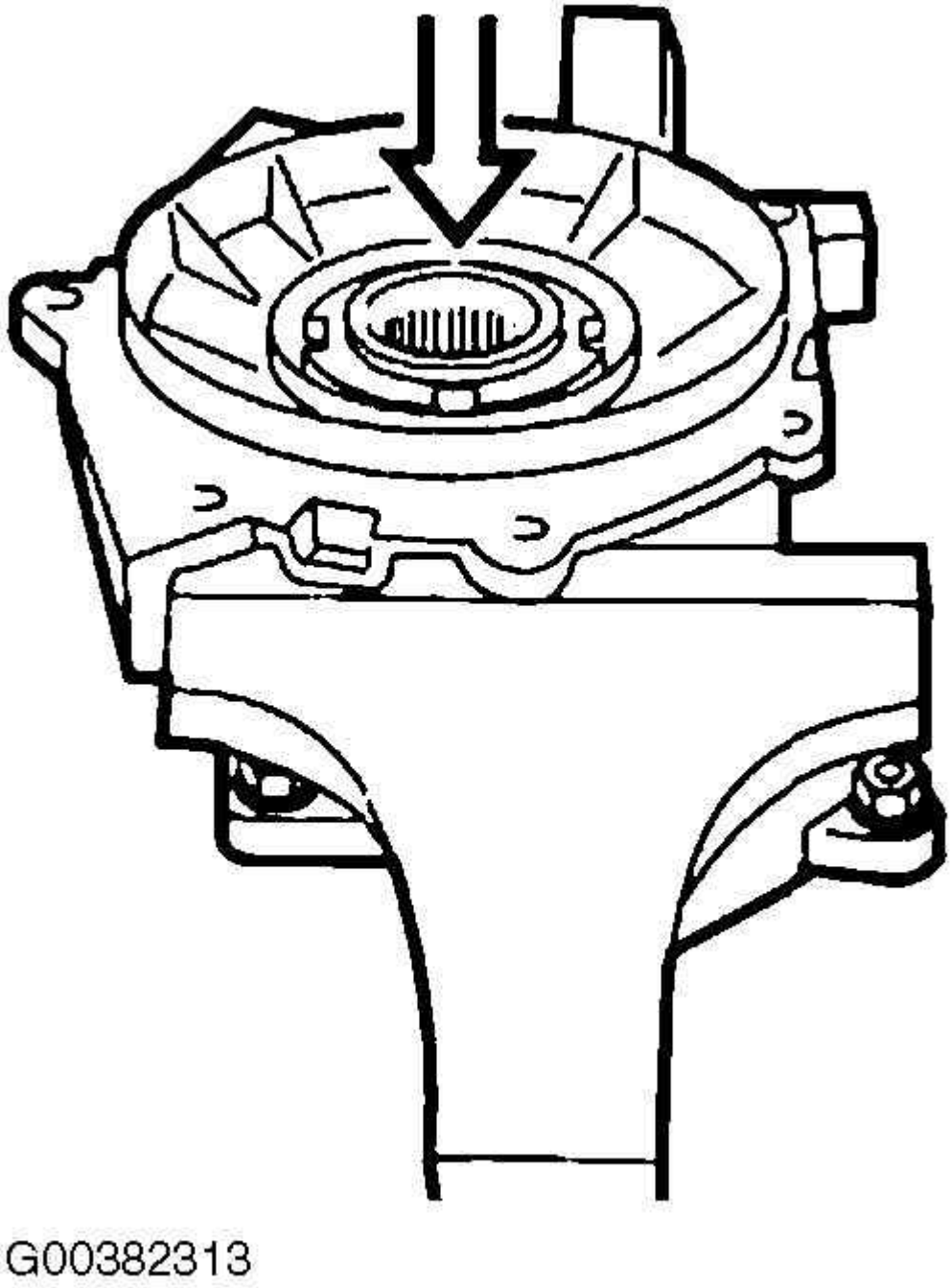

Fig. 63: Pressing Output Flange
Courtesy of BMW OF NORTH AMERICA, INC.

Determine distance (A) from shoulder to sealing surface and distance (B) from shoulder to end face of output flange. See **Fig. 64** . Example:

- A = 10.00 mm
- B = 7.50 mm

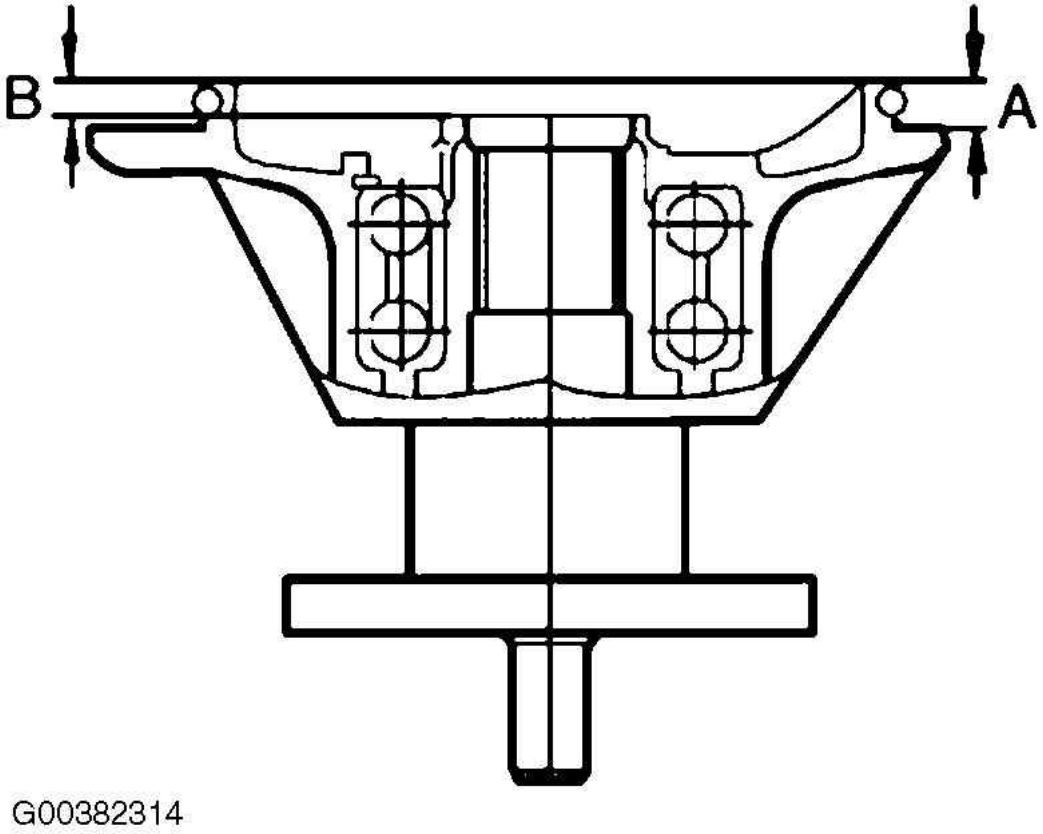

Fig. 64: Locating Distance A & B
Courtesy of BMW OF NORTH AMERICA, INC.

Remove shim from sprag wheel. Press sprag wheel inwards. Determine distance (E) from sealing surface on transmission housing to shoulder (1) on parking lock gear. See **Fig. 65** . Example: E = 4.00 mm.

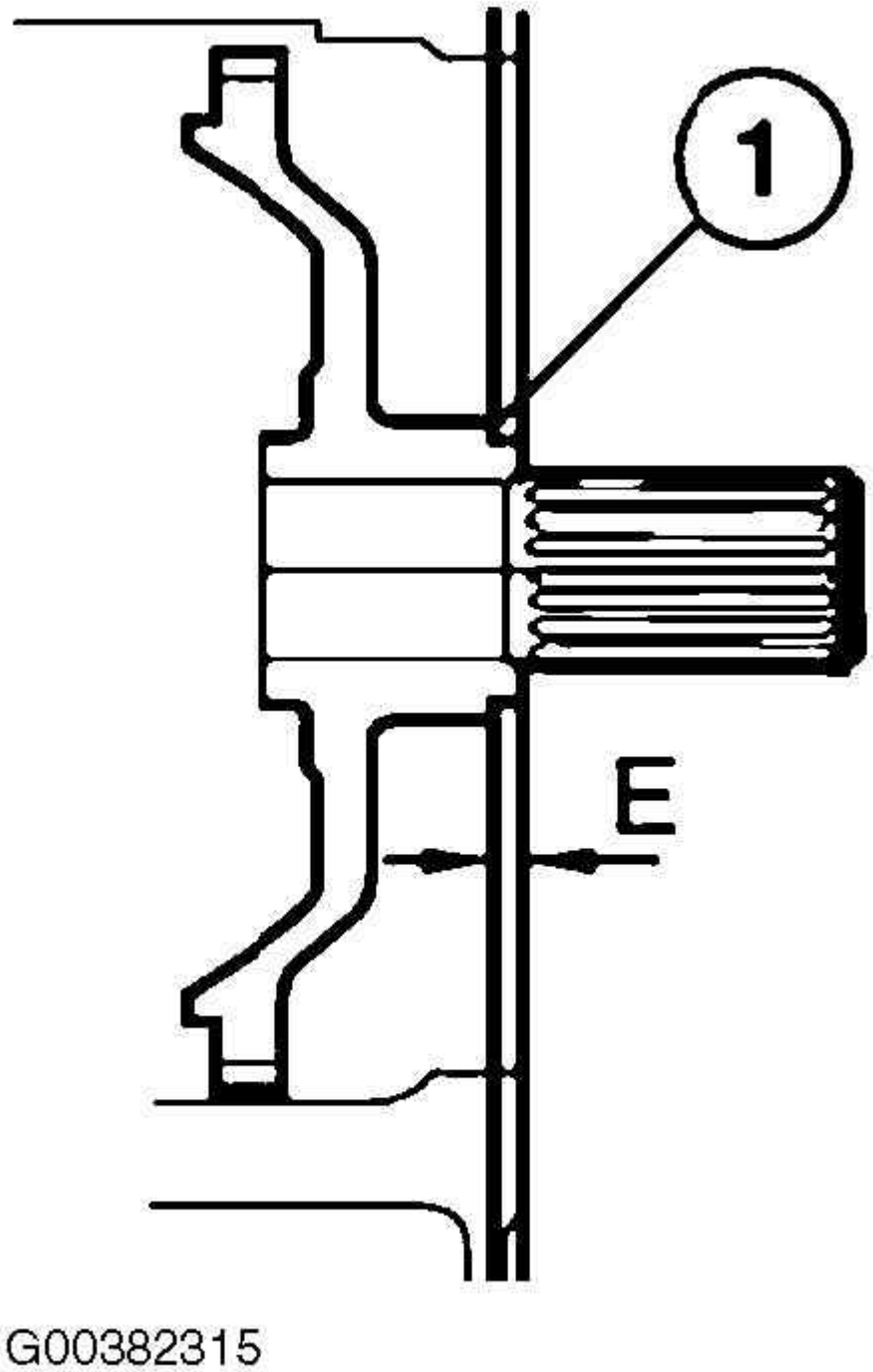

Fig. 65: Locating Distance E

Courtesy of BMW OF NORTH AMERICA, INC.

NOTE: Shims are available in 0.2 mm increments from 0.8 to 2.8 mm.

Calculate shim thickness:

1. A - B = C
2. E - C - end play = shim thickness
3. If necessary: round distance to an amount divisible by 2. Pay attention to distance for end play (0.15 - 0.35 mm) in so doing. Example:
   - 10 - 7.5 = 2.5
   - 4 - 2.5 - 0.25 = 1.15 3. 1.2

Install shim (example: 1.20 mm).

REPLACING OUTPUT FLANGE (A5S 360R / 390R)

NOTE: Numbers in text refer to numbers in figures.

NOTE: After completing work, top up ATF level. Check/top up fluid level in automatic transmission. See CHECKING/TOPPING UP FLUID LEVEL IN AUTOMATIC TRANSMISSION (A5S 360R / 390R, A4S 200R / 310R) .

Remove complete exhaust system.

Remove heat shield (1). See **Fig. 44** .

Release screws. See **Fig. 48** . Upon installation: replace self-locking nuts and tighten to specification. See **TORQUE SPECIFICATIONS** .

Grip propeller shaft. Release nuts. See **Fig. 49** . Bend propeller shaft downwards at center bearing (1). Detach propeller shaft from transmission output flange and tie back to side on vehicle underbody. Upon installation, tighten nuts to specification. See **TORQUE SPECIFICATIONS** .

Grip output flange (1) with Special Tool (23 0 020). See **Fig. 66** . Release hexagon nut. Detach output flange (1). Upon installation, install hexagon nut with screw retaining compound and tighten to specification. See **TORQUE SPECIFICATIONS** .

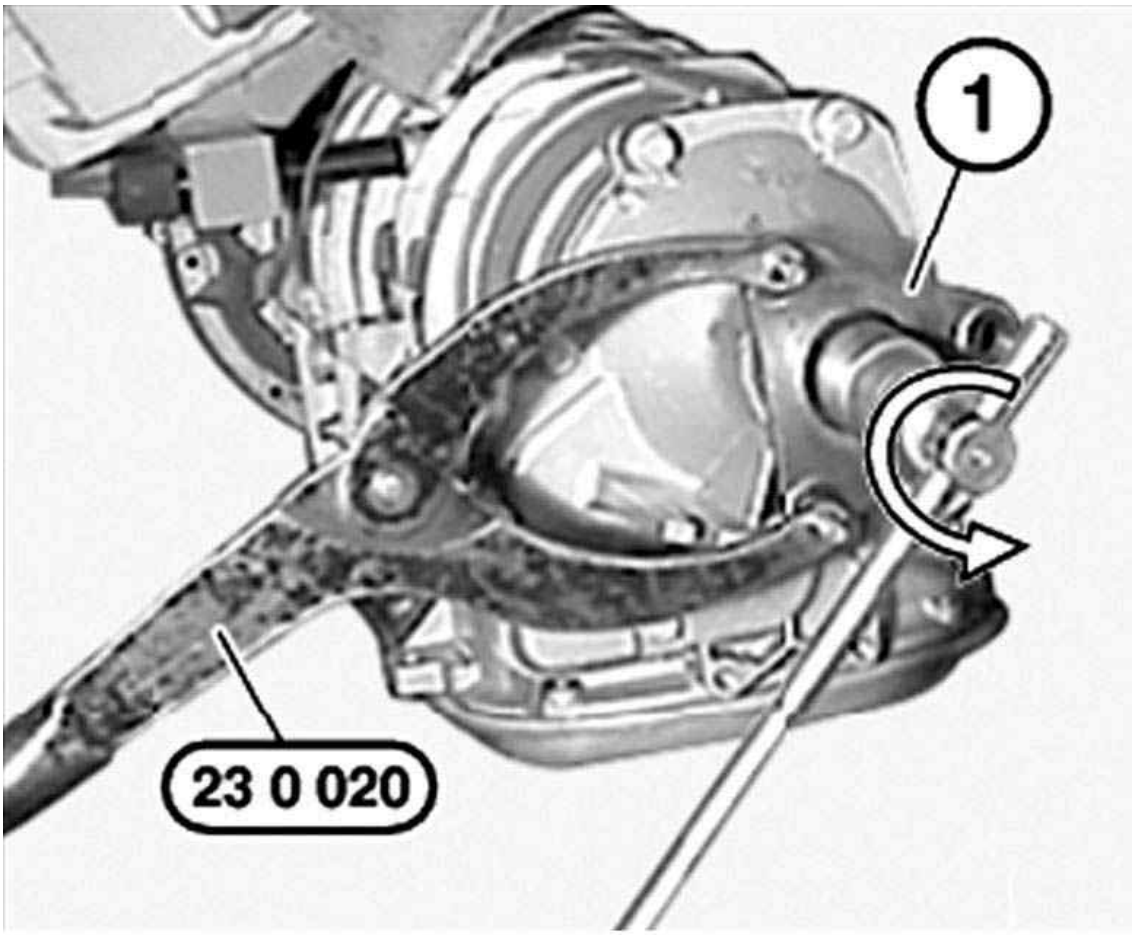

G00382365

Fig. 66: Detaching Output Flange
Courtesy of BMW OF NORTH AMERICA, INC.

Installation: replace inner sealing ring (1) on output flange (2). See **Fig. 67** .

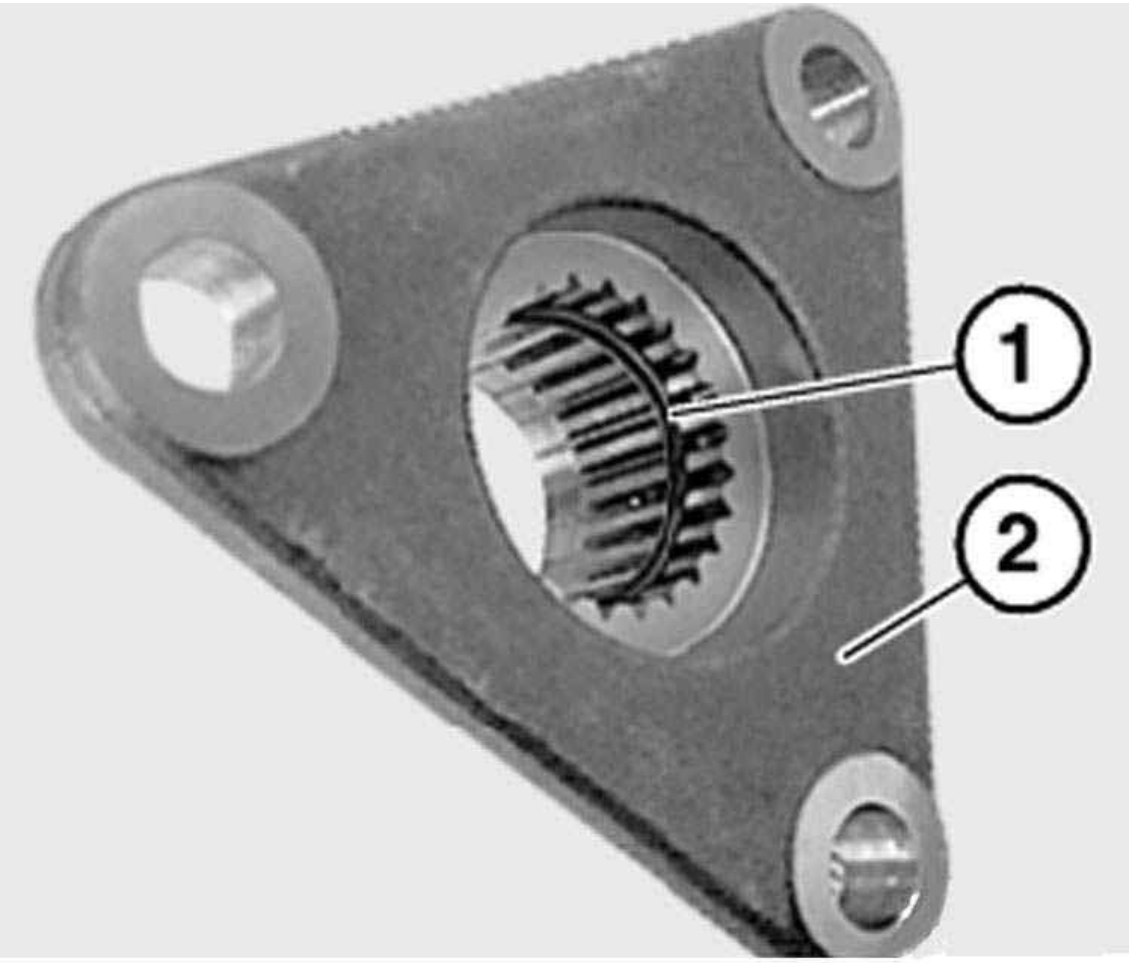

G00382366

Fig. 67: Replacing Inner Sealing Ring
Courtesy of BMW OF NORTH AMERICA, INC.

CAUTION: There are two different output flanges; DO NOT mix them up.

Version 1 (without spring washer) Identifying features:

- There is no spring washer fitted between the flange nut and output flange to secure the output flange (2) on the flange nut (1). See **Fig. 68** .
- When this output flange is replaced, the add-on kit detailed below must be retrofitted.

CAUTION: Only the modified version (Version 2) is still available as a replacement.

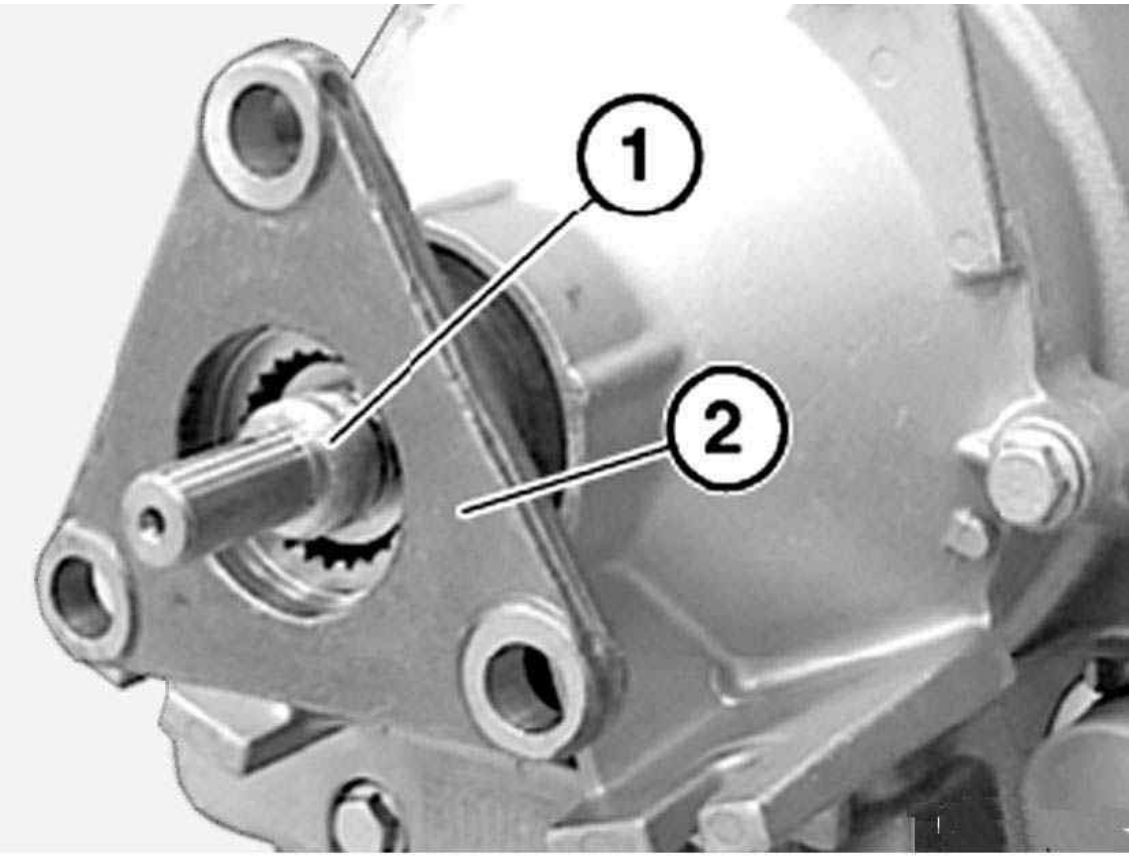

G00382367

Fig. 68: Identifying Version 1
Courtesy of BMW OF NORTH AMERICA, INC.

For retrofit kit, see **Fig. 69** . Install add-on kit for output flange.

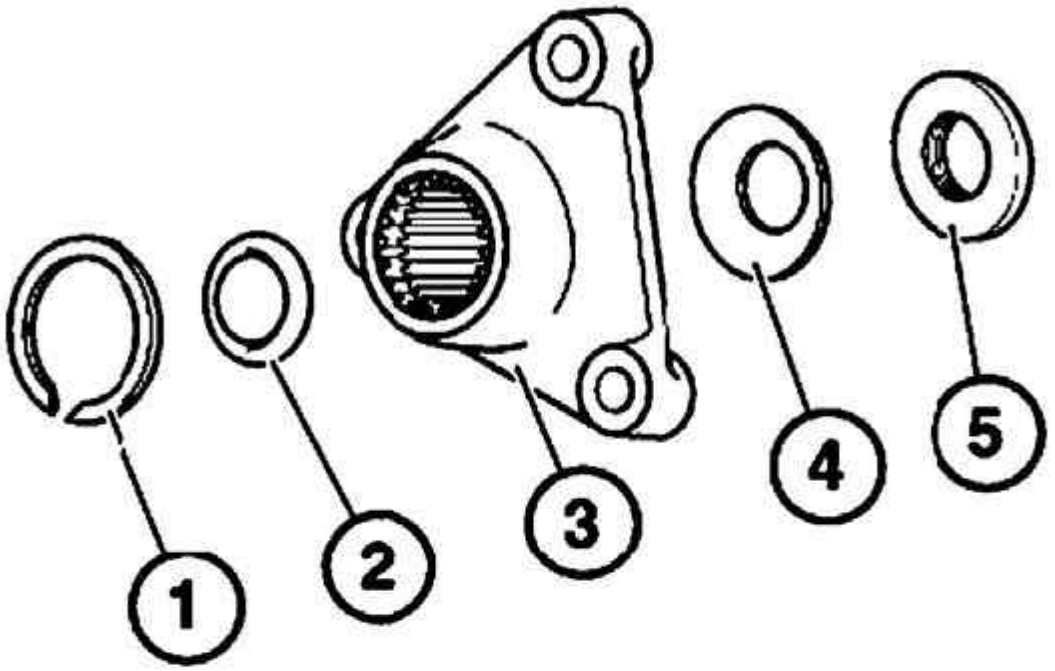

1 Snap ring

2 Sealing ring

3 Output flange

4 Spring washer

5 Flange nut

G00382368

Fig. 69: Identifying Retrofit Kit
Courtesy of BMW OF NORTH AMERICA, INC.

CAUTION: If the version 2 output flange is replaced by a version 2 model, the snap ring supplied in the add-on kit must not be replaced because the fitted snap ring is difficult to remove. See Fig. 69 The fitted snap ring must be

left in the transmission

NOTE: In series production, the output flange with spring washer is fitted from transmission serial number 7912 and has no color marking.

Version 2 (with spring washer) Identifying features:

1. As the substitute, the output flange with spring washer (2) is identified with a white marking (1) around its circumference. See **Fig. 70** .
2. The spring washer (1) is fitted between flange nut and output flange (2). See **Fig. 71** .

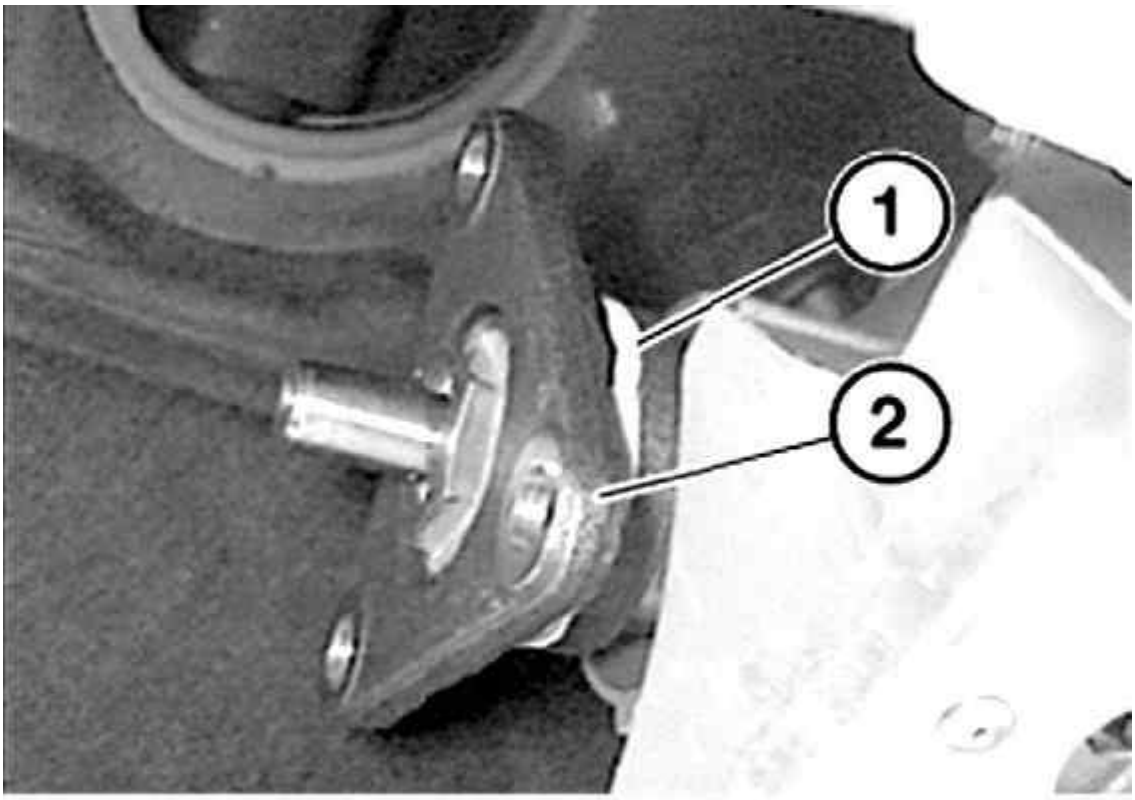

G00382369

Fig. 70: Identifying Version 2
Courtesy of BMW OF NORTH AMERICA, INC.

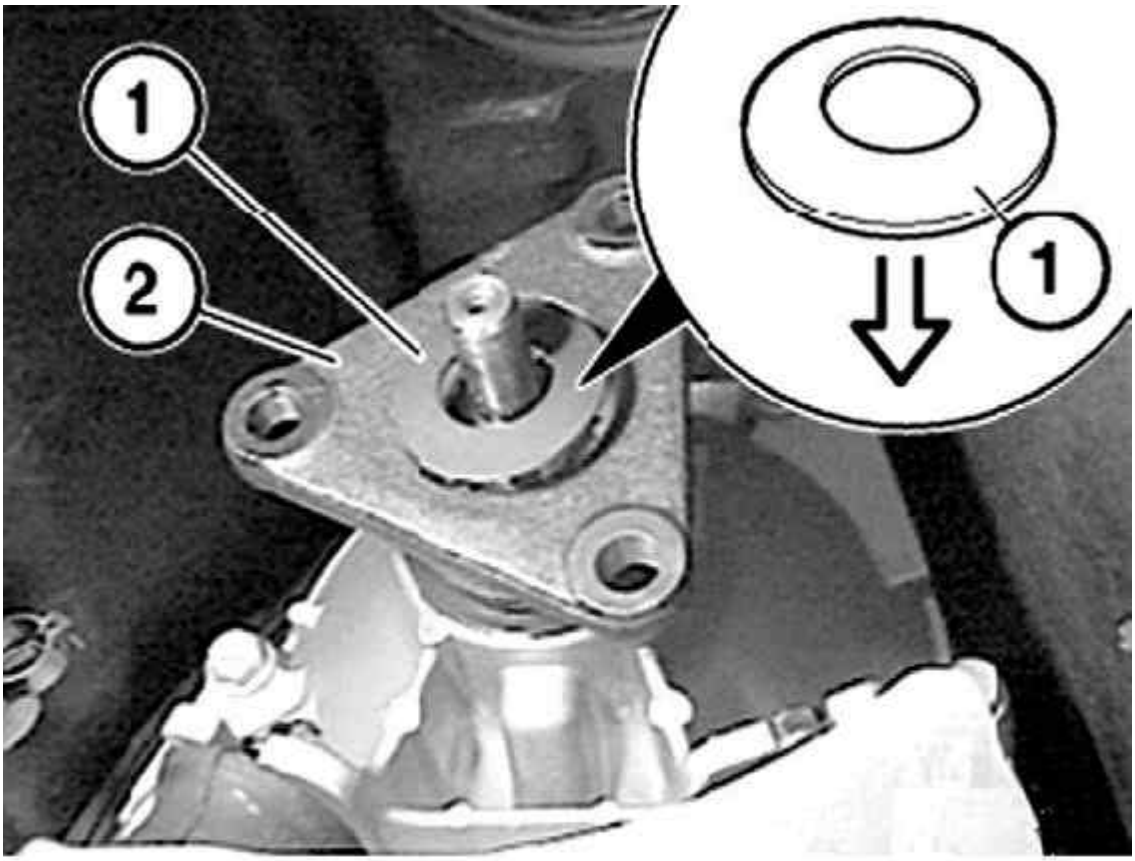

G00382370

Fig. 71: Locating Spring Washer
Courtesy of BMW OF NORTH AMERICA, INC.

REPLACING PRESSURE REGULATOR FOR CONVERTER LOCKUP CLUTCH (AS5 360R / 390R, A4S 200R)

NOTE: **After completing work, top up ATF level. Check/top up fluid level in automatic transmission. See CHECKING/TOPPING UP FLUID LEVEL IN AUTOMATIC TRANSMISSION (A5S 360R / 390R, A4S 200R / 310R) .**

Remove shift unit. See **REMOVING AND INSTALLING/REPLACING SELECTOR UNIT (A5S 360R / 390R, A4S 200R)** .

Remove retaining spring. Pull out pressure regulator (1) for converter lockup clutch. See **Fig. 72** .

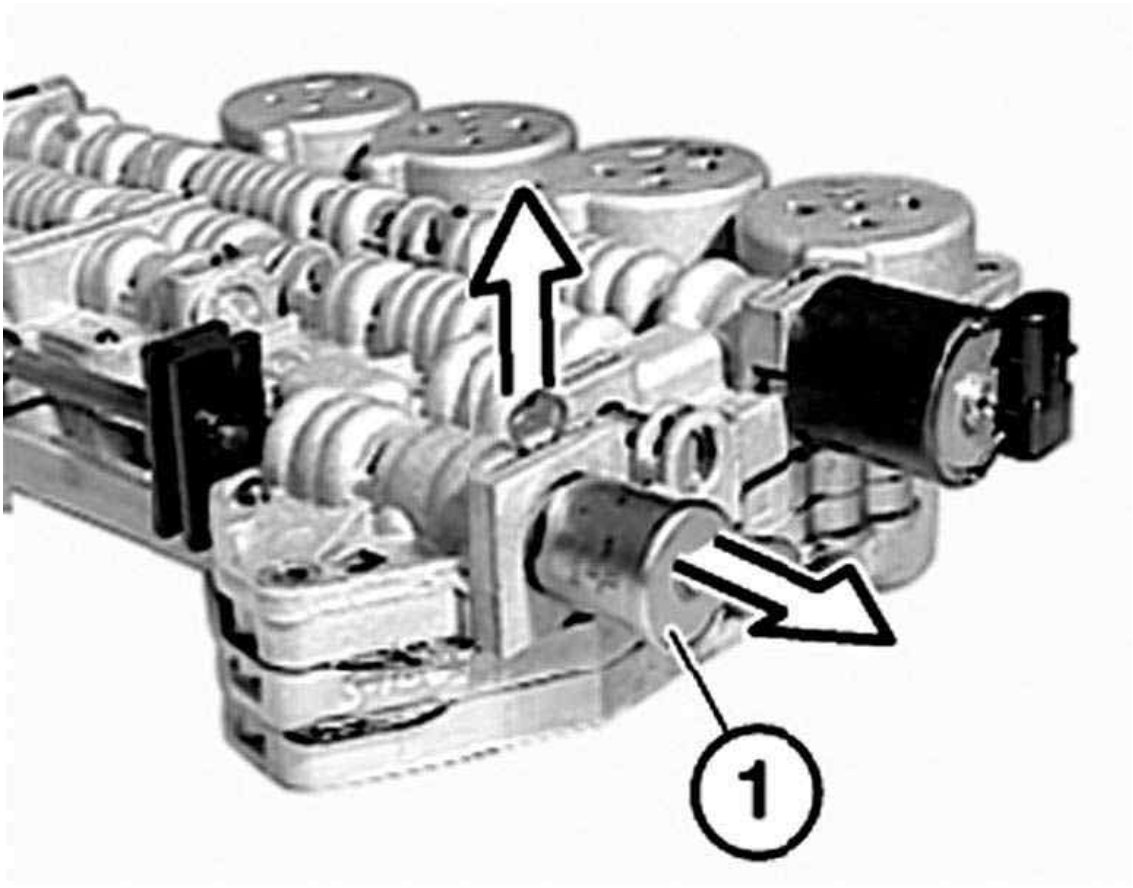

Fig. 72: Removing Pressure Regulator
Courtesy of BMW OF NORTH AMERICA, INC.

Installation: coat new pressure regulator (1) for converter lockup clutch with automatic transmission fluid.

REPLACING PRESSURE REGULATOR FOR MAIN PRESSURE (A5S 360R/390R, A4S 200R)

NOTE: Numbers in text refer to numbers in figures.

NOTE: After completing work, top up ATF level. Check/top up fluid level in automatic transmission. See CHECKING/TOPPING UP FLUID LEVEL IN AUTOMATIC TRANSMISSION (A5S 360R / 390R, A4S 200R / 310R) .

Remove transmission sump. See **REMOVING AND INSTALLING/SEALING OR REPLACING TRANSMISSION FLUID SUMP (A5S 360R / 390R, A4S 200R)** .

Remove transmission fluid screen. See **REMOVING AND INSTALLING/REPLACING TRANSMISSION SCREEN (A5S 360R / 390R, A4S 200R)** .

Disconnect plug (1) from pressure regulator (2) for main pressure. See **Fig. 73** . Remove retaining spring (3). Remove pressure regulator (2) for main pressure. Upon installation: coat new pressure regulator (2) for main pressure with automatic transmission fluid.

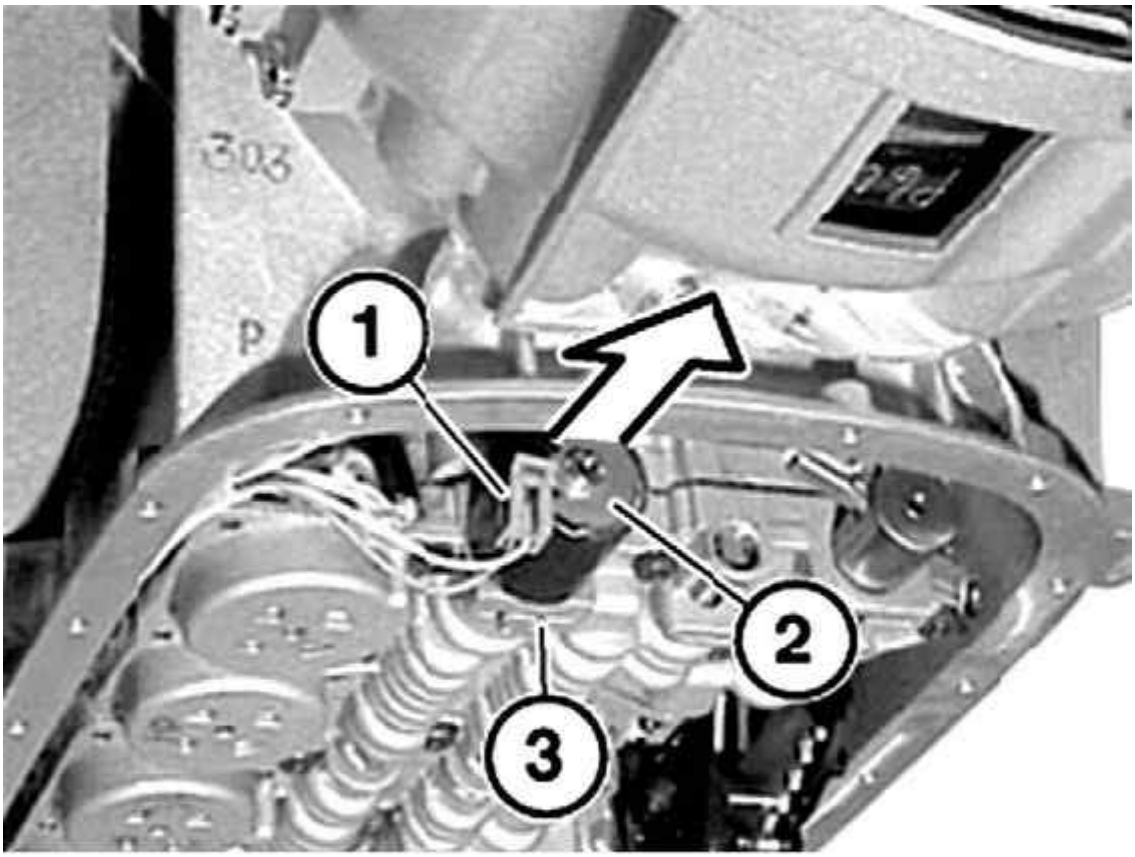

Fig. 73: Removing Pressure Regulator For Main Pressure
Courtesy of BMW OF NORTH AMERICA, INC.

REPLACING PRESSURE REGULATOR FOR SYSTEM PRESSURE (AS5 325Z)

NOTE: Numbers in text refer to numbers in figures.

NOTE: After completing work, top up ATF level. Check/top up fluid level in automatic transmission. See CHECKING/TOPPING UP FLUID LEVEL IN AUTOMATIC TRANSMISSION (A5S 325Z) .

Remove and install shift unit. See **REMOVING AND INSTALLING/REPLACING SHIFT UNIT (A5S 325Z)** .

Disconnect plug (1) from pressure regulator (2) for system pressure. See **Fig. 74** .

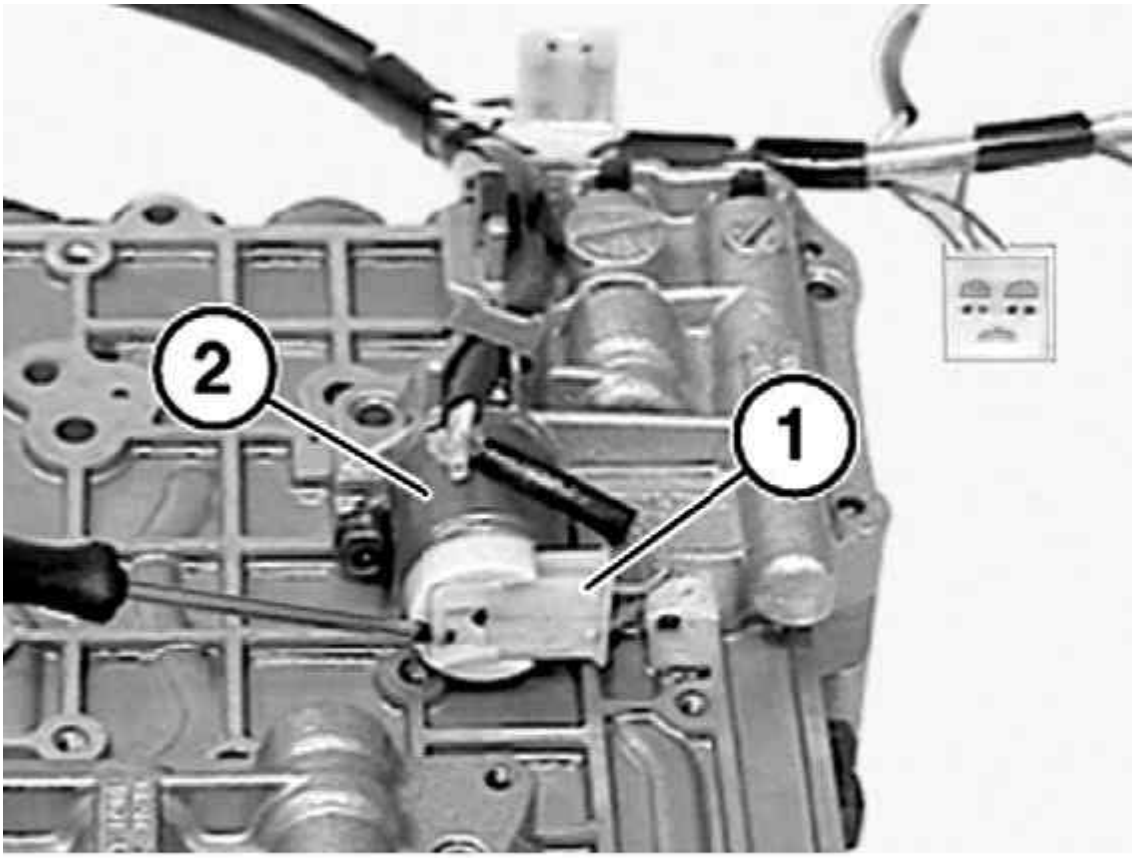

G00382332

Fig. 74: Disconnecting Plug From Pressure Regulator
Courtesy of BMW OF NORTH AMERICA, INC.

Unscrew bolt (1). See **Fig. 75** . Remove retaining plate (2). Remove pressure regulator (3) for system pressure. Upon installation: coat new pressure regulator (3) for system pressure with ATF.

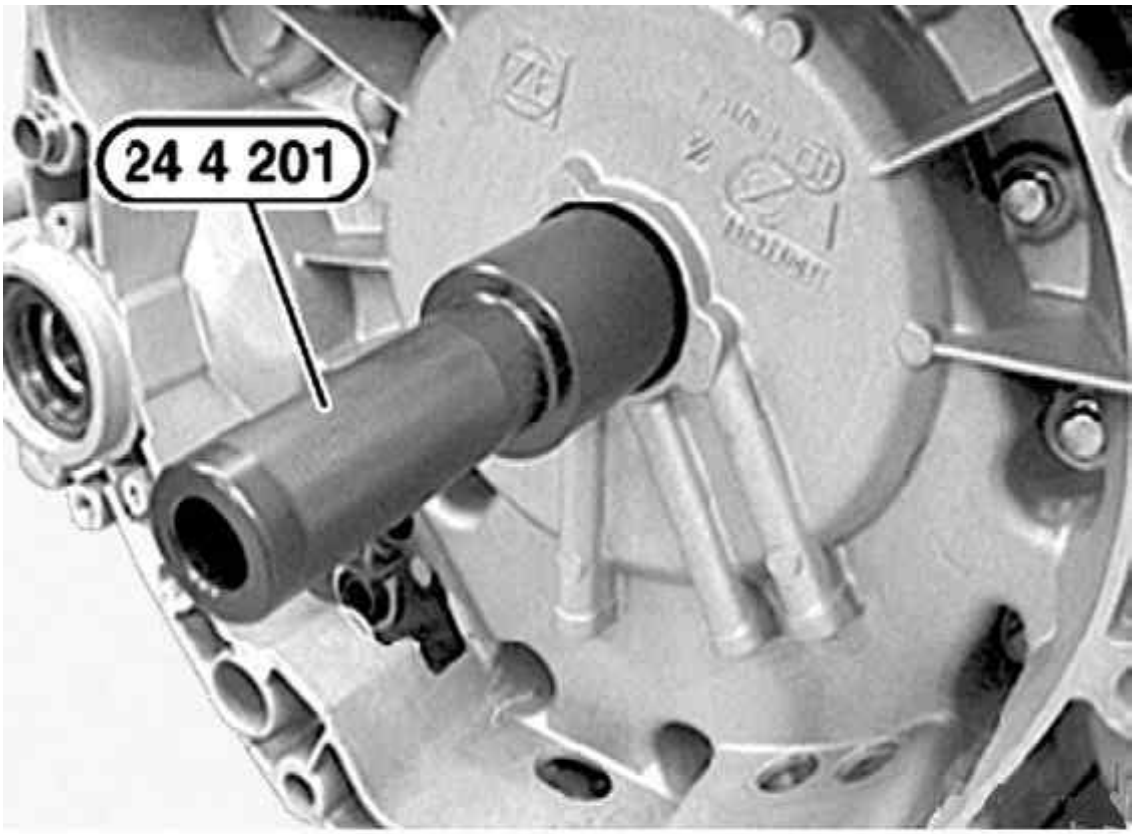

G00382333

Fig. 75: Removing Pressure Regulator For System Pressure
Courtesy of BMW OF NORTH AMERICA, INC.

Slide in pressure regulator (4). See **Fig. 76** . Install retaining plate (1) with lug (2) as illustrated. Install screw (3). Tighten fasteners to specification. See **TORQUE SPECIFICATIONS** .

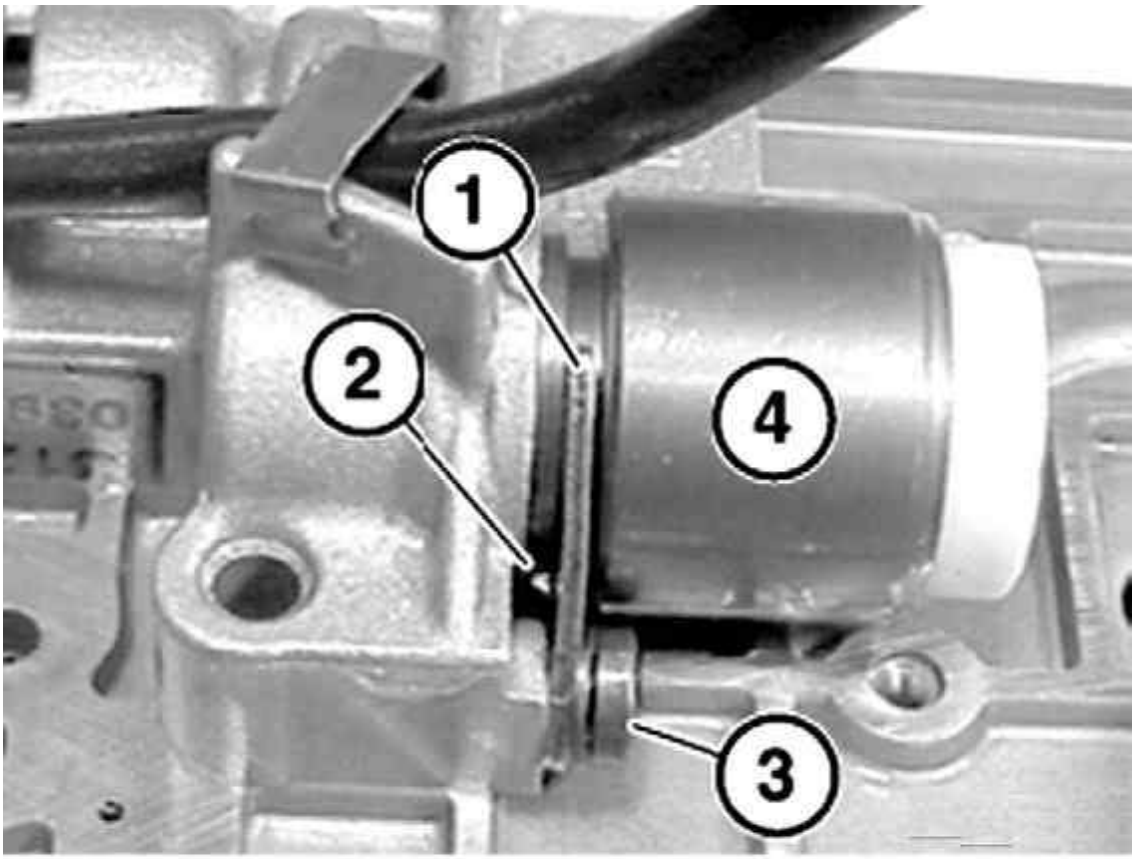

G00382334

Fig. 76: Installing Pressure Regulator
Courtesy of BMW OF NORTH AMERICA, INC.

REPLACING PULSE GENERATOR (OUTPUT SPEED) (A5S 325Z)

NOTE: **Numbers in text refer to numbers in figures.**

NOTE: **After completing work, top up ATF level. Check/top up fluid level in automatic transmission. See CHECKING/TOPPING UP FLUID LEVEL IN AUTOMATIC TRANSMISSION (A5S 325Z) .**

Remove and install transmission oil sump. See **REMOVING AND INSTALLING/SEALING OR REPLACING TRANSMISSION OIL SUMP (A5S 325Z)** .

Unscrew bolt (1). See **Fig. 77** . Remove pulse generator (2). Upon installation, tighten bolt to specification. See **TORQUE SPECIFICATIONS** .

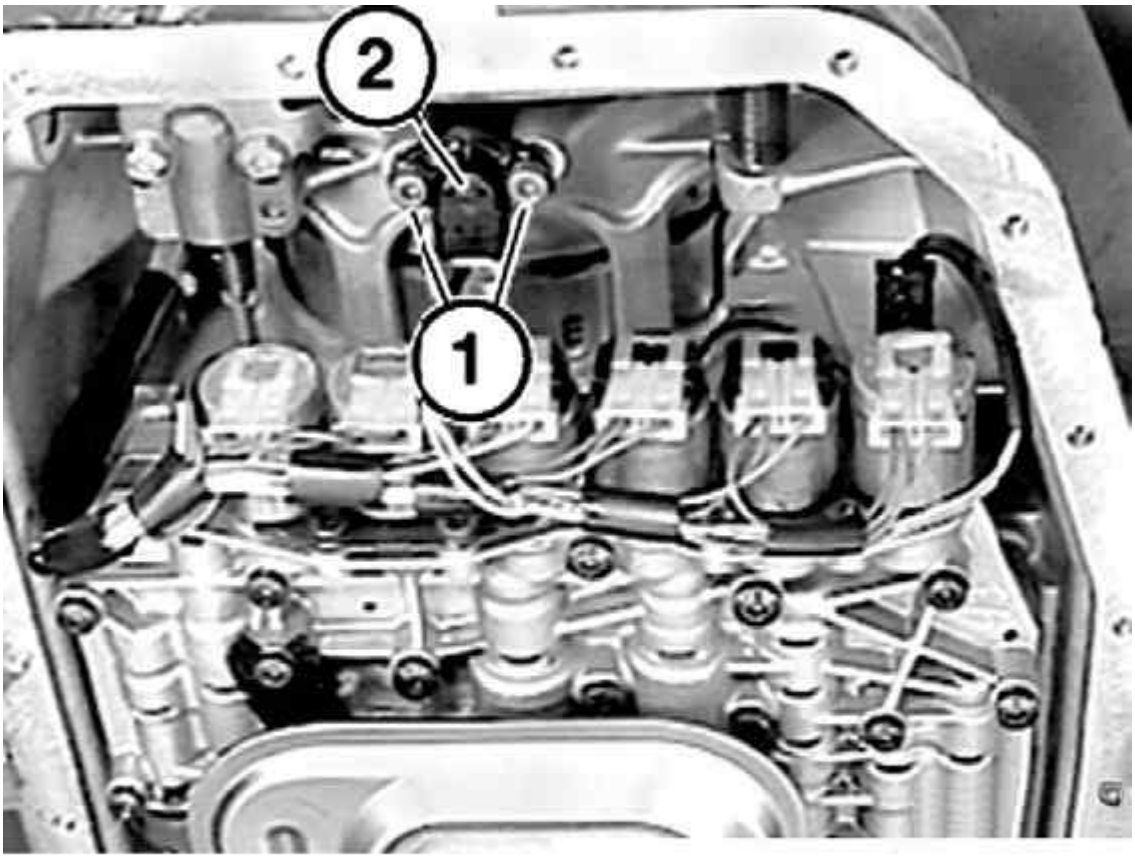

G00382335

Fig. 77: Removing Pulse Generator
Courtesy of BMW OF NORTH AMERICA, INC.

Detach plug (1) from pulse generator (2). See **Fig. 78** .

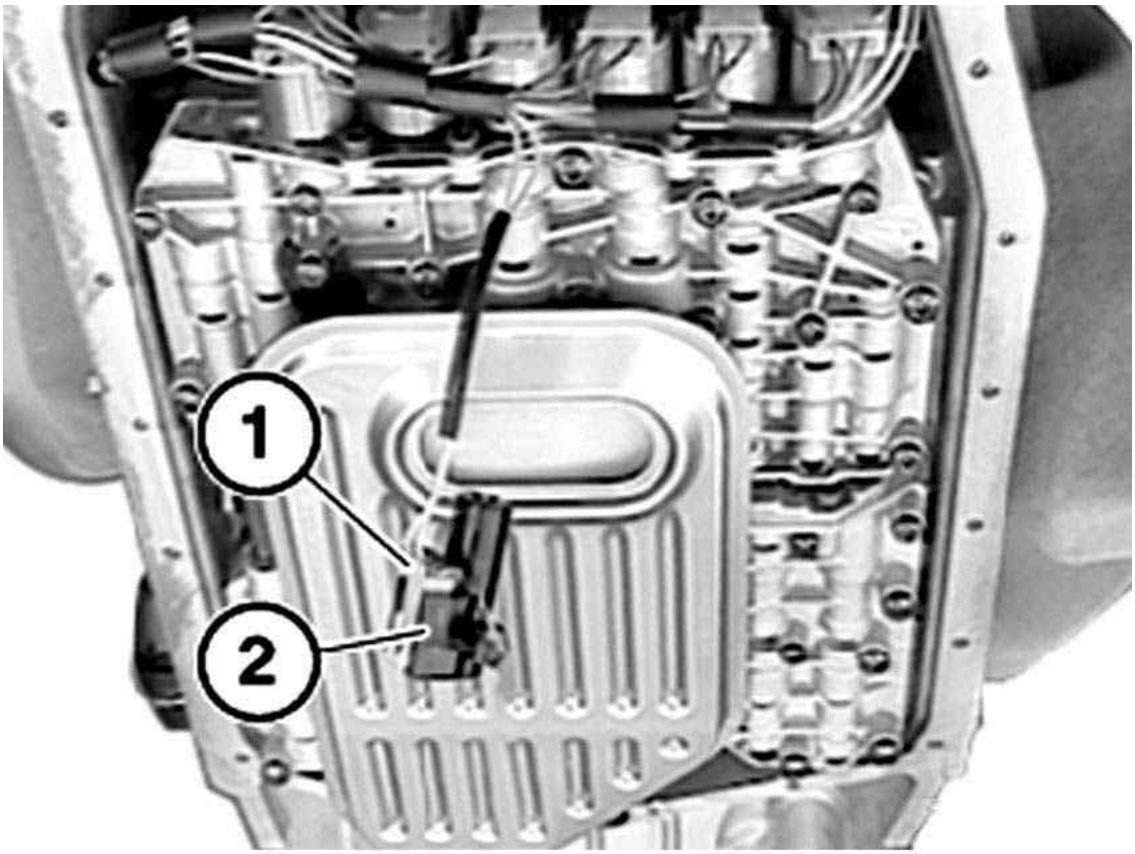

G00382336

Fig. 78: Detaching Plug From Pulse Generator
Courtesy of BMW OF NORTH AMERICA, INC.

REPLACING PULSE GENERATOR (OUTPUT SPEED) (A5S 360R / 390R, A4S 200R)

NOTE: Numbers in text refer to numbers in figures.

NOTE: After completing work, top up ATF level. Check/top up fluid level in automatic transmission. See CHECKING/TOPPING UP FLUID LEVEL IN AUTOMATIC TRANSMISSION (A5S 360R / 390R, A4S 200R / 310R) .

Remove transmission oil sump. See **REMOVING AND INSTALLING/SEALING OR REPLACING TRANSMISSION OIL SUMP (A5S 325Z)** .

Pull off plug (1). See **Fig. 79** . Unscrew bolt (2). Withdraw pulse generator (3). Upon installation, tighten bolt to specification. See **TORQUE SPECIFICATIONS** . Read out fault memory of EGS control unit. Check stored fault messages, eliminate faults and then clear fault memory.

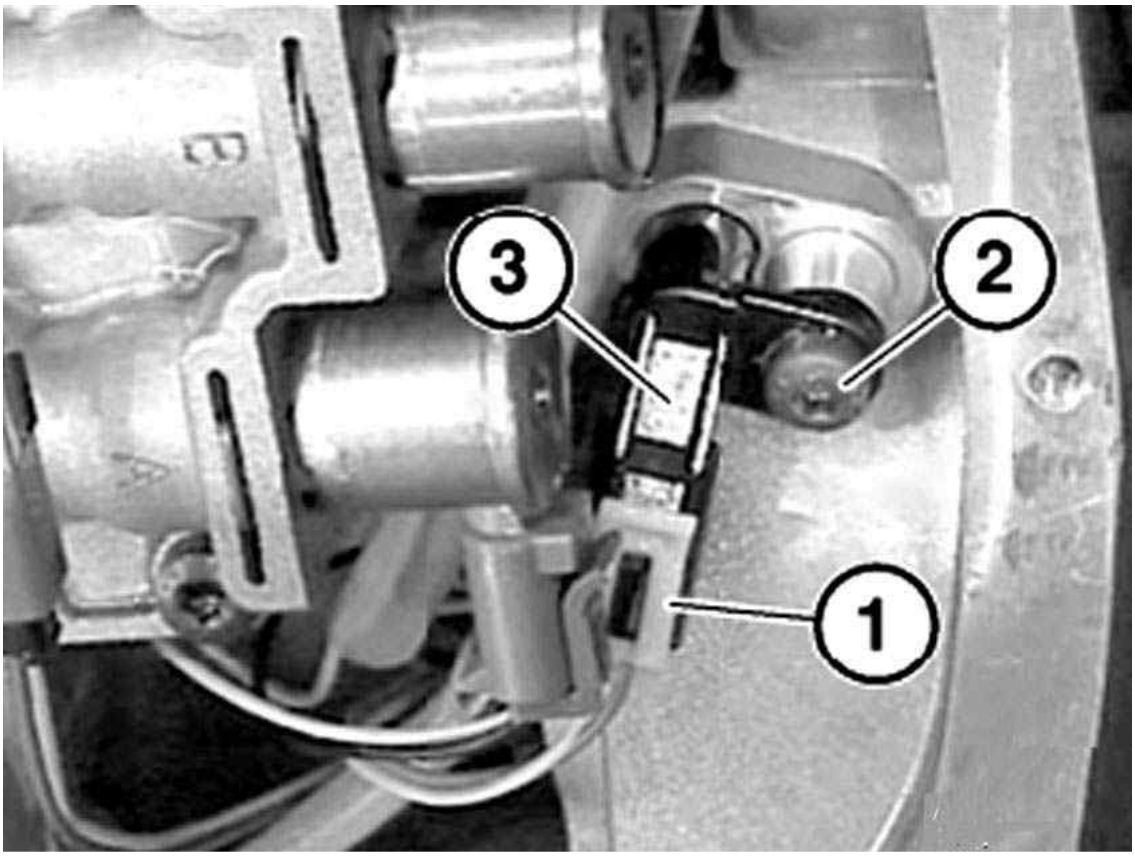

G00382375

Fig. 79: Removing Output Speed Pulse Generator
Courtesy of BMW OF NORTH AMERICA, INC.

REPLACING PULSE GENERATOR (TURBINE SPEED) (A5S 325Z)

NOTE: **Numbers in text refer to numbers in figures.**

NOTE: **After completing work, top up ATF level. Check/top up fluid level in automatic transmission. See CHECKING/TOPPING UP FLUID LEVEL IN AUTOMATIC TRANSMISSION (A5S 325Z) .**

Remove and install transmission oil sump. See **REMOVING AND INSTALLING/SEALING OR REPLACING TRANSMISSION OIL SUMP (A5S 325Z)** .

Remove and install transmission oil screen. See **REMOVING AND INSTALLING/SEALING OR REPLACING TRANSMISSION OIL SUMP (A5S 325Z)** .

Remove and install shift unit. See **REMOVING AND INSTALLING/REPLACING SHIFT UNIT (A5S 325Z)** .

Unscrew bolt (1). See **Fig. 80** . Withdraw pulse generator (2). Pull off connector (3). Upon installation, tighten bolt to specification. See **TORQUE SPECIFICATIONS** .

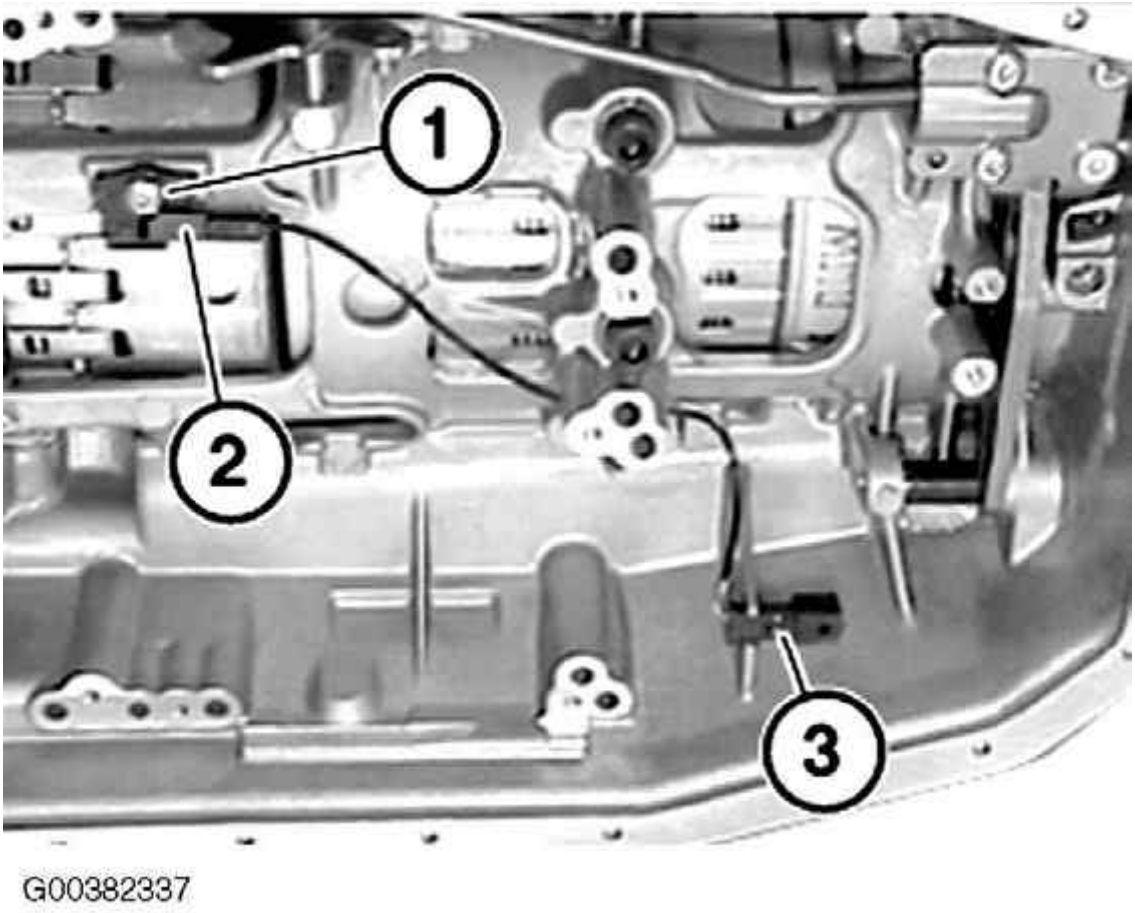

Fig. 80: Removing Pulse Generator
Courtesy of BMW OF NORTH AMERICA, INC.

REPLACING PULSE GENERATOR (TURBINE SPEED) (A5S 360R / 390R, A4S 200R)

NOTE: Numbers in text refer to numbers in figures.

NOTE: After completing work, top up ATF level. Check/top up fluid level in automatic transmission. See CHECKING/TOPPING UP FLUID LEVEL IN AUTOMATIC TRANSMISSION (A5S 360R / 390R, A4S 200R / 310R) .

Remove transmission oil sump. See **REMOVING AND INSTALLING/SEALING OR REPLACING TRANSMISSION FLUID SUMP (A5S 360R / 390R, A4S 200R)** .

Pull off plug (1). See **Fig. 81** . Release screw (2). Withdraw pulse generator (3). Upon installation, tighten screw to specification. See **TORQUE SPECIFICATIONS** . Read out fault memory of EGS control unit. Check stored fault messages, eliminate faults and then clear fault memory.

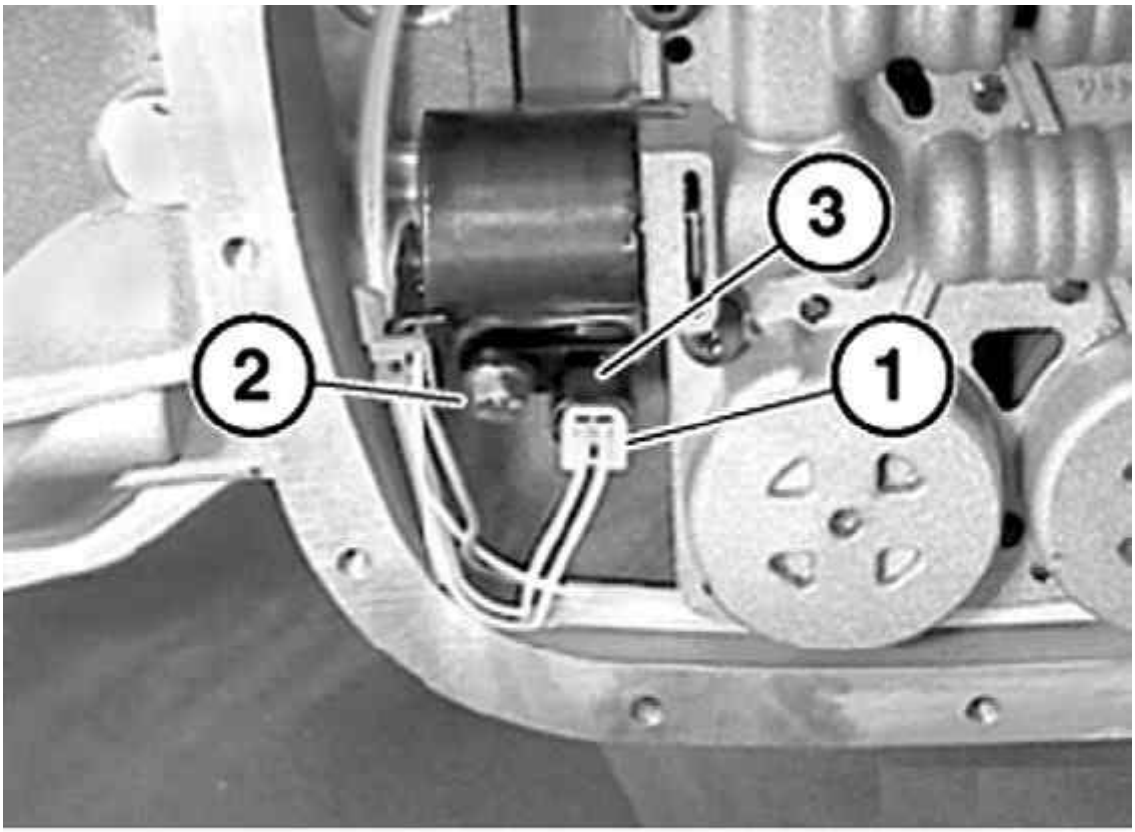

G00382374

Fig. 81: Removing Turbine Speed Pulse Generator
Courtesy of BMW OF NORTH AMERICA, INC.

REPLACING RADIAL SEAL ON MANUAL SHIFT VALVE SHAFT (A5S 325Z)

NOTE: Numbers in text refer to numbers in figures.

NOTE: After completing work, top up ATF level. Check/top up fluid level in automatic transmission. See CHECKING/TOPPING UP FLUID LEVEL IN AUTOMATIC TRANSMISSION (A5S 325Z) .

Remove position switch from the manual shift valve shaft. See **REMOVING AND INSTALLING/REPLACING POSITION SWITCH (A5S 325Z)** .

Remove radial seal with Special Tool (24 5 260) from transmission housing. See **Fig. 82** .

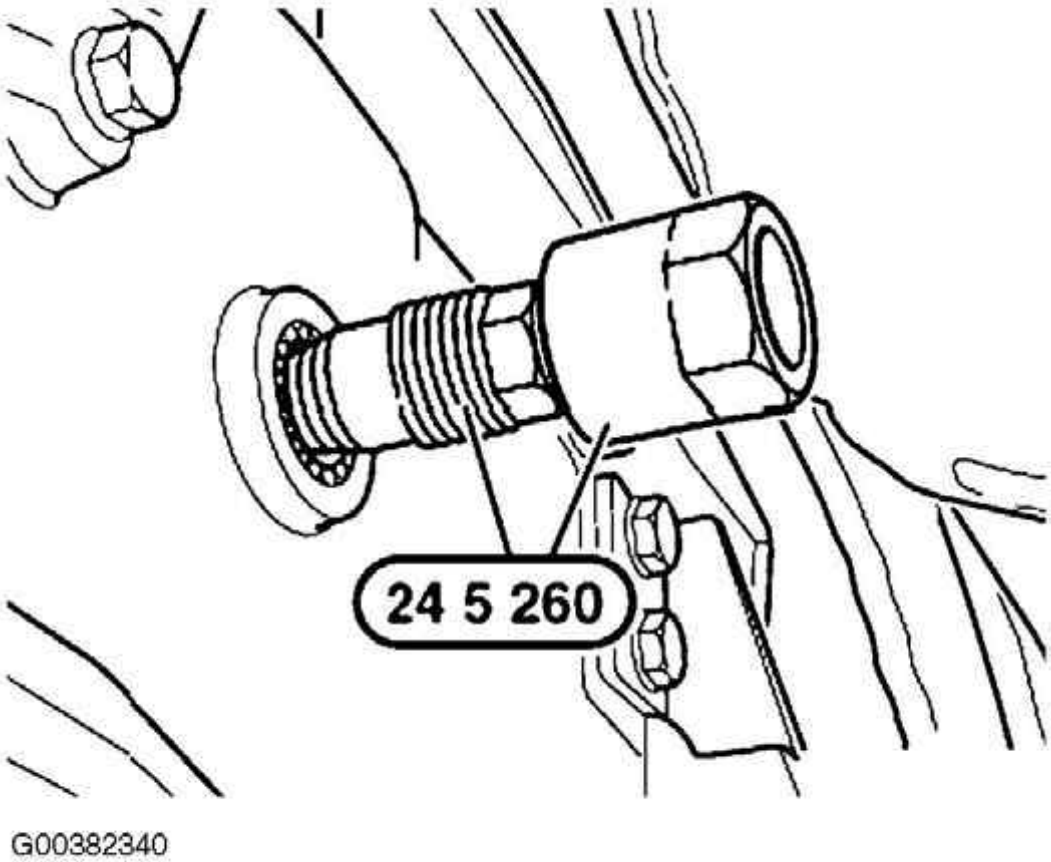

Fig. 82: Removing Radial Seal
Courtesy of BMW OF NORTH AMERICA, INC.

Installation: fit Special Tool (24 5 490) to the manual shift valve shaft. See **Fig. 83** . Coat sealing lip of new radial seal (1) with transmission oil. Slide radial seal onto manual shift valve shaft.

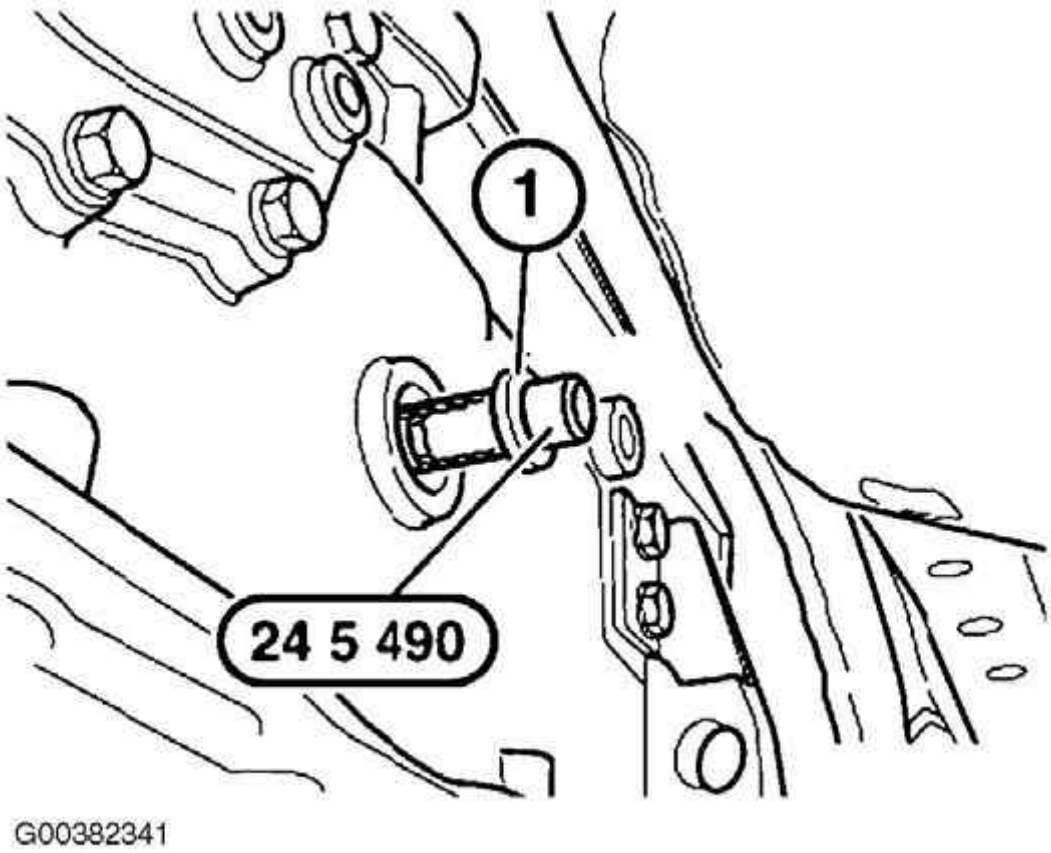

Fig. 83: Sliding Radial Seal Onto Manual Shift Valve Shaft
Courtesy of BMW OF NORTH AMERICA, INC.

Installation: press radial seal into transmission case with Special Tool (24 5 250). See **Fig. 84** . Pull Special Tool (24 5 490) off manual shift valve shaft.

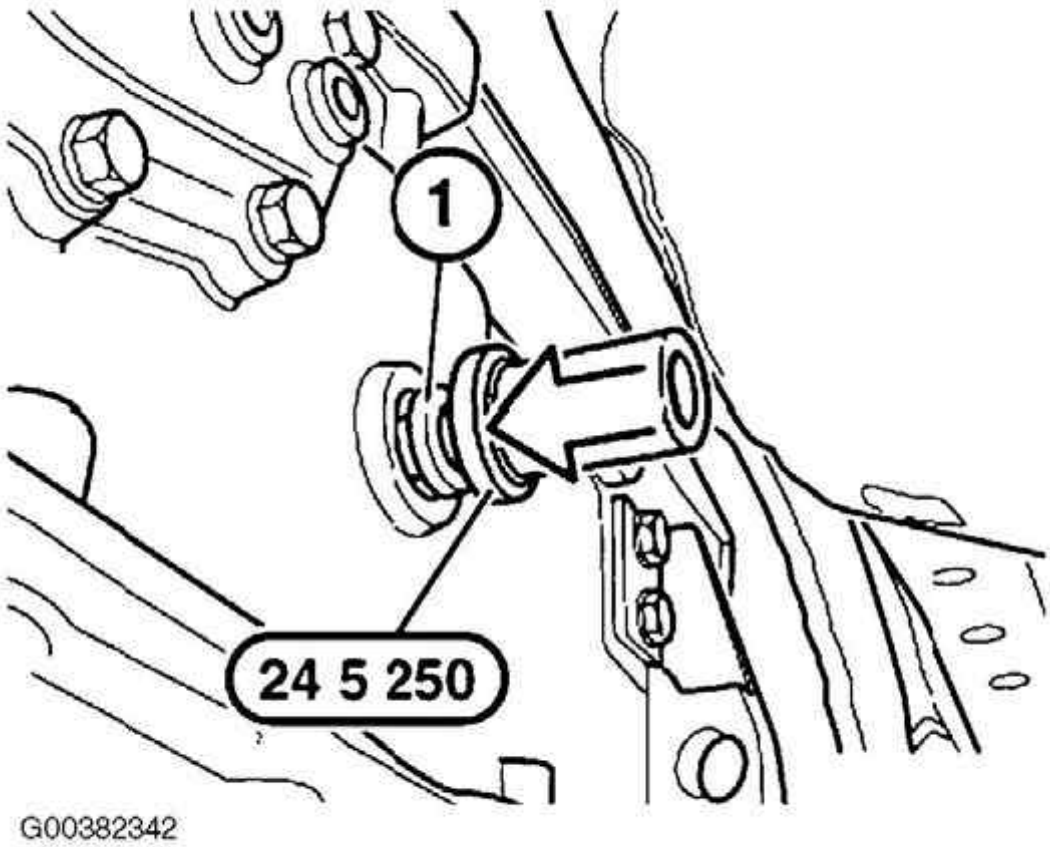

Fig. 84: Pressing Radial Seal Into Transmission Case
Courtesy of BMW OF NORTH AMERICA, INC.

REPLACING RADIAL SHAFT SEAL FOR MANUAL SHIFT VALVE SHAFT (A5S 360R / 390R, A4S 200R)

NOTE: **Numbers in text refer to numbers in figures.**

NOTE: **After completing work, top up ATF level. Check/top up fluid level in automatic transmission. See CHECKING/TOPPING UP FLUID LEVEL IN AUTOMATIC TRANSMISSION (A5S 360R / 390R, A4S 200R / 310R) .**

Grip clamping sleeve (1). Loosen nut (2). See **Fig. 99** . Upon installation, tighten nut to specification. See **TORQUE SPECIFICATIONS** .

Unscrew nut (1). Remove selector lever (2). See **Fig. 100** . Upon installation, tighten nut to specification. See **TORQUE SPECIFICATIONS** .

Screw Special Tool (24 5 361) into radial shaft seal. See **Fig. 85** .

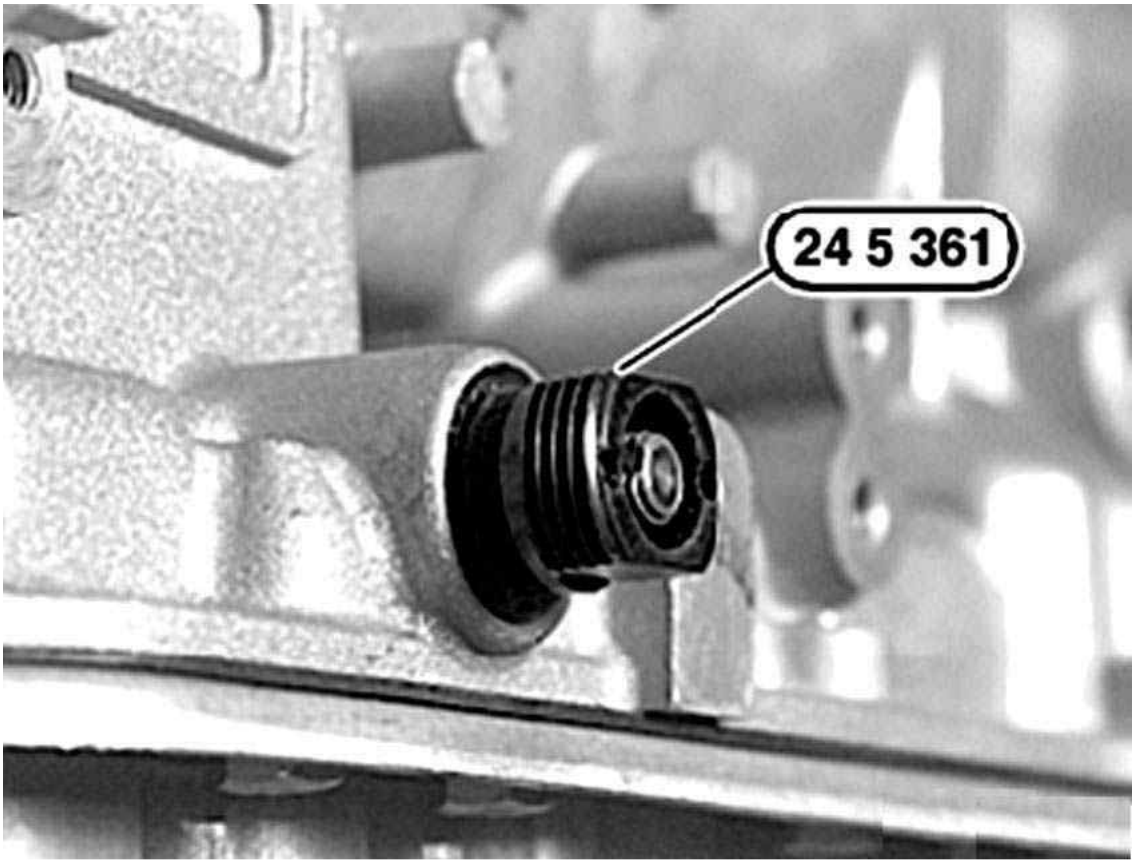

G00382381

Fig. 85: Screwing Special Tool Into Radial Shaft Seal
Courtesy of BMW OF NORTH AMERICA, INC.

Screw Special Tool (24 5 362) onto Special Tool (24 5 361) and tighten down. See **Fig. 86** . This pulls the radial shaft seal out of the transmission housing.

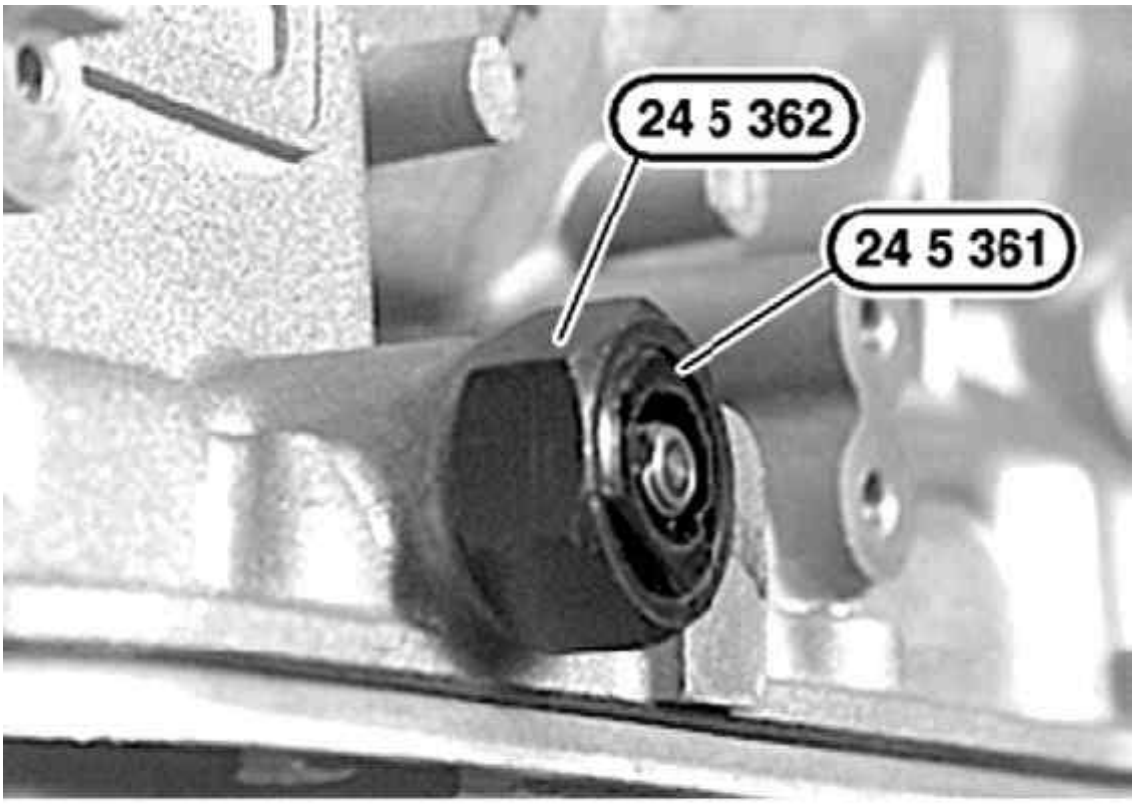

G00382382

Fig. 86: Removing Radial Shaft From Transmission Housing
Courtesy of BMW OF NORTH AMERICA, INC.

Screw adapter sleeve (1) from seal set onto manual shift valve shaft. See **Fig. 87** . Moisten sealing lips of radial shaft seal (2) with automatic transmission fluid. Push radial shaft seal (2) onto manual shift valve shaft. Press radial shaft seal (2) as far as possible into transmission housing. Grip radial shaft seal (2) firmly. Unscrew adapter sleeve (1) from manual shift valve shaft.

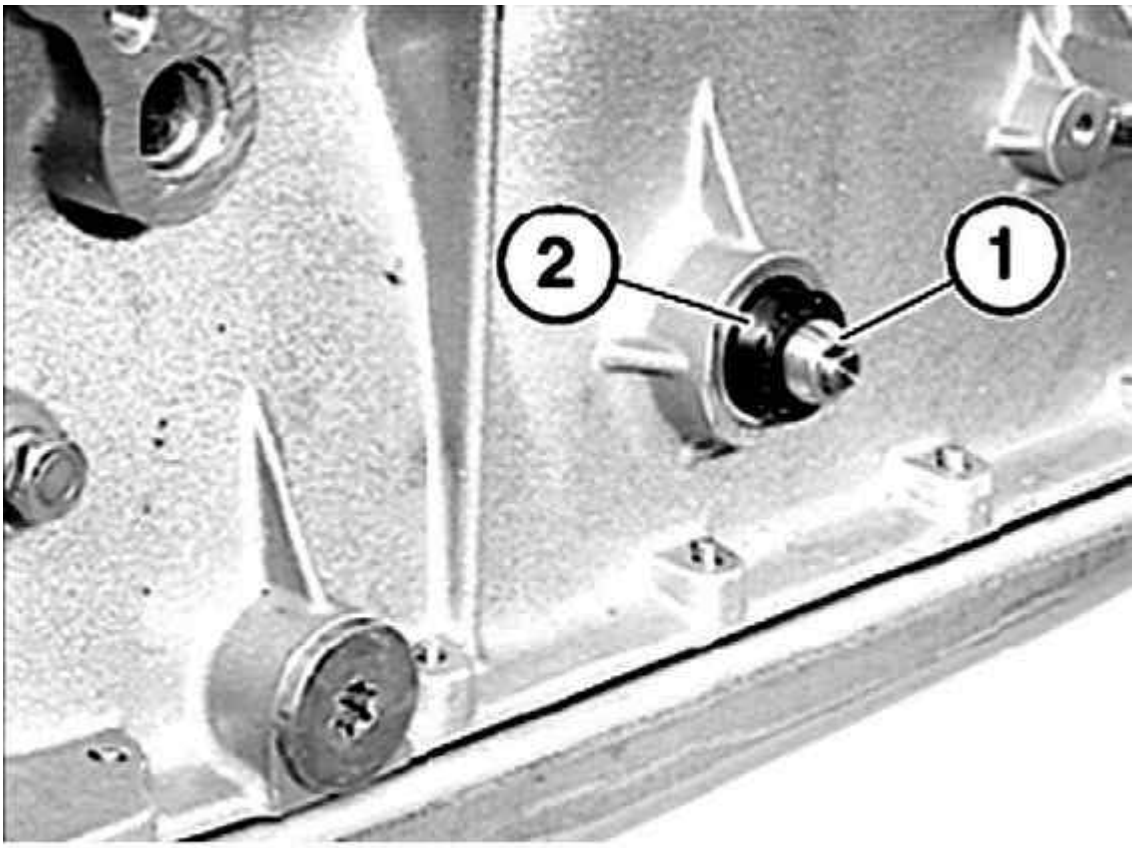

G00382383

Fig. 87: Removing Adapter Sleeve From Manual Shift Valve Shaft
Courtesy of BMW OF NORTH AMERICA, INC.

Pull radial shaft seal into transmission housing up to stop with Special Tools (24 5 363) and (24 5 364). See **Fig. 88** . Upon installation, adjust selector lever. See **ADJUSTING SELECTOR LEVER (A5S 360R / 390R, A4S 200R, 6HP26Z/19Z)** .

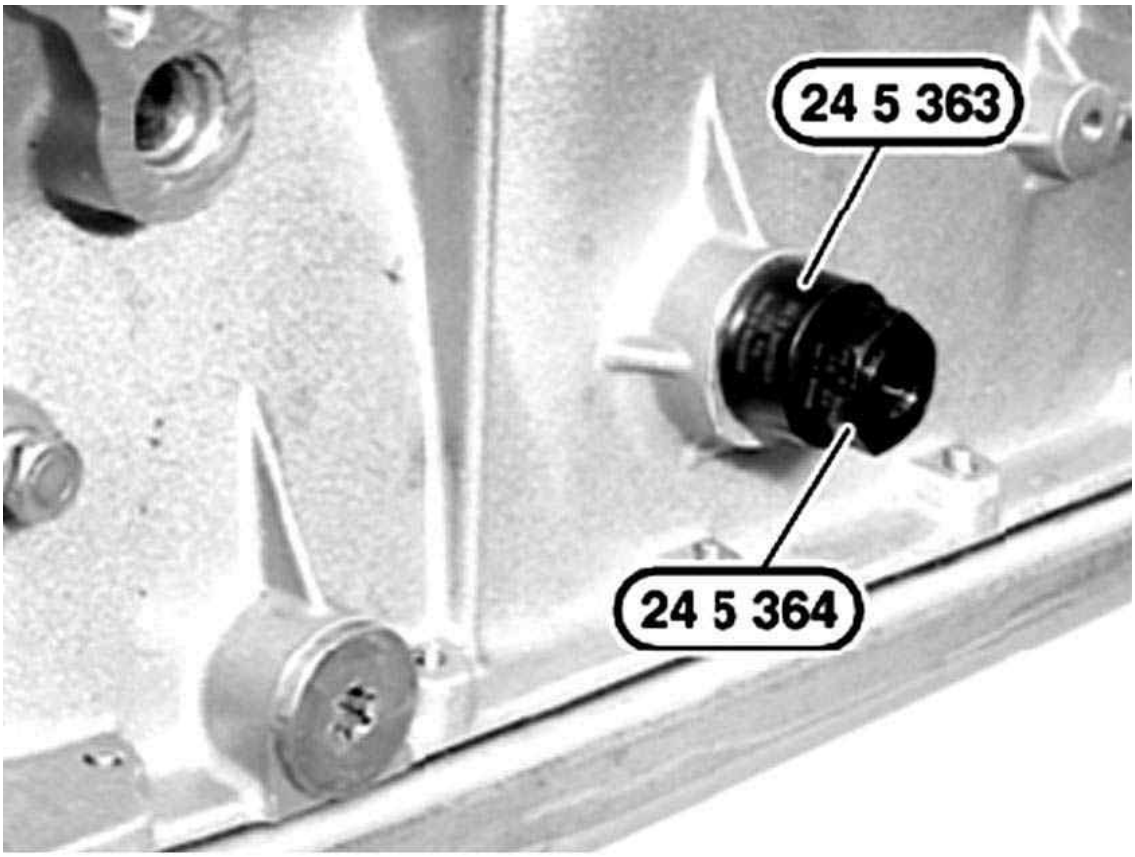

G00382384

Fig. 88: Pulling Radial Shaft Seal Into Transmission H
Courtesy of BMW OF NORTH AMERICA, INC.

E46 4WD: Selector Shaft Sealing Cap On Left Transmission Side Leaking

Lever out sealing cap (1) with a screwdriver (2). See **Fig. 89** .

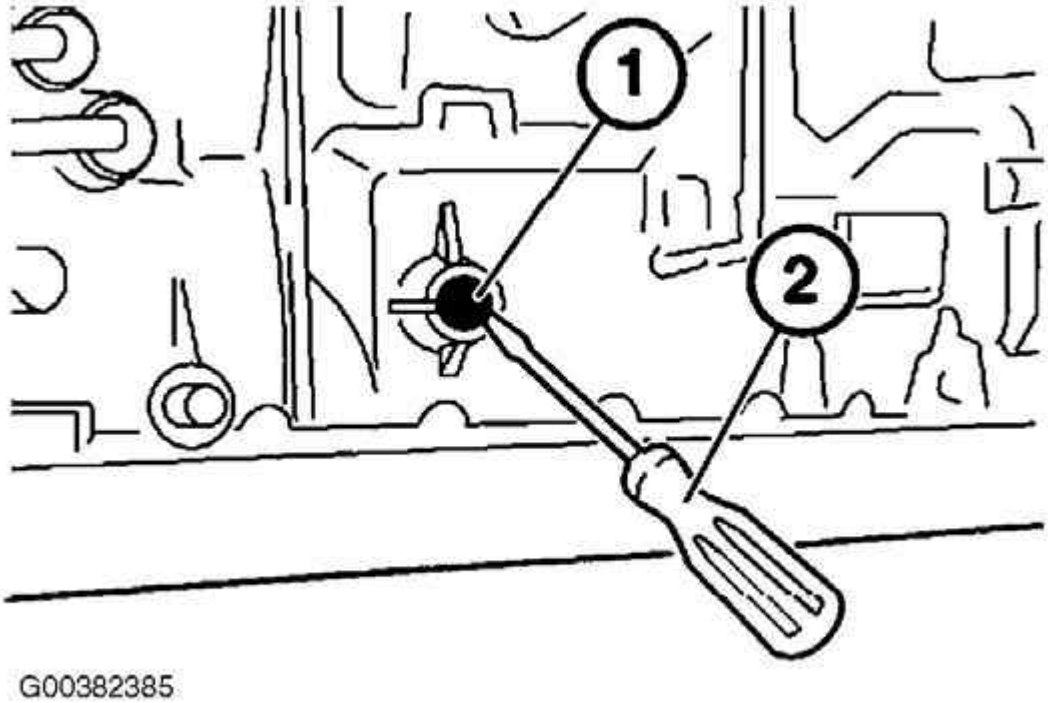

Fig. 89: Levering Out Sealing Cap
Courtesy of BMW OF NORTH AMERICA, INC.

NOTE: Drift (2) for driving in sealing cap is contained in repair kit.

Place new sealing cap (1) on drift (2). See **Fig. 90** .

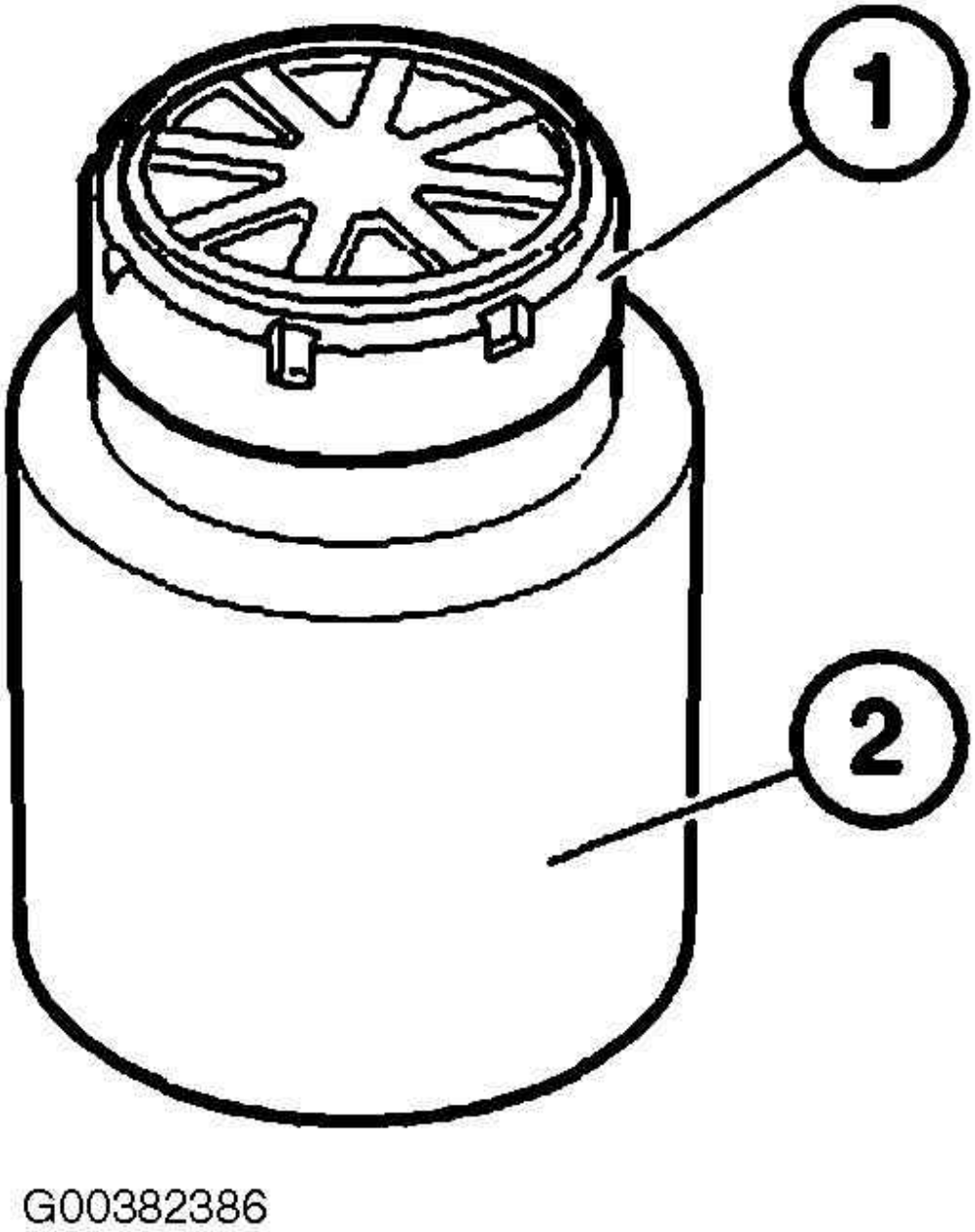

Fig. 90: Placing New Sealing Cap On Drift
Courtesy of BMW OF NORTH AMERICA, INC.

Drive in new sealing cap (1) with drift (2) as far as it will go. See **Fig. 91** .

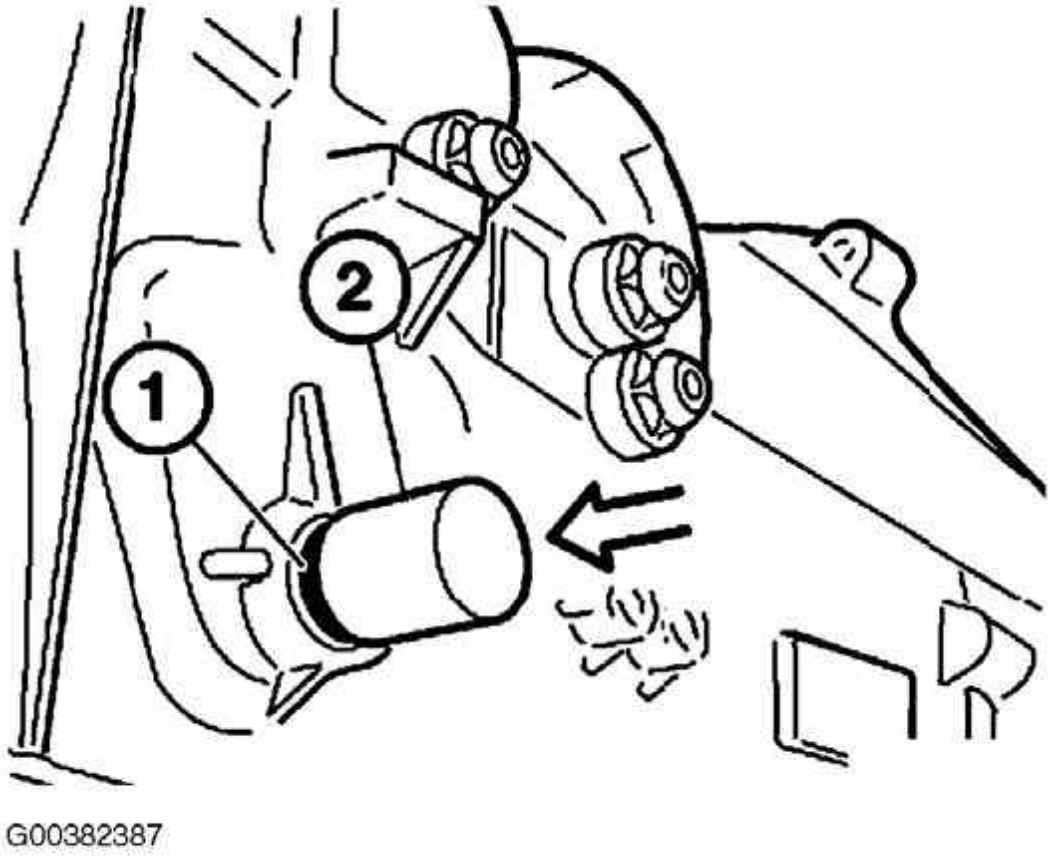

Fig. 91: Driving In New Sealing Cap
Courtesy of BMW OF NORTH AMERICA, INC.

REPLACING RADIAL SEAL FOR OUTPUT FLANGE (A5S 325Z)

NOTE: Numbers in text refer to numbers in figures.

Remove transmission extension. See **REMOVING & INSTALLING TRANSMISSION EXTENSION (A5S 325Z)** .

Clamp Special Tool (24 1 220) in vise. Fit transmission extension to the special tool. See **Fig. 92** .

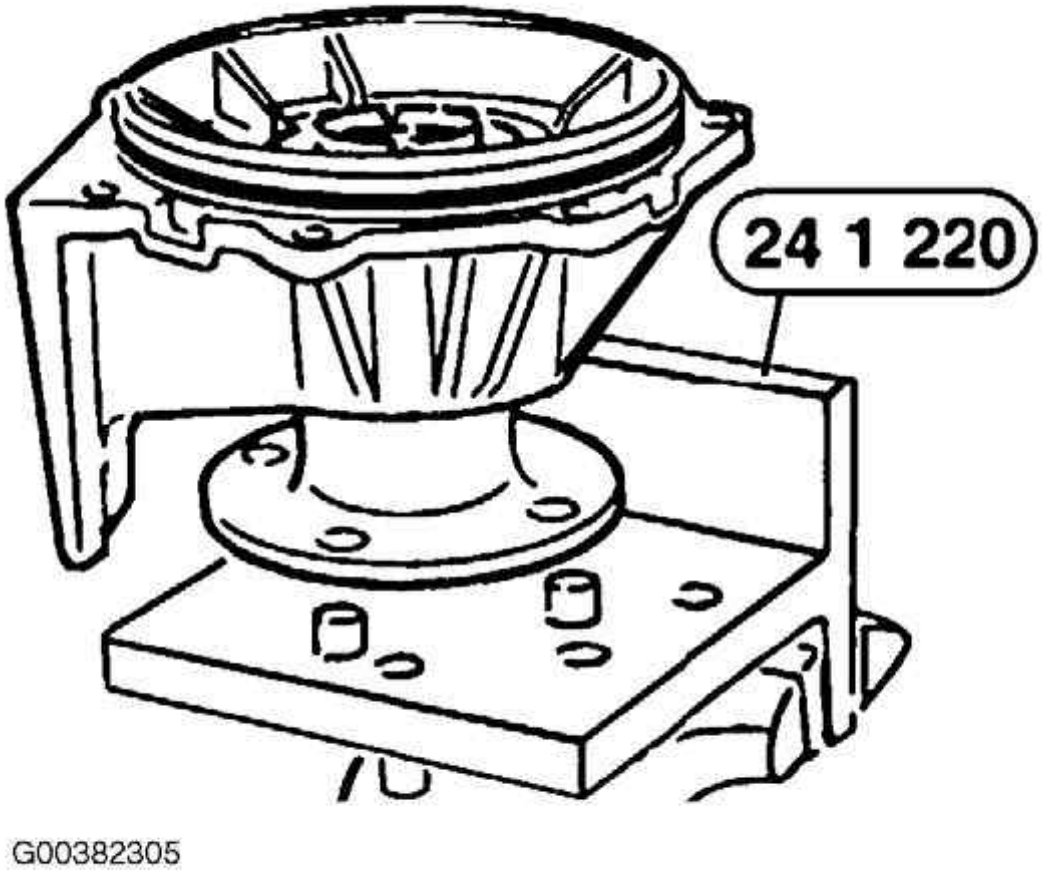

Fig. 92: Fitting Transmission Extension To Special Tool
Courtesy of BMW OF NORTH AMERICA, INC.

Knock back cotter pin in grooved nut. See **Fig. 93** . Upon installation, peen grooved nut to secure.

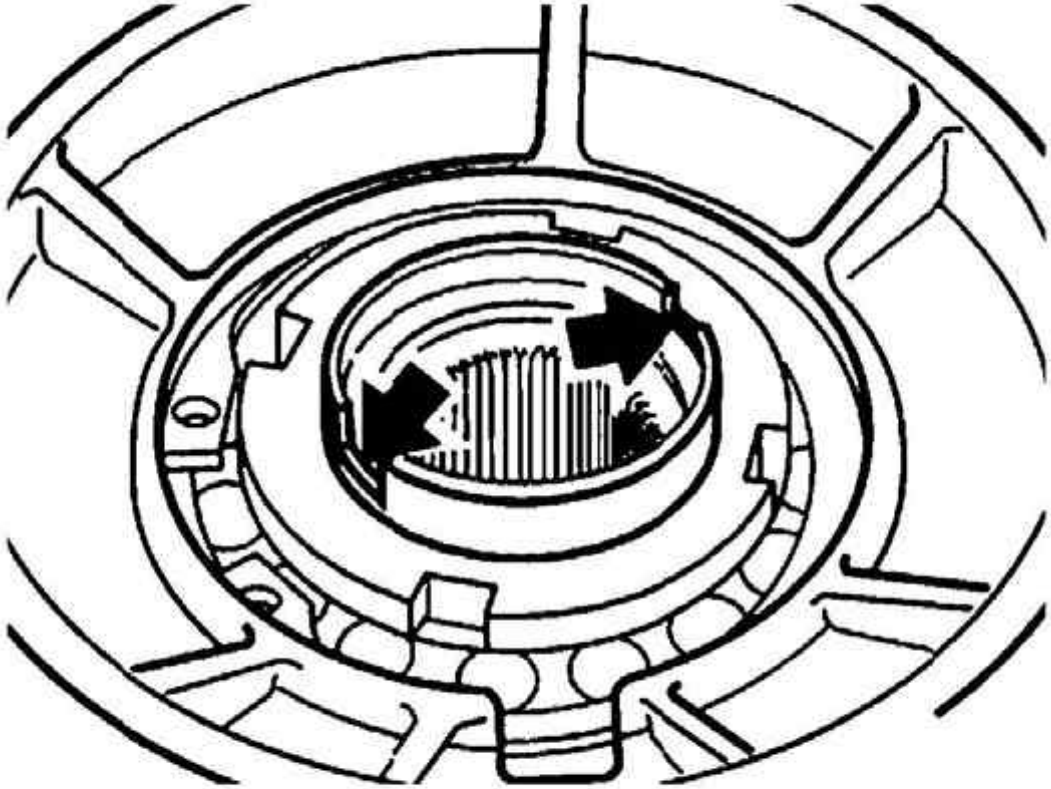

Fig. 93: Knocking Back Cotter Pin
Courtesy of BMW OF NORTH AMERICA, INC.

Unfasten grooved nut (1) with Special Tool (24 1 170). See **Fig. 94** . Upon installation, tighten to specification. See **TORQUE SPECIFICATIONS** .

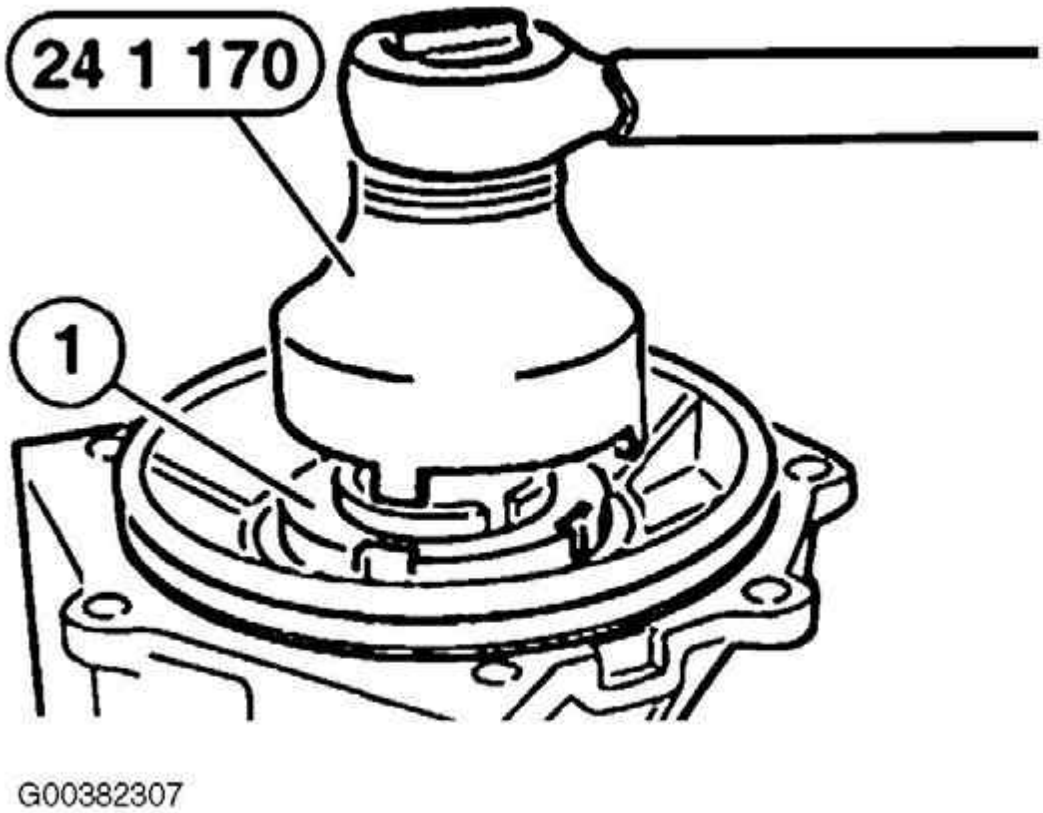

Fig. 94: Unfastening Grooved Nut
Courtesy of BMW OF NORTH AMERICA, INC.

Remove transmission extension from special tool. Remove output flange from mounting. See **Fig. 95** .
Installation: coat sealing lip of radial seal and sealing surface of output flange with transmission oil.

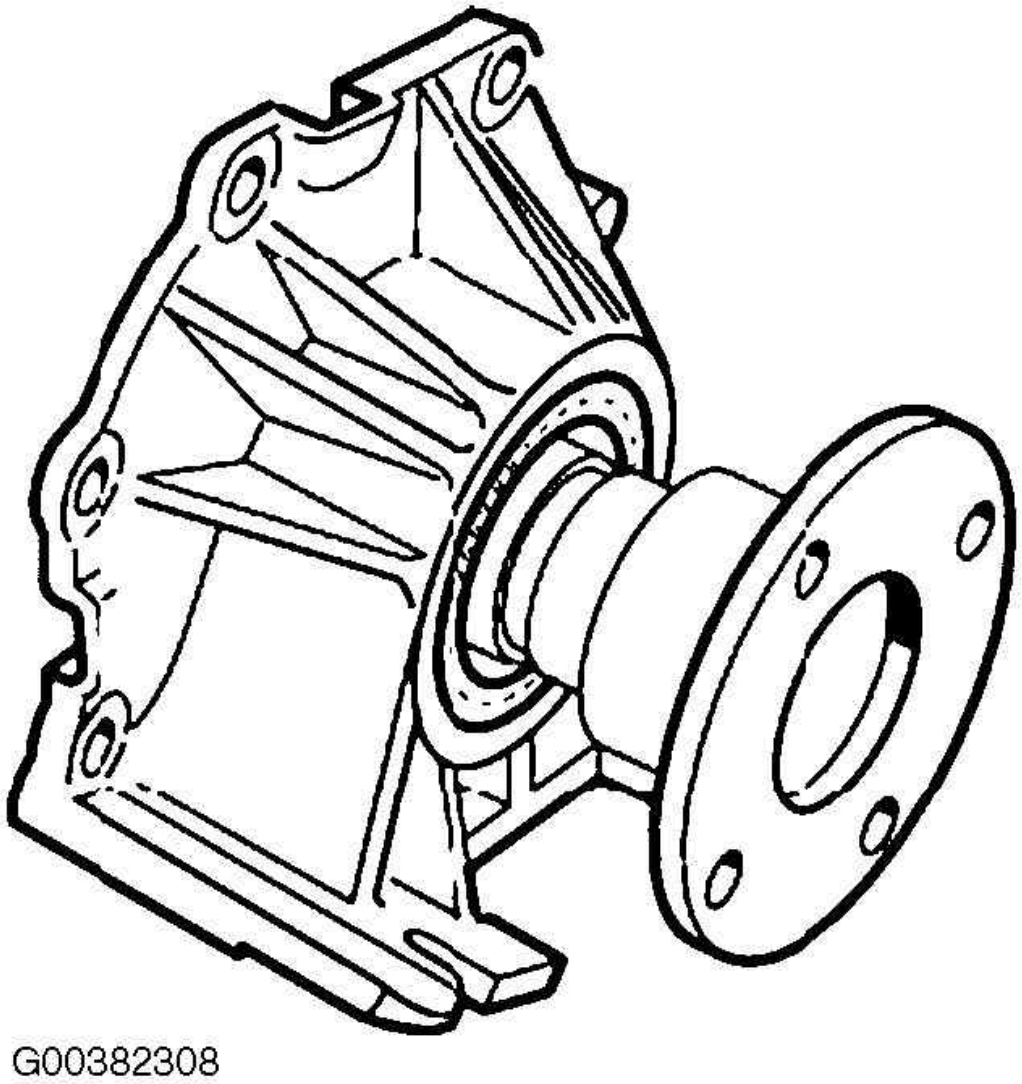

Fig. 95: Removing Output Flange From Mounting
Courtesy of BMW OF NORTH AMERICA, INC.

Lift out radial seal (1). See **Fig. 96** .

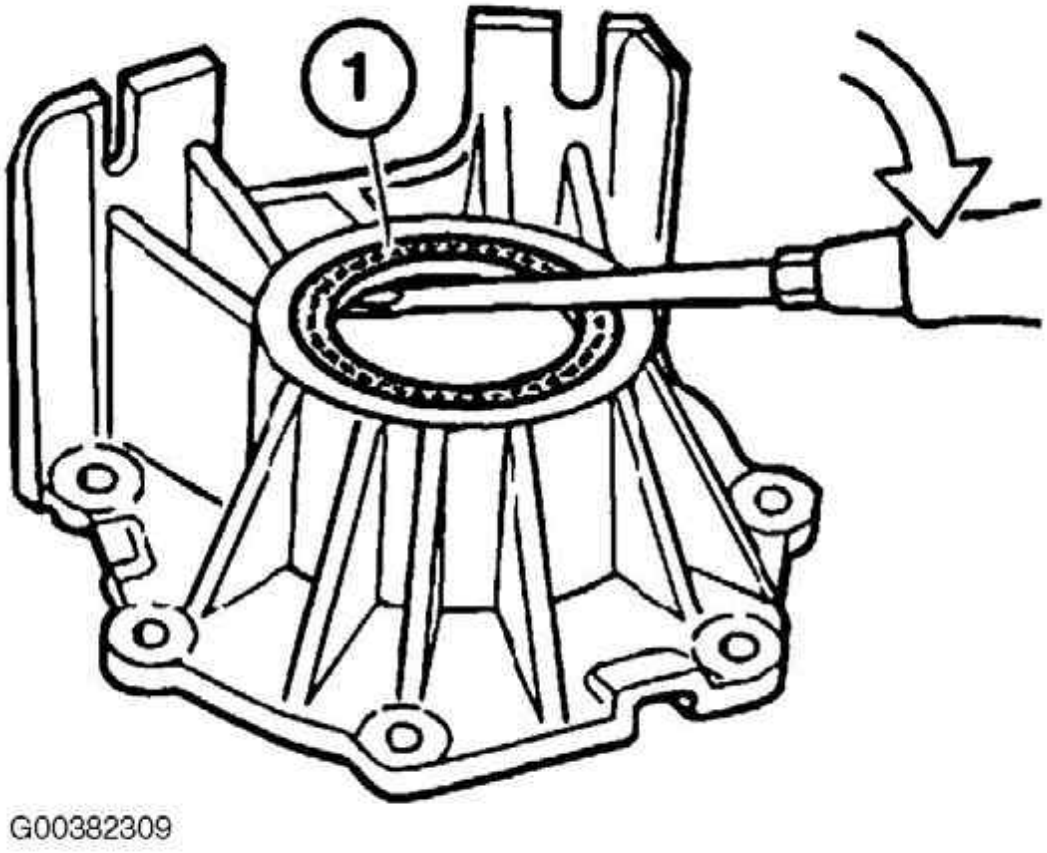

Fig. 96: Lifting Out Radial Seal
Courtesy of BMW OF NORTH AMERICA, INC.

Installation: drive in new radial seal (1) flush using Special Tool (00 5 500 / 24 1 190). See **Fig. 97** .

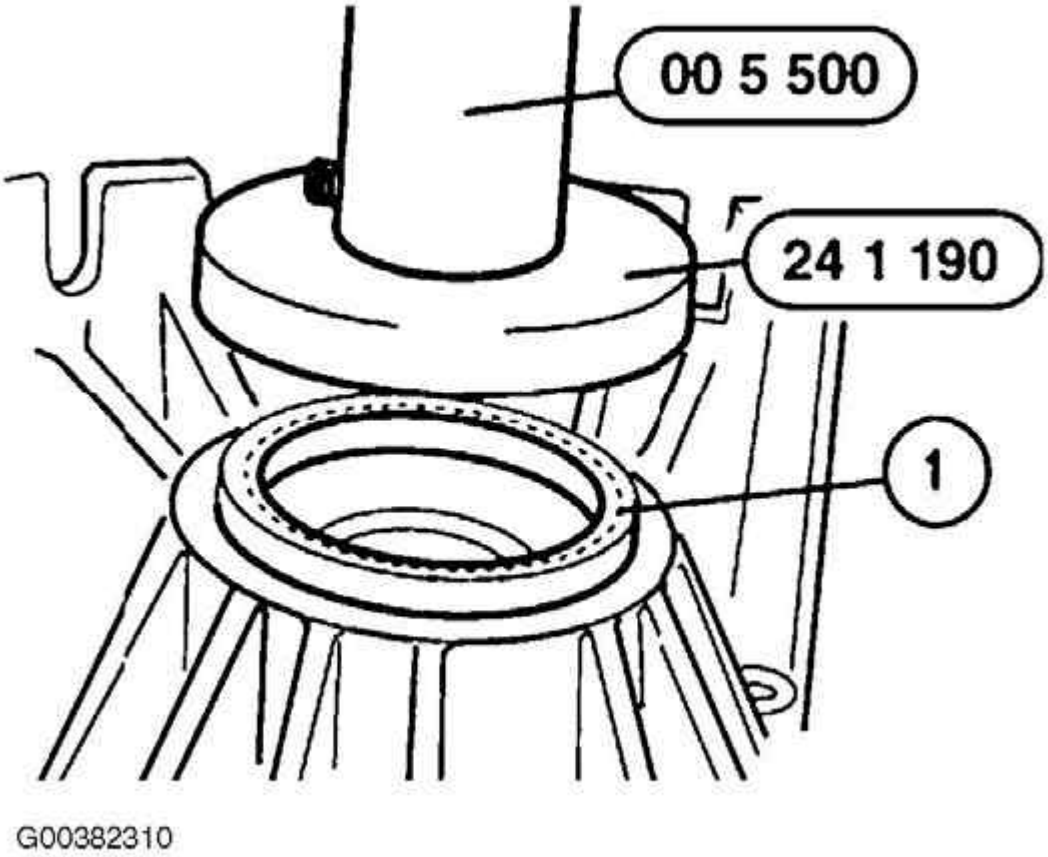

Fig. 97: Driving In Radial Seal
Courtesy of BMW OF NORTH AMERICA, INC.

REPLACING RADIAL SEAL FOR OUTPUT FLANGE (A5S 360R / 390R)

To replace radial seal for output flange, see **REMOVING AND INSTALLING OR REPLACING TRANSMISSION EXTENSION HOUSING (A5S 360R / 390R)** .

REPLACING SOLENOID VALVE 1, 2 OR 3 (A5S 360R / 390R, A4S 200R)

NOTE: After completing work, top up ATF level. Check/top up fluid level in automatic transmission. See CHECKING/TOPPING UP FLUID LEVEL IN AUTOMATIC TRANSMISSION (A5S 360R / 390R, A4S 200R / 310R) .

Remove transmission oil sump. See **REMOVING AND INSTALLING/SEALING OR REPLACING TRANSMISSION FLUID SUMP (A5S 360R / 390R, A4S 200R)** .

CAUTION: Note position of wiring harness.

Disconnect plug from solenoid valve. Remove retaining spring and withdraw solenoid valve (1, 2 or 3). See **Fig. 98** . Upon installation: coat new solenoid valve with automatic transmission fluid.

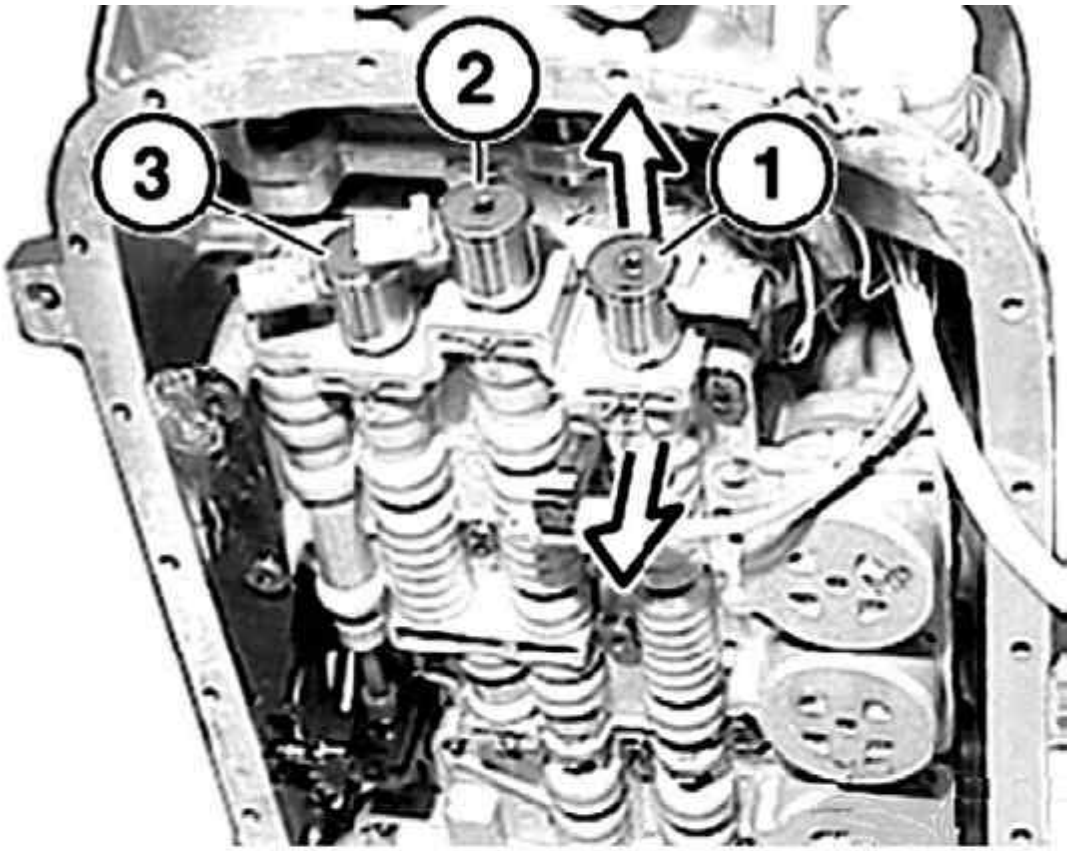

Allocation of solenoid valves (SV):

1	SV switching 1-2
2	SV switching 2-3
3	SV switching 4-5

G00382373

Fig. 98: Removing Solenoid Valve (1, 2 Or 3)

Courtesy of BMW OF NORTH AMERICA, INC.

REPLACING TRANSMISSION SWITCH (A5S 360R / 390R, A4S 200R)

NOTE: Numbers in text refer to numbers in figures.

NOTE: After completing work, top up ATF level. Check/top up fluid level in automatic transmission. See CHECKING/TOPPING UP FLUID LEVEL IN AUTOMATIC TRANSMISSION (A5S 360R / 390R, A4S 200R / 310R) .

Move selector lever to position "D". Remove transmission oil sump. See **REMOVING AND INSTALLING/SEALING OR REPLACING TRANSMISSION FLUID SUMP (A5S 360R / 390R, A4S 200R)** .

Remove and install selector unit. See **REMOVING AND INSTALLING/REPLACING SELECTOR UNIT (A5S 360R / 390R, A4S 200R)** .

Grip clamping sleeve (1). Slacken nut (2). See **Fig. 99** .

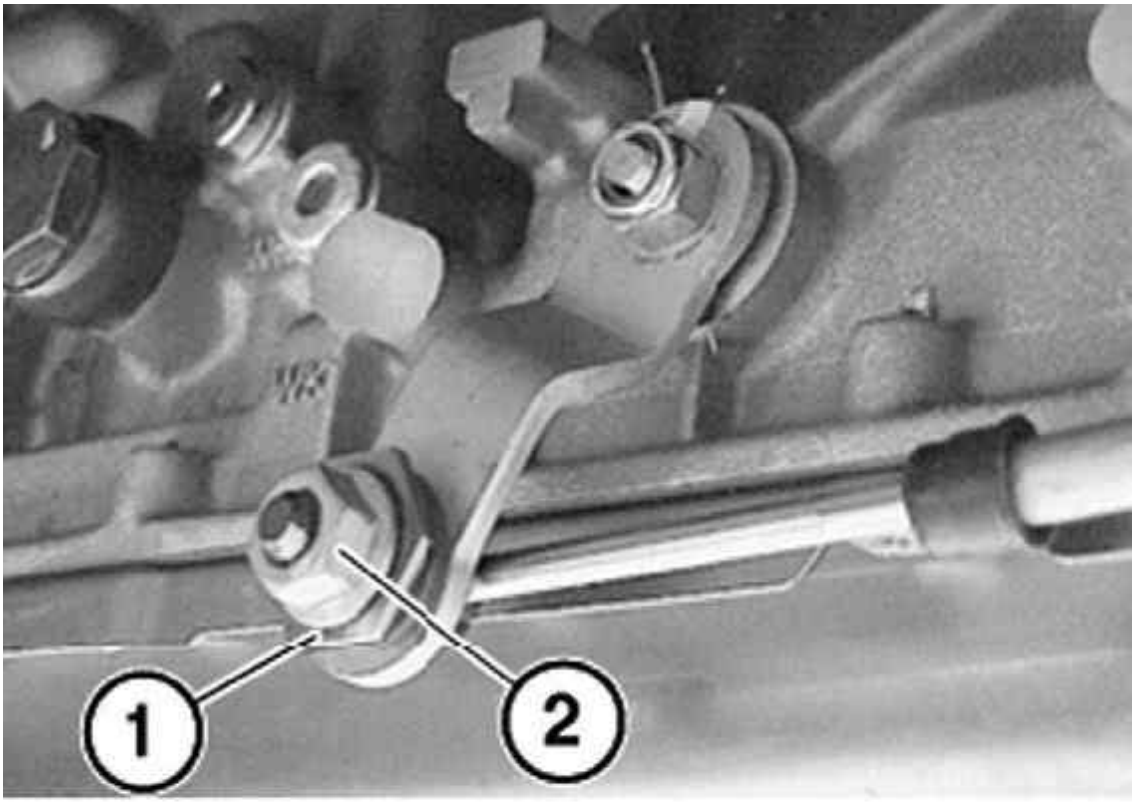

G00367853

Fig. 99: Releasing Selector Lever Nut

Courtesy of BMW OF NORTH AMERICA, INC.

Release nut (1). See **Fig. 100** . Remove selector lever (2). Upon installation, tighten fasteners to specification. See **TORQUE SPECIFICATIONS** . Adjust selector lever. See **ADJUSTING SELECTOR LEVER (A5S 360R / 390R, A4S 200R, 6HP26Z/19Z)** .

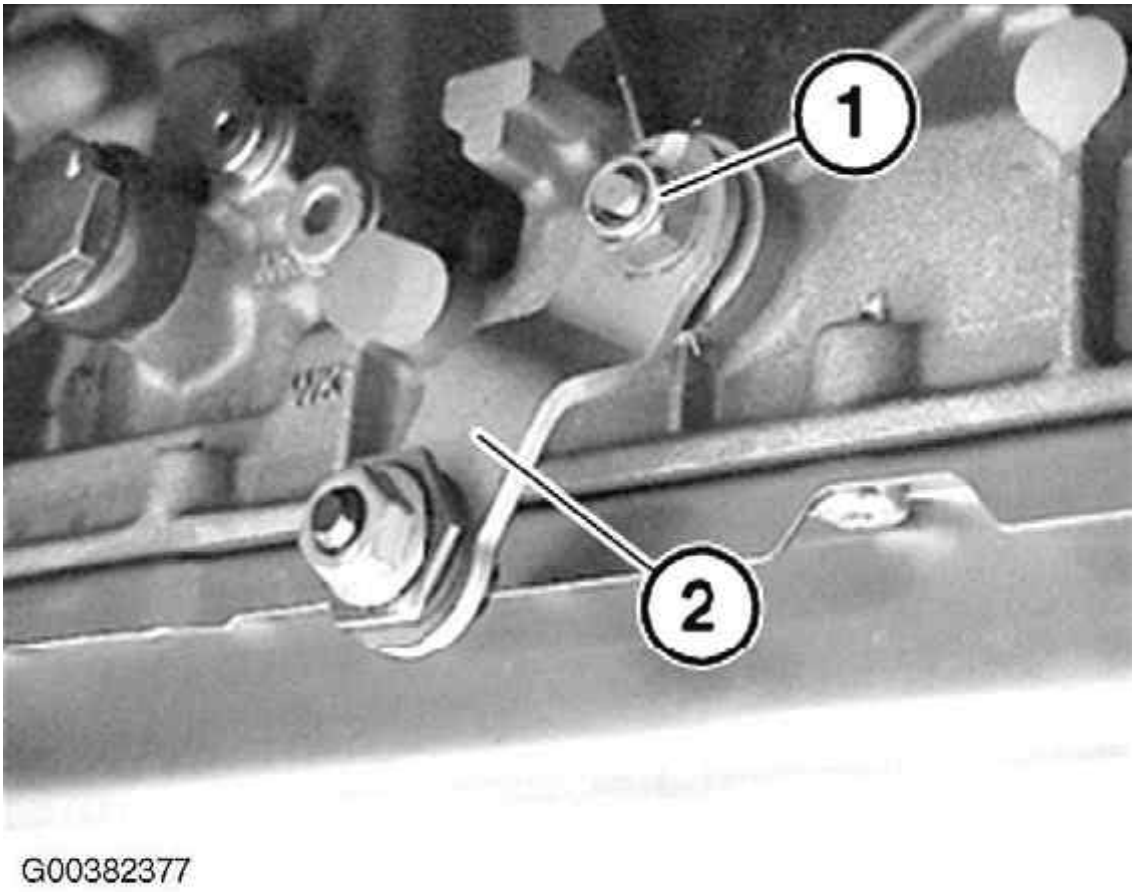

Fig. 100: Removing Selector Lever
Courtesy of BMW OF NORTH AMERICA, INC.

Drive spring pin (1) out of transmission switch (2). See **Fig. 101** . Withdraw manual shift valve shaft (3) from transmission only so far that transmission switch (2) can be removed. DO NOT remove parking gear rack. DO NOT move parking gear rack more than 10 mm; if necessary, secure with pointed pliers. Release notched disk on parking gear rack. Remove transmission switch (2) with detent disk.

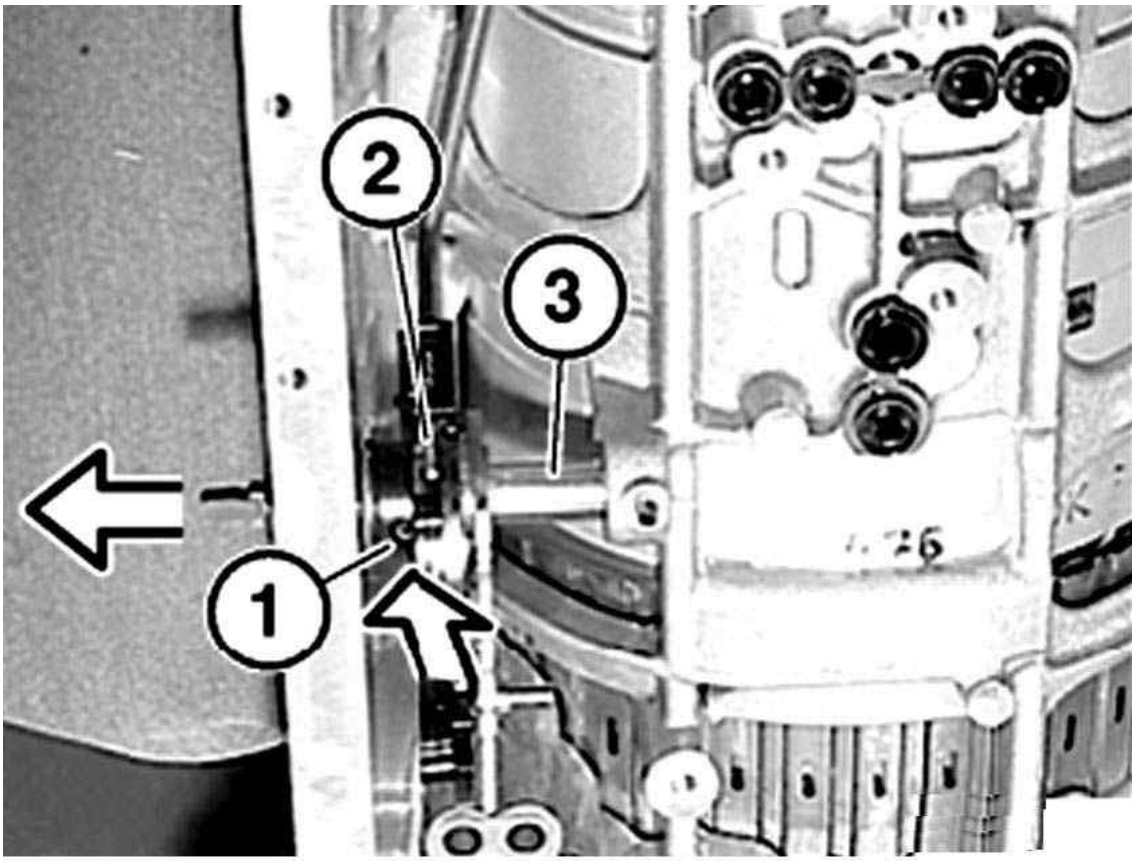

G00382378

Fig. 101: Removing Transmission Switch
Courtesy of BMW OF NORTH AMERICA, INC.

Remove transmission switch (1) from detent disk (2). See **Fig. 102** . Upon installation: bore holes for spring pin in transmission switch (1) must overlap with bore holes of detent disk (2) and manual shift valve shaft.

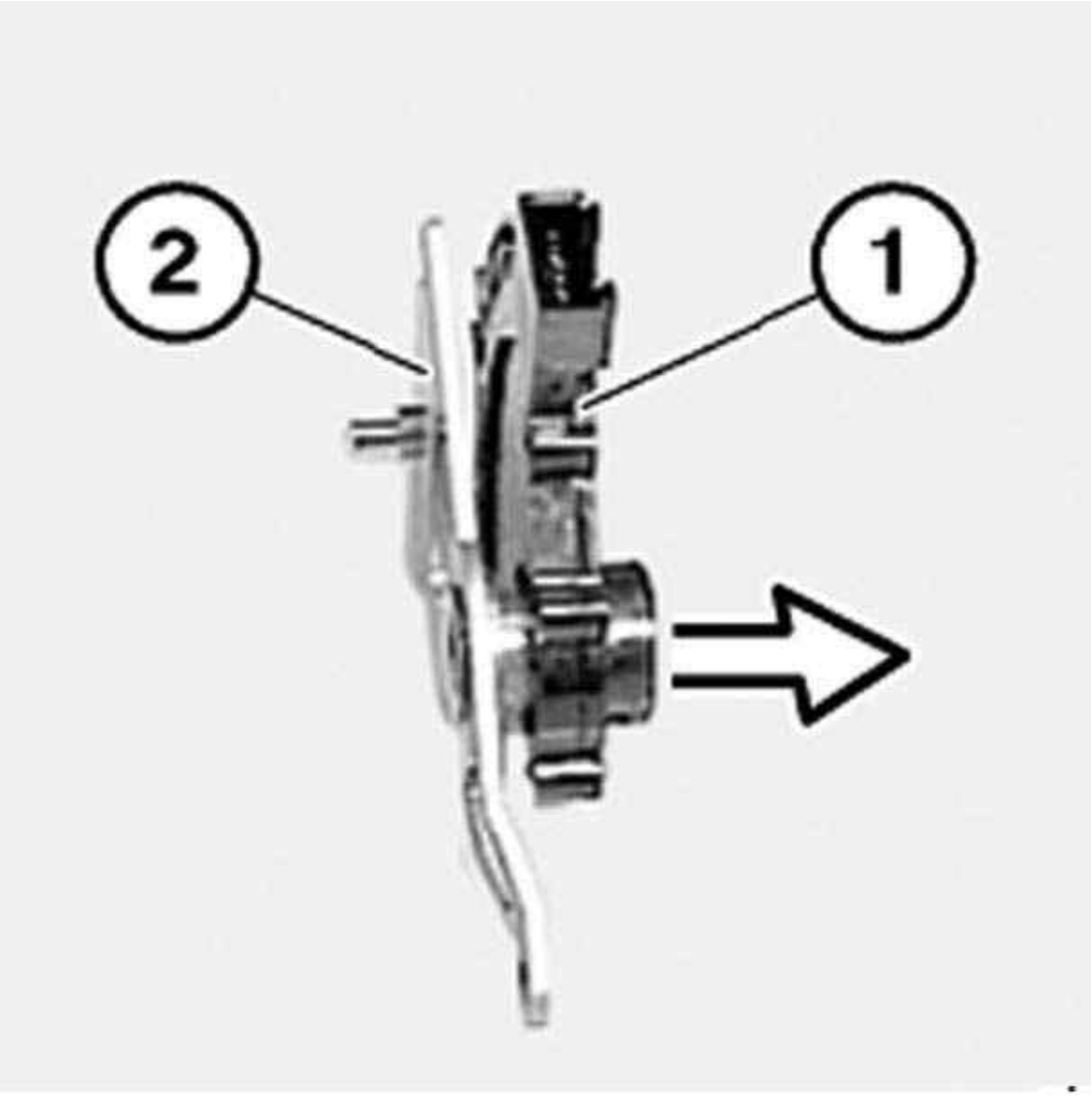

G00382379

Fig. 102: Removing Transmission Switch From Detent Disk
Courtesy of BMW OF NORTH AMERICA, INC.

Installation: attach parking gear rack (1) from rear in detent disk (2). See **Fig. 103** . Slide in manual shift valve shaft. Drive in spring pin. During entire installation work, journal (3) must be aligned vertically to manual shift valve shaft. After installation of detent spring, ensure that parking lock functions correctly. Press journal (3) forwards into "P" position, rotate propeller shaft and check that locking pawl engages.

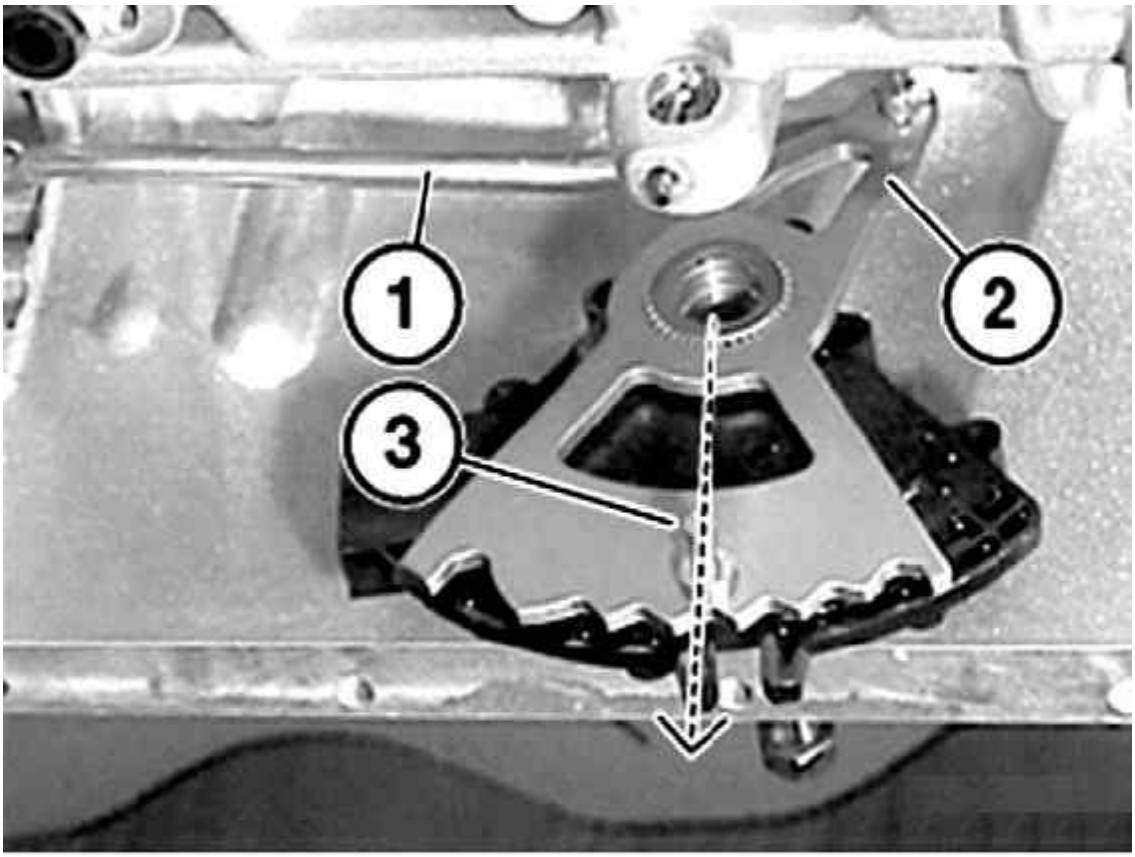

G00382380

Fig. 103: Installing Parking Gear Rack In Detent Disk
Courtesy of BMW OF NORTH AMERICA, INC.

REPLACING WIRING HARNESS IN AUTOMATIC TRANSMISSION (A5S 325Z)

NOTE: **Numbers in text refer to numbers in figures.**

NOTE: **After completing work, top up ATF level. Check/top up fluid level in automatic transmission. See CHECKING/TOPPING UP FLUID LEVEL IN AUTOMATIC TRANSMISSION (A5S 325Z) .**

Remove and install transmission oil sump. See **REMOVING AND INSTALLING/SEALING OR REPLACING TRANSMISSION OIL SUMP (A5S 325Z)** .

Remove and install transmission oil screen. See **REMOVING AND INSTALLING/REPLACING TRANSMISSION OIL SCREEN (A5S 325Z)** .

Remove and install shift unit. See **REMOVING AND INSTALLING/REPLACING SHIFT UNIT (A5S 325Z)** .

Disconnect plug (1) from solenoid valve. See **Fig. 104** . Detach plug (2) from pulse generator (3).

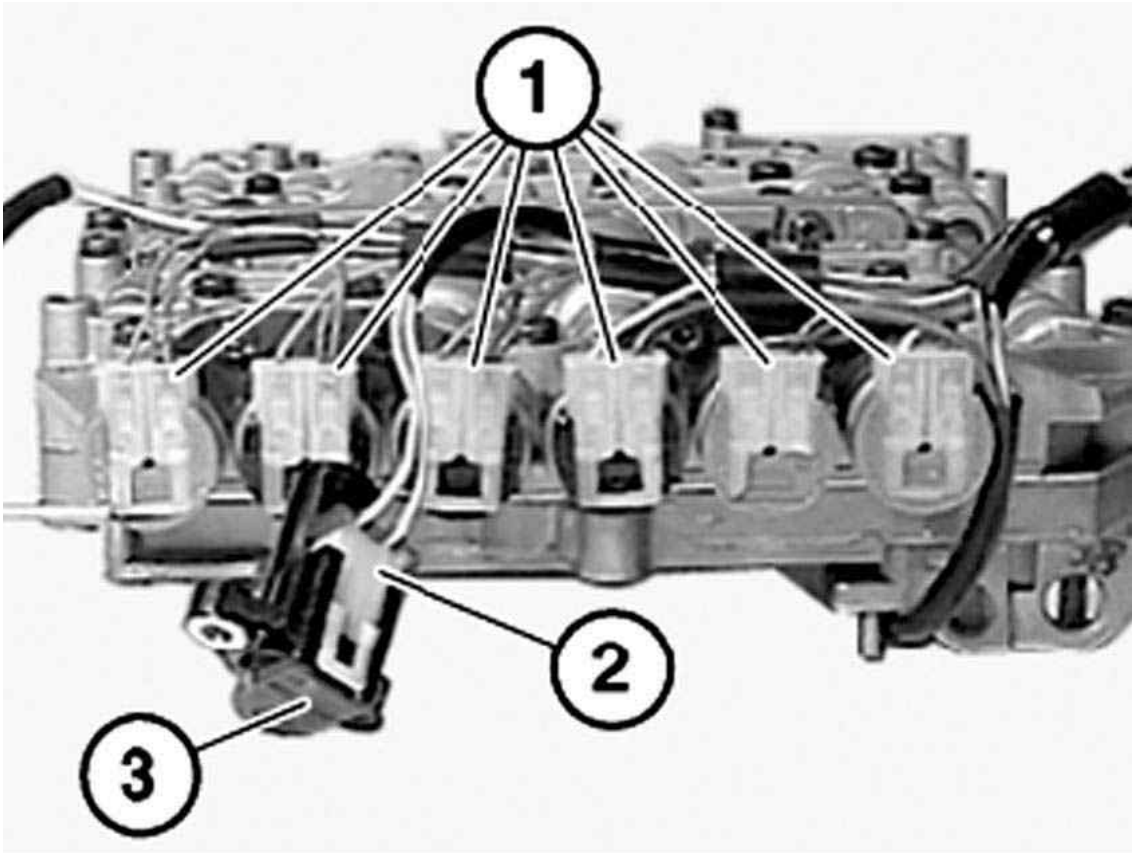

G00382338

Fig. 104: Disconnecting Plugs
Courtesy of BMW OF NORTH AMERICA, INC.

Remove connector (1). See **Fig. 105** . Remove retaining clip (2). Remove wiring harness from cable guide (3).

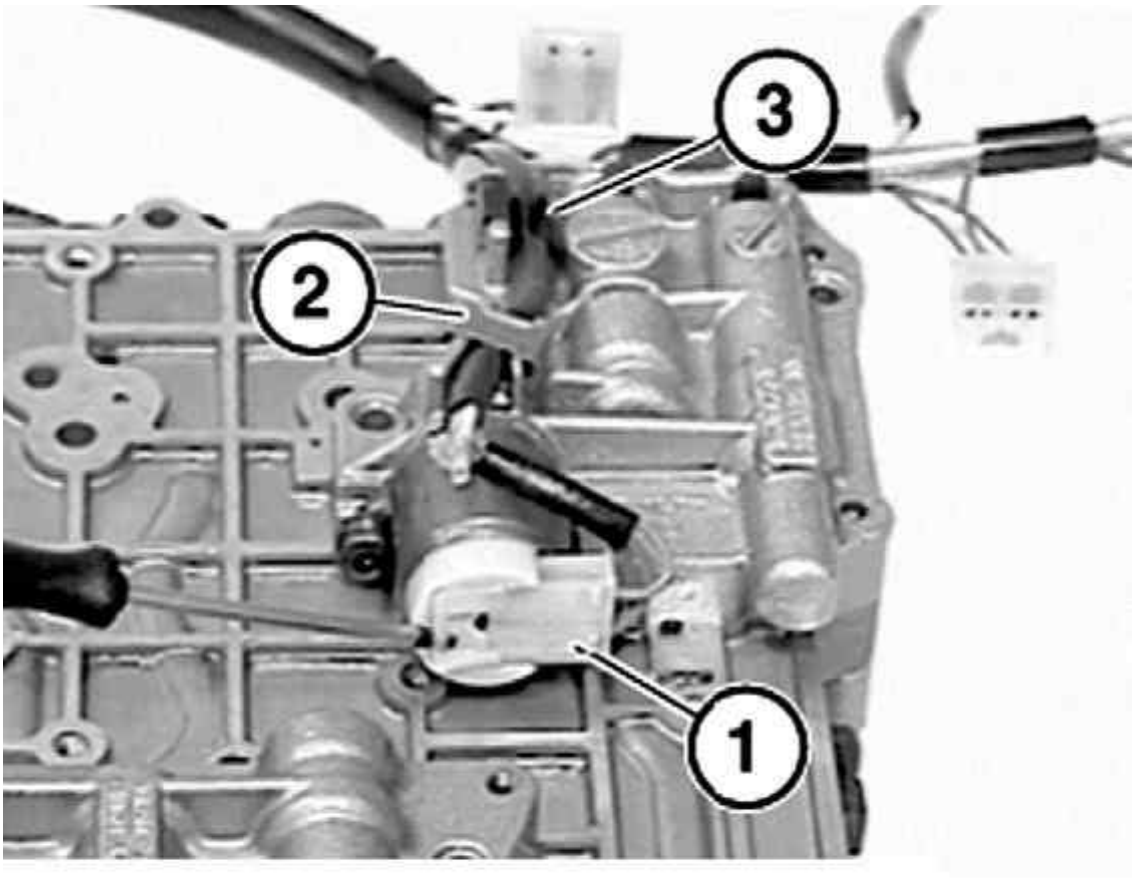

G00382339

Fig. 105: Removing Wiring Harness
Courtesy of BMW OF NORTH AMERICA, INC.

REPLACING WIRING HARNESS IN AUTOMATIC TRANSMISSION (A5S 360R/390R, A4S 200R)

NOTE: Numbers in text refer to numbers in figures.

NOTE: After completing work, top up ATF level. Check/top up fluid level in automatic transmission. See CHECKING/TOPPING UP FLUID LEVEL IN AUTOMATIC TRANSMISSION (A5S 360R / 390R, A4S 200R / 310R) .

Remove transmission oil sump. See **REMOVING AND INSTALLING/SEALING OR REPLACING TRANSMISSION FLUID SUMP (A5S 360R / 390R, A4S 200R)** .

Remove transmission plug at rear right.

Pull off transmission fluid screen (1) towards bottom and remove. See **Fig. 38** .

NOTE: **If the sealing ring (1) has remained in the pump housing, it must be removed and the transmission fluid screen replaced. See Fig. 39 .**

Disconnect all plug connections on shift unit. Unclip temperature sensor (1) from holder. See **Fig. 28** .

NOTE: **As of model year 2001 (04/2000), the temperature sensor is integrated in the wiring harness.**

Remove retaining clip with screwdriver (2). See **Fig. 18** . Insert transmission plug (1) in transmission. Remove wiring harness from automatic transmission.

Installation: to facilitate installation, coat sealing rings with petroleum jelly. See **Fig. 19** . Make sure transmission plug is in correct position.

TORQUE SPECIFICATIONS

TORQUE SPECIFICATIONS

Application	Ft. Lbs. (N.m)
Bowden Cable On Shift Tower/Transmission	11 (15)
Center Mount-To-Body	15 (21)
Cross Member-To-Body	15 (21)
Flange Nut, Output Flange Without Spring Washer	22 (30)
Flange Nut, Output Flange With Spring Washer	44 (60)
Flexible Disk-To-Propeller Shaft & Transmission Output Flange	
M10 8.8 Thread	35 (48)
M10 10.9 Thread	47 (64)
M14 Thread	103 (140)
M12 10.9 Thread	74 (100)
Flexible Disk-To-Transmission Output Flange (Screw With Rolled-On Shim Only)	
Stage 1	37 (50)
Stage 2	Additional 90°
Oil Filler Plug	
A5S 360R	13 (18)
A5S 325Z	22 (30)
Oil Drain Plug (A5S 325Z)	26 (35)
Plug	15 (20)
Rubber Mounts-To-Cross Member Or Transmission	15 (21)
Slotted Nut/Output Flange	89 (120)
Transmission Extension	
A5S 325Z	18 (25)
A5S 360R	16 (22)
	INCH Lbs. (N.m)

Clamping Screw On Shift Lever	89 (10)
Guide Plate/Parking Lock Mechanism	89 (10)
Oil Strainer	53 (6)
Pulse Generator, Output Speed	53 (6)
Pulse Generator, Turbine Speed	71 (8)
Pulse Sender	97 (11)
Retaining Plate For Solenoid Valves & Pressure Regulator On Shift Unit	53 (6)
Selector Lever On Transmission	89 (10)
Transmission Oil Sump	
A5S 325Z	53 (6)
A5S 360R	89 (10)
Valve Body-To-Transmission	
A5S 325Z	71 (8)
A5S 360R	97 (11)