Renault ESPACE

Driver's handbook

RENAULT

A passion for **performance**

ELF, partner of
world series
by RENAULT

RENAULT recommends ELF

Partners in cutting-edge automotive technology, Elf and Renault combine their expertise on both the racetrack and the city streets. This enduring partnership gives drivers a range of lubricants perfectly suited to Renault cars. Lasting protection and optimum performance for your engine – guaranteed. Whether changing the oil or simply topping up, to find the approved ELF lubricant best suited to your vehicle, ask your Renault dealer for a recommendation or consult your vehicle maintenance handbook.

www.lubricants.elf.com

elf

A brand from TOTAL

Welcome to your new vehicle

This Driver's Handbook contains the information necessary:

– for you to familiarise yourself with your vehicle, to use it to its best advantage and to benefit fully from the all the functions and the technical developments it incorporates.

– to ensure that it always gives the best performance by following the simple, but comprehensive advice concerning regular maintenance.

– to enable you to deal quickly with minor faults not requiring specialist attention.

It is well worth taking a few minutes to read this handbook to familiarise yourself with the information and guidelines it contains about the vehicle and its functions and new features. If certain points are still unclear, our Network technicians will be only too pleased to provide you with any additional information.

The following symbol will help you when reading this handbook:

To indicate a hazard, danger or safety recommendation.

The descriptions of the models given in this handbook are based on the technical specifications at the time of writing. **This handbook covers all items of equipment** (both standard and optional) **available for these models but whether or not these are fitted to the vehicle depends on the version, options selected and the country where the vehicle is sold.**

This handbook may also contain information about items of equipment to be introduced later in the model year.

Throughout the manual, the "approved Dealer" is your RENAULT Dealer.

Enjoy driving your new vehicle.

Translated from French. Copying or translation, in part or in full, is forbidden unless prior written permission has been obtained from the vehicle manufacturer.

0.2

C O N T E N T S

Sections

Getting to know your vehicle 1

Driving 2

Your comfort 3

Maintenance 4

Practical advice 5

Technical specifications 6

Alphabetical index 7

0.4

Section 1: Getting to know your vehicle

The RENAULT card: general information and use 1.2
Locking/unlocking the doors 1.8
Opening and closing the doors 1.11
Automatic locking when driving 1.14
Headrests - Seats 1.15
Seat belts. 1.23
Additional methods of restraint: 1.27
    in addition to the front seat belts 1.27
    to the rear seat belts 1.31
    side protection 1.32
Steering wheel/Power-assisted steering 1.34
Child safety: General information 1.35
    choosing a child seat mounting 1.38
    Fitting a child seat, general information 1.41
Child seats: attachment by seat belt or by Isofix system. 1.43
    deactivating/activating the front passenger airbag. 1.55
Driving position 1.58
Instrument panel 1.60
    trip computer and warning system 1.70
    vehicle settings customisation menu 1.80
Clock and outdoor temperature. 1.81
Rear view mirrors 1.82
Audible and visual signals 1.85
Exterior lighting and signals. 1.86
Windscreen wash/wipe 1.91
Rear windscreen wash, wiper 1.97
Fuel tank (filling with fuel) 1.99

RENAULT CARD: general information (1/2)

1 Unlocking the doors and tailgate.

2 Locking all doors and tailgate.

3 Locking/unlocking of the boot and, depending on the vehicle, automatic opening/closing of the tailgate (please see the information on “Automatic tailgate” in Section 3).

4 Switching on the lighting remotely.

The RENAULT card is used for:

– locking/unlocking the doors and tailgate (doors, tailgate) and the fuel filler flap (see the following pages);
– switching on the vehicle lighting remotely (refer to the following pages);
– Automatic closing of electric windows and, depending on the vehicle, of the sunroof; please see the information on “Electric windows” and “Electric sunroof” in Chapter 3;
– starting the engine; please see the information on “Starting, stopping the engine” in Chapter 2.

Battery life

Make sure that the correct battery type is being used, and that the battery is in good condition and inserted correctly. Its service life is approximately two years: replace it when the message “Keycard battery low” appears on the instrument panel (refer to the information on the “RENAULT card: battery” in section 5).

RENAULT card operating range

This varies according to the surroundings. It is important to make sure when handling the RENAULT card that you do not lock or unlock the doors by inadvertently pressing the buttons.

When the battery is flat, you can still lock/unlock and start your vehicle. Please see the information on “Locking and unlocking the doors” in Chapter 1 and “Starting, stopping the engine” in Chapter 2.

Distance lighting function

Pressing button ***4*** switches on the dipped beam headlights, the indicator lights and the interior lighting for approximately 30 seconds. This can be used, for example, to identify the vehicle from a distance when parked in a car park.

Note: Pressing button ***4*** again switches off the lighting.

Advice

Avoid leaving the card in hot, cold or humid areas.

Do not keep the RENAULT card in a place where it could be bent or damaged accidentally, such as in a back pocket of a garment.

Replacement: need for an additional RENAULT Card

If you lose your RENAULT card or require another, you can obtain one from an approved dealer.

If a RENAULT card is replaced, it will be necessary to take the vehicle and **all of its RENAULT cards** to an approved dealer to initialise the system.

You may use up to four RENAULT cards per vehicle.

Driver's responsibility when parking or stopping the vehicle

Never leave an animal, child or adult who is not self-sufficient alone in your vehicle, even for a short time.

They may pose a risk to themselves or to others by starting the engine, activating equipment such as the electric windows or locking the doors, for example.

Also, in hot and/or sunny weather, please remember that the temperature inside the passenger compartment increases very quickly.

RISK OF DEATH OR SERIOUS INJURY.

There are two ways to unlock/lock the vehicle:
– the RENAULT card in “Hands-free” mode;
– the RENAULT card in remote control mode.

Do not store the RENAULT card anywhere it may come into contact with other electronic equipment (computer, phone, etc.) as this could hinder its operation.

Driver’s responsibility when parking or stopping the vehicle

Never leave an animal, child or adult who is not self-sufficient alone in your vehicle, even for a short time.

They may pose a risk to themselves or to others by starting the engine, activating equipment such as the electric windows or locking the doors, for example.

Also, in hot and/or sunny weather, please remember that the temperature inside the passenger compartment increases very quickly.

RISK OF DEATH OR SERIOUS INJURY.

Using the card in “hands-free” mode

In “hands-free” mode, it is possible to lock/unlock the vehicle without using any of the RENAULT card’s buttons, as long as the card is within the access zone ***1***.

Note: It is possible to disable “hands-free” access using the multifunction screen (please see the equipment instructions).

“Hands-free” unlocking

With the RENAULT card in zone ***1***, place your hand on a door handle ***2***: the vehicle will unlock.

The hazard warning lights **flash once** to indicate that the doors have been unlocked.

Pressing button ***4*** unlocks the whole vehicle, including the boot, or, for vehicles equipped with an automatic tailgate, opens the boot completely.

Remote “Hands-free” locking

With the RENAULT card on you, and doors and boot closed, move away from the vehicle: it will lock automatically as soon as you leave the access zone.

Note: The distance at which the vehicle locks depends on the surroundings.

To indicate that the doors have been locked, the hazard warning lights flash once and then light up for approximately four seconds, and a beep sounds in confirmation.

“Hands-free” locking using the sensor *3*

If you wish to lock your vehicle while the card is within range, make sure that the doors and boot are closed and place your finger over the sensor ***3*** on the driver’s door handle. The vehicle will lock.

Note: The sensor cannot be used to lock the vehicle unless the RENAULT card is within the access zone ***1***.

Special features of the locking system

Having locked the vehicle by pressing the sensor ***3***, there is a delay of approximately 3 seconds before it can be unlocked again. During these 3 seconds, the door handles can be tried to make sure that the vehicle is locked properly.

If a door is open or not properly closed:
– when locking using the sensor ***3***, the vehicle will lock/unlock in quick succession, but the hazard warning lights will not flash;
– the vehicle will not lock as you move away.

Particular features of the locking system (continued)

If the RENAULT card has been within range for approximately 15 minutes, remote locking is disabled.

The vehicle cannot be locked if the card is within the zone ***7***.

If the vehicle is unlocked by pressing the button on the RENAULT card, but the doors or boot are not then opened; remote “hands-free” locking is disabled.

Using the card as a remote control

Unlocking with the card RENAULT
Press the button ***5***.
The hazard warning lights **flash once** to indicate that the doors have been unlocked.

Locking using the RENAULT card
With the doors and boot closed, press button ***6***: the vehicle will lock.
The hazard warning lights will **flash twice** to indicate that the vehicle is locked.

Note: The maximum distance at which the vehicle locks depends on the surroundings.

Special features
If the a door or the boot is open or not properly closed, the vehicle cannot be locked. The vehicle will lock/unlock in quick succession, but the hazard warning lights will not flash.

The card buttons are deactivated when the engine is running.

If, **while the engine is running,** a door is opened and closed, and the card is no longer in the zone ***7***, the message Keycard not detected indicates that the card is not inside the vehicle. This will, for example, prevent you from driving away after dropping off a passenger who has kept the card on them.

The warning disappears when the card is detected again.

Locking/unlocking only the boot

With vehicles not equipped with an automatic tailgate, press the button ***8*** to lock/unlock the boot only.

Driver’s responsibility when parking or stopping the vehicle

Never leave an animal, child or adult who is not self-sufficient alone in your vehicle, even for a short time.

They may pose a risk to themselves or to others by starting the engine, activating equipment such as the electric windows or locking the doors, for example.

Also, in hot and/or sunny weather, please remember that the temperature inside the passenger compartment increases very quickly.

RISK OF DEATH OR SERIOUS INJURY.

If the RENAULT card does not work:

In certain cases, the RENAULT card may not work:

– when the RENAULT card battery is drained, flat battery, etc.

– use of appliances operating on the same frequency as the card (mobile phone, etc.);

– vehicle located in a high electromagnetic radiation zone.

It is then possible:

– to use the key that is built into the card;

– to lock each of the doors manually;

– to use the interior door locking/unlocking control (refer to the following pages).

The card's built-in key

The built-in key ***2*** is used to lock or unlock the front left-hand door if the RENAULT card is not working.

Access with key 2

Slide the rear casing ***1*** downwards while pressing on zone ***A***.

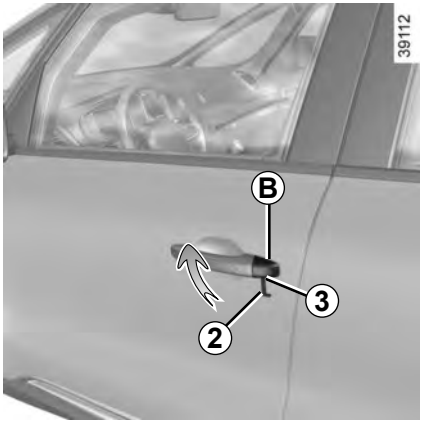

Using the key integrated in the RENAULT card

– Insert the tip of the key ***2*** into the notch ***3*** at the bottom of the cover ***A*** on the front left-hand door;
– Move it upwards to remove the cover ***B***;
– Insert the key ***2*** into the lock and lock or unlock the front left-hand door.

Once you are inside the vehicle, put the key back in its casing in the RENAULT card.

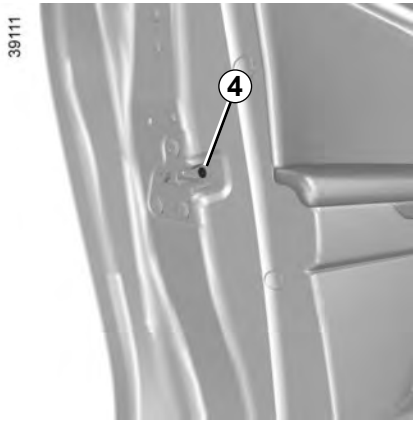

Locking the doors manually

Turn screw ***4*** with the door open (using the end of the key) and close the door.

This means that the doors are then locked from the outside.

The doors may then only be opened from the inside or by using the key in the front left-hand door.

Interior locking/unlocking door control

Switch ***5*** controls the doors, the boot and the fuel filler flap simultaneously.

If a door or the tailgate is open or not closed properly, the doors and tailgate lock/unlock quickly.

If you need to carry a load with the boot open, you can still lock everything else: **with the engine stopped,** press switch ***5*** for more than five seconds to lock the other opening elements.

Locking the doors without the RENAULT card

For example, in the event of a discharged battery or the RENAULT card temporarily not working, etc.

With the engine switched off and an opening element (door or boot) open, press and hold switch ***5*** for more than five seconds.

When the door is closed, all the doors and tailgate will be locked.

Unlocking the vehicle from the outside is only possible with the RENAULT card in the vehicle's access zone or using the key integrated in the RENAULT card.

Door and tailgate status indicator

With the RENAULT card inside the passenger compartment, press the button START. The light built into the switch ***5*** will indicate whether the opening elements are locked or not.

– indicator light on, the doors and tailgate are locked;

– indicator light off, the doors and tailgate are unlocked.

When you lock the doors from the outside, the indicator light remains lit for a moment, and then goes out.

Never leave your vehicle with the RENAULT card inside.

Driver's responsibility

If you decide to keep the doors locked when you are driving, remember that it may be more difficult for those assisting you to gain access to the passenger compartment in the event of an emergency.

Opening the doors from the outside

With the doors unlocked or RENAULT card on you, hold handle ***1*** and pull it towards you.

As a safety precaution, the doors should only be opened or closed when the vehicle is stationary.

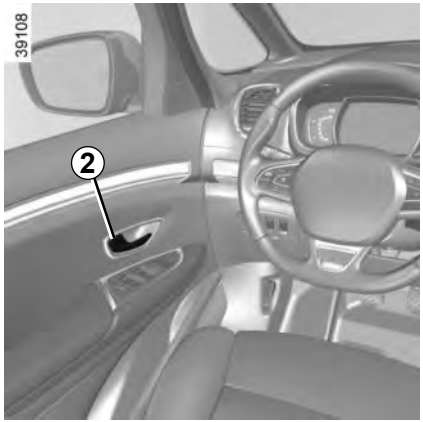

Opening from the inside

Pull on the handle ***2***.

Lights-on reminder buzzer

If you have switched off the ignition and left the lights switched on, a reminder buzzer will sound when a door is opened while the light stalk is not in position AUTO.

Door/tailgate open buzzer

At a standstill, warning light ***3*** lights up on the instrument panel alongside warning light ***4***, indicating the opening element(s) (door, boot) open or incorrectly closed.

Once the vehicle reaches a speed of approximately 12 mph (20 km/h), a warning light indicates if the door(s) or luggage compartment are open or improperly closed, along with the message «Boot open» or «Door open» and a beep will sound for around 40 seconds or until the door/luggage compartment is closed.

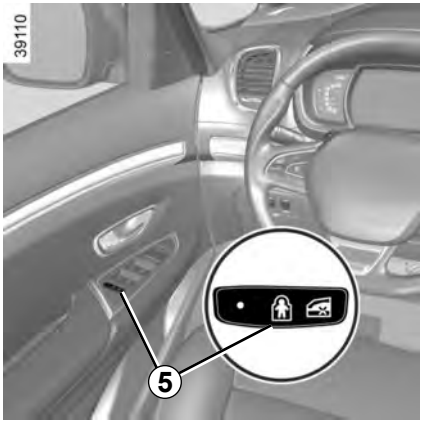

Child safety

Press switch ***5*** to allow or prevent opening of the rear doors and rear electric windows from inside the vehicle.
The indicator light in the switch lights up to confirm that the locks have been activated.

Note: If there is a system fault, the message “Check child safety device” is displayed on the instrument panel: please contact an authorised dealer.

As a safety precaution, the doors should only be opened or closed when the vehicle is stationary.

Safety of rear occupants
The driver can enable operation of the rear doors and, depending on the vehicle, the electric windows by pressing switch ***4*** on the side with the illustration.
Depending on the vehicle, in the event of a fault:
– a beep sounds;
– a message is displayed on the instrument panel;
– the integrated indicator does not light up.
If the battery has been disconnected, press switch ***4*** on the side with the symbol to lock the rear doors.

Driver’s responsibility when parking or stopping the vehicle

Never leave an animal, child or adult who is not self-sufficient alone on your vehicle, even for a short time.

They may pose a risk to themselves or to others by starting the engine, activating equipment such as the electric windows or locking the doors.

Also, in hot and/or sunny weather, please remember that the temperature inside the passenger compartment increases very quickly.

RISK OF DEATH OR SERIOUS INJURY.

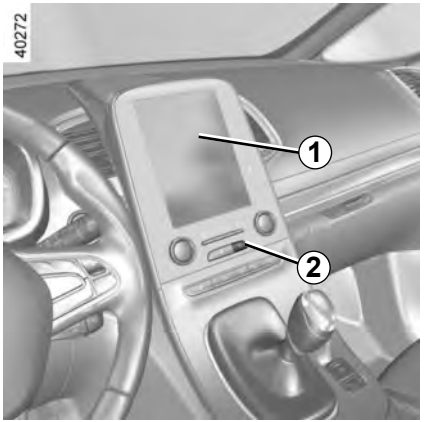

Operating principle

After the vehicle is started, the system automatically locks the doors when you are driving at approximately 6 mph (10 km/h) and over.

The door can be unlocked:

– by pressing central door unlocking switch ***2***.

– at a standstill, by opening a front door from inside the vehicle.

Note: if a door is opened or closed, it will automatically lock again when the vehicle reaches a speed of 6 mph (10 km/h).

Activating/deactivating the function

To switch it on: with the vehicle at a standstill and the engine running, press switch ***2*** until a beep sounds.

To deactivate: with the vehicle at a standstill and the engine running, press switch ***2*** until two beeps sound.

You can also deactivate/activate the function from the menu on the multi-function screen ***1*** (refer to the information on the “Vehicle settings customisation menu” section 1, “Auto door locking while driving” function).

Driver’s responsibility

If you decide to keep the doors locked when you are driving, remember that it may be more difficult for those assisting you to gain access to the passenger compartment in the event of an emergency.

Operating faults

If you experience an operating fault (no automatic locking, the indicator light incorporated in switch ***2*** does not light up when trying to lock the doors and boot, etc.), make sure that locking has not been deactivated by mistake and check that the doors and boot are properly closed. If they are correctly locked and the fault is still present, contact an authorised dealer.

FRONT HEADRESTS

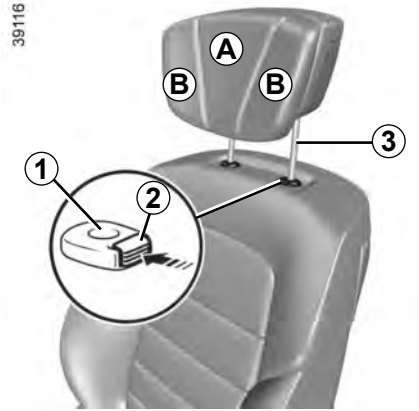

To raise the headrest

Pull the headrest upwards to the desired height.

To lower the headrest

Press button ***2*** and guide the headrest down to the desired height.

To adjust the angle of the headrest

Depending on the vehicle, move section ***A*** towards or away from you to the required position.

To adjust side supports *B*

Depending on the vehicle, sections ***B*** can be adjusted independently to the desired position.

To remove the headrest

Raise it to its highest position (tilt the seatback backwards if necessary). Press button ***2*** and lift the headrest to release it.

To refit the headrest

Check that the headrest rods are clean ***3***.
Insert the headrest rods into the holes ***1*** (tilt the seatback backwards if necessary).
Lower the headrest until it locks, press button ***2*** and lower the headrest as far as it will go.
Check that the headrest is properly locked in place.

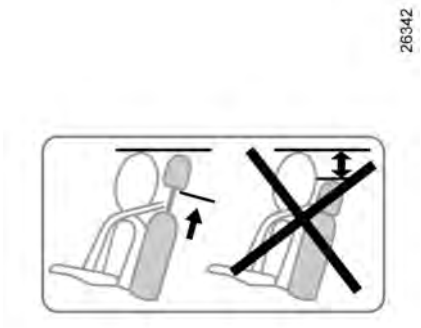

The headrest is an important safety component: ensure that it is in place and in the correct position. The distance between your head and the headrest and the distance between the head and section ***A*** should be as small as possible.

FRONT SEATS WITH MANUAL CONTROL (1/2)

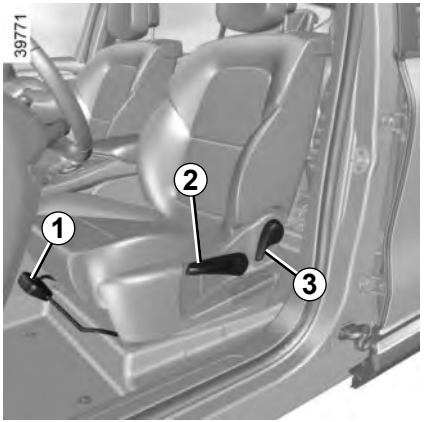

To move the seat forwards or back

Lift handle ***1*** to release. Release the handle at the desired position and make sure that it is locked.

To raise or lower the seat base

Move lever ***2*** as many times as necessary upwards or downwards.

To tilt the seatback

Lift handle ***3*** and tilt the seatback to the desired position. Release the handle at the desired position and make sure that it is locked.

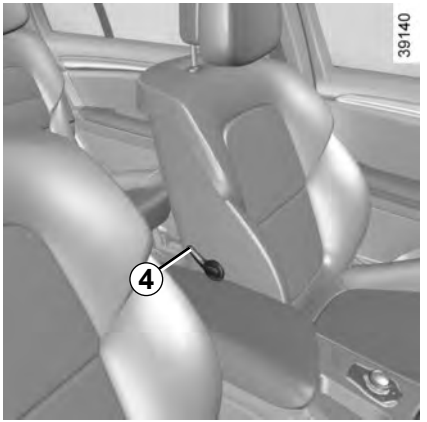

To adjust the seat's lumbar position

Lower handle ***4*** to increase the support and lift it to decrease it.

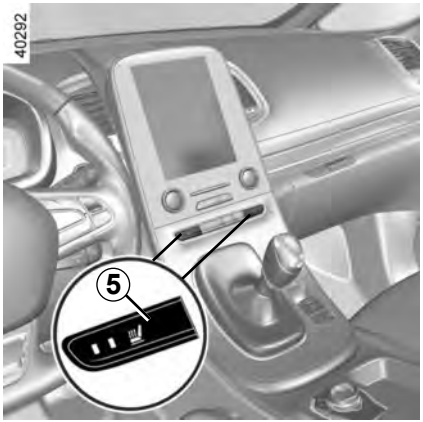

Heated seats

With the ignition on:

– Pressing the switch ***5*** on the required seat for the first time activates the heating system on high. Both integrated switch warning lights come on;

– pressing the switch for the second time changes the heating to low. One integrated warning light comes on;

– pressing for the third time turns the heating off.

Operating faults

When an operating fault is detected, the integrated warning lights on the switch ***5*** for the seat concerned flash.

Consult an approved dealer.

For safety reasons, make these adjustments only when the vehicle is stationary.

We would advise you not to recline the seatbacks too far to ensure that the effectiveness of the seat belts is not reduced.

Nothing should be placed on the floor (area in front of driver) as such objects may slide under the pedal during braking manoeuvres, thus obstructing its use.

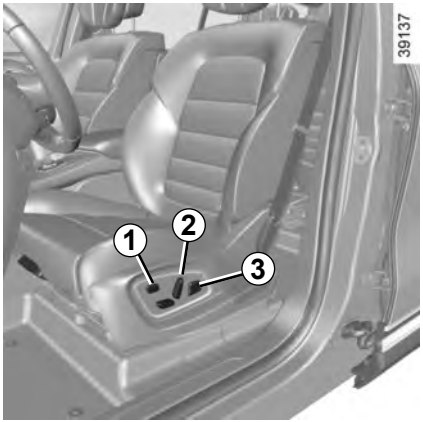

On equipped vehicles, switch ***1*** grants access to the seats menu on the multi-function screen (please refer to the following pages).

Adjusting the seatback

To tilt the seatback, move the top of switch ***2*** forwards or backwards.

Adjusting the lumbar support on the driver's seat

Move the switch ***3*** forwards, backwards, up or down.

Make sure that the seatbacks are correctly locked in place.

For safety reasons, carry out any adjustments when the vehicle is not being driven.

Make sure that the seatbacks are correctly locked in place.

We would advise you not to recline the seatbacks too far to ensure that the effectiveness of the seat belts is not reduced.

No object should be placed on the floor (in front of the driver). such objects may slide under the pedals during sudden braking manoeuvres and obstruct their use.

Adjusting the seat position

To move the seat forwards or back
Move switch ***4*** forwards or backwards.

To raise or lower the seat base
Move the back of switch ***4*** up or down.

To tilt the seat base
(depending on the vehicle)
Move the front of switch ***4*** upwards or downwards.

Adjusting the seat length

Lift handle ***5*** to unlock. Release the handle at the desired position and make sure that it is locked.

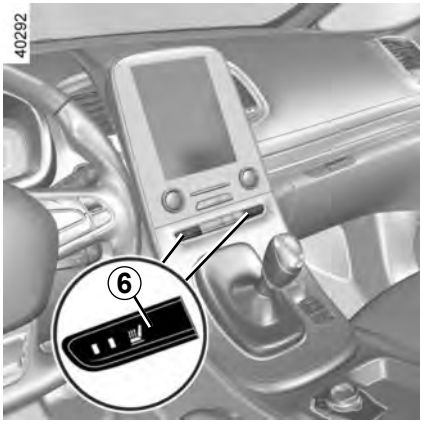

Heated seats

With the ignition on:

– Pressing the switch ***6*** on the required seat for the first time activates the heating system on high. Both integrated switch warning lights come on;

– pressing the switch for the second time changes the heating to low. One integrated warning light comes on;

– pressing for the third time turns the heating off.

Using the multifunction screen, depending on the vehicle you can access a number of seat functions.

On equipped vehicles, switch ***1*** grants direct access to the seat menu on the multifunction screen.

Please refer to the multimedia equipment instructions for further information.

Massage

You can activate the driver and front passenger seat massage function.

Using the multifunction screen, select menu “Vehicle”, “Seats” then “Massage”.

Browse menu “Driver” or “Passenger” to:

– select the type of massage (Tonic, Relaxing or Lumbar);

– adjust the intensity (+ or -);

– adjust the speed (+ or -);

– reset the selected settings. Press ***2*** then “Reset”;

– activate/deactivate the massage seat (ON or OFF).

Note: the mode selected in the “Multi-Sense” menu may affect the massage configuration (please refer to the information in “Multi-Sense” in Section 3).

Settings

Using the multifunction screen, select menu “Vehicle”, “Seats” then “Settings”.

You can activate or deactivate the following elements:

– easy driver access;

– easy passenger access;

– Courtesy for passenger;

– visual feedback of current movement.

Easy driver and passenger access

Press “ON” or “OFF” to activate or deactivate this function.

When this function is activated, the seat automatically moves back when the driver or passenger leaves the vehicle, and returns to its position when the start button is pressed.

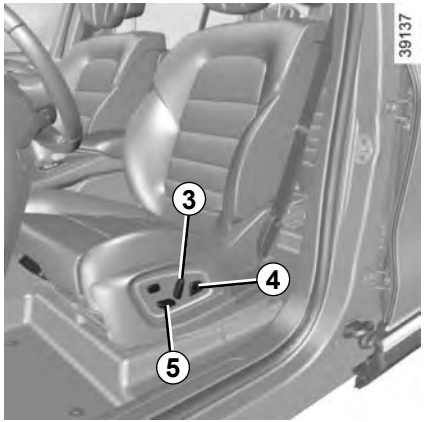

Courtesy for passenger

Press “ON” or “OFF” to activate or deactivate this function.

When this function is activated, the driver can adjust the passenger seat using switches ***3***, ***4*** and ***5***.

Position

It is possible to store the driving position of the driver seat.

The driving position includes the settings for the seat base and seatback as well as the door mirrors.

The driving position can be stored and recalled by pressing the buttons:
– RENAULT hands-free card detected;
– when the driver's door is opened.

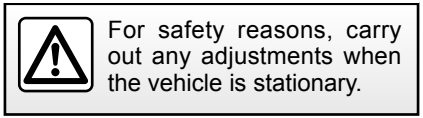

For safety reasons, carry out any adjustments when the vehicle is stationary.

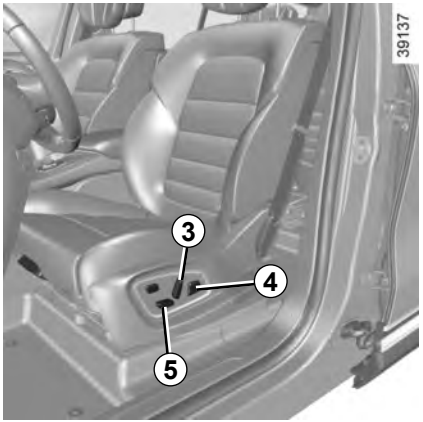

Storing your driving position

– adjust the driver seat using switches ***3***, ***4*** and ***5*** (refer to previous page);
– adjust the door mirrors;
– from the multifunction screen, select menu "Vehicle", "Seats", "Settings" then "Position" and select "Save".

The positions of the door mirrors when driving forwards, in reverse and of the driver seat are saved.

Recalling the driving position

With the vehicle at a standstill, using the multifunction screen, select menu "Vehicle", "Seats", "Settings" then "Position", select "Recall" and confirm.

Note: recall of the saved driving position is interrupted if one of the seat adjustment buttons is pressed during recall.

When driving, it is not possible to recall a driving position.

Always wear your seat belt when travelling in your vehicle. You must also comply with the legislation of the particular country you are in.

Make sure that the rear seats are locked in position properly so that the rear seat belts will operate efficiently. Refer to the information on “rear seat functions” and “adjusting the rear seats” in Section 3.

Seat belts which are incorrectly adjusted or twisted may cause injuries in the event of an accident.

Use one seat belt per person, whether child or adult.

Even pregnant women should wear a seat belt. In this case, ensure that the lap belt is not exerting too much pressure on the abdomen, but do not allow any slack.

Before starting, first adjust your driving position, then ask all occupants to adjust their seat belts to ensure optimum protection.

Adjusting your driving position

- **Sit well back in your seat** (having first removed your coat or jacket). This is essential to ensure your back is positioned correctly;
- **adjust the distance between the seat and the pedals.** Your seat should be as far back as possible while still allowing you to depress the clutch pedal fully. The seatback should be adjusted so that your arms are slightly bent when you hold the steering wheel;
- **adjust the position of your headrest.** For maximum safety, your head must be as close as possible to the headrest;
- **adjust the height of the seat.** This adjustment allows you to select the seat position which offers you the best possible view;
- **adjust the position of the steering wheel.**

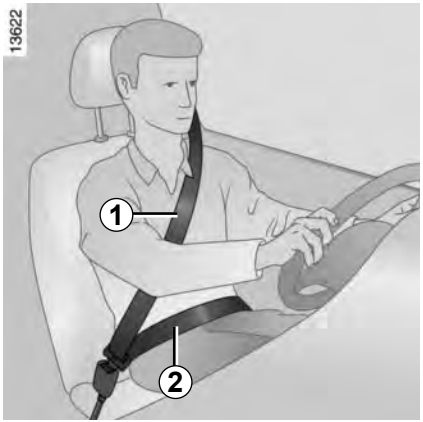

Adjusting the seat belts

Sit with your back firmly against the seatback.

Shoulder strap ***1*** should be as close as possible to the base of the neck but not on it.

Lap belt ***2*** should be worn flat over the thighs and against the pelvis.

The belt should be worn so that it is as close as possible to your body, ie.: avoid wearing heavy clothing or keeping bulky objects under the belts, etc.

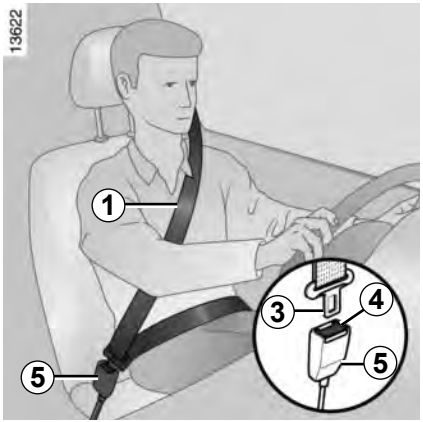

Locking

Unwind the belt **slowly and smoothly** and ensure that buckle ***3*** locks into catch ***5*** (check that it is locked by pulling on buckle ***3***).
If the belt jams, allow it to return slightly before attempting to unwind it again.
If your seat belt is completely jammed, pull slowly, but firmly, so that just over 3 cm unwinds. Allow it to return slightly before attempting to unwind it again.
If there is still a problem, contact an approved dealer.

Driver's seat belt reminder and, depending on the vehicle, front passenger seat belt reminder

This lights up on the interior rear-view mirror when starting the engine then, if the driver's or front passenger's seat belt (if this seat is occupied) is not fastened and the vehicle has reached approximately 12 mph (20 km/h), it flashes and a bleep sounds for around 120 seconds.
Note: an object placed on the passenger seat base may activate the warning light in some cases.

Rear seat belt reminder (depending on vehicle)

Warning light lights up on the instrument panel, accompanied by the graphic ***6*** for approximately 30 seconds each time the vehicle is started, a door is opened or a rear seat belt is fastened or unfastened.

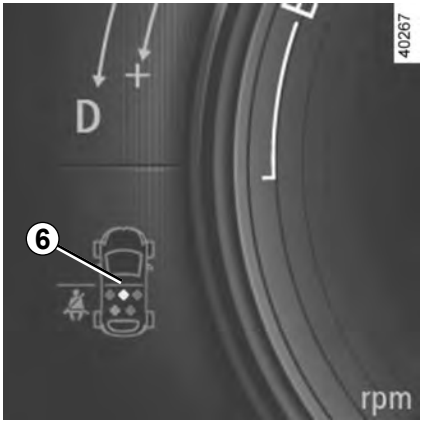

Check that the rear passengers are wearing seat belts and that the number of seat belts shown as fastened corresponds to the number of rear seat places occupied.

On the graphic ***6***:
– marker in green: seat belt fastened;
– marker in red: seat belt unfastened.

Unfastening

Press button ***4*** and the seat belt will be rewound by the inertia reel. Guide the belt.

Adjusting the height of the front seat belts

Use button ***7*** to adjust the seat belt height so that the shoulder strap is worn as shown previously. Press the button ***7*** and raise or lower the seat belt. Make sure that the seat belt is locked in position correctly after you have adjusted it.

The following information applies to the vehicle's front and rear seat belts.

– No modification may be made to the component parts of the originally fitted restraint system: belts, seats and their mountings. For special operations (e.g. fitting child seats) contact an authorised dealer.

– Do not use devices which allow any slack in the belts (e.g. clothes pegs, clips, etc.): a seat belt which is worn too loosely may cause injury in the event of an accident.

– Never wear the shoulder strap under your arm or behind your back.

– Never use the same belt for more than one person and never hold a baby or child on your lap with your seat belt around them.

– The belt should never be twisted.

– Following an accident, have the seat belts checked and replaced if necessary. Always replace your seat belts as soon as they show any signs of wear.

– Make sure that the buckle is inserted into the appropriate catch.

– Ensure that no objects are placed in the area around the seat belt catch as they could prevent it from being properly secured.

– When refitting the rear seats, make sure the seat belts are correctly positioned so that they can be used correctly.

– Make sure the seat belt catch is properly positioned (it should not be hidden away, crushed or flattened by people or objects).

Second row rear side seats

Slowly unwind belt ***1***.

Click the sliding buckle ***2*** into the corresponding red catch ***3***.

Second row centre rear seat

Unwind belt ***5*** slowly from its housing ***4***.

Click buckle ***9*** into black catch ***8***.

Snap the last sliding buckle ***6*** into the red catch ***7***.

To store the seat belt, push it into the housing ***4*** and put the two buckles in their respective locations ***A*** and ***B***.

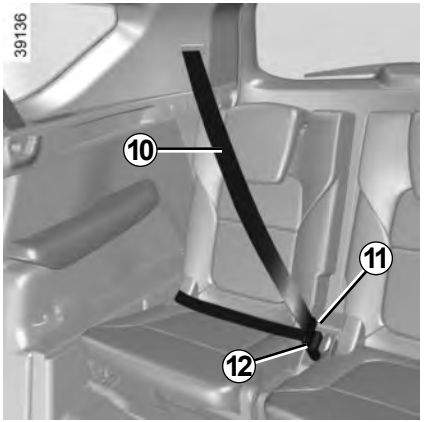

Third row rear seats (7-seater versions)

Slowly unwind the strap ***10***.

Click the buckle ***11*** into the corresponding black catch ***12***.

Rear seat functions

Refer to the information on “Rear seat functions” in Section 3.

Check that the rear seat belts are positioned and operating correctly each time the rear seats are moved.

METHODS OF RESTRAINT IN ADDITION TO THE FRONT SEAT BELTS (1/4)

Depending on the vehicle, they are composed of:

- **seat belt inertia reel pretensioners;**
- **central seat belt pretensioners;**
- **chest-level load limiter;**
- **air bags for driver and front passenger.**

These systems are designed to act independently or together when the vehicle is subjected to a frontal impact.

Depending on the severity of the impact, the system can trigger:

- seat belt locking;
- the seat belt inertia reel pretensioner (which engages to correct seat belt slack);
- the lap belt pretensioners to hold the occupant in his seat;
- the front airbag.

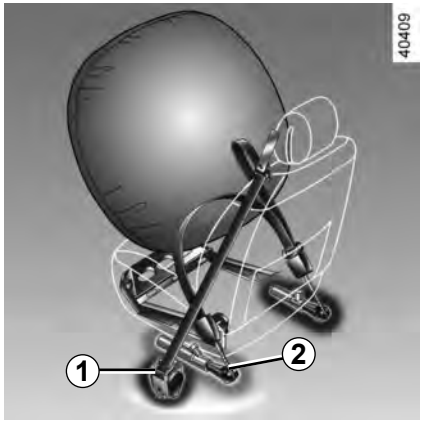

Pretensioners

The pretensioners hold the seat belt against the body, holding the occupant more securely against the seat, thus increasing the seat belt's efficiency.

In the event of a severe frontal impact and if the ignition is switched on, the system may engage the following depending on the force of the impact:

- the seat belt inertia reel pretensioner ***1*** which instantly retracts the seat belt;
- the lap pretensioner ***2*** on the front seats.

- Have the entire restraint system checked following an accident.
- No operation whatsoever is permitted on any part of the system (pretensioners, air bags, computers, wiring) and the system components must not be reused on any other vehicle, even if identical.
- To avoid incorrect triggering of the system which may cause injury, only qualified personnel from an approved Dealer may work on the pretensioner and air bag system.
- The electric trigger system may only be tested by a specially trained technician using special equipment.
- When the vehicle is scrapped, contact an approved Dealer for disposal of the pretensioner and air bag gas generators.

Load limiter

Above a certain severity of impact, this mechanism is used to limit the force of the belt against the body so that it is at an acceptable level.

airbags for driver and passenger

Fitted to the driver and passenger side.

The presence of this equipment is indicated by the word “Air bag” on the steering wheel and dashboard (air bag zone ***A***) and, depending on the vehicle, a symbol on the lower section of the windscreen.

Each air bag system consists of:

– an air bag and gas generator fitted on the steering wheel for the driver and in the dashboard for the front passenger;

– an electronic unit for system monitoring which controls the gas generator electrical trigger system;

– remote sensors;

– a single warning light on the instrument panel.

The air bag system uses pyrotechnic principles. This explains why, when the air bag inflates, it will generate heat, produce smoke (this does not mean that a fire is about to start) and make a noise upon detonation. In a situation where an air bag is required, it will inflate immediately and this may cause some minor, superficial grazing to the skin or other problems.

Operation

This system is only operational when the ignition is switched on.

In a severe frontal impact, the air bags inflate rapidly, cushioning the impact of the driver's head and chest against the steering wheel and of the front passenger against the dashboard. The air bags then deflate immediately so that the passengers are not in any way hindered from leaving the vehicle.

Operating faults

This warning light comes on when the engine is started and then goes out after approximately three seconds.

If it does not come on when the ignition is switched on or if it stays on, there is a fault in the system.

Contact your approved Dealer as soon as possible.

Your protection will be reduced until this fault is rectified.

METHODS OF RESTRAINT IN ADDITION TO THE FRONT SEAT BELTS (4/4)

All of the warnings below are given so that the air bag is not obstructed in any way when it is inflated and also to prevent the risk of serious injuries caused by items which may be dislodged when the air bag inflates.

Warnings concerning the driver's air bag

– Do not modify the steering wheel or the steering wheel boss.

– Do not cover the steering wheel boss under any circumstances.

– Do not attach any objects (badge, logo, clock, telephone holder, etc.) to the steering wheel boss.

– The steering wheel must not be removed (except by qualified personnel from our Network).

– Do not sit too close to the steering wheel when driving: Sit with your arms slightly bent (see the information on "Adjusting your driving position" in Section 1). This will allow sufficient space for the air bag to deploy correctly and to be fully effective.

Warnings concerning the passenger air bag

– Do not attach or glue any objects (badge, logo, clock, telephone holder, etc.) to the dashboard on or near the air bag.

– Do not place anything between the dashboard and the passenger (pet, umbrella, walking stick, parcels, etc.).

– The passenger must not put his or her feet on the dashboard or seat as there is a risk that serious injuries may be sustained. In general, parts of the body should be kept away from the dashboard (knees, hands, head, etc.)

– The devices in addition to the front passenger seat belt should be reactivated as soon as a child seat is removed, to ensure the protection of the passenger in the event of an impact.

A REAR-FACING CHILD SEAT MUST NOT BE FITTED TO THE FRONT PASSENGER SEAT UNLESS THE ADDITIONAL RESTRAINT SYSTEMS, I.E. THE PASSENGER AIR BAG, ARE DEACTIVATED.

(refer to the information on "Child safety: deactivating/activating the front passenger air bag" in Section 1)

Force limiter

Above a certain severity of impact, this mechanism is used to limit the force of the belt against the body so that it is at an acceptable level.

– Have the entire restraint system checked following an accident.

– No operation whatsoever is permitted on any part of the system (air bags, electronic control units, wiring) and the system components must not be reused on any other vehicle, even if identical.

– Only qualified personnel from our Network may work on the air bags; otherwise the system may trigger accidentally and cause injury.

SIDE PROTECTION DEVICES

Side air bags

These air bags are fitted to the front seats and are activated at the sides of the seats (door side) to protect the occupants in the event of a severe side impact.

Curtain air bags

These are airbags fitted along the sides of the vehicle in the ceiling which trigger along the front and rear door side windows to protect the passengers in case of a severe side impact.

Depending on the vehicle, a marking on the windscreen informs you of the presence of additional means of restraint (airbags, pretensioners, etc.) in the passenger compartment.

Warning concerning the side air bag

– **Fitting seat covers:** seats equipped with an air bag require covers specifically designed for your vehicle. Contact an approved Dealer to find out if these covers are available. The use of any covers other than those designed for your vehicle (including those designed for another vehicle) may affect the operation of the air bags and reduce your protection.

– Do not place any accessories, objects or even pets between the seatback, the door and the internal fittings. Do not cover the seatback with any items such as clothes or accessories. This may prevent the air bag from operating correctly or cause injury when the air bag is deployed.

– No work or modification whatsoever may be carried out on the seat or internal fittings, except by qualified personnel from an approved dealer.

ADDITIONAL METHODS OF RESTRAINT

All of the warnings below are given so that the airbag is not obstructed in any way when it is inflated and also to prevent the risk of serious injuries caused by items which may be dislodged when it inflates.

The airbag is designed to complement the action of the seat belt. Both the air bags and seat belts are integral parts of the same protection system. It is therefore essential to wear seat belts at all times. If seat belts are not worn, the occupants are exposed to the risk of serious injury in the event of an accident. It may also increase the risk of minor superficial injuries occurring when the airbag is deployed, although such minor injuries are always possible with air bags.

If the vehicle should overturn or in the event of a rear impact, however severe, the pretensioners and airbags are not always triggered. Impacts to the underside of the vehicle, e.g. from pavements, potholes or stones, can all trigger these systems.

– No work or modification **whatsoever** may be carried out on any part of the airbag system (airbags, pretensioners, computer, wiring harness, etc.), except by qualified Network personnel.

– To ensure that the system is in good working order and to avoid accidental triggering of the system which may cause injury, only qualified Network personnel may work on the airbag system.

– As a safety precaution, have the airbag system checked if your vehicle has been involved in an accident, or is stolen or broken into.

– When selling or lending the vehicle, inform the user of these points and hand over this handbook with the vehicle.

– When scrapping your vehicle, contact your approved Dealer for disposal of the gas generator(s).

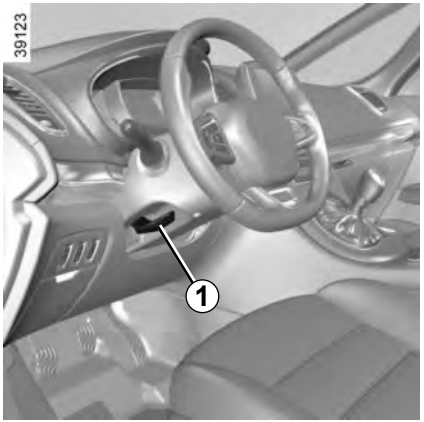

Adjusting the steering wheel height and depth

Lower the lever ***1*** and position the steering wheel in the required position.

Then, raise the lever fully, beyond the point of resistance to lock the steering wheel.

Make sure that the steering wheel is correctly locked.

For safety reasons, only adjust the steering wheel when the vehicle is stationary.

Power-assisted steering

Variable power-assisted steering

The variable power assisted steering system is equipped with an electronic control system which alters the level of assistance to suit the vehicle speed.

Steering is made easier during parking manoeuvres (for added comfort) while the force needed to steer increases progressively as the speed rises (for enhanced safety at high speeds).

Stop and Start feature

With the engine on standby, power-assisted steering is no longer operational. It returns to its original state when the engine is restarted or when the speed moves above 1 mph or 1 km/h (hill, slope, etc.).

Engine on standby - power-assisted steering is no longer operational.

NB: power-assisted steering depends on the mode selected in the “Multi-Sense” menu (please refer to the information in “Multi-Sense” in Section 3).

Never leave the steering wheel at full lock while stationary.

With the engine switched off, or if there is a system fault, it is still possible to turn the steering wheel. The force required will be greater.

Do not switch off the engine when driving downhill and, as a general rule, when driving (the power-assisted steering and brake cannot operate normally).

Carrying children

Children, and adults, must be correctly seated and strapped in for all journeys. The children being carried in your vehicle are your responsibility.

A child is not a miniature adult. Children are at risk of specific injuries as their muscles and bones have not yet finished growing. The seat belt alone would not provide suitable protection. Use an approved child seat and ensure you use it correctly.

To prevent the doors being opened, use the “Child safety” device (refer to the information on “Opening and closing the doors” in Section 1).

A collision at 30 mph (50 km/h) is the same as falling a distance of 10 metres.
Transporting a child without a restraint is the equivalent of allowing him or her to play on a fourth-floor balcony without railings.
Never travel with a child held in your arms. In the event of an accident, you will not be able to keep hold of the child, even if you yourself are wearing a seat belt.
If your vehicle has been involved in a road accident, replace the child seat and have the seat belts and ISOFIX anchorage points checked.

Driver’s responsibility when parking or stopping the vehicle

Never leave an animal, child or adult who is not self-sufficient alone on your vehicle, even for a short time.

They may pose a risk to themselves or to others by starting the engine, activating equipment such as the electric windows or by locking the doors.

Also, in hot and/or sunny weather, please remember that the temperature inside the passenger compartment increases very quickly.

RISK OF DEATH OR SERIOUS INJURY.

Using a child seat

The level of protection offered by the child seat depends on its ability to restrain your child and on its installation. Incorrect installation compromises the protection it offers the child in the event of harsh braking or an impact.

Before purchasing a child seat, check that it complies with the regulations for the country you are in and that it can be fitted in your vehicle. Consult an approved dealer to find out which seats are recommended for your vehicle.

Before fitting a child seat, read the manual and respect its instructions. If you experience any difficulties during installation, contact the manufacturer of the equipment. Keep the instructions with the seat.

Set a good example by always fastening your seat belt and teaching your child:
- to strap themselves in correctly;
- to always get in and out of the car at the kerb, away from busy traffic.

Do not use a second-hand child seat or one without an instruction manual.

Check that there are no objects in the vicinity of the child seat which could impede its operation.

Never leave a child unattended in the vehicle.

Check that your child is always strapped in and that the belt or safety harness used is correctly set and adjusted. Avoid wearing bulky clothing which could cause the belts to slacken.

Never let your child put their head or arms out of the window.

Check that the child is in the correct position for the entire journey, especially if asleep.

Rear-facing child seats
A baby's head is, proportionally, heavier than that of an adult and its neck is very fragile. Transport the child in this position for as long as possible (until the age of 2 at the very least). It supports both the head and the neck.
Choose a bucket type seat for best side protection and change it as soon as the child's head is higher than the shell.

Forward-facing child seats
The child's head and abdomen need to be protected as a priority. A forward-facing child seat which is firmly attached to the vehicle will reduce the risk of impact to the head. Ensure your child travels in a forward-facing seat with a harness for as long as their size permits.
Choose a bucket type seat for optimum side protection.

Booster cushions
From 15 kg or 4 years, the child can travel using a booster seat, which will enable the seat belt to be adapted to suit his/her size and shape. The booster seat cushion must be fitted with guides to position the seat belt on the child's thighs rather than the stomach. It is recommended that you use a seat-back fitted with a belt strap guide which can be adjusted in terms of height to position the seat belt in the centre of the shoulder. It must never rest on the neck or on the arm.
Choose a bucket type seat for optimum side protection.

CHILD SAFETY: choosing a child seat mounting (1/3)

There are two ways of attaching child seats: via the seat belt or using the ISOFIX system.

Attachment via the seat belt

The seat belt must be adjusted to ensure that it is effective in the event of harsh braking or an impact.

Ensure that the strap paths indicated by the child seat manufacturer are respected.

Always check that the seat belt is correctly fastened by pulling it up, then pulling it out fully whilst pressing on the child seat.

Check that the seat is correctly held by moving it from side to side and back to front: the seat should remain firmly fixed.

Check that the child seat has not been installed at an angle and that it is not resting against a window.

Do not use the child seat if it may unfasten the seat belt restraining it: the base of the seat must not rest on the buckle and/or catch of the seat belt.

The seat belt must never be twisted or the tension relieved. Never pass the shoulder strap under the arm or behind the back.
Check that the seat belt has not been damaged by sharp edges.
If the seat belt does not operate normally, it will not protect the child. Consult an approved dealer. Do not use this seat until the seat belt has been repaired.

Attachment using the ISOFIX **system**

Approved child seats ISOFIX are standardised in accordance with current regulations if any of the four cases below applies:

– ISOFIX universal 3-point forward-facing seat;

– ISOFIX semi-universal 2-point seat;

– Specific;

– i-Size Which has:
  – either a belt which attaches to the third ring of the seat concerned;
  – or a stay that rests on the vehicle floor, compatible with the approved seat i-Size, the role of which is to prevent the child seat from moving in the event of a collision.

In the latter three cases check that your child seat can be installed by consulting the list of compatible vehicles.

Attach the child seat with the ISOFIX locks, if these are provided. The ISOFIX system allows quick, easy, safe fitting.

The ISOFIX system consists of 2 rings and, in some cases, a third ring.

No modifications may be made to the component parts of the restraint system (ISOFIX seat belts, seats and their mountings) originally fitted.

Before using an ISOFIX child seat that you purchased for another vehicle, check that its installation is authorised. Consult the list of vehicles which can be fitted with the seat from the equipment manufacturer.

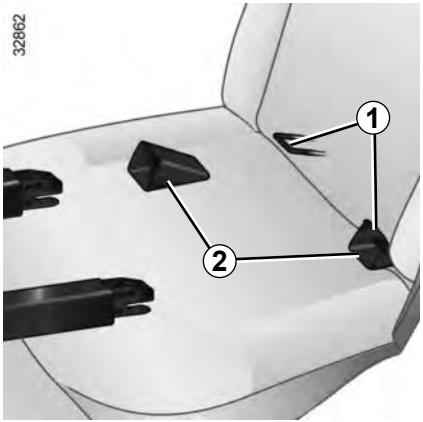

Attachment using the ISOFIX system (continued)
The two rings ***1*** are located between the seatback and the seat base of the seat and are identified by a marking.
To ensure your child seat can be easily fitted and locked on the rings ***1***, use access guides ***2*** on the child seat.

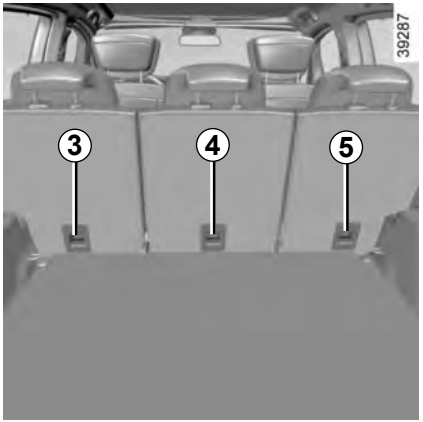

The third ring ***3***, ***4*** or ***5*** is used to attach the upper strap on some seats ISOFIX.

The rings are located on the rear seat-backs and indicated by the symbol .

In all cases, attach the strap hook to the corresponding ring (***3*** and ***5*** for the rear side seats and ***4*** for the rear centre seat) and place the seat in the desired position.

Pull the belt so that the back of the child seat comes into contact with the back of the vehicle seat.

Check that the seatback of the forward-facing child seat is in contact with the seatback of the vehicle seat. In this case, the child seat may not always rest on the seat base of the vehicle seat.

The ISOFIX anchorage points have been exclusively designed for child seats with the ISOFIX system. Never fit a different type of child seat, seat belt or other objects to these anchorage points. Check that nothing is obstructing the anchorage points.

If your vehicle has been involved in a road accident, have the ISOFIX anchorage points checked and replace your child seat.

The child seat strap **must** be attached to the corresponding ring.

Do not use any other mounting point.

CHILD SAFETY: fitting a child seat, general information (1/2)

Some seats are not suitable for fitting child seats. The diagram on the following page shows you how to attach a child seat.

Fit the child seat in a rear seat wherever possible.

Make sure that the child seat or the child's feet do not prevent the front seat from locking correctly. Refer to the information on the "Front seat" in Section 1.

Check that when installing the child seat in the vehicle it is not at risk of coming loose from its base.

If you have to remove the headrest, check that it is correctly stored so that it does not come loose under harsh braking or impact.

Always attach the child seat to the vehicle even if it is not in use so that it does not come loose under harsh braking or impact.

The types of child seat indicated may not be available. Before using a different child seat, check with the manufacturer that it can be fitted.

In the front seat

The laws concerning children travelling in the front passenger seat differ in every country. Consult the legislation in force and follow the indications on the diagram on the following page.

Before fitting a child seat in this seat (if authorised):
- lower the seat belt as far as possible;
- move the seat as far back as possible;
- gently tilt the seatback away from vertical (approximately 25°);
- on equipped vehicles, raise the seat base as far as possible.

In all situations, reinsert the headrest to its full extent so that it does not interfere with the child seat (see the information on "Front headrests" in Section 1);

After installing the child seat, if necessary, the seat may be advanced (so as to leave enough space in the rear seats for passengers or other child seats). For a rear-facing child seat, do not let it touch the dashboard or move it to the furthest forward position.

Do not change other settings after installing the child seat.

RISK OF DEATH OR SERIOUS INJURY: before fitting a rear-facing child seat to this seat, check that the air bag has been deactivated (refer to the information on "Child safety: deactivating/activating the front passenger air bag" in Section 1).

In the rear seat

A carrycot can be installed across the vehicle and will take up at least two seats. Position the child with his or her feet nearest the door.

Move the front seat as far forward as possible to install a rear-facing child seat, then move back the seat in front as far as it will go, although without allowing it to come into contact with the child seat.

For the safety of the child in the forward-facing position:
– move the relevant seat backwards as far as possible;
– move the seat in front of the child forwards, and set the position of the seatback to avoid contact between the seat and the child's legs.

Always remove the headrest from the rear seat used for the child seat (see "Rear headrests" in Section 3). If necessary, position the vehicle seat as far back as possible. This must be done before fitting the child seat.
Check that the child seat is resting against the back of the vehicle seat.

For 7-seater vehicles, the second row rear seats must be pushed forward before a child is seated in the third row rear seats.

For 7-seater vehicles, a child seat with a stay should never be installed on the third row rear seats.

Ensure that the child seat or the child's feet do not prevent the front seat from locking correctly. Refer to the information on the "Front seat" in Section 1 or "Rear seat operation" in Section 3.

When fitting a child seat (Group 2 or 3 booster seat), check that the seat belts operate (wind) correctly: refer to Section 1 "Rear seat belts". If necessary, adjust the position of the vehicle seat.

The floor of your vehicle has storage spaces. Before installing a child seat with a floor support, ensure that this seat can be correctly installed by consulting the list of compatible vehicles supplied with the child seat.

Risk of serious injury in the event of sudden braking or accident.

CHILD SEATS: attachment by seat belt (1/6)

Visual installation of the five-seater version

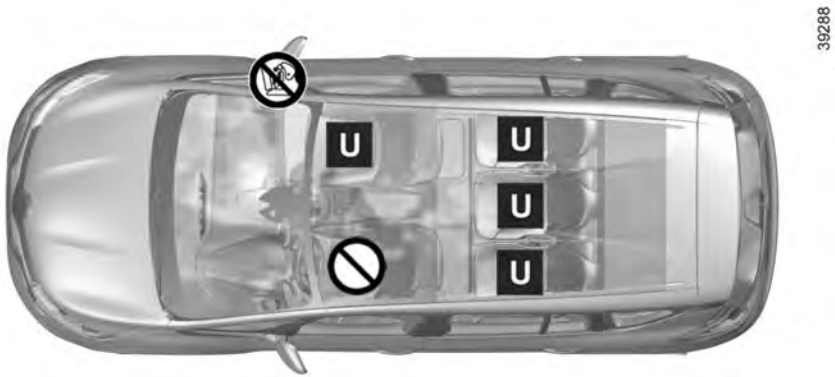

Check the status of the airbag before fitting a child seat or allowing a passenger to use the seat.

Seat not suitable for fitting child seats.

Child seat attached using the belt

U Seat which allows a child seat with “Universal” approval to be attached by a seat belt.

RISK OF DEATH OR SERIOUS INJURY: Before installing a child seat on the front passenger seat, check that the airbag has been deactivated (please refer to “Child safety: front passenger airbag deactivation and activation” in Section 1).

Using a child safety system which is not approved for this vehicle will not correctly protect the baby or child. They risk serious or even fatal injury.

CHILD SEATS: attachment by seat belt (2/6)

The table below summarises the information already shown on the diagram on the previous page, to ensure the applicable regulations are respected.

Five-seater version				
Type of child seat	**Weight of the child**	**Front passenger seat (1)**	**Rear side seats**	**Rear centre seat**
Carrycot fitted across the vehicle Group 0	< 10 kg	X	U (2)	X
Rear-facing shell seat Groups 0 or 0 +	< 10 kg and < 13 kg	U (5)	U (3)	U (3)
Shell seat/rear-facing seat Groups 0+ and 1	< 13 kg and 9 to 18 kg	U (5)	U (3)	U (3)
Forward-facing seat Group 1	9 to 18 kg	X	U (3) (4)	U (3) (4)
Booster seat Groups 2 and 3	15 to 25 kg and 22 to 36 kg	X	U (3) (4)	U (3) (4)

(1) RISK OF DEATH OR SERIOUS INJURY: Before installing a child seat on the front passenger seat, check that the airbag has been deactivated (please refer to “Child safety: front passenger airbag deactivation and activation” in Section 1).

CHILD SEATS: attachment by seat belt (3/6)

X = Seat not suitable for fitting child seats of this type.

U = Seat which allows a child seat with “Universal” approval to be installed using a seat belt; check that it can be fitted.

(2) A carrycot can be installed across the vehicle and will take up at least two seats. Position the child with his or her feet nearest the door.

(3) If necessary, position the vehicle seat as far back as possible. Move the front seat as far forward as possible to install a rear-facing child seat, then move back the seat in front as far as it will go, although without allowing it to come into contact with the child seat.

(4) In all situations, remove the rear headrest of the seat on which the child seat is positioned. This must be done before fitting the child seat. Please refer to the information on the “Rear headrests” in Section 3. Move the seat in front of the child forwards, move the seatback forward to avoid contact between the seat and the child’s legs.

(5) Raise the seat to the maximum and position it as far back as possible, tilting the seatback slightly (approximately 25°).

CHILD SEATS: attachment by seat belt (4/6)

The table below summarises the information already shown in the diagram on the following pages, to ensure the applicable regulations are respected.

Seven-seat version					
Type of child seat	**Weight of the child**	**Front passenger seat (1)**	**Row 2 rear side seats**	**Row 2 rear centre seat**	**Row 3 rear centre seat (5)**
Carrycot fitted across the vehicle Group 0	< 10 kg	X	U (2)	X	U
Rear-facing shell seat Groups 0 or 0 +	< 10 kg and < 13 kg	U (6)	U (3)	U (3)	U
Shell seat/rear-facing seat Groups 0+ and 1	< 13 kg and 9 to 18 kg	U (6)	U (3)	U (3)	U
Forward-facing seat Group 1	9 to 18 kg	X	U (3) (4)	U (3) (4)	U
Booster seat Groups 2 and 3	15 to 25 kg and 22 to 36 kg	X	U (3) (4)	U (3) (4)	U

(1) RISK OF DEATH OR SERIOUS INJURY: Before installing a child seat on the front passenger seat, check that the airbag has been deactivated (please refer to “Child safety: front passenger airbag deactivation and activation” in Section 1).

CHILD SEATS: attachment by seat belt (5/6)

X = Seat not suitable for fitting child seats of this type.

U = Seat which allows a child seat with “Universal” approval to be installed using a seat belt; check that it can be fitted.

(2) A carrycot can be installed across the vehicle and will take up at least two seats. Position the child with his or her feet nearest the door.

(3) If necessary, position the vehicle seat as far back as possible. Move the front seat as far forward as possible to install a rear-facing child seat, then move back the seat in front as far as it will go, although without allowing it to come into contact with the child seat.

(4) In all situations, remove the rear headrest of the seat on which the child seat is positioned. This must be done before fitting the child seat. Please refer to the information on the “Rear headrests” in Section 3. Move the seat in front of the child forwards, move the seatback forward to avoid contact between the seat and the child’s legs.

(5) Push the seat(s) in front of the child in a third row seat as far forward as possible.

(6) Raise the seat to the maximum and position it as far back as possible, tilting the seatback slightly (approximately 25°).

CHILD SEATS: attachment by seat belt (6/6)

Installation diagram, 7-seater version

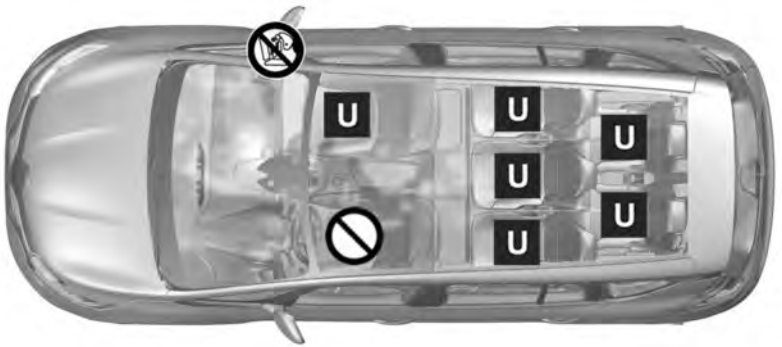

Check the status of the airbag before fitting a child seat or allowing a passenger to use the seat.

Seat not suitable for fitting child seats.

Child seat attached using the belt

U Seat which allows a child seat with “Universal” approval to be attached by a seat belt.

RISK OF DEATH OR SERIOUS INJURY: Before installing a child seat on the front passenger seat, check that the airbag has been deactivated (please refer to “Child safety: front passenger airbag deactivation and activation” in Section 1).

Using a child safety system which is not approved for this vehicle will not correctly protect the baby or child. They risk serious or even fatal injury.

Visual installation of the five-seater version

Seat which does not allow a child seat to be fitted.

Using a child safety system which is not approved for this vehicle will not correctly protect the baby or child. They risk serious or even fatal injury.

Child seat fitted using the ISOFIX mounting

Seat which allows an ISOFIX child seat to be fitted.

The rear seats are fitted with an anchorage point which allows a forward-facing ISOFIX child seat with universal approval to be attached. The anchorage points are located on the backs of the rear seats.

The size of the ISOFIX child seat is indicated by a letter:

– A, B and B1: for forward-facing seats in group 1 (9 to 18 kg);

– C and D: shell seat or rear-facing seats in group 0+ (less than 13 kg) or group 1 (9 to 18 kg);

– E: rear-facing shell seats in group 0 (less than 10 kg) or 0+ (less than 13 kg);

– F and G: cots in group 0 (less than 10 kg).

CHILD SEATS: attachment using the ISOFIX system (2/6)

The table below summarises the information already shown on the diagram on the previous page, to ensure the regulations in force are respected.

Five-seater version					
Type of child seat	**Weight of the child**	**Seat size ISOFIX**	**Front passenger seat**	**Rear side seats**	**Rear centre seat**
Carrycot fitted across the vehicle Group 0	< 10 kg	F, G	X	X	X
Rear-facing shell seat Groups 0 or 0 +	< 10 kg and < 13 kg	E	X	IL (1)	IL (1)
Shell seat/rear-facing seat Groups 0+ and 1	< 13 kg and 9 to 18 kg	C, D	X	IL (1)	IL (1)
Forward-facing seat Group 1	9 to 18 kg	A, B, B1	X	IUF - IL (1) (2)	IUF - IL (1) (2)
Booster seat Groups 2 and 3	15 to 25 kg and 22 to 36 kg		X	IUF - IL (1) (2)	IUF - IL (1) (2)

Seat i-Size			X	i-U	i-U

CHILD SEATS: attachment using the ISOFIX system (3/6)

X = Seat not suitable for fitting child seats ISOFIX.

IUF/IL = On equipped vehicles, seat which allows an approved “Universal/semi-universal” or “vehicle specific” child seat to be attached using the ISOFIX system; check that it can be fitted.

i-U = Suitable for the i-Size restraint devices in the “universal” forward-facing and backward-facing category.

(1) If necessary, position the vehicle seat as far back as possible. Move the front seat as far forward as possible to install a rear-facing child seat, then move back the seat in front as far as it will go, although without allowing it to come into contact with the child seat.

(2) In all situations, remove the rear headrest of the seat on which the child seat is positioned. This must be done before fitting the child seat. Please refer to the information on the “Rear headrests” in Section 3. Move the seat in front of the child forwards, move the seatback forward to avoid contact between the seat and the child’s legs.

CHILD SEATS: attachment using the isofix system (4/6)

The table below summarises the information already shown in the diagram on the following pages, to ensure the applicable regulations are respected.

Seven-seat version						
Type of child seat	**Weight of the child**	**Seat size ISOFIX**	**Front passenger seat**	**Row 2 rear side seats**	**Row 2 rear centre seat**	**Row 3 rear centre seat (3)**
Carrycot fitted across the vehicle Group 0	< 10 kg	F, G	X	X	X	X
Rear-facing shell seat Groups 0 or 0 +	< 10 kg and < 13 kg	E	X	IL (1)	IL (1)	X
Shell seat/rear-facing seat Groups 0+ and 1	< 13 kg and 9 to 18 kg	C, D	X	IL (1)	IL (1)	X
Forward-facing seat Group 1	9 to 18 kg	A, B, B1	X	IUF - IL (1) (2)	IUF - IL (1) (2)	X
Booster seat Groups 2 and 3	15 to 25 kg and 22 to 36 kg		X	IUF - IL (1) (2)	IUF - IL (1) (2)	X
Seat i-Size			X	i-U	i-U	X

CHILD SEATS: attachment using the isofix system (5/6)

X = Seat not suitable for fitting child seats ISOFIX.

IUF/IL = On equipped vehicles, seat which allows an approved “Universal/semi-universal” or “vehicle specific” child seat to be attached using the ISOFIX system; check that it can be fitted.

i-U = Suitable for the i-Size restraint devices in the “universal” forward-facing and backward-facing category.

(1) If necessary, position the vehicle seat as far back as possible. Move the front seat as far forward as possible to install a rear-facing child seat, then move back the seat in front as far as it will go, although without allowing it to come into contact with the child seat.

(2) In all situations, remove the rear headrest of the seat on which the child seat is positioned. This must be done before fitting the child seat. Please refer to the information on the “Rear headrests” in Section 3. Move the seat in front of the child forwards, move the seatback forward to avoid contact between the seat and the child’s legs.

(3) Push the seat(s) in front of the child in a third row seat as far forward as possible.

Visual installation of seven-seater version

Seat which does not allow a child seat to be fitted.

Using a child safety system which is not approved for this vehicle will not correctly protect the baby or child. They risk serious or even fatal injury.

Child seat fitted using the ISOFIX mounting

Seat which allows an ISOFIX child seat to be fitted.

The rear seats are fitted with an anchorage point which allows a forward-facing ISOFIX child seat with universal approval to be attached. The anchorage points are located on the backs of the rear seats.

The size of the ISOFIX child seat is indicated by a letter:

– A, B and B1: for forward-facing seats in group 1 (9 to 18 kg);

– C and D: shell seat or rear-facing seats in group 0+ (less than 13 kg) or group 1 (9 to 18 kg);

– E: rear-facing shell seats in group 0 (less than 10 kg) or 0+ (less than 13 kg);

– F and G: cots in group 0 (less than 10 kg).

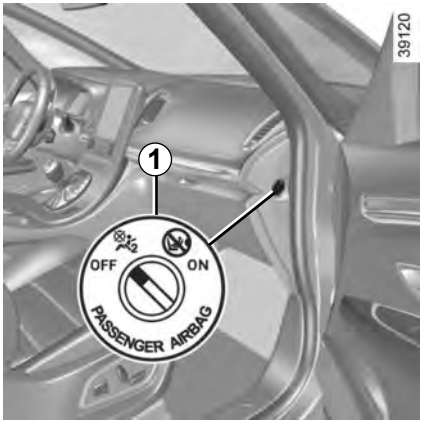

Front passenger air bag deactivation

You **must** deactivate certain devices in addition to the front passenger seat belt before fitting a child seat in the front passenger seat.

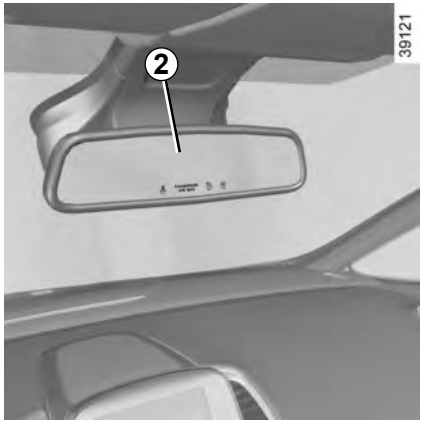

To deactivate the air bag: **when the vehicle is stationary**, push and turn lock ***1*** to the OFF position.

With the ignition on, you **must** check that the warning light on the rear-view mirror ***2*** is switched on.

This light remains permanently lit to let you know that you can fit a child seat.

The front passenger air bag must only be deactivated or activated when the **vehicle is stationary**.

If it is interfered with when the vehicle is being driven, indicator lights and will come on.

Switch the ignition off then on again to reset the air bag in accordance with the lock position.

DANGER

Since operation of the front passenger airbag is not compatible with the position of a rear-facing child seat, **NEVER** fit a restraint system for a rear-facing child in a seat protected by an **ACTIVATED front AIRBAG**. This can cause the **CHILD'S DEATH** or **SERIOUS INJURY**.

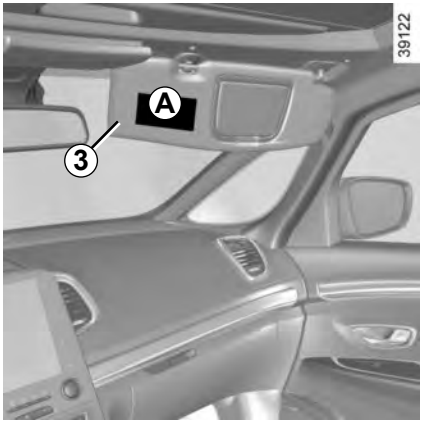

The markings on the dashboard and labels ***A*** on each side of the passenger sun visor ***3*** (example: label shown above) remind you of these instructions.

DANGER

Since operation of the front passenger airbag is not compatible with the position of a rear-facing child seat, **NEVER** fit a restraint system for a rear-facing child in a seat protected by an **ACTIVATED front AIRBAG**. This can cause the **CHILD'S DEATH** or **SERIOUS INJURY**.

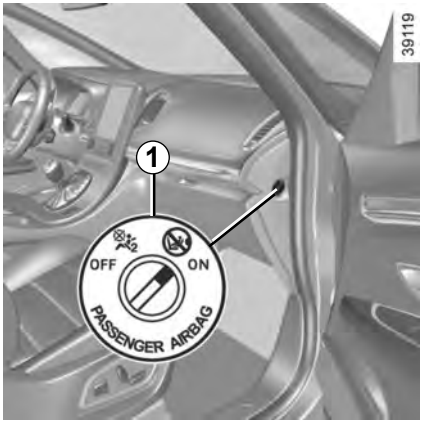

Activation of the front passenger air bag

You should reactivate the air bag as soon as you remove the child seat from the front passenger seat to ensure the protection of the front passenger in the event of an impact.

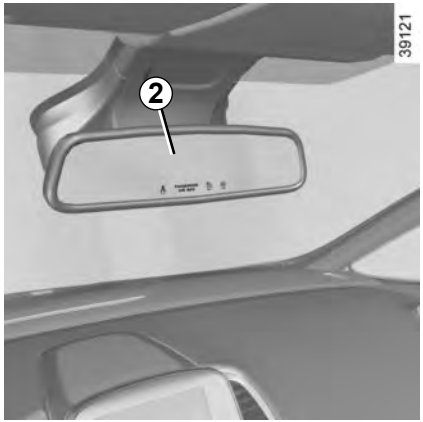

To reactivate the airbags : with the vehicle at a standstill, and the **ignition off**, push and turn lock ***1*** to the **ON** position.

With the ignition on, it is **essential** to check that the warning light is off and that the warning light comes on rear-view mirror ***2*** for about 1 minute after each start-up.

The front passenger seat belt additional restraint systems are activated.

Operating faults

It is forbidden to fit a rear-facing child seat to the front passenger seat if the airbag activation/deactivation system is faulty.

Allowing any other passenger to sit in that seat is not recommended.

Contact your approved dealer as soon as possible.

The front passenger air bag must only be deactivated or activated when the **vehicle is stationary**.

If it is interfered with when the vehicle is being driven, indicator lights and will come on.

Switch the ignition off then on again to reset the air bag in accordance with the lock position.

DRIVING POSITION (1/2)

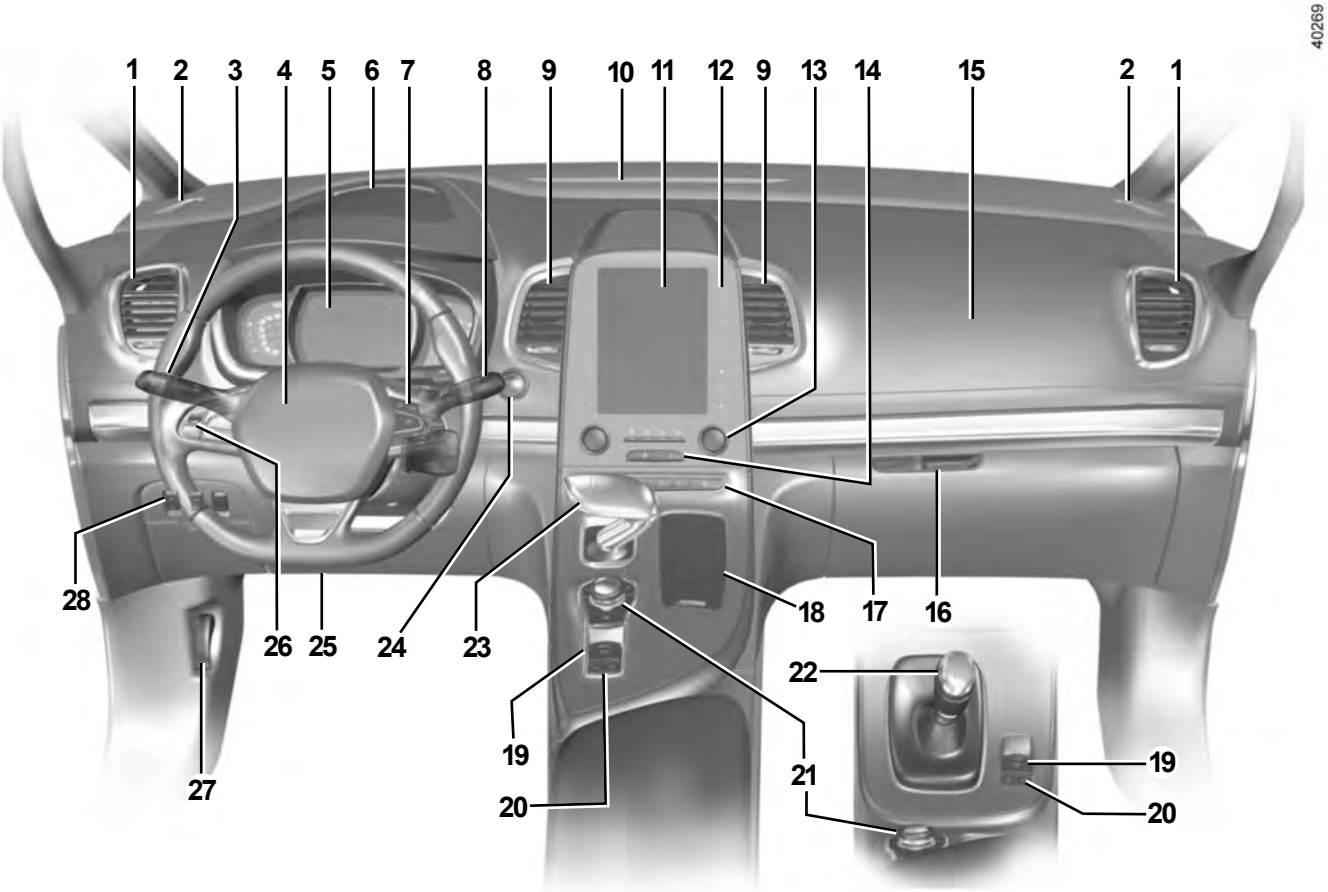

DRIVING POSITION (2/2)

The equipment fitted, described below, DEPENDS ON THE VERSION AND COUNTRY.

1 Side air vent.

2 Side window demister outlet.

3 Stalk for:
- direction indicator lights;
- exterior lights;
- rear fog lights.

4 Driver Airbag and horn location.

5 Instrument panel.

6 Head-up display.

7 Controls for:
- on-board computer information read-out and vehicle settings customisation menu,
- remote radio and navigation system.

8 Steering column stalk for windscreen and rear screen wash/wiper.

9 Centre air vents.

10 Windscreen demister outlet.

11 Multimedia touchscreen.

12 Multifunction screen controls:
- screen activation/deactivation;
- volume;
- welcome menu;
- driving aids menu;
- settings.

13 Heating or air conditioning controls.

14 Switches for:
- hazard warning lights,
- electric door locking.

15 Passenger Airbag location.

16 Storage drawer.

17 Controls for:
- heated front seats,
- activation/deactivation of ECO mode,
- activation/deactivation of assisted parking,
- activation/deactivation of the Stop and Start function.

18 Storage compartment.

19 Assisted parking brake control.

20 Cruise control/speed limiter main control.

21 Central multifunction and Multi-Sense control.

22 Manual gearbox gear lever.

23 Automatic gearbox gear lever.

24 Engine start/stop button.

25 Control for adjusting steering wheel height and reach.

26 Cruise control/speed limiter and adaptive cruise control controls.

27 Bonnet release control.

28 Automatic tailgate opening/closing control.

WARNING LIGHTS (1/6)

The display of information shown below DEPENDS ON THE VEHICLE EQUIPMENT AND COUNTRY.

Instrument panel*A*: lights up when the driver's door is opened.

In some cases, the appearance of a warning light is accompanied by a message.

The warning light means you should **drive very carefully** to an approved dealer as soon as possible. If you fail to follow this recommendation, you risk damaging your vehicle.

Side light warning light

Main beam headlight tell-tale

Dipped beam headlight tell-tale

Rear fog lights tell-tale

Automatic main beam headlight indicator light

Please refer to the information on "External signals and lights" in Section 1.

Warning light STOP requires you to stop immediately, for your own safety, as soon as traffic conditions allow. Switch off the engine and do not restart it. Contact an approved Dealer.

Left-hand direction indicator tell-tale

Right-hand direction indicator tell-tale

Low fuel level warning light

It lights up orange when the ignition or the engine is switched on and goes off after a few seconds.

If it comes on orange while driving and is accompanied by a beep, fill up with fuel as soon as possible. There is only approximately 30 miles (50 km) worth of fuel left.

If no lights or sounds are apparent, this indicates a fault in the instrument panel. This indicates that it is essential to stop immediately (as soon as traffic conditions allow). Ensure that the vehicle is correctly immobilised and contact an approved Dealer.

WARNING LIGHTS (2/6)

The display of information shown below DEPENDS ON THE VEHICLE EQUIPMENT AND COUNTRY.

STOP light

This lights up when the ignition or engine is switched on and goes out as soon as the engine is running. It comes on with other warning lights and/or messages, and is accompanied by a beep.

It requires you to stop immediately, for your own safety, as soon as traffic conditions allow. Switch off the engine and do not restart it.

Contact an approved Dealer.

Brake circuit fault warning light

It lights up when the ignition or the engine is switched on and goes off after a few seconds.

If it comes on during braking and is accompanied by the STOP warning light and a beep, it indicates that the fluid level in the circuit is low or that there is a braking system fault. Stop as soon as traffic conditions allow and contact an authorised dealer.

Battery charge warning light

It lights up when the ignition or the engine is switched on and goes off after a few seconds.

If it comes on on the road, accompanied by the STOP warning light and a beep, this indicates an overload or discharge in the electrical circuit.

Stop as soon as traffic conditions allow and contact an approved Dealer.

Oil pressure warning light

It lights up when the ignition or the engine is switched on and goes off after a few seconds.

If it comes on on the road, accompanied by the STOP warning light and a beep, stop immediately and cut the ignition.

Check the oil level. If the level is normal, the indicator light is being lit by something else. Contact an approved Dealer.

Variable power-assisted steering warning light

It lights up when the ignition or the engine is switched on and goes off after a few seconds.

If it comes on while driving, alongside the warning light STOP, this means there is a system fault.

Contact an authorised dealer.

The display of information shown below DEPENDS ON THE VEHICLE EQUIPMENT AND COUNTRY.

Emergency active brake assist

Refer to the information on “Driving correction devices and aids” in Section 2.

Toxic Fume Filter System Warning Light

On vehicles which are equipped with it, this light comes on when the engine is started and, depending on the vehicle, when the ignition is switched off if the vehicle is in the engine standby phase (refer to the information on the "Stop and Start Function" in section 2) then goes out.

– If it lights up continuously, consult your approved dealer as soon as possible;

– if it flashes, reduce the engine speed until the light stops flashing. Contact your approved Dealer as soon as possible.

Refer to the information on “Advice: antipollution, fuel economy and driving” in Section 2.

ECO mode warning light

This comes on when ECO mode is activated.
Please refer to the information on “Eco-driving” in Section 2.

Anti-lock braking warning light

It lights up when the ignition or the engine is switched on and goes off after a few seconds.
If it lights up when you are driving, it indicates a fault in the anti-lock braking system.
Braking will then be as normal, without the ABS. Contact an approved Dealer as soon as possible.

Coolant temperature warning light

This lights up red when the ignition is switched on or the engine is started.

If it turns red, stop and let the engine idle for a minute or two.

The temperature should drop. Otherwise, stop the engine. Let the engine cool down before checking the coolant.

Contact an approved Dealer.

WARNING LIGHTS (4/6)

The display of information shown below DEPENDS ON THE VEHICLE EQUIPMENT AND COUNTRY.

Preheating warning light (diesel version)

This should come on when the ignition is switched on. It indicates that the heater plugs are in operation.

It goes out when preheating is complete. The engine can be started.

Door(s) open warning light

Rear seat belt reminder (depending on vehicle)

Warning light comes on, accompanied (depending on the vehicle) by a message indicating the number of fastened seat belts on the instrument panel for approximately 30 seconds, each time the vehicle is started, a door is opened or a rear seat belt is fastened/unfastened. Check that the rear passengers are wearing seat belts and that the number of seat belts shown as fastened corresponds to the number of rear seat places occupied.

Gear change indicator

This lights up to advise you to change to a higher gear (up arrow) or lower gear (down arrow).

Please refer to the information on “Driving advice, Eco-driving” in Section 2.

Assisted parking brake fault light

Please refer to the information on the “Assisted parking brake” in Section 2.

Air bag warning light

This warning light will be displayed on the instrument panel when the ignition is switched on or the engine is started, and will then go out after a few seconds.

If it does not come on when the ignition is switched on, or comes on when the engine is running, there is a fault in the system.

Contact your approved Dealer as soon as possible.

Brake pedal warning light

This lights up when the brake pedal should be depressed. Refer to the information on the “Automatic gearbox” in Section 2.

Please refer to the information on “Driving advice, Eco-driving” in Section 2.

Handbrake or electronic parking brake warning light

Refer to the information on the “Assisted parking brake” in Section 2.

WARNING LIGHTS (5/6)

The display of information shown below DEPENDS ON THE VEHICLE EQUIPMENT AND COUNTRY.

Rear seat belt reminder warning light

This comes on for approximately 30 seconds, each time the vehicle is started, a door is opened or a rear seat belt is fastened/unfastened. Please see the information on "Seat belts" in Section 1.

Engine standby warning light

Please see information in the paragraph on “Stop and Start Function” in Section 2.

Unavailability of engine standby warning light

Please see information in the paragraph on “Stop and Start Function” in Section 2.

Speed limiter, cruise control and adaptive cruise control warning lights

Please refer to the information on the “Speed limiter”, “Cruise control” and “Adaptive cruise control” in Section 2.

Tyre pressure monitoring system

Refer to the information on the “Tyre pressure monitoring system” in Section 2.

Emergency active brake assist

Refer to the information on “Driving correction devices and aids” in Section 2.

Warning light

This lights up when the ignition or engine is switched on and goes out as soon as the engine is running. It can light up in conjunction with other warning lights and/or messages on the instrument panel.

It means you should **drive very carefully** to an approved dealer as soon as possible. If you fail to follow this recommendation, you risk damaging your vehicle.

Warning light for electronic stability program (ESC **) and traction control system**

It lights up when the ignition or the engine is switched on and goes off after a few seconds.

There are several reasons for the warning light to come on: please refer to the information on “Driver correction devices and aids” in Section 2.

WARNING LIGHTS (6/6)

The display of information shown below DEPENDS ON THE VEHICLE EQUIPMENT AND COUNTRY.

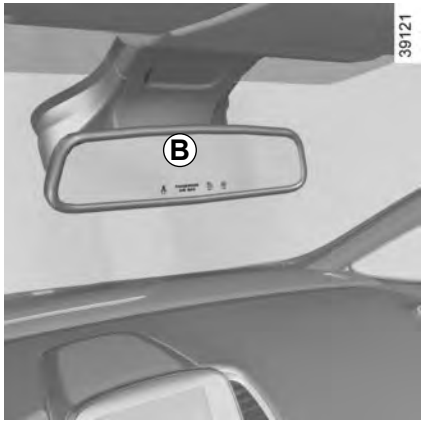

On the rear-view mirror *B*

Passenger airbag ON
Please refer to the information on “Child safety: deactivating/activating the front passenger airbag” in Section 1.

Passenger airbag OFF
Please refer to the information on “Child safety: deactivating/activating the front passenger airbag” in Section 1.

Driver’s seat belt reminder and, depending on the vehicle, front passenger seat belt reminder.
This lights up in the rear-view mirror when the ignition is started then, if the driver or front passenger seat belt (if this seat is occupied) is not fastened and the vehicle has reached approximately 12 mph (20 km/h), it flashes and a beep sounds for around 120 seconds.
Note: an object placed on the passenger seat base can activate the warning light.

Instrument panel *A*

You can customise your instrument panel with the content and colours of your choice.

From the multifunction screen, select:
– one of the Multi-Sense modes. Please refer to the information on “Multi-Sense” in Section 3;
– menu “System” then “User profile”. Refer to the handbook for the equipment.

Rev counter *1*
(graduations x 1000)

Speedometer *2*

This is displayed differently according to how the instrument panel is customised.

Overspeed buzzer

Depending on the vehicle and country, a buzzer sounds for approximately 10 seconds every 40 seconds, as long as the vehicle is travelling in excess of 72 mph (120 km/h).

Driving style indicator *3*

Please refer to the information on “Eco-driving” in Section 2.

Trip computer and warning system

Refer to the information on the “Trip computer and warning system” in Section 1.

Engine oil level low warning

When the engine is started, the instrument panel display ***A*** alerts you when the minimum oil level is reached. Refer to the information on the “Engine oil level” in Section 4.

The first time the warning appears, it can be cleared by pressing switch ***4*** “**OK** ”.

Subsequent warnings will disappear automatically after around 30 seconds.

Coolant temperature indicator *5*

In normal use, indicator ***5*** should be before area ***B***. Under “intensive” operating conditions, the needle may approach this zone. This is not serious unless the warning light STOP comes on accompanied by a message on the instrument panel and a beep.

Fuel gauge *6*

If the level is at the minimum, warning light integrated in the indicator comes on orange, accompanied by a beep. Fill up as soon as possible.

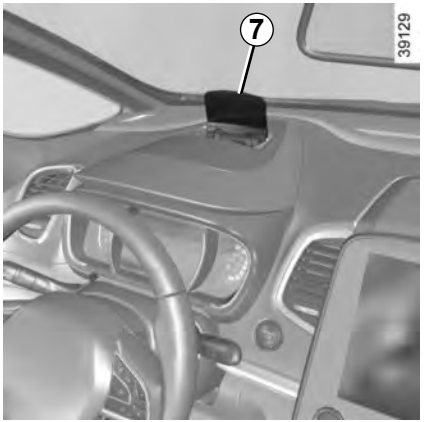

Head-up display 7

The display details driving and navigation information from the instrument panel and the multifunction screen.

If fitted to the vehicle, this comes on when the engine is started and is retracted when the engine is switched off.

Do not manually force the opening/closure of the head-up display.

You can adjust certain settings from the multifunction screen: with the engine running, access menu “System”, “Display” then “Head-up display”.

Adjusting the display information height

Depending on your driving position, you can raise or lower the information on the display.

Adjusting the display brightness

You can adjust the brightness (day or night mode)

– **automatically**: the brightness will vary depending on the outdoor light.
– **manually**: the brightness automatically switches with the activation/deactivation of the lights.

In both cases, the day mode varies based on the outdoor brightness.

For safety reasons, carry out any adjustments when the vehicle is stationary.

Good information visibility can be affected by:

– the seat position;

– the presence of an object placed on the opened display;

– the polarisation of some spectacle lenses;

– extreme weather conditions (rain, snow, very strong sunlight, etc.).

In the event of contradictory information between the instrument panel and the head-up display/multifunction screen, please refer to the information displayed on the instrument panel.

Operating faults

In the event of a malfunction (the display fails to open when the engine is started, or the display retracts, with the engine running, following an object impacting the display):

– stop and restart the engine;

or

– from the multifunction screen, change the display opening settings.

If there is still a problem, contact an authorised dealer.

With the display opened or closed, no object should be placed on it or in its housing.

Do not use solvents, detergents or an abrasive cloth to clean the display.

Only use a microfibre wipe.

Multifunction screen *B*

Please see the equipment instructions or the sections dealing with the relevant functions.

TRIP COMPUTER: general information (1/2)

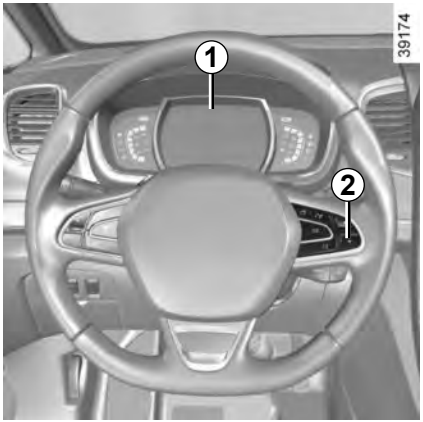

On-board computer *1*

Depending on the vehicle, this includes the following functions:

– distance travelled;

– journey parameters;

– information messages;

– operating fault messages (associated with the warning light);

– warning messages (associated with the STOP warning light);

All these functions are described on the following pages.

Display selection keys *2*

Scroll through the following information by repeated short presses on button ***2*** (the display depends on the vehicle equipment and country):

a) total mileage and trip mileage recorder;

b) journey parameters:
   – fuel used;
   – average fuel consumption;
   – current fuel consumption;
   – estimated range;
   – distance travelled;
   – average speed;

c) mileage before service;

d) tyre pressure reset;

e) trip log, operating faults and information message readout.

Trip mileage resetting

With “trip mileage recorder” selected on the display, press key OK ***3*** until the mileage recorder resets to zero.

Resetting the journey parameters (reset button)

with the display showing one of the trip settings, press key OK ***3*** until the display is reset to zero.

Interpreting some of the values displayed after resetting

The values showing average fuel consumption and average speed will become more stable and reliable the further you have travelled since the last time the Reset button was pressed.

The average fuel consumption may decrease when:

– the vehicle stops accelerating;

– the engine reaches its operating temperature (if the engine was cold when the reset key was pressed);

– when driving from an urban area onto the open road.

Automatic resetting of the journey parameters

Resetting occurs automatically when the maximum value of any of the parameters is exceeded.

ON-BOARD COMPUTER: trip settings (1/5)

The display of information shown below DEPENDS ON THE VEHICLE EQUIPMENT AND COUNTRY.

Examples of selections	Interpreting the display selected
101778 km 112.4 km	**a) Total mileage and trip mileage recorder.**
Fuel used 8 L	**b) Journey parameters:** **Fuel used.** Fuel consumed since the last reset.
Middle 5.8 L/100	**Average fuel consumption** since the last reset. The value is displayed after having travelled at least 400 metres since the last reset.
Current 7.4 L/100	**Current fuel consumption.** This value is displayed after a speed of approximately 20 mph (30 km/h) is reached.

ON-BOARD COMPUTER: trip settings (2/5)

The display of information shown below DEPENDS ON THE VEHICLE EQUIPMENT AND COUNTRY.

Examples of selections	Interpreting the display selected
Range 541 km	**b) Journey parameters (continued):** **Estimated range with remaining fuel.** The value is displayed after driving 400 metres.
Distance 522 km	**Distance travelled** since last reset.
Middle 123.4 km/H	**Average speed** since the last reset. The value is displayed after driving 400 metres.

ON-BOARD COMPUTER: trip settings (3/5)

The display of information shown below DEPENDS ON THE VEHICLE EQUIPMENT AND COUNTRY.

Examples of selections On-board computer with mileage-before-service message	Interpreting the display selected
Service Intervals → Service in 30 000 Kms / 12 mo → Service due in 300 Kms / 24 days → Service required	**c) Mileage before service or oil change.** **Mileage before service** **With the ignition switched on, the engine not running** and the display set to “Service Intervals”, press button **OK** for approximately 5 seconds to display the mileage before service (distance or time to the next service). When the range approaches its limit, there are several possible scenarios: – distance/time remaining less than **900 miles (1,500 km)** or **one month**: the message “Service due in” is displayed along with the nearest limit (distance or time); – range equal to **0 km/miles** or **service date reached:** the message “Service required” is displayed accompanied by warning light . The vehicle requires a service as soon as possible.

Resetting: to reset the distance before service, press and hold button ***2*** for approximately 10 seconds until the display shows the mileage permanently.

NB: if a service is performed without changing the engine oil, only the mileage before the next service should be reset. In the event of an oil change, both the distance before the next service and the next oil change should be reset.

TRIP COMPUTER: trip settings (4/5)

The display of information shown below DEPENDS ON THE VEHICLE EQUIPMENT AND COUNTRY.

Examples of selections On-board computer with distance before next service message (cntd.)	Interpreting the display selected
Service Intervals → Oil change in 30 000 Kms / 24 mo → Service due in 300 Kms / 24 days → Service required	**c) Mileage before service or oil change.** **Mileage before service** **With the ignition switched on and the engine not running**, and the selected display is “Mileage before service”, press button **OK** for about 5 seconds to display the mileage before the next service, then press button ***2*** to view the mileage before the next oil change (distance or time remaining before the next service). When the range approaches its limit, there are several possible scenarios: – distance/time remaining less than **900 miles (1,500 km)** or **one month**: the message “Service due in” is displayed, accompanied by the nearest term (distance or time); – range equal to **0 km/miles** or **service date reached:** the message “Service required” is displayed accompanied by warning light . The vehicle requires an oil change as soon as possible.

Depending on the vehicle, the mileage before an oil change varies according to the driving style (frequent driving at low speed, door-to-door journeys, extensive use at idling speed, towing a trailer, etc.). The distance remaining until the next oil change can therefore decrease more quickly in some cases than the actual distance travelled.

Resetting: to reset the mileage before a service, press and hold button ***2*** for approximately 10 seconds until the display shows the range permanently.
NB: if a service is performed without changing the engine oil, only the mileage before the next service should be reset. In the event of an oil change, both the distance before the next service and the next oil change should be reset.

ON-BOARD COMPUTER: trip settings (5/5)

The display of information shown below DEPENDS ON THE VEHICLE EQUIPMENT AND COUNTRY.

Examples of selections	Interpreting the display selected
2.5 2.5 2.5 2.5 + Tyre pressure	**d) Tyre pressure reset** Refer to the information on the “Tyre pressure monitoring system” in Section 2.
No message memorised	**e) Trip log.** Successive display: – information messages (passenger airbag OFF etc.); – operating fault messages (Check injection system, etc.).

TRIP COMPUTER AND WARNING SYSTEM: information messages

These can help in the vehicle starting phase, or give information about a selection or a driving status.
Examples of information messages are given in the following pages.

Examples of messages	Interpreting the display selected
« Parking brake on »	Indicates that the parking brake has been applied.
« Checking control functions »	Displayed with the ignition on when the vehicle is running self-diagnostics.
« Turn steering wheel + START »	Turn the steering wheel slightly whilst pressing the vehicle start button to unlock the steering column.
« Steering wheel not locked »	Indicates that the steering column has not been locked.

TRIP COMPUTER AND WARNING SYSTEM: operating fault messages

These appear with the warning light and mean that you should drive very carefully to an authorised dealer as soon as possible. If you fail to follow this recommendation, you risk damaging your vehicle.
They disappear when the display selection key is pressed or after several seconds and are stored in the computer log. The warning light stays on. Examples of operating fault messages are given in the following pages.

Examples of messages	Interpreting the display selected
« Clean diesel filter »	Indicates the presence of water in the diesel filter; contact an approved Dealer as soon as possible.
« Check lighting »	Indicates a fault in the headlights.
« Check vehicle »	Indicates a fault in one of the pedal sensors, battery management system or oil level sensor.
« Check airbag »	Indicates a fault in the restraint system in addition to the seat belts. In the event of an accident, it is possible that they may not be triggered.
« Check anti-pollution system »	Indicates a fault in the vehicle's particle filter system.

TRIP COMPUTER AND WARNING SYSTEM: warning message

These appear with the STOP warning light and require you to stop immediately, for your own safety, as soon as traffic conditions allow. Stop your engine and do not restart it. Contact an approved Dealer.
Some examples of warning messages are given below. **Note:** the messages appear on the display either individually or alternately (when there are several messages to be displayed), and may be accompanied by a warning light and/or a beep.

Examples of messages	Interpreting the display selected
« Engine failure hazard »	Indicates an injection fault, the vehicle's engine has overheated or there is a serious engine fault.
"Power steering fault" or **"Risk of locked steering"**	Indicates a fault in the steering or a problem with the four-wheel drive.
"Braking system fault" or **"Stop vehicle"**	Indicates a fault in the braking system. Apply the electronic parking brake manually and ensure that the vehicle is immobilised using a chock.
« Electric failure DANGER »	Indicates a fault in the vehicle battery charging circuit (alternator etc.).
« Puncture »	Indicates a puncture on the tyre displayed on the instrument panel.

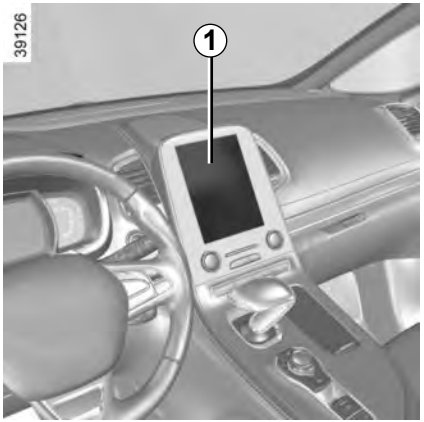

Depending on the vehicle, this function, which is integrated in the multifunction screen ***1***, allows you to activate/deactivate and adjust some of the vehicle's functions.

Accessing the vehicle settings personalisation menu

With the vehicle at a standstill, using the multifunction screen ***1***, select menu "Vehicle", "User settings" to access the various settings.

Adjusting the settings

Select the function to modify:

a) unlocking the driver's door;
b) automatic locking of the doors while driving;
c) hands-free function;
d) indicator audio volume;
e) internal welcome sound;
f) external welcome;
g) reading lamp in automatic mode;
h) rear windscreen wiping in reverse gear;
i) configuration of the driving style indicator;
j) Active noise control.

Select "ON" or "OFF" to activate or deactivate the function.

For safety reasons, carry out any adjustments when the vehicle is stationary.

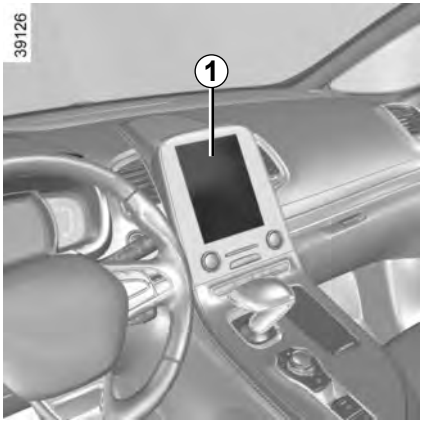

The time and/or external temperature are displayed on the multifunction screen *1*

Refer to the handbook for the equipment.

External temperature indicator

Special note:

When the exterior temperature is - 3 °C to + 3 °C, the **°C** characters flash (signalling a risk of ice on the road).

External temperature indicator

As ice formation is related to climatic exposure, local air humidity and temperature, the external temperature alone is not sufficient to detect ice.

If the electrical supply is cut (battery disconnected, broken supply wire, etc.), the clock will automatically go back to the right time after a few minutes once the system is capable of receiving information GPS.

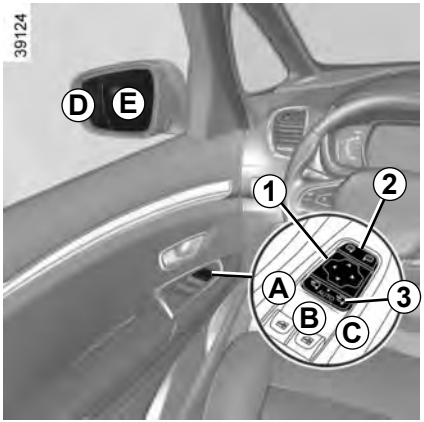

Door mirrors

Adjustment

Select the door mirror using switch ***2***, then use button ***1*** to adjust it to the desired position.

Heated door mirrors

Mirror de-icing is carried out at the same time as rear screen de-icing.

Please refer to the information on “Automatic climate control” in Section 3.

Folding door mirrors

The door mirrors automatically fold in when the vehicle is locked (switch ***3*** in position ***B***).

In any case, you can make the door mirrors fold in (switch ***3*** in position ***C***) or fold out (switch ***3*** in position ***A***).
Automatic mode is then deactivated. To reactivate it, position switch ***3*** to ***B***.

The driver’s door mirror may have two clearly defined zones. Zone ***E*** shows what can normally be seen in an ordinary rear view mirror. Zone ***D*** increases rear side visibility.

Objects in the mirror are closer than they appear.

Welcome and goodbye function

From the multifunction screen, select menu “Vehicle”, “User settings”, “External welcom” and activate or deactivate the function (ON or OFF).

Depending on the selected choice, the door mirrors will fold out:
– when the ignition is next switched on (function deactivated);
– upon detecting the RENAULT card or upon unlocking the vehicle (function activated).

For safety reasons, carry out any adjustments when the vehicle is not being driven.

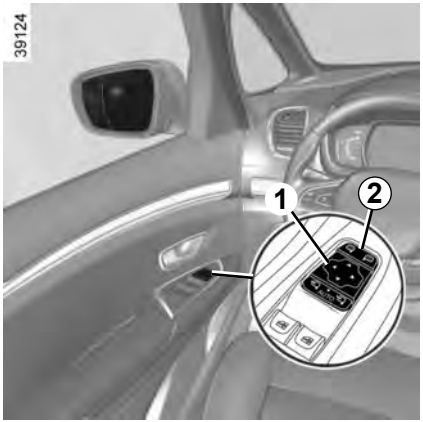

Rear view mirrors which tilt in reverse gear

For vehicles equipped with the driver's seat with position memory, you can enter a specific setting for the door mirrors when reversing and store the position.

With the vehicle at a standstill and reverse gear engaged, select the door mirror using switch ***2*** then, with button ***1***, adjust it to the required position.

Position memory

– Adjust the door mirrors (see previous paragraphs);
– from the multifunction screen, select menu "Vehicle", "Seats", "Settings" then "Position" and select "Save".

The positions of the door mirrors in a forward gear, reverse and of the front seats are simultaneously saved.

For safety reasons, carry out any adjustments when the vehicle is not being driven.

Recalling the memorised position

From the multifunction screen, select menu "Vehicle", "Seats", "Settings" then "Position" and select "Recall".

The positions of the door mirrors in forward gear, reverse and of the front seats are recalled.

Returning to the driving position

Moving from reverse gear to a forward gear is done:

– approximately 9 seconds after reverse gear has been disengaged when the speed is lower than 6 mph (10 km/h);
– forward gear engaged when the speed is greater than 6 mph (10 km/h);
– when the engine is stopped;
– when switch ***2*** is in neutral position.

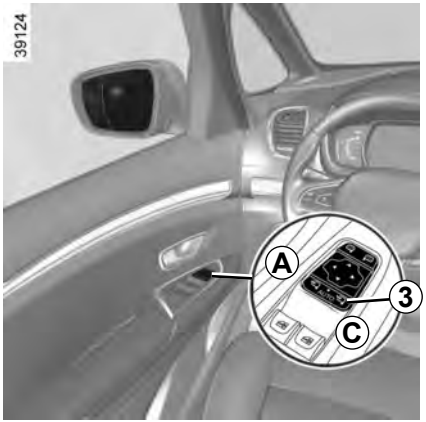

Special feature:

When the rear-view mirror has been manually deployed or folded back, it is possible to reset it to a usage position. To do this, position the switch ***3*** to ***C***. A mechanical noise from the rear-view mirror unit will be heard.

If it is not the case, place switch ***3*** to ***A*** and then place switch ***3*** to ***C*** until the mechanical noise of the rear-view mirror is heard.

Interior rear view mirror

The rear-view mirror ***4*** automatically darkens when you are being followed by a vehicle using main beam headlights or in very bright lighting.

Information regarding the activation and deactivation of the front passenger airbag is displayed on the interior rear-view mirror (please refer to information in “Child safety: front passenger airbag deactivation/activation” in Section 1).

Horn

Press the steering wheel boss ***A*** to activate the horn.

Headlight flasher

Pull stalk ***1*** towards you to flash the headlights.

Direction indicators

Move stalk ***1*** parallel to the steering wheel and in the direction you are going to turn it.

One-touch mode

When driving, it is possible that the steering wheel may not be turned sufficiently to return the stalk automatically to its starting position.
In this case, briefly turn stalk ***1*** to the intermediate position, then release it: the stalk returns to its original point and the indicator light flashes three times.

Hazard warning lights

Press switch ***2***. This switch activates all four direction indicators and the side indicator lights simultaneously. It must only be used in an emergency to warn drivers of other vehicles that you have had to stop in an area where stopping is prohibited or unexpected or that you are obliged to drive under special conditions.

Depending on the vehicle, the hazard warning lights may come on automatically under heavy deceleration. You can switch them off by pressing switch ***2***.

Side lights

Turn ring ***3*** until the symbol is opposite mark ***2***. This indicator light on the instrument panel comes on.

Before driving at night: check that the electrical equipment is operating correctly. As a general precaution, check that the lights are not obscured (by dirt, mud, snow or objects being transported).

Main beam headlights

With the dipped beam headlights lit, push stalk ***1***. This indicator light on the instrument panel comes on.

To return to the dipped headlight position, pull the stalk ***1*** towards you again.

Dipped beam headlights

Manual operation
Turn ring ***3*** until the symbol is opposite mark ***2***. This indicator light on the instrument panel comes on.

Automatic operation
Turn ring ***3*** until the AUTO symbol is opposite mark ***2***: with the engine running, the dipped beam headlights switch on or off automatically depending on the brightness of the light outside, without any action on stalk ***1***.

Automatic main beam headlights

Depending on the vehicle, this system switches the main beam headlights on and off automatically. The function uses a camera located behind the interior rear-view mirror to detect vehicles that are following and coming in the opposite direction.

The main beam headlights come on automatically if:
– exterior light is weak;
– no other vehicles or lighting are detected;
– the vehicle speed is above approximately 30 mph (45 km/h).

If any of the above conditions are not fulfilled, the system switches to dipped beam headlights.

The "automatic main beam headlights" system should under no circumstances be used to replace driver attention and responsibility with regard to vehicle lighting and adapting to light, visibility and traffic conditions.

The system may encounter difficulties under certain conditions, including:
– extreme weather conditions (rain, snow, fog, etc.);
– obstruction in front of the windscreen or camera;
– when a following or oncoming vehicle has weak or hidden lighting;
– incorrect settings for the front headlights;
– reflective systems;
– ...

Activation
Turn ring ***3*** until the AUTO symbol is opposite mark ***2***.
Push stalk ***1*** to activate the main beam headlights. The warning light comes on on the instrument panel.

Deactivation
– Push stalk ***1*** again;
– or turn ring ***3*** to a position other than AUTO ;
– or, from the multifunction screen: select menu "Vehicle", "Driving assistance", "Automatic high beams" then choose "OFF".

Warning light goes out on the instrument panel.

Using the portable navigation system at night in the windscreen area below the camera may disturb the operation of the "automatic main beam headlights" system (risk of reflection on the windscreen).

Operating faults
When the message “Check auto lighting” appears on the instrument panel, the system is deactivated.
Consult an approved dealer.

Daytime running lights function

The daytime running lights come on automatically with no action on stalk ***1*** when the engine is started, and they go off once the engine is switched off.

Operating faults

When the message “Check lighting” with warning light is displayed and warning light flashes on the instrument panel, this indicates that there is a lighting fault.
Consult an approved dealer.

Switching off the lights

There are two possibilities:
– manually, move ring ***3*** to position **0**;
– automatically, the lights will go out when the engine is switched off, the driver’s door is opened or the vehicle is locked. In this case, the next time the engine is started the lights will be switched back on according to the position of the ring ***3***.

Lights-on reminder buzzer

If the lights are on, a warning beep sounds when the driver’s door is opened to warn you that the lights are still on.

Adjusting the headlight beam height

The headlight adjustment is automatic, based on the vehicle load.

“See-me-home lighting” function

This function allows you to briefly switch on the dipped beam headlights (to provide light when opening a gate, etc.).

With the engine and lights off and ring ***3*** in position **0** or **AUTO**, pull stalk ***1*** towards you: the dipped beam headlights come on for approximately thirty seconds. To increase this duration, you may pull the stalk up to four times (total time restricted to two minutes). The message “Follow-me home for _ _ _” along with the time the lights will be on for is displayed on the instrument panel to confirm this action. You can then lock your vehicle.

To switch off the lights before they go out automatically, turn ring ***3*** to any position, then return it to the **AUTO** position .

Welcome and goodbye function

(depending on the vehicle)

Once the function is activated, the lights come on automatically upon detecting the Renault card or when the vehicle is unlocked.

They switch off automatically:

– approximately one minute after lighting up;

– when starting the engine based on the position of the lighting stalk;

or

– upon locking the vehicle.

Welcome lighting under the door mirrors

With the function activated, the lights located under the door mirrors come on automatically upon detection of the RENAULT card, upon unlocking the vehicle or when opening a door.

They switch off automatically:

– approximately one minute after lighting up;

– upon starting the engine;

or

– upon locking the vehicle.

Function activation/ deactivation

Using the multifunction screen, select menu “Vehicle”, “User settings” then “External welcom”. Choose “**ON**” or “**OFF**” to activate or deactivate the function.

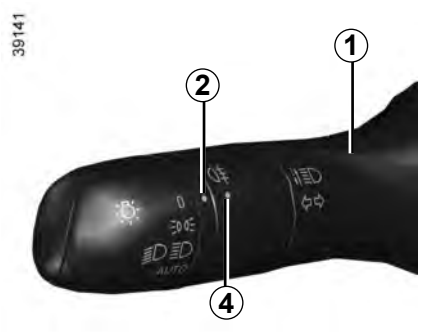

Rear fog lights

Turn centre ring ***4*** on the stalk until the symbol faces mark ***2***, then release it.

Operation of the fog lights depends on the exterior lighting selected, and an indicator light will light up on the instrument panel.

Do not forget to switch off the fog lights when they are no longer needed, to avoid inconveniencing other road users.

Switching off the lights

Turn ring ***4*** again until mark ***2*** is opposite the symbol for the fog light that you wish to switch off. The corresponding indicator light on the instrument panel goes out.

The rear fog lights switch off when the exterior lights are switched off.

When driving in fog or snow, or when transporting objects which are higher than the roof, the headlights do not come on automatically.

Switching on the fog lights remains the responsibility of the driver: the indicator lights on the instrument panel inform you whether the fog lights are lit (indicator light on) or not (indicator light not on).

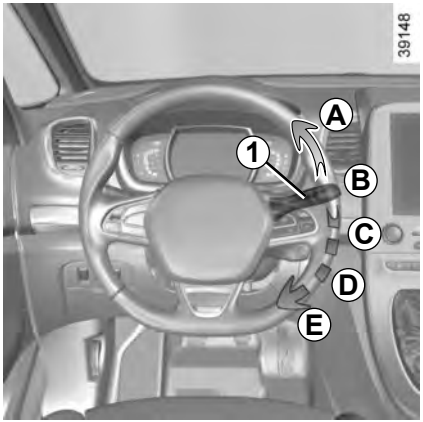

Vehicle fitted with intermittent windscreen wipers

A **single sweep**
A short push will trigger one sweep of the wipers.

B **stop**

C **intermittent wiping**
The wipers will pause for several seconds between sweeps. It is possible to change the time between sweeps by turning ring ***2***.

D **slow continuous wiping**

E **fast continuous wiping**

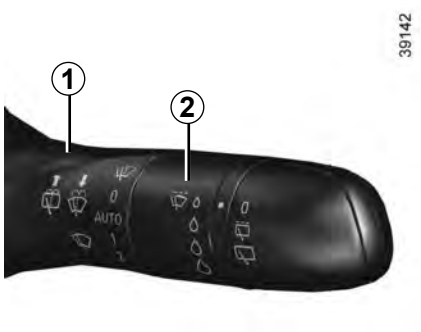

Special note
When driving the vehicle, the wiping speed slows down whenever the vehicle stops. For example, fast wiping speed will slow to normal wiping speed. As soon as the vehicle moves off, wiping will return to the speed originally selected.
If stalk ***1*** is operated, it overrides and cancels the automatic function.

Positions ***A***, ***C*** and ***D*** are accessible with the ignition on. Position ***E*** is accessible only when the engine is running.

Check the condition of the wiper blades. You are responsible for their service life:

– they must remain clean: clean the blades, windscreen and rear screen regularly with soapy water;

– do not use them when the windscreen or rear screen are dry;

– free them from the windscreen or rear screen when they have not been used for a long time.

In all cases, replace them as soon as they begin to lose efficiency: approximately once a year.

Before using the rear wiper, check that no object obstructs the travel of the blade.

Do not use the wiper arm to open or close the tailgate.

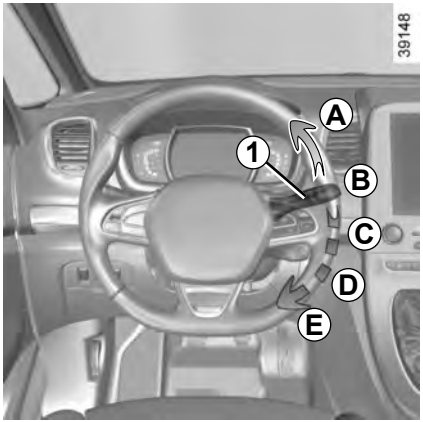

Vehicle fitted with front windscreen wiper rain sensor

The rain sensor is located on the windscreen, in front of the interior rear-view mirror.

A **single sweep**
A short push will trigger one sweep of the wipers.

B **stop**

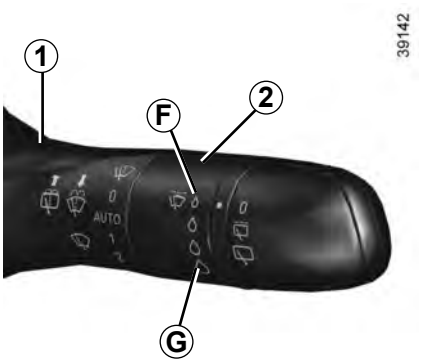

C **automatic wiper function**
When this position is selected, the system detects water on the windscreen and triggers the wipers at a suitable wiping speed. It is possible to change the triggering threshold and the time sweeps by turning ring ***2***:

– ***F*** : minimum sensitivity
– ***G*** : maximum sensitivity

The higher the sensitivity, the quicker the wipers will react and the faster the wipe.

When activating automatic wiping or when increasing sensitivity, one sweep of the blades is performed.

Note:

– the rain sensor is only intended as a driving aid. In the event of reduced visibility, the driver should manually activate the wipers. In foggy weather or during snowfalls, wiping is not automatically triggered and remains under the driver's control;

– in the event of temperatures below zero, automatic wiping is not activated when the vehicle is started. It is automatically activated as soon as the vehicle exceeds a certain speed (approximately 5 mph (8 km/h));

– do not activate automatic wiping in dry weather;

– fully de-ice the windscreen before activating automatic wiping.

Operating fault

In the event of a malfunction of the automatic wiping, the wiper is set to intermittent wiping. Contact an authorised dealer.
The operation of the rain sensor can be disturbed in the event of:

– damaged wiper blades; a screen of water or traces left by a blade in the sensor's detection zone may increase the response time of the automatic wiper, or increase the wiping frequency;
– a windscreen with any chip or crack level with the sensor, or a windscreen covered in dust, dirt, insects, ice, the use of washing wax and water-repellent chemicals; the automatic wiping will be less sensitive, or even unresponsive.

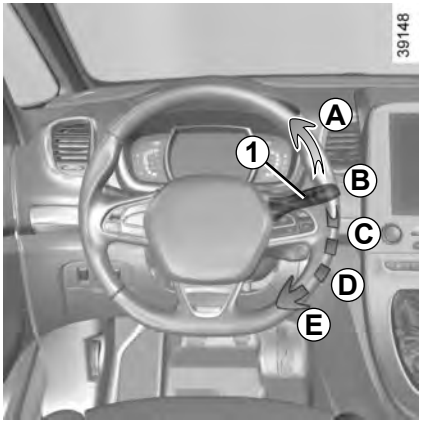

D **slow continuous wiping**

E **fast continuous wiping**

Positions ***A*** and ***D*** are accessible with the ignition on. Positions ***C*** and ***E*** are accessible only with the engine running.

Special note

When driving the vehicle, the wiping speed slows down whenever the vehicle stops. For example, fast wiping speed will slow to normal wiping speed. As soon as the vehicle moves off, wiping will return to the speed originally selected.
If stalk ***1*** is operated, it overrides and cancels the automatic function.

Precautions

– In the event of ice, check whether the blades are stuck to the windscreen before operating the wiping mechanism. If you activate the wipers while the blades are stuck down with ice, you may risk damaging both the blade and the wiper motor.
– Do not activate the wipers on a dry screen. This will lead to the premature wear or damage to the blades.

Specific front wiper position (service position)

This position enables the blades to be lifted to remove them from the windscreen.

This can be useful:
– to clean the blades;
– to release the blades from the windscreen in winter;
– to replace the blades (please refer to the information on the “Wiper blades” in Section 5).

With the ignition on and the engine off, lower the windscreen wiper stalk fully (fast continuous wipe position). The wiper arms stop in a position away from the bonnet.

To return the blades to position, make sure they have been placed on the windscreen, then move the stalk to position ***B*** (stop) with the ignition on.

Before switching on the ignition, place the wipers on the windscreen. Otherwise, there may a risk of damage to the bonnet or the wipers when they are switched on.

Note:

Once the wipers have been switched off, at least 1 minute after locking the vehicle, it is possible to manually move the blades. Do not force the blade arms to move. This may risk damage to the wiper motor, the arms and the blades.

After your intervention, to reposition the blades correctly, make sure the blades are resting on the windscreen, switch on the ignition and activate the wiper control.

The blade on the driver’s side must always be above the passenger blade. If this is not the case, a quick sweep of the windscreen wipers should be performed once the vehicle is travelling at over 4 mph (7 km/h).

In the event of obstacles present on the windscreen (dirt, snow, ice, etc.), clean the windscreen (including the central area located behind the interior rear-view mirror) and the rear screen before starting the wipers (risk of motor overheating).

If an object is preventing a blade from moving, it may stop functioning. Remove the obstacle and reactivate the wiper using the wiper stalk.

Before any action involving the windscreen (washing the vehicle, de-icing, cleaning the windscreen, etc.) return stalk ***1*** to position ***B*** (stop).

Risk of injury and/or damage.

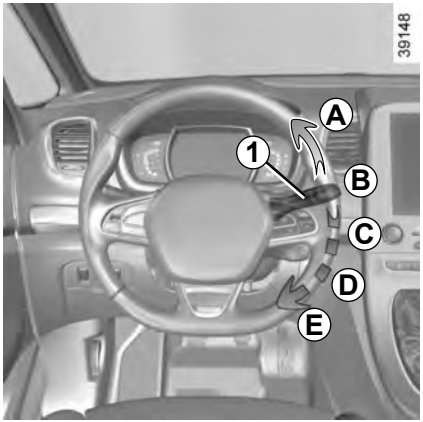

Windscreen washer

With the ignition on, pull stalk ***1*** then release.

A brief pull will trigger a single sweep of the wipers, in addition to the windscreen washer.

A longer pull will trigger three sweeps of the wipers followed, a few seconds later, by a fourth, in addition to the windscreen washer.

Note:

In temperatures below zero, the washer liquid risks freezing to the windscreen, thereby reducing visibility. Heat the windscreen using the demister control before cleaning.

When working in the engine compartment, ensure that the windscreen wiper stalk is in position **B** (stop).

Risk of injury.

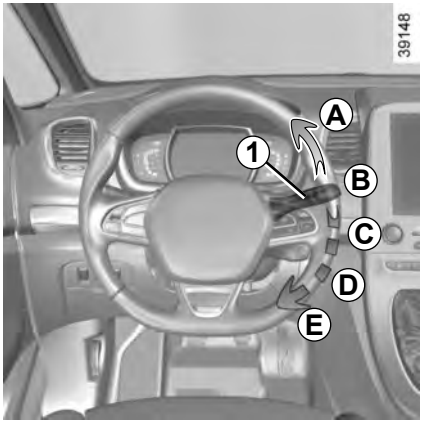

Headlight washers

Headlights on
On equipped vehicles, hold stalk ***1*** pulled towards you for about 2 seconds - the headlight washers and windscreen washers will be activated at the same time.
The headlight washers are also activated after three prolonged movements on the front windscreen washer control.

Note:

To ensure the headlight washers operate correctly in winter, remove snow from the jet trims and de-ice the jet trims using an aerosol de-icer.

You are recommended to regularly remove dirt encrusted on the headlight glass.

When the minimum windscreen washer fluid level is reached, the headlight washer system may be deprimed.

Fill the windscreen washer fluid and then activate the windscreen washer, **with the engine running**, to reprime the system.

When working in the engine compartment, ensure that the windscreen wiper stalk is in position **B** (stop).

Risk of injury.

REAR SCREEN WASH/WIPE (1/2)

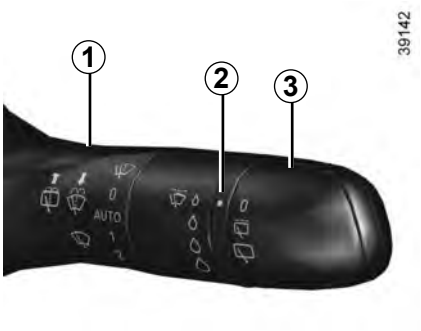

Rear screen wiper

With the ignition on, turn ring ***3*** on stalk ***1*** to align the symbol with mark ***2***.

- **stop;**
- **intermittent wiping.**
  The wipers will pause for several seconds between sweeps. Wiping frequency varies with vehicle speed;
- **slow continuous wiping.**

To stop the operation, pivot ring ***3*** again.

Note:
When washing using a roller type car wash, return the ring ***3*** on the stalk ***1*** to the stop position to deactivate automatic wiping.
Follow usage recommendations.

Before any action involving the rear screen (washing the vehicle, de-icing, cleaning, etc.) return stalk ***1*** to the stop position.

Risk of injury and/or damage.

Check the condition of the wiper blades. You are responsible for their service life:

- they must remain clean: clean the blades, windscreen and rear screen regularly with soapy water;
- do not use them when the windscreen or rear screen are dry;
- free them from the windscreen or rear screen when they have not been used for a long time.

In all cases, replace them as soon as they begin to lose efficiency: approximately once a year.

Before using the rear wiper, check that no object obstructs the travel of the blade.

Do not use the wiper arm to open or close the tailgate.

Activation/deactivation of the rear screen wiper

Engaging reverse gear triggers intermittent wiping (if the front wipers are in operation). If your vehicle is fitted with a vehicle settings customisation menu, you can opt to activate or deactivate this function. To do this, refer to the information on the “Vehicle settings customisation menu” in Section 1; “Rear wiping in reverse gear”.

For vehicles not fitted with a settings customisation menu, you can have this function deactivated by an authorised dealer.

In the event of obstacles present on the rear window (dirt, snow, etc.), the wiper will try to sweep away all the obstacles. If an obstacle prevents the blade from moving, it can be stopped. Remove the obstacle, wait for around 30 seconds and reactivate the wiper using the wiper stalk.

Precautions

– In the event of ice, check whether the blades are stuck to the windscreen before operating the wiping mechanism. If you activate the wiper while the blade is blocked by ice, you risk damaging both the blade and the wiping motor.

– Do not activate the wipers on a dry screen. This will lead to the premature wear or damage to the blades.

Rear screen wash/wipe

With the ignition on, push and hold stalk ***1***, then release.

A longer action will trigger three sweeps of the wipers followed, a few seconds later, by a fourth, in addition to the windscreen washer.

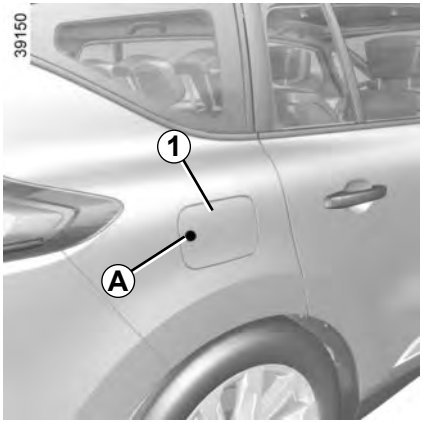

Useable fuel tank capacity:
approx. **58 litres**.

With the vehicle unlocked, to open cover ***1***, press area ***A*** then release. The cover ***1*** opens.

Valve ***2*** is integrated into the filler pipe. For details on filling the fuel tank, refer to the information on “Filling with fuel”.

To close it, press on the fuel filler flap by hand, as far as it will go.

Fuel grade

Use a high-grade fuel that complies with the legislation in force in each country and which **must** comply with the specifications given on the label on the cover ***1***. Please refer to the information on “Engine specifications” in Section 6.

Never press valve ***2*** with your fingers.

Do not wash the filler area with a high-pressure washer.

Diesel versions

Only use diesel fuel which complies with the information on the label located inside the cover ***1***.

Petrol versions

It is **essential** to use unleaded petrol. The octane rating (RON) must comply with the information given on the label on the cover ***1***. Refer to Section 6 for information on “Engine specifications”.

Do not mix even small amounts of petrol (unleaded or E85) with diesel.
Do not use ethanol-based fuel if your vehicle is not compatible with this fuel.
Do not add additive to the fuel – otherwise you risk damaging the engine.

Filling with fuel

Insert the nozzle to open the valve ***2*** and insert it **fully** before turning it on to fill the fuel tank (risk of splashing).

Keep the nozzle in this position throughout the entire filling operation.

When the pump cuts out automatically at the end of the filling procedure, a maximum of two further filling attempts may be made, as there must be sufficient space in the fuel tank to allow for expansion.

Make sure that no water enters the fuel tank during filling. The valve ***2*** and its surround must remain clean.

Petrol versions

Using leaded petrol will damage the antipollution system and may lead to a loss of warranty.

To ensure that the fuel tank is not filled with leaded petrol, the fuel tank filler neck consists of a restrictor fitted with a safety system which **only allows a nozzle for unleaded petrol to be used** (at the pump).

Vehicle fitted with the Stop and Start function

To fill up with fuel, the engine must be stopped (and not on standby): stop the engine by pressing the engine stop button ***3*** (please refer to the information on “Starting and Stopping the engine” in Section 2).

Running out of fuel on diesel versions

With the card **RENAULT** in the passenger compartment, press the start button ***3*** without pressing any of the pedals. Wait a few minutes before starting. This will enable the fuel circuit to be primed. If the engine does not start, repeat the procedure.

If the engine does not start after several attempts, please contact an authorised dealer.

No modifications whatsoever are permitted on any part of the fuel supply system (electronic units, wiring, fuel circuit, injectors, protective covers, etc.) as this may be dangerous (unless undertaken by qualified Network personnel).

Persistent smell of fuel

If you notice a persistent smell of fuel you should:

– stop the vehicle as soon as traffic conditions allow and switch off the ignition;
– switch on the hazard warning lights and ask your passengers to leave the vehicle and to keep away from traffic;
– contact an approved Dealer.

Section 2: Driving

(Advice on use relating to fuel economy and the environment)

Running in 2.2
Starting - Stopping the engine 2.3
Stop and Start Function 2.6
Special features of petrol versions 2.10
Special features of diesel versions 2.11
Gear lever 2.12
Electronic parking brake 2.13
Driving advice, Eco-driving 2.16
Maintenance and antipollution advice 2.21
Environment 2.22
Tyre pressure monitoring system 2.23
Driver correction devices/aids 2.26
Lane departure warning 2.38
Blind spot warning 2.41
Safe distance alert 2.44
Speed limiter 2.46
Speeding alert 2.49
Cruise control 2.52
Adaptive cruise control 2.56
Parking distance control 2.63
Reversing camera 2.67
Assisted parking 2.69
Piloted dampened suspension 2.73
Automatic gearbox 2.74

RUNNING IN

Petrol version

Up to **600 miles (1 000 km)**, do not exceed 78 mph (130 km/h) in top gear or 3,000 to 3,500 rpm.

You may only expect top performance from your vehicle after approximately **1,800 miles** (3 000 km).

Service interval: refer to the Maintenance Document for your vehicle.

Diesel version

For the first **900 miles (1 500 km)**, do not exceed 2,500 rpm. After completing this mileage you may drive faster, however, it is only after approximately 3600 miles (6 000 km) that you may reasonably expect full performance.

During the running in period, do not accelerate hard while the engine is still cold and do not let the engine over-rev.

Service interval: refer to the Maintenance Document for your vehicle.

The RENAULT card must be inserted in detection zone ***1***.

To start:

– vehicles with an automatic gearbox, place the lever in position **P**, depress the brake pedal and press button ***2***;

– vehicles with a manual gearbox, depress the brake or clutch pedal and press the button ***2***. If a gear is engaged, the vehicle may only be started by depressing the clutch pedal.

Special features

– If one of starting conditions is not applied, the message “Press brake + START” or “Press clutch + START” or “Select P” is displayed on the instrument panel;

– in some cases, it will be necessary to move the steering wheel while pressing start button ***1*** to assist in unlocking the steering column. A message on the instrument panel “Turn steering wheel + START” warns of this.

“Hands-free” starting with the tailgate open

In this case, the RENAULT card should not be located in the boot, to avoid any risk of loss.

Driver’s responsibility when parking or stopping the vehicle

Never leave an animal, child or adult who is not self-sufficient alone in your vehicle, even for a short time.

They may pose a risk to themselves or to others by starting the engine, activating equipment such as the electric windows or locking the doors, for example.

Also, in hot and/or sunny weather, please remember that the temperature inside the passenger compartment increases very quickly.

RISK OF DEATH OR SERIOUS INJURY.

Accessories function
(switching on the ignition)

Once you have gained access to your vehicle, you may use some of its functions (radio, navigation, wipers, etc.).

To use the other functions, with the RENAULT card in the passenger compartment, press button ***2*** without pressing the pedals.

Operating faults

In certain cases, the RENAULT "hands-free" card may not work:

– when the RENAULT card battery is drained, etc.;

– near to appliances operating on the same frequency as the card (monitor, mobile phone, video game, etc.);

– vehicle located in a high electromagnetic radiation zone.

The message "Place card close to START button" appears on the instrument panel.

Depress the brake or clutch pedal, then place the RENAULT ***3*** card (logo side) in contact with the start button ***2*** for around 2 seconds. Press the ***2*** button to start the vehicle. The message goes out.

Conditions for stopping the engine

With the vehicle at a standstill, and the RENAULT card in the vehicle, press button ***2***: the engine will stop. The steering column is locked when the driver's door is opened or the vehicle is locked.

For vehicles with an automatic gearbox, park position **P** is activated automatically.

If the RENAULT card is no longer in the passenger compartment when you try to switch the engine off, the message "No keycard Press and hold" appears on the instrument panel: press the button ***2*** for longer than two seconds. If the card is no longer in the passenger compartment, make sure you can retrieve it before pressing and holding the button. Without the card RENAULT , you will not be able to start.

With the engine switched off, any accessories being used (radio, etc.) will continue to function for approximately 10 minutes.

When the driver's door is opened, the accessories stop working.

Never switch off the ignition before the vehicle has stopped completely. Once the engine has stopped, the brake servo, power-assisted steering, etc. and the passive safety devices such as air bags and pretensioners will no longer operate.

When you leave your vehicle, especially if you have your RENAULT card with you, check that the engine is completely switched off.

Driver's responsibility when parking or stopping the vehicle

Never leave an animal, child or adult who is not self-sufficient alone in your vehicle, even for a short time.

They may pose a risk to themselves or to others by starting the engine, activating equipment such as the electric windows or locking the doors, for example.

Also, in hot and/or sunny weather, please remember that the temperature inside the passenger compartment increases very quickly.

RISK OF DEATH OR SERIOUS INJURY.

STOP AND START FUNCTION (1/4)

This system enables a reduced fuel consumption and lower greenhouse gas emissions. The system is activated automatically when the vehicle is started. While driving, the system stops the engine (standby) when the vehicle is at a standstill (traffic jam, traffic lights, etc).

Conditions for engine standby

The vehicle has set off from where it was parked;

For vehicles equipped with automatic gearboxes:

– the gearbox is in position D, M or N;
and
– the brake pedal is depressed (sufficiently hard);
and
– the accelerator pedal is not depressed;
and
– the speed is zero for around 1 second.

The engine remains on standby if position P is selected, or if position N is selected with the handbrake engaged and the brake pedal released.

For vehicles equipped with manual gearboxes:

– the gearbox is in neutral;
and
– the clutch pedal is released.

If the warning light flashes, this means that the clutch pedal is not sufficiently released;
and
– the vehicle speed is less than approximately 7 mph (3 km/h).

For all vehicles:

The warning light on the instrument panel is lit when the engine is on standby.

The vehicle equipment remain operational while the engine is stopped.

If the engine stalls while the system is in operation, pressing the clutch pedal right down will start it again.

Before getting out of the vehicle, you must switch off the ignition by pressing the engine stop (please see “Starting, stopping the engine”).

Keep your vehicle stationary when the engine is on standby (shown by the warning light on the instrument panel).

If the engine is put in standby, the electronic parking brake (depending on the vehicle) is not applied automatically.

Engine on standby - power-assisted steering is no longer operational.

Engine on standby - braking assistance is no longer operational.

Preventing the engine from standing by

In certain situations, such as negotiating a crossroads for instance, it is possible to keep the engine running so as to be ready to move off quickly.

For vehicles equipped with automatic gearboxes:

Keep the vehicle stationary without pressing too hard on the brake pedal

For vehicles equipped with manual gearboxes:

Keep the clutch pedal pressed right down

Conditions for coming out of engine standby

For vehicles equipped with automatic gearboxes:

– the brake pedal is released, position D or M engaged;

or

– the brake pedal is released in gear position N with the handbrake off;

or

– the brake pedal is pressed again in gear position P or N engaged with the handbrake applied;

or

– the vehicle is in gear position R;

or

– the accelerator pedal is depressed.

For vehicles equipped with manual gearboxes:

– the gearbox is in neutral and the clutch pedal is slightly depressed;

or

– the engine is in gear and the clutch pedal is pressed right down.

Special note: depending on the vehicle, if you switch off the ignition when the engine is on standby, the warning light is displayed for a few seconds on the instrument panel.

To fill up with fuel, the engine must be stopped (and not on standby): always stop the engine by pressing the engine stop button (please see “Starting, stopping the engine)”.

Conditions preventing the standby of the engine

Certain conditions prevent the system from using the engine standby function, including when:

– reverse gear is engaged;

– the bonnet is not locked;

– the driver's door is not closed;

– the driver's seatbelt is not fastened;

– the outdoor temperature is too low or too high (less than around 0 °C or higher than around 30 °C);

– the battery is not sufficiently charged;

– the difference between the vehicle interior temperature and the automatic climate control instruction is too high;

– parking distance control is in operation;

– for vehicles with automatic gearboxes, the gradient is steeper than approximately 12%;

– the "Clear View" function is activated (please see "Automatic Climate Control" in Section 3);

– the engine temperature is too low;

– the emission control system is being regenerated;

or

– ...

Warning light is displayed on the instrument panel. This notifies you that engine standby is not available.

Deactivate the Stop and Start function when performing any operations in the engine compartment.

Special case for vehicles with a RENAULT card

With the engine on standby (traffic jam, traffic lights, etc.), if the driver unfastens the seat belt and opens the driver's door, or gets out of the seat, the ignition is switched off.

The assisted parking brake is applied automatically.

To restart and reactivate the Stop and Start system, press the start button (please see "Starting, stopping the engine" in Section 2).

Special feature of the automatic engine re-start

Under certain conditions, the engine can restart on its own in order to guarantee your safety and comfort.

This can occur especially when:

– the outdoor temperature is too low or too high (less than around 0 °C or higher than around 30 °C);

– the “Clear View” function is activated (please see “Automatic Climate Control” in Section 3);

– the battery is not sufficiently charged;

– the vehicle speed is above 3 mph (5 km/h) (downhill slope, etc.);

– repeated pressing on the brake pedal or braking system requirement;

– ...

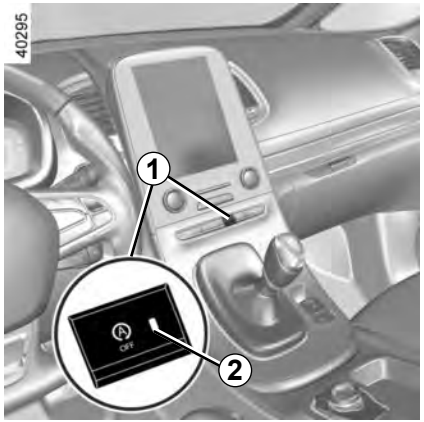

Deactivating, activating the function

Press switch ***1*** to deactivate the function. The message “Stop & Start deactivated” will appear on the instrument panel and the integrated warning light ***2*** on the switch will light up.
Pressing again will reactivate the system. The message “Stop & Start activated” will appear on the instrument panel and the integrated warning light ***2*** on switch ***1*** will go out.

Note: With the engine on standby, press switch ***1*** to automatically restart the engine.

The system reactivates automatically each time the vehicle is started using the start button (please refer to “Starting, stopping the engine” in Section 2).

Operating faults

When the message “Check Stop & Start” appears on the instrument panel and the integrated warning light ***2*** lights up on the switch ***1***, the system is deactivated.
Please consult an authorised dealer.

Before getting out of the vehicle, you must switch off the ignition by pressing the engine stop (please see “Starting, stopping the engine”).

The following operating conditions should be avoided:

– driving for long periods when the low fuel level warning light is lit;

– using leaded petrol;

– using fuel or lubrication additives which are not approved.

Or operating faults such as:

– faulty ignition, running out of fuel or disconnected spark plugs resulting in the engine misfiring or cutting out when driving;

– loss of power,

may cause the catalytic converter to overheat, reducing its efficiency **which may irreparably damage it and cause heat damage to the vehicle.**

If you notice any of the above operating faults, have the necessary repairs carried out as soon as possible by an approved dealer.

These faults may be avoided by regularly taking your vehicle to an approved Dealer at the intervals specified in the Maintenance Document.

Starting problems

To avoid damaging the catalytic converter, **do not keep** trying to start the engine (using the start button, or by pushing or towing the vehicle) **without having identified and corrected the cause of the fault**.

Do not park the vehicle or run the engine in locations where combustible substances or materials such as grass or leaves can come into contact with the hot exhaust system.

Diesel engine speed

Diesel engines are fitted with injection equipment **which prevents the engine speed being exceeded** irrespective of the gear selected.

If the message “Check anti-pollution system” is displayed along with warning lights and , consult an authorised dealer immediately.

When driving, depending on the fuel grade used, it is possible that white smoke may be emitted.

This is due to the exhaust particle filter being cleaned automatically, and does not affect the way the vehicle runs.

Precautions to be taken in winter

To avoid any faults in icy weather:

– ensure that the battery is always fully charged,

– always keep the diesel tank relatively full to avoid water vapour condensing in it and accumulating at the bottom of the tank.

Do not park the vehicle or run the engine in locations where combustible substances or materials such as grass or leaves can come into contact with the hot exhaust system.

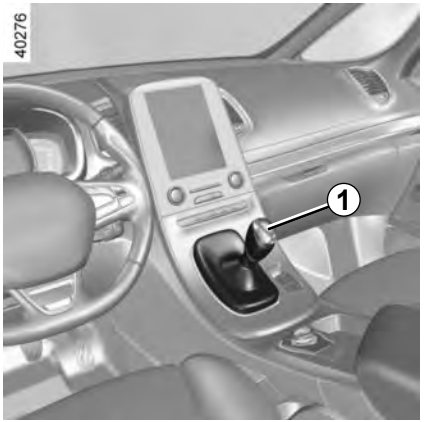

Selecting reverse gear

Vehicles with manual gearbox: follow the grid drawn on knob ***1***, and depending on the vehicle, lift ring against the gear lever knob to select reverse.

Vehicle with automatic gearbox: refer to the information on the “Automatic gearbox” in Section 2.

The reversing lights will come on as soon as reverse gear is selected with the ignition on.

An impact to the underside of the vehicle while manoeuvring (e.g.: striking a post, raised kerb or other street furniture) may result in damage to the vehicle (e.g.: deformation of the rear axle).

To avoid any risk of accident, have your vehicle checked by an approved Dealer.

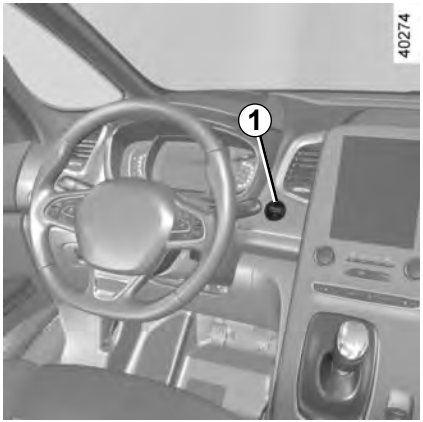

Assisted operation

The assisted parking brake can be used to immobilise the vehicle when the **engine is stopped by pressing button *1*.**
In all other cases:
– engine standby for vehicles fitted with Stop and Start function,
– engine has stalled etc.,
the assisted parking brake is not applied automatically. Manual mode must be used.
Please refer to «Starting/stopping the engine» and «Stop and Start function" in Section 2.

For certain country-specific model versions, the assisted brake application function is not activated. Refer to the information on “Manual operation”.

To confirm that the electronic parking brake is applied, the message “Parking brake on” and warning light (Ⓟ) on the instrument panel and warning light ***3*** on the switch ***2*** light up.

After the engine is switched off, indicator light ***3*** goes out several minutes after the electronic parking brake has been applied and indicator light (Ⓟ) goes out when the vehicle is locked.

Note:

To indicate that the electronic parking brake is released, a beep sounds and the message “Apply parking brake” appears on the instrument panel:

– with the engine running: when the driver’s door is opened;
– with the engine switched off (eg. when the engine stalls): when a front door is opened.

In this case, pull and release switch ***2*** to apply the assisted parking brake.

Assisted release of the parking brake

The brake will be released as soon as the vehicle starts and accelerates.

Before leaving the vehicle, check that the assisted parking brake is fully applied. Warning light ***3*** on switch ***2*** and warning light (Ⓟ) on the instrument panel light up to show that the parking brake is applied but go out when the doors are locked.

Manual operation

You can control the electronic parking brake manually.

Applying the electronic parking brake

Pull switch ***2***. Warning light ***3*** and warning light (Ⓟ) on the instrument panel light up.

Releasing the electronic parking brake

With the ignition on, depress the brake pedal then press switch ***2***: warning light ***3*** and warning light (Ⓟ) go out.

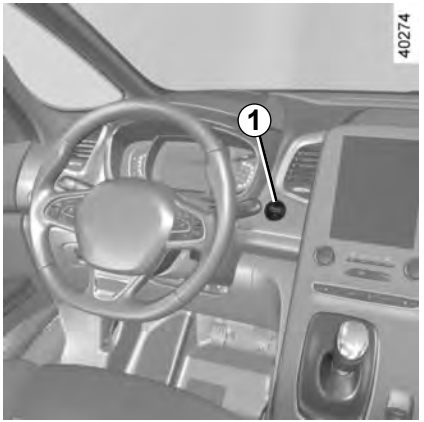

Brief stop

To manually activate the electronic parking brake, (when stopping at a red light, or stopping when the engine is running, etc.): pull and release switch ***2***. The brake is released as soon as the vehicle is started up again.

Special cases

To park on a slope or while towing a trailer, for example, pull switch ***2*** for a few seconds to gain the maximum braking.

To park the vehicle without applying the electronic parking brake (if there is a risk of freezing, for example):

– with the engine running, while simultaneously keeping the brake pedal and switch ***2*** depressed, switch off the engine by pressing the engine Start/Stop button ***1***;
– with a gear or position **P** engaged, release the brake pedal and the switch ***2***.

For vehicles fitted with a Stop and Start function, with the engine on standby, the electronic parking brake is automatically activated if the driver unfastens their seat belt or opens the driver's door or gets out of their seat.

Special feature relating to the Stop and Start function: in the event of unfastening the driver's seat belt **before** the engine goes to standby using the Stop and Start function, make sure the parking brake is engaged: warning light (Ⓟ) will come on the instrument panel to confirm this. **Risk of loss of immobilisation.**

In the event of message “Electric failure DANGER” or “Check battery”, manually activate the electronic parking brake by pulling switch ***2*** (or position the gear lever in **P** for automatic gearboxes) before stopping the engine.

Risk of loss of immobilisation of the vehicle.

Contact an authorised dealer.

If no lights or sounds are apparent, this indicates a fault in the instrument panel. This indicates that it is essential to stop immediately (as soon as traffic conditions allow). Ensure that the vehicle is correctly immobilised and contact an approved Dealer.

Versions with an automatic gearbox

For safety reasons, automatic release is deactivated when the driver’s door is open or not shut properly and the engine is running (in order to prevent the vehicle from moving without the driver). The “Release parking brake manually” message appears on the instrument panel when the driver depresses the accelerator.

Never leave your vehicle without moving the selector lever to position **P**. This is because when the vehicle is stationary with the engine running and a gear engaged, the vehicle may begin to move if you accelerate.

There is a risk of accidents.

Operating faults

– If there is a fault, the warning light illuminates on the instrument panel accompanied by the “Check parking brake” message and, in some cases, the warning light.
Please contact an authorised dealer as soon as possible.

– If there is an assisted parking brake fault, the warning light STOP comes on, along with the message “Braking system fault”, a beep and, in some cases, the warning light .
This means that you must stop as soon as traffic conditions allow.

It is therefore essential to immobilise the vehicle by engaging first gear (manual gearbox) or position **P** (automatic gearbox). If the slope requires it, chock the vehicle.

Fuel consumption is accredited in accordance with a standard regulatory method. Identical for all manufacturers, this enables vehicles to be compared with one another. Consumption in real time depends on vehicle usage conditions, the equipment fitted and the user's driving style. To optimise fuel consumption, please refer to the following advice.

Depending on the vehicle, you will have various functions which enable you to lower your fuel consumption:
- the rev counter;
- gear change indicator;
- the driving style indicator;
- the journey record and eco-driving advice via the multimedia screen;
- ECO mode.

If fitted on the vehicle, the navigation system provides additional information.

On the instrument panel

The information display can be organised and customised based on the instrument panel customisation style selected from the multimedia screen.

Rev counter with ECO zone *1*

Driving in the ECO zone helps you optimise fuel consumption under most circumstances.

Gear change indicator *2*

Depending on the vehicle, to obtain optimum consumption levels, a warning light on the instrument panel lets you know the best time to move up or down a gear:

move up a gear;

move down a gear.

If you regularly follow this indicator, you will reduce your vehicle's fuel consumption.

Driving style indicator *3*

Informs you about the driving style adopted in real time. You will be notified by indicator ***3***.

The more petals there are on indicator ***3***, the smoother and more economical your driving.

If you regularly monitor this indicator, you will reduce your vehicle's fuel consumption.

The driving style indicator is activated by default. If you wish to deactivate it, please see the multimedia system instructions.

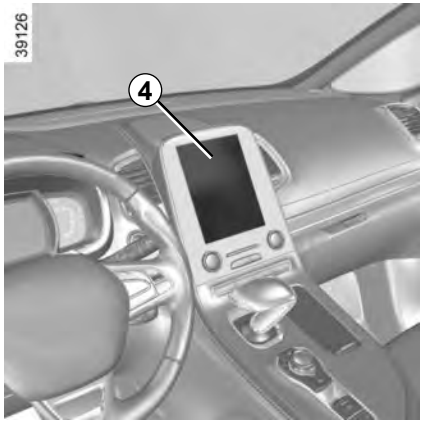

On the multifunction screen

Journey record

Once the engine is switched off, you will see "Journey record" displayed on the screen ***4***, enabling you to view information relating to your last journey.
This indicates:
– average fuel consumption;
– number of miles/kilometres travelled;
– number of miles/kilometres saved. This corresponds to driving without fuel consumption (deceleration and/or foot off the accelerator pedal).

An overall rating from 0 to 100 is displayed to let you assess your eco driving performance. The higher the rating, the lower the fuel consumption.
Eco advice is given to help improve your performance.

With your favourite journeys saved, you can compare your performance between trips and the performance of other vehicle users.
For more information, please see the multimedia system instructions.

ECO mode

ECO mode is a function which optimises fuel consumption. This acts on all power consuming elements (engine power, switching gears for vehicles fitted with an automatic gearbox, heating and/or air conditioning, etc.).

Limiting acceleration enables low fuel consumption in urban and surrounding areas. The air conditioning and heating limiter enables you to save fuel without affecting your heating comfort.

Activating the function

The function can be activated:

– by pressing switch ***4***.

– using the central control ***5*** (please refer to the information on “Multi-Sense” in Section 3);

– from the navigation menu on the multimedia screen (please refer to the multimedia instructions).

The warning light ECO comes on on the instrument panel to confirm activation.

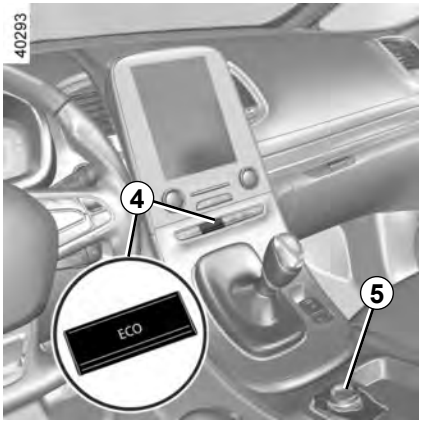

While driving, it is possible to leave the ECO mode temporarily in order to improve engine performance.

For this, depress the accelerator pedal firmly and fully.

ECO mode is reactivated when you take pressure off the accelerator pedal.

Disabling the function

Press switch ***4***.

The warning light ECO goes out on the instrument panel to confirm deactivation.

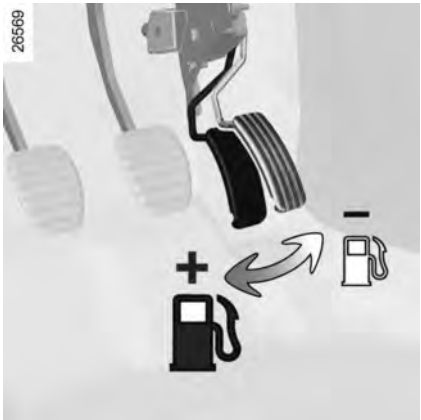

Driving advice, Eco-driving

Behaviour

– Drive carefully for the first few miles until the engine reaches its normal operating temperature, rather than let it warm up while the vehicle is stationary.
– Speed is expensive.
– Dynamic driving with a lot of frequent acceleration and braking is expensive on fuel in comparison to the time saved.
– Do not overrev the engine in the intermediate gears.
You should always use the highest gear possible.
– Avoid sudden acceleration.
– Brake as little as possible. If you anticipate an obstacle or bend in advance, you may then simply release the accelerator pedal.
– Do not try to maintain the same speed up a hill, accelerate no more than you would on flat ground. Keep your foot in the same position on the accelerator pedal.
– Double declutching and accelerating before switching off are unnecessary in modern vehicles.
– Bad weather, flooded roads:

Do not drive through floods if the water is above the lower edge of the wheel rims.

Obstructions to the driver
On the driver's side, only use mats suitable for the vehicle, attached with the pre-fitted components, and check the fitting regularly. Do not lay one mat on top of another.
There is a risk of wedging the pedals

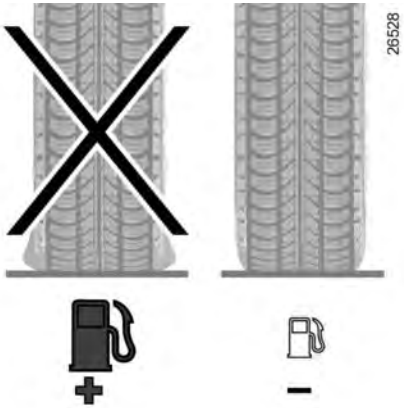

Tyres

– An underinflated tyre increases fuel consumption.
– Opt for the highest speed pressure or the pressure recommended to optimise fuel consumption indicated on edge of the driver's door (please refer to the information on "Tyre inflation pressure" in Section 4).
– The use of non-recommended tyres can increase fuel consumption.

Advice on use

– Favour the ECO mode.
– Electricity is fuel; switch off all the electrical components which are not really needed. **However** (safety first), keep your lights on when the visibility is bad ("see and be seen").
– Use the air vents. Driving with the windows open at 60 mph (100 km/h) will increase fuel consumption by 4%.
– Never fill the fuel tank right to the brim to avoid overflow.
– **In vehicles fitted with air conditioning,** it is normal to observe an increase in fuel consumption (especially in urban conditions) when it is used. For vehicles fitted with manual air conditioning, switch off the system when it is not required.

Recommendations for reducing consumption and therefore helping to preserve the environment:

If the vehicle has been parked in the sun, open the doors for a few moments to let the hot air escape before starting the engine.
– Do not leave an empty roof rack fitted to the vehicle.
– It is better to fit a trailer for bulky objects.
– When towing a caravan, fit a wind deflector and adjust it carefully.
– Avoid using the car for door-to-door calls (short journeys with long waits in between) because the engine never reaches its normal operating temperature.

Your vehicle complies with criteria for recycling and recovering vehicles at the end of their service life which will come into force in 2015.

Some parts of your vehicle have therefore been designed to facilitate future recycling.

These parts are easy to remove so that they can be recovered and reprocessed by recycling companies.

By virtue of its design, moderate fuel consumption and initial settings, your vehicle also conforms to current antipollution regulations. The manufacturer is actively striving to reduce pollutant exhaust gas emissions and to save energy. But the fuel consumption of your vehicle and the level of pollutant exhaust gas emissions are also your responsibility. Ensure that it is maintained and used correctly.

Maintenance

It is important to remember that failure to respect antipollution regulations could lead to legal action being taken against the vehicle owner.

In addition, replacing engine, fuel supply system and exhaust components with parts other than those originally recommended by the manufacturer may alter your vehicle so that it no longer complies with anti-pollution regulations.

Have your vehicle adjusted and checked by an authorised dealer, in accordance with the instructions given in your maintenance schedule: they will have all the equipment necessary for ensuring that your vehicle is maintained to its original standard.

Engine adjustments

– **Spark plugs:** for optimum conditions of use, output and performance the specifications laid down by our Design Department must be strictly applied.

  If the spark plugs have to be changed, use the make, type and gap specified for your vehicle's engine. Contact an authorised dealer for this.

– **Air filter, fuel filter:** a choked element will reduce efficiency. It must be replaced.
– **Ignition and idle speed:** no adjustment is needed.

Exhaust gas monitoring system

The exhaust gas monitoring system will detect any operating faults in the vehicle's antipollution system.
If this system malfunctions, toxic substances may be released into the atmosphere or damage may occur.

This warning light on the instrument panel will indicate if there are any faults in the system:
This lights up when the ignition is switched on and goes out when the engine is started.

– If it lights up continuously, consult an approved Dealer as soon as possible;

– if it flashes, reduce the engine speed until the light stops flashing. Contact an authorised dealer as soon as possible.

ENVIRONMENT

Your vehicle has been designed with respect for the **environment** in mind for its entire service life: during production, use and at the end of its life.
This commitment is illustrated by the Renault eco² signature.

Manufacture

Your vehicle has been manufactured at a factory which complies with a policy to reduce the environmental impact on the surrounding areas (reduction of water and energy consumption, visual and noise pollution, atmospheric emissions and waste water; sorting and re-using waste).

Emissions

Your vehicle has been designed to emit fewer greenhouse gases (CO2) while in use, and therefore to consume less fuel (eg. 140 g/km, equivalent to 5.3 l/100 km for a diesel vehicle).

Our vehicles are also equipped with a particle filter system including a catalytic converter, an oxygen sensor and an active carbon filter (the latter prevents vapour from the fuel tank being released into the open air).

For certain diesel vehicles, this system also has a particle filter to reduce the volume of soot particles emitted.

Please make your own contribution towards protecting the environment too

– Worn parts replaced in the course of routine vehicle maintenance (vehicle battery, oil filter, air filter, batteries, etc.) and oil containers (empty or filled with used oil) must be disposed of through specialist organisations.

– At the end of the vehicle's service life, it should be sent to approved centres to ensure that it is recycled.

– In all cases, comply with local legislation.

Recycling

Your vehicle is 85% recyclable and 95% recoverable.

To achieve these objectives, many of the vehicle components have been designed to enable them to be recycled. The materials and structures have been carefully designed to allow these components to be easily removed and reprocessed by specialist companies.

In order to preserve raw material resources, this vehicle incorporates numerous parts made from recycled plastics or renewable materials (vegetable or animal-derived materials such as cotton or wool).

TYRE PRESSURE MONITORING SYSTEM (1/3)

If the vehicle is equipped with the function, this system monitors the tyre pressure.

Operating principle

Each wheel (except for the emergency spare wheel) has a sensor in the inflation valve which periodically measures the tyre pressure.
The system displays the current pressures on the instrument panel ***1*** and alerts the driver in the event of insufficient pressure.

Resetting the standard level for the tyre pressures

This should be done:
– when the standard tyre pressure needs to be changed to adapt to usage conditions (empty, carrying a load, motorway driving, etc.);
– after swapping a wheel (however this practice is not recommended);
– after changing a wheel.

It should always be done after checking the tyre pressure of all four tyres when cold.

Tyre pressures must correspond to the current usage of the vehicle (empty, carrying a load, motorway driving, etc.).

Resetting can also be done from the multifunction screen ***3***. Select the menu “Vehicle”, “Tyre pressure”.

Resetting procedure

With the ignition on:
– repeatedly and briefly press control ***2*** to select the tyre pressure display and the “Tyre pressure” function;
– press and hold (around 3 seconds) the button ***2*** to launch the reset. The flashing tyres followed by the messages “Learning TP initiated” and then “Tyres location in progress” indicates that the reset request for the tyre pressure reference value has been acknowledged.

Reset can take several minutes of driving.

If the resetting is followed by short trips, the message “Tyres location in progress” can remain displayed after successive restarts.

Note
The standard tyre pressure cannot be less than that recommended and indicated on the door frame.

Display
The display ***1*** and the warning light ***4*** on the instrument panel warn you of any tyre pressure faults (flat tyre, punctured tyre, system fault, etc.).

For your safety, the warning light STOP requires you to stop immediately as soon as traffic conditions allow.

"Adjust tyre pressure"
A wheel ***B*** is shown in orange, the warning light ***4*** comes on and the message "Adjust tyre pressure" appears.
They indicate that a wheel is deflated.
Check and, if necessary, readjust the pressures of the four wheels when cold.

The warning light ***4*** goes off after a few minutes' driving.

"Puncture"
A wheel ***B*** is shown in red, the warning light ***4*** comes on, the message "Puncture" appears and there is a beep.
This message appears along with the STOP warning light.
They indicate that the affected wheel is punctured or severely underinflated. Replace it or contact an approved dealer if it is punctured. Top up the tyre pressure if the wheel is deflated.

"Check tyre pressure sensors"
A wheel ***A*** disappears, the warning light ***4*** flashes for several seconds then comes on continuously and the message "Check tyre pressure sensors" appears.
This message appears along with the warning light. They indicate that at least one wheel is not fitted with sensors (e.g. emergency spare wheel). Otherwise, consult an authorised dealer.

The sudden loss of pressure in a tyre (burst tyre, etc.) cannot be detected by the system.

“Tyres location in progress”

This message “Tyres location in progress” appears when driving if one or more wheels have been fitted with sensors not recognised by Renault.

Consult an approved dealer

Readjustment of tyre pressures

The tyre pressures should be adjusted when cold (please refer to the label located on the edge of the driver’s door). If the tyre pressures cannot be checked when the tyres are cold, the recommended pressures should be increased by 0.2 to 0.3 bar (3 PSI).
Never deflate a hot tyre.

Replacing wheels/tyres

This system requires specific equipment (wheels, tyres, hubcaps, etc.). Please see the information on “Tyres” in Section 5.
Contact an approved Dealer to fit new tyres and to find out about available accessories compatible with the system and available from your dealer network: the use of any other accessory could affect the correct operation of the system or damage a sensor.

Emergency spare wheel

If the vehicle is equipped with an emergency spare wheel, it will not have a sensor. If the vehicle is fitted with one, the warning light ***4*** flashes for several seconds then comes on continuously along with the warning light, and the message "Check tyre pressure sensors” appears on the instrument panel.

Tyre repair product and inflation kit

Because the valves are specially designed, only use equipment approved by the approved network. Please refer to “Tyre inflation kit” in Section 5.

Changing a wheel
The system may take several minutes depending on use for the new wheel positions and pressures to be recognised; check the tyre pressures after all operations.

This function is an additional driving aid.
However, the function is not intended to replace the driver. It cannot, therefore, under any circumstances replace the vigilance or the responsibility of the driver. Check the tyre pressures, including the emergency spare wheel, once a month.

- **ABS (anti-lock braking system);**
- **ESC (electronic stability control) with understeer control and traction control;**
- **emergency brake assist;**
- **advanced traction control;**
- **active emergency braking;**
- **driver assistance with a trailer;**
- **hill start assistance;**
- **rear wheel steering.**

Other driving assistance systems are detailed on the following pages.

These functions are an additional aid in the event of critical driving conditions, enabling the vehicle behaviour to be adapted to suit the driving conditions.

However, the functions do not take the place of the driver. **They do not increase the vehicle's limits and should not encourage you to drive more quickly.** Therefore, they can under no circumstances replace the vigilance or responsibility of the driver when manoeuvring the vehicle (the driver must always be ready for sudden incidents which may occur when driving).

ABS (anti-lock braking system)

Under heavy braking, the ABS prevents the wheels from locking, allowing the stopping distance to be managed and keeping control of the vehicle.

Under these circumstances, the vehicle can be steered to avoid an obstacle whilst braking. In addition, this system can increase stopping distances, particularly on roads with low surface grip (wet ground etc.).
You will feel a pulsation through the brake pedal each time the system is activated. The ABS does not in any way improve the vehicle's physical performance relating to the road surface and roadholding. It is still **essential** to follow the rules of good driving practice (such as driving at a safe distance from the vehicle in front etc.).

In an emergency, apply **firm and continuous pressure** to the brake pedal. There is no need to pump it repeatedly. The ABS will modulate the force applied in the braking system.

Operating faults:

– and lit up on the instrument panel alongside messages “Check ABS”, “Check braking system” and “Check ESC”: indicates the ABS, ESC and emergency brake assist are deactivated. **Braking is always enabled**;

– , , and STOP lit up on the instrument panel alongside the message “Braking system fault”: **this indicates a fault in the braking system.**

In both cases, consult an approved dealer.

Warning light STOP requires you to stop immediately, for your own safety, as soon as traffic conditions allow. Switch off the engine and do not restart it. Contact an approved Dealer.

Your braking systems are partially operational. However, it is **dangerous to brake suddenly** and it is essential to stop immediately, as soon as traffic conditions allow. Contact an approved dealer.

Electronic stability control ESC with understeer control and traction control

Electronic stability control ESC

This system helps you to keep control of the vehicle in critical driving conditions (avoiding an obstacle, loss of grip on a bend, etc.).

Operating principle

A sensor in the steering wheel detects the direction selected by the driver.

Other sensors throughout the vehicle measure the actual direction.

The system compares driver input to the actual trajectory of the vehicle and corrects the trajectory if necessary by controlling the braking of certain wheels and/or engine power. In the event that the system is engaged, indicator light flashes on the instrument panel.

Understeer control

This system optimises the action of the ESC in the case of pronounced understeer (loss of front axle road holding).

Traction control

This system helps to limit wheelspin of the drive wheels and to control the vehicle when pulling away accelerating or decelerating.

Operating principle

Using the wheel sensors, the system measures and compares the speed of the drive wheels at all times and slows down their over-rotation. If a wheel is starting to slip, the system brakes automatically until the drive supplied becomes compatible with the level of grip under the wheel again.
The system also adjusts the engine speed to the grip available under the wheels, independently of the pressure exerted on the accelerator pedal.

Operating faults

When the system detects an operating fault the message “Check ESC” and warning light and appear on the instrument panel.
In this case, the ESC and traction control system are deactivated. Consult an authorised dealer.

Emergency brake assist

This system supplements the ABS and helps reduce vehicle stopping distances.

Operating principle

The system is for detecting an emergency braking situation. In this case, the braking assistance immediately develops maximum power and may trigger ABS regulation.

ABS braking is maintained as long as the brake pedal is applied.

Hazard warning lights switching on

Depending on the vehicle, these may light up in the event of sudden deceleration.

Braking anticipation

Depending on the vehicle, when you rapidly release the accelerator, the system anticipates the braking manoeuvre in order to reduce stopping distances.

Special cases

When using the cruise control:
- if you use the accelerator, when you release it, the system may be triggered;
- if you do not use the accelerator, the system will not be triggered.

Operating faults

When the system detects an operating fault the message “Check braking system” appears on the instrument panel along with the warning light.

Consult an approved dealer.

Advanced traction control

If fitted on the vehicle, grip control makes it easier to control the vehicle on low grip surfaces (soft ground, etc.).

These functions are an additional aid in the event of critical driving conditions, enabling the vehicle behaviour to be adapted to suit the driving conditions.

However, the functions do not take the place of the driver. **They do not increase the vehicle's limits and should not encourage you to drive more quickly.** Therefore, they can under no circumstances replace the vigilance or responsibility of the driver when manoeuvring the vehicle (the driver must always be ready for sudden incidents which may occur when driving).

Activating or deactivating the system

From the multifunction screen, select menu "Vehicle", "Driving assistance", "Traction control" then select the mode:

« Auto **»**

The "Auto Advanced Traction Control" message is shown on the instrument panel for approximately 15 seconds.

This position enables optimal usage under normal driving conditions (dryness, humidity, light snow, etc.).

« Expert **»**

This position enables optimal usage on soft ground (mud, sand, dead leaves, etc.). "Expert" mode uses traction control functions.

The system automatically switches to «Auto" mode at speeds above approximately 24.8 mph (40 km/h) and the message "Auto Advanced Traction Control» is displayed on the instrument panel for approximately 15 seconds.

Note: The system's default mode is "Auto" mode.

Tyres

When they need to be replaced, only tyres of the same make, size, type and profile should be used.

Tyres fitted to the vehicle should either be identical to those fitted originally or conform to those recommended by your approved dealer.

Active emergency braking

Using the sensor ***1***, the system calculates the distance separating the vehicle from the one in front and alerts the driver if there is a risk of a front-end collision. The driver can then brake the vehicle to limit the damage arising from a collision.

Note: Make sure that the sensor ***1*** is not obscured (by dirt, mud, snow, etc.).

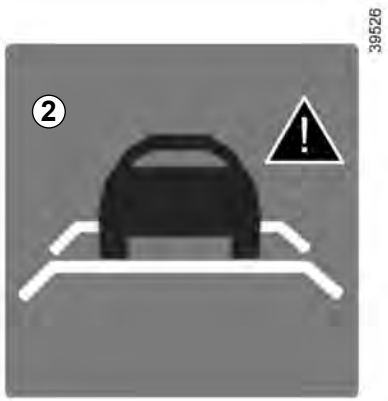

Operation

While driving (at speeds of between 20 and 90 mph (30 and 140 km/h)), if there is a risk of collision with the vehicle in front, warning light ***2*** will be displayed on the instrument panel in red and, depending on the vehicle, on the head-up display, alongside a beep.

If the driver depresses the brake pedal and the system still detects a risk of collision, the brake force is increased.
If the driver fails to react following an alert of an imminent collision, the system activates the brakes.

The system only detects vehicles driving in the same direction of traffic. The system cannot detect motorcycles because of the difficulty in forecasting their trajectory.

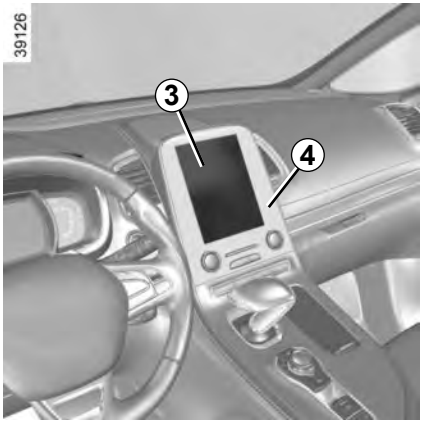

Activating or deactivating the system

From the multifunction screen ***3***, select menu “Vehicle”, “Driving assistance”, “Active braking” then choose “ON” or “OFF”.

Warning light is displayed on the instrument panel when the system is deactivated.

This system is reactivated each time the ignition is switched on.

Conditions for non-activation of the system

The system cannot be activated:
– when the gear lever is in neutral;
– when the parking brake is activated;
– while cornering.

You can access the “Driving assistance” menu directly from the button ***4***.

Operating faults

When the system detects an operating fault, the warning light lights up on the instrument panel, with the message “Active braking disconnected”.

There are two possibilities:

– The system is temporarily experiencing difficulties (for example: sensor obscured by dirt, mud, snow, etc.) in this case, park the vehicle and switch off the engine. Clean the detection zone of the radar. When you next start the engine, the warning light and the message go out;

– If this is not the case, this may arise from another cause; contact an Approved Dealer.

Active emergency braking

This function is an additional driving aid. However, this function is not under any circumstances intended to replace the due care and attention of the driver, who should at all times be in control of the vehicle.

System servicing/repairs

– In the event of an impact, the sensor alignment may become changed, and its operation will consequently be affected. Deactivate the function, then consult an authorised dealer.

– Any work in the area where the radar is located (repairs, replacements, touching up of paintwork) must be carried out by a qualified professional.

– Fitting accessories which may block the radar is prohibited (bull-bars, etc.).

Only an authorised dealer is qualified to service the system.

In the event of system disturbance

Some conditions can disturb or damage the operation of the system, such as:

– a complex environment (metal bridge, etc.);

– poor weather conditions (snow, hail, black ice, etc.).

Risk of inadvertent braking.

Active emergency braking

Limitation of the system operation

– The system will only respond to vehicles which are moving or which have been sensed as moving.

– A vehicle travelling in the opposite direction will not trigger any alert or any action on the system operation.

– The sensor area should be kept clean and free of any modifications in order to ensure the proper operation of the system.

– The system cannot respond to small vehicles such as motorbikes or bicycles as effectively as to other vehicles.

Deactivating the function

The function should be deactivated if:

– the brake lights are not functioning;

– the front of the vehicle has undergone an impact or been damaged;

– the vehicle is being towed (breakdowns).

Halting the function

You can halt the active braking function at any time by tapping the accelerator pedal or by turning the steering wheel in a avoidance manoeuvre.

If the driver notices any unusual behaviour in the system, please consult an authorised dealer.

Driver assistance with a trailer

This system helps to maintain control over the vehicle while using a trailer. It detects shaking caused by towing a trailer under certain driving conditions.

Operating conditions

– The function should be activated by an authorised dealer;

– the towbar must be approved by an authorised dealer;

– the wiring must be approved by an authorised dealer;

– the towbar must be connected to the vehicle.

Operating principle

The function stabilises the vehicle by:

– asymmetric braking of the front wheels to reduce shaking caused by the trailer;

– braking of all four wheels and limitation on engine torque to reduce the vehicle speed until the shaking has stopped.

Warning light flashes on the instrument panel to inform the driver.

If the towbar wiring is plugged in but no trailer is attached (bicycle carrier, luggage carrier with lighting, etc.), the function may act under certain rutted road conditions.

Risk of vehicle deceleration.

Hill start assistance

Depending on the gradient of the incline, this system assists the driver when starting on a hill. It prevents the vehicle from rolling backwards by automatically applying the brakes when the driver lifts his/her foot off the brake pedal to depress the accelerator pedal.

System operation

It only operates when the gear lever is in a position other than neutral (other than **N** or **P** for automatic transmissions) and the vehicle is completely stationary (brake pedal depressed)
The system holds the vehicle for approximately **2 seconds**. The brakes are then released (the vehicle will move according to the slope).

The hill start assistance system cannot completely prevent the vehicle from rolling backwards in all situations (extremely steep gradients, etc.).
In all cases, the driver may depress the brake pedal to prevent the vehicle from rolling backwards.
The hill start assistance function should not be used for prolonged stops: use the brake pedal.
This function is not designed to immobilise the vehicle permanently.
If necessary, use the brake pedal to stop the vehicle.
The driver must remain particularly vigilant when driving on slippery or low-grip surfaces and/or on hills.
Risk of serious injury.

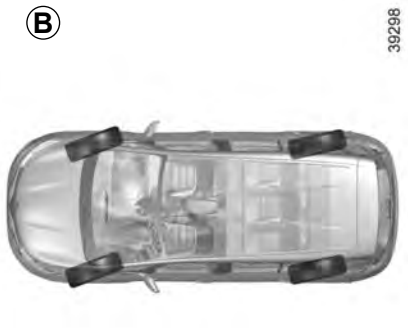

Rear wheel steering

On equipped vehicles, this system, when the vehicle is being driven, steers the rear wheels according to driving conditions: at low speed this system offers manoeuvrability, at higher speeds it optimises stability.

When driving at low speeds, the rear wheels steer in the opposite direction to the front wheels (figure ***A***) to increase the vehicle's manoeuvrability. This is used when driving in towns, on winding roads, during parking manoeuvres, etc.

When driving at higher speeds, the rear wheels steer in the same direction as the front wheels (figure ***B***) to optimise the vehicle's stability. This is useful when changing lanes or when cornering etc.

Note: The system configuration (agility, etc.) depends on the mode selected in the «Multi-sense» menu (please refer to the information on «Multi-sense» in Section 3).

Operating faults

– If the warning light, together with the message "Check power steering", is displayed on the instrument panel: please contact an authorised dealer.

– If the warning light STOP, together with the message "Power steering fault", is displayed on the instrument panel, **this indicates a fault in the system.**

STOP requires you to stop as soon as traffic conditions allow. Contact an approved Dealer.

An impact to the underside of the vehicle (e.g.: striking a post, raised kerb or other street furniture) may result in damage to the vehicle (e.g.: deformation of an axle).

To avoid any risk of accident, have your vehicle checked by an approved Dealer.

LANE DEPARTURE WARNING (1/3)

This system notifies the driver when they accidentally cross a continuous or broken line.
This function uses a camera attached to the windscreen, behind the rear-view mirror.

On equipped vehicles, some information is given on the head-up display.

This function is a driving aid in the event of the accidental crossing of a continuous or broken line in the road. However, the function is not intended to replace the driver. The function can be disrupted under certain conditions, including:

- poor visibility (rain, snow, fog, dirty windscreen, glare of the sun, partially obscured road lines, etc.);
- roads with tight bends;
- closely following a vehicle in the same lane;
- worn road markings, difficult to distinguish or spaced very widely apart;
- narrow roads;
- ...

In this case, the line visibility indicators remain uncoloured on the instrument panel to indicate that the function will not operate (lines not detected).

Under no circumstances should this function replace the driver's care or responsibility whilst performing manoeuvres.

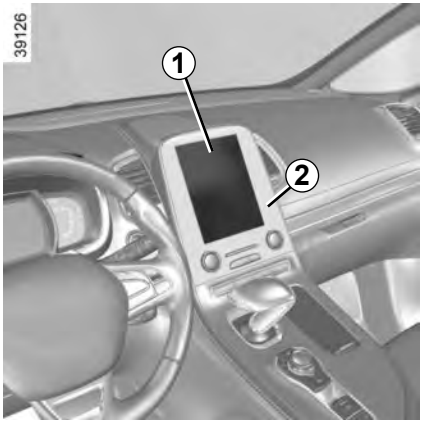

Activation/deactivation

From the multifunction screen ***1***: select “Vehicle”, “Driving assistance”, “Lane departure warning” then choose “ON” or “OFF”.

When the function is activated, the visibility indicators ***3*** for the left and right lines are displayed in grey on the instrument panel.

You can access menu “Driving assistance” directly from button ***2*** /i\.

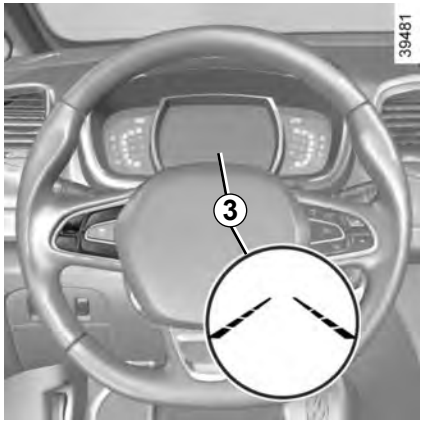

The function is set to notify the driver if:

– the vehicle speed is greater than approximately 45 mph (70 km/h);

and

– lines are detected and the visibility indicators ***3*** are green.

The function triggers an alert if a line is crossed without the direction indicators being activated. The function alerts the driver through a beep and the indicator the line crossed switches to red on the instrument panel.

Conditions for non-activation of alerts

– Indicators activated or having been activated less than approximately four seconds prior to departing from the lane;
– Very fast lane departure;
– Driving continuously on a line;
– On bends, the function allows for slightly cutting the bend;
– ...

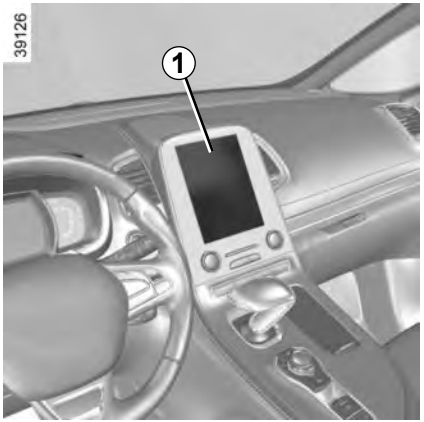

Adjustment

From the multifunction screen ***1***, select “Vehicle”, “Driving assistance”, “Lane departure warning settings” then in:

– volume: adjust the alert volume to one of five levels;
– sensitivity: adjust the sensitivity level for line detection. To do this select:
  – “Low” line detected upon crossing;
  – “Middle” line detected on approach;
  – “high” line detected nearby.

Operating faults

In the event of a malfunction, a message “Lane departure warning check” is displayed on the instrument panel, and the visibility indicators for the left and right lines disappear from the instrument panel.
Consult an approved dealer.

BLIND SPOT WARNING (1/3)

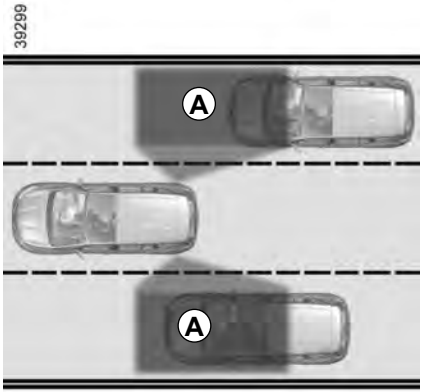

This system alerts the driver to other vehicles in the detection zone ***A***.

The system is activated when the vehicle's speed is between approximately 30 km/h (19 mph) and 140 km/h (87 mph).

This function uses sensors ***1*** installed in the front and rear bumper of both sides.

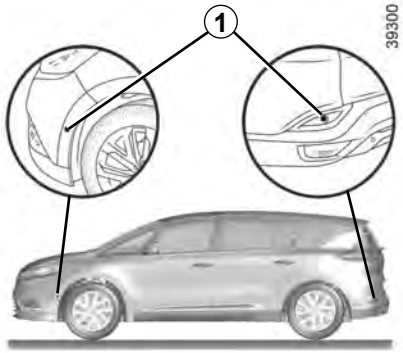

Activation/deactivation

On the multifunction screen ***2***, select the "Vehicle" menu, "Driving assistance", and "Blind spot alert", and then choose "ON" or "OFF".

When the engine is started, the system remembers its position when the ignition was last switched off.

You can access the "Driving assistance" menu directly by pressing the button ***3*** /i\.

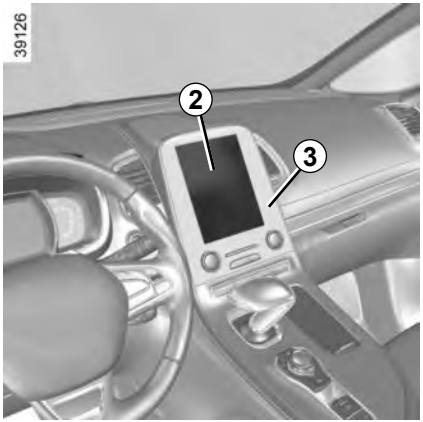

Special feature

Make sure that the sensors are not obscured (by dirt, mud, snow, etc.).

If a sensor is obscured, the message "Blind spot clean sensor" will appear on the instrument panel. If this happens, please clean the sensors.

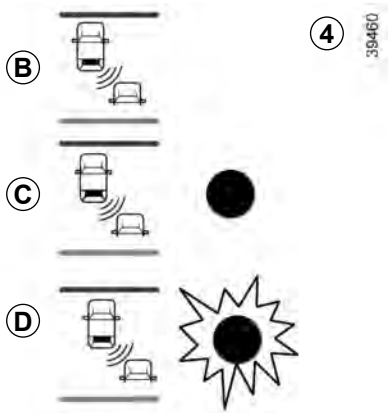

Indicator *4*

An indicator light ***4*** is situated on both door mirrors ***5***.

Note: Clean the door mirrors ***5*** regularly, so that the indicator lights ***4*** can be seen properly.

Operation

This function will indicate:

– when the vehicle speed is between approximately 30 km/h (19 mph) and 140 km/h (87 mph);
– when another vehicle is in the blind spot area and travelling in the same direction as your vehicle.

If another vehicle is being overtaken, the indicator ***4*** will be activated only if that vehicle remains in the blind spot for more than one second.

Display *B*

The function is activated and has not detected any vehicles.

Display *C*

Initial warning: the indicator light ***4*** shows that a vehicle has been detected in the blind spot.

Display *D*

When the direction indicator is activated, the indicator light ***4*** flashes when a vehicle is detected in the blind spot on the side towards which you are about to steer. If you cancel the direction indicator, the function will return to the initial warning (display ***C***).

Note: The system's detection range operates according to a standard lane width. If you are driving in narrow traffic lanes, it may detect vehicles in other lanes.

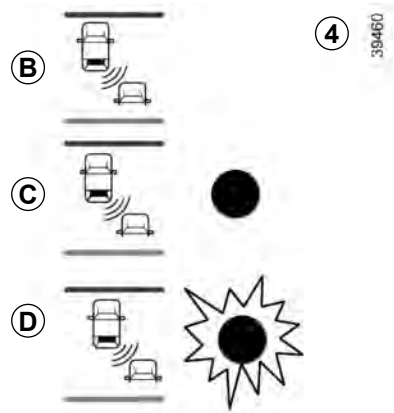

Conditions for non-function

- If the object is not moving;
- if traffic is heavy;
- the road is winding;
- if front and rear sensors both detect objects at the same time (e.g. when passing an articulated lorry).
- ...

Operating faults

If the system detects a fault, the message “Check blind spot alert” is displayed on the instrument panel. Consult an authorised dealer.

Note: When the engine is started, the indicator light ***4*** (display ***B***) flashes three times. It is normal.

– The system’s detection range operates according to a standard lane width. If you are driving in wide traffic lanes, the system might not be able to detect a vehicle in the blind spot.

– The system might be disrupted momentarily if it is exposed to strong electromagnetic waves (as beneath high-tension power lines) or to very poor weather conditions (heavy rain, snow, etc.). Remain aware of driving conditions.

There is a risk of accidents.

Because sensors have been installed in the bumpers, any work (repairs, replacements, touching up of paintwork) must be carried out by a qualified professional.

This function is an additional aid which indicates other vehicles in the blind spot area.

It can never in any case be a substitute for care nor for the driver’s responsibility while in charge of his vehicle.

The driver should always look out for sudden hazards during driving: make sure while manoeuvring that there are no moving or movable objects (such as a child, an animal, a pushchair or a bicycle) or small or narrow obstacles (such as a boulder or a post) in the blind spot area.

SAFE DISTANCE ALERT (1/2)

Using the sensor ***1***, this function notifies the driver about the time interval separating them from the vehicle in front, so they can respect a safe distance between the two vehicles.

Note: make sure that the sensor ***1*** is not obscured (by dirt, mud, snow, etc.).

The function is activated when the vehicle speed is between about 20 and 125 mph (30 and 200 km/h).

When the engine is started, the function maintains the same status that was active when the engine was last stopped.

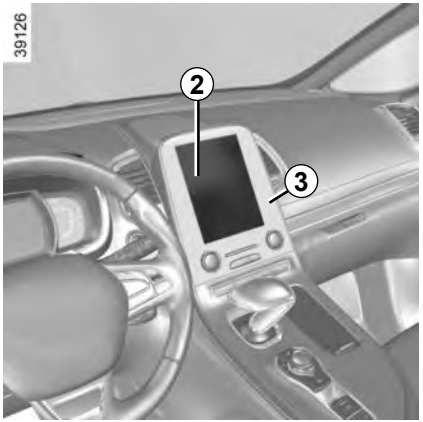

Activating/deactivating the function

From the multifunction screen ***2***, select menu “Vehicle”, “Driving assistance”, “Distance warning” then choose “ON” or “OFF”.

You can access menu “Driving assistance” directly from button ***3*** /i\.

This function is an additional driving aid. However, this function is not under any circumstances intended to replace the due care and attention of the driver, who should at all times be in control of the vehicle.

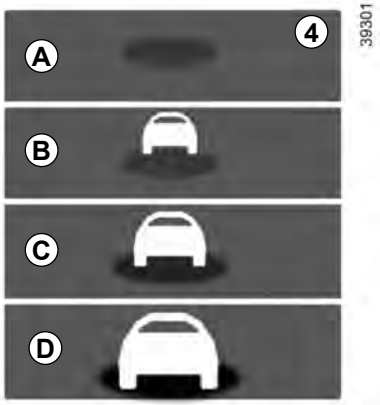

Operation

Upon activating the function, indicator ***4*** notifies the driver of the distance separating them from the vehicle in front.

– ***A*** (grey): function not operational;

– ***A*** (green): no vehicle detected;

– ***B*** (green): the time interval is greater than or equal to around two seconds (distance between the two vehicles adapted to your speed);

– ***C*** (orange): the time interval falls between around 1 and 2 seconds (insufficient distance between the two vehicles);

– ***D*** (red): the time interval is less than or equal to around one second (very insufficient distance between the two vehicles).

If the interval between the two vehicles is less than around 0.5 seconds, warning light ***4*** will flash on the instrument panel. Under certain conditions, the time interval may not be displayed:
– while cornering;
– when changing lane;
– if the vehicle in front is sufficiently far or outside the range of the sensor.

On equipped vehicles, some information is given on the head-up display.

This function is essential if adaptive cruise control is activated.

The measurement is displayed for information only: the system performs no action on the vehicle.
This function is not designed for use in urban conditions or for a dynamic driving style (sudden cornering, acceleration, braking, etc.), but rather for stable driving conditions.
The function does not interact with the braking system.
The sensor area should be kept clean and free of any modifications in order to ensure the proper operation of the system.
Any work in the area where the radar is located (repairs, replacements, touching up of paintwork) must be carried out by a qualified professional.

The speed limiter function helps you stay within the driving speed limit that you choose, known as the **limit speed**.

If you wish, you can associate the speed limiter and the “Overspeed alert” function (please refer to the information on the “Overspeed alert” in Section 2).

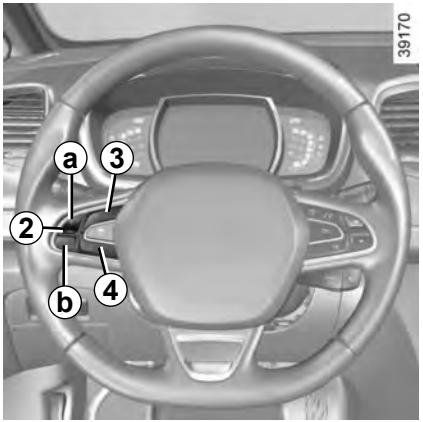

Controls

1 Main “On/Off” switch.

2 Controls for:

- ***a*** speed limiter activation, memory and increase (+);
- ***b*** decreasing the speed limiter (-).

3 Activation and recall of memorised limited speed (R).

4 Speed limiter function standby (with limited speed memory) (O).

Switching on

Press switch ***1*** on side . The indicator light comes on, lit orange, and the message “Speed limiter” appears on the instrument panel, accompanied by dashes to indicate that the speed limiter function is activated and waiting to store a limited speed.

To store the current speed, press switch ***2*** on side ***a*** (+): the limited speed will replace the dashes.

The minimum stored speed is 20 mph (30 km/h).

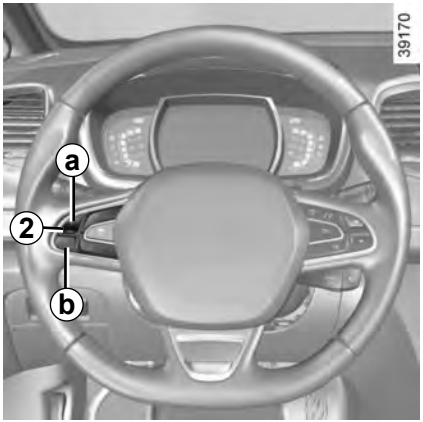

Driving

When a limited speed has been stored and this speed is not reached, driving is similar to driving a vehicle without the speed limiter function.

Once you have reached the stored speed, no effort on the accelerator pedal will allow you to exceed the programmed speed except in an emergency (refer to information on “Exceeding the limit speed”).

Varying the limit speed

The speed limiter can be changed by repeatedly pressing switch ***2*** :

– side ***a*** (+) to increase the speed;

– side ***b*** (-) to reduce the speed.

The speed limiter function is in no way linked to the braking system.

Exceeding the limit speed

It is possible to exceed the limit speed at any time. To do this: press the accelerator pedal **firmly and fully** (beyond the resistance point).

While the speed is being exceeded, the speed limiter flashes red on the instrument panel.

Then, release the accelerator: the speed limiter function will return as soon as you reach a speed lower than the stored speed.

Limited speed cannot be maintained

If driving up or down a steep gradient, the system is unable to maintain the limited speed: the stored speed flashes red on the instrument panel and a beep sounds at regular intervals to inform you.

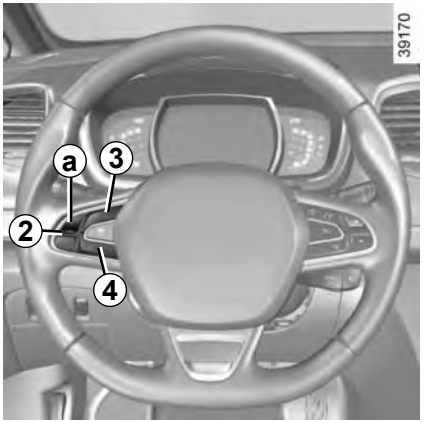

Putting the function on standby

The speed limiter function is suspended when you press switch ***4*** (O). In this case, the speed limit remains stored and the message “Memorised” accompanied by this speed appears on the instrument panel.

Recalling the limit speed

If a speed has been stored, it can be recalled by pressing switch ***3*** (R).

When the speed limiter is put on standby, pressing side ***a*** (+) on switch ***2*** reactivates the function without taking into account the stored speed: it is the speed at which the vehicle is moving that is taken into account.

Switching off the function

The speed limiter function is deactivated if you press switch ***1***: in this case a speed is no longer stored. The orange instrument panel warning light goes out, confirming that the function is stopped.

OVERSPEED ALERT (1/3)

The overspeed alert with signage panel recognition notifies the driver that they are exceeding the speed limit for the section of road on which they are currently travelling.

Operating principle

The system detects speed limit signs on the side of the road and displays the speed limit.
It mainly uses information taken from the camera ***1***, attached to the windscreen behind the rear-view mirror.

Note: Make sure the windscreen is not obstructed (dirt, ice, snow, etc.).

The system also uses information from other vehicle systems (navigation GPS, etc.).

Once the speed limiter is activated, you can adjust the speed limiter indication displayed by the system.

In the event of exceeding the speed limit, the sign display is modified (the characters change to red or the circle around the sign flashes) no notify you.

On equipped vehicles, some information is given on the head-up display.

Special situations

– If the vehicle is travelling in a country where the speed units differ from those of the vehicle, the system displays the speed limit sign in the unit of the country, alongside the speed limit converted to the unit used by the vehicle's instrument panel.
– For countries where the speed limit is reduced during rainy weather on some types of roads, the system can modify the limited speed after a few seconds of wiping the windscreen.
– The system does not take into account exceptional speed limit measures, such as peak pollution days.

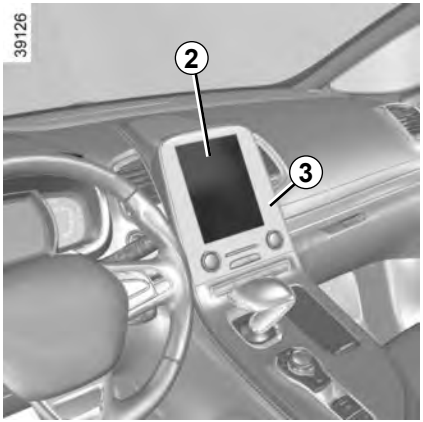

Activating/deactivating the system

On the multifunction screen ***2***, select the “Vehicle” menu, followed by “Driving assistance”, “Speed alert settings”, “Speed warning”, then choose “ON” or “OFF”.

You can access menu “Driving assistance” directly from button ***3*** .

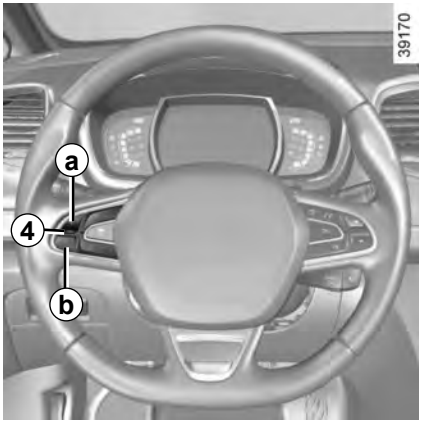

With the function activated and depending on local laws, you can activate the “increased vigilance zones”. The system will notify you of the distance separating you from this zone, and while you are travelling in the zone.

Varying the limit speed

If the speed limiter notification differs from the detected speed value, press and hold switch ***4***:

– side ***a*** (+) to increase the notification speed to the detected speed;
– side ***b*** (-) to reduce the notification speed to the detected speed.

Operating fault

The system cannot detect the speed limit if:

– the windscreen is not clean;
– the camera is blinded by the sun;
– there is insufficient visibility (night, fog, etc.);
– the signs are not legible (snow, etc.) or are hidden (by another vehicle or by trees);
– the information taken from a navigation system is not up to date.

OVERSPEED ALERT (3/3)

This function is an additional driving aid. However, this function is not under any circumstances intended to replace the due care and attention of the driver, who should at all times be in control of the vehicle.

The driver should always adapt their speed to the traffic conditions, regardless of the system indications.

The system enables maximum speed signs to be detected and does not detect other traffic signage.

The driver should not, however, ignore signs which are not detected by the system and should as a priority comply with the traffic signage and the highway code.

In the event of poor visibility (fog, snow, frost, etc.), it is possible that the system may not indicate the correct speed to the driver.

The driver should always adapt their speed to the traffic conditions, regardless of the system indications.

The cruise control function helps you to maintain your driving speed at a speed that you choose, called the **cruising speed.**

This cruising speed may be set at any speed above 20 mph (30 km/h).

The cruise control function is in no way linked to the braking system.

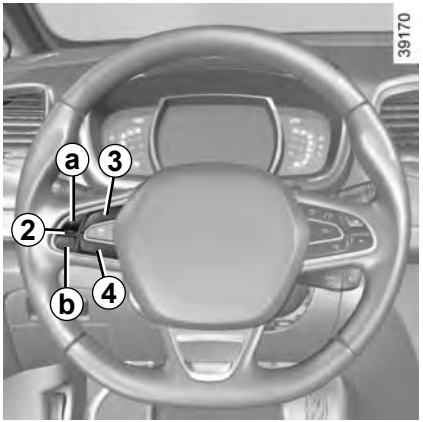

Controls

1 Main “On/Off” switch.

2 Controls for:

- ***a*** cruising speed activation, storage and increase (+) ;
- ***b*** decreasing cruising speed (-).

3 Activation with recall of saved cruising speed (R).

4 Switch the function to standby (with cruising speed saved) (O).

This function is an additional driving aid. However, the function does not take the place of the driver. Therefore, it can under no circumstances replace the driver’s responsibility to respect speed limits and to be vigilant (the driver must always be ready to brake). Cruise control must not be used in heavy traffic, on undulating or slippery roads (black ice, aquaplaning, gravel) and during bad weather (fog, rain, side winds etc.).

There is a risk of accidents.

Switching on

Press switch ***1*** on side .

Indicator light comes on, lit green, and the message “Check cruise control” appears on the instrument panel, accompanied by dashes to indicate that the cruise control function is activated and waiting to store a cruising speed.

Activating cruise control

At a steady speed (above approx. 20 mph or 30 km/h), press switch ***2*** side ***a*** (+): the function is activated and the current speed is saved.

The cruising speed replaces the dashes and cruise control is confirmed by the appearance of the message “Check cruise control” and the warning light .

If you try to activate the function below 20 mph (30 km/h), the message “Invalid speed” will be displayed and the function will remain inactive.

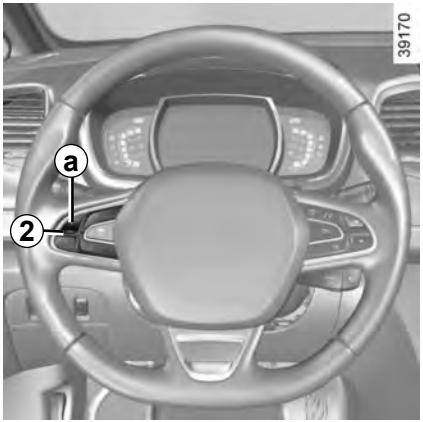

Driving

Once a cruising speed is memorised and the cruise control function is active, you may lift your foot off the accelerator pedal.

Please note that you are strongly advised to keep your feet close to the pedals in order to react in an emergency.

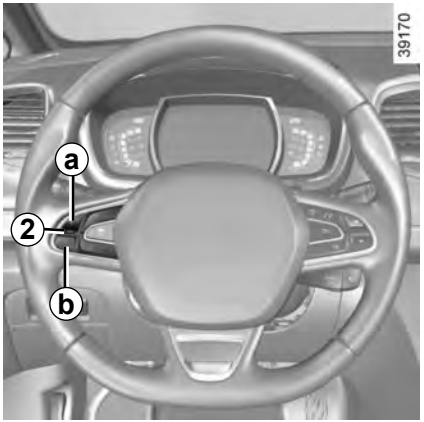

Adjusting the cruising speed

The cruising speed can be changed by pressing the switch ***2*** repeatedly:

– side ***a*** (+) to increase the speed;

– side ***b*** (-) to reduce the speed.

The cruise control function is in no way linked to the braking system.

Exceeding the cruising speed

The cruising speed may be exceeded at any time by depressing the accelerator pedal. While overtaking, the cruising speed flashes red on the instrument panel.

Then, release the accelerator: after a few seconds, the vehicle will automatically return to its set cruising speed.

Cruising speed cannot be maintained

If driving up or down a steep gradient, the system is unable to maintain the cruising speed: the stored speed is flashes red on the instrument panel to inform you of this situation.

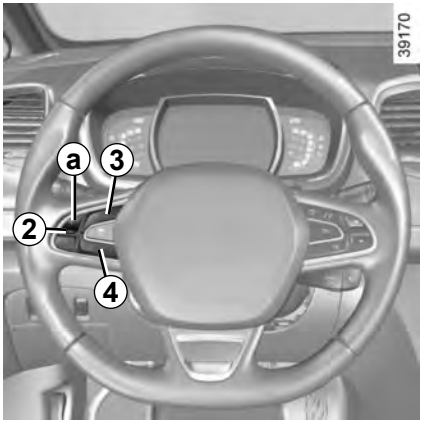

Putting the function on standby

The function is set to standby if you:
– use the switch ***4*** (O);
– the brake pedal;
– depress the clutch pedal or the shift into neutral if the vehicle has an automatic gearbox.

In these three cases, the cruising speed remains stored and the message “Memorised” accompanied by this speed appears on the instrument panel. Standby is confirmed by the display of the cruising speed in grey and the message “Memorised”.

Returning to the cruising speed

If a speed is stored, it can be recalled, once you are sure that the road conditions are suitable (traffic, road surface, weather conditions, etc.). Press switch ***3*** (R) if the vehicle speed is above 20 mph (30 km/h).
When the stored speed is recalled, activation of the cruise control is confirmed by the illumination of the cruising speed in green, along with the message “Check cruise control”.

NB: if the speed previously stored is much higher than the current speed, the vehicle will accelerate more rapidly to reach this threshold.

When the cruise control function is put on standby, pressing switch ***2*** side ***a*** (+) reactivates the cruise control function without taking into account the stored speed: it is the speed at which the vehicle is moving that is taken into account.

Switching off the function

The cruise control function is deactivated if you press switch ***1***: in this case a speed is no longer stored. The green warning light and message on the instrument panel goes out to confirm that the function is deactivated.

Putting the cruise control on standby or switching it off does not cause a rapid reduction in speed: you must brake by depressing the brake pedal.

When traffic conditions permit (large free-flowing road or motorway), the adaptive cruise control gives you the option of maintaining a chosen speed, known as cruise control, adjustable from 30 mph to 90 mph (50 and 140 km/h), while keeping a following distance from the vehicle in front in the same lane.

The sensor has a range of 120 metres.

Note: The driver should take into account the maximum speed limit in their location.

Note: The adaptive cruise control can brake the vehicle up to a third of the braking capacity. Depending on the situation, the driver may need to brake harder.

On equipped vehicles, some information is given on the head-up display.

This function is an additional driving aid. However, the function does not take the place of the driver.

Therefore, it can under no circumstances replace the driver's responsibility to respect speed limits and to be vigilant (the driver must always be ready to brake).

The adaptive cruise control should not be used in heavy traffic, on winding or slippery roads (black ice, aquaplaning, gravel) and during bad weather (fog, rain, side winds etc.).

There is a risk of accidents.

Sensor location

Make sure that the sensor ***1*** is not obscured (by dirt, mud, snow, etc.).

Controls

5 Main “On/Off” switch.

2 Controls for:
- ***a*** cruising speed activation, storage and increase (+) ;
- ***b*** decreasing cruising speed (-).

3 Activation with recall of saved cruising speed (R).

4 Switch the function to standby (with cruising speed saved) (O).

6 Adjusting following distance.

Switching on

Press switch ***5***. Indicator light comes on, lit green, and the message “Adaptive cruise ctrl” appears on the instrument panel, accompanied by dashes to indicate that the cruise control function is activated and waiting to store a cruising speed.

Activating cruise control

At a steady speed (above approx. 30 mph (50 km/h)), press switch ***2*** side ***a*** (+): the function is activated and the current speed is saved.

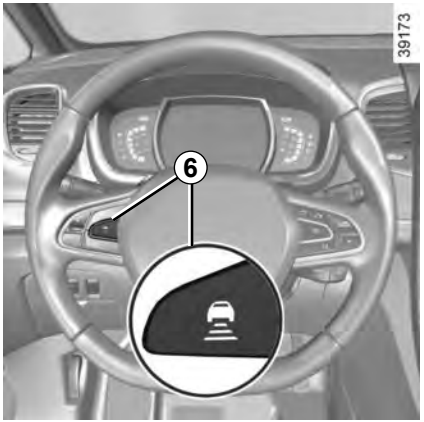

The cruising speed replaces the dashes and cruise control is confirmed by the appearance of the message “Adaptive cruise ctrl” and the indicator light .
If you try to activate the function below 30 mph (50 km/h) or above 90 mph (140 km/h), the message “Invalid speed” is displayed and the function will remain inactive.

Adjusting the following distance

Pressing switch ***6*** multiple times adjusts the following distance.

Driving

Once a cruising speed is memorised and the cruise control function is active, you may lift your foot off the accelerator pedal.

If a following distance is stored and a vehicle travelling slower than yours is detected by the system in your lane, your vehicle will brake (with the brake lights on) and adapt its speed to that of the vehicle in front, respecting the following distance selected previously.

Overtaking

If your speed is lower than the cruise control and you wish to perform an overtaking manoeuvre, activating the direction indicator will provide acceleration enabling the overtaking manoeuvre.

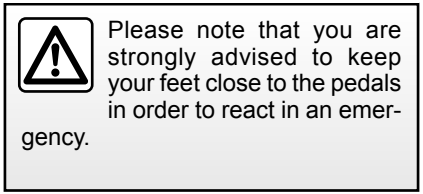

Please note that you are strongly advised to keep your feet close to the pedals in order to react in an emergency.

Adjusting the cruising speed

The cruising speed can be changed by pressing the switch ***2*** repeatedly:

– side ***a*** (+) to increase the speed;

– side ***b*** (-) to reduce the speed.

Varying the following distance

You can vary the following distance from the vehicle in front at any time by pressing switch ***6*** repeatedly.

Horizontal following bars will be displayed on the instrument panel, indicating the following distance selected:

– one bar for a short distance (corresponding to a following time of around one second);
– two bars for a medium distance;
– three bars for a long distance (corresponding to a following time of around two seconds).

Choosing the distance should depend on the traffic, the laws in your country, and on the weather conditions.

If a vehicle is detected by the system in your lane, an outline ***A*** of a vehicle will appear above the following bars.

Exceeding the cruising speed

The cruising speed may be exceeded at any time by depressing the accelerator pedal.
When exceeding this speed, the cruising speed and the following bars show red and the cruising speed flashes on the instrument panel: the distance control function is no longer activated.
Then, release the accelerator: cruise and distance control will automatically reactivate unless the function has been set to standby.

Putting the function on standby

The function is set to standby if:

– you press switch ***4*** (O);

– you depress the brake pedal;

– you depress the clutch pedal;

– you use the gear lever;

– the vehicle speed is lower than 25 mph (40 km/h) or over 100 mph (160 km/h);

– certain driver correction devices and aids are triggered (ABS, ESC, etc.)

In the latter two cases, the message “Adaptive cruise ct disconnected” is displayed on the instrument panel when the function is set to standby.

Standby is confirmed by the display of the cruising speed in grey and the message “Adaptive cruise ctrl”.

Returning to the cruising speed

If a speed is stored, it can be recalled, once you are sure that the road conditions are suitable (traffic, road surface, weather conditions, etc.). Press switch ***3*** (R) if the vehicle speed is above around 30 mph (50 km/h).

When the stored speed is recalled, activation of the cruise control is confirmed by the illumination of the cruising speed in green, along with the message “Adaptive cruise ctrl”.

When the cruise control function is put on standby, pressing switch ***2*** side ***a*** (+) reactivates the cruise control function without taking into account the stored speed: it is the speed at which the vehicle is moving that is taken into account.

Note: if the speed previously stored is much higher than the current speed, the vehicle will accelerate to reach this threshold.

Under certain conditions (coming up behind a vehicle moving more slowly, rapid change of lane of vehicles in front, etc.), the system may not have time to respond and may emit a beep alongside the alert ***A*** when the situation requires the driver's attention, or the alert ***B*** when the situation requires immediate action from the driver.

React accordingly and perform the appropriate manoeuvres.

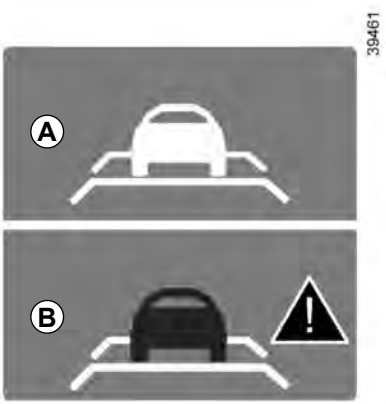

Switching off the function

The cruise control function is deactivated if you press switch ***5***: in this case a speed is no longer stored. The green indicator light and the message "Adaptive cruise ctrl" on the instrument panel go out to confirm that the function is deactivated.

Please note that you are strongly advised to keep your feet close to the pedals in order to react in an emergency.

Putting the cruise control on standby or switching it off does not cause a rapid reduction in speed: you must brake by depressing the brake pedal.

This function is an additional driving aid. However, this function is not under any circumstances intended to replace the due care and attention of the driver, who should at all times be in control of the vehicle.

The driver should always adapt their speed to the traffic conditions, regardless of the system indications.

The system should under no circumstances be taken to be an obstacle detector or an anti-collision system.

System servicing/repairs

– In the event of an impact, the sensor alignment may become changed, and its operation will consequently be affected. Deactivate the function, then consult an authorised dealer.

– Any work in the area where the radar is located (repairs, replacements, touching up of paintwork) must be carried out by a qualified professional.

System disturbance

In a complex environment (metal bridge, etc.), the system may be affected.

Risk of inadvertent braking.

Limitation of the system operation

– A vehicle travelling in the opposite direction will not trigger any alert or any action on the system operation.
– The sensor area should be kept clean and free of any modifications in order to ensure the proper operation of the system.
– Fixed obstacles (vehicles at a standstill, traffic jams, toll booths, etc.) or objects travelling at low speed or of a small size (motorbikes, bicycles, pedestrians, etc.) may not be detected by the system.
– A vehicle entering the same lane will only be detected once it has entered the detection zone. Sudden or late braking may then take place.
– When entering a bend or curve, the sensor may temporarily no longer detect the vehicle in front, and this may lead to acceleration.
– When exiting a curve, the detection of the vehicle in front may be affected or delayed. Sudden or late braking may then take place.
– A slower vehicle travelling in an adjacent lane may be detected and cause a slowing down if one of the two vehicles is travelling too close to the lane of the other.
– The system is deactivated below around 20 mph (40 km/h). Drivers must react accordingly.
– Sudden changes in situation are not instantly taken into account by the system. Drivers must remain vigilant at all times and under all circumstances.

Deactivating the function

The function should be deactivated if:
– the brake lights are not functioning;
– the front of the vehicle has undergone an impact or been damaged;
– the vehicle is being towed (breakdowns);
– traffic is heavy;
– the vehicle is travelling in a tunnel;
– the vehicle is travelling on a windy road;
– the vehicle is travelling on a slippery road or in poor weather conditions (fog, snow, rain, side winds, etc.).

If the driver notices abnormal system behaviour, please consult an authorised dealer.

PARKING DISTANCE CONTROL (1/4)

Operating principle

Ultrasonic sensors in the rear bumper measure the distance between the vehicle and an obstacle.

This measurement is indicated by beeps which become more frequent the closer you come to the obstacle, until they become a continuous beep when the vehicle is approximately 20 to 30 centimetres from the obstacle.

The system detects obstacles to the front, the rear and the sides of the vehicle.

The parking distance control system is only activated when the vehicle is driven at a speed below approximately 6 mph (10 km/h).

Special features

Ensure that the ultrasonic sensors indicated by arrows ***1*** are not obscured (by dirt, mud, snow, etc.).

This function is an additional aid that indicates the distance between the vehicle and an obstacle whilst reversing, using sound signals.

Under no circumstances should it replace the driver's care or responsibility whilst reversing.

The driver should always look out for sudden hazards during driving: always ensure that there are no moving obstacles (such as a child, animal, pram or bicycle, etc.) or small, narrow objects such as stones or posts in your path when manoeuvring.

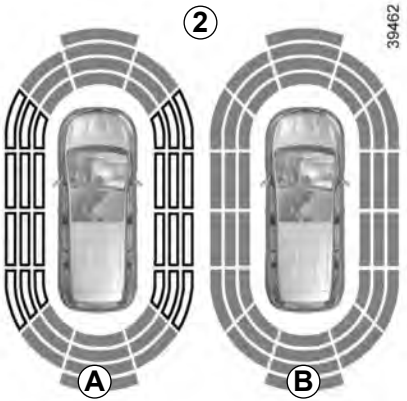

Note: the display ***2*** shows the vehicle surroundings and emits beeps.

It is necessary to travel a few metres before the side detection is activated.

If all areas have a grey background, the whole area around the vehicle is being monitored:

– ***A***: analysis of the vehicle surroundings in progress;

– ***B***: analysis of the vehicle surroundings carried out

Operation

Most objects located less near the front, rear and sides of the vehicle are detected.

Depending on the distance of the obstacle, the frequency of the beep will be higher while approaching it, and will become a solid beep around 20 cm for obstacles to the sides, and 30 cm for obstacles to the front or rear. Green, orange and red zones will be displayed on the display ***C***.

Detection of obstacles to the side

Depending on the direction of the wheels, the system determines the trajectory of the vehicle and notifies the driver of any risk or otherwise of a collision with an obstacle ***3*** to the side of the vehicle.

If a side obstacle is detected:

– the beeps become faster and then sound continuously as the obstacle gets nearer. Green, orange and red zones will be displayed on the display ***D***;

– if there is no risk of collision, no beep will sound when approaching the obstacle. Green, orange and red zones will be displayed interspersed on the display ***D***.

Note: in the event of a change in trajectory during a manoeuvre, the risk of collision with an obstacles may be signalled late.

An impact to the underside of the vehicle while manoeuvring (e.g.: striking a post, raised kerb or other street furniture) may result in damage to the vehicle (e.g.: deformation of an axle).

To avoid any risk of accident, have your vehicle checked by an approved Dealer.

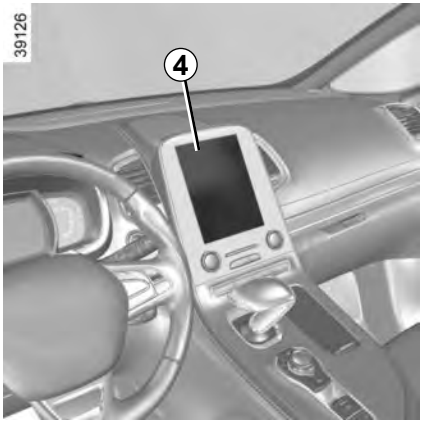

Adjustment

You can adjust certain settings from the multifunction screen ***4***. Please see the equipment instructions for further information.

Select “Vehicle”, “PARKING ASSIST”, “Obstacle detection”.

Parking distance control audio volume

Adjust the volume of the parking distance control by pressing **+** or **-**.

System sound

Enables the system sound to be selected from a choice of 3.

Deactivating the system sound

Activate or deactivate the parking distance control sound.

Note: If you deactivate the sound, you will no longer be notified with beeps when approaching an obstacle.

Deactivating the system

Activate or deactivate parking distance control.

When the vehicle is being driven at a speed below approximately 6 mph (10 km/h), certain noises (motorcycle, lorry, pneumatic drill, etc.) may trigger the beeping sound of the parking distance control.

Automatic deactivation of the parking distance control

The system deactivates:

– when the vehicle speed is above approximately 6 mph (10 km/h);

– depending on the model, when the vehicle is stationary for more than approximately 5 seconds and an obstacle is detected (such as when in a traffic jam, etc.);

– when the vehicle is in neutral for manual gearboxes, or in position **N** or **P** for automatic gearboxes.

Operating faults

When the system detects an operating fault, a beep sounds for approximately 3 seconds each time reverse gear is selected and is accompanied by the message “Check parking sensor” shown on the instrument panel. Please consult an authorised dealer.

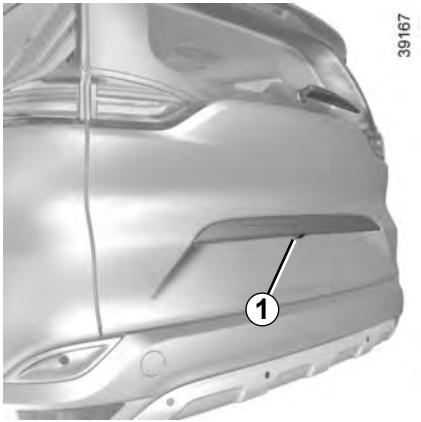

Operation

When you change to reverse gear, the camera ***1*** located on the tailgate provides a view of the area behind the vehicle on the multimedia screen ***2***, accompanied by one or two fixed or moving guide lines ***3*** and ***4***.

This system is initially used with the aid of several gauges (mobile for trajectory and fixed for distance). When the red zone is reached, use the bumper image to stop accurately.

Fixed gauge 3

The fixed clearance gauge comprises coloured markers ***A***, ***B*** and ***C***, indicating the distance behind the vehicle:

– ***A*** (red) approximately 30 centimetres from the vehicle;
– ***B*** (yellow) approximately 70 centimetres from the vehicle;
– ***C*** (green) approximately 150 centimetres from the vehicle.

This gauge remains fixed and indicates the vehicle trajectory if the wheels are in line with the vehicle.

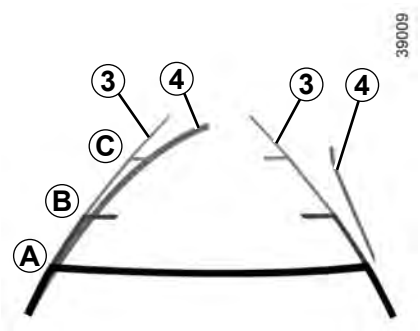

***4* moving guide line:**

This is shown in blue on the multifunction screen ***2***. It indicates the vehicle trajectory according to the position of the steering wheel.

Special feature

Make sure that the camera is not obscured (by dirt, mud, snow, etc.).

Activating, deactivating the reversing camera

From the multifunction screen **2**, select “Vehicle”, “Settings”, “Parking assistance”, then “Rear view camera”. Activate or deactivate the reversing camera and confirm your choice.

You can also adjust the camera image settings (brightness, contrast, etc.)

The screen shows a reverse mirror image.

The frames are a representation projected onto flat ground; this information must not be taken into account when superimposed on a vertical object or an object on the ground.

Objects which appear on the edge of the screen may be deformed.

In very bright light (snow, vehicle in sunshine etc.), the camera vision may be adversely affected.

If the boot is open or poorly closed, the message “Boot open” appears and the camera display disappears.

This function is an additional aid. It cannot, therefore, under any circumstances replace the vigilance or the responsibility of the driver.
The driver should always look out for sudden hazards during driving: always ensure that there are no moving obstacles (such as a child, animal, pram, bicycle, etc.) or small, narrow objects such as stones or posts in your path when manoeuvring.

ASSISTED PARKING (1/4)

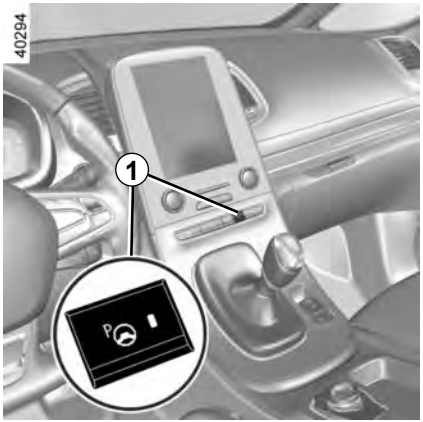

This function assists with parking manoeuvres.

Take your hands off the steering wheel. You only control the pedals and the gear lever.

You can retake control at any time by operating the steering wheel.

Switching on

With the vehicle stationary or driving at less than 18.6 mph (30 km/h), press switch ***1***. The warning light integrated on switch ***1*** lights up and the ***2*** screen appears on the multifunction screen.

Special features

Ensure that the ultrasonic sensors indicated by arrows ***3*** are not obscured (by dirt, mud, snow, etc.).

Choice of manoeuvre

The system can perform four types of manoeuvres:

– parallel parking;

– perpendicular parking;

– angle parking;

– moving out of a parallel parking space.

From the multifunction screen, select the manoeuvre to be performed.

Note: When starting the vehicle, or after successfully completed parallel parking using the system, the default manoeuvre proposed by the system is assistance in exiting a parallel parking space. In other cases, the default manoeuvre can be set from the multifunction screen.

Operation

Parking

As long as the vehicle speed is less than 20 mph (30 km/h), the system looks for available parking spaces on both sides of the vehicle.

Once a space has been found, it is displayed on the multifunction screen, indicated by a small letter “P”. Drive slowly, with the indicators activated on the side of the space, until the message “Stop” is displayed, alongside a beep.

The space is then indicated on the multifunction screen by a capital “P”.

– Stop the vehicle;

– select reverse gear.

Warning light lights up on the instrument panel, along with a beep.

– release the steering wheel;

– follow the system instructions provided on the multifunction screen.

Your speed should not exceed around 4 mph (7 km/h).

Once the warning light on the instrument panel goes off and a beep sounds, the manoeuvre has been completed.

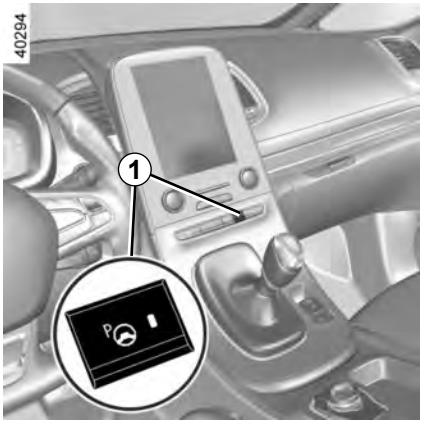

Exiting a parallel parking space

– Select “exit parallel parking space” mode;
– activate the direction indicator on the side you wish to go out of;
– press and hold switch ***1*** (around 2 seconds).

Warning light lights up on the instrument panel, along with a beep.
– release the steering wheel;
– go forwards and backwards using the parking distance control system alerts.

Your speed should not exceed around 4 mph (7 km/h).
Once in position to exit the space, the system will notify you of the end of the manoeuvre.

Once the warning light on the instrument panel goes off and a beep sounds, the manoeuvre has been completed.

Suspending the manoeuvre

The manoeuvre is suspended in the following circumstances:
– you take control of the wheel;
– a door or the boot is opened;
– the vehicle is at a standstill for too long;
– an obstacle in the direction of movement prevents the manoeuvre from being completed;
– the engine will stop.

Once the warning light on the instrument panel goes off and a beep sounds, the manoeuvre has been suspended. Then to resume the manoeuvre, press and hold the system activation switch.

In this case, the reason for suspending the manoeuvre will be displayed on the multifunction screen.

Make sure:
– you have released the steering wheel and;
– that all doors and the boot are closed, and;
– that no obstacles are in the way of the direction of movement, and;
– that the engine is started.

Cancelling the manoeuvre

The manoeuvre can be stopped in the following cases:
– by pressing the system activation switch;
– the vehicle speed has exceeded 4 mph (7 km/h);
– You have performed more than ten forwards/backwards movements in one manoeuvre;
– the parking distance control sensors are dirty or blocked;
– the vehicle wheels have skidded.

Once the warning light on the instrument panel goes off and a beep sounds, the manoeuvre has been ended.

This function is an additional driving aid. However, this function is not under any circumstances intended to replace the due care and attention of the driver, who should at all times be in control of the vehicle.

Make sure that the manoeuvre complies with the applicable traffic regulations at your location.

– The driver should always look out for sudden hazards during driving: always ensure that there are no moving obstacles (such as a child, animal, pram, bicycle, etc.) or small, narrow objects such as stones or posts in your path when manoeuvring.
– The system cannot detect objects located in the sensor blind spots.
– During manoeuvring, the steering wheel may turn quickly: do not place your hands inside the wheel, and ensure nothing is located in this space.
– Always visually check that the parking space proposed by the system is still available and contains no obstacles.
– The system should be deactivated when towing a trailer.

ADAPTIVE SUSPENSION

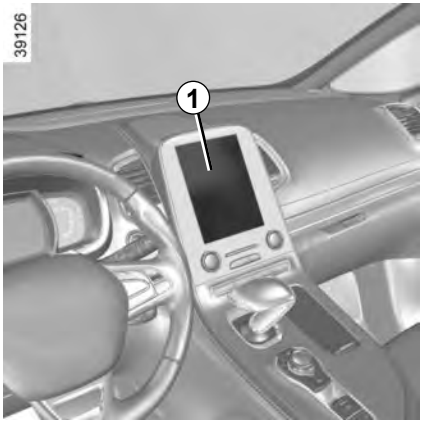

Adaptive suspension makes it possible to modify the suspension automatically, according to driving conditions and to your driving style.

Choosing a preset mode

From the menu on the multifunction screen ***1***, you can select a preset driving mode.

The configuration of the suspension will depend on the mode selected in the “Multi-Sense” menu (please refer to the information on “Multi-Sense” in Section 3).

Operating fault

In the event of a fault, the system switches automatically to the “Neutral” mode in “Multi-Sense”.

If the message “Check Damper control” appears on the instrument panel, consult an authorised dealer.

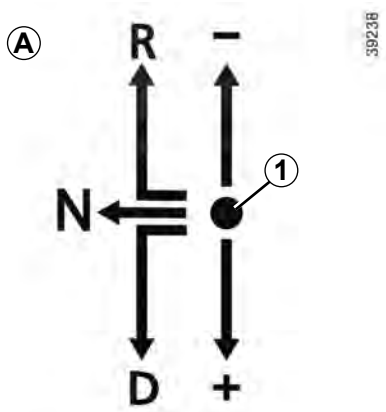

Gear selector *3* position grid *A*

1: selector rest position

2: button **P:** Park

R: reverse

N: neutral (park)

D: automatic mode

+: Manually moving up a gear

–: Manually moving down a gear

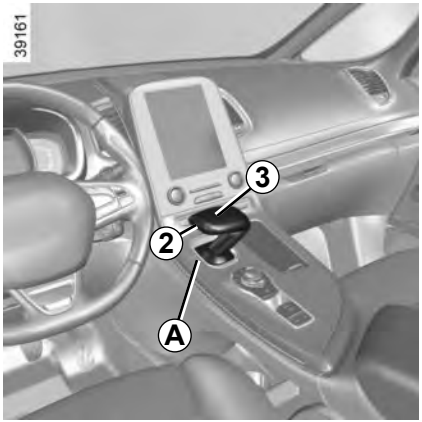

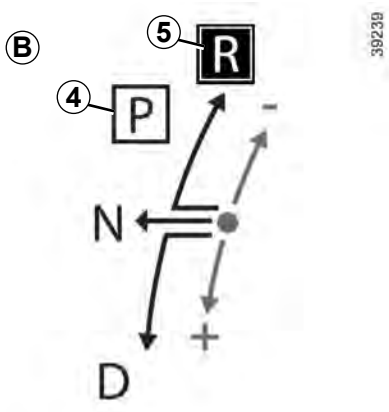

Grid *B* on the instrument panel

– The current gear is given in zone ***5***;

– The available functions are provided in the ambient colour chosen by the driver;

– Unavailable functions are greyed out, except for position **P** ***4*** which disappears from the grid above 2 mph (3 km/h).

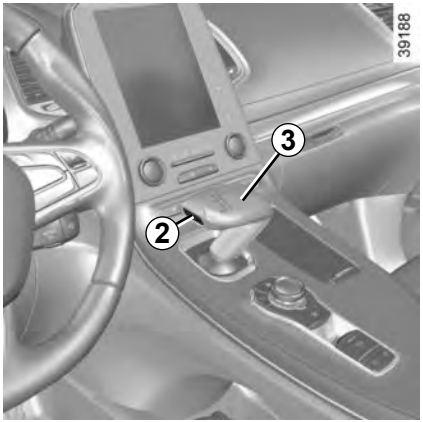

To engage position P (button *2*)

With the vehicle at a standstill, engine running or ignition on, press button ***2*** to engage position **P**. The warning light for button ***2*** lights up orange once the Park position on the gearbox is engaged.

Check that warning light **P** on the instrument panel and the warning light integrated on the button ***2*** are activated before leaving the vehicle.

Risk of loss of immobilisation of the vehicle

To disengage position P (button *2*)

With the vehicle at a standstill, engine running, depress the brake pedal and move the selector to the desired position **R**, **N** or **D**.

If the brake pedal is not fully depressed, the message “Push brake pedal” the warning light are displayed on the instrument panel.

When position **R** or **D** is disengaged, **N** is displayed on the instrument panel and the warning light on button ***2*** goes out.

Note:

– If the driver opens their door to leave the vehicle while position **P** has not been engaged, a beep sounds and the message “P not engaged” is displayed on the instrument panel.

– Warning light comes on each time it is necessary to depress the brake pedal to change the position of the automatic gearbox.

To engage neutral

With the vehicle at a standstill, engine running, depress the brake pedal and move the selector ***3*** to the left:

– hold in place for about a second until a white **N** is displayed on the instrument panel, then release;

or

– release immediately.

Note: If the current gear is **R** or **D**, it is not necessary to depress the brake pedal to engage position **N**.

In the event of the message “Check auto gearbox”, “Automatic gearbox position P defective” or “Electric failure DANGER”, or in the event of a battery fault, immobilise the vehicle using the electronic parking brake.

Driving in automatic mode

With the vehicle at a standstill, engine running, position **P**, **N** or **R**, depress the brake pedal and move the selector to the left then back, and release.

If one of the conditions is not applied, **D** flashes for around 5 seconds and the message “Push brake pedal” is displayed on the instrument panel for approximately 15 seconds.

In most road conditions you will encounter, you will not need to touch your lever again: the gears will change automatically at the right time and at the most suitable engine speed because the automatic system takes into account the vehicle load and road contour and adjusts itself to the particular driving style you have chosen.

Note: With the engine running and the vehicle travelling between 0 and 6 mph (0 and 10 km/h), position **N** or **R**, it is not necessary to depress the brake pedal to engage position **D**. This is useful during parking manoeuvres requiring a number of alternate forward and reverse movements.

Economical driving

When driving, always leave the lever in position **D**, keeping the accelerator pedal lightly depressed to ensure automatic gear changes at a lower engine speed.

Accelerating and overtaking

Depress the accelerator pedal briskly and fully (so that it goes beyond the point of resistance).

It is also possible to change down at any time for overtaking purposes, by pushing the selector to position “**-**”.

To select reverse gear

With the vehicle at a standstill, engine running, position **P**, **N** or **D**, depress the brake pedal and move the selector to the left then forwards, and release.

If the brake pedal is not depressed, a beep will sound, the display of position **R** flashes for around 5 seconds in the grid shown on the instrument panel, and a message “Push brake pedal” is displayed for around 15 seconds.

Note: With the engine running, and the vehicle travelling between 0 and 6 mph (0 and 10 km/h), position **N** or **D**, it is not necessary to depress the brake pedal to engage **R**. This is useful during parking manoeuvres requiring a number of alternate forward and reverse movements.

Driving in manual mode

Driving in temporary manual mode

Temporary manual mode can only be selected when automatic mode **D has been engaged** and the vehicle speed **is over around 6 mph (10 km/h).**

Once **D** engaged, move the selector ***3***:

– to the rear **+,** to request a higher gear;

– forwards **-**, to request a lower gear.

The gear selected is displayed to the right of **D** on the instrument panel.

Special cases

Under certain driving conditions (e.g. engine protection, electronic stability program (ESP) operational etc.: ESC) etc.) the system can change the gear automatically.

The requested gear will be maintained for a period set by the system, based on the gradient and the driving style.

The system **will take over once this period has elapsed** and may then **trigger an automatic gear change.**

Likewise, to prevent incorrect manoeuvres, a gear change **may be refused** by the system: in this case the gear display **+** or **-** flashes for a few seconds as a warning, along with a beep.

Driving in permanent manual mode

Permanent manual mode can only be selected when automatic mode **D** has previously been engaged and the vehicle speed is greater than around 6 mph (10 km/h).

Once **D** engaged, move and hold the selector ***3*** for around 1 second:

– to the rear **+**, to request a higher gear;

– forwards **-** to request a lower gear.

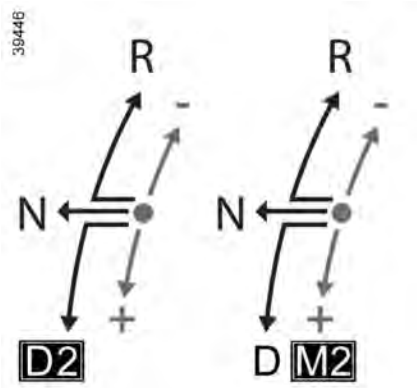

The gear engaged is first displayed to the right of **D** on the instrument panel, then **M** followed by the gear engaged appear under **+** once permanent manual mode is activated.

To exit permanent manual mode and return to automatic mode, move the selector to **D**.

Any other request for an available gear, **P** or **R** or **N** will exit permanent manual mode.

Special cases

In certain driving cases (eg: protecting the engine), a gear change can be performed automatically in the event of over-revving or approaching under-revving. Permanent manual mode remains activated. Similarly, to avoid making the "wrong move", a gear change may be refused by the gearbox. In this case, the display for the requested gear + or – flashes for a few seconds to warn you.

Parking the vehicle

Upon stopping the engine by pressing the engine stop button, position **P** is automatically engaged, along with the electronic parking brake for vehicles equipped with this device. **P** is displayed on the instrument panel and the warning light on button **P** comes on.

Special cases

As position **P** is **automatically engaged** when the engine is stopped, it is sometimes necessary to place the vehicle in position **N** for some car washes, for example.

Position **N** can be engaged before opening the driver's door, and a maximum of **around 25 seconds** after the engine is stopped.

After this time or after opening the driver's door, it will be necessary to turn on the ignition again to disengage position **P**.

In the event of a loss of information on the instrument panel, stop and immobilise the vehicle using the electronic parking brake or button **P**.

With the engine running, the automatic gearbox in **D** or **R** or **N** or **M** and without your foot on the brake, messages "P not engaged" and "Select P" are displayed on the instrument panel as soon as the driver's door is open.

With the engine stopped, the automatic gearbox in **N** (neutral), the message "P not engaged" is displayed on the instrument panel.

Never leave the vehicle with the engine running without previously engaging the Park position **P**.

Special feature related to the Stop and Start function: if you are going to unfasten the driver's seat belt **before** the engine goes into standby due to the Stop and Start function, make sure the gearbox is in position **P**. The **P** warning light will light up on the instrument panel to confirm this. **Risk of loss of immobilisation.**

Special circumstances

– **If the bends and road surface** do not allow you to stay in automatic mode (e.g. in the mountains), we recommend that you change to either temporary or permanent manual mode.
This will prevent the automatic gearbox from changing gear repeatedly when climbing, and permit engine braking on long descents.

– **In cold weather,** wait a few seconds before disengaging position **P** or **N** and engage the lever in **D** or **R** to prevent the engine stalling.

In very cold weather, the system may prevent the gears from being shifted in manual mode until the gearbox reaches the right temperature.

Operating faults

– **When driving**, if the “Check auto gearbox” message appears on the instrument panel, it indicates a fault.

Contact your approved Dealer as soon as possible.

– **When driving**, if the message “Gearbox overheating” appears on the instrument panel, stop the vehicle to allow the gearbox to cool down.

Contact your approved Dealer as soon as possible.

– **If a vehicle with an automatic gearbox breaks down,** please refer to the information on “Towing” in Section 5.

An impact to the underside of the vehicle while manoeuvring (e.g.: striking a post, raised kerb or other street furniture) may result in damage to the vehicle (e.g.: deformation of an axle).

To avoid any risk of accident, have your vehicle checked by an approved Dealer.

Section 3: Your comfort

multi-Sense 3.2
Air Vents 3.4
Automatic climate control 3.7
Additional heating and air conditioning 3.12
Air conditioning: information and advice on use 3.14
Outside air quality and deodorisation functions. 3.15
Electric windows 3.16
Electric sunroof 3.18
Fixed glass roof 3.20
Interior lighting 3.21
Sun visor/blinds 3.23
Passenger compartment storage/fittings 3.24
Accessories socket 3.29
Ashtray 3.29
Cigarette lighter 3.29
Headrests - Rear seats 3.30
Luggage compartment. 3.36
Automatic tailgate 3.37
Luggage cover. 3.42
Luggage compartment storage space and fittings 3.43
Transporting objects in the luggage compartment 3.44
Transporting objects: 3.45
equipment 3.45
Luggage net. 3.46
Roof bars 3.48
Multimedia equipment 3.49

MULTI-SENSE (1/2)

The Multi-Sense system enables once of five modes to be selected which, depending on the vehicle, affect the drive, the light environment, the comfort and the engine noise:
– modes Comfort, Neutral, Eco and Sport are preset and associated with customisable light environments and engine noise;
– mode Perso is fully customisable.

The drive modes affect the:
– power-assisted steering;
– piloted suspension damping;
– four-wheel drive;
– engine and gearbox responsiveness;
– heating level.

They also affect the:
– passenger compartment and instrument panel lighting;
– instrument panel and multifunction screen information;
– engine noise;
– massage seat.

After each start-up, the vehicle uses the mode set at the time the engine was last switched off.

39522

Mode Comfort

This mode favours flexibility in the suspension and steering. The interior environment is softened.

Mode Neutral

Default mode, mode Neutral selects the vehicle factory settings.

Mode Eco

Mode Eco is geared towards saving energy and the environment. The suspension and steering are soft, engine and gearbox management enable fuel consumption to be lowered. Air conditioning is managed to be used only when necessary.

Please refer to the information on “Driving advice, Eco-driving” in Section 2.

In all modes, it is possible to change the colour of the ambient lighting as well as the format of the information displayed on the instrument panel and multifunction display.

You can also reset to the default settings.

Sport mode

This mode allows greater responsiveness from the engine and gearbox, making the suspension and steering firmer.

Mode Perso

This mode enables you to manually configure the drive, light environment and, depending on the vehicle, the comfort and engine noise.

Stopping the engine in Sport mode, or Perso mode with engine setting in Sport mode.

When you restart the vehicle, a message asks you if you wish to keep the engine setting in Sportmode.

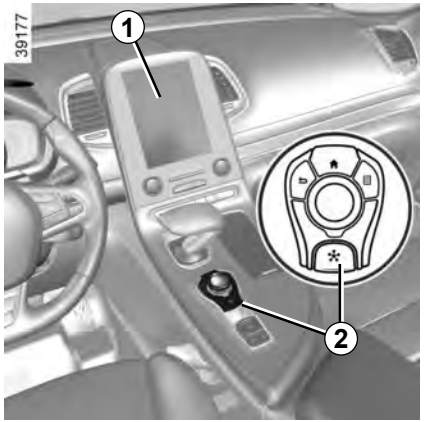

Accessing the menu

You can access Multi-Sense:

– from the multifunction screen ***1***. Select menu “Vehicle” then “Multi-Sense”;
– using switch ***2***;
– using button Eco ***3*** which automatically launches Eco mode and opens the 'Multi-Sense' menu on the multifunction screen ***1*** for a few seconds.

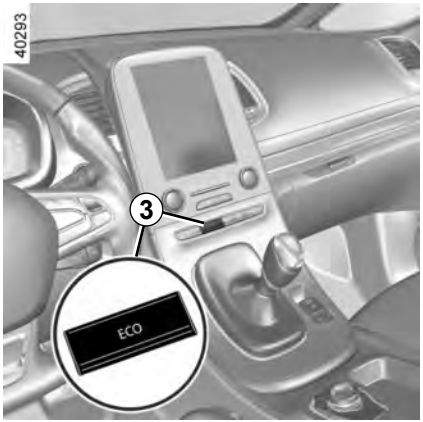

Depending on the vehicle, once the “Multi-Sense” menu is displayed on the multifunction screen ***1***, pressing switch ***2*** enables you to move between the two preferential modes you have selected. Refer to the handbook for the equipment.

AIR VENTS: air outlets (1/3)

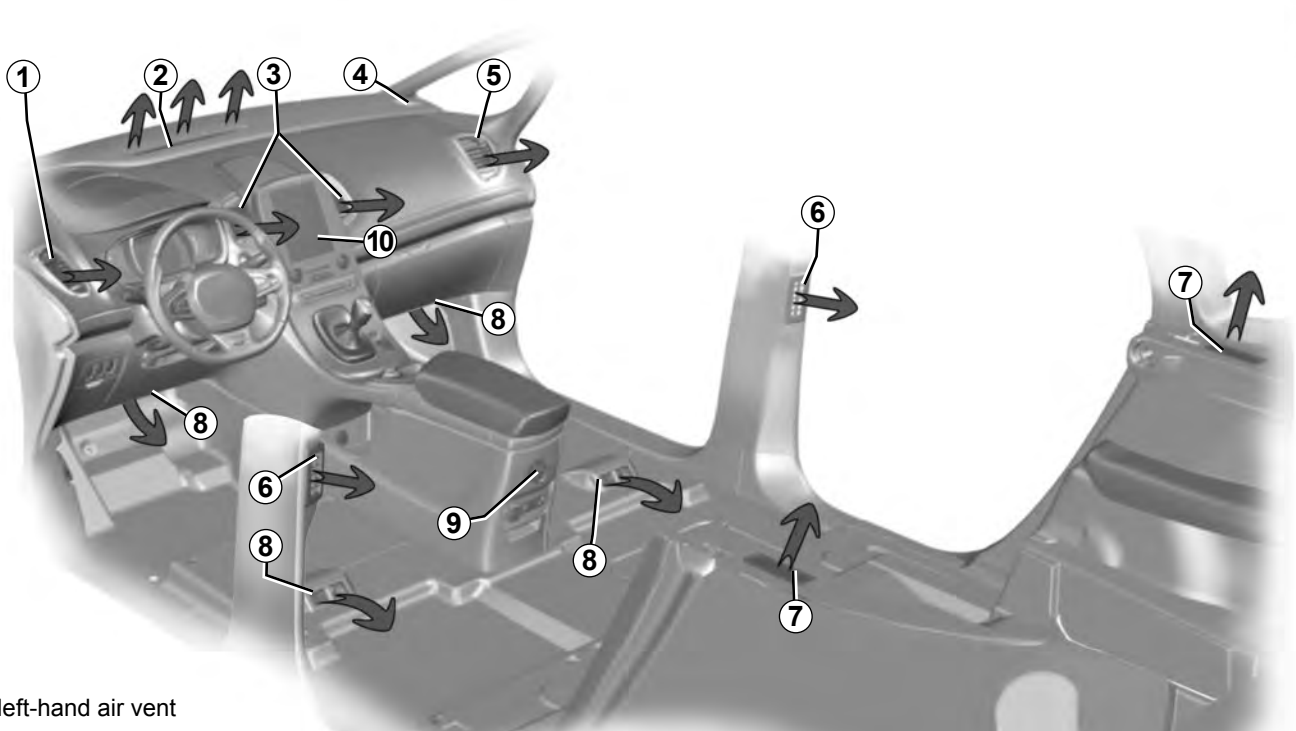

1 left-hand air vent

2 windscreen demisting vents

3 centre air vents

4 side window demister outlets

5 right-hand air vent

6 2nd row passenger air vent

7 3rd row passenger air vent

8 passenger footwell heater outlets

9 Additional air conditioning control

10 multifunction screen

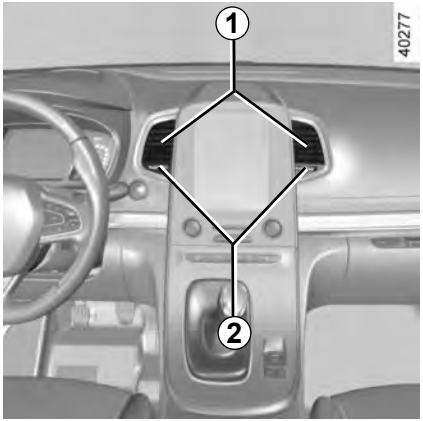

Front seats

Direction

Right/left: turn knob ***2***.
To fully close, turn beyond the point of resistance.

Up/down: lower or raise tabs ***1***.

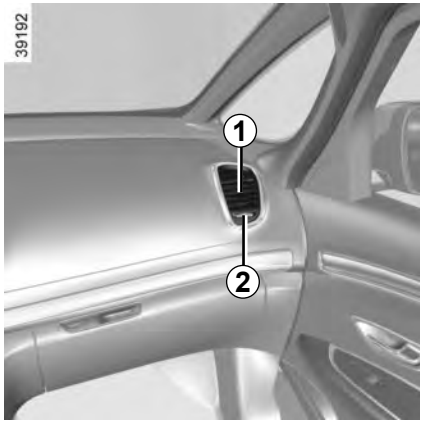

To remove bad odours from your vehicles, only use the systems designed for this purpose. Consult an approved Dealer.

Do not add anything to the vehicle's ventilation circuit (for example, to remove bad odours).

There is a risk of damage or of fire.

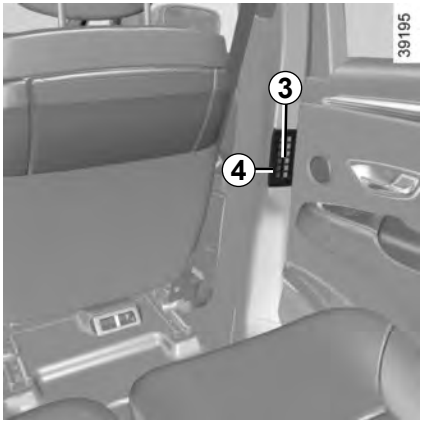

2nd row rear seats

Right/left direction

Move air vent ***4***.

Up/down direction

Move cursor ***3***.

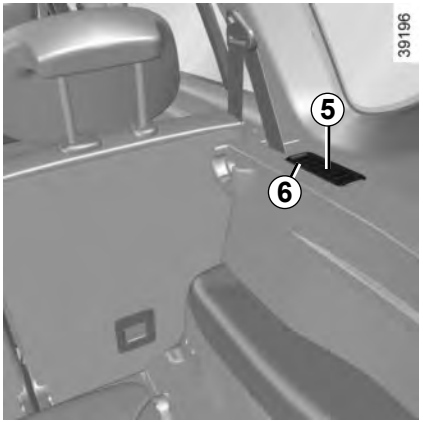

3rd row rear seats

Right/left direction

Move air vent ***6***.

Front/rear direction

Move cursor ***5***.

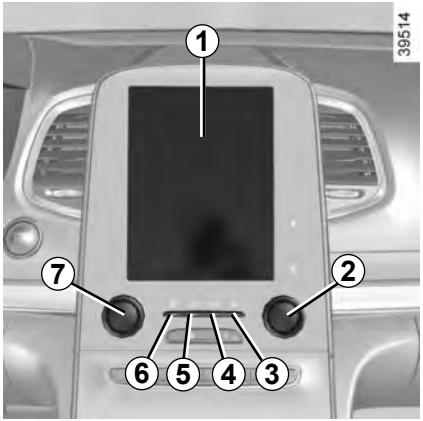

The controls

Press zone ***14*** to access the multifunction screen controls ***1***. The presence of the controls detailed below will depend on the vehicle model.

2 and ***7*** Left and right temperature indication adjustment.

3 De-icing/demisting of the rear screen and, depending on the vehicle, the door mirrors.

4, ***8***, ***9*** and ***10*** automatic modes

5 Air recirculation.

6 “Clear View” function.

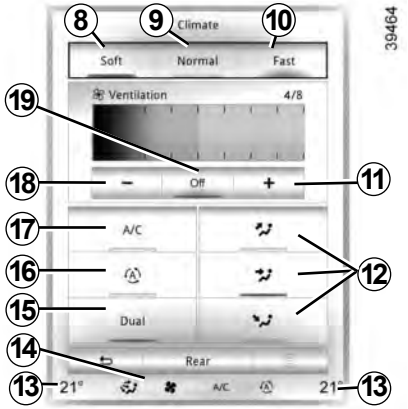

11 and ***18*** Ventilation speeds.

12 Passenger compartment air distribution.

13 Right and left temperature display.

14Zone displaying air conditioning settings.

15“DUAL” function.

16“Automatic recirculation” function.

17 Air conditioning.

19 Stopping the system.

Some buttons have a warning light indicating their operative state.

Automatic mode

The automatic climate control system guarantees comfort in the passenger compartment and good visibility (except in the event of extreme conditions), while optimising consumption. The system controls the ventilation speed, air distribution, air recirculation, and starting and stopping the air conditioning and air temperature.

This mode consists of a choice of three programmes:

NORMAL : allows the selected comfort level to be best attained, depending on the exterior conditions. Press button ***4*** or key ***9***.

SOFT: reaches the desired comfort level more gently and silently. Press button ***8***.

FAST: increases the flow of air in the passenger compartment. This mode is recommended in particular to optimise comfort in the rear seats. Press button ***10***.

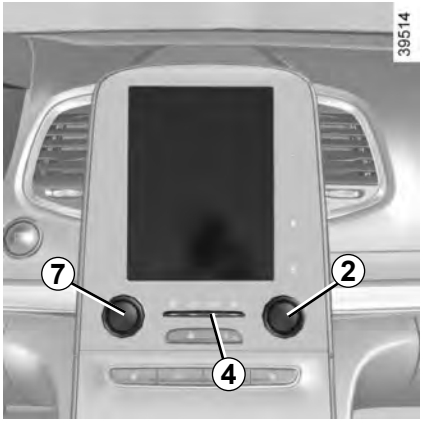

Varying the ventilation speed

In automatic mode, the system uses the most suitable amount of air to reach and maintain the desired comfort level.

You can still adjust the ventilation speed by pressing buttons ***11*** or ***18*** or by sliding your finger in zone ***A***.

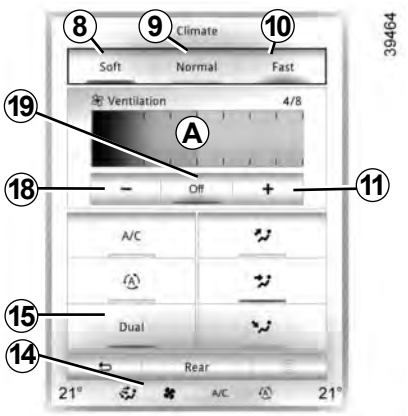

Temperature adjustment

There are two types of settings:

– uniform passenger compartment setting;
– DUAL function setting to independently adjust the left and right sides.

Uniform passenger compartment setting

Use control ***7***.

DUAL function setting

Press button ***15*** to activate. Use control ***7*** to adjust the left side and control ***2*** for the right side.

Note: The air conditioning configuration depends on the mode selected on the “Multi-Sense” menu (please refer to the information in “Multi-Sense” in Section 3).

The displayed temperature values show a comfort level.

When starting the engine, increasing or decreasing the value displayed will not allow the comfort level to be reached any more quickly. The system will always optimise the temperature increase or decrease (the ventilation system does not start instantly at maximum speed: it gradually increases). This may take several minutes.

Generally speaking, unless there is a particular reason not to, the dashboard air vents should remain open.

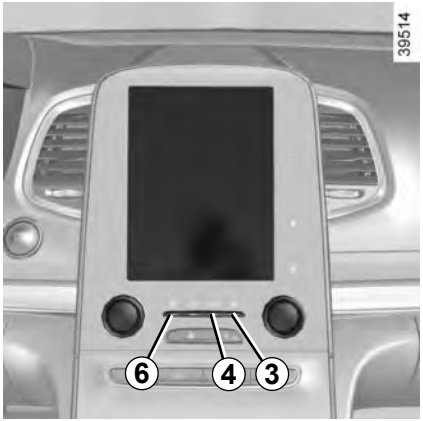

Clear View function

This function quickly demists and de-ices the windscreen, the rear screen, the front side windows, and the door mirrors (depending on the vehicle). It imposes automatic operation of the air conditioning and rear screen de-icing and, depending on the vehicle, the windscreen electric de-icer.

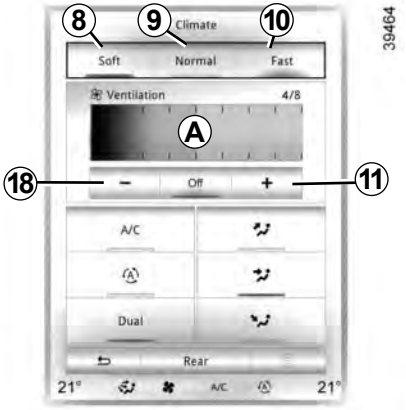

Press button ***6*** – the integrated indicator light comes on.

Press button ***3*** to stop the heated rear screen operating, and the integrated indicator goes out.

To adjust the ventilation speed: press buttons ***11*** or ***18*** or slide your finger in zone ***A***.

To exit this function, press either:

– button ***4***;

– again button ***6***;

– on button ***8***, ***9*** or ***10***.

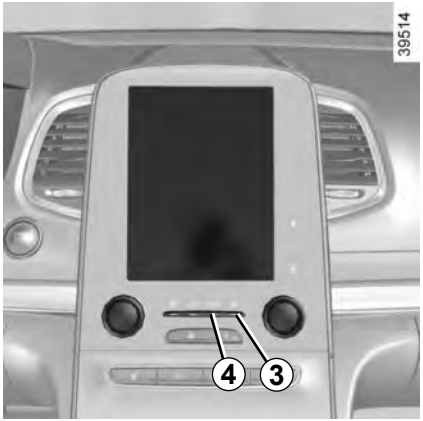

Switching air conditioning on or off

In automatic mode, the system switches the air conditioning system on or off, depending on the climate conditions.

Press button ***17*** to:

– activate the air conditioning (a warning light in zone ***14*** comes on).

– deactivate the air conditioning (the warning light in zone ***14*** goes out)

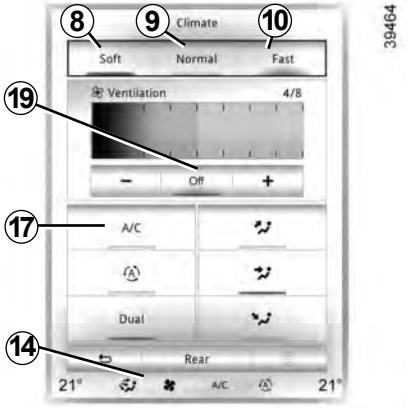

Stopping the system

Press button ***19*** to activate or deactivate the system (the operating warning light on button ***19*** notifies you of the system status).

Rear screen de-icing/ demisting

Press button ***3*** – the integrated indicator light comes on. This function enables rapid demisting or de-icing of the rear screen and de-icing of the door mirrors (on equipped vehicles).

To exit this function, press button ***3*** again. Demisting automatically stops.

It is preferable to use one of the automatic programmes NORMAL, SOFT or FAST.

In automatic mode (***4*** warning light is lit), all air conditioning functions are controlled by the system.

You can still modify the system's choice; in this case, the warning light in the button ***4*** goes out.

To return to automatic mode, press one of the programmes **NORMAL *8***, **SOFT *9*** or **FAST *10*** or the button ***4***.

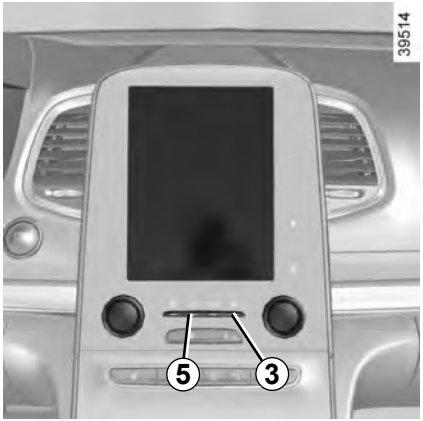

Adjusting the distribution of air in the passenger compartment

Press buttons ***12*** to select the desired distribution (a warning light is displayed in zone ***14***):

The air flow is mainly directed to the demisting vents for the windscreen and the side windows.

The air flow is mainly directed to the dashboard air vents.

The air flow is directed mainly towards the footwells.

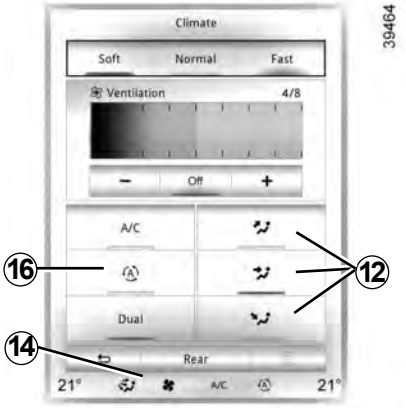

Air recirculation

This function is managed automatically but you can also activate it manually.

Note:

– during recirculation, air is taken from the passenger compartment and is recycled, with no air being taken from outside the vehicle;

– air recirculation allows the external atmosphere to be cut off (when driving in polluted areas, etc.) and to cool the passenger compartment temperature more quickly.

Automatic usage

Press button ***16*** (a warning light comes on in zone ***14***).

Manual use

Press button ***5*** to force air recirculation.

Prolonged use of this position may lead to odours, caused by non-renewal of air, and the formation of condensation on the windows.

We advise you to return to automatic mode as soon as air recirculation is no longer needed, by pressing key ***16*** or button ***5*** again.

To exit this function, press key ***16*** or button ***5*** again.

The demisting/de-icing will still take priority over the air recirculation.

ADDITIONAL AIR CONDITIONING (1/2)

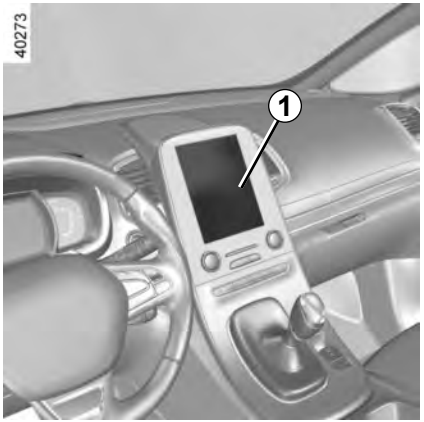

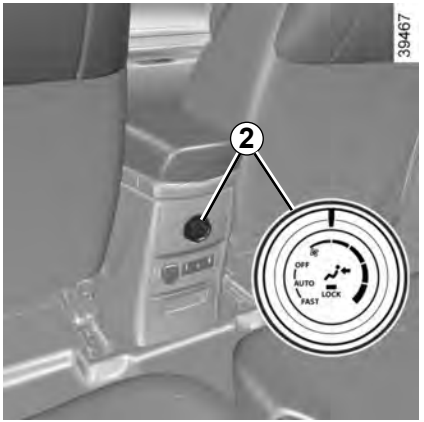

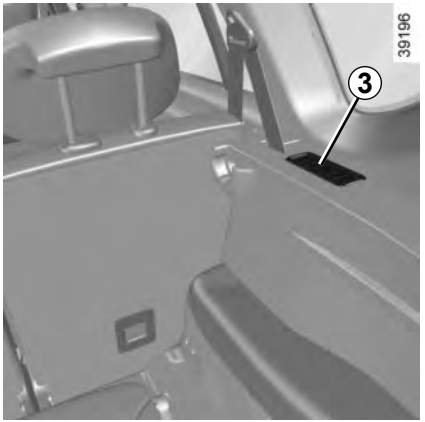

Control

The additional air conditioning powers the air vents ***3*** in the third row to add to the heating level of the second and third rows.

It only operates on the flow of cold air blown into the passenger compartment.

It can be activated or deactivated using the buttons on the multifunction screen ***1***, or by the rear control panel ***2***.

The air conditioning system is used for:

– lowering the temperature inside the passenger compartment;

– eliminating condensation more quickly.

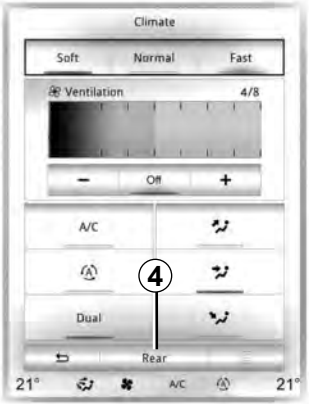

39464

Switching on or off

From the multifunction screen, press button ***4***.

Mode AUTO
Press button ***6***. The system uses the most suitable amount of air to reach and maintain the desired comfort level.

Mode OFF
Press button ***5*** to deactivate the function.

Note: For these two modes, the rear control ***2*** is locked and the warning light ***9*** is displayed for notification.

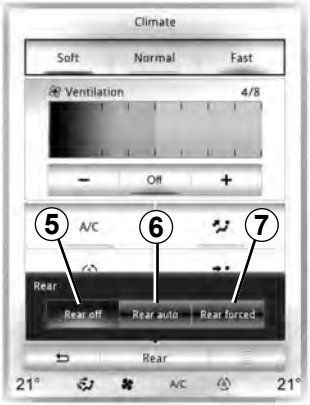

39465

Mode MANUAL

Press button ***7*** to activate. The rear control ***2*** is then operational and the warning light ***9*** goes out.

From the rear control panel ***2***, move the marker ***8*** to:

AUTO: Turn the control to ***11***. Enables the optimal comfort level.

39467

FAST: Turn the control to ***10***.
Enables the system to reach the desired comfort level more quickly.

OFF: Turn the control to ***12***.
Enables the additional air-conditioning to be deactivated.

Adjusting the ventilation speed.

Turn the control ***2*** to move the marker ***8*** to zone ***A***.

Advice on use

In some situations, (air conditioning off, air recirculation activated, ventilation speed at zero or low, etc.) you may notice that condensation starts to form on the windows and windscreen.

If there is condensation, use the **"Clear View"** function to remove it, then use the air conditioning in automatic mode to stop it forming again.

Vehicles equipped with the ECOmode: once activated, ECO mode can reduce the performance of the automatic air conditioning. Please refer to the information on "Driving advice, Eco-driving" in Section 2.

Do not add anything to the vehicle's ventilation circuit (for example, to remove bad odours).

There is a risk of damage or of fire.

Fuel consumption

You will normally notice an increase in fuel consumption (especially in town) when the air conditioning is operating.

For vehicles fitted with air conditioning with no automatic mode, switch off the system when it is not required.

Advice for reducing consumption and helping to preserve the environment

Drive with the air vents open and the windows closed.

If the vehicle has been parked in the sun, open the doors for a few moments to let the hot air escape before starting the engine.

Maintenance

Refer to the Maintenance Document for your vehicle for the inspection frequency.

Operating faults

As a general rule, contact your approved dealer in the event of an operating fault.

– **Reduction in de-icing, demisting or air conditioning performance.** This may be caused by the passenger compartment filter cartridge becoming clogged.

– **No cold air is being produced**. Check that the controls are set correctly and that the fuses are sound. Otherwise, switch off the system.

Presence of water under the vehicle

After prolonged use of the air conditioning system, it is normal for water to be present under the vehicle. This is caused by condensation.

Do not open the refrigerant fluid circuit. The fluid may damage eyes or skin.

OUTSIDE AIR QUALITY AND DEODORISATION FUNCTION

With the air conditioning switched on, from the screen ***A***, select Menu, Vehicle, Take care.

Outside air quality

The air quality is given using a graph on the multifunction screen.

Three colours indicate the air quality level (from the cleanest to the most polluted):

1 (blue)

2 (light grey)

3 (grey)

Deodorisation function

This reduces unpleasant odours in the passenger compartment.

Deodorization cycle

– ON: helps to reduce the unpleasant odour more quickly in the passenger compartment,

– OFF: stop the function.

Note:

The function is on a timer. It stops automatically after a few minutes.

Please refer to the multimedia instructions for further information.

ELECTRIC WINDOWS (1/2)

These systems operate:

– with the engine running;

– with the ignition off until one of the front doors is opened (limited to approximately 12 minutes).

– with the engine off, front doors closed, after pressing the start button.

Press the window switch down or pull it up to lower or raise the window to the desired height: the rear windows do not open fully.

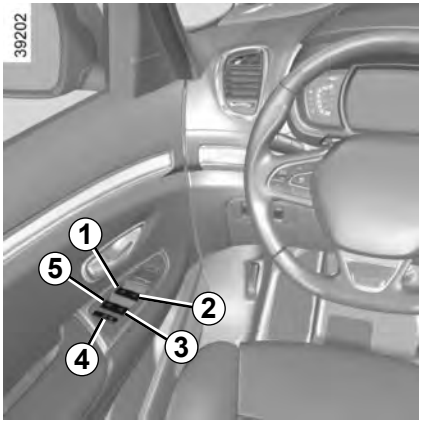

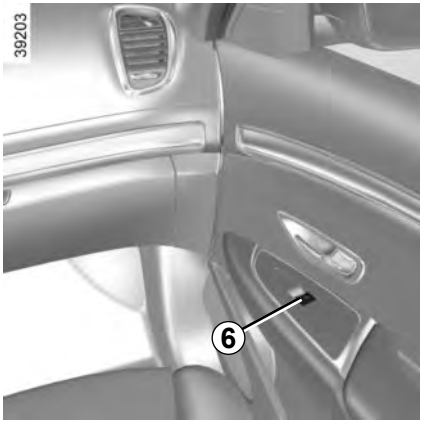

From the driver's seat, use switch:

1 for the driver's side;

2 for the front passenger side;

3 and ***5*** for the rear passenger windows.

From the passenger seats, use switch ***6***.

Safety of rear occupants

The driver can disable operation of the rear electric windows and doors by pressing switch ***4***. A confirmation message is displayed on the instrument panel.

Driver's responsibility

Never leave your vehicle with the RENAULT card or key inside, and never leave a child, adult who is not self-sufficient or a pet, even for a short while. They may pose a risk to themselves or to others by starting the engine or activating equipment (such as the gear lever or electric windows). If any part of the body becomes trapped, reverse the direction of the window immediately by pressing the relevant switch.

Risk of serious injury.

Avoid resting any objects against a half-open window: there is a risk that the electric window could be damaged.

One-touch mode

This mode works in addition to the operation of the electric windows described previously.

Briefly press or pull the window switch fully: the window is fully lowered or raised. Pressing the switch again stops the window moving.

Note: if the window detects resistance when closing (e.g.: branch of a tree, etc.) it stops and then lowers again by a few centimetres.

Remote control window closing

(vehicles with 4 one-touch electric windows).

When you lock the doors from the outside, **press the locking button on the RENAULTcard twice in quick succession, or on the driver's door** in hands-free mode, and all the windows will close automatically (and, depending on the vehicle, the sunroof).

It is recommended that the user only operates the system when the vehicle can be seen clearly and no one is inside.

When closing the windows, ensure that no part of the body (arm, hand, etc.) is protruding from the vehicle.

Risk of serious injury.

Operating faults

In case of a fault when closing a window, the system reverts to normal mode: pull the switch as many times as necessary until the window closes completely, hold the switch (still on the closing side) for around one second, then completely lower then raise the window to reset the system.

If necessary, contact an approved Dealer.

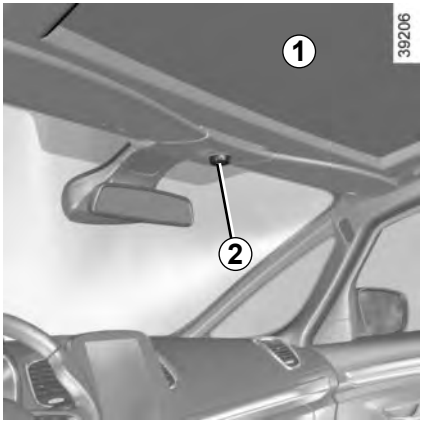

To slide the curtain *1*

With the ignition on:

- **Full opening:** move marker ***3*** on button ***2*** to position ***A***. The points in between correspond to the progressive opening positions of the curtain;
- **to close:** move mark ***3*** on button ***2*** to position ***0.***

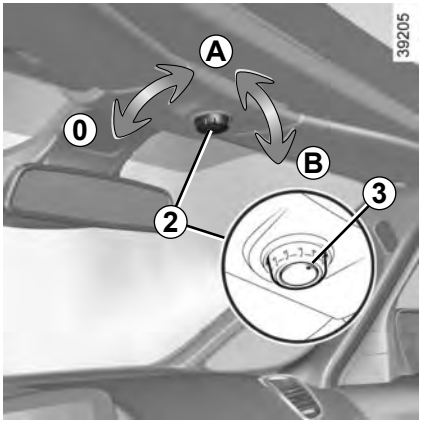

To slide the sunroof

With the ignition on:

- **to open:** move mark ***3*** on button ***2*** to position ***B***, depending how far you wish it to open. The points in between correspond to the progressive opening positions;
- **To close:** move the marker ***3*** on button ***2*** to position ***A***.

Moving the position ***0*** directly to position ***B*** causes the simultaneous opening of the curtain and the roof.

Special features

Pressing button ***2*** allows the curtain to be automatically positioned depending on the position of the sunroof.

Pressing button ***2*** when the roof and the curtain are in the same opening position enables the curtain to be opened fully.

Driver's responsibility

Never leave your vehicle with the RENAULT card or key inside, and never leave a child, adult who is not self-sufficient or a pet, even for a short while. The reason for this is that the child may endanger itself or others by starting the engine, activating equipment such as the sunroof for example, or locking the doors.

If something gets trapped, reverse the direction of travel as soon as possible by turning button ***2*** fully to the right (position ***B***).

Risk of serious injury.

Precautions during use

– **Vehicle with loaded roof bars.**

As a general rule, if there is a load on the roof, use of the sunroof is not recommended.

Before using the sunroof, check the objects and/or accessories (bike racks, roof boxes, etc.) attached to the roof bars: they should be properly arranged and secured and should not interfere with the operation of the sunroof.

Contact an approved dealer for details of possible conversions;

– **check** that the sunroof is properly closed before leaving your vehicle;

– **clean** the seal every three months using products recommended by our Technical Department;

– **do not open** the sunroof immediately after it has rained or immediately after washing the vehicle.

Closing the sunroof by remote control

(depending on the vehicle)

If you **press the locking button on the** card twice in quick succession **RENAULT,**, the windows and the electric sunroof will close automatically.

It is recommended that the user only operates the system when the vehicle can be seen clearly and no one is inside.

When closing the sunroof, ensure that no part of the body (arm, hand, etc.) is protruding from the vehicle.

Risk of serious injury.

Special features

Your vehicle is fitted with an anti-pinch facility: when the sunroof encounters resistance whilst closing (arm, tree branch etc.), it stops and then moves back a few centimetres.

After closing the sunroof by remote control, pressing button ***2*** allows the sunroof to return to its previous position.

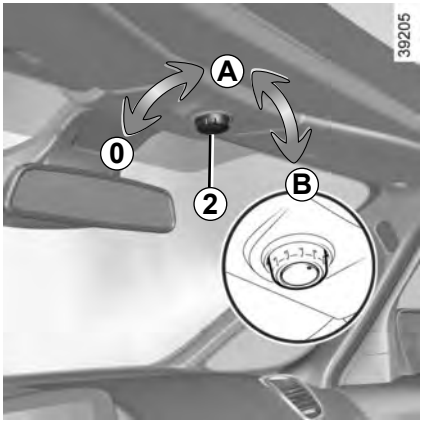

Operating fault

– If the sunroof will not close, turn switch ***2*** to position ***B*** to open the sunroof, then turn switch ***2*** to position ***0*** until the sunroof is completely closed.

– If the curtain does not close, turn switch ***2*** to position ***A*** to open the curtain, then turn switch ***2*** to position ***0*** until the curtain is fully closed.

If the blockage persists, keep switch ***2*** pressed until it closes completely.

Please consult an authorised dealer.

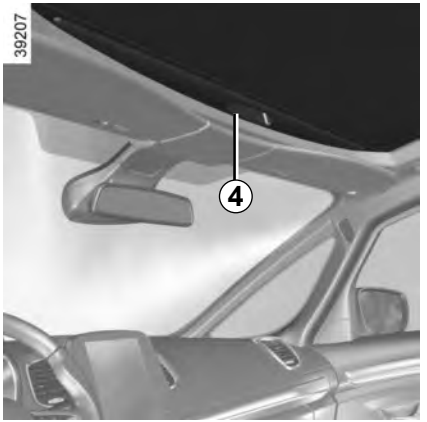

Fixed glass roof

Opening the blind

Press the top of handle ***4***.

Closing the blind

Pull handle ***4*** until it clicks in the lock.

If the blind becomes skewed when opening or closing, close fully and then fully open the blind.

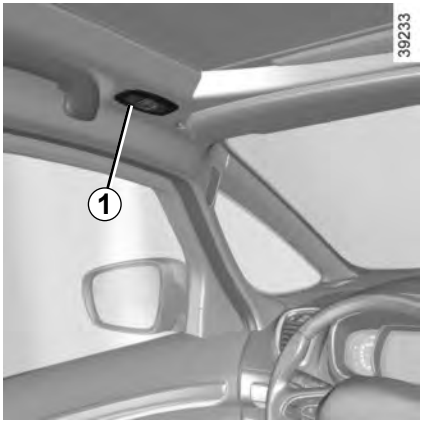

Map reading lights

Press switch ***1*** to get:

– permanent lighting;

– immediate switching off.

When the doors or boot are unlocked and opened, the reading and footwell lights come on temporarily.

From the multifunction screen, it is possible to deactivate/activate the courtesy lights upon opening the doors or the boot. To do this, please refer to “Vehicle settings customisation menu” in Section 1.

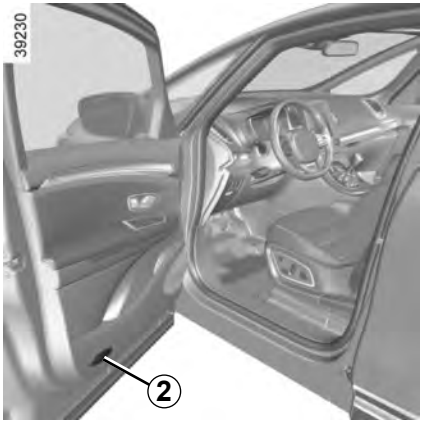

Door lights

Light ***2*** comes on when the door is opened.

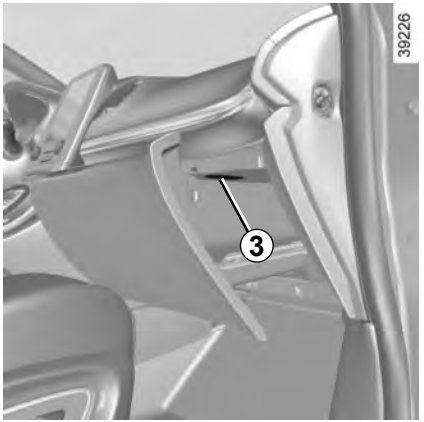

Storage drawer light

Light ***3*** comes on when the storage drawer is opened.

Boot lights

Light ***4*** comes on when the boot is opened.

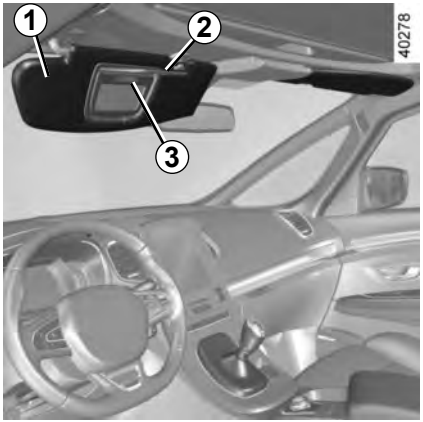

Front sun visor

Lower the sun visor ***1*** on the windscreen or unclip it and lower it over the side window.

Vanity mirror

Lift the cover ***2***.

The light ***3*** switches on automatically.

When driving, ensure the courtesy mirror cover is closed. Risk of injury.

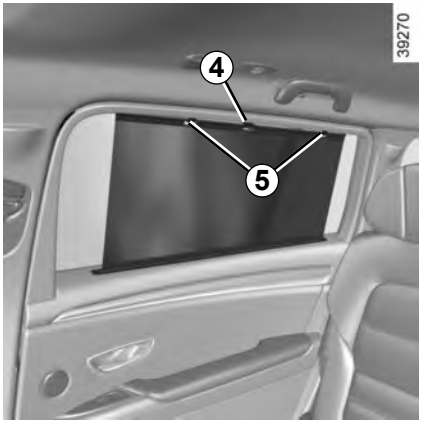

Lateral sun visor

Pull the sun visor up by tab ***4*** until hooks ***5*** engage in their housings (make sure the hooks are properly locked in position).

Door pockets *1*

It can hold a 1.5 litre bottle.

Nothing should be placed on the floor area in front of the driver as such objects may slide under the pedal during braking manoeuvres, thus obstructing its use.

Dashboard storage compartment *2*

Ensure that no hard, heavy or pointed objects are placed in the “open” storage compartments in such a way that they may fall onto passengers during sudden turning or braking.

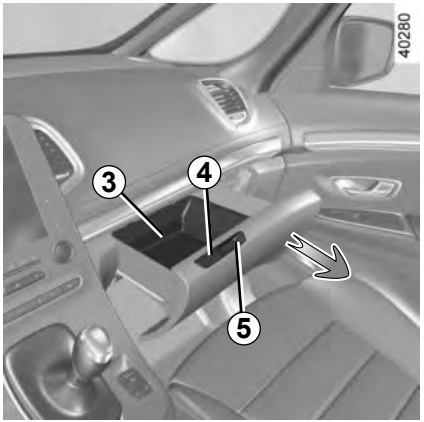

Passenger storage drawer *3*

To open, move your fingers into area ***4***- it will open by itself. If on a steep slope, assist the drawer opening by pulling handle ***5***. It can hold A4 documents. It is ventilated and refrigerated.

Maximum load allowed in the passenger storage compartment: 6 kg, evenly distributed.

When driving, ensure that the storage drawer is closed. Risk of injury.

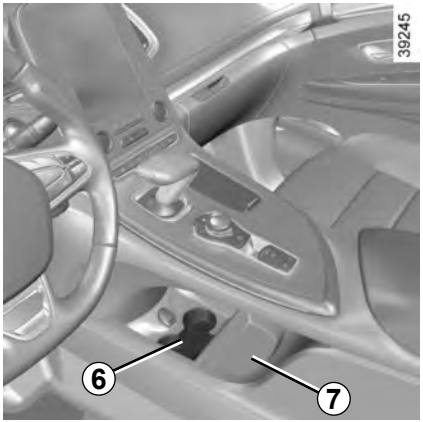

Cup holders *6* and *9*

Storage compartment *7*

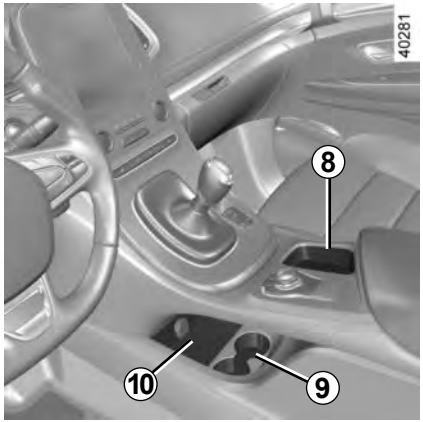

Storage compartments *8* and *10*

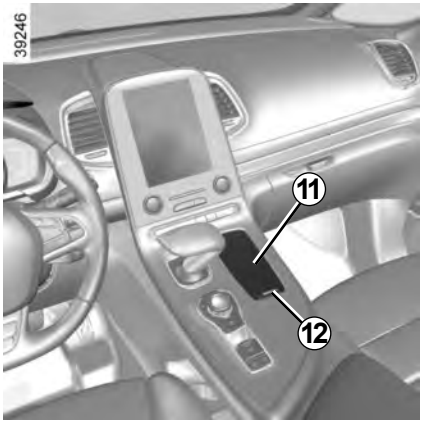

Central storage compartment *11*

Slide the curtain ***12*** to open the storage compartment.

Depending on the vehicle, this may be used to hold a removable cup-holder.

When turning corners, accelerating or braking, ensure that the receptacle being held by the cup holder is not dislodged.

There is a risk of burning if hot liquid escapes.

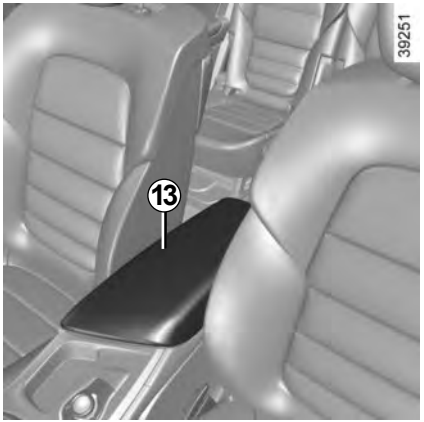

Centre console storage compartment *14*

Lift up the armrest ***13***.

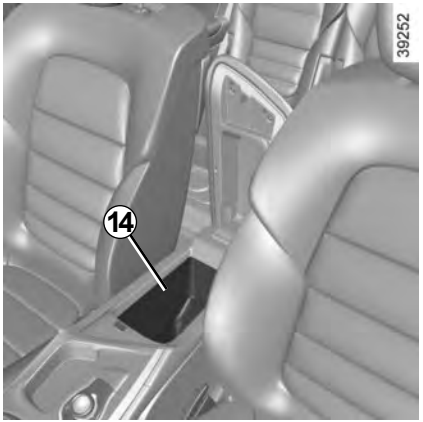

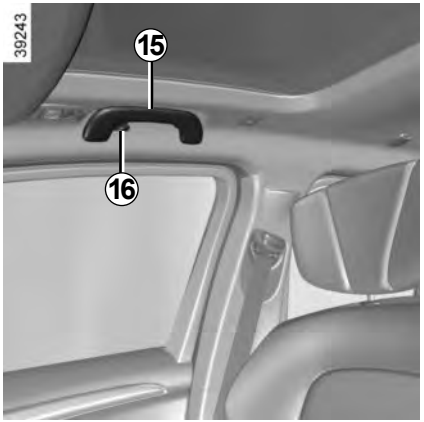

Grab handle *15*

This offers support and can be held when the vehicle is being driven.

Do not use it for getting into or out of the vehicle.

Clothes hooks *16*

Rear door storage compartment *17*

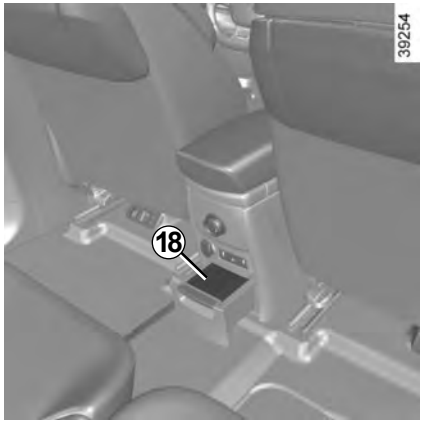

Storage drawer *18* under the centre console

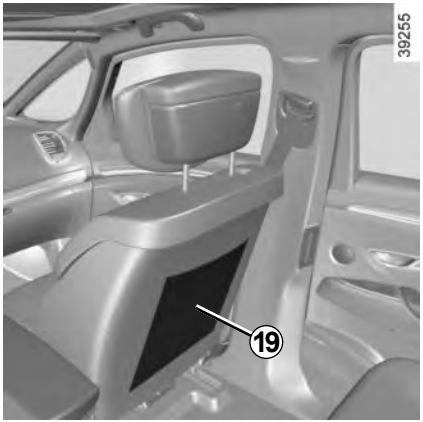

Front seat storage pockets *19*

Nothing should be placed on the floor area in front of the driver as such objects may slide under the pedal during braking manoeuvres, thus obstructing its use.

Ensure that no hard, heavy or pointed objects are placed in the “open” storage compartments in such a way that they may fall onto passengers during sudden turning or braking.

Rear parcel shelf *20*

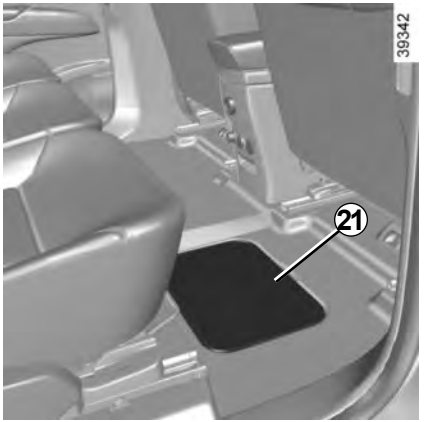

Flap under the feet of the right rear passenger *21*

This location houses the tool kit. Please refer to the information on “Tools” in Section 5.

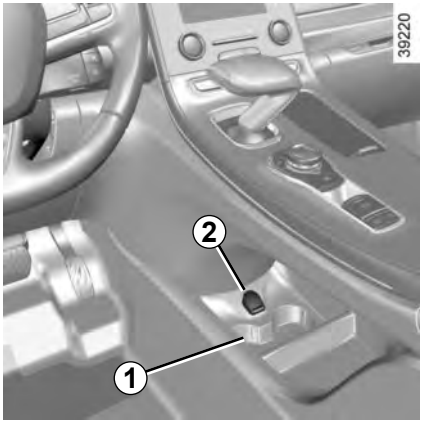

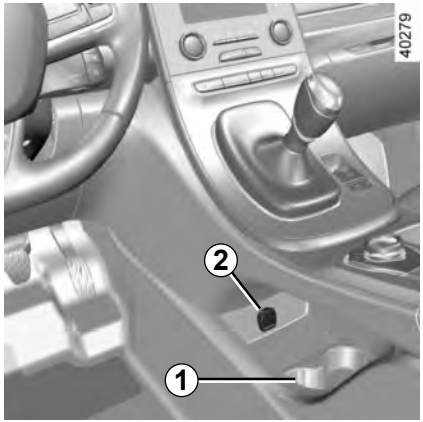

Ashtray location *1*

Cigarette lighter *2*

With the ignition on, push in the cigarette lighter ***2*** - it will spring back with a click when it is ready. Pull it out to use. After use, replace it without pushing it all the way in.

If your vehicle is not fitted with a cigar lighter and an ashtray, these can be obtained from an authorised dealer.

Accessories sockets

You can use the one of sockets ***2***. They are provided for connecting accessories approved by our Technical Department.

Connect accessories with a maximum power of 120 watts (12 V) only.

When several accessory sockets are used at the same time, the total power of the connected accessories must not exceed 180 watts.

Fire hazard.

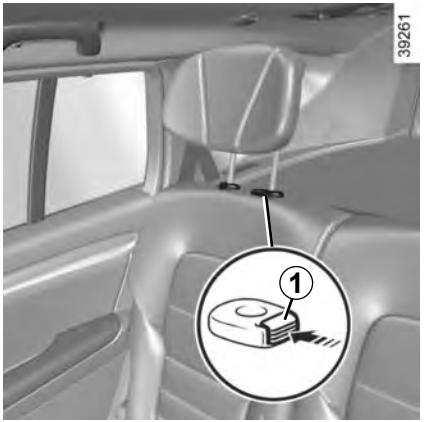

Position for use

Lift the headrest to maximum height, then lower it until it locks.

To remove the headrest

Press the tab(s) ***1***, then remove the headrest.

To refit the headrest

Insert the rods into the holes, press tab ***1*** and lower the headrest.

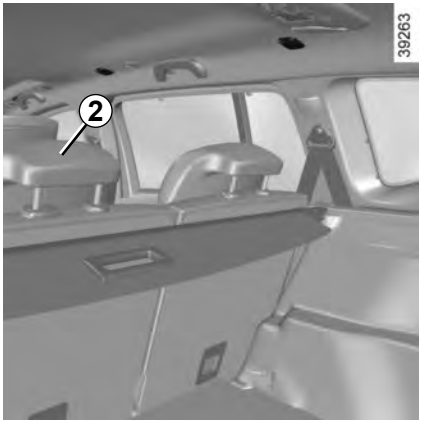

Centre seat headrest *2* storage position

Press tab ***1*** and lower the headrest completely.

When the headrest is set at the lowest position, this is for storage only. It should not be in this position when a seat is occupied.

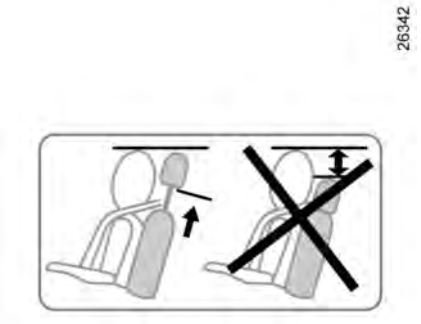

The headrest is a safety component; check that it is fitted and in the correct position. The top of the headrest should be as close as possible to the top of the head.

The rear seats are separate seats.

To move the seats forwards or backwards

Lift lever ***1*** to unlock the seat. Once in the desired position, release the lever and check that the seat is correctly locked.

To tilt the seatback

Lift handle ***2*** and tilt the seatback to the desired position.

Release the handle ***2*** and ensure that the seatback is fully locked into position.

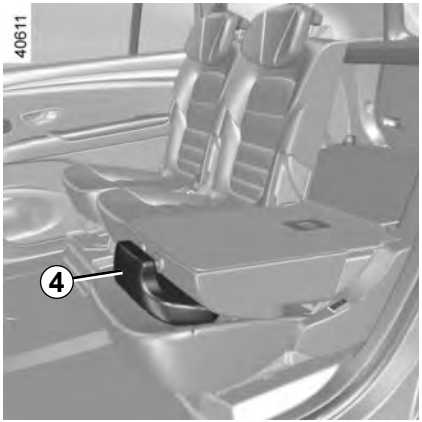

To fold down the seats (flat-floor position)

Lower the headrest ***4*** and lift the handle ***2*** to fold down the seat. Make sure the seat is correctly locked in position.

To raise the seat

Hold the seatback, lift it up and ensure it is correctly locked in place.

For safety reasons, carry out any adjustments when the vehicle is stationary.

Heated seats
(depending on vehicle)
Side seats only

With the ignition on:

– Pressing the switch ***3*** on the required seat for the first time activates the heating system on high. Both integrated switch warning lights come on;

– pressing the switch for the second time changes the heating to low. One integrated warning light comes on;

– pressing for the third time turns the heating off.

Operating faults

When an operating fault is detected, the integrated warning lights on the switch ***3*** for the seat concerned flash.

Consult an approved dealer.

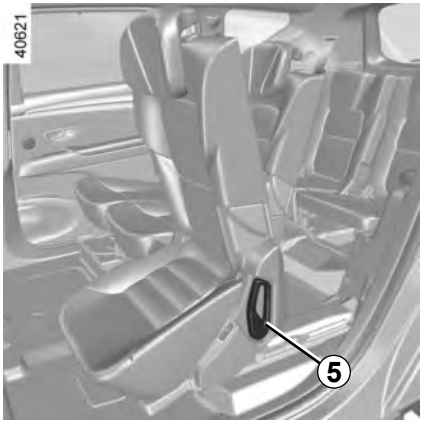

To access the third row rear seats

– Lift the handle ***5***;

– guide the seat forwards until it locks;

– sit in the third row rear seat;

– hold the second row seatback and fold it down;

– Make sure the seat is correctly locked in position.

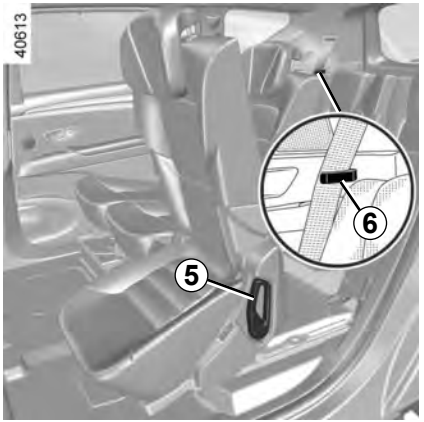

To unfold a seat in the third row

– Access the third row seats;

– place seat belt in hook ***6*** to avoid damaging it;

– hold the seatback, lift it up and ensure it is correctly locked in place.

When moving the rear seats, ensure that nothing obstructs the anchorage points (passenger's arm or leg, a pet, gravel, cloth, toys, etc.).

When moving the rear seats:

– check that no one is near to any of the moving parts;

– check that there is sufficient space around the seat;

– check that nothing is obstructing the section of the boot reserved for storing the seat;

For safety reasons, carry out any adjustments when the vehicle is stationary.

To automatically fold down the seats (flat position)

The rear seats are electrically unlocked to fold down in order to create a flat floor.

There are two ways to manoeuvre the seats:

– from the boot using control ***7***;

– on the multifunction screen ***8***.

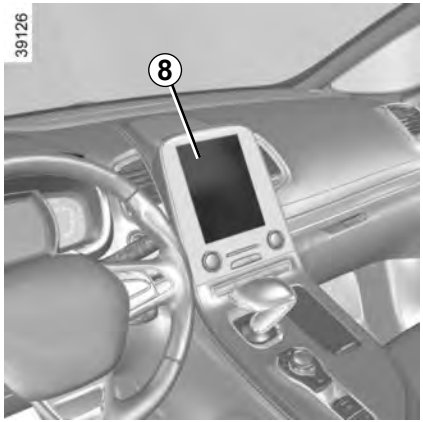

Conditions of use

With the vehicle at a standstill and the rear seat belts unlocked:

– from control ***7***, with the boot lid open;

– from the multifunction screen ***8***, with the engine running.

Note:
All unlocking actions for folding down the seats require that the trays on the back of the front seats have already been folded away.

Disabling the function

– With the engine running, a buckled seat belt prevents the movement of the relevant seat.

– Once the vehicle is moving the two controls are deactivated.

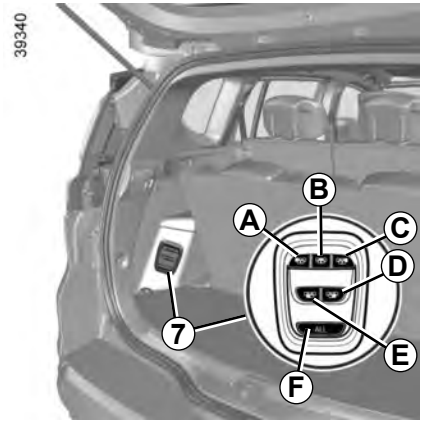

Using control *7*

Depending on the vehicle, folding switches for:

A the rear left seat in the second row.

B central rear seat in the second row.

C the rear right seat in the second row.

D the rear right seat in the third row.

E the rear left seat in the third row.

F all seats.

From the multifunction screen *8*

With the vehicle at a standstill, select menu “Vehicle”, “Seats” then “One-touch folding”.

Press on the seat you wish to fold away, or on all seats, then confirm.

Encountering an obstacle

While being moved, if a seat encounters an obstacle, the movement stops of its own accord. You will then have to manually fold back the seat after removing the obstacle.

Operating fault

If all user conditions have been fulfilled and the folding action still fails to operate, please contact an authorised dealer.

When moving the rear seats, ensure that nothing obstructs the anchorage points (passenger’s arm or leg, a pet, gravel, cloth, toys, etc.).

Use restriction

It is not permitted to drive with a second row rear seatback or seat folded down when there is a passenger occupying a third row rear seat.

For safety reasons, carry out any adjustments when the vehicle is not being driven.

When moving the rear seats, ensure that nothing obstructs the anchorage points (passenger's arm or leg, a pet, gravel, cloth, toys, etc.).

When refitting the seatback, make sure it is correctly locked in place.
If seat covers are fitted, make sure these do not prevent the seatback latch from locking in.
Make sure that the seat belts are positioned correctly.
Reposition the headrests.

Manual controls

To open

Press button ***1*** and lift the tailgate.

To close

Lower the boot lid using the handle inside the boot ***2*** to assist you.

Electric controls

Please refer to the information on the “Automatic tailgate” in Section 3.

Opening the doors manually from the inside

If it is impossible to unlock the tailgate, it can be done manually from inside:

– access the boot by tilting the rear seat(s);

– unclip the lock access flap ***3***;

– slide the tab ***5*** to the right in vehicles with a manual tailgate, or tab ***4*** on vehicles with an automatic tailgate.

– push the boot lid to open it;

The attaching of any carrying device (bike rack, luggage box, etc.) resting on the luggage compartment lid is prohibited. To install a carrying device on your vehicle, contact an Approved Dealer.

AUTOMATIC TAILGATE (1/5)

If fitted on the vehicle, the tailgate locks and unlocks at the same time as the doors.

The following modes are available to manoeuvre the tailgate:

– using the RENAULT card remote control;

– using the controls on the tailgate;

– using the dashboard control;

– depending on the vehicle, using the «hands-free» function.

When opening or closing the tailgate, ensure that nothing interferes with the manoeuvre.

Conditions of use

– Immobilise the vehicle.

– If there is any ice or snow preventing the tailgate from opening, this ice or snow must be removed to free the tailgate.

– In the event that the battery is discharged or if it is changed, the tailgate should be closed (manually if necessary) to restart the tailgate motor.

Ensure that nobody is close to the moving parts when opening/closing the tailgate.

Risk of injury.

Opening/Closing

Activating the automatic tailgate opening or closing using the dashboard control or using the card, **three beeps** sound just before the tailgate begins to move.

To avoid damaging the tailgate system, do not manually force the tailgate to open or close while it is moving.

Using the Renault card remote control

With the ignition off, press and hold switch ***1*** on the RENAULT card.

As a safety precaution, the doors should only be opened or closed when the vehicle is stationary.

Risk of injury.

Using the tailgate exterior opening control

Press control ***2***.

Using the tailgate interior closing control

Press control ***3***.

Using the dashboard control
Press and hold switch ***4***.

Using the hands-free function
The hands-free function grants access to the boot or allows it to be closed while you have your hands full.
With the RENAULT card on your person and with the ignition off, perform a forwards/backwards movement with your foot in the area delimited by the sensors ***5***.
The sensor detects the approach and removal of your foot and triggers the opening or closing of the tailgate.

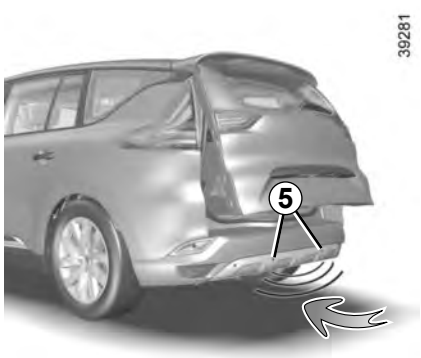

Do not keep your foot in the air. Carry out the movement without stopping.

Note: With the tailgate open, after detecting a closure control, it waits around 3 seconds before triggering the closure (a beep is emitted every second).

Activation/deactivation of the hands-free function

Using the multifunction screen, select menu “Vehicle”, “User settings” then “Use handsfree card: open/close”. Select “ON” or “OFF” to activate or deactivate the function.

Usage features of the hands-free function

– the hands-free function is no longer available after a few days of lack of movement of the vehicle, or after around 15 minutes if the vehicle is unlocked. To reactivate it, use the unlocking button on the RENAULT card.

– The “Hands-free” function is only available if the vehicle is stationary and the engine is switched off (and not on standby with the Stop and Start function).

– The hands-free feature may not work if the vehicle is equipped with a towbar or is in an area with high electromagnetic radiation.

Stopping the tailgate manoeuvre

The automatic tailgate manoeuvre can be stopped at any time by a short press on one of the controls. Depending on the opening position, the tailgate hatch can however continue to be opened manually.

If the tailgate is stationary in the intermediate position, your next press will move the tailgate in the opposite direction to when you stopped it.

Manual mode

After stopping the tailgate, you can perform the manoeuvre manually if you wish.

You can switch to automatic movement at any time by pressing one of the controls.

Obstacle detection

When the tailgate window encounters an obstacle (presence of an object or person) when it is moving, it stops. Depending on the opening position, the tailgate hatch can however continue to be opened manually.

Press the tailgate opening/closing control to reperform the tailgate movement in the same direction as before encountering the obstacle.

The obstacle detection is an aid to opening and closing the tailgate, it does not in any way replace the user's care or responsibility.

Limiting the tailgate opening angle

You can adjust the maximum tailgate opening height It will always stop at the chosen position:

– open the tailgate to an intermediate position;
– manually adjust the tailgate to the chosen position;
– press the automatic tailgate control ***3*** for more than 3 seconds to save the position.
  Two beeps will sound to notify you that the position has been saved.

Precautions during use

Before opening/closing the tailgate, ensure that the surrounding space is sufficient to allow the tailgate to operate. If not, stop the tailgate movement with the external tailgate control and hold the tailgate in position by hand (the tailgate may continue to open manually).
If the tailgate is moving and the engine is started, the movement will stop for a seconds before continuing.
Avoid multiple manual stops during the automatic tailgate movement (risk of damaging the tailgate system).

Disable the «hands-free» function before washing the vehicle manually or handling the emergency spare wheel or the towbar.

Risk of accidental opening or closing of the tailgate which may cause injury.

Operating faults

If you activate the automatic tailgate continuously for around a minute (sequence of opening and closing), it will stop in order to avoid overheating. The operation will return to normal after about a minute.

The automatic tailgate will not operate if the battery is on low charge. In this case, operate the automatic tailgate with the engine started.

In very cold weather conditions, the automatic opening or closing may not operate if the tailgate joints are frozen.

The attaching of any carrying device (bike rack, luggage box, etc.) resting on the luggage compartment lid is prohibited. To install a carrying device on your vehicle, contact an Approved Dealer.

Driver's responsibility when parking or stopping the vehicle

Never leave your vehicle with a child, an adult who is not self-sufficient or a pet inside or at the rear of the tailgate, even for a short while.

They may pose a risk to themselves or to others by starting the engine, activating equipment such as the electric windows, the automatic tailgate or by locking the doors.

RISK OF DEATH OR SERIOUS INJURY.

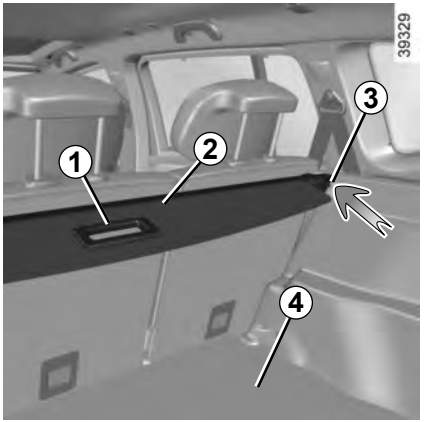

To remove the flexible section of the luggage cover

Pull handle ***1*** gently to release the pins from their mounting points located on each side of the boot.

Guide the luggage cover onto the roller ***2***.

Removing the luggage cover

Swivel the ends of the luggage cover ***2*** and remove it.

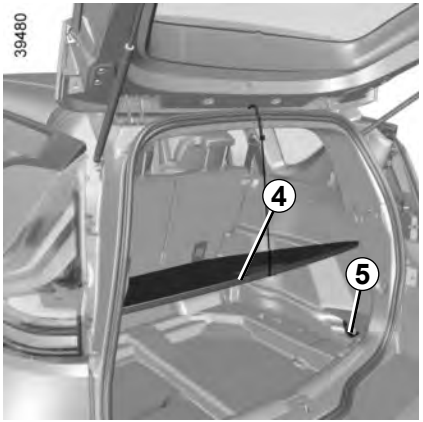

Refitting the luggage compartment cover

Place the luggage cover into the housing points ***3***.

Do not place any heavy or solid objects on the luggage cover. These may pose a risk to the vehicle occupants if the driver has to brake suddenly or if the vehicle is involved in an accident.

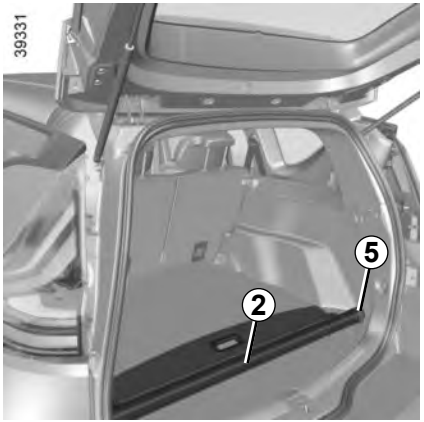

Luggage compartment cover storage

Vehicles without additional air conditioning

Lift the false floor ***4***, remove the attachment strips ***5*** and position the luggage cover roller ***2***. Attach using the attachment strips ***5*** under the false floor of the boot ***4***.

Version with additional air conditioning

Remove the attachment strips ***5*** and position the luggage cover roller ***2***. Attach using the attachment strips ***5***.

Bag hooks *1*

Maximum weight per hook: 5 kg.

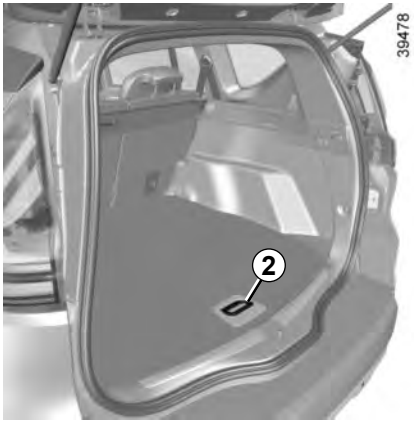

Storage compartment under boot false floor

Depending on the vehicle, to access, lift the false floor of the boot ***5*** using the handle ***2***.

The false floor can be attached using the hook ***4*** in the housing ***3***.

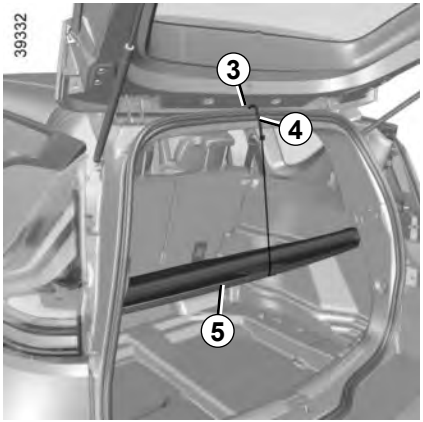

Always place the objects to be transported so that their largest side rests against the back of the rear seat for normal loads (e.g.: ***A***), or against the back of the front seats ***B*** when the rear seatbacks are folded down.

If you have to place objects on the folded seat back, it is vital that you remove the headrests before folding the seat back so that it can be folded as flat as possible against the seat.

Always position the heaviest items directly on the floor. Use the lashing points on the floor of the luggage compartment, if these are fitted to the vehicle. The luggage should be loaded in such a way that no items will be thrown forward and strike the occupants if the driver has to brake suddenly. Fasten the rear seat belts, even if the seats are not occupied.

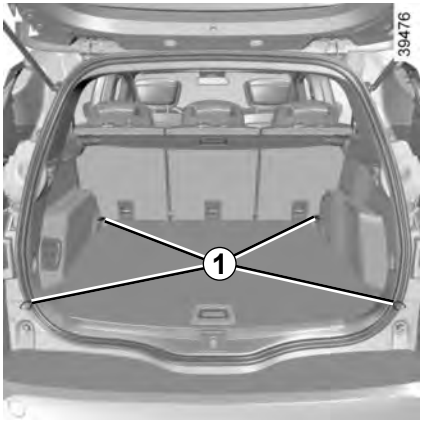

Anchorage points

Hooks ***1*** located on each corner of the boot allow the load to be secured.

Always position objects being transported so that the heaviest items are resting against the back of the rear seat.

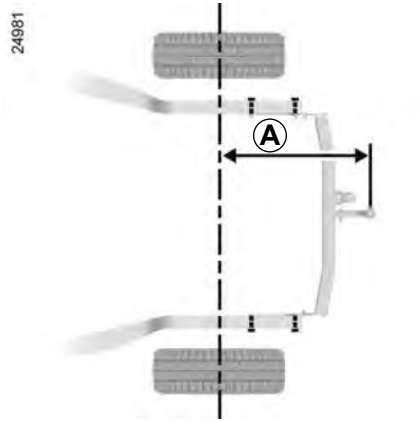

Permissible nose weight, maximum permissible towing weight, braked and unbraked: refer to the information on “Weights” in Section 6.

Choice and fitting of towing equipment

Maximum weight of towing equipment: 32 kg

For fitting and conditions of use, refer to the equipment’s fitting instructions.
Please keep these instructions with the rest of the vehicle documentation.

A: 1066 mm.

If the towbar ball obscures the registration plate or the rear fog lights, it should be removed when not in use.

In all cases, comply with local legislation.

Vehicle fitted with an automatic tailgate with the «hands-free» function

Disable the «hands-free» function before washing the vehicle manually or handling the emergency spare wheel or the towbar.

Risk of accidental opening or closing of the tailgate which may cause injury.

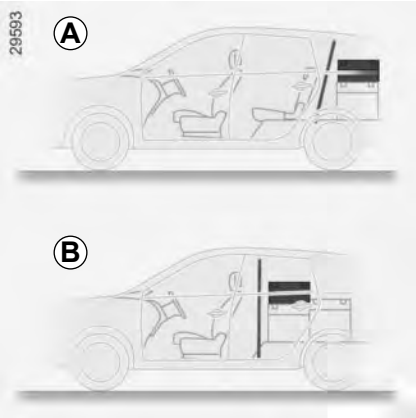

Depending on the vehicle, this may be used when transporting animals or luggage to isolate them from the passenger section.

It can be positioned:

– behind the rear seats ***A***;

– behind the front seats ***B***.

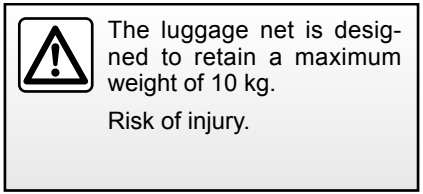

The luggage net is designed to retain a maximum weight of 10 kg.

Risk of injury.

Fitting the luggage net behind the front seats

Inside the vehicle on each side:

– lower cover ***1*** to gain access to the anchoring points for the top part of the luggage net;

– insert the top rod of net ***2*** into the anchoring points;

– attach the two hooks ***5*** for the net straps ***3*** to the anchoring points ***4***

– adjust the net strap ***3*** so that it is taut.

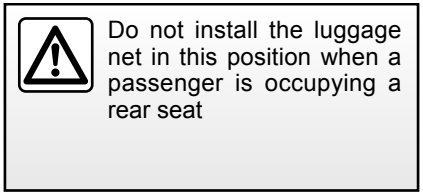

Do not install the luggage net in this position when a passenger is occupying a rear seat

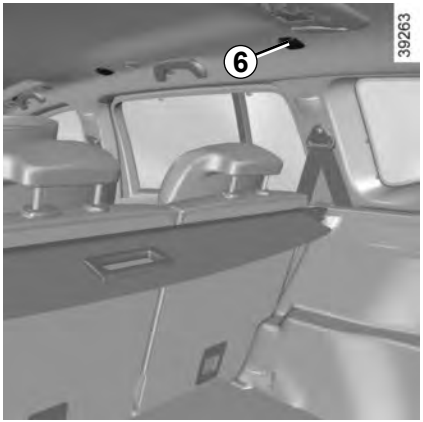

Fitting the luggage net behind the rear seats

(behind the second row rear seats on the 7-seater version)

Inside the vehicle on each side:

– push the second row seats fully forward;

– lift cover ***6*** to access the luggage net upper mounting rail;

– insert upper rod ***7*** for the net into the rail;

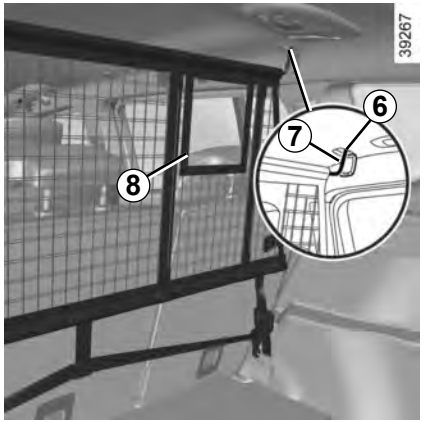

– fix the net belt hook ***11*** onto the anchoring points ***10***;

– adjust net strap ***9*** so that it is taut.

– adjust the position of the second row seats: ensure that the seatbacks do not touch the luggage net.

Note: Notch ***8*** should be on the side of the centre seat belt feed.

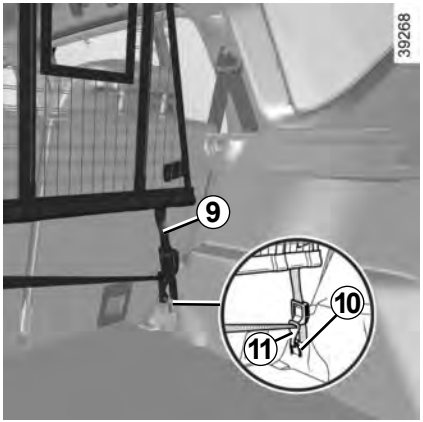

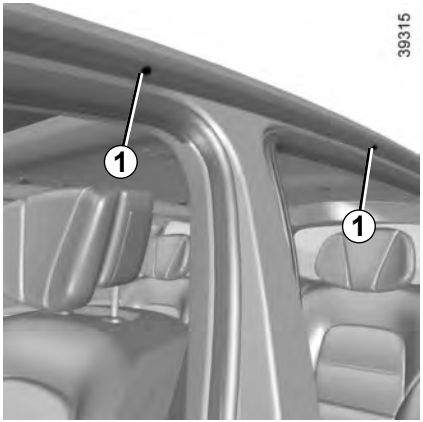

Access to the mounting points

Open the doors to access the mounting points ***1***.

If original roof bars, approved by our Technical Department, are supplied with screws, only use these screws for attaching the roof bars to the vehicle.

Precautions during use

Handling the tailgate

Before handling the tailgate, check the objects and/or accessories (bike rack, roof box, etc.) fitted to the roof bars: these must be correctly positioned and secured, so as not to hinder the operation of the tailgate.

For information on the range of equipment adapted to your vehicle, we advise you to consult an approved Dealer.

Refer to the fitting instructions for information on how to fit roof bars and conditions of use.

Please keep these instructions with the rest of the vehicle documentation.

Maximum permissible load on roof rack: refer to the information on “Weights” in Section 6.

The attaching of any carrying device (bike rack, luggage box, etc.) resting on the luggage compartment lid is prohibited. To install a carrying device on your vehicle, contact an Approved Dealer.

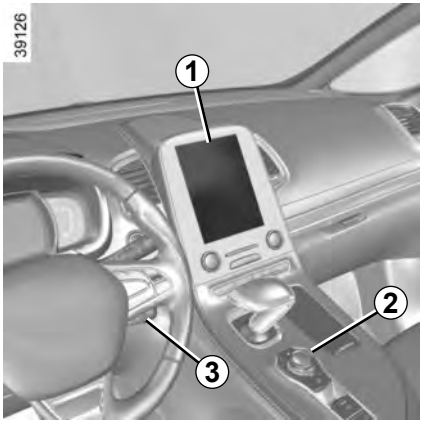

Multimedia systems

1 Multimedia touchscreen display;
2 Central control;
3 Steering column controls;
4 Steering wheel controls;
5 Microphone.

Refer to the equipment instructions for information on how to operate this equipment.

Hands-free telephone integrated control

For equipped vehicles, use the steering wheel controls ***4***.

Using the telephone

We remind you of the need to conform to the legislation in force concerning the use of such equipment.

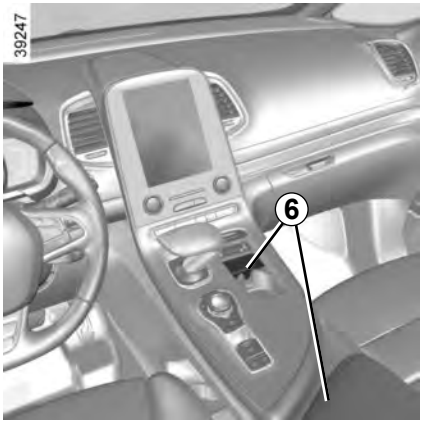

Multimedia sockets *6*

You can use sockets USB or the SD card reader to access the multimedia content of your accessories and the system update (please refer to the equipment instructions).

The various sources can be selected from the multifunction screen and from the steering column controls.

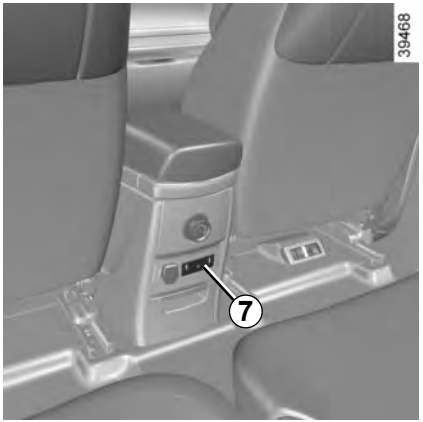

The sockets USB can also recharge accessories with a maximum power rating of 12 Watts (voltage: 5V) per socket, which have been approved by our Technical Department.

The JACK socket enables the radio to be used with an auxiliary cable.

Multimedia sockets *7*

Sockets USB can only recharge accessories with a maximum power rating of 12 Watts (voltage: 5V) per socket, which have been approved by our Technical Department.

The JACK socket enables the radio to be used with an auxiliary cable.

Connect accessories with a maximum power of 12 watts only.

Fire hazard.

Section 4: Maintenance

Bonnet 4.2
Engine oil level: general information 4.4
Engine oil level: topping up/filling 4.5
Oil change 4.6
Levels: 4.7
engine coolant 4.7
brake fluid 4.8
windscreen/headlight washer reservoir 4.9
Filters 4.9
Battery 4.10
Tyre Pressure 4.12
Bodywork maintenance 4.14
Interior trim maintenance 4.16

To open, pull handle ***1***, located on the left-hand side of the dashboard.

Before performing any action in the engine compartment, the ignition must be switched off by pressing the engine stop button (please see the information on “Starting, stopping the engine” in Section 2).

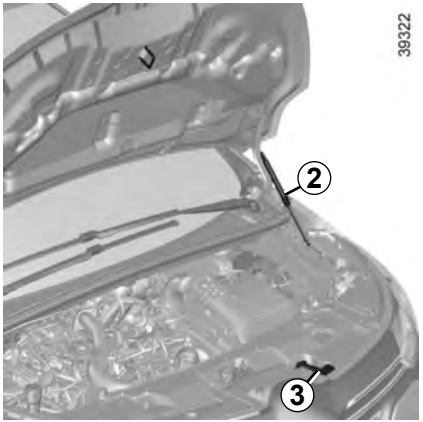

Unlocking the bonnet catch

To unlock, push tab ***3*** at the same time as opening the bonnet.

Opening the bonnet

Lift the bonnet, guiding it up, and it will rest in position with the help of two struts ***2***.

Do not press down on the bonnet: there is a risk that the bonnet may accidentally close.

When working in the engine compartment, ensure that the windscreen wiper stalk is in the park position.

Risk of injury.

The engine may be hot when carrying out operations in close proximity. In addition, the engine cooling fan can come on at any moment.

Risk of injury.

Closing the bonnet

Check that nothing has been left in the engine compartment.

To close the bonnet again, hold the bonnet in the middle and guide it down, allowing a 30 cm gap before it is closed, then release it. It will latch automatically under its own weight.

After carrying out any work in the engine compartment, check that nothing has been left behind (cloth, tools, etc.).
These may damage the engine or cause a fire.

Ensure that the bonnet is properly locked.

Check that nothing is preventing the catch from locking (gravel, cloth, etc.).

In the event of even a slight impact involving the radiator grille or bonnet, have the bonnet lock checked by an authorised dealer as soon as possible.

ENGINE OIL LEVEL: general information

It is normal for an engine to use oil for lubrication and cooling of moving parts and it is normal to top up the level between oil changes.

However, contact your approved Dealer if more than 0.5 litres is being consumed every 600 miles (1,000 km) after the running in period.

Oil change frequency: check the oil level from time to time and certainly before any long journey to avoid the risk of damaging your engine.

Reading the oil level

The oil level should be read with the vehicle on level ground, after the engine has been switched off for some time.

The dipstick must be used to read the exact oil level and make sure that the maximum level has not been exceeded (risk of engine damage). Refer to the following pages.

The instrument panel display only alerts the driver when the oil level is at its minimum.

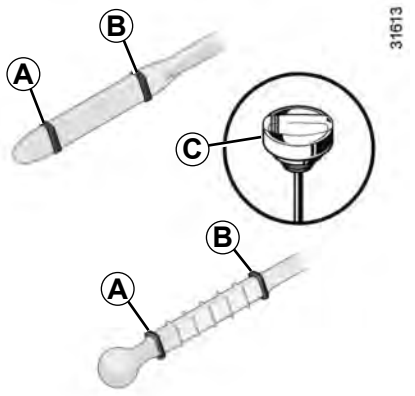

– remove the dipstick and wipe with a clean, lint-free cloth;
– push the dipstick in as far as it will go (for vehicles equipped with a cap-type dipstick ***C***, screw the cap in as far as it will go);
– take out the dipstick again;
– read the level: it should never fall below minimum mark ***A*** or exceed maximum mark ***B***.

Once the operation has been completed, ensure that the dipstick is pushed in as far as it will go or that the “cap-type dipstick” is completely screwed in.

In order to prevent splashback, it is recommended that a funnel be used when topping up/filling with oil

Exceeding the maximum engine oil level

Under no circumstances must the maximum fill level ***B*** be exceeded: risk of damage to the engine and catalytic converter.
If the oil level exceeds the maximum level, **do not start your vehicle** and contact an approved Dealer.

Before performing any action in the engine compartment, the ignition must be switched off by pressing the engine stop button (please see the information on “Starting, stopping the engine” in Section 2).

ENGINE OIL LEVEL: topping up, filling (1/2)

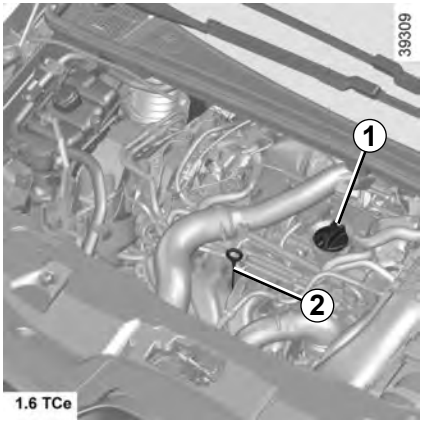

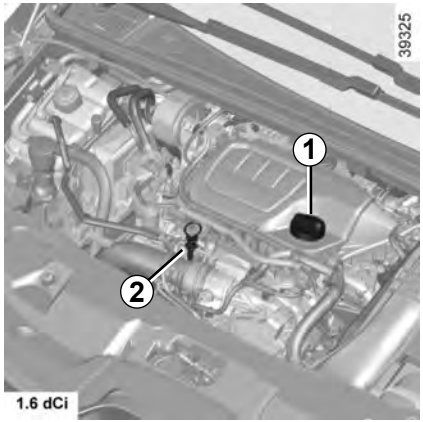

Topping up/Filling

The vehicle must be parked on level ground and the engine should be cold (for instance, before the engine is started up for the first time in the day).

Do not exceed the **max** level and do not forget to refit cap ***1*** and dipstick ***2***.

– Unscrew cap ***1***;

– top up the level (as a guide, the capacity between the minimum and maximum reading on the dipstick ***2*** is between 1.5 and 2 litres, depending on the engine);

– wait for approximately 20 minutes to allow the oil to flow into the engine;

– check the level using the dipstick ***2*** (as described above).

Once the operation has been completed, ensure that the dipstick is pushed in as far as it will go or that the “cap-type dipstick” is completely screwed in.

Before performing any action in the engine compartment, the ignition must be switched off by pressing the engine stop button (please see the information on “Starting, stopping the engine” in Section 2).

Oil change

Service interval: refer to the Maintenance Service Booklet for your vehicle.

Oil change capacity

Please refer to the maintenance document for your vehicle, or contact an authorised dealer.
Always check the engine oil level using the dipstick, as explained previously (it should never fall below the minimum level, or be over the maximum level on the dipstick).

Exceeding the maximum engine oil level

Under no circumstances must the maximum fill level be exceeded: risk of damage to the engine and catalytic converter.
If the oil level exceeds the maximum level, **do not start your vehicle** and contact an approved Dealer.

Engine oil grade

Refer to the Maintenance Service Booklet for your vehicle.

When working in the engine compartment, ensure that the windscreen wiper stalk is in the park position.

Risk of injury.

Consult your approved Dealer at once if you notice an abnormal or repeated drop in any of the fluid levels.

The engine may be hot when carrying out operations in close proximity. In addition, the engine cooling fan can come on at any moment.

Risk of injury.

Filling: take care when topping up the oil that no oil drips onto engine components - risk of fire.
Remember to refit the cap securely as there is a risk of fire if oil splashes onto hot engine components.

Never run the engine in an enclosed space as exhaust gases are poisonous.

Engine oil change: if you are changing the oil when the engine is hot, be careful not to scald yourself if the oil overflows.

Coolant

With the engine switched off and on level ground, the level **when cold** must be between the “MINI" and "MAXI" marks on coolant reservoir ***1***.

Top this level up **when cold** before it reaches the MIN mark.

Checking intervals

Check the coolant level regularly (very severe damage is likely to be caused to the engine if it runs out of coolant).

If the level needs to be topped up, only use products approved by our Technical Department which ensure:

– protection against freezing;

– anticorrosion protection of the cooling system.

Consult your approved dealer at once if you notice an abnormal or repeated drop in any of the fluid levels.

No operations should be carried out on the cooling circuit when the engine is hot.

Risk of burns.

Replacement intervals

Refer to the Maintenance Document for your vehicle.

The engine may be hot when carrying out operations in close proximity. In addition, the engine cooling fan can come on at any moment.

Risk of injury.

Before performing any action in the engine compartment, the ignition must be switched off by pressing the engine stop button (please see the information on “Starting, stopping the engine” in Section 2).

Brake fluid level

This should be checked frequently, and any time you notice even the slightest loss in braking efficiency.

The level should be read with the engine switched off and on level ground.

Level 2

It is normal for the level to drop as the linings become worn, but it should never drop below the **"MINI"** warning line.

If you wish to check the disc and drum wear yourself, you should obtain the document explaining the checking procedure from our network or from the manufacturer's website.

The engine may be hot when carrying out operations in close proximity. In addition, the engine cooling fan can come on at any moment.

Risk of injury.

Topping up

After any operation on the hydraulic circuit, a specialist must replace the fluid.

Only use fluids approved by our Technical Department (and taken from a sealed container).

Replacement intervals

Refer to the Maintenance Document for your vehicle.

Before performing any action in the engine compartment, the ignition must be switched off by pressing the engine stop button (please see the information on "Starting, stopping the engine" in Section 2).

Windscreen/headlight washer reservoir

Topping up

Open cap ***3***, fill until you can see the fluid, then refit the cap.

Note: Regularly check the reservoir level by topping up the liquid before taking a trip.

Liquid

Windscreen washer fluid. In winter, use anti-freeze product. Use products recommended by an authorised dealer.

Note: Do not use pure water (risk of damage to the priming pump, limescale building up on the pump and the jets).

NOTE

Depending on the vehicle, to find out the fluid level, open cap ***3*** and pull out the dipstick.

Filters

The replacement of filter elements (air filter, passenger compartment filter, diesel filter, etc.) is scheduled in the maintenance operations for your vehicle.

Replacement intervals for filter elements: refer to the Maintenance Document for your vehicle.

BATTERY (1/2)

Battery ***1*** does not require any maintenance. **You should not open it or add any fluid.**

Handle the battery with care as it contains sulphuric acid which must not come into contact with the eyes or skin. If it does, wash the affected area with plenty of cold water. If necessary, consult a doctor.

Ensure that naked flames, red hot objects and sparks do not come into contact with the battery as there is a risk of explosion.

Depending on the vehicle, a system continuously checks the battery charge status. If this decreases, the message “Battery low start engine” is displayed on the instrument panel. In this case, start the engine and the message on the instrument panel will disappear.

The charge status of your battery can decrease especially if you use your vehicle:

– for short journeys;

– for driving in town;

– when the temperature drops;

– after extended use of energy-consuming devices (radio, etc.) with the engine switched off.

Before performing any action in the engine compartment, the ignition must be switched off by pressing the engine stop button (please see the information on “Starting, stopping the engine” in Section 2).

The engine may be hot during operations in close proximity. In addition, the engine cooling fan may start at any moment.

Risk of injury.

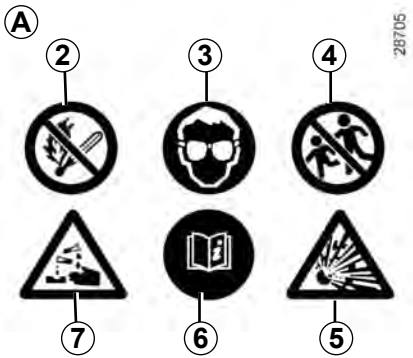

Label *A*

Observe the indications on the battery:
- ***2*** Naked flames and smoking are forbidden;
- ***3*** eye protection required;
- ***4*** keep away from children;
- ***5*** explosive materials;
- ***6*** refer to the handbook;
- ***7*** corrosive materials.

Replacing the battery

As this operation is complex, we advise you to contact an approved Dealer.

The battery is a **specific type**, please ensure it is replaced with the same type. Consult an approved dealer.

Label *A*

Open the door to read it.
Tyre pressures should be checked when the tyres are cold.

If the tyre pressures cannot be checked when the tyres are **cold**, increase the pressures from **0.2** to **0.3** bar (or **3 PSI**). **Never deflate a hot tyre.**

Vehicle fitted with a tyre pressure monitoring system

In cases of under-inflation (puncture, low pressure, etc.), warning light lights up on the instrument panel. Please refer to the information on the “Tyre pressure monitoring system” in Section 2.

Vehicle used fully laden (Maximum Permissible All-up Weight) and towing a trailer

the maximum speed must be limited to **60 mph (100 km/h)** and the tyre pressure increased by **0.2 bar**.

Please refer to the information on “Weights” in Section 6.

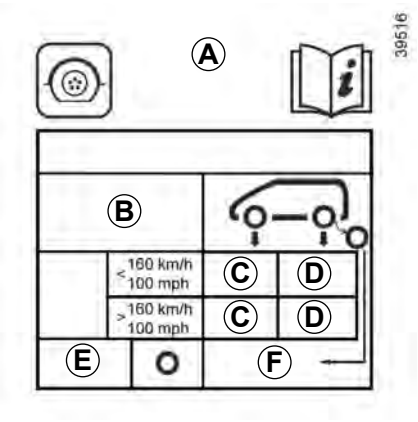

B: dimension of the tyres fitted to the vehicle.

C: front tyre pressure.

D: rear tyre pressure.

E: emergency spare wheel dimensions.

F: tyre pressure for the emergency spare wheel.

TYRE PRESSURES (2/2)

Tyre safety and use of snow chains: Refer to the information on “Tyres” in Section 5 for the servicing conditions and, depending on the version, the use of chains.

For your safety, please respect the speed limit.

When they need to be replaced, only tyres of the same make, size, type and profile should be used on a single axle.

They must: either have a load capacity and speed rating at least equal to those of the original tyres, or conform to those recommended by an authorised dealer.

Failure to heed these instructions could endanger your safety and affect your vehicle’s roadworthiness.

Risk of loss of control of the vehicle.

BODYWORK MAINTENANCE (1/2)

A well-maintained vehicle will last longer. It is therefore recommended to maintain the exterior of the vehicle regularly.

Your vehicle has been treated with very effective anti-corrosion products. It is nevertheless subject to various outside influences.

Corrosive agents in the atmosphere
- atmospheric pollution (built-up and industrial areas),
- saline atmospheres (near the sea, particularly in hot weather),
- seasonal and damp weather conditions (e.g. road salt in winter, water from road cleaners, etc.).

Minor impacts

Abrasive action
Dust and sand in the air, mud, road grit thrown up by other vehicles, etc.

You should take a number of minor precautions in order to safeguard your vehicle against such risks.

What you should not do

Do not degrease or clean mechanical components (e.g. the engine compartment), underneath the body, parts with hinges (e.g. inside the doors) and painted plastic external fittings (e.g. bumpers) using high-pressure cleaning equipment or by spraying on products not approved by our Technical Department. Doing this could give rise to corrosion or operational faults.

Wash the vehicle in bright sunlight or freezing temperatures.

Do not scrape off mud or dirt without pre-wetting.

Allow dirt to accumulate on the exterior.

Allow rust to form following minor impacts.

Do not use solvents not approved by our Technical Department to remove stains as this could damage the paintwork.

Do not drive in snow or muddy conditions without washing the vehicle, particularly under the wheel arches and body.

You should

Wash your car frequently, **with the engine off**, with cleaning products recommended by the manufacturer (never use abrasive products). Rinse thoroughly beforehand with a jet:
- spots of tree resin and industrial grime;
- mud in the wheel arches and underneath the body which forms damp patches;
- **bird droppings**, which cause a chemical reaction with the paint that **rapidly discolours paintwork and may even cause the paint to peel off;**
  wash the vehicle **immediately** to remove these marks since it is impossible to remove them by polishing;
- salt, particularly in the wheel arches and underneath the body after driving in areas where the roads have been gritted.

Remove any plant matter (resin, leaves, etc.) from the vehicle regularly.

Respect local regulations about washing vehicles (e.g. do not wash your vehicle on a public highway).

Observe the vehicle stopping distances when driving on gravelled surfaces to prevent paint damage.

Repair, or have repaired quickly, areas where the paint has been damaged, to prevent corrosion spreading.

Remember to visit the body shop periodically in order to maintain your anti-corrosion warranty. Refer to the Maintenance Document.

If it is necessary to clean mechanical components, hinges, etc., spray them with products approved by our Technical Department to protect them after they have been cleaned.

We have selected special products to care for your vehicle and you can obtain these from the manufacturer's accessory outlets.

Vehicles with a matte paint finish

This type of paint requires certain precautions.

Do not do the following

– use wax-based products (polishing);
– rub hard;
– wash the vehicle in a roller-type car wash;
– wash the vehicle using a high-pressure device;
– attach stickers to the paintwork (risk of leaving marks).

You should do the following

Wash the vehicle by hand using plenty of water, using a soft cloth or a gentle sponge.

Using a roller type car wash

Return the windscreen wiper stalk to the Park position (refer to the information on the "Windscreen washer, wiper" in Section 1). Check the mounting of external accessories, additional lights and mirrors, and ensure that the wiper blades are secured with adhesive tape. Remove the radio aerial mast if your vehicle is fitted with this equipment.
Remember to remove the tape and refit the antenna after washing.

Cleaning the headlights

As the headlights are made of plastic "glass", use a soft cloth or cotton wool to clean them. If this does not clean them properly, moisten the cloth with soapy water, then wipe clean with a soft damp cloth or cotton wool.
Finally, carefully dry off with a soft dry cloth.

Cleaning products containing alcohol must not be used.

INTERIOR TRIM MAINTENANCE (1/2)

A well-maintained vehicle will last longer. It is therefore recommended to maintain the interior of the vehicle regularly.

A stain should always be dealt with swiftly.

Whatever type of stain is on the trim, use **cold** (or warm) **soapy water with natural soap**.

Detergents (washing-up liquid, powdered products, alcohol-based products) should not be used.

Use a soft cloth.

Rinse and soak up the excess.

Glass instrument panel

(e.g.: instrument panel, clock, exterior temperature display, radio display, multimedia or multifunction display etc.)

Use a soft cloth (or cotton wool).
If this does not clean them properly, use a soft cloth (or cotton wool) slightly moistened with soapy water and then wipe clean with another soft damp cloth or cotton wool.
Finally, **carefully** dry off with a soft dry cloth.

Do not use products containing alcohol and/or spray fluids on the area.

Seat belts

These must be kept clean.
Use products selected by our Technical Department (Approved outlets) or warm, soapy water and a sponge and wipe with a dry cloth.
Detergents or dyes must not be used under any circumstances.

Textiles (seats, door trim, etc)

Vacuum-clean the textiles **regularly**.

Liquid stain

Use soapy water.

Dab lightly (never rub) with a soft cloth, rinse and remove the excess.

Solid or pasty stain

Carefully remove the excess solid or pasty material **immediately** with a spatula (working from the edges to the centre to avoid spreading the stain).
Clean as for a liquid stain.

Special instructions for sweets or chewing gum

Put an ice cube on the stain to solidify it, then proceed as for a solid stain.

For further recommendations for maintaining the interior, and/or for any unsatisfactory results, please see an authorised dealer.

Removal/replacing removable equipment originally fitted in the vehicle

If you need to remove equipment in order to clean the passenger compartment (for example, mats), always ensure that they are correctly refitted and are the right way around (the driver's mat should be fitted on the driver's side, etc.) and fit them with the components supplied with the equipment (for example, the driver mat should always be fixed using the pre-fitted mounting components).

With the vehicle stationary, always ensure that nothing will impede driving (anything obstructing the pedals, heel wedged by the mat etc.).

You should not:

You are strongly advised not to position objects such as deodorants, scents, etc. near air vents, as this could damage your dashboard trim.

You are strongly recommended not to use high-pressure or spray cleaning equipment inside the passenger compartment: use of such equipment could impair the correct functioning of the electrical or electronic components in the vehicle, or have other detrimental effects.

Section 5: Practical advice

Puncture/emergency spare wheel 5.2
Tyre inflation kit 5.5
Tools 5.8
Wheel trims - wheel 5.9
Changing a wheel 5.10
Tyres (tyre and wheel safety, use in winter) 5.12
Headlights (changing bulbs) 5.15
Rear lights (changing bulbs) 5.16
Indicator lights (changing bulbs) 5.18
interior lighting:<UD-sous-titre> changing bulbs</UD-sous-titre> 5.19
Fuses 5.21
Battery 5.23
RENAULT card: battery 5.25
Accessories 5.26
Wipers (replacing blades) 5.27
Towing 5.29
Tow eye 5.30
Operating faults 5.31

In case of puncture

Depending on the vehicle, a tyre inflation kit or emergency spare wheel is provided (refer to the following pages).

Special note

The Tyre Pressure Monitor function does not check the emergency spare wheel (the wheel replaced by the emergency spare wheel disappears from the instrument panel display).

Refer to the information on the “Tyre pressure monitoring system” in Section 2.

If the vehicle is parked on the hard shoulder, you must warn other road users of your vehicle’s presence with a warning triangle or with other devices as per the legislation applying to the country you are in.

Disable the «hands-free» function before washing the vehicle manually or handling the emergency spare wheel or the towbar.

Risk of accidental opening or closing of the tailgate which may cause injury.

If the emergency spare wheel has been stored for several years, have it checked by your Dealer to ensure that it is safe to use.

Vehicles fitted with an emergency spare wheel smaller than the four other wheels:

- Never fit more than one emergency spare wheel to the same vehicle.
- As the punctured wheel is wider than the emergency spare wheel, the vehicle’s ground clearance is reduced.
- Replace the emergency spare wheel as soon as possible with a wheel with the same dimensions as the original.
- When this is fitted to the vehicle, which must only be a temporary measure, the driving speed must not exceed the speed indicated on the label on the wheel.
- Fitting an emergency spare wheel may alter the way the vehicle usually runs. Avoid sudden acceleration or deceleration and reduce your speed when cornering.
- If you need to use snow chains, fit the emergency spare wheel to the rear axle and check the tyre pressure.

39449

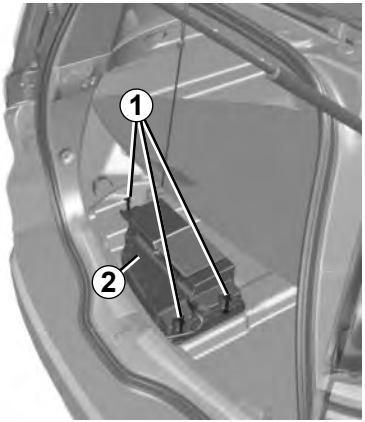

Emergency spare wheel

It is located under the vehicle.

From the boot:

– for vehicles fitted with a servo, unscrew the three mounting bolts ***1*** then move the servo ***2*** to access the cover ***3***;

– lift cover ***3***;

– remove blanking cover;

39450

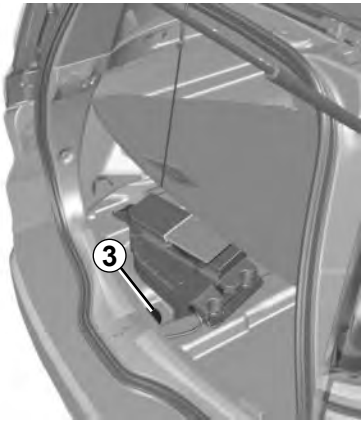

– only use the wheel brace ***4*** (using a different tool could damage the mechanism) to unroll the retaining cable, and the wheel falls to the ground.

– from the exterior of the vehicle, stand the wheel up and pass the cable and the component ***5*** through the wheel rim and release the wheel.

39453

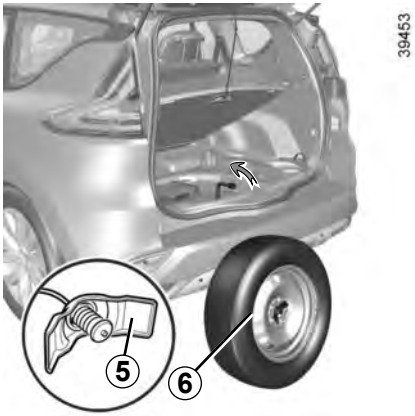

To refit a wheel

To carry out this operation, the cable must be unwound.

Stand the wheel up with the valve towards you. Thread the cable and the component ***5*** through the wheel rim. Rest the wheel with the valve ***6*** towards the ground.

From the luggage compartment, tighten the bolt fully in order to wind the retaining cable, ensuring that the wheel remains horizontal and the cable taut.

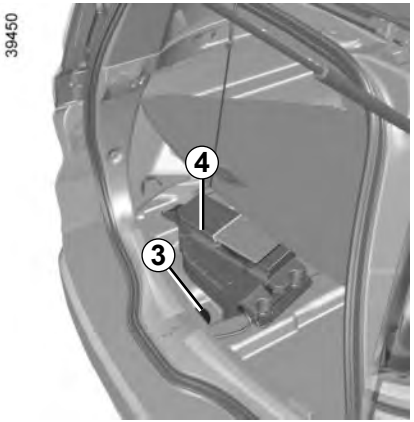

Reposition the blanking cover then the cover ***3***.

For vehicles fitted with a servo, replace the servo ***2***. Tighten the three screws ***1***.

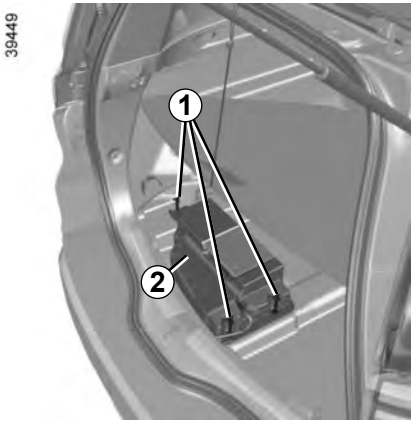

As the punctured wheel is wider than the emergency spare wheel, when you place the punctured wheel in the emergency spare wheel bay, the vehicle's ground clearance is reduced. To prevent damage, proceed carefully when driving over raised sections of road and when dismounting pavements When this is fitted to the vehicle, which must only be a temporary measure, the driving speed must not exceed the speed indicated on the label on the wheel. Replace the emergency spare wheel as soon as possible with a wheel with the same dimensions as the original.

TYRE PRESSURE KIT (1/3)

The kit repairs tyres when tread ***A*** has been damaged by objects smaller than 4 mm. It cannot repair all types of puncture, such as cuts larger than 4 mm, or cuts in tyre sidewall ***B***.

Ensure also that the wheel rim is in good condition.

Do not pull out the foreign body causing the puncture if it is still in the tyre.

Do not attempt to use the inflation kit if the tyre has been damaged as a result of driving with a puncture.

You should therefore carefully check the condition of the tyre sidewalls before any operation.

Driving with underinflated, flat or punctured tyres can be dangerous and may make the tyre impossible to repair.

This repair is temporary

A tyre which has been punctured should always be inspected (and repaired, where possible) as soon as possible by a specialist.

When taking a tyre which has been repaired using this kit to be replaced, you must inform the specialist.

When driving, vibration may be felt due to the presence of the repair product injected into the tyre.

The kit is only approved for inflating the tyres of the vehicle originally equipped with the kit.

It must never be used to inflate the tyres of another vehicle, or any other inflatable object (rubber ring, rubber boat, etc.).

Avoid spillage on skin when handling the repair liquid bottle. If droplets do leak out, rinse them off with plenty of water.

Keep the repair kit away from children.

Do not dispose of the empty bottle in the countryside. Return it to your approved dealer or to a recycling organisation.

The bottle has a limited service life which is indicated on its label. Check the expiry date.

Contact an approved dealer to replace the inflation tube and repair product bottle.

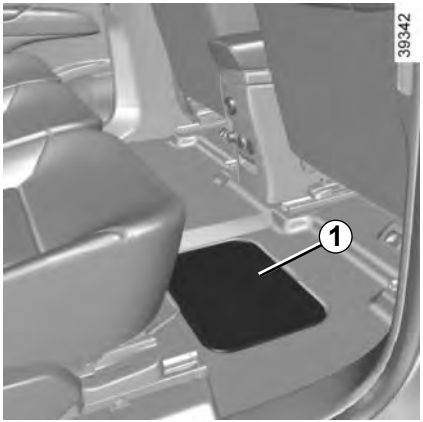

In the event of a puncture, use the kit situated under the second row rear passenger footwell flap ***1***.

If the vehicle is parked on the hard shoulder, you must warn other road users of your vehicle's presence with a warning triangle or with other devices as per the legislation applying to the country you are in.

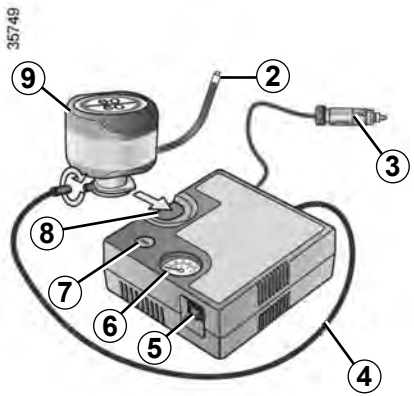

With the engine running and the parking brake applied,

- unroll the hose from the container;
- connect the compressor hose ***4*** to the container's inlet ***9***;
- depending on the vehicle, connect the container ***9*** to the compressor from the container recess ***8***;
- unscrew the valve cap on the relevant wheel and screw on the container's inflation adapter ***2***;
- disconnect any accessories previously connected to the vehicle's accessories sockets;
- end piece ***3*** **must** be connected to a vehicle accessories socket;
- press switch ***5*** to inflate the tyre to the recommended pressure (please refer to the information on "Tyre inflation pressure" in Section 4);
- after a maximum of **15** minutes, stop inflating and read the pressure (on pressure gauge ***6***).

  Note: while the bottle is emptying (approximately 30 seconds), the pressure gauge ***6*** will indicate briefly a pressure of **6** bar, then the pressure drops.
- adjust the pressure: to increase it, continue inflation with the kit; to reduce it, press button ***7***.

Before using the kit, park the vehicle at a sufficient distance from traffic, switch on the hazard warning lights, apply the parking brake, ask all passengers to leave the vehicle and keep them away from traffic.

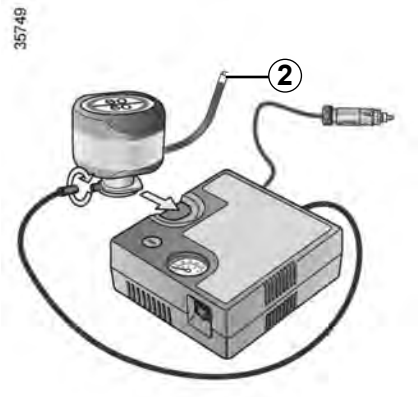

If a minimum pressure of 1.8 bar is not reached after 15 minutes, repair is not possible; do not drive the vehicle but contact an approved dealer.

Nothing should be placed around the driver's feet as such objects may slide under the pedals during sudden braking manoeuvres and obstruct their use.

Once the tyre is correctly inflated, remove the kit: slowly unscrew the inflation adapter ***2*** to prevent any repair product from escaping and store the container in plastic packaging to prevent the product from escaping.

– Affix the driving recommendation label to the dashboard where it can easily be seen by the driver;

– Put the kit away.

– At the end of this initial inflation operation, air will still escape from the tyre. You must drive a short distance in order to seal the hole.

– Start immediately and drive at between 12 and 40 mph (20 and 60 km/h) in order to distribute the product evenly in the tyre and, after driving for 2 miles (3 km), stop and check the pressure.

– If the pressure is greater than 1.3 bar but less than the recommended pressure (refer to the label affixed to the edge of the driver's door), readjust it. Otherwise, please contact an authorised dealer: the tyre cannot be repaired.

Precautions when using the kit

The kit should not be operated for more than 15 consecutive minutes.

Please be aware that a poorly tightened or missing valve cap can make the tyres less airtight and may lead to pressure loss.

Always use valve caps identical to those fitted originally and tighten them fully.

Following repair with the kit, do not travel further than 120 miles (200 km). In addition, reduce your speed and under no circumstances exceed 48 mph (80 km/h). The sticker, which you must affix in a prominent position on the dashboard, reminds you of this.
Depending on the country or local legislation, a tyre repaired with the inflation kit may need to be replaced.

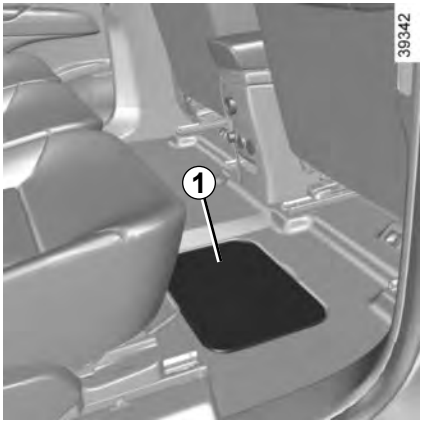

Tool kit storage

The tool kit is located in flap ***1*** under the feet of the right-hand second row passenger.

To refit, reposition the tools in their housing and fold the jack fully. Check that the assembly is correctly positioned (to avoid noise).

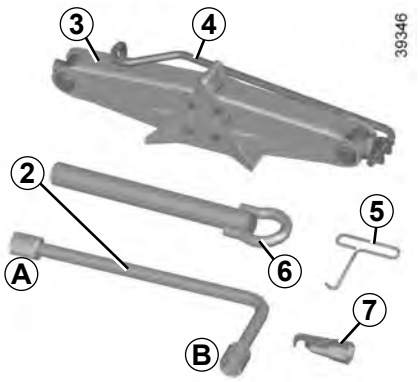

The presence of the tools depends on the vehicle.

Wheelbrace *2*

Allows the wheel bolts to be locked/unlocked (using end piece ***B***).

Enables the emergency spare wheel retaining cable to be wound/unwound (using end piece ***A***).

Jack *3*

Fold it correctly before refitting it in its housing (ensure that the wheelbrace is correctly positioned ***4***).

Hubcap tool *5*

This tool is used to remove the wheel trims.

Tow eye *6*

Refer to the information on “Towing” in Section 5.

Screw guide *7*

For tightening/loosening wheel bolts on vehicles fitted with alloy wheels

Do not leave the tools unsecured inside the vehicle as they may come loose under braking. After use, check that all the tools are correctly clipped into the tool kit, then position it correctly in its housing: risk of injury.

If wheel bolts are supplied in the tool kit, only use these bolts for the emergency spare wheel: refer to the label affixed to the emergency spare wheel.

The jack is designed for wheel changing purposes only. Under no circumstances should it be used for carrying out repairs underneath the vehicle or to gain access to the underside of the vehicle.

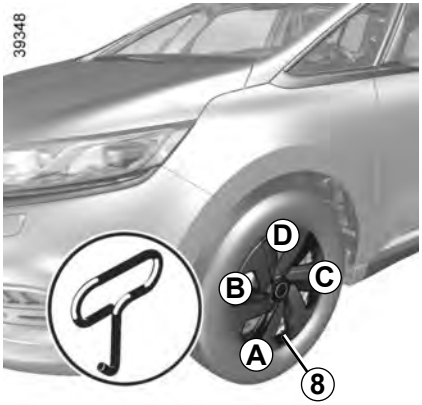

Wheel trim

Remove it using the hubcap tool ***5*** by connecting the hook in the recess provided next to the valve ***8*** (to attach the metal clip).

To refit the wheel trim, align it with valve ***8***. Push the retaining hooks in fully, starting with side ***A*** near the valve, followed by ***B*** and ***C***, finishing at ***D*** opposite the valve.

Note: if you are using anti-theft bolts, refer to the information on “Changing a wheel”.

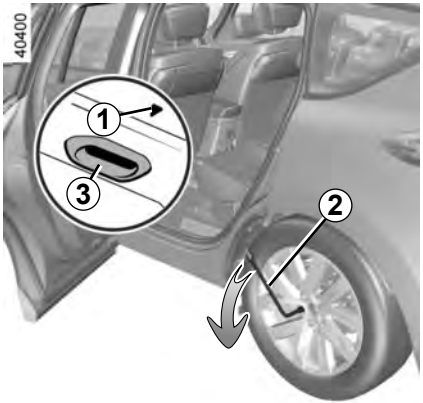

Switch on the hazard warning lights.

Keep the vehicle away from traffic and on a level surface where it will not slip.

Apply the parking brake and engage a gear (first or reverse, or **P** for automatic transmissions).
Ask all the passengers to leave the vehicle and keep them away from traffic.

Vehicles equipped with a jack and wheelbrace

If necessary, remove the wheel trim.

Use the wheelbrace ***2*** to slacken off the wheel bolts. Position it so as to be able to push from above.

Open the door nearest the wheel concerned to identify the arrow ***1*** indicating the jacking point ***3***.

If the vehicle is not equipped with a jack or wheelbrace, you can obtain these from your approved dealer.

If the vehicle is parked on the hard shoulder, you must warn other road users of your vehicle's presence with a warning triangle or with other devices as per the legislation applying to the country you are in.

Position the jack ***4*** horizontally. It is **essential** to position the jack head in the jacking point ***3***.

Close the door.

Start cranking the jack up by hand to align the base plate (which should be pushed slightly under the vehicle).

CHANGING A WHEEL (2/2)

Turn the wheelbrace until the wheel lifts off the ground.

Undo the bolts and take off the wheel.

Fit the emergency spare wheel onto the hub and rotate it until the mounting holes in the wheel coincide with those of the hub.

If bolts are supplied with the emergency spare wheel, only use these bolts for the emergency spare wheel. Tighten the bolts, checking that the wheel is correctly positioned on its hub and unscrew the jack.

With the wheel on the ground, tighten the bolts fully and have the tightness of the bolts checked and the emergency spare wheel pressure checked as soon as possible.

Anti-theft bolt

If you use anti-theft bolts, fit these nearest the valve (wheel embellisher may not be able to fit).

If you have a puncture, replace the wheel as soon as possible.

A tyre which has been punctured should always be inspected (and repaired, where possible) by a specialist.

TYRES (1/3)

The tyres are the only contact between the vehicle and the road, so it is essential to keep them in good condition.

You must make sure that your tyres conform to local road traffic regulations.

For your safety, please respect the speed limit.

When they need to be replaced, only tyres of the same make, size, type and profile should be used on a single axle.

They must: either have a load capacity and a speed capacity at least equal to the original tyres, or correspond to those recommended by your authorised dealer.

Failure to heed these instructions could endanger your safety and affect your vehicle's roadworthiness.

Risk of loss of control of the vehicle.

Maintaining the tyres

The tyres must be in good condition and the tread form must have sufficient depth; tyres approved by our Technical Department have tread wear indicators ***1*** which are **indicators moulded into the tread at several points**.

When the tread has worn down to the wear warning strips, **these strips will become visible *2***: it is then necessary to replace your tyres because the tread rubber is now **only 1.6 mm deep at most, resulting in poor road holding on wet roads**.

An overloaded vehicle, long journeys by motorway, particularly in very hot weather, or continual driving on poorly surfaced minor roads will lead to more rapid tyre wear and affect safety.

Incidents which occur when driving, such as striking the kerb, may damage the tyres and wheel rims, and could also lead to misalignment of the front or rear axle geometry. In this case, have the condition of these checked by an approved dealer.

Tyre pressures

Adhere to the tyre pressures (including the emergency spare wheel). The tyre pressures should be checked at least once a month and additionally before any long journey (refer to the label affixed to the edge of the driver's door).

Incorrect tyre pressures lead to abnormal tyre wear and unusually hot running. These are factors which may seriously affect safety and lead to:

– poor road holding,

– risk of bursting or tread separation.

The pressure depends on the load and the speed of use. Adjust the pressure according to the conditions of use (refer to the label affixed to the edge of the driver's door).

The pressures should be checked cold: ignore higher pressures which may be reached in hot weather or following a high speed journey.

If the tyre pressures cannot be checked when the tyres are **cold**, increase the pressures from **0.2** to **0.3** bar (or **3 PSI**).

Never deflate a hot tyre.

Special note
Depending on the vehicle, there may be an adapter which needs to be positioned on the valve before air is added.

Please be aware that a poorly tightened or missing valve cap can make the tyres less airtight and lead to pressure loss.

Always use valve caps identical to those fitted originally and tighten them fully.

Vehicle fitted with a tyre pressure monitoring system

In cases of under-inflation (puncture, low pressure, etc.), warning light lights up on the instrument panel. Please refer to the information on the "Tyre pressure monitoring system" in Section 2.

Emergency spare wheel

Refer to the information on "Puncture" and "Changing a wheel" in Section 5.

Fitting new tyres

For safety reasons, this operation must be carried out by a specialist.

Fitting different tyres may change your vehicle as follows:

- it may mean that your vehicle no longer conforms to current regulations;
- it may change the way it handles when cornering;
- it may cause the steering to be heavy;
- It may affect the use of snow chains.

Changing a wheel

As the tyre pressure monitor may take several minutes to correctly determine the positions of the wheels and the pressure values after driving, check the tyre pressures following any operation.

Use in winter

Chains

For safety reasons, fitting snow chains to the rear axle is strictly forbidden.

Chains cannot be fitted to tyres which are larger than those originally fitted to the vehicle.

Snow or Winter tyres

We would recommend that these be fitted to all **four wheels** to ensure that your vehicle retains maximum adhesion.

Warning: These tyres sometimes have a specific direction of rotation and a maximum speed index which may be lower than the maximum speed of your vehicle.

Snow chains may only be fitted to tyres of the same size as those originally fitted to **your vehicle**.

Studded tyres

This type of equipment may only be used for a limited period and as laid down by local legislation. It is necessary to observe the speed specified by current legislation.

These tyres must, at a minimum, be fitted to the two front wheels.

In all cases, we would recommend that you contact an authorised dealer who will be able to advise you on the choice of equipment which is most suitable for your vehicle.

19” wheels and larger cannot be fitted with chains.

If you wish to use **special equipment**, please consult an authorised dealer.

FRONT HEADLIGHTS: changing bulbs

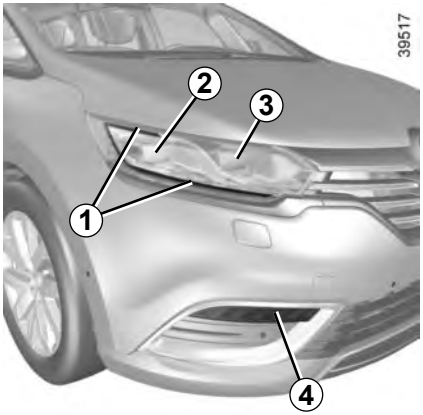

Daytime running lights and side lights *1*

Please consult an authorised dealer.

The engine may be hot when carrying out operations in close proximity. In addition, the engine cooling fan can come on at any moment.
Risk of injury.

Main beam headlights *2*

Please consult an authorised dealer.

Dipped beam headlights *3*

Please consult an authorised dealer.

Direction indicators

You can replace this bulb. However, we would advise you to have it replaced by an authorised dealer if it proves difficult.

Access bulb holder ***4*** via the underneath of the vehicle, then unscrew it to unclip. Replace the bulb.

Bulb type: PY21W.

Cleaning the headlights

Use a soft cloth. If this does not clean it properly, moisten the cloth with soapy water then rinse off.

Finally, **carefully** dry off with a soft dry cloth.

Cleaning products containing alcohol must not be used.

To comply with current legislation, or as a precaution, you can obtain an emergency kit from an approved dealer containing a set of spare bulbs and fuses.

The bulbs are under pressure and can break when replaced.

Risk of injury.

Side lights, brake lights and direction indicators

Consult an approved Dealer.

Reversing lights

From the boot, unclip the cover on the interior trim of the boot lid.

Using a screwdriver, unscrew bolt ***2*** to remove the light, then change the bulb.

From the outside of the vehicle, pull on the light unit to remove it then unscrew bulb holder ***3*** a quarter of a turn.

Replace the bulb.

Bulb type: W5W.

Refitting

To refit, proceed in the reverse order, taking care not to damage the wiring.

The bulbs are under pressure and can break when replaced.

Risk of injury.

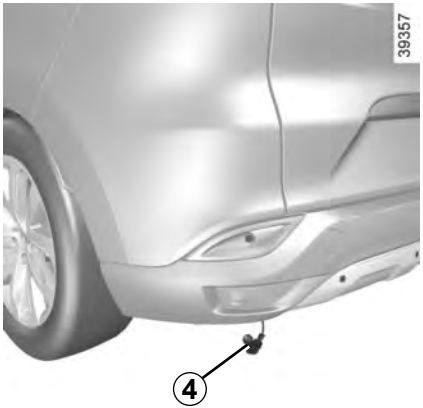

Fog light

Access bulb holder ***4*** via the underneath of the vehicle, then unscrew it by turning towards the centre of the vehicle.

Bulb type: P21W.

High level brake light *5*

Consult an approved Dealer.

Number plate lights *6*

Unclip light ***6*** by pressing the tab ***7***.

Remove the light cover to gain access to the bulb.

Bulb type: C5W festoon bulb.

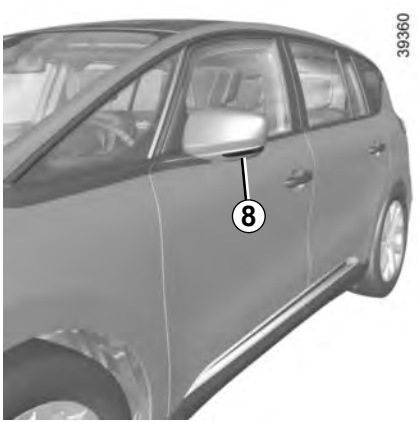

Side indicator lights *8*

Consult an approved Dealer.

INTERIOR LIGHTING: changing bulbs (1/2)

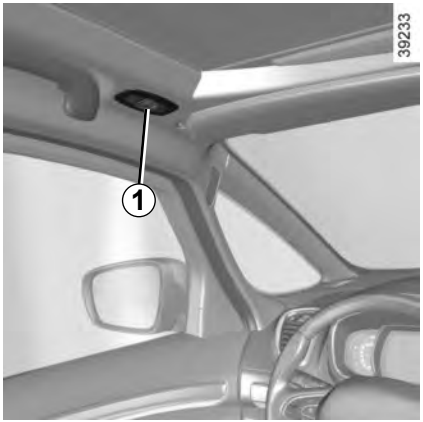

Map reading lights *1*

Please consult an authorised dealer.

Front and rear door lights 2

Unclip door light (using a flat-blade screwdriver or similar) ***2***.

Turn the bulb holder a quarter of a turn and take out the bulb.

Bulb type: W5W.

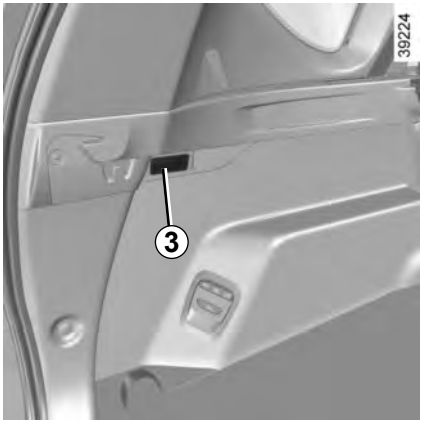

Boot lights *3*

Unclip light ***3*** by pressing the tabs on each side (using a flat-blade screwdriver or similar).

Disconnect the light.

Press tab ***5*** to release the lens ***7*** and access the bulb ***6***.

Bulb type: W5W.

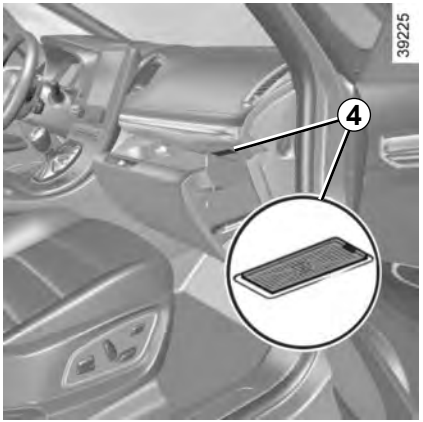

Passenger storage drawer light *4*

Unclip light ***4*** by pressing the tabs on each side (using a flat-blade screwdriver or similar).

Disconnect the light.

Press tab ***5*** to release the lens ***7*** and access bulb ***6***.

Bulb type: W5W.

Ambient lighting

Please consult an authorised dealer.

The bulbs are under pressure and can break when replaced.

Risk of injury.

Fuse box

If any electrical component does not work, check the condition of the fuses.

Unclip the access flap ***A***.

In accordance with local legislation or as a precautionary measure:

obtain an emergency kit containing a set of spare bulbs and fuses from an approved Dealer.

Use the fuse allocation label in storage compartment ***A*** to identify the fuses.

Certain fuses should only be replaced by a qualified professional. These fuses are not listed on the label.

Only change the fuses represented on the label.

Check the fuse in question and **replace it,** if necessary, **by a fuse of the same rating**.

If a fuse is fitted where the rating is too high, it may cause the electrical circuit to overheat (risk of fire) in the event of an item of equipment using an excessive amount of current.

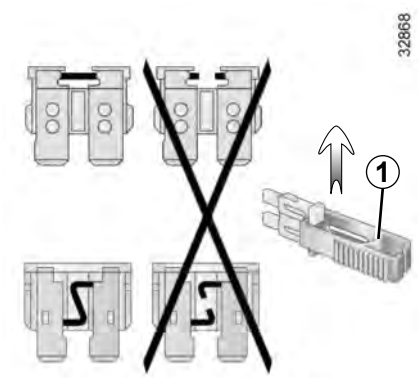

Tweezers *1*

Remove the fuse using tweezers ***1***, located underneath the fuses.

To remove the fuse from the tweezers, slide the fuse to the side.

It is not advisable to use the free fuse locations.

FUSES (2/2)

Allocation of fuses
(the presence of certain fuses depends on the vehicle equipment level)

Symbol	Allocation
	Windscreen washer
	Third row accessories socket, boot accessories socket
	Front cigarette lighter, front and rear second row accessories socket
	Not used
	Heated door mirrors
STOP	Brake lights, passenger compartment central unit
(P)	Parking brake
	Additional servo
	Radio, multifunction screen, multimedia accessories sockets, parking brake control
BCM	Passenger compartment centre unit, rear wiper, rear fog light
	Locking opening elements, tailgate opening and closing control

Symbol	Allocation
SED	Not used
	Towbar socket
DIAG	Diagnostic socket, audio alarm
	Horn
	Instrument panel, dashboard control lighting
	Piloted dampened suspension
	Front windscreen wiper
	Direction indicator lights, hazard warning lights
	Rear USB sockets on console
	Not used

To avoid all risk of sparks:

– Ensure that any consumers (courtesy lights, etc.) are switched off before disconnecting or reconnecting the battery;

– when charging, stop the charger before connecting or disconnecting the battery;

– to avoid creating a short circuit between the terminals, do not place metal objects on the battery;

– always wait at least one minute after the engine has been switched off before disconnecting a battery;

– make sure that you reconnect the battery terminals after refitting.

Before performing any action in the engine compartment, the ignition must be switched off by pressing the engine stop button (please see the information on “Starting, stopping the engine” in Section 2).

Connecting a battery charger

The battery charger must be compatible with a battery with nominal voltage of 12 volts.

Do not disconnect the battery when the engine is running. **Follow the instructions given by the manufacturer of the battery charger you are using.**

Special procedures may be required to charge some batteries. Contact your authorised dealer.

Avoid all risk of sparks which may cause an immediate explosion, and charge the battery in a well-ventilated area. Risk of serious injury.

Handle the battery with care as it contains sulphuric acid, which must not come into contact with eyes or skin. If it does, wash the affected area with plenty of cold water. If necessary, consult a doctor.

Ensure that naked flames, red hot objects and sparks do not come into contact with the battery as there is a risk of explosion. There is a risk of explosion.

The engine may be hot when carrying out operations in close proximity. In addition, the engine cooling fan can come on at any moment.

Risk of injury.

Starting the vehicle using the battery from another vehicle

If you have to use the battery from another vehicle to start, obtain suitable jump leads (with a large cross section) from an approved dealer or, if you already have jump leads, ensure that they are in perfect condition.

The two batteries must have an identical nominal voltage of 12 volts. The battery supplying the current should have a capacity (amp-hours, Ah) which is at least the same as that of the discharged battery.

Ensure that there is no risk of contact between the two vehicles (risk of short circuiting when the positive terminals are connected) and that the discharged battery is properly connected. Switch off your vehicle ignition.

Start the engine of the vehicle supplying the current and run it at a moderate speed.

Lift the red cover on box ***1*** located behind the battery.

Connect the positive cable ***A*** to **support *3*** (+) located under the box cover ***1***, then to **terminal *5*** (+) of the battery supplying the current.

Connect the negative cable ***B*** to **terminal *4*** (–) of the battery supplying the current, then to the **metal cable *2*** (–).

Start the engine, and as soon as it starts running, disconnect cables ***A*** and ***B*** in reverse order **(*2 - 4 - 5 - 3*).**

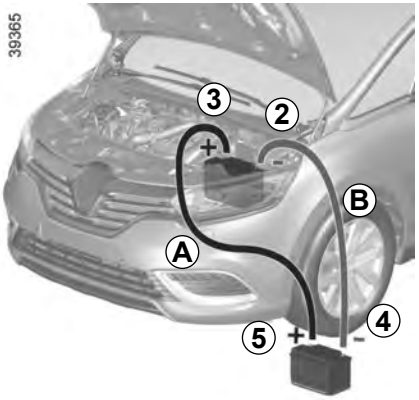

Check that there is no contact between leads ***A*** and ***B*** and that the positive lead ***A*** is not touching any metal parts on the vehicle supplying the current.

Risk of injury and/or damage to the vehicle.

Replacing the battery

When the message “Keycard battery low” appears on the instrument panel, replace the battery in the RENAULT card:

– slide the rear casing ***1*** downwards while pressing on zone ***A***;
– remove the battery cover ***2***;
– remove the battery by pressing on one side and lifting the other;
– replace it according to the direction and template shown inside the cover.

When refitting, proceed in the reverse order, then press one of the buttons on the card four times, close to the vehicle: the message will disappear.

Note: it is not advisable to touch the electronic circuit or contacts on the RENAULT card when replacing the battery.

The batteries are available from approved Dealers, and their service life approximately two years. Check that there is no dye on the battery: risk of an incorrect electrical contact.

Operating faults

If the battery is too weak to ensure correct operation, you can still start and lock/unlock the vehicle (please refer to the information on “Locking/unlocking the opening elements” in Section 1).

Do not throw away your used batteries; give them to an organisation responsible for collecting and recycling batteries.

Electrical and electronic accessories
Before installing this type of accessory (particularly for transmitters/receivers: frequency bandwidth, power level, position of the aerial, etc.), make sure it is compatible with your vehicle. You can get advice from an authorised dealer.
Connect accessories with a maximum power of 120 Watts only. **Fire hazard.** When several accessory sockets are used at the same time, the total power of the connected accessories must not exceed 180 watts.
No work may be carried out on the vehicle's electrical or radio circuits, except by authorised dealers: an incorrectly connected system may result in damage being caused to the electrical equipment and/or the components connected to it.
If the vehicle is fitted with any aftermarket electrical equipment, make sure that the installation is correctly protected by a fuse. Establish the rating and position of this fuse.

Using the diagnostic socket
The use of electronic accessories on the diagnostic socket may cause serious disturbance to the vehicle's electronic systems. For your safety we recommend that you use only electronic accessories approved by the manufacturer, consult an Approved Dealer. **Serious accident risk**.

Use of transmitting/receiving devices (telephones, CB equipment etc.).
Telephones and CB equipment with integrated aerials may cause interference to the electronic systems originally fitted to the vehicle: it is advisable only to use equipment with an external aerial. **Furthermore, we remind you of the need to conform to the legislation in force concerning the use of such equipment.**

Fitting aftermarket accessories
If you wish to install accessories on the vehicle: please contact an authorised dealer. Also, to ensure the correct operation of your vehicle, and to avoid any risk to your safety, we recommend that you use only accessories specifically designed for your vehicle, which are the only accessories for which the manufacturer will provide a warranty.
If you are using an anti-theft device, only attach it to the brake pedal.
Obstructions to the driver
On the driver's side, only use mats suitable for the vehicle, attached with the pre-fitted components, and check the fitting regularly. Do not lay one mat on top of another. **There is a risk of wedging the pedals.**

WINDSCREEN WIPER BLADES: replacement (1/2)

Windscreen wiper blades *1*

With the ignition on and the engine switched off, lower the windscreen wiper stalk fully: the blades stop slightly away from the bonnet.
Lift wiper arm ***3***, press button ***2*** to release the blade.

Refitting

Slide the blade along the arm until it clips on. Check that it is correctly locked in place. Lower the windscreen wiper arm carefully.

With the ignition on, return the windscreen wiper stalk to the stop position. The blade on the driver's side must always be above the passenger blade. If this is not the case, a quick sweep of the windscreen wipers should be performed once the vehicle is travelling at over 4 mph (7 km/h).

Note: Before restarting your vehicle, lower the windscreen wiper blades onto the windscreen to avoid any risk of damaging the bonnet or the wipers.

– In frosty weather, make sure that the wiper blades are not stuck by ice (to avoid the risk of the motor overheating or damaging the blades).
– Check the condition of the wiper blades.
Replace the wiper blades as soon as they begin to lose efficiency (approximately once a year).

Whilst changing the blade, take care not to drop the arm onto the window after it has been removed as this may break the window.

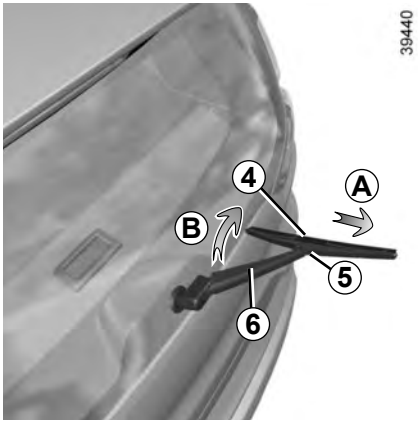

Rear screen wiper blade *4*

Stalk in stop position (deactivated):
- Lift the wiper arm ***6***;
- pivot wiper blade ***4*** until some resistance is met (movement ***B***);
- depending on the vehicle, press tab ***5***, then remove the wiper blade by pulling it (movement ***A***).

To refit

To refit the wiper blade, proceed in reverse order to removal. Make sure that the blade is correctly locked in position.

Keep monitoring the condition of the wiper blades.

- clean the blades, windscreen and rear screen regularly with soapy water;
- do not use them when the windscreen or rear screen are dry;
- free them from the windscreen or rear screen when they have not been used for a long time.

Before changing the rear wiper blade, make sure the stalk is in the stop position (deactivated).

Risk of injury.

Before towing, put the gearbox in neutral, unlock the steering column and release the parking brake.
For vehicles fitted with an automatic gearbox, if it is not possible to put the gear lever into position N, please consult an authorised dealer.

Steering column unlocking

Press the engine starter button for approximately **two seconds**, without depressing the pedals.

The column is unlocked, the accessory functions are supplied: the vehicle lights can be used (indicators, brake lights etc.). Always switch on the lights when driving at night.

Once you have finished towing, press the engine start button twice (risk of running down the battery).

The speed specified by current legislation for towing must always be observed. If your vehicle is the towing vehicle, do not exceed the maximum towing weight for your vehicle (refer to the information on “Weights” in Section 6).

Towing a vehicle with an automatic gearbox

Transport the vehicle on a trailer or tow it with the front wheels off the ground.

In exceptional circumstances, you may tow it with all four wheels on the ground, only in a forward gear, with the gear in neutral position N over a maximum distance of 50 miles and not exceeding a speed of 15 mph (25 km/h).

Only use the front *1* and rear *4*towing points (never use the driveshafts or any other part of the vehicle). These towing points may only be used for towing: never use them for lifting the vehicle directly or indirectly.

When the engine is stopped, steering and braking assistance are not operational.

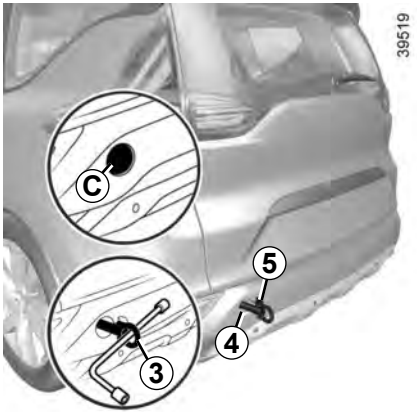

Access to towing points

Front towing point

Press zone ***A*** and keep depressed while pulling zone ***B*** to open flap ***2***.

Rear towing point

Press zone ***C*** then release to open flap ***5***.

Tighten the tow eye *3* fully: as much as possible by hand at first, then finish tightening it using the wheelbrace.

Use only towing hitch ***3*** and the wheelbrace or the lever located under the 2nd row right rear passenger footwell (please refer to the information on the “Tool kit” in Section 5).

– Use a rigid towing bar. If a rope or cable is used (where the law allows this), the vehicle being towed must be able to brake.

– A vehicle must not be towed if it is not fit to be driven.

– Avoid accelerating or braking suddenly when towing, as this may result in damage being caused to the vehicle.

– When towing a vehicle, it is advisable not to exceed **30 mph (50 km/h)**.

Do not leave the tools unsecured inside the vehicle as they may come loose under braking.

OPERATING FAULTS (1/6)

Using the RENAULT card	POSSIBLE CAUSES	WHAT TO DO
The RENAULT card does not lock or unlock the doors.	Card battery is flat.	Replace the battery. You can still lock/unlock and start your vehicle (refer to the information on “Locking/unlocking the doors” in Section 1 and “Starting/Stopping the engine” in Section 2).
	Use of appliances operating on the same frequency as the card (mobile phone, etc.).	Stop using the equipment or use the integrated key (refer to the information on “Locking, unlocking the opening elements” in Section 1).
	Vehicle located in a high electromagnetic radiation zone. Vehicle battery flat.	Use the key integrated in the card (refer to the information on “Locking, unlocking the opening elements” in Section 1).
	The message “Place card close to START button” appears on the instrument panel.	Hold the start button card close until the instrument panel message stops being displayed, then press the same button within 2 seconds of the message going out.

OPERATING FAULTS (2/6)

The starter is activated	POSSIBLE CAUSES	WHAT TO DO
The instrument panel indicator lights are weak or fail to light up and the starter does not turn.	Battery terminals not tight, battery terminals disconnected or oxidised.	Retighten or reconnect the terminals, or clean them if they are oxidised.
	Discharged battery or not operational.	Connect another battery to the faulty battery. Refer to the paragraph “Battery: troubleshooting” in section 5 or replace the battery if necessary. Do not push the vehicle if the steering column is locked.
	Faulty circuit.	Consult an approved dealer.
The engine will not start.	Starting conditions are not fulfilled.	Please refer to the information on “Starting, stopping the engine” in Section 2.
	The RENAULT “hands-free” card does not work.	Please refer to the information on “Starting, stopping the engine” in Section 2.
The engine cannot be switched off.	Card not detected.	Press and hold the start button.
	Electronic fault.	Press the start button quickly five times.
The steering column remains locked.	Steering wheel locked.	Move the steering wheel while pressing the engine start button (please refer to Section 2 “Starting, stopping the engine”).
	Faulty circuit.	Consult an approved dealer.

OPERATING FAULTS (3/6)

On the road	POSSIBLE CAUSES	WHAT TO DO
Vibrations.	Tyres not inflated to correct pressures, incorrectly balanced or damaged.	Check the tyre pressures: if this is not the problem, have them checked by an approved Dealer.
White smoke from the exhaust.	In the diesel version, this is not necessarily a fault. Smoke may be caused by particle filter regeneration.	Please refer to the information on “Special features of diesel versions” in Section 2.
Smoke under the bonnet.	Short-circuit or cooling system leak.	Stop, switch off the ignition, stand away from the vehicle and contact an approved dealer.
The oil pressure warning light comes on:		
while cornering or braking	The level is too low.	Top up the engine oil level (refer to the information on “Engine oil level: topping up/filling” in Section 4).
is slow to go out or remains lit under acceleration	Loss of oil pressure.	Stop the vehicle and contact an approved Dealer.

OPERATING FAULTS (4/6)

On the road	POSSIBLE CAUSES	WHAT TO DO
Steering becomes heavy.	Assistance overheating.	Consult an approved dealer.
The engine is overheating. The coolant temperature indicator is in the warning zone and warning light STOP comes on.	Engine cooling fan not working.	Stop the vehicle, switch off the engine and contact an approved dealer.
	Coolant leaks.	Check the coolant reservoir: it should contain fluid. If there is no coolant, consult an authorised dealer as soon as possible.
Coolant boiling in the coolant reservoir.	Mechanical fault: damaged cylinder head gasket.	Stop the engine. Contact an approved dealer.

Radiator: If there is a significant lack of coolant, remember that it must never be topped up using cold coolant while the engine is very warm. After any procedure on the vehicle which has involved even partial draining of the cooling system, it must be refilled with a new mixture prepared in the correct proportions. Reminder: only products approved by our Technical Department may be used for this purpose.

OPERATING FAULTS (5/6)

Electrical equipment	POSSIBLE CAUSES	WHAT TO DO
The wipers do not work.	Wiper blades stuck.	Free the blades before using the wipers.
	Faulty electrical circuit.	Consult an approved dealer.
	Fuse damaged.	Replace the fuse, refer to the information on “Fuses”.
The wiper does not stop.	Faulty electrical controls.	Consult an approved dealer.
Direction indicators flashing more quickly.	Blown bulb.	See information on “Headlights: changing bulbs” in section 5.
The direction indicators do not work.	Faulty electrical circuit or control.	Consult an approved dealer.
	Fuse damaged.	Replace the fuse, refer to the information on “Fuses”.
The lights do not come on or go off.	Faulty electrical circuit or control.	Consult an approved dealer.
	Fuse damaged.	Replace the fuse, refer to the information on “Fuses”.

OPERATING FAULTS (6/6)

Electrical equipment	POSSIBLE CAUSES	WHAT TO DO
Traces of condensation in the lights.	Traces of condensation may be a natural phenomenon caused by variations in temperature. In this case, the traces will disappear slowly once the lights are switched on.	
The front seat belt reminder light comes on when the seat belts are fastened.	An object is stuck between the floor and the seat and is disrupting the operation of the sensor.	Remove all objects from underneath the front seats.

Section 6: Technical specifications

Vehicle identification plates 6.2
Engine identification plates 6.3
Dimensions 6.4
Engine specifications 6.5
Weights 6.6
Towing weights 6.6
Replacement parts and repairs 6.7
Service sheets 6.8
Anticorrosion check 6.14

VEHICLE IDENTIFICATION PLATES

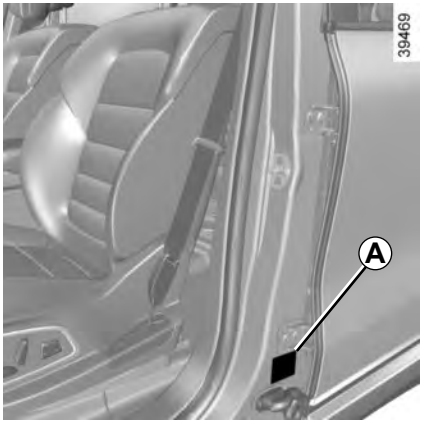

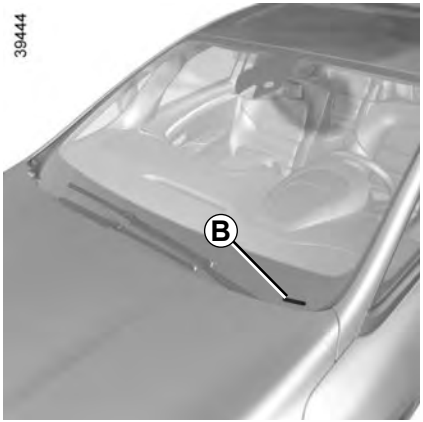

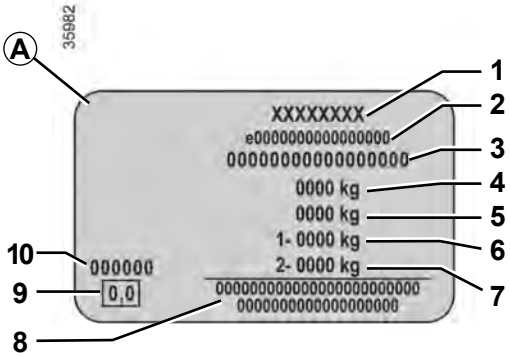

The information shown on the vehicle identification plate should be quoted on all correspondence or orders.

The presence and location of the information depends on the vehicle.

Vehicle identification plate *A*

1 Manufacturer name.
2 EC design number or approval number.
3 Identification number.
Depending on the vehicle, this information is also given on marking *B*.
4 MMAC (Maximum permissible all-up weight).
5 MTR (Gross train weight: vehicle fully loaded, with trailer).
6 MMTA (Maximum Permissible Weight) front axle.
7 MMTA rear axle.
8 Reserved for related or additional entries.
9 Diesel exhaust emissions.
10 Paint reference (colour code).

ENGINE IDENTIFICATION PLATES

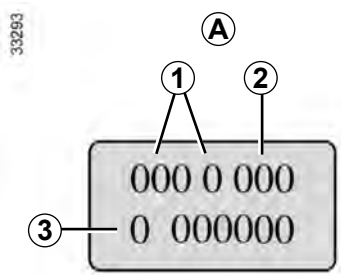

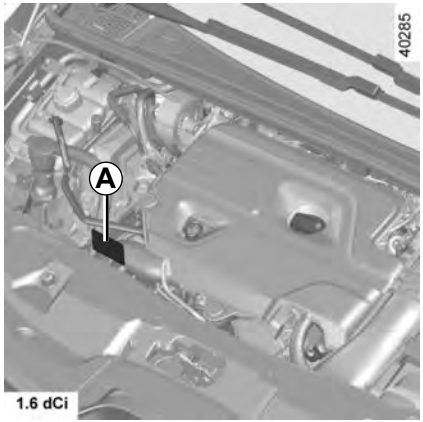

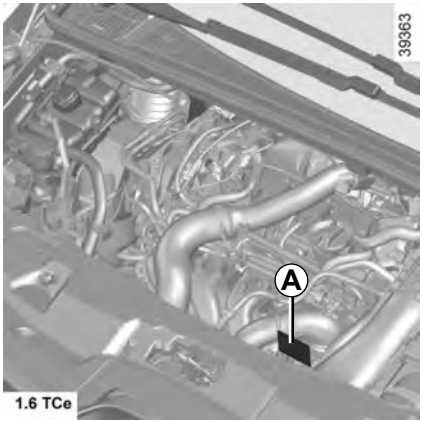

Please quote the information on the engine plate or label *A* in all correspondence or orders.
(Location varies depending on engine)

1 Engine type.
2 Engine suffix.
3 Engine number.

DIMENSIONS (in meters)

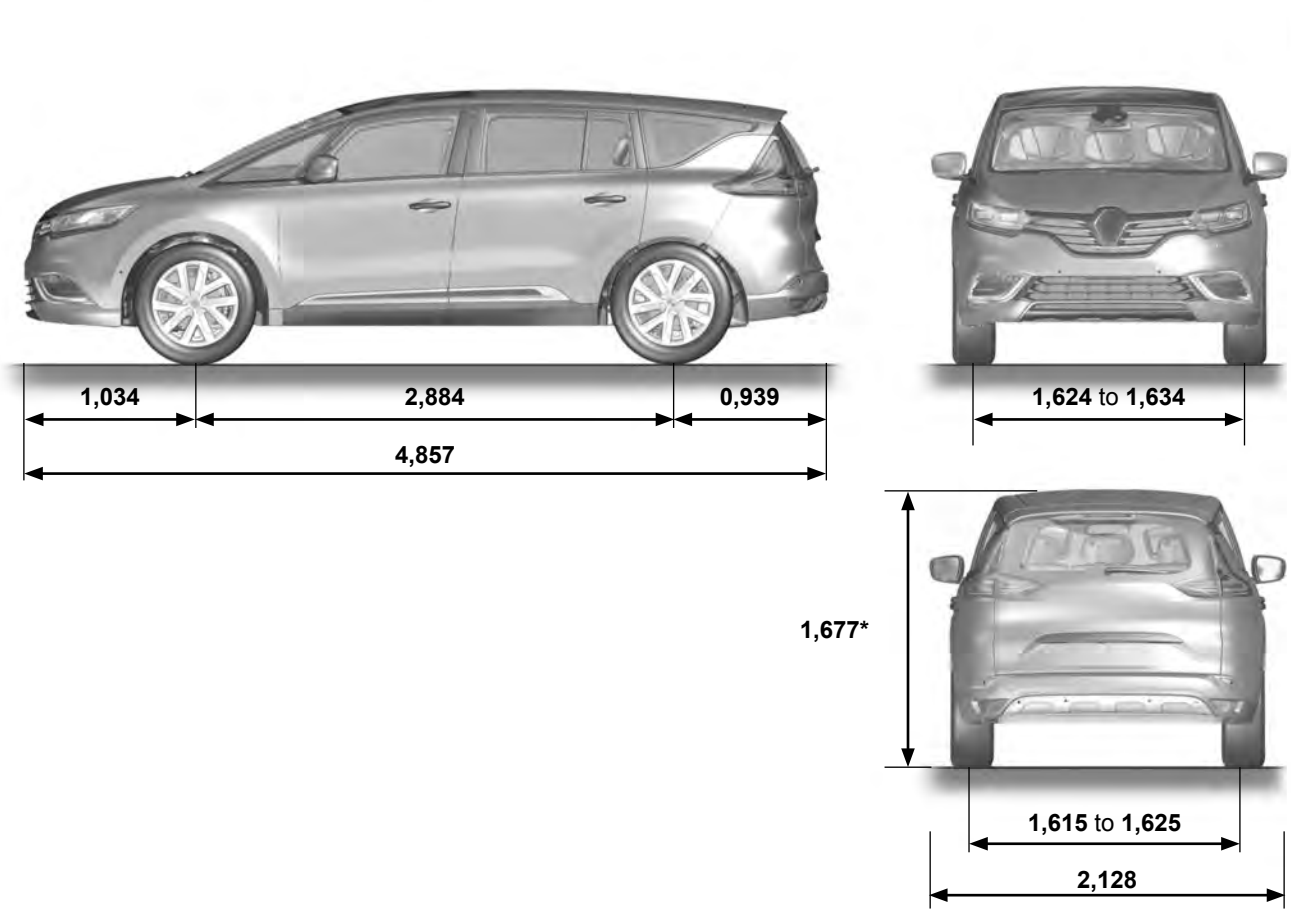

* Unladen

ENGINE SPECIFICATIONS

Versions	1.6 Tce	1.6 dCi
Engine type (see engine plate)	M5M Turbo	R9M
Cubic capacity (cc)	1 618	1 598
Type of fuel **Octane rating**	It is **essential** that you use unleaded petrol of the octane rating stated on the label inside the fuel filler flap. If not available, for a limited time only, use unleaded fuel: – with an octane rating of 91 for a label showing 95 or 98; – with an octane rating of 87 for a label showing 91, 95 or 98.	Diesel The label located in the fuel filler flap indicates authorised fuels.
Spark plugs	Only use the spark plugs specified for your vehicle's engine. The type should be marked on a label affixed inside the engine compartment. If it is not then contact an approved Dealer. Fitting spark plugs which are not to specification may damage the engine.	–

WEIGHTS (in kg)

The weights indicated are for a basic vehicle without options: they may vary depending on your vehicle's equipment. Consult an approved Dealer.

Maximum Permissible All-Up Weight (MMAC) **Gross Train Weight (MTR)** **Maximum permissible all-up weight (MMTA)**	Weights are indicated on the vehicle identification plate (refer to the information on "Vehicle identification plates" in Section 6)
Braked Trailer Weight*	found by calculating: **MTR - MMAC**
Unbraked Trailer Weight*	750
Permissible nose weight*	80
Permissible load on the roof with the carrying device	80 kg (including the carrying device)

*** Towing weight (towing a caravan, boat, etc.)**

Towing is prohibited when the MTR - MMAC calculation is equal to zero, or when the MTR is equal to zero (or is not listed) on the identification plate.

– It is important to comply with the towing weights, governed by local legislation in each country and, in particular, laid down in the Road Traffic Regulations. Contact an approved Dealer about any towing equipment.
– When towing, under no circumstances may **the total train weight (vehicle + trailer) be exceeded**. However the following is permitted:
  – rear axle MMTA exceeded by no more than 15%,
  – maximum MMAC exceeded by no more than 10% or 100 kg (whichever is reached first).
  In either case, the maximum speed of the towing assembly must not exceed 60 mph (100 km/h) and the tyre pressure must be increased by 0.2 bar (3 PSI).
– The engine output and climbing capability are reduced with altitude. You need to reduce the total train weight by 10% at an altitude of 1,000 metres and by an additional 10% for each 1,000 metres thereafter.

REPLACEMENT PARTS AND REPAIRS

Original parts are based on strict specifications and are subject to highly-specialised tests. Therefore, they are of at least the same level of quality as the parts fitted originally.

If you always fit genuine replacement parts to your vehicle, you will ensure that it performs well. Furthermore, repairs carried out within the manufacturer's Network using original parts are guaranteed according to the conditions set out on the reverse of the repair order.

SERVICE SHEETS (1/6)

VIN: .....

Date: Miles (Km): Invoice number:		Comments/miscellaneous
Type of operation: Service □ ..... □ **Anti-corrosion check:** OK □ Not OK* □ *See specific page	**Stamp**	

Date: Miles (Km): Invoice number:		Comments/miscellaneous
Type of operation: Service □ ..... □ **Anti-corrosion check:** OK □ Not OK* □ *See specific page	**Stamp**	

Date: Miles (Km): Invoice number:		Comments/miscellaneous
Type of operation: Service □ ..... □ **Anti-corrosion check:** OK □ Not OK* □ *See specific page	**Stamp**	

SERVICE SHEETS (2/6)

VIN: .....

Date: Miles (Km):	Invoice number:	Comments/miscellaneous
Type of operation: Service □ ..... □ **Anti-corrosion check:** OK □ Not OK* □ *See specific page	**Stamp**	

Date: Miles (Km):	Invoice number:	Comments/miscellaneous
Type of operation: Service □ ..... □ **Anti-corrosion check:** OK □ Not OK* □ *See specific page	**Stamp**	

Date: Miles (Km):	Invoice number:	Comments/miscellaneous
Type of operation: Service □ ..... □ **Anti-corrosion check:** OK □ Not OK* □ *See specific page	**Stamp**	

SERVICE SHEETS (3/6)

VIN: .....

Date: Miles (Km):	Invoice number:	Comments/miscellaneous
Type of operation: Service □ ..... □ **Anti-corrosion check:** OK □ Not OK* □ *See specific page	**Stamp**	

Date: Miles (Km):	Invoice number:	Comments/miscellaneous
Type of operation: Service □ ..... □ **Anti-corrosion check:** OK □ Not OK* □ *See specific page	**Stamp**	

Date: Miles (Km):	Invoice number:	Comments/miscellaneous
Type of operation: Service □ ..... □ **Anti-corrosion check:** OK □ Not OK* □ *See specific page	**Stamp**	

SERVICE SHEETS (4/6)

VIN: .....

Date: Miles (Km):	Invoice number:	Comments/miscellaneous
Type of operation: Service □ ..... □ **Anti-corrosion check:** OK □ Not OK* □ *See specific page	**Stamp**	

Date: Miles (Km):	Invoice number:	Comments/miscellaneous
Type of operation: Service □ ..... □ **Anti-corrosion check:** OK □ Not OK* □ *See specific page	**Stamp**	

Date: Miles (Km):	Invoice number:	Comments/miscellaneous
Type of operation: Service □ ..... □ **Anti-corrosion check:** OK □ Not OK* □ *See specific page	**Stamp**	

SERVICE SHEETS (5/6)

VIN: .....

Date: Miles (Km): Invoice number:		Comments/miscellaneous
Type of operation: Service □ ..... □ **Anti-corrosion check:** OK □ Not OK* □ *See specific page	**Stamp**	

Date: Miles (Km): Invoice number:		Comments/miscellaneous
Type of operation: Service □ ..... □ **Anti-corrosion check:** OK □ Not OK* □ *See specific page	**Stamp**	

Date: Miles (Km): Invoice number:		Comments/miscellaneous
Type of operation: Service □ ..... □ **Anti-corrosion check:** OK □ Not OK* □ *See specific page	**Stamp**	

SERVICE SHEETS (6/6)

VIN: .....

Date: Miles (Km):	Invoice number:	Comments/miscellaneous
Type of operation: Service □ ..... □ **Anti-corrosion check:** OK □ Not OK* □ *See specific page	**Stamp**	

Date: Miles (Km):	Invoice number:	Comments/miscellaneous
Type of operation: Service □ ..... □ **Anti-corrosion check:** OK □ Not OK* □ *See specific page	**Stamp**	

Date: Miles (Km):	Invoice number:	Comments/miscellaneous
Type of operation: Service □ ..... □ **Anti-corrosion check:** OK □ Not OK* □ *See specific page	**Stamp**	

ANTICORROSION CHECK (1/5)

If the continuation of the warranty is subject to repair, it is indicated below.

VIN: .....

Corrosion repair operation to be carried out: Date of repair:	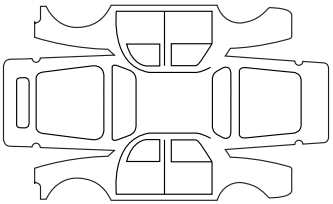	**Stamp**
Repair to be carried out: Date of repair:	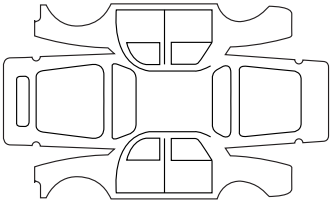	**Stamp**
Repair to be carried out: Date of repair:	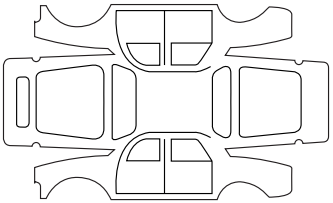	**Stamp**

ANTICORROSION CHECK (2/5)

If the continuation of the warranty is subject to repair, it is indicated below.

VIN: .....

Corrosion repair operation to be carried out: Date of repair:		**Stamp**
Repair to be carried out: Date of repair:		**Stamp**
Repair to be carried out: Date of repair:		**Stamp**

ANTICORROSION CHECK (3/5)

If the continuation of the warranty is subject to repair, it is indicated below.

VIN: .....

Corrosion repair operation to be carried out: Date of repair:		**Stamp**
Repair to be carried out: Date of repair:		**Stamp**
Repair to be carried out: Date of repair:		**Stamp**

ANTICORROSION CHECK (4/5)

If the continuation of the warranty is subject to repair, it is indicated below.

VIN: .....

Corrosion repair operation to be carried out: Date of repair:		**Stamp**
Repair to be carried out: Date of repair:		**Stamp**
Repair to be carried out: Date of repair:		**Stamp**

ANTICORROSION CHECK (5/5)

If the continuation of the warranty is subject to repair, it is indicated below.

VIN: .....

Corrosion repair operation to be carried out: Date of repair:	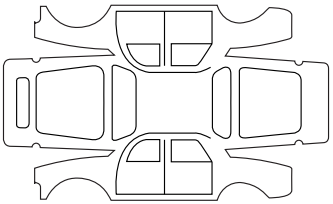	**Stamp**
Repair to be carried out: Date of repair:	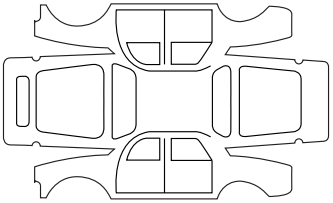	**Stamp**
Repair to be carried out: Date of repair:	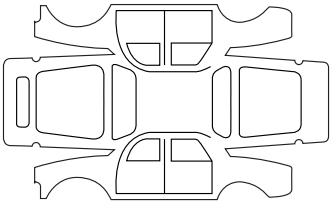	**Stamp**

ALPHABETICAL INDEX (1/5)

A

ABS ....2.26 → 2.37
accessories.... 5.26
accessories socket 3.29, 3.50
adaptive cruise control....2.56 → 2.62
additional air conditioning .... 3.12 – 3.13
additional methods of restraint ....1.27 → 1.30, 1.33
side protection 1.32
to the rear seat belts ....1.27 → 1.31
adjusting your driving position 1.23
advice on antipollution 2.21
air bag....1.27 → 1.33
activating the front passenger air bags 1.57
deactivating the front passenger air bags 1.55
air conditioning ....3.7 → 3.14
air vents ....3.4 → 3.6
anti-corrosion check ....6.14 → 6.18
anti-corrosion protection 4.14
anti-lock braking system: ABS ....2.26 → 2.37
antipollution
advice 2.21
armrest:
front.... 3.26
ashtray.... 3.29
assisted parking....2.63 → 2.66, 2.69 → 2.72
automatic gearbox (use)....2.74 → 2.79
automatic gearbox selector lever....2.74 → 2.79
automatic trunk lid ....3.37 → 3.41

B

battery.... 4.10 – 4.11
troubleshooting .... 5.23 – 5.24
blind spot warning signal ....2.41 → 2.43
blind spot: warning signal ....2.41 → 2.43
bonnet.... 4.2 – 4.3
brake fluid 4.8
bulbs
changing ....5.15 → 5.18

C

catalytic converter.... 2.10 – 2.11
central door locking ....1.8 → 1.10, 1.14
changing a bulb ....5.15 → 5.18
changing a wheel.... 5.10 – 5.11
changing gear....2.12, 2.74 → 2.79
child restraint/seat ....1.35 – 1.36, 1.38 → 1.54
child safety....1.2, 1.13, 1.35 – 1.36, 1.38 → 1.54, 3.16
child seats....1.35 – 1.36, 1.38 → 1.54
children .... 1.35 – 1.36, 1.36
children (safety).... 1.2, 1.13, 3.16
cigar lighter 3.29
cleaning:
inside the vehicle .... 4.16 – 4.17
clock 1.81
closing the doors ....1.8 → 1.13
control instruments .... 1.70 – 1.71
controls .... 1.58 – 1.59
coolant 4.7
courtesy light .... 3.21 – 3.22, 5.19 – 5.20
courtesy mirrors.... 3.23
cruise control ....2.46 → 2.48, 2.52 → 2.55
cruise control-speed limiter....2.46 → 2.48, 2.52 → 2.55
customised vehicle settings 1.80
customising the vehicle settings 1.80

D

dashboard.... 1.58 – 1.59
daytime running lights.... 1.88
dimensions 6.4
display ....1.60 → 1.69, 3.49
doors....1.11 → 1.14
driver assistance....2.26 → 2.72

driver's position .....1.58 → 1.65
driving.....2.2 → 2.5, 2.10 → 2.20, 2.23 → 2.37, 2.46 → 2.48, 2.52 → 2.66, 2.74 → 2.79
driving aids .....2.26 → 2.72
driving position
settings 1.23
driving recommendations .....2.16 → 2.20

E
ECO driving .....2.16 → 2.20
ECO mode..... 2.18
electric beam height adjustment..... 1.90
electric windows ..... 3.16 – 3.17
electronic parking brake .....2.13 → 2.15
electronic stability control: ESC .....2.26 → 2.37
emergency active braking..... 2.31
emergency brake assist.....2.26 → 2.37
emergency braking .....2.26 → 2.37
emergency key ..... 1.2 – 1.3
emergency spare wheel .....5.2 → 5.4
engine
technical specifications 6.5
engine oil .....4.4 → 4.6
engine oil level..... 4.5 – 4.6
engine specifications 6.5
engine start/stop button .....2.3 → 2.5
environment..... 2.22
ESC: electronic stability control .....2.26 → 2.37
external temperature 1.81

F
faults
operating faults .....5.31 → 5.36
filter
air filter 4.9
diesel filter..... 4.9
oil filter 4.9
passenger compartment filter 4.9
fittings .....3.24 → 3.28
fixed sunroof..... 3.20
front passenger air bag deactivation 1.55
front seat
driver's position memory..... 1.22
front seat adjustment..... 1.16 – 1.17
front seats
adjustment ..... 1.16 – 1.17
with electric controls ..... 1.18 – 1.19
with manual controls 1.16
fuel
advice on fuel economy .....2.16 → 2.20
capacity..... 1.99
consumption .....2.16 → 2.20
filling.....1.99 → 1.101
grade.....1.99 → 1.101
fuel consumption .....2.16 → 2.20
fuel economy .....2.16 → 2.20
fuel level 1.66
fuel repriming..... 1.100
fuel tank
capacity.....1.99 → 1.101
fuel tank capacity.....1.99 → 1.101
fuses ..... 5.21 – 5.22

G
gear lever..... 2.12
grab handle..... 3.26
grip control..... 2.30

H
handbrake..... 2.13
hands-free telephone integrated control..... 3.49 – 3.50
hazard warning lights signal ..... 1.85 – 1.86

head-up display ....1.66 → 1.69
headlight flashers 1.85
headlight washer 1.95
headrest.... 3.30
heating and air conditioning system .... 3.13 – 3.14
heating system ....3.7 → 3.11
Hill Start Assist....2.26 → 2.37, 2.35
horn 1.85
horn:
flash 1.85
sounding the horn 1.85
hubcap tool .... 5.8 – 5.9

I
indicators 1.85, 5.15
indicators:
direction indicators 1.85, 5.16
exterior temperature indicator 1.81
instrument panel ....1.60 → 1.71
instrument panel ....1.60 → 1.79, 1.86
instrument panel messages....1.72 → 1.79
interior trim
maintenance .... 4.16 – 4.17
Isofix ....1.49 → 1.54

J
jack .... 5.8 – 5.9

L
lane departure warning....2.38 → 2.40
levels:
brake fluid 4.8
coolant 4.7
engine oil 4.4
windscreen washer reservoir 4.9
lifting the vehicle
changing a wheel .... 5.10 – 5.11
lighting:
exterior ....1.3, 1.86 → 1.90
instrument panel 1.86
interior .... 3.21 – 3.22, 5.19 – 5.20
lights
changing bulbs 5.15
front 5.15
lights:
brake lights 5.16
dipped beam headlights 1.86, 5.15
direction indicators .... 1.85, 5.15 – 5.16
fog lights 1.90, 5.16
hazard warning 1.85
main beam headlights .... 1.87 – 1.88, 5.15
number plate lights 5.18
reversing lights 5.16
side lights 1.86, 5.16
locking the doors .... 1.2 → 1.7, 1.11 → 1.14
luggage compartment cover 3.42
luggage retaining net .... 3.46 – 3.47

M
maintenance 2.21
maintenance:
bodywork .... 4.14 – 4.15
interior trim .... 4.16 – 4.17
mechanical....4.2 – 4.3, 6.8 → 6.13
map reading lights .... 3.21 – 3.22
menu for customising the vehicle settings 1.80
methods of restraint in addition to the seat belts...1.31 → 1.33
mulitfunction display ....1.66 → 1.69
multifunction screen....1.66 → 1.69
multimedia (equipment) .... 3.49 – 3.50
multimedia equipment .... 3.49 – 3.50

Multi-Sense ..... 3.2 – 3.3

N
navigation ..... 3.49 – 3.50
navigation system ..... 3.49 – 3.50

O
oil change 4.4, 4.6
opening the doors ..... 1.8 → 1.13
operating faults ..... 5.31 → 5.36
overspeed warning ..... 1.66, 2.49 → 2.51

P
paintwork
  maintenance ..... 4.14 – 4.15
parking assistance: assisted parking 2.63 → 2.66, 2.69 → 2.72
parking distance control ..... 2.63 → 2.66
power-assisted steering 1.34
powered tailgate ..... 3.37 → 3.41
puncture ..... 5.2 → 5.4, 5.8 → 5.11

R
radio ..... 3.49 – 3.50
rear drive wheels ..... 2.26 → 2.37, 2.37
rear parcel shelf 3.28, 3.42
rear screen de-icing/demisting 3.11
rear seats
  functions ..... 3.31 → 3.35
rear view camera ..... 2.67 – 2.68
rear view mirrors ..... 1.82 → 1.84
RENAULT ANTI-INTRUDER DEVICE (RAID) 1.14
RENAULT card
  battery 5.25
  use ..... 1.2 → 1.7
RENAULT card battery 5.25
replacement parts 6.7
reverse gear
  selecting ..... 2.12, 2.74 → 2.79
reversing sensor ..... 2.63 → 2.66
roof bars 3.48
roof rack
  roof bars 3.48
running in 2.2

S
safety distance warning ..... 2.44 – 2.45
safety distances ..... 2.44 – 2.45
screen
  fold-away screen 1.68
  navigation display ..... 1.67, 3.49 – 3.50
  navigation screen ..... 1.67, 3.49 – 3.50
screen wash/wipe ..... 1.97 – 1.98
seat belt pretensioners ..... 1.27 → 1.30
seat belts ..... 1.23 → 1.25, 1.27 → 1.30, 1.33
see-me-home lighting 1.89
service sheets ..... 6.8 → 6.13
shock absorbers 2.73
side indicator lights
  changing bulbs 5.18
sign detection: overspeed warning ..... 2.49 → 2.51
signals and lights ..... 1.86 → 1.90
special features of diesel versions 2.11
special features of petrol vehicles 2.10
speed limiter ..... 2.46 → 2.48
starting the engine ..... 2.3 → 2.5
steering wheel
  adjustment 1.34
Stop & Start ..... 2.6 → 2.9
Stop & Start function ..... 2.6 → 2.9
storage compartment ..... 3.24 → 3.28
storage compartments ..... 3.24 → 3.28, 3.43
sun blinds 3.23

sun visor 3.23
sunroof ..... 3.18 → 3.20
suspension 2.73
suspension with controlled damping 2.73
switching on the vehicle ignition 2.4

T
tailgate ..... 3.36 → 3.41, 3.43 – 3.44
tanks and reservoirs
  brake fluid 4.8
  coolant 4.7
tanks and reservoirs:
  windscreen washer 4.9
technical specifications ..... 6.4 → 6.7
telephone ..... 3.49 – 3.50
temperature regulation ..... 3.7 → 3.11
tool kit ..... 5.8 – 5.9
towing
  driving 2.35
  breakdown ..... 5.29 – 5.30
  towing equipment 3.45
towing a caravan ..... 3.44 – 3.45, 6.6
towing equipment
  fitting 3.45
towing hitch ..... 5.29 – 5.30
towing rings 3.44, 3.47
towing weights 6.6
traction control ..... 2.26 → 2.37
trailer driving assistance 2.35
trailer driving: assistance 2.35
trailer: driving assistance 2.35
transporting children ..... 1.35 – 1.36, 1.38 → 1.54
transporting objects
  in the luggage compartment 3.44
  luggage net ..... 3.46 – 3.47
trims 5.9
trip computer and warning system ... 1.60 → 1.65, 1.70 → 1.79
tyre inflation kit ..... 5.5 → 5.7
tyre pressure ..... 2.23 → 2.25, 4.12 – 4.13, 5.13
tyre pressure monitor ..... 2.23 → 2.25
tyre pressures ..... 2.23 → 2.25, 4.12 – 4.13, 4.13
tyres ..... 2.20, 2.23 → 2.25, 4.12 – 4.13, 5.12 → 5.14

U
unlocking the doors ..... 1.8 → 1.10

V
ventilation ..... 3.7 → 3.13, 3.13

W
warning buzzer 1.11, 1.85, 1.88
warning lights ..... 1.60 → 1.65, 1.70 → 1.79
washing ..... 4.14 – 4.15
weights 6.6
wheelbrace ..... 5.8 – 5.9
wheels (safety) ..... 5.12 → 5.14
windscreen de-icing/demisting 3.11
windscreen washer ..... 1.97 – 1.98, 4.9
wiper blades ..... 5.27 – 5.28
wipers
  blades ..... 5.27 – 5.28

RENAULT S.A.S. SOCIÉTÉ PAR ACTIONS SIMPLIFIÉE AU CAPITAL DE 533 941 113 € / 13-15, QUAI LE GALLO
92100 BOULOGNE-BILLANCOURT R.C.S. NANTERRE 780 129 987 — SIRET 780 129 987 03591 / TÉL. : 0810 40 50 60
NU 1130-3 – 99 91 059 39R – 09/2015 – Edition anglaise