# Renault TWIZY

Driver's handbook

RENAULT

# Welcome to your new electric vehicle

**This driver's handbook** contains the information necessary:
- for you to familiarise yourself with your vehicle, to use it to its best advantage and to benefit fully from the all the functions and the technical developments it incorporates.
- to ensure that it always gives the best performance by following the simple, but comprehensive advice concerning regular maintenance.
- to enable you to deal quickly with minor faults not requiring specialist attention.

It is well worth taking a few minutes to read this handbook to familiarise yourself with the information and guidelines it contains about the vehicle and its functions and new features. If certain points are still unclear, our Network technicians will be only too pleased to provide you with any additional information.

The following symbol will help you when reading this handbook:

**To indicate a hazard, danger or safety recommendation.**

The descriptions of the models given in this handbook are based on the technical specifications at the time of writing. **This handbook covers all items of equipment** (both standard and optional) **available for these models but whether or not these are fitted to the vehicle depends on the version, options selected and the country where the vehicle is sold.**

**This handbook may also contain information about items of equipment to be introduced later in the model year.**

Throughout the manual, the "approved Dealer" is your RENAULT Dealer.

Enjoy driving your new vehicle.

Translated from French. Copying or translation, in part or in full, is forbidden unless prior written permission has been obtained from the vehicle manufacturer.

0.2

# C O N T E N T S

Sections


Getting to know your vehicle ..... 1

Driving ..... 2

Your comfort ..... 3

Maintenance ..... 4

Practical advice ..... 5

Technical specifications ..... 6

Alphabetical index ..... 7

0.4

# Section 1: Getting to know your vehicle


Electric vehicle: introduction . . . . . 1.2
Important recommendations . . . . . 1.7
Electric vehicle: charging. . . . . 1.8
Key . . . . . 1.13
Doors. . . . . 1.14
Engine immobiliser . . . . . 1.15
Front seat . . . . . 1.16
Seat belts. . . . . 1.17
Methods of restraint in addition to the front seat belt. . . . . 1.20
Child safety: General information . . . . . 1.24
booster seat . . . . . 1.26
attaching a booster seat. . . . . 1.27
installing a booster seat . . . . . 1.28
Driving position . . . . . 1.31
Warning lights . . . . . 1.32
Displays and indicators . . . . . 1.35
Clock . . . . . 1.37
Audible and visual signals . . . . . 1.38
Horn. . . . . 1.39
Exterior lighting and signals. . . . . 1.40
Windscreen washer/wiper . . . . . 1.41

# ELECTRIC VEHICLE: introduction (1/5)

36817

***1*** Charging cord

***2*** Electric motor

***3*** Orange electrical power cables

***4*** Traction battery

***5*** 12 volt battery

Electric vehicles have specific features. We therefore recommend that you read these instructions describing your electric vehicle carefully.

**Special feature**

Depending on the country, this vehicle has been approved for the four-wheel category or for passenger vehicles. It may need to meet special regulations regarding the type of driving licence required, the type of road used, etc. Please ensure that you comply with the legislation of your country.

## Batteries

Your electric vehicle has two types of battery:
– a traction battery;
– a 12 volt battery.

### “58 volt” traction battery

This battery stores the energy necessary to operate the motor in your electric vehicle. As with any battery, it discharges after use, and must be regularly recharged.

You do not have to wait until the traction battery hits the reserve level in order to recharge it.

Using a domestic socket, it takes approximately 3.5 hours to complete a full charge.
Your vehicle range will depend on the charge level of the traction battery, and also on your driving style.
Please refer to information on “Vehicle range: recommendations” in Section 2.

### 12 volt battery

The second battery on your vehicle is a 12V battery: this supplies the energy required to operate vehicle equipment (lights, washer/wipers, etc).

The 12 V battery is charged either:
– when the traction battery is charged;
– when the ignition is on;
– when the ignition is off and periodically, provided there is enough power in the traction battery.

Please see the information under “12 volt battery” in Section 4.

Ⓐ

33436

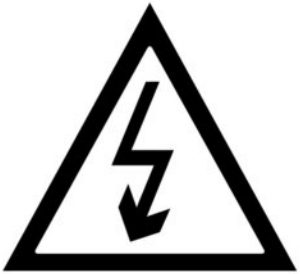

The ***A*** symbol denotes the electrical elements of your vehicle which may present health risks.

## “58 volt” electrical circuit

The electrical circuit can be recognised by the orange cables and by the elements signalled using the ⚠ symbol.

The vehicle drive system in an electric vehicle uses a direct voltage of approximately 58 volts. This system can get hot during and after switching off the ignition.

All interventions or modifications to the vehicle’s electrical system (components, cables, connectors, traction battery) are strictly prohibited due to the risks they present to your safety. Please contact an authorised dealer.

**Risk of fire, burns or electric shocks which may lead to serious injury.**

## Noise

Electric vehicles are particularly quiet. You will not yet necessarily be used to it, and neither will other road users. It is difficult for them to hear the vehicle when it is moving.

We would therefore recommend that you are aware of the horn and make use of it, especially when driving in a built-up area or when manoeuvring (please see the information under “Horn” in Section 1).

As the motor is silent, you will hear noises that you are not used to hearing (aerodynamic noises, tyre noise, etc.).

When charging, the vehicle may emit noises (fan, relays, etc).

Your electric vehicle is silent, so when you get out, always check that the handbrake is engaged and switch off the ignition.

Risk of serious injury.

## Driving

When you lift your foot off the accelerator pedal, the motor generates electrical current during deceleration, and this energy is used to recharge the traction battery. Please refer to the information on the “Charge meter” in Section 2.

An electric motor generates a greater engine brake than in a petrol or diesel engine vehicle.

**Obstructions to the driver**
On the driver’s side, only use mats suitable for the vehicle, attached with the pre-fitted components, and check the fitting regularly. Do not lay one mat on top of another.
**There is a risk of wedging the pedals.**

For safety reasons, adapt your driving to driving conditions and avoid any sudden turning of the steering wheel, especially on steep slopes or slippery surfaces.
Failure to respect these recommendations may lead to a loss of control of the vehicle.
Risk of accident and serious injury.

Having a passenger effects vehicle balance, road holding and increases the vehicle braking distance.
Adapt your driving to the driving conditions and avoid any sudden manoeuvre which could lead to a loss of control over the vehicle. Risk of accident and serious injury.

Bad weather, flooded roads:

Do not drive through floods if the depth of water is above the lower edge of the wheel rims.

If a water level reaches the vehicle floor, do not recharge the vehicle. Please consult an authorised dealer.

Risk of electric shock and a risk to life.

**Special cases**

– At very high exterior temperatures, a safety mode is triggered. Warning light comes on the instrument panel. This mode reduces vehicle power and can lead to its immobilisation. We recommend that you stop and allow the electrical system to cool down, until the warning light goes off. The vehicle then recovers its performance.

– After a maximum charge for the traction battery and during the first few miles when driving the vehicle, or during very low outside temperatures, the engine brake is temporarily reduced. Please adapt your driving style accordingly.

The engine brake should under no circumstances be used as a substitute for the brake pedal.

# IMPORTANT RECOMMENDATIONS

Please read these instructions carefully. Failure to follow these instructions may lead to a **risk of fire, burns or electric shock and serious injury.**

**In the event of an accident or impact to the vehicle**

In the event of an accident or an impact to the underside of the vehicle (e.g.: striking a post, raised kerb or other street furniture), this may damage the electrical circuit or the traction battery.
Have the vehicle checked by an authorised dealer.
Never touch components or orange cables which are exposed and visible inside or outside the vehicle.

In the event of serious damage to the traction battery, leaks may occur:
– never touch the liquids (fluids, etc.) coming from the traction battery;
– in the event of contact with the body, wash the affected area with plenty of water and consult a doctor as soon as possible.

**In the event of fire**

In the event of fire, make everyone evacuate the vehicle immediately and contact the emergency services, informing them that this is an electric vehicle.
Only use extinguishing agents ABC or BC that are permitted for use with electrical fires. Do not use water or other extinguishing agents.
In the event of damage to the electrical circuit, please call an authorised dealer.

**All towing operations**

Please refer to the information on “Towing, breakdowns” in Section 5.

**Washing the vehicle**

Never wash the vehicle while it is charging.
Never wash the vehicle or the traction battery with a high-pressure jet.
Do not wash the vehicle in a roller car wash.
This risks damaging the electric circuit.

**Lifting**

Using a lifting tool (jack, etc.) directly under the traction battery to lift the vehicle is prohibited. To replace a wheel, please go to an authorised dealer.

# ELECTRIC VEHICLE: charging (1/5)

**Charging schematic diagram**

***1*** Wall socket or, depending on the vehicle, charging terminal

***2*** Charging cord

If you have any questions regarding the equipment needed for charging, please ask an authorised dealer.

## Important recommendations for charging your vehicle

Please read these instructions carefully. Failure to follow these instructions may lead to a **risk of fire, burns or electric shock and serious injury.**

### Installations on domestic sockets

Have a qualified professional check that each socket you intend to use with the charging cord complies with the standards and regulations in force in your country, and especially that they have:
– a Type A 30 mA residual current differential device;
– a device to protect against overvoltage (16A fuse or circuit breaker for the socket used);
– protection against overvoltage relating to lightning in exposed areas.
You are recommended to test the residual differential current device every month.
You are recommended to regularly check the domestic plug socket or wall-mounted socket. In the event of any damage (corrosion, discolouration, etc.), do not use it.

### Charging

Never wash the vehicle while it is charging.
Never wash the vehicle or the traction battery with a high-pressure jet.
Always check that the socket is clean, dry and shows no signs of rust before plugging in. Risk of serious injury and/or electric shock which may endanger life.
In the event of the presence of water, signs of corrosion or foreign bodies in the charging cord socket, do not charge the vehicle. Fire hazard.
Do not attempt to introduce objects into the socket of the charging cord.
Never plug the charging cord into a multiple socket or an extension lead.
Do not remove or modify the charging cord. Fire hazard.
Take care of the cord: do not stand on it, do not get it wet, only pull it gently, do not drive over it, do not allow anything to hit it and keep it away from heat sources.
If the blue (or orange) protective sleeve, depending on the vehicle, is damaged, do not use it. Please see an authorised dealer to replace them.

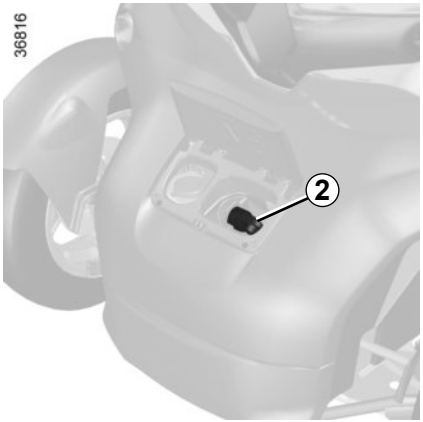


## Charging cord *2*

This cord enables a full recharge of the traction battery in approximately 3.5 hours.

The cord is located in the storage compartment at the front of the vehicle.

Do not use an extension lead or a multiple socket. Only use an adapter approved by the constructor. Please contact an authorised dealer.

Fire hazard.

Avoid charging and parking your vehicle in extreme temperatures (hot or cold).

Favour charging the traction battery in mild temperatures.

When the outdoor temperature falls below zero or is very high, the traction battery charging time will be longer. Charging may become impossible when the temperature is extremely low.

When the vehicle is parked for more than seven days in temperatures below about -25°C, charging the traction battery can become impossible.

When the vehicle is parked for more than three months with near zero charge, charging the battery can become impossible.

To preserve the service life of your traction battery, avoid parking the vehicle for more than one month with high charge, especially when the weather is very hot.

**Recommendations**

Favour parking and recharging the vehicle in a shaded/covered location.

**Wear to the charging cord protective sleeve.**

The charging cord must be replaced in the event that the blue (or orange) protective sleeve, depending on the vehicle, is damaged. Contact an approved Dealer.

Risk of serious injury and/or electric shock which may endanger life.

Always check that the socket is clean, dry and shows no signs of rust before plugging in.

Risk of serious injury and/or electric shock which may endanger life.

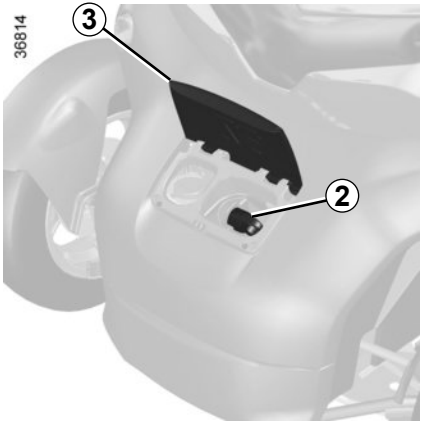


## Recharging the traction battery

Ignition switched off:

– open flap ***3***;
– take out the entire charging cord ***2*** located in the storage compartment at the front of your vehicle, pulling it by the plug using reasonable force. The maximum length of the charging cord is approximately 3 metres;
– plug in the end of the cord to the power supply (domestic plug socket, etc);
– make sure that the stretch limiter ***8*** of the charging cord ***2*** is not exceeded during charging.

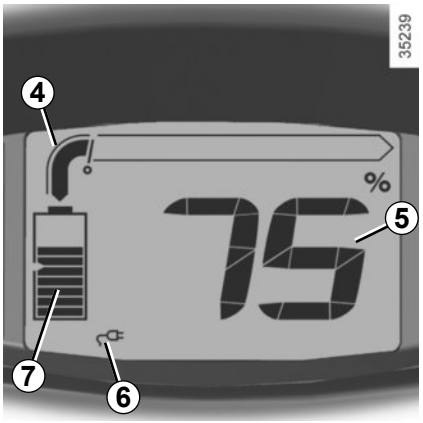


When charging, the following information is displayed:

– warning light ***4***. This flashes to indicate that the traction battery is receiving energy;
– the completed charge percentage ***5***;
– warning light ***6*** indicates that the cord is attached to the power supply;
– the battery ***7*** indicates the amount of energy stored in the traction battery.

At the end of a full charge, the instrument panel switches off.

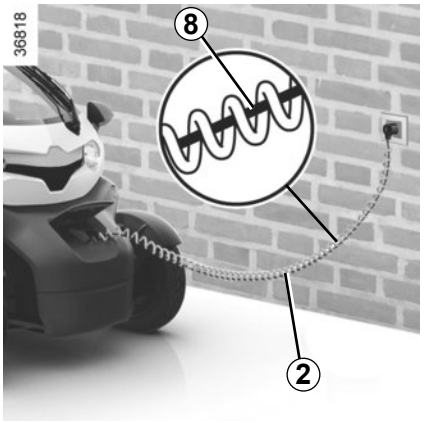


**NB:**
It is not necessary to wait:

– until you reach reserve levels in order to recharge your vehicle;
– for a full charge of the traction battery in order to use the vehicle.

In the absence of any protection against overvoltage, you are advised not to charge the vehicle in stormy weather (lightning, etc).

The vehicle can only be charged with the ignition switched off.

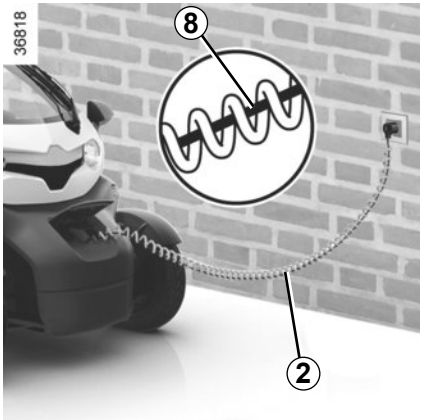


After each charge, it is normal to hear a fan noise from the vehicle if it is still plugged in.

When charging, make sure that the charging cord ***2*** is not overstretched. Do not pull the vehicle using the charging cord.
If the stretch limiter ***8*** is damaged, please replace the charging cord. Please contact an authorised dealer.

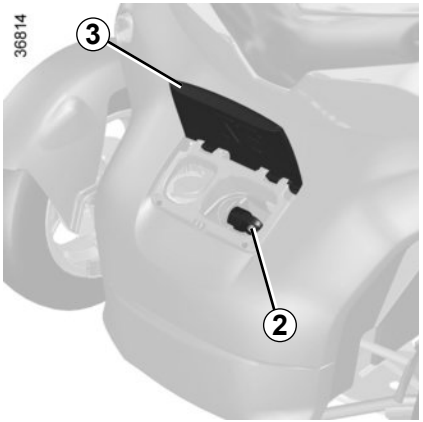


**Precautions to take when removing from the socket**

– Unplug the cord from the power supply by pulling out the plug. The instrument panel goes out;
– reposition the cord ***2*** correctly in the front storage compartment.
Depending on the vehicle, place the end of the plug in its housing or the cord connector facing down;
– close the flap ***3***. Check that the bonnet is correctly locked.

**Special conditions**

If it becomes impossible to unplug the vehicle from the charging terminal (the plug is mechanically locked), turn the key as if to start the vehicle, switch off the ignition, then switch on again.

Attempting to start the vehicle ends the charging process and unlocks the plug from the terminal.

Repeat this operation as many times as is necessary.

**Important:** before starting the vehicle, please make sure that the cord is properly stored in its housing and that the flap is fully closed.

26565

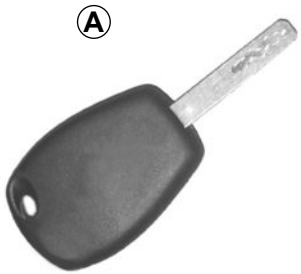


## Key

***A*** Coded ignition-starter key, locking/unlocking storage compartments.

The key must not be used for any function other than those described in the handbook (removing the cap from a bottle, etc.).

**Replacement, requirements for additional keys**

If you lose your key or require another, you can obtain one exclusively from an authorised dealer.

**Driver's responsibility when parking or stopping the vehicle**

Never leave an animal, child or adult who is not self-sufficient alone on your vehicle, even for a short time.

They may pose a risk of injury, such as by starting the engine or activating equipment.

Risk of serious injury.

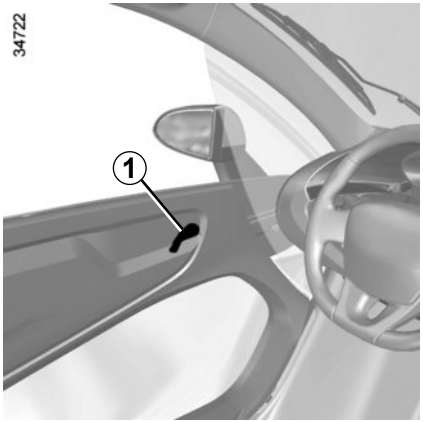


## Opening from inside or outside

Lift handle ***1*** and pull upwards.

## Closing

Lower the door until it locks into place.

As a safety precaution, the doors should only be opened or closed when the vehicle is stationary.

**Driver's responsibility when parking or stopping the vehicle**

Never leave an animal, child or adult who is not self-sufficient alone on your vehicle, even for a short time.

They may pose a risk of injury, such as by starting the engine or activating equipment.

Risk of serious injury.

**For safety reasons:**

– Do not press on the door while it is open when there is another occupant of the vehicle;

– make sure that no people or pets prevent the doors from closing;

– hold the door when opening when parked on a steep slope.

Risk of serious injury.

**Do not drive with the door open.**

Risk of unwanted closure.

**This prevents the vehicle being driven by anyone not in possession of the vehicle's coded ignition key.**

The vehicle is automatically protected after the engine is switched off.

Any unauthorised work carried out on the engine immobiliser (computers, wiring, etc.) could be dangerous. Work must be carried out by qualified personnel.

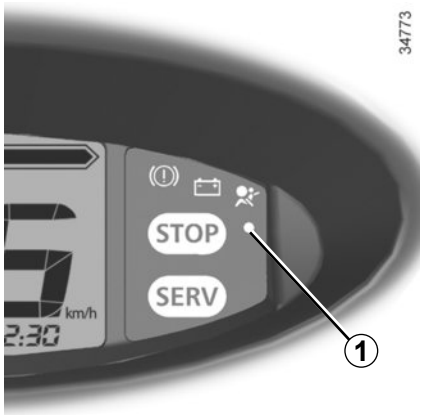


## Operating principle

When the engine is started, warning light ***1*** remains lit for a few seconds, then goes out (refer to the information on "Starting, stopping the engine" in Section 2).

If the code is not recognised, the warning light flashes rapidly and the vehicle will not start.

### Vehicle protection tell-tale light

After the ignition has been switched off, warning light ***1*** flashes and the vehicle is protected.

### Operating fault warning light

If the warning light continues to flash or stays lit up permanently following an attempt to start the engine, this indicates a fault in the system.

In this case, use the second key (supplied with the vehicle). If the fault is still present, contact your authorised dealer, as only they are qualified to repair the engine immobiliser system.

When the engine immobiliser system is activated, the handbrake cannot be released.

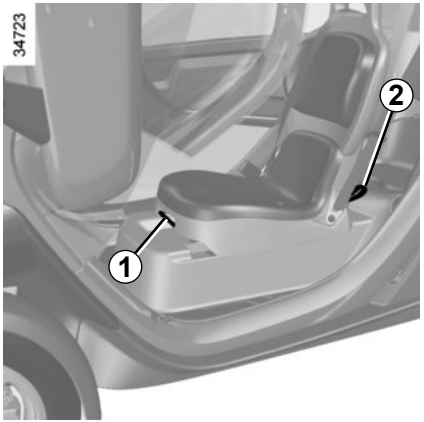


## To move the seat forwards or back

Lift handle ***1*** to unlock the seat. Release the handle once the seat is in the correct position and ensure that the seat is fully locked into position.

For safety reasons, carry out any adjustments when the vehicle is not being driven.

## Access to the rear seats

Lift strap ***2*** and slide the driver's seat forwards.

To replace the seat in the driving position, pull strap ***2*** towards the rear of the vehicle until you get to the desired position.

Make sure the seat is locked in place.

No object should be placed on the floor: such objects may slide under the pedals during sudden braking manoeuvres and obstruct their use.

# SEAT BELTS (1/3)

For safety reasons, always wear your seat belt when travelling in your vehicle. You must also comply with the legislation of your country.
**Before starting, first adjust your driving position, then ask all occupants to adjust their seat belts to ensure optimum protection.**

## Adjusting your driving position

- **Sit well back in your seat**. This is essential to ensure your back is positioned correctly;
- **adjust the distance between the seat and the pedals.** Your seat should be as far back as possible while still allowing you to fully depress the pedals.

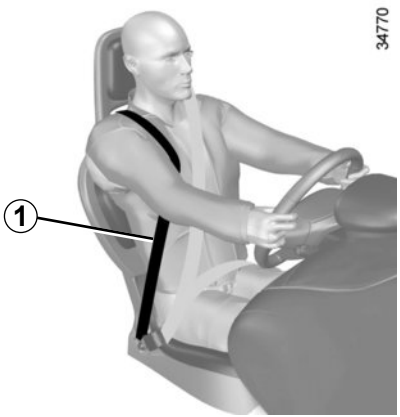


## Driver's side seat belt

Slip your right shoulder under the belt ***1***.

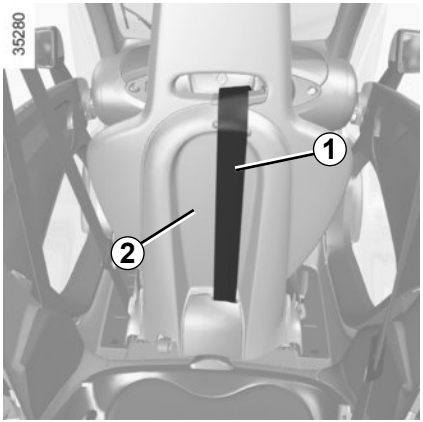


Incorrectly adjusted or twisted seat belts may cause injuries in the event of an accident.
Use one seat belt per person, whether child or adult.
Even pregnant women should wear a seat belt. In this case, ensure that the lap belt is not exerting too much pressure on the abdomen, but do not allow any slack.

To avoid hampering the proper operation of the side support belt, make sure nothing is positioned between the back ***2*** of the front seat and the belt ***1***. Risk of injury in the event of an accident.

Do not use the driver's side support belt on its own. This belt is designed to complement the action of the seat belt.

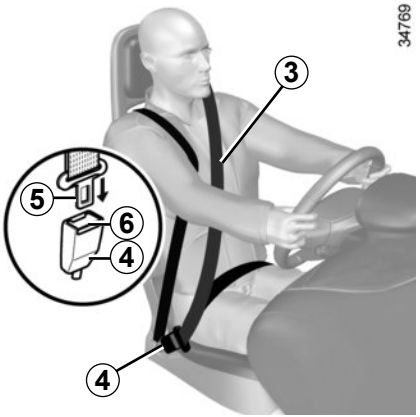


## Locking

Unwind the belt **slowly and smoothly** and ensure that buckle ***5*** locks into catch ***4*** (check that it is locked by pulling on buckle ***5***). If the belt jams, allow it to return slightly before attempting to unwind it again.

If your seat belt is completely jammed, pull slowly, but firmly, so that just over 3 cm unwinds. Allow it to return slightly before attempting to unwind it again.

If there is still a problem, contact an approved dealer.

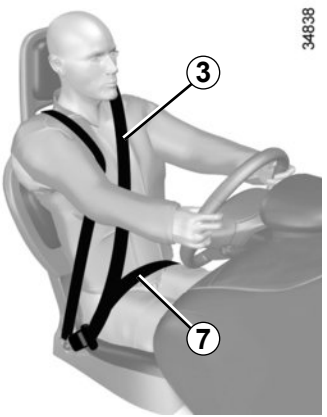


## Adjusting the seat belts

Sit with your back firmly against the seatback.

The shoulder strap ***3*** should be as close as possible to the base of the neck but not on it.

The lap belt ***7*** should be worn flat over the thighs and against the pelvis.

The seat belt must be worn as close to the body as possible. E.g.: avoid having objects under the belts, etc.

## Unfastening

Press button ***6*** and the seat belt will be rewound by the inertia reel. Guide the belt into position.

– No modification may be made to the component parts of the originally fitted restraint system: belts, seats and their mountings. For special operations (e.g.: fitting booster seats), please contact an authorised dealer.

– Do not use devices which allow any slack in the belts (e.g. clothes pegs, clips, etc.): a seat belt which is worn too loosely may cause injury in the event of an accident.

– Never wear the shoulder strap under your arm or behind your back.

– Never use the same belt for more than one person and never hold a baby or child on your lap with your seat belt around them.

– The belt should never be twisted.

– Following an accident, have the seat belts checked and replaced if necessary. Always replace your seat belts as soon as they show any signs of wear.

– Make sure that the buckle is inserted into the appropriate catch.

– Ensure that no objects are placed in the area around the seat belt catch as they could prevent it from being properly secured.

– Make sure the seat belt catch is properly positioned (it should not be hidden away, crushed or flattened by people or objects).

# METHODS OF RESTRAINT IN ADDITION TO THE FRONT SEAT BELTS (1/3)

These are made up of:

- **a side support belt;**
- **chest force limiters;**
- **the driver's airbag.**

These systems are designed to act independently or together when the vehicle is subjected to a frontal impact.

Depending on the severity of the impact, the system can trigger:

- the seat belt and side support belt locking;
- the front airbag.

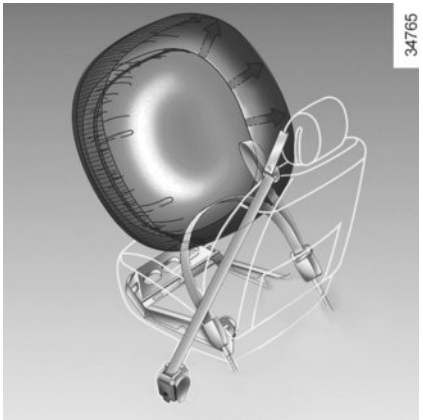


- Have the entire restraint system checked following an accident.
- No operation whatsoever is permitted on any part of the system (airbags, electronic control units, wiring) and the system components must not be reused on any other vehicle, even if identical.
- Only qualified personnel from our Network may work on the airbags; otherwise the system may trigger accidentally and cause injury.
- The electric trigger system may only be tested by a specially trained technician using special equipment.
- When scrapping your vehicle, contact your authorised dealer for disposal of the airbag gas generators.

## Side support belt

Please see the information on “Seat belts” in Section 1.

## Load limiter

Above a certain severity of impact, this mechanism is used to limit the force of the belt against the body so that it is at an acceptable level.

## Airbag

This is fitted in the front seats.

An Airbag marking on the steering wheel informs you of the presence of this equipment.

The airbag system consists of:

– an airbag and its gas generator fitted on the steering wheel;

– an electronic unit for system monitoring which controls the gas generator electrical trigger system;

– a single warning light on the instrument panel.

The air bag system uses pyrotechnic principles. This explains why, when the air bag inflates, it will generate heat, produce smoke (this does not mean that a fire is about to start) and make a noise upon detonation. In a situation where an air bag is required, it will inflate immediately and this may cause some minor, superficial grazing to the skin or other problems.

## Operation

This system is only operational when the ignition is switched on.

If a severe **frontal** impact occurs, the airbag inflates rapidly, cushioning the impact of the driver's head and chest against the steering wheel; the airbag then deflates immediately after impact so that the vehicle can be exited without hindrance.

**All of the warnings below are given so that the air bag is not obstructed in any way when it is inflated and also to prevent the risk of serious injuries caused by items which may be dislodged when the air bag inflates.**

**Warnings concerning the driver's air bag**

– Do not modify the steering wheel or the steering wheel boss.

– Do not cover the steering wheel boss under any circumstances.

– Do not attach any objects (badge, logo, clock, telephone holder, etc.) to the steering wheel boss.

– The steering wheel must not be removed (except by qualified personnel from our Network).

– Do not sit too close to the steering wheel when driving: sit with your arms slightly bent (see Section 1 "Adjusting your driving position"). This will allow sufficient space for the air bag to deploy correctly and to be fully effective.

# ADDITIONAL METHODS OF RESTRAINT

**All of the warnings below are given so that the air bag is not obstructed in any way when it is inflated and also to prevent the risk of serious injuries caused by items which may be dislodged when the air bag inflates.**

The air bag is designed to complement the action of the seat belt. Both the air bags and seat belts are integral parts of the same protection system. It is therefore essential to wear seat belts at all times. If seat belts are not worn, the occupants are exposed to the risk of serious injury in the event of an accident. It may also increase the risk of minor superficial injuries occurring when the air bag is deployed, although such minor injuries are always possible with air bags.

The airbags are not always triggered if the vehicle overturns or in the event of a rear impact, however severe. Impacts to the underside of the vehicle (such as from a pavement or stones, etc.) can cause this system to be triggered.

– Any work or modification to any part of the airbag system (airbags, ECU, wiring, etc.) is **prohibited** (except by qualified personnel from an authorised dealer).

– To ensure that the system is in good working order and to avoid accidental triggering of the system which may cause injury, only qualified Network personnel may work on the air bag system.

– As a safety precaution, have the air bag system checked if your vehicle has been involved in an accident, or is stolen or broken into.

– When selling or lending the vehicle, inform the user of these points and hand over this driver's handbook with the vehicle.

– When scrapping your vehicle, contact your approved dealer for disposal of the gas generator(s).

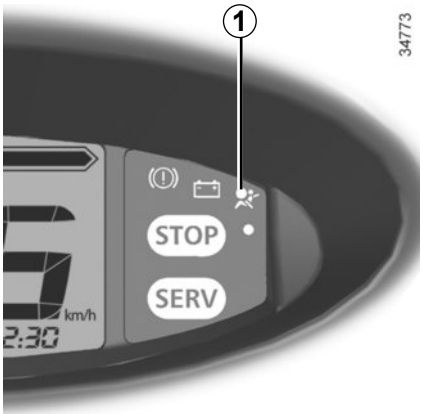


## Operating faults

This warning light ***1*** will light up on the instrument panel when the ignition is switched on and then go out after a few seconds.

If it does not come on when the ignition is switched on, or if it comes on when the engine is running, there is a fault with the system (airbags, etc.) in the front seats.

Contact your approved dealer as soon as possible. Your protection will be reduced until this fault is rectified.

## Carrying children

Children, and adults, must be correctly seated and strapped in for all journeys. The children being carried in your vehicle are your responsibility.

A child is not a miniature adult. Children are at risk of specific injuries as their muscles and bones have not yet finished growing. The seat belt alone would not provide suitable protection. Use a booster seat and ensure you use it correctly.

**Driver's responsibility**

Never use the storage space as a booster seat for a child or a pet. Otherwise, this could place your child or pet in danger, or endanger the driver, in the event of hard braking or impact.

Risk of death or serious injuries.

A collision at 30 mph (50 km/h) is the same as falling a distance of 10 metres. Transporting a child without a restraint is the equivalent of allowing him or her to play on a fourth-floor balcony without railings.
Never travel with a child held in your arms. In the event of an accident, you will not be able to keep hold of the child, even if you yourself are wearing a seat belt.
If your vehicle has been involved in a road accident, replace the booster seat and have the seat belts checked.

**Driver's responsibility when parking or stopping the vehicle**

Never leave an animal, child or adult who is not self-sufficient alone on your vehicle, even for a short time.

They may pose a risk of injury, such as by starting the engine or activating equipment.

Risk of serious injury.

## Use

**Only a booster seat should be used.** The level of protection offered by the booster seat depends on its ability to restrain your child and on its installation. Incorrect installation compromises the protection it offers the child in the event of harsh braking or an impact.

Before purchasing a booster seat, check that it complies with the regulations for your country and that it can be fitted in your vehicle. Consult an authorised dealer to find out which booster seats are recommended for your vehicle.

Before fitting a booster seat, read the manual and follow its instructions. If you experience any difficulties during installation, contact the equipment manufacturer. Keep the instructions with the booster seat.

Set a good example by always fastening your seat belt and teaching your child:
- to strap themselves in correctly;
- to always get in and out of the car at the kerb, away from busy traffic.

Do not use a second-hand child seat or one without an instruction manual.

Check that there are no objects in the vicinity of the child seat which could impede its operation.

Never leave a child unattended in the vehicle.

Check that your child is always strapped in and that the belt is correctly set and adjusted.

Never allow your child to stick their head out of the window.

Check that the child is in the correct position for the entire journey, especially if asleep.

**Only a booster seat should be used.**

**Booster cushions**
From 15 kg or 4 years, the child can travel using a booster seat, which will enable the seat belt to be adapted to suit his/her size and shape. The booster seat cushion must be fitted with guides to position the seat belt on the child's thighs rather than the stomach. It is recommended that you use a seat-back fitted with a belt strap guide which can be adjusted in terms of height to position the seat belt in the centre of the shoulder. It must never rest on the neck or on the arm.
Choose a bucket type seat for optimum side protection.

**Driver's responsibility**

Never use the storage space as a booster seat for a child or a pet. Otherwise, this could place your child or pet in danger, or endanger the driver, in the event of hard braking or impact.

Risk of death or serious injuries.

**Attachment via the seat belt**

The seat belt must be adjusted to ensure that it is effective in the event of harsh braking or an impact.

Ensure that the strap paths indicated by the booster seat manufacturer are respected.

Always check that the seat belt is correctly fastened by pulling it up, then pulling it out fully whilst pressing on the booster seat.

Check that the booster seat is correctly held by moving it from side to side and back to front: the booster seat should remain firmly fixed in place.

Check that the booster seat has not been installed at an angle.

No modifications may be made to the component parts of the restraint system originally fitted: belts, seats and their mountings.

Do not use the booster seat if it risks loosening the seat belt restraining it: the base of the booster seat must not rest on the buckle and/or catch of the seat belt.

The seat belt must never be twisted or the tension relieved. Never pass the shoulder strap under the arm or behind the back.
Check that the seat belt has not been damaged by sharp edges.
If the seat belt does not operate normally, it will not protect the child. Consult an approved dealer. Do not use this seat until the seat belt has been repaired.

**In the rear seat**

For child safety, move the front seat as far forward as possible to install a booster seat, then move it back as far as it will go, without allowing it to come into contact with the child.

Check that the booster seat is resting against the back of the vehicle seat.

Check that when installing the booster seat in the vehicle, it is not at risk of coming loose from its base.

Always attach the booster seat to the vehicle even if it is not in use so that it does not come loose under hard braking or upon impact.

Make sure that the booster seat or the child's feet do not prevent the front seat from locking correctly. Refer to the information on the "Front seat" in Section 1.

# CHILD SAFETY: installing a booster seat (2/3)

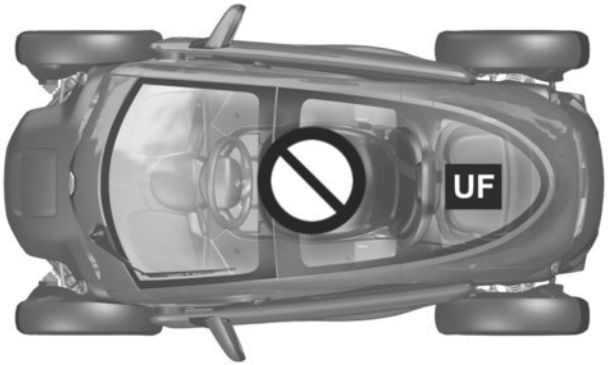


34764

Seat not suitable for fitting child seats.

UF Seat which **only** allows a standardised “Universal” **booster seat** to be installed using a seat belt.

Using a child safety system which is not approved for this vehicle will not correctly protect the baby or child. They risk serious or even fatal injury.

# CHILD SAFETY: installing a booster seat (3/3)

**The table below summarises the information already shown on the diagram on the previous page, to ensure the regulations in force are respected.**

| Type of child seat | Weight of the child | Rear seat |
|---|---|---|
| **Carrycot fitted across the vehicle**<br>Group 0 | < 10 kg | X |
| **Rear-facing shell seat**<br>Group 0 or 0+ | < 13 kg and 9 to 18 kg | X |
| **rear-facing seat**<br>Group 0+ and 1 | 9 to 18 kg | X |
| **Forward-facing seat**<br>Group 1 | 9 to 18 kg | X |
| **Booster seat**<br>Group 2 and 3 | 15 to 25 kg and 22 to 36 kg | UF (1) |

**X** = Seat not suitable for fitting child seats.
**UF** = Seat which only allows a standardised “Universal” booster seat to be installed using a seat belt; check that it can be fitted.

(1) place the back of the booster seat against the vehicle seatback and move the front seat backwards without allowing it to come into contact with the child.

# DRIVING POSITION

**The equipment fitted, described below, DEPENDS ON THE VERSION AND COUNTRY.**

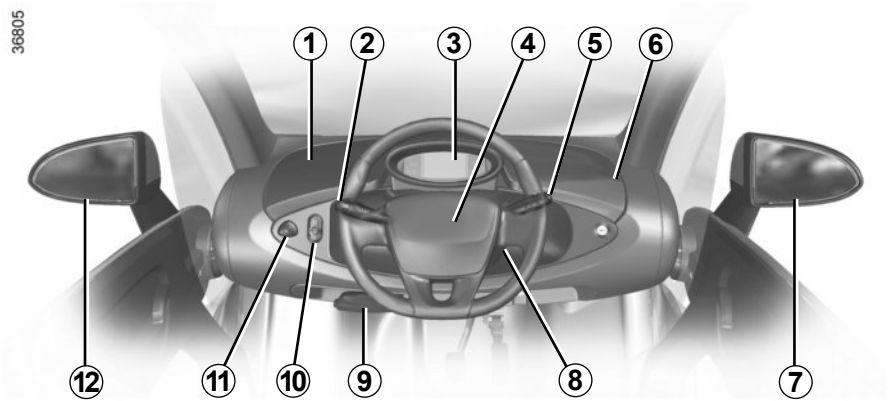


***1*** Storage and accessories socket.

***2*** Stalk:

- horn,
- direction indicator lights,
- exterior lights,
- horn.

***3*** Instrument panel.

***4*** Location for driver's airbag.

***5*** – Windscreen wiper/washer stalk,

- On-board computer information readout control,
- windscreen de-icer control.

***6*** Lockable storage.

***7*** and ***12*** door mirrors
To adjust the mirrors, press on the mirror.

***8*** Key ignition switch.

***9*** Handbrake.

***10*** Controls for:

- forward gear,
- neutral,
- reverse.

***11*** Hazard warning lights switch.

# WARNING LIGHTS (1/3)

**The presence and operation of the warning lights DEPEND ON THE EQUIPMENT AND COUNTRY.**

**Instrument panel*A***: lights up when the ignition is switched on.

Warning light SERV means you should drive **very carefully to an authorised dealer as soon as possible**. If you fail to follow this recommendation, you risk damaging your vehicle.

**Side light tell-tale light**

**Main beam headlight tell-tale light**

**Direction indicator lights**

**Engine immobiliser system warning light**

Refer to the information on the “Engine immobiliser” in Section 1.

**Vehicle ready for driving warning light**

Please see the information on “Starting, stopping the engine” in Section 2.

Warning light STOP requires you to stop immediately, for your own safety, as soon as traffic conditions allow. Switch off the engine and do not restart it. Contact an approved Dealer.

**Air bag warning light**

This comes on when the ignition is switched on and goes out after a few seconds.
If it does not come on when the ignition is switched on, or lights up when driving, there is a system fault.
Contact your approved Dealer as soon as possible.

**Charging cord plugged in warning light**

This comes on when the charging cord is plugged into an electricity supply.

If no lights or sounds are apparent, this indicates a fault in the instrument panel. This indicates that it is essential to stop immediately (as soon as traffic conditions allow). Ensure that the vehicle is correctly immobilised and contact an approved Dealer.

# WARNING LIGHTS (2/3)

**The presence and operation of the warning lights DEPEND ON THE EQUIPMENT AND COUNTRY.**

SERV **Warning light**
This lights up when the ignition is switched on and goes out as soon as the engine is started. It may comes on in conjunction with other warning lights on the instrument panel.
It means you should **drive very carefully** to an approved dealer as soon as possible. If you fail to follow this recommendation, you risk damaging your vehicle.

STOP **STOP light**
This lights up when the ignition is switched on and goes out as soon as the engine is started. It lights up at the same time as other warning lights, and is accompanied by a beep.

It requires you to stop immediately, for your own safety, as soon as traffic conditions allow. Switch off the engine and do not restart it.
Contact an approved Dealer.

**Special feature:** On steep slopes, a warning light will come on and a beep will sound if the vehicle is travelling at excessive speed. You must then reduce your speed. Risk of damage to the engine. The warning light goes out once the vehicle speed drops below the maximum set level.

**Windscreen de-icing warning light**.

**12 V battery charge warning light**
If it comes on, limit the non-essential use of any energy-consuming equipment and accessories.
If it stays on, see an authorised dealer as soon as possible.
If it comes on together with the warning light STOP and a beep, this indicates a fault in the 12V battery charging circuit. Stop as soon as traffic conditions allow and contact an authorised dealer.

**Handbrake on and brake circuit incident warning light**

This comes on when the ignition is switched on and goes out as soon as the handbrake is released.
If it comes on during braking and is accompanied by the STOP warning light and a beep, it indicates that the fluid level in the circuit is low or that there is a braking system fault.
Stop as soon as traffic conditions allow and contact an approved Dealer.

# WARNING LIGHTS (3/3)

**The presence and operation of the warning lights DEPEND ON THE EQUIPMENT AND COUNTRY.**

**Electrotechnical system warning light**

When the warning light comes on, this indicates the traction battery or the engine temperature is too high. Opt for a calmer driving style.

**The warning light can be accompanied by a drop in vehicle performance.**

**Low traction battery level warning light**

This comes on when the traction battery charge level has reached the reserve threshold. Please see the information on “Displays and indicators” in Section 1.

**Electrotechnical system warning light**

If it lights up while driving, this means there is an electrotechnical fault in the “58 volt” electrical circuit. Please see an authorised dealer as soon as possible.

When the vehicle is started or while driving, if it flashes accompanied by the STOP warning light and a beep, this indicates that the charging flap is open or not correctly closed. Stop and switch off the ignition, make sure that the charging cord is disconnected and that the flap is fully closed.

**Not used**

**ERROR Not used**

**+ Not used**

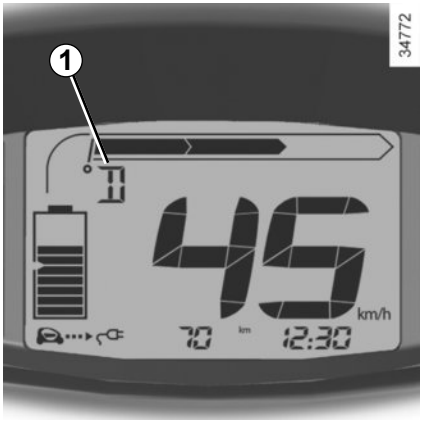


**Gear selector *1* position indicator (N, D or R).**

# DISPLAYS AND INDICATORS (1/2)

**The presence and operation of the display and indicators DEPENDS ON THE LEVEL OF EQUIPMENT AND THE COUNTRY.**

## Charge level *1*

The gauge indicates the level of energy remaining.

**NB:** Each time you switch off the ignition, the remaining energy level will be calculated.
Once you switch on the ignition again, you will see a slight change in the level display.

### Reserve level

When the battery reaches approximately 12% charge, warning light comes on, along with a beep.
To optimise your range, please see the information on “Recommendations: saving energy” in Section 2.

### Immobilisation threshold imminent

When the battery reaches less than 6% charge, a beep repeats every 20 seconds and warning light flashes on and off.

Motor performance gradually decreases until the vehicle comes to a stop.

Please see the information on “Towing: in the event of energy loss” in Section 5.

## Charge meter *2*

Please refer to the information on the “Charge meter” in Section 2.

## Speedometer *3*

In kilometres or miles per hour.

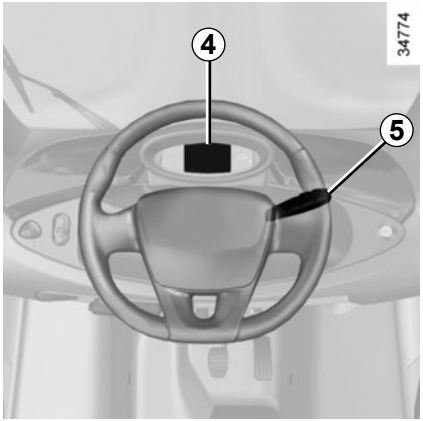


## Display *4*

Press and hold button ***5*** to reset the trip mileage recorder. The display must be set to “Trip mileage recorder”.

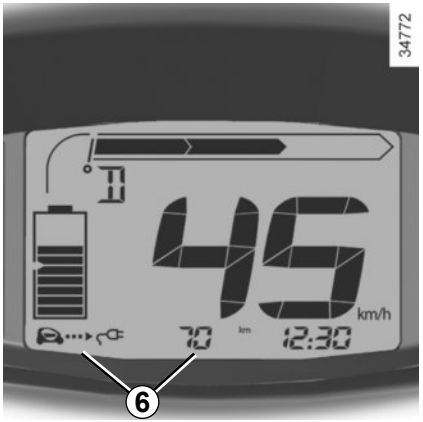


Zones ***6*** of the instrument panel display the information detailed below by pressing button ***5*** repeatedly:

- estimated range;
- total mileage recorder;
- trip mileage recorder;
- Eco score;
- clock (CS : Clock setting).

**Note:** resetting is automatic when the maximum capacity of any of the memories is exceeded.

**Forecast range display features**

- Sporty driving will strongly affect the forecast range value. Once you return to a calmer driving style, you will need to drive for several miles to return to an estimate that is closer to the real situation;
- the forecast range displayed after charging the traction battery is calculated based on the power consumption over the last 93 miles (150 kilometres) travelled.

## Instrument panel in miles

It is possible to switch to km/h.
Press button ***5*** and switch on the ignition.
The speed measurement unit indicator flashes for approximately three seconds, then the new unit flashes on the display and is then lit up continuously: release button ***5***.
To return to miles, proceed in the same manner.

# CLOCK

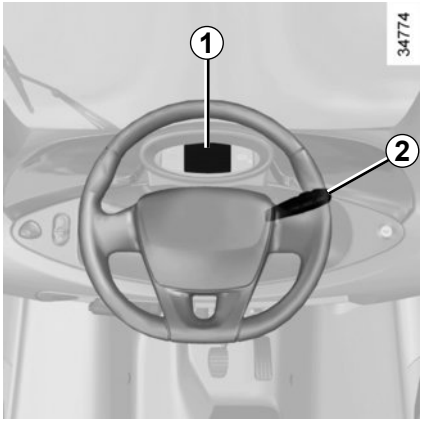


**With the ignition switched on,** the clock is displayed on the instrument panel.

## Adjusting the time on the instrument panel *1*

– Press button ***2*** in quick succession, as many times as necessary, to obtain the time adjustment mode;

– press and hold button ***2***.
The hour reading flashes;

– repeatedly press button ***2*** as necessary to adjust the hour;

– press and hold button ***2*** to confirm the hours.
The minute display flashes;

– repeatedly press button ***2*** as necessary to adjust the minutes;

– press and hold button ***2*** to confirm the minutes.

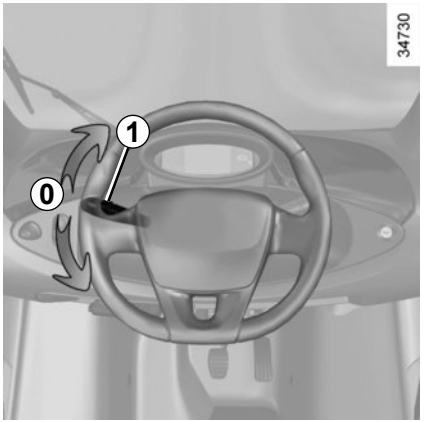


## Horn

Press the end of stalk ***1***.

## Headlight flasher

Pull stalk ***1*** towards you to flash the headlights.

## Direction indicators

Move stalk ***1*** parallel to the steering wheel and in the direction you are going to turn it.

When driving on the motorway, the steering wheel is not often turned enough to return the stalk automatically to ***0***.

There is also an intermediate position in which the switch may be held when changing lanes.

When the stalk is released, it automatically returns to ***0***.

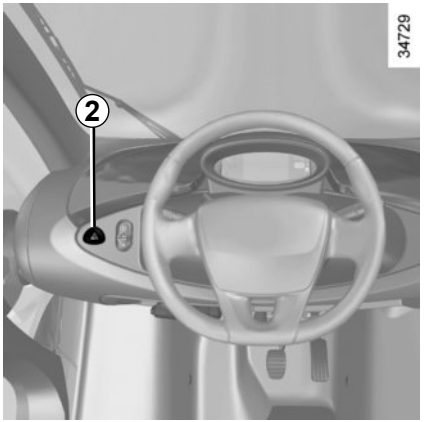


## Hazard warning lights

Press switch ***2***. This switch lights up all four indicators simultaneously. It must only be used in an emergency to warn drivers of other vehicles that you have had to stop in an area where stopping is prohibited or unexpected or that you are obliged to drive under special conditions.

# HORN

Electric vehicles are particularly quiet. This system enables you to warn people of your presence – especially pedestrians and cyclists.

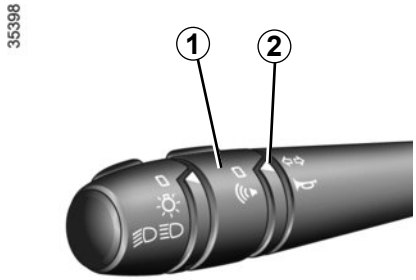


## Activating the system

With the engine running, turn centre ring ***1*** on the stalk until the symbol faces mark ***2***.

## Deactivating the system

Turn the centre ring ***1*** to position 0 again.

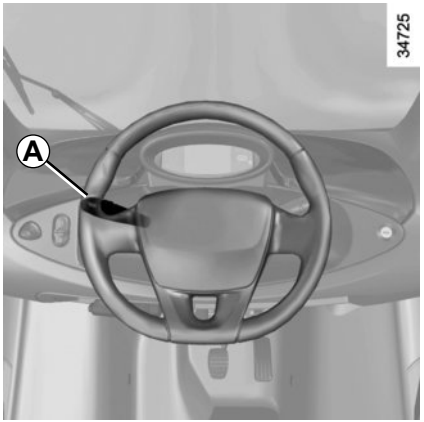


## Daytime running lights

The dipped headlights come on without using the stalk ***A*** when the engine is started.

## Side lights

Turn end ***1*** of stalk ***A*** until the symbol is opposite mark ***2***.

The instrument panel lighting dims.

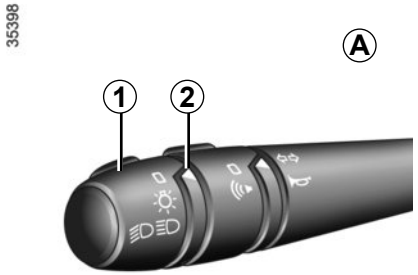


## Dipped beam headlights

**Manual operation**

Turn end ***1*** of stalk ***A*** until the symbol is opposite mark ***2***.

With the ignition switched off, it is not possible to operate the lights (to avoid lights being used when parked).

## Main beam headlights

With the stalk ***A*** in position , pull it towards you. An indicator light on the instrument panel will come on.

To return to the dipped headlights position, pull stalk ***A*** towards you again.

## Switching off the lights

Return the stalk to its original position. When the engine is started, the dipped headlights stay on. They will go out once the engine is switched off.

**When the vehicle is driven at maximum permissible load** (refer to the information on «Weights» in section 6), you must have the dipped beam headlights adjusted, while it is being used, by an Approved Dealer.

## Lights-on warning buzzer

If the stalk is not returned to its initial position after the ignition is switched off, a warning beep sounds four times to warn you.

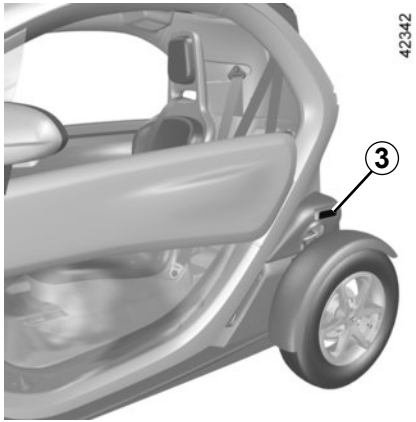


## Retroreflectors *3*

Remember to check the condition of the side retroreflectors regularly. In the event of damage, please replace them.

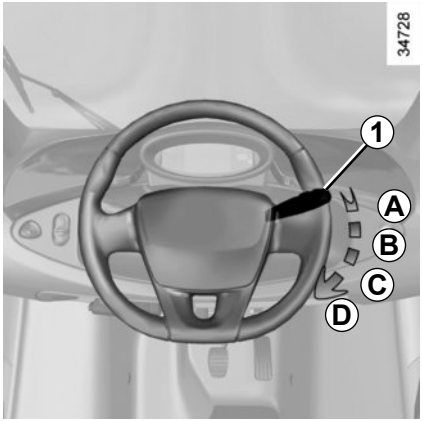


## Windscreen wiper

**With the ignition on,** move stalk ***1***:

***A*** **park**

***B*** **intermittent wiping**

The wipers will pause for several seconds between sweeps.

***C*** **normal wiping speed**

***D*** **fast wiping speed**

## Windscreen washer

With the ignition on, pull stalk ***1*** towards you.

In the snow or ice, make sure that the wiper blades are not stuck by ice.

Keep an eye on the condition of the blade. Replace the wiper blades as soon as they begin to lose efficiency: approximately once a year.

When working on the vehicle, ensure that the windscreen wiper stalk is in position **A** (off).
Risk of injury.

Before any action involving the windscreen (washing the vehicle, de-icing, cleaning the windscreen, etc.) return stalk ***1*** to position **A** (park).

Risk of injury and/or damage.

Check the condition of the wiper blades. How long they last depends on you:
- they should be kept clean: clean the blades and the windscreen regularly with soapy water;
- do not use them when the windscreen is dry;
- free them from the windscreen when they have not been used for a long time.

In any event, replace them as soon as they begin to lose efficiency: approximately once a year.

# Section 2: Driving

## (Advice on use relating to fuel economy and the environment)


Starting, stopping the engine . . . . . 2.2
Gear control . . . . . 2.3
Handbrake . . . . . 2.5
Vehicle range: advice . . . . . 2.6
Environment . . . . . 2.8
Charge meter . . . . . 2.9
Eco-consumption . . . . . 2.9

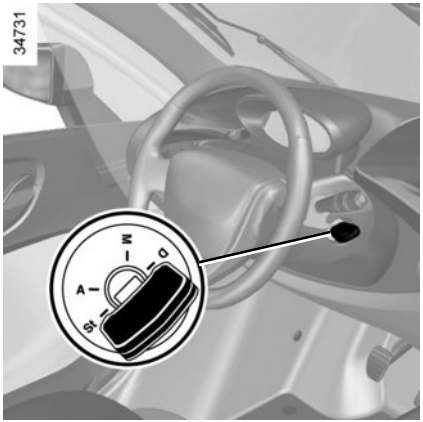


## “Stop, steering and handbrake lock” position St

To unlock: turn the key and the steering wheel slightly.

To lock: remove the key and turn the steering wheel until the steering column locks.

To release the handbrake, please see the information on “Handbrake” in Section 2.

## “Accessories” position A

No power-consuming device will operate when the ignition is switched off.

## “On” position M

The ignition is switched on:

## Start position D

### Starting the engine

Turn the key to the **D** position and hold it in this position until you hear a beep. Release the key.

As soon as warning light GO stops flashing, your vehicle is ready to drive.

The vehicle cannot be started if the charging cord is plugged in and powered or if the charging flap is open.

### Stopping the engine

Bring the key to “Stop” position. Warning light GO goes out.

**Driver’s responsibility when parking or stopping the vehicle**

Never leave an animal, child or adult who is not self-sufficient alone on your vehicle, even for a short time.

They may pose a risk of injury, such as by starting the engine or activating equipment.

**Risk of serious injury.**

## Display *1*

The display ***1*** on the instrument panel indicates the selection control position ***2***.

## Selection control *2*

**D**: forward

**N**: neutral

**R**: reverse

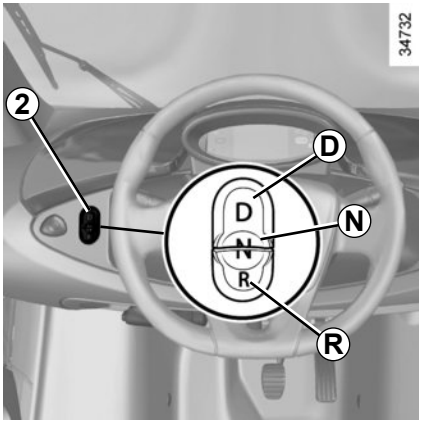


## Operation

– Switch on the ignition;
– start the engine;
– with your foot on the brake pedal, release the handbrake (refer to the information under “Handbrake” in Section 2). It will now be possible to drive off.

**Only engage D or R when the vehicle is at a standstill, with your foot on the brake and the accelerator pedal released.**

To protect the charging cord, always check that it is properly stored in its housing before setting off.

## Driving

Press switch **D**, a beep will sound.

While driving, press the accelerator pedal to achieve the desired speed.

### Hill start

When setting off on a slope, release the handbrake whilst pressing the brake pedal before pressing the accelerator pedal.

### Reverse

Press switch **R**.

The reversing light will come on as soon as reverse gear is selected (ignition on).

A beep will sound.

The vehicle can only be started if the charging cord is unplugged from the vehicle and stored away.

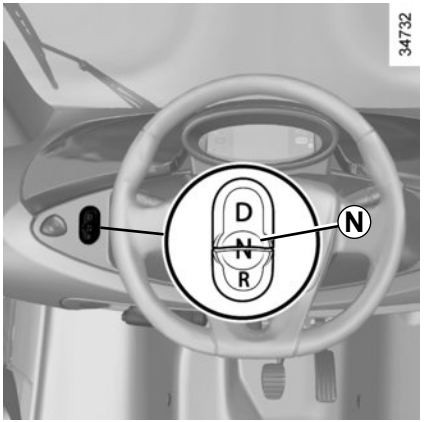


## Parking the vehicle

With the vehicle at a standstill, press switch **N**.

Warning light ***3*** comes on the instrument panel.

**Engage the handbrake** (please see the "Handbrake" information in Section 2).

NB: when the ignition is switched off, the gear control automatically switches to position **N**.

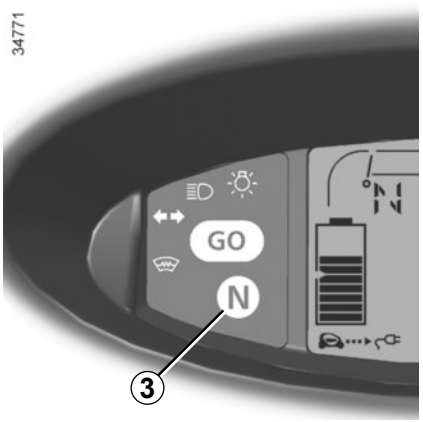


## Temporary stop

At a standstill and with the engine running, when position **D** or **R** is engaged, a beep will sound and warning light GO flashes until one of the following conditions is met:

– brake pedal pressed;

– accelerator pedal pressed;

– N switch pressed;

– the handbrake is secured.

In the event of an impact to the underside of the vehicle (e.g.: striking a post, raised kerb or other street furniture), this may result in damage to the vehicle (e.g.: twisted axle), the electrical circuit or the traction battery.

Do not touch the circuit elements or any fluids or liquids.

To prevent any risk of accident, have your vehicle checked by an authorised dealer.

**Risk of serious injury or electric shock.**

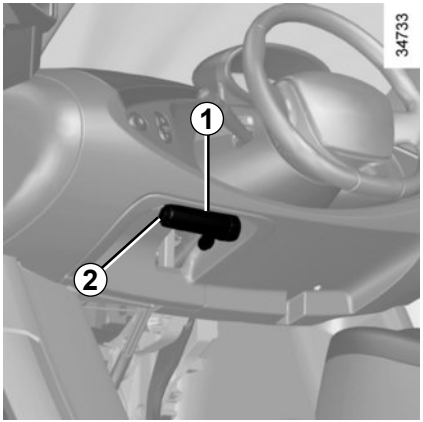


## Handbrake

**To release:**

With the ignition on:
- support on the brake pedal and maintain it sunk ;
- press ***2***;
- gently pull lever ***1*** towards you, keeping the ***2*** button pressed down;
- push the lever down as far as it will go.

The handbrake is a vehicle safety measure. It cannot be released unless the ignition is switched on.

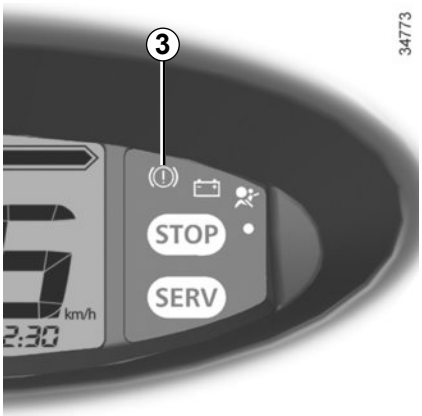


**Special conditions**

It is not possible to release the handbrake when the 12 volt battery is discharged.

You must recharge it (see “12V battery” in Section 4) before you can release the handbrake, or have the 12V battery replaced by an authorised dealer.

**To apply:**

Pull lever ***1*** upwards and make sure the vehicle is immobilised. Warning light ***3*** will come on on the instrument panel.

When stationary and depending on the slope and/or vehicle load, it may be necessary to pull up the handbrake at least two extra notches.

Make sure that the handbrake is properly released when driving (red indicator light off), otherwise overheating may occur.

# VEHICLE RANGE: recommendations (1/2)

The vehicle range is approved for an ECE-15 cycle.
In real usage, the range of an electric vehicle may vary depending on several factors over which you have partial control, which may make a considerable difference to the vehicle range. These factors are:
– speed and driving style;
– type of road;
– electrical accessories and equipment;
– vehicle loading;
– tyres;

## Speed and driving style

High speeds will reduce your vehicle's range.

A "sporty" driving style reduces your vehicle range: opt for a "lighter" driving style.

34630

Drive at a constant speed.

Adapt your driving style to avoid excessive energy consumption. Please refer to the information on the "Charge meter" in Section 2.

Anticipate traffic changes by lifting your foot off the accelerator pedal in order to recover energy.

34760

## Road type

Do not try to maintain the same speed up a hill, accelerate no more than you would on the level. Keep your foot in the same position on the accelerator pedal.

## Use of electrical accessories and equipment

In the event of freezing, manually de-ice the windscreen (using a scraper) to reduce usage of the de-icing/demisting function and to save energy.
Please see the information on “Deicing, demisting the windscreen” in Section 3.

The use of electrical accessories (GPS, phone charger, etc.) reduces vehicle range.

## Vehicle loading

Avoid pointlessly overloading your vehicle.

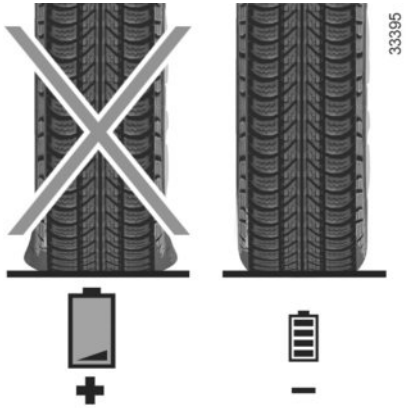


## Tyres

An under-inflated tyre increases energy consumption. Comply with the specified tyre pressures for your vehicle.
When replacing them, you **must** use tyres made by the same manufacturer, with the same dimensions, type and structure as the originals.

Please see the information on “Tyres” in Section 5.

For safety reasons, the use of tyres other than those recommended by the manufacturer is prohibited. Failure to respect this recommendation may adversely affect stability, behaviour, braking or the play between the bodywork and the tyres... Some of these effects may lead to the loss of control of the vehicle under certain driving conditions, and lead to an accident and serious injury.

# ENVIRONMENT

Your vehicle has been designed with respect for the **environment** in mind for its entire service life: during production, use and at the end of its life.

## Manufacture

Your vehicle has been manufactured at an industrial site which uses a progress policy to reduce environmental impacts on rivers and natural areas (reduction of water and energy consumption, visual and noise pollution, atmospheric emissions and waste water, sorting and reusing waste).

## Please make your own contribution towards protecting the environment too.

– Worn parts replaced in the course of routine vehicle maintenance (vehicle battery, etc.) must be disposed of through specialist bodies.

– At the end of the vehicle's service life, it should be sent to approved centres to ensure that it is recycled.

– In all cases, comply with local legislation.

## Recycling

Your vehicle is 85% recyclable and 95% recoverable.

To achieve these objectives, many of the vehicle components have been designed to enable them to be recycled. The materials and structures have been carefully designed to allow these components to be easily removed and reprocessed by specialist companies.

In order to preserve raw material resources, this vehicle incorporates numerous parts made from recycled plastics or renewable materials (vegetable or animal-derived materials such as cotton or wool).

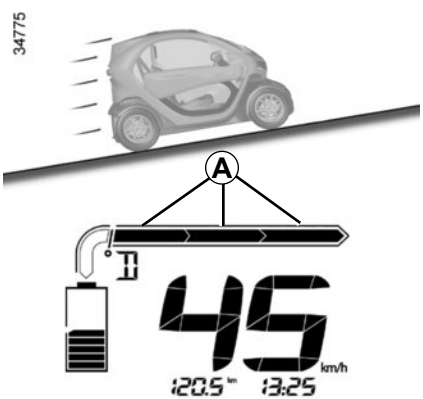


## Charge meter

The charge meter gives the driver a real-time view of the vehicle's remaining power.

### Power consumption *A*

The traction battery supplies the electrical energy required for the motor to move the vehicle.

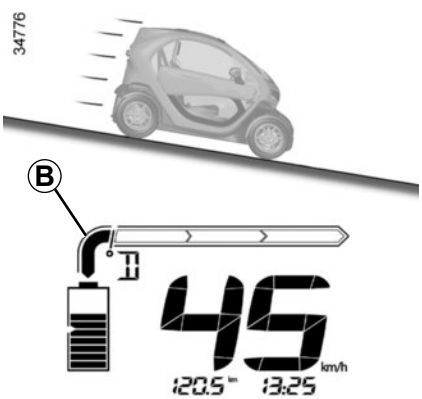


### Power recovery *B*

When driving, if you lift your foot off the accelerator pedal, the motor generates electrical current during deceleration, and this energy is used to recharge the traction battery.

## Eco-consumption (Éco ScorE)

This function shows the driver whether their driving style is suitable for an optimum vehicle range.
To display this function, press the end of the windscreen wiper stalk as many times as necessary.

The squares ***C*** indicate increased range: the more squares there are, the more range there is remaining for the vehicle.
Éco ScorE is calculated using the average from the last 1.8 miles (3 kilometres) travelled. After the traction battery is charged, it is calculated based on the last 93 miles (150 kilometres).

# Section 3: Your comfort

Windscreen de-icing, demisting. . . . . 3.2
Passenger compartment storage/fittings. . . . . 3.3

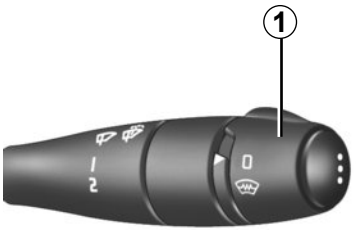


34743

## De-icing or demisting the windscreen

With the engine running, turn the end of stalk ***1***. Warning light ***2*** lights up on the instrument panel.

This function enables quick electric deicing/demisting.

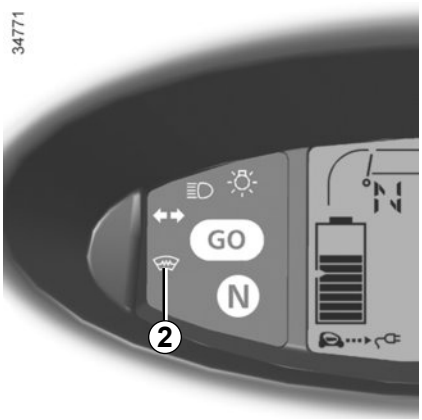


34771

**To exit this function**

Turn the end of stalk ***1***. Warning light ***2*** goes out on the instrument panel.

Demisting automatically stops approximately 10 seconds after it is activated.

**Recommendations**

In the event of freezing, manually de-ice the windscreen using a scraper rather than the de-icing/demisting function in order to reduce your energy consumption.

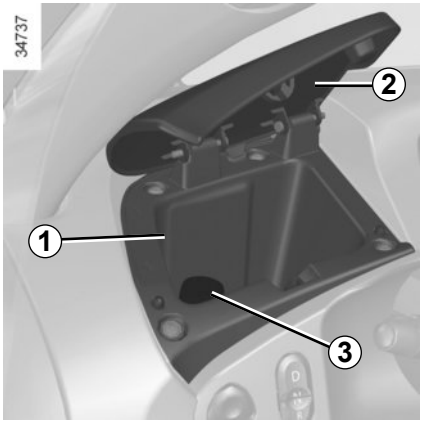


## Left-hand storage compartment *1*

To open, lift cover ***2***.

## Accessories socket *3*

Located in the storage compartment ***1***, this is provided for connecting accessories approved by the Technical Department with a maximum power of 65 watts (voltage of 12V).

Only connect accessories with a maximum power of 65 watts.

**Fire hazard.**

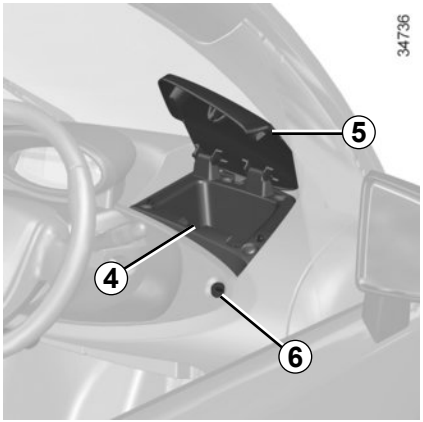


## Right-hand storage compartment *4*

To open, lift cover ***5***.

To lock and unlock the storage compartment ***4***, insert the ignition key in lock ***6*** and turn it.

Always leave the storage compartment covers closed when driving.

There is a risk of injury when braking suddenly or in the event of an accident.

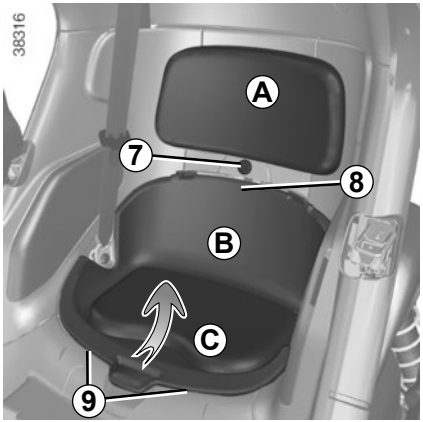


## Rear storage space *10*

To unlock the seat cushion ***B*** and the seatback ***A***, insert the ignition key in lock ***7*** and turn it.

The closure ***7*** enables the seat back and cushion of the rear passenger seat and the rear storage compartment to be locked or unlocked.

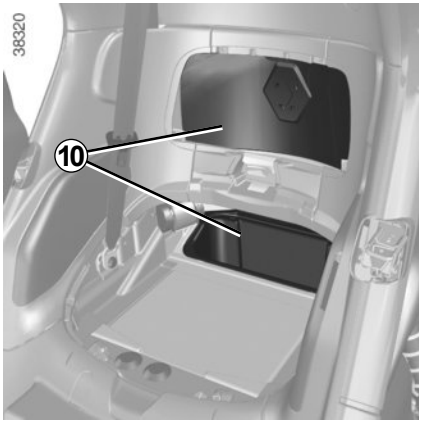


Unclip the seatback ***A***, then slide it back and pull towards you.
Move the seat cushion ***B*** in ***8***, then pull upwards to unclip the base.
Push the seat cushion ***B*** and lift it (movement ***C***) to take it out from the runners ***9***.

**Note:** when replacing, make sure you lock the cushion and the seat back in place.

Do not place an object or pet on the storage space if it has not first been secured using a specific accessory for the vehicle.

Risk of serious injury when braking sharply or in an impact.

Ensure that no hard, heavy or pointed objects are placed in the “open” storage compartments in such a way that they may fall onto passengers during sudden turning, braking or in the event of an accident.

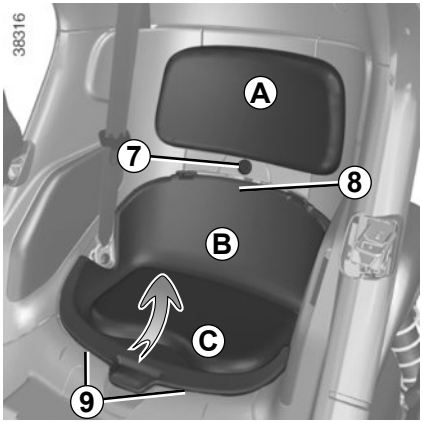


## Rear storage space

The rear seat can be transformed into a storage space.

– To unlock the seat cushion ***B*** and the seatback ***A***, insert the ignition key in lock ***7*** and turn it;

– unclip the seatback ***A***, then slide it downwards and pull towards you;

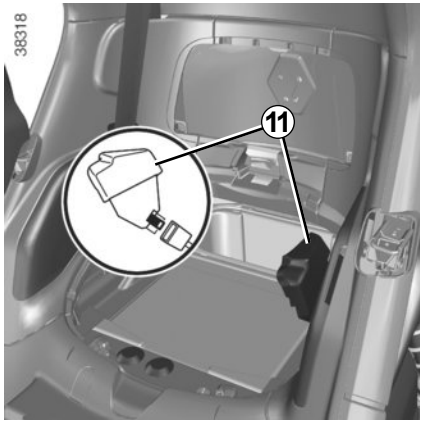


– move the seat cushion ***B*** in ***8***, then pull it upwards to unclip the base;

– push the seat cushion ***B*** and lift it (movement ***C***) to take it out from the runners ***9***;

– depending on the vehicle, insert the blanking cover ***11*** into the seatbelt housing. On vehicles fitted with it, the blanking cover ***11*** is located on the back of seatback ***A***;

Ensure that no hard, heavy or pointed objects are placed in the “open” storage compartments in such a way that they may fall onto passengers during sudden turning, braking or in the event of an accident.

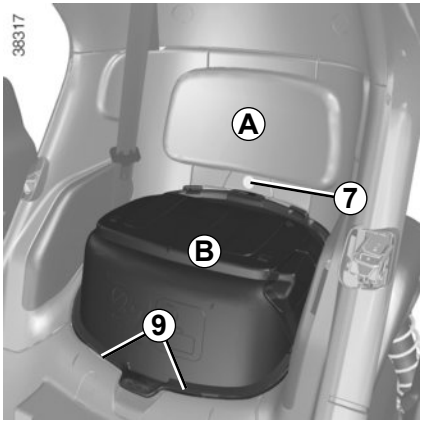


– turn the seat ***B***;
– insert the seat ***B*** into the runners ***9***;
– correctly position the seat ***B***;
– clip the seatback ***A*** from top to bottom;
– lock the seat cushion ***B*** and the seatback ***A*** using lock ***7***.

Maximum load allowed in the rear storage space: 10 kg, evenly distributed.

**Driver's responsibility**

Never use the storage space as a booster seat for a person or pet. Otherwise, this could place your child or pet in danger, or endanger the driver, in the event of hard braking or impact.

Risk of death or serious injury.

**Driver's responsibility**

Do not place any objects in the storage space if this space is not secured using the specific accessory for your vehicle.

Please see an authorised dealer.

Risk of serious injury when braking sharply or in heavy impacts.

# Section 4: Maintenance

Levels . . . . . 4.2
Brake fluid . . . . . 4.2
windscreen washer reservoir . . . . . 4.3
12 volt battery . . . . . 4.4
Bodywork maintenance . . . . . 4.6
Interior trim maintenance . . . . . 4.8

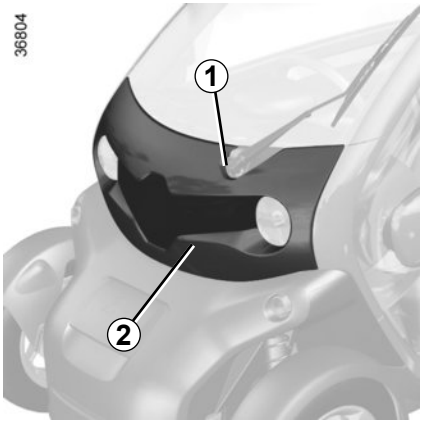


## Brake fluid level

The level control should be read with the vehicle on level ground. This should be checked frequently, and immediately if you notice even the slightest loss in braking efficiency.

### Accessing the brake fluid reservoir

Unclip the upper bar ***2*** of the bonnet before moving your hand in ***1***.

### Topping up

After any operation on the hydraulic circuit, a specialist must replace the fluid. Only use fluids approved by our Technical Department (and taken from a sealed container).

### Replacement intervals

Refer to the Maintenance Document for your vehicle.

Consult your approved dealer at once if you notice an abnormal or repeated drop in any of the fluid levels.

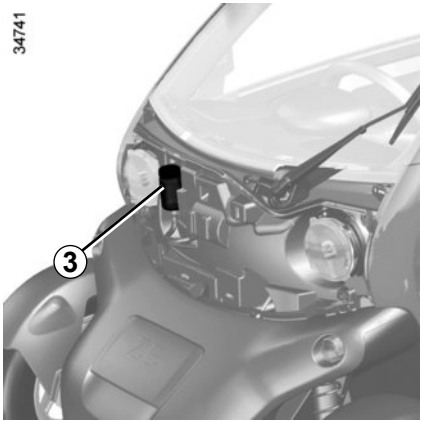


**Level *3***

It is normal for the level to drop as the linings become worn, but it should never drop below the **MIN** line.
If you wish to check the disc wear yourself, you should obtain the document explaining the checking procedure from our network or from the manufacturer's website.

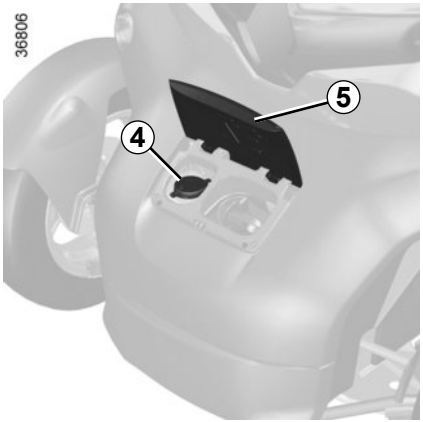


## Windscreen washer reservoir

### Topping up

Open flap ***5***.

Open cap ***4*** and fill until you see the liquid. Then close the cap.

### Liquid

Screen wash product (product with antifreeze in winter).

### Jet

Use a pointed tool to adjust the height of the windscreen washer jets.

# 12V BATTERY (1/2)

The secondary battery is a 12 V battery: this supplies the energy required to operate vehicle equipment (lights, windscreen wipers, audio system, etc) and certain safety systems, such as ABS.

For your safety and the proper operation of the vehicle's electrical equipment (lights, windscreen wipers, etc.), any work on the secondary 12V battery (removal, disconnection, etc.) **must** be carried out by a specialist.
Risk of serious burns or electric shocks.
Respect **categorically** the replacement intervals (without exceeding them) as stated in the maintenance document.
The battery is a specific type. Please ensure it is replaced with the same type.
Contact an Authorised Dealer.

26913

28705

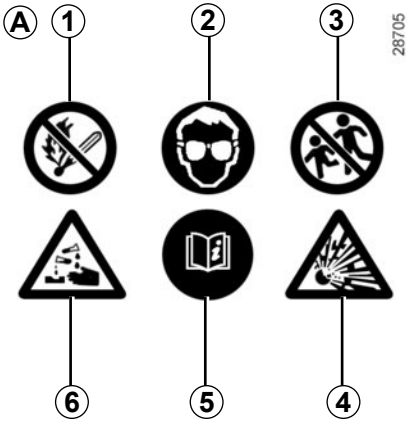


**Label *A***

Observe the indications on the battery:
- ***1*** naked flames and smoking are forbidden;
- ***2*** eye protection required;
- ***3*** keep away from children;
- ***4*** explosive materials;
- ***5*** please consult the driver's handbook;
- ***6*** corrosive materials.

## Recharging the 12 volt battery

It is difficult to access the 12 volt battery. It is therefore recommended that you attach the vehicle plug to a power source: energy is supplied to both the 12 volt battery and the traction battery at the same time.
Please refer to the information on “Electric vehicle: charging” in Section 1.
Do not forget to switch off the ignition when replacing the traction battery.

### Immobilising the vehicle for an extended period of time

Before immobilisation, you should make sure that:
– the ignition is switched off;
– the side lights and hazard warning lights are switched off;
– the traction battery is fully charged.

After lengthy immobilisation, it is normal to find the traction battery charge level down. In this case, recharge it (see “Electric vehicle: charging” in Section 1).

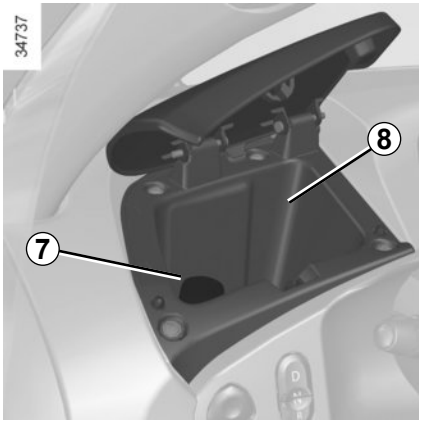


## Connecting a charger to the accessories socket

**Only use a charger that is compatible with a nominal voltage of 14.4 volts and a current limited to 5 amps.**

With the ignition switched on, plug the power supply into the accessories socket ***7*** located in the storage compartment ***8***. Please consult an authorised dealer.

Only connect accessories with a maximum power of 65 watts. When several accessory sockets are used at the same time, the total power of the connected accessories must not exceed 65 watts.
**Fire hazard.**

Do not use booster cables to start the vehicle.
Risk of serious injury.

A well-maintained vehicle will last longer. It is therefore recommended to maintain the exterior of the vehicle regularly.
Some parts may look different over time (e.g.: bleaching, etc.)

## Protection against the effects of corrosive agents

Although your vehicle has been treated with very effective anti-corrosion products, it nevertheless remains subject to the effects of:

- **corrosives in the atmosphere**
  - atmospheric pollution (built-up and industrial areas),
  - saline atmospheres (near the sea, particularly in hot weather),
  - seasonal and damp weather conditions, (e.g. road salt in winter, water from road cleaners, etc.).
- **abrasives**
  Wind-borne dust and sand, mud, road grit thrown up by other vehicles, etc.
- **minor impacts**

You should take a minimum number of precautions in order to safeguard your vehicle against such risks and not to lose the benefit of your vehicle's anti-corrosion protection.

## What you should not do

- Degrease or clean mechanical components, underneath the body, parts with hinges (e.g. inside the fuel tank flap) and painted plastic external fittings using high-pressure cleaning equipment or by spraying on products not approved by our Technical Department. If adequate precautions are not taken, this could give rise to corrosion, damage to paintwork or operating faults.
- Wash the vehicle in bright sunlight or freezing temperatures.
- Scrape off mud or dirt without pre-wetting.
- Allow dirt to accumulate.
- Allow rust to form following minor impacts.
- Use solvents not approved by our Technical Department to remove stains as this could damage the paintwork.
- Drive frequently in snow or muddy conditions without washing the vehicle, particularly under the wheel arches and body.

**Washing the vehicle**

Never wash the vehicle with a roller or a high-pressure spray, and under no circumstances when charging.
This risks damaging the electrical circuit.

## You should

- Observe the vehicle stopping distances when driving on gravelled surfaces to prevent paint damage.
- Quickly repair, or have repaired, areas where the paint has been damaged, to prevent corrosion spreading.
- Remember to visit the body shop periodically if your vehicle has an anti-corrosion warranty. Refer to the Maintenance Document.
- Respect local regulations about washing vehicles (e.g. do not wash your vehicle on a public highway).
- Spray mechanical components, hinges, etc. with products approved by our Technical Department to protect them after they have been cleaned.
- Wash your car frequently, **with the engine off**, with cleaning products recommended by the manufacturer (never use abrasive products). Rinse thoroughly beforehand with a jet:
  - spots of tree resin and industrial grime;
  - **bird droppings**, which cause a chemical reaction with the paint that **rapidly discolours paintwork and may even cause the paint to peel off;**

    wash the vehicle **immediately** to remove these marks since it is impossible to remove them by polishing;
  - salt, particularly in the wheel arches and underneath the body after driving in areas where the roads have been gritted;
  - mud in the wheel arches and underneath the body which forms damp patches.

## Cleaning the roof

Use a soft cloth or cotton wool.
Soak it lightly with a protective agent recommended by our Technical Department.
Spread the protective agent carefully in circular movements using a soft or a cotton cloth.

We have selected special products to care for your vehicle and you can obtain these from the manufacturer's accessory outlets.

# INTERIOR TRIM MAINTENANCE (1/2)

A well-maintained vehicle will last longer. It is therefore recommended to maintain the interior of the vehicle regularly.

A stain should always be dealt with swiftly.

Whatever type of stain is on the trim, use **cold** (or warm) **soapy water with natural soap**.

**Detergents (washing-up liquid, powdered products, alcohol-based products) should not be used.**

Use a soft cloth.

Rinse and wipe up excess water.

## Instrument panel glass and door deflector

(e.g.: instrument panel, clock, etc.)

Use a soft cloth (or cotton wool).
If this does not clean them properly, use a soft cloth (or cotton wool) slightly moistened with soapy water and then wipe clean with another soft damp cloth or cotton wool.
Finally, **carefully** dry off with a soft dry cloth.

**Do not use products containing alcohol and/or spray fluids on the area.**

## Seat belts

These must be kept clean.
Use products selected by our Technical Department (Approved outlets) or warm, soapy water and a sponge and wipe with a dry cloth.
**Detergents or dyes must not be used under any circumstances.**

For further recommendations for maintaining the interior, and/or for any unsatisfactory results, please see an authorised dealer.

## Removal/replacing removable equipment originally fitted in the vehicle

If you have to remove detachable equipment to clean the passenger compartment, make sure you reinstall it properly and attach them using the original parts.

With the vehicle stationary, ensure that nothing will impede driving (anything obstructing the pedals, etc.).

Washing with a water jet is permitted if you do not wash higher than the driver's seat.

High-pressure equipment and sprays may not be used inside the passenger compartment. This could impair the correct functioning of the electrical or electronic components in the vehicle, or have other detrimental effects.

# Section 5: Practical advice

Tyres (tyre and wheel safety, use in winter) . . . . . 5.2
Headlights (changing bulbs) . . . . . 5.6
Rear lights (changing bulbs) . . . . . 5.8
Fuses. . . . . 5.10
Accessories . . . . . 5.12
Wipers (replacing blades) . . . . . 5.13
Towing/breakdown. . . . . 5.14
Operating faults . . . . . 5.17

# TYRES (1/4)

The tyres are the only contact between the vehicle and the road, so it is essential to keep them in good condition.
You must make sure that your tyres conform to local road traffic regulations.

For your safety, please respect the speed limit.

When they need to be replaced, only tyres of the same make, size, type and profile should be used on a single axle.

**They must: either have a load capacity and a speed capacity at least equal to the original tyres, or correspond to those recommended by your authorised dealer.**

Failure to heed these instructions could endanger your safety and affect your vehicle's roadworthiness.

**Risk of loss of control of the vehicle.**

Incidents which occur when driving, such as striking the kerb, may damage the tyres and wheel rims, and could also lead to misalignment of the front or rear axle geometry. In this case, have the condition of these checked by an approved dealer.

## Maintaining the tyres

The tyres must be in good condition and the tread form must have sufficient depth; tyres approved by our Technical Department have wear warning strips ***1*** that are **indicators moulded into the tread at several points**.
When the tread has worn down to the wear warning strips, **these strips will become visible:** it is **then** necessary to replace your tyres because the tread rubber is now only **1.6 mm deep at most, resulting in poor road holding on wet roads**.
An overloaded vehicle, long journeys — particularly in very hot weather – or frequent driving on poorly surfaced minor roads will lead to more rapid tyre wear and affect safety.

The front and rear wheels have different dimensions. For safety reasons, it is not permitted to switch the front wheels with the rear wheels.

## Tyre pressures

Respect the tyre pressures, checking them at least once a month and before any long journeys.

Pressures should be checked when the tyres are cold; ignore higher pressures which may be reached in hot weather or following a fast journey.

**Incorrect tyre pressures** lead to abnormal tyre wear and unusually hot running. These are factors which may seriously affect safety and lead to:

– poor road holding,

– risk of bursting or tread separation.

The pressure depends on the load and the speed of use. Adjust the pressure based on the user conditions.

If tyre pressures cannot be checked when the tyres are **cold,** the normal pressures must be increased by **0.2** to **0.3** bar (or **3 PSI**).

**Never deflate a hot tyre.**

## Use in winter

The use of snow or winter tyres significantly reduces the vehicle range.

Please be aware that a poorly tightened or missing valve cap can make the tyres less airtight and lead to pressure loss.

Always use valve caps identical to those fitted originally and tighten them fully.

**Snow or Winter tyres**

We would recommend that these be fitted to all **four wheels** to ensure that your vehicle retains maximum adhesion.

**Warning**: These tyres sometimes have a specific direction of rotation and a maximum speed index which may be lower than the maximum speed of your vehicle.

You **must** use tyres made by the same manufacturer, with the same dimensions, type and structure.

**Chains**

For safety reasons, the use of chains is strictly forbidden.

In all cases, we would recommend that you contact an approved dealer who will be able to advise you on the choice of equipment which is most suitable for your vehicle.

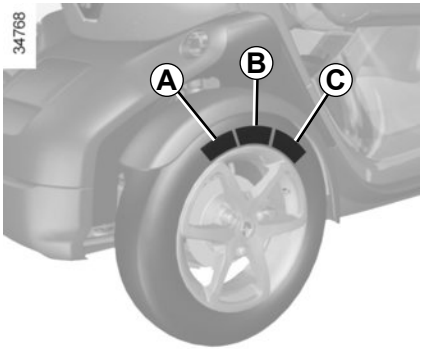


## Fitting new tyres

Due to the special design of this vehicle, please bear in mind the tyre specifications as indicated:

***A*** = Dimension, type and structure.

***B*** = Brand

***C*** = Commercial name

For safety reasons, this operation must be carried out by a specialist.

Fitting different tyres may change your vehicle as follows:

– It may mean that your vehicle no longer conforms to current regulations;

– It may change the way it handles when cornering;

– heavy steering.

The front and rear wheels have different dimensions. For safety reasons, it is not permitted to switch the front wheels with the rear wheels.

# TYRES (4/4)

| | Type of tyres | Type of “snow” tyres | Pressure (bar) |
|---|---|---|---|
| Front wheels | 125/80 R13 65M<br>**Conti.eContact** | 125/80 R13 65T TS800<br>**ContiWinterContact** | 2,3 |
| Rear wheels | 145/80 R13 75M<br>**Conti.eContact** | 145/80 R13 75T TS800<br>**ContiWinterContact** | 2,0 |

When they need to be replaced, only tyres of the same make, size, type and profile should be used.

**Tyres fitted to the vehicle should either be identical to those fitted originally or conform to those recommended by your authorised dealer.**

For safety reasons, the use of tyres other than those recommended by the manufacturer is prohibited. Failure to respect this recommendation may adversely affect stability, behaviour, braking or the play between the bodywork and the tyres... Some of these effects may lead to the loss of control of the vehicle under certain driving conditions, and lead to an accident and serious injury.

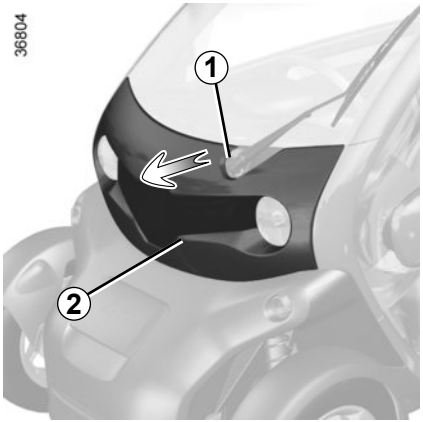


## Front lights

– Unclip upper bar ***2*** of the bonnet before introducing your hand in ***1***;
– unscrew ***3*** the front lights using standard tools;
– pull the headlight towards you as far as it will go.

**Note:** the headlight cannot be pulled out completely. Avoid pulling too hard, as this could damage the connections.

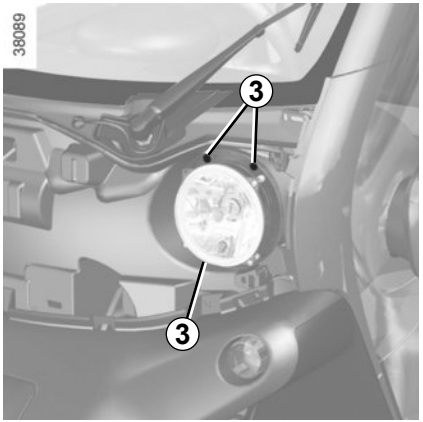


– Turn bulb a quarter of a turn ***4***;
– and/or undo the bulb ***5***, then turn the bulb holder a quarter turn.

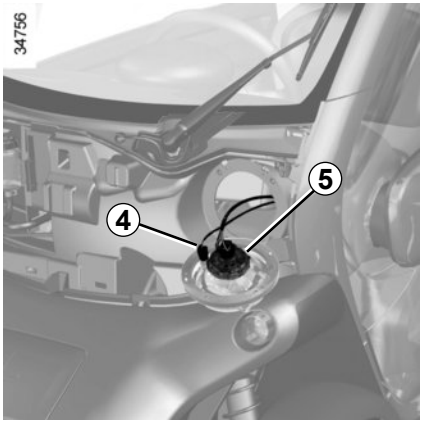


**Type of bulbs**

***4*** **Side light**
Bulb type: **W5W**.

***5*** **Dipped beam/main beam headlights**
Bulb type: **H4**.

The bulbs are under pressure and can break when replaced.

Risk of injury.

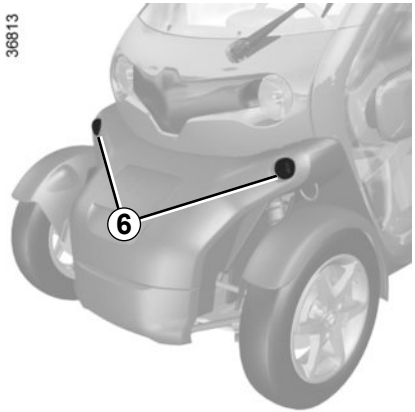


## Direction indicator lights *6*

Please contact an authorised dealer.

## Cleaning the headlights

Use a soft cloth. If this does not clean it properly, moisten the cloth with soapy water then rinse off.

Finally, **carefully** dry off with a soft dry cloth.

**Cleaning products containing alcohol must not be used under any circumstances.**

To comply with local legislation, or as a precaution, you can obtain an emergency kit containing a set of spare bulbs and fuses from an approved dealer.

Any operation on (or modification to) the electrical system must be performed by an authorised dealer since incorrect connections could damage the electrical equipment (wiring, components). In addition, your dealer has available all the parts necessary for fitting electrical components.

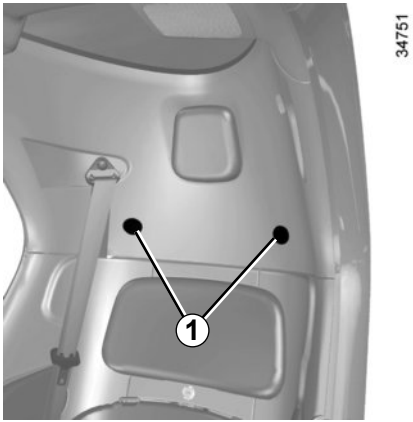


## Reversing/side and brake lights

From inside the vehicle:
– unclip covers ***1*** using a flat-blade screwdriver or similar;
– unscrew using a Torx tool.

From outside the vehicle:
– release the light unit by pulling it backwards;
– unscrew bulb holder ***2*** or ***3*** and replace the bulb.

**Note:** ensure that the cable is in place before inserting the light unit.

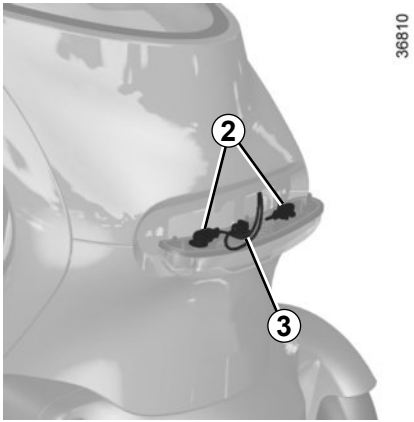


**Side light and brake light *2***

**Bulb type: P21/5W**.

**Reversing indicator light *3***

**Bulb type: PY21W**.

## Refitting

To refit, proceed in the reverse order, taking care not to damage the wiring.

The bulbs are under pressure and can break when replaced.

Risk of injury.

# REAR LIGHTS: changing bulbs (2/2)

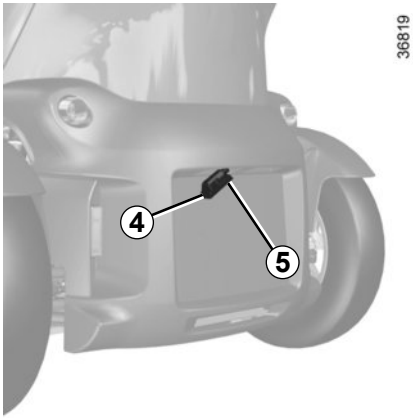


## Number plate lights *5*

– Unclip light ***5*** by pressing tab ***4***;

– remove the light cover to gain access to the bulb.

**Bulb type: W5W.**

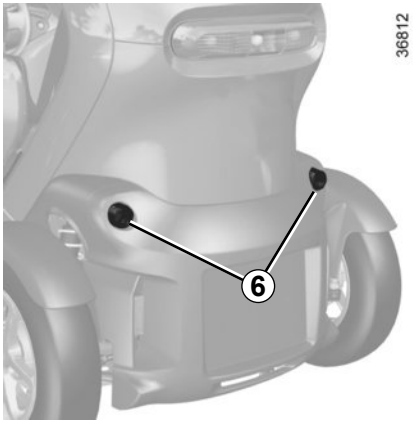


## Direction indicators *6*

Please see an authorised dealer.

The bulbs are under pressure and can break when replaced.

Risk of injury.

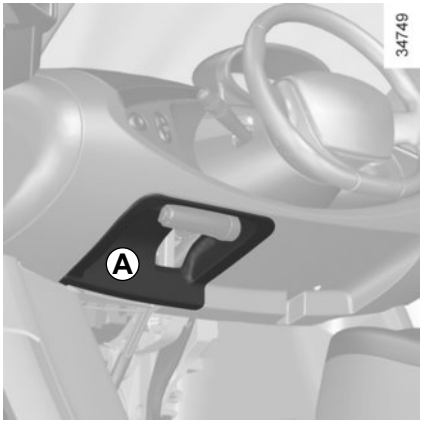


## Fuse box

If any electrical component does not work, check the condition of the fuses.

Apply the handbrake and unclip flap ***A***.

In accordance with local legislation or as a precautionary measure:

Obtain an emergency kit containing a set of spare bulbs and fuses from an approved Dealer.

Check the fuse in question and **replace it,** if necessary, **by a fuse of the same rating**.

If a fuse is fitted where the rating is too high, it may cause the electrical circuit to overheat (risk of fire) in the event of an item of equipment using an excessive amount of current.

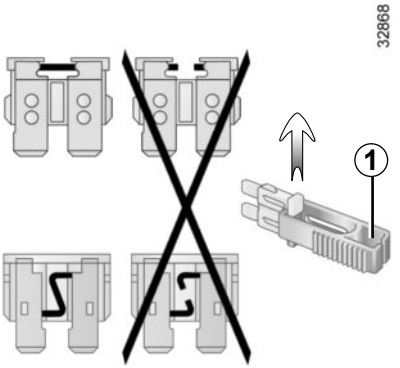


## Tweezers *1*

Remove the fuse. Use the tweezers if the vehicle is equipped with them ***1***.

To remove the fuse from the tweezers, slide the fuse to the side.

It is not advisable to use the free fuse locations.

To repair fuses, use the fuse location marking on the back of the flap ***A***.

# FUSES (2/2)

**Allocation of fuses (the presence of fuses DEPENDS ON THE EQUIPMENT LEVEL OF THE VEHICLE)**

| Symbol | Allocation |
|---|---|
| | Traction battery |
| | Inverter |
| | Left-hand dipped beam headlight |
| | Charger |
| | Light stalk |
| | Accessories socket |
| ELEC | Windscreen de-icing |
| | Power and supply connection |
| | Right-hand dipped beam headlight |
| | Horn |
| | Screen washer/wiper |
| | Braking system |

| Symbol | Allocation |
|---|---|
| | Instrument panel |
| STOP | Brake lights |
| | Side light, left rear light |
| | Front left headlight |
| | Airbag |
| UCH | Passenger compartment ECU |
| | Diagnostics/Radio socket |
| | Horn |
| | Side light, right rear light |
| | Front right headlight |

**Electrical and electronic accessories**
Before installing this type of accessory (particularly for transmitters/receivers: frequency bandwidth, power level, position of the aerial, etc.), make sure it is compatible with your vehicle. You can get advice from an authorised dealer.
Only connect accessories with a maximum power of 65 watts. **Fire hazard.** When several accessory sockets are used at the same time, the total power of the connected accessories must not exceed 65 watts.
No work may be carried out on the vehicle's electrical or radio circuits, except by approved Dealers: an incorrectly connected system may result in damage being caused to the electrical equipment and/or the components connected to it.
If the vehicle is fitted with any aftermarket electrical equipment, make sure that the installation is correctly protected by a fuse. Establish the rating and position of this fuse.

**Using the diagnostic socket**
The use of electronic accessories on the diagnostic socket may cause serious disturbance to the vehicle's electronic systems. For your safety we recommend that you use only electronic accessories approved by the manufacturer, consult an Approved Dealer. **Serious accident risk**.

**Use of transmission/receiving devices (telephones, CB equipment etc.).**
Telephones and CB equipment with integrated aerials may cause interference to the electronic systems originally fitted to the vehicle: it is advisable only to use equipment with an external aerial. **Furthermore, we remind you of the need to conform to the legislation in force concerning the use of such equipment.**

**Fitting after-market accessories**
If you wish to install accessories on the vehicle: please contact an authorised dealer. Also, to ensure the correct operation of your vehicle, and to avoid any risk to your safety, we recommend that you use only accessories specifically designed for your vehicle, which are the only accessories for which the manufacturer will provide a warranty.
If you are using an anti-theft device, only attach it to the brake pedal.
**Obstructions to the driver**
Only use mats suitable for the vehicle, attached with the pre-fitted components, and check the fitting regularly. Do not lay one mat on top of another. **There is a risk of wedging the pedals.**

# WIPER BLADE

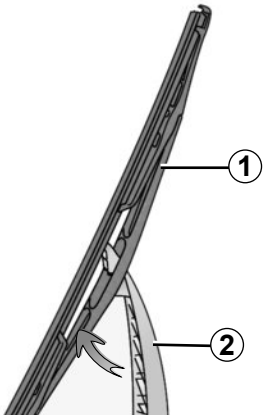


## Replacement

**With the ignition on and the engine stopped:**

– lift windscreen wiper arm ***2*** as far as it will go;

– pivot blade ***1*** until it is removed from its hinge.

**Refitting**

To refit the wiper blade, clip the blade onto its hinge. Make sure that the blade is correctly locked in position.

Check the condition of the wiper blades. How long they last depends on you:

– clean the blades and the windscreen regularly with soapy water;

– do not use them when the windscreen is dry;

– free them from the windscreen when they have not been used for a long time.

– In freezing weather, make sure that the wiper blades are not stuck by ice (to avoid the risk of the wiper motor overheating).

– Keep an eye on the condition of the blade.
Replace the wiper blades as soon as they begin to lose efficiency: approximately once a year.

When changing the blade, when it has been removed, do not let the wiper arm fall against the window: risk of breaking the window.

## Choice of breakdown service

**In the event of an energy fault**
In the event of a fully discharged traction battery, any type of towing is permitted: **towing on a flatbed truck** or **towing on the road** using the tow eye (please see following pages).

**All other cases**

**Only towing on a flatbed truck is permitted**.

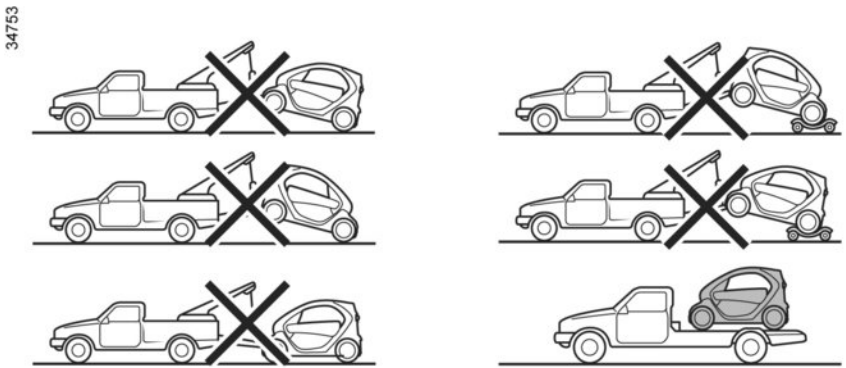


## Towing on a flatbed truck

Breakdown recovery **must** be performed on a flat surface under all circumstances except where the vehicle is immobilised following a full discharge of the traction battery. In the event of a total energy loss, please see the following pages.

Before repairs, insert the key in the ignition to unlock the steering column. Turn the key to position **M**.

The regulations in force for breakdown recovery must always be observed.

## In the event of an energy fault: towing

In the event of a fully discharged traction battery:

– warning light flashes on the instrument panel;
– battery warning light ***1*** on the instrument panel is empty.

It is possible to recover on a flatbed truck or tow the vehicle using the tow eye, following the instructions below.

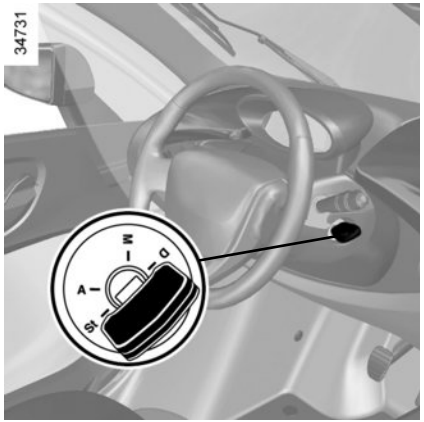


Before towing, insert the key in the switch to unlock the steering column. Turn key to position **M**.

The column is unlocked, the accessory functions are supplied: the vehicle lights can be used (hazard warning lights, brake lights etc.). The towed vehicle's lights must be switched on at night.

The speed specified by current legislation for towing must always be observed.

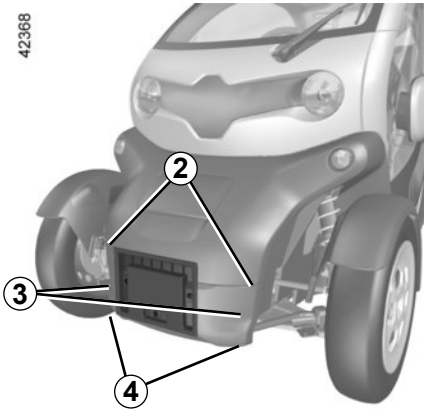


## Access to the towing point

Remove:

– the bolts ***4***;

– the plastic clips ***3***;

– the clips ***2*** located under the front bumper. Lift up the bonnet.

Take care not to allow anything to hit the 12 volt battery during towing.

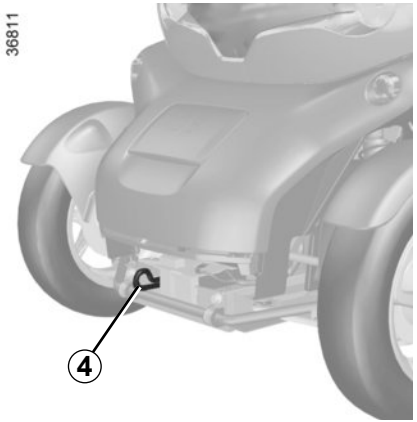


**Only use the front and rear towing points *4*.**

This towing point may only be used for towing: never use it for lifting the vehicle directly or indirectly.

Do not remove the key from the ignition when the vehicle is being towed.

# OPERATING FAULTS (1/3)

**The following advice will enable you to carry out quick, temporary repairs. For safety reasons you should always contact an approved dealer as soon as possible.**

| FAULTS | POSSIBLE CAUSES | WHAT TO DO |
|---|---|---|
| Impossible to charge the traction battery. | No electrical current in domestic sockets or poor connection of cable to domestic socket. | Check your installation (circuit breaker, programmer, etc.).<br>Check the connections (power socket, etc.). Please refer to the information on “Electric vehicle: charging” in Section 1. |
| | The outdoor temperature is extremely low. | Recharge your vehicle in a more suitable environment. Please refer to the information on “Electric vehicle: charging” in Section 1. |
| | The cord is defective. | Please see an authorised dealer to replace it. |
| The steering column remains locked. | Steering wheel locked. | Move the steering wheel while pressing the engine start button (refer to Section 2 “Starting the engine”). |
| Vibrations. | Tyres incorrectly inflated or damaged. | Check the tyre pressures. If this is not the problem, have them checked by an approved Dealer. |
| The engine performance is limited. | The outdoor temperature is extremely high. | Opt for a calmer driving style. |
| | The traction battery reserve has been reached. | Recharge the traction battery as soon as possible. Please refer to the information on “Electric vehicle: charging” in Section 1. |
| The vehicle will not start. | The charging flap is open or not properly closed. | Check that the charging flap is correctly locked. In other cases, contact an authorised dealer as soon as possible. |

# OPERATING FAULTS (2/3)

| Electrical equipment | | POSSIBLE CAUSES | ACTION REQUIRED |
|---|---|---|---|
| The wipers do not work. | | Wiper blade stuck. | Free the blade before using the wipers. |
| | | Broken windscreen wiper fuse. | Consult an approved dealer. |
| | | Motor fault. | Consult an approved dealer. |
| The wiper does not stop. | | Faulty electrical controls. | Consult an approved dealer. |
| Direction indicators flashing more quickly. | | Blown bulb. | Replace the bulb. |
| The indicators are not working. | On one side only: | – blown bulb,<br>– faulty earth connection. | Replace the bulb. |
| | On both sides: | – fuse blown, | Replace it. |
| | | – faulty flasher unit. | Needs replacing: please see an authorised dealer. |

# OPERATING FAULTS (3/3)

| Electrical equipment | | POSSIBLE CAUSES | ACTION REQUIRED |
|---|---|---|---|
| The headlights are not working. | Only one: | – blown bulb, | Replace the bulb. |
| | | – disconnected wire or incorrectly-positioned connector, | Check and reconnect the wire or the connector. |
| | | – faulty earth connection. | See above. |
| | Both: | – if the circuit is fused. | Check and replace if necessary. |
| The headlights do not switch off. | | Faulty electrical controls. | Consult an approved dealer. |
| Traces of condensation in the lights. | | This is not a fault. The presence of traces of condensation in lights is a natural phenomenon linked to variations in temperature.<br>These traces soon disappear when the lights are switched on. | |

# Section 6: Technical specifications

Vehicle identification plates . . . . . 6.2
Engine identification plate . . . . . 6.3
Engine specification. . . . . 6.3
Weights . . . . . 6.4
Dimensions . . . . . 6.5
Replacement parts and repairs . . . . . 6.6
Service sheets . . . . . 6.7
Anticorrosion check . . . . . 6.13

# VEHICLE IDENTIFICATION PLATES

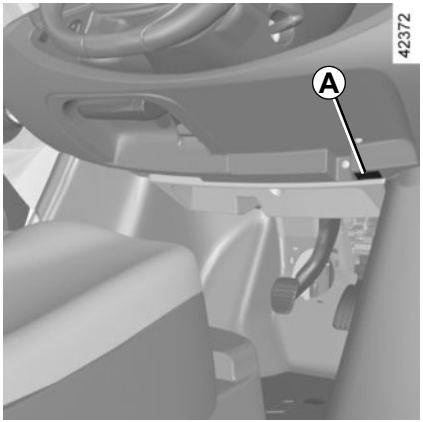


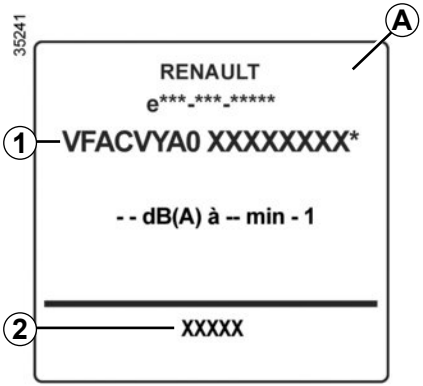


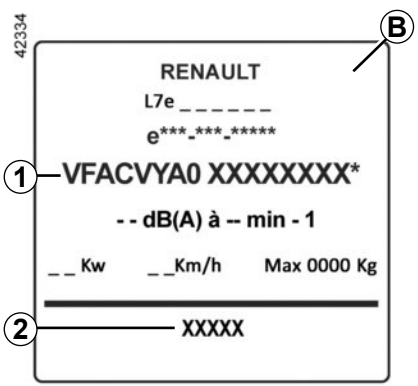


**The information shown on the vehicle identification plate should be quoted on all correspondence or orders.**

**Constructor plate *A* or *B***

***1*** Vehicle type and chassis number.
***2*** Paint reference.

# ENGINE IDENTIFICATION PLATE/ENGINE SPECIFICATION

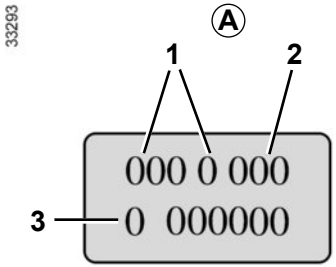


**Please quote the information on the engine plate or label *A* in all correspondence or orders.**
(Location varies depending on engine)

***1*** Engine type.
***2*** Engine suffix.
***3*** Engine number.

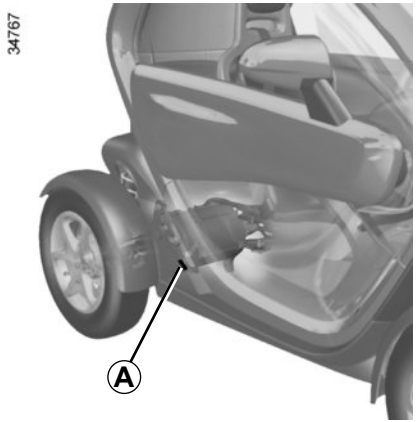


## Engine specification

Engine type ***1***: 3CG

# WEIGHTS (in kg)

**The weights shown are for a basic vehicle without options: they will vary depending on the equipment level of your vehicle. Contact an authorised dealer.**

| **Vehicle type** | Twizy 45 | Twizy |
|---|---|---|
| **Unladen weight excluding traction battery** | 347 | 375 |
| **Mass in Running Order (MRO)** | 446 | 474 |
| **Gross Vehicle Weight (GVW)** | 685 | 690 |
| **Braked Trailer Weight** | prohibited | |
| **Unbraked Trailer Weight** | prohibited | |
| **Maximum permissible load on roof** | prohibited | |

# DIMENSIONS (in metres)

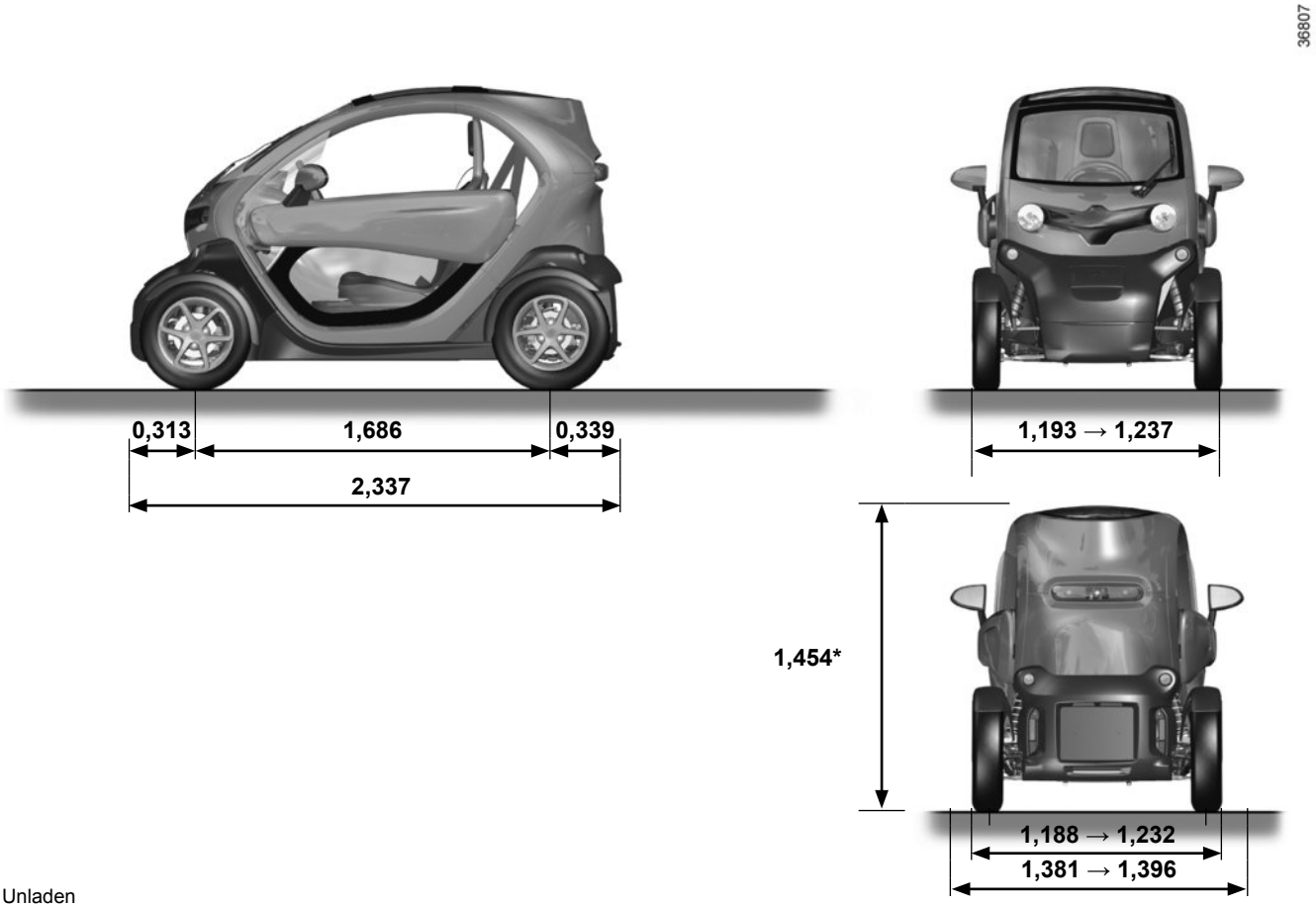


* Unladen

# REPLACEMENT PARTS AND REPAIRS

Original parts are based on strict specifications and are subject to highly-specialised tests. Therefore, they are of at least the same level of quality as the parts fitted originally.

If you always fit genuine replacement parts to your vehicle, you will ensure that it performs well. Furthermore, repairs carried out within the manufacturer's Network using original parts are guaranteed according to the conditions set out on the reverse of the repair order.

# SERVICE SHEETS (1/6)

**VIN:** .....

| Date: Miles (Km): | Invoice number: | Comments/miscellaneous |
|---|---|---|
| **Type of operation:**<br>Service □<br>..... □<br>**Anti-corrosion check:**<br>OK □ Not OK* □<br>*See specific page | **Stamp** | |

| Date: Miles (Km): | Invoice number: | Comments/miscellaneous |
|---|---|---|
| **Type of operation:**<br>Service □<br>..... □<br>**Anti-corrosion check:**<br>OK □ Not OK* □<br>*See specific page | **Stamp** | |

| Date: Miles (Km): | Invoice number: | Comments/miscellaneous |
|---|---|---|
| **Type of operation:**<br>Service □<br>..... □<br>**Anti-corrosion check:**<br>OK □ Not OK* □<br>*See specific page | **Stamp** | |

# SERVICE SHEETS (2/6)

**VIN:** .....

| Date: Miles (Km): Invoice number: | | Comments/miscellaneous |
|---|---|---|
| **Type of operation:**<br>Service □<br>..... □<br>**Anti-corrosion check:**<br>OK □ Not OK* □<br>*See specific page | **Stamp** | |

| Date: Miles (Km): Invoice number: | | Comments/miscellaneous |
|---|---|---|
| **Type of operation:**<br>Service □<br>..... □<br>**Anti-corrosion check:**<br>OK □ Not OK* □<br>*See specific page | **Stamp** | |

| Date: Miles (Km): Invoice number: | | Comments/miscellaneous |
|---|---|---|
| **Type of operation:**<br>Service □<br>..... □<br>**Anti-corrosion check:**<br>OK □ Not OK* □<br>*See specific page | **Stamp** | |

# SERVICE SHEETS (3/6)

**VIN:** .....

| Date: Miles (Km): Invoice number: | | Comments/miscellaneous |
|---|---|---|
| **Type of operation:**<br>Service □<br>..... □<br>**Anti-corrosion check:**<br>OK □ Not OK* □<br>*See specific page | **Stamp** | |

| Date: Miles (Km): Invoice number: | | Comments/miscellaneous |
|---|---|---|
| **Type of operation:**<br>Service □<br>..... □<br>**Anti-corrosion check:**<br>OK □ Not OK* □<br>*See specific page | **Stamp** | |

| Date: Miles (Km): Invoice number: | | Comments/miscellaneous |
|---|---|---|
| **Type of operation:**<br>Service □<br>..... □<br>**Anti-corrosion check:**<br>OK □ Not OK* □<br>*See specific page | **Stamp** | |

# SERVICE SHEETS (4/6)

**VIN:** .....

| Date: Miles (Km): Invoice number: | | Comments/miscellaneous |
|---|---|---|
| **Type of operation:**<br>Service □<br>..... □<br>**Anti-corrosion check:**<br>OK □ Not OK* □<br>*See specific page | **Stamp** | |

| Date: Miles (Km): Invoice number: | | Comments/miscellaneous |
|---|---|---|
| **Type of operation:**<br>Service □<br>..... □<br>**Anti-corrosion check:**<br>OK □ Not OK* □<br>*See specific page | **Stamp** | |

| Date: Miles (Km): Invoice number: | | Comments/miscellaneous |
|---|---|---|
| **Type of operation:**<br>Service □<br>..... □<br>**Anti-corrosion check:**<br>OK □ Not OK* □<br>*See specific page | **Stamp** | |

# SERVICE SHEETS (5/6)

**VIN:** .....

| Date: Miles (Km): Invoice number: | | Comments/miscellaneous |
|---|---|---|
| **Type of operation:**<br>Service □<br>..... □<br>**Anti-corrosion check:**<br>OK □ Not OK* □<br>*See specific page | **Stamp** | |

| Date: Miles (Km): Invoice number: | | Comments/miscellaneous |
|---|---|---|
| **Type of operation:**<br>Service □<br>..... □<br>**Anti-corrosion check:**<br>OK □ Not OK* □<br>*See specific page | **Stamp** | |

| Date: Miles (Km): Invoice number: | | Comments/miscellaneous |
|---|---|---|
| **Type of operation:**<br>Service □<br>..... □<br>**Anti-corrosion check:**<br>OK □ Not OK* □<br>*See specific page | **Stamp** | |

# SERVICE SHEETS (6/6)

**VIN:** .....

| Date: Miles (Km): Invoice number: | | Comments/miscellaneous |
|---|---|---|
| **Type of operation:**<br>Service □<br>..... □<br>**Anti-corrosion check:**<br>OK □ Not OK* □<br>*See specific page | **Stamp** | |

| Date: Miles (Km): Invoice number: | | Comments/miscellaneous |
|---|---|---|
| **Type of operation:**<br>Service □<br>..... □<br>**Anti-corrosion check:**<br>OK □ Not OK* □<br>*See specific page | **Stamp** | |

| Date: Miles (Km): Invoice number: | | Comments/miscellaneous |
|---|---|---|
| **Type of operation:**<br>Service □<br>..... □<br>**Anti-corrosion check:**<br>OK □ Not OK* □<br>*See specific page | **Stamp** | |

# ANTICORROSION CHECK (1/6)

If the continuation of the warranty is subject to repair, it is indicated below.

**VIN:** .....

| | | |
|---|---|---|
| Corrosion repair operation to be carried out:<br><br>Date of repair: | | **Stamp** |
| Repair to be carried out:<br><br>Date of repair: | | **Stamp** |
| Repair to be carried out:<br><br>Date of repair: | | **Stamp** |

# ANTICORROSION CHECK (2/6)

If the continuation of the warranty is subject to repair, it is indicated below.

**VIN:** .....

| | | |
|---|---|---|
| Corrosion repair operation to be carried out:<br><br>Date of repair: | | **Stamp** |
| Repair to be carried out:<br><br>Date of repair: | | **Stamp** |
| Repair to be carried out:<br><br>Date of repair: | | **Stamp** |

# ANTICORROSION CHECK (3/6)

If the continuation of the warranty is subject to repair, it is indicated below.

**VIN:** .....

| | | |
|---|---|---|
| Corrosion repair operation to be carried out:<br><br>Date of repair: | | **Stamp** |
| Repair to be carried out:<br><br>Date of repair: | | **Stamp** |
| Repair to be carried out:<br><br>Date of repair: | | **Stamp** |

# ANTICORROSION CHECK (4/6)

If the continuation of the warranty is subject to repair, it is indicated below.

**VIN:** .....

| | | |
|---|---|---|
| Corrosion repair operation to be carried out:<br><br>Date of repair: | | **Stamp** |
| Repair to be carried out:<br><br>Date of repair: | | **Stamp** |
| Repair to be carried out:<br><br>Date of repair: | | **Stamp** |

# ANTICORROSION CHECK (5/6)

If the continuation of the warranty is subject to repair, it is indicated below.

**VIN:** .....

| | | |
|---|---|---|
| Corrosion repair operation to be carried out:<br><br>Date of repair: | | **Stamp** |
| Repair to be carried out:<br><br>Date of repair: | | **Stamp** |
| Repair to be carried out:<br><br>Date of repair: | | **Stamp** |

# ANTICORROSION CHECK (6/6)

If the continuation of the warranty is subject to repair, it is indicated below.

**VIN:** .....

| | | |
|---|---|---|
| Corrosion repair operation to be carried out:<br><br>Date of repair: | | **Stamp** |
| Repair to be carried out:<br><br>Date of repair: | | **Stamp** |
| Repair to be carried out:<br><br>Date of repair: | | **Stamp** |

# ALPHABETICAL INDEX (1/3)


**A**

accessories ..... 5.12
additional methods of restraint ..... 1.20 → 1.23
    to the front seat belts ..... 1.20 → 1.22
    to the rear seat belts ..... 1.20 → 1.22
adjusting your driving position ..... 1.17
air bag ..... 1.20 → 1.23
anti-corrosion check ..... 6.13 → 6.18
anti-corrosion protection ..... 4.6
audible and visual signals ..... 1.38

**B**

battery ..... 1.33
12 volt battery
    maintenance ..... 4.4 – 4.5
12 volt battery ..... 4.4 – 4.5
brake fluid ..... 4.2
bulbs
    changing ..... 5.8 – 5.9

**C**

changing a bulb ..... 5.8 – 5.9
charge meter ..... 2.9
charging cord ..... 1.8 → 1.12
charging flap ..... 1.7
child booster seat ..... 1.24 – 1.25, 1.28 → 1.30
child restraint/seat ..... 1.24 – 1.25, 1.27 → 1.30
child safety ..... 1.24 – 1.25, 1.27 → 1.30
child seats ..... 1.24 – 1.25, 1.27 → 1.30
children ..... 1.13 – 1.14, 1.24 – 1.25
cleaning:
    inside the vehicle ..... 4.8 – 4.9
clock ..... 1.37
closing the doors ..... 1.14
control instruments ..... 1.32 → 1.36
controls ..... 1.31

**D**

dashboard ..... 1.31
de-icing
    windscreen ..... 3.2
demisting
    windscreen ..... 3.2
display ..... 1.32 → 1.36
doors ..... 1.14
driver's position ..... 1.31 → 1.34
driving ..... 2.2, 2.6 – 2.7
driving position
    settings ..... 1.17 → 1.19

**E**

electric vehicle
    vehicle range ..... 2.6 – 2.7
    charge ..... 1.8 → 1.12
    driving ..... 2.6 – 2.7
    important recommendations ..... 1.7, 1.9
electrical installation ..... 1.9
energy
    recovery ..... 2.9
    saving ..... 2.6
    charge meter (function) ..... 2.9
    consumption ..... 2.9
energy saving ..... 2.6 – 2.7
energy consumption ..... 1.35 – 1.36, 2.6 – 2.7
energy recovery ..... 2.6
engine immobiliser ..... 1.15
engine specifications ..... 6.3
environment ..... 2.8

**F**

faults
    operating faults ..... 5.17 → 5.19
fittings ..... 3.3 → 3.6

# ALPHABETICAL INDEX (2/3)


front lights
changing bulbs ..... 5.6 – 5.7
front seat adjustment ..... 1.16
front seats
adjustment ..... 1.16 → 1.19
with manual controls ..... 1.16
fuses ..... 5.10 – 5.11

**H**
handbrake ..... 2.4 – 2.5
hazard warning lights signal ..... 1.38
headlight flashers ..... 1.38
horn ..... 1.38
horn:
flash ..... 1.38
sounding the horn ..... 1.38

**I**
indicators ..... 1.38
indicators:
direction indicators ..... 1.38
instrument panel ..... 1.32 → 1.36
instrument panel ..... 1.32 → 1.34, 1.36, 1.40
instrument panel messages ..... 1.36
interior trim
maintenance ..... 4.8 – 4.9

**K**
keys ..... 1.13

**L**
lighting:
exterior ..... 1.40 – 1.41
instrument panel ..... 1.40
lights
changing bulbs ..... 5.6 – 5.7
front ..... 5.6 – 5.7
lights:
brake lights ..... 5.8
dipped beam headlights ..... 1.40, 5.6 – 5.7
direction indicator lights ..... 5.6 – 5.7, 5.9
direction indicators ..... 1.32, 1.38, 5.6 – 5.7
hazard warning ..... 1.38
main beam headlights ..... 1.32, 5.6 – 5.7
number plate lights ..... 5.9
reversing lights ..... 5.8
side lights ..... 1.40, 5.8
locking the doors ..... 1.14

**M**
maintenance:
bodywork ..... 4.6 – 4.7
interior trim ..... 4.8 – 4.9
mechanical ..... 6.7 → 6.12
methods of restraint in addition to the seat belts ... 1.20 → 1.23

**O**
opening the doors ..... 1.14
operating faults ..... 5.17 → 5.19

**P**
paintwork
maintenance ..... 4.6 – 4.7
pedestrian warning system ..... 1.39
practical advice ..... 2.6 – 2.7
pretensioners ..... 1.20 → 1.22

**R**
rear view mirrors ..... 1.31
replacement parts ..... 6.6

# ALPHABETICAL INDEX (3/3)


**S**

seat belt pretensioners ..... 1.20 → 1.22
    front seat belt ..... 1.20 → 1.22
seat belts ..... 1.17 → 1.23, 1.33
service sheets ..... 6.7 → 6.12
signals and lights ..... 1.40 – 1.41
speed control ..... 2.3
starting ..... 2.2
starting the engine ..... 2.2
stopping the engine ..... 2.2
storage compartment ..... 3.3 → 3.6
storage compartments ..... 3.3 → 3.6

**T**

tanks and reservoirs
    brake fluid ..... 4.2
tanks and reservoirs:
    windscreen washer ..... 4.3
technical specifications ..... 6.6
towing
    in the event of energy failure ..... 5.14 → 5.16
    breakdown ..... 5.14 → 5.16
towing hitch ..... 5.15 – 5.16
towing rings ..... 1.27
traction battery ..... 1.7
traction battery charge ..... 1.8 → 1.12
transporting children ..... 1.24 – 1.25, 1.27 → 1.30
tyre pressure ..... 5.3
tyres ..... 5.2 → 5.5

**V**

vehicle range ..... 2.6 – 2.7

**W**

warning buzzer ..... 1.14, 1.38
warning lights ..... 1.32 → 1.34
washing ..... 4.6 – 4.7
weights ..... 6.4
wheels (safety) ..... 5.2 → 5.5
windscreen washer ..... 1.42, 4.3
windscreen washer fluid ..... 4.2
windscreen washer/wiper ..... 1.42
wiper blades ..... 5.13
wipers ..... 1.42
    blades ..... 5.13

polyester 100%

Pour ranger les documents de votre nouveau véhicule Z.E., RENAULT a développé pour vous une pochette fabriquée à partir de matières recyclées et recyclables.

To store documents in your new vehicle Z.E., RENAULT has developed for you a pocket made from recycled and recyclable materials.

RENAULT S.A.S. SOCIÉTÉ PAR ACTIONS SIMPLIFIÉE AU CAPITAL DE 533 941 113 € / 13-15, QUAI LE GALLO
92100 BOULOGNE-BILLANCOURT R.C.S. NANTERRE 780 129 987 — SIRET 780 129 987 03591 / TÉL. : 0810 40 50 60
NU 913-10 – 99 91 019 57R – 10/2016 – Edition anglaise