2005 ENGINE

Engine Mechanical - RAV4

CO/HC

INSPECTION

HINT:

This check is used only to determine whether or not the idle CO/HC complies with specifications.

1. **INITIAL CONDITIONS**
   a. Engine at normal operating temperature
   b. Air cleaner installed
   c. Air pipes and hoses of air induction system connected
   d. All accessories switched OFF
   e. All vacuum lines properly connected
   f. SFI system wiring connectors fully plugged
   g. Ignition timing check correctly
   h. Transmission in neutral position
   i. Tachometer and CO/HC meter calibrated by hand
2. **START ENGINE**
3. **RACE ENGINE AT 2,500 RPM FOR APPROX. 180 SECONDS**
4. **INSERT CO/HC METER TESTING PROBE AT LEAST 40 cm (1.3 ft) INTO TAILPIPE DURING IDLING**

cardiagn.com

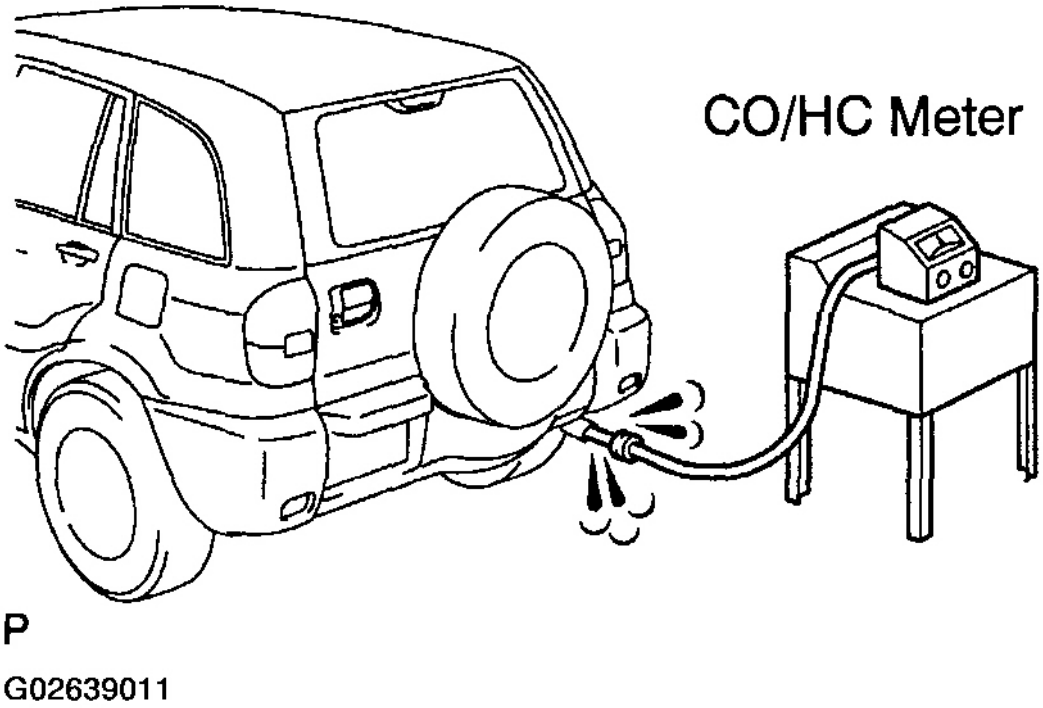

Fig. 1: Inserting CO/HC Meter Testing Probe Into Tailpipe
Courtesy of TOYOTA MOTOR SALES, U.S.A., INC.

5. **IMMEDIATELY CHECK CO/HC CONCENTRATION AT IDLE AND/OR 2,500 RPM**

   Complete the measuring within 3 minutes.

   HINT:

   When performing the 2 mode (2,500 RPM and idle) test, follow the measurement order prescribed by the applicable local regulations.

If the CO/HC concentration does not conform to specifications, perform troubleshooting in the order given below.

1. Check the A/F sensor operation (see **DTC P2195: OXYGEN (A/F) SENSOR SIGNAL STUCK LEAN (BANK 1 SENSOR 1)**).
2. See table for possible causes, and then inspect and correct the applicable causes if necessary.

cardiagn.com

CO	HC	Problems	Causes
Normal	High	Rough idle	1. Faulty ignitions: • Incorrect timing • Fouled, shorted or improperly gapped plugs 2. Incorrect valve clearance 3. Leaky intake and exhaust valves 4. Leaky cylinders
Low	High	Rough idle (Fluctuating HC reading)	1. Vacuum leaks: • PCV hoses • Intake manifold • Throttle body • IAC valve • Brake booster line 2. Lean mixture causing misfire
High	High	Rough idle (Black smoke from exhaust)	1. Restricted air filter 2. Plugged PCV valve 3. Faulty SFI system: • Faulty fuel pressure regulator • Defective ECT sensor • Faulty ECM • Faulty injectors • Faulty throttle position sensor • Faulty MAF meter

G02639012

Fig. 2: CO/HC Problem & Cause Table
Courtesy of TOYOTA MOTOR SALES, U.S.A., INC.

COMPRESSION

INSPECTION

HINT:

If there is lack of power, excessive oil consumption or poor fuel economy, measure the compression pressure.

1. **WARM UP AND STOP ENGINE**

   Allow the engine to warm up to normal operating temperature.

2. **REMOVE IGNITION COILS (See IGNITION COIL)**
3. **REMOVE SPARK PLUGS** , see (**IGNITION SYSTEM**)
4. **INSPECT CYLINDER COMPRESSION PRESSURE**
   a. Insert a compression gauge into the spark plug hole.
   b. Fully open the throttle.
   c. While cranking the engine, measure the compression pressure.

      HINT:

      Always use a fully charged battery to obtain engine speed of 250 RPM or more.

cardiagn.com

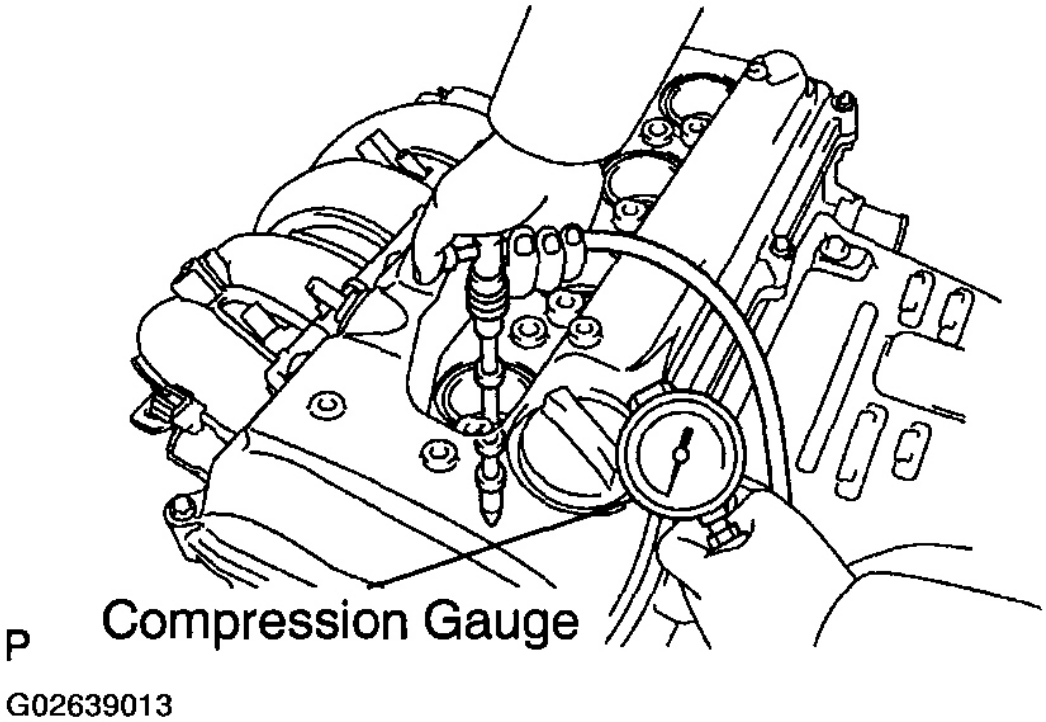

Fig. 3: Measuring Compression Pressure
Courtesy of TOYOTA MOTOR SALES, U.S.A., INC.

d. Repeat steps () through (c) for each cylinder.

NOTE: **This measurement must be done in as short a time as possible.**
Compression pressure
1.300 kPa (13.8 kgf/cm^2 , 196 psi)
Minimum pressure: 1.00 MPa (10 kgf/cm^2 , 142 psi)
Difference between each cylinder:
100 kPa (1.0 kgf/cm^2 , 14 psi)

e. If the cylinder compression pressure in one or more cylinders is low, pour a small amount of engine oil into the cylinder through the spark plug hole and repeat steps () through (c) for cylinders with low compression pressure.
   - If adding oil helps the compression, it is likely that the piston rings and/or cylinder bore are worn or damaged.
   - If pressure stays low, a valve may be sticking or seating is improper, or there may be leakage through the gasket.

5. **REINSTALL SPARK PLUGS** , see (**IGNITION SYSTEM**)

cardiagn.com

6. **REINSTALL IGNITION COILS (See IGNITION COIL)**

VALVE CLEARANCE

ADJUSTMENT

HINT:

Inspect and adjust the valve clearance when the engine is cold.

1. **REMOVE RH ENGINE UNDER COVER**
2. **REMOVE AIR CLEANER ASSEMBLY (See REMOVAL)**
3. **REMOVE CYLINDER HEAD COVER (See REMOVAL)**
4. **SET NO. 1 CYLINDER TO TDC/COMPRESSION**
   a. Turn the crankshaft pulley, and align its groove with timing mark 0 of the timing chain cover.

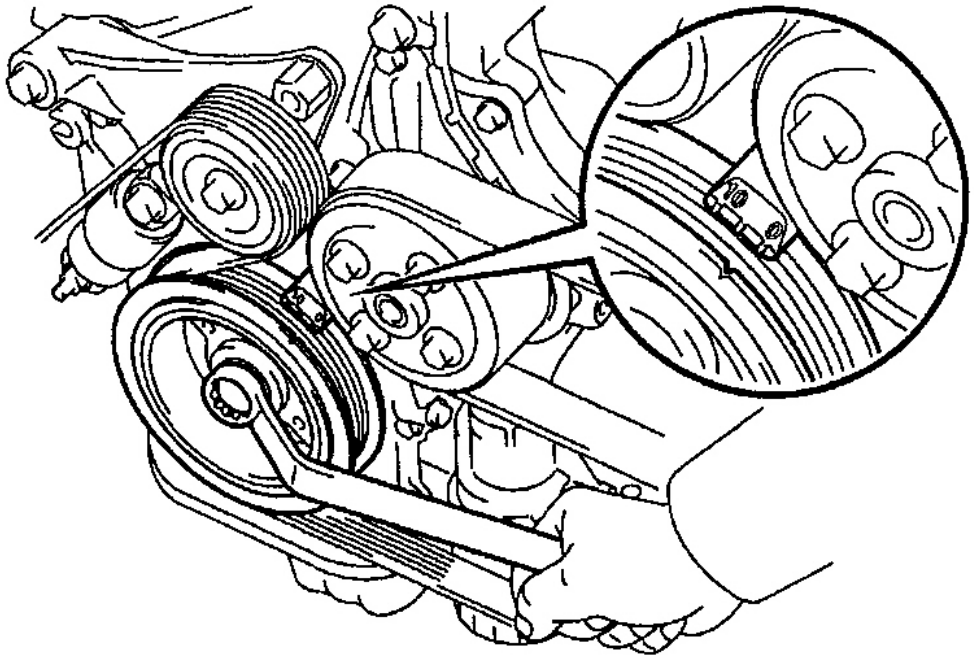

Fig. 4: Turning Crankshaft Pulley
Courtesy of TOYOTA MOTOR SALES, U.S.A., INC.

   b. Check that the timing marks of the camshaft timing sprocket and VVT timing sprocket are aligned

cardiagn.com

with the timing marks of the No. 1 and No. 2 bearing caps as shown in the illustration.

If not, turn the crankshaft 1 revolution (360°) and align the marks as above.

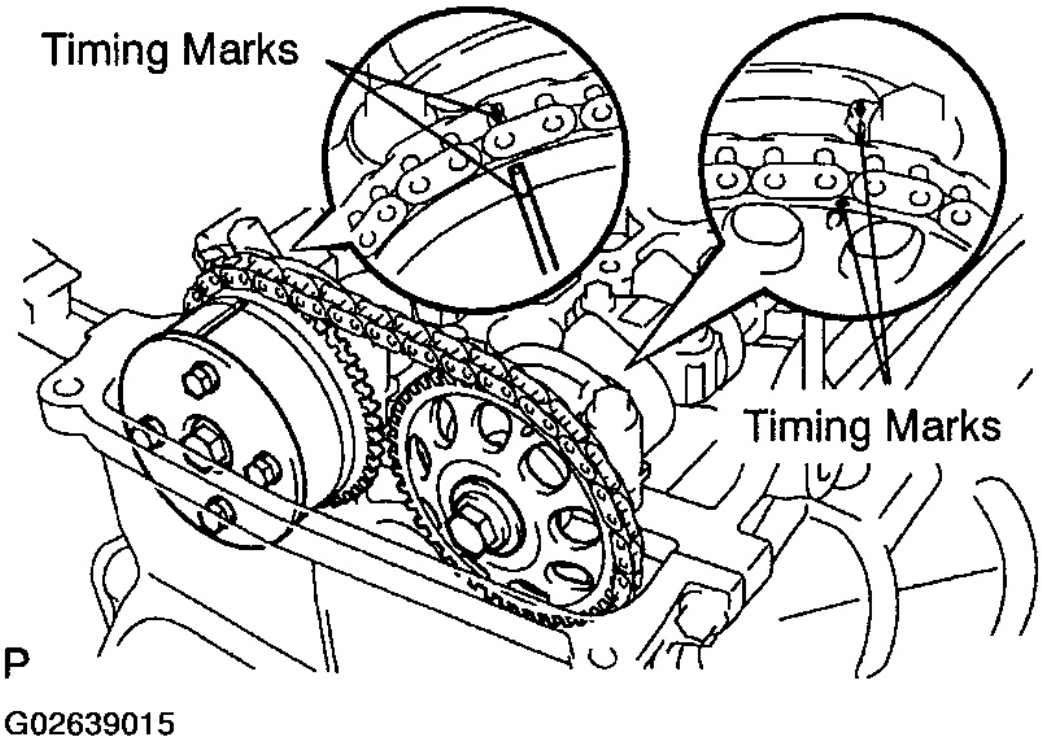

Fig. 5: Checking Timing Marks Of Camshaft Timing Sprocket And VVT Timing Sprocket
Courtesy of TOYOTA MOTOR SALES, U.S.A., INC.

5. **INSPECT VALVE CLEARANCE**
   a. Check only the valve indicated.
      1. Using a feeler gauge, measure the clearance between the valve lifter and camshaft.
      2. Record the out-of-specification valve clearance measurements. They will be used later to determine the required replacement adjusting valve lifter.

Valve clearance (Cold):

VALVE CLEARANCE (COLD)

Intake	0.19 to 0.29 mm (0.008 to 0.011 in.)
Exhaust	0.30 to 0.40 mm (0.012 to 0.016 in.)

cardiagn.com

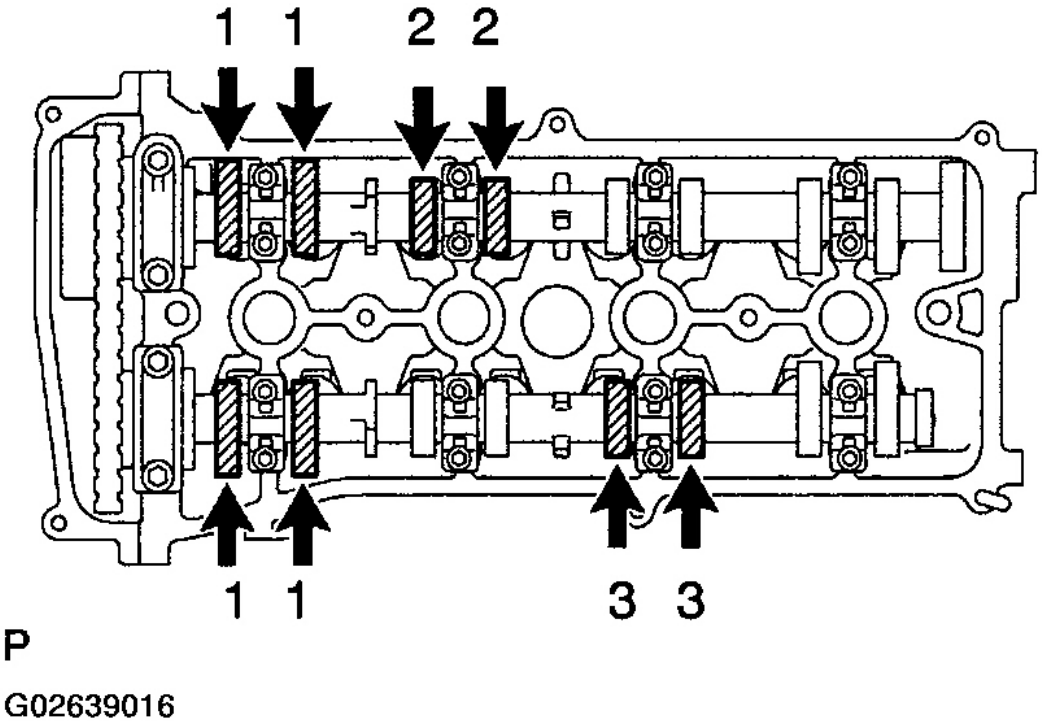

Fig. 6: Inspecting Valve Clearance (Check Only The Valves Indicated)
Courtesy of TOYOTA MOTOR SALES, U.S.A., INC.

b. Turn the crankshaft 1 revolution (360°) and align the mark as above (see step 4).
c. Check only the valves indicated as shown. Measure the valve clearance (see step (a)).

cardiagn.com

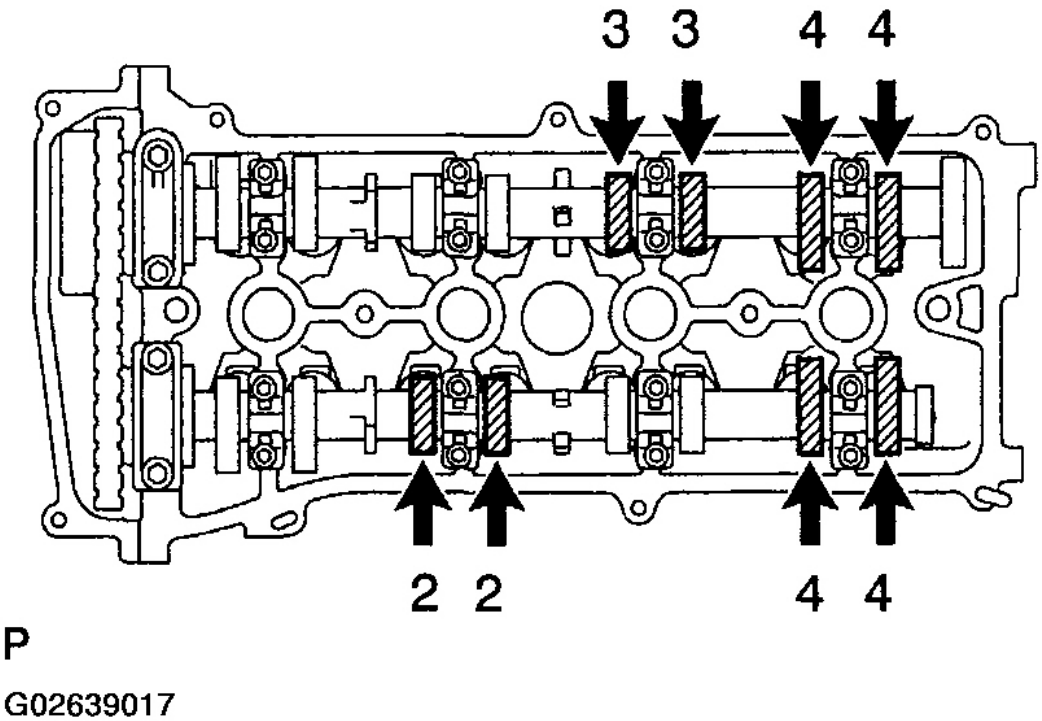

Fig. 7: Inspecting Valve Clearance (Check Only The Valves Indicated)
Courtesy of TOYOTA MOTOR SALES, U.S.A., INC.

6. **ADJUST VALVE CLEARANCE**
   a. Set the No. 1 cylinder to the TDC/compression (See step 4).
   b. Place matchmarks on the timing chain and camshaft timing sprockets.

cardiagn.com

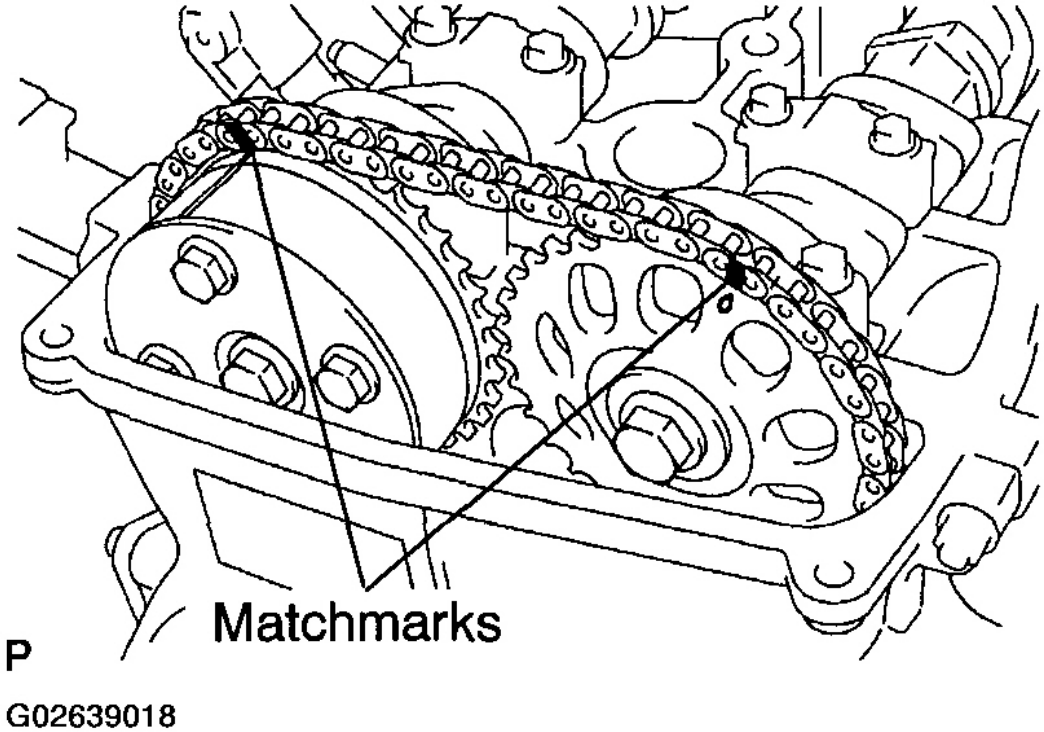

Fig. 8: Identifying Matchmarks
Courtesy of TOYOTA MOTOR SALES, U.S.A., INC.

c. Remove the 2 nuts, gasket and chain tensioner.
d. Hold the hexagonal head portion of the camshaft with a wrench, and loosen the camshaft timing sprocket bolt.

NOTE: Be careful not to damage the cylinder head and valve lifter with the wrench.

cardiagn.com

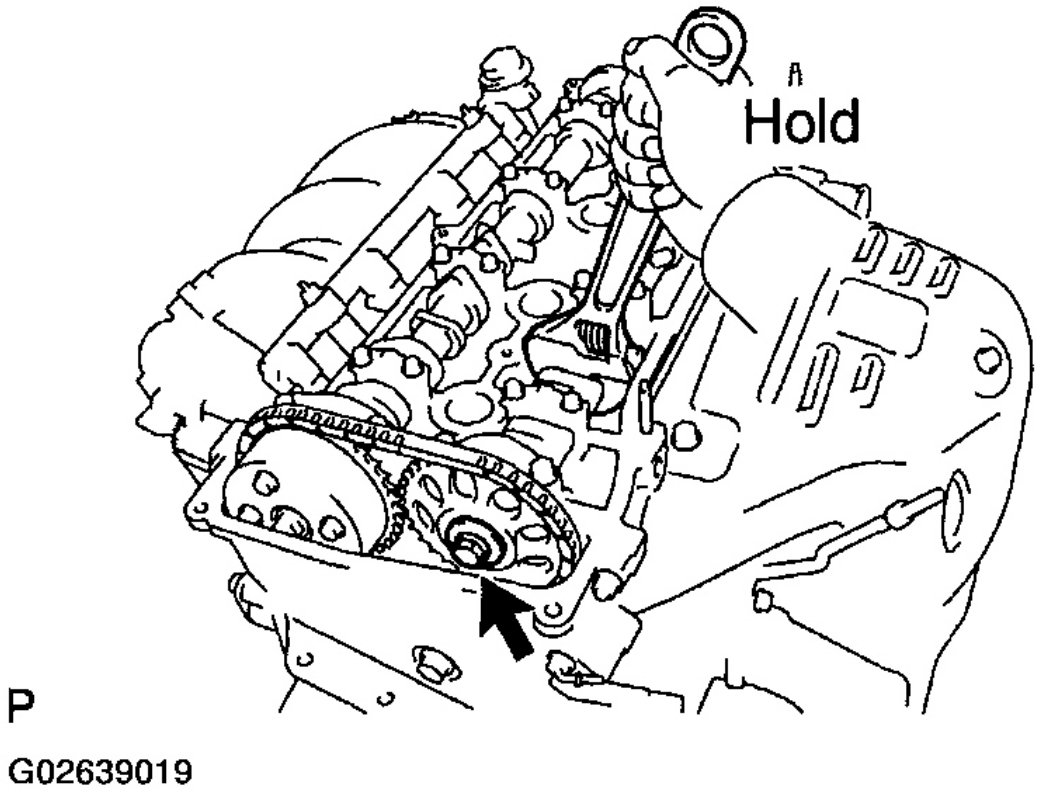

Fig. 9: Holding Hexagonal Head Portion Of Camshaft
Courtesy of TOYOTA MOTOR SALES, U.S.A., INC.

e. Uniformly loosen and remove the 10 camshaft bearing cap bolts in several passes, in the sequence shown.
f. Remove the 5 camshaft bearing caps.

cardiagn.com

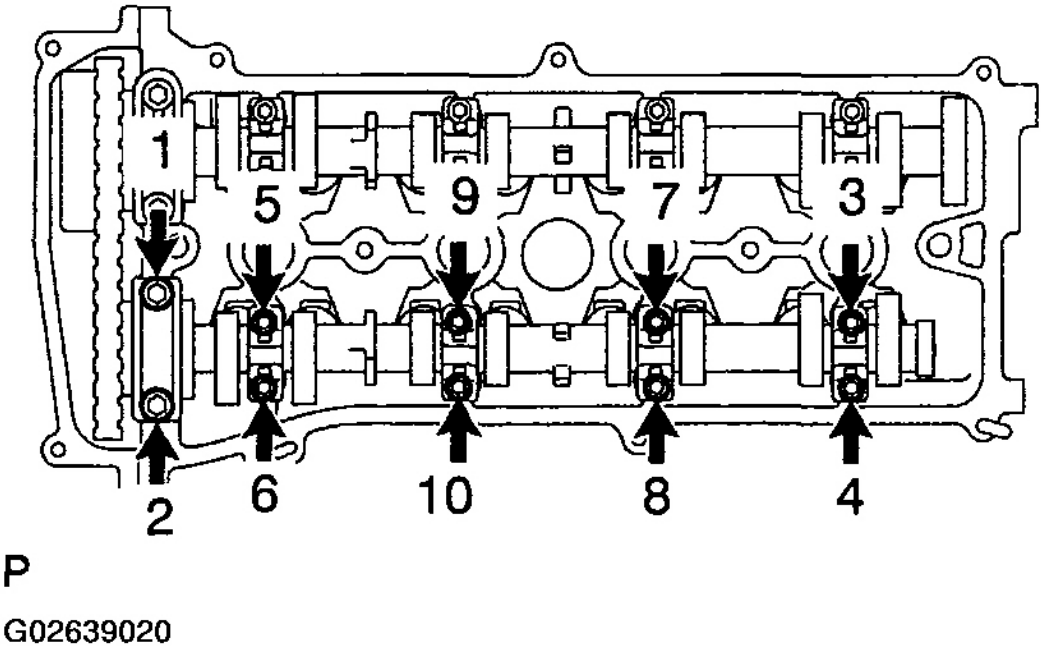

Fig. 10: Identifying Camshaft Bearing Cap Removing Sequence
Courtesy of TOYOTA MOTOR SALES, U.S.A., INC.

g. Raising the camshaft, remove the camshaft timing sprocket bolt.

cardiagn.com

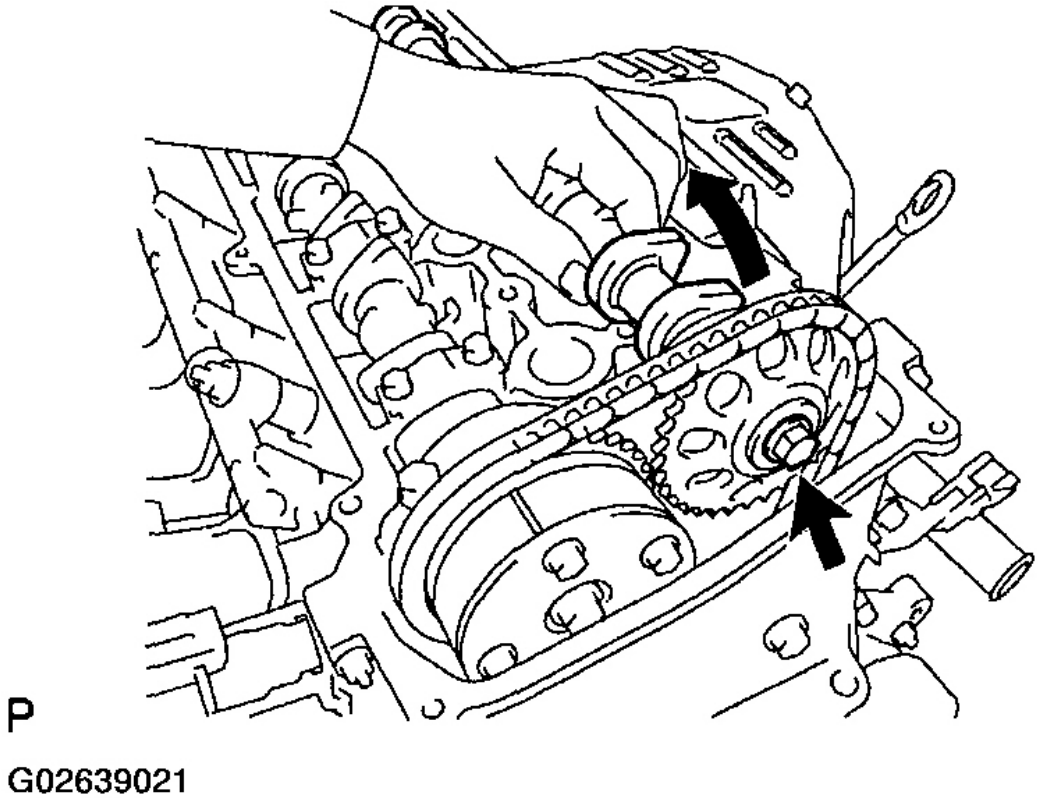

Fig. 11: Removing Camshaft Timing Sprocket Bolt
Courtesy of TOYOTA MOTOR SALES, U.S.A., INC.

h. Disconnect the camshaft timing sprocket together with the timing chain from the exhaust camshaft.
i. Remove the camshaft timing sprocket from the timing chain.
j. Uniformly loosen and remove the 10 camshaft bearing cap bolts in several passes, in the sequence shown.
k. Remove the 5 camshaft bearing caps.
l. Disconnect the timing chain from the VVT timing sprocket, and remove the intake camshaft with the VVT timing sprocket.

cardiagn.com

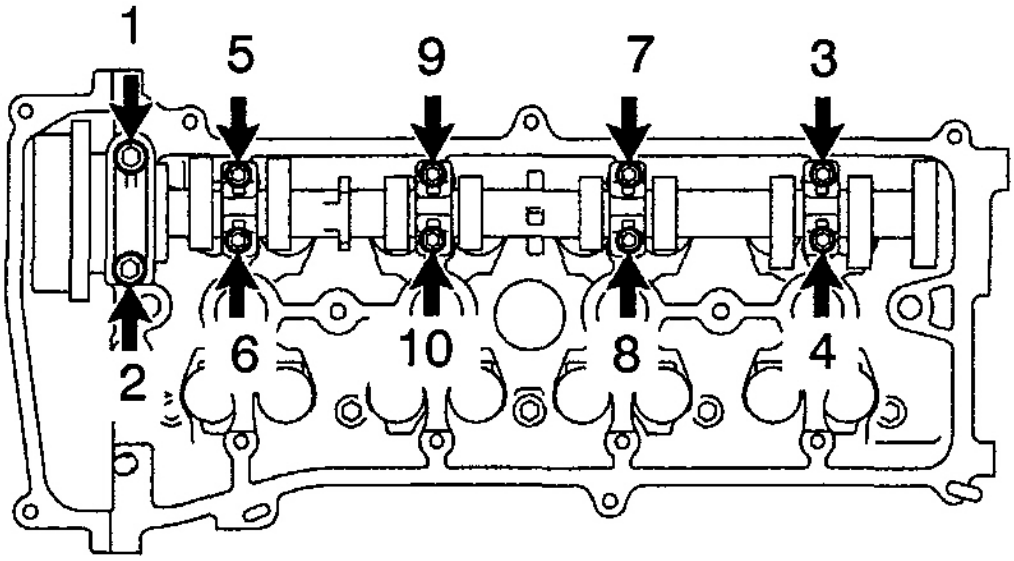

P

G02639022

Fig. 12: Identifying Camshaft Bearing Cap Removing Sequence
Courtesy of TOYOTA MOTOR SALES, U.S.A., INC.

m. Tie the timing chain as shown, see **Fig. 13**.

NOTE:

- **Be careful not to drop anything inside the timing chain cover.**
- **Do not allow the chain to come into contact with water or dust.**

cardiagn.com

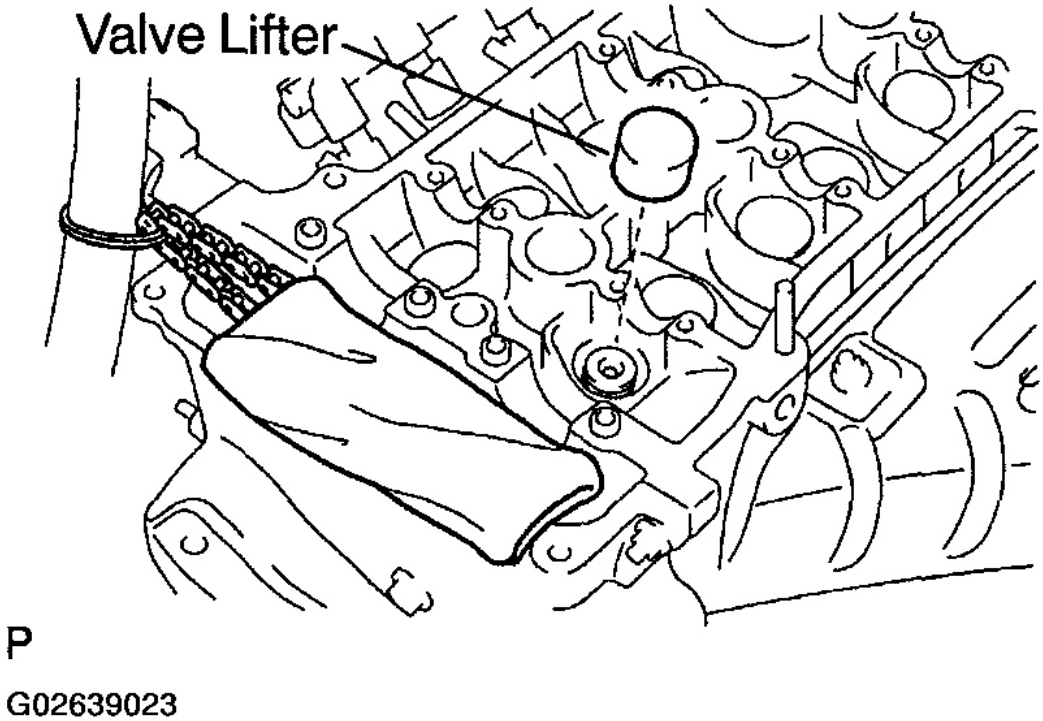

Fig. 13: Tie-Up Timing Chain
Courtesy of TOYOTA MOTOR SALES, U.S.A., INC.

n. Remove the valve lifter.

o. Determine the replacement valve lifter size according to these Formula, see **VALVE LIFTER SIZE FORMULA** or Charts: **Fig. 16** and **Fig. 17**.

- Using a micrometer, measure the thickness of the removed lifter.

cardiagn.com

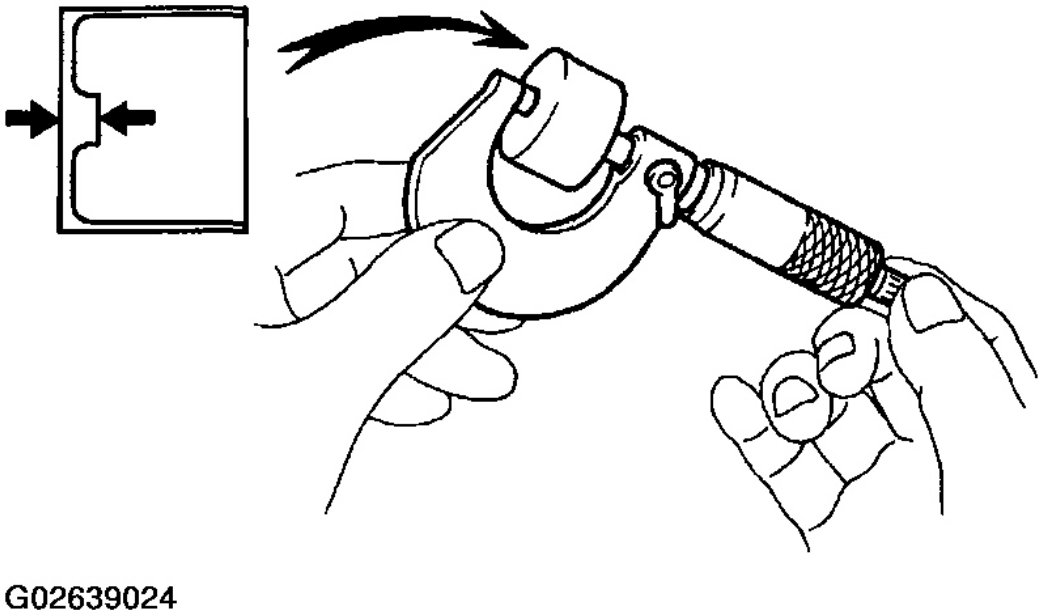

Fig. 14: Measuring Thickness Of Removed Lifter Using Micrometer
Courtesy of TOYOTA MOTOR SALES, U.S.A., INC.

- Calculate the thickness of a new lifter so the valve clearance comes within the specified value.

  T.....Thickness of used lifter

  A.....Measured valve clearance

  N.....Thickness of new lifter

- Select a new lifter with a thickness as close as possible to the calculated values.

VALVE LIFTER SIZE FORMULA

Intake	N = T + (A - 0.24 mm (0.009 in.))
Exhaust	N = T + (A - 0.35 mm (0.014 in.))

HINT:

- Valve lifters are available in 35 sizes in increments of 0.020 mm (0.0008 in.), from 5.060 mm (0.1992 in.) to 5.740 mm (0.2260 in.).
- Identification number inside the valve lifter shows the value of the 2 decimal places (The illustration shows 5.380 mm (0.2118 in.).

cardiagn.com

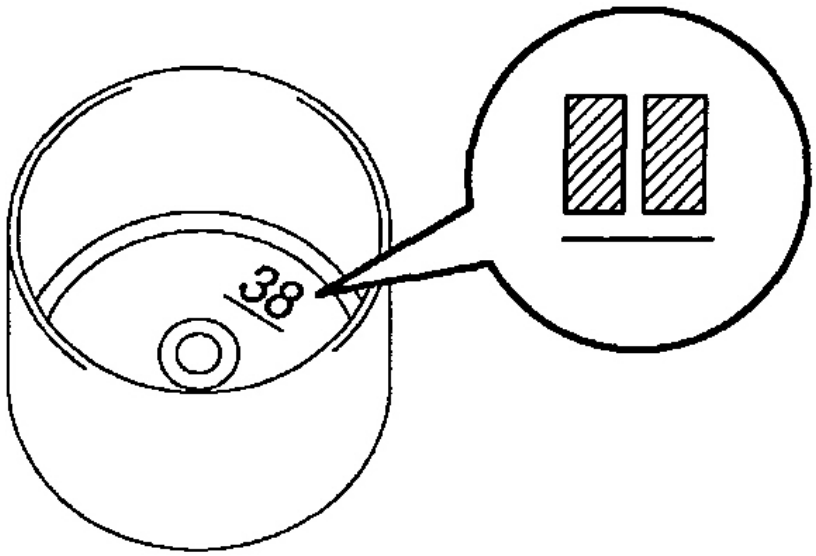

Y

G02639025

Fig. 15: Locating Valve Lifter Identification Number
Courtesy of TOYOTA MOTOR SALES, U.S.A., INC.

Valve lifter Selection Chart (Intake)

cardiagn.com

Measure clearance mm (in.) \ Installed lifter thickness mm (in.)	5.060 (0.1992)	5.080 (0.2000)	5.100 (0.2008)	5.120 (0.2016)	5.140 (0.2024)	5.160 (0.2031)	5.180 (0.2039)	5.200 (0.2047)	5.220 (0.2055)	5.240 (0.2063)	5.260 (0.2071)	5.280 (0.2079)	5.300 (0.2087)	5.320 (0.2094)	5.340 (0.2102)	5.360 (0.2110)	5.380 (0.2118)	5.400 (0.2126)	5.420 (0.2134)	5.440 (0.2142)	5.460 (0.2150)	5.480 (0.2157)	5.500 (0.2165)	5.520 (0.2173)	5.540 (0.2181)	5.560 (0.2189)	5.580 (0.2197)	5.600 (0.2205)	5.620 (0.2213)	5.640 (0.2220)	5.660 (0.2228)	5.680 (0.2236)	5.700 (0.2244)	5.720 (0.2252)	5.740 (0.2260)
0.000–0.030 (0.0000–0.0012)										06	06	08	08	10	10	12	12	14	14	16	16	18	18	20	20	22	22	24	24	26	26	28	28	30	30	32	32
0.031–0.050 (0.0012–0.0020)								06	06	06	08	08	10	10	12	12	14	14	16	16	18	18	20	20	22	22	24	24	26	26	28	28	30	30	32	32
0.051–0.070 (0.0020–0.0028)							06	08	08	08	10	10	12	12	14	14	16	16	18	18	20	20	22	22	24	24	26	26	28	28	30	30	32	32	34	34
0.071–0.090 (0.0028–0.0035)						06	08	10	10	10	12	12	14	14	16	16	18	18	20	20	22	22	24	24	26	26	28	28	30	30	32	32	34	34	36	36
0.091–0.110 (0.0036–0.0043)					06	08	10	12	12	12	14	14	16	16	18	18	20	20	22	22	24	24	26	26	28	28	30	30	32	32	34	34	36	36	38	38
0.111–0.130 (0.0044–0.0051)				06	08	10	12	14	14	14	16	16	18	18	20	20	22	22	24	24	26	26	28	28	30	30	32	32	34	34	36	36	38	38	40	40
0.131–0.150 (0.0052–0.0059)			06	08	10	12	14	16	16	16	18	18	20	20	22	22	24	24	26	26	28	28	30	30	32	32	34	34	36	36	38	38	40	40	42	42
0.151–0.170 (0.0059–0.0067)		06	08	10	12	14	16	18	18	18	20	20	22	22	24	24	26	26	28	28	30	30	32	32	34	34	36	36	38	38	40	40	42	42	44	44
0.171–0.189 (0.0067–0.0074)	06	08	10	12	14	16	18	20	20	20	22	22	24	24	26	26	28	28	30	30	32	32	34	34	36	36	38	38	40	40	42	42	44	44	46	46
0.190–0.290 (0.0075–0.0114)																																			
0.291–0.310 (0.0115–0.0122)	12	14	16	18	20	22	24	26	28	28	30	30	32	32	34	34	36	36	38	38	40	40	42	42	44	44	46	46	48	48	50	50	52	52	54	54
0.311–0.330 (0.0122–0.0130)	14	16	18	20	22	24	26	28	30	30	32	32	34	34	36	36	38	38	40	40	42	42	44	44	46	46	48	48	50	50	52	52	54	54	56	56
0.331–0.350 (0.0130–0.0138)	16	18	20	22	24	26	28	30	32	32	34	34	36	36	38	38	40	40	42	42	44	44	46	46	48	48	50	50	52	52	54	54	56	56	58	58
0.351–0.370 (0.0138–0.0146)	18	20	22	24	26	28	30	32	34	34	36	36	38	38	40	40	42	42	44	44	46	46	48	48	50	50	52	52	54	54	56	56	58	58	60	60
0.371–0.390 (0.0146–0.0154)	20	22	24	26	28	30	32	34	36	36	38	38	40	40	42	42	44	44	46	46	48	48	50	50	52	52	54	54	56	56	58	58	60	60	62	62
0.391–0.410 (0.0154–0.0161)	22	24	26	28	30	32	34	36	38	38	40	40	42	42	44	44	46	46	48	48	50	50	52	52	54	54	56	56	58	58	60	60	62	62	64	64
0.411–0.430 (0.0162–0.0169)	24	26	28	30	32	34	36	38	40	40	42	42	44	44	46	46	48	48	50	50	52	52	54	54	56	56	58	58	60	60	62	62	64	64	66	66
0.431–0.450 (0.0170–0.0177)	26	28	30	32	34	36	38	40	42	42	44	44	46	46	48	48	50	50	52	52	54	54	56	56	58	58	60	60	62	62	64	64	66	66	68	68
0.451–0.470 (0.0178–0.0185)	28	30	32	34	36	38	40	42	44	44	46	46	48	48	50	50	52	52	54	54	56	56	58	58	60	60	62	62	64	64	66	66	68	68	70	70
0.471–0.490 (0.0185–0.0193)	30	32	34	36	38	40	42	44	46	46	48	48	50	50	52	52	54	54	56	56	58	58	60	60	62	62	64	64	66	66	68	68	70	70	72	72
0.491–0.510 (0.0193–0.0201)	32	34	36	38	40	42	44	46	48	48	50	50	52	52	54	54	56	56	58	58	60	60	62	62	64	64	66	66	68	68	70	70	72	72	74	74
0.511–0.530 (0.0201–0.0209)	34	36	38	40	42	44	46	48	50	50	52	52	54	54	56	56	58	58	60	60	62	62	64	64	66	66	68	68	70	70	72	72	74	74	74	74
0.531–0.550 (0.0209–0.0217)	36	38	40	42	44	46	48	50	52	52	54	54	56	56	58	58	60	60	62	62	64	64	66	66	68	68	70	70	72	72	74	74	74	74		
0.551–0.570 (0.0217–0.0224)	38	40	42	44	46	48	50	52	54	54	56	56	58	58	60	60	62	62	64	64	66	66	68	68	70	70	72	72	74	74	74	74				
0.571–0.590 (0.0225–0.0232)	40	42	44	46	48	50	52	54	56	56	58	58	60	60	62	62	64	64	66	66	68	68	70	70	72	72	74	74	74	74						
0.591–0.610 (0.0233–0.0240)	42	44	46	48	50	52	54	56	58	58	60	60	62	62	64	64	66	66	68	68	70	70	72	72	74	74	74	74								
0.611–0.630 (0.0241–0.0248)	44	46	48	50	52	54	56	58	60	60	62	62	64	64	66	66	68	68	70	70	72	72	74	74	74	74										
0.631–0.650 (0.0248–0.0256)	46	48	50	52	54	56	58	60	62	62	64	64	66	66	68	68	70	70	72	72	74	74	74	74												
0.651–0.670 (0.0256–0.0264)	48	50	52	54	56	58	60	62	64	64	66	66	68	68	70	70	72	72	74	74	74	74														
0.671–0.690 (0.0264–0.0272)	50	52	54	56	58	60	62	64	66	66	68	68	70	70	72	72	74	74	74	74																
0.691–0.710 (0.0272–0.0280)	52	54	56	58	60	62	64	66	68	68	70	70	72	72	74	74	74	74																		
0.711–0.730 (0.0280–0.0287)	54	56	58	60	62	64	66	68	70	70	72	72	74	74	74	74																				
0.731–0.750 (0.0288–0.0295)	56	58	60	62	64	66	68	70	72	72	74	74	74	74																						
0.751–0.770 (0.0296–0.0303)	58	60	62	64	66	68	70	72	74	74	74	74																								
0.771–0.790 (0.0304–0.0311)	60	62	64	66	68	70	72	74	74	74																										
0.791–0.810 (0.0311–0.0319)	62	64	66	68	70	72	74																													
0.811–0.830 (0.0319–0.0327)	64	66	68	70	72	74																														
0.831–0.850 (0.0327–0.0335)	66	68	70	72	74																															
0.851–0.870 (0.0335–0.0343)	68	70	72	74																																
0.871–0.890 (0.0343–0.0350)	70	72	74																																	
0.891–0.910 (0.0351–0.0358)	72	74																																		
0.911–0.930 (0.0359–0.0366)	74																																			

Intake valve clearance (Cold):
0.19 to 0.29 mm (0.008 to 0.011 in.)
EXAMPLE:
The 5.250 mm (0.2067 in.) lifter is installed, and the measured clearance is 0.400 mm (0.0157 in.).
Replace the 5.250 mm (0.2067 in.) lifter with a new No. 42 lifter.

New Lifter Thickness — mm (in.)

Lifter No.	Thickness	Lifter No.	Thickness	Lifter No.	Thickness
06	5.060 (0.1992)	30	5.300 (0.2087)	54	5.540 (0.2181)
08	5.080 (0.2000)	32	5.320 (0.2094)	56	5.560 (0.2189)
10	5.100 (0.2008)	34	5.340 (0.2102)	58	5.580 (0.2197)
12	5.120 (0.2016)	36	5.360 (0.2110)	60	5.600 (0.2205)
14	5.140 (0.2024)	38	5.380 (0.2118)	62	5.620 (0.2213)
16	5.160 (0.2031)	40	5.400 (0.2126)	64	5.640 (0.2220)
18	5.180 (0.2039)	42	5.420 (0.2134)	66	5.660 (0.2228)
20	5.200 (0.2047)	44	5.440 (0.2142)	68	5.680 (0.2236)
22	5.220 (0.2055)	46	5.460 (0.2150)	70	5.700 (0.2244)
24	5.240 (0.2063)	48	5.480 (0.2157)	72	5.720 (0.2252)
26	5.260 (0.2071)	50	5.500 (0.2165)	74	5.740 (0.2260)
28	5.280 (0.2079)	52	5.520 (0.2173)		

G02639026

Fig. 16: Valve lifter Selection Chart (Intake)
Courtesy of TOYOTA MOTOR SALES, U.S.A., INC.

Valve Lifter Selection Chart (Exhaust)

cardiagn.com

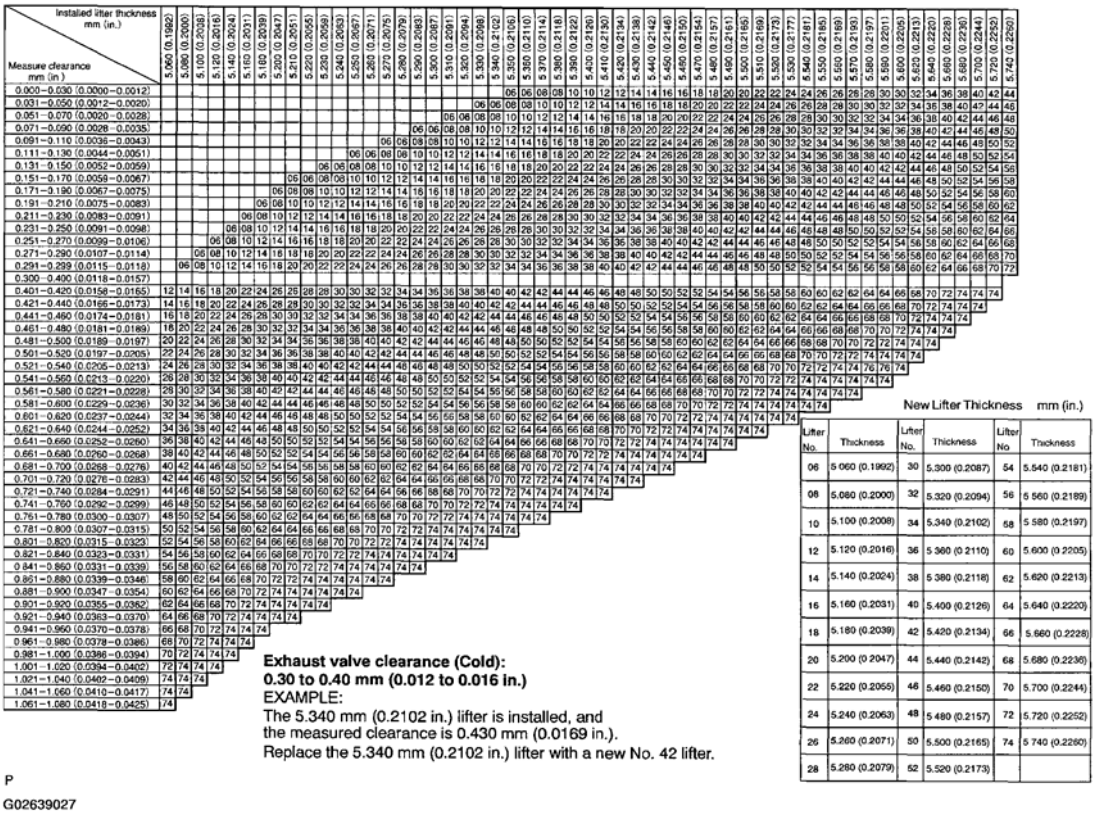

Fig. 17: Valve lifter Selection Chart (Exhaust)
Courtesy of TOYOTA MOTOR SALES, U.S.A., INC.

p. Apply a light coat engine oil to new valve lifter.

q. Reinstall the valve lifter.

cardiagn.com

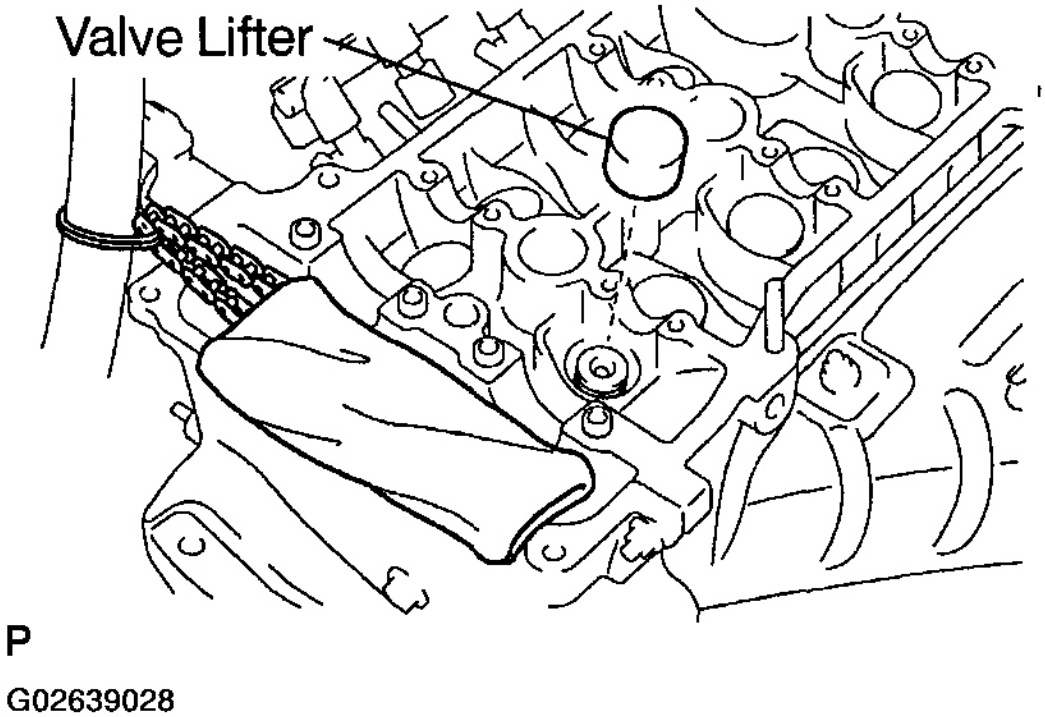

Fig. 18: Reinstalling Valve Lifter
Courtesy of TOYOTA MOTOR SALES, U.S.A., INC.

r. Align the crankshaft pulley groove with timing mark 0 of the timing chain cover.

cardiagn.com

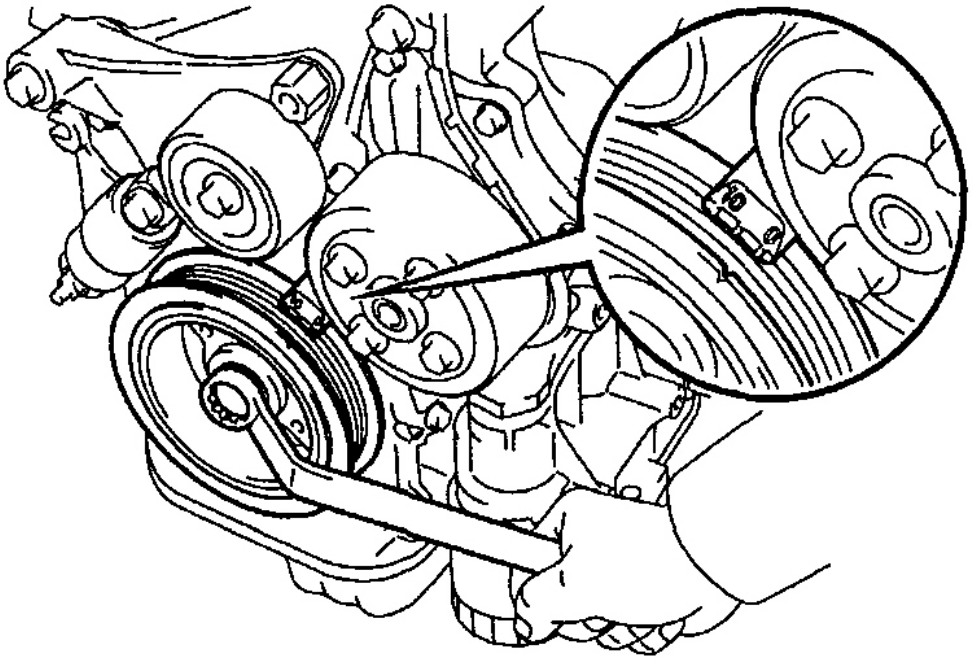

Fig. 19: Aligning Crankshaft Pulley Groove With 0 Timing Mark On Timing Chain Cover
Courtesy of TOYOTA MOTOR SALES, U.S.A., INC.

s. Hold the timing chain.

7. **REINSTALL INTAKE CAMSHAFT**
   a. Align the matchmarks on the timing chain and VVT timing sprocket (See step a), and place the intake camshaft on the cylinder head.
   b. Apply a light coat engine oil on the threads and under the camshaft bearing cap bolts.
   c. Install the 5 intake camshaft bearing caps in their proper locations (see **INSTALLATION**).
   d. Uniformly tighten the 10 bearing cap bolts in several passes, in the sequence shown.

   Torque:

   30 N.m (301 kgf.cm, 22 ft.lbf) for bolt A

   9.0 N.m (92 kgf.cm, 80 in.lbf) for others

cardiagn.com

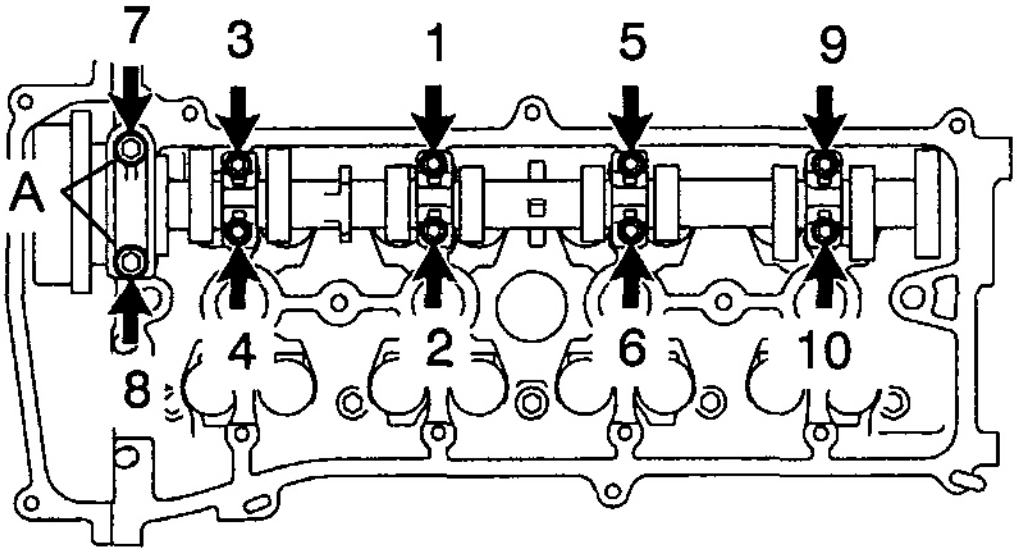

P

G02639030

Fig. 20: Identifying Bearing Cap Bolt Tightening Sequence
Courtesy of TOYOTA MOTOR SALES, U.S.A., INC.

e. Align the matchmarks on the timing chain and camshaft timing sprocket (See step a), and install them.

8. **REINSTALL EXHAUST CAMSHAFT**
   a. Temporarily install the camshaft timing sprocket with the timing chain to the exhaust camshaft with the bolt.
   b. Place the exhaust camshaft on the cylinder head.
   c. Apply a light coat engine oil on the threads and under the camshaft bearing cap bolts.
   d. Install the 5 exhaust camshaft bearing caps in their proper locations (see **INSTALLATION**).
   e. Uniformly tighten the 10 bearing cap bolts in several passes, in the sequence shown.

   Torque:

   30 N.m (301 kgf.cm, 22 ft.lbf) for bolt A

   9.0 N.m (92 kgf.cm, 80 in.lbf) for others

cardiagn.com

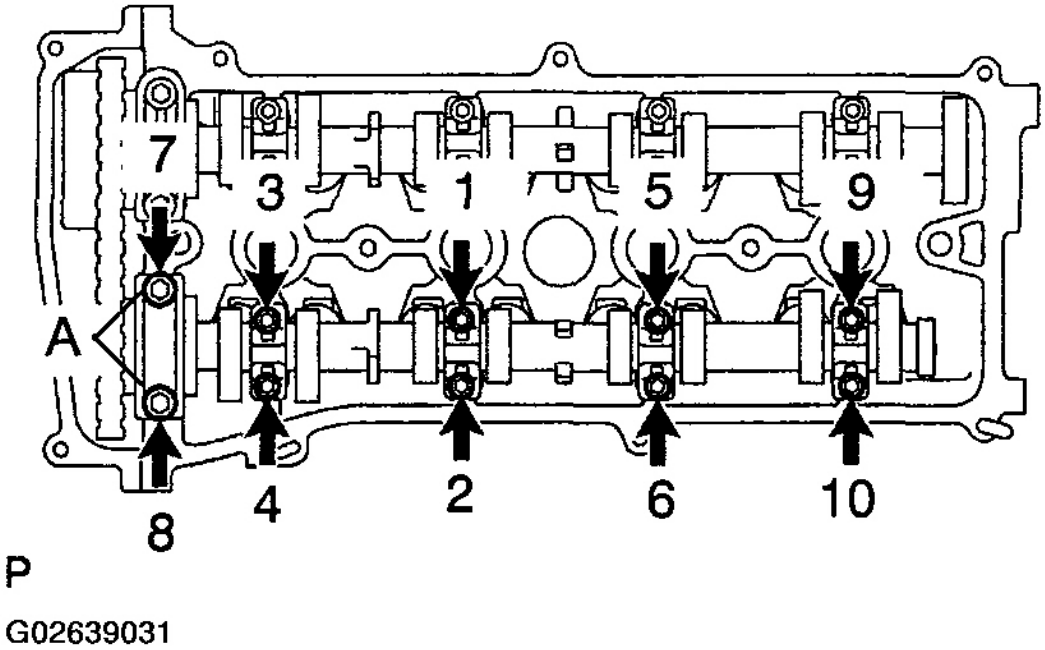

Fig. 21: Identifying Bearing Cap Bolts Tightening Sequence
Courtesy of TOYOTA MOTOR SALES, U.S.A., INC.

f. Hold the hexagon head portion of the exhaust camshaft with a wrench, and tighten the bolt.

Torque: 54 N.m (551 kgf.cm, 40 ft.lbf)

cardiagn.com

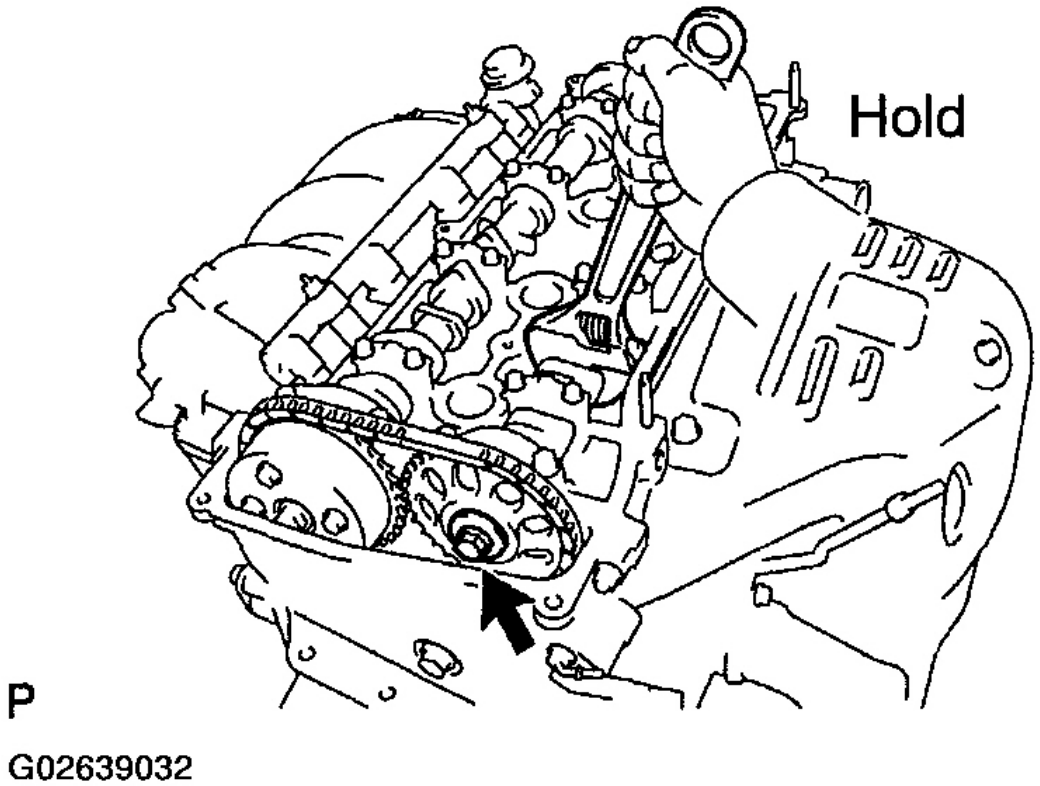

Fig. 22: Holding Hexagon Head Portion Of Exhaust Camshaft
Courtesy of TOYOTA MOTOR SALES, U.S.A., INC.

g. Check that the each sprocket aligned with the matchmarks as shown.

cardiagn.com

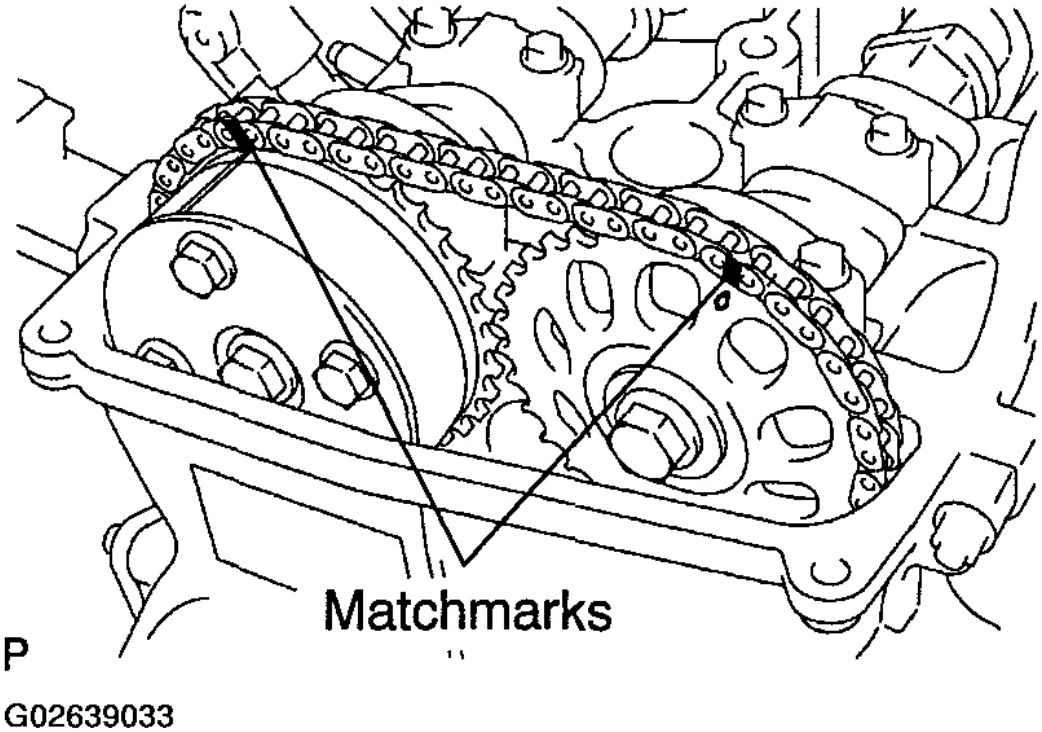

Fig. 23: Identifying Sprocket Matchmarks
Courtesy of TOYOTA MOTOR SALES, U.S.A., INC.

h. Install the chain tensioner (see **INSTALLATION**).
i. Recheck the valve clearance (see step 5).
j. Check the valve timing (see **INSTALLATION**).

9. **REINSTALL CYLINDER HEAD COVER (See INSTALLATION)**
10. **REINSTALL AIR CLEANER ASSEMBLY (See REMOVAL)**
11. **REINSTALL RH ENGINE UNDER COVER**

IGNITION TIMING

INSPECTION

1. **WARM UP ENGINE**

   Allow the engine to warm up to normal operating temperature.

2. **CHECK IDLE SPEED (See IDLE SPEED)**

cardiagn.com

3. **CONNECT TIMING LIGHT**

Connect the tester probe of a timing light to the black-white service wire of the engine wire as shown.

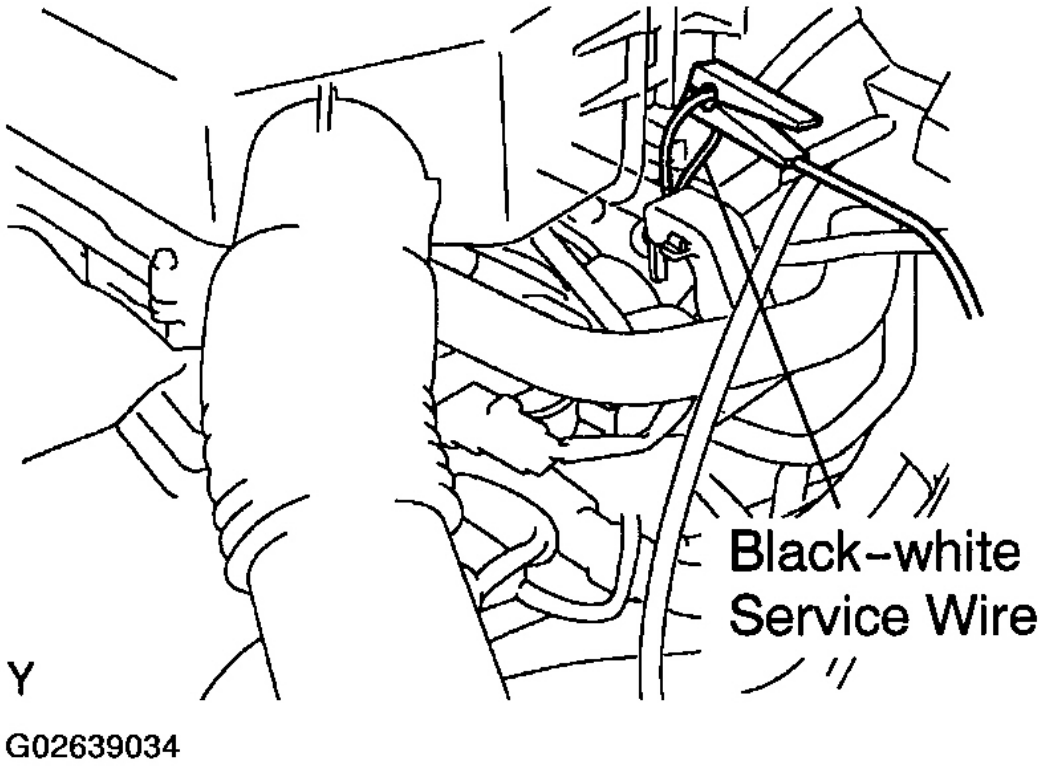

Fig. 24: Connecting Tester Probe Of Timing Light To Service Wire
Courtesy of TOYOTA MOTOR SALES, U.S.A., INC.

4. **INSPECT IGNITION TIMING**
   a. Using SST, connect terminals to TC and CG of the DLC3.

      SST 09843-18040

      HINT:

      After engine RPM is kept at 900 - 1,500 RPM for 5 seconds, check that it returns to idle speed.

cardiagn.com

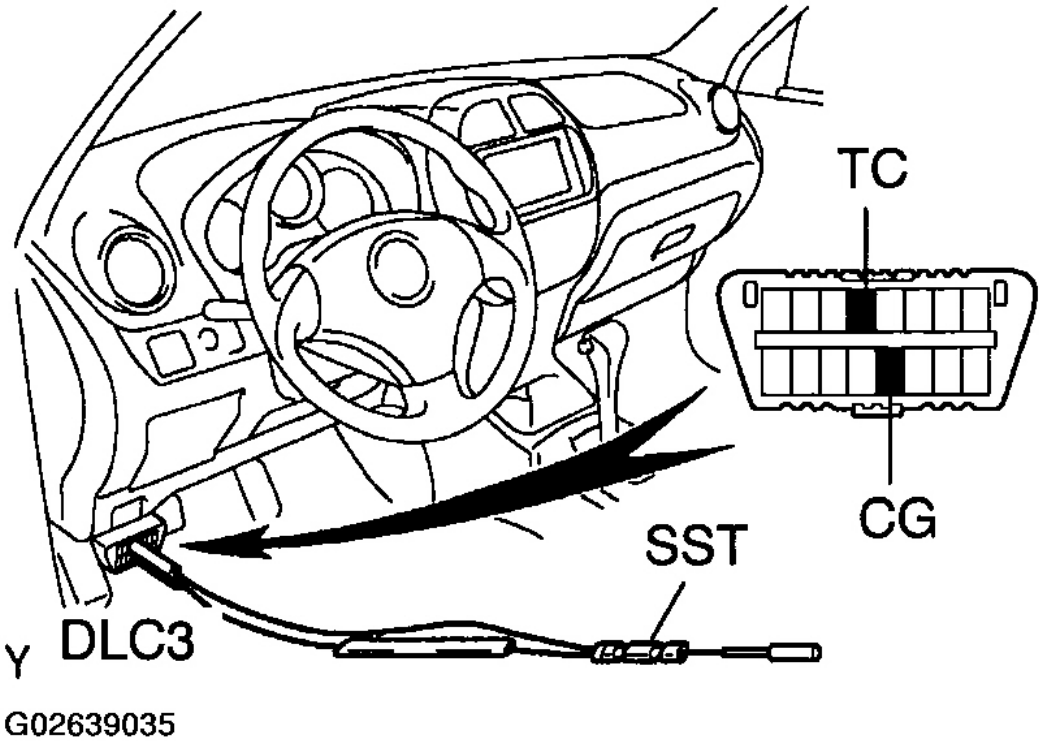

Fig. 25: Connecting Terminals To TC And CG Of DLC3 Using SST
Courtesy of TOYOTA MOTOR SALES, U.S.A., INC.

b. Using a timing light, check the ignition timing.

Ignition timing: 8 to 12° BTDC @ idle

c. Remove the SST from the DLC3.

5. **FURTHER CHECK IGNITION TIMING**

Ignition timing: 5 to 15° BTDC @ idle

HINT:

The timing mark moves in a range between 5 and 15°.

6. **DISCONNECT TIMING LIGHT**

cardiagn.com

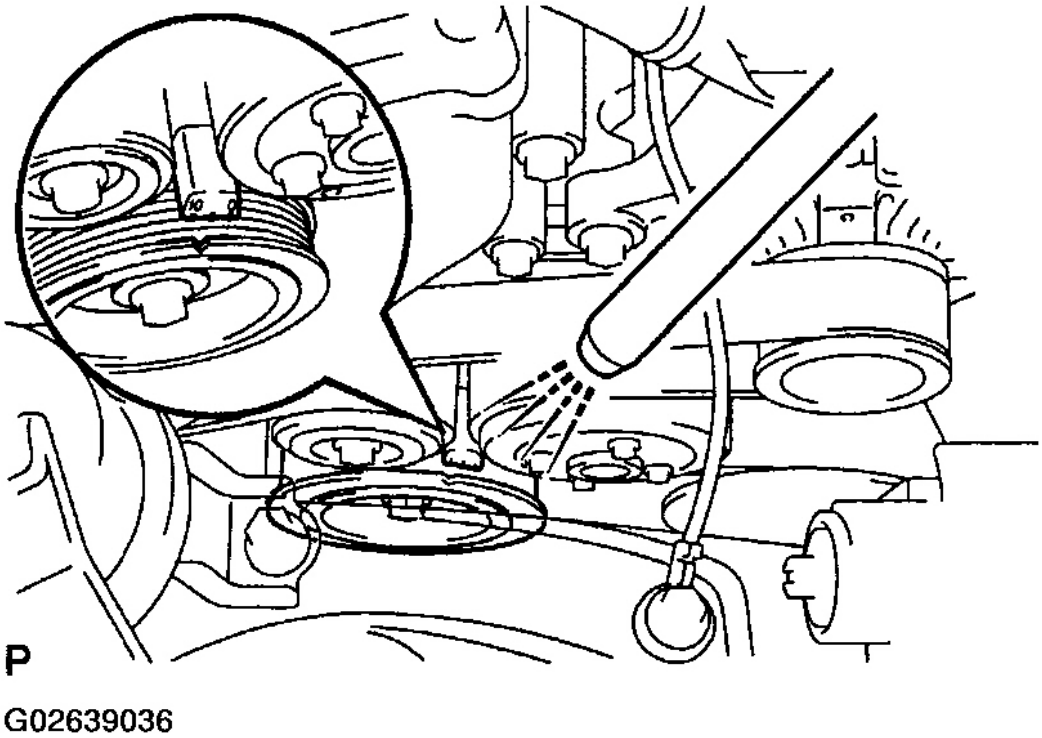

Fig. 26: Checking Ignition Timing Using Timing Light
Courtesy of TOYOTA MOTOR SALES, U.S.A., INC.

IDLE SPEED

INSPECTION

1. **INITIAL CONDITIONS**
   a. Engine at normal operating temperature.
   b. Air cleaner installed
   c. All pipes and hoses of air induction system connected
   d. All vacuum lines properly connected
   e. SFI system wiring connectors fully plugged
   f. All operating accessories switched OFF
   g. Ignition timing check correctly
   h. Transmission in neutral range
   i. A/C switched OFF
2. **CONNECT HAND-HELD TESTER OR OBD II SCAN TOOL**

cardiagn.com

a. Connect the hand-held tester or OBD II scan tool to the DLC3.
b. Refer to the hand-held tester or OBD II scan tool operator's for further details.

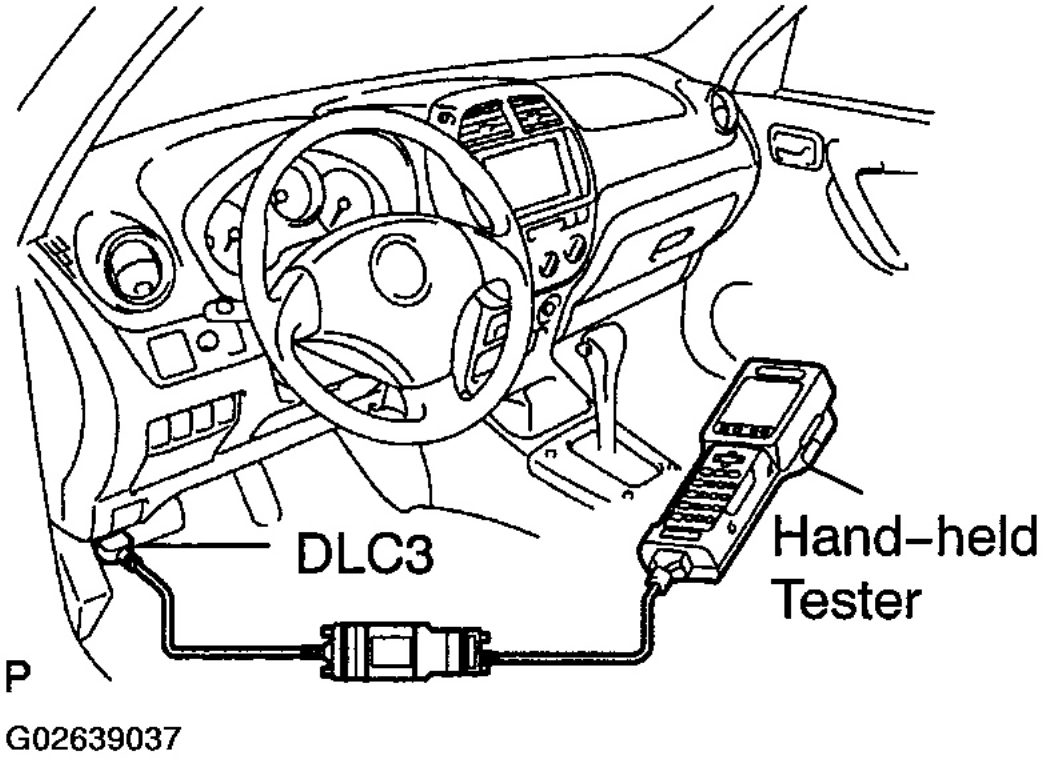

Fig. 27: Connecting Hand-Held Tester OBD II Scan Tool To DLC3
Courtesy of TOYOTA MOTOR SALES, U.S.A., INC.

3. **INSPECT IDLE SPEED**
   a. Race the engine at 2,500 RPM for approx. 90 seconds.
   b. Check the idle speed.

   Idle speed (w/ Cooling fan OFF):

   IDLE SPEED (W/ COOLING FAN OFF)

AT	610 to 710 RPM
MT	610 +/- 710 RPM

   If the idle speed is not as specified, check the air intake system.

4. **DISCONNECT HAND-HELD TESTER OR OBD II SCAN TOOL**

cardiagn.com

TIMING CHAIN

COMPONENTS

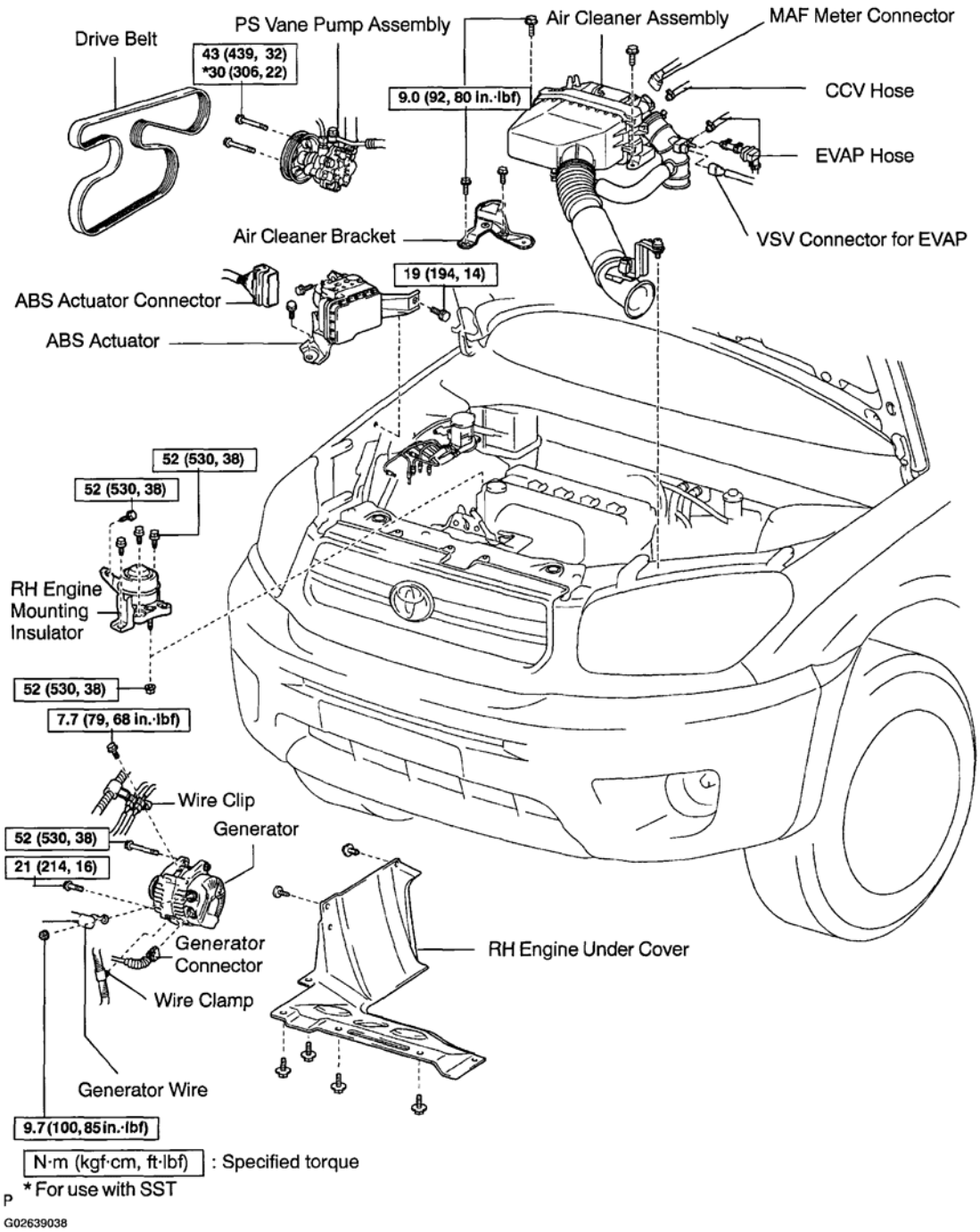

Fig. 28: Identifying Timing Chain Components & Torque Specifications (1 of 2)
Courtesy of TOYOTA MOTOR SALES, U.S.A., INC.

cardiagn.com

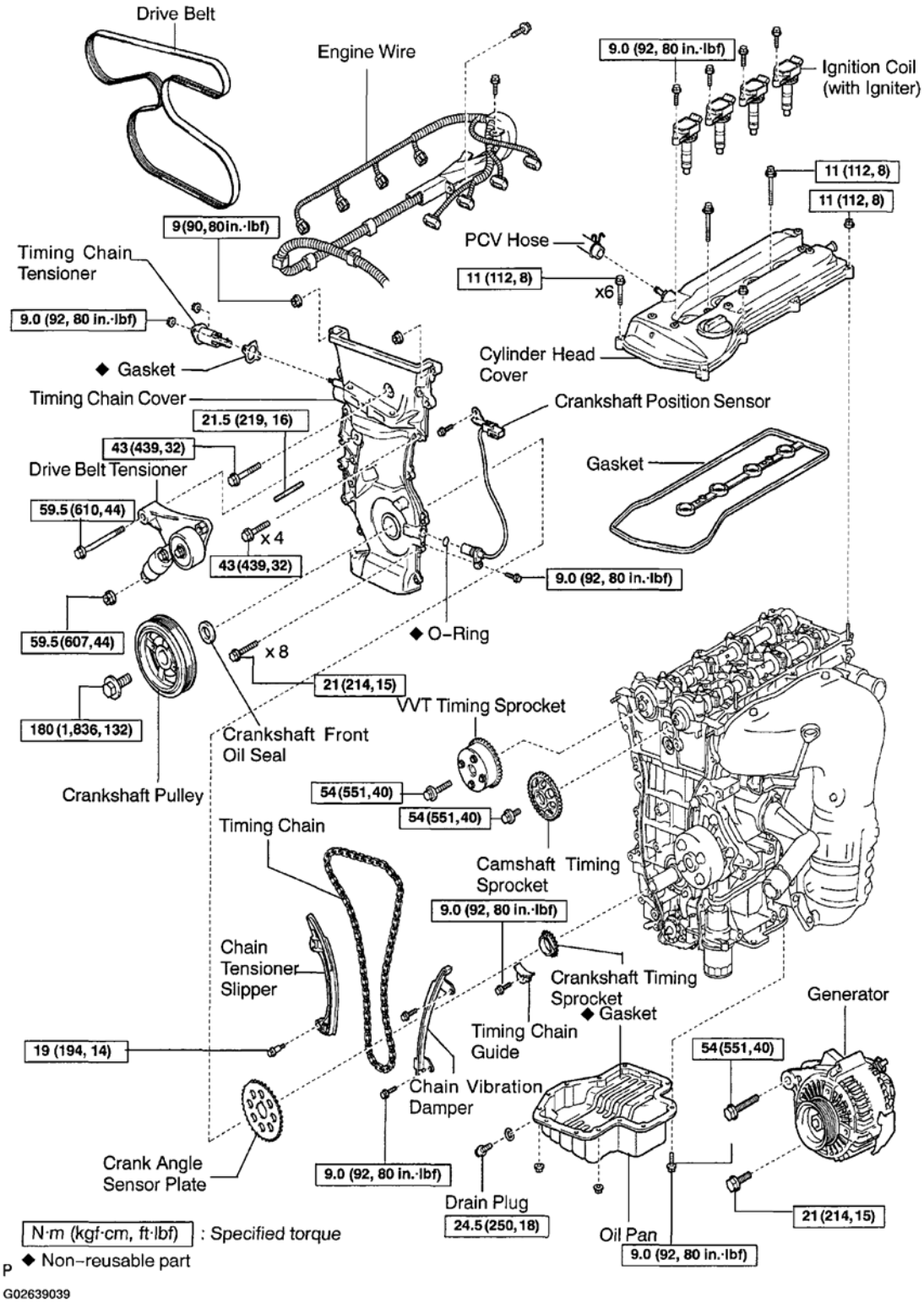

Fig. 29: Identifying Timing Chain Components & Torque Specifications (2 of 2)
Courtesy of TOYOTA MOTOR SALES, U.S.A., INC.

cardiagn.com

REMOVAL

NOTE: **Under the condition with the timing chain cover removed, in case of rotating the camshafts, make the position of the crankshaft rotated clockwise by about 45° from TDC/compression of No. 1 cylinder.**

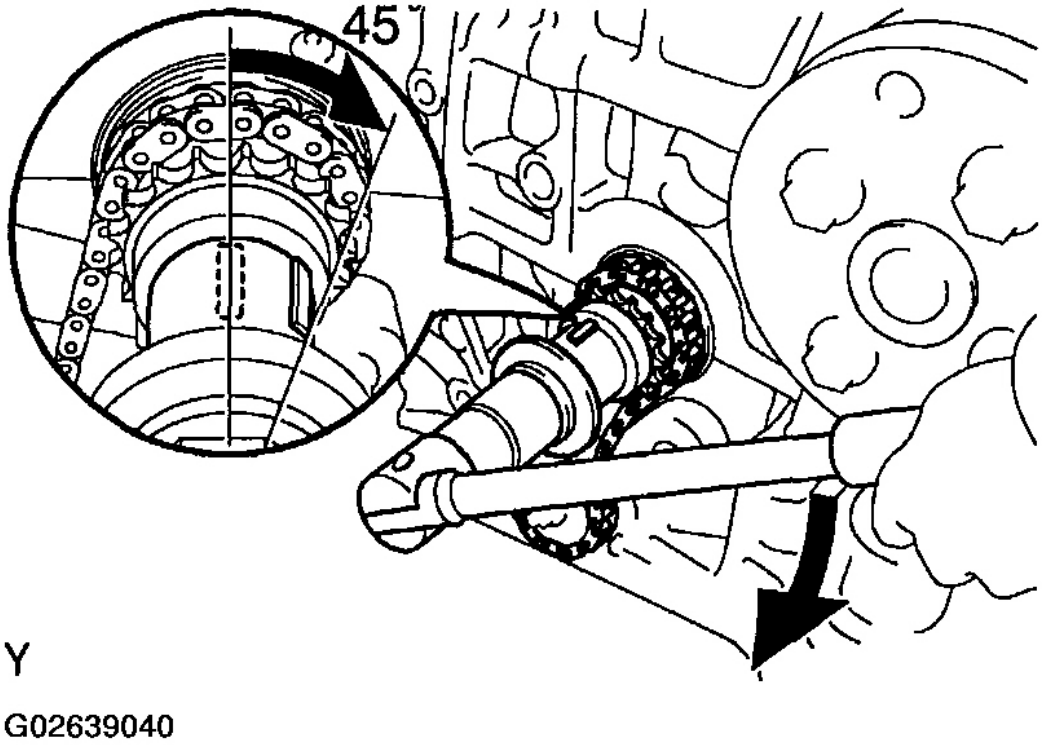

Fig. 30: Rotating Camshafts Clockwise By About 45°
Courtesy of TOYOTA MOTOR SALES, U.S.A., INC.

1. **DRAIN ENGINE OIL**
2. **REMOVE RH ENGINE UNDER COVER**
3. **REMOVE PS VANE PUMP (See REMOVAL)**
4. **REMOVE ABS ACTUATOR (See REMOVAL)**
5. **REMOVE RH ENGINE MOUNTING INSULATOR (See REMOVAL)**
6. **REMOVE DRIVE BELT (See CHARGING SYSTEM)**
7. **REMOVE GENERATOR (See REMOVAL)**
8. **REMOVE AIR CLEANER ASSEMBLY (See REMOVAL)**
9. **REMOVE IGNITION COILS (See IGNITION COIL)**

cardiagn.com

10. **REMOVE CYLINDER HEAD COVER**
    a. Disconnect the 2 PCV hoses from the cylinder head cover.
    b. Remove the 8 bolts, 2 nuts, cylinder head cover and gasket.

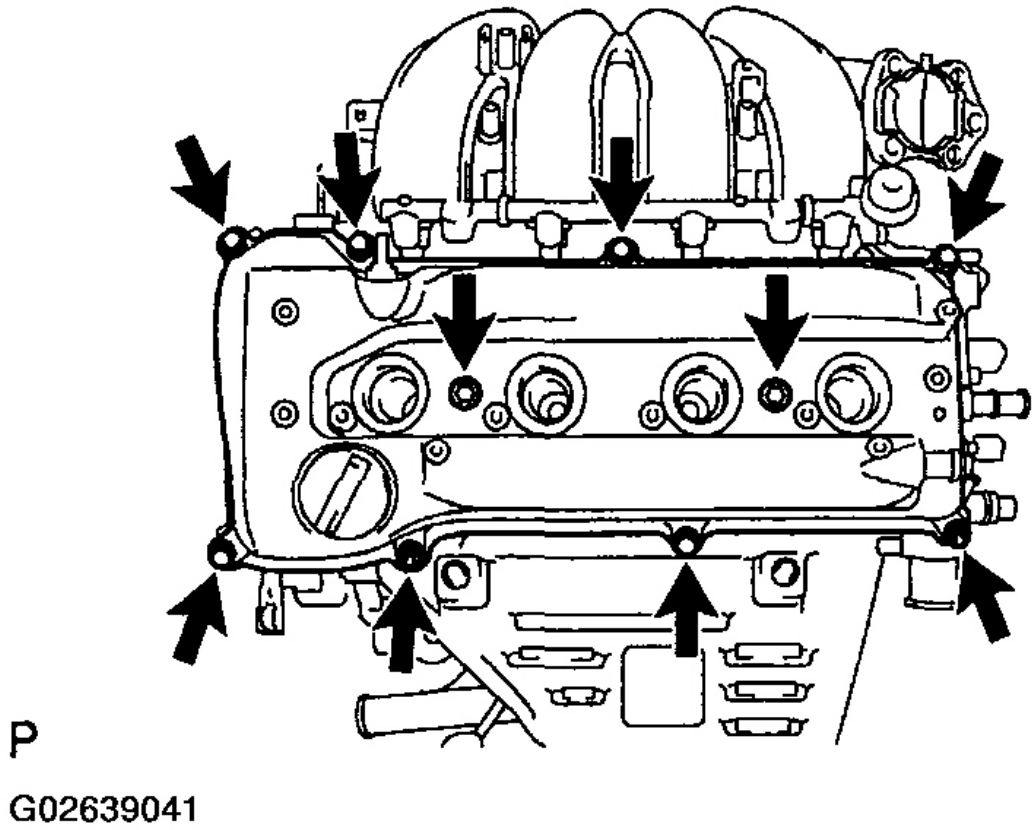

Fig. 31: Removing Cylinder Head Cover And Gasket
Courtesy of TOYOTA MOTOR SALES, U.S.A., INC.

11. **SET NO. 1 CYLINDER TO TDC/COMPRESSION**
    a. Turn the crankshaft pulley, and align its groove with timing mark 0 of the timing chain cover.

cardiagn.com

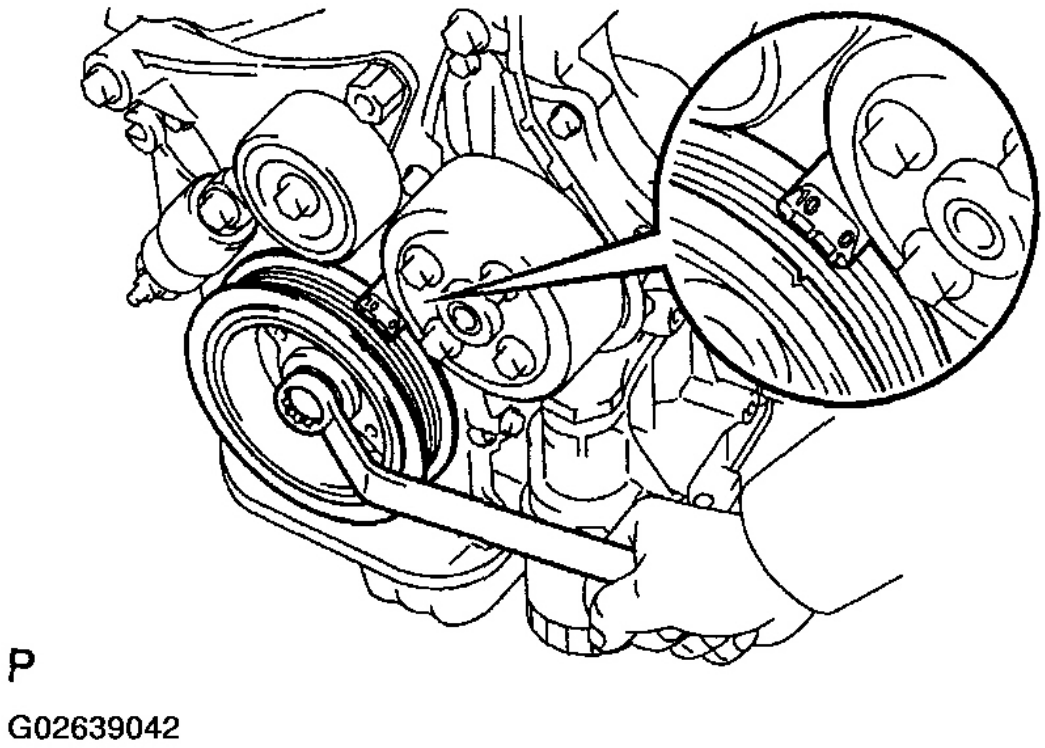

Fig. 32: Aligning Crankshaft Pulley Groove With 0 Timing Mark Of Timing Chain Cover
Courtesy of TOYOTA MOTOR SALES, U.S.A., INC.

b. Check that the timing marks of the camshaft timing sprocket and VVT timing sprocket aligned with the timing marks of the No. 1 and No. 2 bearing caps as shown.

If not, turn the crankshaft 1 revolution (360°) and align the marks as above.

cardiagn.com

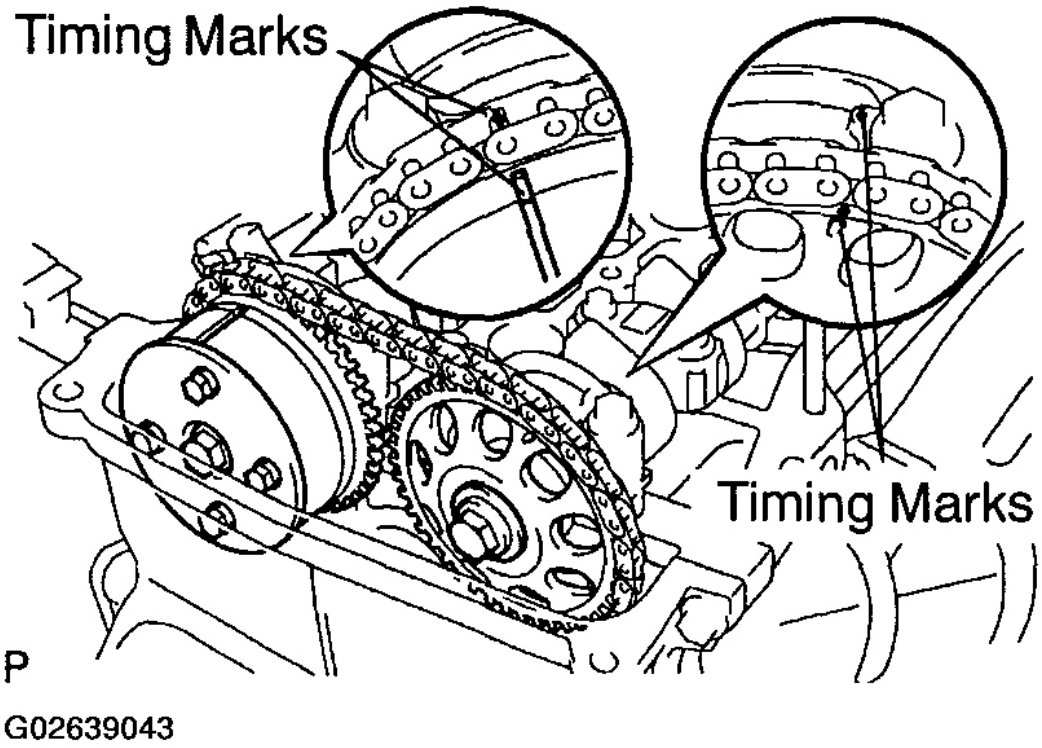

Fig. 33: Checking Timing Marks Of Camshaft Timing Sprocket
Courtesy of TOYOTA MOTOR SALES, U.S.A., INC.

12. **REMOVE CRANKSHAFT PULLEY**
    a. Using SST, loosen the pulley bolt.

       SST 09213-54015, 09330-00021

    b. Remove the pulley bolt and crankshaft pulley.

cardiagn.com

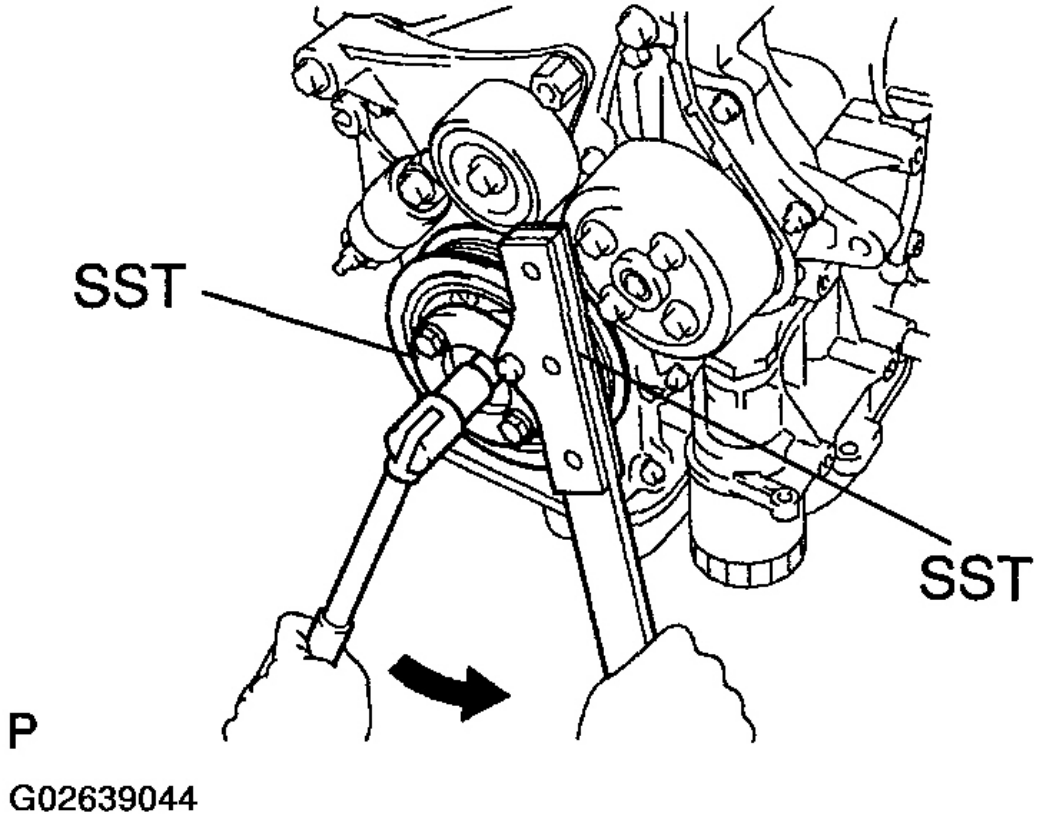

Fig. 34: Loosening Crankshaft Pulley
Courtesy of TOYOTA MOTOR SALES, U.S.A., INC.

HINT:

If necessary, remove the pulley with SST.

SST 09950-50013 (09951-05010, 09952-05010, 09953-05020, 09954-05021), 09950-40011 (09957-04010)

cardiagn.com

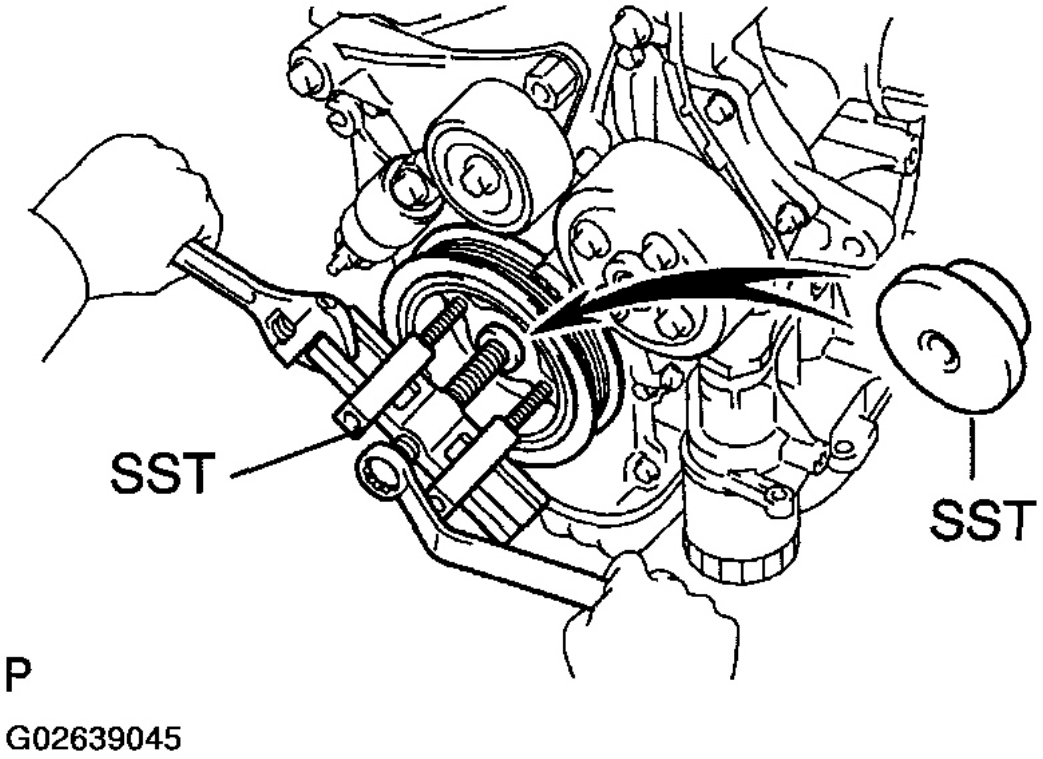

Fig. 35: Removing Crankshaft Pulley
Courtesy of TOYOTA MOTOR SALES, U.S.A., INC.

13. **REMOVE CHAIN TENSIONER**

Remove the 2 nuts, chain tensioner and gasket.

cardiagn.com

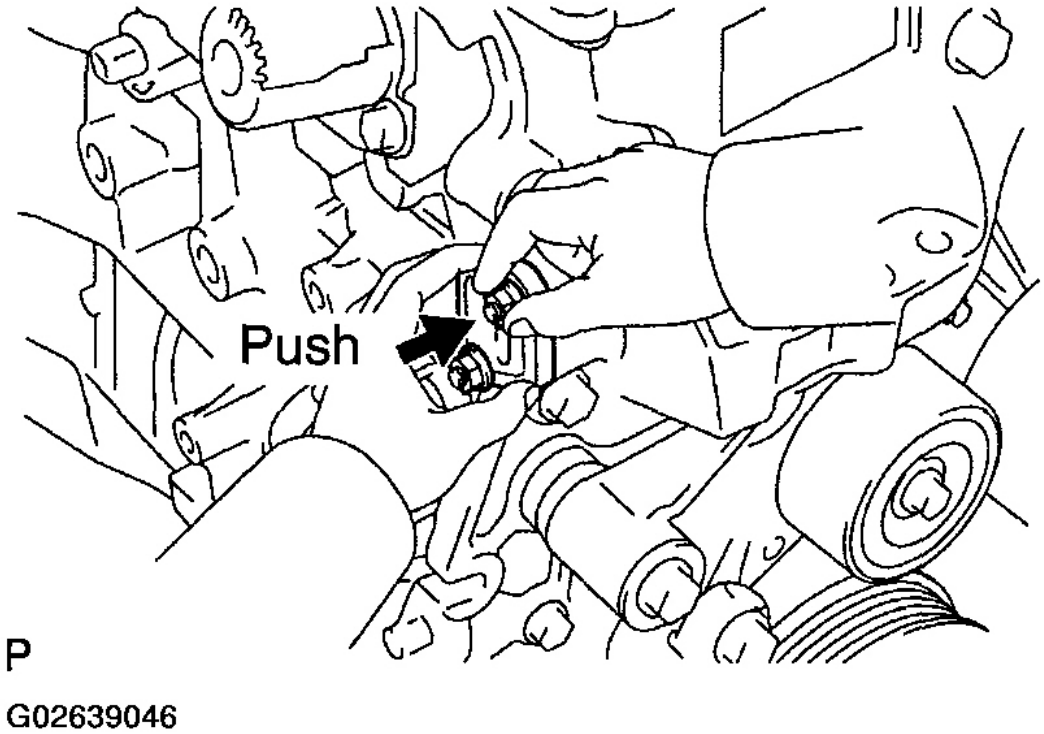

Fig. 36: Removing Nuts, Chain Tensioner And Gasket
Courtesy of TOYOTA MOTOR SALES, U.S.A., INC.

14. **REMOVE DRIVE BELT TENSIONER**

Remove the bolt, nut and drive belt tensioner.

cardiagn.com

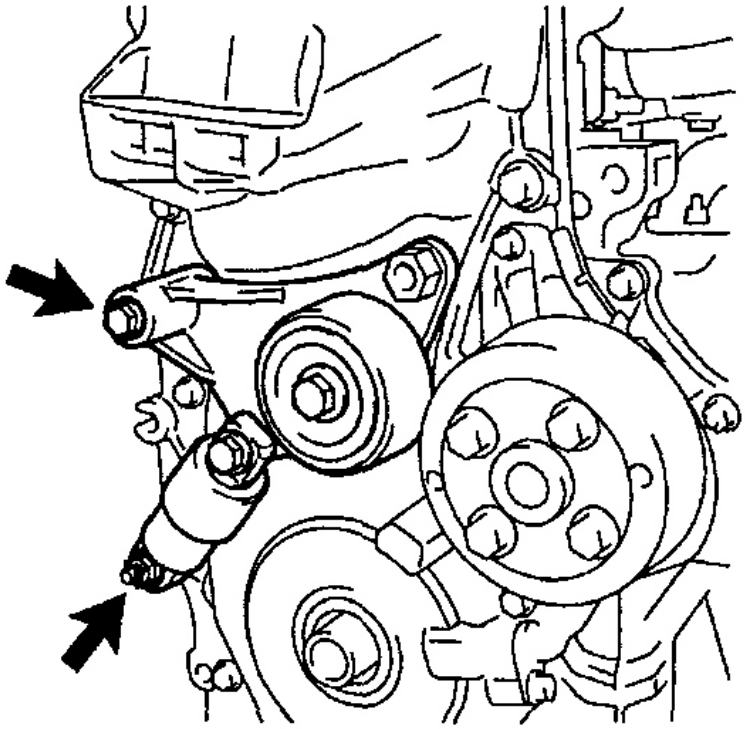

Fig. 37: Removing Drive Belt Tensioner
Courtesy of TOYOTA MOTOR SALES, U.S.A., INC.

15. **REMOVE CRANKSHAFT POSITION SENSOR (See CRANKSHAFT POSITION SENSOR)**
16. **REMOVE OIL PAN (See REMOVAL)**
17. **REMOVE TIMING CHAIN COVER**
    a. Using a Torx(R) socket wrench (T10), remove the stud bolt for the drive belt tensioner.

cardiagn.com

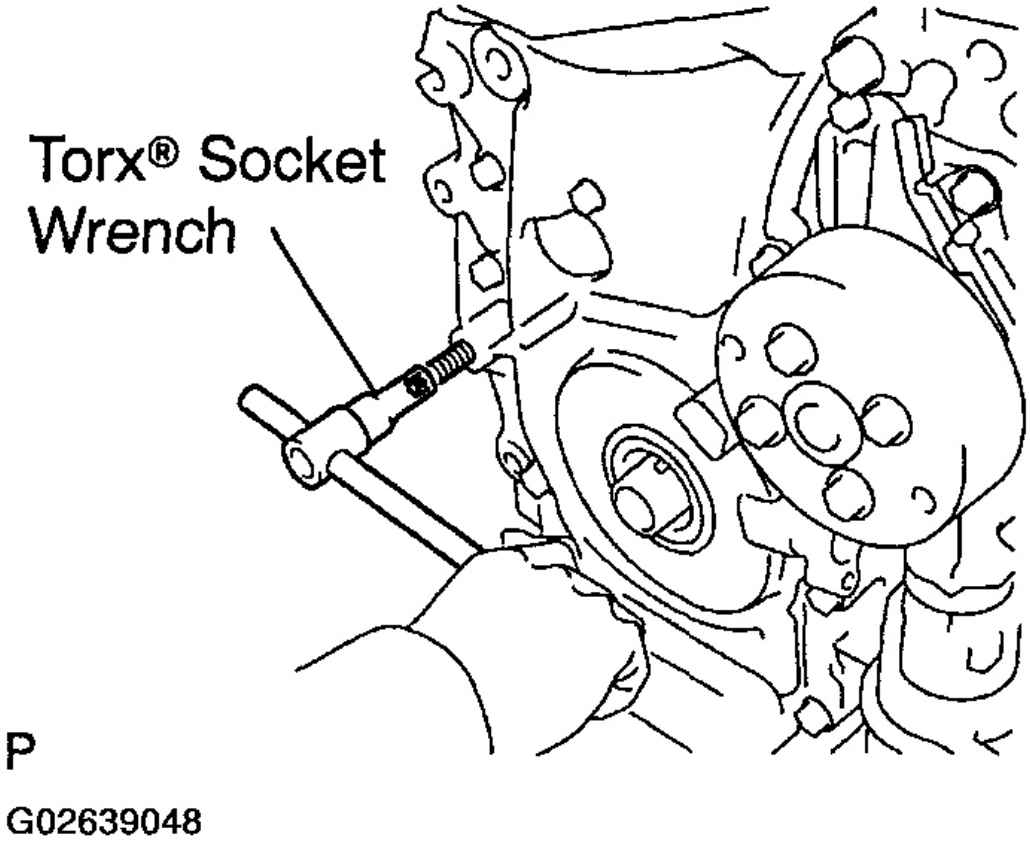

Fig. 38: Removing Timing Chain Cover
Courtesy of TOYOTA MOTOR SALES, U.S.A., INC.

b. Remove the 14 bolts and 2 nuts.

cardiagn.com

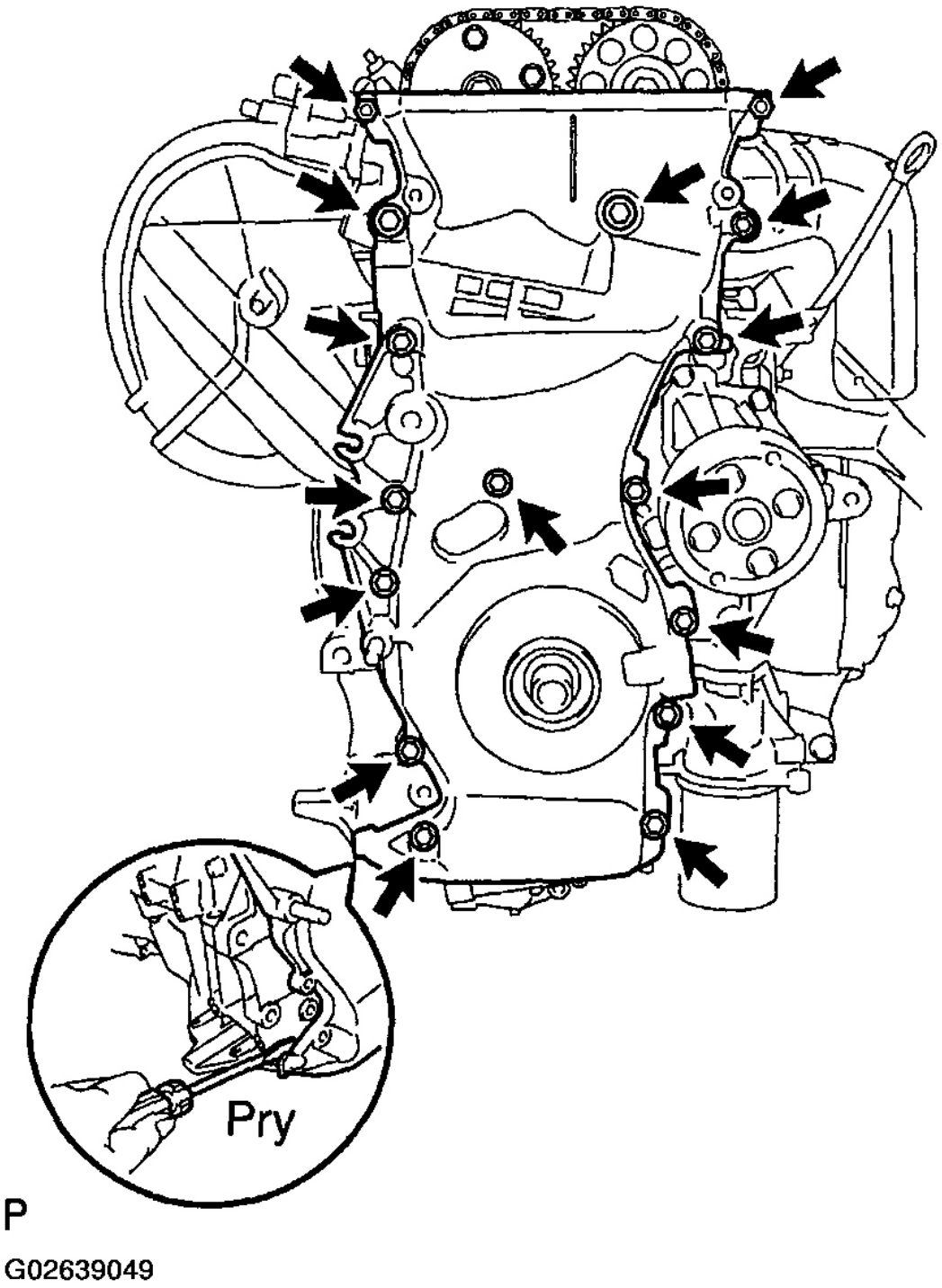

Fig. 39: Locating Timing Chain Cover Bolts
Courtesy of TOYOTA MOTOR SALES, U.S.A., INC.

cardiagn.com

c. Using a screwdriver, pry between the timing chain cover and cylinder head or cylinder block.
d. Remove the timing chain cover.

NOTE: Be careful not to damage the contact surfaces of the timing chain cover, cylinder head and cylinder block.

18. **REMOVE CRANK ANGLE SENSOR PLATE**
19. **REMOVE CHAIN TENSIONER SLIPPER**

Remove the bolt and slipper.

20. **REMOVE CHAIN VIBRATION DAMPER**

Remove the 2 bolts and damper.

21. **REMOVE TIMING CHAIN GUIDE**

Remove the bolt and chain guide.

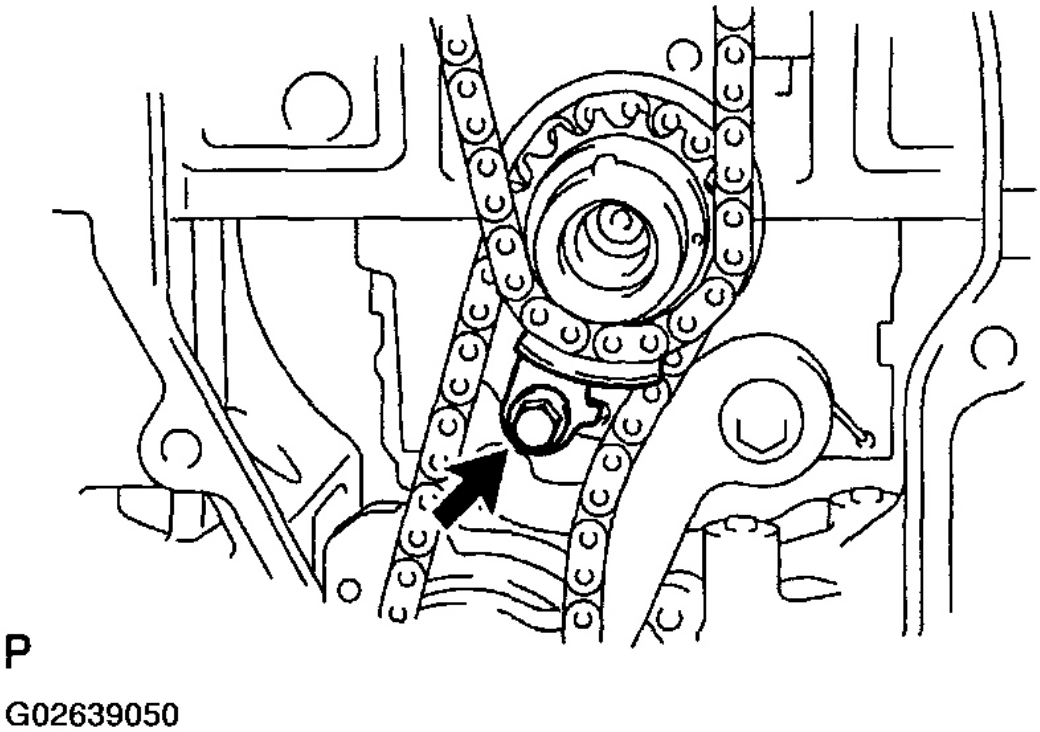

Fig. 40: Removing Timing Chain Guide Bolt

cardiagn.com

Courtesy of TOYOTA MOTOR SALES, U.S.A., INC.

22. **REMOVE TIMING CHAIN**
23. **REMOVE CRANKSHAFT TIMING SPROCKET**
24. **REMOVE CAMSHAFT TIMING SPROCKET AND VVT TIMING SPROCKET**
    a. Hold the hexagonal head wrench portion of the camshaft with a wrench, and loosen the sprocket bolts.

    NOTE: Be careful not to damage the cylinder head and valve lifter by a wrench.

    b. Remove the bolt and exhaust camshaft timing sprocket.
    c. Remove the bolt and VVT timing sprocket.

    NOTE: Do not disassemble the VVT timing sprocket.

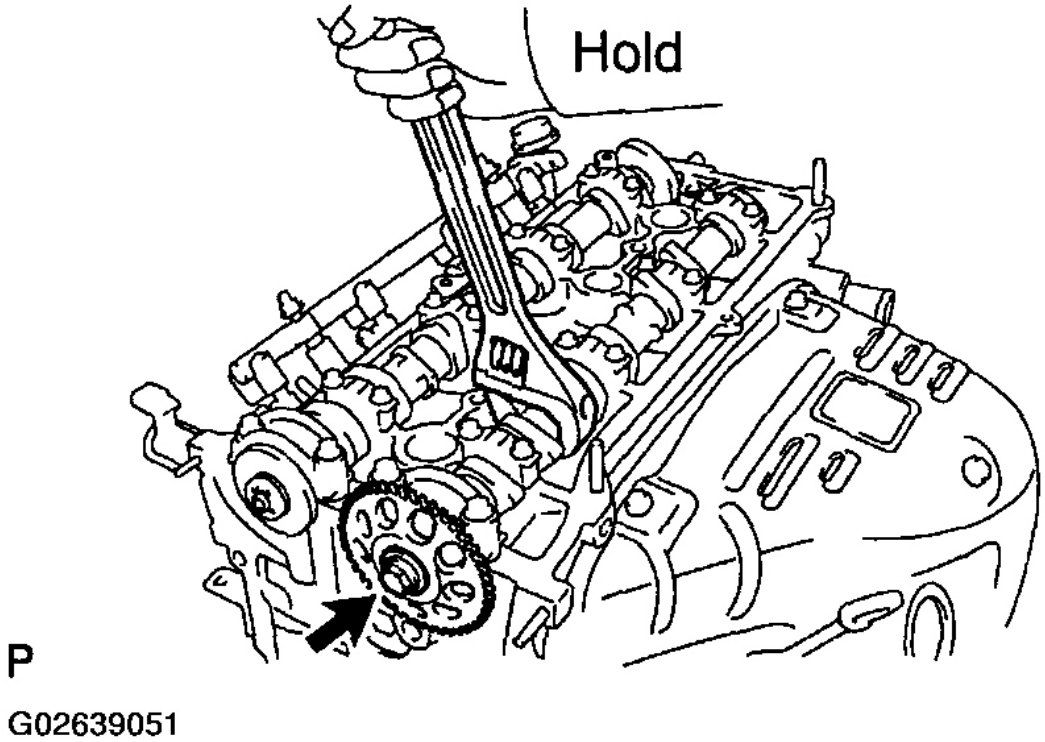

Fig. 41: Removing Camshaft Timing Sprocket And VVT Timing Sprocket
Courtesy of TOYOTA MOTOR SALES, U.S.A., INC.

cardiagn.com

INSPECTION

1. **INSPECT TIMING CHAIN AND TIMING SPROCKETS**
   a. Using vernier calipers, measure the length of the 16 links with the chain fully stretched.

      Maximum chain elongation: 122.6 mm (4.827 in.)

      If the elongation is greater than maximum, replace the chain.

      HINT:

      Make the same pulling measurements at 3 or more places selected at random.

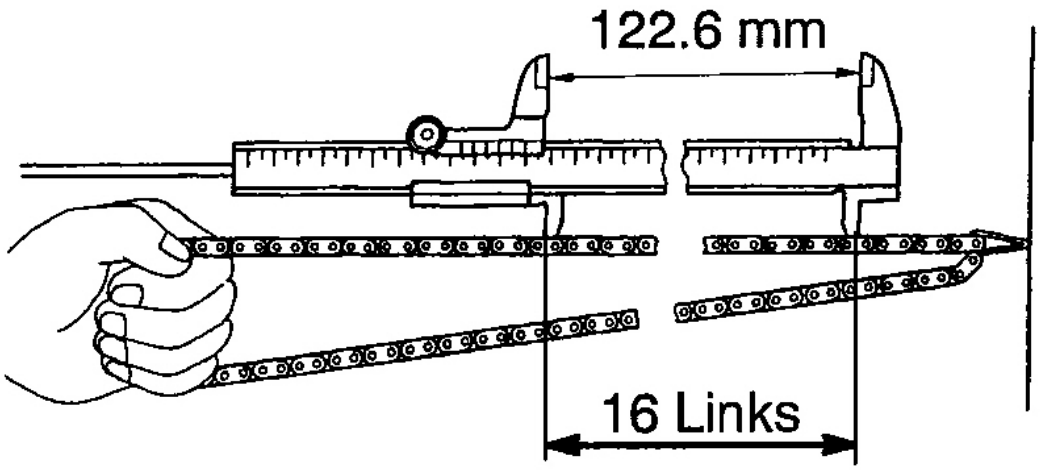

Fig. 42: Measuring Length Of Links With Chain Fully Stretched Using Vernier Calliper
Courtesy of TOYOTA MOTOR SALES, U.S.A., INC.

   b. Wrap the chain around the timing sprocket.
   c. Using vernier calipers, measure the timing sprocket diameter with the chain.

NOTE: Vernier caliper must contact the chain rollers for measuring.

cardiagn.com

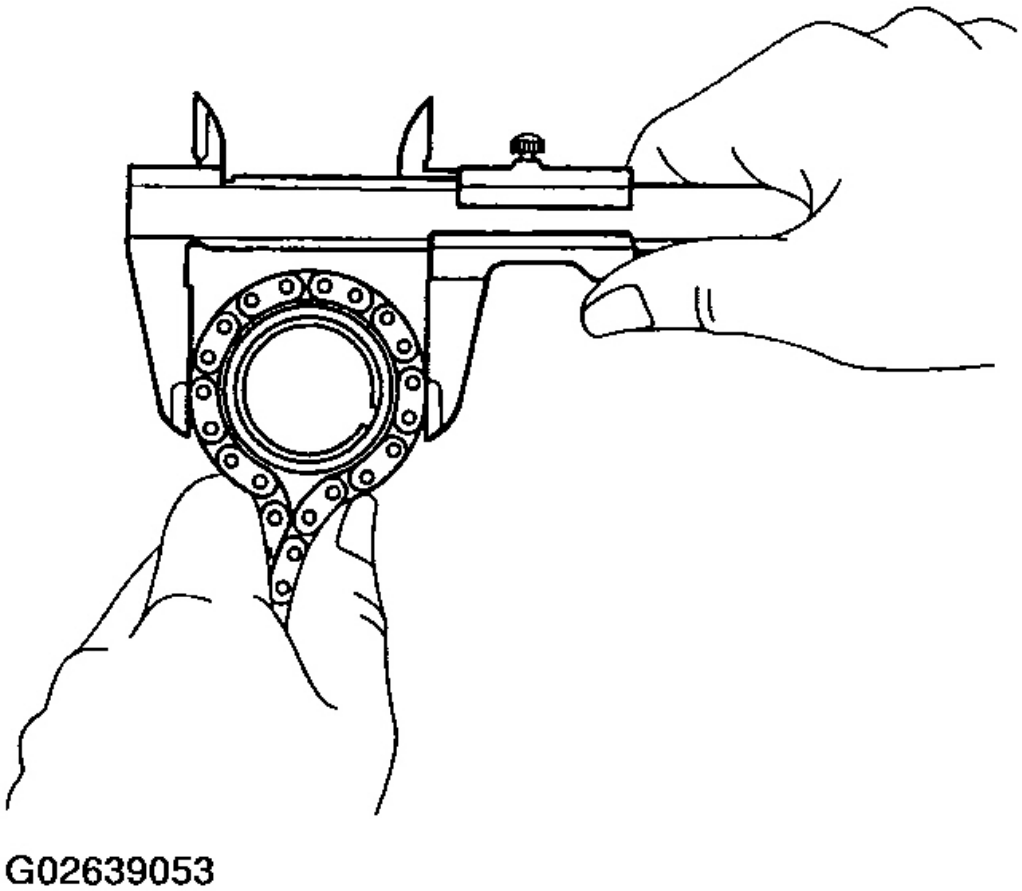

Fig. 43: Measuring Timing Sprocket Diameter With Chain Using Vernier Calliper
Courtesy of TOYOTA MOTOR SALES, U.S.A., INC.

Minimum sprocket diameter (w/ Chain):

MINIMUM SPROCKET DIAMETER (W/ CHAIN)

Camshaft	97.3 mm (3.831 in.)
Crankshaft	51.6 mm (2.031 in.)

If the diameter is less than the minimum, replace the chain and sprockets.

2. **INSPECT CHAIN TENSIONER SLIPPER AND VIBRATION DAMPER**

Measure the chain tensioner slipper and vibration damper wears.

cardiagn.com

Maximum wear: 1.0 mm (0.039 in.)

If the wear is greater than the maximum, replace the slipper and/or damper.

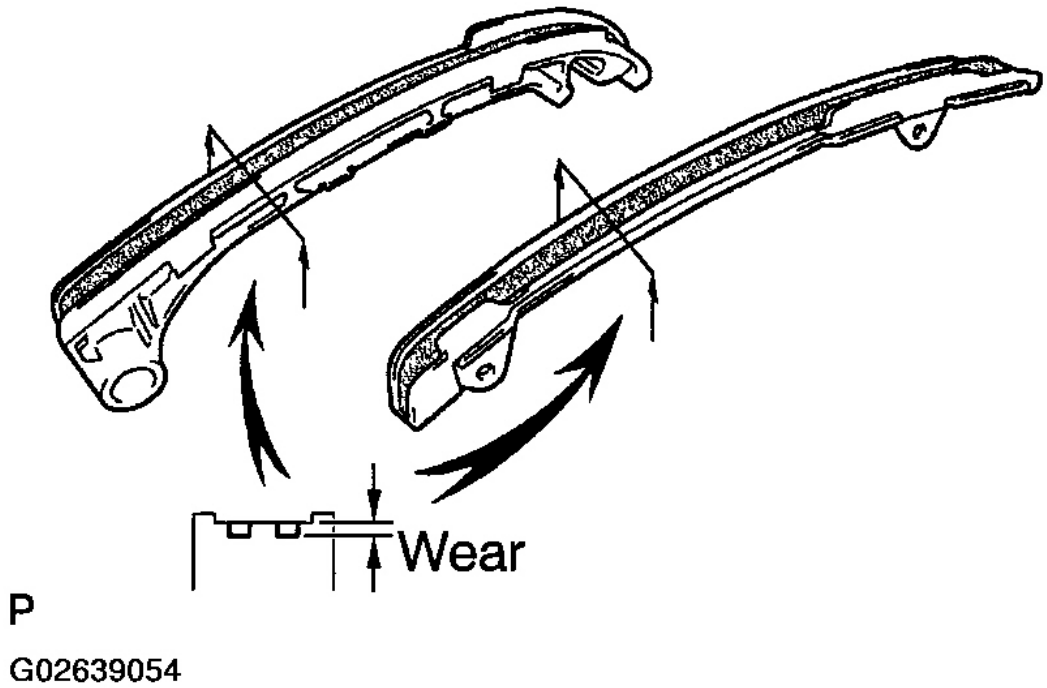

Fig. 44: Measuring Chain Tensioner Slipper And Vibration Damper Wears
Courtesy of TOYOTA MOTOR SALES, U.S.A., INC.

3. **INSPECT CHAIN TENSIONER**
   a. Check that the plunger moves smoothly when the ratchet pawl is raised with your finger.
   b. Release the ratchet pawl and check that the plunger is locked in place by the ratchet pawl and does not move when pushed with your finger.

cardiagn.com

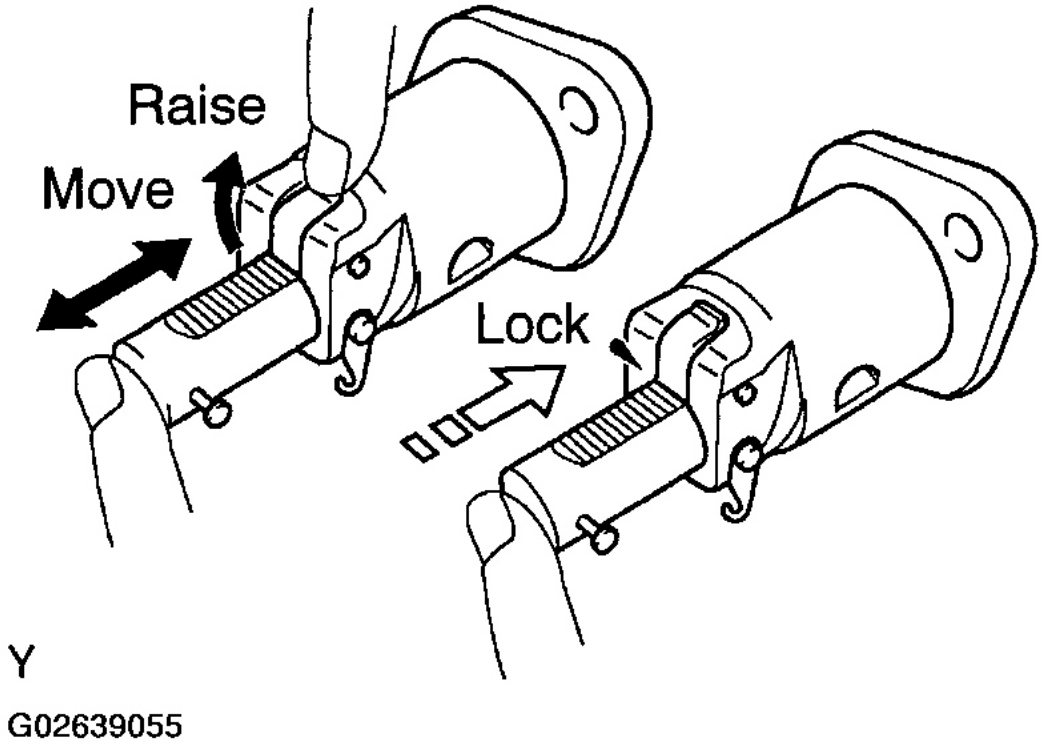

Fig. 45: Checking Plunger Function
Courtesy of TOYOTA MOTOR SALES, U.S.A., INC.

4. **INSPECT DRIVE BELT TENSIONER**

   Check for oil leakage and or cracks.

   If necessary, replace the drive belt tensioner.

REPLACEMENT

REPLACE CRANKSHAFT FRONT OIL SEAL

HINT:

There are 2 methods ((a) and (b)) to replace the oil seal.

a. If the timing chain cover is removed from the cylinder head and block.
   1. Using a screwdriver and a hammer, tap out the oil seal.

cardiagn.com

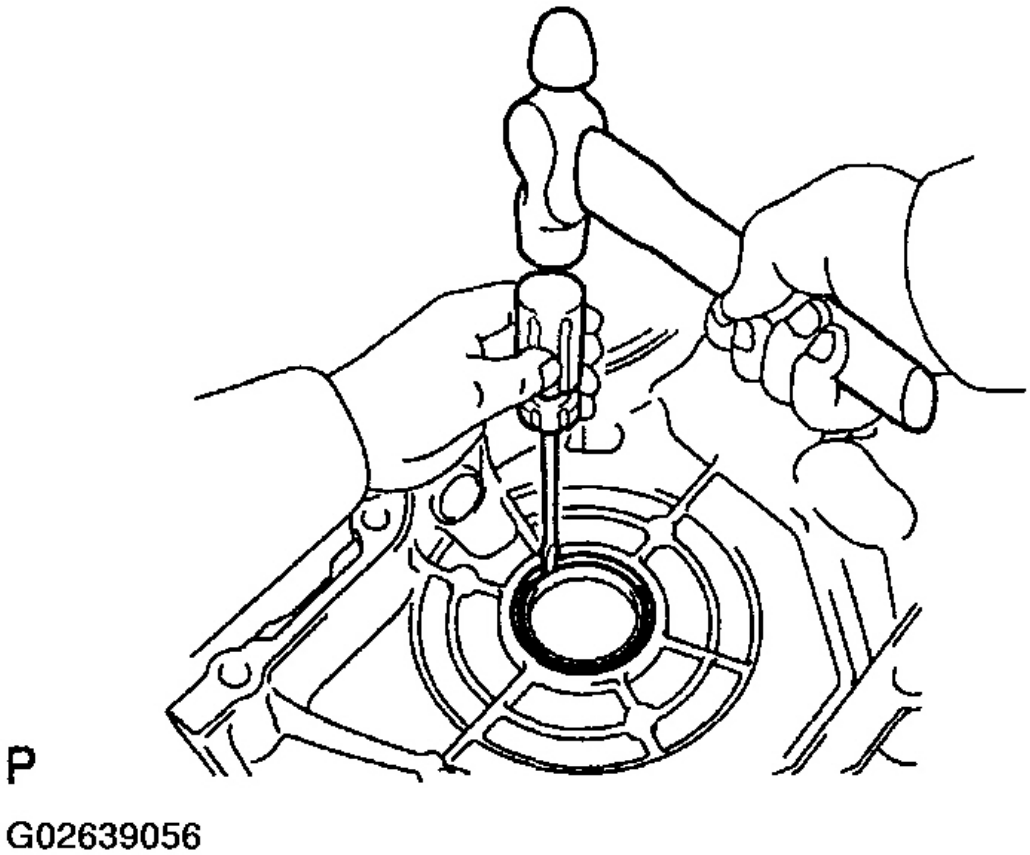

Fig. 46: Taping Out Oil Seal Using Screwdriver And Hammer
Courtesy of TOYOTA MOTOR SALES, U.S.A., INC.

2. Using SST and a hammer, tap in a new oil seal until its surface is flush with the timing chain cover edge.

   SST 09309-37010

3. Apply MP grease to the oil seal lip.

cardiagn.com

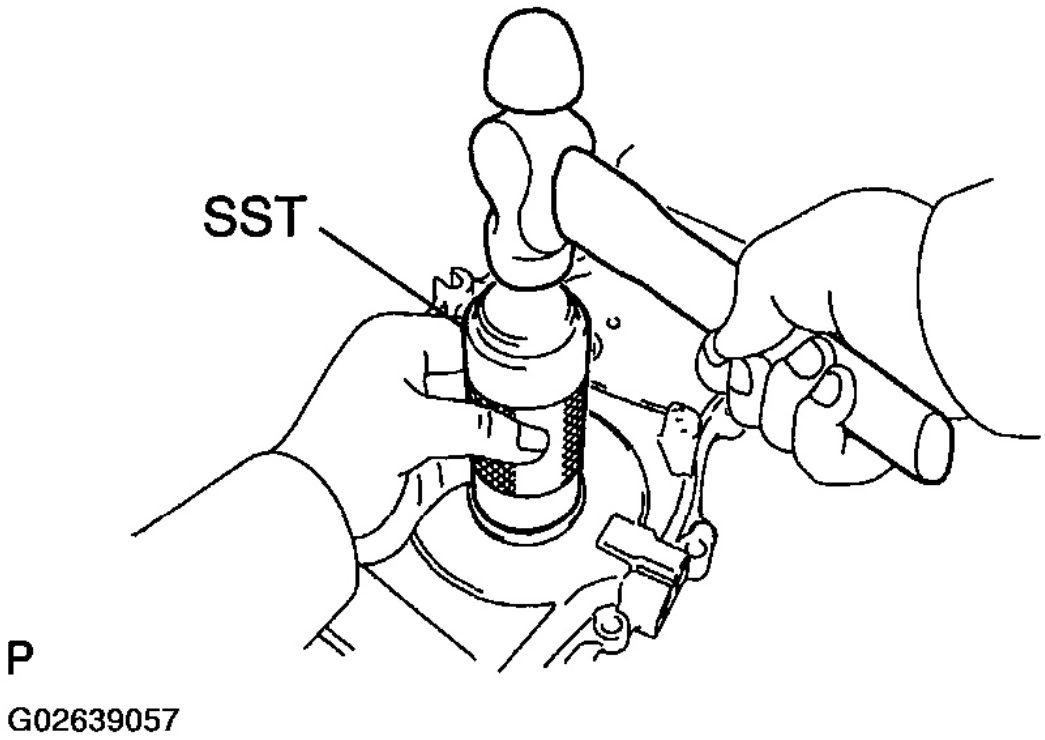

Fig. 47: Taping In Oil Seal Using SST And Hammer
Courtesy of TOYOTA MOTOR SALES, U.S.A., INC.

b. If the timing chain cover is installed to the cylinder head and block.
   1. Using SST, remove the oil seal.

      SST 09308-10010, 09950-60010 (09951-00200)

cardiagn.com

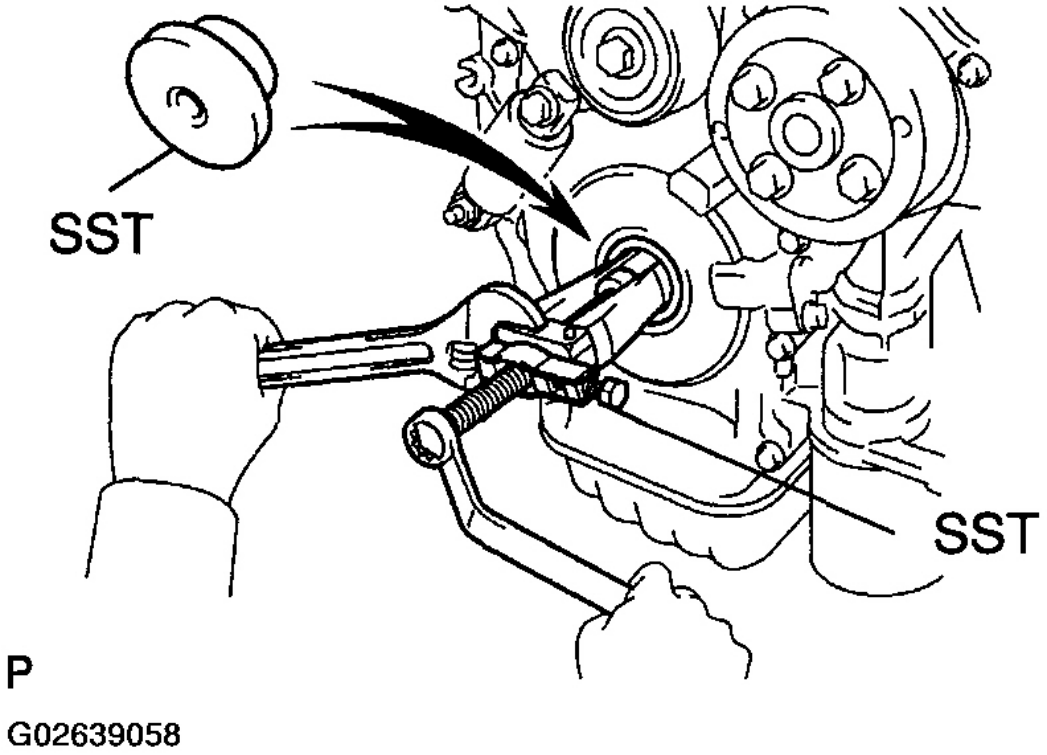

Fig. 48: Removing Oil Seal Using SST
Courtesy of TOYOTA MOTOR SALES, U.S.A., INC.

2. Using SST and a hammer, tap in a new oil seal until its surface is flush with the timing chain cover edge.

   SST 09309-37010

cardiagn.com

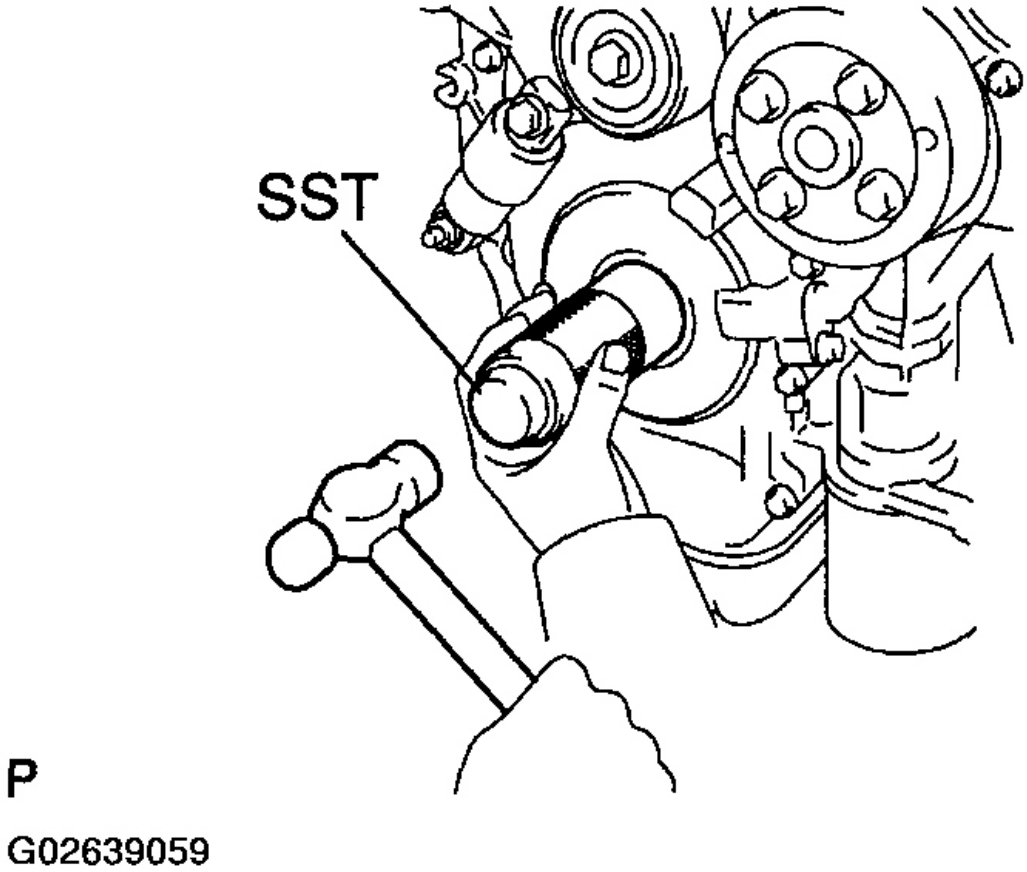

Fig. 49: Taping In Oil Seal Using SST And Hammer
Courtesy of TOYOTA MOTOR SALES, U.S.A., INC.

INSTALLATION

1. **INSTALL CAMSHAFT TIMING SPROCKET AND VVT TIMING SPROCKET**
   a. Install the camshaft timing sprocket.
      1. Face the timing mark of the sprocket outward.
      2. Align the camshaft knock pin with the knock pin groove on the sprocket side with the timing mark, and slide on the timing sprocket.

cardiagn.com

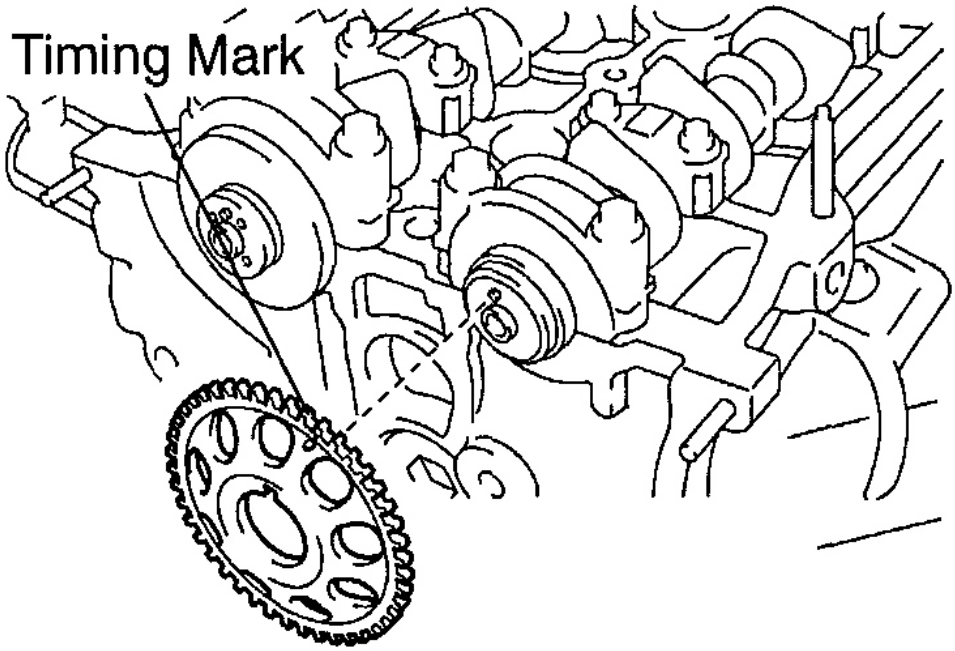

P

G02639060

Fig. 50: Identifying Timing Mark
Courtesy of TOYOTA MOTOR SALES, U.S.A., INC.

3. Temporarily install the timing sprocket set bolt.
4. Hold the hexagon wrench head portion of the exhaust camshaft with a wrench, and tighten the bolt.

Torque: 54 N.m (551 kgf.cm, 40 ft.lbf)

cardiagn.com

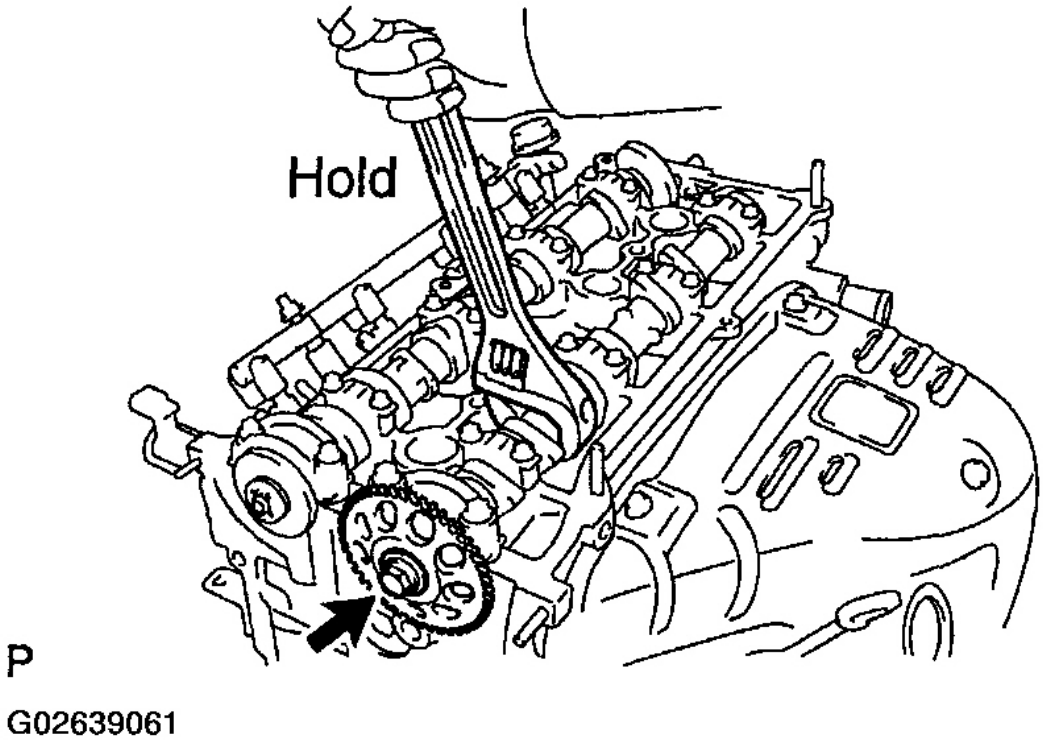

Fig. 51: Holding Exhaust Camshaft With A Wrench
Courtesy of TOYOTA MOTOR SALES, U.S.A., INC.

b. Install the VVT timing sprocket.
   1. Holding the timing sprocket in the position where the timing sprocket pin groove is slightly to right of the camshaft pin looking from the front side, install the timing sprocket to the camshaft, lightly pressing and turning it counterclockwise. Check that there is virtually no clearance between the timing sprocket and camshaft flange.

      NOTE: Be careful not to turn the timing sprocket clockwise when installing it.

   2. Temporarily install the timing sprocket set bolt.
   3. Hold the hexagon wrench head portion of the intake camshaft with a wrench.
   4. Take care to install the timing sprocket with the bolt.

      Torque: 54 N.m (551 kgf.cm, 40 ft.lbf)

   5. Check that the valve timing controller turns clockwise and that it is locked securely when the lock pin in hole is at the locking point.

cardiagn.com

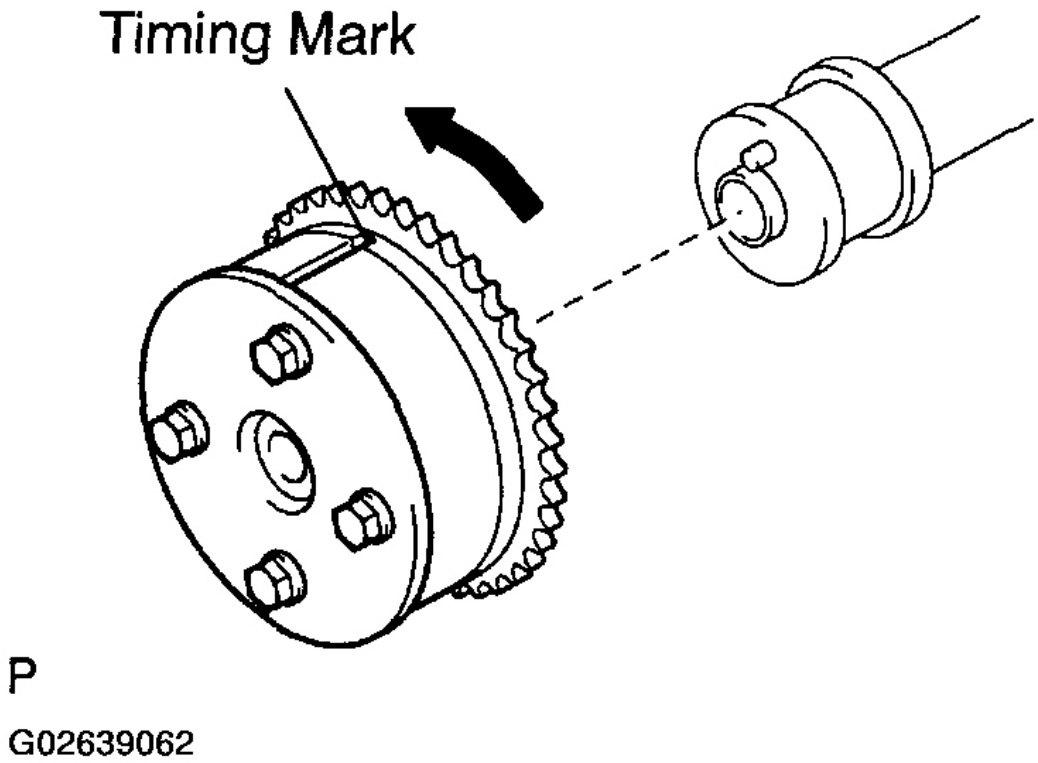

Fig. 52: Identifying Timing Mark On Timing Sprocket
Courtesy of TOYOTA MOTOR SALES, U.S.A., INC.

2. **SET NO. 1 CYLINDER TO TDC/COMPRESSION**
   a. Turn the hexagonal wrench head portion of the camshafts, and align the timing marks of the camshaft timing sprocket and VVT timing sprocket with the timing marks of No. 1 and No. 2 bearing caps as shown in the illustration.

cardiagn.com

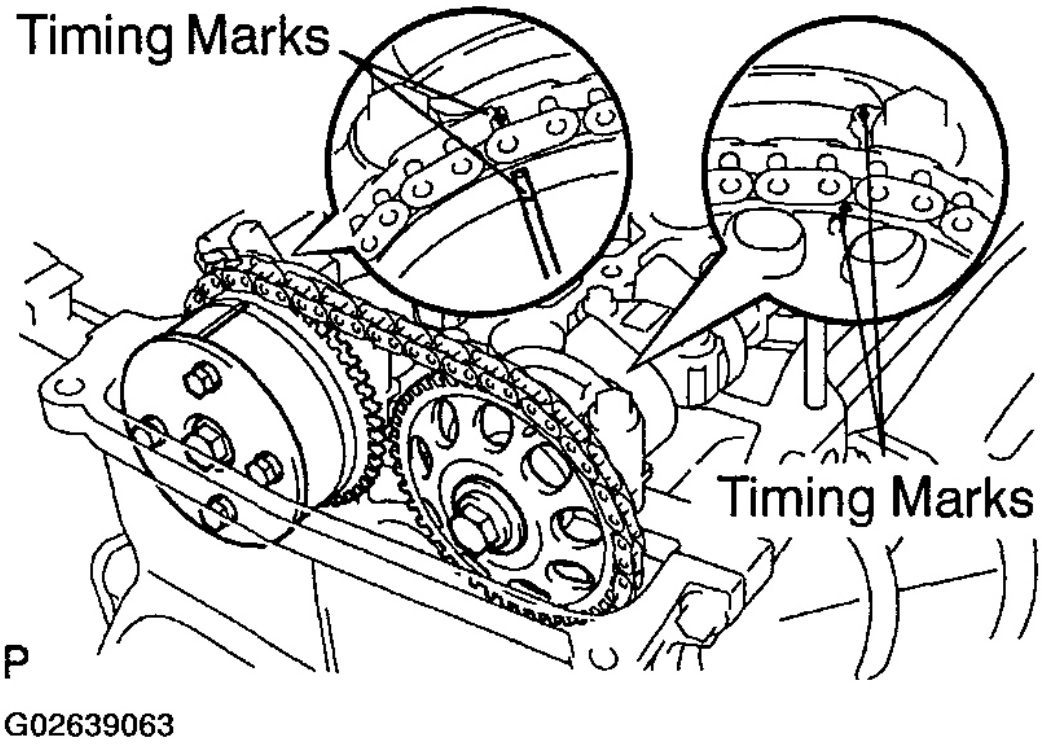

Fig. 53: Identifying Timing Marks On Camshaft Timing Sprockets
Courtesy of TOYOTA MOTOR SALES, U.S.A., INC.

b. Using the crankshaft pulley bolt, turn the crankshaft and set the set key on the crankshaft upward.

cardiagn.com

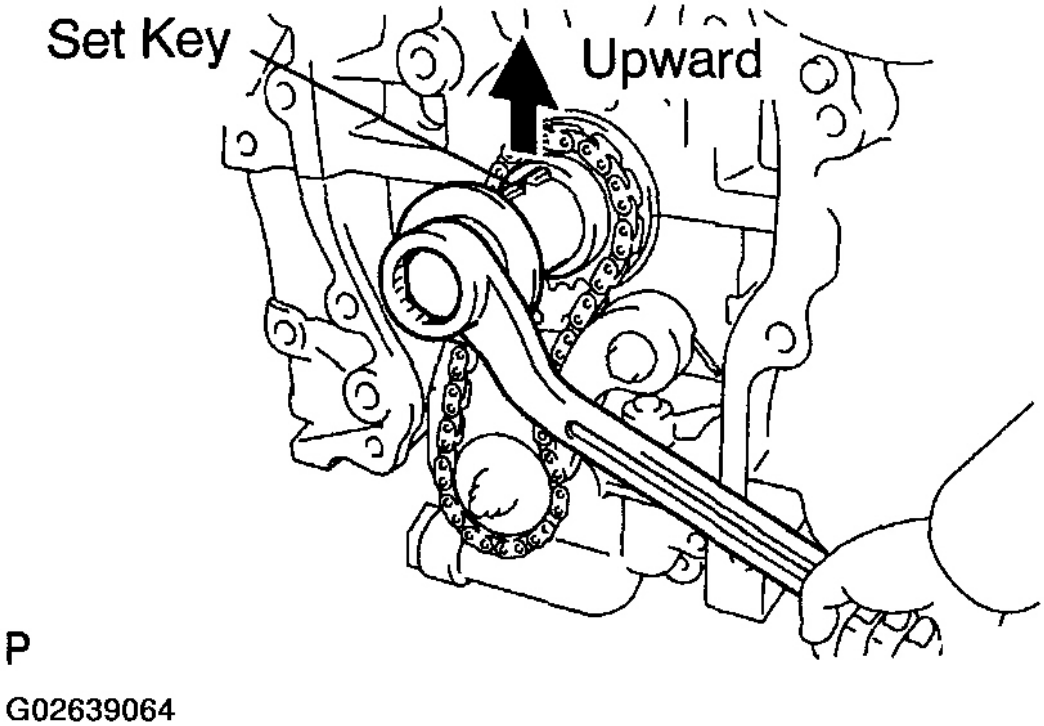

Fig. 54: Turning Crankshaft Using Crankshaft Pulley Bolt
Courtesy of TOYOTA MOTOR SALES, U.S.A., INC.

3. **INSTALL CHAIN VIBRATION DAMPER**

   Install the damper with the 2 bolts.

   Torque: 9.0 N.m (92 kgf.cm, 80 in.lbf)

cardiagn.com

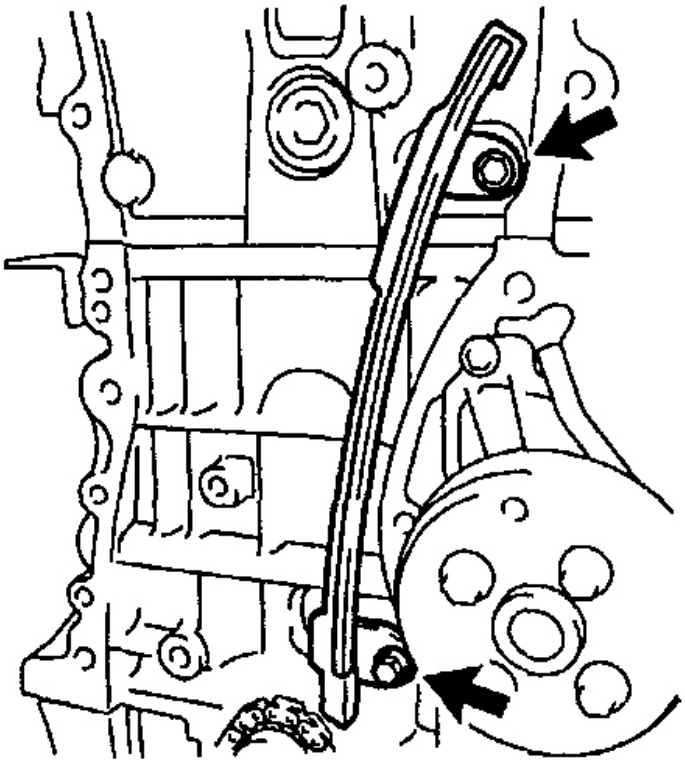

P

G02639065

Fig. 55: Installing Chain Vibration Damper
Courtesy of TOYOTA MOTOR SALES, U.S.A., INC.

4. **INSTALL CRANKSHAFT TIMING SPROCKET**

   Align the sprocket set key with the key groove of the sprocket, slide on the sprocket.

5. **INSTALL TIMING CHAIN**
   a. Install the timing chain on the crankshaft timing sprocket with the blue or orange mark link aligned with the timing mark on the crankshaft timing sprocket.

cardiagn.com

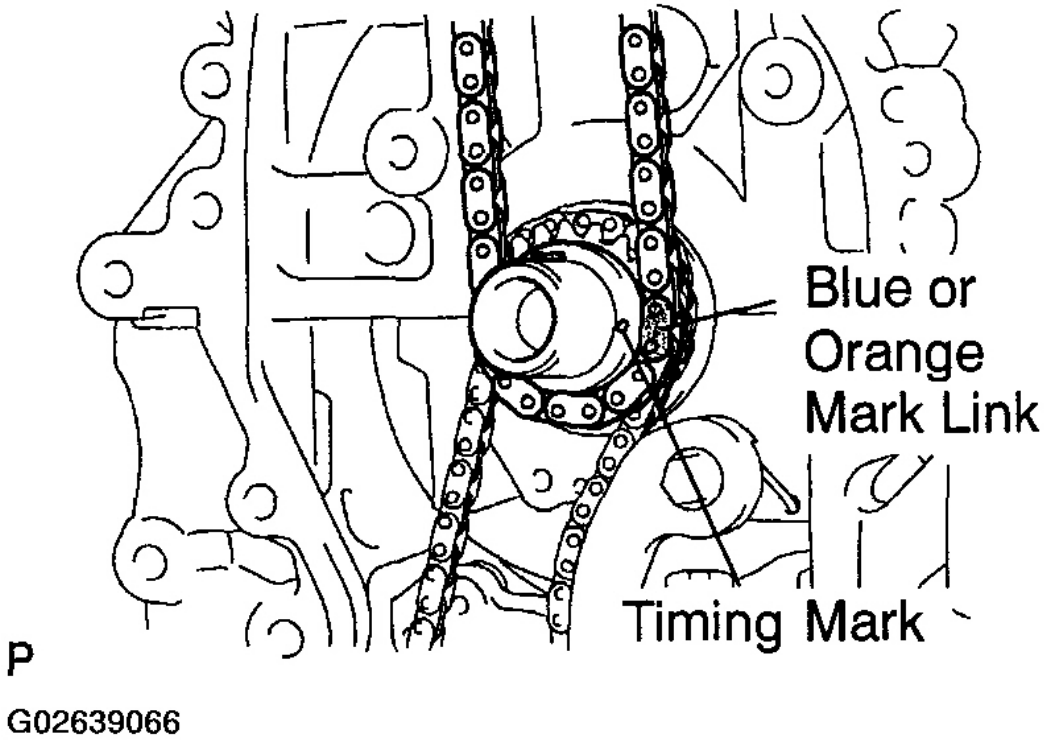

Fig. 56: Installing Timing Chain On Crankshaft Timing Sprocket
Courtesy of TOYOTA MOTOR SALES, U.S.A., INC.

b. Install the timing chain on the camshaft timing sprocket and VVT timing sprocket with the gold or yellow mark links aligned with the timing marks on the camshaft timing sprocket and VVT timing sprocket.

cardiagn.com

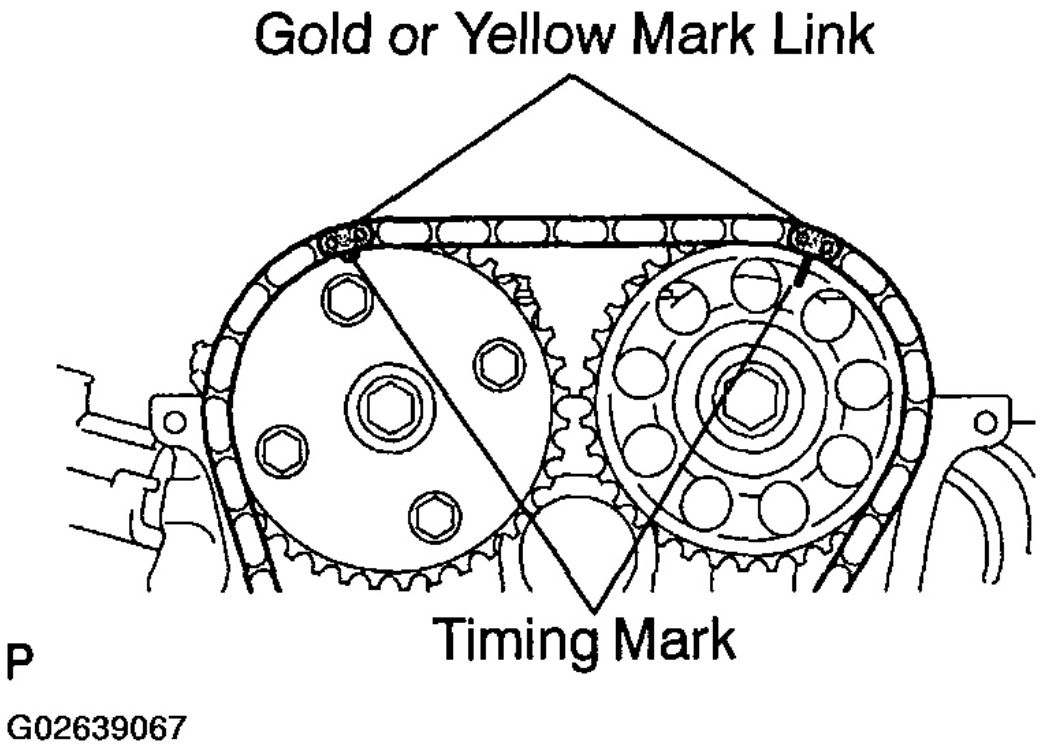

Fig. 57: Installing Timing Chain On Camshaft Timing Sprockets
Courtesy of TOYOTA MOTOR SALES, U.S.A., INC.

6. **INSTALL TIMING CHAIN GUIDE**

   Install the timing chain guide with the bolt.

   Torque: 9.0 N.m (92 kgf.cm, 80 in.lbf)

cardiagn.com

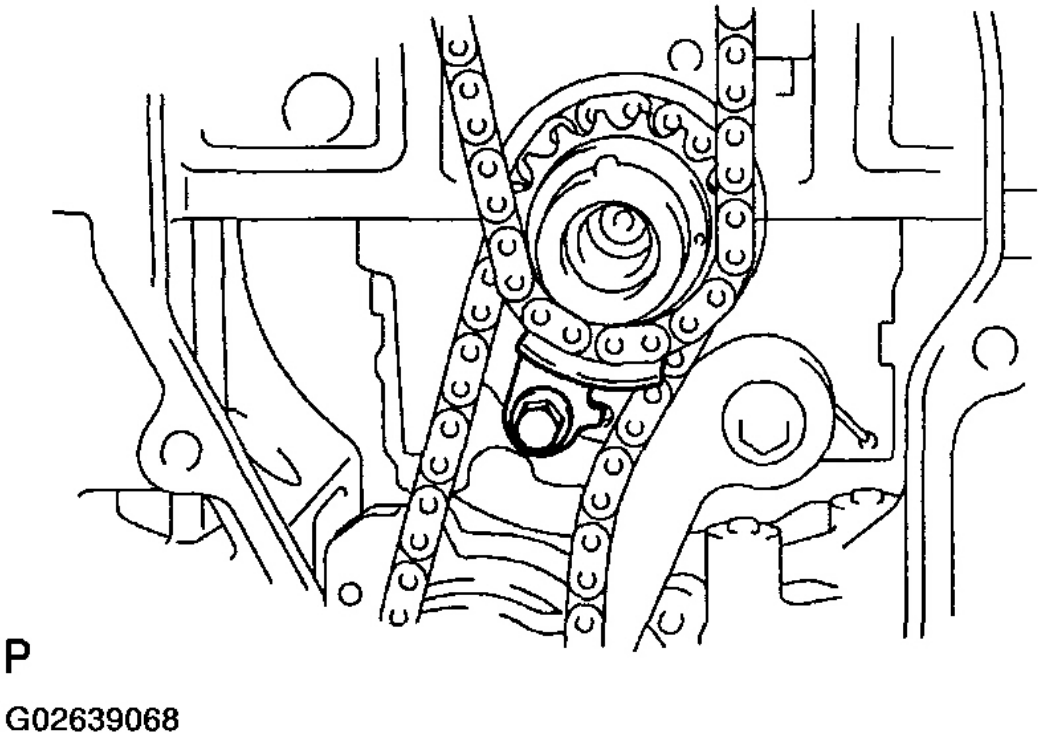

Fig. 58: Installing Timing Chain Guide
Courtesy of TOYOTA MOTOR SALES, U.S.A., INC.

7. **INSTALL CHAIN TENSIONER SLIPPER**
   a. Install the slipper with the bolt.

      Torque: 19 N.m (194 kgf.cm, 14 ft.lbf)

   b. Check that the slipper is hold on the cylinder block stopper.

cardiagn.com

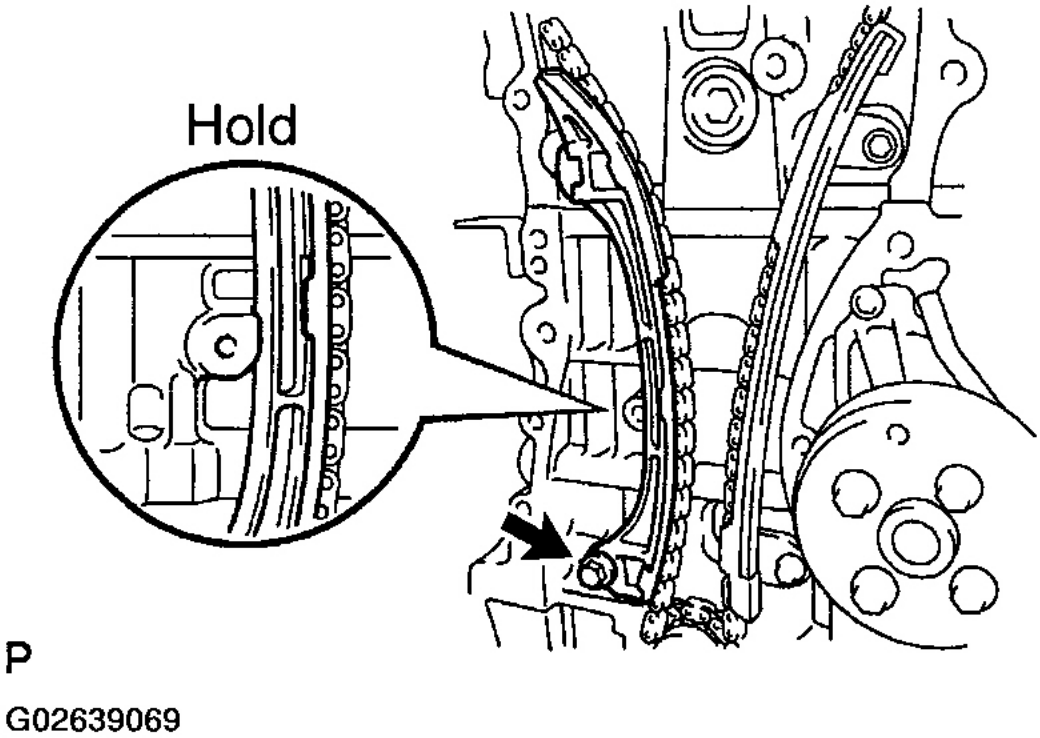

Fig. 59: Installing Chain Tensioner Slipper
Courtesy of TOYOTA MOTOR SALES, U.S.A., INC.

8. **INSTALL CRANK ANGLE SENSOR PLATE**

Install the plate with the F mark facing forward.

cardiagn.com

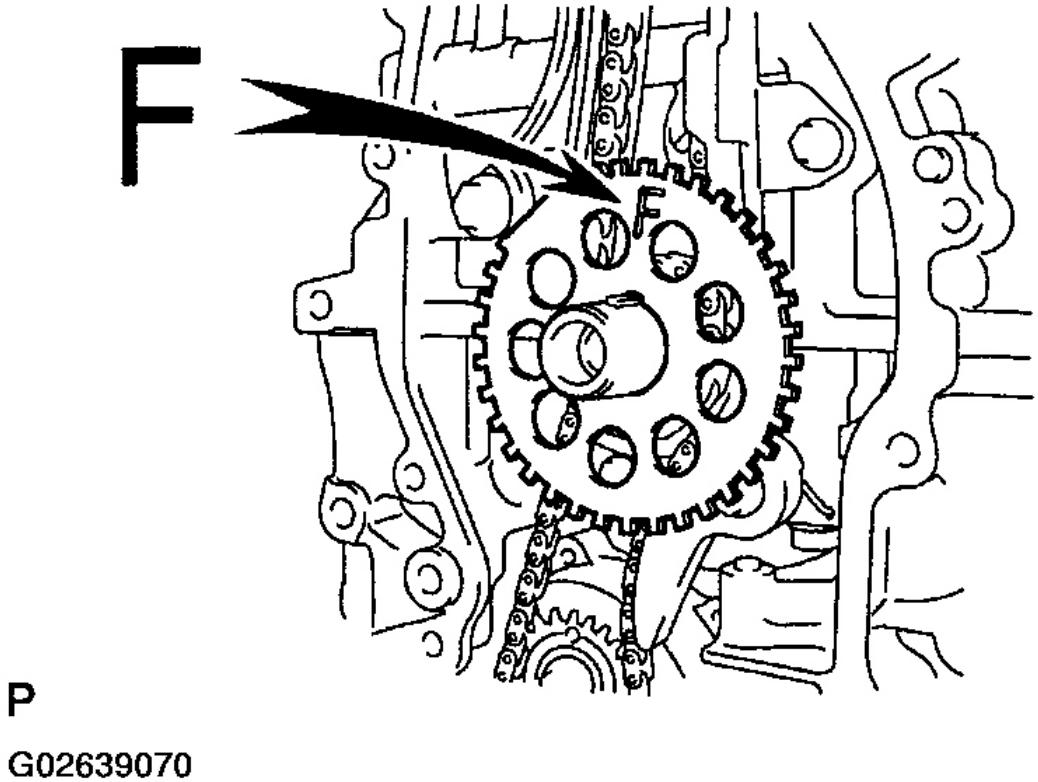

Fig. 60: Installing Crank Angle Sensor Plate With F Mark Facing Forward
Courtesy of TOYOTA MOTOR SALES, U.S.A., INC.

9. **INSTALL TIMING CHAIN COVER**
   a. Remove any old packing (FIPG) material and be careful not to drop any oil on the contact surfaces of the timing chain cover and cylinder head/block/crank case. See **Fig. 61**.
      - Using a razor blade and a gasket scraper, remove all the old packing (FIPG) material from the gasket surfaces and sealing grooves.
      - Thoroughly clean all components to remove all the loose material.
      - Using a non-residue solvent, clean both sealing surfaces.
   b. Apply seal packing to the timing chain cover as shown, see **Fig. 61**.

      Seal packing: Part No. 08826-00080 or equivalent

      - Install a nozzle that has been cut to a 3 to 4 mm (0.12 to 0.16 in.) opening.

      HINT:

cardiagn.com

Avoid applying an excessive amount to the surface.

- Parts must be assembled within 3 minutes of application. Otherwise the material must be removed and reapplied.
- Immediately remove nozzle from the tube and reinstall cap.

cardiagn.com

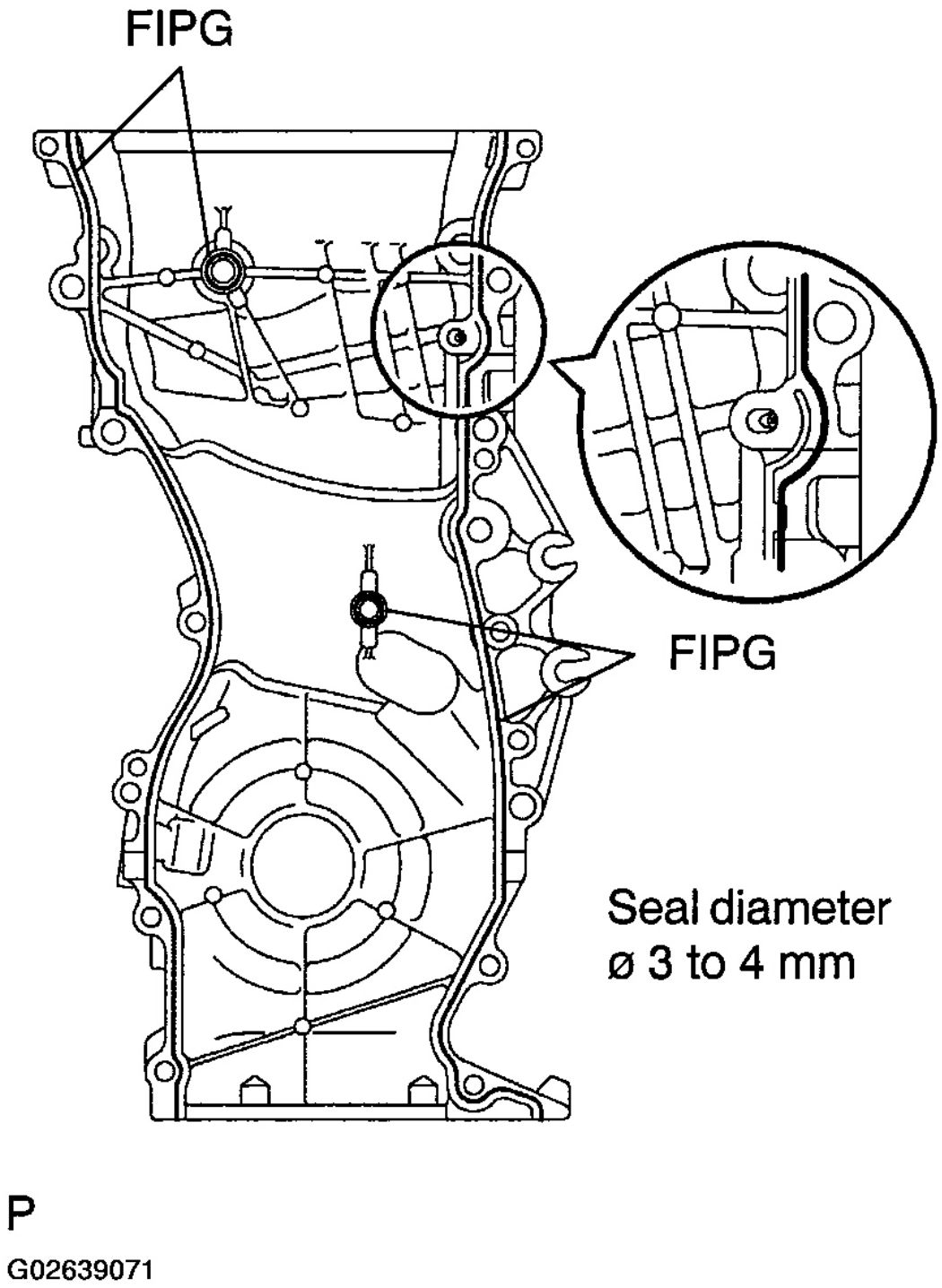

Fig. 61: Installing Timing Chain Cover
Courtesy of TOYOTA MOTOR SALES, U.S.A., INC.

cardiagn.com

c. Apply seal packing to 2 locations as shown, see **Fig. 62**.

Seal packing: Part No. 08826-00080 or equivalent

- Install a nozzle that has been cut to a 2 mm (0.08 in.) opening.

  HINT:

  Avoid applying an excessive amount to the surface.

- Parts must be assembled within 3 minutes of application. Otherwise the material must be removed and reapplied.
- Immediately remove nozzle from the tube and reinstall cap.

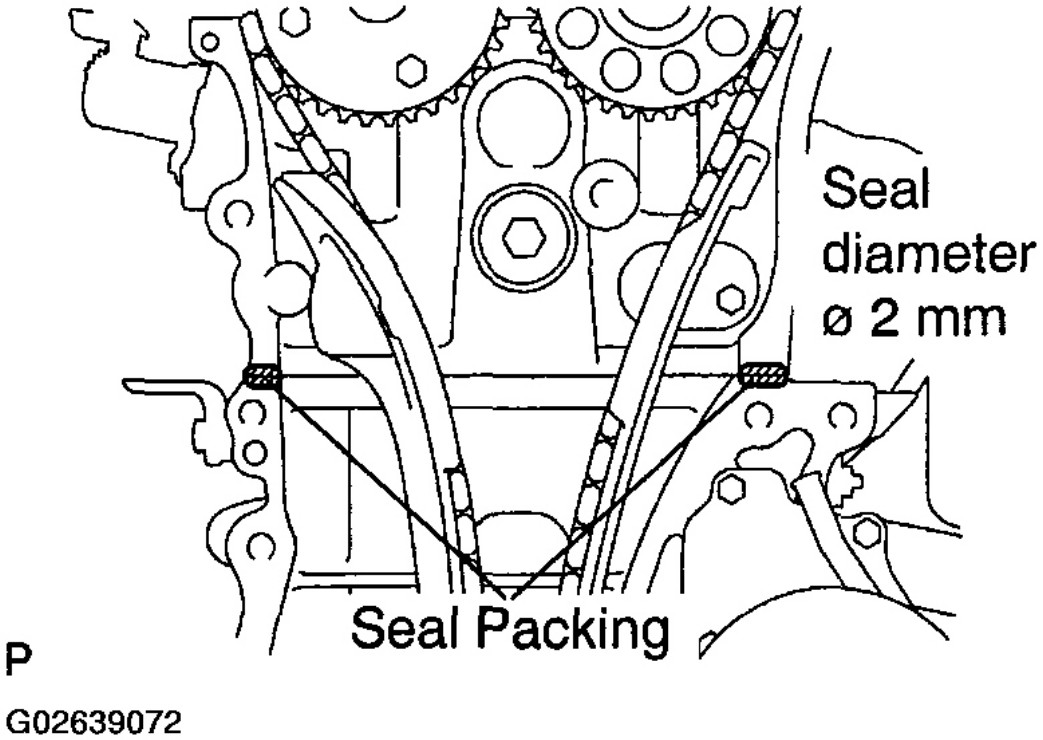

Fig. 62: Applying Seal Packing
Courtesy of TOYOTA MOTOR SALES, U.S.A., INC.

d. Install the timing chain cover with the 14 bolts and 2 nuts. Uniformly tighten the bolts and nuts in several passes.

cardiagn.com

Torque:

9.0 N.m (92 kgf.cm, 80 in.lbf) for bolt A

21 N.m (214 kgf.cm, 15 ft.lbf) for bolt B

43 N.m (439 kgf.cm, 32 ft.lbf) for bolt C

43 N.m (439 kgf.cm, 32 ft.lbf) for bolt D

9.0 N.m (92 kgf.cm, 80 ft.lbf) for nut

HINT:

Bolt length:

BOLT LENGTH

Bolt A	30 mm (1.18 in.) length for 10 mm head
Bolt B	30 mm (1.18 in.) length for 12 mm head
Bolt C	40 mm (1.57 in.) length for 14 mm head
Bolt D	65 mm (2.56 in.) length for 14 mm head

cardiagn.com

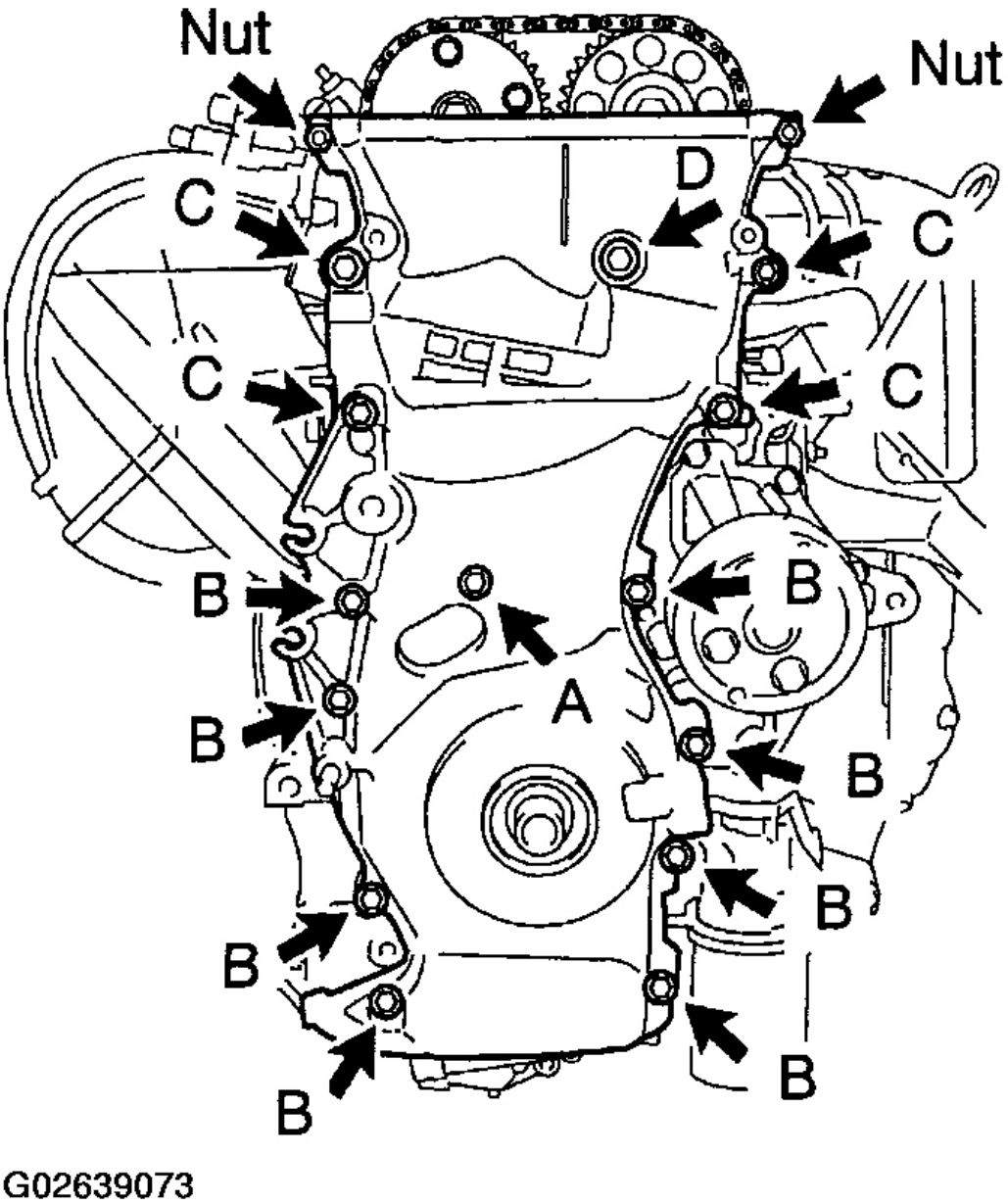

Fig. 63: Identifying Location Of Timing Chain Cover Fasteners
Courtesy of TOYOTA MOTOR SALES, U.S.A., INC.

e. Using a Torx(R) socket wrench (E10), install the stud bolt for the drive belt tensioner.

Torque: 21.5 N.m (219 kgf.cm, 15.8 in.lbf)

cardiagn.com

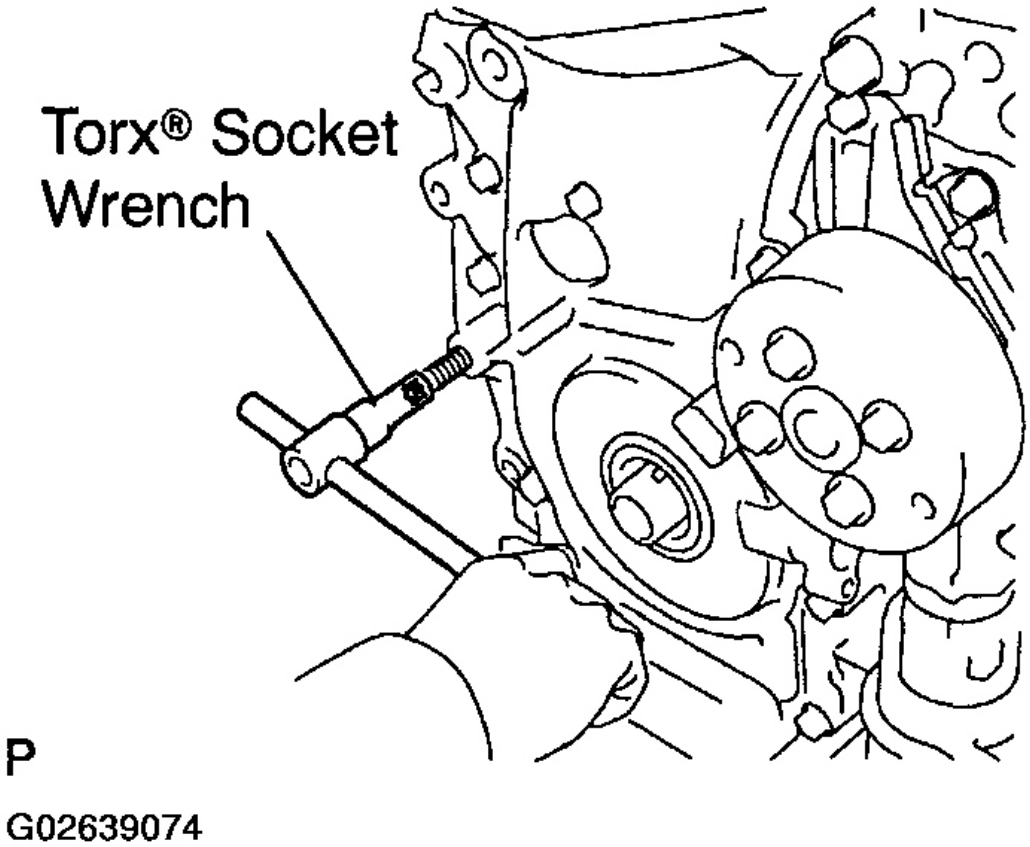

Fig. 64: Installing Stud Bolt Using Torx Socket Wrench
Courtesy of TOYOTA MOTOR SALES, U.S.A., INC.

10. **INSTALL DRIVE BELT TENSIONER**

Install the drive belt tensioner with the bolt and nut.

Torque: 59.5 N.m (607 kgf.cm, 44 ft.lbf)

NOTE: **As the drive belt tensioner should be torqued together with the timing chain cover, so be sure install it within 15 minutes after the timing chain cover is installed.**

cardiagn.com

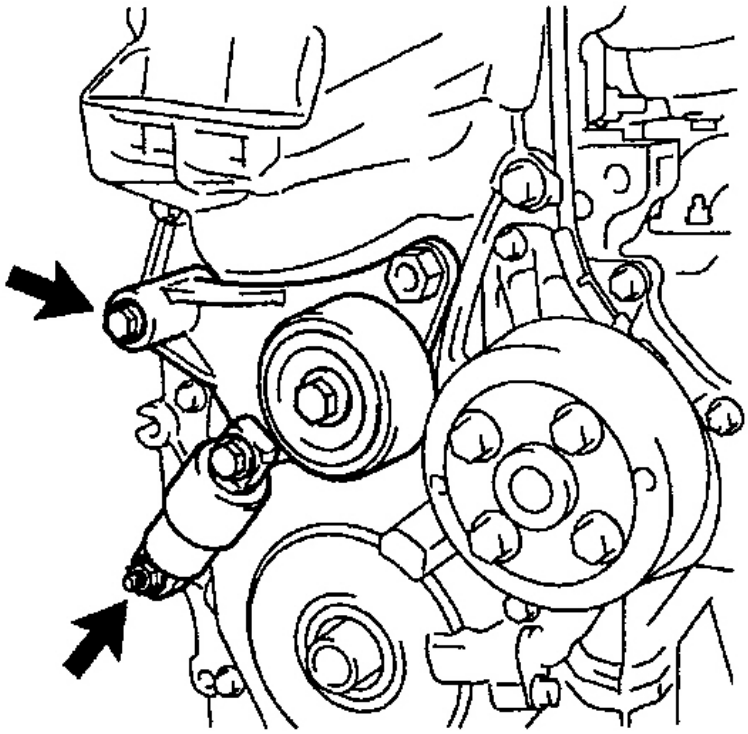

Fig. 65: Installing Drive Belt Tensioner
Courtesy of TOYOTA MOTOR SALES, U.S.A., INC.

11. **INSTALL CRANKSHAFT POSITION SENSOR (See CRANKSHAFT POSITION SENSOR)**
12. **INSTALL OIL PAN (See INSTALLATION)**
13. **INSTALL CRANKSHAFT PULLEY**
    a. Align the pulley set key with the key groove of the pulley, and slide on the pulley.
    b. Using SST, install the pulley bolt.

       SST 09213-54015, 09330-00021

       Torque: 180 N.m (1,836 kgf.cm, 132 ft.lbf)

cardiagn.com

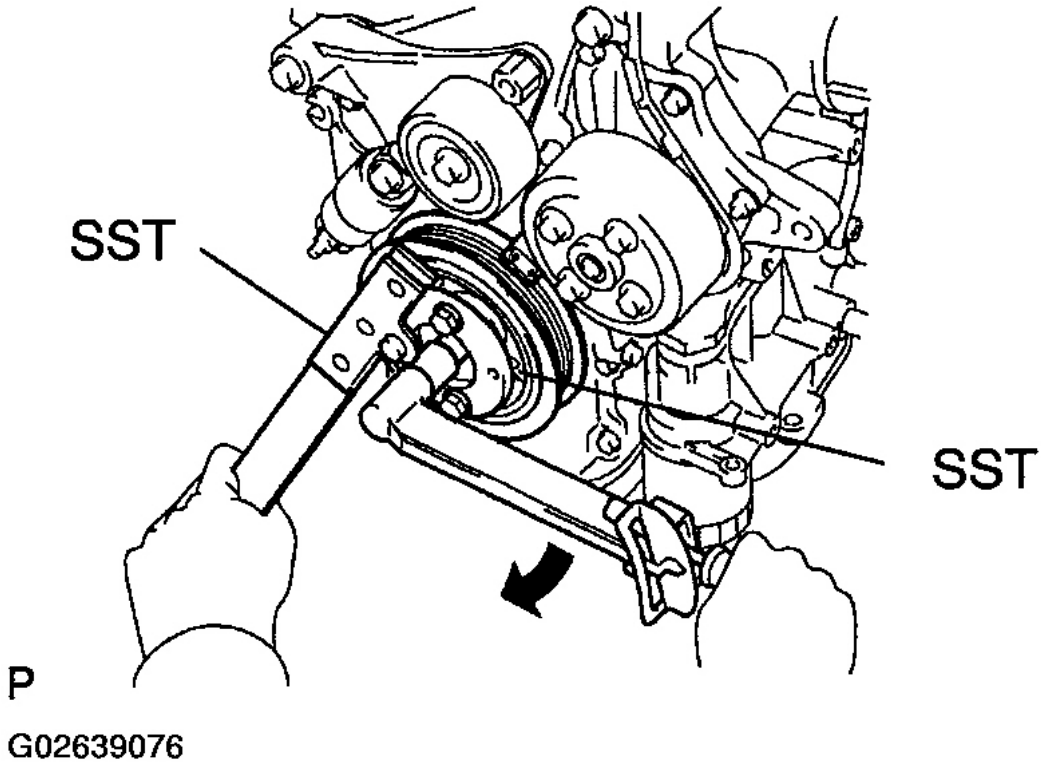

Fig. 66: Installing Crankshaft Pulley
Courtesy of TOYOTA MOTOR SALES, U.S.A., INC.

14. **INSTALL CHAIN TENSIONER**
    a. Release the ratchet pawl, fully push in the plunger and apply the hook to the pin so that the plunger cannot spring out.

cardiagn.com

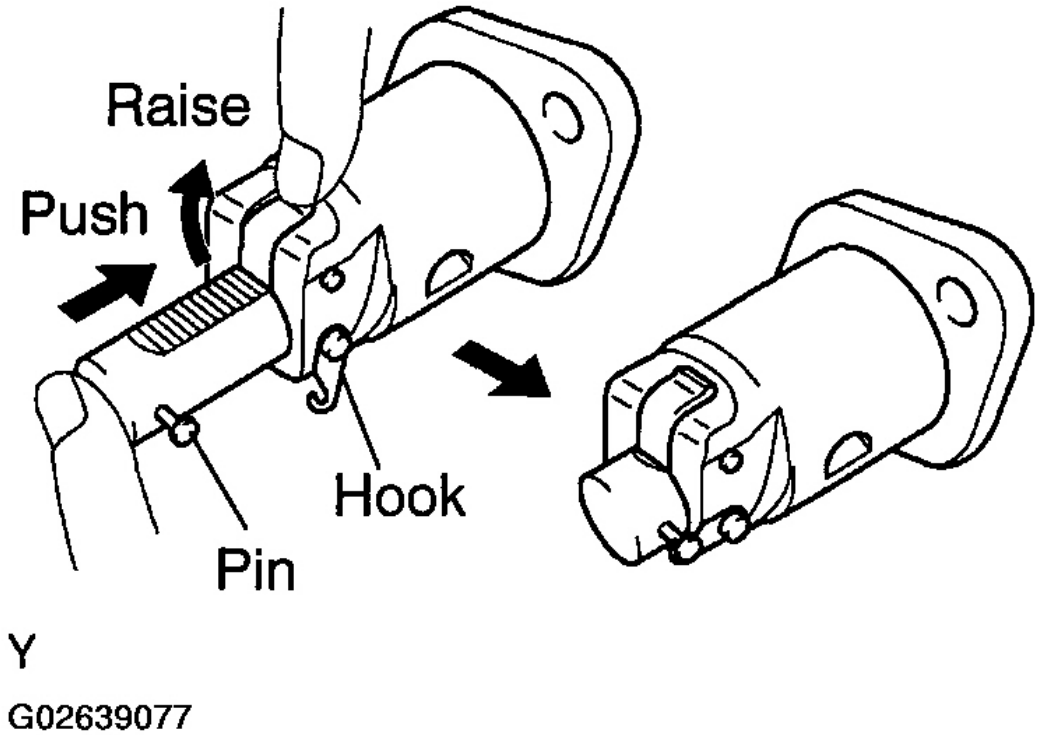

Fig. 67: Installing Chain Tensioner
Courtesy of TOYOTA MOTOR SALES, U.S.A., INC.

b. Place a new gasket on the timing chain cover with portion A facing as shown.

cardiagn.com

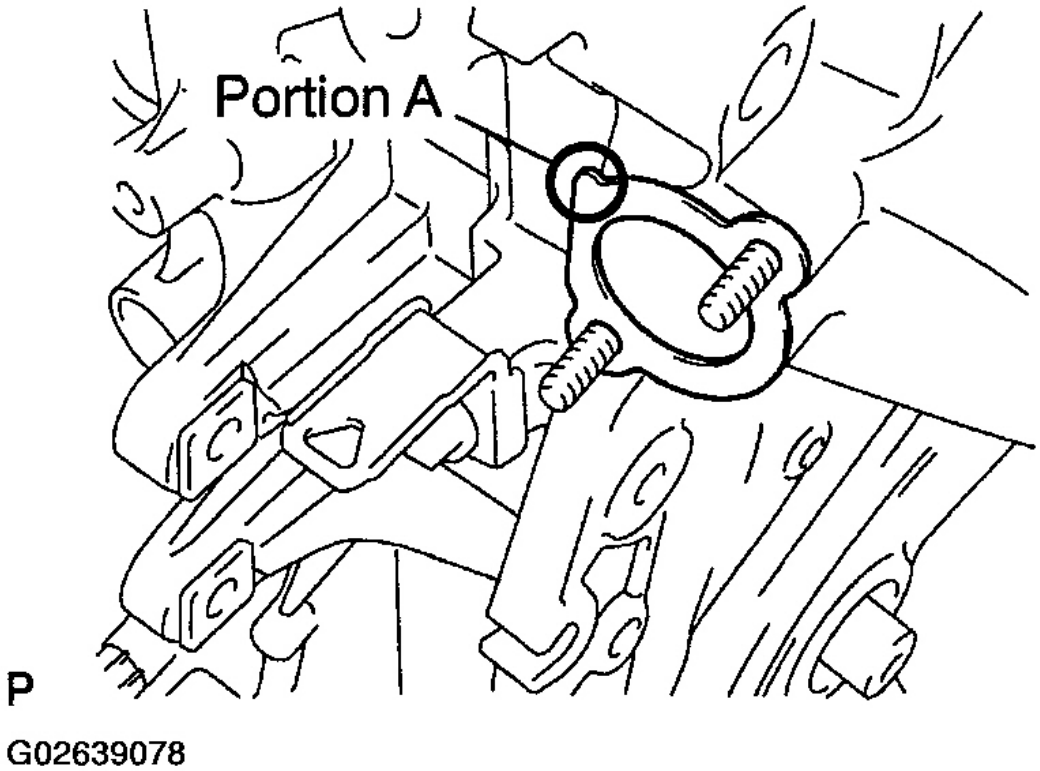

Fig. 68: Placing Gasket On Timing Chain Cover
Courtesy of TOYOTA MOTOR SALES, U.S.A., INC.

c. Push the chain tensioner into the timing chain cover, and install the 2 nuts.

Torque: 9.0 N.m (92 kgf.cm, 80 in.lbf)

cardiagn.com

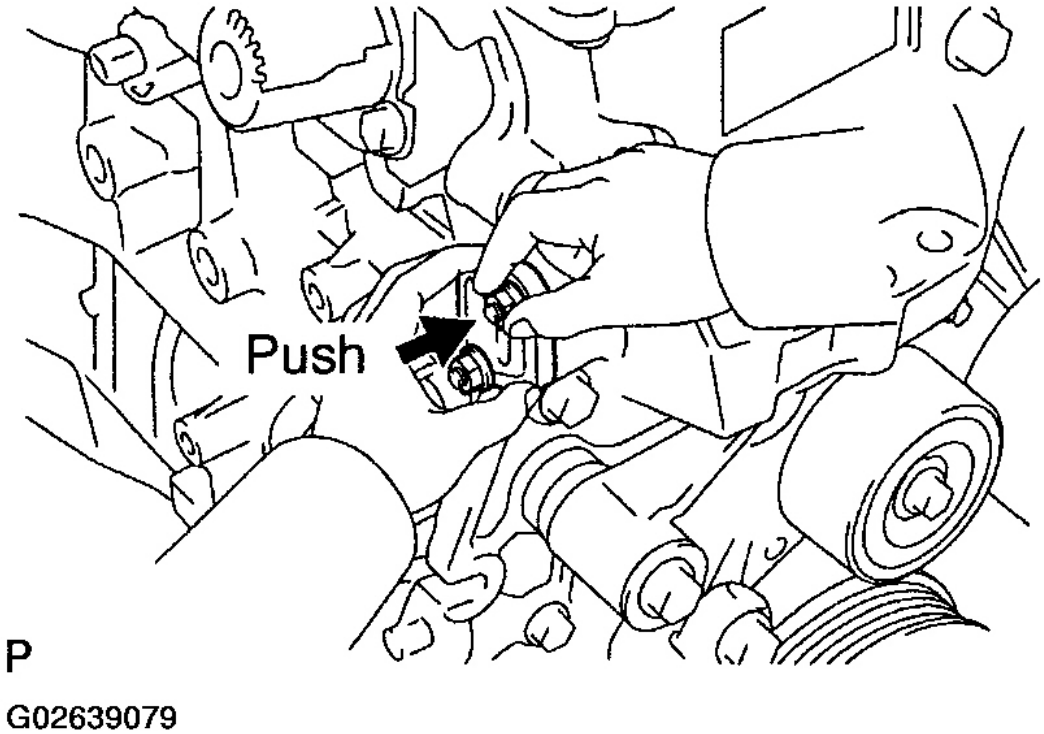

Fig. 69: Pushing Chain Tensioner Into Timing Chain Cover
Courtesy of TOYOTA MOTOR SALES, U.S.A., INC.

15. **SET CHAIN TENSION**
    a. Turn the crankshaft counterclockwise, and disconnect the plunger knock pin from the hook.

cardiagn.com

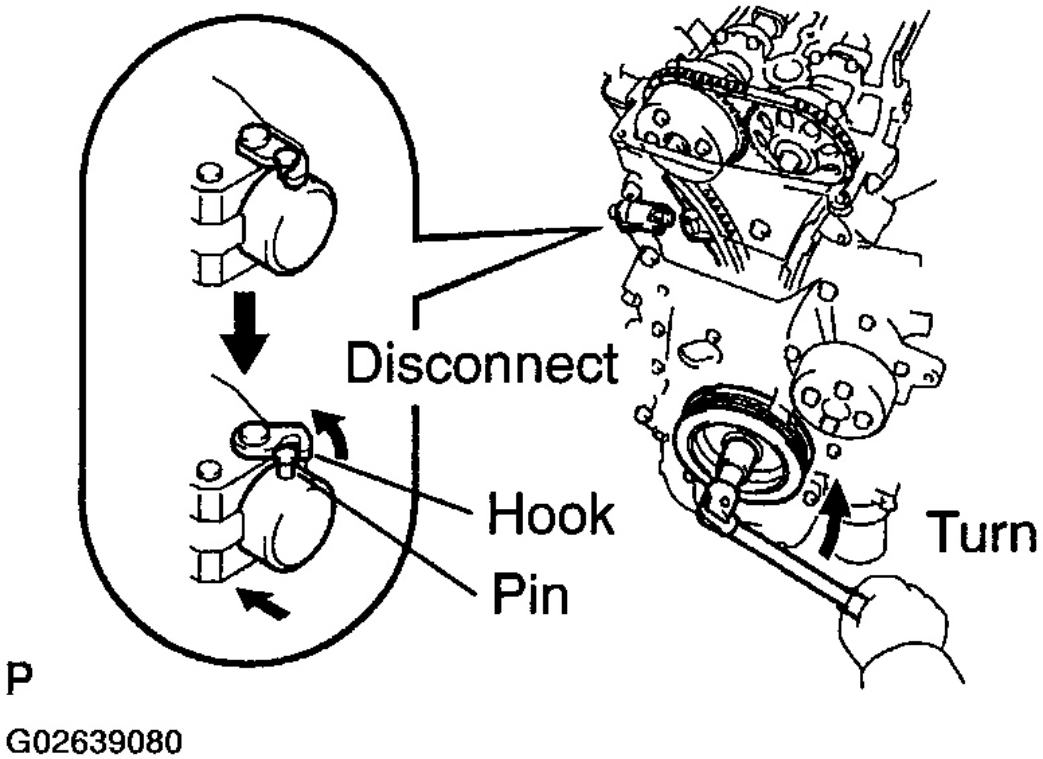

Fig. 70: Setting Chain Tension (1 Of 2)
Courtesy of TOYOTA MOTOR SALES, U.S.A., INC.

b. Turn the crankshaft clockwise, and check that the slipper is pushed by the plunger.

cardiagn.com

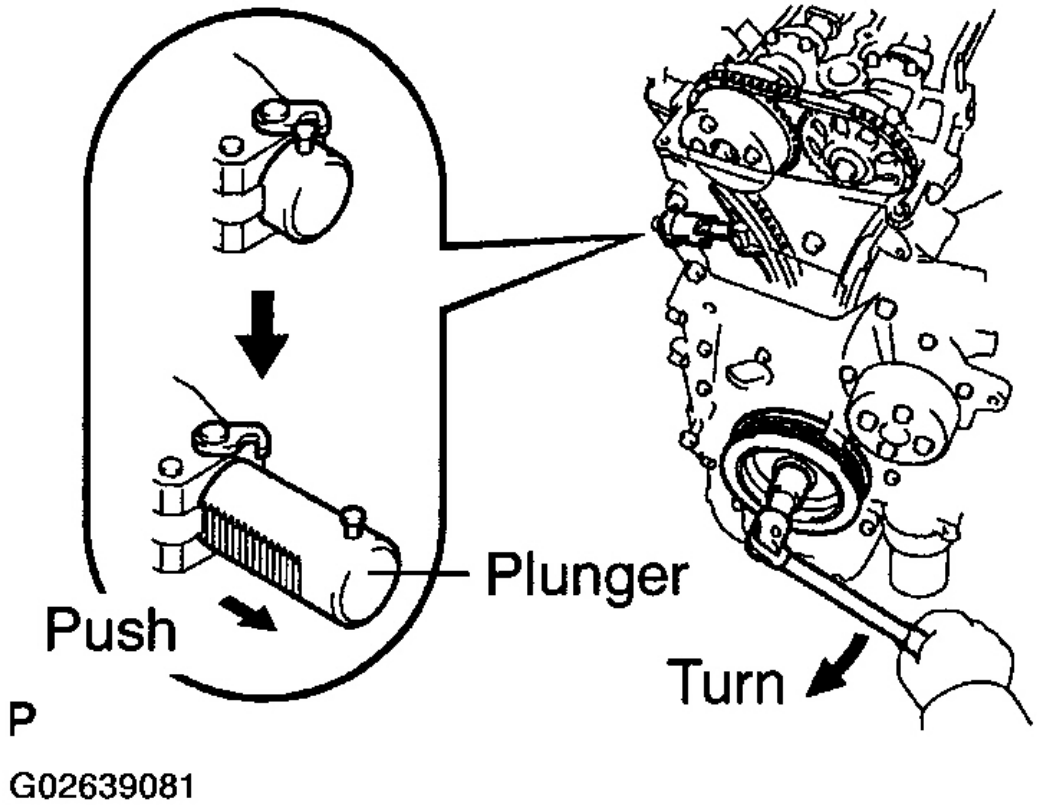

Fig. 71: Setting Chain Tension (2 Of 2)
Courtesy of TOYOTA MOTOR SALES, U.S.A., INC.

16. **CHECK VALVE TIMING**
    a. Turn the crankshaft pulley, and align its groove with timing mark 0 of the timing chain cover.

NOTE: **Always turn the crankshaft clockwise.**

cardiagn.com

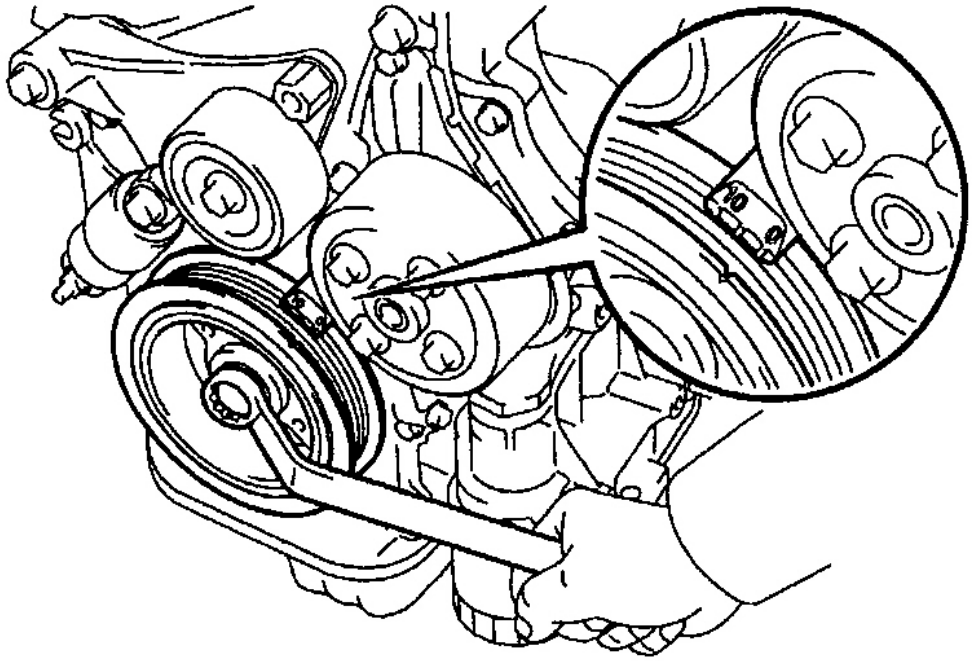

Fig. 72: Aligning Timing Marks Crankshaft Pulley & Timing Chain Cover
Courtesy of TOYOTA MOTOR SALES, U.S.A., INC.

b. Check that the timing marks of the camshaft timing sprocket and VVT timing sprocket are aligned with the timing marks of the No. 1 and No. 2 bearing caps as shown in the illustration.

If not, turn the crankshaft 1 revolution (360°) and align the marks as above.

cardiagn.com

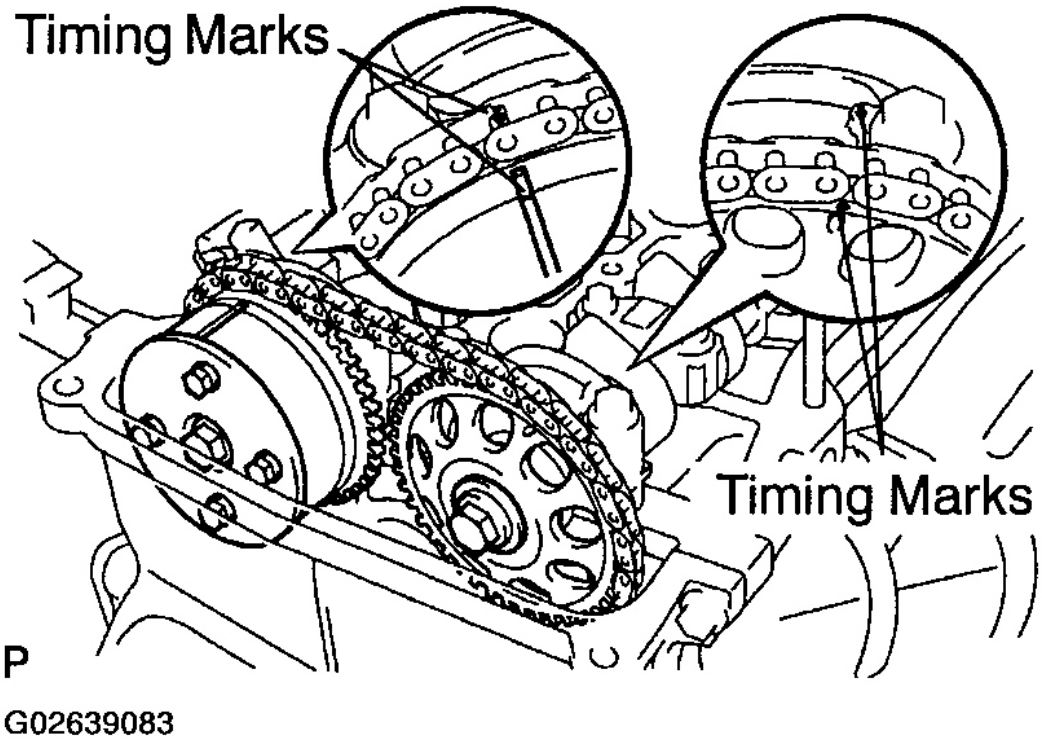

Fig. 73: Checking Timing Marks Of Camshaft Timing Sprockets
Courtesy of TOYOTA MOTOR SALES, U.S.A., INC.

17. **INSTALL CYLINDER HEAD COVER**
    a. Remove any old packing (FIPG) material.
    b. Apply seal packing to 2 locations as shown, see **Fig. 74**.

       Seal packing: Part No. 08826-00080 or equivalent

    c. Install the gasket to the cylinder head cover.

       If the gasket has damage, replace a new one.

       HINT:

       Part must be assembled within 3 minutes of application. Otherwise the material must be removed and reapplied.

cardiagn.com

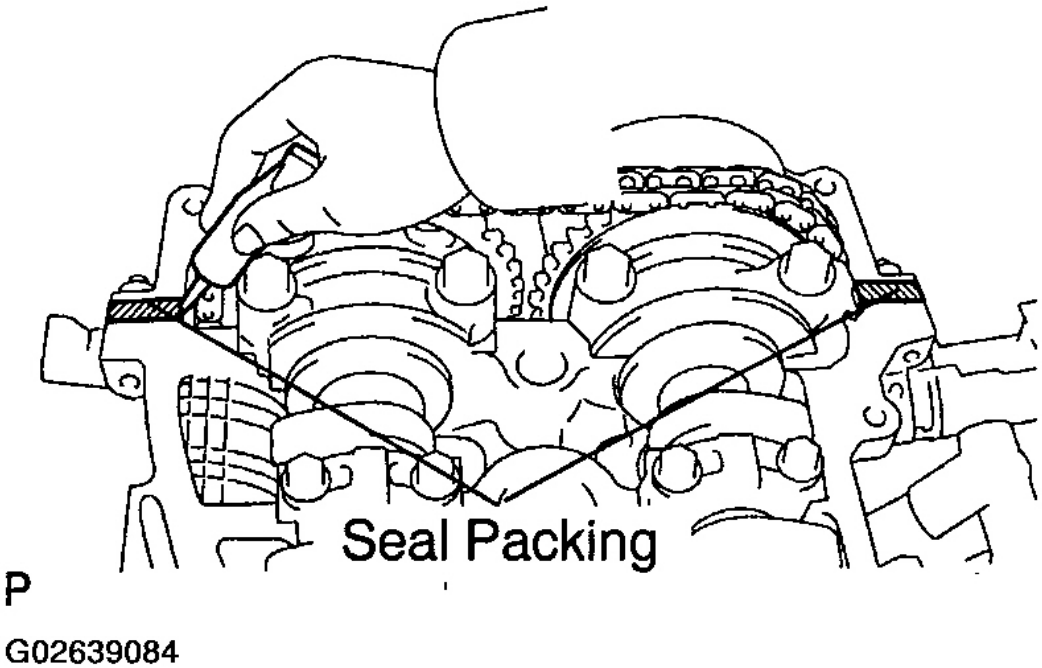

Fig. 74: Applying Seal Packing To 2 Locations
Courtesy of TOYOTA MOTOR SALES, U.S.A., INC.

d. Install the cylinder head cover with the 8 bolts and 2 nuts.

Torque: 11 N.m (112 kgf.cm, 8 ft.lbf)

cardiagn.com

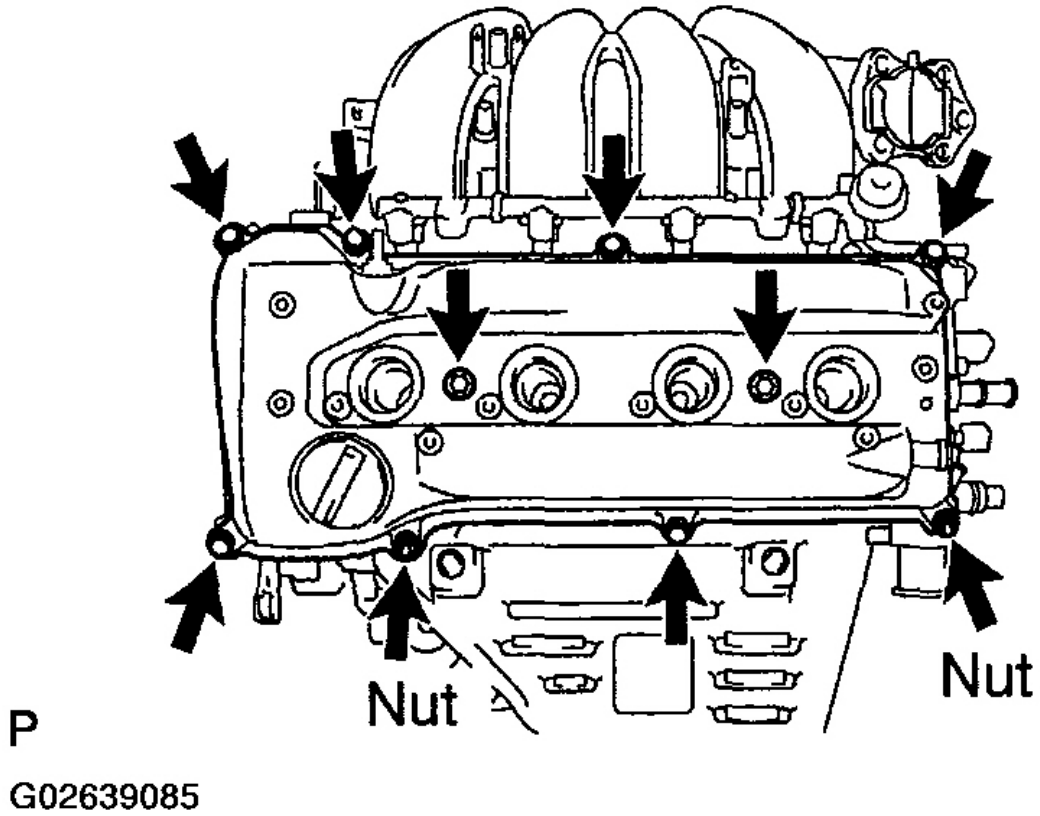

Fig. 75: Installing Cylinder Head Cover
Courtesy of TOYOTA MOTOR SALES, U.S.A., INC.

e. Connect the 2 PCV hoses to the cylinder head cover.

18. **INSTALL IGNITION COILS (See IGNITION COIL)**
19. **INSTALL VANE PUMP (See INSTALLATION)**
20. **INSTALL GENERATOR (See INSTALLATION)**
21. **INSTALL RH ENGINE MOUNTING INSULATOR (See REMOVAL)**
22. **INSTALL DRIVE BELT (See CHARGING SYSTEM)**

cardiagn.com

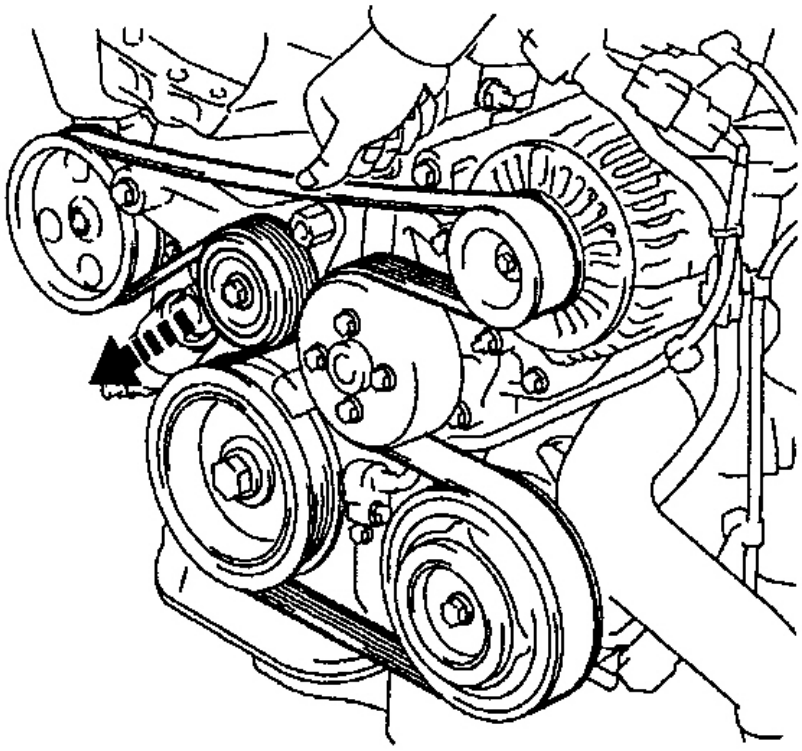

Fig. 76: Identifying Drive Belt Routing
Courtesy of TOYOTA MOTOR SALES, U.S.A., INC.

23. **INSTALL ABS ACTUATOR (See INSTALLATION)**
24. **INSTALL AIR CLEANER ASSEMBLY (See INSTALLATION)**
25. **INSTALL ENGINE UNDER COVER**
26. **FILL WITH ENGINE OIL (See REPLACEMENT)**
27. **START ENGINE AND CHECK FOR LEAK**
28. **RECHECK ENGINE OIL LEVEL**

CYLINDER HEAD

COMPONENTS

cardiagn.com

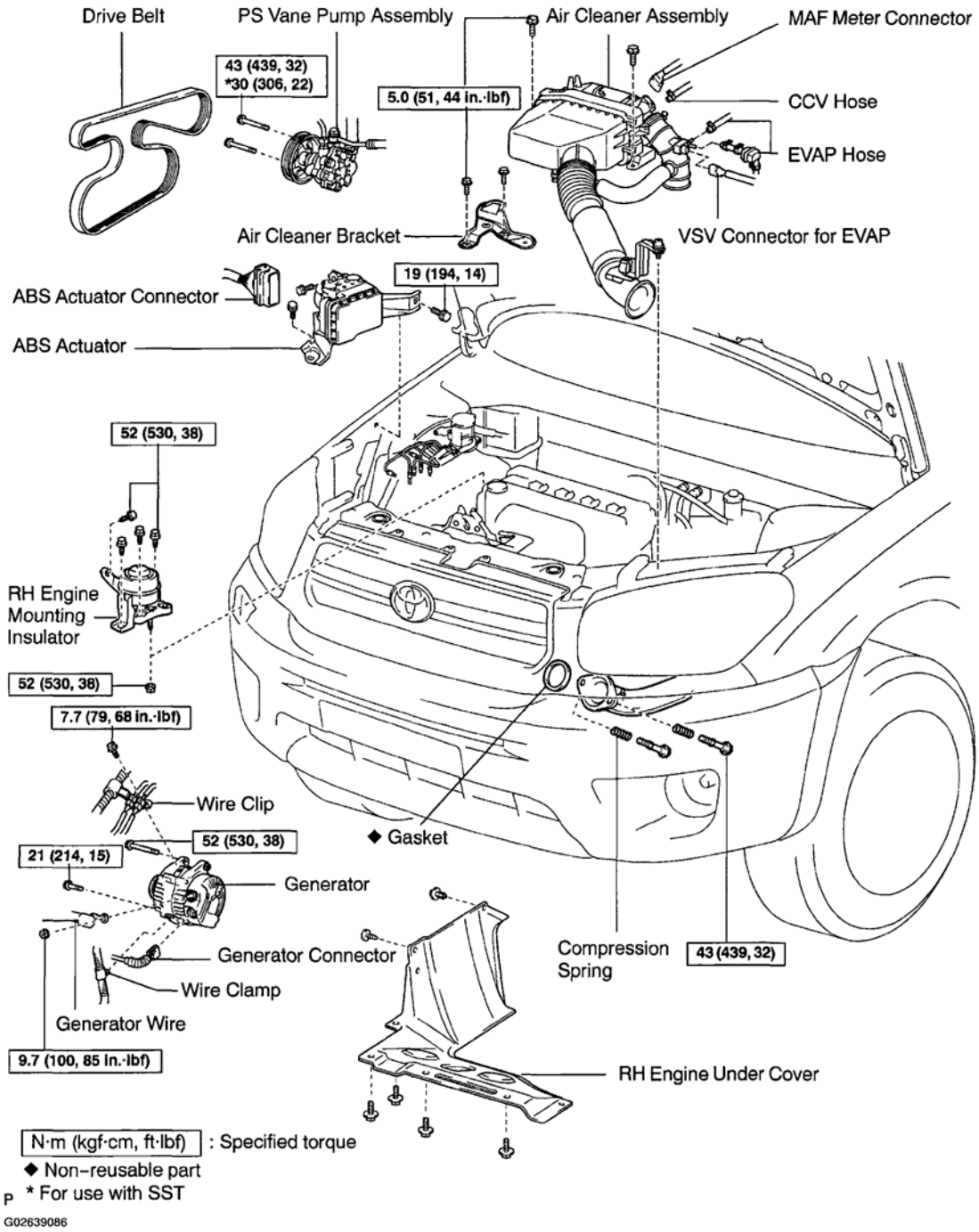

Fig. 77: Identifying Cylinder Head Components & Torque Specifications (1 Of 4)
Courtesy of TOYOTA MOTOR SALES, U.S.A., INC.

cardiagn.com

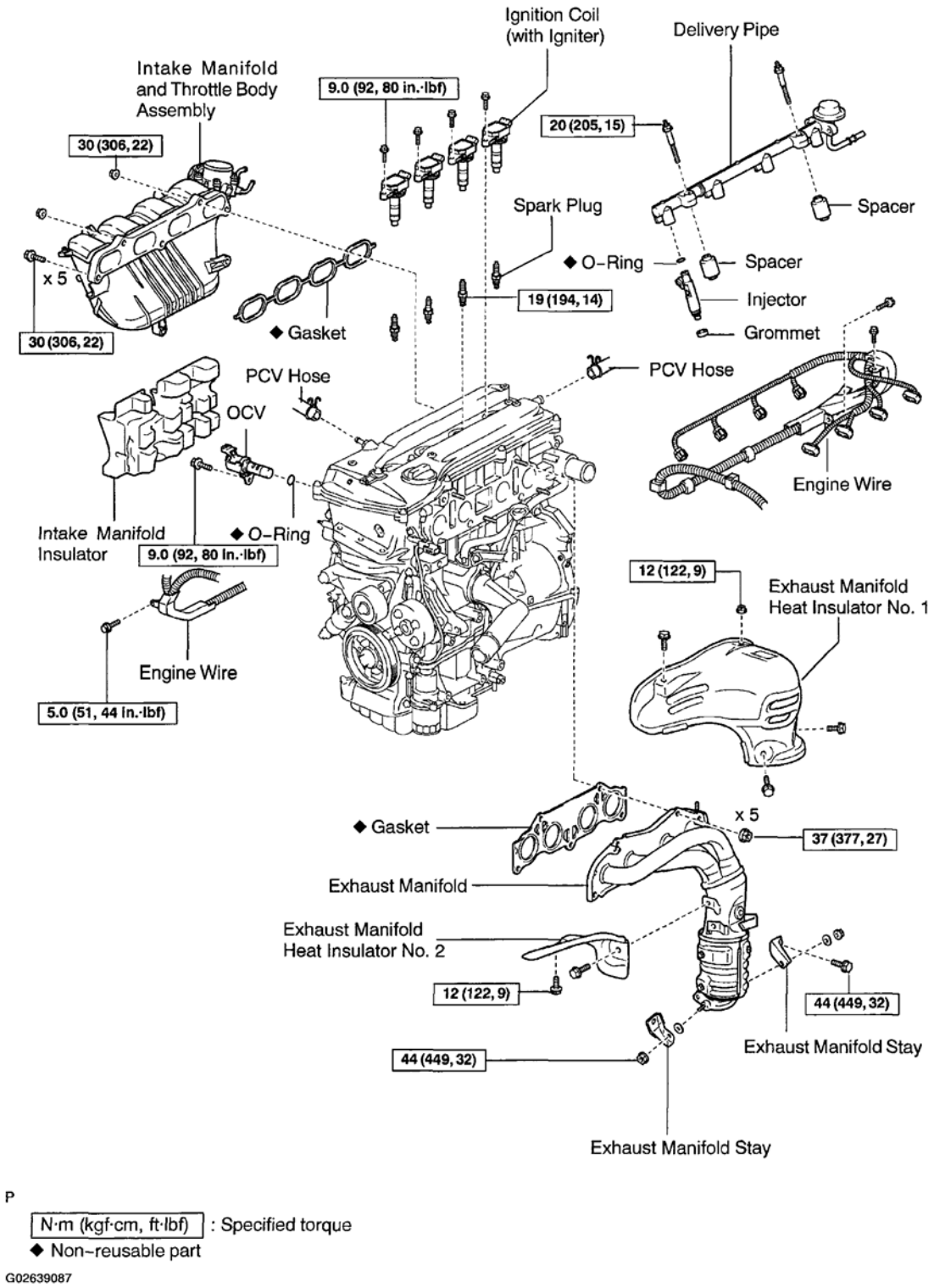

P

N·m (kgf·cm, ft·lbf) : Specified torque

◆ Non-reusable part

G02639087

Fig. 78: Identifying Cylinder Head Components & Torque Specifications (2 of 4)
Courtesy of TOYOTA MOTOR SALES, U.S.A., INC.

cardiagn.com

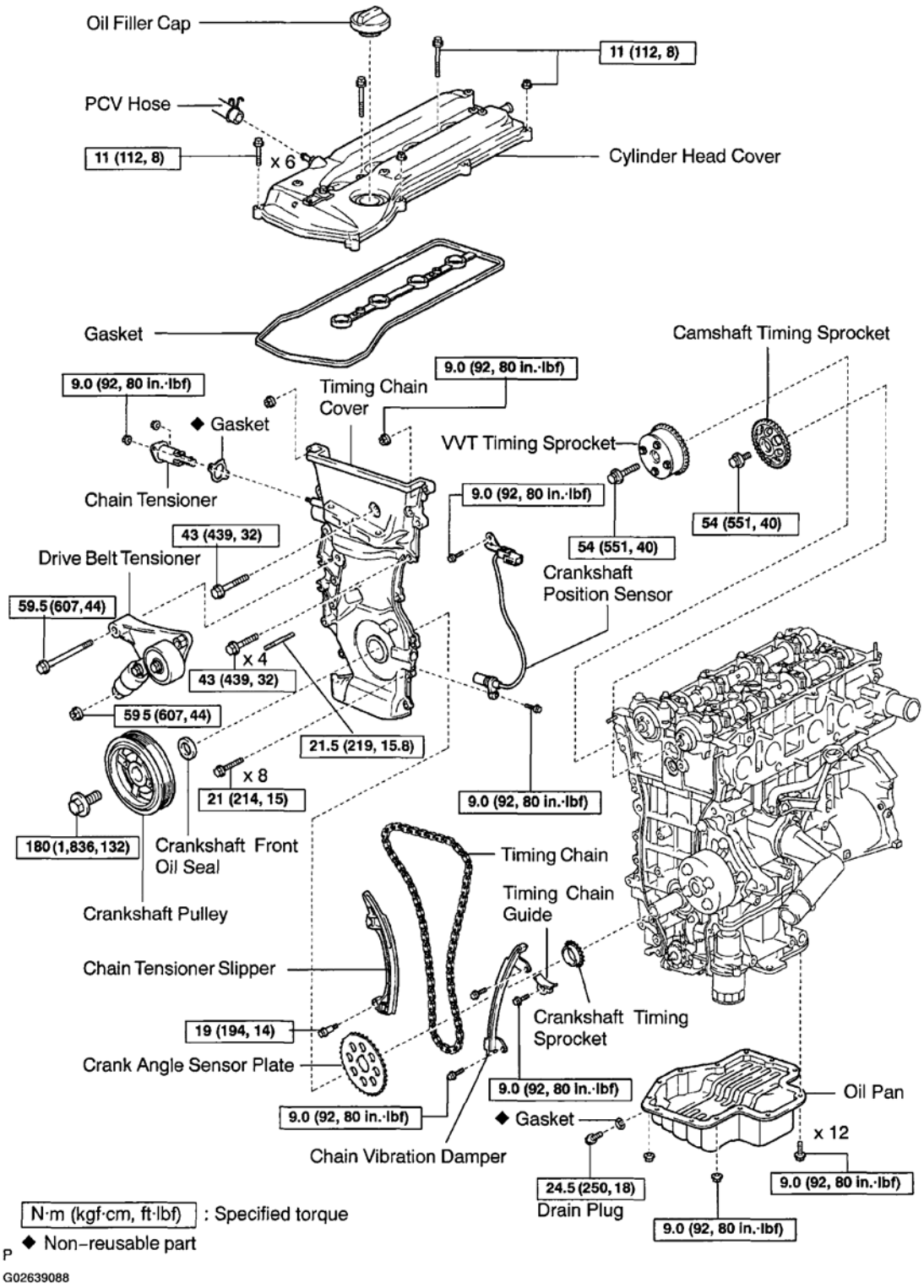

Fig. 79: Identifying Cylinder Head Components & Torque Specifications (3 of 4)
Courtesy of TOYOTA MOTOR SALES, U.S.A., INC.

cardiagn.com

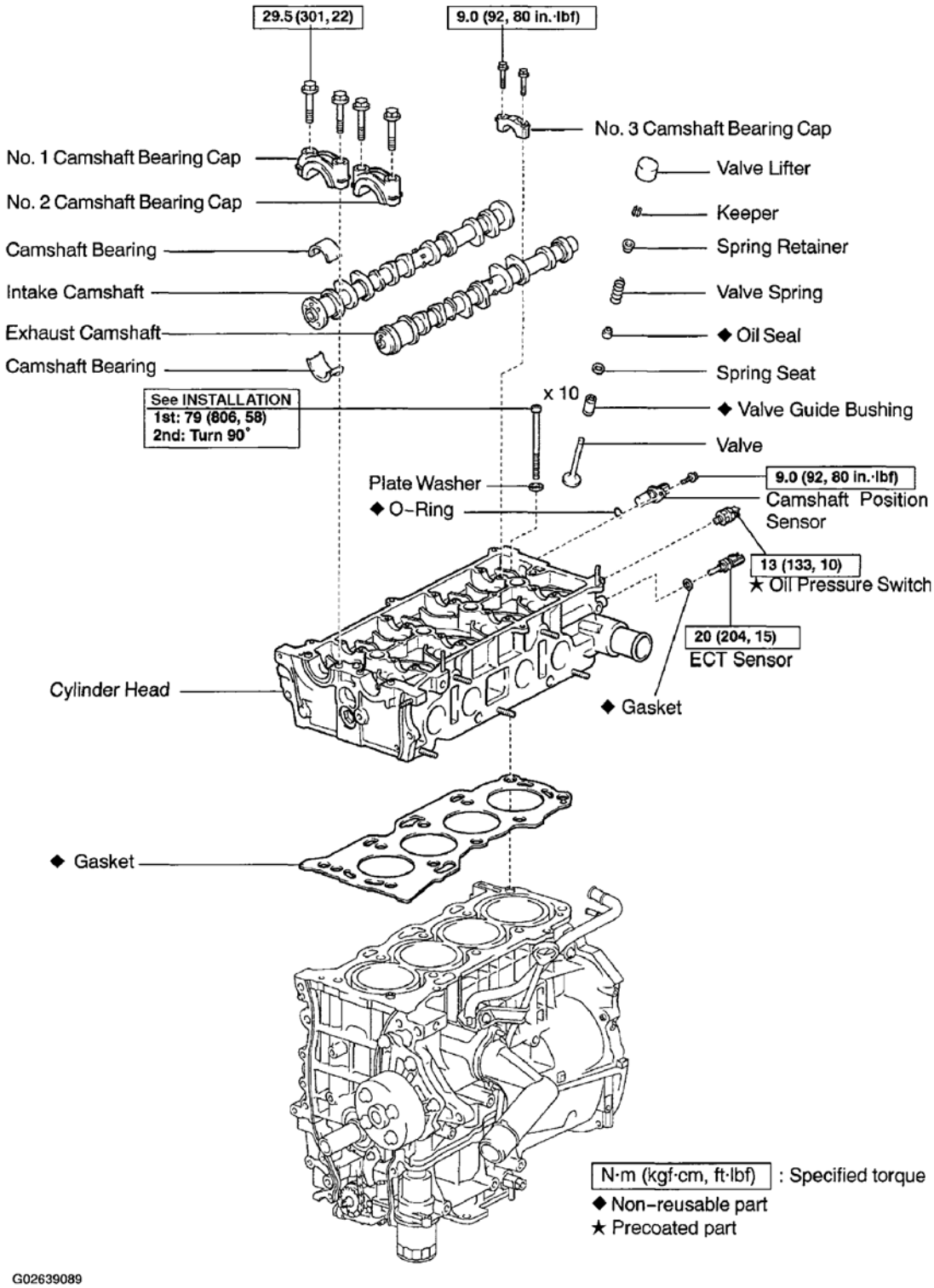

Fig. 80: Identifying Cylinder Head Components & Torque Specifications (4 of 4)
Courtesy of TOYOTA MOTOR SALES, U.S.A., INC.

cardiagn.com

REMOVAL

1. **REMOVE RH ENGINE UNDER COVER**
2. **DRAIN ENGINE COOLANT (See REPLACEMENT)**
3. **DRAIN ENGINE OIL (See REPLACEMENT)**
4. **REMOVE AIR CLEANER ASSEMBLY**
   a. Disconnect the MAF meter connector.
   b. Disconnect the 2 EVAP hoses from the VSV.
   c. Disconnect VSV connector for EVAP.
   d. Disconnect the CCV hose from the air cleaner.
   e. Disconnect the PCV hose from the cylinder head cover.

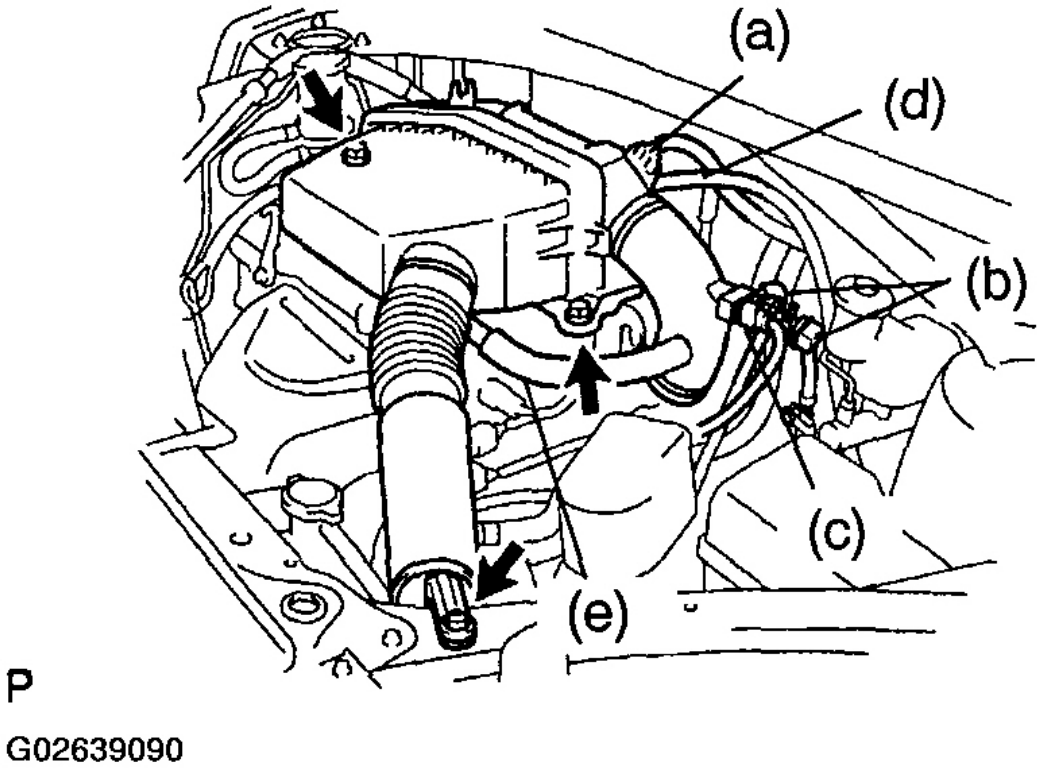

Fig. 81: Removing Air Cleaner Assembly
Courtesy of TOYOTA MOTOR SALES, U.S.A., INC.

5. **REMOVE DRIVE BELT (See CHARGING SYSTEM)**
6. **REMOVE GENERATOR (See REMOVAL)**

cardiagn.com

7. **REMOVE PS VANE PUMP (See REMOVAL)**
8. **REMOVE IGNITION COILS (See IGNITION COIL)**
9. **REMOVE SPARK PLUGS (See IGNITION SYSTEM)**
10. **REMOVE INJECTORS (See REMOVAL)**
11. **REMOVE EXHAUST MANIFOLD ASSEMBLY**
    a. Disconnect the A/F sensor connector.
    b. Remove the 3 bolts, nut and exhaust manifold heat insulator No. 1.
    c. Remove the 2 bolts holding the exhaust manifold stays and crank case.
    d. Remove the 5 nuts, 2 bolts, 2 compression springs, the exhaust manifold assembly and 2 gaskets.
    e. Remove the 2 nuts, No. 1 and No. 2 exhaust manifold stays.

cardiagn.com

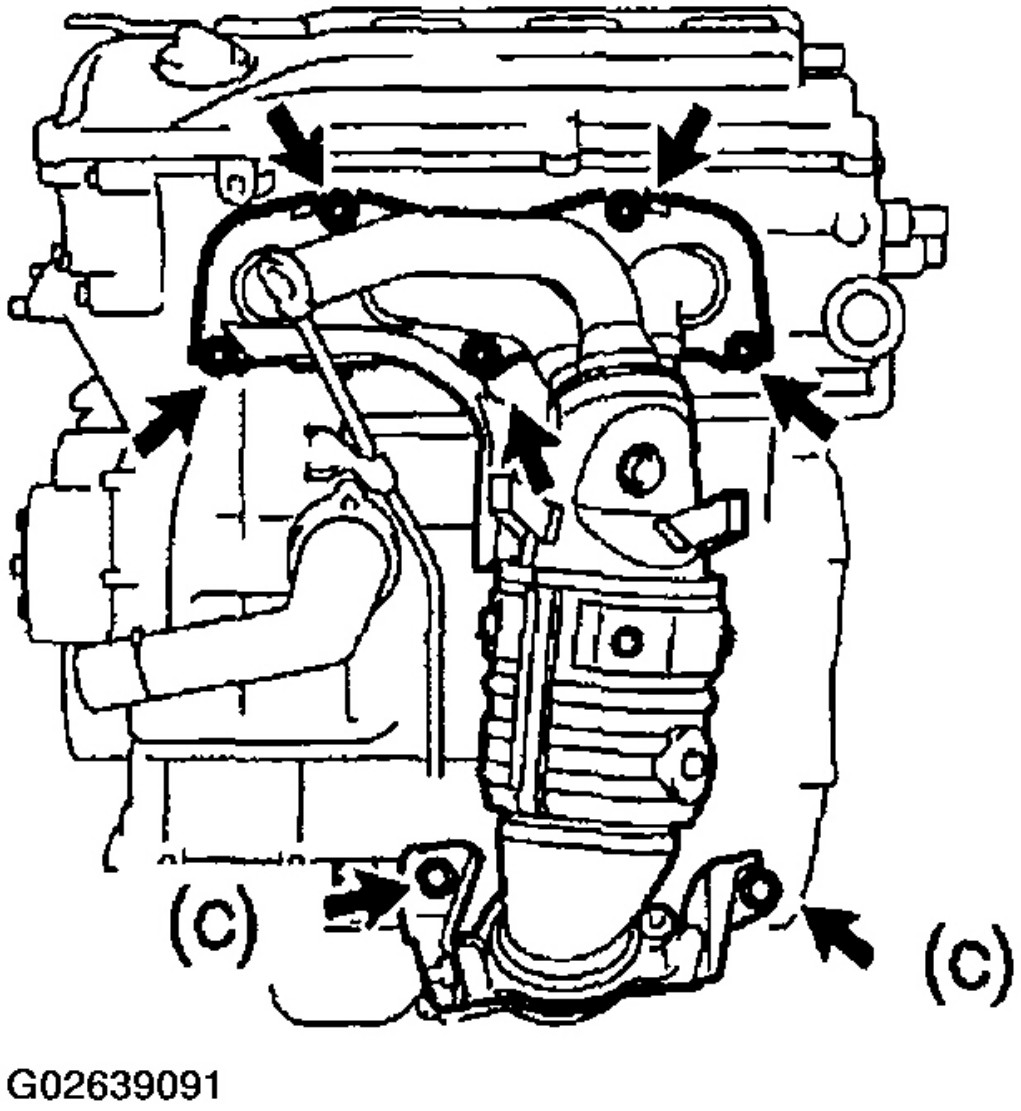

Fig. 82: Removing Exhaust Manifold Assembly
Courtesy of TOYOTA MOTOR SALES, U.S.A., INC.

12. **REMOVE OIL FILLER CAP**
13. **REMOVE PCV HOSES AND VALVE**
    a. Remove the 2 PCV hoses.
    b. Remove the PCV valve and grommet.
14. **REMOVE INTAKE MANIFOLD AND THROTTLE BODY ASSEMBLY**

cardiagn.com

a. Disconnect the throttle position sensor connector.
b. Disconnect the 2 water hoses from the throttle body.
c. Disconnect the 2 vacuum hoses from the intake manifold.
d. Disconnect the engine wire harness from the clamp.
e. Remove the 5 bolts, 2 nuts, the intake manifold and throttle body assembly, and gasket.
f. Remove the intake manifold insulator.

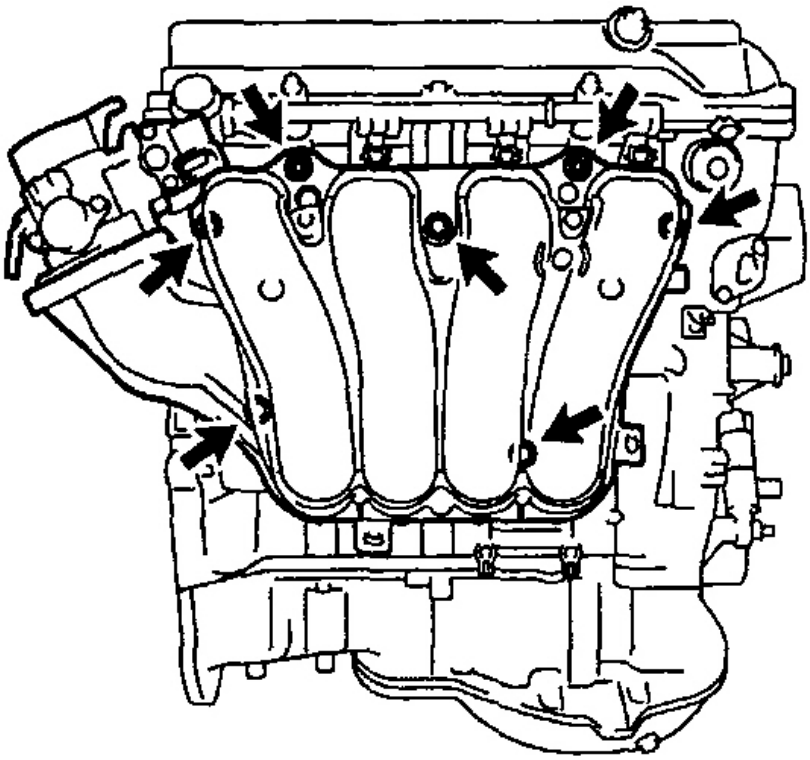

P

G02639092

Fig. 83: Removing Intake Manifold And Throttle Body Assembly
Courtesy of TOYOTA MOTOR SALES, U.S.A., INC.

15. **DISCONNECT ENGINE WIRE**
    a. Disconnect the OCV connector.
    b. Disconnect the crankshaft position sensor connector.
    c. Disconnect the oil pressure switch connector and wire.

cardiagn.com

d. Disconnect the camshaft position sensor connector.
e. Disconnect the ECT sensor connector.
f. Disconnect the noise filter.

16. **REMOVE CAMSHAFT TIMING CHAIN (See REMOVAL)**
17. **REMOVE TIMING SPROCKET AND VVT SPROCKET (See REMOVAL)**
18. **REMOVE CAMSHAFT TIMING OIL CONTROL VALVE (OCV) (See COMPONENTS)**
19. **REMOVE CAMSHAFTS**
    a. Uniformly loosen and remove the 20 bearing cap bolts in several passes, in the sequence shown.
    b. Remove the 10 bearing caps, intake camshaft and exhaust camshaft.
    c. Remove the camshaft bearings from the No. 1 camshaft bearing cap and intake camshaft No. 1 journal part of the cylinder head.

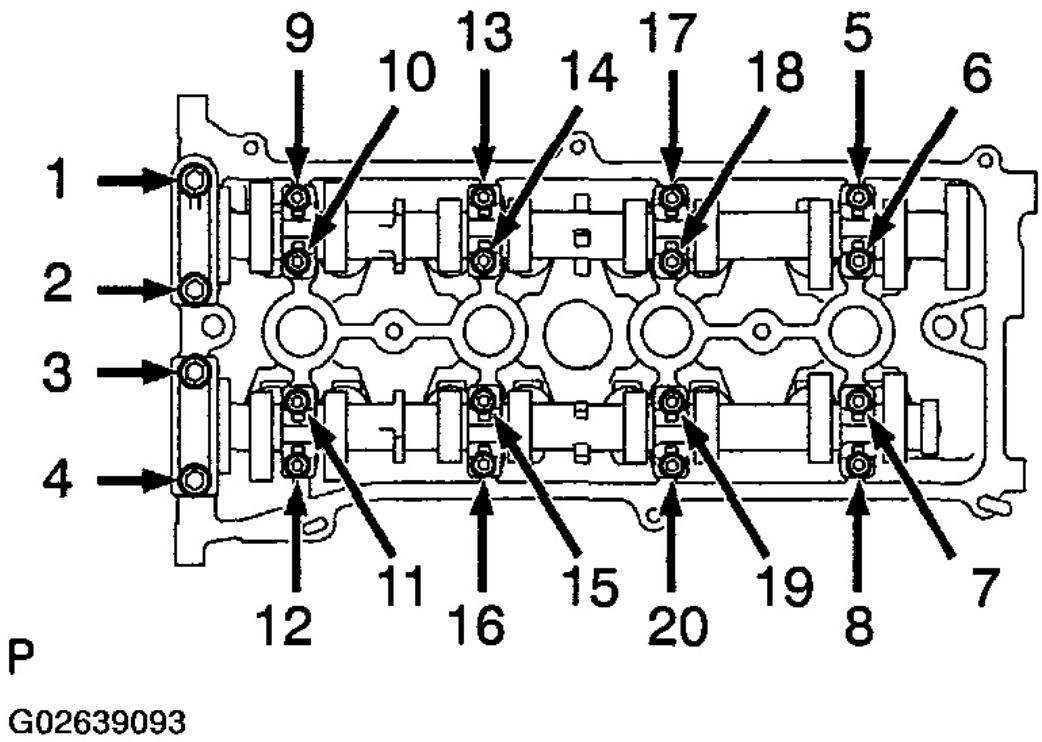

Fig. 84: Identifying Bearing Cap Bolt Loosening Sequence
Courtesy of TOYOTA MOTOR SALES, U.S.A., INC.

20. **REMOVE CYLINDER HEAD**
    a. Using a 10 mm bi-hexagon wrench, uniformly loosen and remove the 10 cylinder head bolts in several passes, in the sequence shown.

cardiagn.com

NOTE: **Head warpage or cracking could result from removing bolts in an incorrect order.**

b. Remove the 10 plate washers.

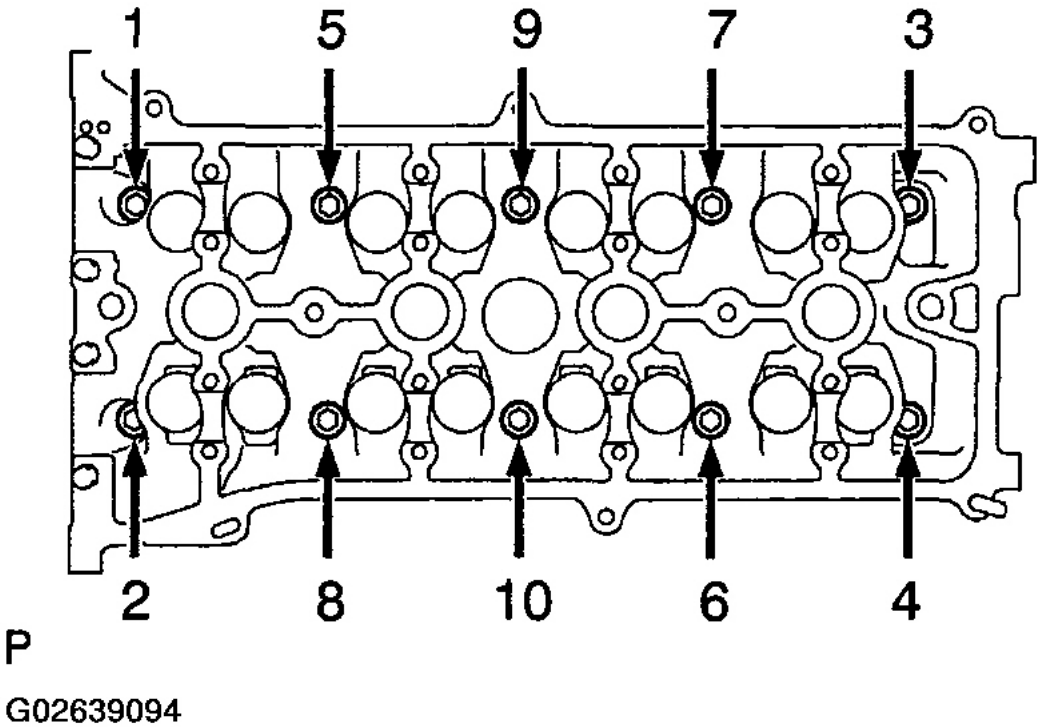

Fig. 85: Identifying Cylinder Head Bolt Loosening Sequence
Courtesy of TOYOTA MOTOR SALES, U.S.A., INC.

c. Using a screwdriver, pry between the cylinder head and cylinder block, and remove the cylinder head.

NOTE: **Be careful not to damage the contact surfaces of the cylinder head and cylinder block.**

cardiagn.com

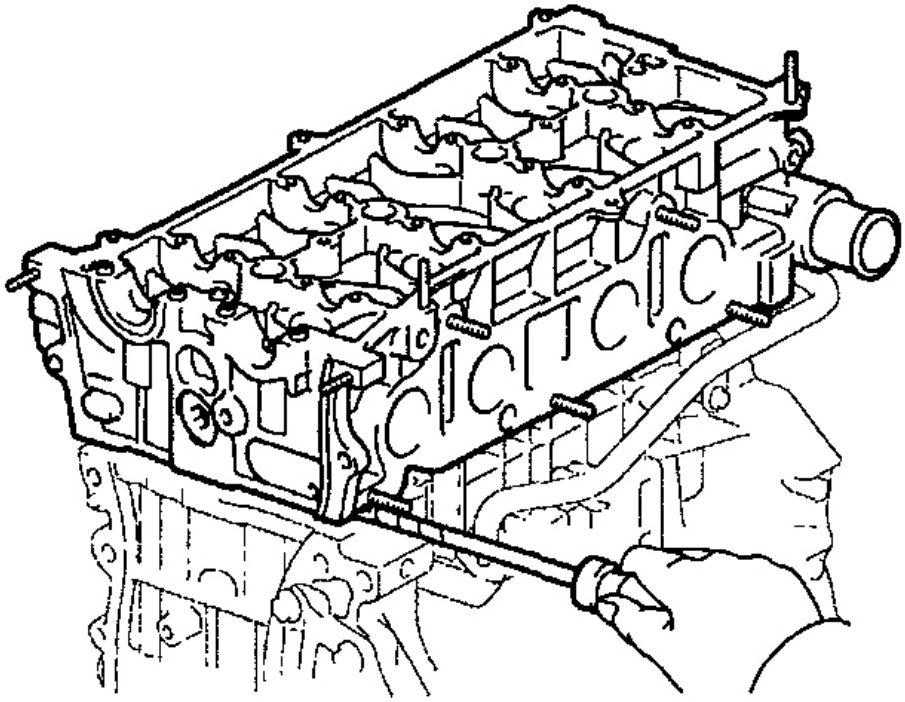

Fig. 86: Carefully Prying Between Cylinder Head And Cylinder Block Using Screwdriver
Courtesy of TOYOTA MOTOR SALES, U.S.A., INC.

DISASSEMBLY

1. **REMOVE OIL PRESSURE SWITCH**
2. **REMOVE ECT SENSOR**
3. **REMOVE CAMSHAFT POSITION SENSOR**

   Remove the bolt, camshaft position sensor and O-ring.

cardiagn.com

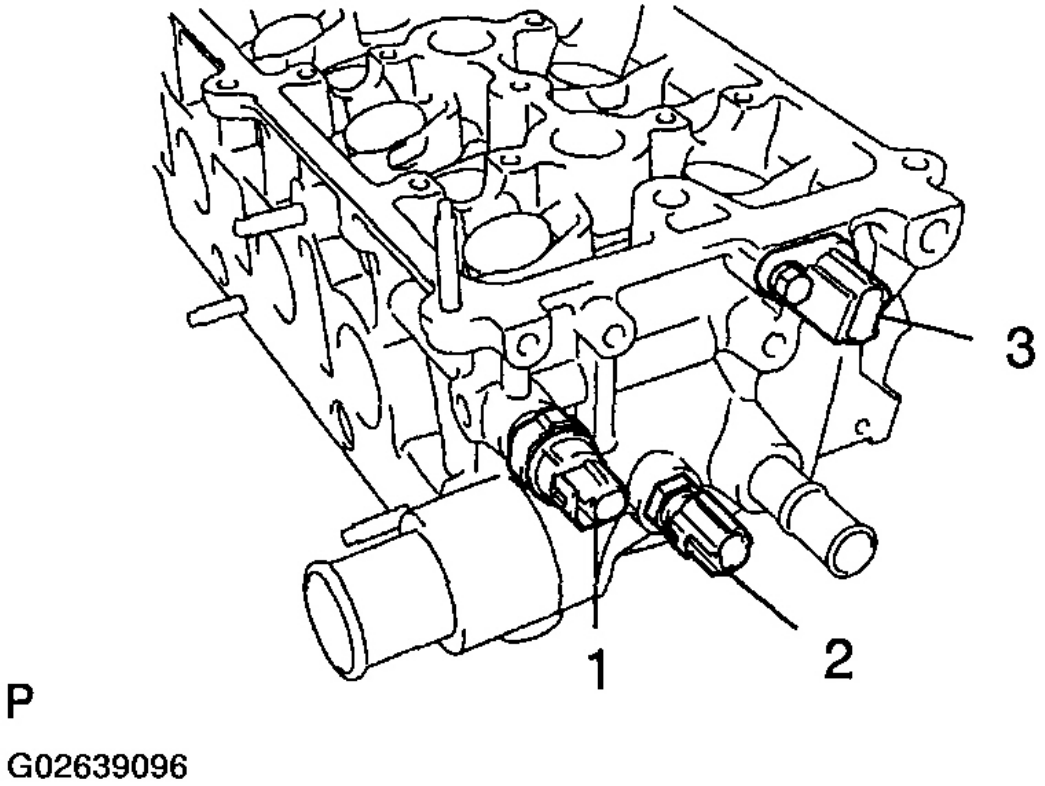

Fig. 87: Identifying Cylinder Head Mounted Sensors
Courtesy of TOYOTA MOTOR SALES, U.S.A., INC.

4. **REMOVE VALVE LIFTERS**

   HINT:

   Arrange the valve lifters in the correct order.

5. **REMOVE VALVES**
   a. Using SST, compress the valve spring and remove the 2 keepers.

      SST 09202-00020, 09202-70020

   b. Remove the spring retainer, valve spring and valve.

cardiagn.com

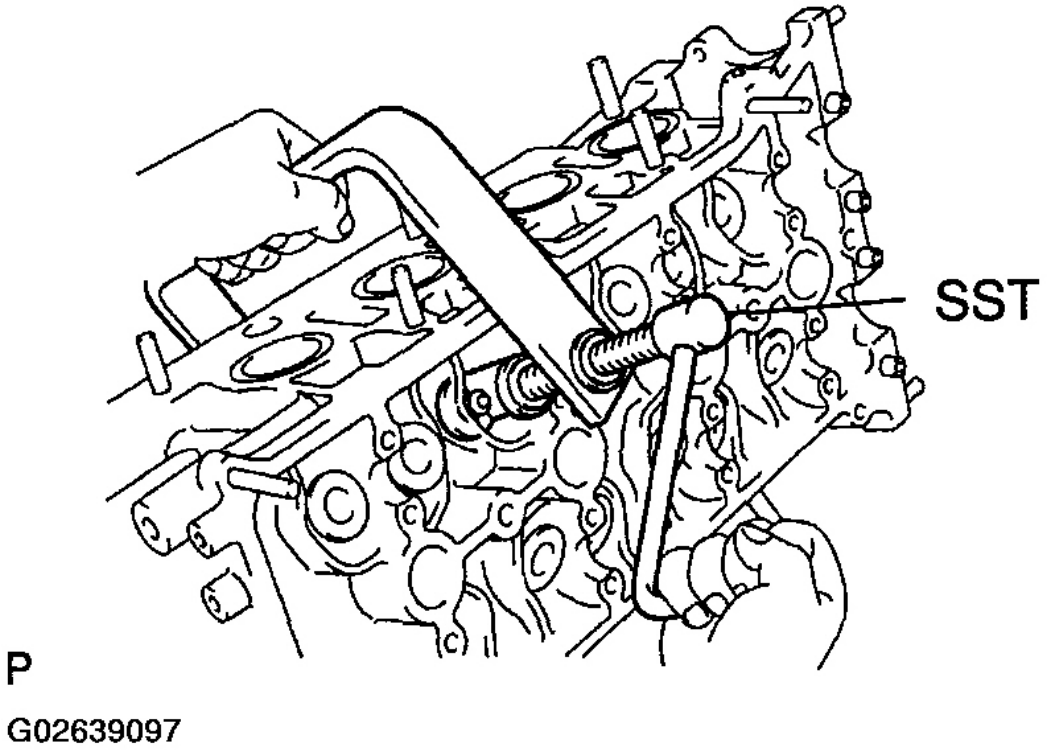

Fig. 88: Compressing Valve Spring Using SST
Courtesy of TOYOTA MOTOR SALES, U.S.A., INC.

c. Using needle-nose pliers, remove the oil seal.

cardiagn.com

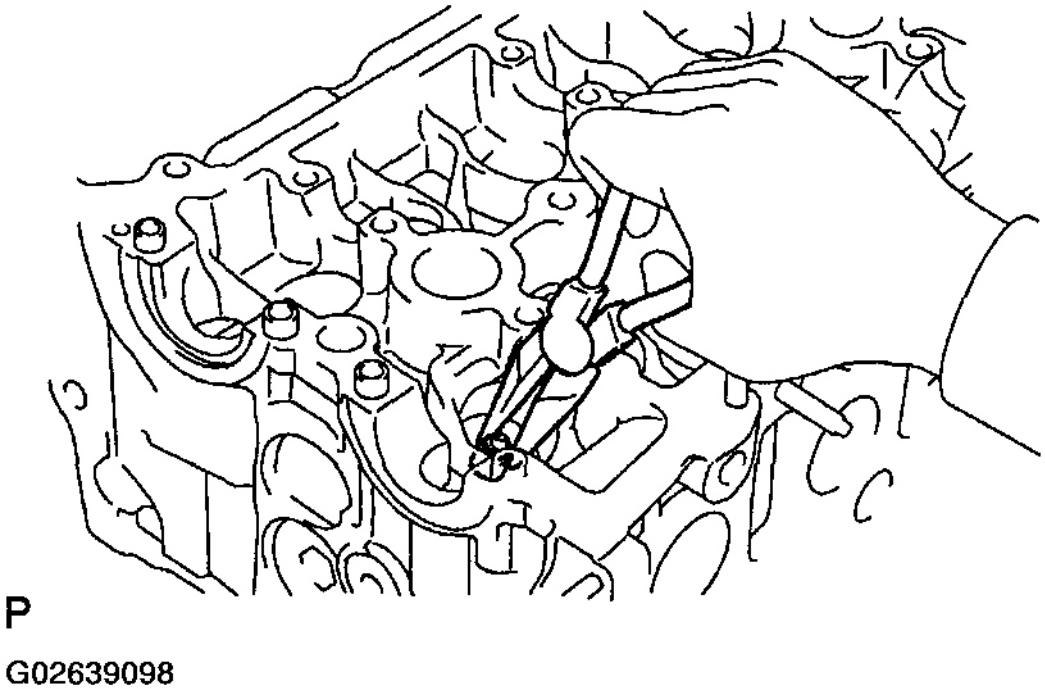

Fig. 89: Removing Oil Seal Using Needle-Nose Pliers
Courtesy of TOYOTA MOTOR SALES, U.S.A., INC.

d. Using compressed air and a magnetic finger, remove the spring seat by blowing air.

HINT:

Arrange the valves, valve springs, spring seats and spring retainers in the correct order.

cardiagn.com

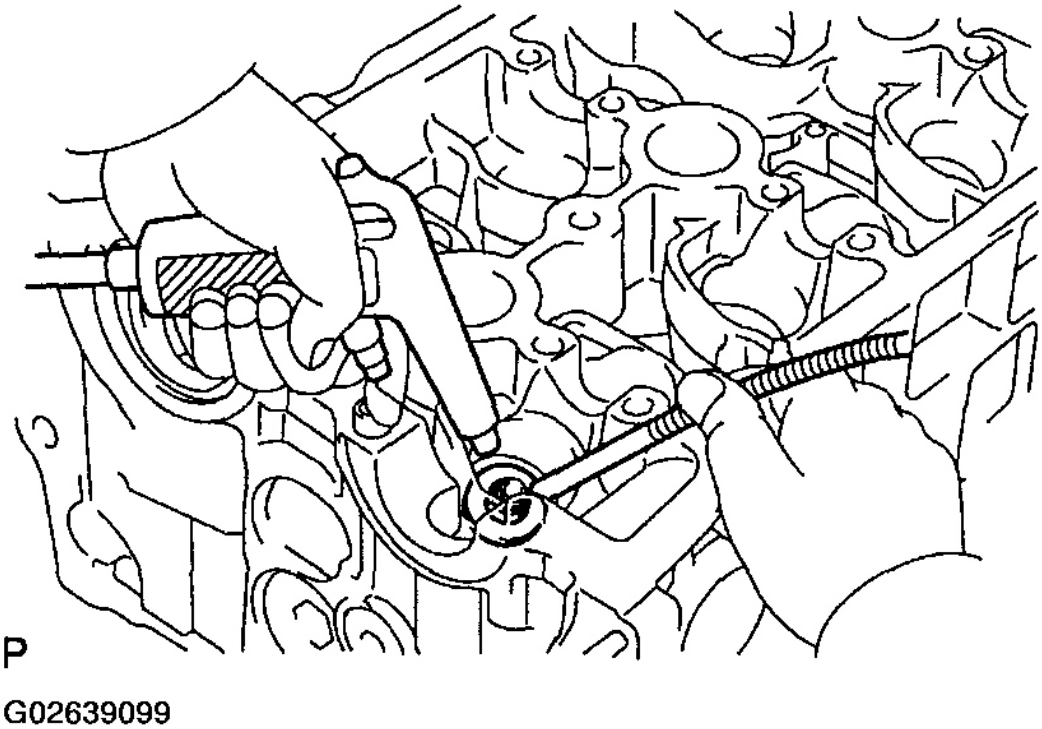

Fig. 90: Removing Spring Seat By Blowing Air Using Compressed Air And Magnet
Courtesy of TOYOTA MOTOR SALES, U.S.A., INC.

INSPECTION

1. **CLEAN TOP SURFACES OF PISTONS AND CYLINDER BLOCK**
   a. Turn the crankshaft, and bring each piston to top dead center (TDC). Using a gasket scraper, remove all the carbon from the piston surface.

cardiagn.com

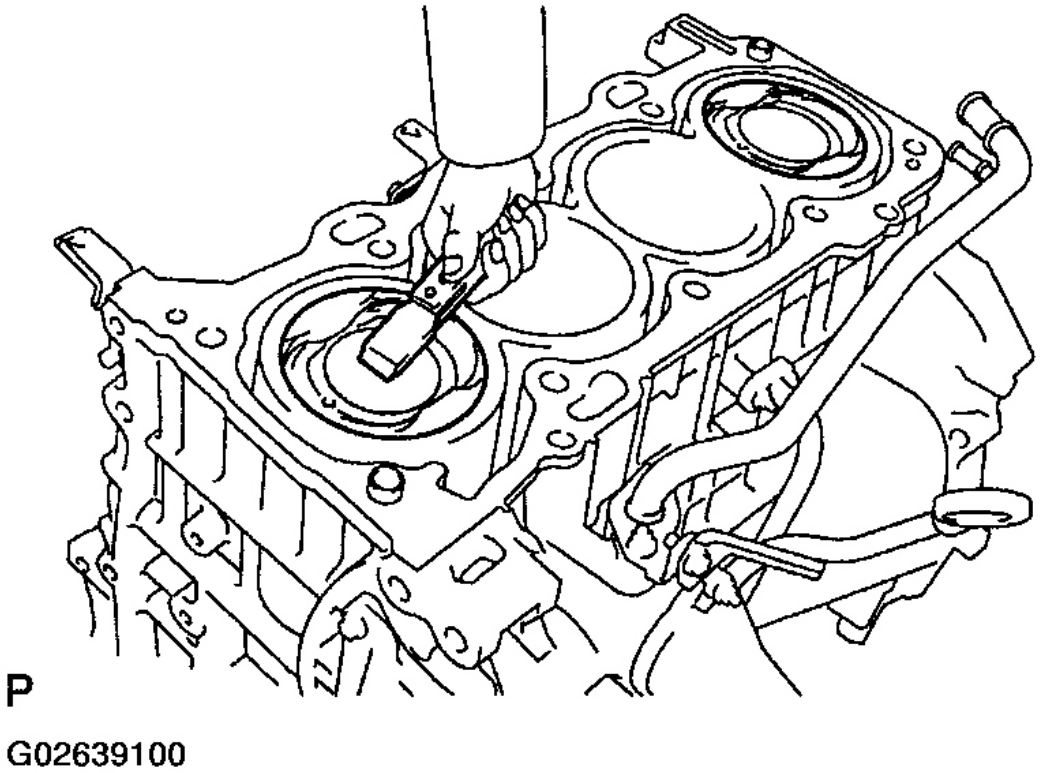

Fig. 91: Cleaning Top Surfaces Of Pistons
Courtesy of TOYOTA MOTOR SALES, U.S.A., INC.

b. Using a gasket scraper, remove all the gasket material from the cylinder block surface.

cardiagn.com

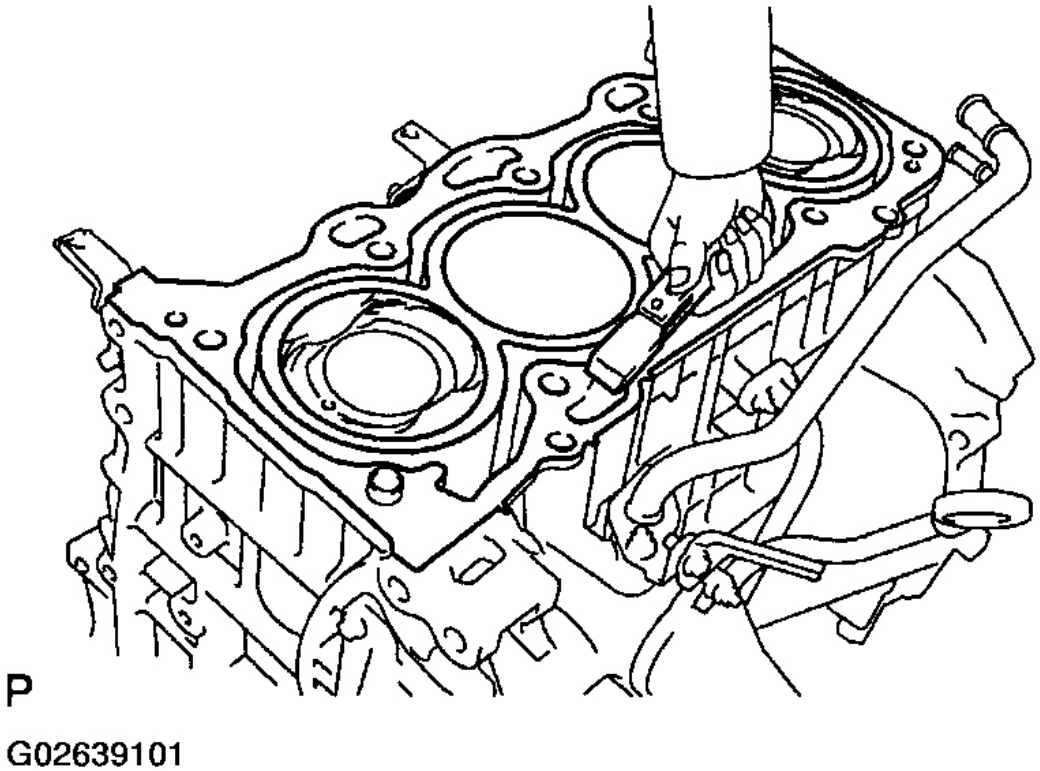

Fig. 92: Removing Gasket Material From Cylinder Block Surface
Courtesy of TOYOTA MOTOR SALES, U.S.A., INC.

c. Using compressed air, blow carbon and oil from the bolt holes.

CAUTION: Protect your eyes when using high pressure compressed air.

NOTE: Be careful not to scratch the cylinder head contact surface.

2. **INSPECT CYLINDER BLOCK FOR FLATNESS (See INSPECTION)**
3. **CLEAN CYLINDER HEAD**
   a. Using a gasket scraper, remove all the gasket material from the cylinder block contact surface.

NOTE: Be careful not to scratch the cylinder block contact surface.

cardiagn.com

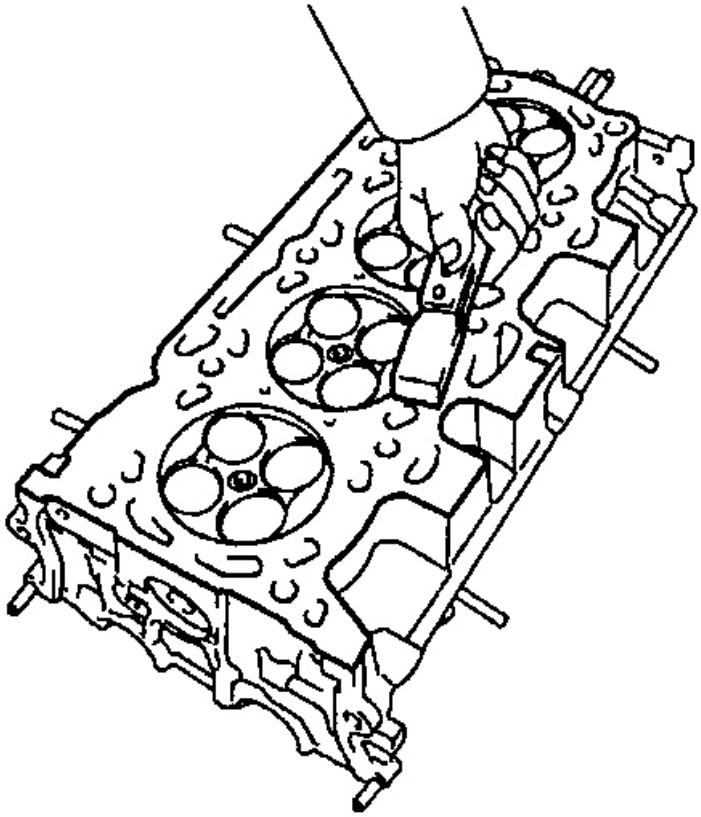

P

G02639102

Fig. 93: Cleaning Cylinder Head Mating Surface
Courtesy of TOYOTA MOTOR SALES, U.S.A., INC.

b. Using a wire brush, remove all the carbon from the combustion chambers.

NOTE: Be careful not to scratch the cylinder block contact surface.

cardiagn.com

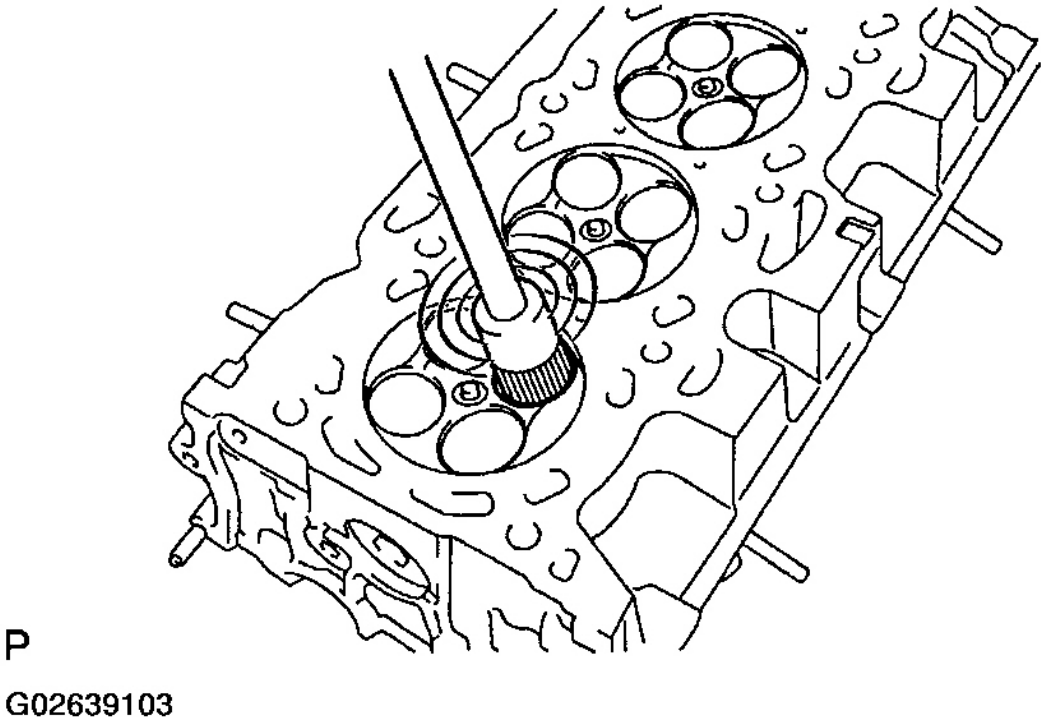

Fig. 94: Removing Carbon From Combustion Chambers
Courtesy of TOYOTA MOTOR SALES, U.S.A., INC.

c. Using a soft brush and solvent, thoroughly clean the cylinder head.

cardiagn.com

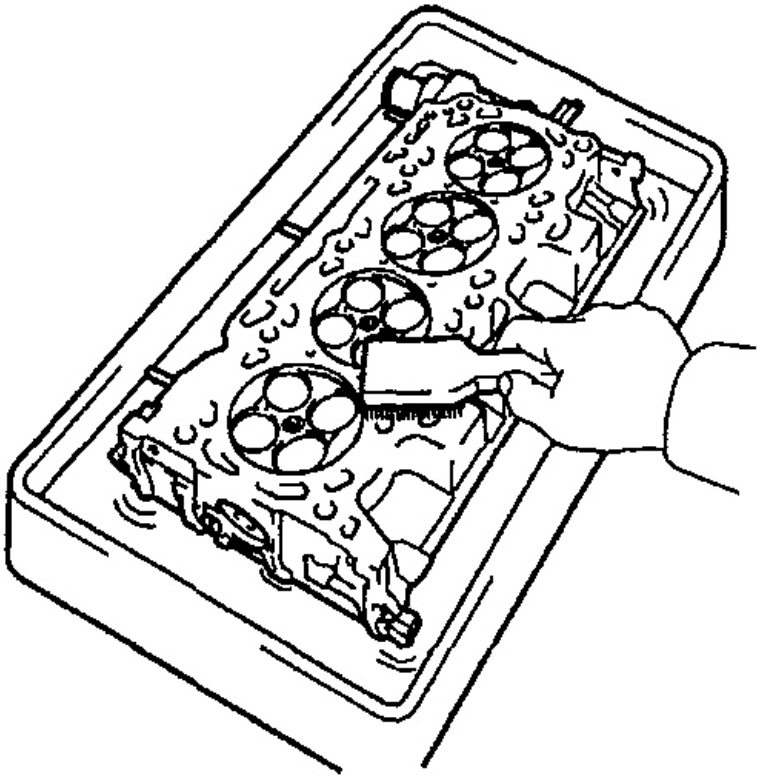

P

G02639104

Fig. 95: Cleaning Cylinder Head Using Soft Brush And Solvent
Courtesy of TOYOTA MOTOR SALES, U.S.A., INC.

d. Using a valve guide bushing brush and solvent, clean all the guide bushings.

cardiagn.com

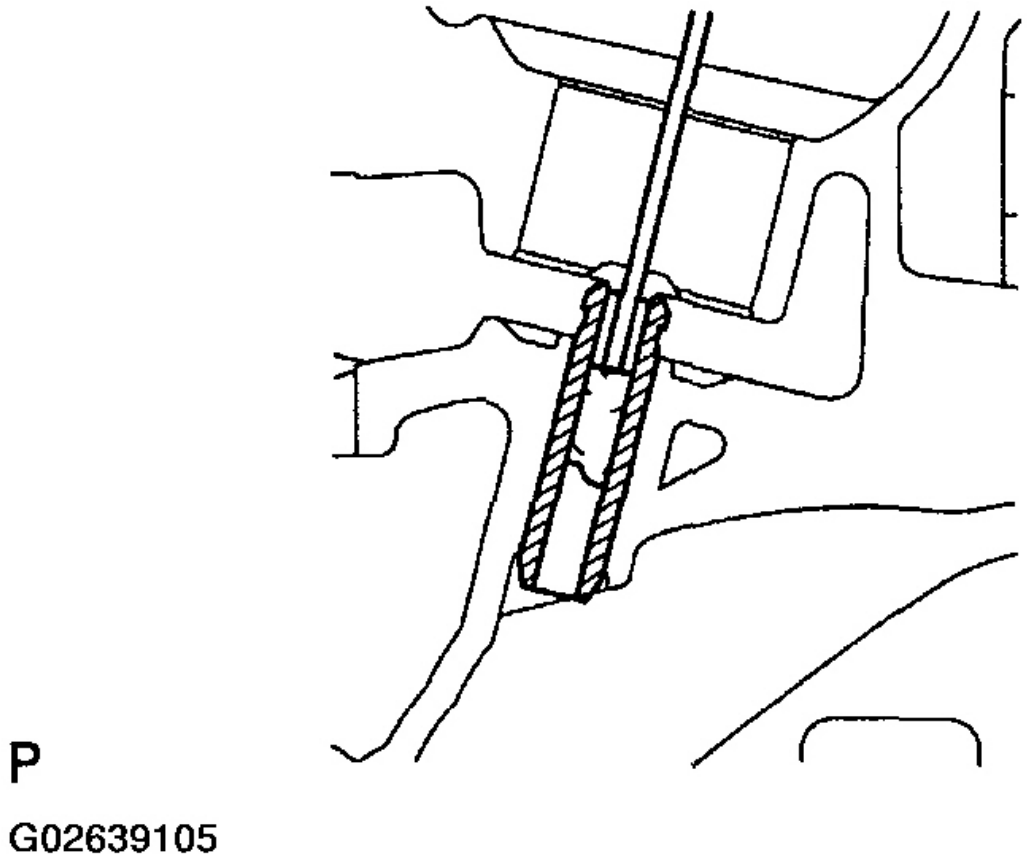

Fig. 96: Cleaning Guide Bushings Using Valve Guide Bushing Brush And Solvent
Courtesy of TOYOTA MOTOR SALES, U.S.A., INC.

4. **INSPECT CYLINDER HEAD**
   a. Inspect for flatness.

      Using a precision straight edge and a feeler gauge, measure the surface contacting the cylinder block and the manifolds for warpage.

      Maximum warpage: 0.08 mm (0.0031 in.)

      If warpage is greater than the maximum, replace the cylinder head.

cardiagn.com

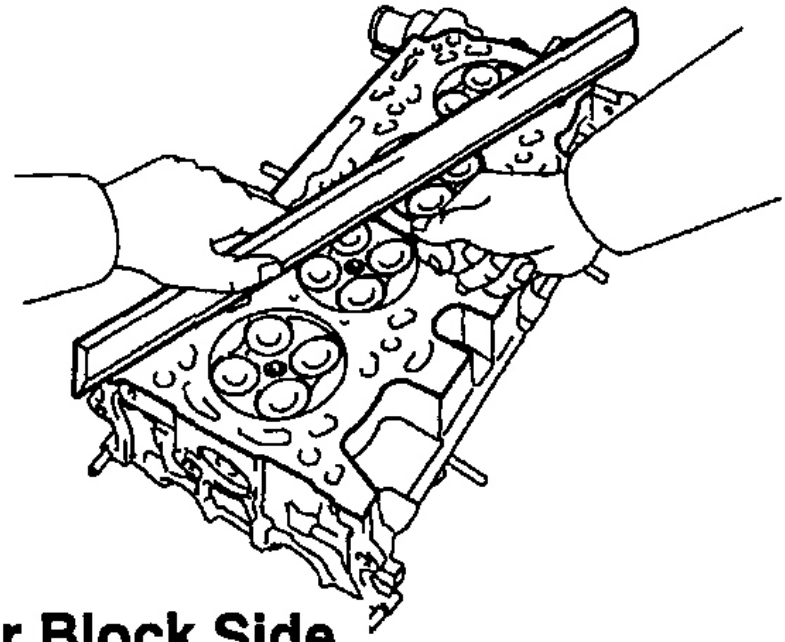

Cylinder Block Side

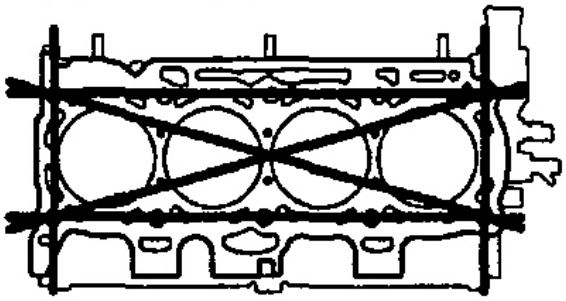

Exhaust Manifold Side

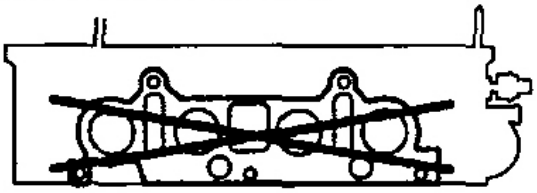

Intake Manifold Side

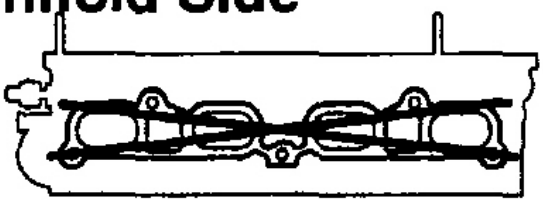

P

G02639106

cardiagn.com

Fig. 97: Checking Cylinder Head For Warpage At Mating Surfaces
Courtesy of TOYOTA MOTOR SALES, U.S.A., INC.

b. Inspect for cracks.

Using a dye penetrate, check the combustion chamber, intake ports, exhaust ports and cylinder block surface for cracks.

If cracked, replace the cylinder head.

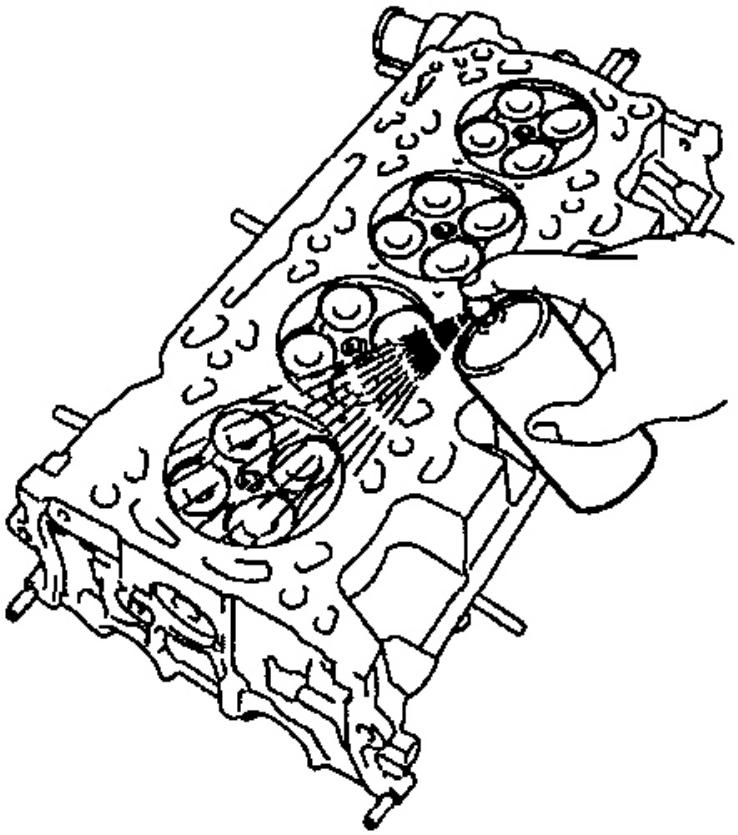

P

G02639107

Fig. 98: Checking Combustion Chamber For Cracks
Courtesy of TOYOTA MOTOR SALES, U.S.A., INC.

5. **CLEAN VALVES**

cardiagn.com

a. Using a gasket scraper, chip off any carbon from the valve head.
b. Using a wire brush, thoroughly clean the valve.

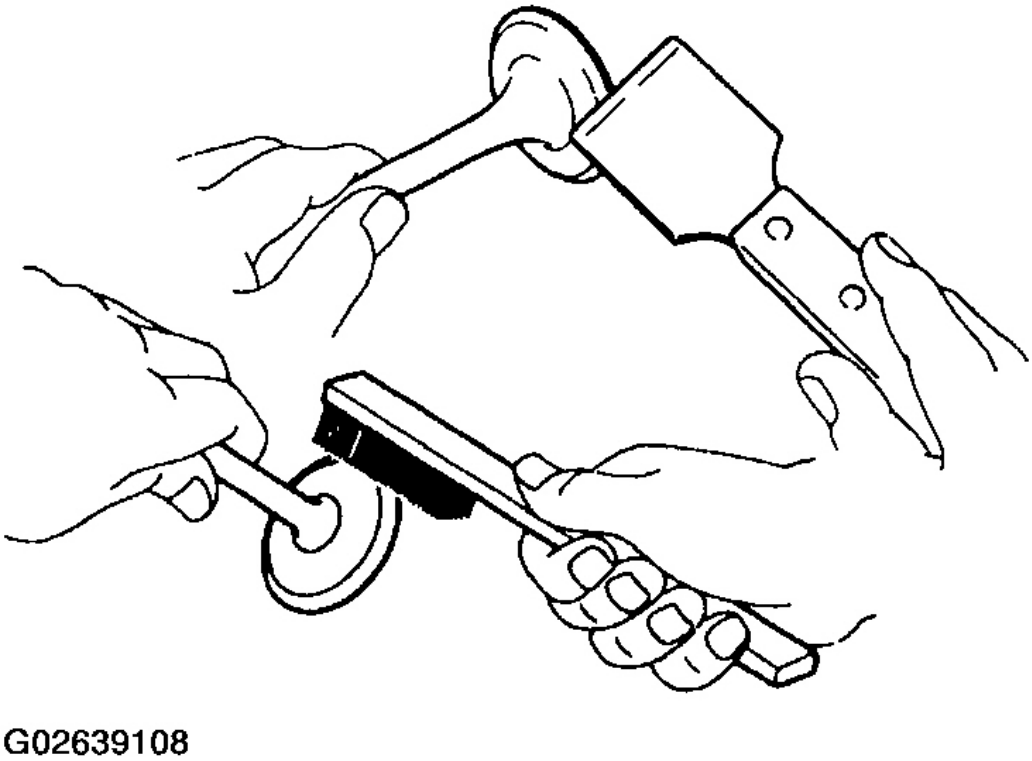

Fig. 99: Cleaning Valves
Courtesy of TOYOTA MOTOR SALES, U.S.A., INC.

6. **INSPECT VALVE STEMS AND GUIDE BUSHINGS**
   a. Using a caliper gauge, measure the inside diameter of the guide bushing.

   Bushing inside diameter:

   5.510 to 5.530 mm (0.2169 to 0.2177 in.)

cardiagn.com

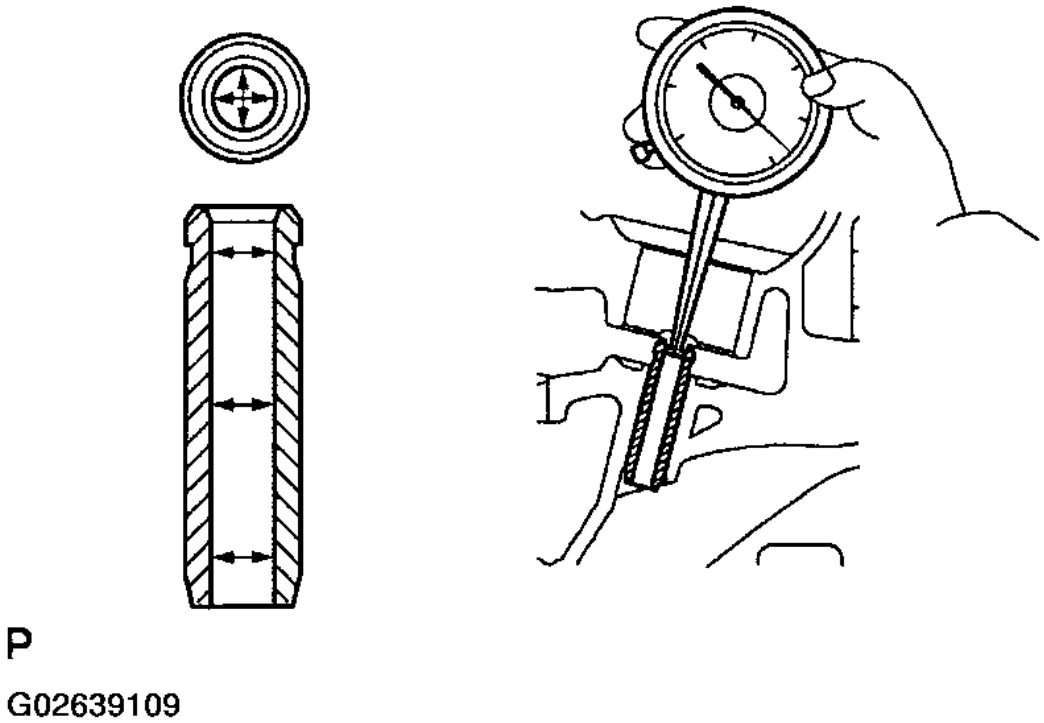

Fig. 100: Measuring Inside Diameter Of Guide Bushing
Courtesy of TOYOTA MOTOR SALES, U.S.A., INC.

b. Using a micrometer, measure the diameter of valve stem.

Valve stem diameter:

VALVE STEM DIAMETER

Intake	5.470 to 5.485 mm (0.2154 to 0.2159 in.)
Exhaust	5.465 to 5.480 mm (0.2152 to 0.2157 in.)

c. Subtract the valve stem diameter measurement from the guide bushing inside diameter measurement.

Standard oil clearance:

STANDARD OIL CLEARANCE

Intake	0.025 to 0.060 mm (0.0010 to 0.0024 in.)
Exhaust	0.030 to 0.065 mm (0.0012 to 0.0026 in.)

cardiagn.com

Maximum oil clearance:

MAXIMUM OIL CLEARANCE

Intake	0.08 mm (0.0031 in.)
Exhaust	0.10 mm (0.0039 in.)

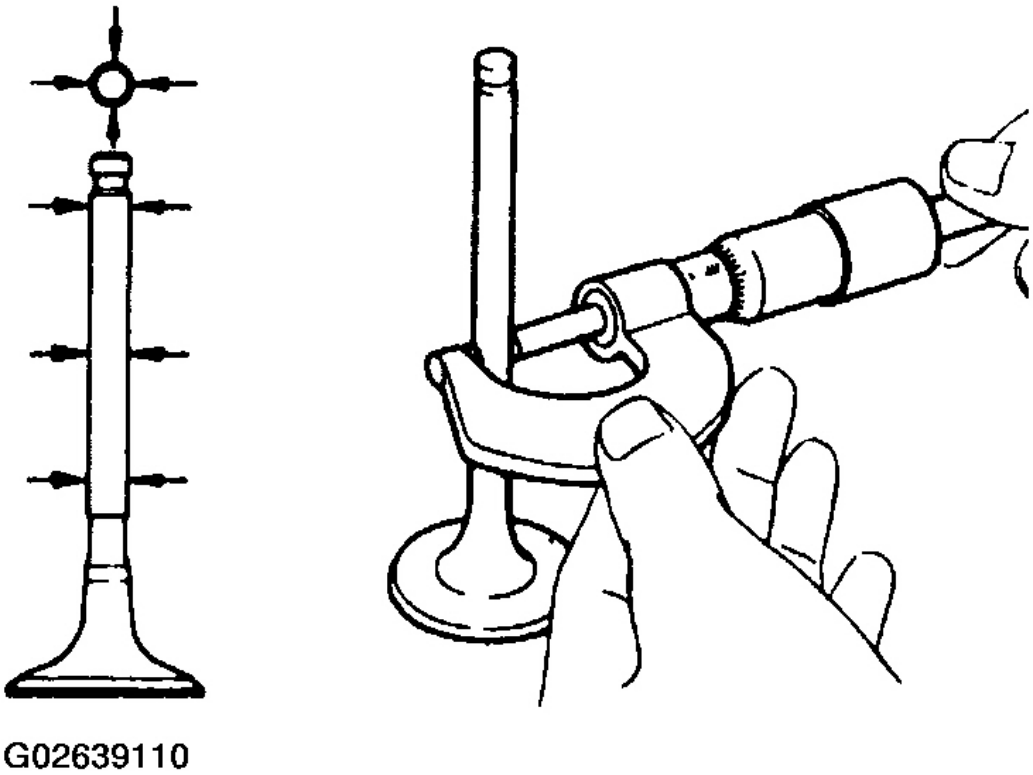

Fig. 101: Measuring Diameter Of Valve Stem Using Micrometer
Courtesy of TOYOTA MOTOR SALES, U.S.A., INC.

If the clearance is greater than the maximum, replace the valve and guide bushing (see **REPLACEMENT**).

7. **INSPECT VALVES**
   a. Check the valve is ground to the correct valve face angle.

      Valve face angle: 44.5°

   b. Check that the surface of the valve for wear.

cardiagn.com

If the valve face is worn, replace the valve.

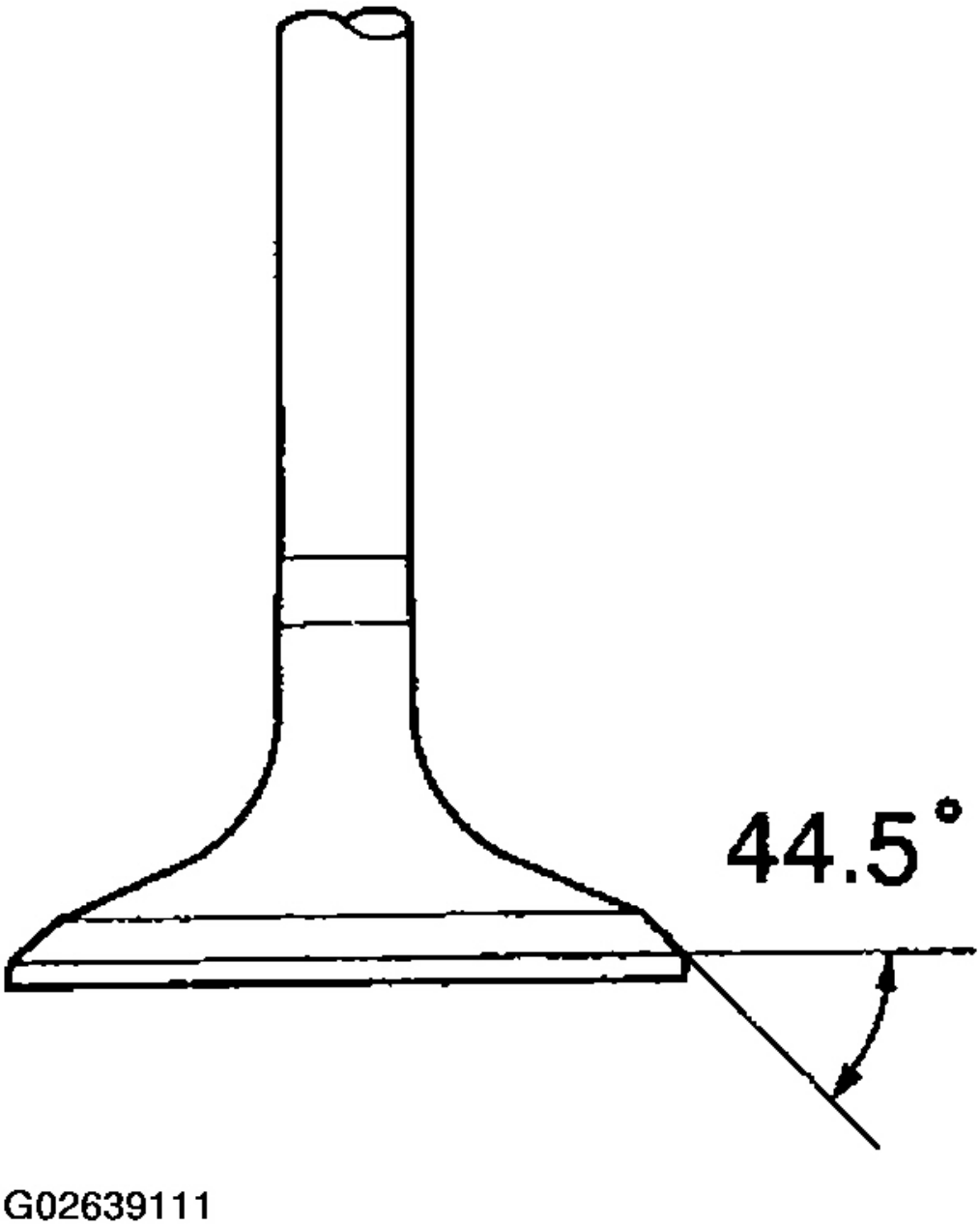

Fig. 102: Checking Valve Is Ground To Correct Valve Face Angle
Courtesy of TOYOTA MOTOR SALES, U.S.A., INC.

cardiagn.com

c. Check the valve head margin thickness.

Standard margin thickness: 1.0 mm (0.039 in.)

Minimum margin thickness: 0.5 mm (0.028 in.)

If the margin thickness is less than the minimum, replace the valve.

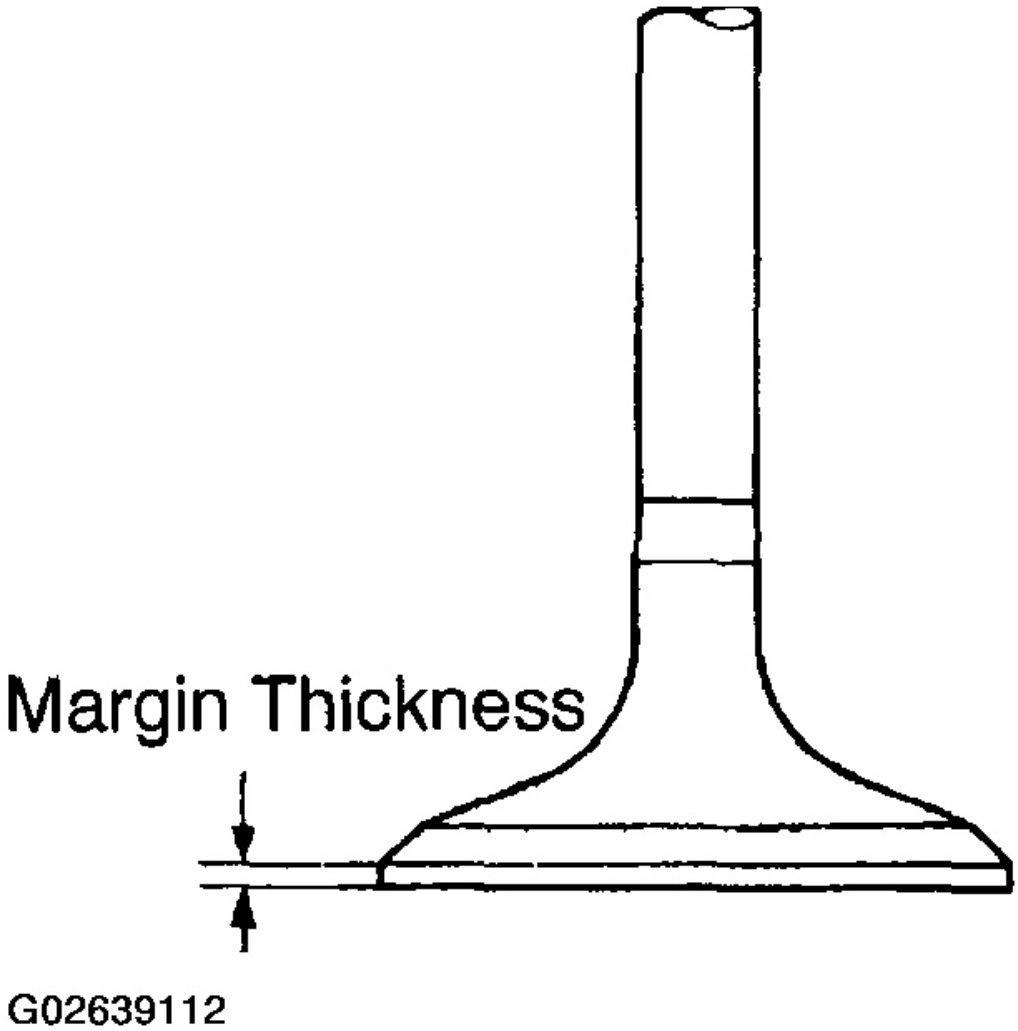

Fig. 103: Checking Valve Head Margin Thickness
Courtesy of TOYOTA MOTOR SALES, U.S.A., INC.

cardiagn.com

d. Check the valve overall length.

Standard overall length:

STANDARD OVERALL LENGTH

Intake	101.71 mm (4.0043 in.)
Exhaust	101.15 mm (3.9823 in.)

Minimum overall length:

MINIMUM OVERALL LENGTH

Intake	101.21 mm (3.9846 in.)
Exhaust	100.70 mm (3.9646 in.)

If the overall length is less than the minimum, replace the valve.

e. Check the surface of the valve stem tip for wear.

If the valve stem tip is worn, replace the valve.

cardiagn.com

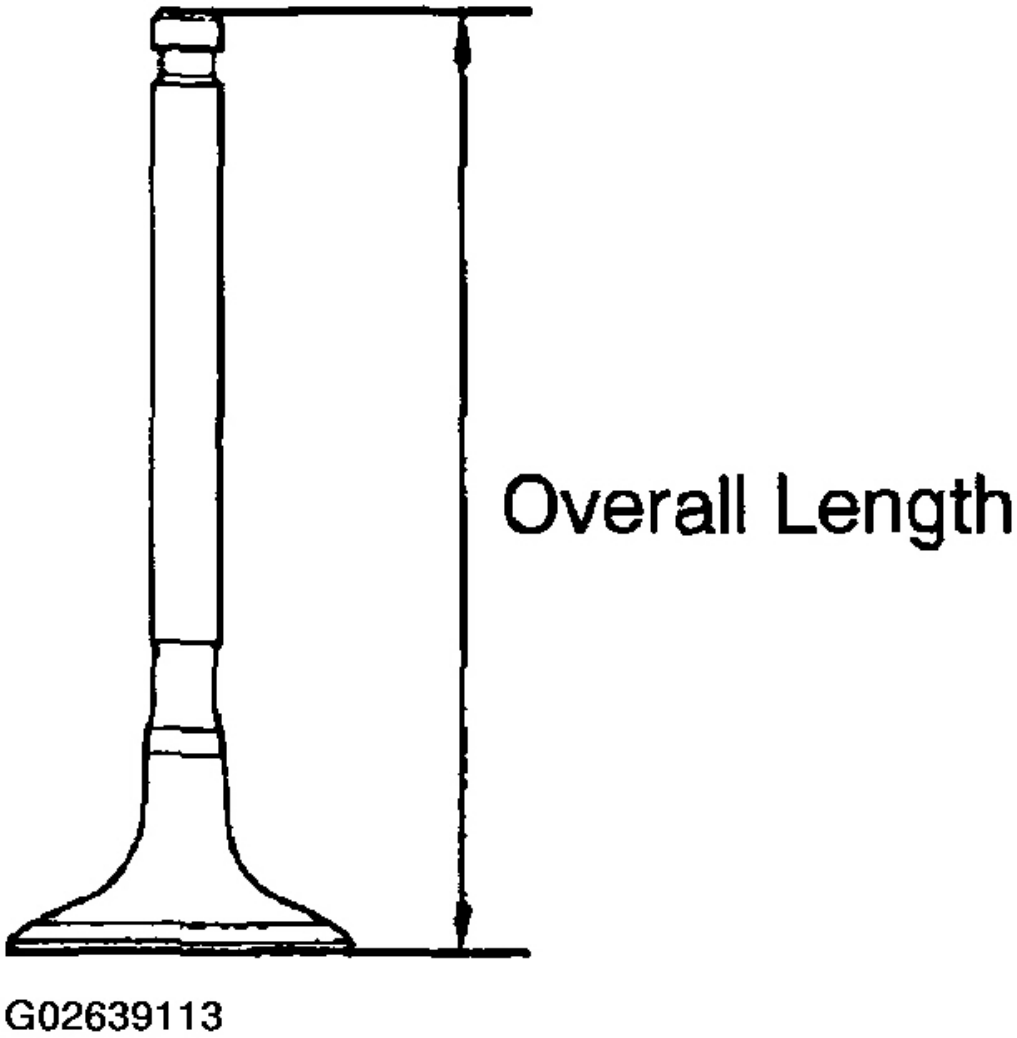

Fig. 104: Checking Valve Overall Length
Courtesy of TOYOTA MOTOR SALES, U.S.A., INC.

8. **INSPECT AND CLEAN VALVE SEATS**
   a. Using a 45° carbide cutter, resurface the valve seats.
   b. Remove only enough metal to clean the seats.

cardiagn.com

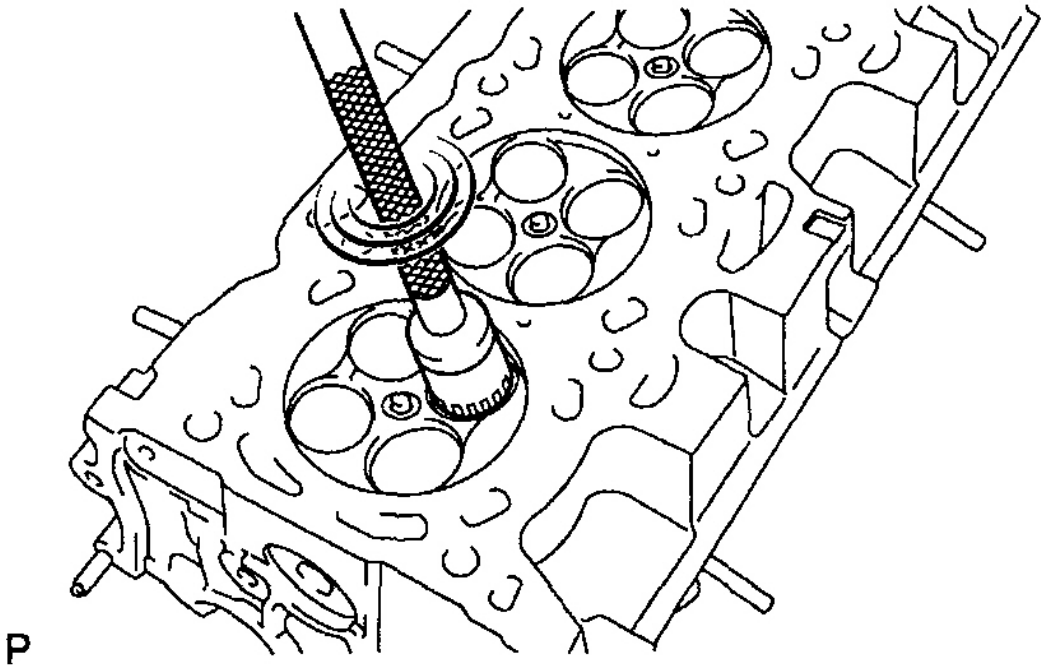

Fig. 105: Resurfacing Valve Seats
Courtesy of TOYOTA MOTOR SALES, U.S.A., INC.

c. Check the valve seating position.

   Apply a light coat of Prussian blue (or white lead) to the valve face. Lightly press the valve against the seat. Do not rotate valve.

d. Check the valve face and seat for the following:
   - If blue appears 360° around the face, the valve is concentric. If not, replace the valve.
   - If blue appears 360° around the valve seat, the guide and face are concentric. If not, resurface the seat.

cardiagn.com

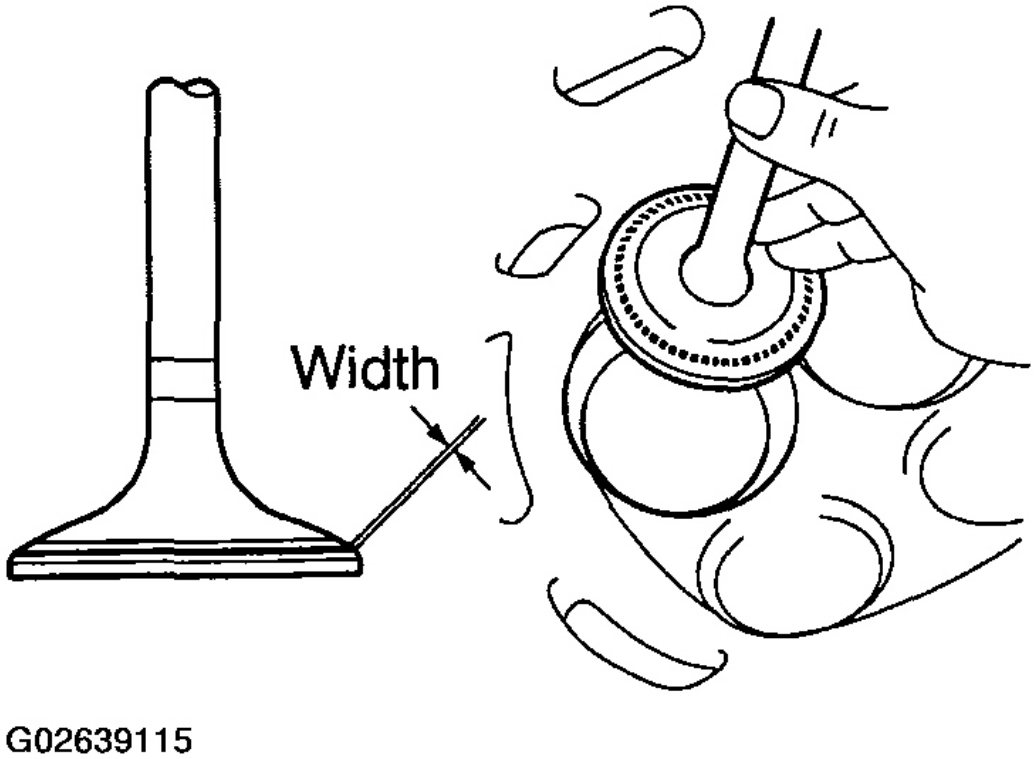

Fig. 106: Checking Valve Face & Valve Seating Position
Courtesy of TOYOTA MOTOR SALES, U.S.A., INC.

- Check that the valve seat contact is in the middle of the valve face with the width between 1.0 to 1.4 mm (0.039 to 0.055 in.).

If not, correct the valve seats as follows:

1. If the seating is too high on the valve face, use 30° and 45° cutters to correct the seat.

cardiagn.com

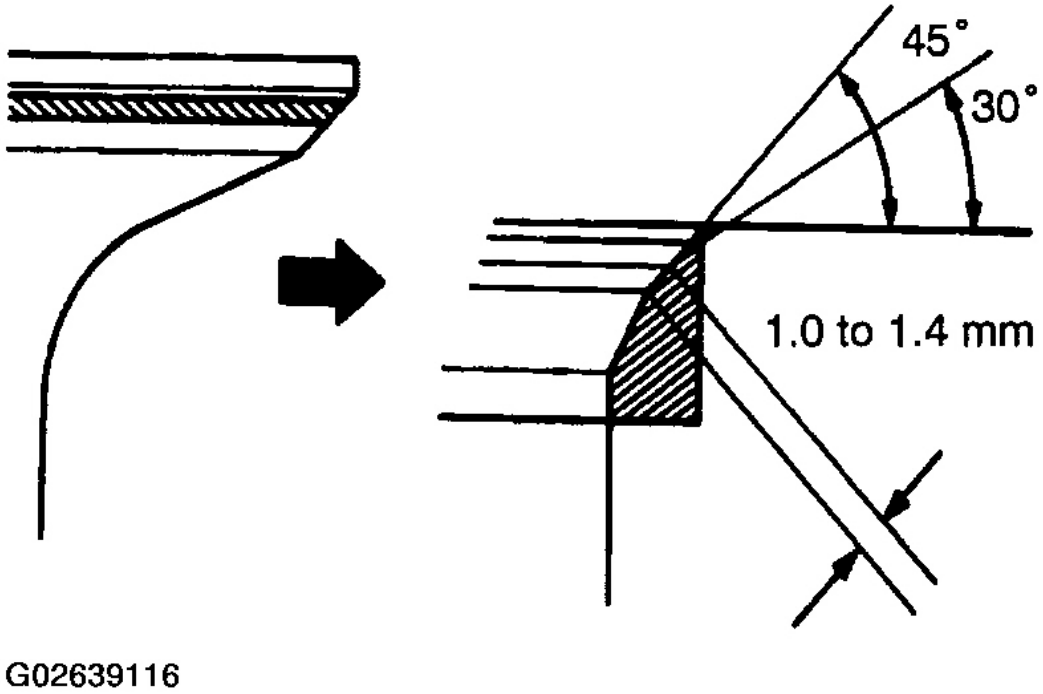

Fig. 107: Identifying Seat Cutter Angle (Seating Is Too High)
Courtesy of TOYOTA MOTOR SALES, U.S.A., INC.

2. If the seating is too low on the valve face, use 75° and 45° cutters to correct the seat.

cardiagn.com

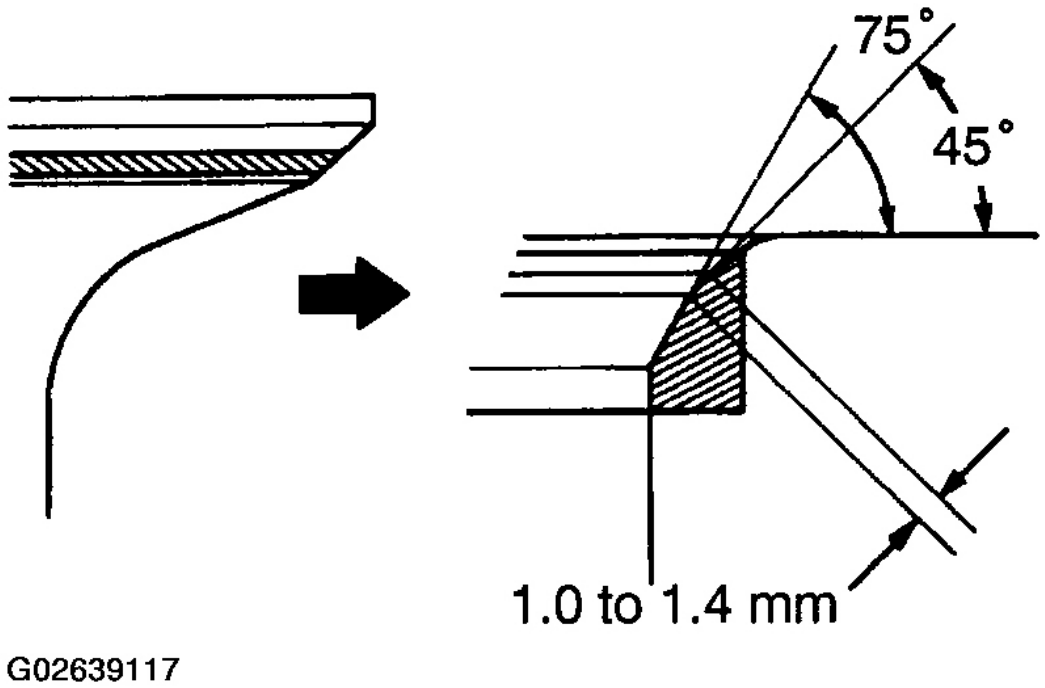

Fig. 108: Identifying Seat Cutter Angle (Seating Is Too Low)
Courtesy of TOYOTA MOTOR SALES, U.S.A., INC.

e. Hand-lap the valve and valve seat with an abrasive compound.
f. After hand-lapping, clean the valve and valve seat.

cardiagn.com

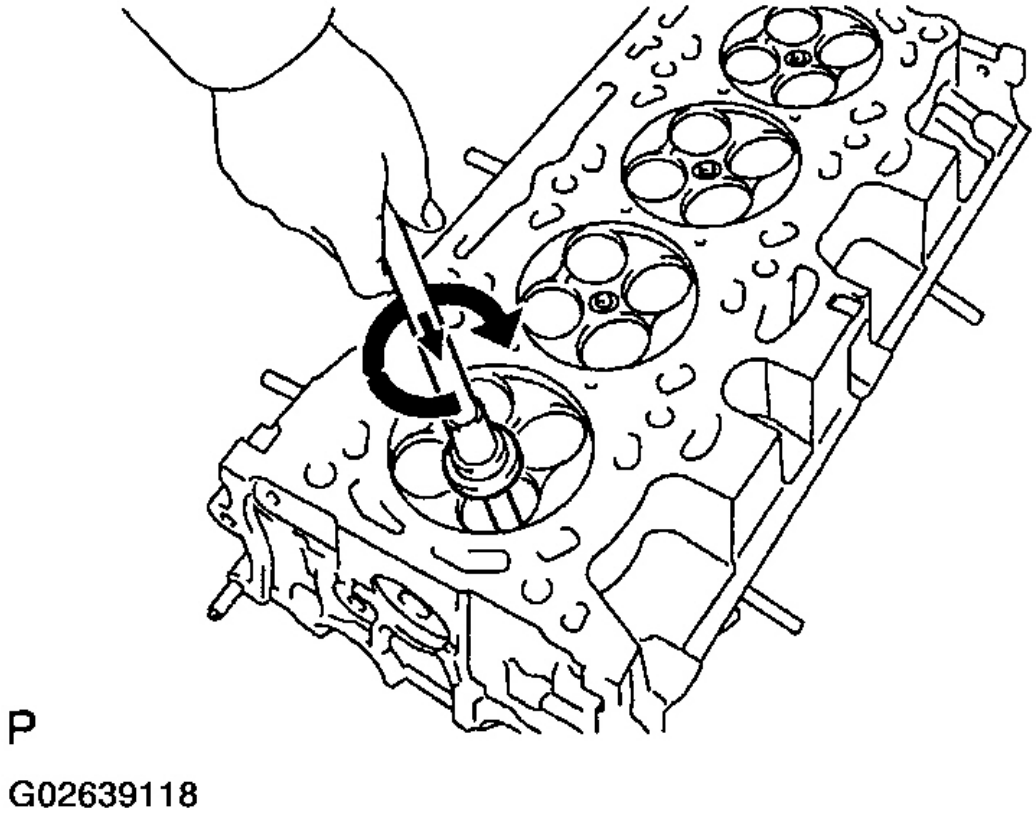

Fig. 109: Hand-Lap Valve And Valve Seat
Courtesy of TOYOTA MOTOR SALES, U.S.A., INC.

9. **INSPECT VALVE SPRINGS**
   a. Using a steel square, measure the deviation of the valve spring.

      Maximum deviation: 1.6 mm (0.063 in.)

      Maximum angle (Reference): 2°

      If the deviation is greater than the maximum, replace the valve spring.

cardiagn.com

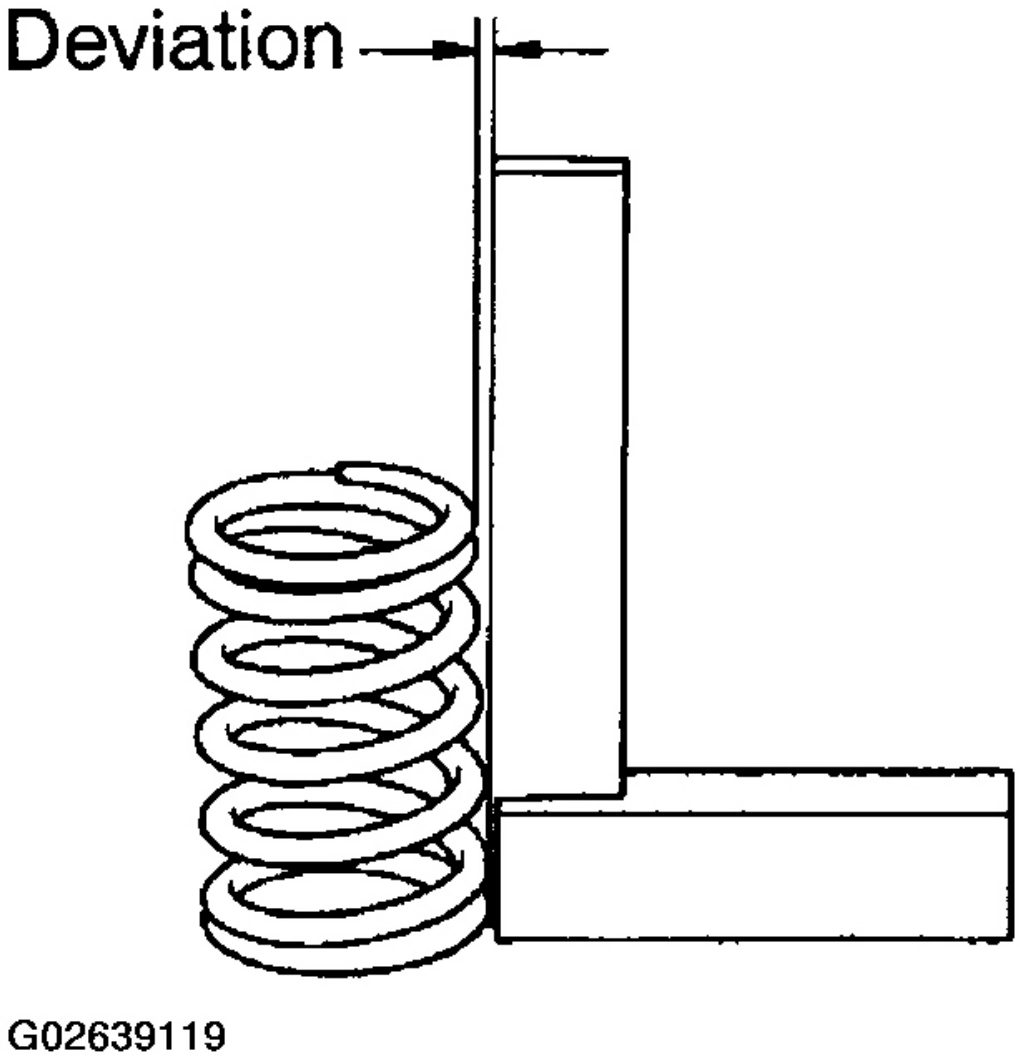

Fig. 110: Measuring Deviation Of Valve Spring Using Steel Square
Courtesy of TOYOTA MOTOR SALES, U.S.A., INC.

b. Using vernier calipers, measure the free length of the valve spring.

Free length: 45.7 mm (1.799 in.)

If the free length is not as specified, replace the valve spring.

cardiagn.com

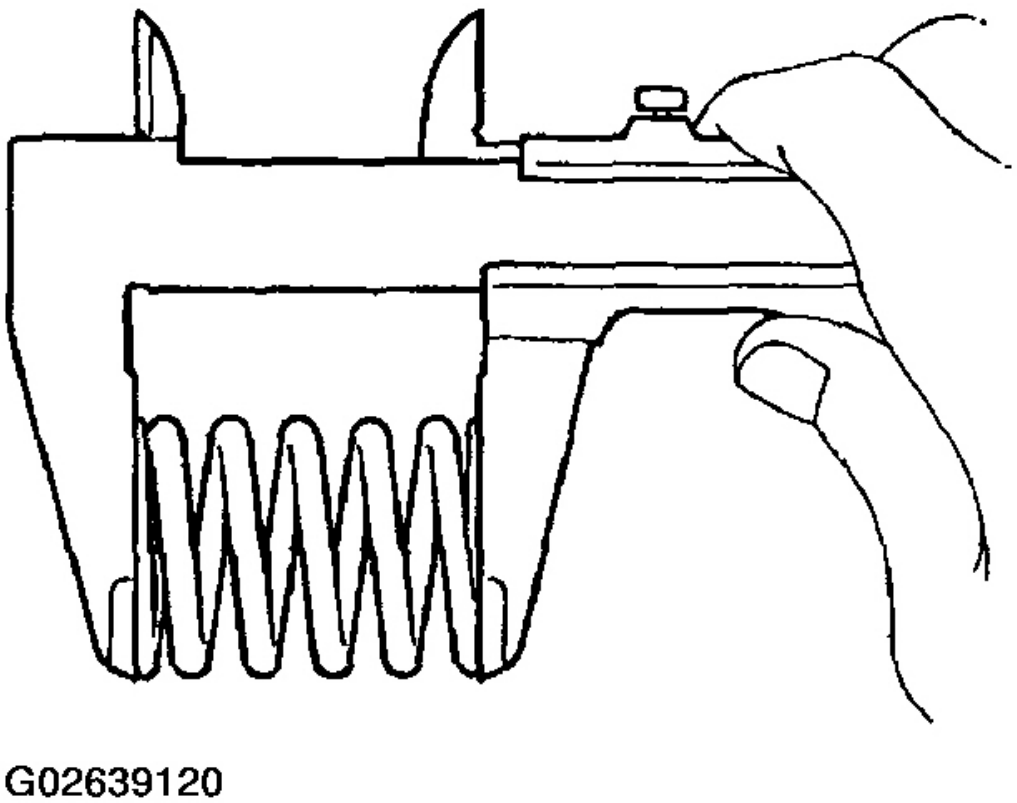

Fig. 111: Measuring Free Length Of Valve Spring Using Vernier Calipers
Courtesy of TOYOTA MOTOR SALES, U.S.A., INC.

c. Using a spring tester, measure the tension of the valve spring at the specified installed length.

Installed tension: 184.3 to 203.7 N (18.8 to 20.8 kgf, 41.4 to 45.9 lbf) at 34.0 mm (1.339 in.)

Maximum working tension: 344.8 to 381.2 N (35.2 to 38.9 kgf, 77.4 to 85.8 lbf) at 24.6 mm (0.968 in.)

If the tension is not as specified, replace the valve spring.

cardiagn.com

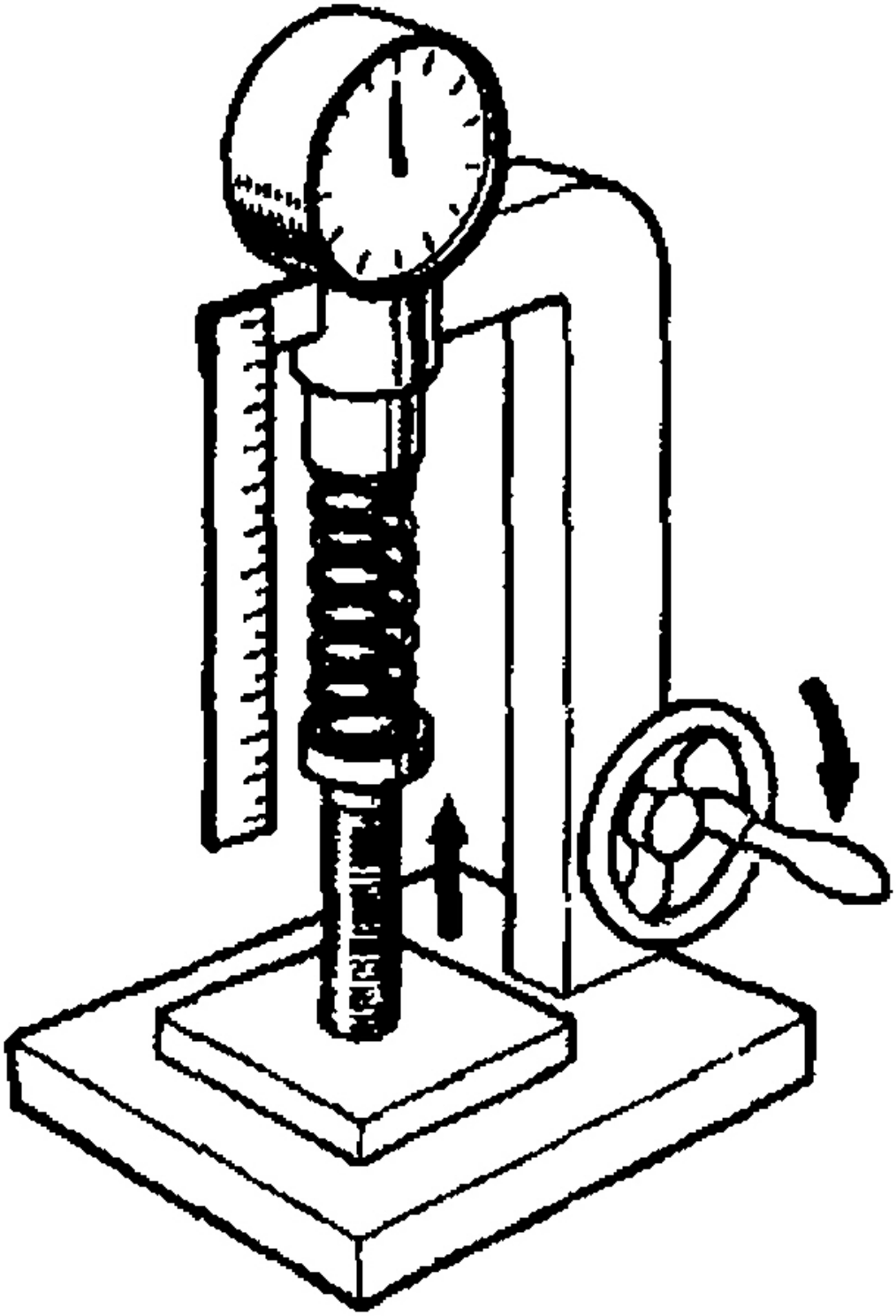

G02639121

cardiagn.com

Fig. 112: Measuring Tension Of Valve Spring At Specified Installed Length Using Spring Tester
Courtesy of TOYOTA MOTOR SALES, U.S.A., INC.

10. **INSPECT CAMSHAFTS**
    a. Inspect for runout.
        1. Place the camshaft on V-blocks.
        2. Using a dial indicator, measure the circle runout at the center journal.

           Maximum circle runout: 0.03 mm (0.0012 in.)

           If the circle runout is greater than the maximum, replace the camshaft.

cardiagn.com

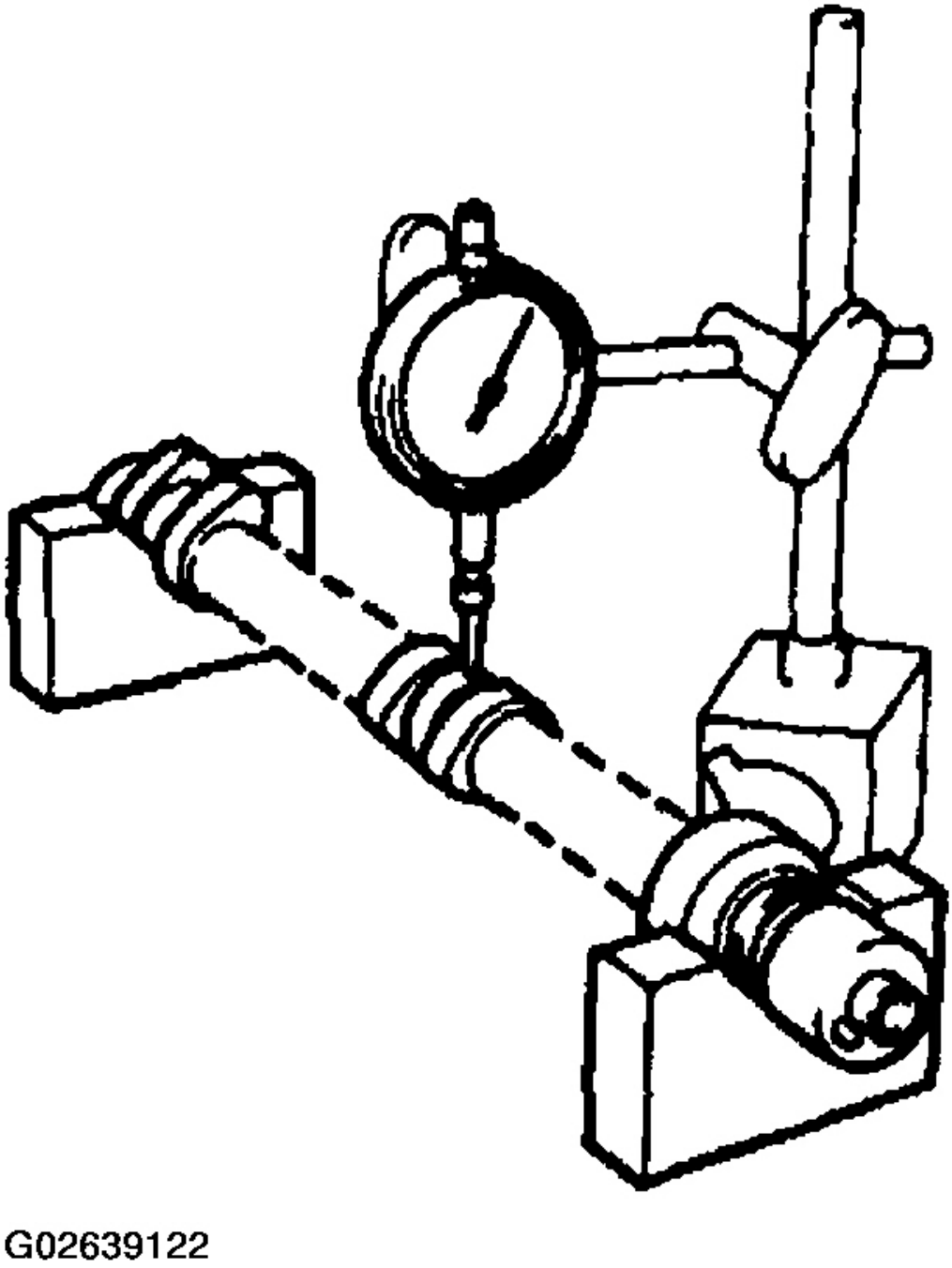

Fig. 113: Measuring Circle Runout At Center Journal
Courtesy of TOYOTA MOTOR SALES, U.S.A., INC.

cardiagn.com

b. Inspect the cam lobes.

Using a micrometer, measure the cam lobe height.

Standard cam lobe height:

STANDARD CAM LOBE HEIGHT

Intake	46.495 to 46.595 mm (1.8305 to 1.8345 in.)
Exhaust	45.983 to 46.083 mm (1.8106 to 1.8143 in.)

Minimum cam lobe height:

MINIMUM CAM LOBE HEIGHT

Intake	46.385 mm (1.8262 in.)
Exhaust	45.873 mm (1.8060 in.)

If the lobe height is less than the minimum, replace the camshaft.

cardiagn.com

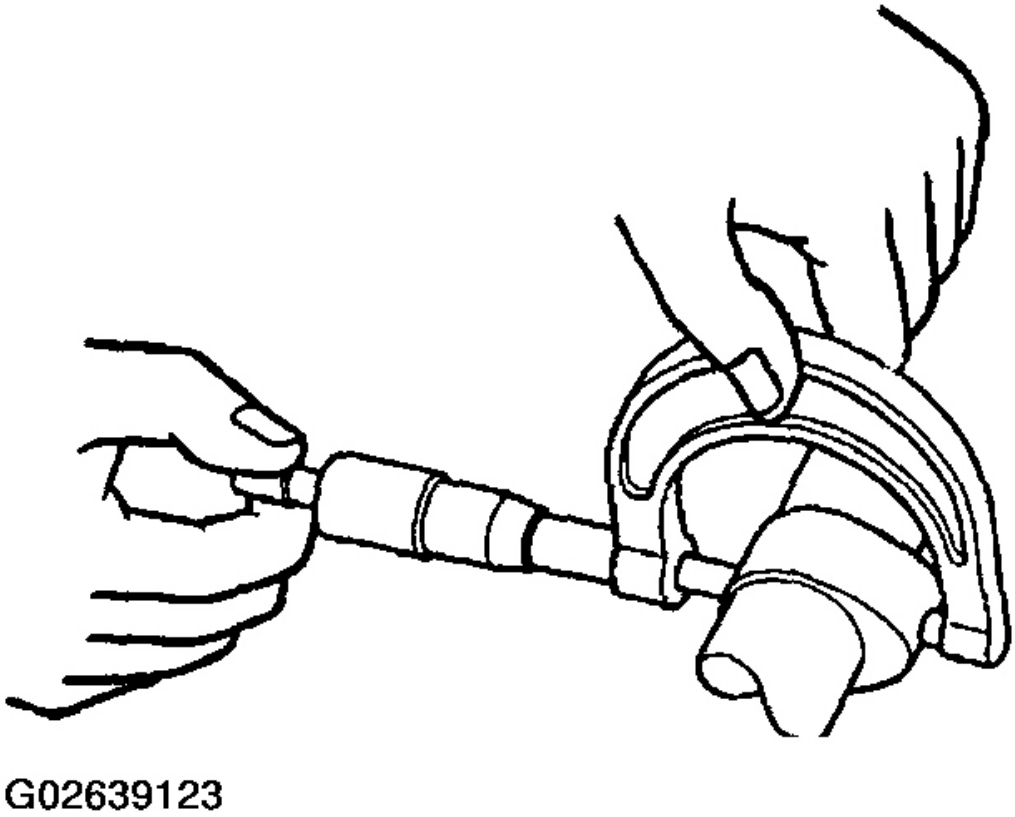

Fig. 114: Measuring Cam Lobe Height Using Micrometer
Courtesy of TOYOTA MOTOR SALES, U.S.A., INC.

c. Inspect the camshaft journals.

Using a micrometer, measure the journal diameter.

Journal diameter:

JOURNAL DIAMETER

No. 1	35.971 to 35.985 mm (1.4162 to 1.4167 in.)
Others	22.959 to 22.975 mm (0.9040 to 0.9045 in.)

If the journal diameter is not as specified, check the oil clearance.

cardiagn.com

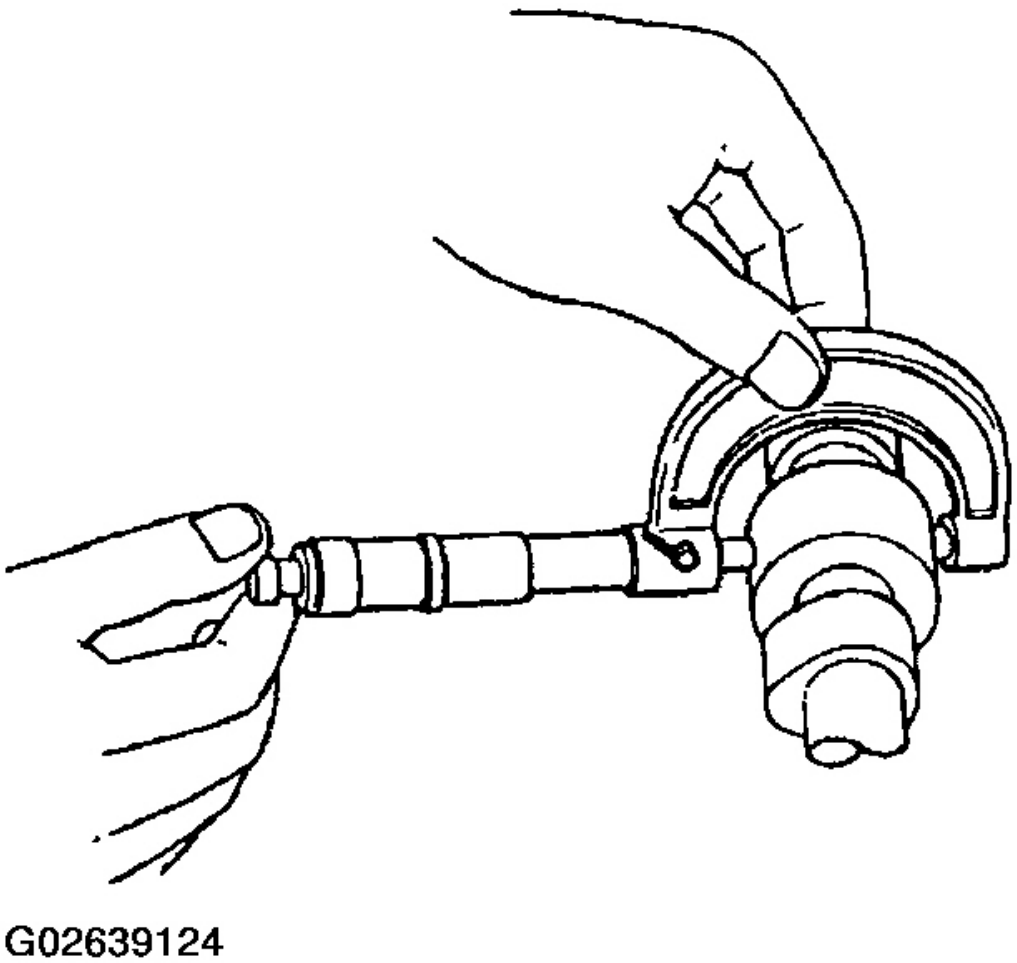

Fig. 115: Measuring Camshaft Journal Diameter Using Micrometer
Courtesy of TOYOTA MOTOR SALES, U.S.A., INC.

d. Inspect the journal clearance.
   1. Clean the bearings, bearing caps and camshaft journals.
   2. Install the bearings (see step 7).
   3. Place the camshafts on the cylinder head.
   4. Lay a strip of Plastigage across each of the camshaft journal.

cardiagn.com

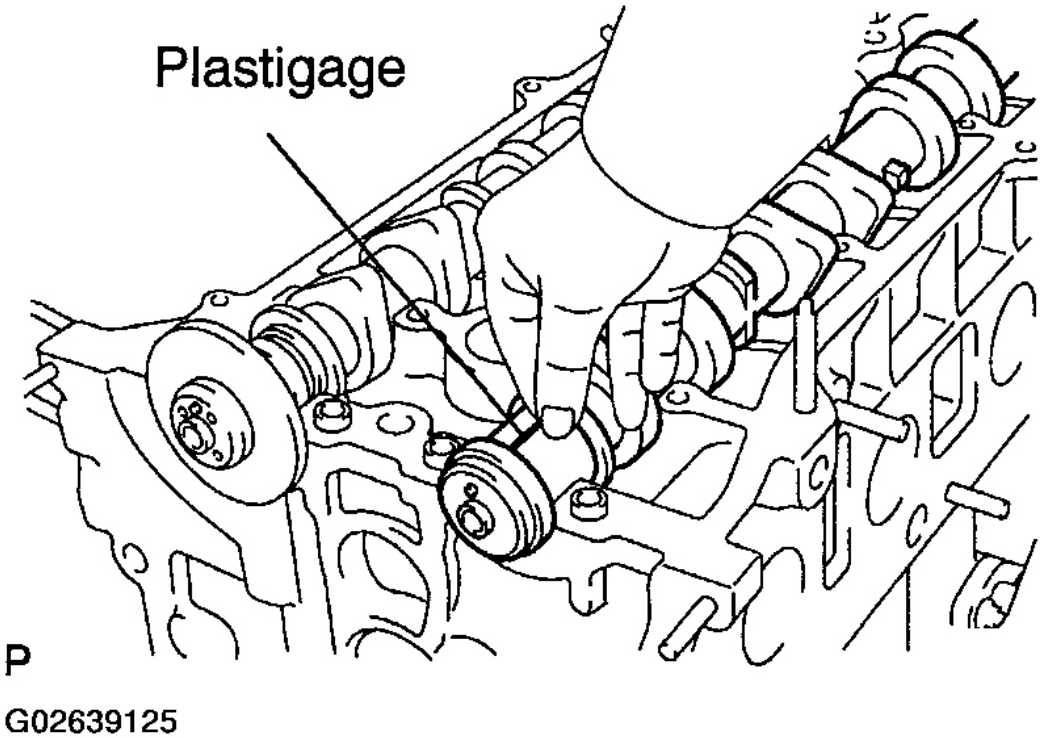

Fig. 116: Inspecting Camshaft Journal Clearance
Courtesy of TOYOTA MOTOR SALES, U.S.A., INC.

5. Install the bearing caps (see **INSTALLATION**).

cardiagn.com

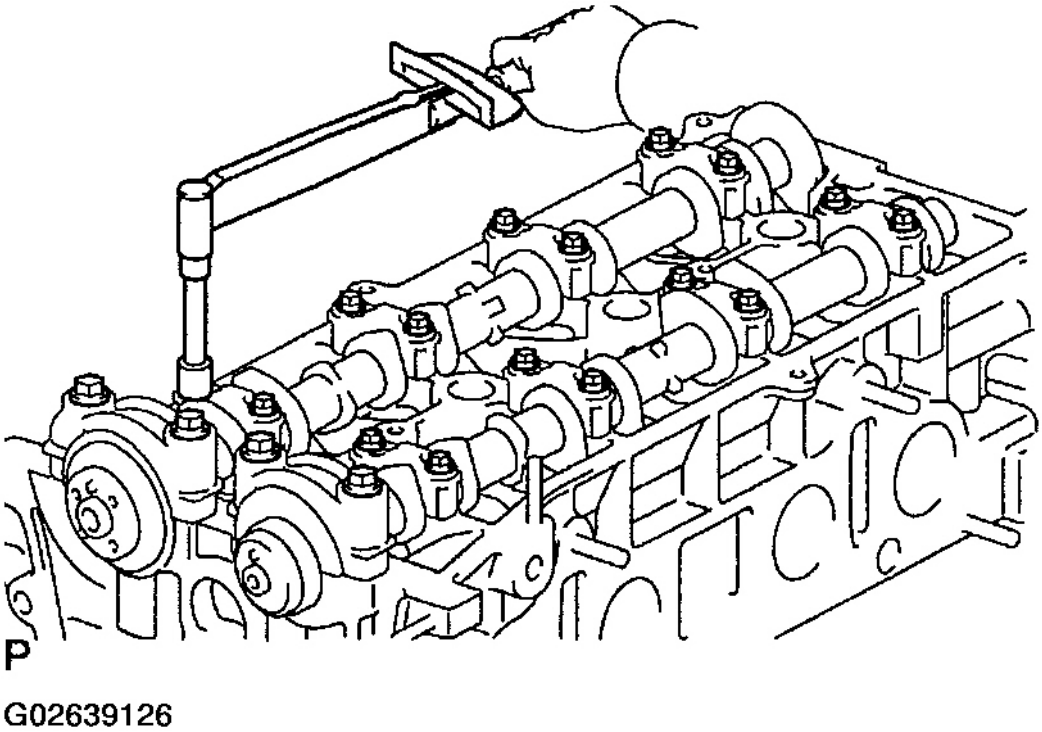

Fig. 117: Installing Bearing Caps
Courtesy of TOYOTA MOTOR SALES, U.S.A., INC.

6. Remove the bearing caps.
7. Measure the Plastigage at its widest point.

cardiagn.com

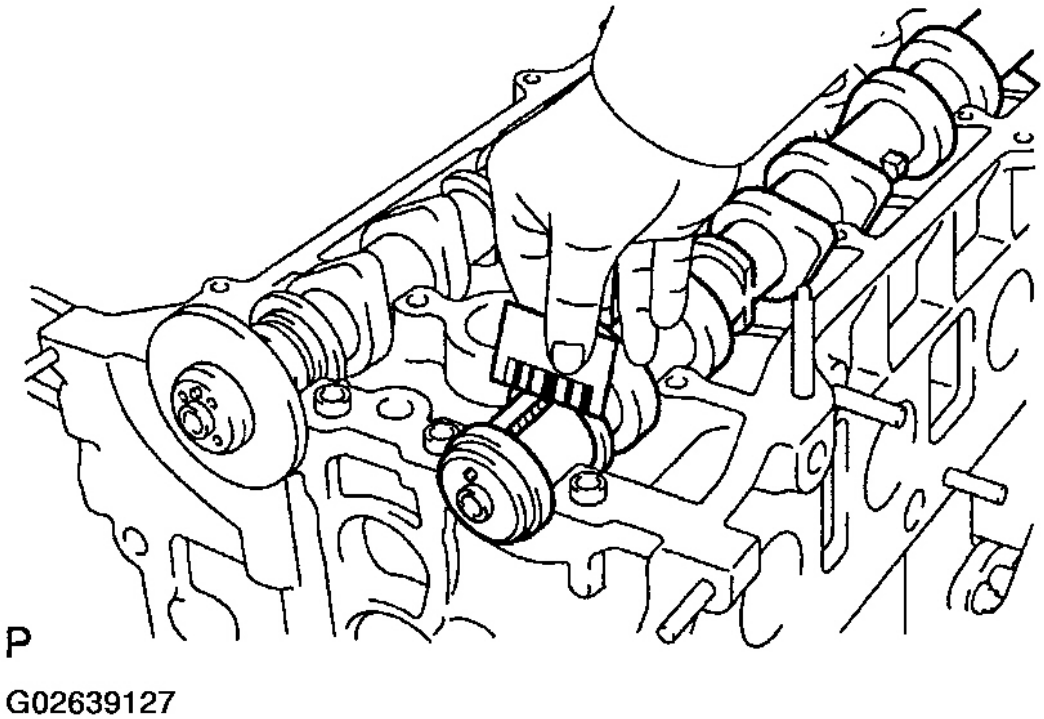

Fig. 118: Measuring Plastigage At Its Widest Point
Courtesy of TOYOTA MOTOR SALES, U.S.A., INC.

Standard oil clearance:

cardiagn.com

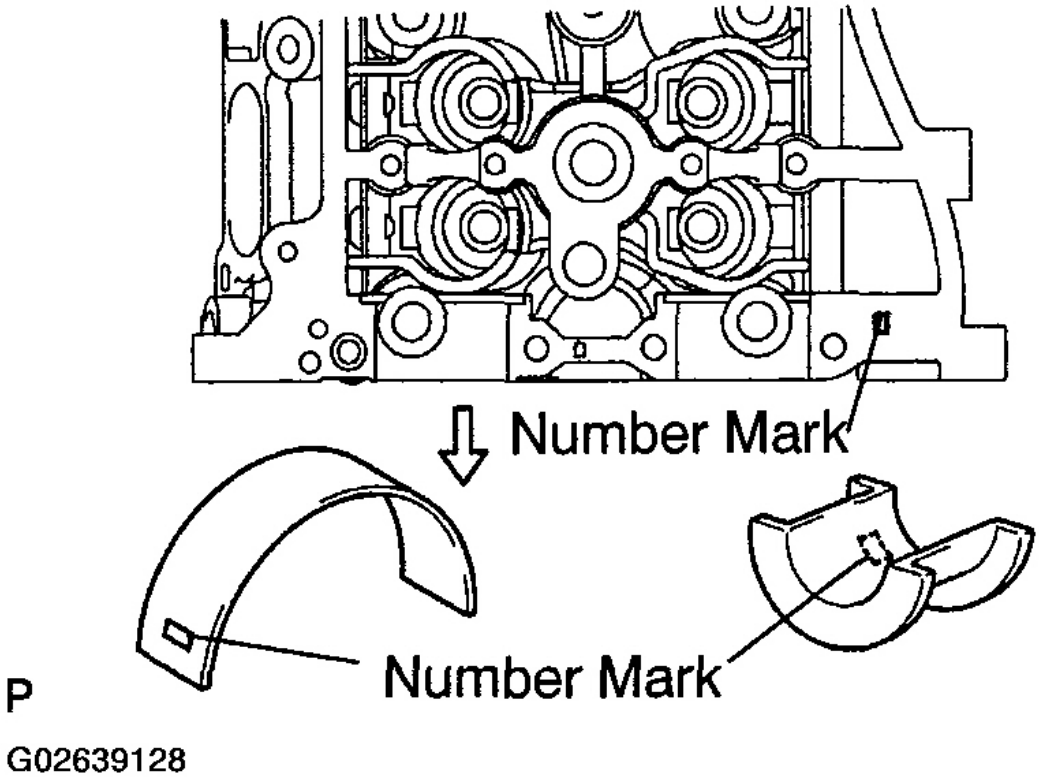

Fig. 119: Identifying Bearing Oil Clearance Specification
Courtesy of TOYOTA MOTOR SALES, U.S.A., INC.

Maximum oil clearance:

MAXIMUM OIL CLEARANCE

Intake	No. 1	0.07 mm (0.0028 in.)
Others		0.10 mm (0.0039 in.)

If the oil clearance is greater than the maximum, replace the bearing and/or camshaft. If necessary, replace the bearing caps and cylinder head as a set.

HINT:

If using a standard bearing, replace with the one which has the same number.

Reference

Cylinder head journal bore diameter:

cardiagn.com

CYLINDER HEAD JOURNAL BORE DIAMETER

Mark 1	40.000 to 40.008 mm (1.5748 to 1.5751 in.)
Mark 2	40.009 to 40.017 mm (1.5752 to 1.5755 in.)
Mark 3	40.018 to 40.025 mm (1.5755 to 1.5758 in.)

Standard bearing center wall thickness:

STANDARD BEARING CENTER WALL THICKNESS

Mark 1	2.000 to 2.004 mm (0.0787 to 0.0789 in.)
Mark 2	2.005 to 2.008 mm (0.0789 to 0.0791 in.)
Mark 3	2.009 to 2.012 mm (0.0791 to 0.0792 in.)

Camshaft journal diameter:

35.971 to 35.985 mm (1.4165 to 1.4167 in.)

8. Remove the Plastigage completely.
9. Remove the camshafts.
10. Remove the bearings.

e. Inspect the thrust clearance.

1. Install the bearings.
2. Install the camshafts (see **INSTALLATION**).

cardiagn.com

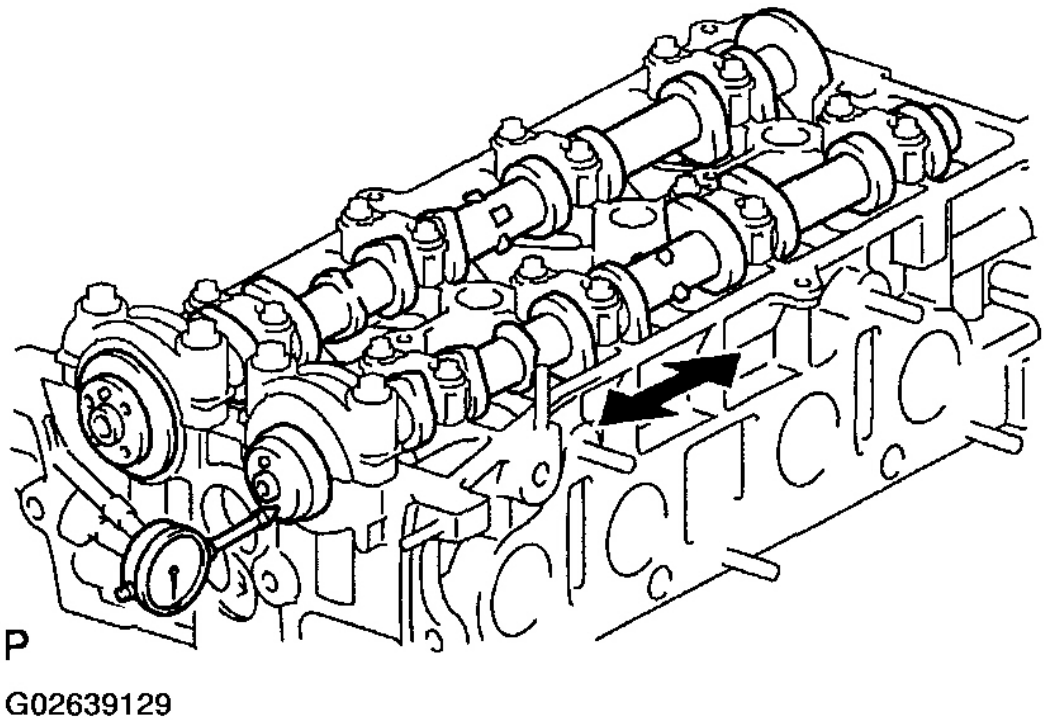

Fig. 120: Inspecting Camshaft Thrust Clearance
Courtesy of TOYOTA MOTOR SALES, U.S.A., INC.

3. Using a dial indicator, measure the thrust clearance while moving the camshaft back and forth.

Standard thrust clearance:

STANDARD THRUST CLEARANCE

Intake	0.040 to 0.095 mm (0.0016 to 0.0037 in.)
Exhaust	0.080 to 0.135 mm (0.0032 to 0.0053 in.)

Maximum thrust clearance:

MAXIMUM THRUST CLEARANCE

Intake	0.11 mm (0.0043 in.)
Exhaust	0.15 mm (0.0059 in.)

If the thrust clearance is greater than the maximum, replace the camshaft. If necessary, replace the bearing caps and cylinder head as a set.

cardiagn.com

4. Remove the bearings.
5. Remove the camshafts.

11. **INSPECT VVT TIMING SPROCKET (VALVE TIMING CONTROLLER ASSEMBLY)**
    a. Apply vinyl tape to all the ports except the one.
    b. Install the VVT timing sprocket.

    Torque: 54 N.m (550 kgf.cm, 40 ft.lbf)

    NOTE: Do not push VVT timing sprocket to the camshaft forcibly when installing it.

    c. Check that the VVT timing sprocket will not turn.
    d. Wind tape around the tip of the air gun and apply air of approx. 100kPa (1 kgf/cm^2 , 14 psi) to the port of the camshaft.

    NOTE: When the oil splashes, wipe it off with a shop rag and the likes.

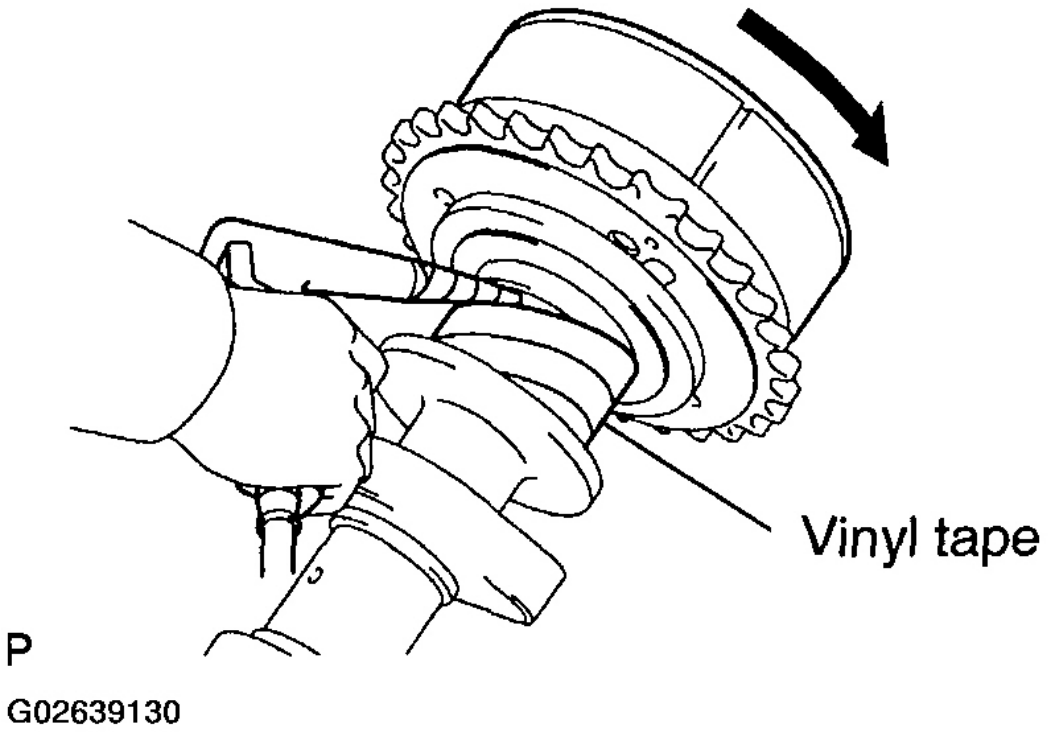

Fig. 121: Inspecting Thrust Clearance
Courtesy of TOYOTA MOTOR SALES, U.S.A., INC.

cardiagn.com

HINT:

Perform this in order to release the lock pin for the maximum delay angle locking.

e. Under the condition of (d), turn the VVT timing sprocket to the advance angle side (the arrow marked direction in the illustration) with your hand.

Standard: Must turn

HINT:

Depending on the air pressure, the VVT timing sprocket will turn to the advance angle side without applying force by hand. Also, under the condition that the pressure can be hardly applied because of the air leakage from the port, there may be the case that the lock pin could be hardly released.

f. Except the position where the lock pin meets at the maximum delay angle, let the VVT timing sprocket turn back and forth, and check the movable range.

Standard: Moves smoothly in the range about 30°

g. Turn the VVT timing sprocket with your hand and lock it at the maximum delay angel position.

12. **INSPECT VALVE LIFTERS AND LIFTER BORES**

a. Using a caliper gauge, measure the lifter bore diameter of the cylinder head.

Lifter bore diameter:

31.009 to 31.025 mm (1.2208 to 1.2215 in.)

cardiagn.com

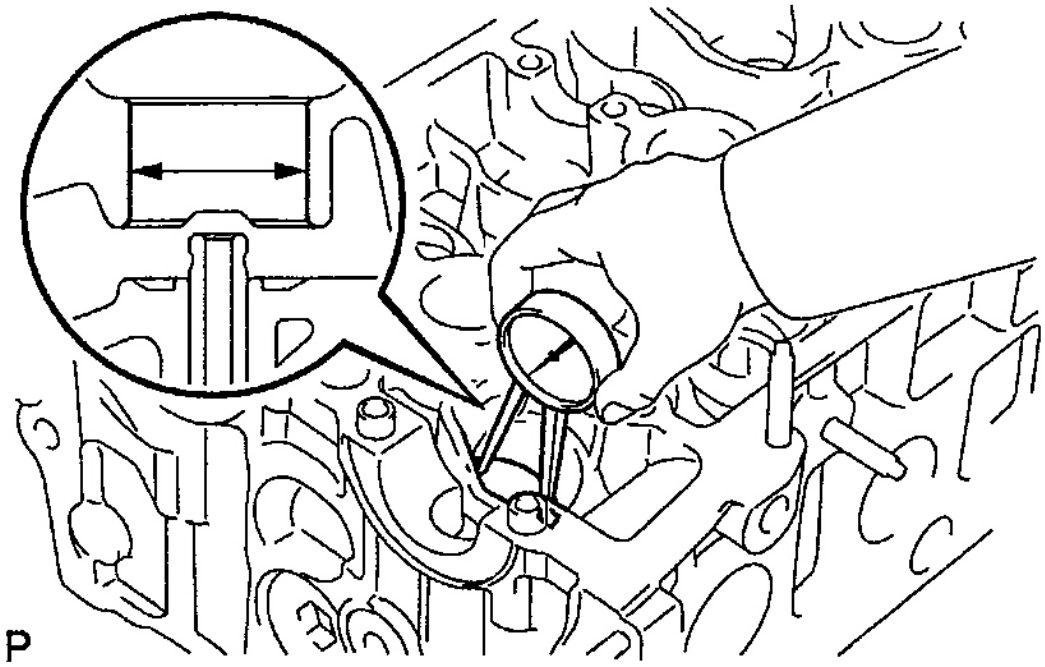

Fig. 122: Inspecting Lifter Bore Diameter Of The Cylinder Head
Courtesy of TOYOTA MOTOR SALES, U.S.A., INC.

b. Using a micrometer, measure the lifter diameter.

Lifter diameter:

30.966 to 30.976 mm (1.2191 to 1.2195 in.)

cardiagn.com

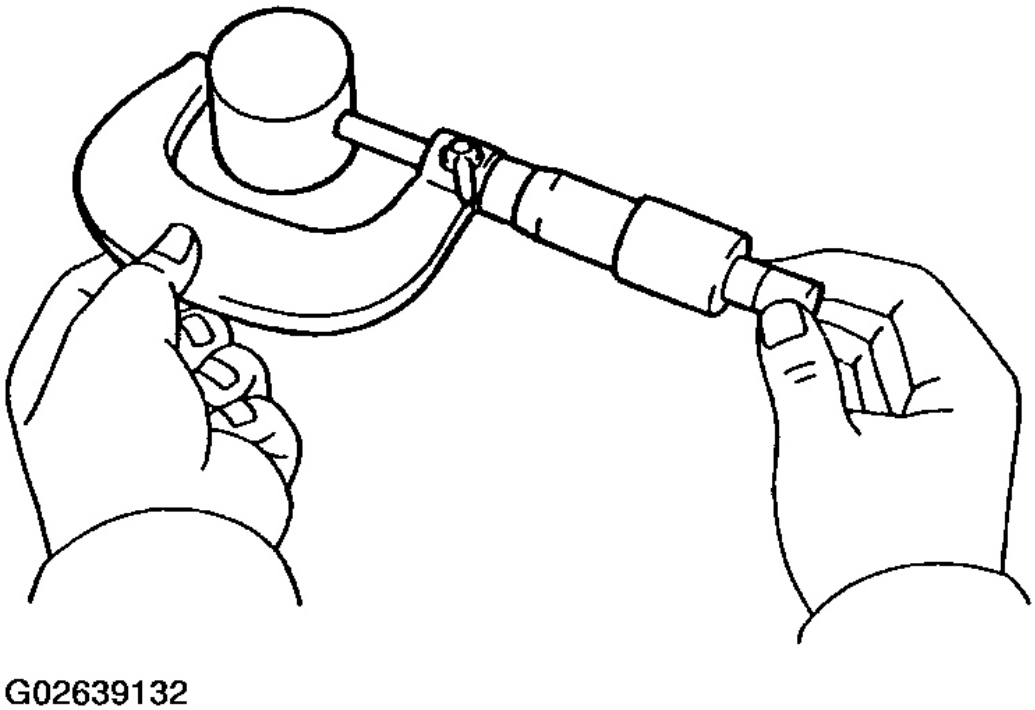

Fig. 123: Inspecting Lifter Diameter
Courtesy of TOYOTA MOTOR SALES, U.S.A., INC.

c. Subtract the lifter diameter measurement from the lifter bore diameter measurement.

Standard oil clearance:

0.033 to 0.059 mm (0.0013 to 0.0023 in.)

Maximum oil clearance: 0.079 mm (0.0031 in.)

If the oil clearance is greater than the maximum, replace the lifter. If necessary, replace the cylinder head.

13. **INSPECT EXHAUST MANIFOLD**

Using a precision straight edge and a feeler gauge, measure the surface contacting the cylinder head for warpage.

Maximum warpage: 0.7 mm (0.0275 in.)

cardiagn.com

If warpage is greater than the maximum, replace the exhaust manifold.

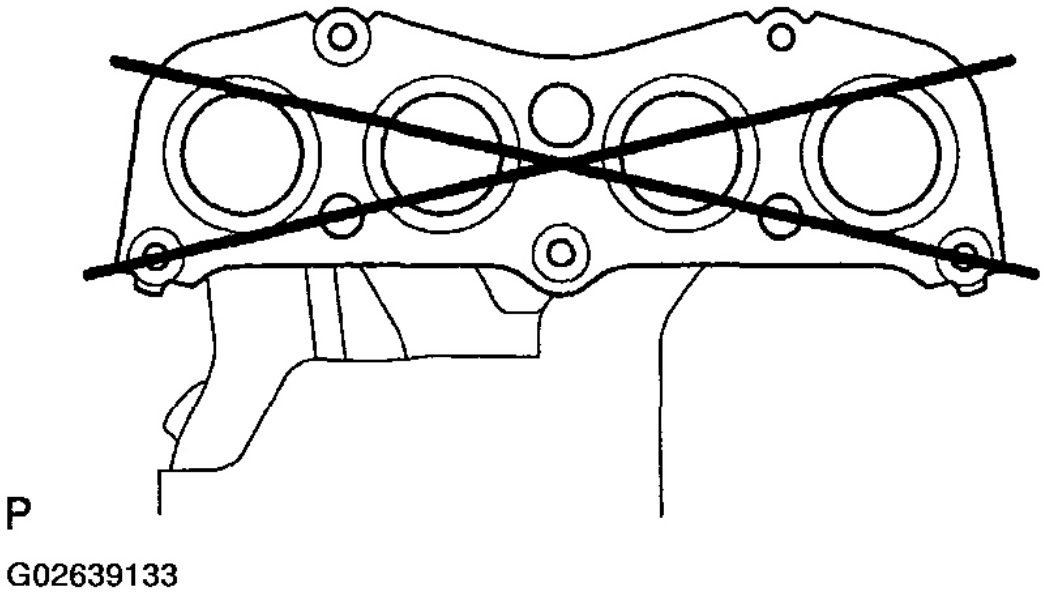

Fig. 124: Inspect Exhaust Manifold Flange For Warpage
Courtesy of TOYOTA MOTOR SALES, U.S.A., INC.

14. **INSPECT CYLINDER HEAD BOLTS**

Standard length:

161.3 the 162.7 mm (6.350 the 6.405 in.)

Maximum length: 164.2 mm (6.4646 in.)

If the length is greater than the maximum, replace the bolt.

cardiagn.com

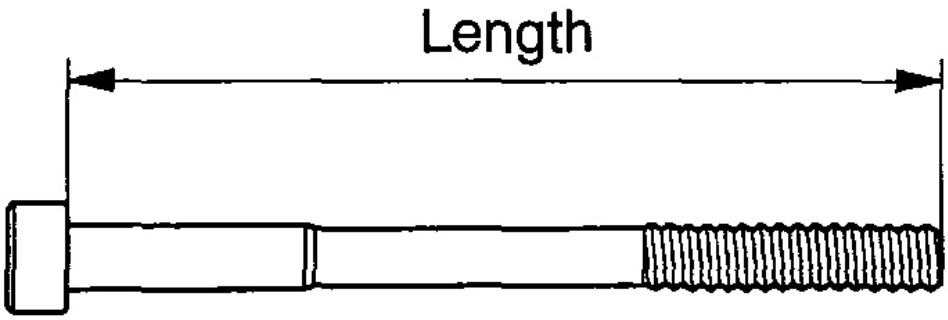

Y

G02639134

Fig. 125: Inspecting Cylinder Head Bolts Length
Courtesy of TOYOTA MOTOR SALES, U.S.A., INC.

REPLACEMENT

REPLACE VALVE GUIDE BUSHINGS

a. Gradually heat the cylinder head to 80 to 100°C (176 to 212°F).

cardiagn.com

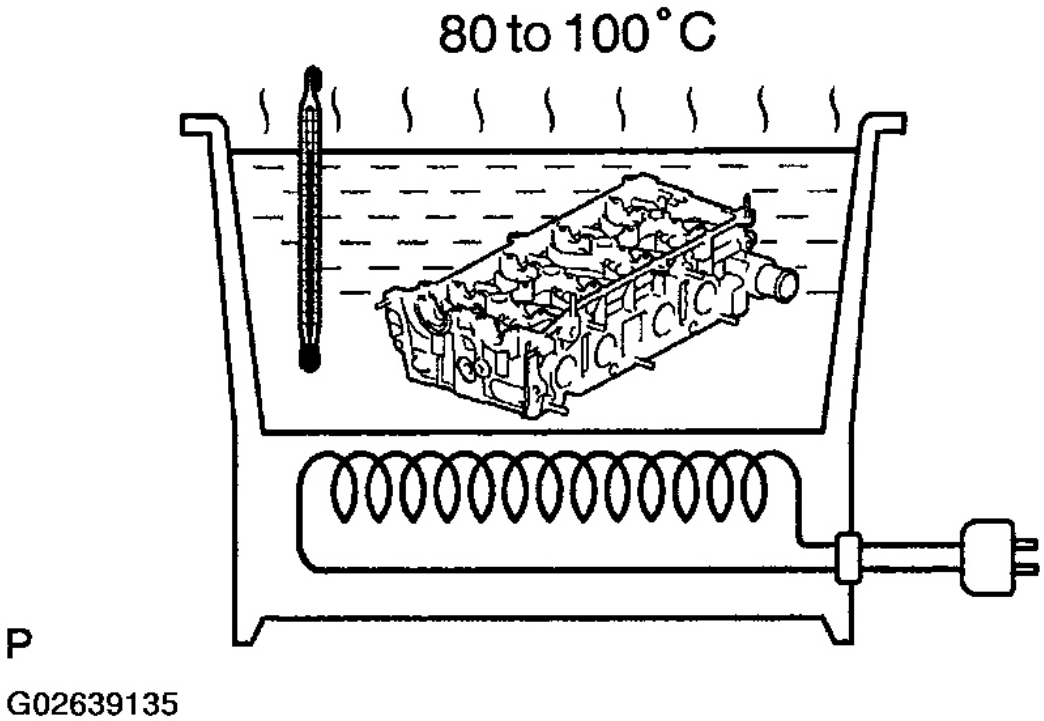

Fig. 126: Heating Cylinder Head
Courtesy of TOYOTA MOTOR SALES, U.S.A., INC.

b. Using SST and a hammer, tap out the guide bushing.

SST 09201-01055, 09950-70010 (09951-07100)

cardiagn.com

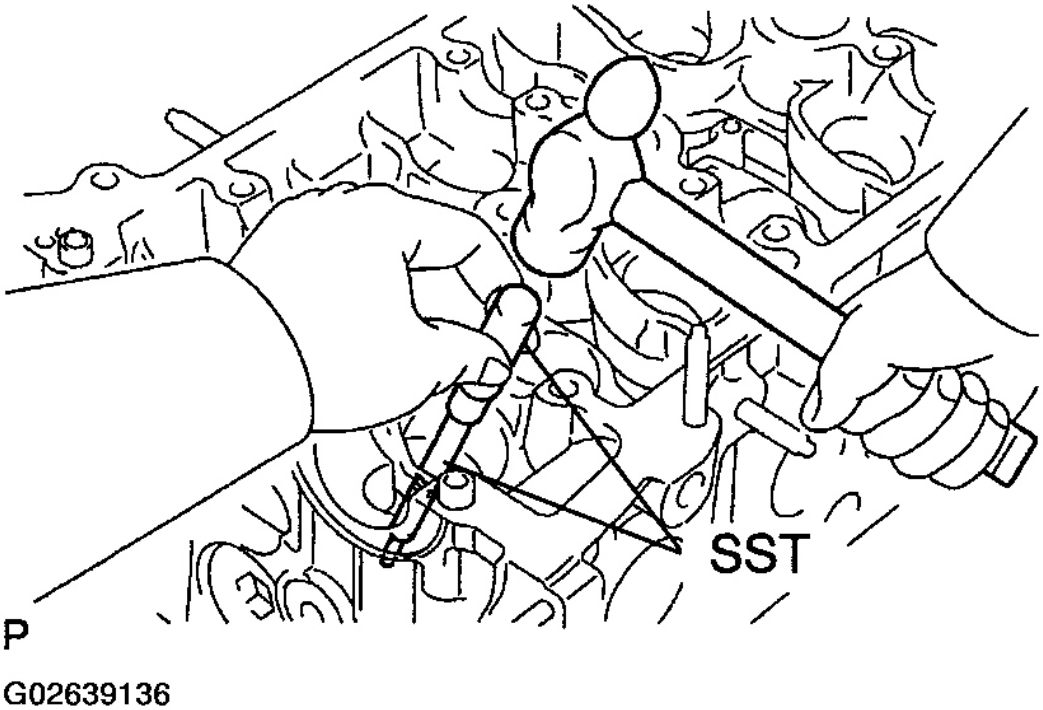

Fig. 127: Taping Out Guide Bushing Using SST And Hammer
Courtesy of TOYOTA MOTOR SALES, U.S.A., INC.

c. Using a caliper gauge, measure the bushing bore diameter of the cylinder head.

Diameter: 10.285 to 10.306 mm (0.4049 to 0.4057 in.)

cardiagn.com

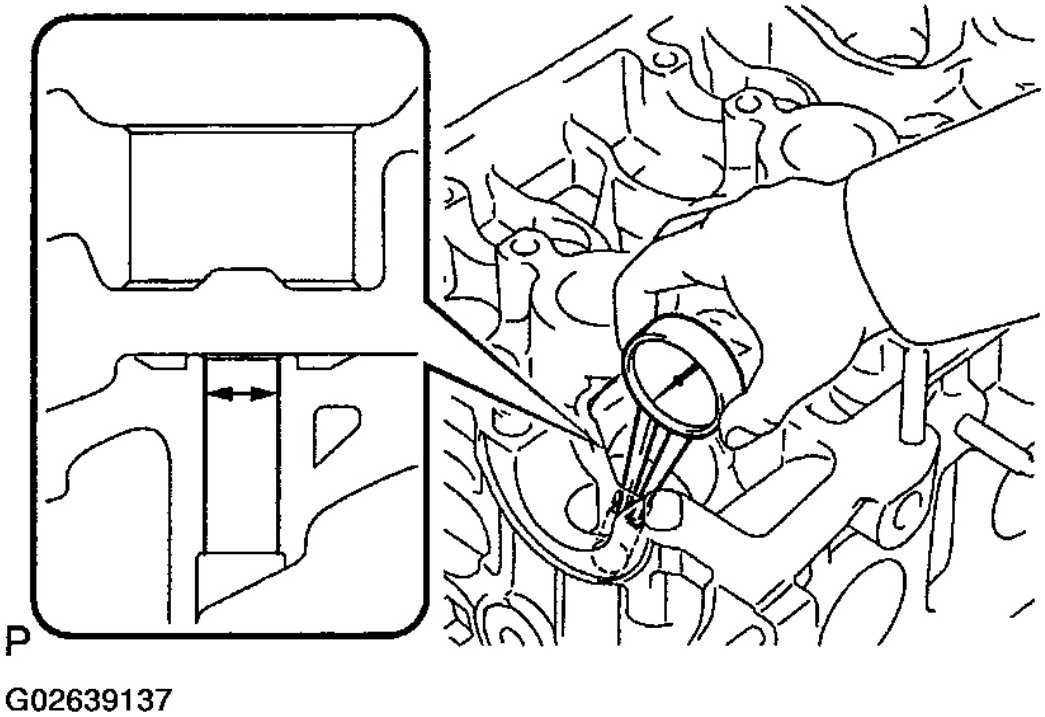

Fig. 128: Measuring Bushing Bore Diameter Of Cylinder Head Using Caliper Gauge
Courtesy of TOYOTA MOTOR SALES, U.S.A., INC.

d. Install the standard bushing if the diameter is within specified diameter.

Standard: 10.333 to 10.344 mm (0.4068 to 0.4072 in.)

e. Gradually heat the cylinder head to 80 to 100°C (176 to 212°F).
f. Using SST and a hammer, tap in a new guide bushing to the specified protrusion height.

SST 09201-01055, 09950-70010 (09951-07100)

Protrusion height (H):

9.6 to 10.0 mm (0.380 to 0.394 in.)

cardiagn.com

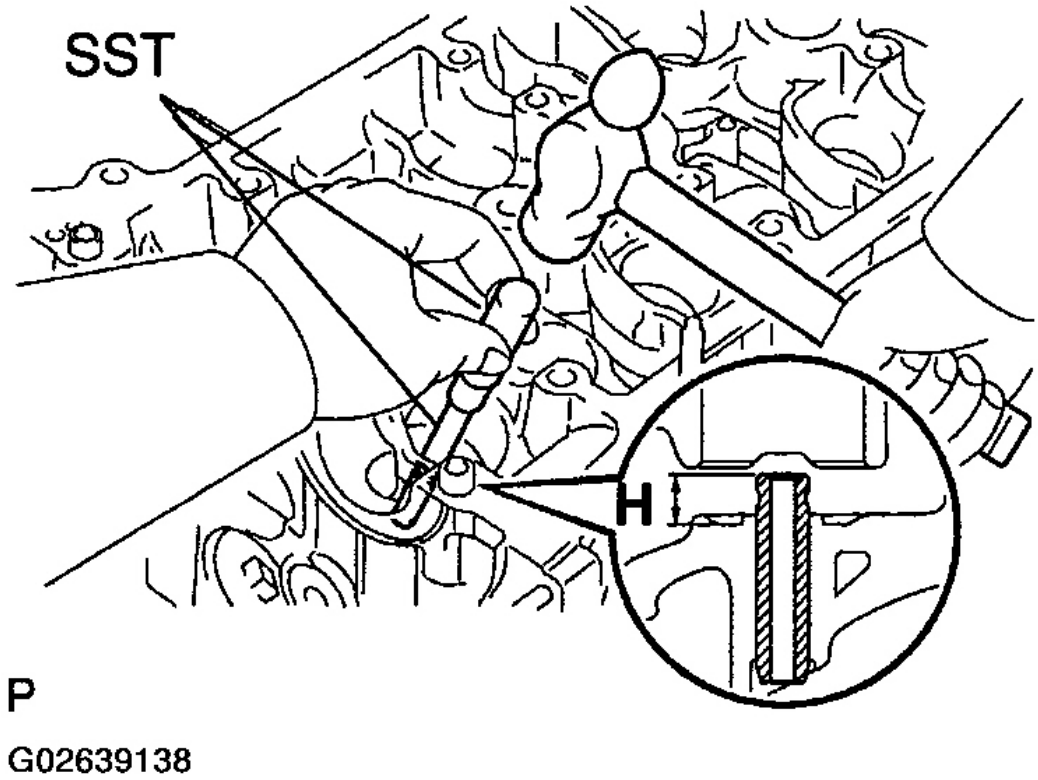

Fig. 129: Taping In Guide Bushing Using SST And Hammer
Courtesy of TOYOTA MOTOR SALES, U.S.A., INC.

g. Using a sharp 5.5 mm reamer, ream the guide bushing to obtain the standard specified clearance (see **INSPECTION**) between the guide bushing and valve stem.

cardiagn.com

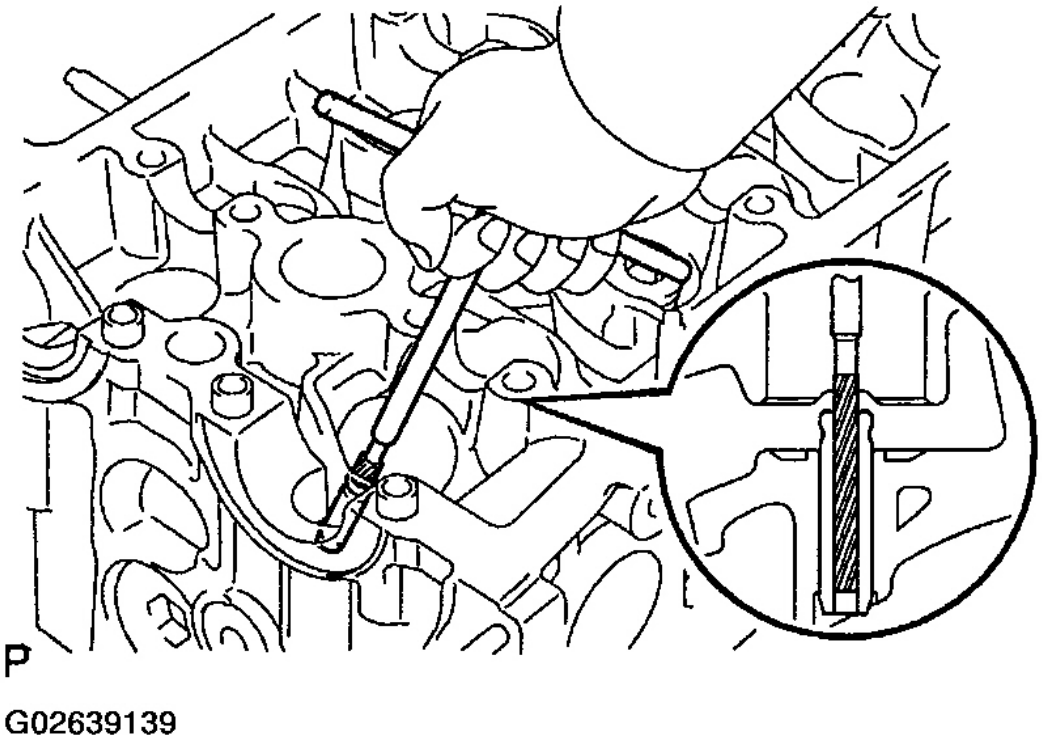

Fig. 130: Reaming Guide Bushing
Courtesy of TOYOTA MOTOR SALES, U.S.A., INC.

REASSEMBLY

HINT:

- Thoroughly clean all parts to be assembled.
- Before installing the parts, apply fresh engine oil to all sliding and rotating surfaces.
- Replace oil seals with new ones.

1. **INSTALL VALVES**
   a. Using SST, push in a new oil seal.

      SST 09201-41020

cardiagn.com

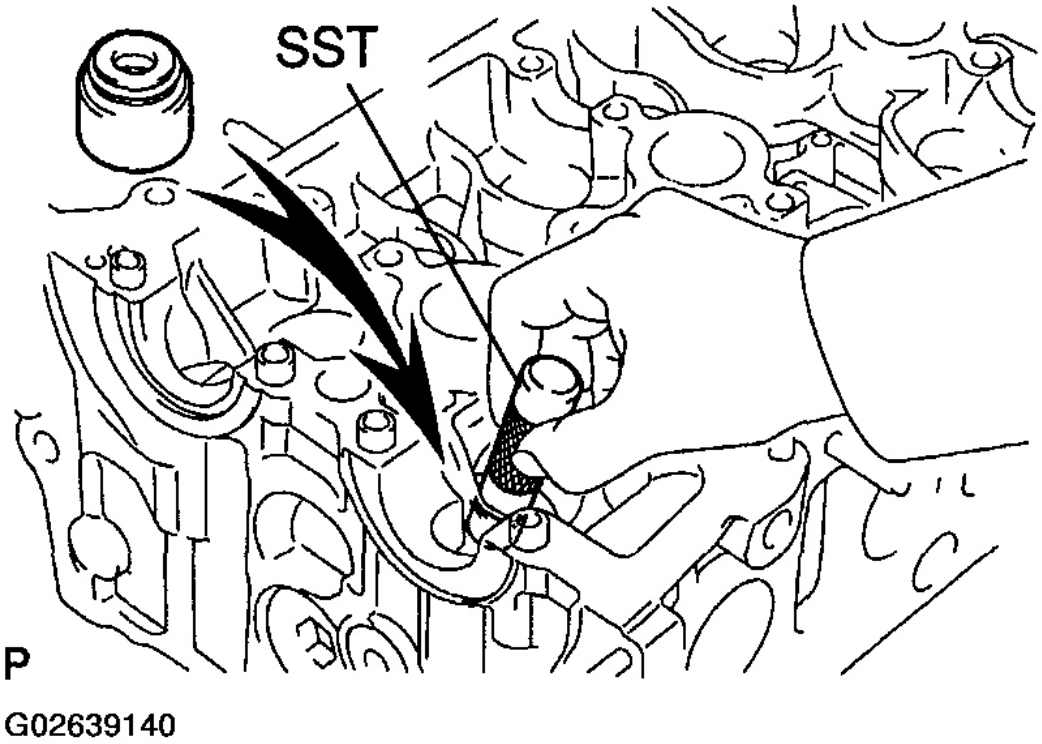

Fig. 131: Installing Guide Bushing Oil Seal
Courtesy of TOYOTA MOTOR SALES, U.S.A., INC.

HINT:

The intake valve oil seal is gray and the exhaust valve oil seal is black.

NOTE: **Pay much attention to assemble the oil seal for intake and exhaust. Assembling the wrong one may cause a failure.**

cardiagn.com

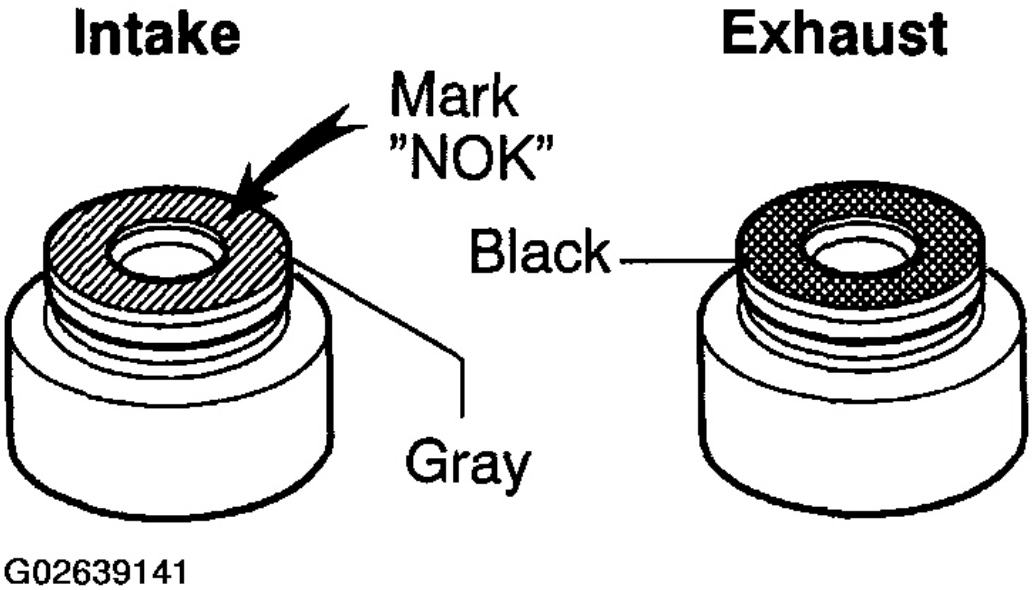

Fig. 132: Identifying Guide Bushing Oil Seals
Courtesy of TOYOTA MOTOR SALES, U.S.A., INC.

b. Install the valve (1), spring seat (2), valve spring (3) and spring retainer (4).

cardiagn.com

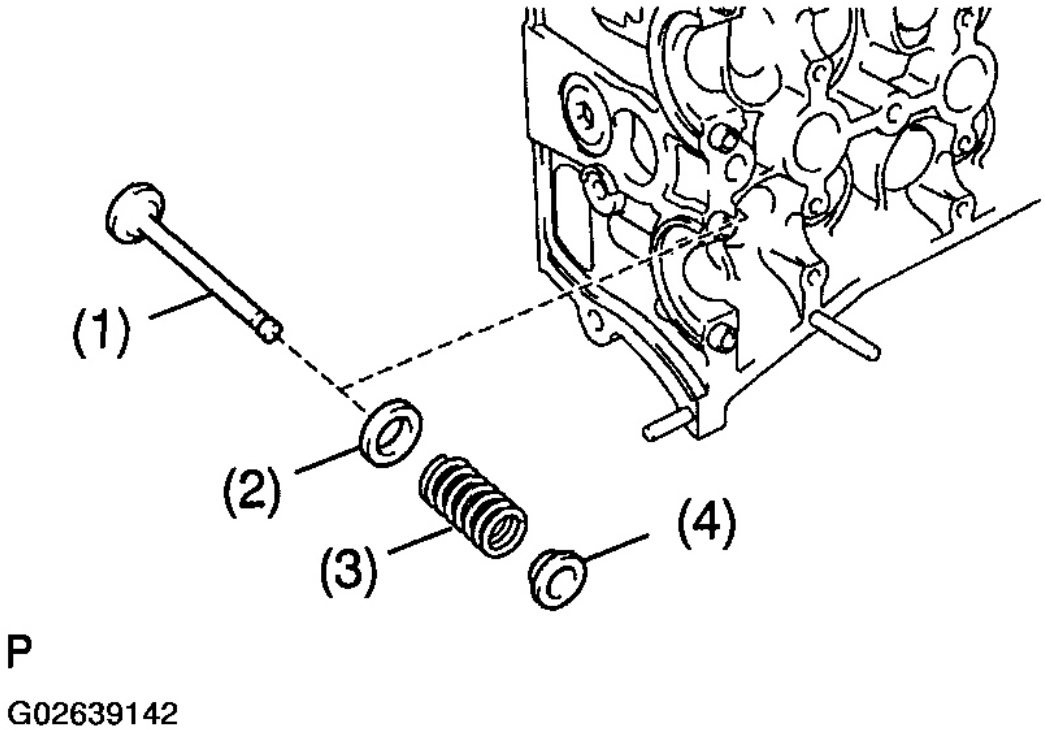

Fig. 133: Identifying Valve & Related Components
Courtesy of TOYOTA MOTOR SALES, U.S.A., INC.

c. Using SST, compress the valve spring and place the 2 keepers around the valve stem.

SST 09202-00020, 09202-70020

cardiagn.com

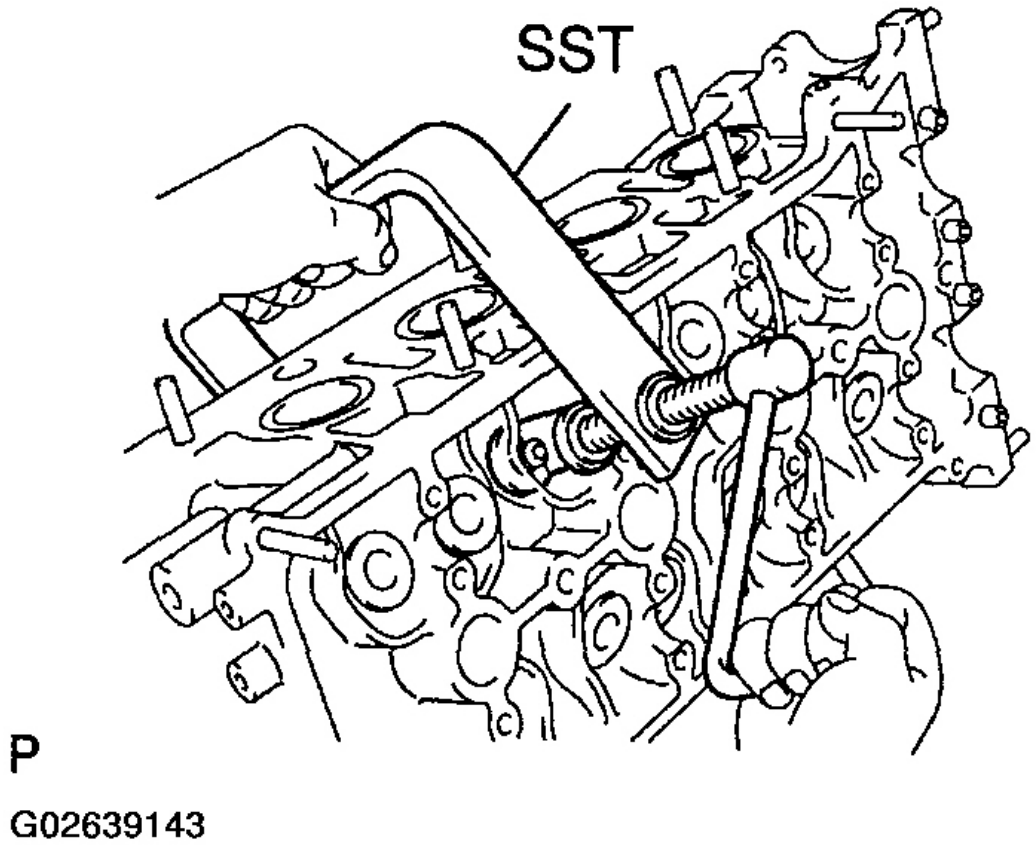

Fig. 134: Installing Spring Seat, Spring, Spring Retainer And Keepers
Courtesy of TOYOTA MOTOR SALES, U.S.A., INC.

d. Using a plastic-faced hammer and the valve stem (not in use) tip wound with vinyl tape, lightly tap the valve stem tip to ensure a proper fit.

NOTE: Be careful not to damage the valve stem tip.

cardiagn.com

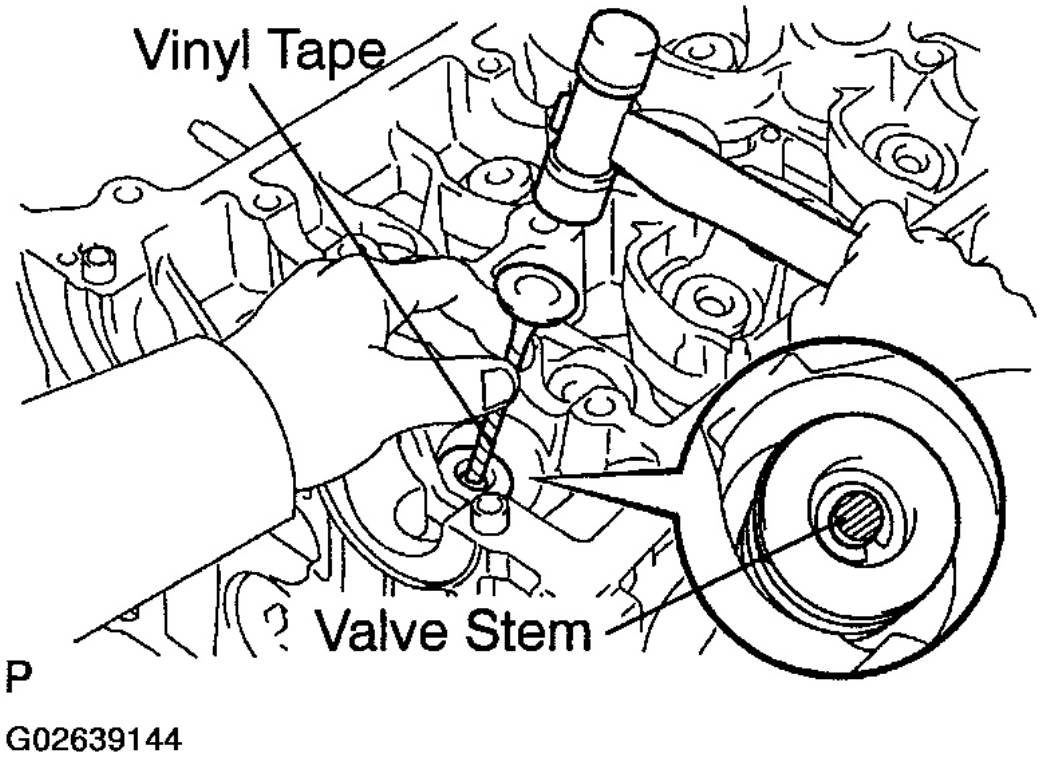

Fig. 135: Seat Keeper By Lightly Tapping Valve Stem Tip
Courtesy of TOYOTA MOTOR SALES, U.S.A., INC.

2. **INSTALL VALVE LIFTERS**
   a. Install the valve lifter.
   b. Check that the valve lifter rotates smoothly by hand.
3. **INSTALL CAMSHAFT POSITION SENSOR**

   Install the camshaft position sensor with the bolt. See **Fig. 136**.

   Torque: 9.0 N.m (92 kgf.cm, 80 in.lbf)

4. **INSTALL ECT SENSOR**

   Install a new gasket and the ECT sensor. See **Fig. 136**.

   Torque: 20 N.m (204 kgf.cm, 15 ft.lbf)

5. **INSTALL OIL PRESSURE SWITCH**

cardiagn.com

a. Apply adhesive to 2 or 3 threads of the oil pressure switch. See **Fig. 136**.

Adhesive:

Part No.08833-00080, THREE BOND 1344, LOCTITE 242 or equivalent.

b. Install the oil pressure switch.

Torque: 13 N.m (133 kgf.cm, 10 ft.lbf)

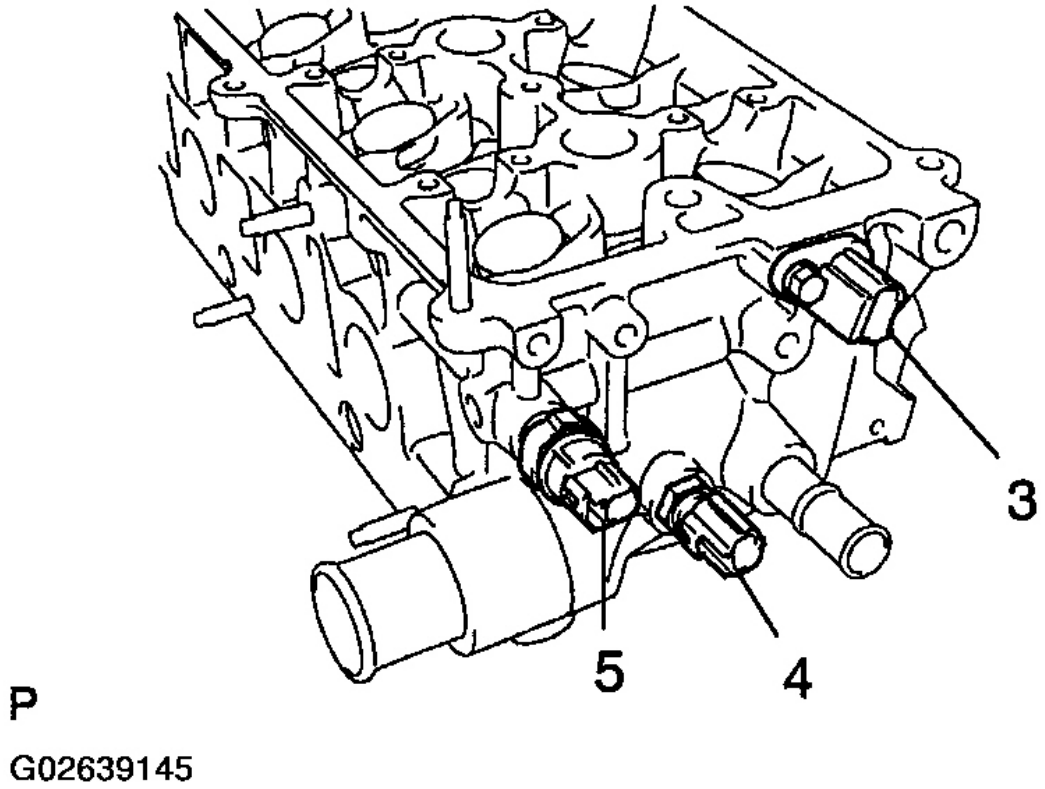

Fig. 136: Installing Camshaft Position Sensor, ECT Sensor & Oil Pressure Switch
Courtesy of TOYOTA MOTOR SALES, U.S.A., INC.

INSTALLATION

HINT:

- Thoroughly clean all parts to be assembled.
- Before installing the parts, apply fresh engine oil to all sliding and rotating surfaces.

cardiagn.com

- Replace all gaskets and oil seals with new ones.

1. **INSTALL CYLINDER HEAD**
   a. Place a new cylinder head gasket on the cylinder block surface with the lot No. upward.

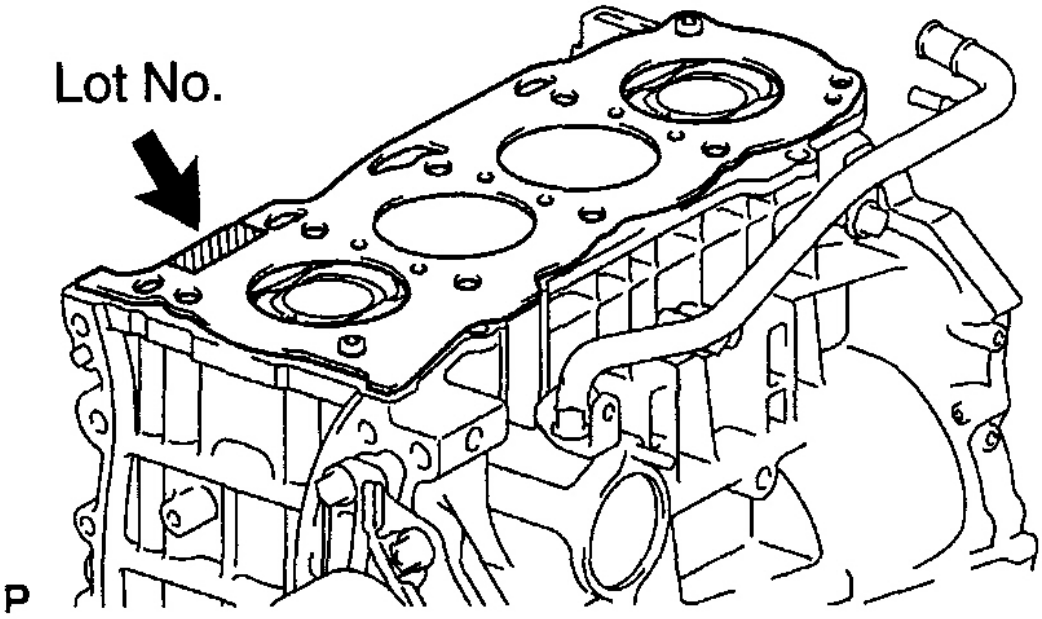

Fig. 137: Installing Cylinder Head Gasket On Block
Courtesy of TOYOTA MOTOR SALES, U.S.A., INC.

NOTE: Be careful of the installation direction.

   b. Place the cylinder head quietly in order not to damage the gasket with the bottom part of the head.
   c. Install the cylinder head bolts.

   HINT:

   - The cylinder head bolts are tightened in 2 steps (steps (2) and (4)).
   - If any cylinder head bolt is broken or deformed, replace it.
     1. Apply a light coat of engine oil on the threads and under the heads of the cylinder head bolts.
     2. Using a 10 mm bi-hexagon wrench, install and uniformly tighten the 10 cylinder head bolts and plate washers in several passes, in the sequence shown.

cardiagn.com

Torque: 79 N.m (806 kgf.cm, 58 ft.lbf)

If any one of the cylinder head bolts does not meet the torque specification, replace the cylinder head bolt.

cardiagn.com

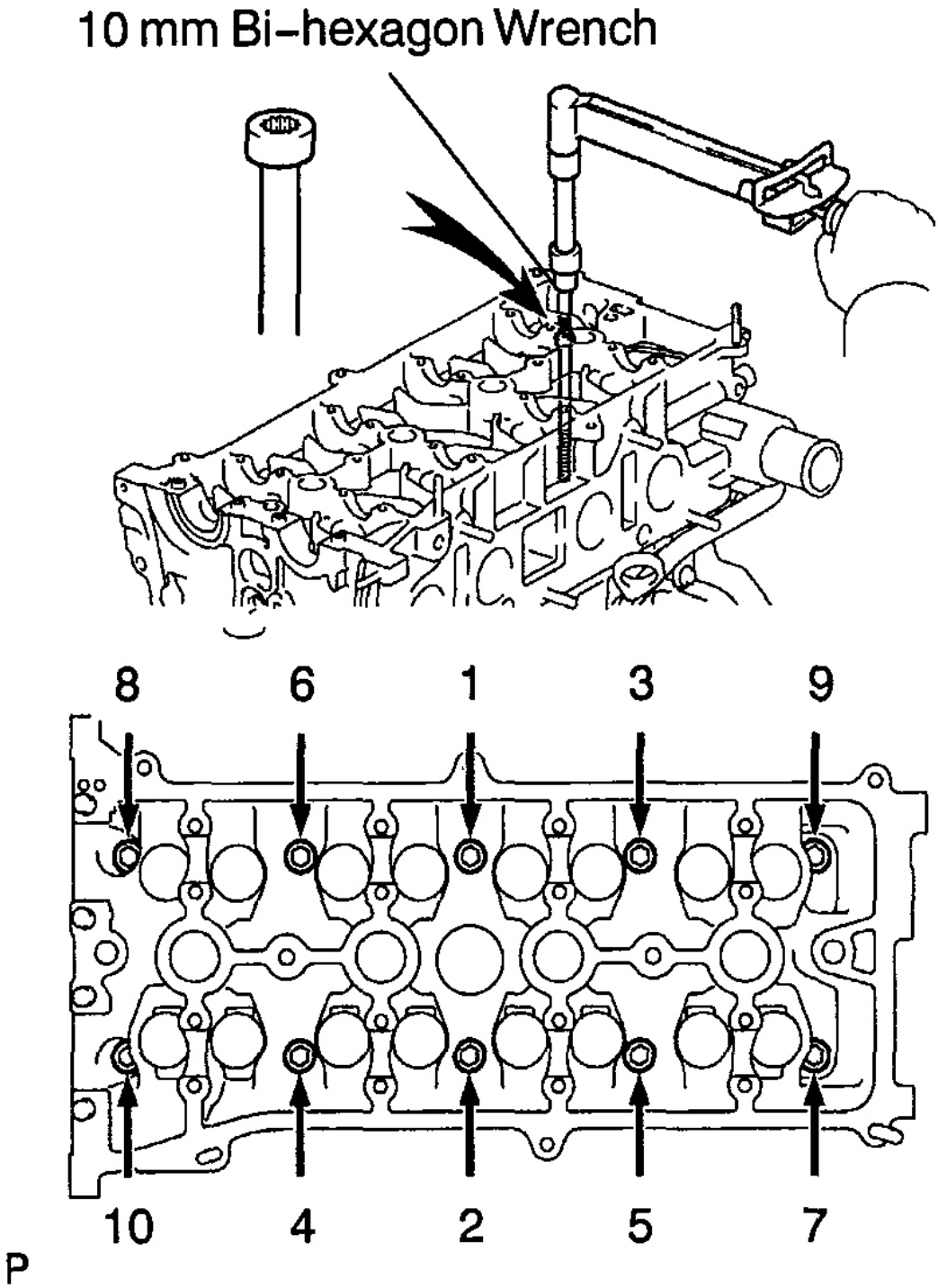

cardiagn.com

Fig. 138: Tightening Cylinder Head Bolts In Sequence Shown
Courtesy of TOYOTA MOTOR SALES, U.S.A., INC.

3. Mark the front of the cylinder head bolt with paint.
4. Retighten the cylinder head bolts 90° in the numerical order shown.
5. Check that the painted mark is now at a 90° angle to the front.

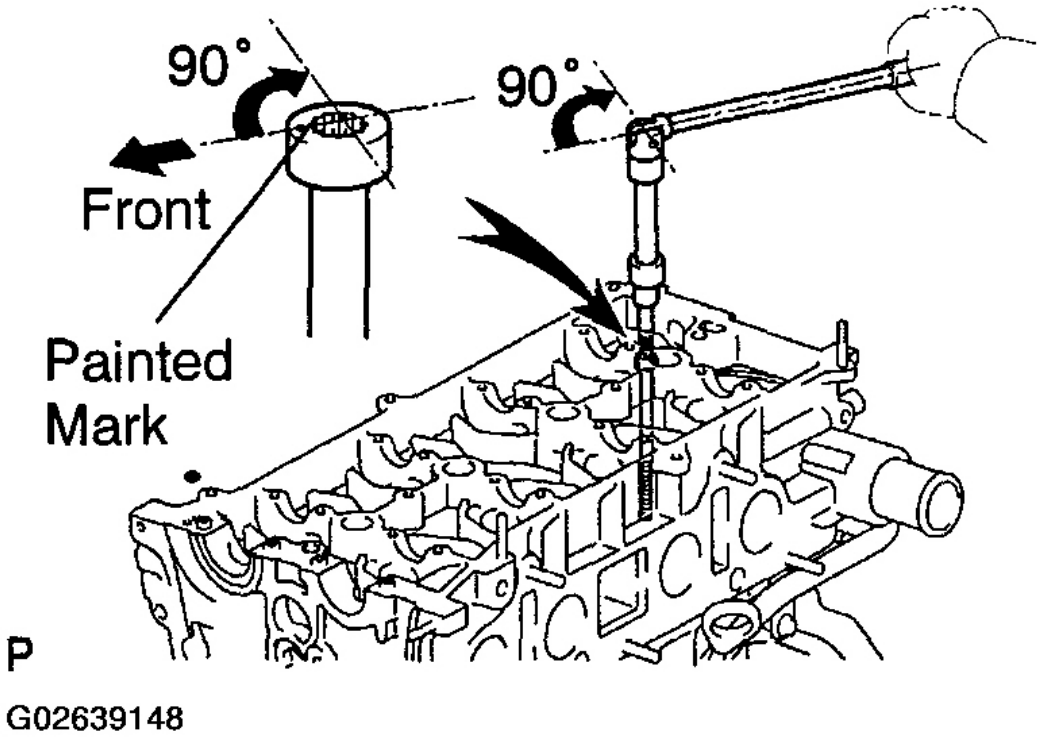

Fig. 139: Retightening Cylinder Head Bolts An Additional 90°
Courtesy of TOYOTA MOTOR SALES, U.S.A., INC.

2. **INSTALL CAMSHAFTS**
   a. Install the lower camshaft bearing to the cylinder head.

cardiagn.com

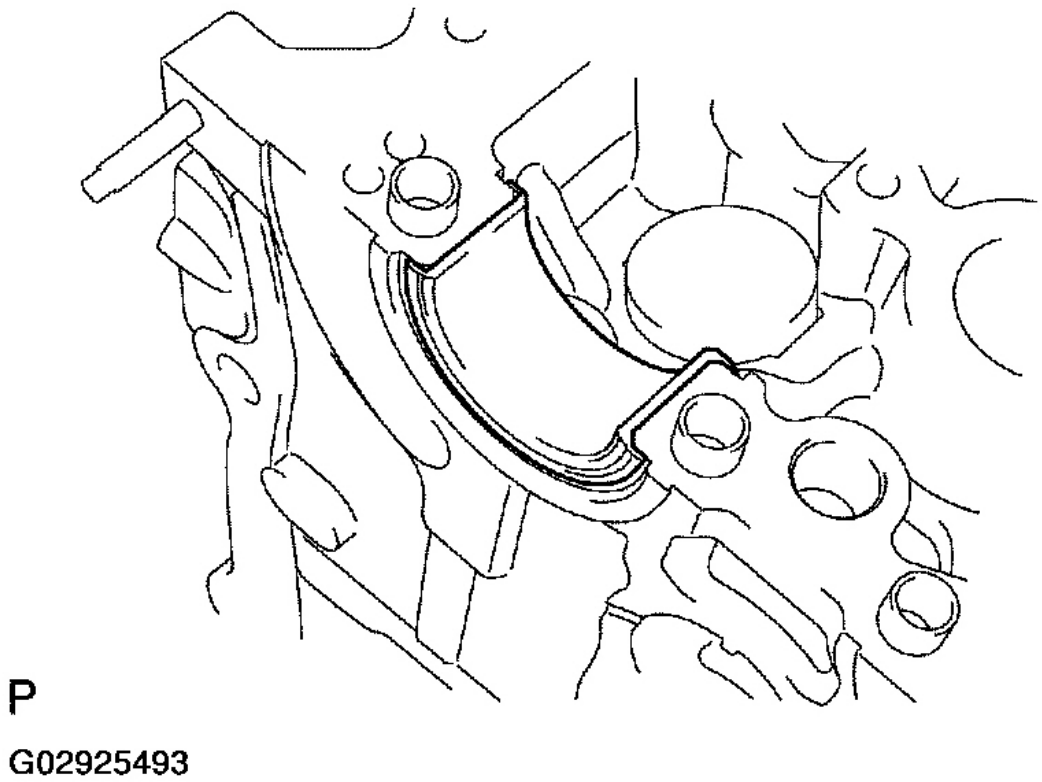

Fig. 140: Installing Lower Camshaft Bearing To Cylinder Head
Courtesy of TOYOTA MOTOR SALES, U.S.A., INC.

b. Align the bearing claw with the claw groove of No. 1 bearing cap, and push in the upper camshaft bearing.

cardiagn.com

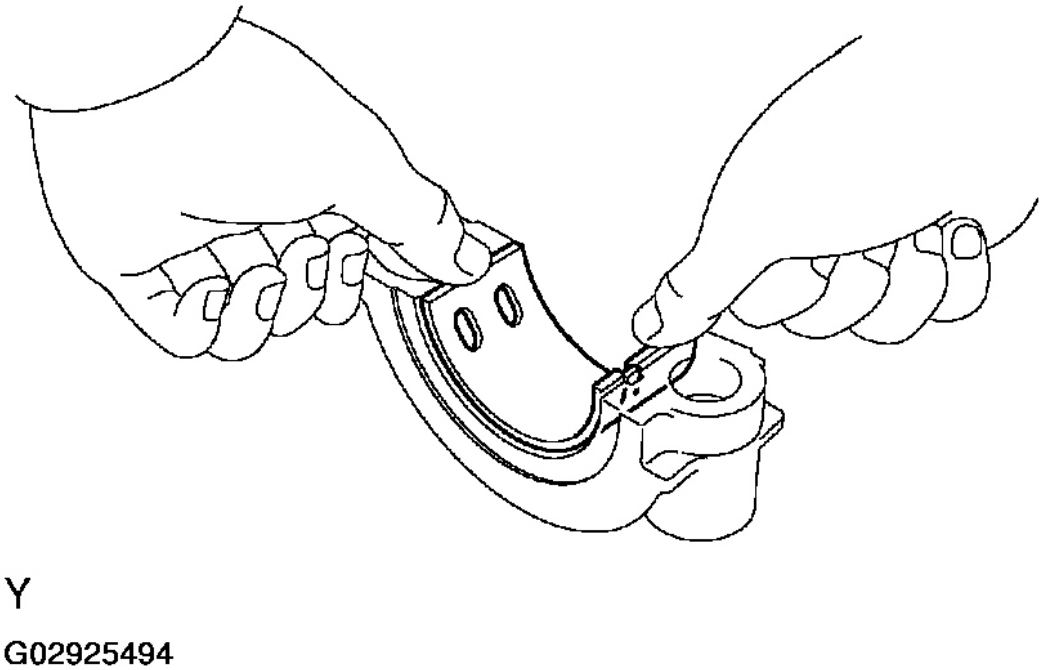

Fig. 141: Aligning Bearing Claw With The Claw Groove Of No. 1 Bearing Cap
Courtesy of TOYOTA MOTOR SALES, U.S.A., INC.

c. Place the 2 camshafts on the cylinder head with the No. 1 cam lobes facing as shown, see **Fig. 142** .

cardiagn.com

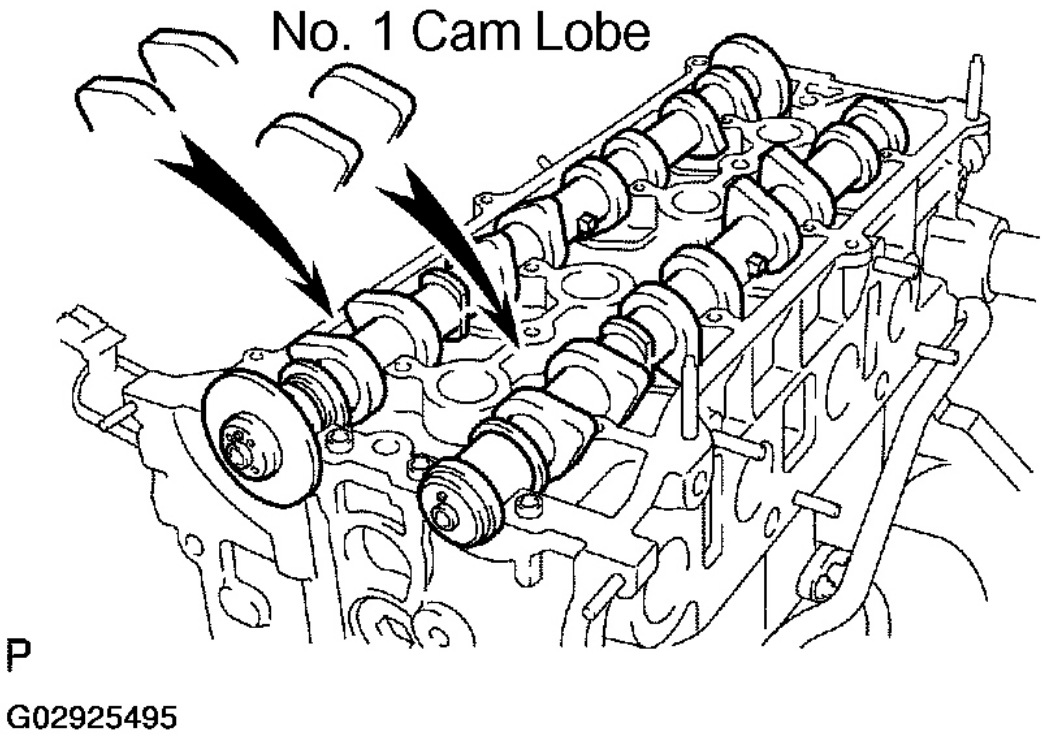

Fig. 142: Placing Camshafts On Cylinder Head With No. 1 Cam Lobes
Courtesy of TOYOTA MOTOR SALES, U.S.A., INC.

d. Install the bearing caps in their proper locations.

HINT:

- Each of No. 3 camshaft bearing cap has a number and front mark.
- The No. 1 and No. 2 bearing caps has a front marks.

cardiagn.com

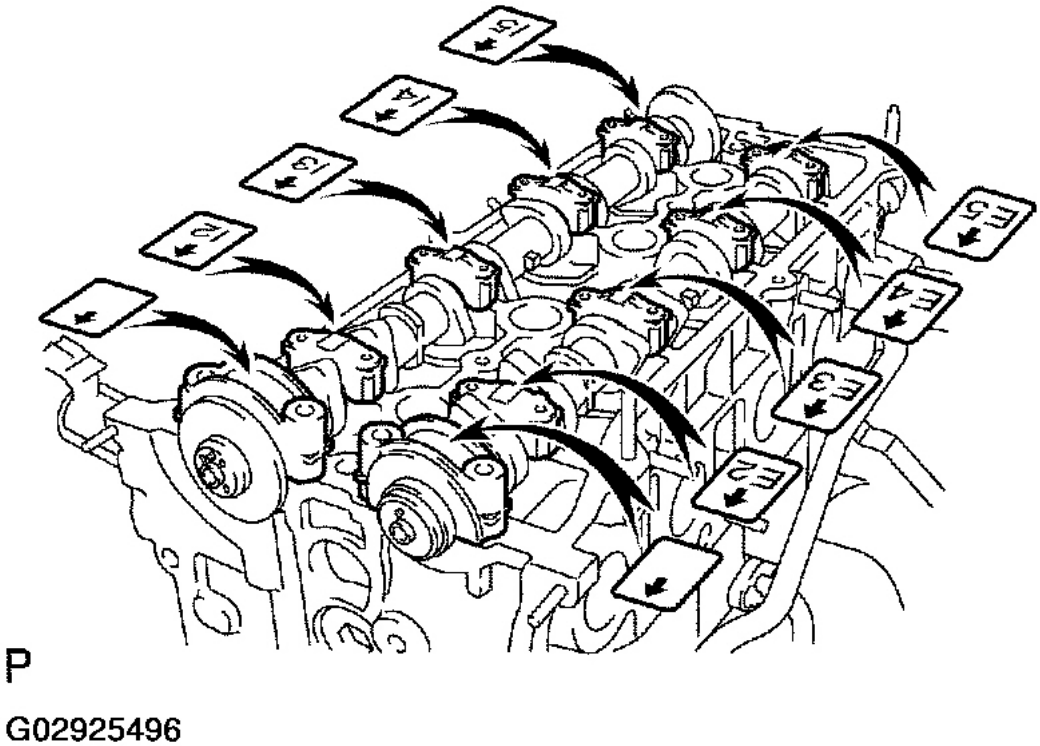

Fig. 143: Installing Bearing Caps In Their Proper Locations
Courtesy of TOYOTA MOTOR SALES, U.S.A., INC.

e. Apply a light coat of engine oil on the threads and under the heads of the bearing cap bolts.
f. Install and uniformly tighten the 20 bearing cap bolts in several passes, in the sequence shown, see **Fig. 144**.

Torque:

29.5 N.m (301 kgf.cm, 22 ft.lbf) for No. 1 and No. 2
9.0 N.m (92 kgf.cm, 80 in.lbf) for others

cardiagn.com

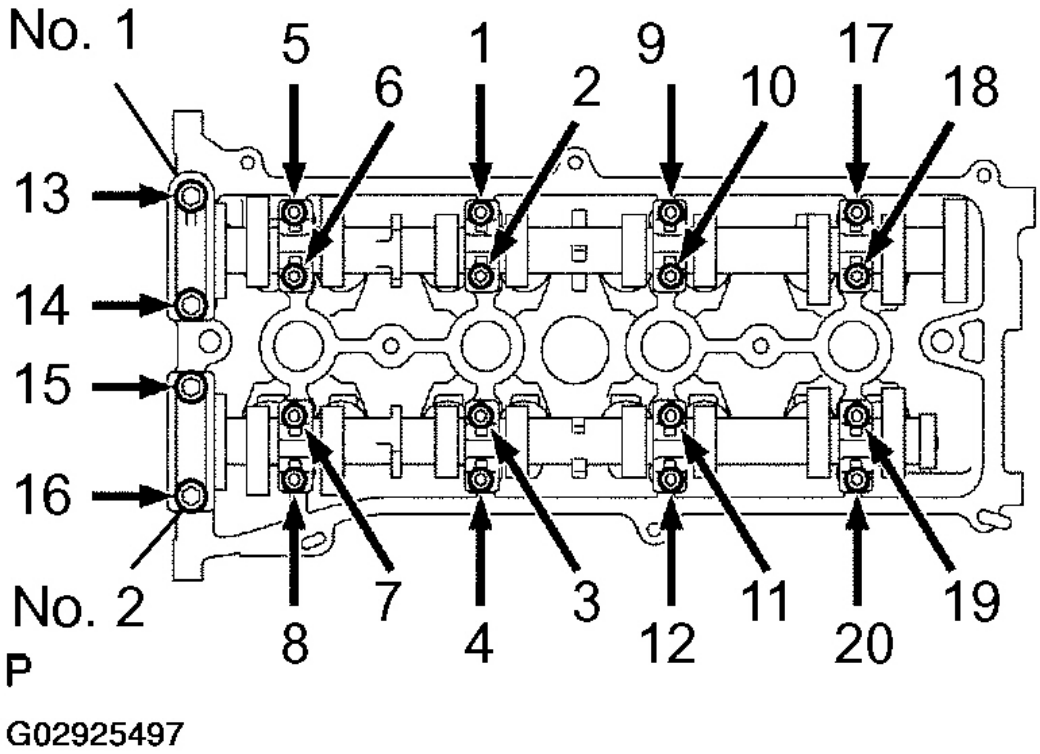

Fig. 144: Tightening Bearing Cap Bolts In Sequence
Courtesy of TOYOTA MOTOR SALES, U.S.A., INC.

3. **CHECK AND ADJUST VALVE CLEARANCE (See VALVE CLEARANCE)**

NOTE: **Under the condition with the timing chain cover removed, in case of rotating the camshafts, make the position of the crankshaft rotated clockwise by about 45° from TDC/compression of No. 1 cylinder. See Fig. 145**

cardiagn.com

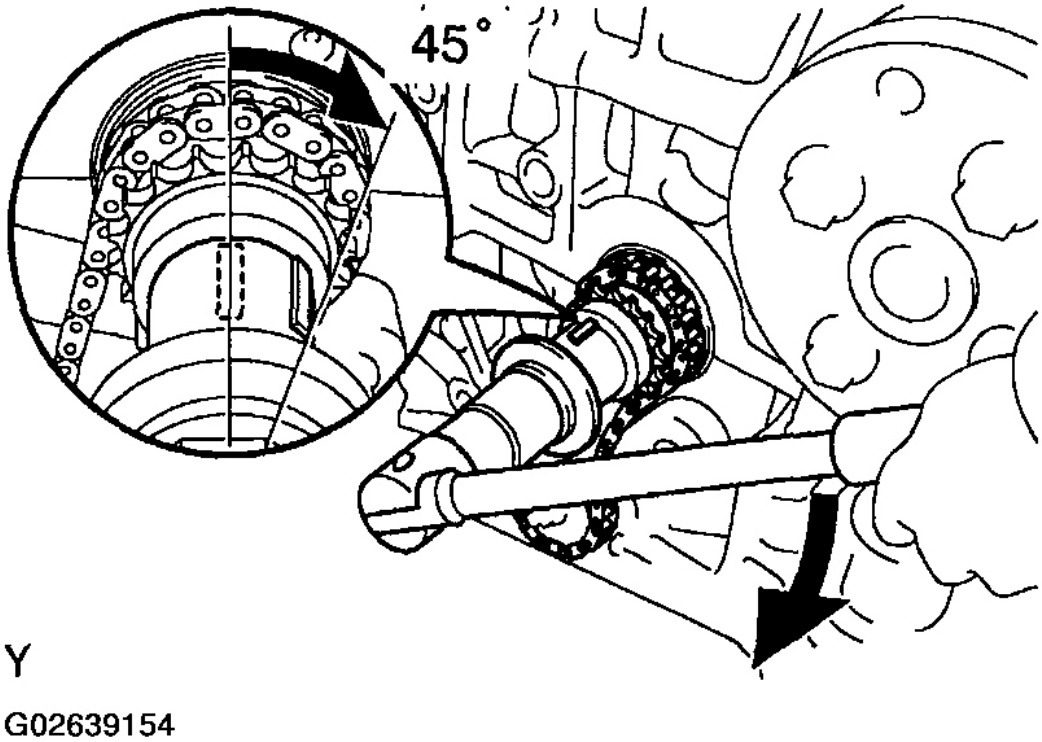

Fig. 145: Positioning Crankshaft
Courtesy of TOYOTA MOTOR SALES, U.S.A., INC.

Turn the camshafts and position the cam lobe upward, and check and adjust the valve clearance.

4. **INSTALL CAMSHAFT TIMING SPROCKET AND VVT TIMING SPROCKET (See INSTALLATION)**
5. **INSTALL TIMING CHAIN (See INSTALLATION)**
6. **INSTALL CAMSHAFT POSITION SENSOR (See CAMSHAFT POSITION SENSOR)**
7. **INSTALL CAMSHAFT TIMING OIL CONTROL VALVE (OCV) (See COMPONENTS)**
8. **INSTALL OIL FILLER CAP**
9. **INSTALL INTAKE MANIFOLD AND THROTTLE BODY ASSEMBLY**
   a. Install a new gasket to the intake manifold.
   b. Install intake manifold insulator.
   c. Install the intake manifold and throttle body assembly with the 5 bolts and 2 nuts. Uniformly tighten the bolts and nuts in several passes.

      Torque: 30 N.m (306 kgf.cm, 22 ft.lbf)

cardiagn.com

d. Connect the engine wire harness to the clamp.
e. Connect the 2 vacuum hoses to the intake manifold.
f. Connect the 2 water hoses to the throttle body.
g. Connect the throttle position sensor connector.

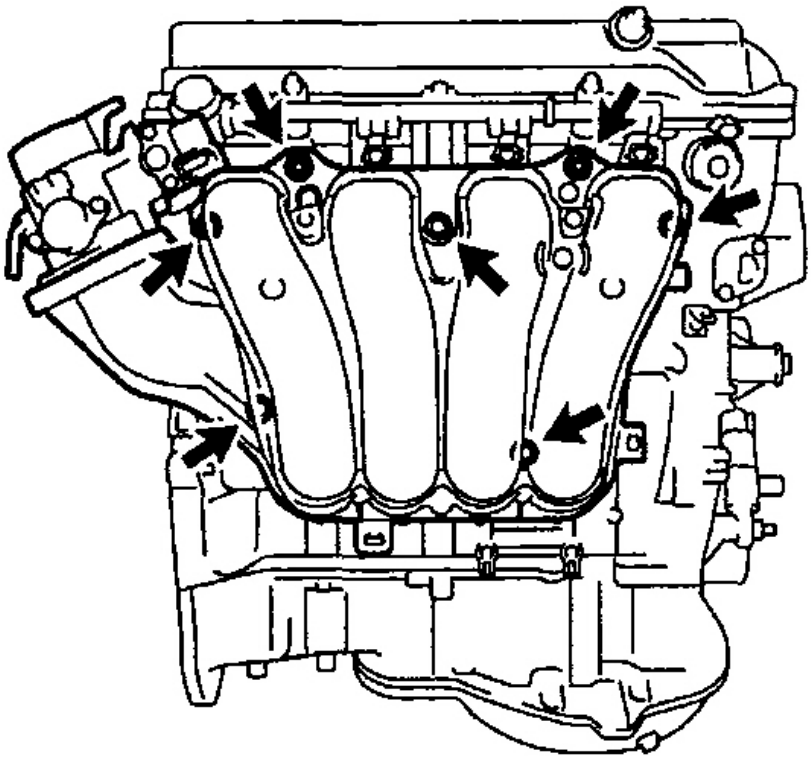

Fig. 146: Installing Intake Manifold & Throttle Body Assembly
Courtesy of TOYOTA MOTOR SALES, U.S.A., INC.

10. **INSTALL PCV VALVE AND HOSES**
    a. Install the PCV valve with the grommet.
    b. Install the PCV hoses.
11. **CONNECT ENGINE WIRE**
    a. Connect the noise filter.
    b. Connect the ETC sensor connector.

cardiagn.com

c. Connect the camshaft position sensor connector.
d. Connect the oil pressure switch connector and wire.
e. Connect the crankshaft position sensor.
f. Connect the OCV connector.
g. Install the engine wire with the 2 bolts.

12. **INSTALL EXHAUST MANIFOLD ASSEMBLY**
    a. Temporary install the No. 1 and No. 2 exhaust manifold stays to the exhaust manifold with the 2 nuts.
    b. Install a new gasket and the exhaust manifold with the 5 nuts.

       Torque: 37 N.m (377 kgf.cm, 27 ft.lbf)

    c. Install the 2 exhaust manifold stays with the 2 bolts.

       Torque: 44 N.m (449 kgf.cm, 32 ft.lbf)

    d. Tighten the 2 nuts holding the exhaust manifold stays to crank case.

       Torque: 44 N.m (449 kgf.cm, 32 ft.lbf)

    e. Install the 2 compression springs and 2 bolts holding the exhaust manifold and front exhaust pipe.

       Torque: 43 N.m (439 kgf.cm, 32 ft.lbf)

    f. Install the exhaust manifold heat insulator No. 1 with the 4 bolts.

       Torque: 12 N.m (122 kgf.cm, 9 ft.lbf)

    g. Connect the A/F sensor connector.

cardiagn.com

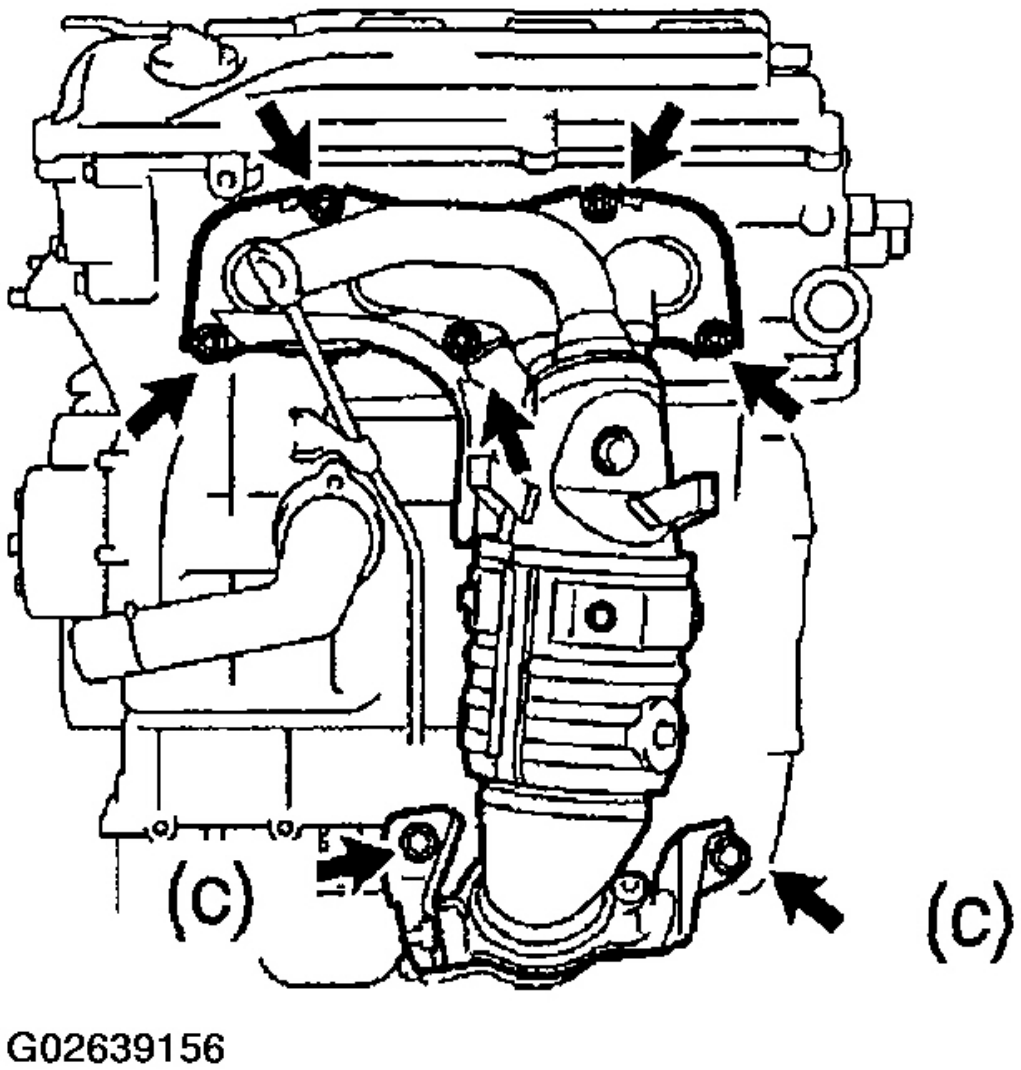

Fig. 147: Installing Exhaust Manifold
Courtesy of TOYOTA MOTOR SALES, U.S.A., INC.

13. **INSTALL INJECTORS (See INSTALLATION)**
14. **INSTALL SPARK PLUGS (See IGNITION SYSTEM)**
15. **INSTALL IGNITION COILS (See IGNITION COIL)**
16. **INSTALL PS VANE PUMP (See INSTALLATION)**
17. **INSTALL GENERATOR (See INSTALLATION)**
18. **INSTALL DRIVE BELT (See INSTALLATION)**

cardiagn.com

19. **INSTALL AIR CLEANER ASSEMBLY**
    a. Connect the PCV hose to the cylinder head cover.
    b. Connect the CCV hose to the air cleaner.
    c. Connect the VSV connect for EVAP.
    d. Connect the 2 EVAP hoses to the VSV.
    e. Connect the MAF meter connector.

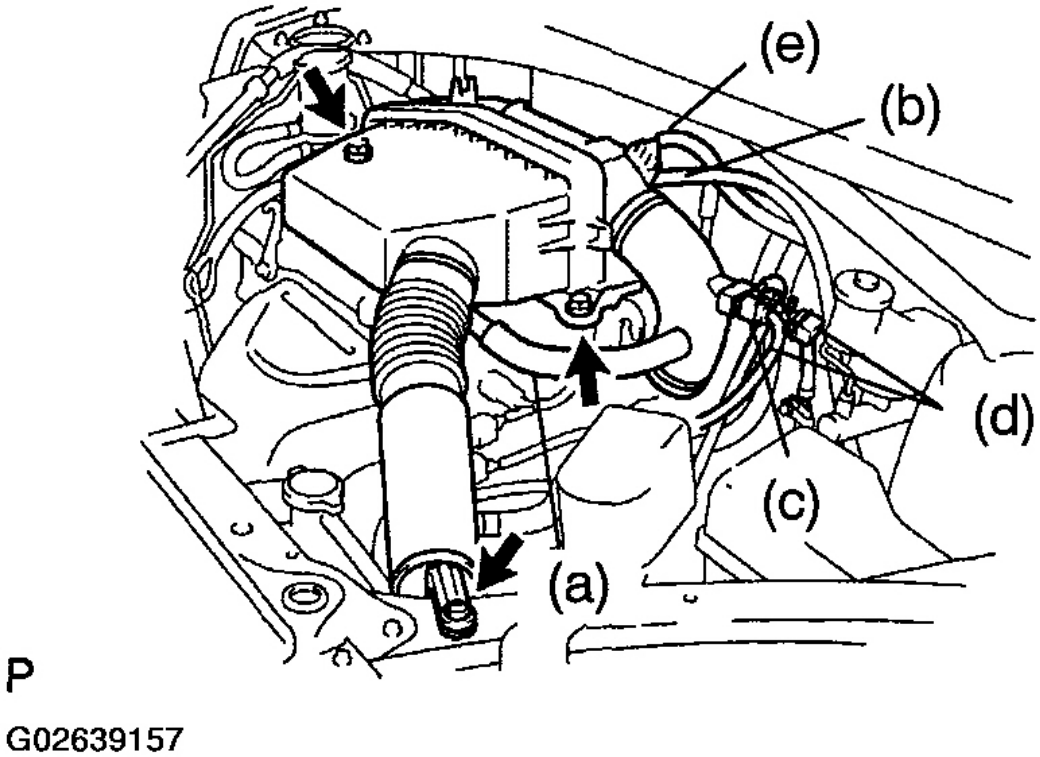

Fig. 148: Installing Air Cleaner Assembly
Courtesy of TOYOTA MOTOR SALES, U.S.A., INC.

20. **FILL WITH ENGINE OIL (See REPLACEMENT)**
21. **FILL WITH ENGINE COOLANT**
22. **START ENGINE AND CHECK FOR LEAK**
23. **RECHECK ENGINE OIL AND COOLANT LEVEL**
24. **INSTALL RH ENGINE UNDER COVER**

ENGINE UNIT

cardiagn.com

COMPONENTS

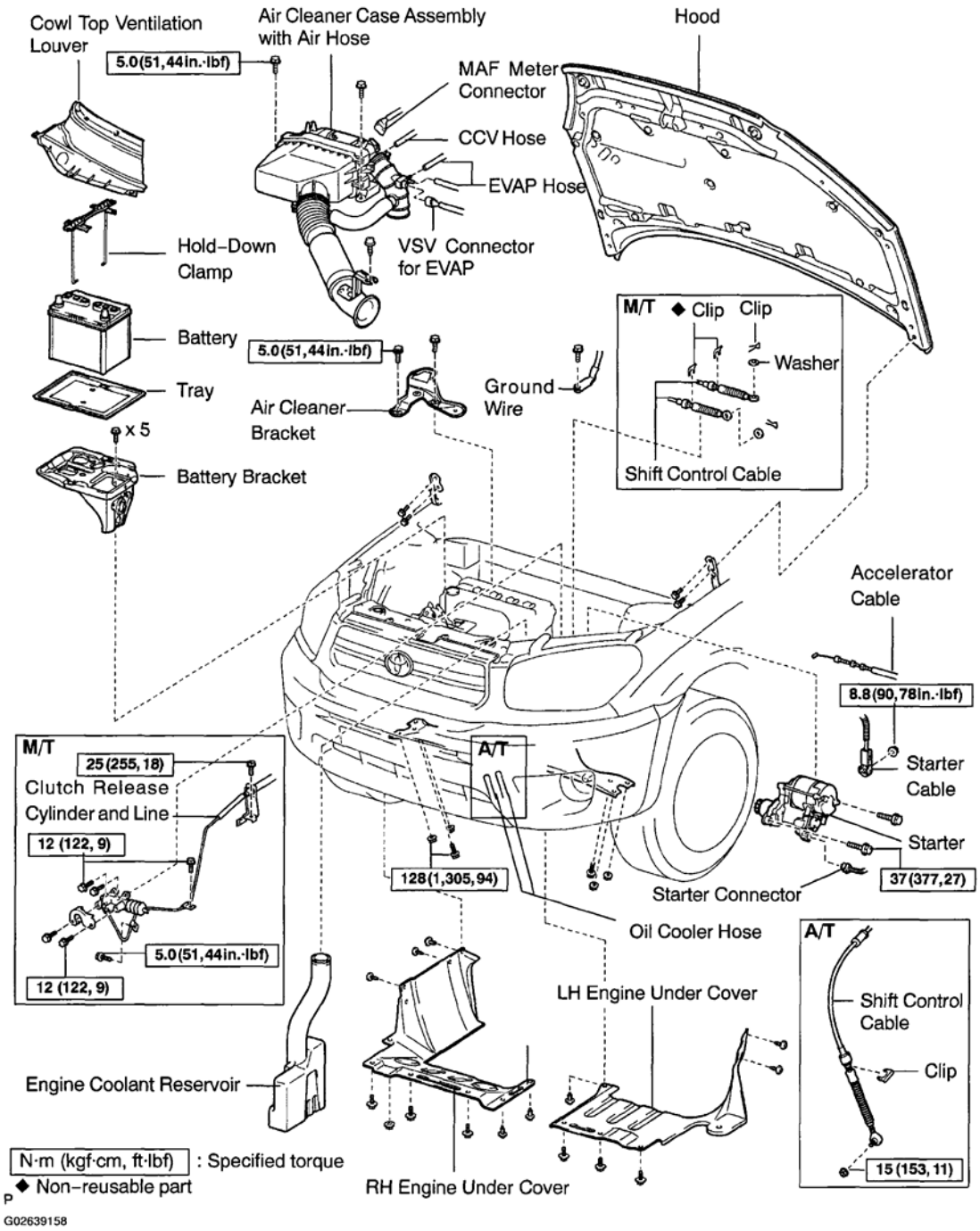

Fig. 149: Identifying Engine Unit Components & Torque Specifications (1 of 6)
Courtesy of TOYOTA MOTOR SALES, U.S.A., INC.

cardiagn.com

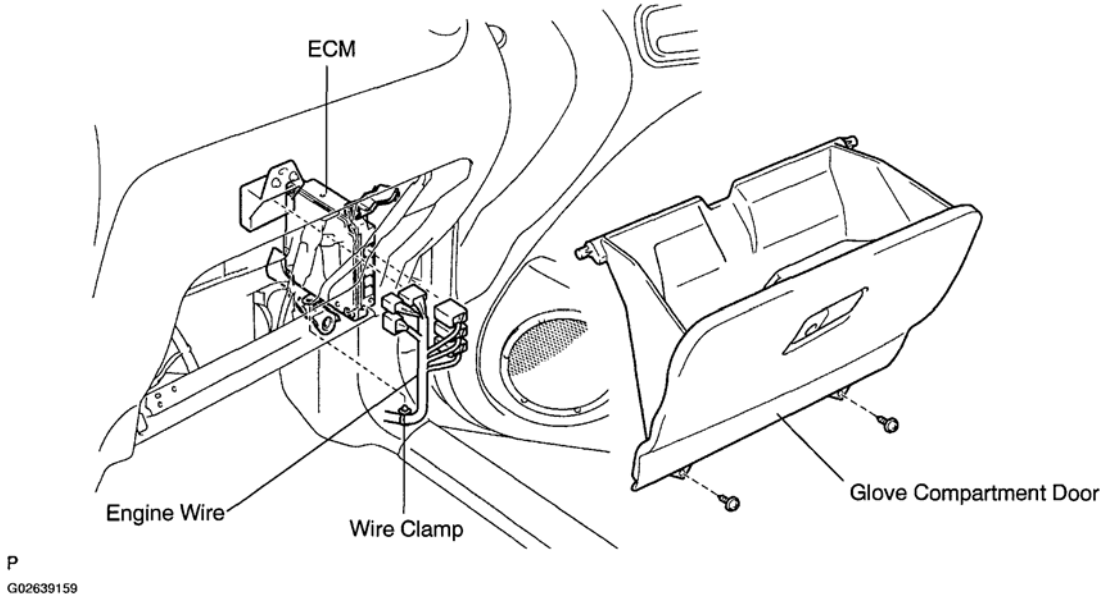

Fig. 150: Identifying Engine Unit Components (2 of 6)
Courtesy of TOYOTA MOTOR SALES, U.S.A., INC.

cardiagn.com

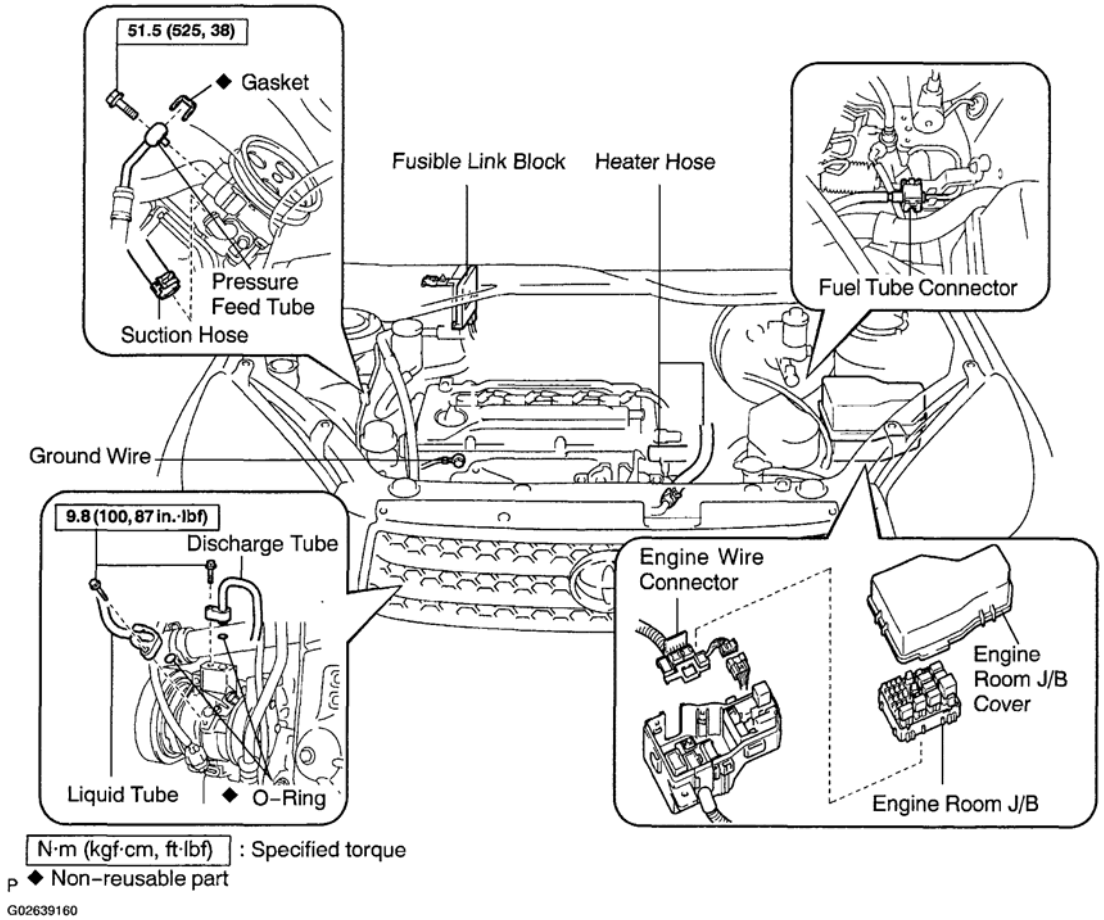

Fig. 151: Identifying Engine Unit Components & Torque Specifications (3 of 6)
Courtesy of TOYOTA MOTOR SALES, U.S.A., INC.

cardiagn.com

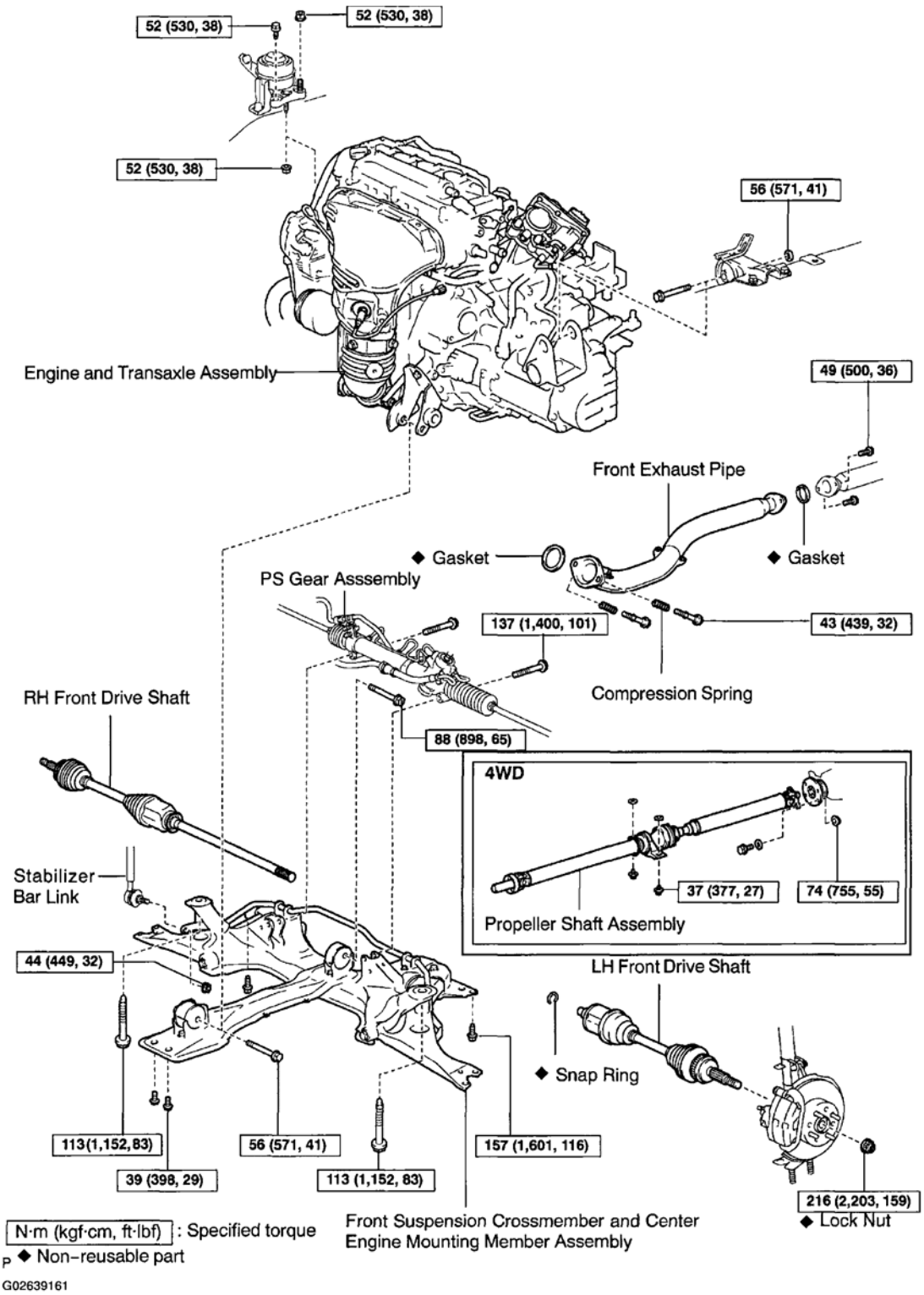

Fig. 152: Identifying Engine Unit Components & Torque Specifications (4 of 6)
Courtesy of TOYOTA MOTOR SALES, U.S.A., INC.

cardiagn.com

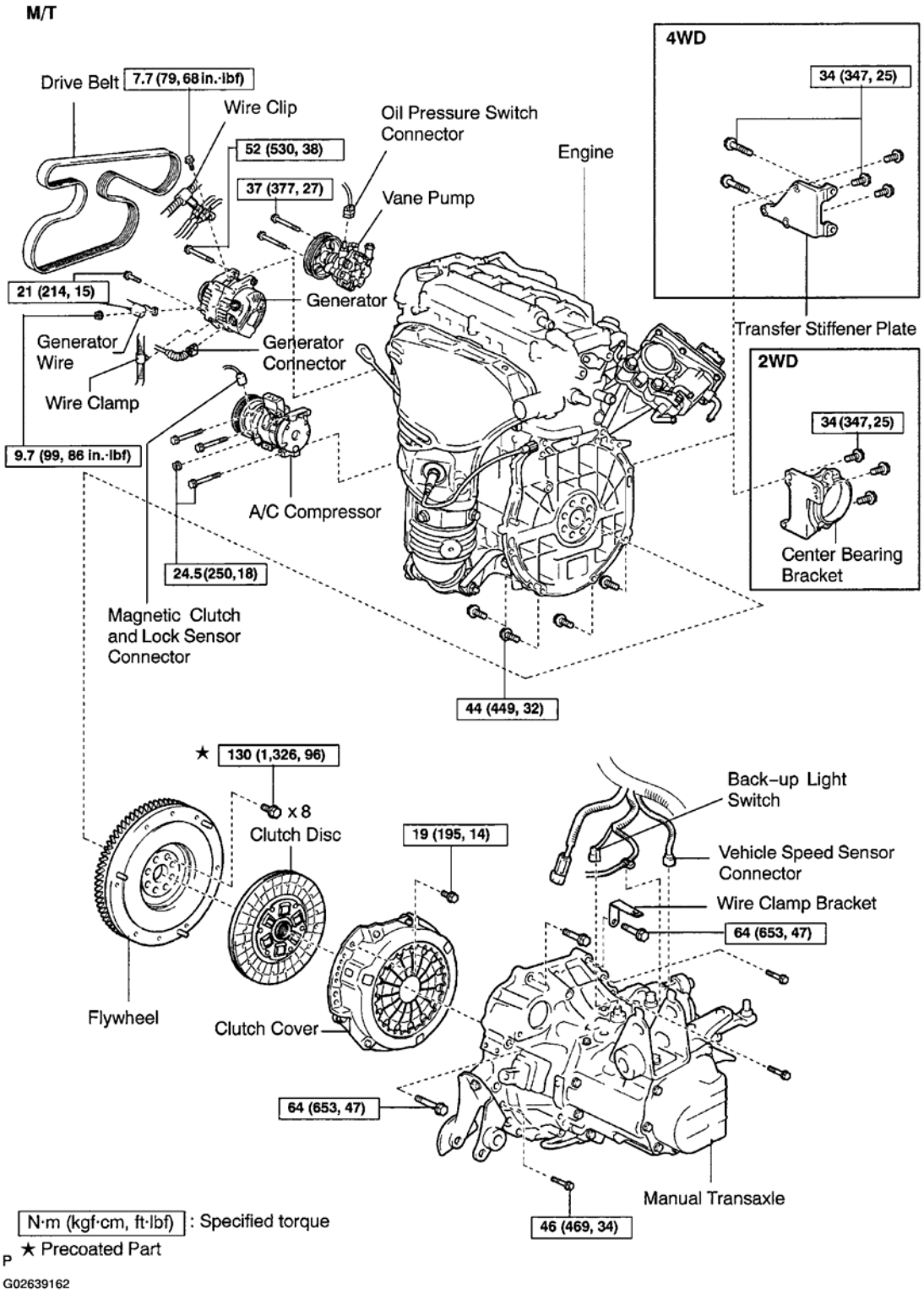

Fig. 153: Identifying Engine Unit Components & Torque Specifications (5 of 6)
Courtesy of TOYOTA MOTOR SALES, U.S.A., INC.

cardiagn.com

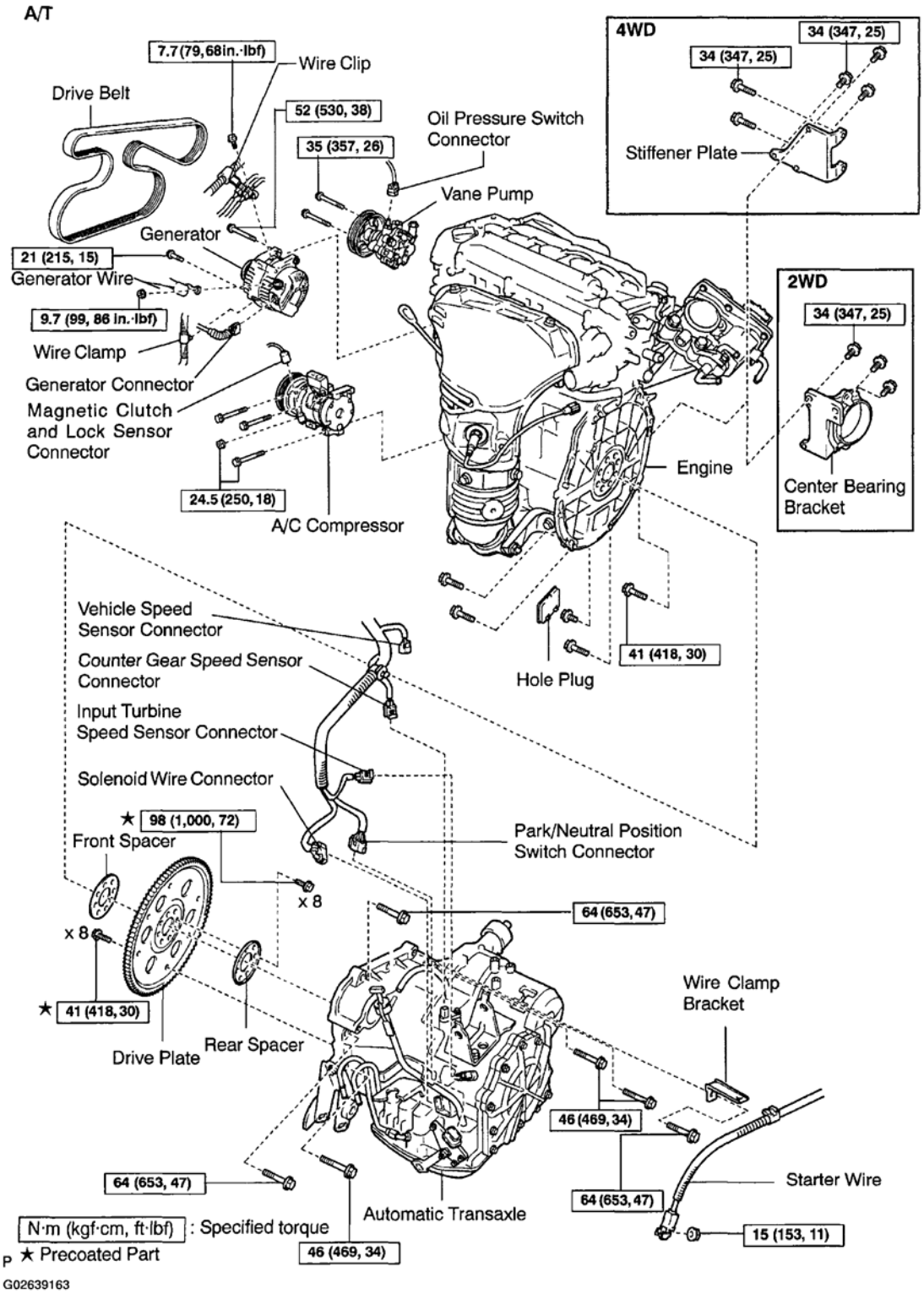

Fig. 154: Identifying Engine Unit Components & Torque Specifications (6 of 6)
Courtesy of TOYOTA MOTOR SALES, U.S.A., INC.

cardiagn.com

REMOVAL

1. **REMOVE ENGINE UNDER COVERS**
2. **DRAIN TRANSAXLE OIL**
3. **DRAIN TRANSFER OIL**
4. **DRAIN ENGINE OIL**
5. **DRAIN ENGINE COOLANT**
6. **REMOVE HOOD**
7. **REMOVE RADIATOR RESERVOIR**
8. **REMOVE BATTERY AND TRAY**
   a. Remove the cowl top ventilation louver (see **REMOVAL**).
   b. Remove the hold-down clamp, battery and tray.
   c. Remove the 5 bolts and battery bracket.

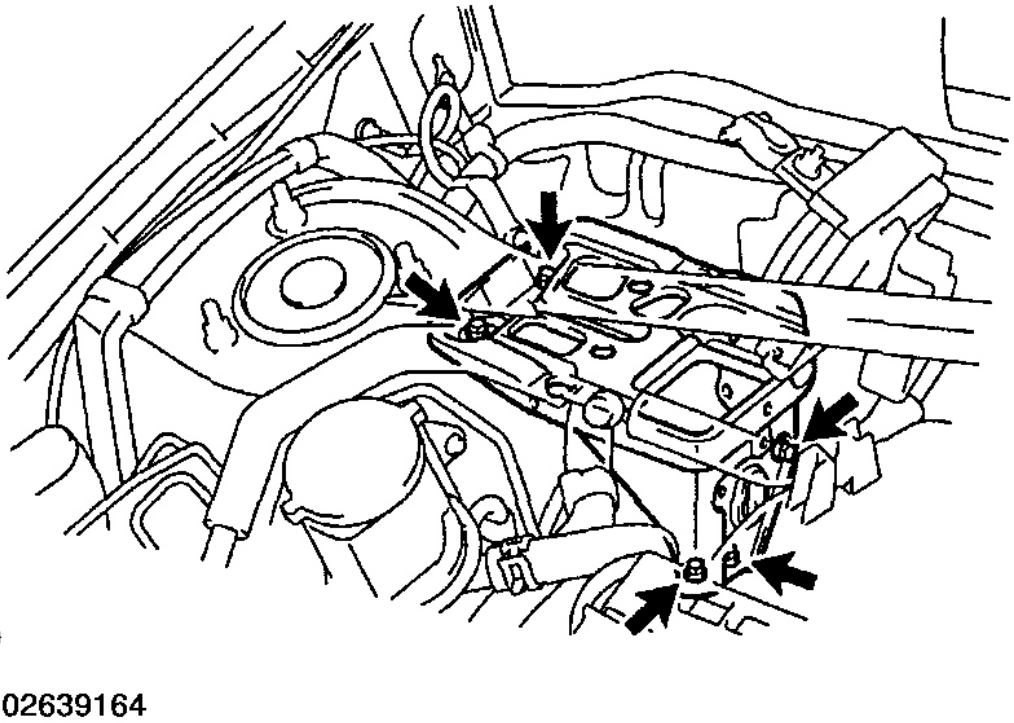

Fig. 155: Removing Battery Tray
Courtesy of TOYOTA MOTOR SALES, U.S.A., INC.

9. **REMOVE AIR CLEANER ASSEMBLY**
   a. Disconnect the MAF meter connector.

cardiagn.com

b. Disconnect the 2 EVAP hoses from the VSV.
c. Disconnect VSV connector for EVAP.
d. Disconnect the CCV hose from the air cleaner.
e. Disconnect the PCV hose from the cylinder head cover.
f. Disconnect the air cleaner hose from the throttle body, and remove the 3 bolts and the air cleaner assembly.

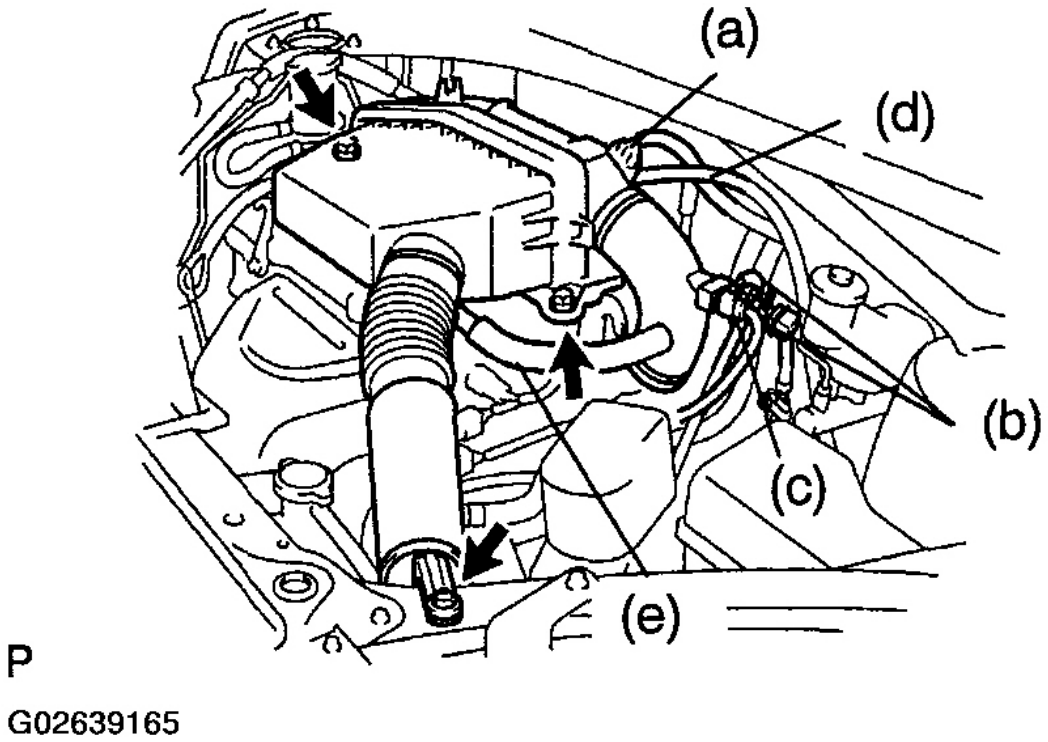

Fig. 156: Removing Air Cleaner Assembly
Courtesy of TOYOTA MOTOR SALES, U.S.A., INC.

10. **REMOVE ENGINE ROOM J/B**
    a. Remove the engine room J/B cover.
    b. Loosen the bolt.
    c. Remove the engine room J/B.
    d. Pull out the engine wire connector.
    e. Disconnect the connector.
    f. Disconnect the engine wire clamp.

cardiagn.com

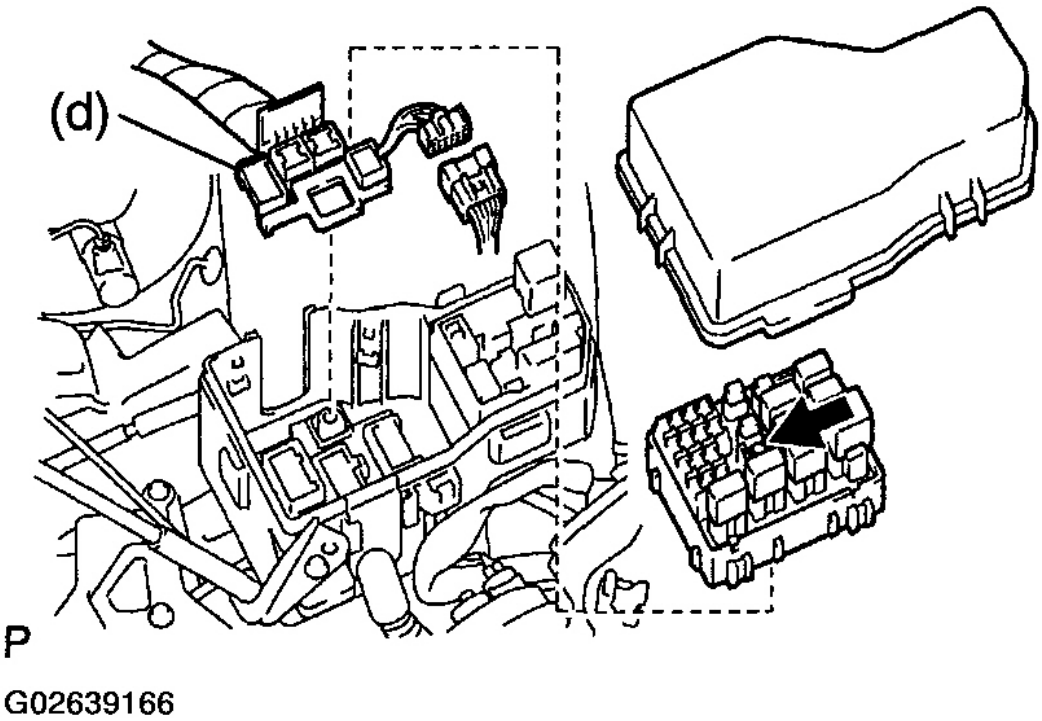

Fig. 157: Removing Engine Room Junction/Box
Courtesy of TOYOTA MOTOR SALES, U.S.A., INC.

11. **DISCONNECT ENGINE WIRE FROM CABIN**
    a. Remove the 2 screws and glove compartment door.
    b. Disconnect the 6 engine wire connectors from the ECM and instrument panel wire.
    c. Pull out the engine wire from the cabin.
12. **DISCONNECT TUBES, HOSES, CONNECTOR, CABLE AND WIRE**
    a. Disconnect the accelerator cable.
    b. Disconnect the ground wire from the cylinder head.
    c. Disconnect the discharge and liquid tubes from the compressor, and remove the 2 O-rings (see **REMOVAL**).

cardiagn.com

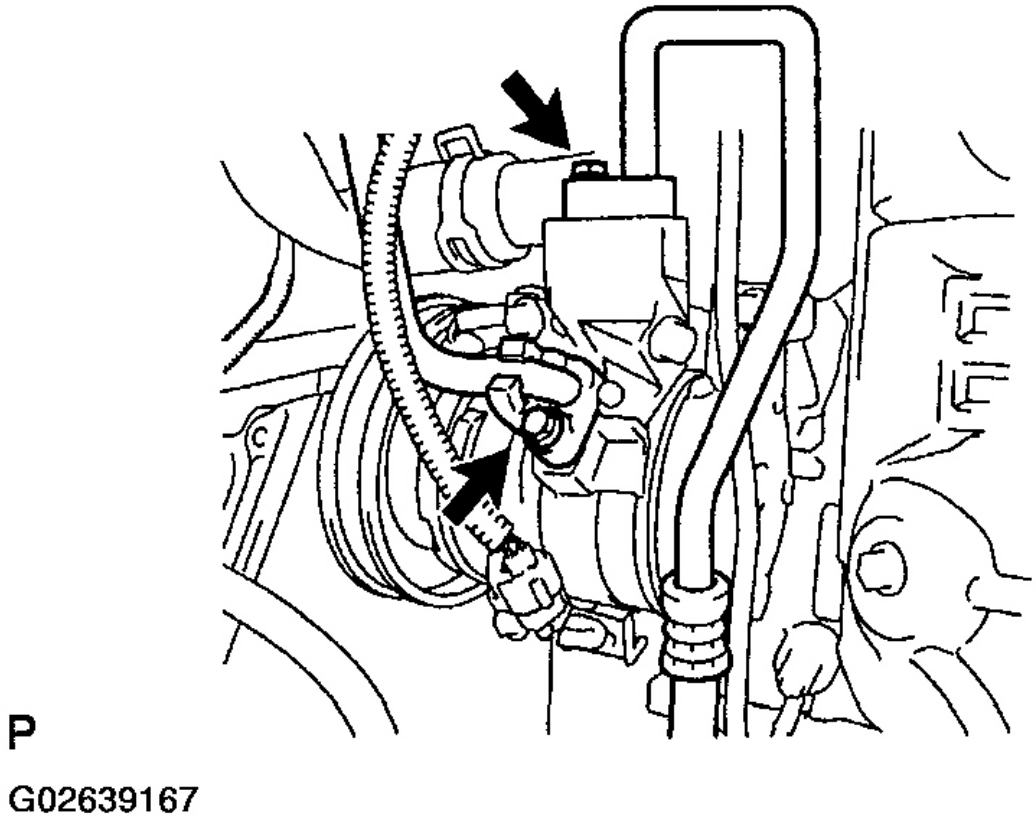

Fig. 158: Disconnecting Discharge And Liquid Tubes From Compressor
Courtesy of TOYOTA MOTOR SALES, U.S.A., INC.

d. Disconnect the suction hose, pressure feed tube and gasket from the PS vane pump.

cardiagn.com

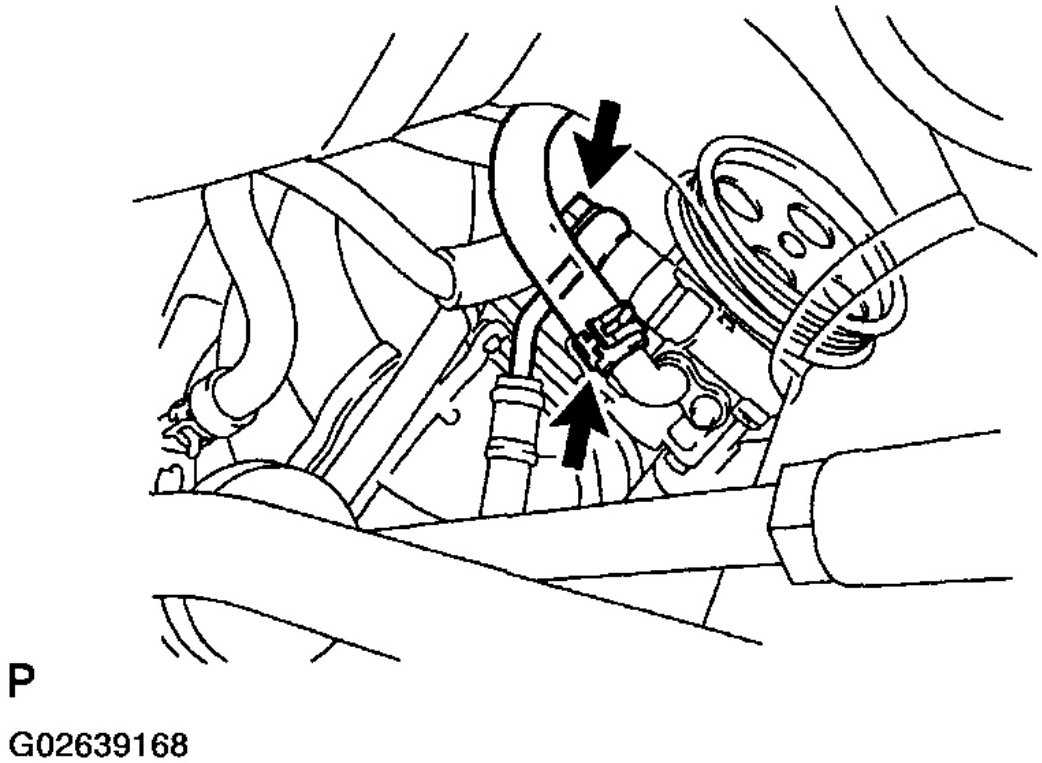

Fig. 159: Disconnecting Suction Hose & Pressure Feed Tube From PS Vane Pump
Courtesy of TOYOTA MOTOR SALES, U.S.A., INC.

e. Disconnect the upper radiator hose.
f. Disconnect the lower radiator hose.
g. Disconnect the fuel tube connector (see **SFI**).
h. Disconnect the 2 heater hoses.
i. Disconnect the connector from the fusible link block.

cardiagn.com

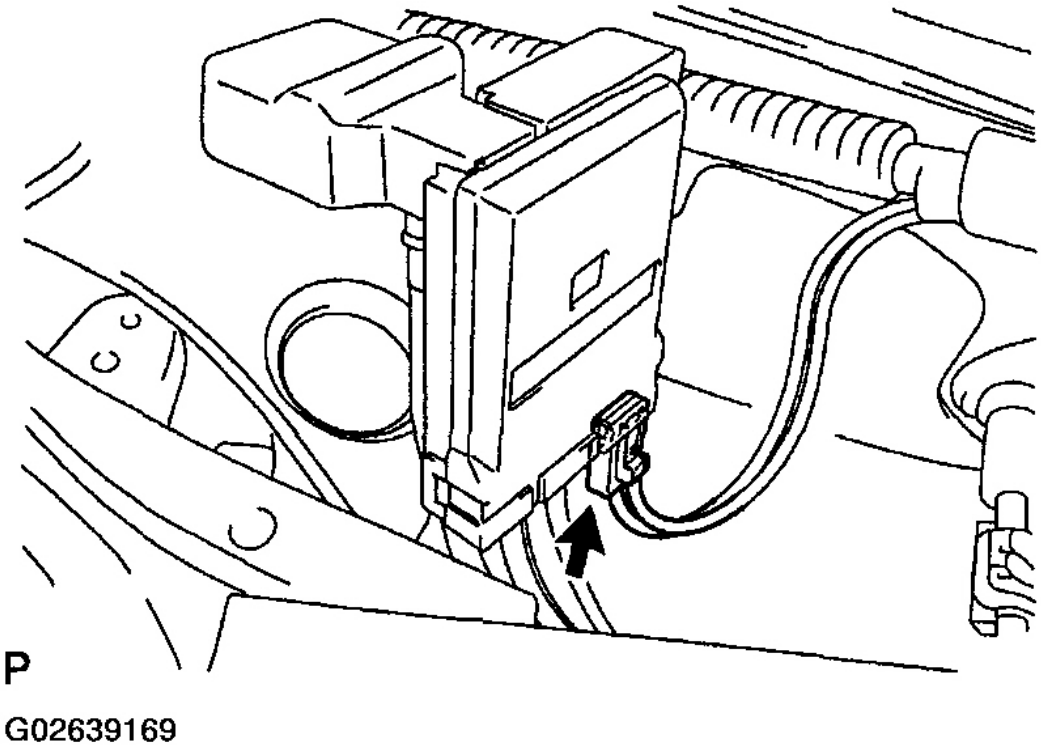

Fig. 160: Disconnecting Connector From Fusible Link Block
Courtesy of TOYOTA MOTOR SALES, U.S.A., INC.

13. **M/T: DISCONNECT SHIFT CONTROL CABLES FROM TRANSAXLE**
    a. Remove the 2 clips and 2 washers.
    b. Remove the 2 clips, and disconnect the 2 control cables.

cardiagn.com

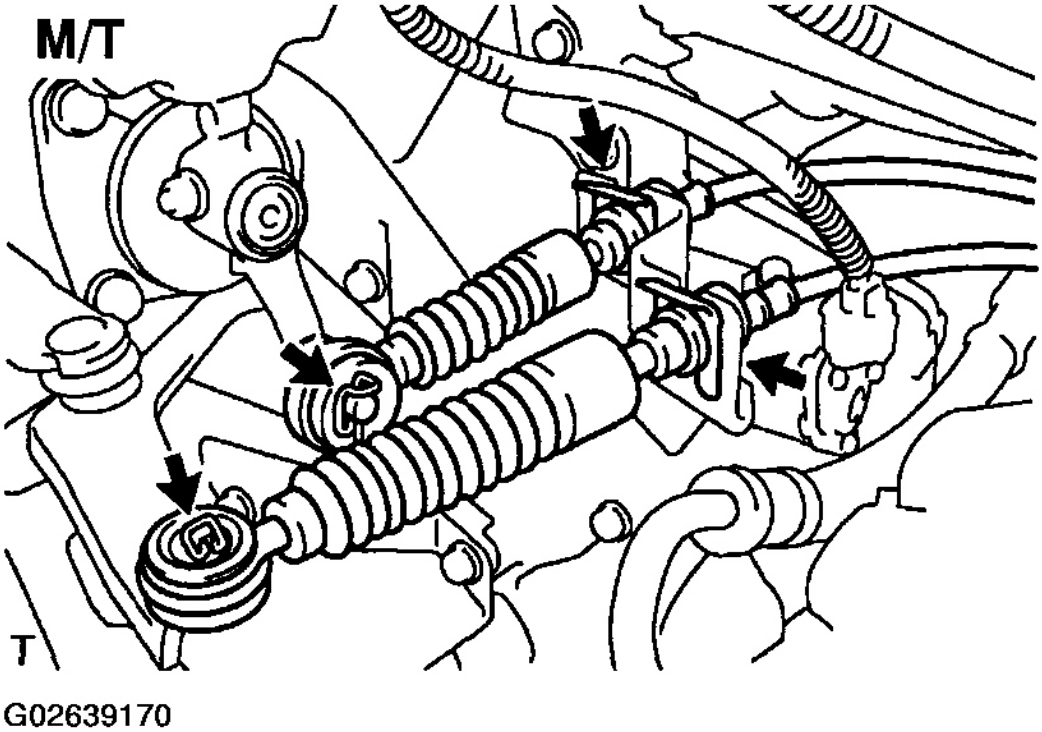

Fig. 161: Disconnecting Shift Control Cables From Transaxle
Courtesy of TOYOTA MOTOR SALES, U.S.A., INC.

14. **REMOVE STARTER**
    a. A/T: Disconnect the hose from the dipstick guide.
    b. Disconnect the connector.
    c. Remove the 2 bolts, and disconnect the starter.
    d. Remove the nut, and disconnect the starter cable.
    e. Remove the starter.

cardiagn.com

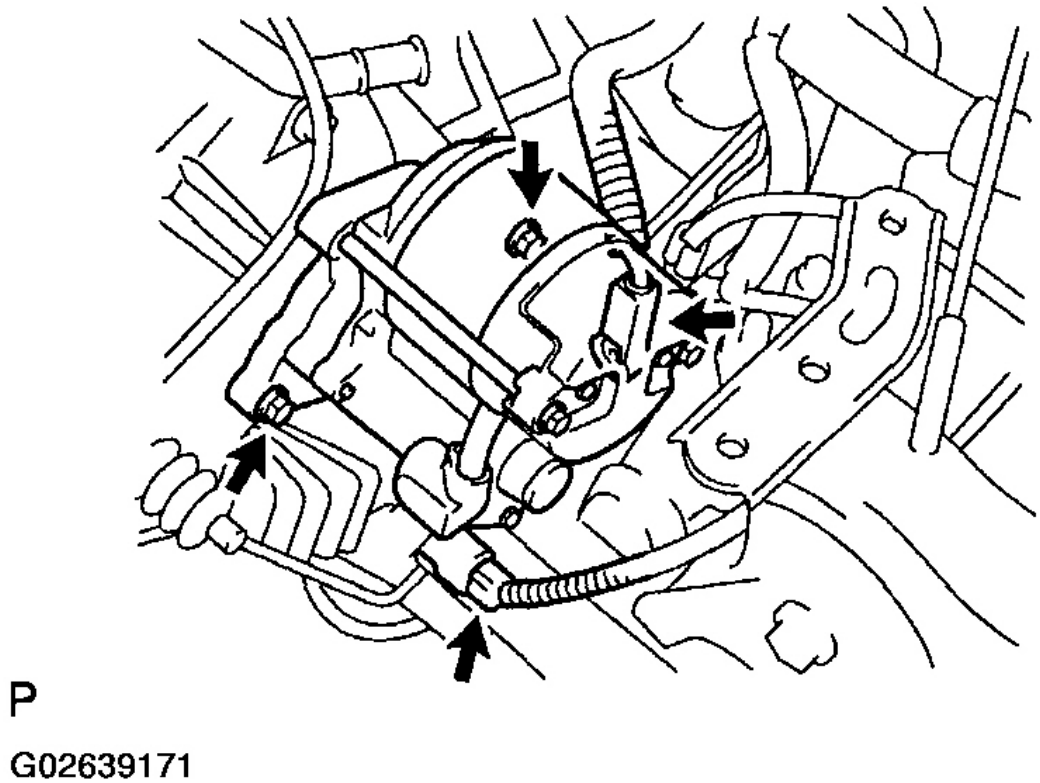

Fig. 162: Removing Starter
Courtesy of TOYOTA MOTOR SALES, U.S.A., INC.

15. **M/T: DISCONNECT CLUTCH RELEASE CYLINDER AND LINE FROM TRANSAXLE**
    a. Remove the 2 bolts and heat insulator.
    b. Remove the 5 bolts, and disconnect the release cylinder.

cardiagn.com

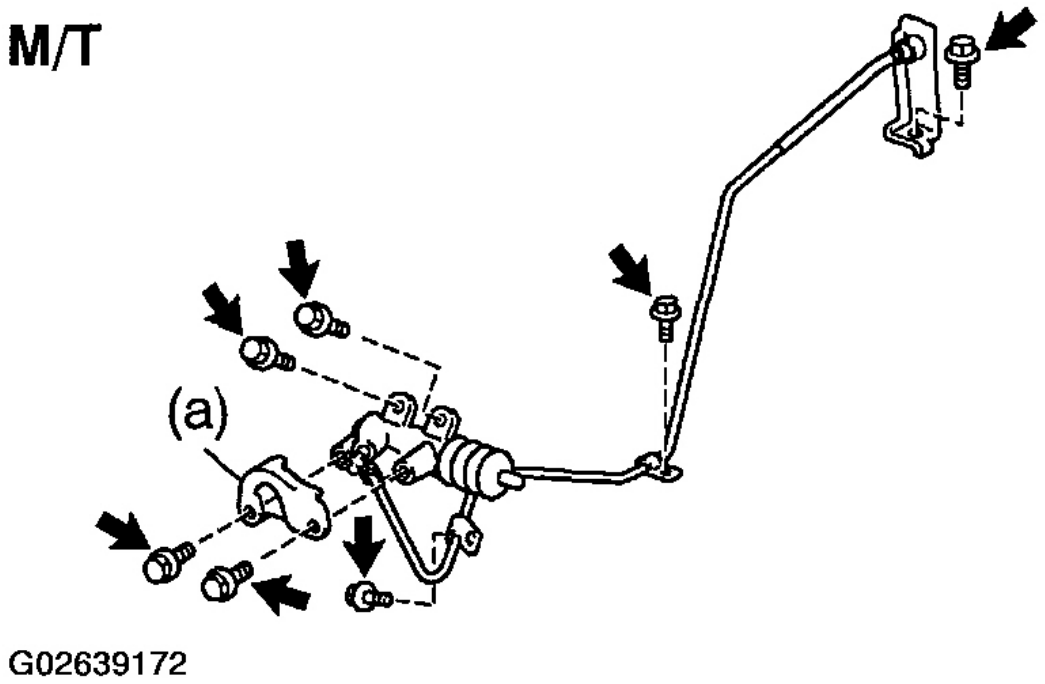

Fig. 163: Disconnecting Clutch Release Cylinder & Line From Transaxle (M/T)
Courtesy of TOYOTA MOTOR SALES, U.S.A., INC.

16. **A/T: DISCONNECT SHIFT CONTROL CABLE FROM TRANSAXLE**
    a. Remove the nut holding the control shift lever to the control cable.
    b. Remove the clip, and disconnect the control cable.
    c. Disconnect the control cable from the cable clamp.

cardiagn.com

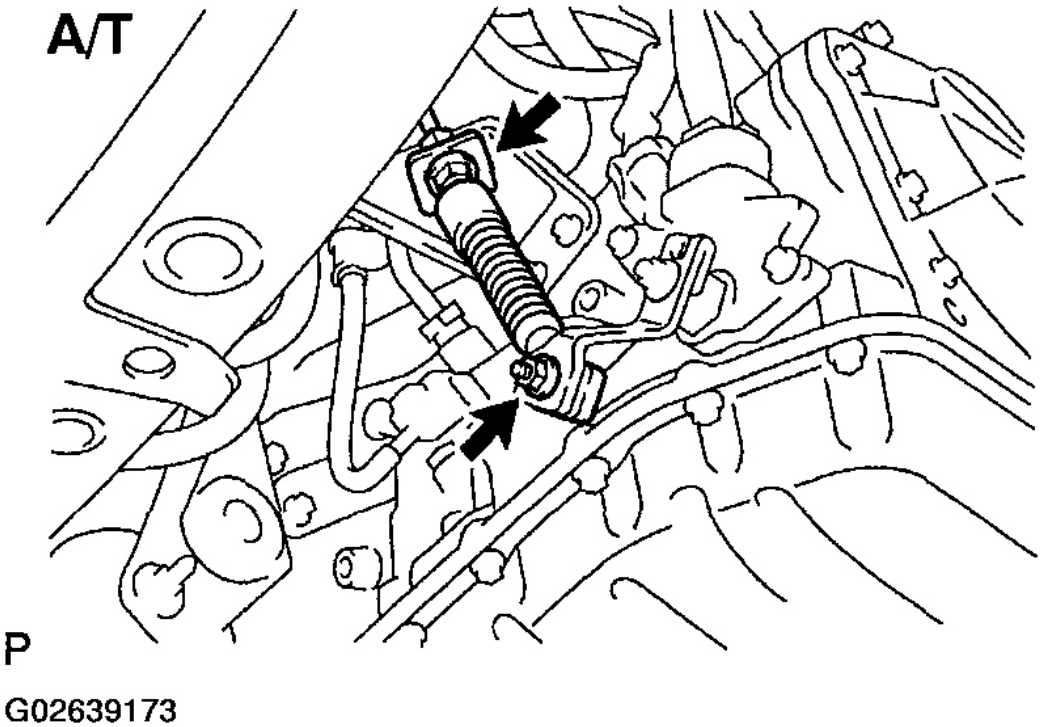

Fig. 164: Disconnecting Shift Control Cable From Transaxle (A/T)
Courtesy of TOYOTA MOTOR SALES, U.S.A., INC.

17. **A/T: DISCONNECT OIL COOLER HOSES**

cardiagn.com

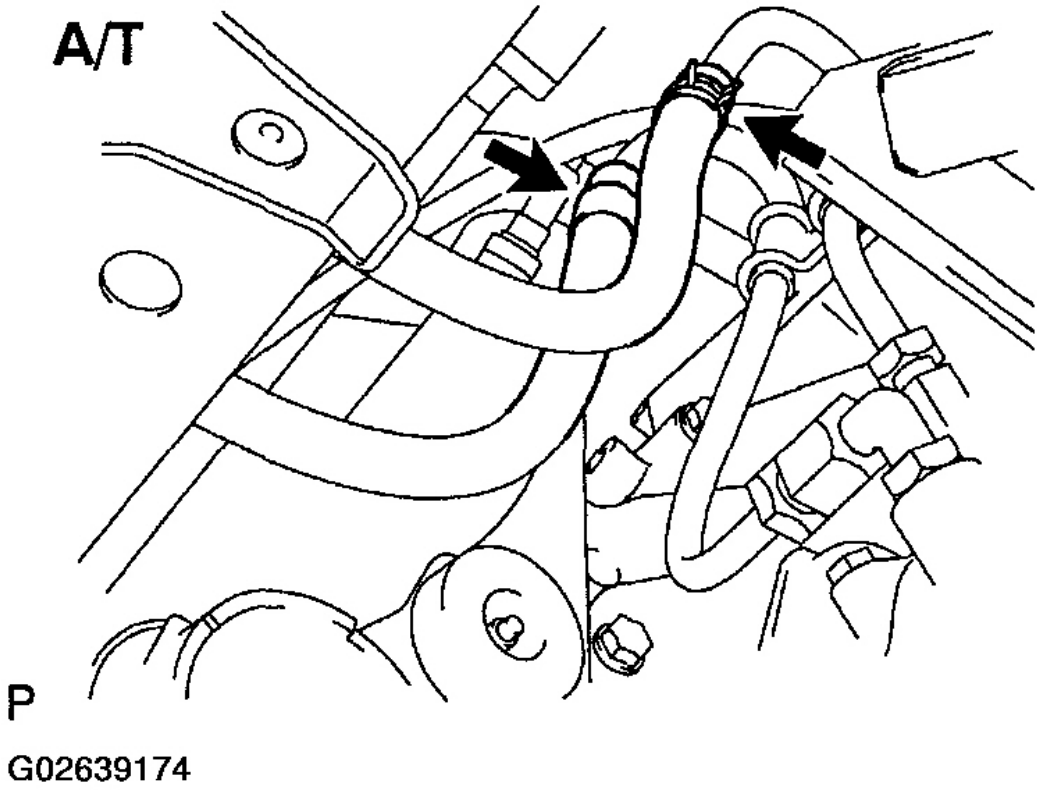

Fig. 165: Disconnecting Oil Cooler Hoses
Courtesy of TOYOTA MOTOR SALES, U.S.A., INC.

18. **DISCONNECT GROUND CABLE FROM TRANSAXLE**
19. **4WD: REMOVE PROPELLER SHAFT (See PROPELLER SHAFT ASSEMBLY)**
20. **REMOVE FRONT DRIVE SHAFTS (See REMOVAL)**
21. **REMOVE FRONT EXHAUST PIPE**

Remove the 4 bolts, 2 compression rings, 2 gaskets and exhaust pipe.

cardiagn.com

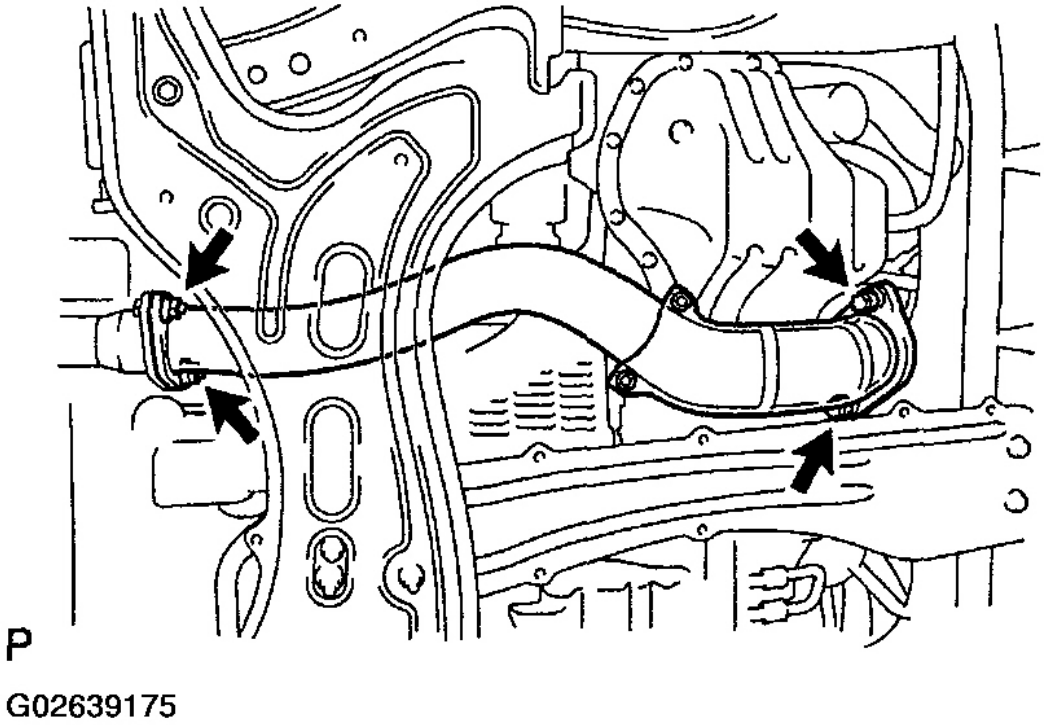

Fig. 166: Removing Front Exhaust Pipe
Courtesy of TOYOTA MOTOR SALES, U.S.A., INC.

22. **DISCONNECT STABILIZER BAR LINKS**

Remove the 2 nuts, and disconnect the LH and RH stabilizer links.

cardiagn.com

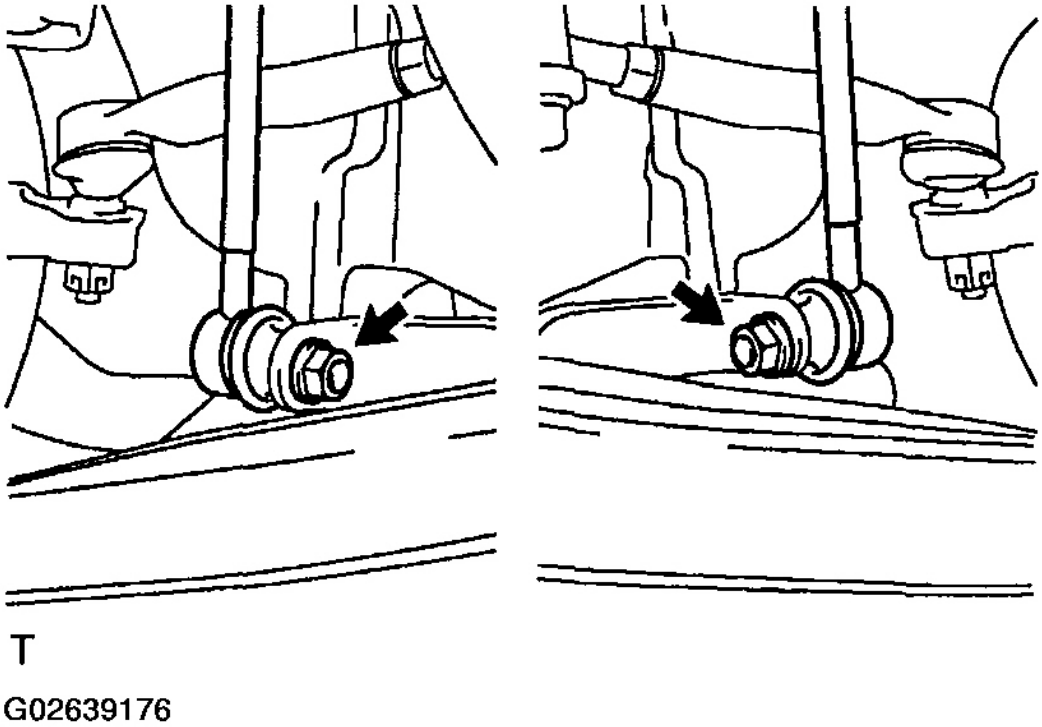

Fig. 167: Disconnecting Stabilizer Bar Links
Courtesy of TOYOTA MOTOR SALES, U.S.A., INC.

23. **DISCONNECT PS GEAR ASSEMBLY**

Remove the 2 bolts of the PS gear assembly.

cardiagn.com

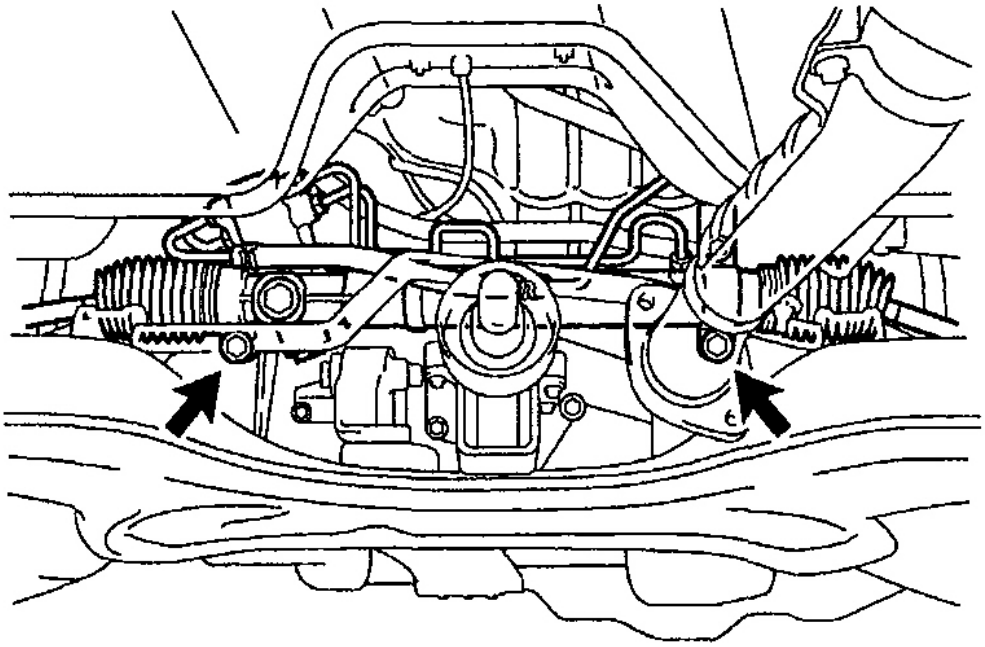

P

G02639177

Fig. 168: Removing PS Gear Assembly
Courtesy of TOYOTA MOTOR SALES, U.S.A., INC.

24. **ATTACH ENGINE SLING DEVICE TO ENGINE HANGERS**
    a. Install No. 1 and No. 2 engine hangers in the correct direction.

Item	Part No.
No. 1 and No. 2 engine hangars	12281-28010, 12281-28020 or 12281-28030
bolt	91512-61020 x 2

G02639178

Fig. 169: Removing PS Gear Assembly
Courtesy of TOYOTA MOTOR SALES, U.S.A., INC.

cardiagn.com

Torque: 38 N.m (387 kgf.cm, 28 ft.lbf)

b. Attach the sling device to the engine hangers.

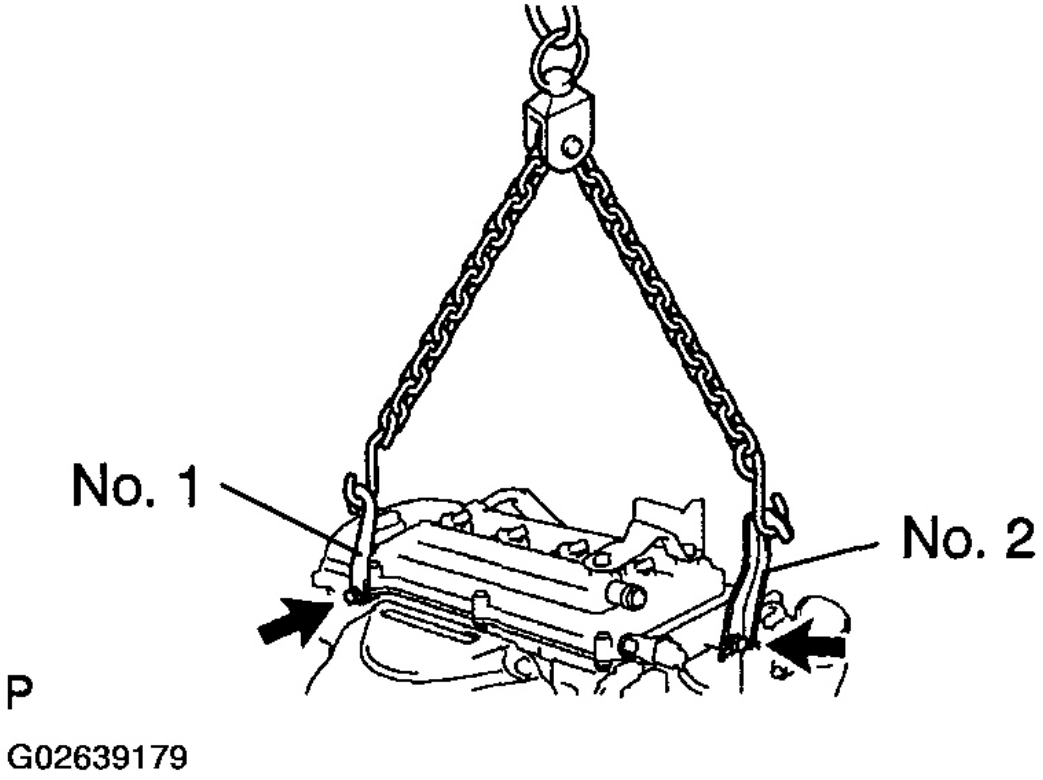

Fig. 170: Attaching Sling Device To Engine Hangers
Courtesy of TOYOTA MOTOR SALES, U.S.A., INC.

CAUTION: Do not attempt to hang the engine by hooking the chain to any other part.

25. **REMOVE ENGINE, TRANSAXLE, FRONT SUSPENSION CROSSMEMBER AND CENTER ENGINE MOUNTING MEMBER ASSEMBLY**
    a. Remove the 2 nuts and bolt holding the RH engine mounting insulator to the timing chain cover.

cardiagn.com

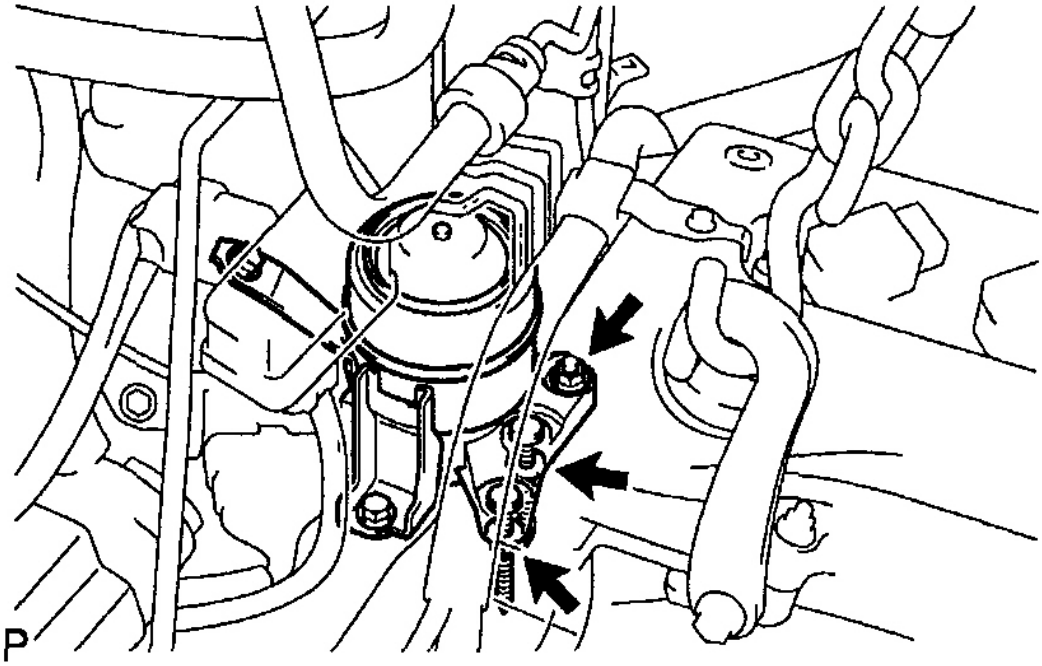

Fig. 171: Removing RH Engine Mounting Insulator
Courtesy of TOYOTA MOTOR SALES, U.S.A., INC.

b. Remove the bolt holding the LH engine mounting insulator to the mounting bracket.

cardiagn.com

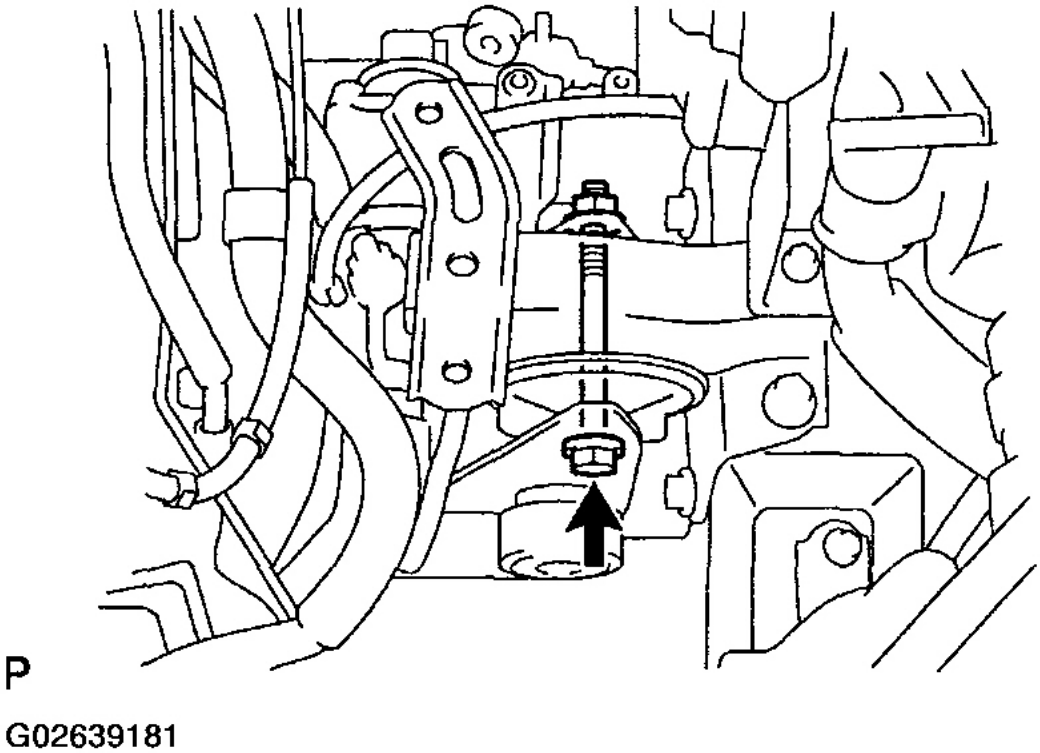

Fig. 172: Removing LH Engine Mounting Insulator To Mounting Bracket
Courtesy of TOYOTA MOTOR SALES, U.S.A., INC.

c. Support the suspension crossmember with a jack.
d. Remove the 6 bolts holding the suspension crossmember engine mounting member to the body.

cardiagn.com

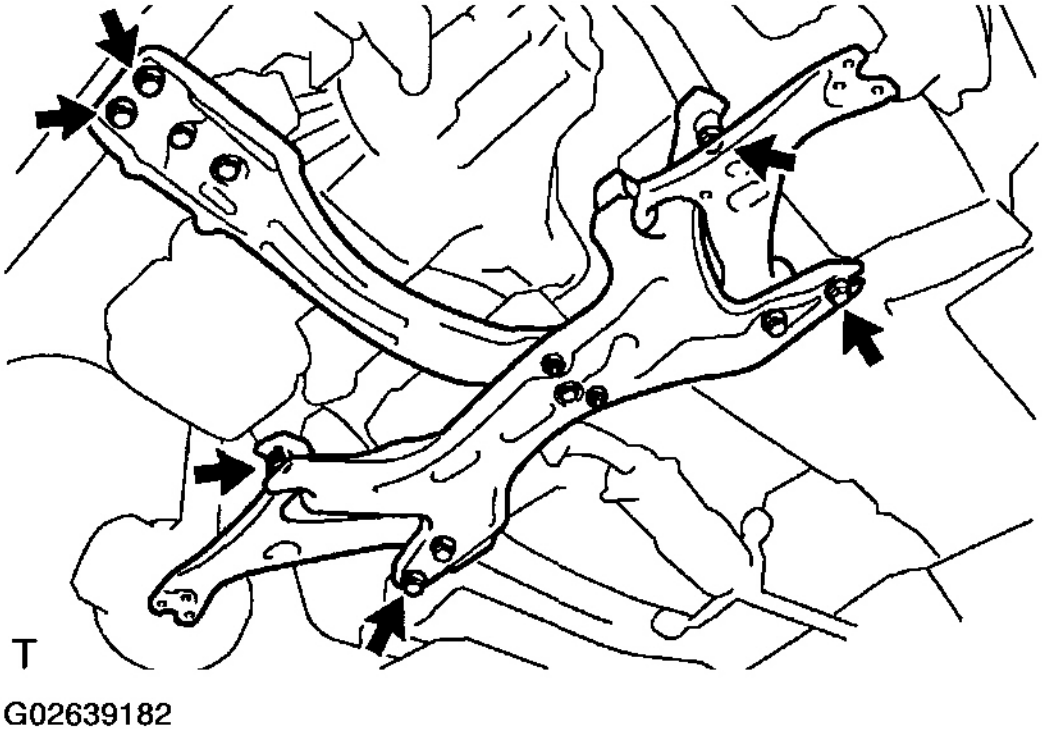

Fig. 173: Removing Front Suspension Crossmember
Courtesy of TOYOTA MOTOR SALES, U.S.A., INC.

e. Lower the engine out of the vehicle slowly and carefully.

NOTE: Make sure the engine is clear of all wiring, hoses and cables.

cardiagn.com

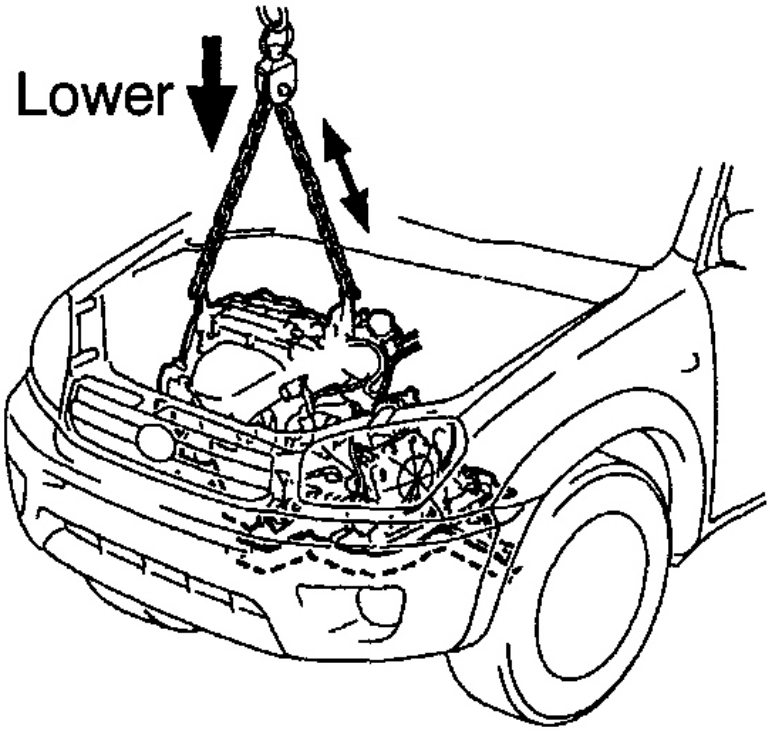

P

G02639183

Fig. 174: Lowering Engine Out Of Vehicle
Courtesy of TOYOTA MOTOR SALES, U.S.A., INC.

26. **REMOVE ENGINE AND TRANSAXLE ASSEMBLY FROM FRONT SUSPENSION CROSSMEMBER AND CENTER ENGINE MOUNTING MEMBER**
    a. Remove the bolt holding the front engine mounting bracket to the mounting insulator.

cardiagn.com

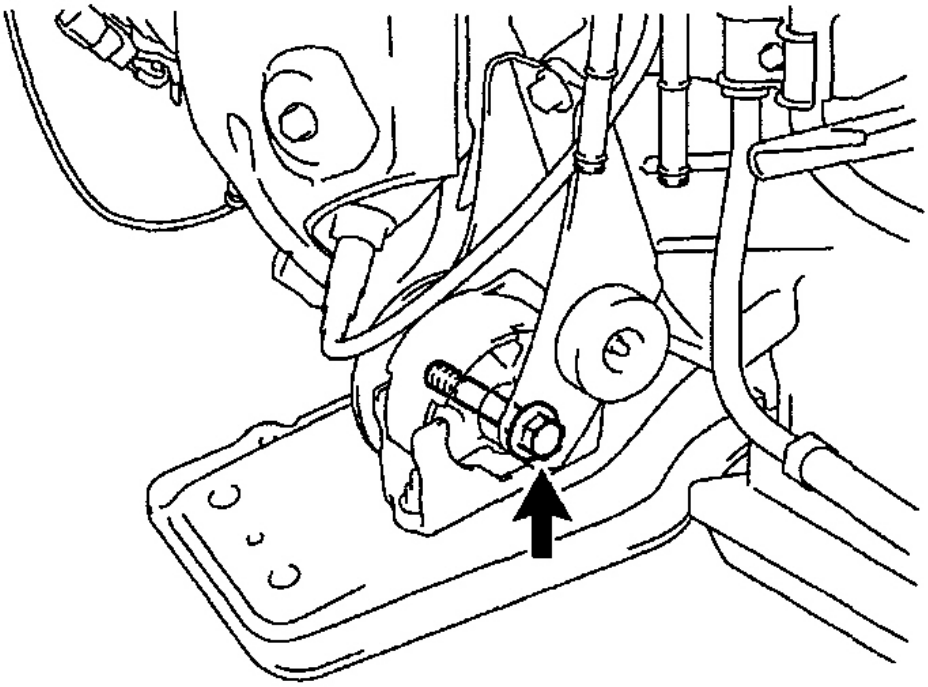

Fig. 175: Removing Bolt Holding Front Engine Mounting Bracket To Mounting Insulator
Courtesy of TOYOTA MOTOR SALES, U.S.A., INC.

b. Remove the bolt holding the rear engine mounting bracket to the mounting insulator.

cardiagn.com

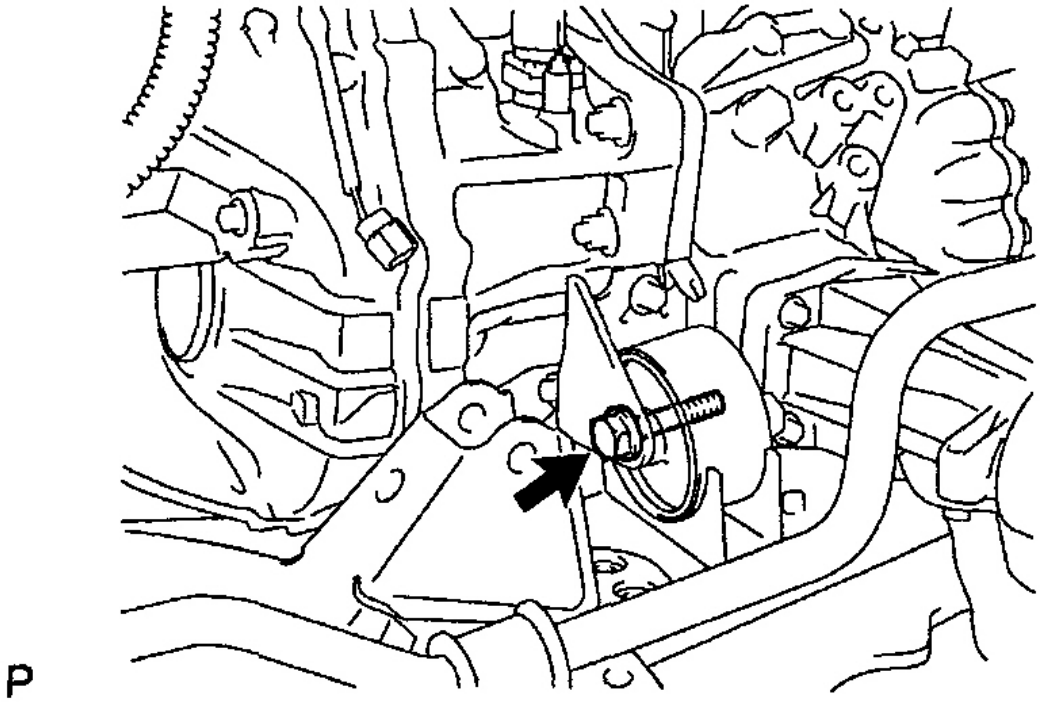

Fig. 176: Removing Bolt Holding Rear Engine Mounting Bracket To Mounting Insulator
Courtesy of TOYOTA MOTOR SALES, U.S.A., INC.

c. Separate the engine and transaxle assembly from the suspension crossmember and engine mounting member.

27. **4WD: REMOVE STIFFENER PLATE**

Remove the 5 bolts and stiffener plate.

cardiagn.com

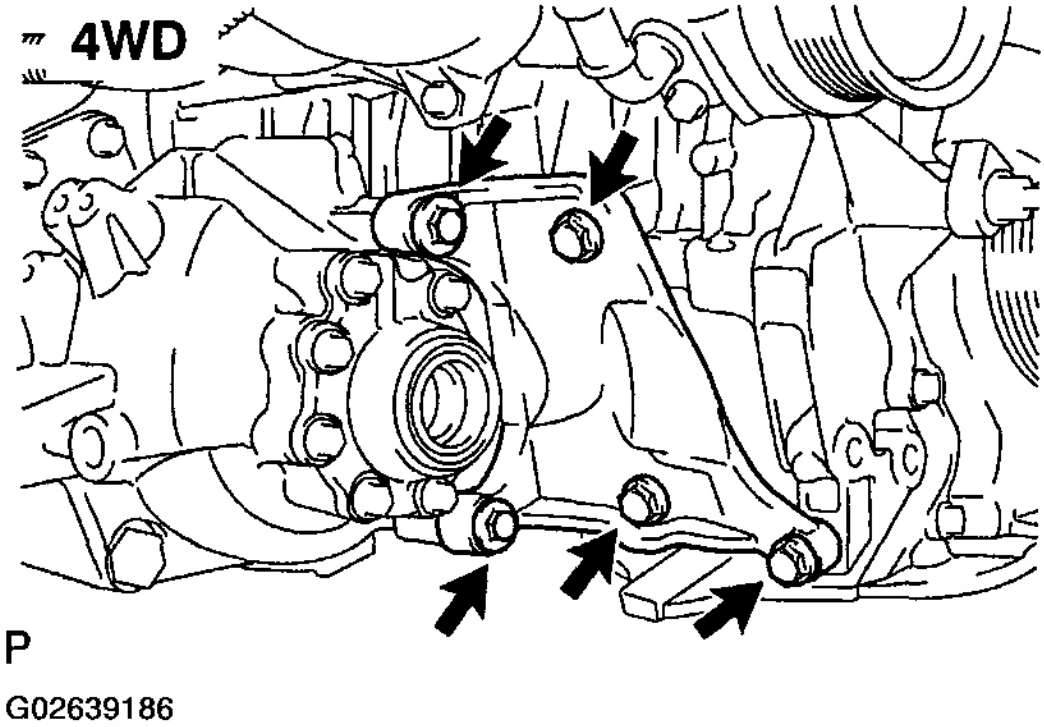

Fig. 177: Removing Stiffener Plate (4WD)
Courtesy of TOYOTA MOTOR SALES, U.S.A., INC.

28. **2WD: REMOVE CENTER BEARING BRACKET**

Remove the 3 bolts and bearing bracket.

cardiagn.com

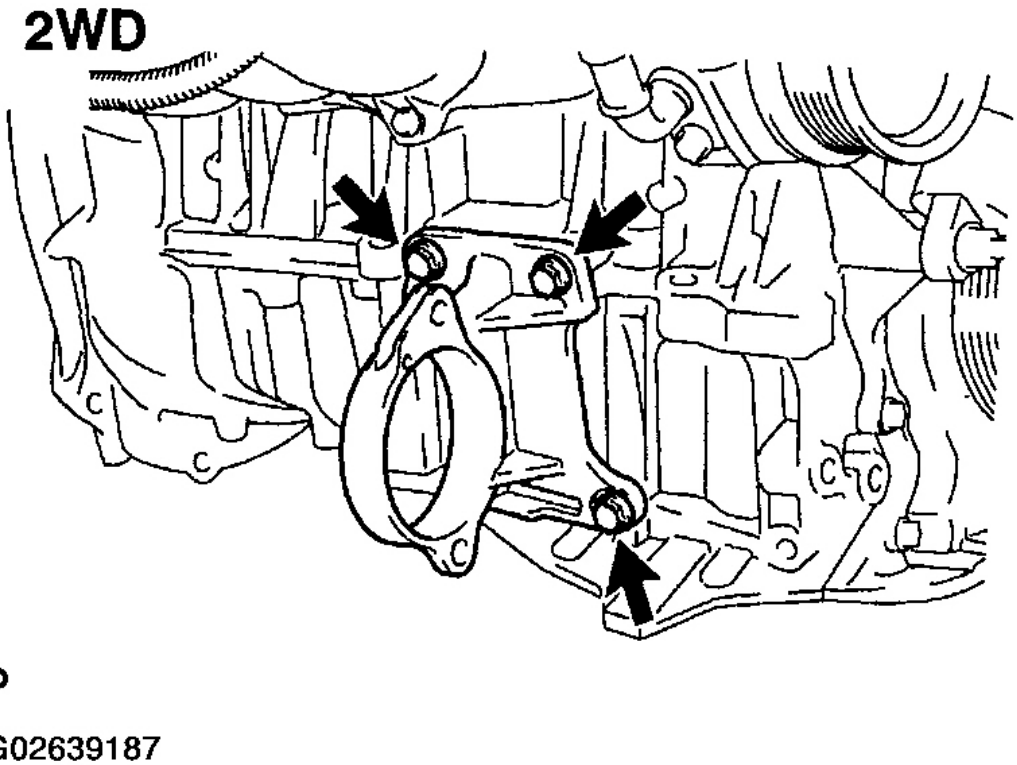

Fig. 178: Removing Center Bearing Bracket (2WD)
Courtesy of TOYOTA MOTOR SALES, U.S.A., INC.

29. **A/T: REMOVE TORQUE CONVERTER CLUTCH BOLTS**
    a. Remove the hole plug.
    b. Turn the crankshaft to gain access to each bolt.
    c. Hold the crankshaft pulley bolt with a wrench, and remove the 6 bolts.

cardiagn.com

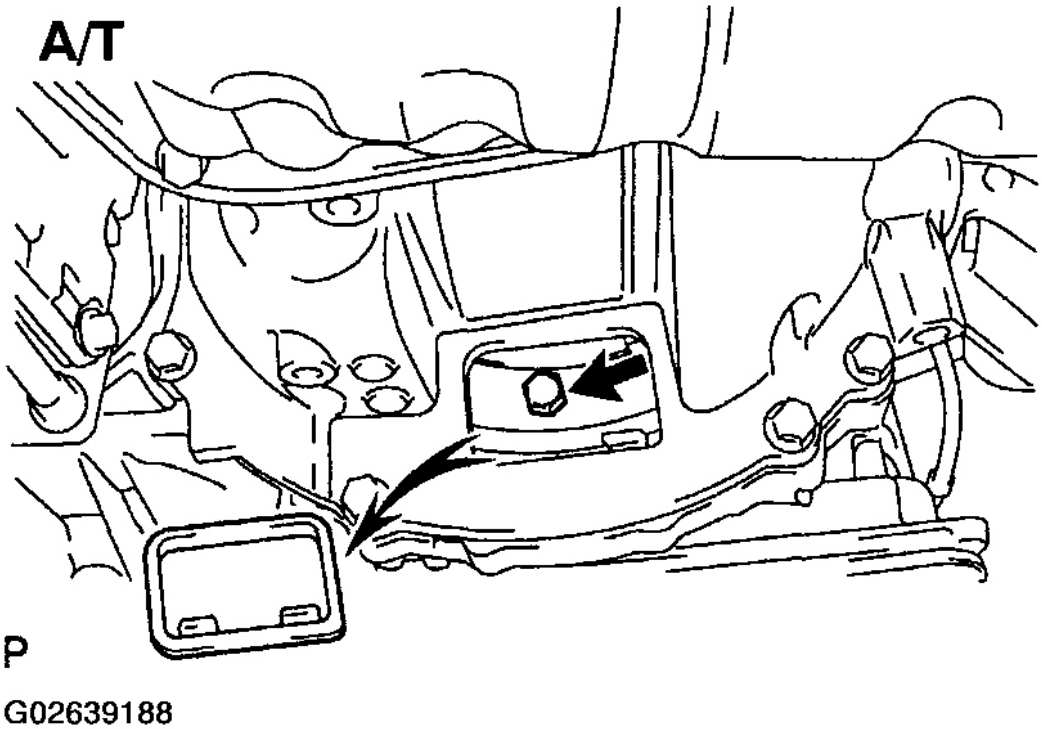

Fig. 179: Removing Torque Converter Clutch Bolts
Courtesy of TOYOTA MOTOR SALES, U.S.A., INC.

30. **REMOVE TRANSAXLE FROM ENGINE**
    a. Remove the 4 lower bolts holding the engine to the transaxle.

cardiagn.com

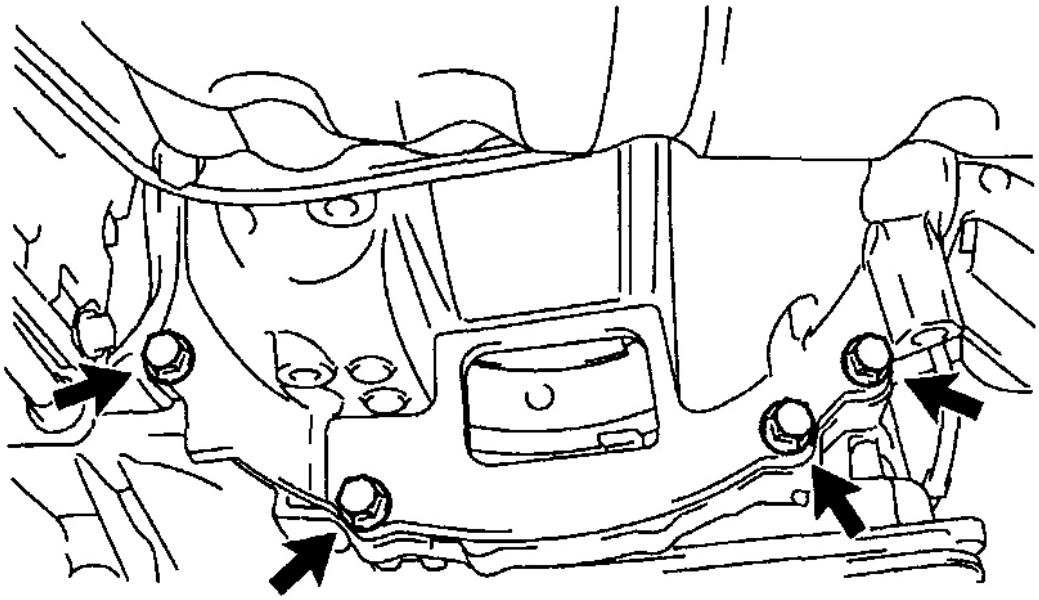

Fig. 180: Removing Bolts Holding Transaxle To Engine
Courtesy of TOYOTA MOTOR SALES, U.S.A., INC.

b. M/T: Disconnect the connectors.
   1. Disconnect the vehicle speed sensor connector.
   2. Disconnect the back-up light switch connector.

cardiagn.com

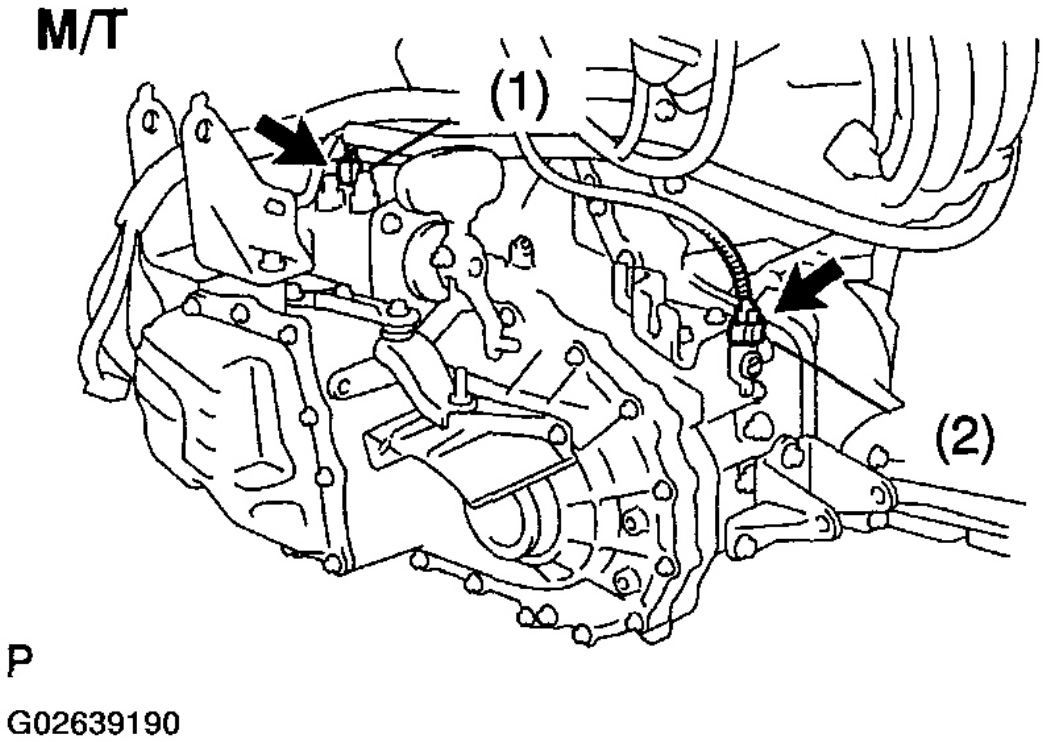

Fig. 181: Disconnecting Wiring Harness Connectors From Transaxle (M/T)
Courtesy of TOYOTA MOTOR SALES, U.S.A., INC.

c. A/T: Disconnect the connectors and clamps.
   1. Disconnect the park/neutral position switch connector.
   2. Disconnect the solenoid wire connector.
   3. Disconnect the input turbine speed sensor connector.
   4. Disconnect the counter gear speed sensor connector.
   5. Disconnect the vehicle speed sensor.

cardiagn.com

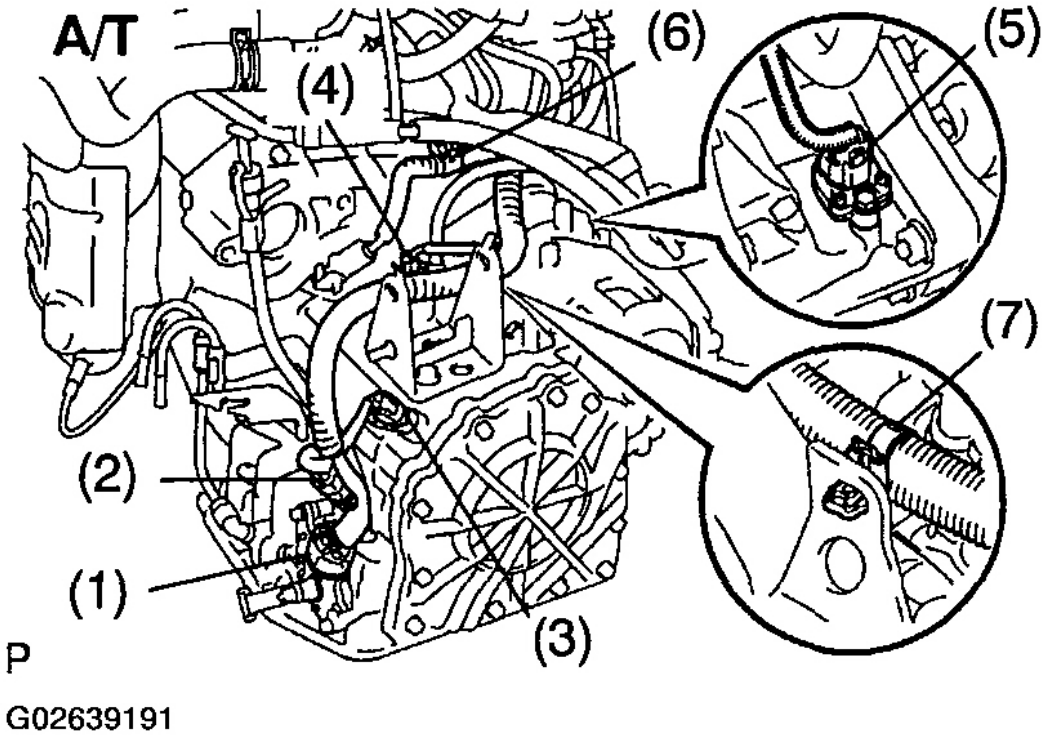

Fig. 182: Disconnecting Wiring Harness Connectors From Transaxle (A/T)
Courtesy of TOYOTA MOTOR SALES, U.S.A., INC.

6. Disconnect the wire clamp from the bracket.
7. Disconnect the wire clamp from the engine mounting bracket.

d. Remove the 6 upper bolts holding the transaxle to the engine.

cardiagn.com

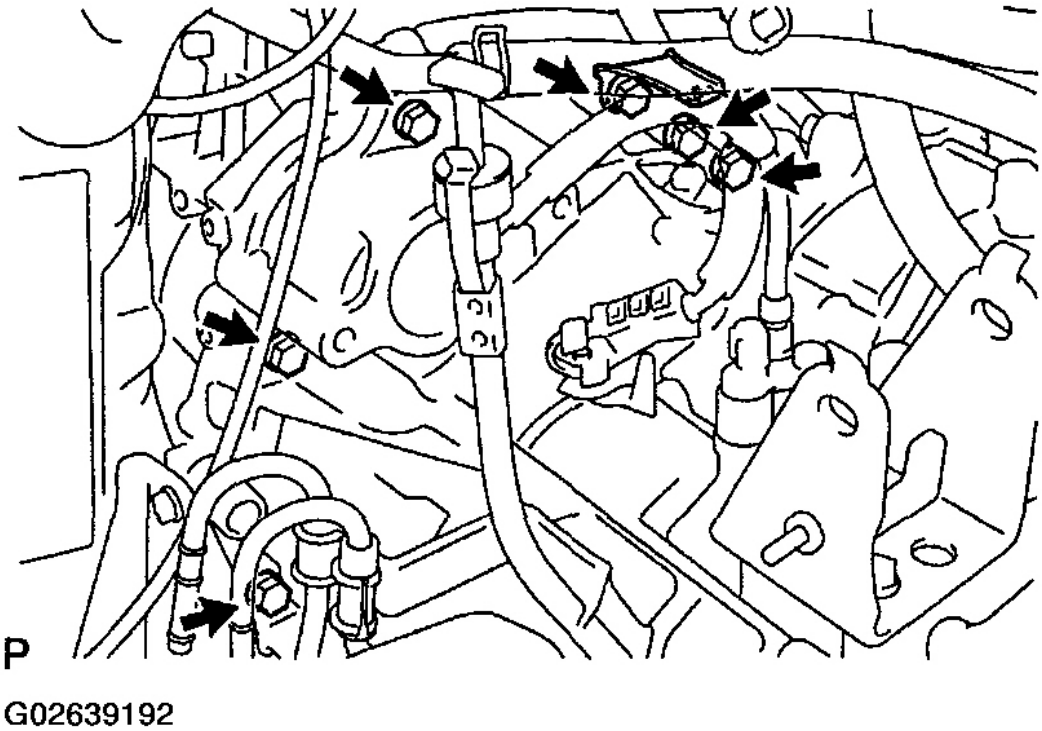

Fig. 183: Removing Upper Bolts Holding Transaxle To Engine
Courtesy of TOYOTA MOTOR SALES, U.S.A., INC.

e. Remove the transaxle together with the torque converter clutch (A/T) from the engine.

31. **REMOVE DRIVE BELT (See CHARGING SYSTEM)**
32. **M/T: REMOVE CLUTCH COVER, DISC AND FLYWHEEL**
33. **A/T: REMOVE DRIVE PLATE**
34. **REMOVE A/C COMPRESSOR**
    a. Disconnect the magnetic clutch and lock sensor connector from the compressor.
    b. Remove the 3 bolts, nut and compressor.

cardiagn.com

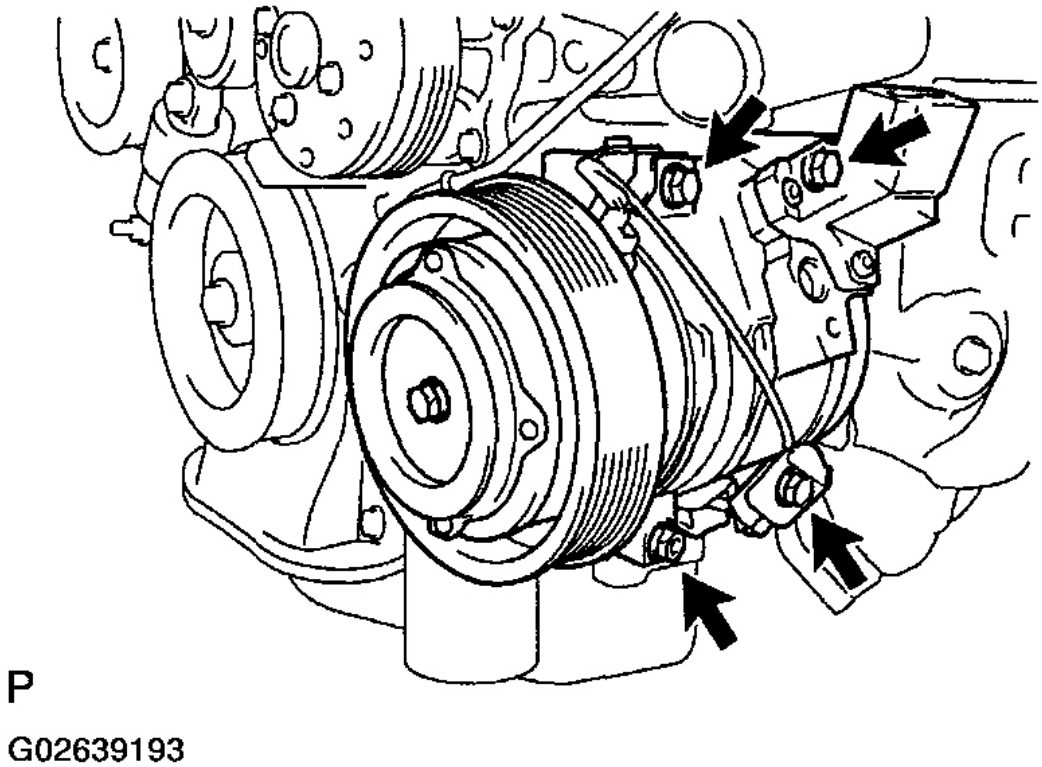

Fig. 184: Removing A/C Compressor Bolts
Courtesy of TOYOTA MOTOR SALES, U.S.A., INC.

35. **REMOVE PS VANE PUMP**
    a. Disconnect the oil pressure switch connector.
    b. Remove the 2 bolts and vane pump.

cardiagn.com

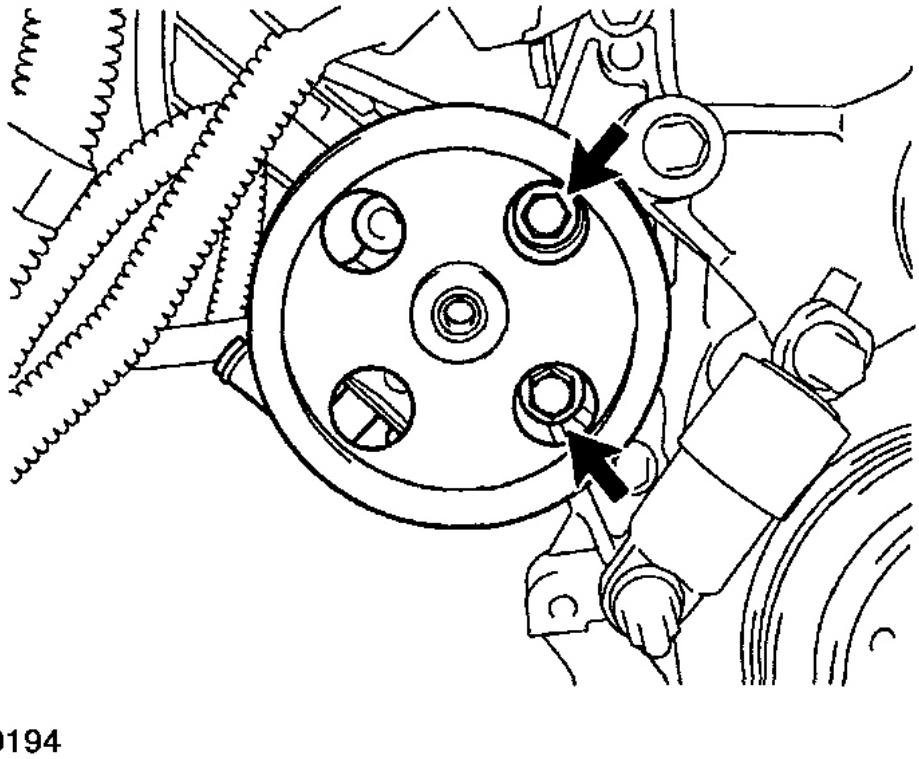

Fig. 185: Removing PS Vane Pump
Courtesy of TOYOTA MOTOR SALES, U.S.A., INC.

36. **REMOVE GENERATOR**
    a. Remove the terminal cover and nut, and disconnect the generator wire.
    b. Disconnect the generator connector.
    c. Disconnect the A/C wire.
    d. Remove the 2 bolts and generator.

cardiagn.com

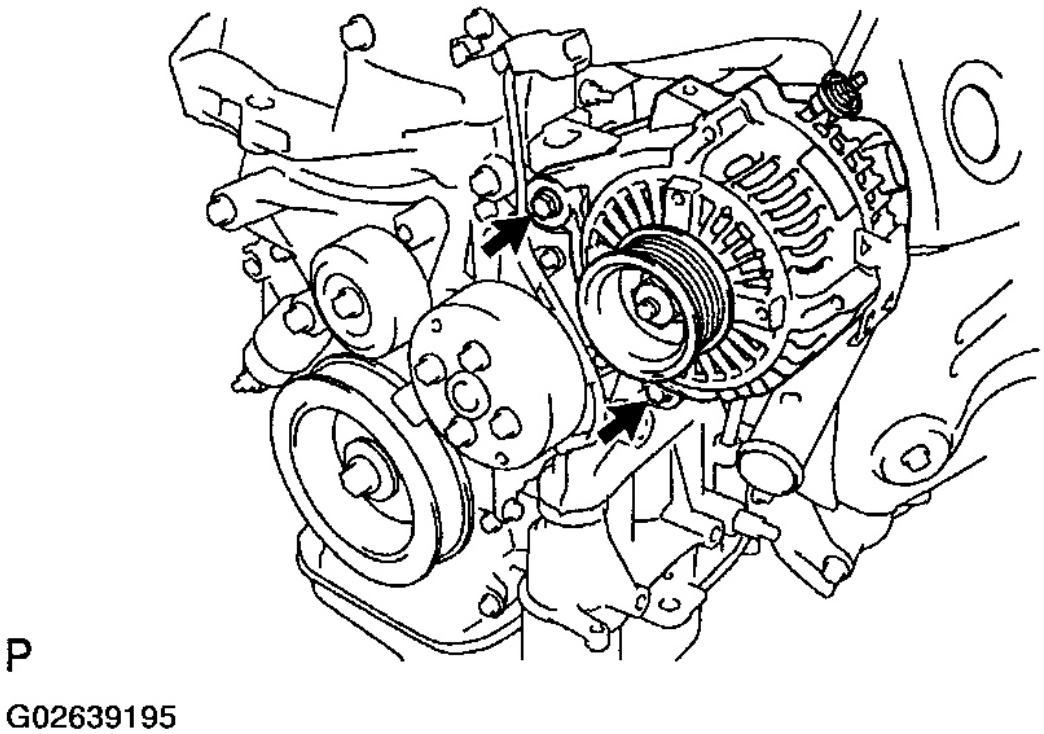

Fig. 186: Removing Generator
Courtesy of TOYOTA MOTOR SALES, U.S.A., INC.

INSTALLATION

1. **INSTALL GENERATOR**
   a. Install the generator with the 2 bolts.

      Torque:

      52 N.m (530 kgf.cm, 38 ft.lbf) for bolt A

      21 N.m (214 kgf.cm, 15 ft.lbf) for bolt B

   b. Connect the A/C wire.
   c. Connect the generator connector.
   d. Connect the generator wire with the nut, and install the cover.

      Torque: 9.7 N.m (99 kgf.cm, 86 in.lbf)

cardiagn.com

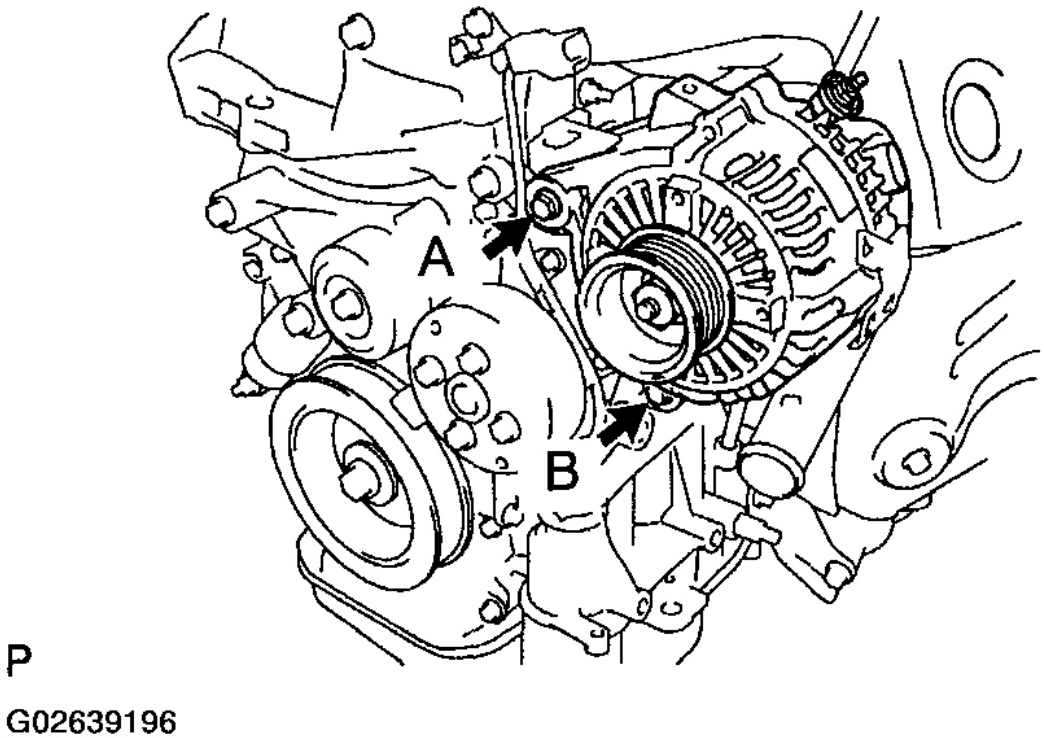

Fig. 187: Installing Generator
Courtesy of TOYOTA MOTOR SALES, U.S.A., INC.

2. **INSTALL PS VANE PUMP**
   a. Install the vane pump with the 2 bolts.

      Torque: 43 N.m (439 kgf.cm, 32 ft.lbf)

   b. Connect the oil pressure switch connector.

cardiagn.com

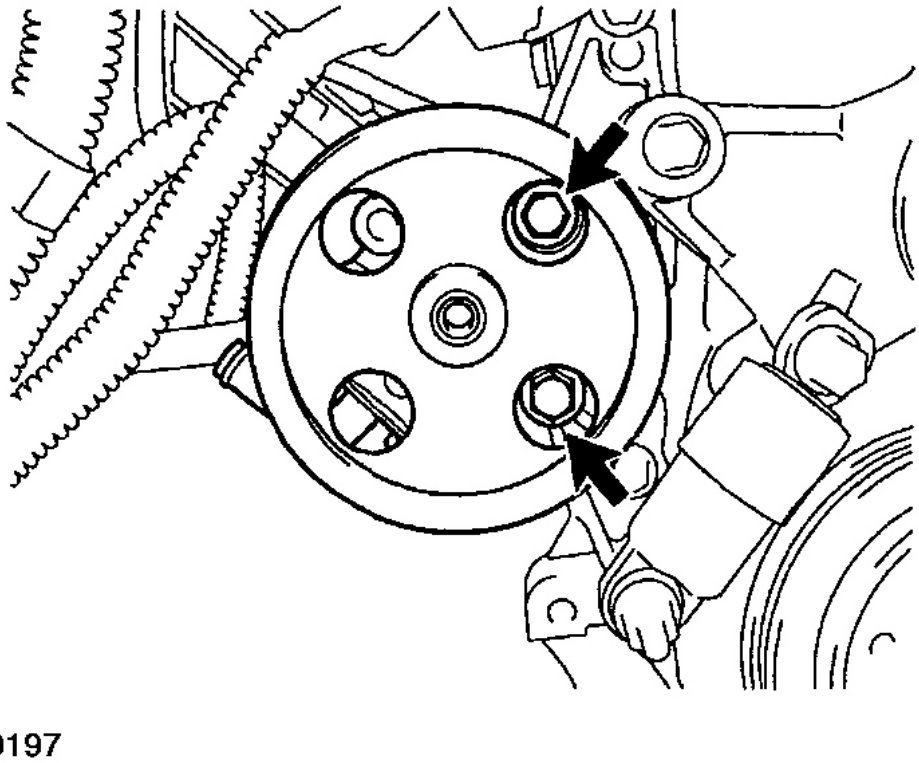

Fig. 188: Installing PS Vane Pump
Courtesy of TOYOTA MOTOR SALES, U.S.A., INC.

3. **INSTALL A/C COMPRESSOR**
   a. Install the compressor with the 3 bolts and nut.

      Torque: 24.5 N.m (250 kgf.cm, 18 ft.lbf)

   b. Connect the magnetic clutch and lock sensor connector.

cardiagn.com

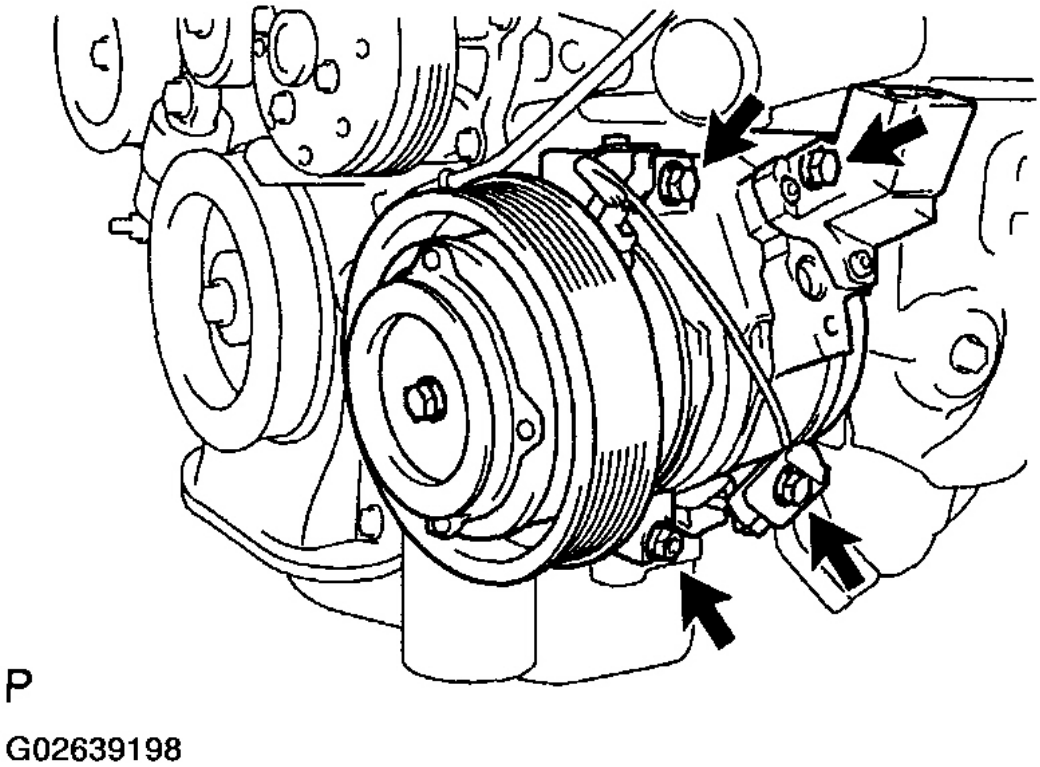

Fig. 189: Installing A/C Compressor
Courtesy of TOYOTA MOTOR SALES, U.S.A., INC.

4. **INSTALL DRIVE BELT (See CHARGING SYSTEM)**
5. **A/T: INSTALL DRIVE PLATE**
   a. Apply adhesive to 2 or 3 threads of the bolt end.

      Adhesive:

      Part No. 08833-00070, THREE BOND 1324 or equivalent

cardiagn.com

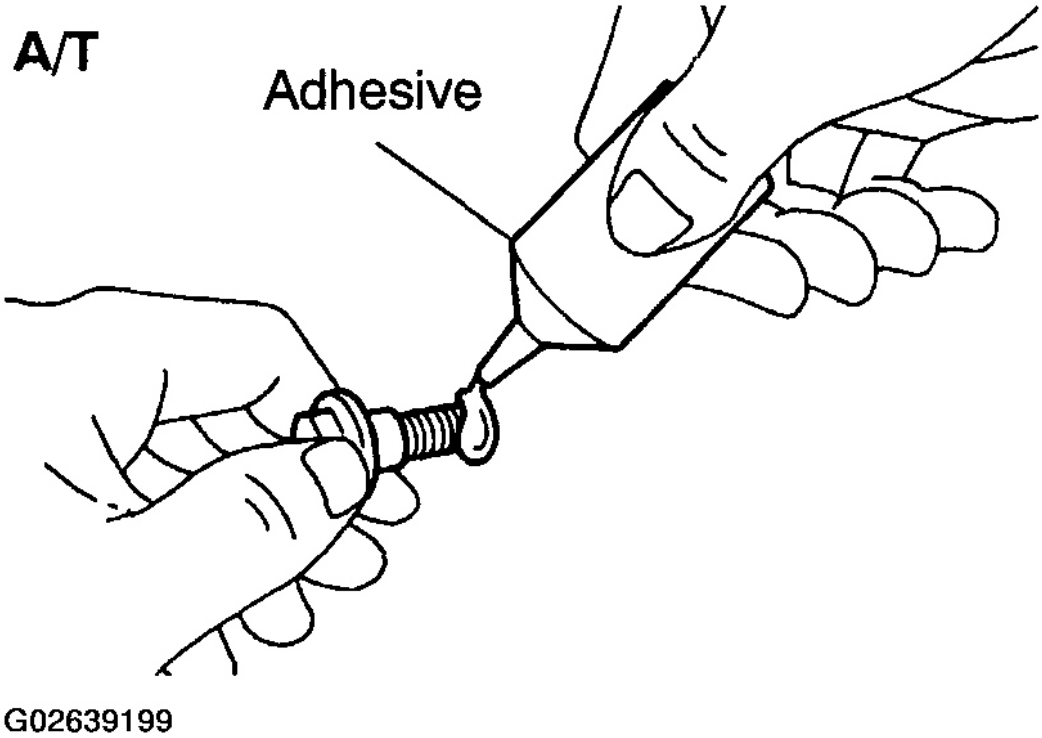

Fig. 190: Applying Adhesive To Threads Of Bolt End
Courtesy of TOYOTA MOTOR SALES, U.S.A., INC.

b. Align the pin of the front spacer with the pin hole of the crankshaft, and install the front spacer.

cardiagn.com

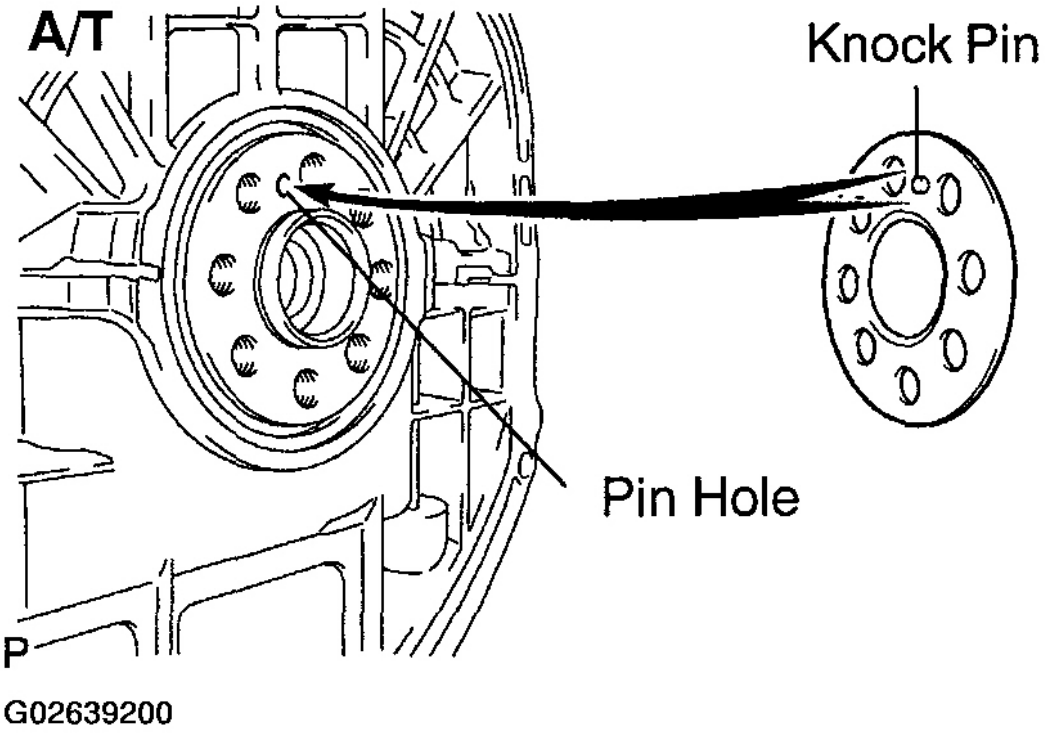

Fig. 191: Aligning Pin Of Front Spacer With Pin Hole In Crack
Courtesy of TOYOTA MOTOR SALES, U.S.A., INC.

c. Install the drive plate and rear spacer as shown.

cardiagn.com

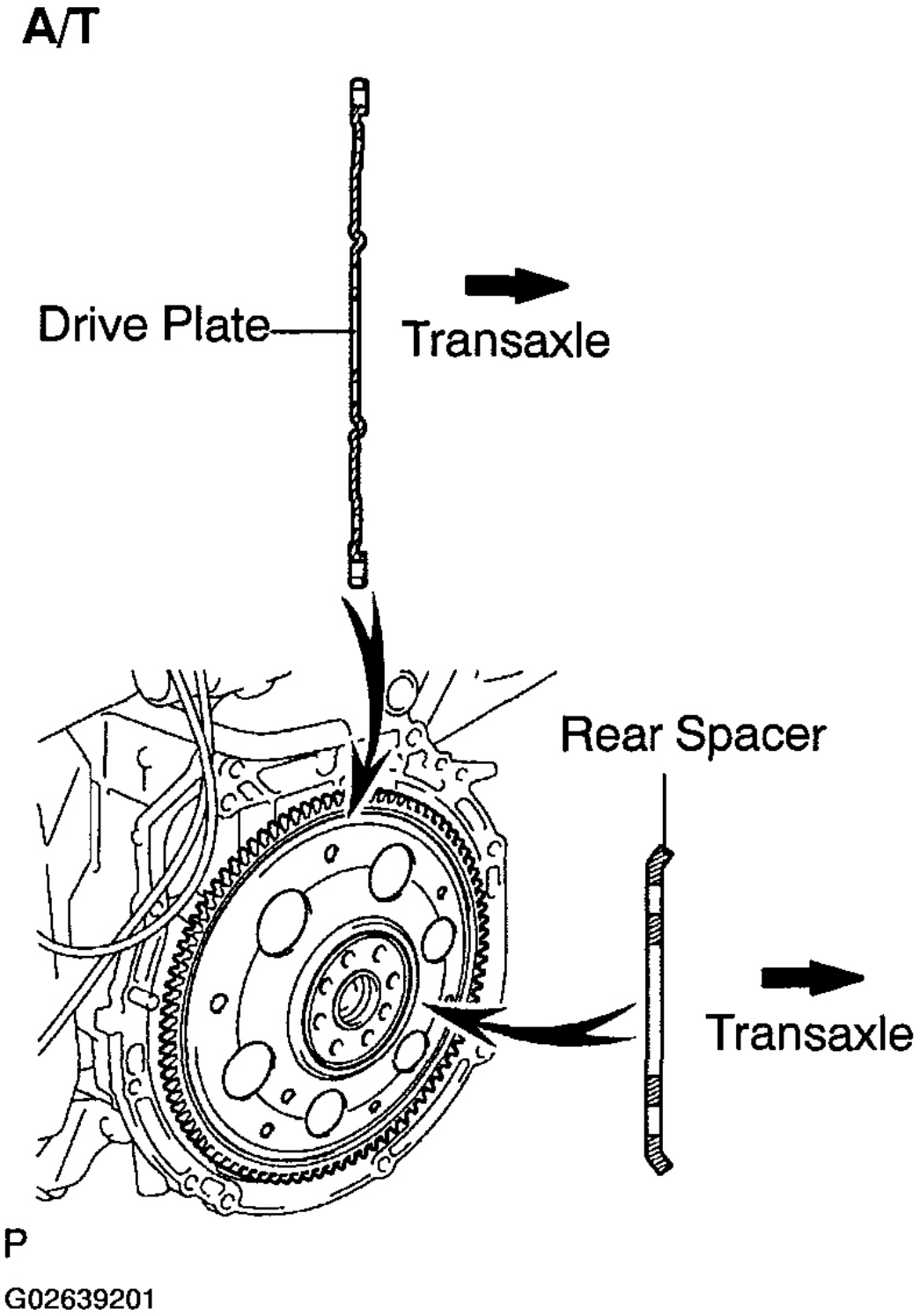

cardiagn.com

Fig. 192: Installing Drive Plate And Rear Spacer
Courtesy of TOYOTA MOTOR SALES, U.S.A., INC.

d. Install and uniformly tighten the 8 bolts in several passes, in the sequence shown.

Torque: 98 N.m (1,000 kgf.cm, 72 ft.lbf)

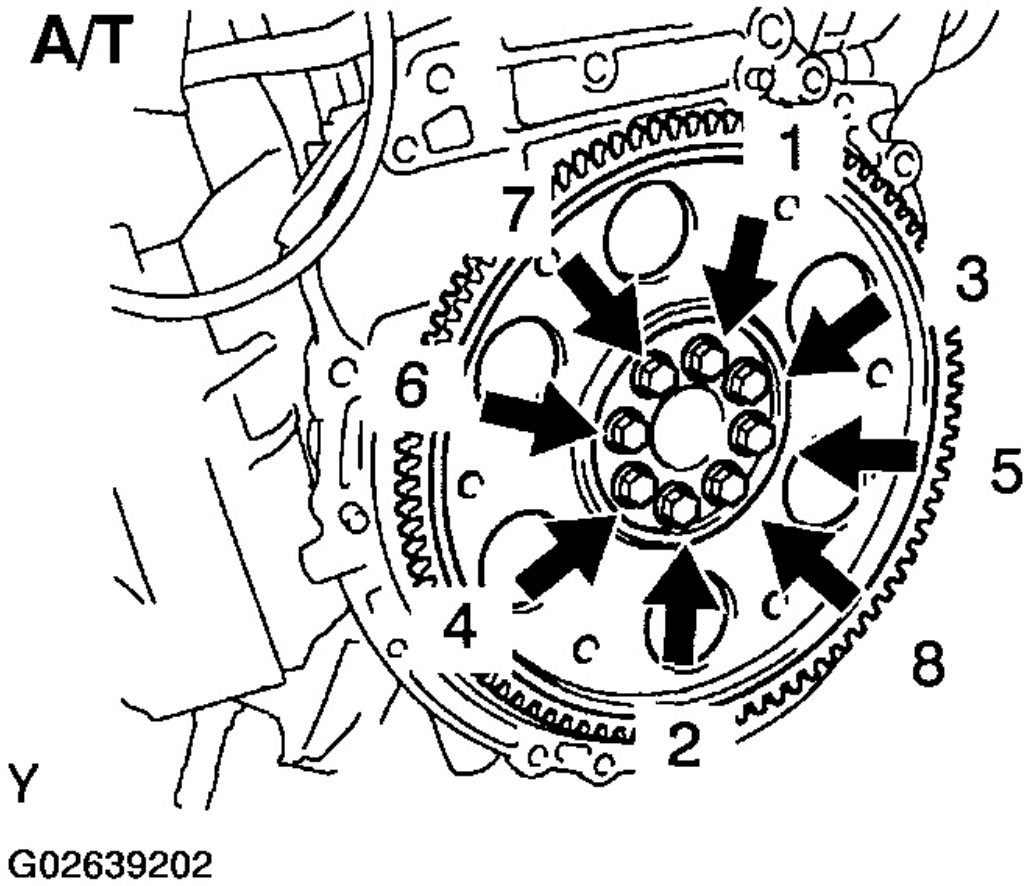

Fig. 193: Tightening Drive Plate Bolts In Several Passes In Sequence Shown
Courtesy of TOYOTA MOTOR SALES, U.S.A., INC.

6. **M/T: INSTALL FLYWHEEL (See procedure in step 5)**

   Torque: 130 N.m (1,326 kgf.cm, 96 ft.lbf)

7. **MT: INSTALL CLUTCH DISC AND COVER (See INSTALLATION)**
8. **INSTALL ENGINE TO TRANSAXLE**

cardiagn.com

a. Install the 6 upper bolts holding the transaxle to the engine.

Torque:

46 N.m (469 kgf.cm, 34 ft.lbf) for bolt A

64 N.m (653 kgf.cm, 47 ft.lbf) for bolt B

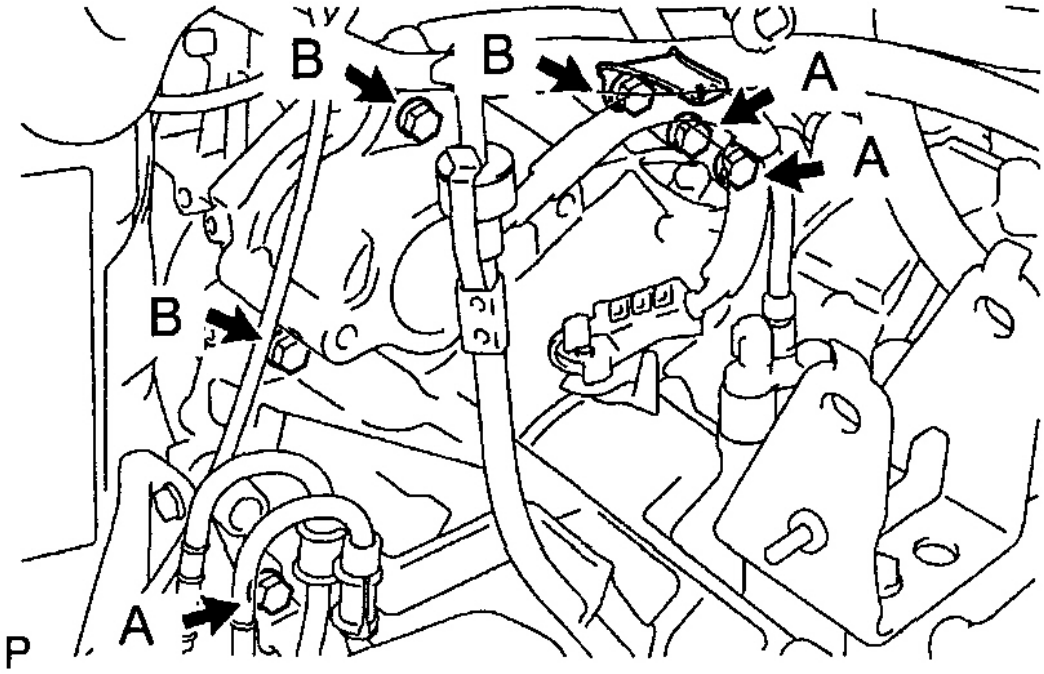

Fig. 194: Installing Upper Bolts Holding Transaxle To Engine
Courtesy of TOYOTA MOTOR SALES, U.S.A., INC.

b. A/T: Connect the connectors and clamps.
   1. Connect the park/neutral position switch connector.
   2. Connect the solenoid wire connector.
   3. Connect the input turbine speed sensor connector.
   4. Connect the counter gear speed sensor connector.
   5. Connect the vehicle speed sensor.
   6. Connect the wire clamp from the bracket.
   7. Connect the wire clamp to the mounting bracket.

cardiagn.com

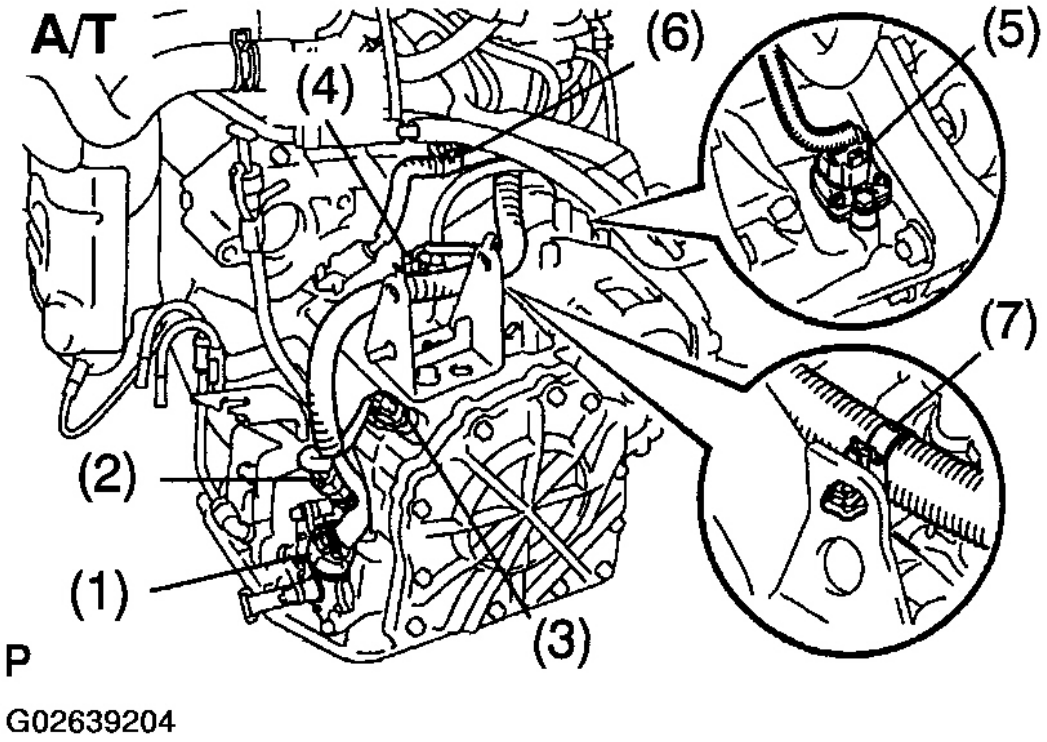

Fig. 195: Connecting Wiring Harness Connectors & Clamps (A/T)
Courtesy of TOYOTA MOTOR SALES, U.S.A., INC.

c. M/T: Connect the connectors.
   1. Connect the vehicle speed sensor connector.
   2. Connect the back-up light switch connector.

cardiagn.com

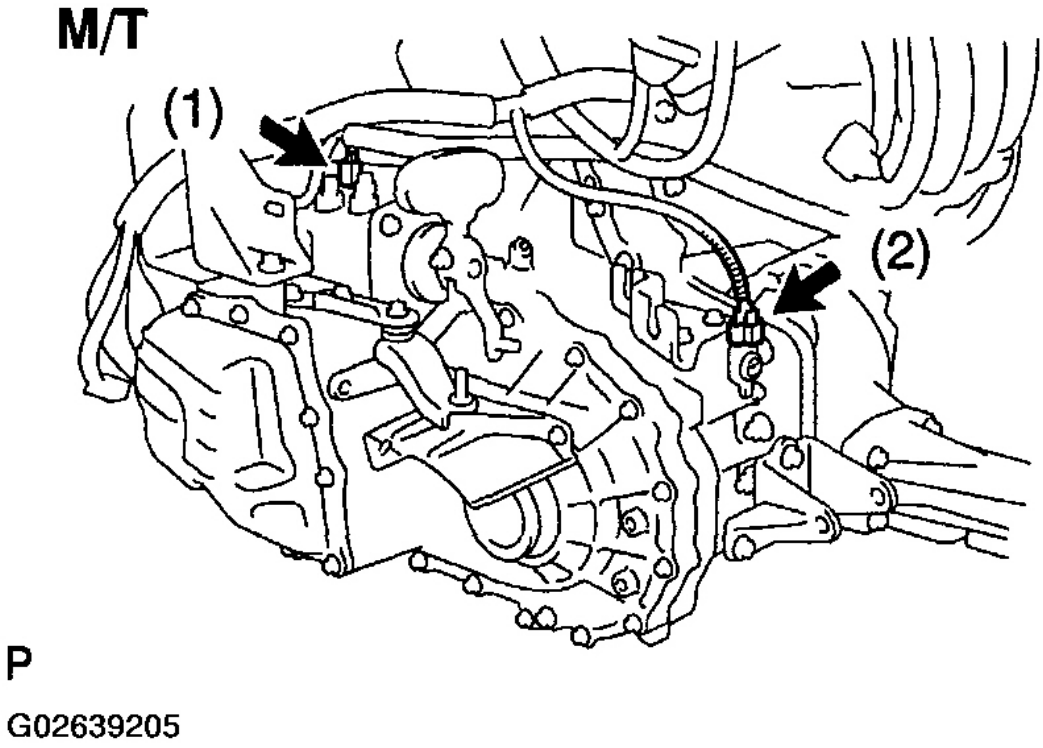

Fig. 196: Connecting Wiring Harness Connectors (M/T)
Courtesy of TOYOTA MOTOR SALES, U.S.A., INC.

d. Install the 4 lower bolts holding the engine to the transaxle.

Torque: 44 N.m (449 kgf.cm, 32 ft.lbf)

cardiagn.com

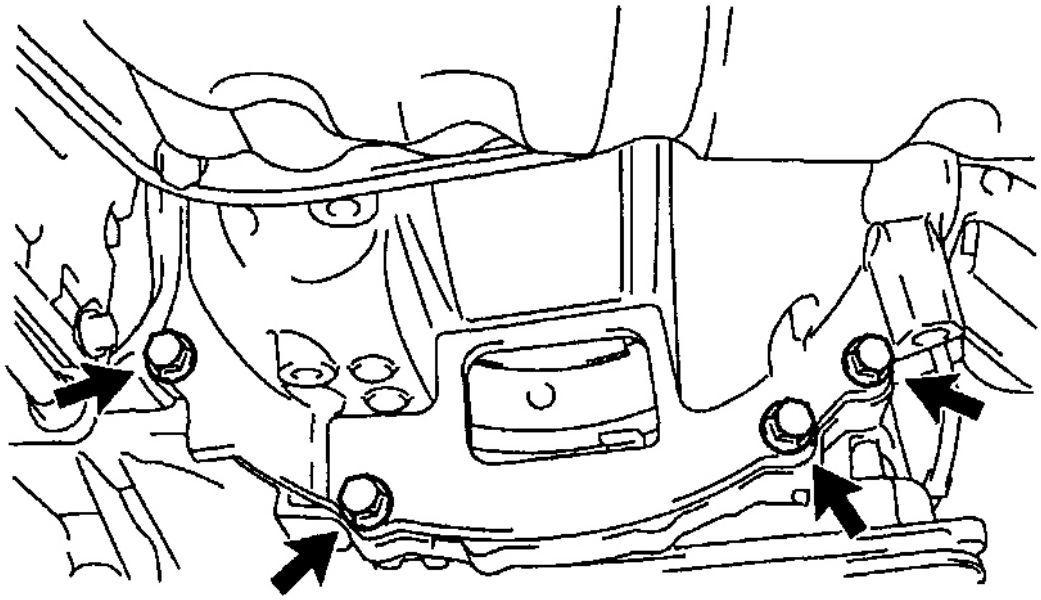

Fig. 197: Installing Lower Bolts Holding Transaxle To Engine
Courtesy of TOYOTA MOTOR SALES, U.S.A., INC.

9. **A/T: INSTALL TORQUE CONVERTER CLUTCH BOLTS**
   a. Apply adhesive to 2 or 3 threads of the bolt end.

      Adhesive:

      Part No. 08833-00070, THREE BOND 1324 or equivalent

   b. Hold the crankshaft pulley bolt with a wrench, and install the 6 bolts evenly.

      Torque: 41 N.m (418 kgf.cm, 30 ft.lbf)

      HINT:

      First tighten the green colored bolt, install the other bolts.

cardiagn.com

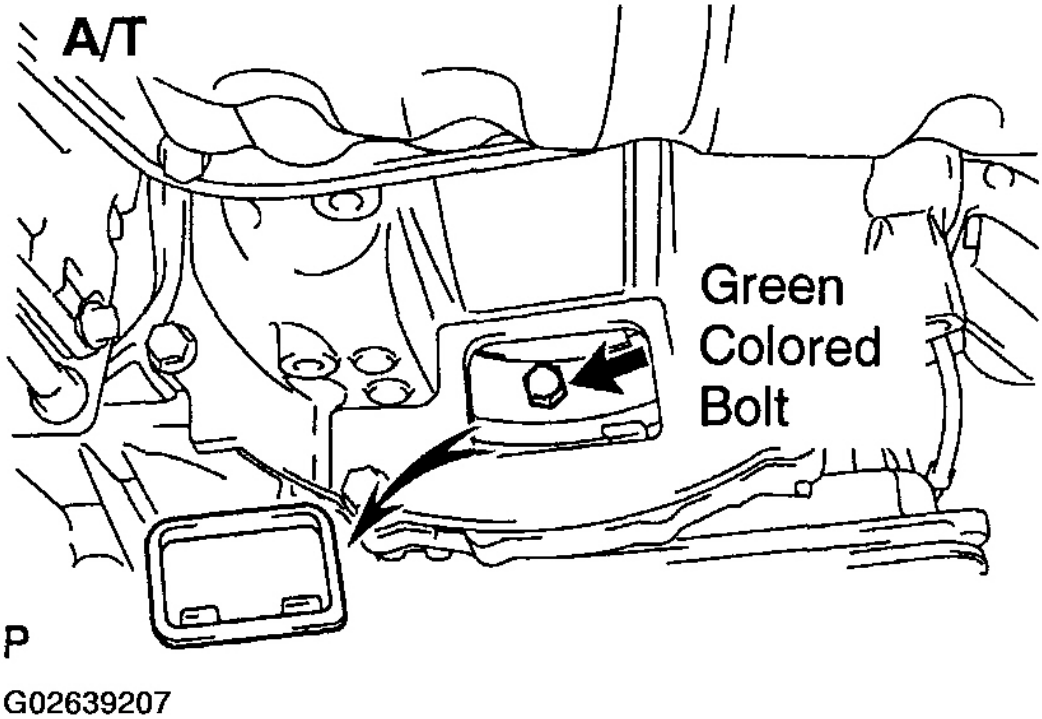

Fig. 198: Installing Torque Converter Clutch Bolts
Courtesy of TOYOTA MOTOR SALES, U.S.A., INC.

10. **2WD: INSTALL CENTER BEARING BRACKET**

Install the bearing bracket with the 3 bolts.

Torque: 34 N.m (347 kgf.cm, 25 ft.lbf)

cardiagn.com

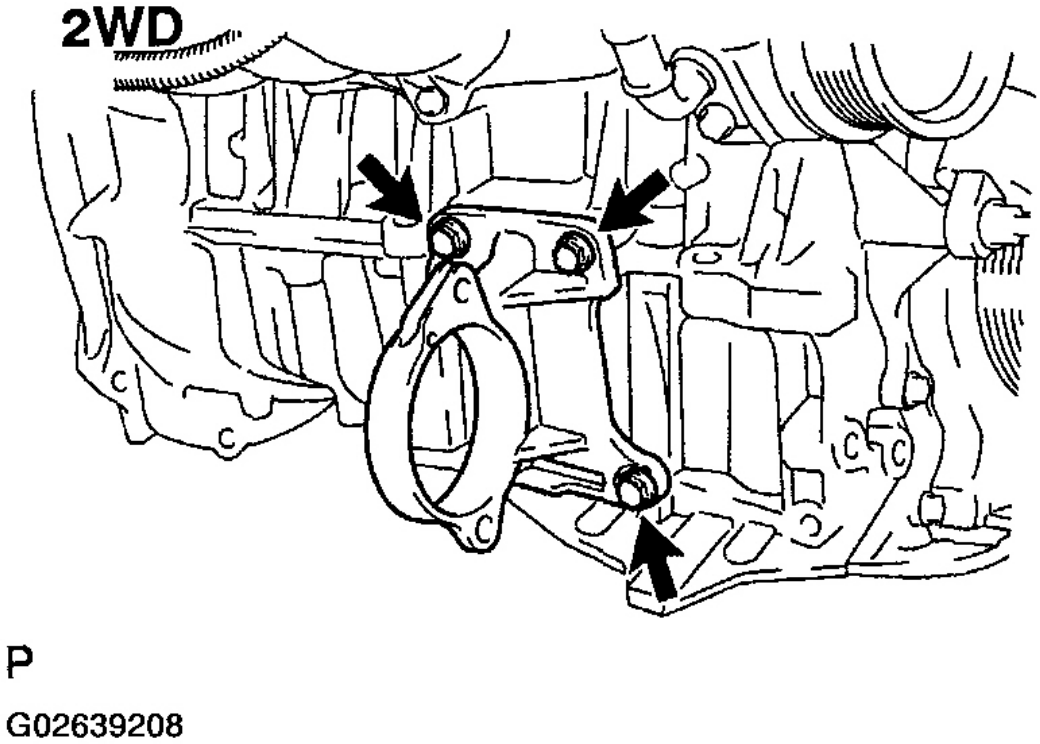

Fig. 199: Installing Center Bearing Bracket (2WD)
Courtesy of TOYOTA MOTOR SALES, U.S.A., INC.

11. **4WD: INSTALL STIFFENER PLATE**

Install the stiffener plate with the 5 bolts.

Torque: 34 N.m (347 kgf.cm, 25 ft.lbf)

cardiagn.com

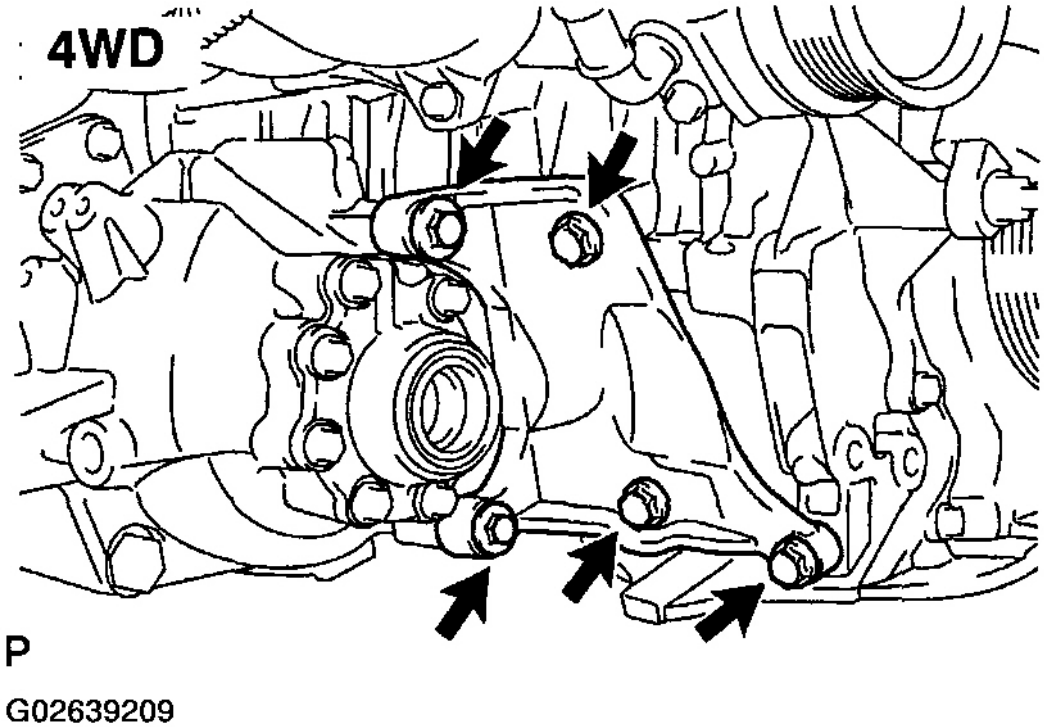

Fig. 200: Installing Stiffener Plate (4WD)
Courtesy of TOYOTA MOTOR SALES, U.S.A., INC.

12. **INSTALL ENGINE AND TRANSAXLE ASSEMBLY TO FRONT SUSPENSION CROSSMEMBER AND CENTER ENGINE MOUNTING MEMBER**
    a. Attach the engine and transaxle assembly to the suspension crossmember and engine mounting member.
    b. Install the bolt holding the rear engine mounting bracket to the mounting insulator.

       Torque: 88 N.m (898 kgf.cm, 65 ft.lbf)

cardiagn.com

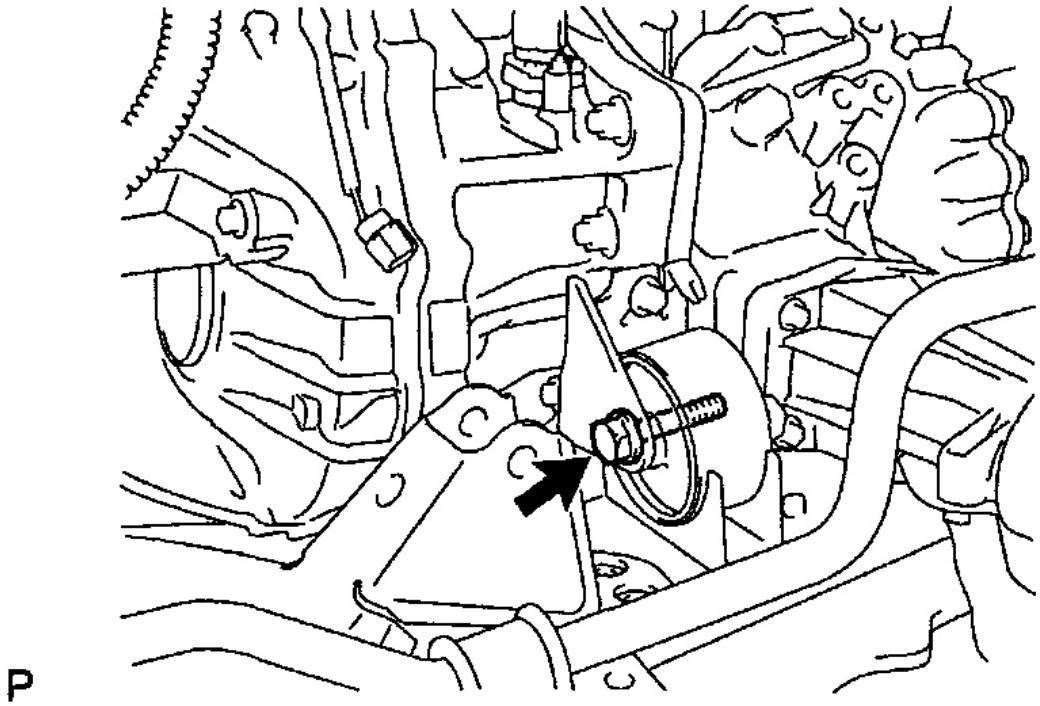

Fig. 201: Installing Bolt Holding Rear Engine Mounting Bracket To Mounting Insulator
Courtesy of TOYOTA MOTOR SALES, U.S.A., INC.

c. Install the bolt holding the front engine mounting bracket to the mounting insulator.

Torque: 56 N.m (571 kgf.cm, 41 ft.lbf)

cardiagn.com

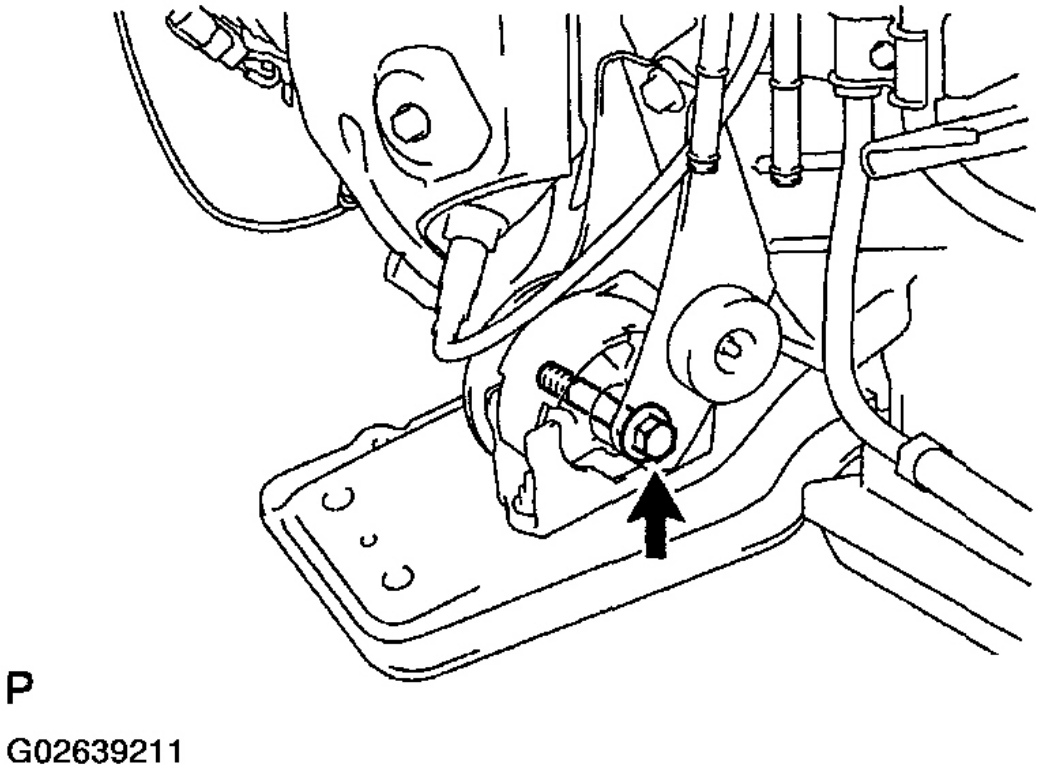

Fig. 202: Installing Bolt Holding Front Engine Mounting Bracket To Mounting Insulator
Courtesy of TOYOTA MOTOR SALES, U.S.A., INC.

13. **INSTALL ENGINE, TRANSAXLE, FRONT SUSPENSION CROSSMEMBER AND CENTER ENGINE MOUNTING MEMBER ASSEMBLY IN VEHICLE**
    a. Attach the engine sling device to the engine hangers.
    b. Lift the engine into the engine compartment.

cardiagn.com

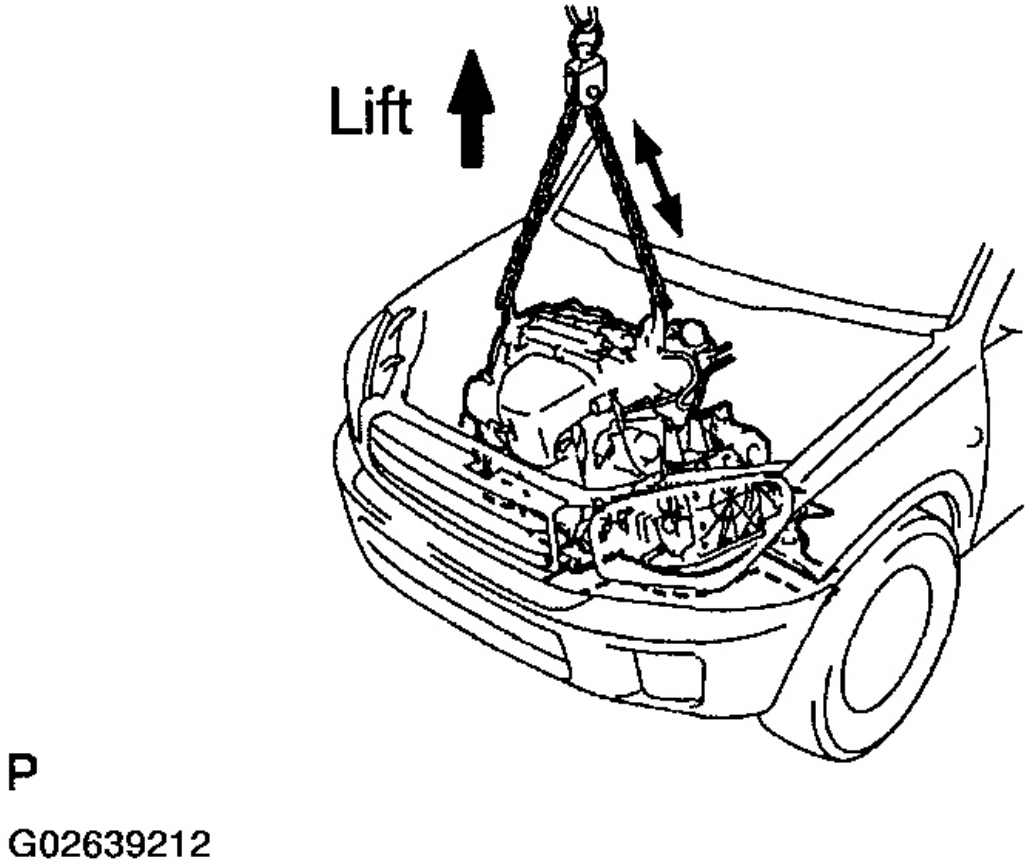

Fig. 203: Lifting Engine Into Engine Compartment
Courtesy of TOYOTA MOTOR SALES, U.S.A., INC.

c. Install the bolt and 2 nuts holding the RH engine mounting insulator to the timing chain cover.

Torque: 52 N.m (530 kgf.cm, 38 ft.lbf)

cardiagn.com

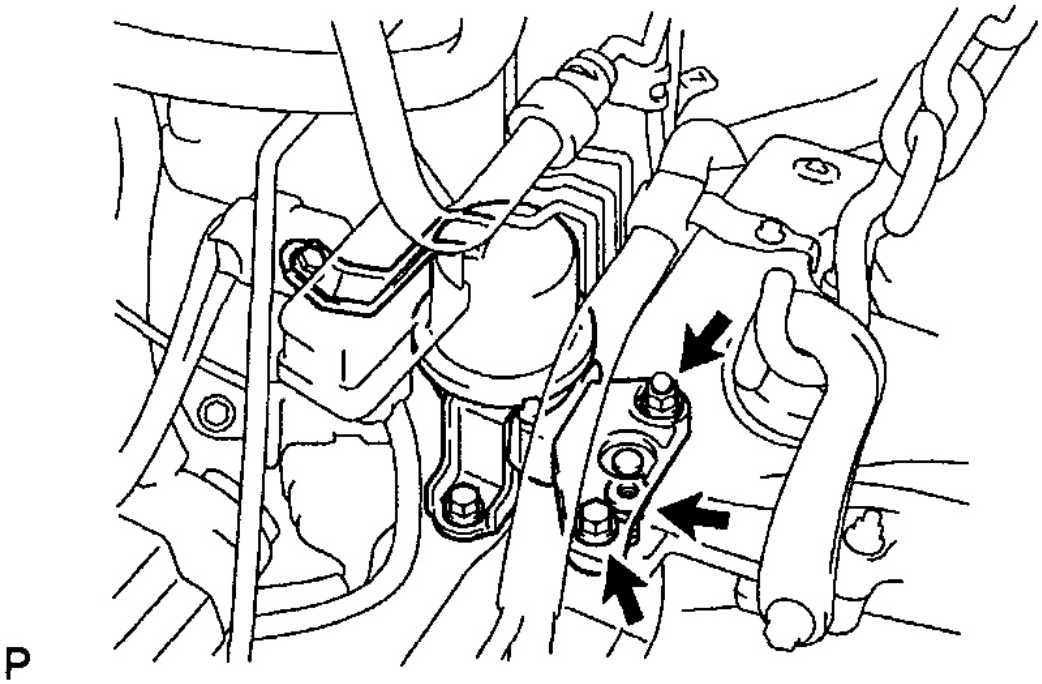

Fig. 204: Installing RH Engine Mounting Insulator To Timing Chain Cover
Courtesy of TOYOTA MOTOR SALES, U.S.A., INC.

d. Install the bolt holding the LH engine mounting bracket to the mounting insulator.

Torque: 56 N.m (571 kgf.cm, 41 ft.lbf)

cardiagn.com

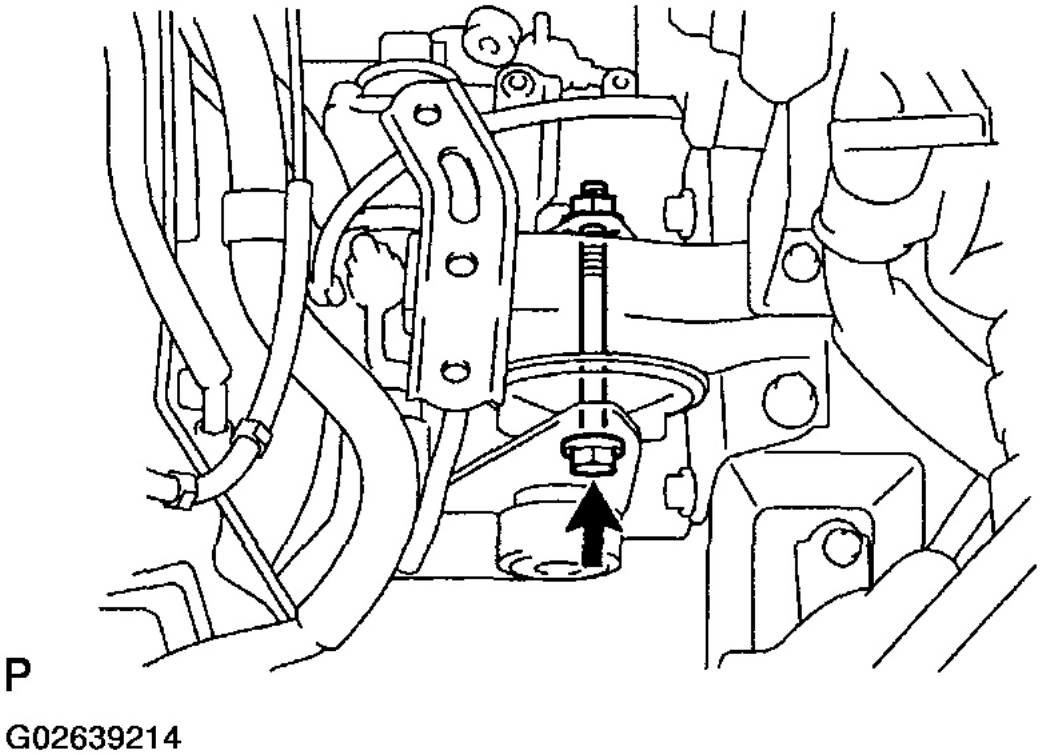

Fig. 205: Installing LH Engine Mounting Bracket To Mounting Insulator
Courtesy of TOYOTA MOTOR SALES, U.S.A., INC.

e. Support the suspension crossmember with a jack.
f. Install the 6 bolts holding the suspension crossmember engine mounting member to the body.

Torque:

39 N.m (398 kgf.cm, 29 ft.lbf) for bolt A

113 N.m (1,153 kgf.cm, 83 ft.lbf) for bolt B

157 N.m (1,601 kgf.cm, 116 ft.lbf) for bolt C

cardiagn.com

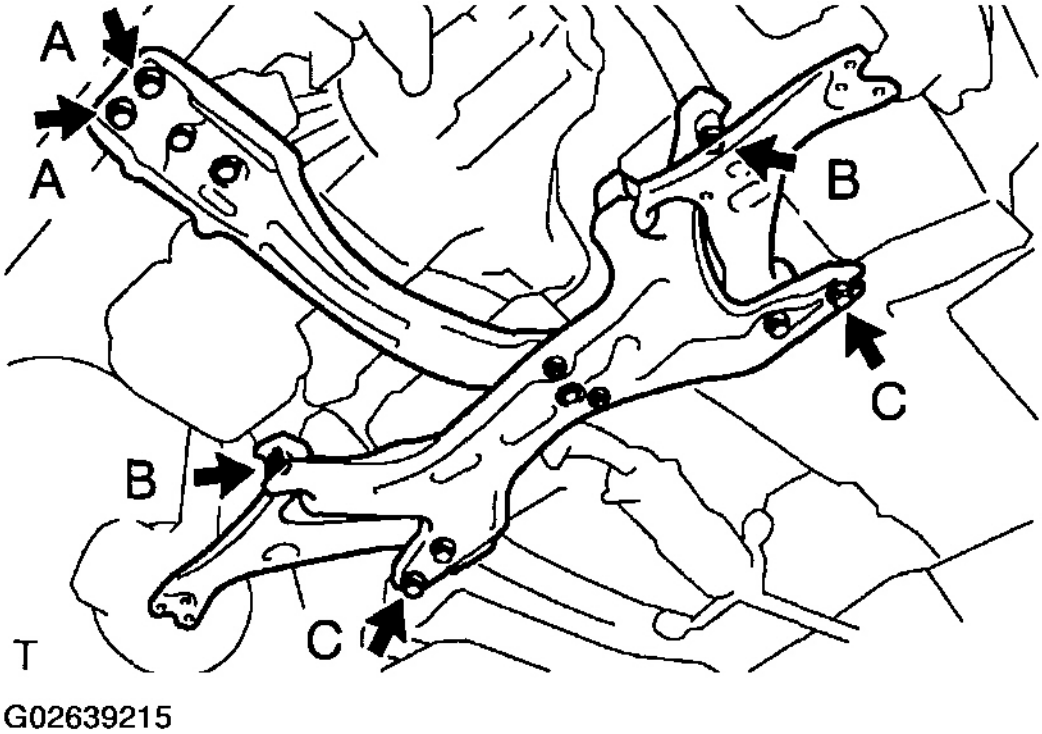

Fig. 206: Installing Front Suspension Crossmember
Courtesy of TOYOTA MOTOR SALES, U.S.A., INC.

14. **INSTALL PS GEAR ASSEMBLY**

Install the PS gear assembly with the 2 bolts.

Torque: 137 N.m (1,397 kgf.cm, 101 ft.lbf)

cardiagn.com

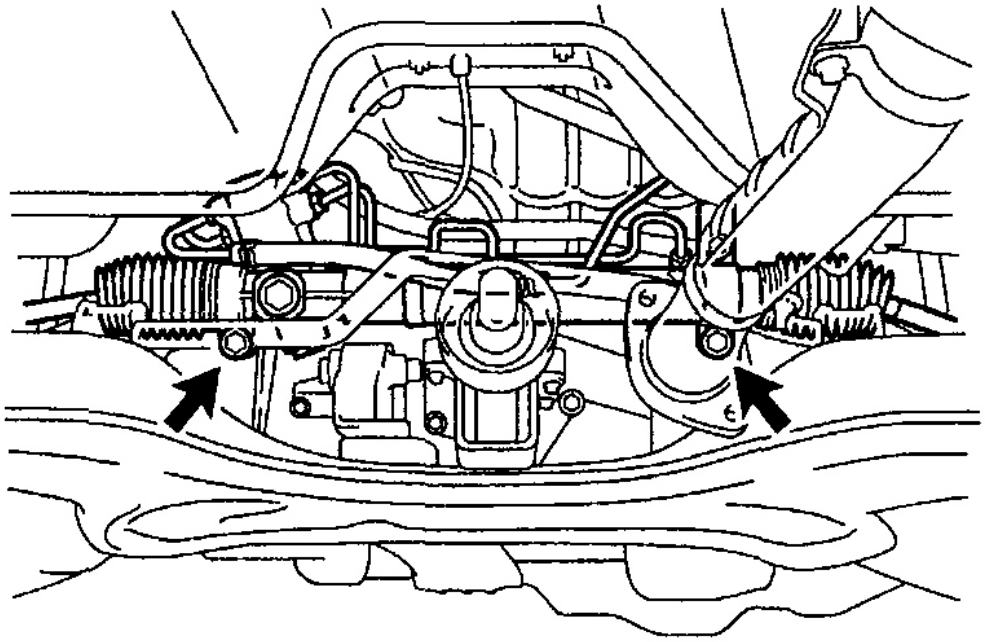

Fig. 207: Installing PS Gear Assembly
Courtesy of TOYOTA MOTOR SALES, U.S.A., INC.

15. **REMOVE NO. 1 AND NO. 2 ENGINE HANGERS**
16. **CONNECT STABILIZER BAR LINKS**

Connect the LH and RH stabilizer links with the 2 nuts.

Torque: 44 N.m (449 kgf.cm, 32 ft.lbf)

cardiagn.com

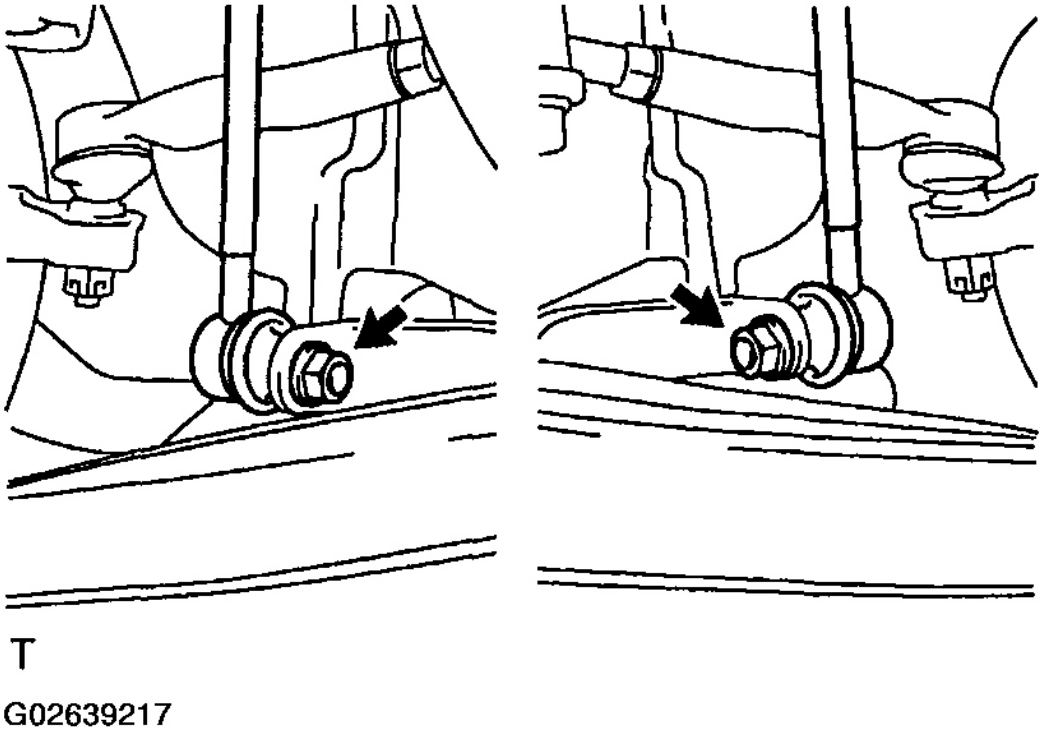

Fig. 208: Connecting LH & RH Stabilizer Links
Courtesy of TOYOTA MOTOR SALES, U.S.A., INC.

17. **INSTALL FRONT EXHAUST PIPE**

Install 2 new gaskets and the exhaust pipe, with the 2 compression rings and 4 bolts.

Torque:

43 N.m (439 kgf.cm, 32 ft.lbf) for bolt A

49 N.m (500 kgf.cm, 36 ft.lbf) for bolt B

cardiagn.com

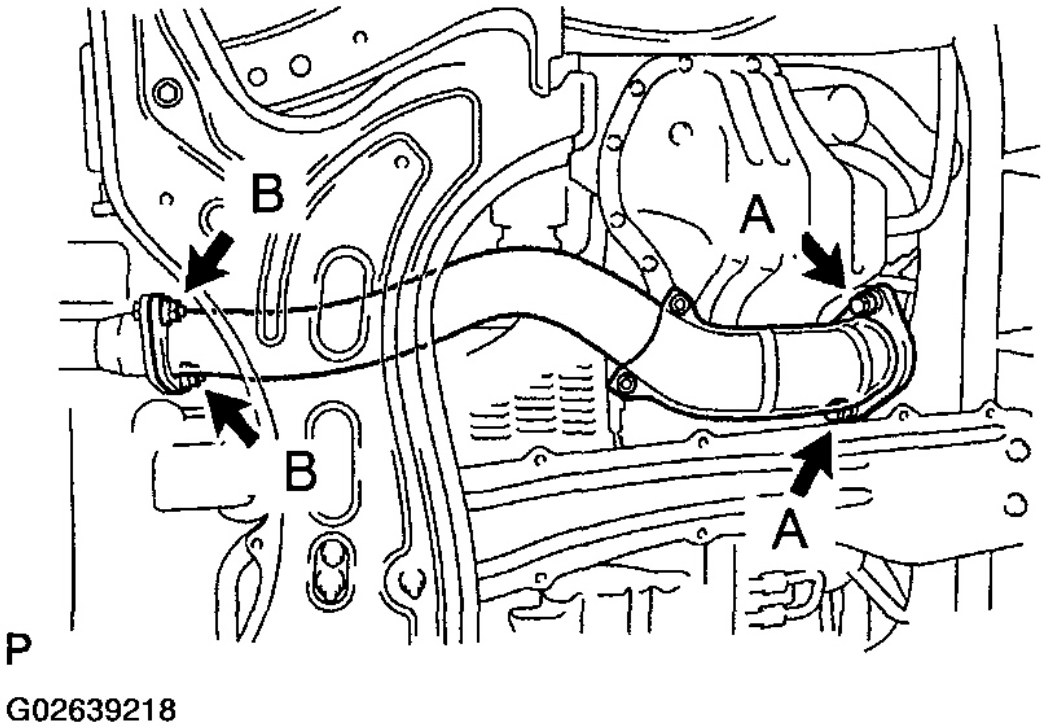

Fig. 209: Installing Front Exhaust Pipe
Courtesy of TOYOTA MOTOR SALES, U.S.A., INC.

18. **INSTALL LH AND RH FRONT DRIVE SHAFTS (See INSTALLATION)**
19. **4WD: INSTALL PROPELLER SHAFT (See INSTALLATION)**
20. **CONNECT GROUND CABLE TO TRANSAXLE**

    Torque: 19 N.m (195 kgf.cm, 14 ft.lbf)

21. **A/T: CONNECT OIL COOLER HOSES**

cardiagn.com

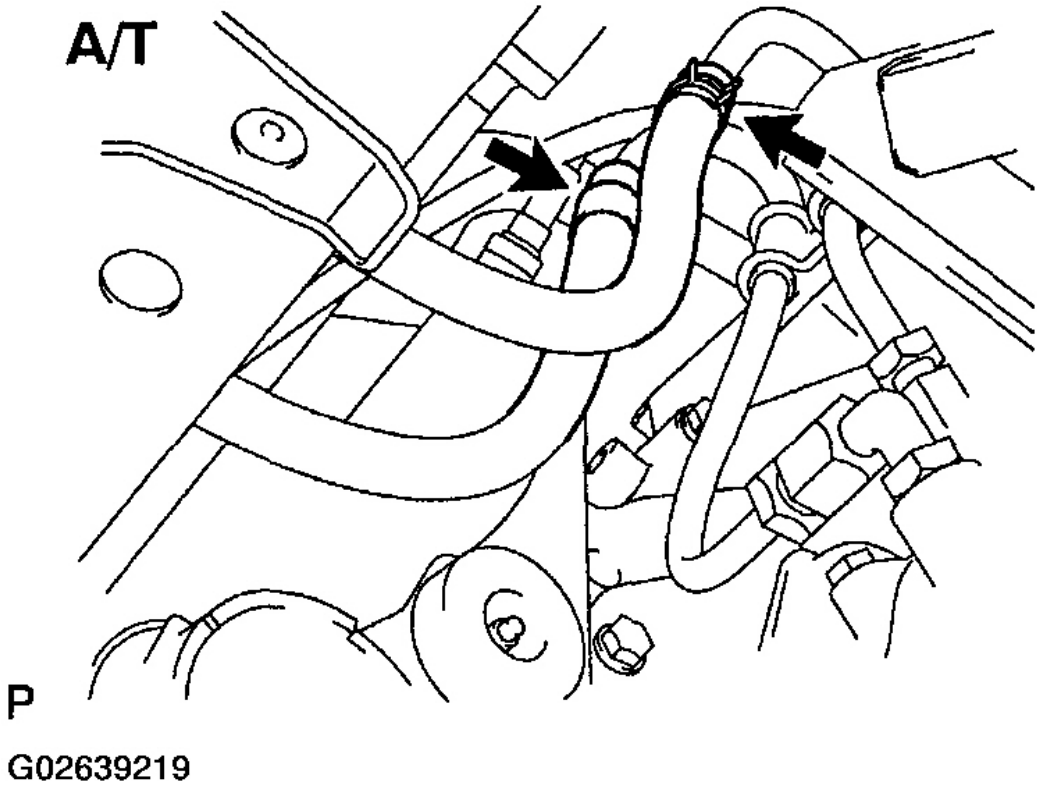

Fig. 210: Connecting Oil Cooler Hoses (A/T)
Courtesy of TOYOTA MOTOR SALES, U.S.A., INC.

22. **A/T: CONNECT SHIFT CONTROL CABLE TO TRANSAXLE**
    a. Connect the control cable with the nut.

       Torque: 15 N.m (153 kgf.cm, 11 ft.lbf)

    b. Connect the control cable with the clip.
    c. Connect the control cable to the cable clamp.

cardiagn.com

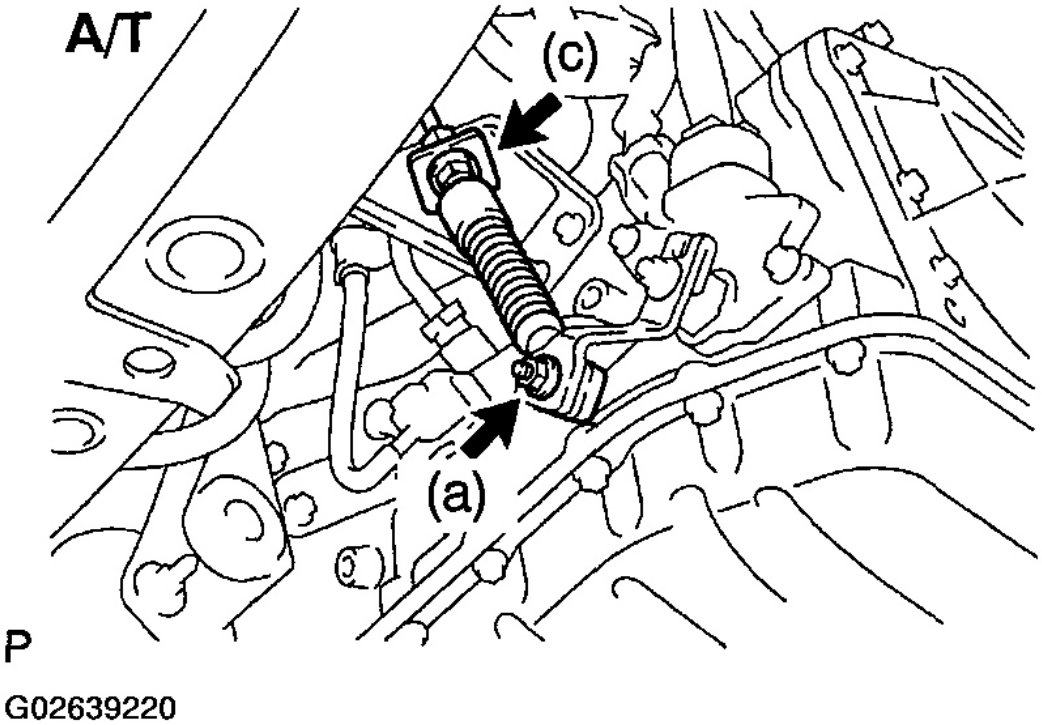

Fig. 211: Connecting Control Cable (A/T)
Courtesy of TOYOTA MOTOR SALES, U.S.A., INC.

23. **M/T: INSTALL CLUTCH RELEASE CYLINDER AND TUBE**
    a. Install the release cylinder with the 5 bolts.

    Torque:

    25 N.m (255 kgf.cm, 18 ft.lbf) for bolt A

    12 N.m (122 kgf.cm, 9 ft.lbf) for bolt B

    5.0 N.m (51 kgf.cm, 44 in.lbf) for bolt C

cardiagn.com

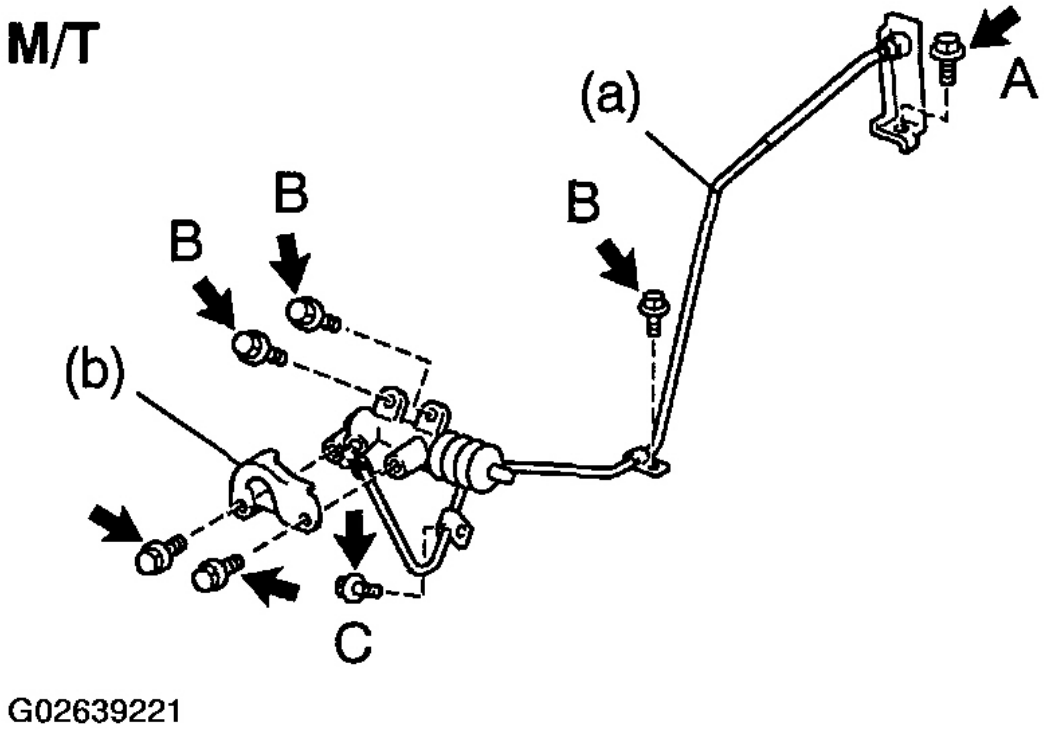

Fig. 212: Installing Clutch Release Cylinder & Tube (M/T)
Courtesy of TOYOTA MOTOR SALES, U.S.A., INC.

b. Install the heat insulator with the 2 bolts.

Torque: 12 N.m (122 kgf.cm, 9 ft.lbf)

24. **INSTALL STARTER**
    a. Install the starter.
    b. Connect the starter cable with the nut.

    Torque: 8.8 N.m (90 kgf.cm, 78 in.lbf)

    c. Install the starter with the 2 bolts.

    Torque: 37 N.m (377 kgf.cm, 27 ft.lbf)

    d. Connect the connector.

cardiagn.com

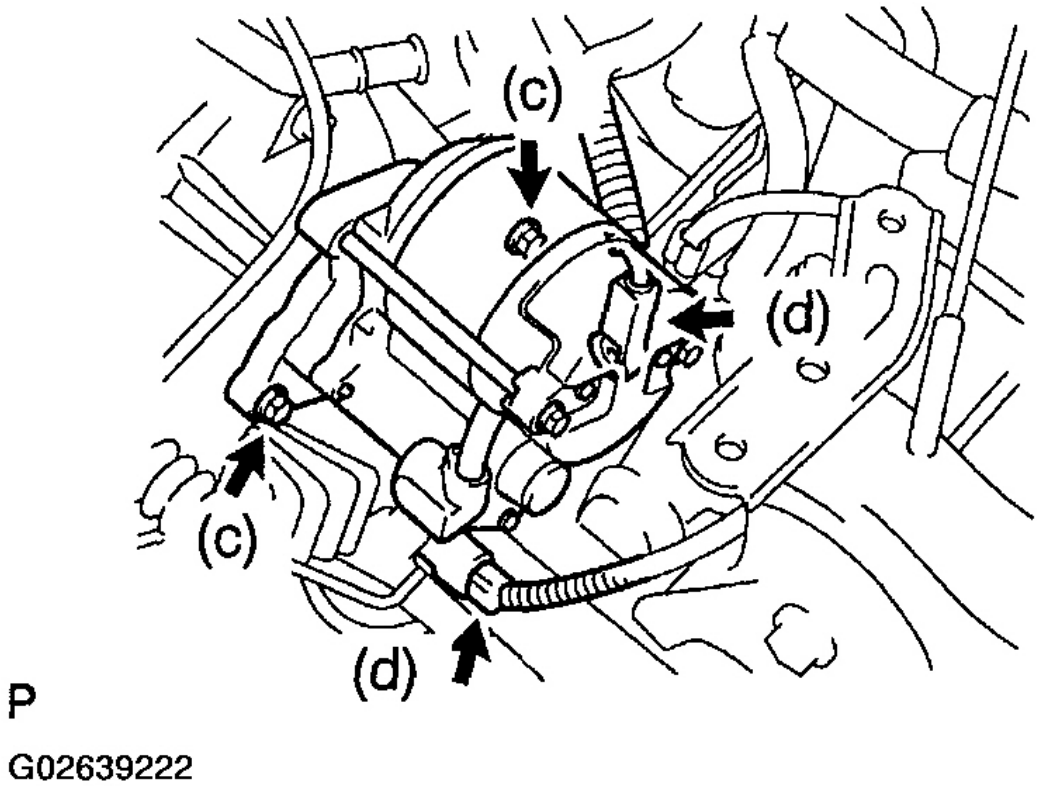

Fig. 213: Installing Starter
Courtesy of TOYOTA MOTOR SALES, U.S.A., INC.

e. Connect the hose to the dipstick guide.

25. **M/T: CONNECT SHIFT CONTROL CABLES TO TRANSAXLE**
    a. Connect the 2 control cables with the 2 clips.
    b. Install the 2 washers and 2 clips.

cardiagn.com

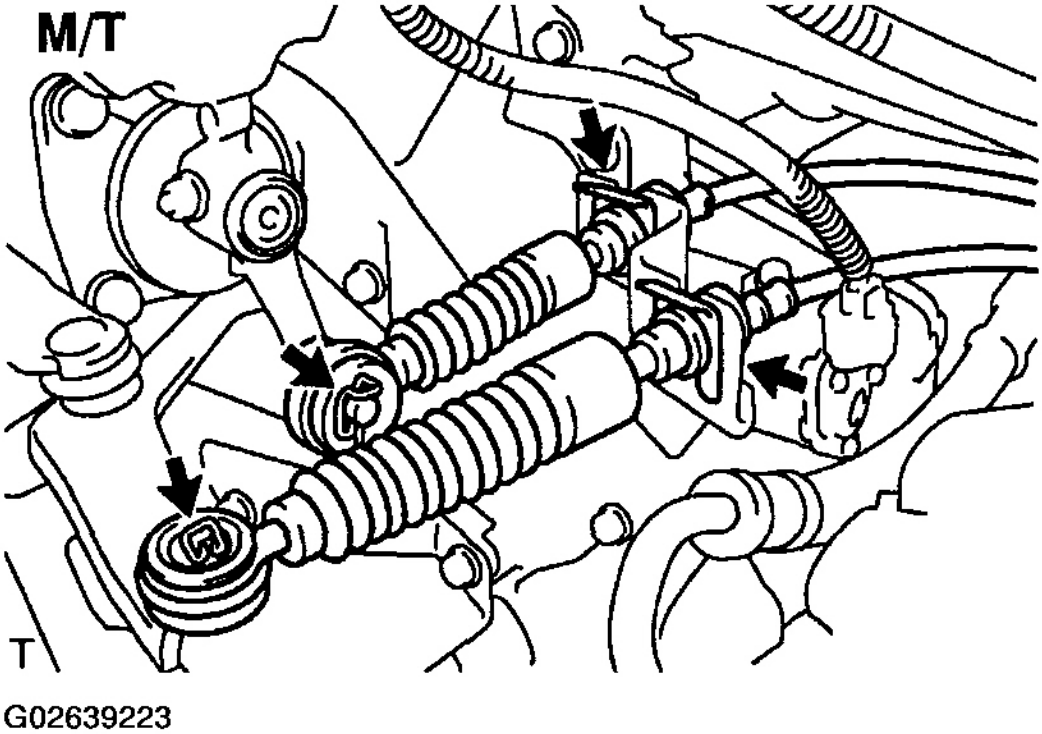

Fig. 214: Connecting Shift Control Cables To Transaxle (M/T)
Courtesy of TOYOTA MOTOR SALES, U.S.A., INC.

26. **CONNECT TUBES, HOSES, CONNECTOR, CABLE AND WIRE**
    a. Install 2 new O-rings, and connect the discharge and liquid tubes to the compressor (see **REMOVAL**).

cardiagn.com

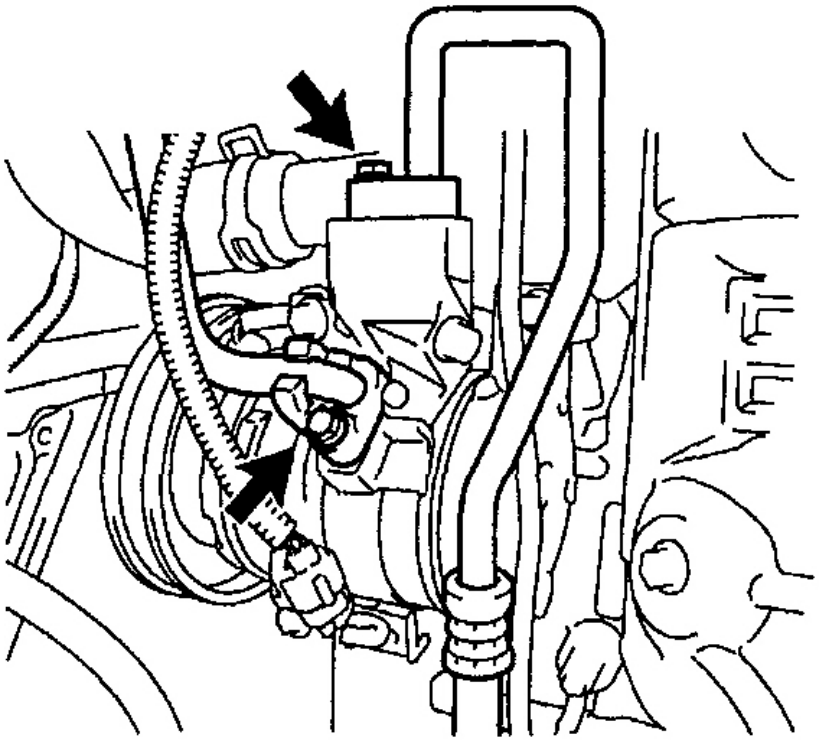

Fig. 215: Connecting Discharge & Liquid Tubes To A/C Compressor
Courtesy of TOYOTA MOTOR SALES, U.S.A., INC.

b. Connect the accelerator cable.
c. Connect the ground wire to the cylinder head.
d. Install a new gasket, and connect the suction hose and pressure feed tube to the PS vane pump.

cardiagn.com

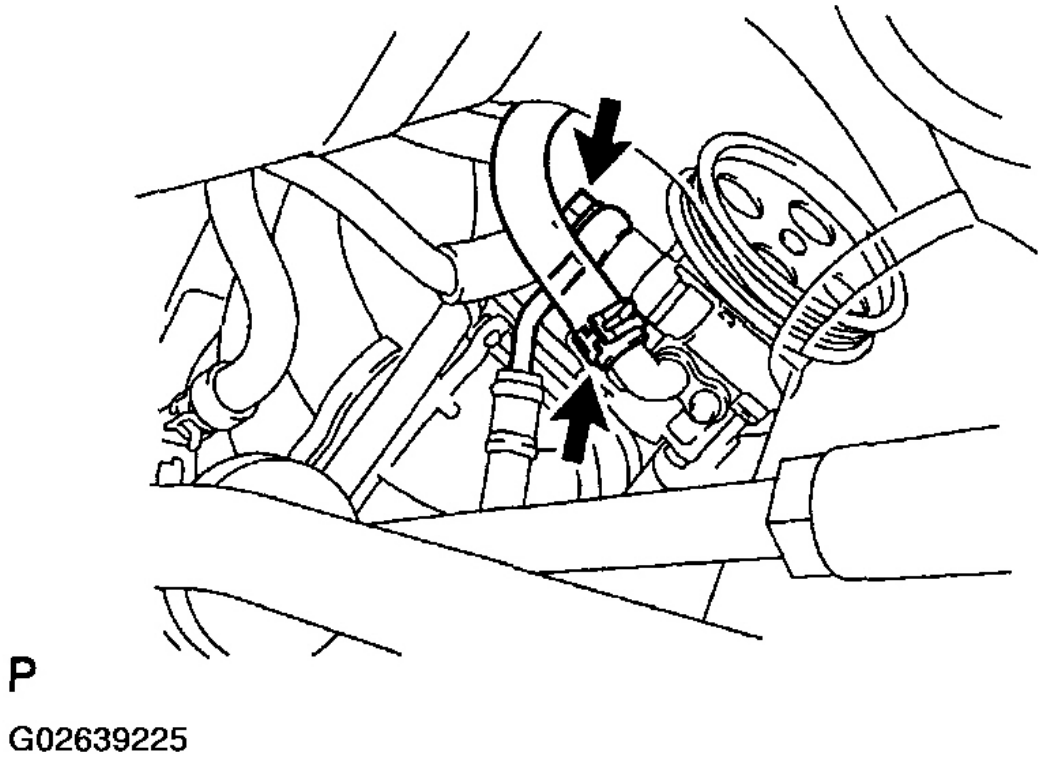

Fig. 216: Installing Suction Hose And Pressure Feed Tube To PS Vane Pump
Courtesy of TOYOTA MOTOR SALES, U.S.A., INC.

e. Connect the upper radiator hose.
f. Connect the lower radiator hose.
g. Connect the fuel tube connector (see **SFI**).
h. Connect the 2 heater hoses.
i. Connect the connector to the fusible link block.

cardiagn.com

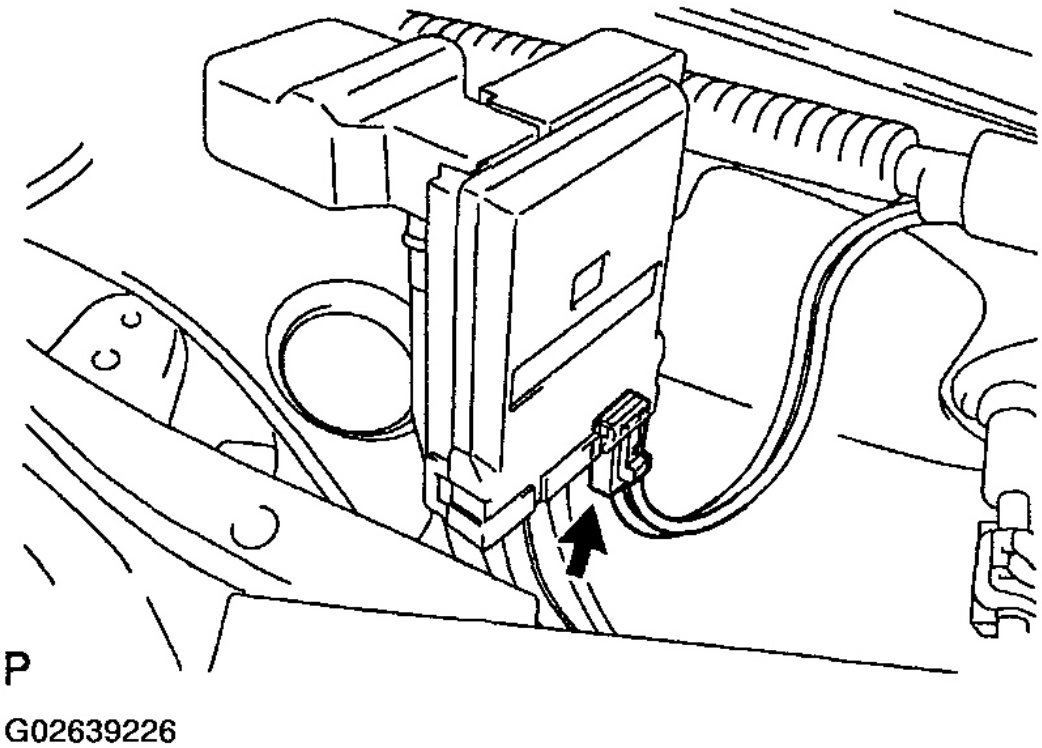

Fig. 217: Connecting Harness Connector To Fusible Link Block
Courtesy of TOYOTA MOTOR SALES, U.S.A., INC.

27. **CONNECT ENGINE WIRE TO CABIN**
    a. Push in engine wire through the cabin.
    b. Connect the 6 engine wire connectors to the ECM and instrument panel wire.
    c. Install the glove compartment door with the 2 screws.
28. **INSTALL ENGINE ROOM J/B**
    a. Connect the engine wire clamp.
    b. Connect the connector.
    c. Push into the engine wire connector.
    d. Install the engine room J/B, and tighten the bolt until it fails to catch.
    e. Install the engine room J/B cover.

cardiagn.com

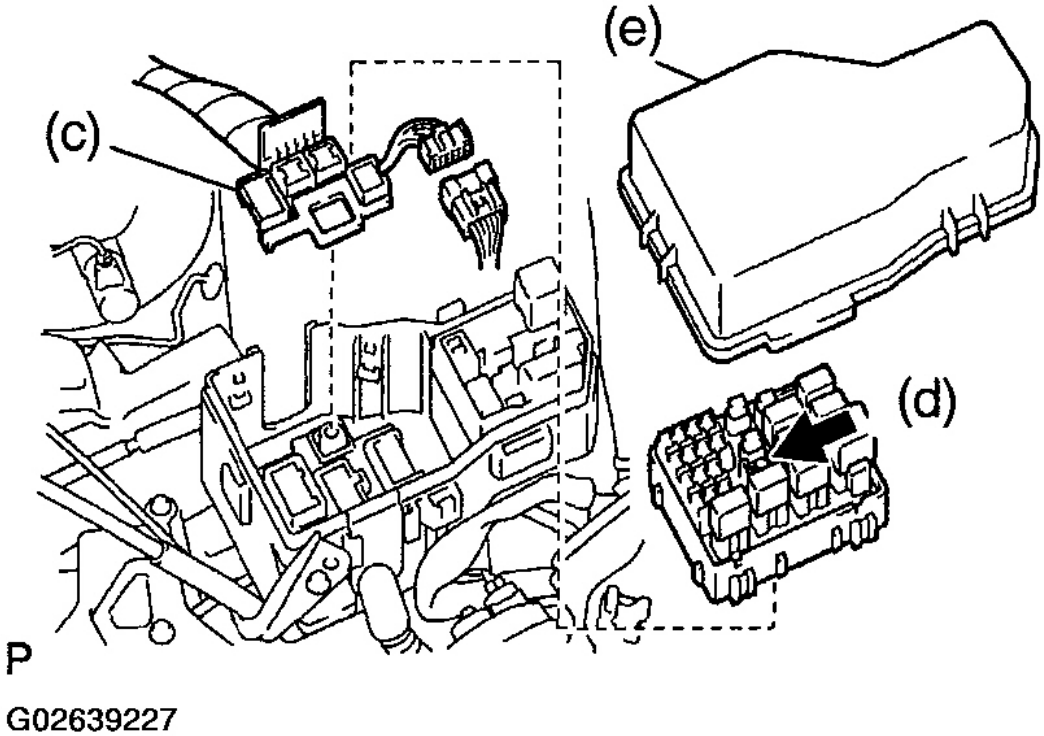

Fig. 218: Installing Engine Room Junction/Box
Courtesy of TOYOTA MOTOR SALES, U.S.A., INC.

29. **INSTALL AIR CLEANER ASSEMBLY**
    a. Connect the air cleaner hose to the throttle body, and install the air cleaner assembly with the 3 bolts.
    b. Connect the MAF meter connector.
    c. Connect the 2 EVAP hoses to the VSV.
    d. Connect the VSV connector for EVAP.
    e. Connect the CCV hose to the air cleaner.
    f. Connect the PCV hose to the cylinder head cover.

cardiagn.com

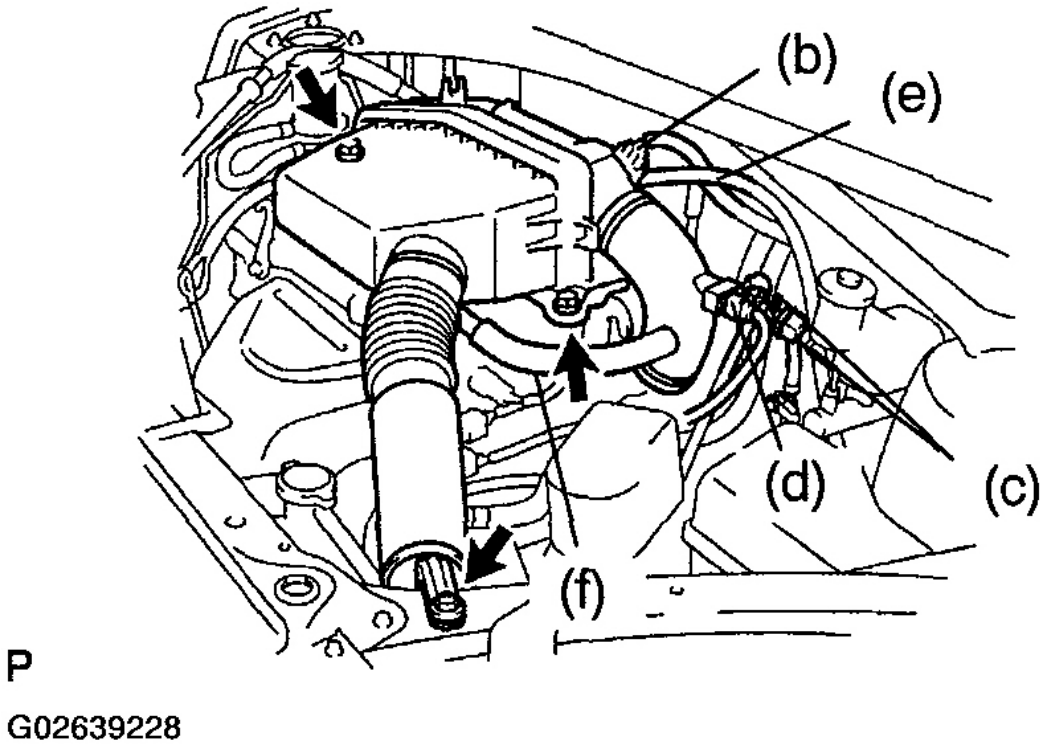

Fig. 219: Installing Air Cleaner Assembly
Courtesy of TOYOTA MOTOR SALES, U.S.A., INC.

30. **INSTALL BATTERY AND TRAY**
    a. Install the battery bracket with the 5 bolts.
    b. Install the battery tray and battery with the hold-down clamp.

cardiagn.com

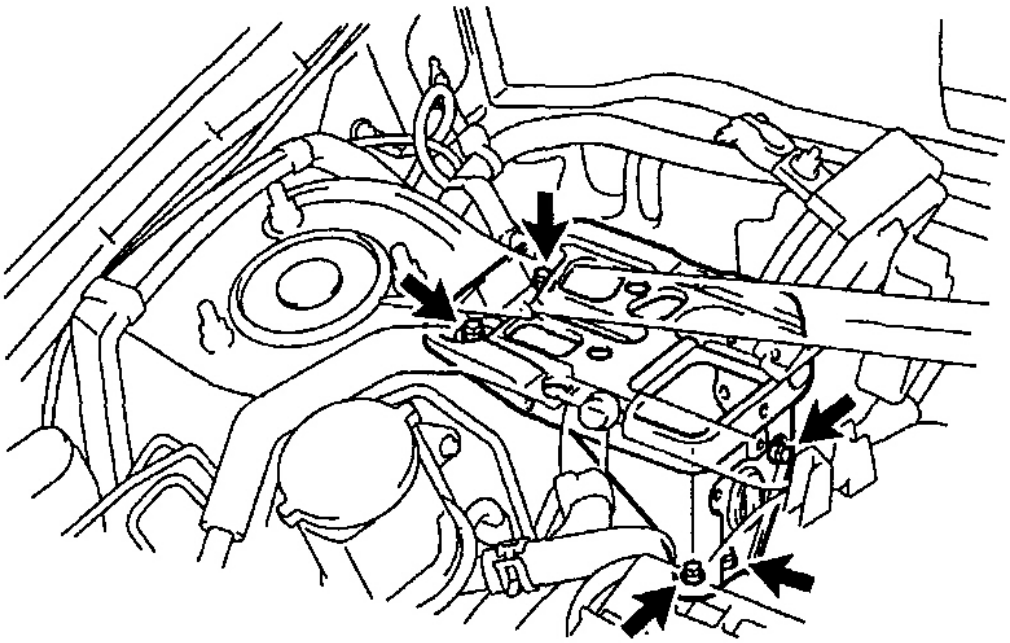

Fig. 220: Installing Battery Bracket
Courtesy of TOYOTA MOTOR SALES, U.S.A., INC.

c. Install the cowl top ventilation louver (see **INSTALLATION**).

31. **INSTALL RADIATOR RESERVOIR TANK**
32. **INSTALL HOOD (See HOOD)**
33. **FILL WITH ENGINE COOLANT**
34. **FILL WITH ENGINE OIL**
35. **FILL WITH TRANSFER OIL**
36. **FILL WITH TRANSAXLE OIL**
37. **START ENGINE AND CHECK FOR LEAKS**
38. **BLEED POWER STEERING SYSTEM (See BLEEDING)**
39. **PERFORM ROAD TEST**

Check for abnormal noise, shock, slippage, correct shift points and smooth operation.

40. **RECHECK ENGINE COOLANT AND OIL LEVELS**
41. **INSTALL ENGINE UNDER COVERS**

cardiagn.com

CYLINDER BLOCK

COMPONENTS

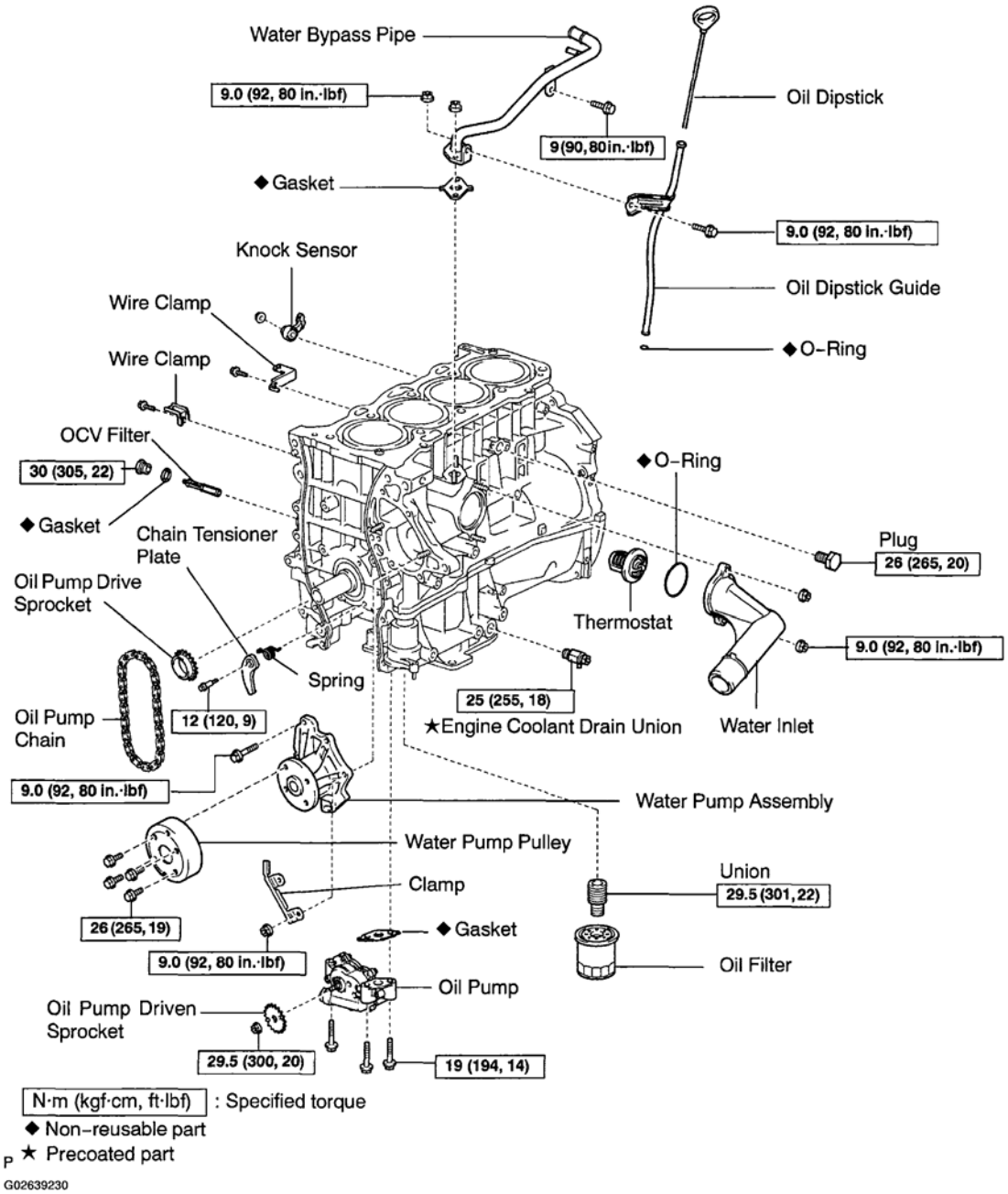

Fig. 221: Identifying Cylinder Block Components & Torque Specifications (1 Of 2)
Courtesy of TOYOTA MOTOR SALES, U.S.A., INC.

cardiagn.com

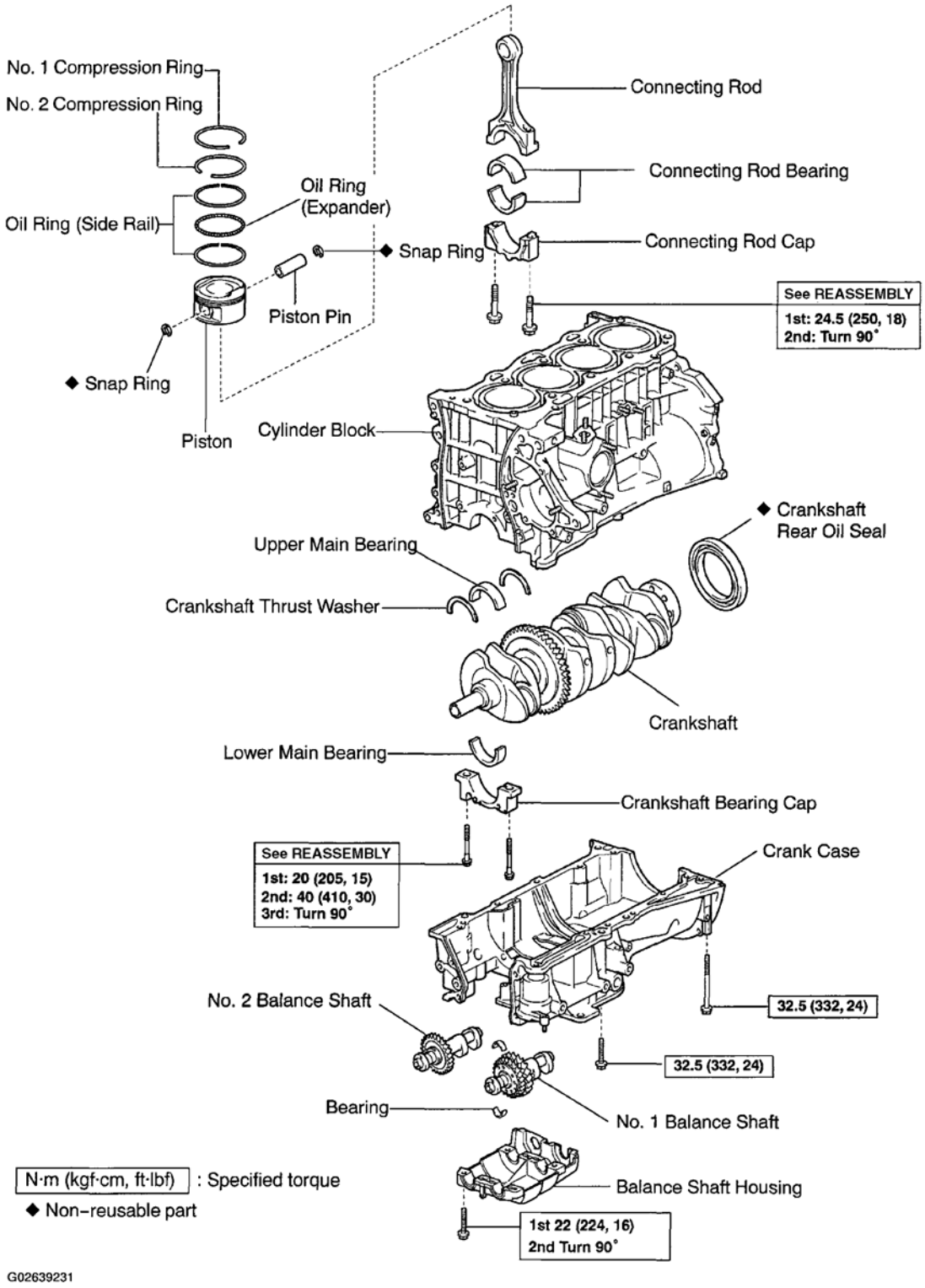

Fig. 222: Identifying Cylinder Block Components & Torque Specifications (2 Of 2)
Courtesy of TOYOTA MOTOR SALES, U.S.A., INC.

cardiagn.com

DISASSEMBLY

1. **INSTALL ENGINE TO ENGINE STAND FOR DISASSEMBLY**
2. **REMOVE TIMING CHAIN (See REMOVAL)**
3. **REMOVE CYLINDER HEAD (See REMOVAL)**
4. **REMOVE KNOCK SENSOR (See KNOCK SENSOR)**
5. **REMOVE ENGINE WIRE CLAMPS**
6. **REMOVE PLUG**
7. **REMOVE OCV FILTER**

   Using a 12 mm hexagon wrench, remove the plug, gasket and OCV filter.

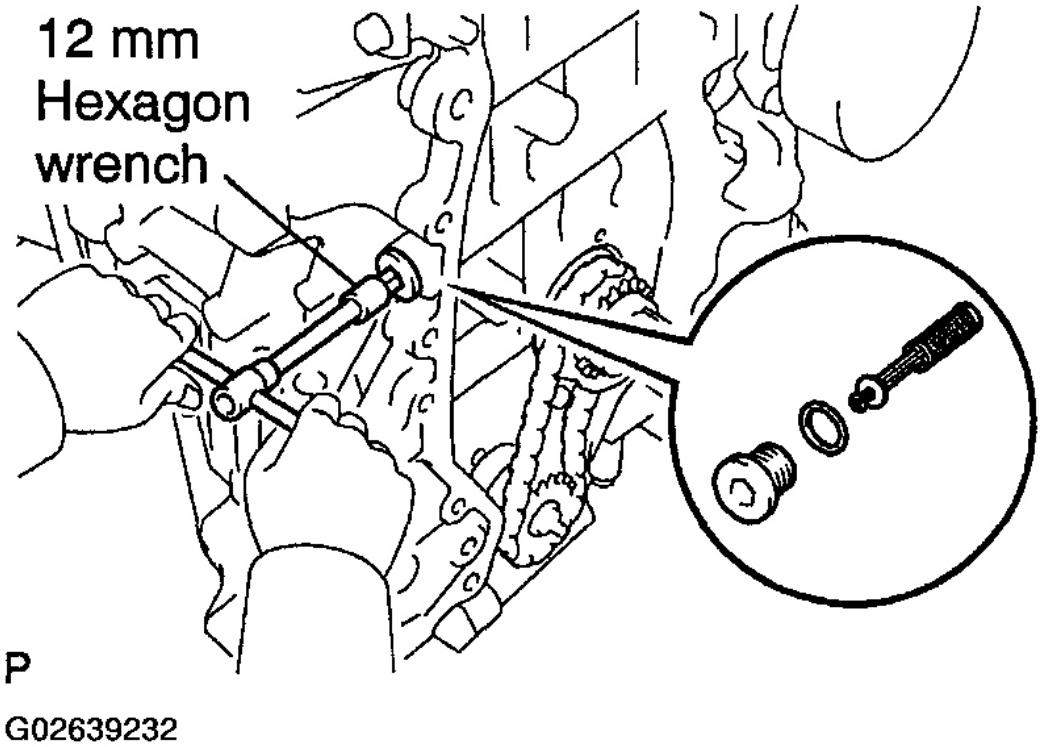

Fig. 223: Removing Plug, Gasket & OCV Filter
Courtesy of TOYOTA MOTOR SALES, U.S.A., INC.

8. **REMOVE WATER PUMP (See REMOVAL)**
9. **REMOVE THERMOSTAT (See REMOVAL)**
10. **REMOVE ENGINE COOLANT DRAIN UNION**

cardiagn.com

11. **REMOVE OIL DIPSTICK AND GUIDE**
    a. Remove the bolt, oil dipstick and guide.
    b. Remove the O-ring from the oil dipstick.

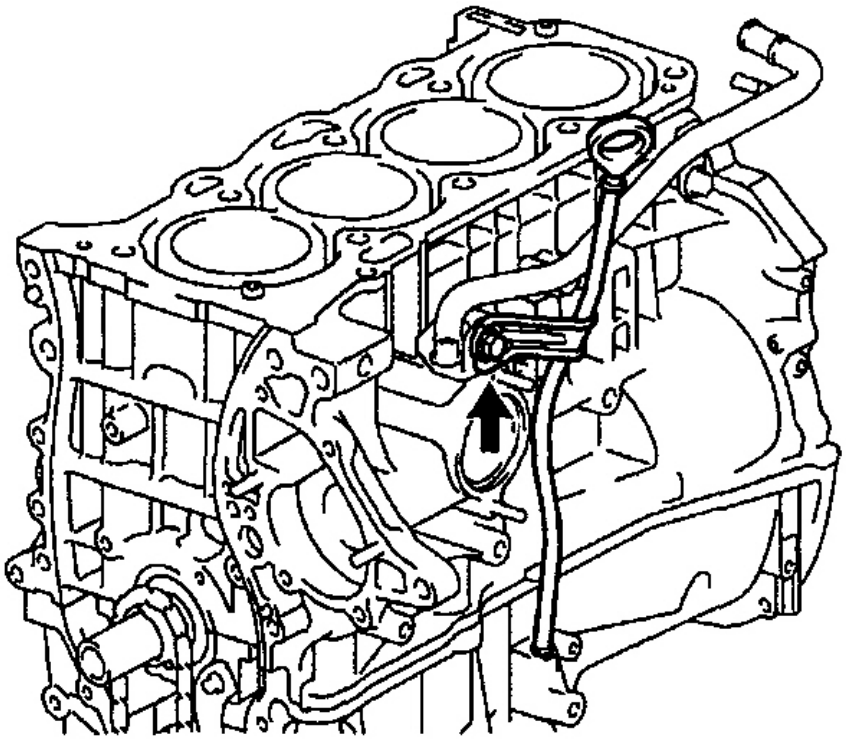

P

G02639233

Fig. 224: Removing Oil Dipstick & Guide
Courtesy of TOYOTA MOTOR SALES, U.S.A., INC.

12. **REMOVE WATER BYPASS PIPE**

    Remove the 2 nuts, bolt, water bypass pipe and gasket.

cardiagn.com

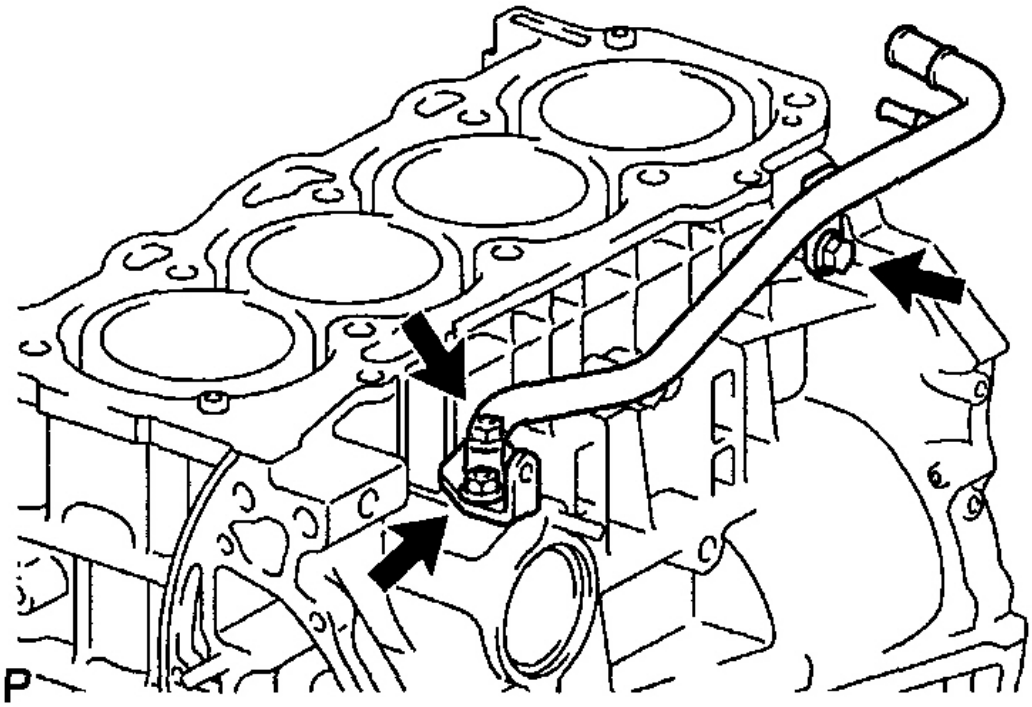

Fig. 225: Removing Water Bypass Pipe
Courtesy of TOYOTA MOTOR SALES, U.S.A., INC.

13. **REMOVE OIL PUMP (See REMOVAL)**
14. **REMOVE OIL FILTER (See REPLACEMENT)**
15. **REMOVE OIL FILTER UNION**

Using a 12 mm hexagon wrench, remove the oil filter union.

cardiagn.com

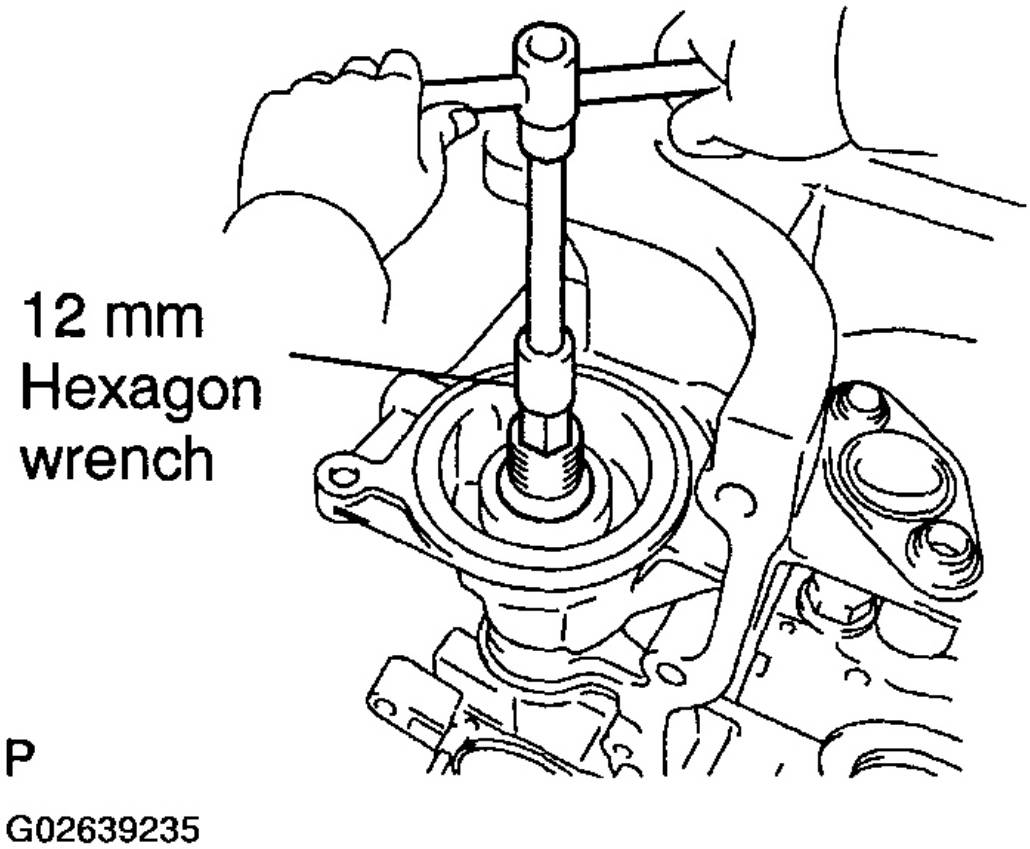

Fig. 226: Removing Oil Filter Union
Courtesy of TOYOTA MOTOR SALES, U.S.A., INC.

16. **CHECK BALANCE SHAFT THRUST CLEARANCE**

Using a dial indicator, measure the thrust clearance while moving the balance shaft back and forth.

Standard thrust clearance:

0.050 to 0.090 mm (0.00197 to 0.00354 in.)

Maximum thrust clearance: 0.090 mm (0.00354 in.)

If the thrust clearance is greater than maximum, replace the balance shaft housing and bearings. If necessary, replace the balance shaft.

cardiagn.com

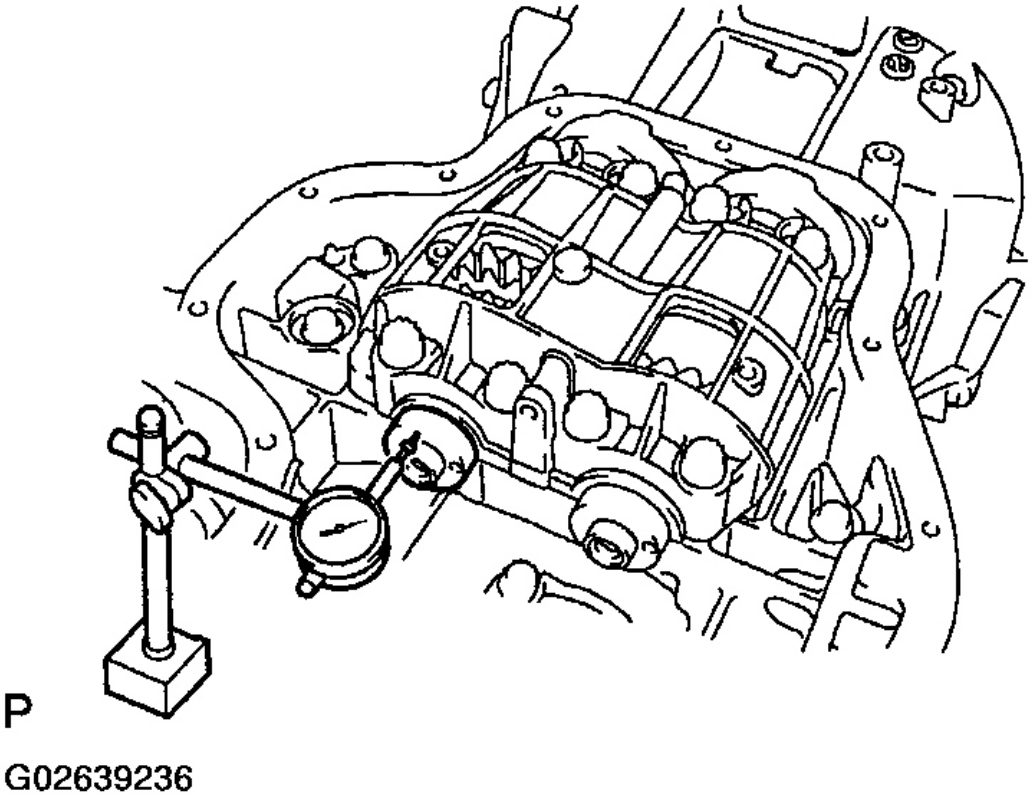

Fig. 227: Measuring Balance Shaft Thrust Clearance
Courtesy of TOYOTA MOTOR SALES, U.S.A., INC.

17. **REMOVE BALANCE SHAFT HOUSING AND CHECK OIL CLEARANCE**
    a. Uniformly loosen and remove the 8 bolts in several passes, in the sequence shown.

    If the balance shaft housing is difficult to lift up, pry between the balance shaft housing and crank case with a screwdriver.

cardiagn.com

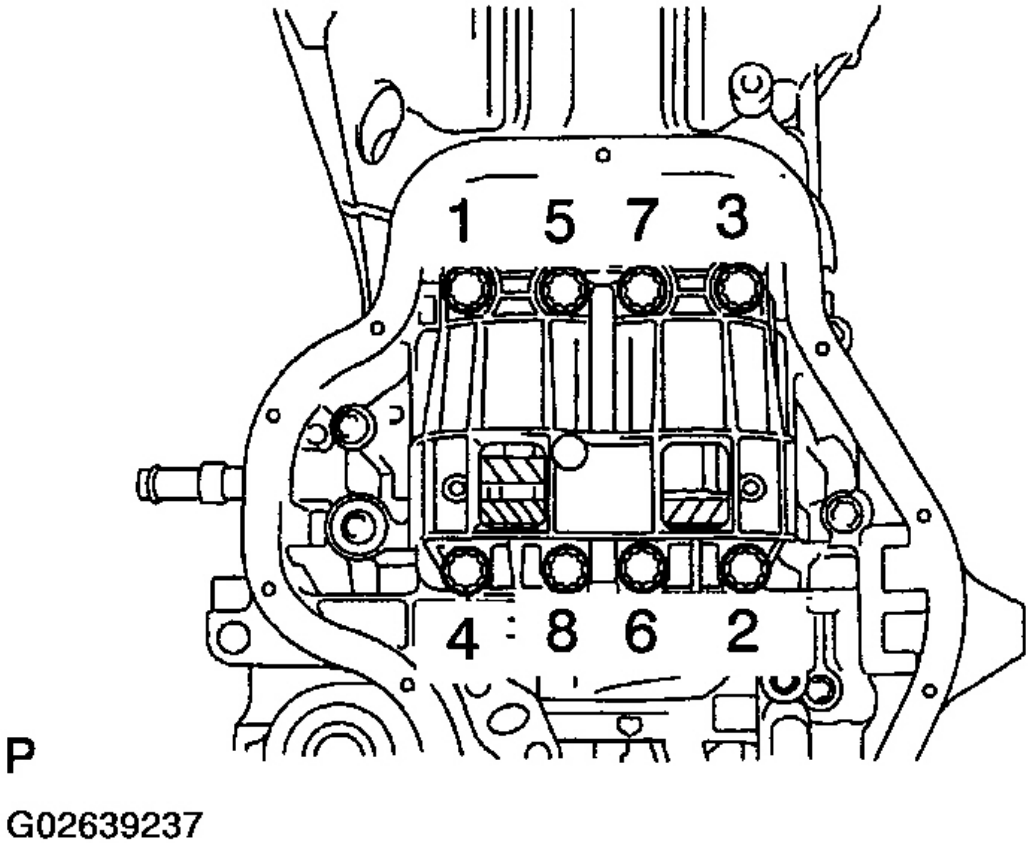

Fig. 228: Removing Balance Shaft Housing
Courtesy of TOYOTA MOTOR SALES, U.S.A., INC.

NOTE: Be careful not to damage the contact surfaces of the balance shaft housing and crank case.

HINT:

Keep the lower bearing and balance shaft housing together.

b. Lift out the No. 1 and No. 2 balance shafts.

HINT:

Keep the upper bearing with the crank case.

c. Clean each bearings and journals.

cardiagn.com

d. Check each bearings and journals for pitting and scratches.

If the bearing or journal is damaged, replace the bearings. If necessary, replace the balance shaft.

e. Place the No. 1 and No. 2 balance shafts on the crank case.
f. Lay a strip of Plastigage across each journal.

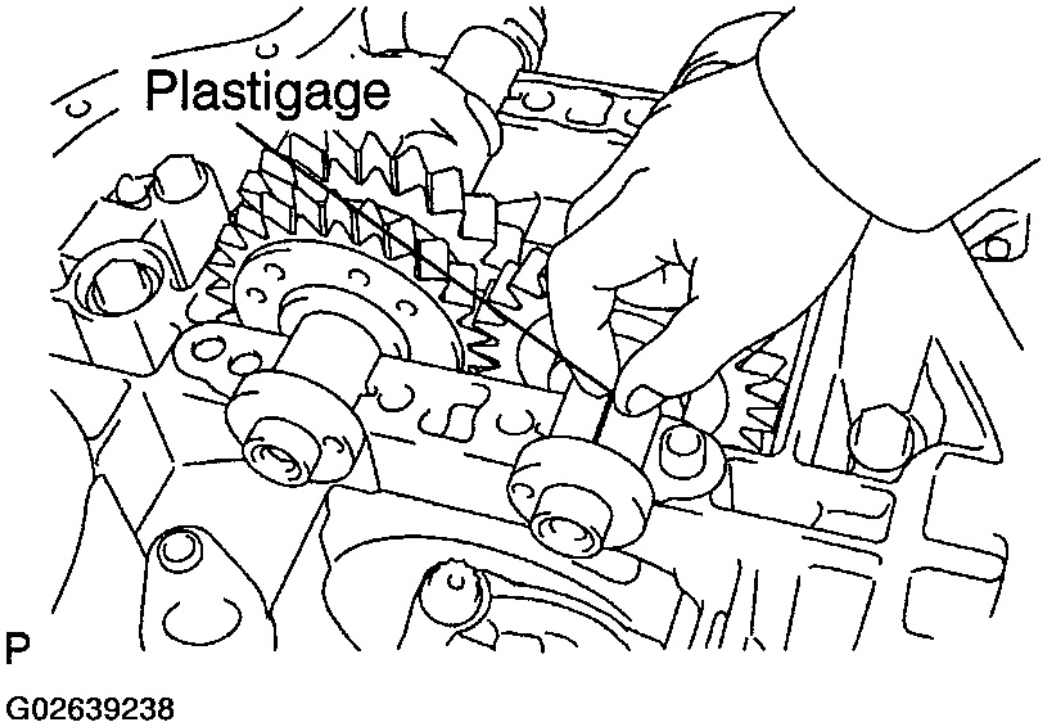

Fig. 229: Placing Plastigage Across Each Journal
Courtesy of TOYOTA MOTOR SALES, U.S.A., INC.

g. Install the balance shaft housing (see **REASSEMBLY**).

NOTE: Do not turn the balance shaft.

h. Remove the balance shaft housing (See procedure () above).
i. Measure the Plastigage at its widest point.

Standard clearance:

0.004 to 0.049 mm (0.00016 to 0.00192 in.)

cardiagn.com

If the oil clearance is greater than standard, replace the bearings.

If necessary, replace the balance shaft.

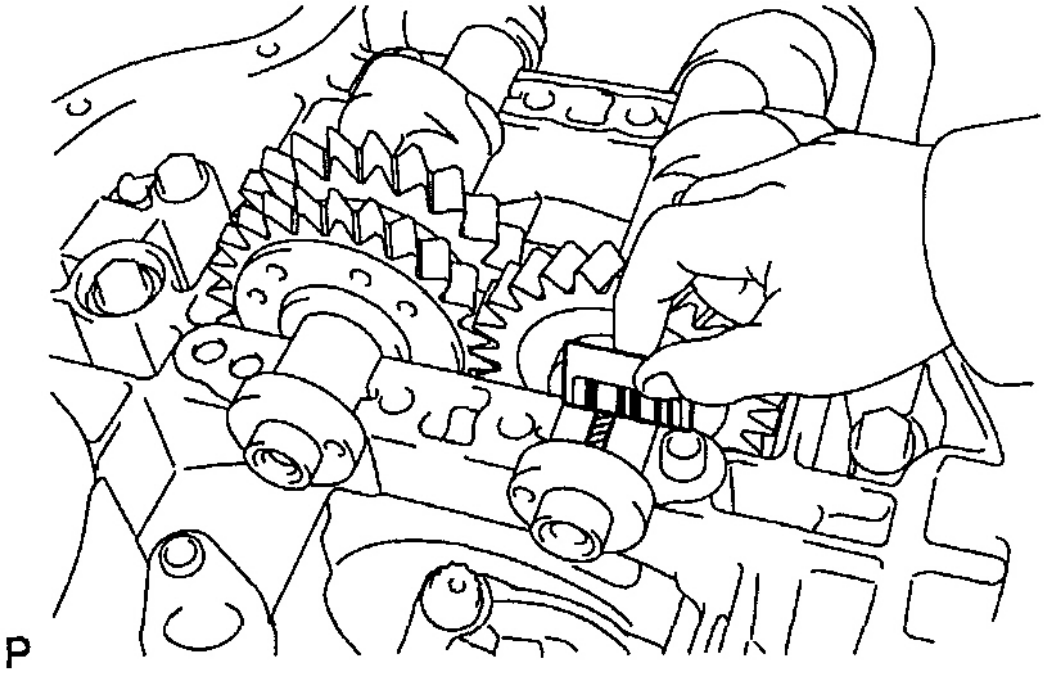

Fig. 230: Measuring Plastigage At Its Widest Point
Courtesy of TOYOTA MOTOR SALES, U.S.A., INC.

HINT:

If using a standard bearing, replace it with one having the same number.

cardiagn.com

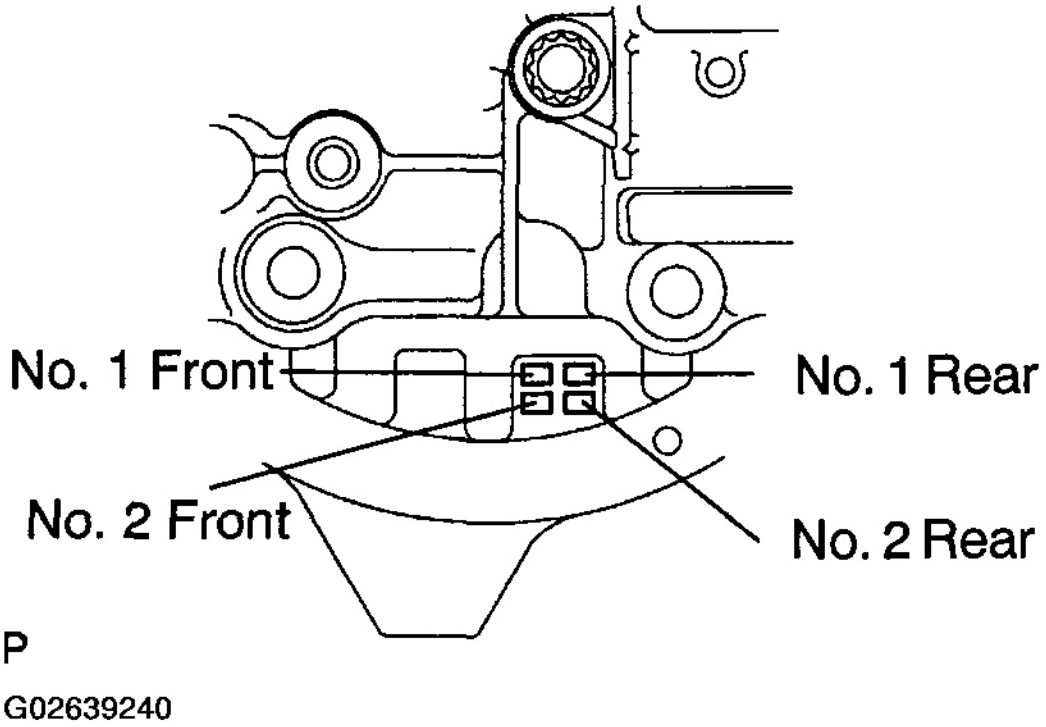

Fig. 231: Locating Standard Bearing Identification
Courtesy of TOYOTA MOTOR SALES, U.S.A., INC.

(Reference)

Balance Shaft Housing Journal Bore Diameter:

BALANCE SHAFT HOUSING JOURNAL BORE DIAMETER

Mark 1	26.000 to 26.006 mm (1.02362 to 1.02386 in.)
Mark 2	26.007 to 26.012 mm (1.02390 to 1.02409 in.)
Mark 3	26.013 to 26.018 mm (1.02413 to 1.02433 in.)

Balance shaft journal diameter:

22.985 to 23.000 mm (0.90492 to 0.90551 in.)

Standard bearing center wall thickness:

STANDARD BEARING CENTER WALL THICKNESS

Mark 1	1.486 to 1.489 mm (0.05850 to 0.05862 in.)

cardiagn.com

Mark 2	1.490 to 1.492 mm (0.05866 to 0.05874 in.)
Mark 3	1.493 to 1.495 mm (0.05877 to 0.05885 in.)

18. **REMOVE BALANCE SHAFT**
    a. Lift out the balance shaft.
    b. Remove the 4 upper bearings from the crank case.

    HINT:

    Arrange the bearings in the correct order.

19. **REMOVE CRANK CASE**
    a. Uniformly loosen and remove the 11 bolts in several passes, in the sequence shown.

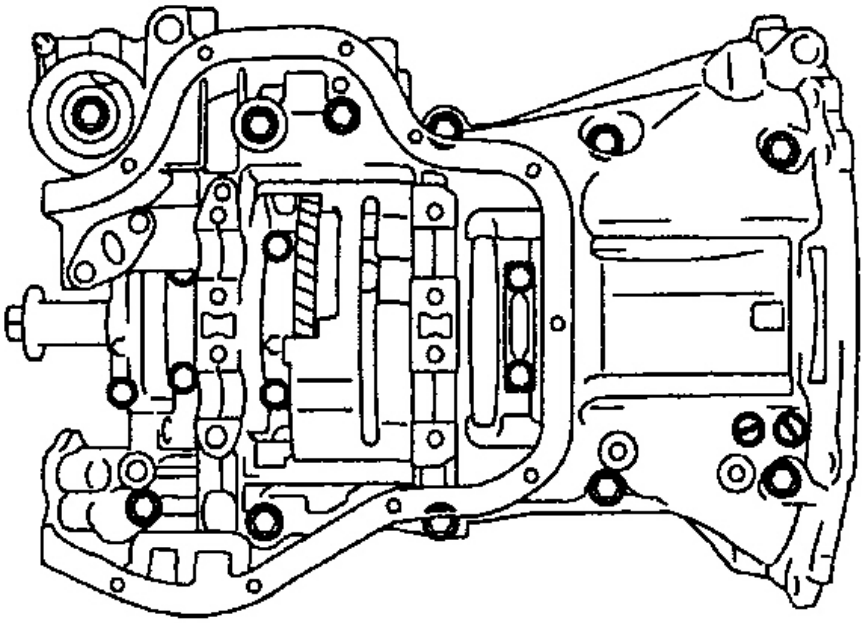

P

G02639241

Fig. 232: Removing Crank Case Bolts In Sequence Shown
Courtesy of TOYOTA MOTOR SALES, U.S.A., INC.

    b. Using a screwdriver, remove the crank case by prying the portions between the crank case and

cardiagn.com

cylinder block.

NOTE: **Be careful not to damage the contact surfaces of the crank case and cylinder block.**

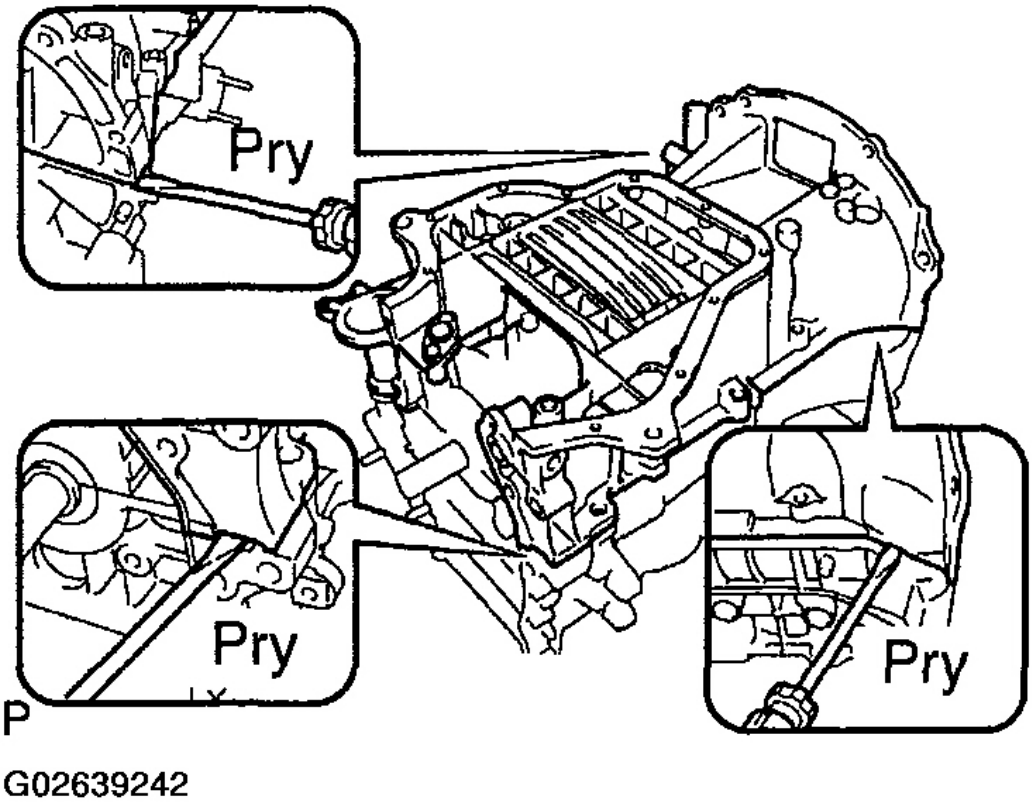

Fig. 233: Prying Apart Crank Case & Cylinder Block.
Courtesy of TOYOTA MOTOR SALES, U.S.A., INC.

c. Remove the O-ring.

20. **REMOVE CRANKSHAFT REAR OIL SEAL**
21. **CHECK CONNECTING ROD THRUST CLEARANCE**

Using a dial indicator, measure the thrust clearance while moving the connecting rod back and forth.

Standard thrust clearance:

0.160 to 0.362 mm (0.0063 to 0.0143 in.)

cardiagn.com

Maximum thrust clearance: 0.362 mm (0.0143 in.)

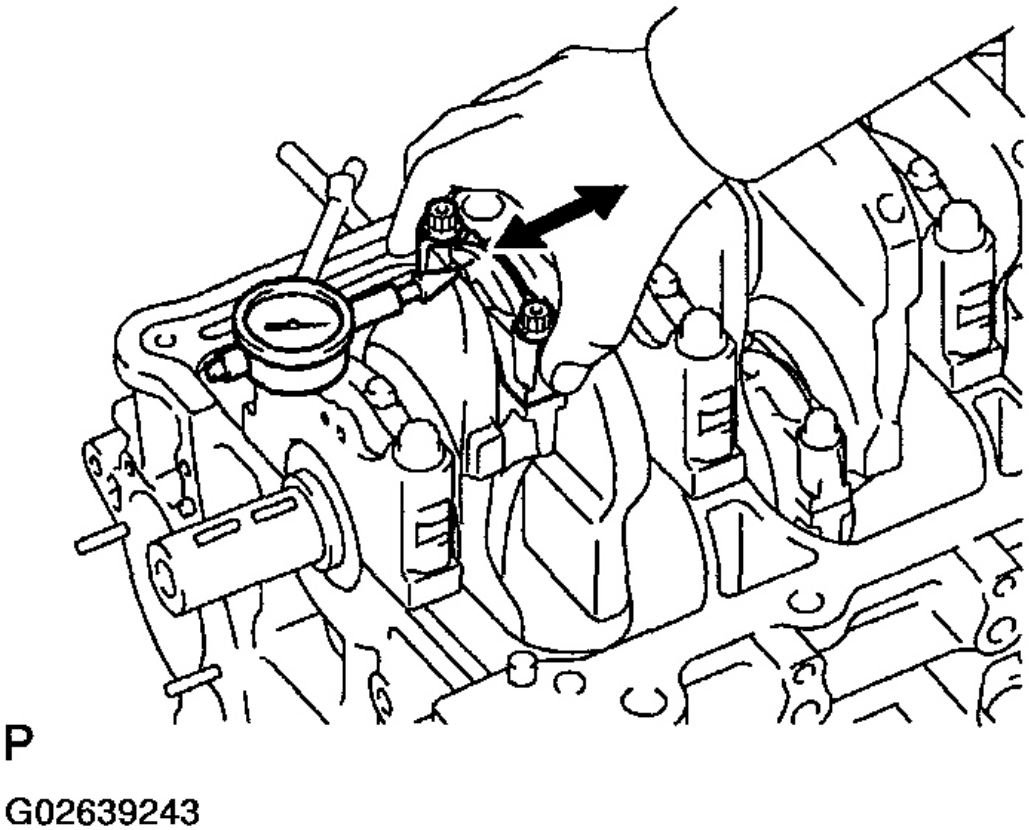

Fig. 234: Checking Connecting Rod Thrust Clearance
Courtesy of TOYOTA MOTOR SALES, U.S.A., INC.

If the thrust clearance is greater than maximum, replace the connecting rod assembly. If necessary, replace the crankshaft.

Connecting rod thickness:

19.788 to 19.840 mm (0.7791 to 0.7811 in.)

22. **REMOVE CONNECTING ROD CAPS AND CHECK OIL CLEARANCE**
    a. Check the matchmarks on the connecting rod and cap are aligned to ensure correct reassembly.

cardiagn.com

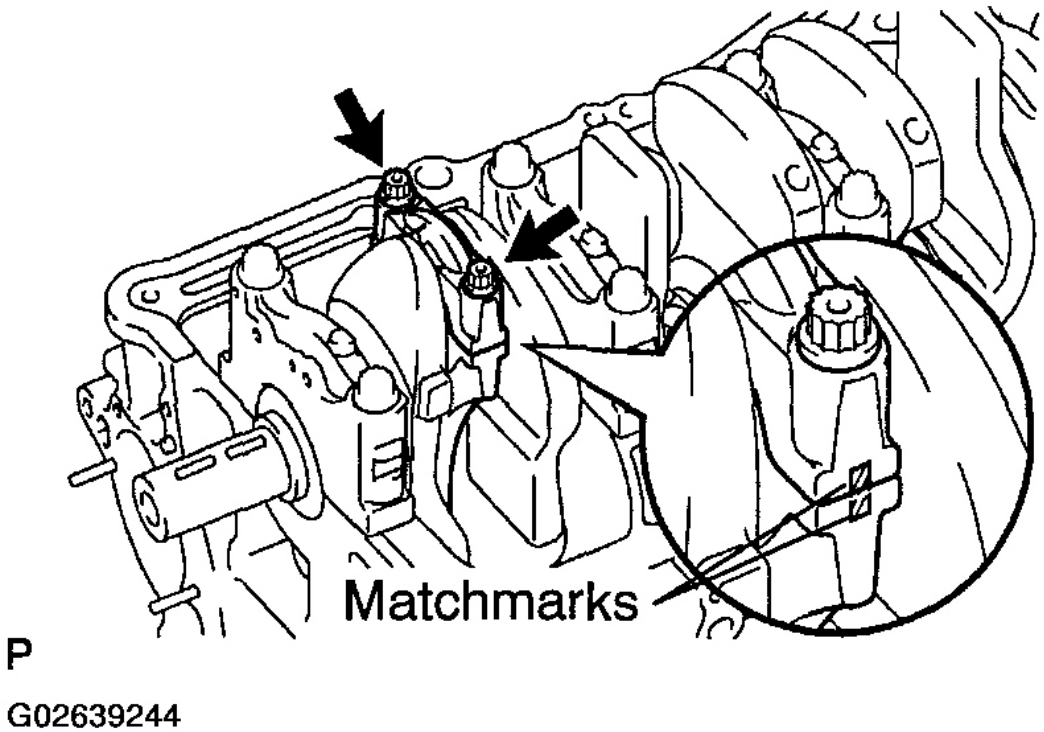

Fig. 235: Checking Matchmarks On Connecting Rod & Cap Are Aligned
Courtesy of TOYOTA MOTOR SALES, U.S.A., INC.

b. Remove the 2 connecting rod cap bolts.
c. Using the 2 removed connecting rod cap bolts, remove the connecting rod cap and lower bearing by wiggling the connecting rod cap right and left.

cardiagn.com

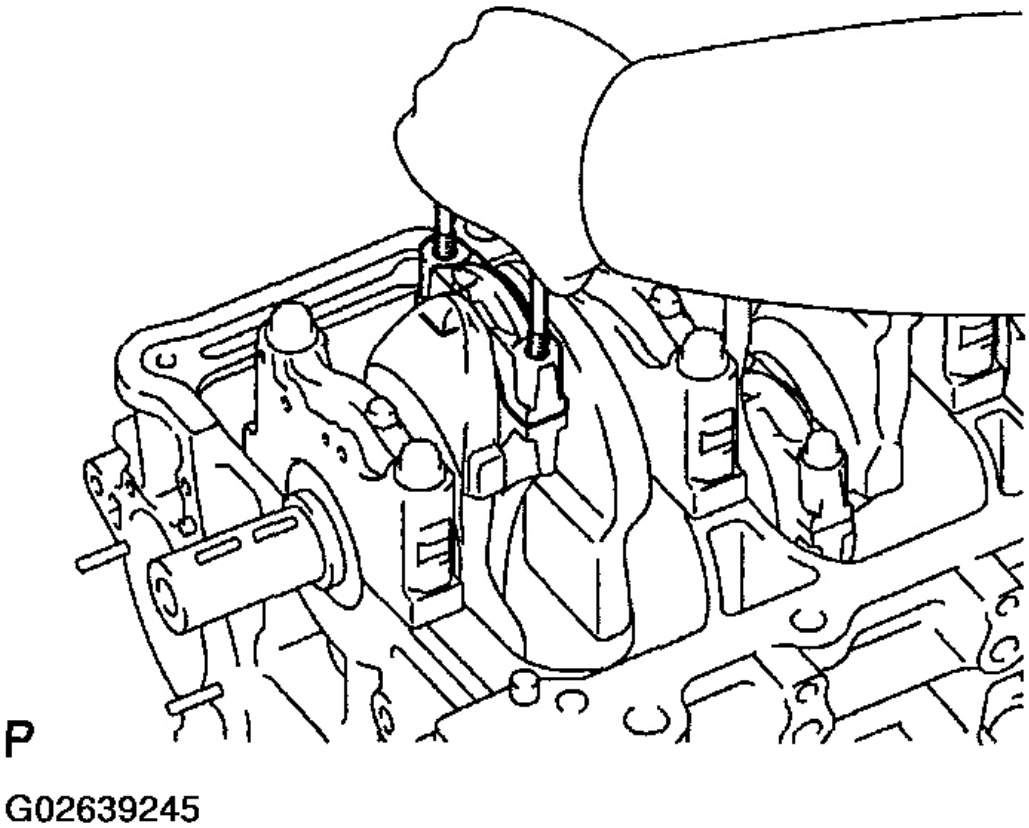

Fig. 236: Removing Connecting Rod Cap & Lower Bearing
Courtesy of TOYOTA MOTOR SALES, U.S.A., INC.

HINT:

Keep the lower bearing inserted with the connecting rod cap.

d. Clean the crank pin and bearing.
e. Check the crank pin and bearing for pitting and scratches.

If the crank pin or bearing is damaged, replace the bearings. If necessary, replace the crankshaft.

f. Lay a strip of Plastigage on the crank pin.

cardiagn.com

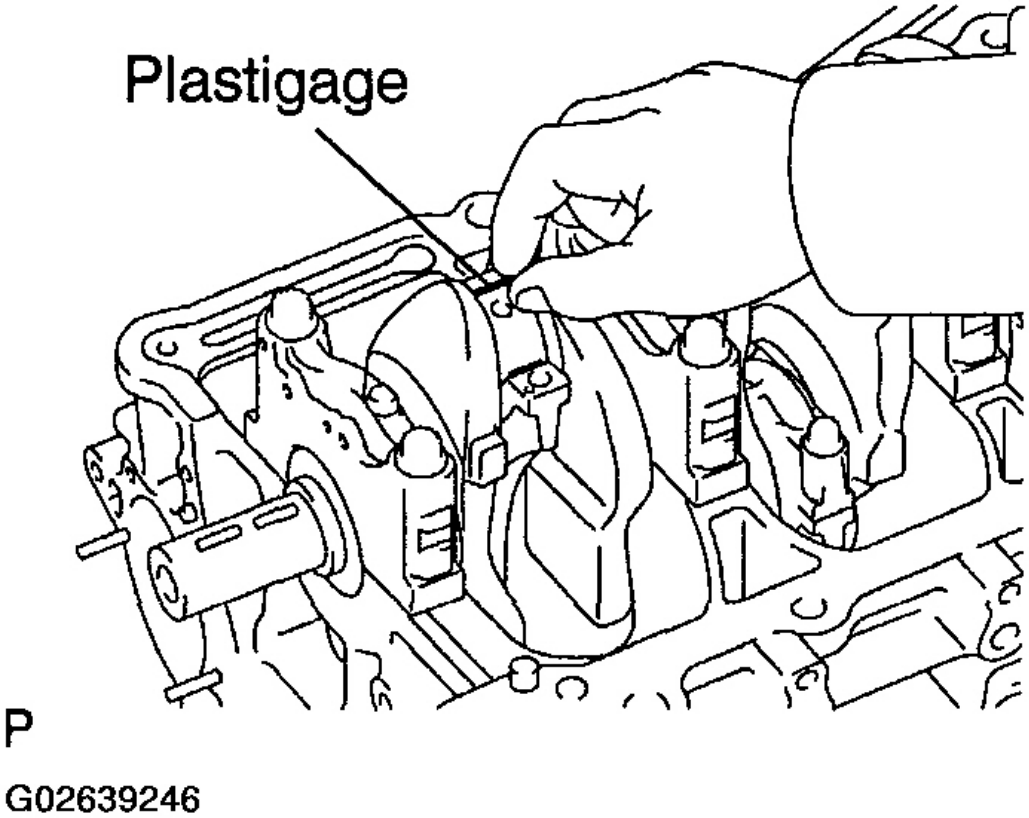

Fig. 237: Placing Strip Of Plastigage On Crank Pin
Courtesy of TOYOTA MOTOR SALES, U.S.A., INC.

g. Install the connecting rod cap (see **REASSEMBLY**).

cardiagn.com

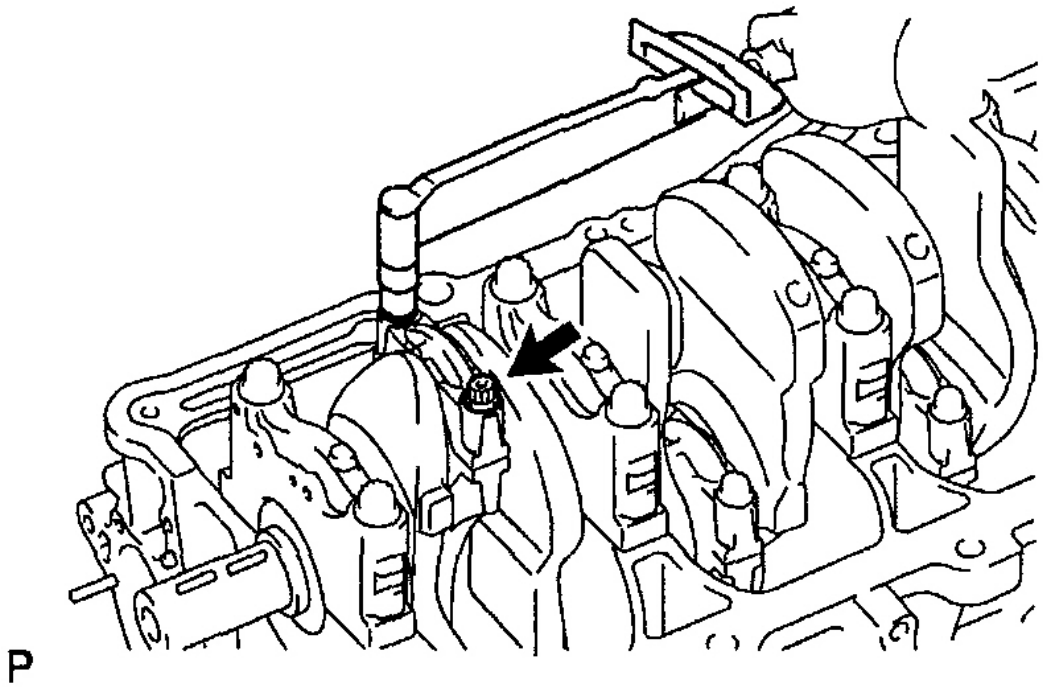

Fig. 238: Installing Connecting Rod Cap
Courtesy of TOYOTA MOTOR SALES, U.S.A., INC.

NOTE: Do not turn the crankshaft.

h. Remove the connecting rod cap (See steps (a) and (c) above).
i. Measure the Plastigage at its widest point.

Standard oil clearance:

0.024 to 0.048 mm (0.0009 to 0.0019 in.)

Maximum oil clearance: 0.08 mm (0.0031 in.)

If the oil clearance is greater than the maximum, replace the bearings. If necessary, replace the crankshaft.

cardiagn.com

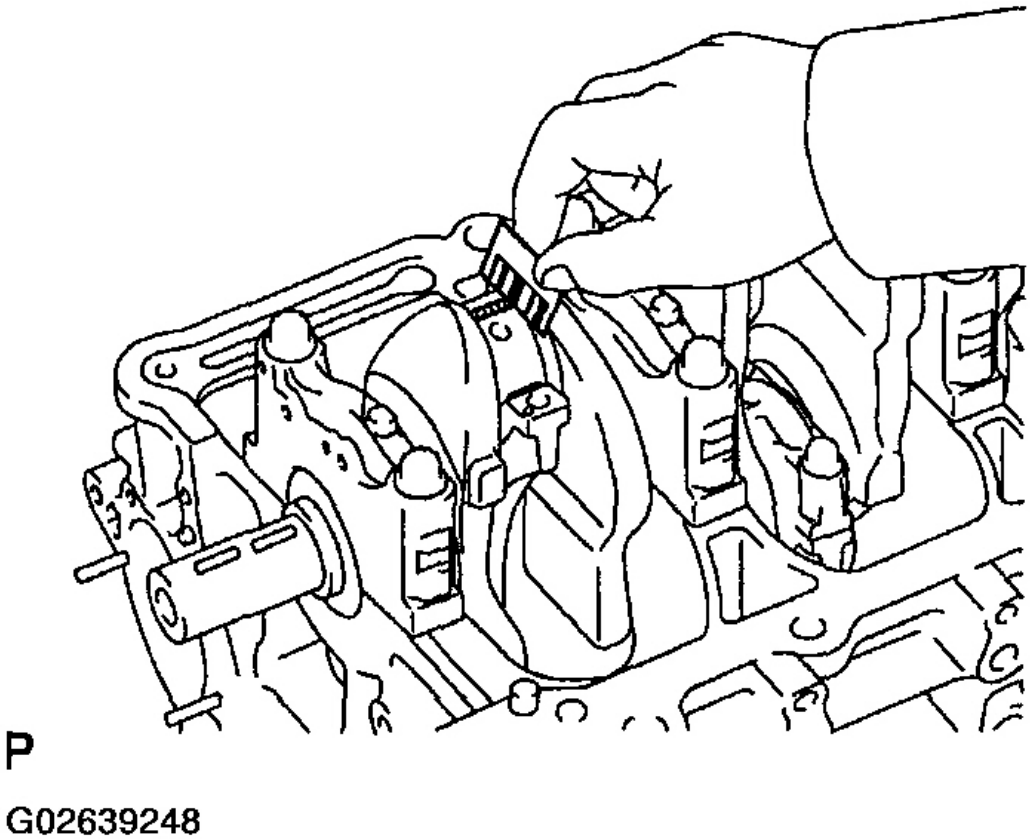

Fig. 239: Measuring Plastigage At Its Widest Point
Courtesy of TOYOTA MOTOR SALES, U.S.A., INC.

HINT:

If replacing a bearing, replace it with one having the same number as marked on the connecting rod. There are 3 sizes of standard bearings, marked 1, 2 and 3 accordingly.

cardiagn.com

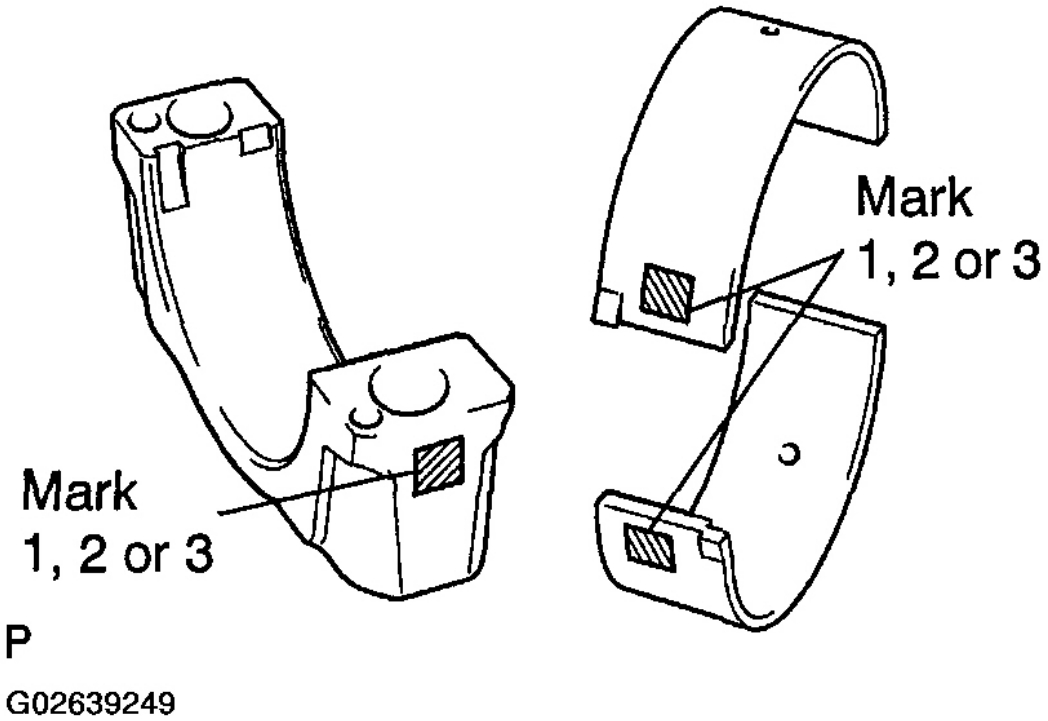

Fig. 240: Identifying Connecting Rod Bearing Size Markers
Courtesy of TOYOTA MOTOR SALES, U.S.A., INC.

Reference

Standard bearing center wall thickness:

STANDARD BEARING CENTER WALL THICKNESS

Mark 1	1.485 to 1.488 mm (0.0585 to 0.0586 in.)
Mark 2	1.489 to 1.491 mm (0.0586 to 0.0587 in.)
Mark 3	1.492 to 1.494 mm (0.0586 to 0.0587 in.)

j. Completely remove the Plastigage.

23. **REMOVE PISTON AND CONNECTING ROD ASSEMBLIES**
    a. Using a ridge reamer, remove all the carbon from the top of the cylinder.
    b. Push the piston, connecting rod assembly and upper bearing through the top of the cylinder block.

cardiagn.com

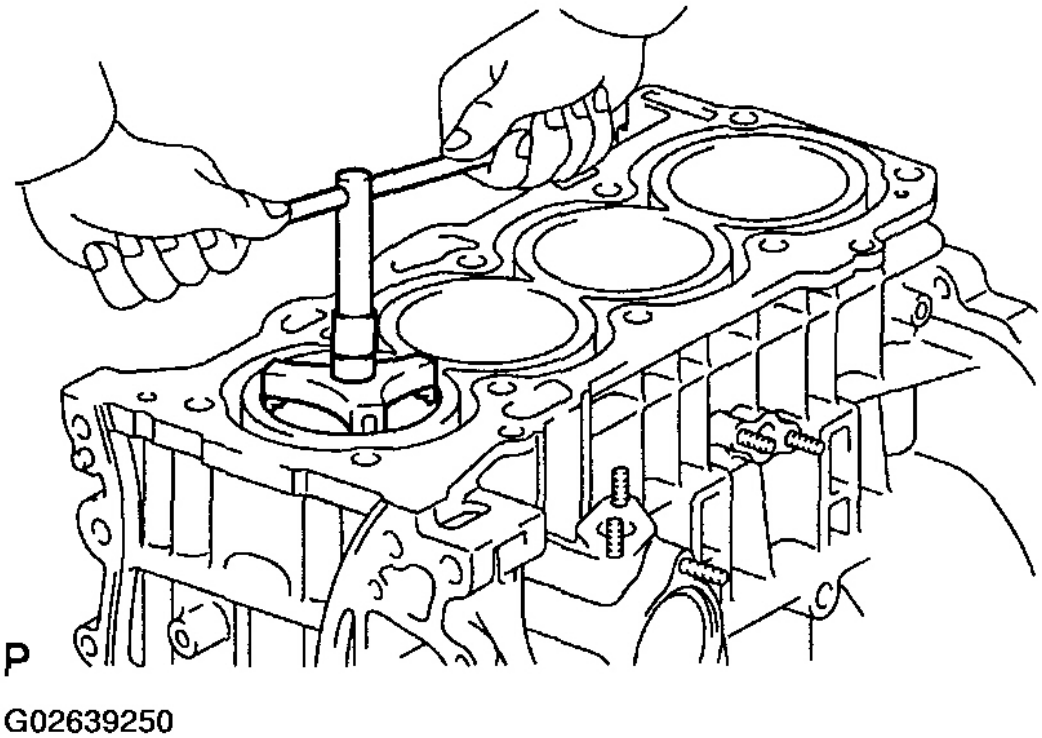

Fig. 241: Removing Carbon From Top Of Cylinder Bore
Courtesy of TOYOTA MOTOR SALES, U.S.A., INC.

HINT:

- Keep the bearings connecting rod and cap together.
- Arrange the piston and connecting rod assemblies in the correct order.

24. **CHECK CRANKSHAFT THRUST CLEARANCE**

Using a dial indicator, measure the thrust clearance while prying the crankshaft back and forth with a screwdriver.

Standard thrust clearance:

0.040 to 0.240 mm (0.0016 to 0.0094 in.)

Maximum thrust clearance: 0.30 mm (0.0118 in.)

cardiagn.com

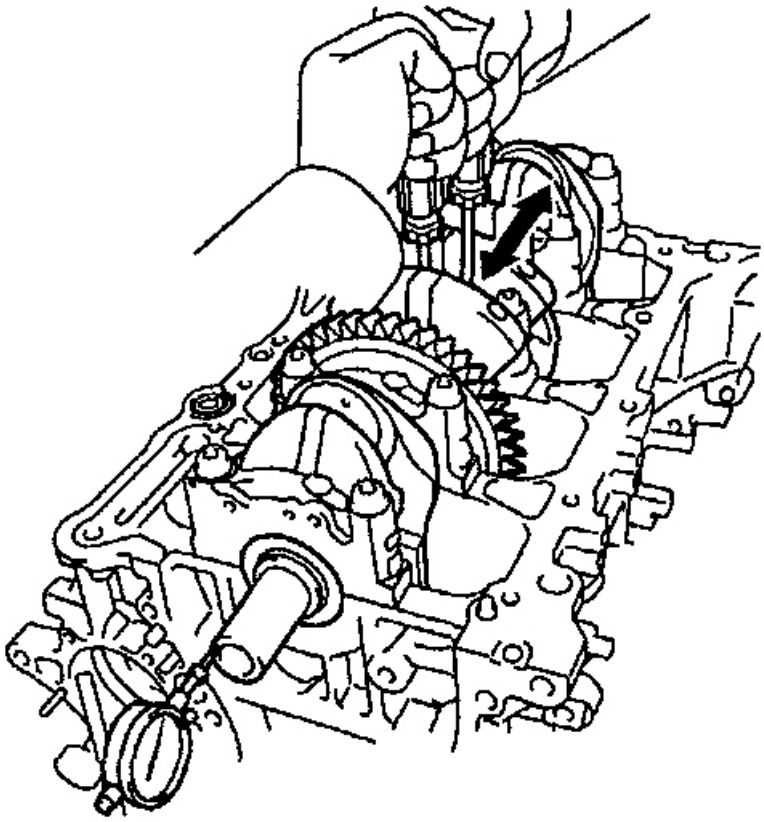

Fig. 242: Checking Crankshaft Thrust Clearance
Courtesy of TOYOTA MOTOR SALES, U.S.A., INC.

If the thrust clearance is greater than the maximum, replace the thrust washers as a set.

Thrust washer thickness:

1.930 to 1.980 mm (0.0760 to 0.0780 in.)

25. **REMOVE MAIN BEARING CAPS AND CHECK OIL CLEARANCE**
    a. Uniformly loosen and remove the 10 main bearing cap bolts in several passes, in the sequence shown.

cardiagn.com

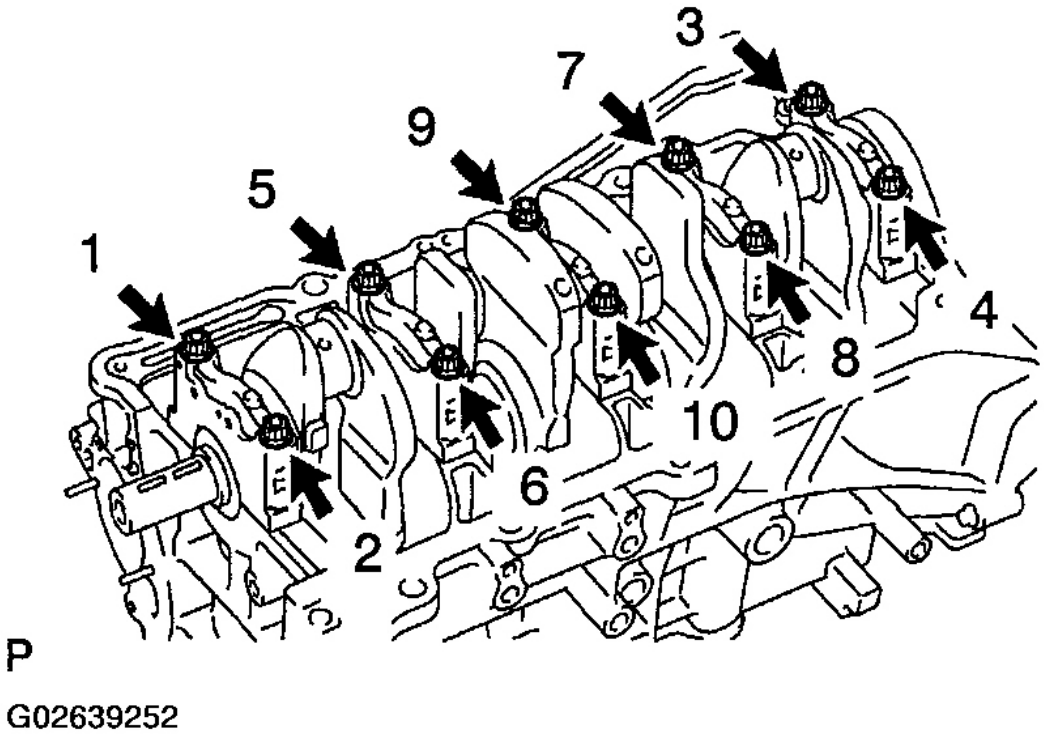

Fig. 243: Removing Main Bearing Caps In Sequence
Courtesy of TOYOTA MOTOR SALES, U.S.A., INC.

b. Using the 2 removed main bearing cap bolts, remove the 5 main bearing caps and 5 lower bearings.

NOTE: Be careful not to damage the cylinder block.

HINT:

- Keep the lower bearing and main bearing cap together.
- Arrange the main bearing caps in the correct order.

cardiagn.com

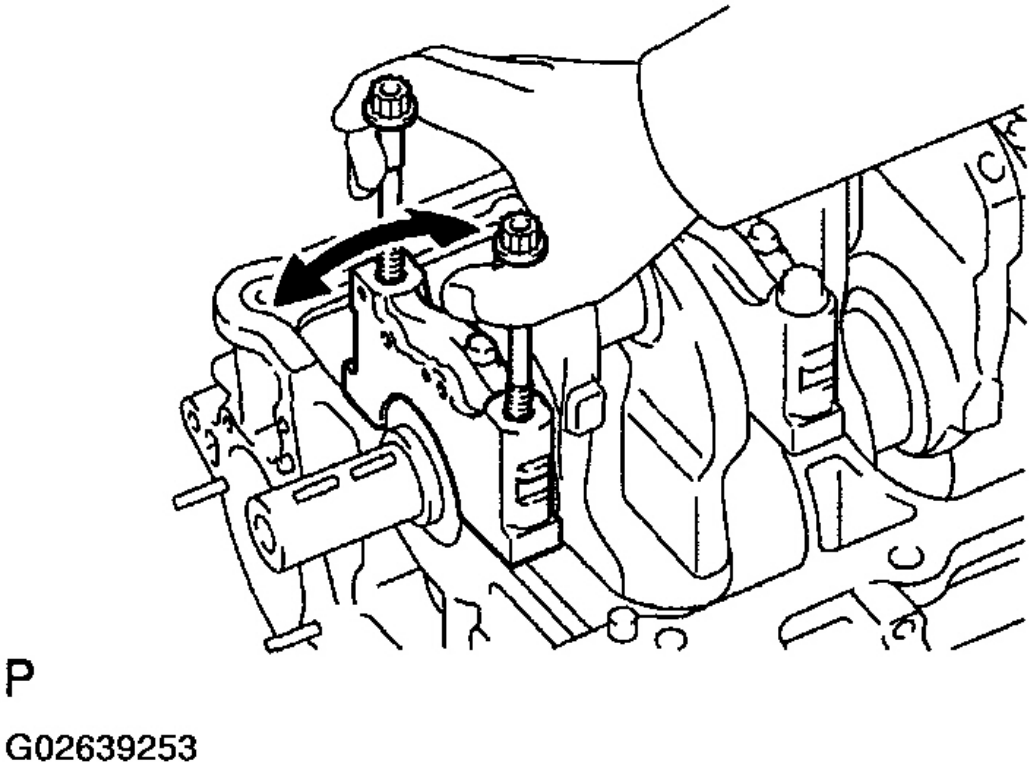

Fig. 244: Removing Main Bearing Caps
Courtesy of TOYOTA MOTOR SALES, U.S.A., INC.

c. Lift out the crankshaft.

HINT:

Keep the main bearings and thrust washers together with the cylinder block.

d. Clean each main journal and bearing.
e. Check each main journal and bearing for pitting and scratches.

If the journal or bearing is damaged, replace the bearings. If necessary, replace the crankshaft.

f. Place the crankshaft on the cylinder block.
g. Lay a strip of Plastigage across each journal.

cardiagn.com

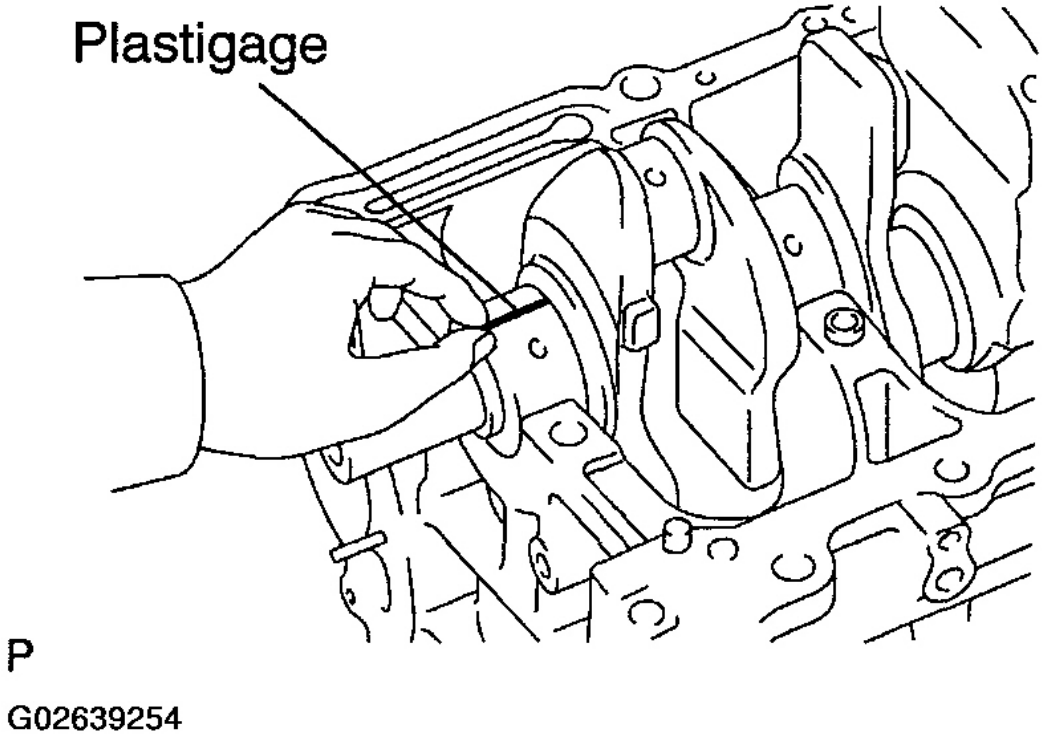

Fig. 245: Placing A Strip Of Plastigage Across Each Crankshaft Journal
Courtesy of TOYOTA MOTOR SALES, U.S.A., INC.

h. Install the main bearing caps (see **REASSEMBLY**).

cardiagn.com

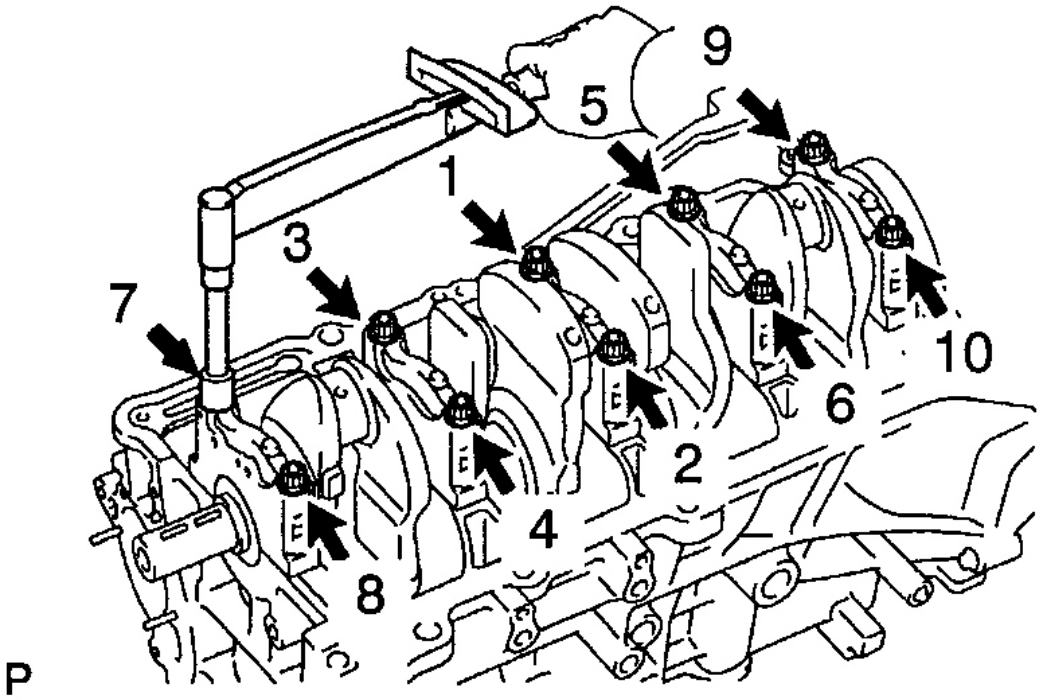

Fig. 246: Installing Main Bearing Caps
Courtesy of TOYOTA MOTOR SALES, U.S.A., INC.

NOTE: Do not turn the crankshaft.

i. Remove the main bearing cap (See steps () and (b) above).
j. Measure the Plastigage at its widest point.

Standard oil clearance:

0.017 to 0.040 mm (0.0007 to 0.0016 in.)

Maximum oil clearance: 0.050 mm (0.0020 in.)

cardiagn.com

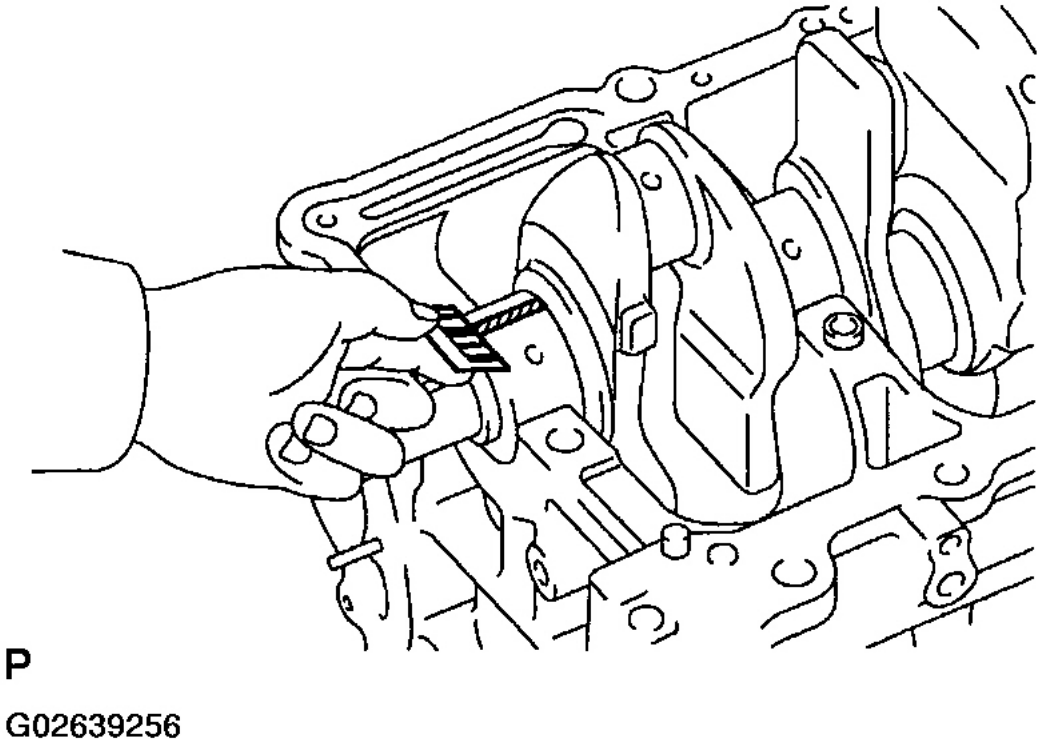

Fig. 247: Measuring Plastigage At Its Widest Point
Courtesy of TOYOTA MOTOR SALES, U.S.A., INC.

If the oil clearance is greater than the maximum, replace the bearings. If necessary, replace the crankshaft.

k. If using a standard bearings, replace it with one having the same number. If the number of the bearing cannot be determined, select the correct bearing by adding together the numbers imprinted on the cylinder block and crankshaft, then selecting the bearing with the same number as the total. There are 4 sizes of standard bearings, marked 1, 2, 3 and 4 accordingly.

cardiagn.com

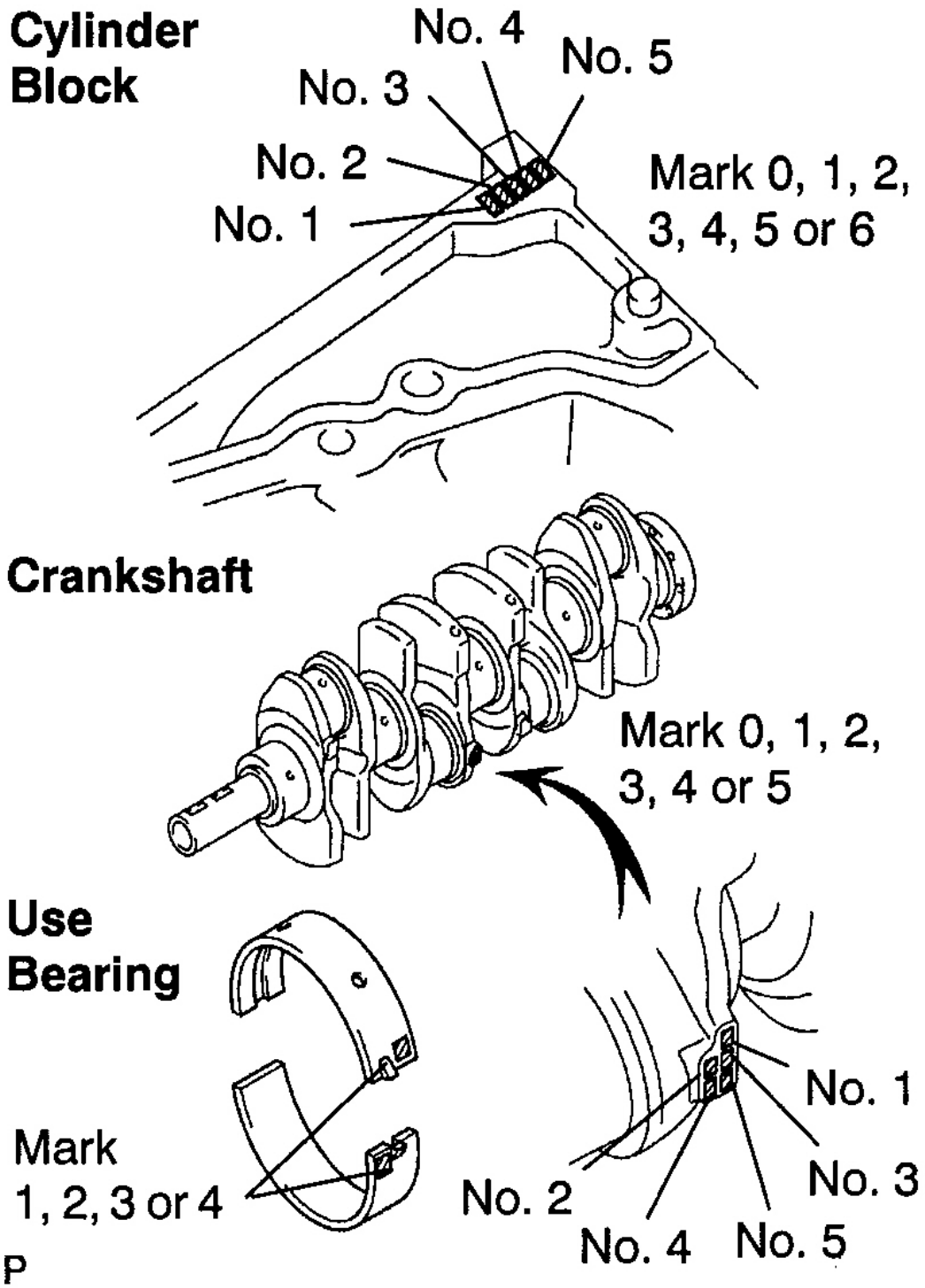

cardiagn.com

Fig. 248: Identifying Crankshaft Journal Bearing Size Markers
Courtesy of TOYOTA MOTOR SALES, U.S.A., INC.

EXAMPLE:

Cylinder block "4"

+ Crankshaft "3"

= Total number 7 (Use bearing "3")

	Total number			" ": Number mark
Cylinder block + Crankshaft	0 to 2	3 to 5	6 to 8	9 to11
Use bearing	"1"	"2"	"3"	"4"

Cylinder block "4"
+ Crankshaft "3"
= Total number 7 (Use bearing "3")

G02639258

Fig. 249: Determining Correct Bearing For Crankshaft Journal
Courtesy of TOYOTA MOTOR SALES, U.S.A., INC.

cardiagn.com

Item	Mark	Specified Condition
Cylinder block main journal bore diameter (A)	0	59.000 to 59.002 mm (2.3228 to 2.3229 in.)
	1	59.003 to 59.004 mm (2.3229 to 2.3230 in.)
	2	59.005 to 59.006 mm (2.3230 to 2.3231 in.)
	3	59.007 to 59.009 mm (2.3231 to 2.3232 in.)
	4	59.010 to 59.011 mm (2.3232 to 2.3233 in.)
	5	59.012 to 59.013 mm (2.3233 to 2.3234 in.)
	6	59.014 to 59.016 mm (2.3234 to 2.3235 in.)
Crankshaft main journal diameter (B)	0	54.999 to 55.000 mm (2.1653 to 2.1654 in.)
	1	54.997 to 54.998 mm (2.1652 to 2.1653 in.)
	2	54.995 to 54.996 mm (2.1651 to 2.1652 in.)
	3	54.993 to 54.994 mm (2.1650 to 2.1651 in.)
	4	54.991 to 54.992 mm (2.1650 to 2.1650 in.)
	5	54.988 to 54.990 mm (2.1649 to 2.1650 in.)
Standard bearing center wall thickness	1	1.993 to 1.996 mm (0.0785 to 0.0786 in.)
	2	1.996 to 1.999 mm (0.0786 to 0.0787 in.)
	3	1.999 to 2.002 mm (0.0787 to 0.0788 in.)
	4	2.002 to 2.005 mm (0.0788 to 0.0789 in.)

G02639259

Fig. 250: Determining Correct Bearing For Crankshaft Journal Reference Chart
Courtesy of TOYOTA MOTOR SALES, U.S.A., INC.

Reference

l. Completely remove the Plastigage.

26. **REMOVE CRANKSHAFT**
    a. Lift out the crankshaft.
    b. Remove the 5 upper main bearings and 2 thrust washers from the cylinder block.

HINT:

Arrange the main bearings and thrust washers in the correct order.

27. **CHECK FIT BETWEEN PISTON AND PISTON PIN**

Try to move the piston back and forth on the piston pin. If any movement is felt, replace the piston and pin as a set.

cardiagn.com

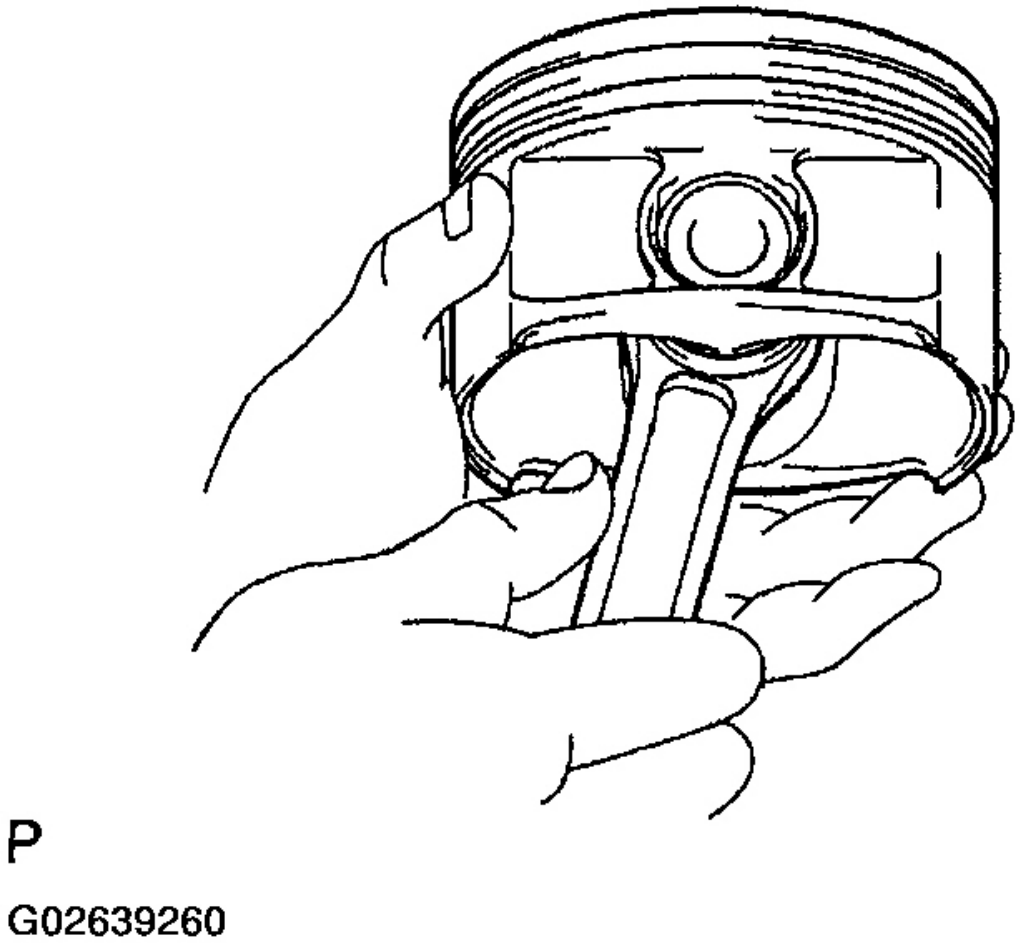

Fig. 251: Checking Fit Between Piston & Piston Pin
Courtesy of TOYOTA MOTOR SALES, U.S.A., INC.

28. **REMOVE PISTON RINGS**
    a. Using a piston ring expander, remove the 2 compression rings.
    b. Remove the 2 side rails and oil ring by hand.

    HINT:

    Arrange the piston rings in the correct order only.

cardiagn.com

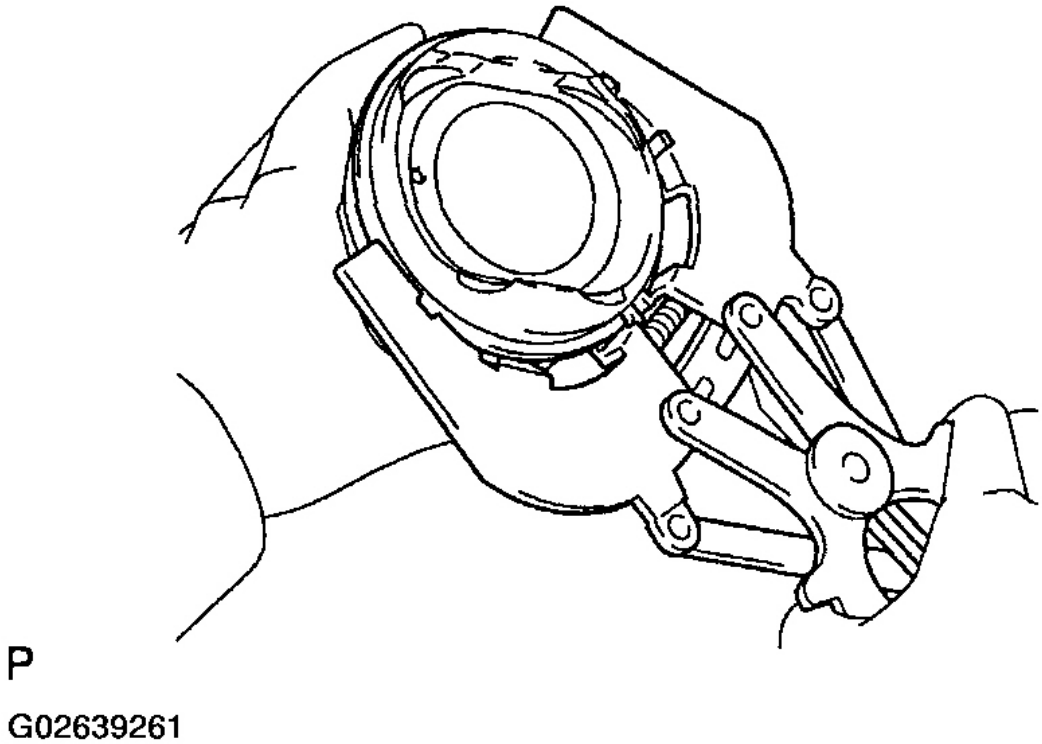

Fig. 252: Removing Piston Rings
Courtesy of TOYOTA MOTOR SALES, U.S.A., INC.

29. **DISCONNECT CONNECTING ROD FROM PISTON**
    a. Using a small screwdriver, pry out the 2 snap rings.

cardiagn.com

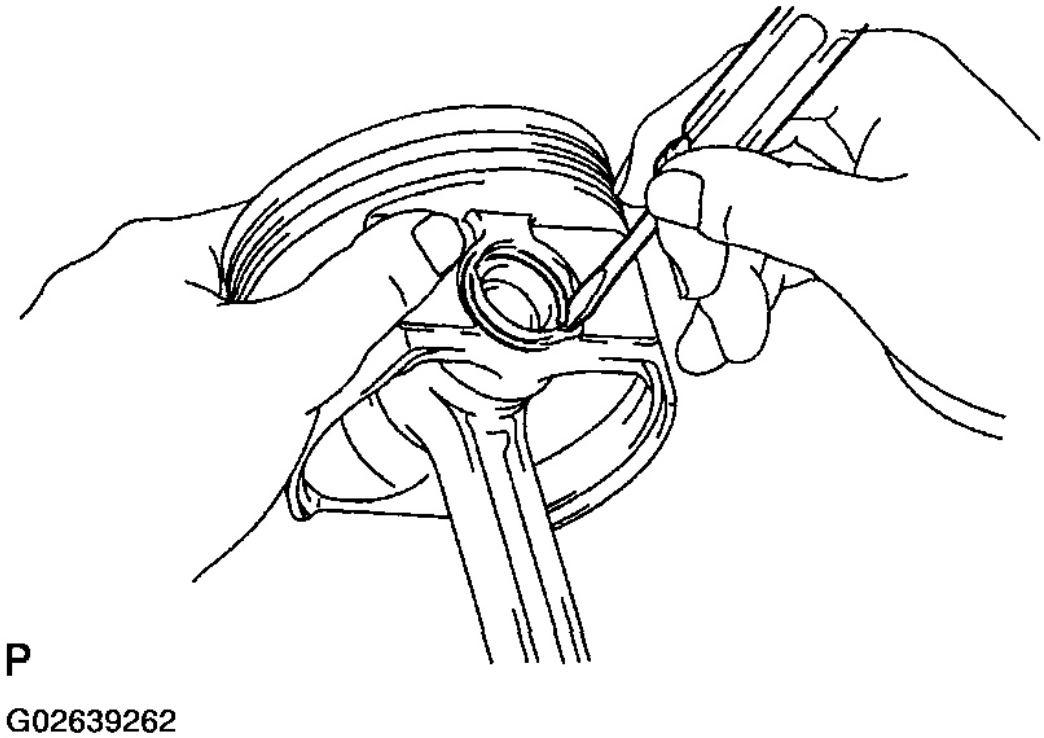

Fig. 253: Removing Piston Pin Snap Rings
Courtesy of TOYOTA MOTOR SALES, U.S.A., INC.

b. Gradually heat the piston to 80 to 90°C (176 to 194°F).

cardiagn.com

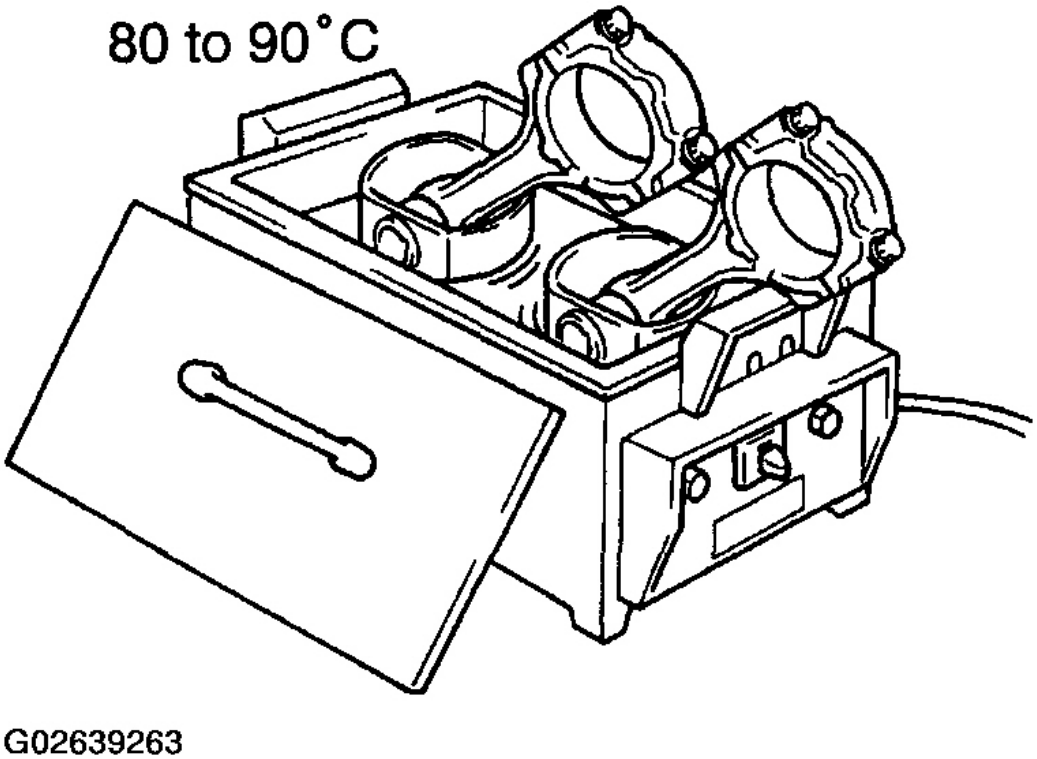

Fig. 254: Gradually Heating Pistons
Courtesy of TOYOTA MOTOR SALES, U.S.A., INC.

c. Using a plastic-faced hammer and a brass bar, lightly tap out the piston pin and remove the connecting rod.

HINT:

- The piston and pin are a matched set.
- Arrange the pistons, pins, rings, connecting rods and bearings in the correct order.

cardiagn.com

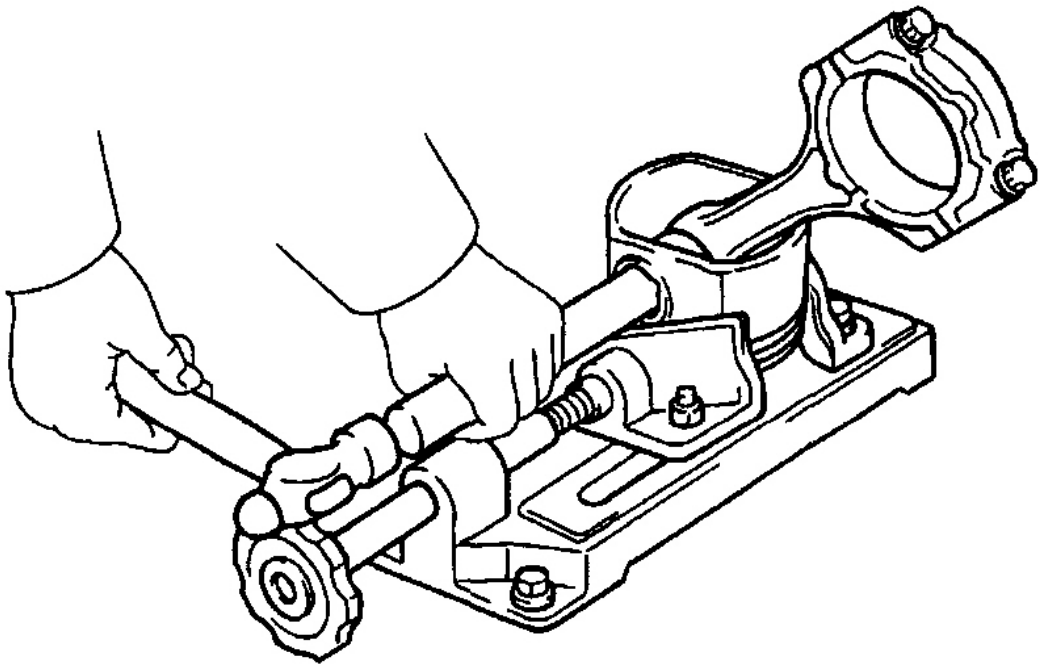

Fig. 255: Lightly Tapping Out Piston Pin From Piston
Courtesy of TOYOTA MOTOR SALES, U.S.A., INC.

INSPECTION

1. **CLEAN CYLINDER BLOCK**
   a. Remove the gasket material.

      Using a gasket scraper, remove all the gasket material from the top surface of the cylinder block.

   b. Clean the cylinder block.

      Using a soft brush and solvent, thoroughly clean the cylinder block.

      NOTE: If the cylinder is washed at high temperatures, the cylinder liner sticks out beyond the cylinder block, so always wash the cylinder block at a temperature of 45°C (133°F) or less.

cardiagn.com

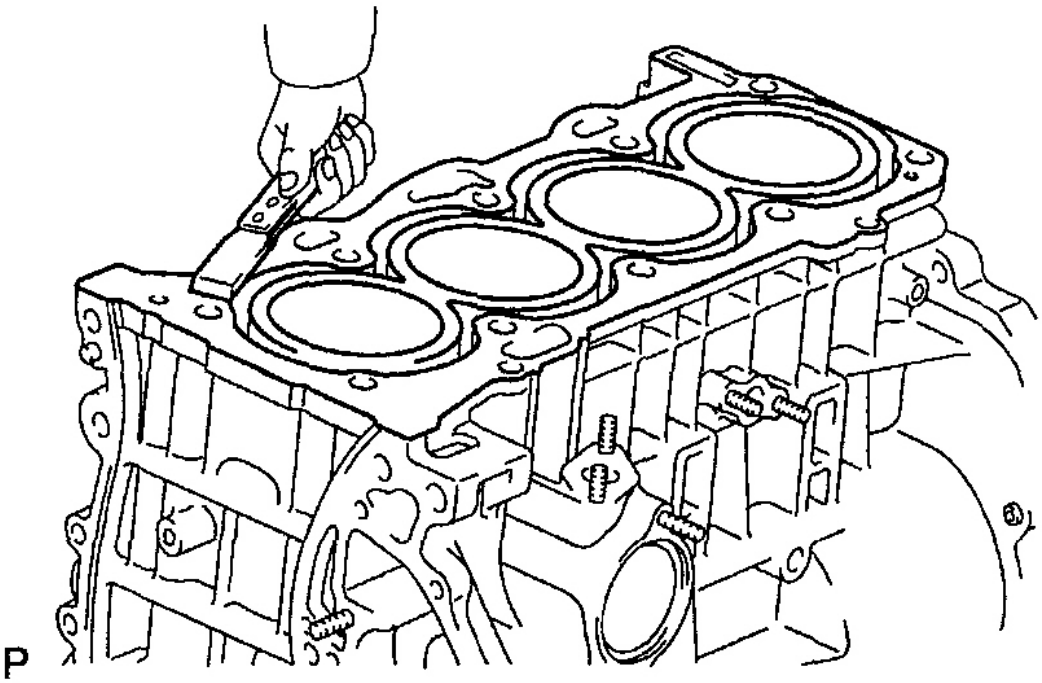

Fig. 256: Removing Gasket Material From Top Surface Of Cylinder Block
Courtesy of TOYOTA MOTOR SALES, U.S.A., INC.

2. **INSPECT CYLINDER BLOCK**
   a. Inspect for flatness.

      Using a precision straight edge and a feeler gauge, measure the surface contacting the cylinder head gasket for warpage.

cardiagn.com

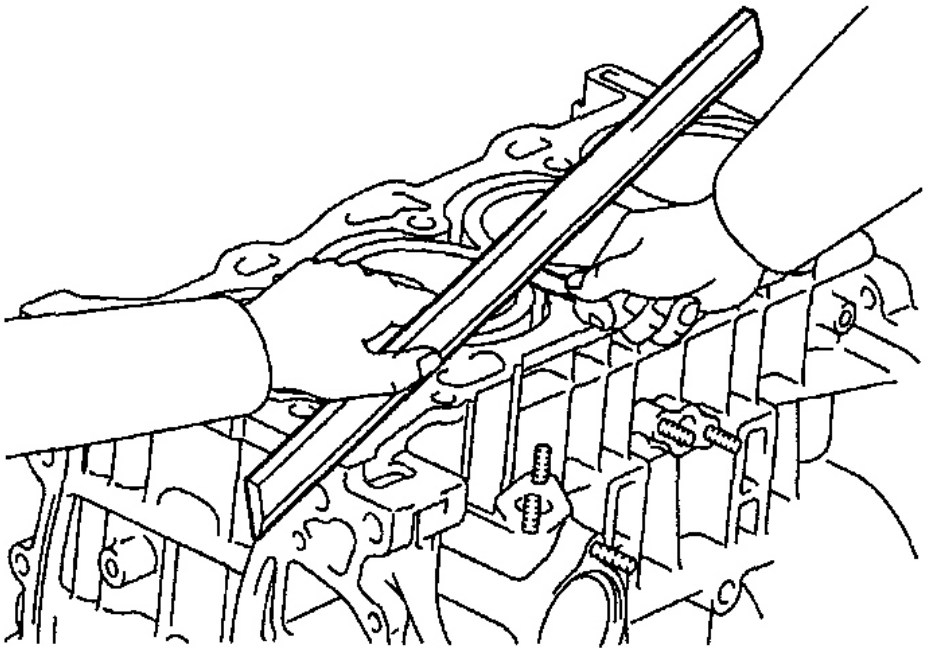

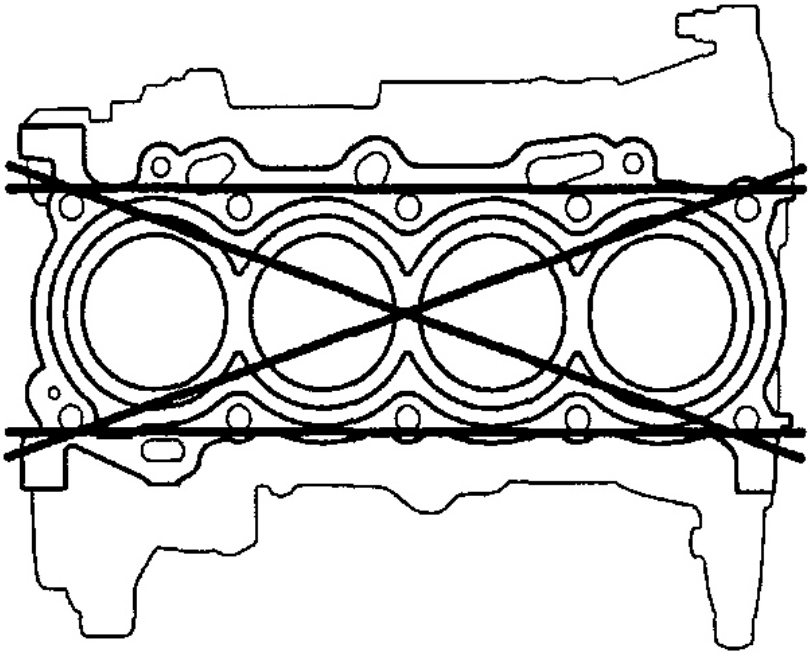

P

G02639266

cardiagn.com

Fig. 257: Measuring Block/Cylinder Head Surface For Warpage
Courtesy of TOYOTA MOTOR SALES, U.S.A., INC.

Maximum warpage: 0.05 mm (0.0020 in.)

If warpage is greater than the maximum, replace the cylinder block.

b. Visually check the cylinder for vertical scratches.

If deep scratches are present, replace the cylinder block.

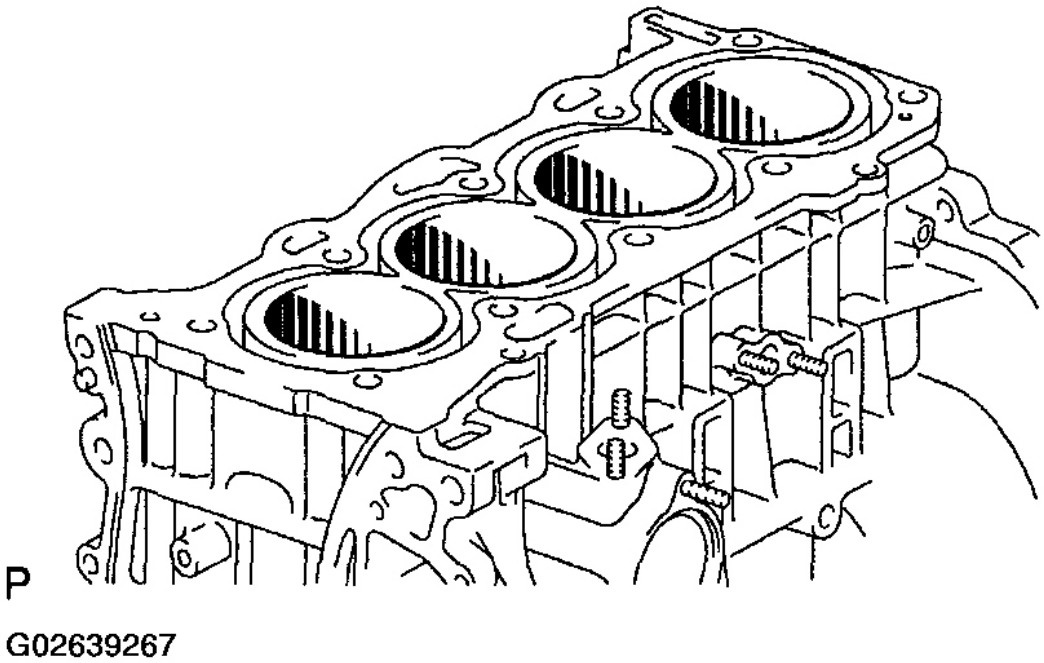

Fig. 258: Visually Check Cylinder For Vertical Scratches
Courtesy of TOYOTA MOTOR SALES, U.S.A., INC.

c. Inspect the cylinder bore diameter.

Using a cylinder gauge, measure the cylinder bore diameter at positions A, B and C in the thrust and axial directions.

Specified diameter:

88.500 to 88.513 mm (3.4843 to 3.4847 in.)

cardiagn.com

Maximum diameter: 88.633 mm (6.4894 in.)

If the diameter is greater than the maximum, replace the cylinder block.

cardiagn.com

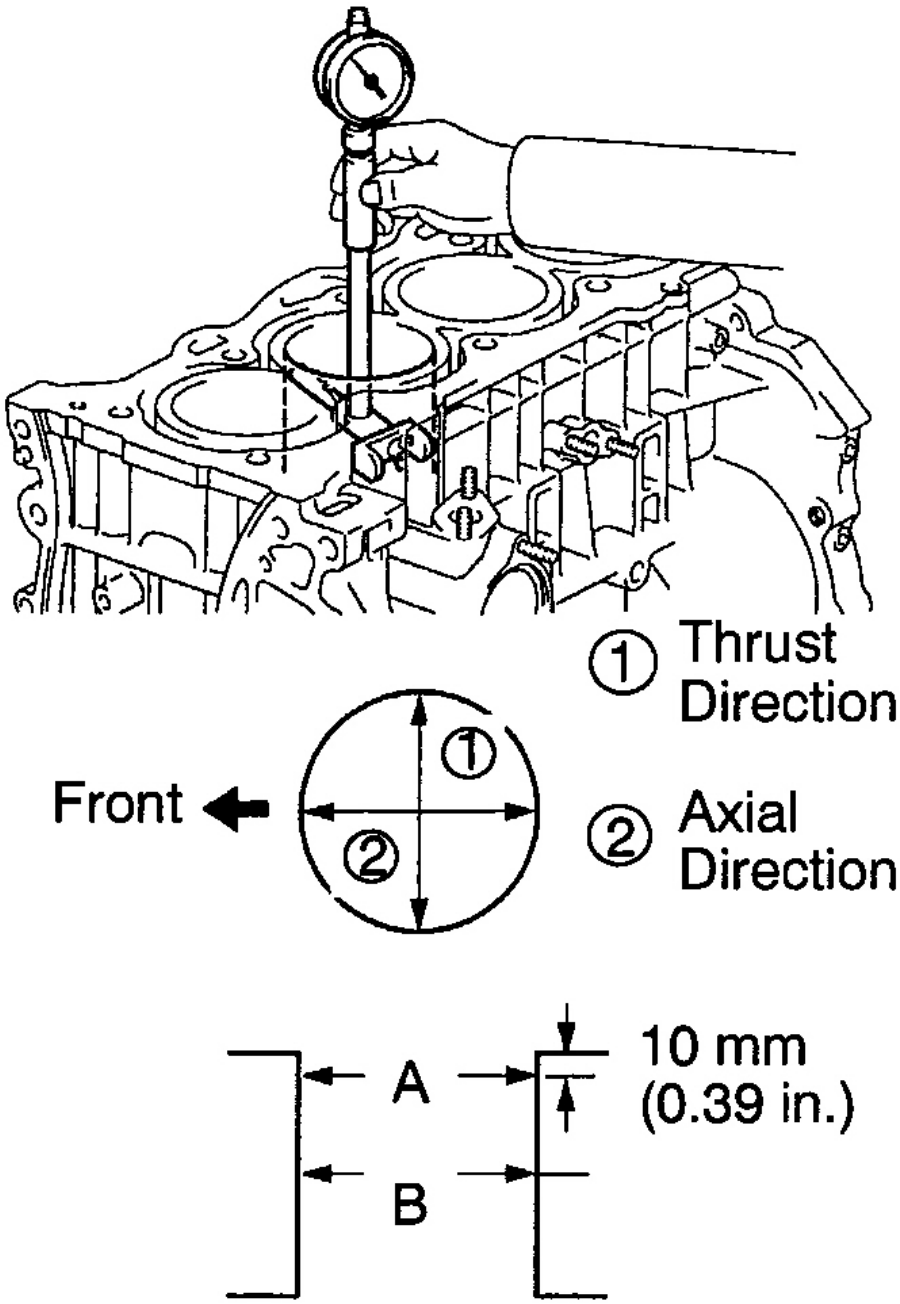

Fig. 259: Measuring Cylinder Bore Diameter
Courtesy of TOYOTA MOTOR SALES, U.S.A., INC.

cardiagn.com

3. **REMOVE CYLINDER RIDGE**

If the wear is less than 0.2 mm (0.008 in.), using a ridge reamer, grind the top of the cylinder.

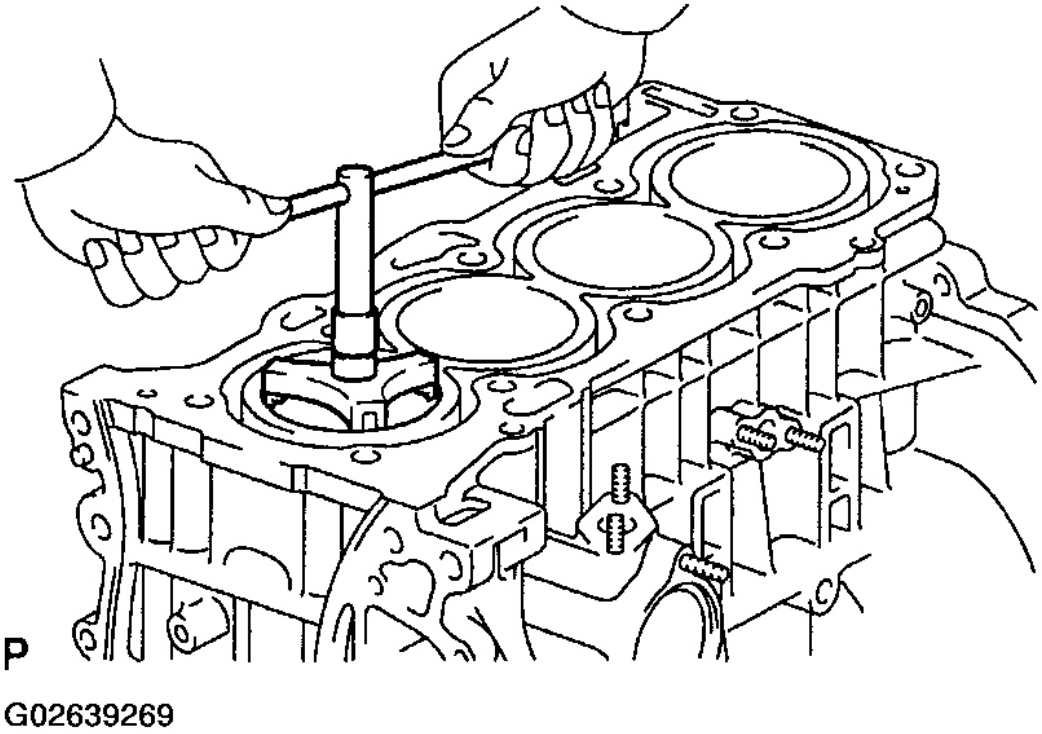

Fig. 260: Removing Cylinder Bore Ridge
Courtesy of TOYOTA MOTOR SALES, U.S.A., INC.

4. **INSPECT CRANKSHAFT BEARING CAP BOLTS**

Using vernier calipers, measure the tension portion diameter of the bolt.

Standard diameter: 7.5 to 7.6 mm (0.2953 to 0.2992 in.)

Minimum diameter: 7.2 mm (0.284 in.)

cardiagn.com

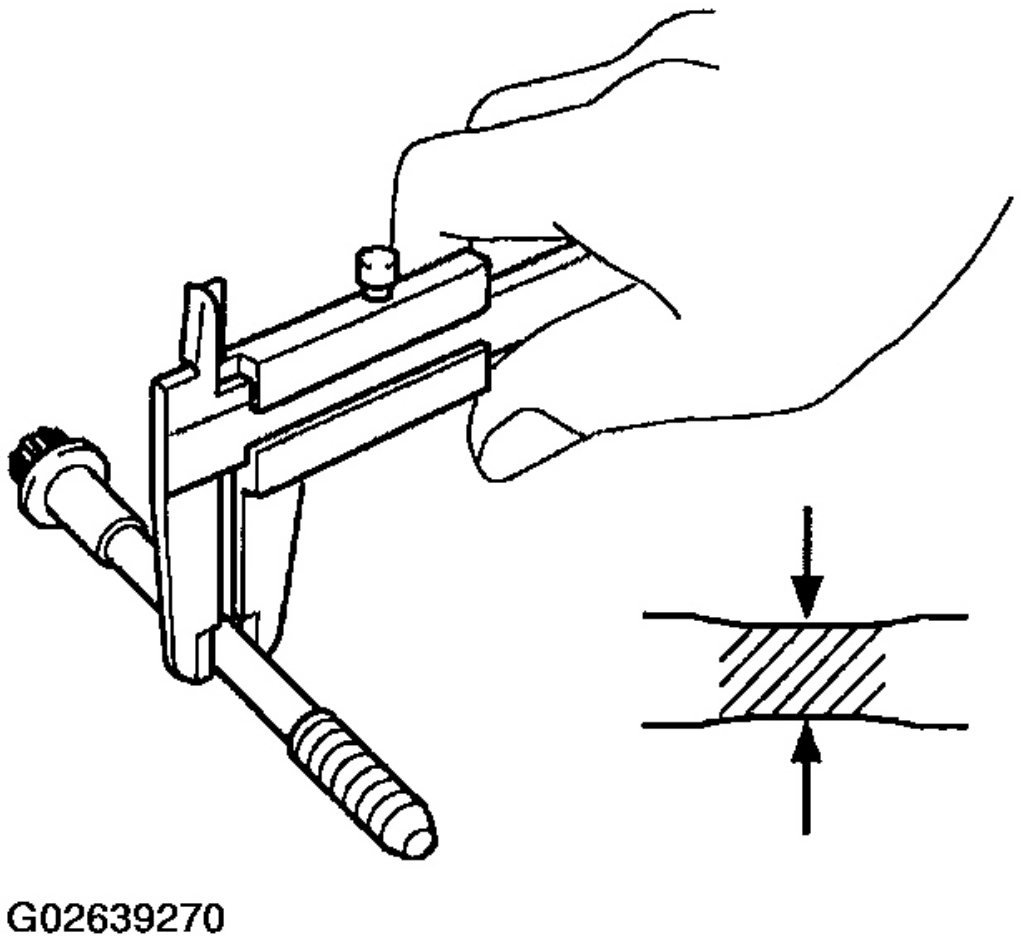

Fig. 261: Inspecting Crankshaft Bearing Cap Bolts
Courtesy of TOYOTA MOTOR SALES, U.S.A., INC.

If the diameter is less than the minimum, replace the bolt.

5. **CLEAN PISTON**
   a. Using a gasket scraper, remove the carbon from the piston top.

cardiagn.com

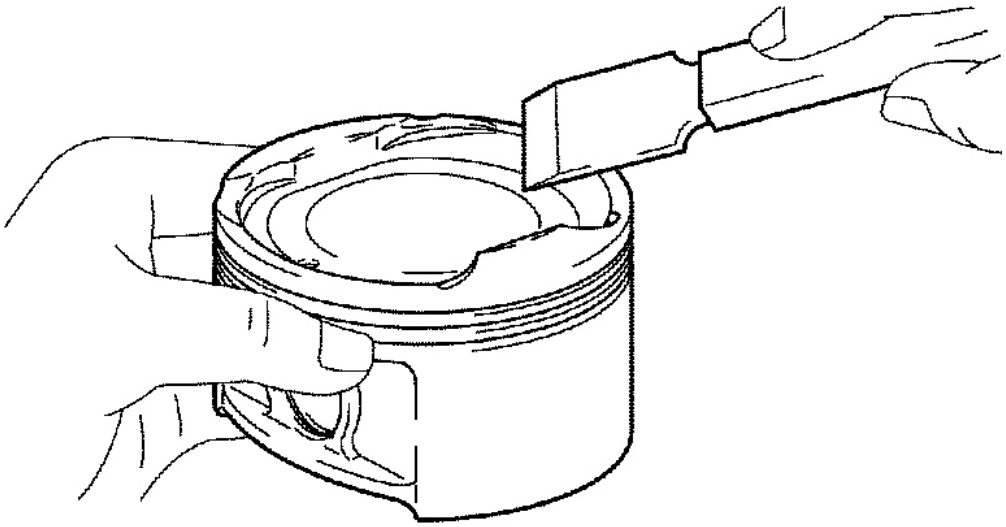

Fig. 262: Removing Carbon From Piston Top
Courtesy of TOYOTA MOTOR SALES, U.S.A., INC.

b. Using a groove cleaning tool or a broken ring, clean the piston ring grooves.

cardiagn.com

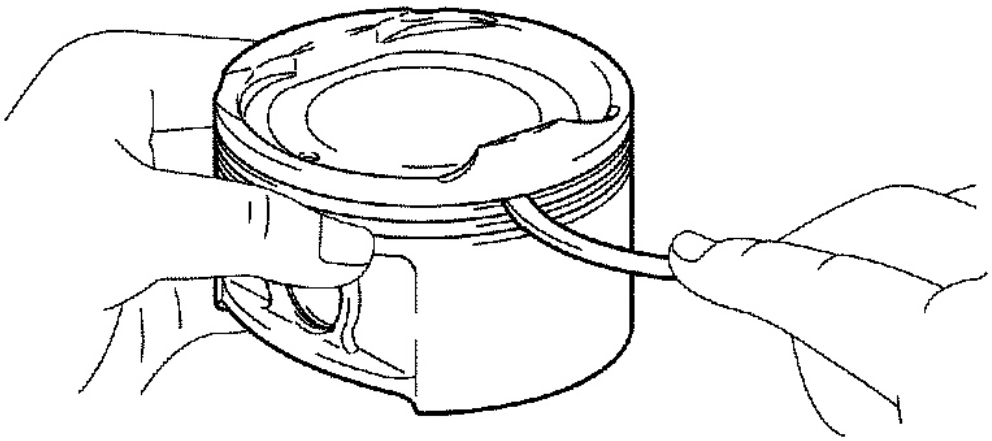

Fig. 263: Cleaning Piston Ring Grooves
Courtesy of TOYOTA MOTOR SALES, U.S.A., INC.

c. Using a brush and solvent, thoroughly clean the piston.

NOTE: Do not use a wire brush.

cardiagn.com

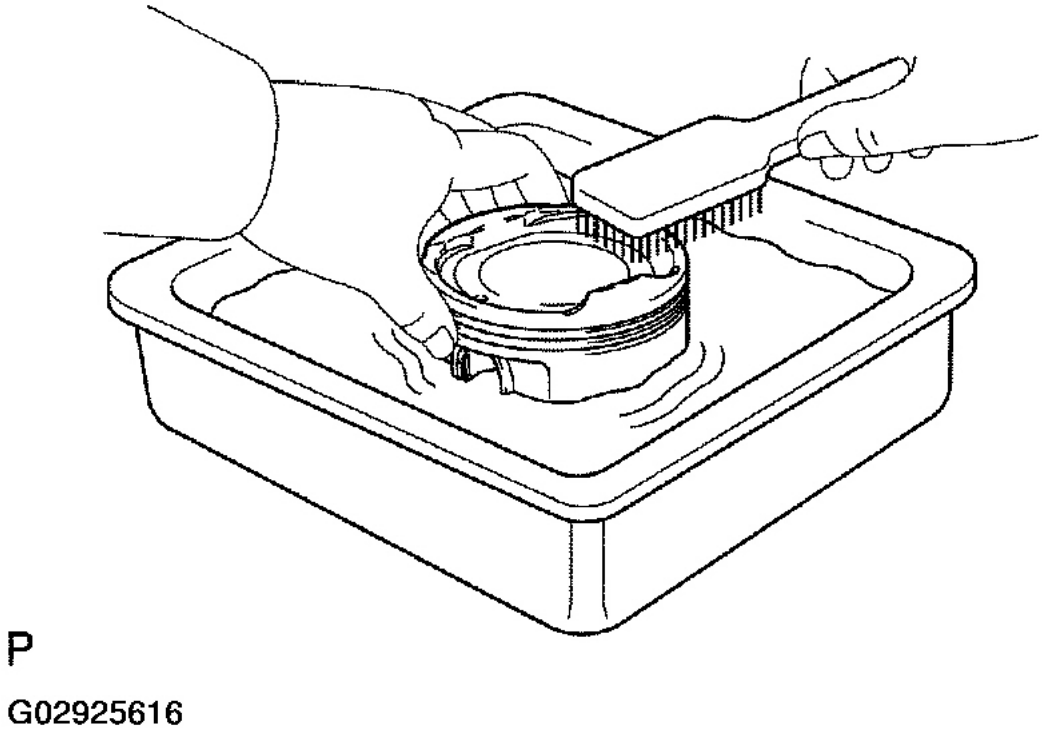

Fig. 264: Cleaning Piston Using Brush & Solvent
Courtesy of TOYOTA MOTOR SALES, U.S.A., INC.

6. **INSPECT PISTON**
   a. Inspect the piston oil clearance.
      1. Using a micrometer, measure the piston diameter at right angles to the piston pin center line, 30.4 mm (1.1967 in.) from the piston head.

         Piston diameter:

         88.439 to 88.449 mm (3.4818 to 3.4822 in.)

cardiagn.com

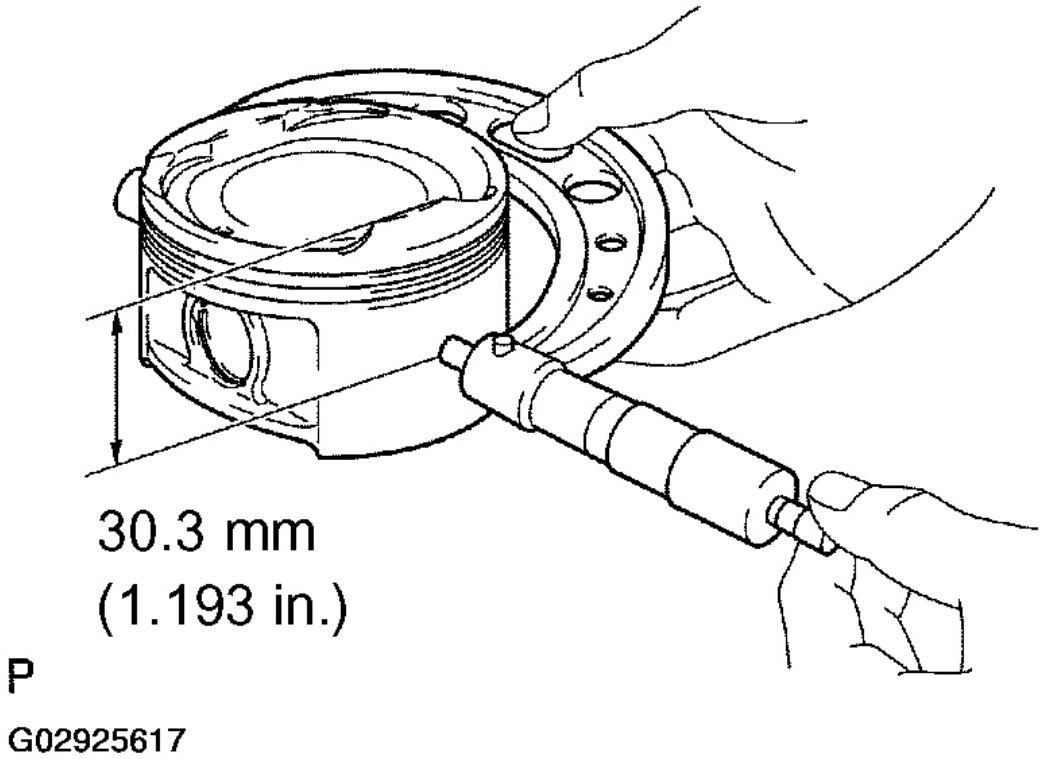

Fig. 265: Measuring Piston Diameter At Right Angles
Courtesy of TOYOTA MOTOR SALES, U.S.A., INC.

2. Measure the cylinder bore diameter in the thrust directions (see step 2).
3. Subtract the piston diameter measurement from the cylinder bore diameter measurement.

   Standard oil clearance:

   0.051 to 0.074 mm (0.0020 to 0.0029 in.)

   Maximum oil clearance: 0.10 mm (0.0039 in.)

   If the oil clearance is greater than the maximum, replace all the 4 pistons. If necessary, replace the cylinder block.

b. Inspect the piston ring groove clearance.

   Using a feeler gauge, measure the clearance between a new piston ring and the wall of the ring groove.

cardiagn.com

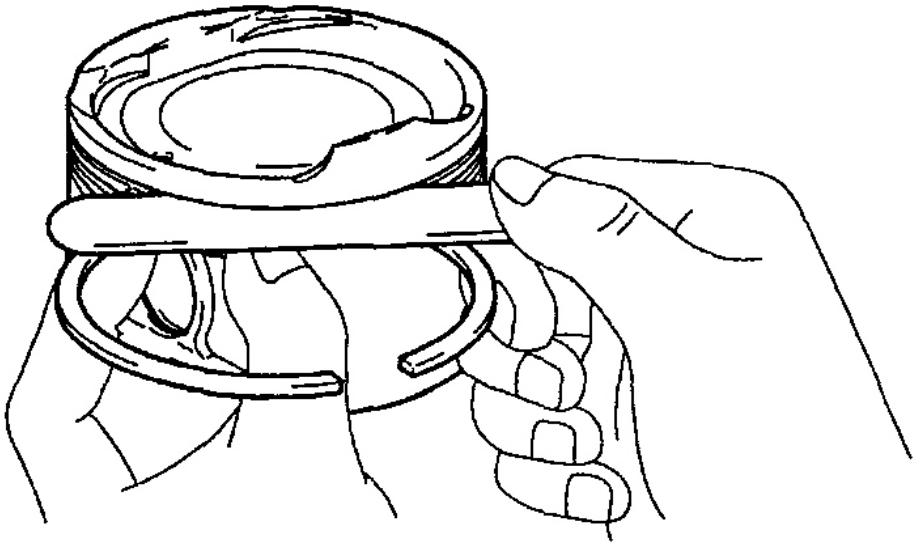

Fig. 266: Measuring Clearance Between Piston Ring & Wall Of Ring Groove
Courtesy of TOYOTA MOTOR SALES, U.S.A., INC.

Ring groove clearance:

RING GROOVE CLEARANCE

No. 1	0.170 to 0.220 mm (0.0066 to 0.0086 in.)
No. 2	0.170 to 0.210 mm (0.0066 to 0.0082 in.)
Oil (Side rail)	0.210 to 0.290 mm (0.0082 to 0.0114 in.)

If the clearance is not as specified, replace the piston.

c. Inspect the piston ring end gap.
   1. Insert the piston ring into the cylinder bore.
   2. Using the piston, push the piston ring a little beyond the bottom of the ring travel, 110 mm (4.33 in.) from the top of the cylinder block.

cardiagn.com

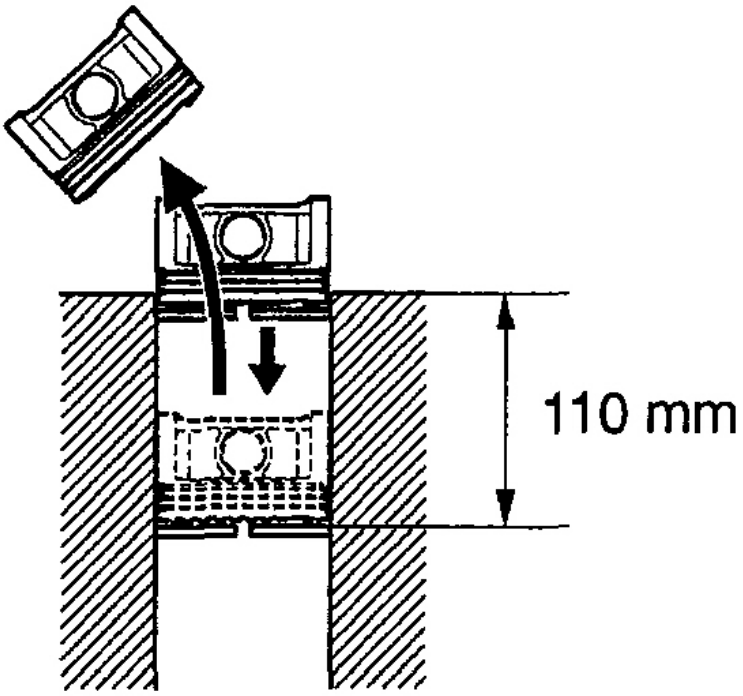

Fig. 267: Inserting Piston Ring Into Cylinder Bore
Courtesy of TOYOTA MOTOR SALES, U.S.A., INC.

3. Using a feeler gauge, measure the end gap. See **STANDARD END GAP** and **MAXIMUM END GAP**

   Standard end gap:

cardiagn.com

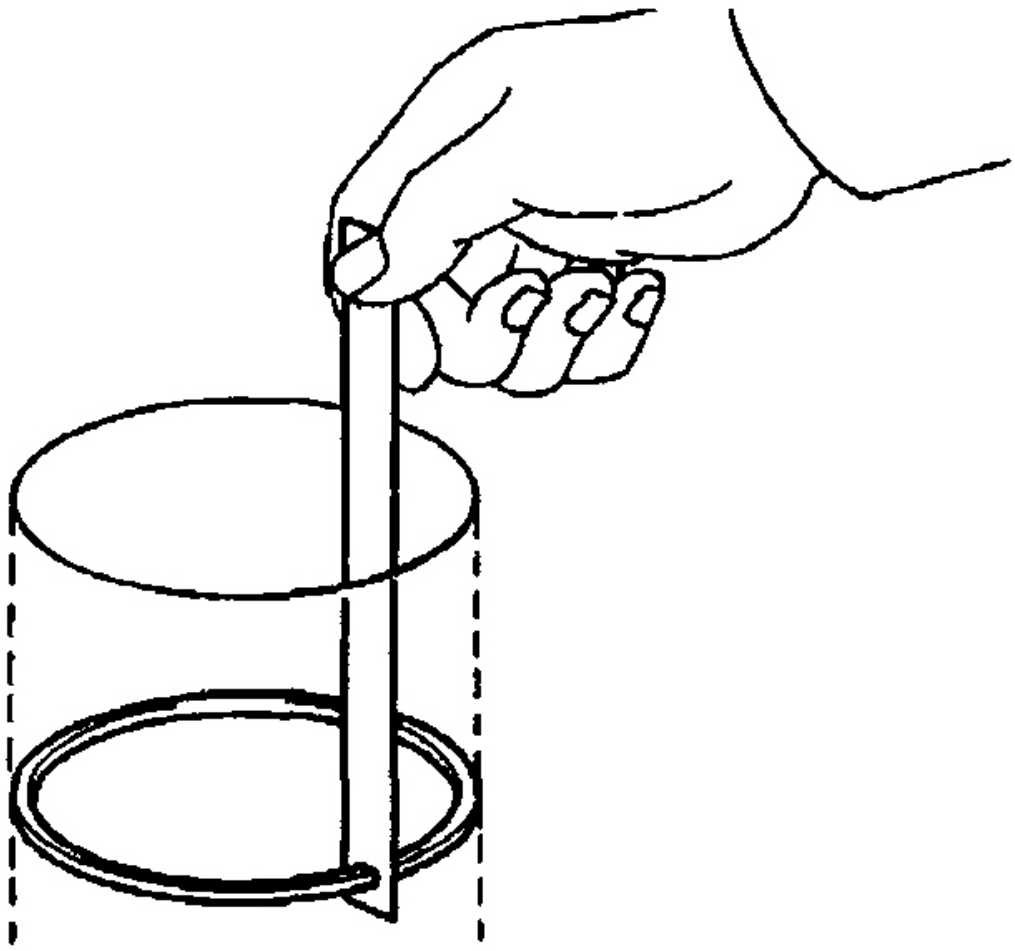

Fig. 268: Inspecting Piston Ring End Gap
Courtesy of TOYOTA MOTOR SALES, U.S.A., INC.

STANDARD END GAP

No. 1	0.22 to 0.32 mm (0.0087 to 0.0126 in.)
No. 2	0.50 to 0.60 mm (0.0197 to 0.0236 in.)
Oil (side rail)	0.10 to 0.35 mm (0.0039 to 0.0138 in.)

Maximum end gap:

MAXIMUM END GAP

cardiagn.com

No. 1	0.89 mm (0.0350 in.)
No. 2	1.35 mm (0.0531 in.)
Oil (side rail)	0.73 mm (0.0287 in.)

If the end gap is greater than the maximum, replace the piston ring. If the end gap is greater than maximum, even with a new piston ring, replace the cylinder block.

d. Inspect the piston pin fit.

At 80 to 90°C (176 to 194°F), you should be able to push the piston pin into the piston pin hole with your thumb.

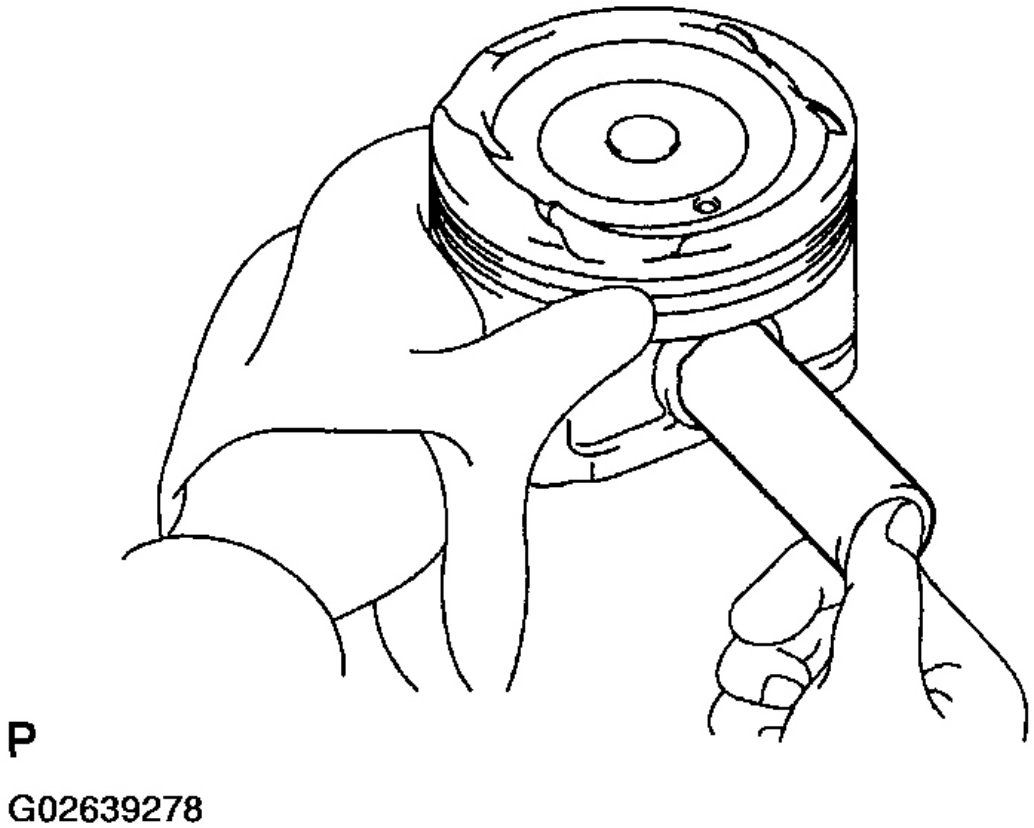

Fig. 269: Inspecting Piston Pin Fit
Courtesy of TOYOTA MOTOR SALES, U.S.A., INC.

7. **INSPECT CONNECTING ROD**

a. Using a rod aligner and a feeler gauge, check the connecting rod alignment.

cardiagn.com

1. Check for out-of-alignment.

   Maximum out-of-alignment:

   0.05 mm (0.0020 in.) per 100 mm (3.94 in.)

   If out-of-alignment is greater than the maximum, replace the connecting rod assembly.

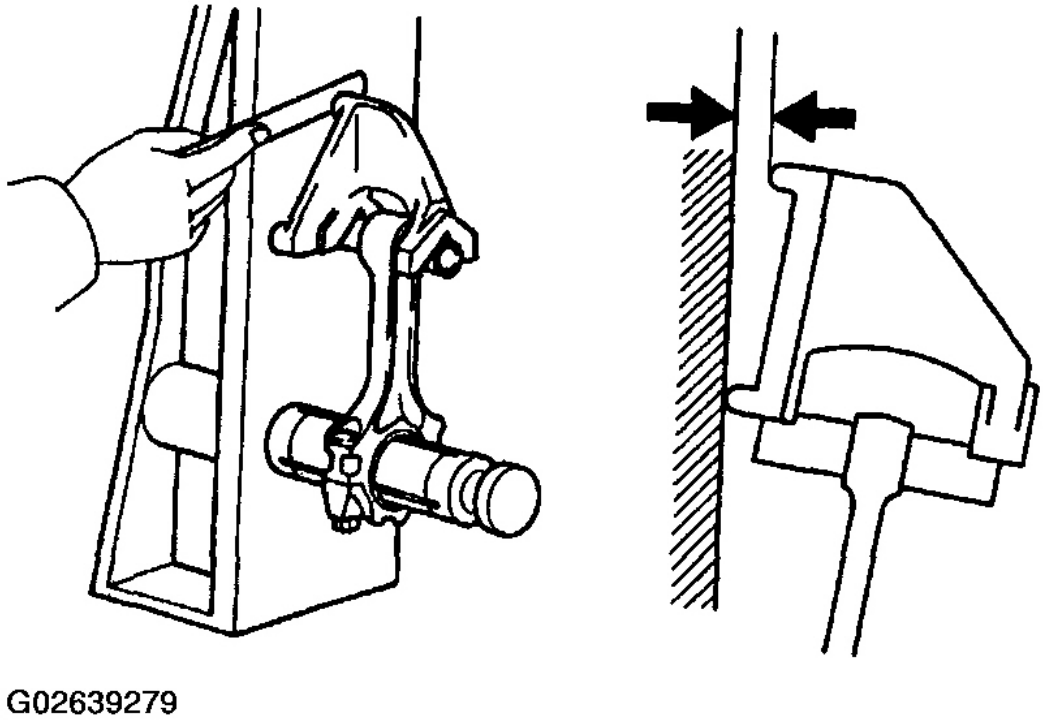

Fig. 270: Checking Connecting Rod Alignment
Courtesy of TOYOTA MOTOR SALES, U.S.A., INC.

2. Check for twist.

   Maximum twist:

   0.15 mm (0.0059 in.) per 100 mm (3.94 in.)

   If twist is greater than the maximum, replace the connecting rod assembly.

cardiagn.com

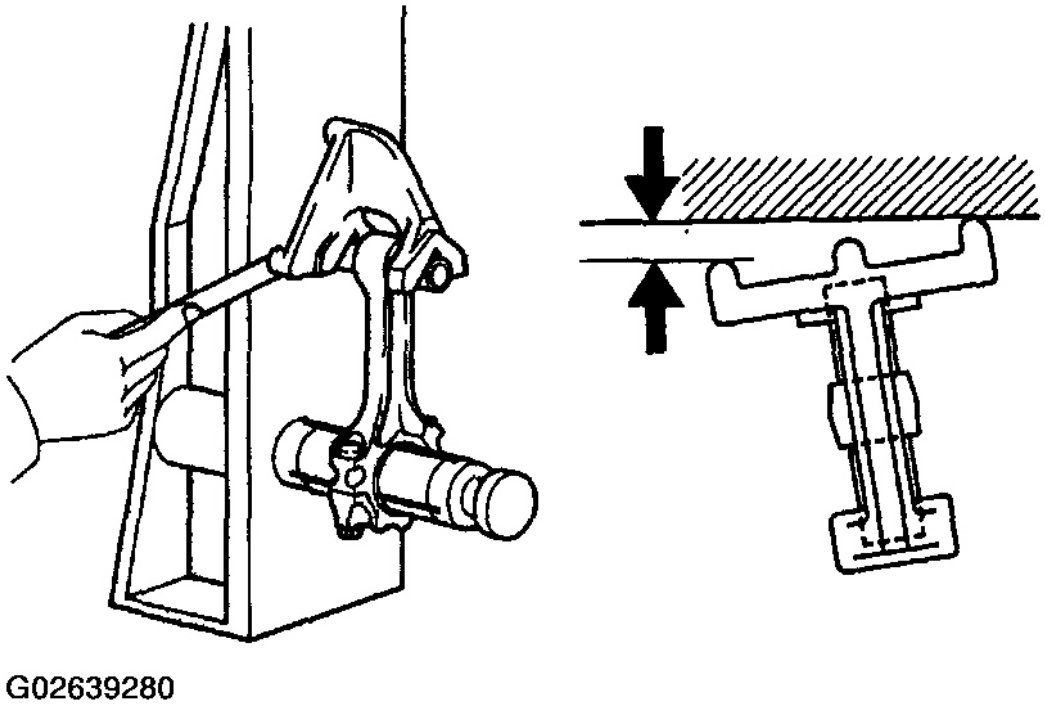

Fig. 271: Checking Connecting Rod For Twist
Courtesy of TOYOTA MOTOR SALES, U.S.A., INC.

b. Inspect the piston pin oil clearance.
   1. Using a caliper gauge, measure the inside diameter of the connecting rod bushing.

      Bushing inside diameter:

      22.005 to 22.014 mm (0.8663 to 0.8667 in.)

cardiagn.com

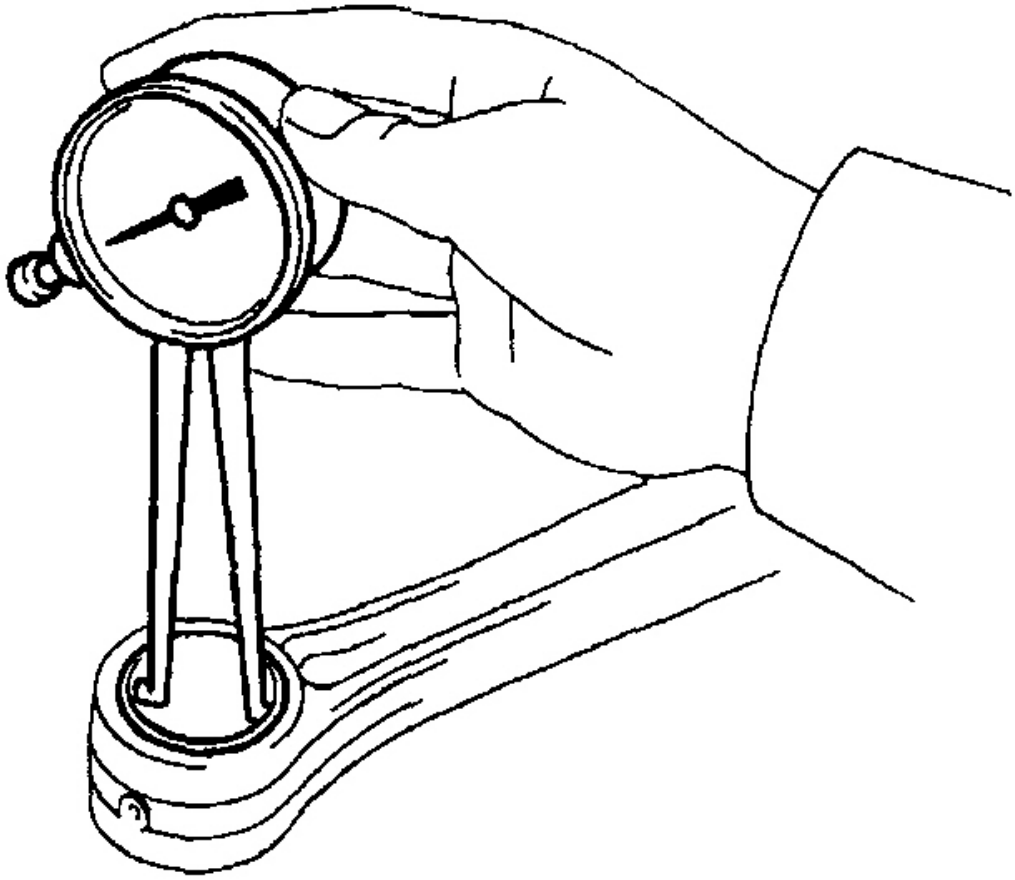

Fig. 272: Measuring Inside Diameter Of Connecting Rod Bushing
Courtesy of TOYOTA MOTOR SALES, U.S.A., INC.

2. Using a micrometer, measure the piston pin diameter.

   Piston pin diameter:

   21.997 to 22.006 mm (0.8660 to 0.8664 in.)

cardiagn.com

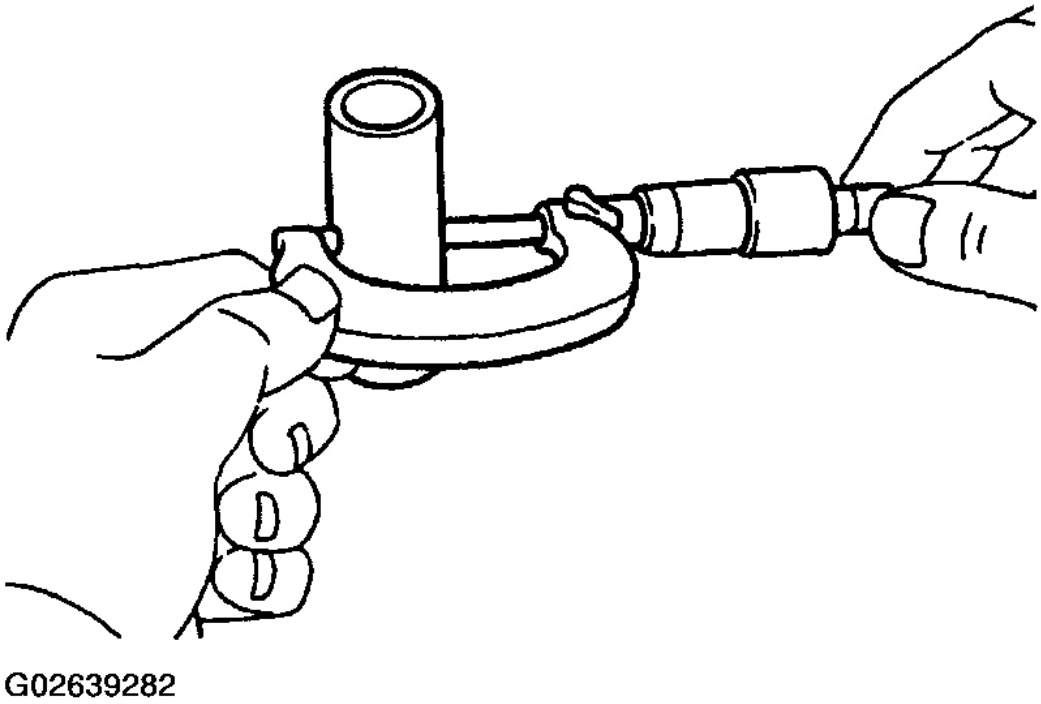

Fig. 273: Measuring Piston Pin Diameter
Courtesy of TOYOTA MOTOR SALES, U.S.A., INC.

3. Subtract the piston pin diameter measurement from the bushing inside diameter measurement.

   Standard oil clearance:

   0.005 to 0.011 mm (0.0002 to 0.0004 in.)

   Maximum oil clearance: 0.05 mm (0.0020 in.)

   If the oil clearance is greater than the maximum, replace the bushing (see **REPLACEMENT**). If necessary, replace the piston and piston pin as a set.

8. **INSPECT CONNECTING ROD BOLTS**

   Using vernier calipers, measure the tension portion diameter of the bolt.

   Standard diameter: 7.2 to 7.3 mm (0.283 to 0.287 in.)

   Minimum diameter: 7.0 mm (0.275 in.)

cardiagn.com

If the diameter is less than the minimum, replace the bolt.

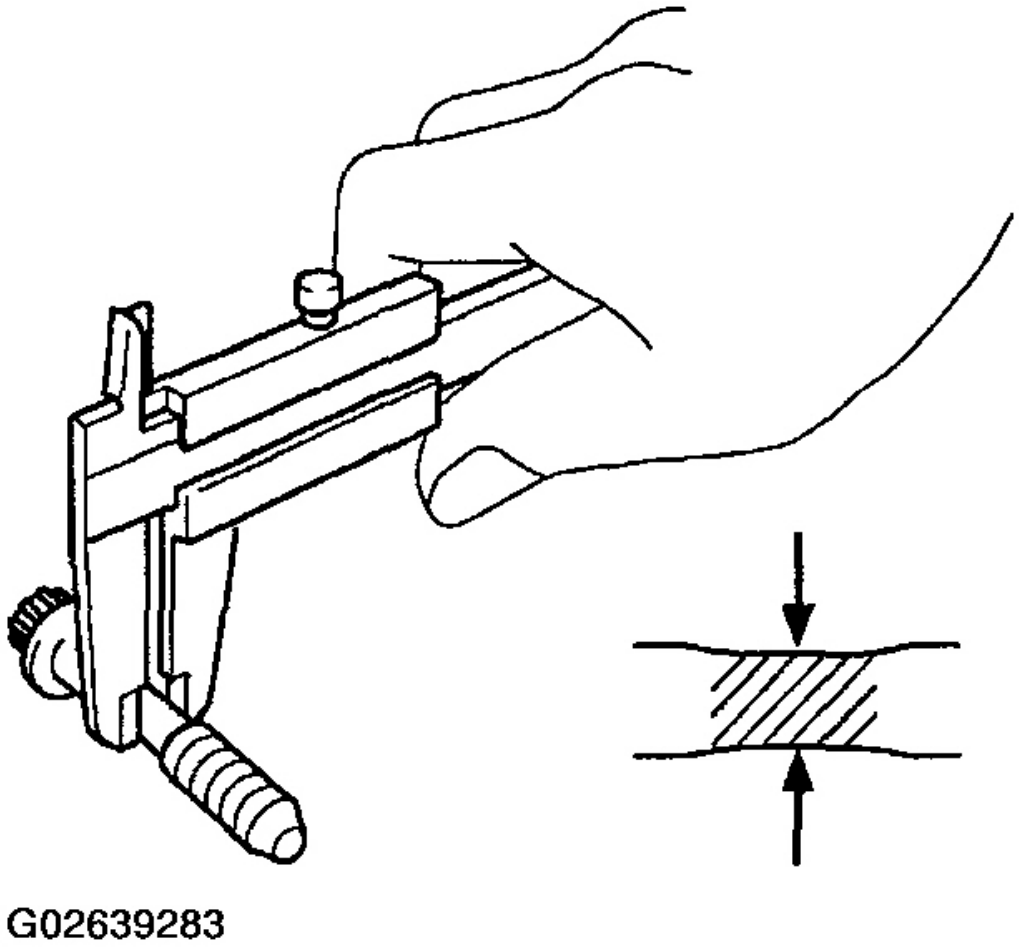

Fig. 274: Measuring Tension Portion Diameter
Courtesy of TOYOTA MOTOR SALES, U.S.A., INC.

9. **INSPECT CRANKSHAFT**
   a. Inspect for circle runout.
      1. Place the crankshaft on V-blocks.
      2. Using a dial indicator, measure the circle runout, as shown in the illustration.

         Maximum circle runout: 0.03 mm (0.0012 in.)

         If the circle runout is greater than the maximum, replace the crankshaft.

cardiagn.com

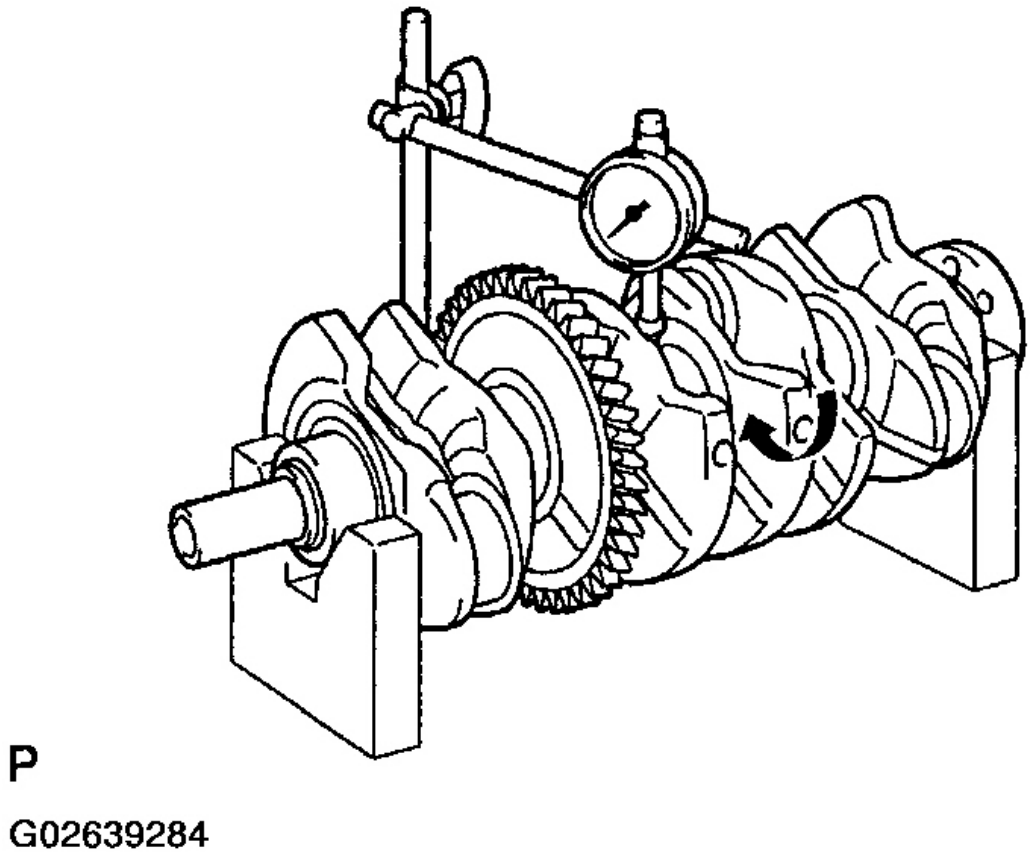

Fig. 275: Measuring Circle Runout Crankshaft
Courtesy of TOYOTA MOTOR SALES, U.S.A., INC.

b. Inspect the main journals and crank pins.
   1. Using a micrometer, measure the diameter of each main journal and crank pin.

      Diameter:

      DIAMETER

Main journal	54.988 to 55.000 mm (2.1649 to 2.1654 in.)
Crank pin	47.990 to 48.000 mm (1.8894 to 1.8898 in.)

      If the diameter is not as specified, check the oil clearance (see **DISASSEMBLY**). If necessary, replace the crankshaft.

   2. Check each main journal and crank pin for taper and out-of-round as shown.

cardiagn.com

Maximum taper and out-of-round:

0.003 mm (0.0001 in.)

If the taper and out-of-round is greater than the maximum, replace the crankshaft.

cardiagn.com

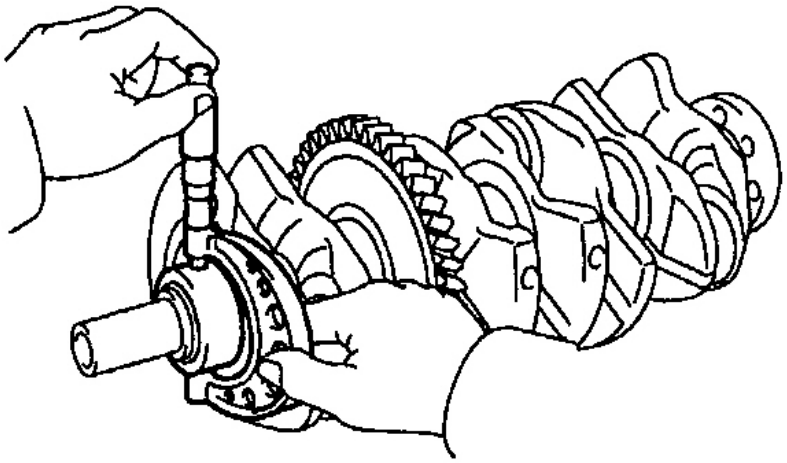

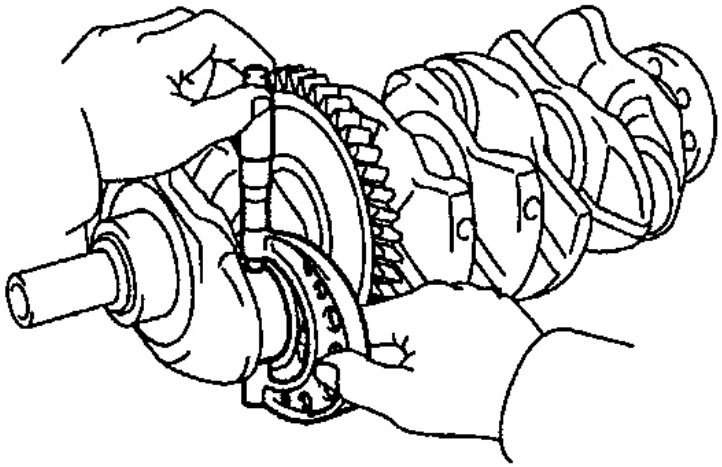

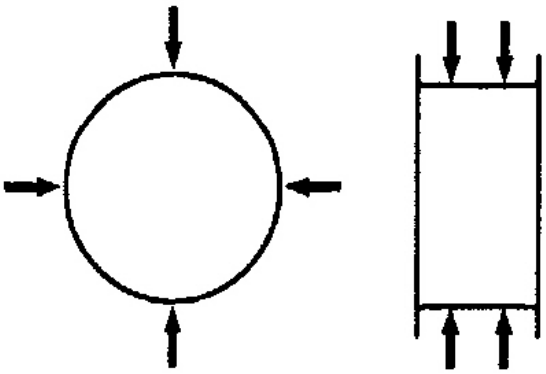

P

G02639285

cardiagn.com

Fig. 276: Checking Each Journal & Crank Pin For Taper And Out-Of-Round
Courtesy of TOYOTA MOTOR SALES, U.S.A., INC.

REPLACEMENT

1. **REPLACE CONNECTING ROD BUSHINGS**
   a. Using SST and a press, press out the bushing.

      SST 09222-30010

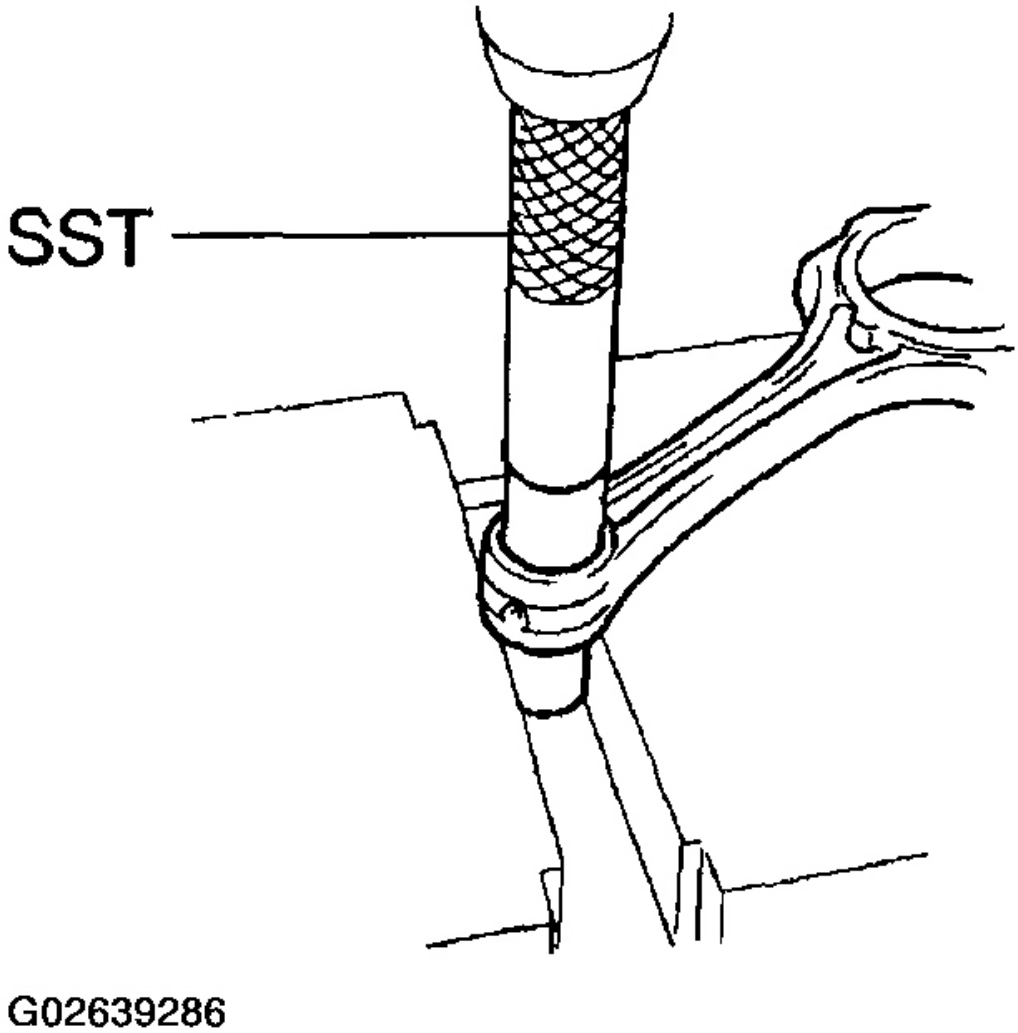

Fig. 277: Pressing Out Bushing

cardiagn.com

Courtesy of TOYOTA MOTOR SALES, U.S.A., INC.

b. Align the oil hoses of a new bushing and the connecting rod.

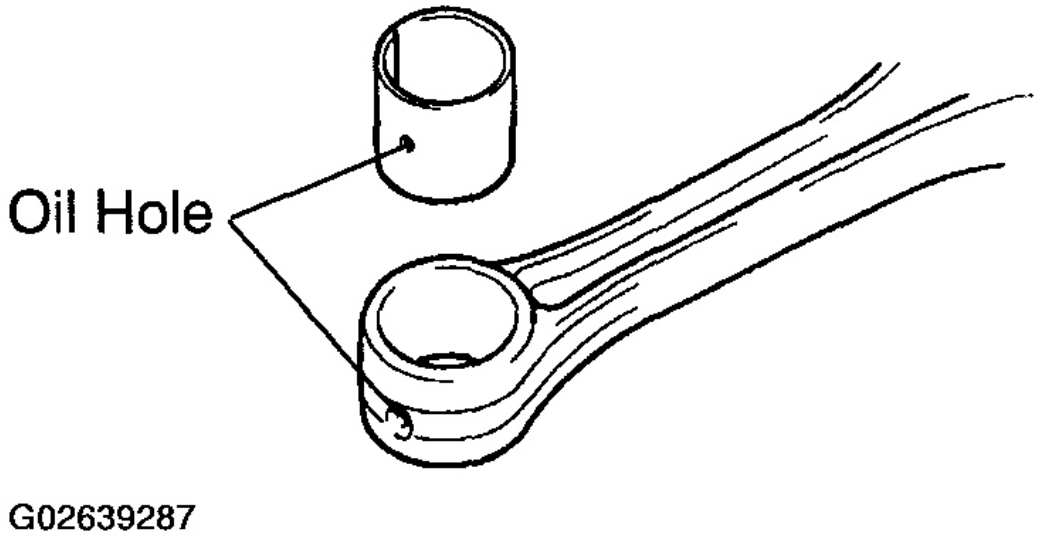

Fig. 278: Aligning Oil Holes Of Bushing & Connecting Rod
Courtesy of TOYOTA MOTOR SALES, U.S.A., INC.

c. Using SST and a press, press in the bushing.

SST 09222-30010

d. Using a pin hole grinder, hone the bushing to obtain the standard specified clearance (See **INSPECTION**) between the bushing and piston pin.

cardiagn.com

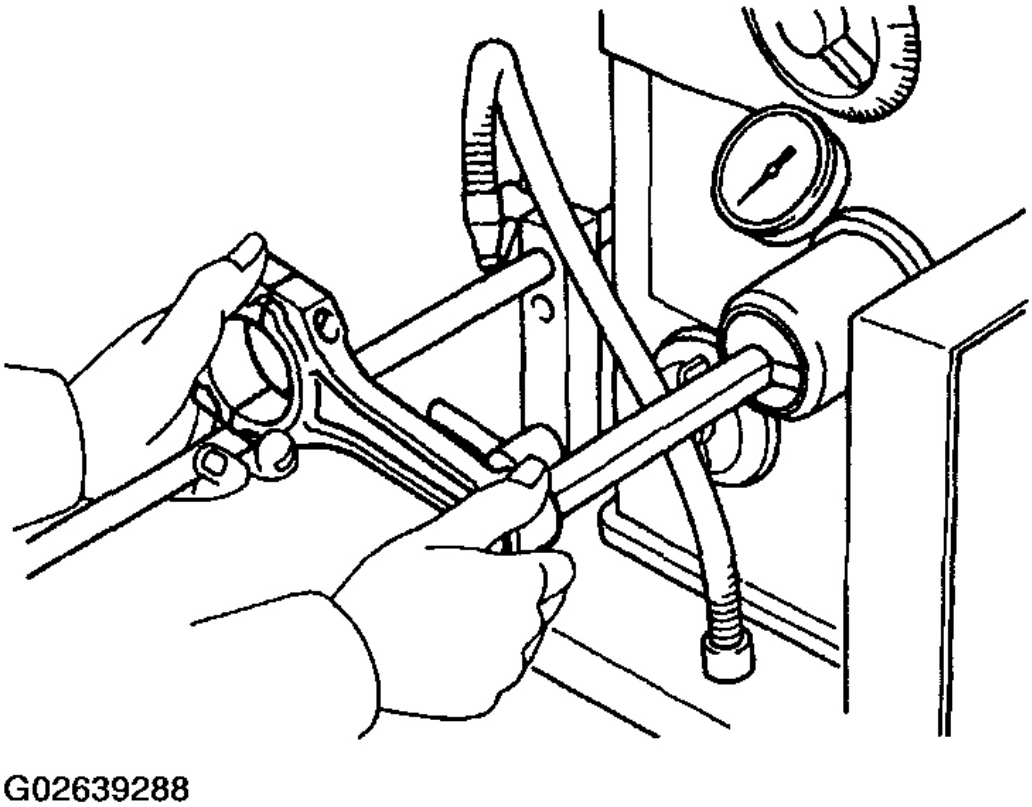

Fig. 279: Honing Connecting Rod Bushing
Courtesy of TOYOTA MOTOR SALES, U.S.A., INC.

e. Check the piston pin fit at normal room temperature. Coat the piston pin with engine oil, and push it into the connecting rod with your thumb.

cardiagn.com

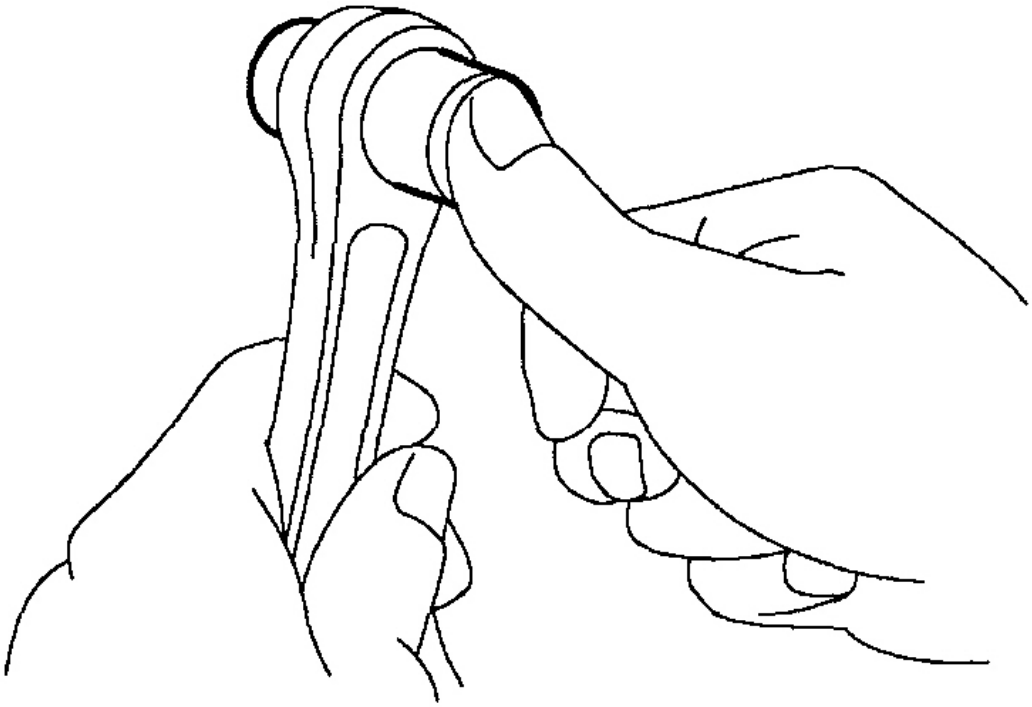

Fig. 280: Checking Piston Pin Fit
Courtesy of TOYOTA MOTOR SALES, U.S.A., INC.

2. **REPLACE CRANKSHAFT REAR OIL SEAL**

   If the rear oil seal is installed to the cylinder block.

   1. Using a knife, cut off the oil seal lip.

cardiagn.com

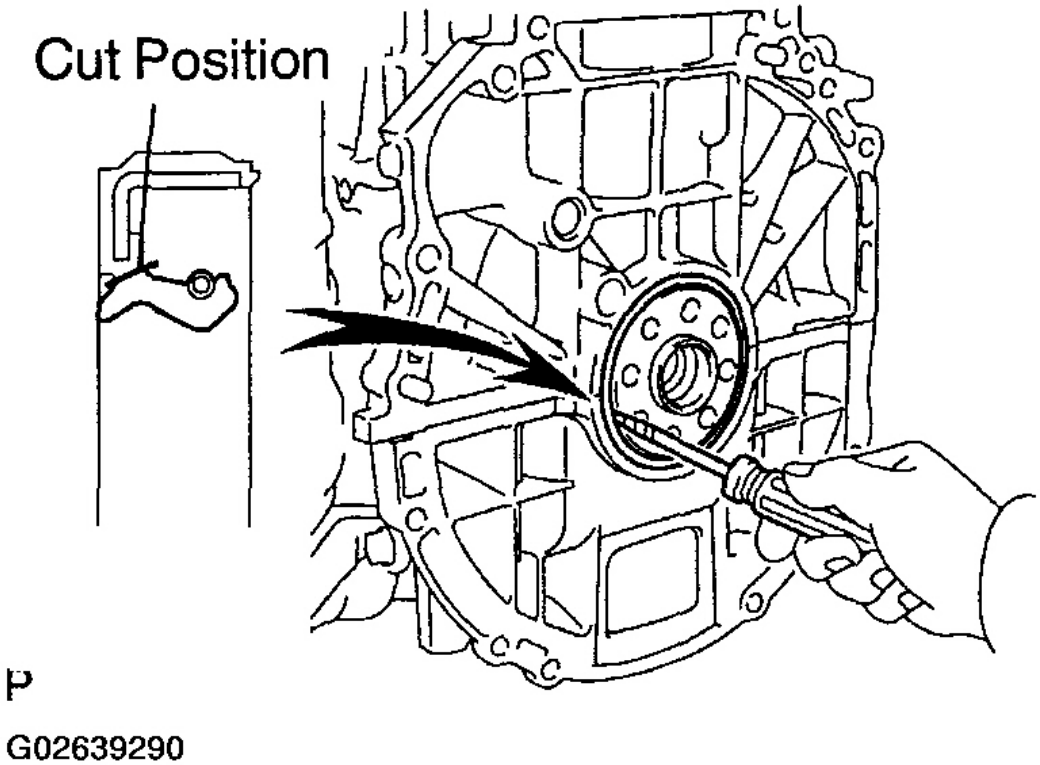

Fig. 281: Cutting Off Oil Seal Lip
Courtesy of TOYOTA MOTOR SALES, U.S.A., INC.

2. Using a screwdriver, pry out the oil seal.

NOTE: Be careful not to damage the crankshaft. Tape the screwdriver tip.

3. Apply MP grease to a new oil seal lip.
4. Using SST and a hammer, tap in the oil seal until its surface is flush with the oil seal retainer edge.

SST 09223-15030, 09950-70010 (09951-07100)

cardiagn.com

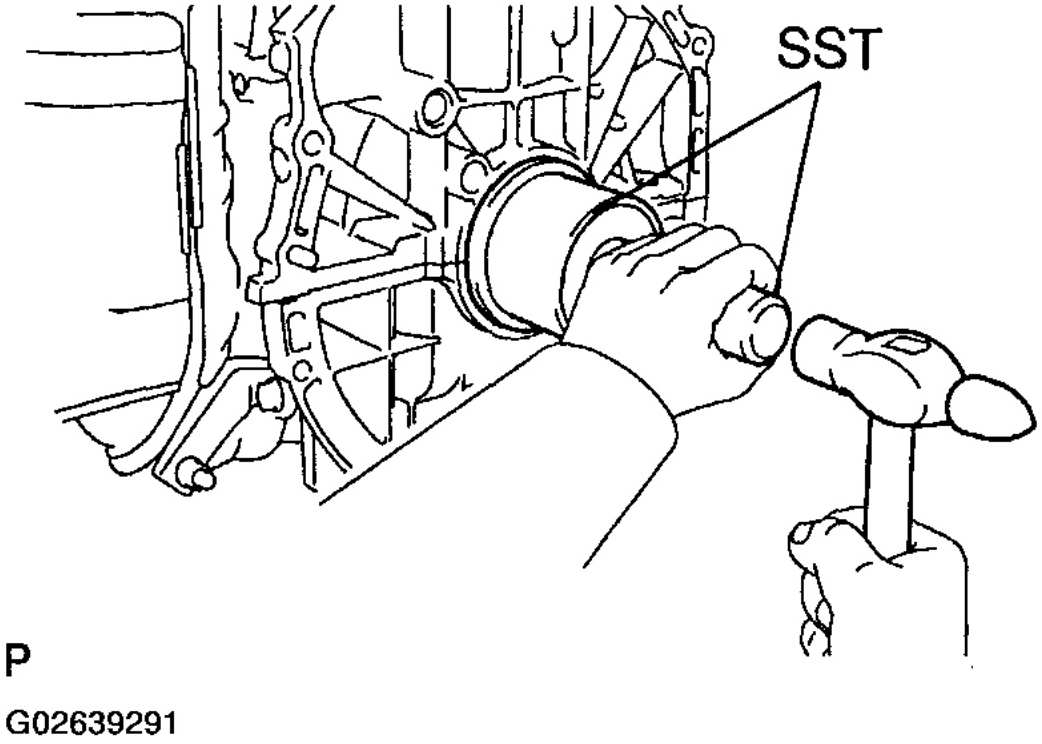

Fig. 282: Cutting Off Oil Seal Lip
Courtesy of TOYOTA MOTOR SALES, U.S.A., INC.

REASSEMBLY

HINT:

- Thoroughly clean all parts to be assembled.
- Before installing the parts, apply fresh engine oil to all sliding and rotating surfaces.
- Replace all gaskets, O-rings and oil seals with new parts.

1. **ASSEMBLE PISTON AND CONNECTING ROD**
   a. Using a small screwdriver, install a new snap ring at one end of the piston pin hole.

NOTE: **Be sure that end gap of the snap ring is not aligned with the pin hole cutout portion of the piston.**

cardiagn.com

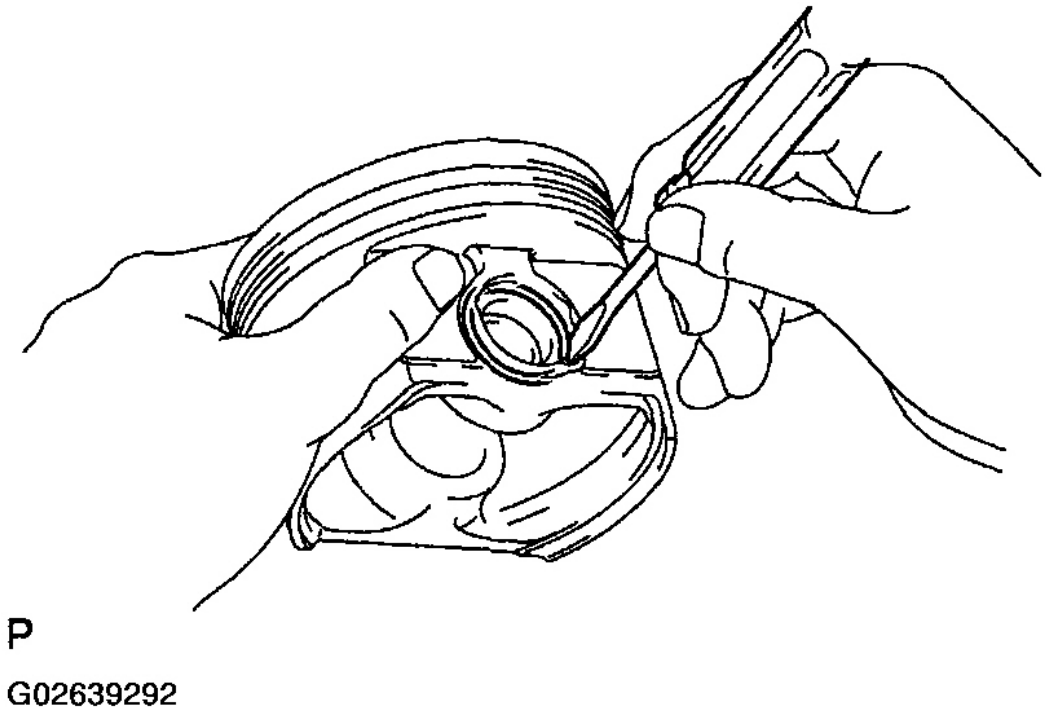

Fig. 283: Installing Snap Ring
Courtesy of TOYOTA MOTOR SALES, U.S.A., INC.

b. Gradually heat the piston to 80 to 90°C (176 to 194°F).

cardiagn.com

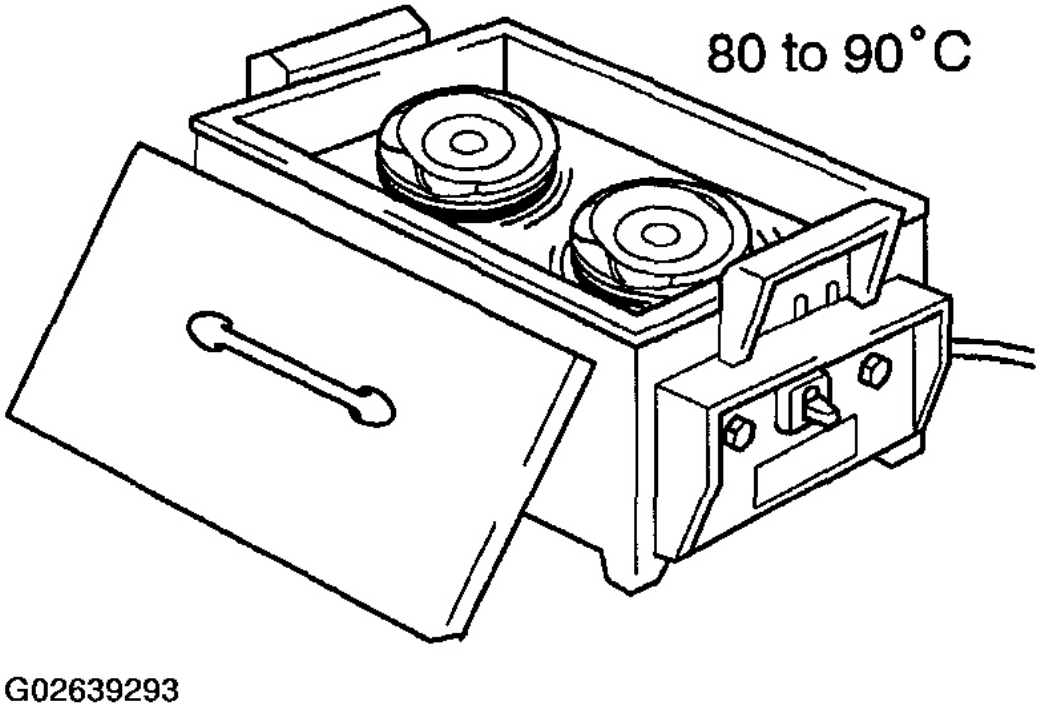

Fig. 284: Heating Pistons
Courtesy of TOYOTA MOTOR SALES, U.S.A., INC.

c. Coat the piston pin with engine oil.
d. Align the front marks on the piston and connecting rod, and push in the piston with your thumb.

cardiagn.com

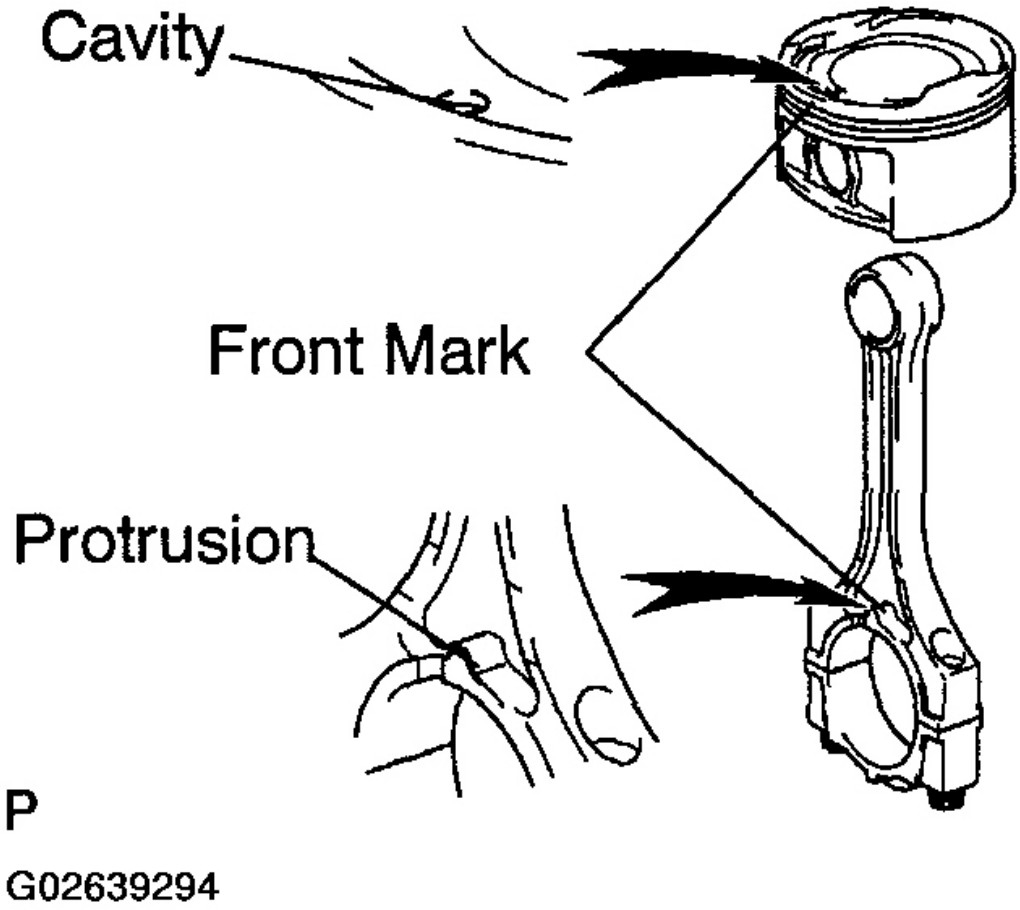

Fig. 285: Aligning Front Marks On Piston & Connecting Rod
Courtesy of TOYOTA MOTOR SALES, U.S.A., INC.

e. Using a small screwdriver, install a new snap ring on the other end of the piston pin hole.

NOTE: **Be sure that end gap of the snap ring is not as aligned with the pin hole cutout portion of the piston.**

cardiagn.com

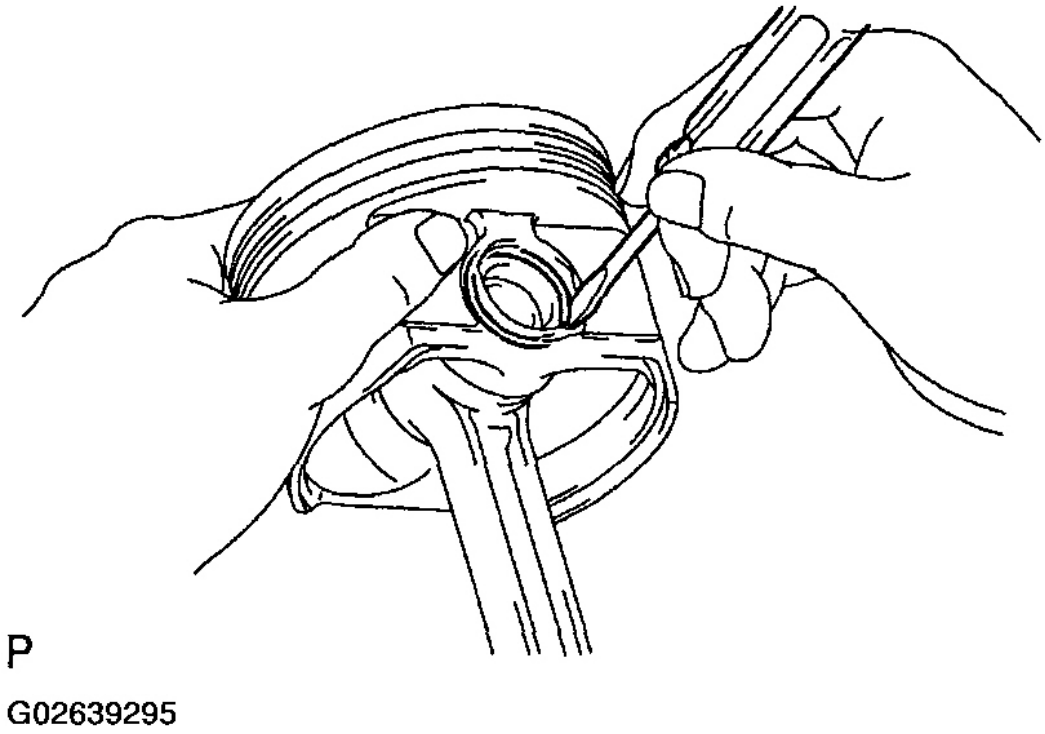

Fig. 286: Installing Snap Ring
Courtesy of TOYOTA MOTOR SALES, U.S.A., INC.

2. **INSTALL PISTON RINGS**
   a. Install the oil ring expander and 2 side rails by hand.
   b. Using a piston ring expander, install the 2 compression rings with the code mark facing upward.

   Code mark:

   CODE MARK

Piston Ring	Code
No. 1	None
No. 2	2N

cardiagn.com

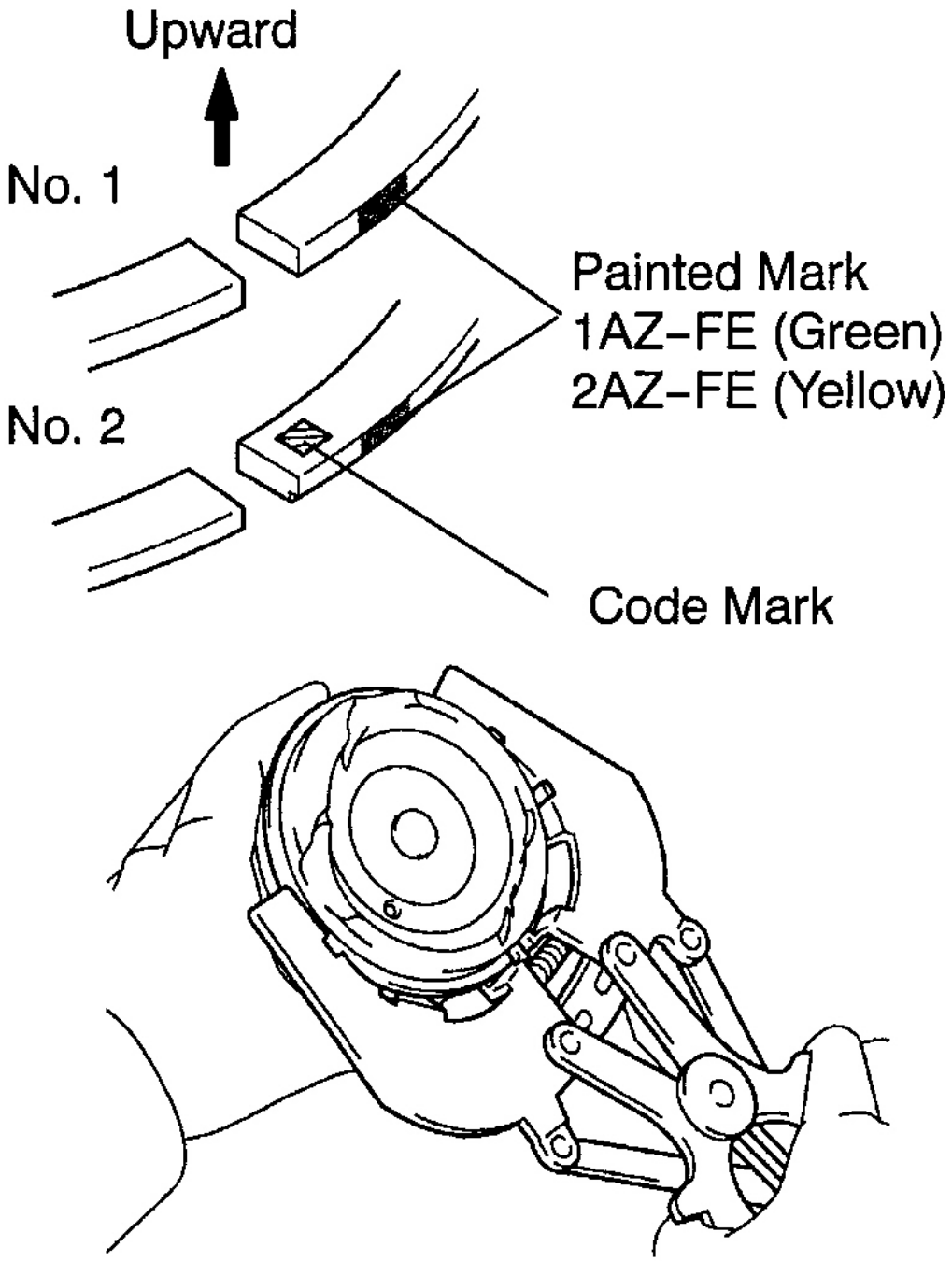

P

G02639297

cardiagn.com

Fig. 287: Installing Piston Rings
Courtesy of TOYOTA MOTOR SALES, U.S.A., INC.

c. Position the piston rings so that the ring ends are as shown.

NOTE: Do not align the ring ends.

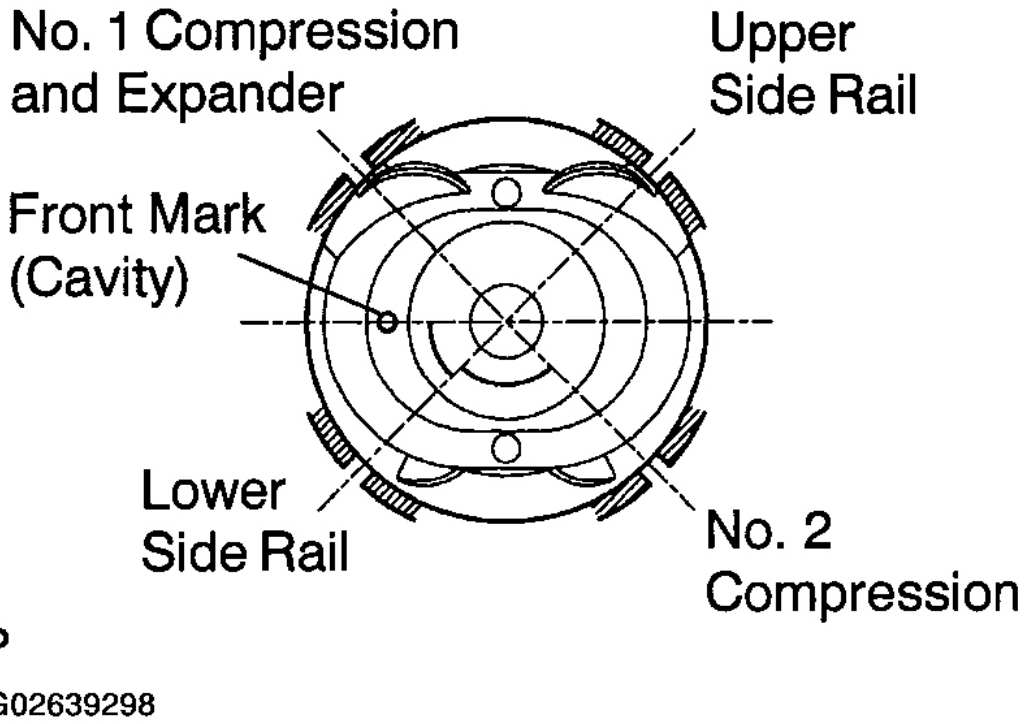

Fig. 288: Positioning Piston Rings
Courtesy of TOYOTA MOTOR SALES, U.S.A., INC.

3. **INSTALL CONNECTING ROD BEARINGS**
   a. Align the bearing claw with the groove of the connecting rod or connecting cap.
   b. Install the bearings in the connecting rod and connecting rod cap.

cardiagn.com

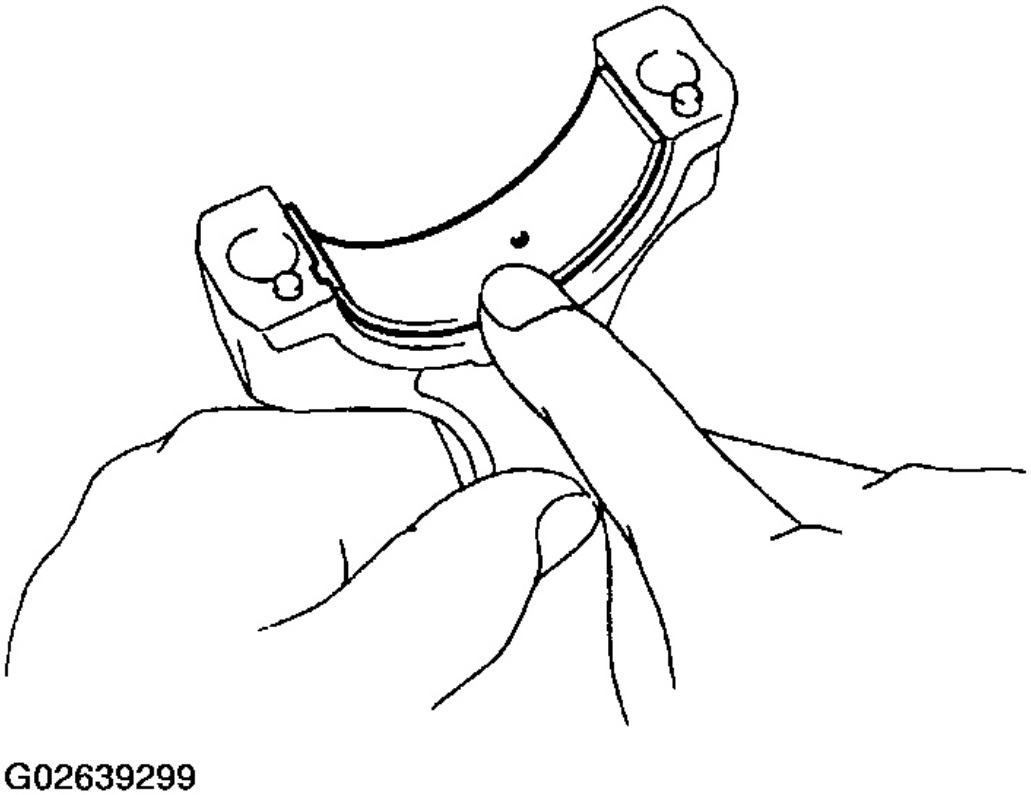

Fig. 289: Installing Connecting Rod Bearings
Courtesy of TOYOTA MOTOR SALES, U.S.A., INC.

4. **INSTALL MAIN BEARINGS**

HINT:

Upper bearings have an oil groove and oil holes; Lower bearings do not.

a. Align the bearing claw with the claw groove of the cylinder block, and push in the 5 upper bearings.

NOTE:
- **Install the bearing with the oil hole in the cylinder block.**

cardiagn.com

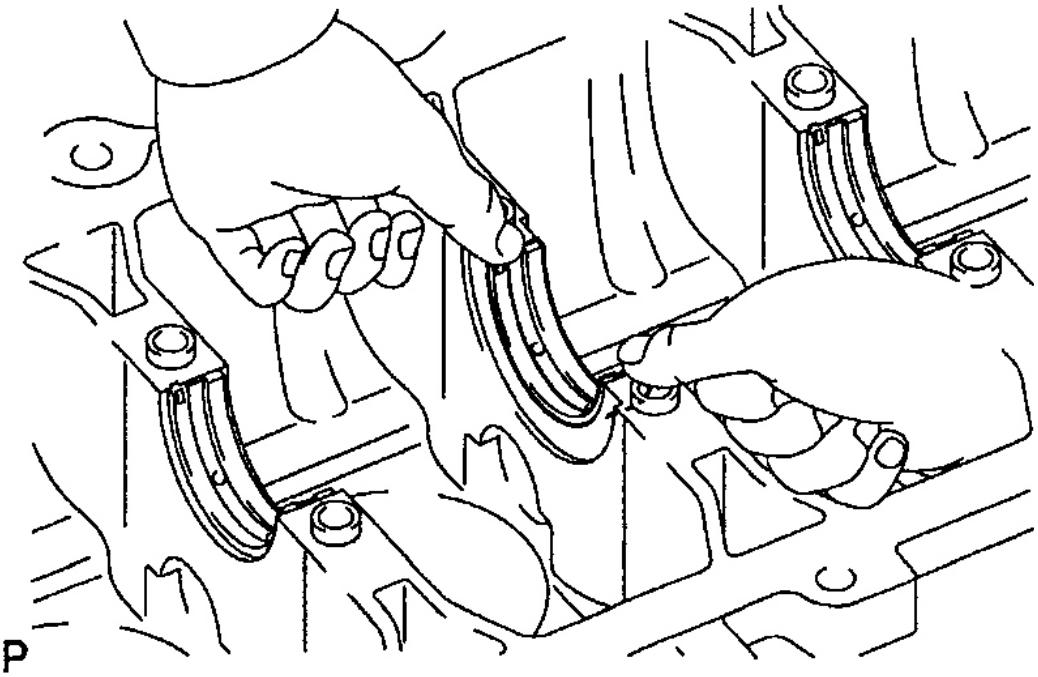

Fig. 290: Installing Bearing With Oil Hole In Cylinder Block
Courtesy of TOYOTA MOTOR SALES, U.S.A., INC.

- **Clean the backside of the bearing and the bearing surface of the bearin cap and do not let the oil and fat stick.**

b. Align the bearing claw with the claw groove of the main bearing cap, and push in the 5 lower bearings.

NOTE: **Clean the backside of the bearing and the bearing surface of the bearing cap and do not let the oil and fat stick.**

cardiagn.com

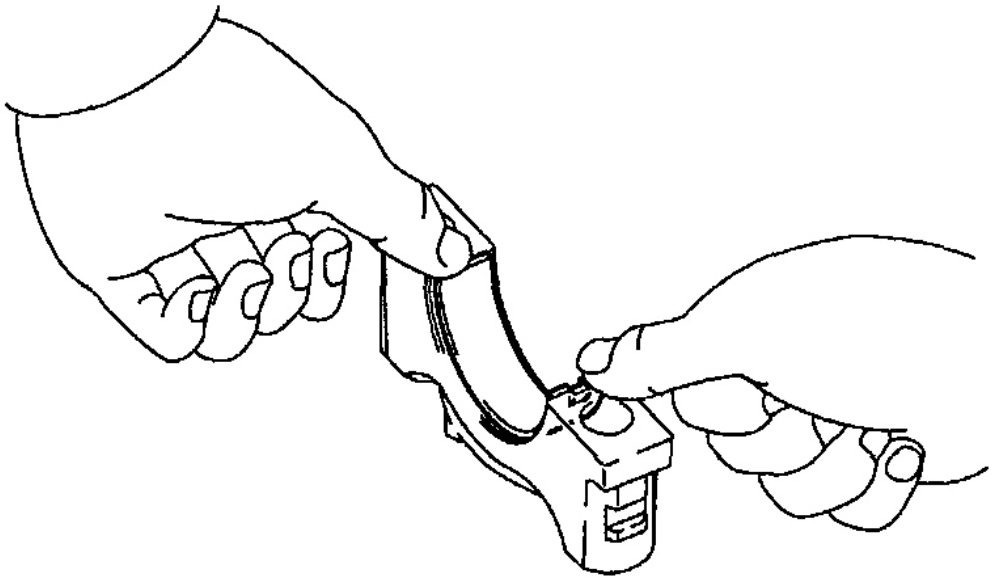

Fig. 291: Installing Bearing Main Bearing Caps
Courtesy of TOYOTA MOTOR SALES, U.S.A., INC.

5. **INSTALL THRUST WASHERS**

Install the 2 thrust washers under the No. 3 journal position of the cylinder block with the oil grooves facing outward.

cardiagn.com

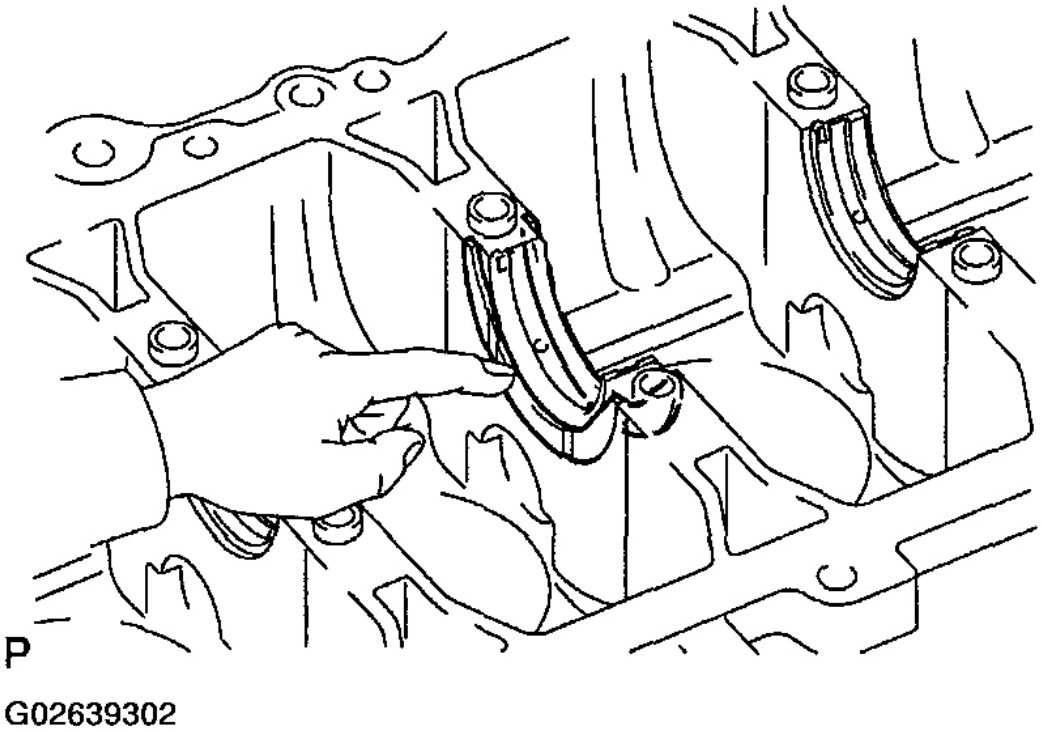

Fig. 292: Installing Thrust Washers
Courtesy of TOYOTA MOTOR SALES, U.S.A., INC.

6. **PLACE CRANKSHAFT ON CYLINDER BLOCK**
7. **INSTALL MAIN BEARING CAPS**
   a. Install the 5 main bearing caps in their proper locations.

      HINT:

      A number is marked on each main bearing cap to indicate the installation position.

cardiagn.com

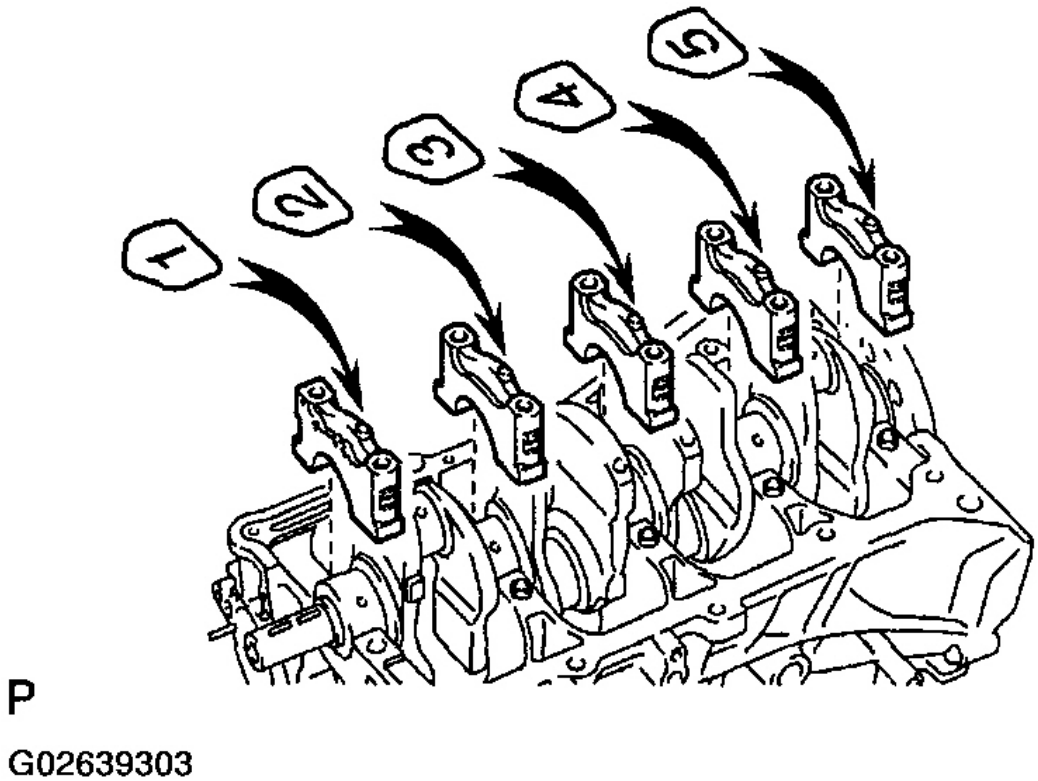

Fig. 293: Installing Main Bearing Caps In Proper Locations
Courtesy of TOYOTA MOTOR SALES, U.S.A., INC.

b. Install the main bearing cap bolts.

HINT:

- The main bearing cap bolts are tightened in 2 progressive steps (steps (2), (3) and (5)).
- If any one of the main bearing cap bolts is broken or deformed, replace it.
    1. Apply a light coat of engine oil on the threads and under the main bearing cap bolts.
    2. Install and uniformly tighten the 10 main bearing cap bolts in several passes, in the sequence shown.

       Torque: 20 N.m (204 kgf.cm, 15 ft.lbf)

cardiagn.com

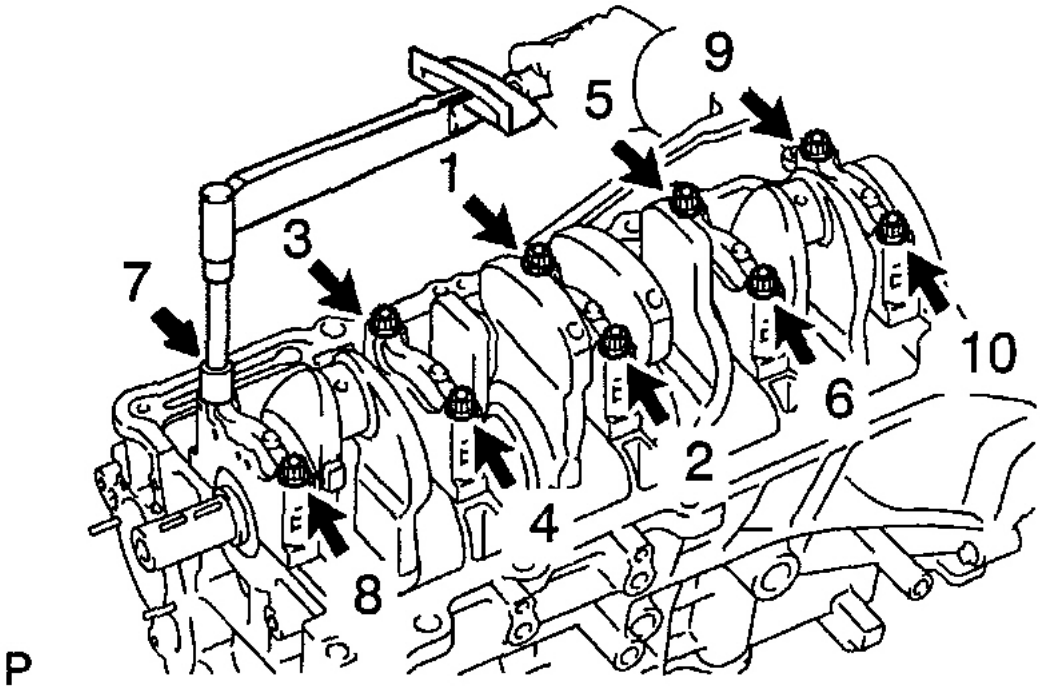

Fig. 294: Identifying Bearing cap Bolt Tightening Sequence
Courtesy of TOYOTA MOTOR SALES, U.S.A., INC.

3. Retighten the 10 main bearing cap bolts in several passes, in the sequence shown. See **Fig. 294**.

   Torque: 40 N.m (408 kgf.cm, 30 ft.lbf)

   If any one of the main bearing cap bolts does not meet the torque specification, replace the main bearing cap bolt.

4. Mark the front of the main bearing cap bolt with paint.

cardiagn.com

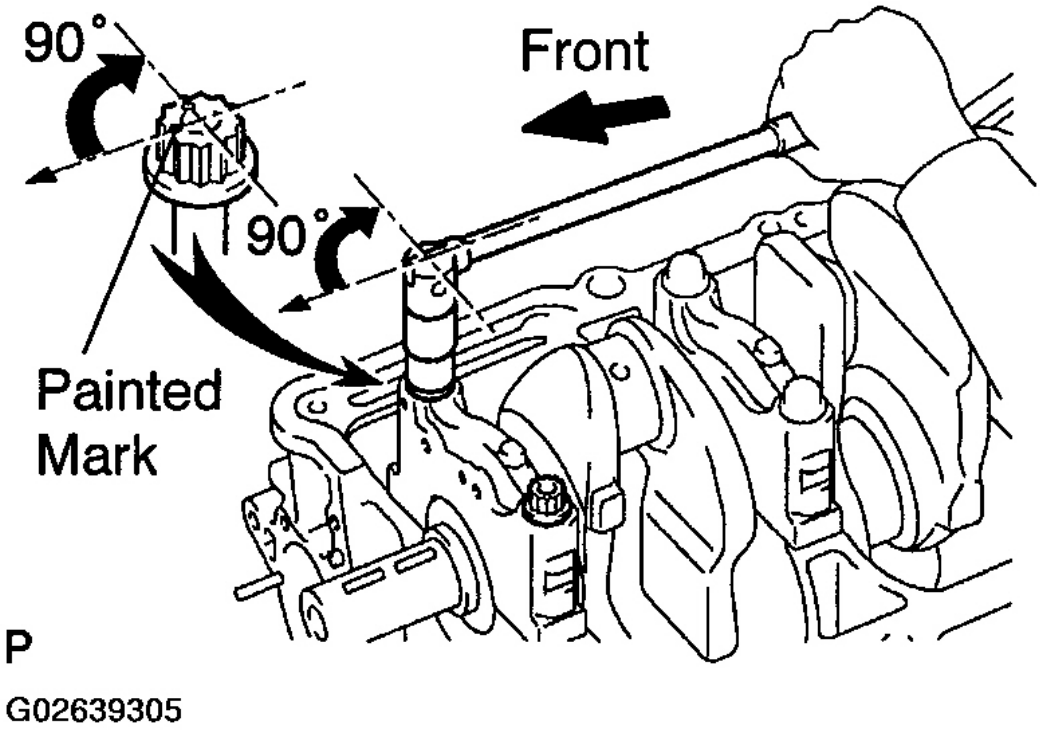

Fig. 295: Retightening Main Bearing Cap Bolts
Courtesy of TOYOTA MOTOR SALES, U.S.A., INC.

5. Retighten the main bearing cap bolts by 90° in the numerical order shown.
6. Check that the painted mark is now at a 90° angle to the front.

c. Check that the crankshaft turns smoothly.

8. **CHECK CRANKSHAFT THRUST CLEARANCE (See DISASSEMBLY)**
9. **INSTALL PISTON AND CONNECTING ROD ASSEMBLES**

Using a piston ring compressor, push the correctly numbered piston and connecting rod assemblies into each cylinder with the front mark of the piston facing forward.

cardiagn.com

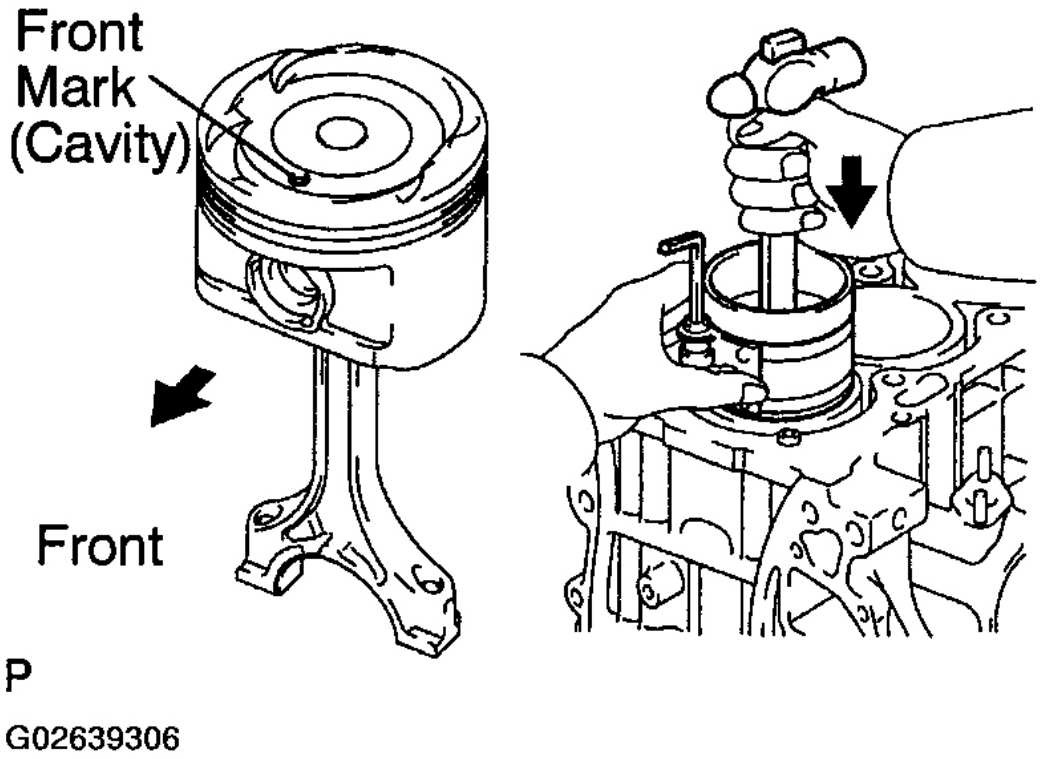

Fig. 296: Installing Piston & Connecting Rod Assembly
Courtesy of TOYOTA MOTOR SALES, U.S.A., INC.

10. **INSTALL CONNECTING ROD CAP**
    a. Place the connecting rod cap on the connecting rod.
        1. Match the numbered connecting rod cap with the connecting rod.
        2. Align the pin dowels of the connecting rod cap with the pins of the connecting rod, and install the connecting rod.

cardiagn.com

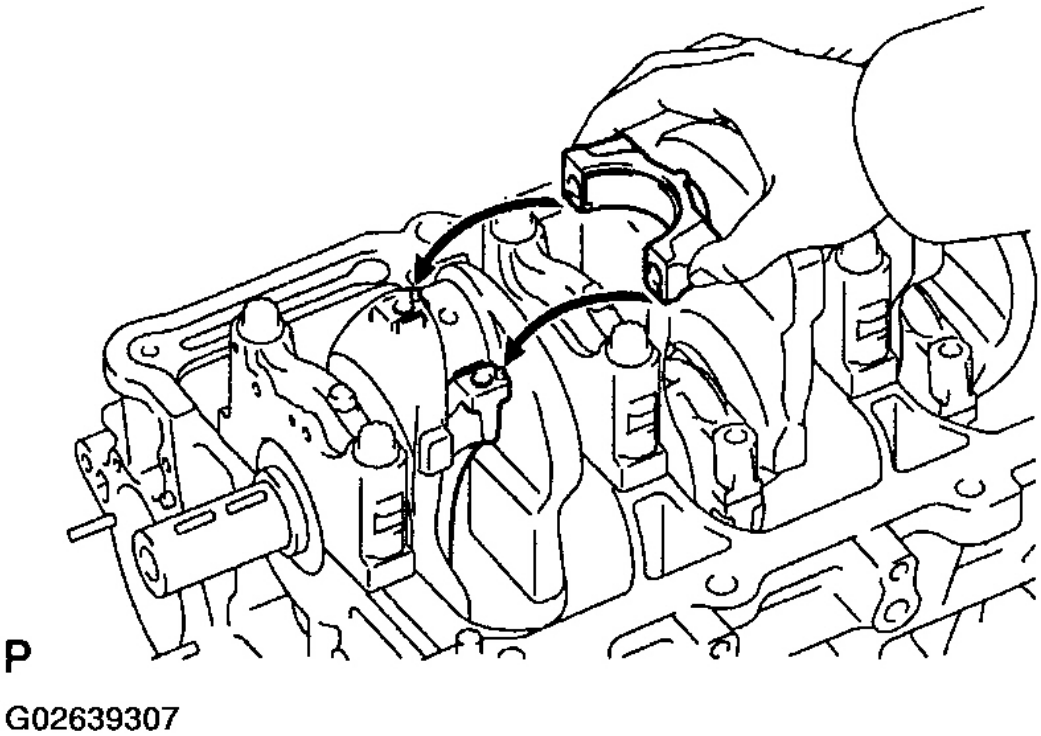

Fig. 297: Placing Connecting Rod Cap On Connecting Rod
Courtesy of TOYOTA MOTOR SALES, U.S.A., INC.

NOTE: **Clean the backside of the bearing and the bearing surface of the bearing cap and prevent oil from adhering to them.**

3. Check that the protrusion of the connecting rod cap is facing in the correct direction.

cardiagn.com

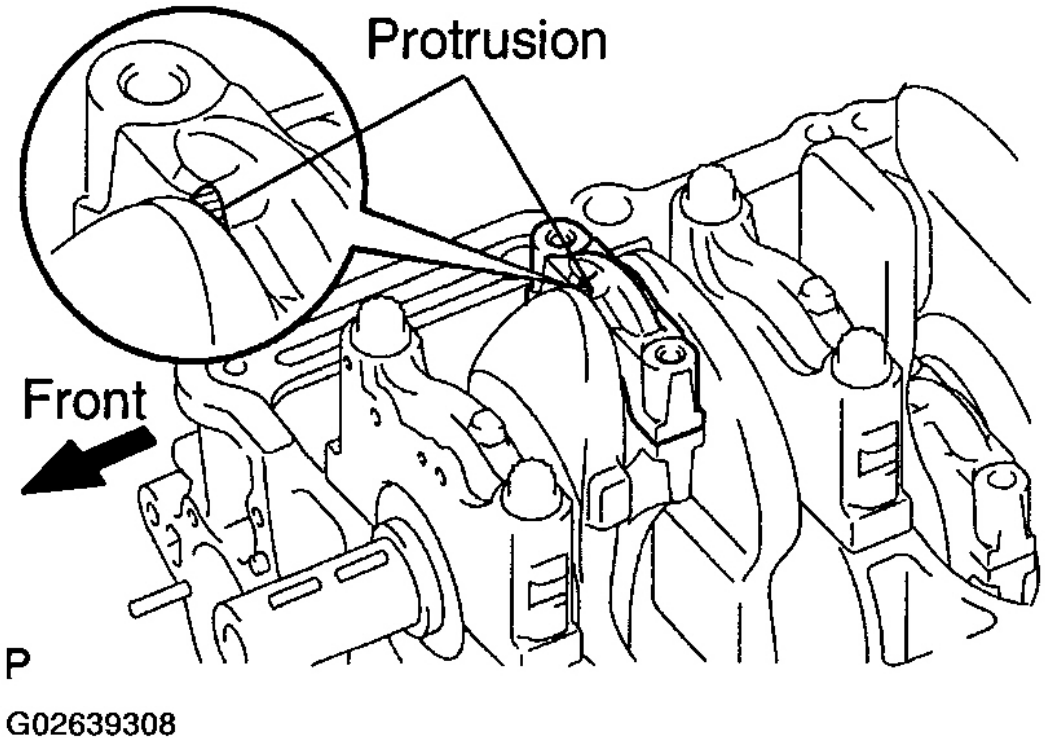

Fig. 298: Checking Protrusion Of Connecting Rod Cap
Courtesy of TOYOTA MOTOR SALES, U.S.A., INC.

b. Install the connecting rod cap bolts.

HINT:

- The connecting rod cap bolts are tightened in 2 steps (steps (3) and (4)).
- If any of the connecting rod cap bolts is broken or deformed, replace it.
  1. Apply a light coat of engine oil on the threads and under the heads of the connecting rod cap bolts.
  2. Install and alternately tighten the 2 connecting rod cap bolts in several passes.

     Torque: 24.5 N.m (250 kgf.cm, 18 ft.lbf)

     If any of the connecting rod cap bolts does not meet the torque specification, replace the connecting rod cap bolts.

cardiagn.com

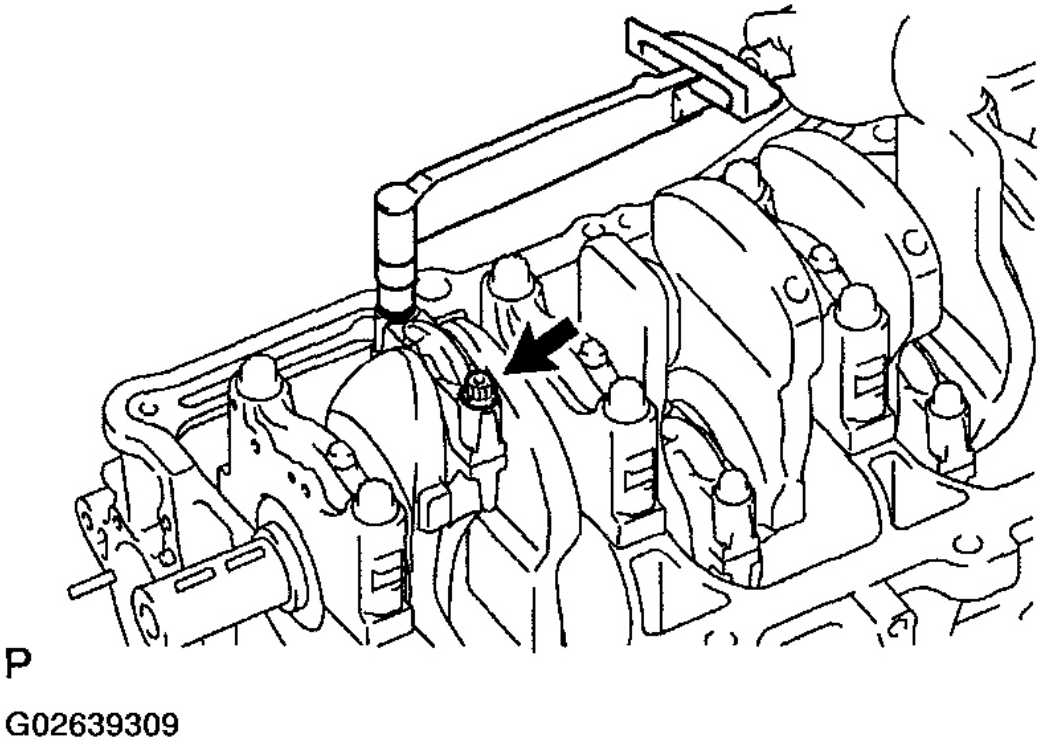

Fig. 299: Alternately Tightening The 2 Connecting Rod Cap Bolts In Several Passes
Courtesy of TOYOTA MOTOR SALES, U.S.A., INC.

3. Mark the front of the connecting cap bolts with paint.
4. Retighten the cap bolts by 90° as shown.

cardiagn.com

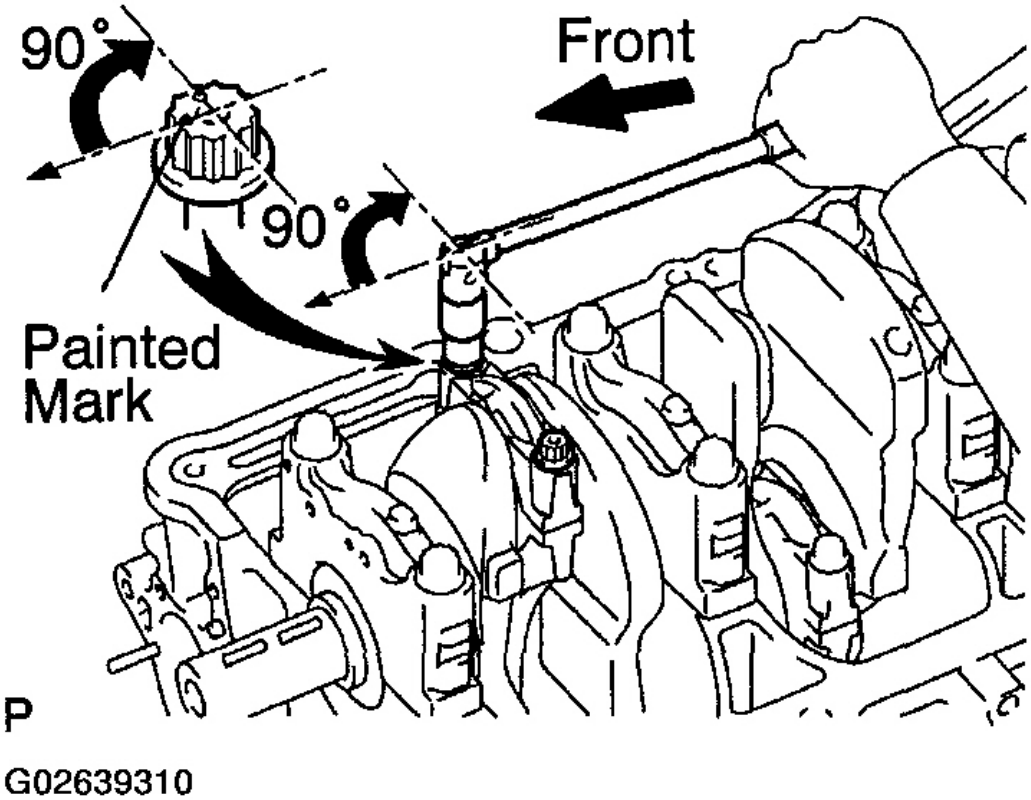

Fig. 300: Marking Bolt Head & Retightening Cap Bolts By 90°
Courtesy of TOYOTA MOTOR SALES, U.S.A., INC.

5. Check that the painted mark is now at a 90° angle to the front.

c. Check that the crankshaft turns smoothly.

11. **CHECK CONNECTING ROD THRUST CLEARANCE (See INSPECTION)**
12. **INSTALL REAR CRANKSHAFT OIL SEAL (See REPLACEMENT)**

HINT:

Wipe seal packing away from the contact surface of the cylinder block assembly and oil seal.

13. **INSTALL CRANK CASE**
    a. Remove any old packing (FIPG) material and be careful not to drop any oil on the contact surfaces of the crank case and cylinder block.
        - Using a razor blade and gasket scraper, remove all the old packing (FIPG) material from the gasket surfaces and sealing groove.

cardiagn.com

- Thoroughly clean all components to remove all the loose material.
- Using a non-residue solvent, clean both sealing surfaces.

b. Apply seal packing to the crank case or cylinder block as shown in the illustration.

Seal packing: Part No. 08826-00080 or equivalent

- Install a nozzle that has been cut to a 2.5 to 3.0 mm (0.10 to 0.12 in.) opening.
- Parts must be assembled within 5 minutes of application. Otherwise the material must be removed and reapplied.
- Immediately remove nozzle from the tube and reinstall cap.

cardiagn.com

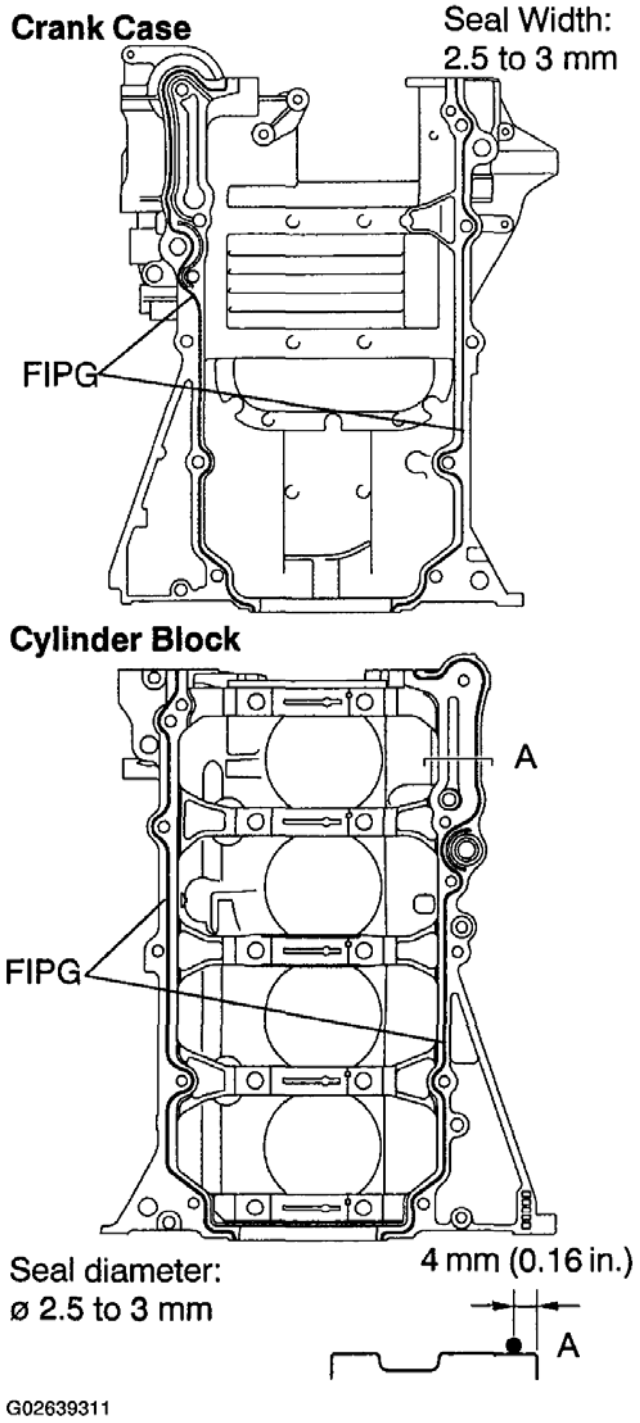

Fig. 301: Applying Seal Packing To Crank Case Or Cylinder Block
Courtesy of TOYOTA MOTOR SALES, U.S.A., INC.

c. Install a new O-ring to the cylinder block.

cardiagn.com

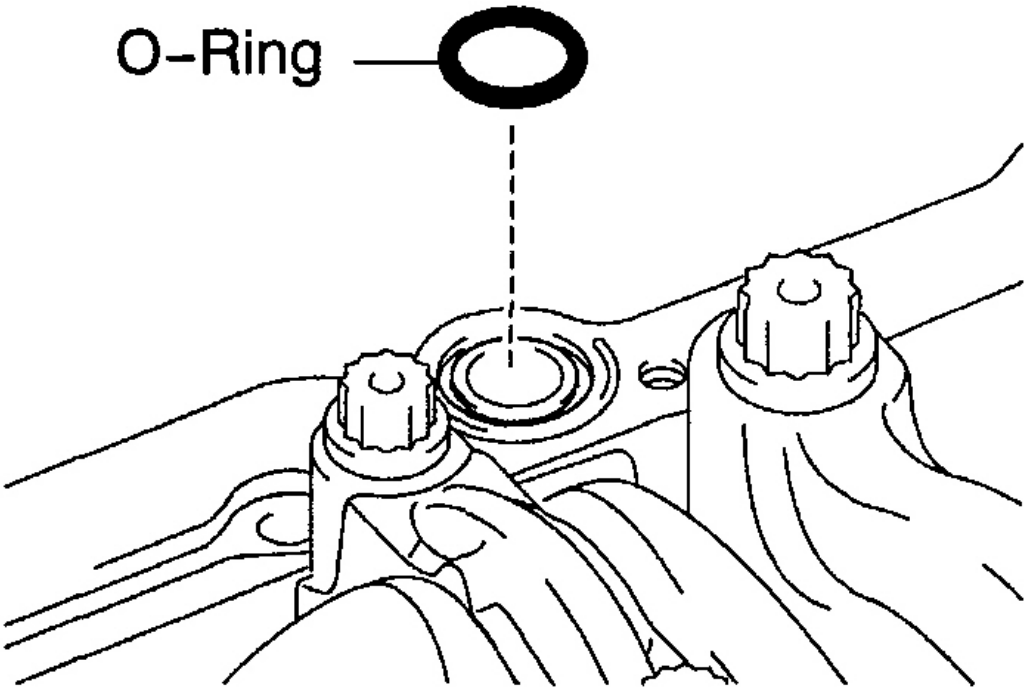

Fig. 302: Installing O-Ring To Cylinder Block
Courtesy of TOYOTA MOTOR SALES, U.S.A., INC.

d. Temporarily install the crank case with the 11 bolts.

HINT:

Bolt length:

112 mm (4.41 in.) for A of 12 mm head

35 mm (1.38 in.) for B of 12 mm head

e. Uniformly tighten the bolts, stud bolts and nuts in several passes.

Torque: 32.5 N.m (331 kgf.cm, 24 ft.lbf)

cardiagn.com

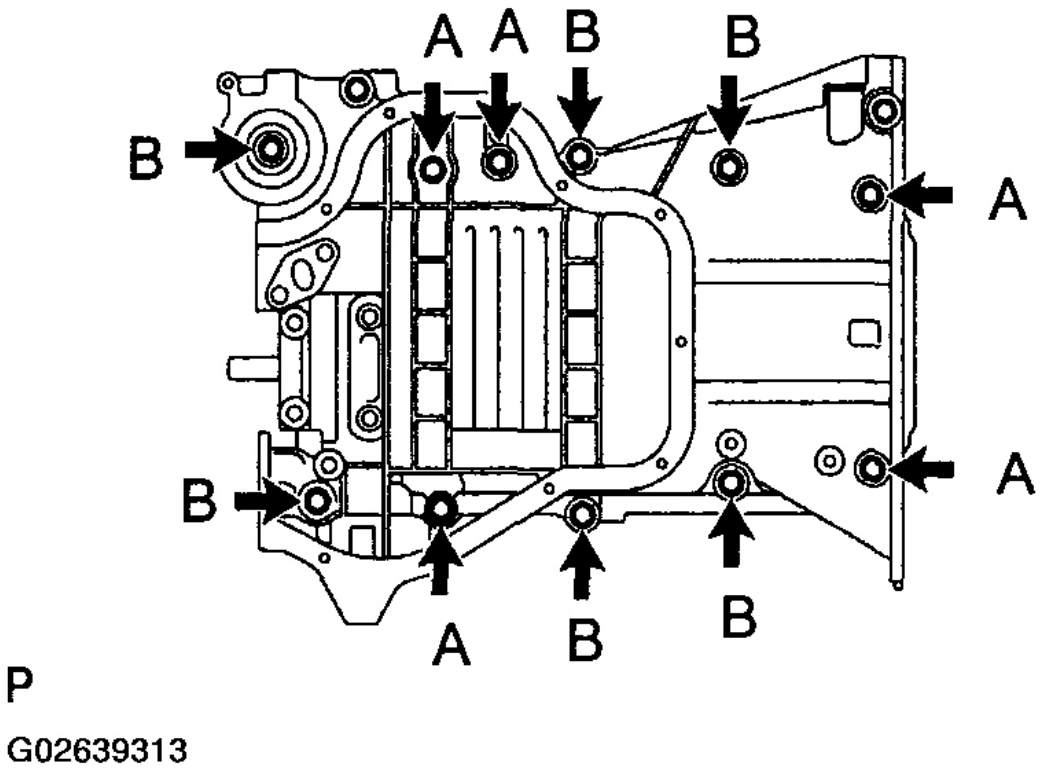

Fig. 303: Identifying Locations Of Crank Case Bolts By Length
Courtesy of TOYOTA MOTOR SALES, U.S.A., INC.

14. **INSTALL BALANCE SHAFT**
    a. Align the bearing claw with the claw groove, and push in the 8 bearings.
    b. Apply a light coat of engine oil on the bearings.
    c. Align the timing marks of the No. 1 and No. 2 balance shafts as shown.

cardiagn.com

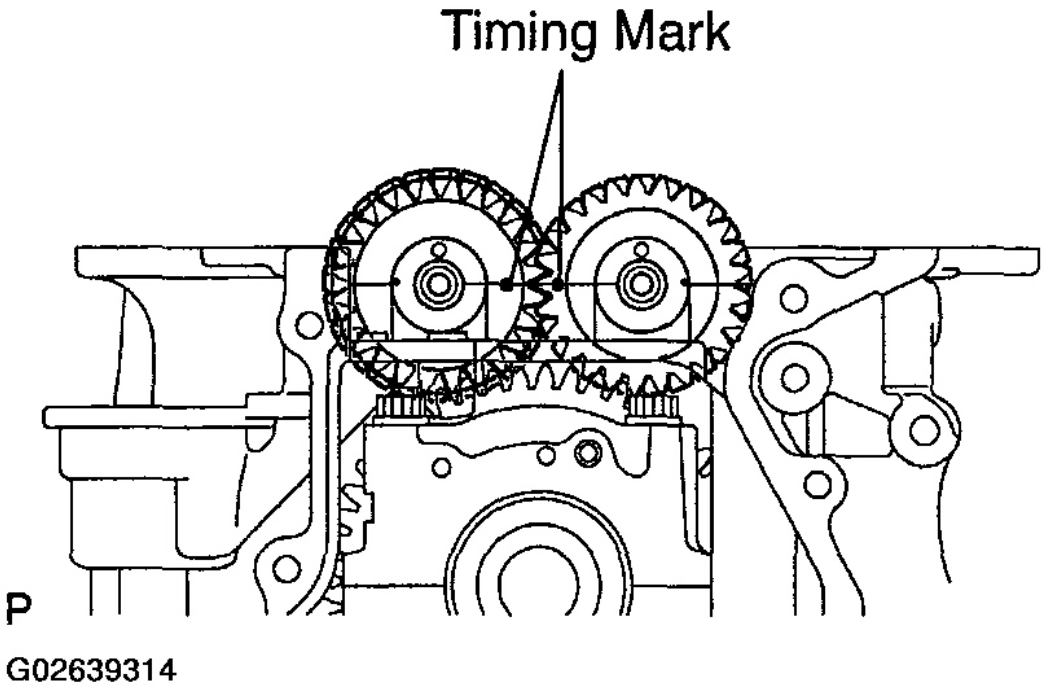

Fig. 304: Identifying Timing Mark Of Balance Shafts
Courtesy of TOYOTA MOTOR SALES, U.S.A., INC.

d. Place the No. 1 and No. 2 balance shaft on the crank case.

15. **INSTALL BALANCE SHAFT HOUSING**
16. **INSTALL BALANCE SHAFT HOUSING BOLTS**

HINT:

- The balance shaft housing bolts are tightened in 2 progressive steps (step (b) and (d)).
- If any of the balance shaft housing bolts is broken or deformed, replace it.
  a. Apply a light coat of engine oil on the threads and under the heads of the balance shaft housing bolts.
  b. Install and uniformly tighten the 8 bolts, several passes, in the sequence shown.

     Torque: 22 N.m (224 kgf.cm, 16 ft.lbf)

cardiagn.com

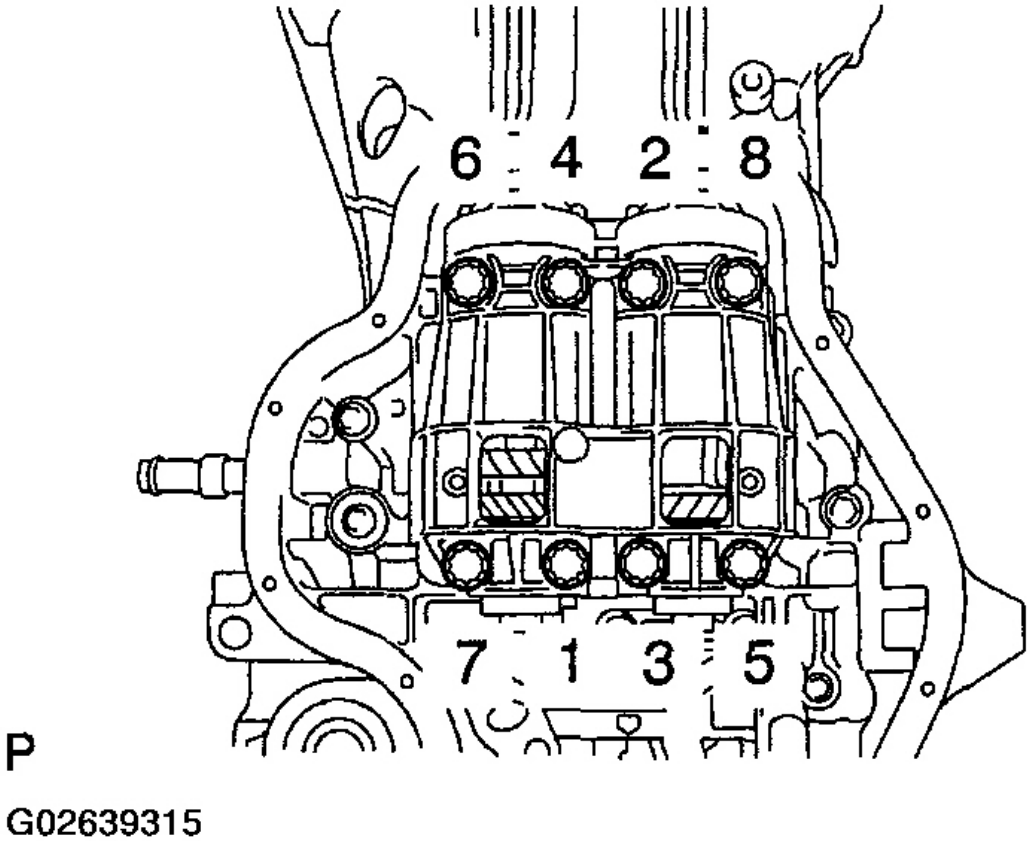

Fig. 305: Installing Balance Shaft Housing Bolts In Sequence
Courtesy of TOYOTA MOTOR SALES, U.S.A., INC.

c. Mark the front of the balance shaft housing bolts with paint.
d. Retighten the bolts by 90° as shown.
e. Check that the painted mark is now at a 90° angle to the front.
f. Check that the balance shaft turns smoothly.
g. Turn the balance shafts, and check that the timing marks of No. 1 and No. 2 balance shafts are in straight line on the crank case surface as shown.

cardiagn.com

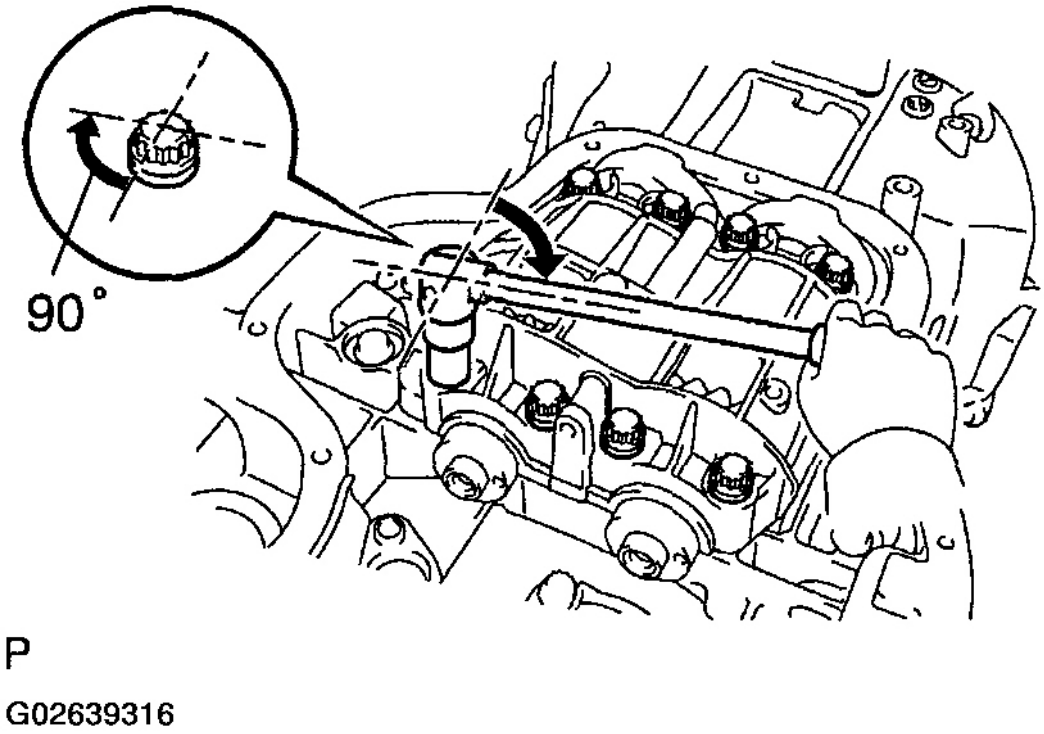

Fig. 306: Retightening Bolts Additional 90°
Courtesy of TOYOTA MOTOR SALES, U.S.A., INC.

17. **INSTALL OIL FILTER UNION**

Using a 12 mm hexagon wrench, install the oil filter union.

Torque: 29.5 N.m (301 kgf.cm, 22 ft.lbf)

cardiagn.com

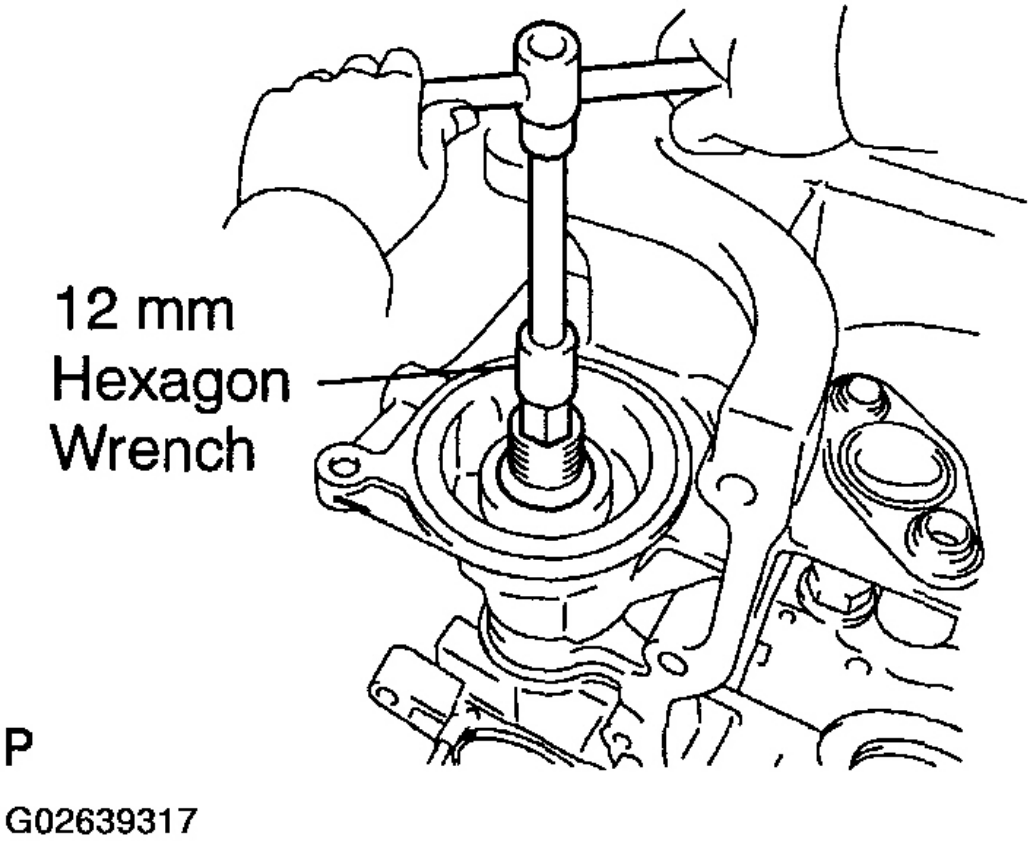

Fig. 307: Installing Oil Filter Union Using Hexagon Wrench
Courtesy of TOYOTA MOTOR SALES, U.S.A., INC.

18. **INSTALL OIL FILTER (See REPLACEMENT)**
19. **INSTALL OIL PUMP (See INSTALLATION**
20. **INSTALL WATER BY-PASS PIPE**

Install a new gasket, the water bypass pipe with the 2 nuts.

Torque: 9.0 N.m (92 kgf.cm, 80 in.lbf)

cardiagn.com

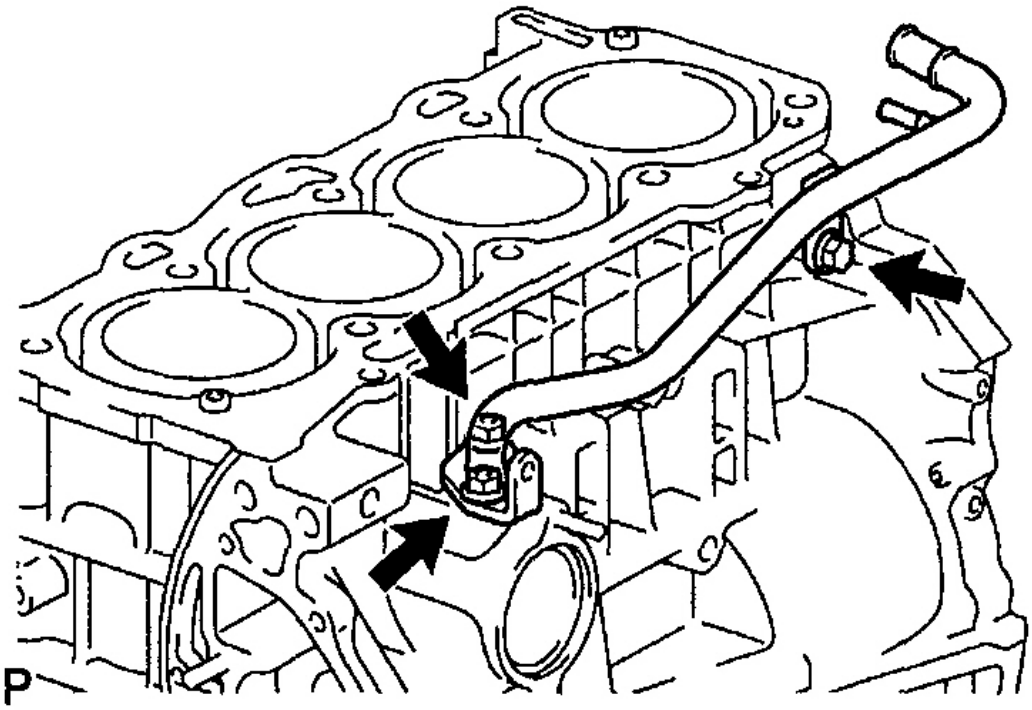

Fig. 308: Installing Water By-Pass Pipe
Courtesy of TOYOTA MOTOR SALES, U.S.A., INC.

21. **INSTALL OIL DIPSTICK AND GUIDE**
    a. Install a new O-ring to the dipstick guide.
    b. Apply soapy water to the O-ring.
    c. Push in the dipstick guide end into the guide hole of the No. 1 oil pan.
    d. Install the dipstick guide with the bolt.

       Torque: 9.0 N.m (92 kgf.cm, 80 in.lbf)

    e. Install the dipstick.

cardiagn.com

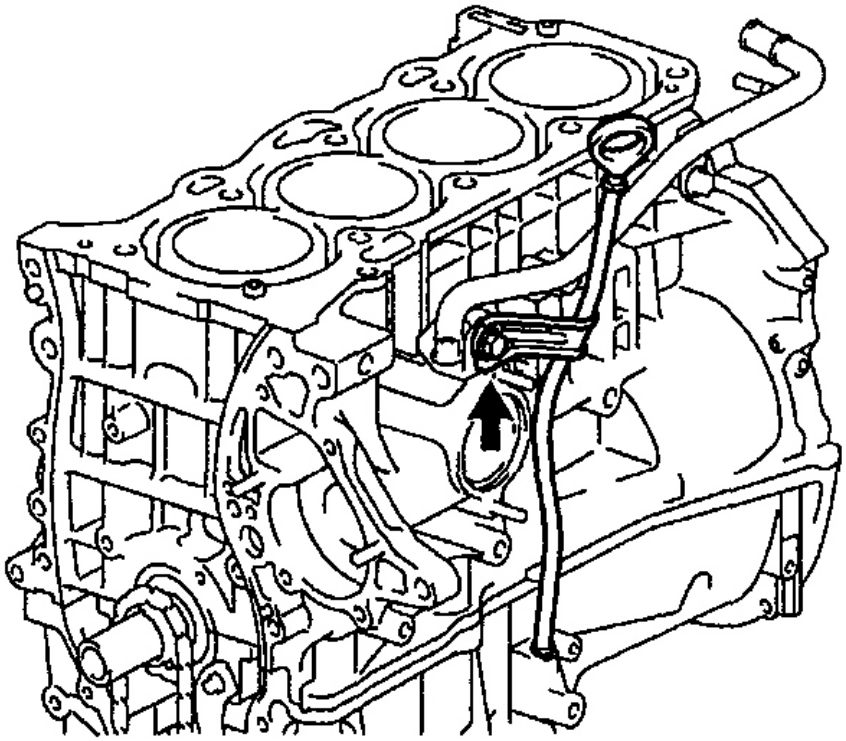

Fig. 309: Installing Dipstick
Courtesy of TOYOTA MOTOR SALES, U.S.A., INC.

22. **INSTALL ENGINE COOLANT DRAIN UNION**
    a. Apply adhesive to 2 or 3 threads.

    Seal packing: Part No. 08826-00100 or equivalent

cardiagn.com

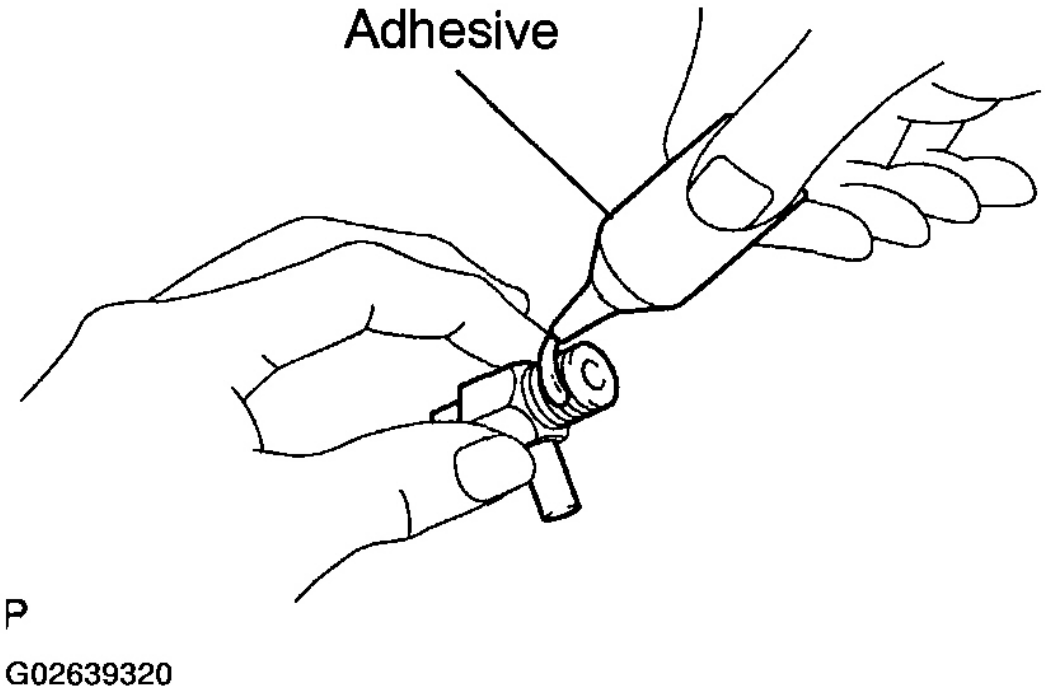

Fig. 310: Applying Adhesive To Threads
Courtesy of TOYOTA MOTOR SALES, U.S.A., INC.

b. Install the drain union.

Torque: 25 N.m (255 kgf.cm, 18 ft.lbf) or more

HINT:

After applying the specified torque, rotate the drain union clockwise until its drain port is facing downward.

23. **INSTALL THERMOSTAT (See INSTALLATION)**
24. **INSTALL PLUG**
25. **INSTALL WIRE CLAMPS**
26. **INSTALL KNOCK SENSOR (See KNOCK SENSOR)**
27. **INSTALL WATER PUMP (See INSTALLATION)**
28. **INSTALL OCV FILTER**

Using a 12 mm hexagon wrench, install the OCV filter with a new gasket and the plug.

cardiagn.com

Torque: 30 N.m (306 kgf.cm, 22 ft.lbf)

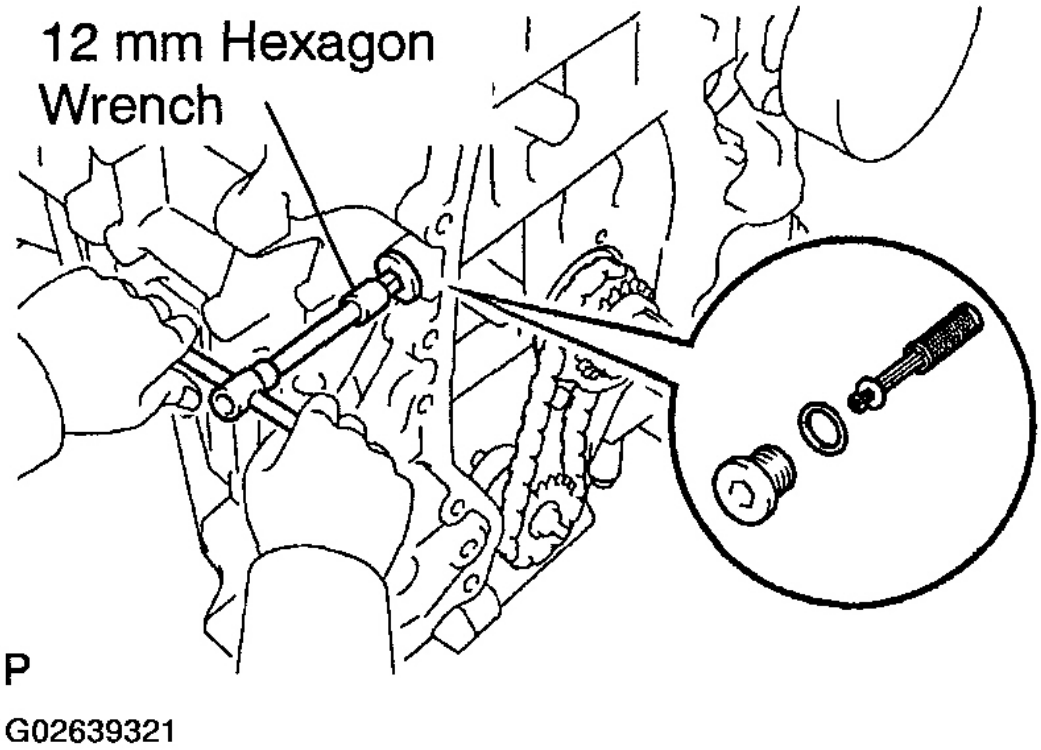

Fig. 311: Installing OCV Filter With Gasket And Plug
Courtesy of TOYOTA MOTOR SALES, U.S.A., INC.

29. **INSTALL CYLINDER HEAD (See INSTALLATION)**
30. **INSTALL TIMING CHAIN (See INSTALLATION)**
31. **REMOVE ENGINE STAND**

EXHAUST SYSTEM

COMPONENTS

cardiagn.com

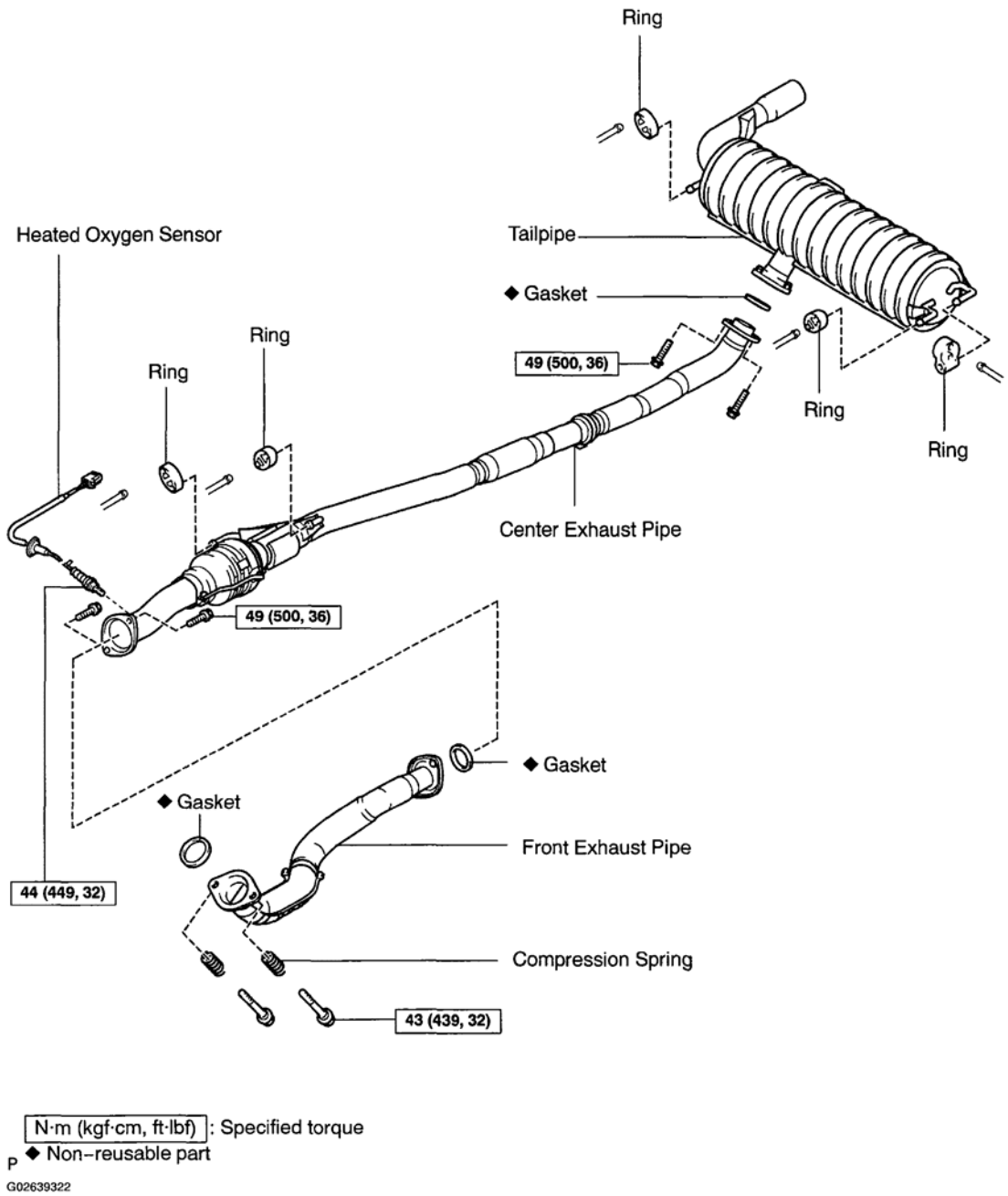

Fig. 312: Identifying Exhaust System Components & Torque Specifications
Courtesy of TOYOTA MOTOR SALES, U.S.A., INC.

REPLACEMENT

NOTE: **Check if an old gasket still remains on the pipe. If so, remove it. Also, check if any bolts or nuts are rusted. If so, replace them.**

cardiagn.com

1. **REMOVE FRONT EXHAUST PIPE**
   a. Remove the 2 bolts and 2 compression springs.
   b. Remove the 2 bolts and exhaust pipe.
   c. Remove the exhaust pipe's gasket and exhaust manifold's gasket.
2. **REMOVE CENTER EXHAUST PIPE**
   a. Remove the heated oxygen sensor (bank 1 sensor 2).
   b. Remove the 2 bolts from the exhaust pipe.
   c. Remove the exhaust pipe from the 2 rings.
   d. Remove the gasket from the exhaust pipe.
3. **REMOVE TAILPIPE**

   Remove the tailpipe from the 3 rings.

4. **INSTALL TAILPIPE**

   Install the tailpipe to the 3 rings.

5. **INSTALL CENTER EXHAUST PIPE**
   a. Install a new gasket to the exhaust pipe.

      NOTE:
      - **Do not reuse the gasket.**
      - **The gasket must be installed to the exhaust pipe before the pipe is installed to the tailpipe. Do not indirectly use the tailpipe to force the gasket onto the exhaust pipe.**

   b. Install the exhaust pipe to the 2 rings.
   c. Install the 2 bolts to the exhaust pipe.

      Torque: 49 N.m (500 kgf.cm, 36 ft.lbf)

   d. Install the heated oxygen sensor (bank 1 sensor 2).

      Torque: 44 N.m (449 kgf.cm, 32 ft.lbf)

      HINT:

      - Before installing the heated oxygen sensor, twist the sensor wire counterclockwise 3 and 1/2 turns.
      - After installing the heated oxygen sensor, check that the sensor wire is not twisted. If it is twisted, remove the heated oxygen sensor and reinstall it.
6. **INSTALL FRONT EXHAUST PIPE**
   a. Using a vernier caliper, measure the free length of the compression spring.

cardiagn.com

Minimum length: 40 mm (1.57 in.)

If the free length is less than the minimum, replace the compression spring.

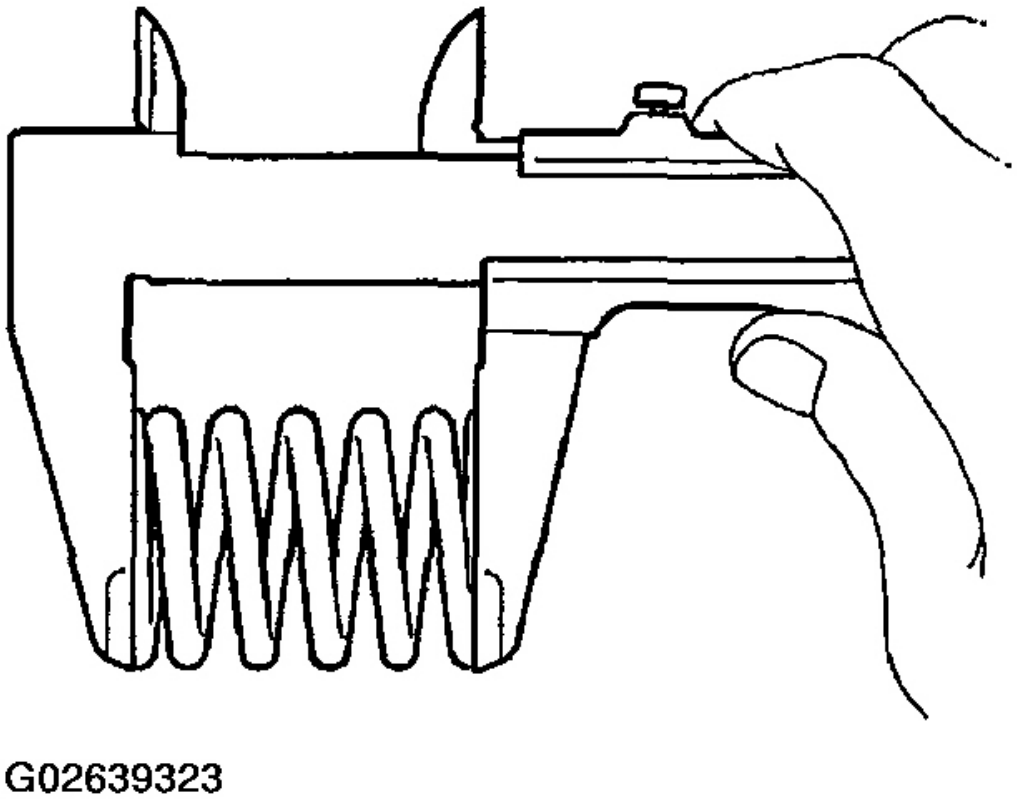

Fig. 313: Measuring Free Length Of Compression Spring
Courtesy of TOYOTA MOTOR SALES, U.S.A., INC.

b. Install a new gasket to the front exhaust pipe.

NOTE:

- **Do not reuse the gasket.**
- **The gasket must be installed to the front exhaust pipe before the pipe is installed to the center exhaust pipe. Do not indirectly use the center exhaust pipe to force the gasket onto the front exhaust pipe.**

c. Install a new gasket to the exhaust manifold.

cardiagn.com

NOTE:

- **Using a plastic faced hammer, uniformly strike the gasket so that the gasket and exhaust manifold are properly fit.**
- **Be careful with the installation direction of the gasket.**
- **Do not reuse the gasket.**
- **The gasket must be installed to the exhaust manifold before the manifold is installed to the exhaust pipe pipe. Do not indirectly use the exhaust pipe to force the gasket onto the exhaust manifold.**

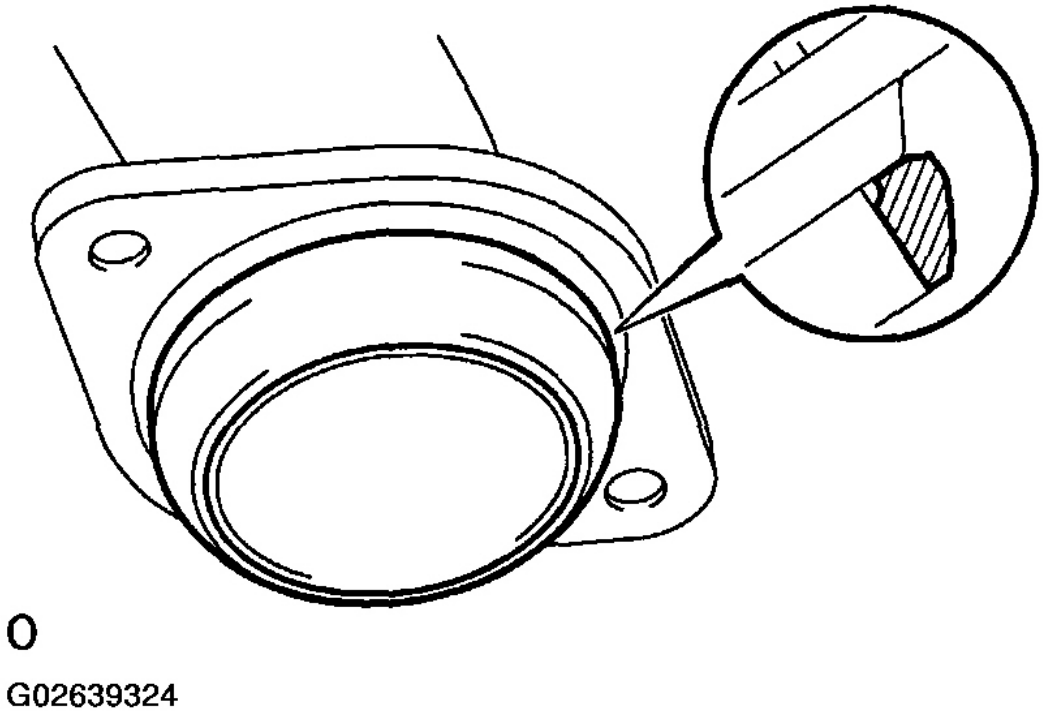

Fig. 314: Installing Gasket To Exhaust Manifold
Courtesy of TOYOTA MOTOR SALES, U.S.A., INC.

d. Temporarily install the 2 compression springs and 2 bolts holding the exhaust manifold to the front exhaust pipe.

e. Install the front exhaust pipe to the center exhaust pipe with the 2 bolts.

Torque: 49 N.m, (500 kgf.cm, 36 ft.lbf)

f. Tighten the 2 compression springs and 2 bolts.

Torque: 43 N.m (439 kgf.cm, 32 ft.lbf)

cardiagn.com

7. **CHECK FOR EXHAUST GAS LEAKS**

If gas is leaking, tighten the areas necessary to stop the leak. Replace damaged parts as necessary.

cardiagn.com