Jeep®

2019 Grand Cherokee

OWNER'S MANUAL

VEHICLES SOLD IN CANADA

With respect to any Vehicles Sold in Canada, the name FCA US LLC shall be deemed to be deleted and the name FCA Canada Inc. used in substitution therefore.

DRIVING AND ALCOHOL

Drunken driving is one of the most frequent causes of accidents.

Your driving ability can be seriously impaired with blood alcohol levels far below the legal minimum. If you are drinking, don't drive. Ride with a designated non-drinking driver, call a cab, a friend, or use public transportation.

WARNING!
Driving after drinking can lead to an accident. Your perceptions are less sharp, your reflexes are slower, and your judgment is impaired when you have been drinking. Never drink and then drive.

This manual illustrates and describes the operation of features and equipment that are either standard or optional on this vehicle. This manual may also include a description of features and equipment that are no longer available or were not ordered on this vehicle. Please disregard any features and equipment described in this manual that are not on this vehicle.

FCA US LLC reserves the right to make changes in design and specifications, and/or make additions to or improvements to its products without imposing any obligation upon itself to install them on products previously manufactured.

Copyright © 2018 FCA US LLC

TABLE OF CONTENTS

SECTION		PAGE
1	INTRODUCTION	3
2	GRAPHICAL TABLE OF CONTENTS	7
3	GETTING TO KNOW YOUR VEHICLE	13
4	GETTING TO KNOW YOUR INSTRUMENT PANEL	133
5	SAFETY	165
6	STARTING AND OPERATING	249
7	IN CASE OF EMERGENCY	391
8	SERVICING AND MAINTENANCE	435
9	TECHNICAL SPECIFICATIONS	497
10	MULTIMEDIA	509
11	CUSTOMER ASSISTANCE	601
12	INDEX	607

INTRODUCTION

CONTENTS

■ INTRODUCTION 4
■ HOW TO USE THIS MANUAL 5
□ Essential Information 5
□ Symbols 5
■ ROLLOVER WARNING 5
■ WARNINGS AND CAUTIONS 6
■ VEHICLE MODIFICATIONS/ALTERATIONS 6

INTRODUCTION

Dear Customer, congratulations on selecting your new vehicle. Be assured that it represents precision workmanship, distinctive styling, and high quality.

This is a specialized utility vehicle. It can go places and perform tasks that are not intended for conventional passenger vehicles. It handles and maneuvers differently from many passenger vehicles both on-road and off-road, so take time to become familiar with your vehicle. If equipped, the two-wheel drive version of this vehicle was designed for on-road use only. It is not intended for off-road driving or use in other severe conditions suited for a four-wheel drive vehicle. Before you start to drive this vehicle, read the Owner's Manual. Be sure you are familiar with all vehicle controls, particularly those used for braking, steering, transmission, and transfer case shifting. Learn how your vehicle handles on different road surfaces. Your driving skills will improve with experience. When driving off-road, or working the vehicle, don't overload the vehicle or expect the vehicle to overcome the natural laws of physics. Always observe federal, state, provincial and local laws wherever you drive. As with other vehicles of this type, failure to operate this vehicle correctly may result in loss of control or a collision. Refer to the "Driving Tips" in "Starting and Operating" for further information.

This Owner's Manual has been prepared with the assistance of service and engineering specialists to acquaint you with the operation and maintenance of your vehicle. It is supplemented by Warranty Information, and customer oriented documents. In the attached Warranty Booklet you will find a description of the services that FCA offers to its customers, the Warranty Certificate and the details of the terms and conditions for maintaining its validity. Please take the time to read all of these publications carefully before driving your vehicle for the first time. Following the instructions, recommendations, tips, and important warnings in this manual will help assure safe and enjoyable operation of your vehicle.

This Owner's Manual describes all versions of this vehicle. Options and equipment dedicated to specific markets or versions are not expressly indicated in the text. Therefore, you should only consider the information which is related to the trim level, engine, and version that you have purchased. Any content introduced throughout the Owner's Information, that may or may not be applicable to your vehicle, will be identified with the wording "If Equipped". All data contained in this publication are intended to help you use your vehicle in the best possible way. FCA aims at a constant improvement of the vehicles produced. For this reason, it reserves the right to make changes to the model

described for technical and/or commercial reasons. For further information, contact an authorized dealer.

If applicable, refer to the Owner's Manual Supplement for related information.

NOTE: After reviewing the Owner's Information, it should be stored in the vehicle for convenient referencing, and remain with the vehicle when sold.

When it comes to service, remember that your authorized dealer knows your vehicle best, has factory-trained technicians and genuine MOPAR® parts, and cares about your satisfaction.

HOW TO USE THIS MANUAL

Essential Information

Consult the Table of Contents to determine which section contains the information you desire.

Since the specification of your vehicle depends on the items of equipment ordered, certain descriptions and illustrations may differ from your vehicle's equipment.

The detailed index at the back of this Owner's Manual contains a complete listing of all subjects.

Symbols

Some vehicle components have colored labels whose symbols indicate precautions to be observed when using this component. Refer to "Warning Lights and Messages" in "Getting To Know Your Instrument Panel" for further information on the symbols used in your vehicle.

ROLLOVER WARNING

Utility vehicles have a significantly higher rollover rate than other types of vehicles. This vehicle has a higher ground clearance and a higher center of gravity than many passenger vehicles. It is capable of performing better in a wide variety of off-road applications. Driven in an unsafe manner, all vehicles can go out of control. Because of the higher center of gravity, if this vehicle is out of control it may roll over while some other vehicles may not.

Do not attempt sharp turns, abrupt maneuvers, or other unsafe driving actions that can cause loss of vehicle control. Failure to operate this vehicle safely may result in a collision, rollover of the vehicle, and severe or fatal injury. Drive carefully.

80bfe0f0

Rollover Warning Label

Failure to use the driver and passenger seat belts provided is a major cause of severe or fatal injury. In fact, the U.S. government notes that the universal use of existing seat belts could cut the highway death toll by 10,000 or more each year and could reduce disabling injuries by two million annually. In a rollover crash, an unbelted person is significantly more likely to die than a person wearing a seat belt. Always buckle up.

WARNINGS AND CAUTIONS

This Owner's Manual contains **WARNINGS** against operating procedures that could result in a collision, bodily injury and/or death. It also contains **CAUTIONS** against procedures that could result in damage to your vehicle. If you do not read this entire Owner's Manual, you may miss important information. Observe all Warnings and Cautions.

VEHICLE MODIFICATIONS/ALTERATIONS

WARNING!

Any modifications or alterations to this vehicle could seriously affect its roadworthiness and safety and may lead to a collision resulting in serious injury or death.

GRAPHICAL TABLE OF CONTENTS

CONTENTS

- FRONT VIEW 8
- REAR VIEW 9
- INSTRUMENT PANEL 10
- INTERIOR 11

FRONT VIEW

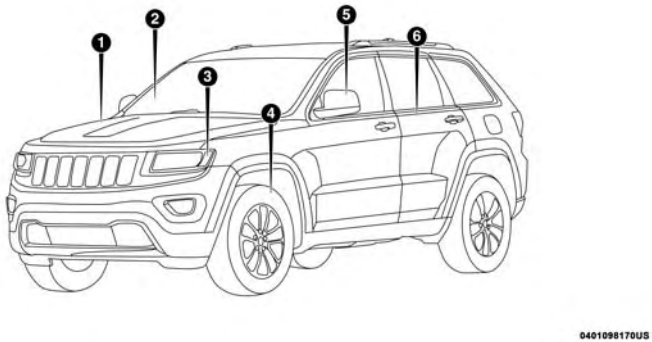

Front View

1 — Hood/Engine Compartment
2 — Windshield
3 — Headlights
4 — Wheels/Tires
5 — Exterior Mirrors
6 — Doors

REAR VIEW

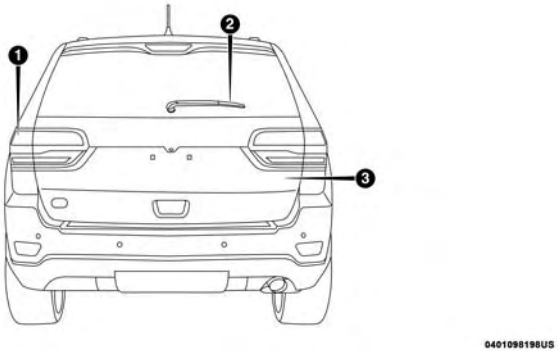

Rear View

1 — Taillight
2 — Rear Windshield Wiper
3 — Liftgate

INSTRUMENT PANEL

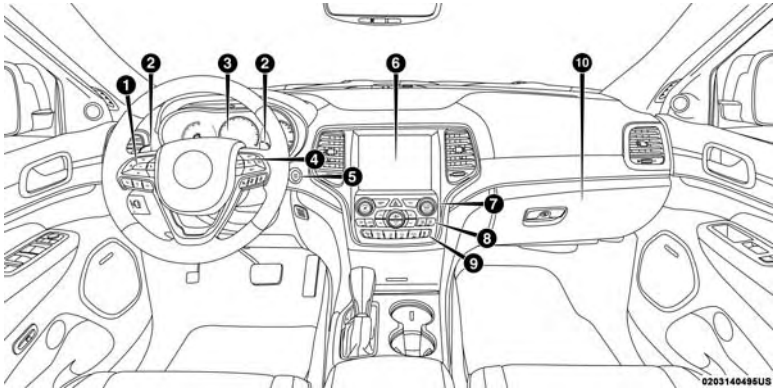

Instrument Panel

1 — Instrument Cluster Display Controls
2 — Paddle Shifters
3 — Instrument Cluster
4 — Speed Controls
5 — Ignition Switch
6 — Uconnect System
7 — Radio Controls
8 — Climate Controls
9 — Switch Panel
10 — Glove Compartment

INTERIOR

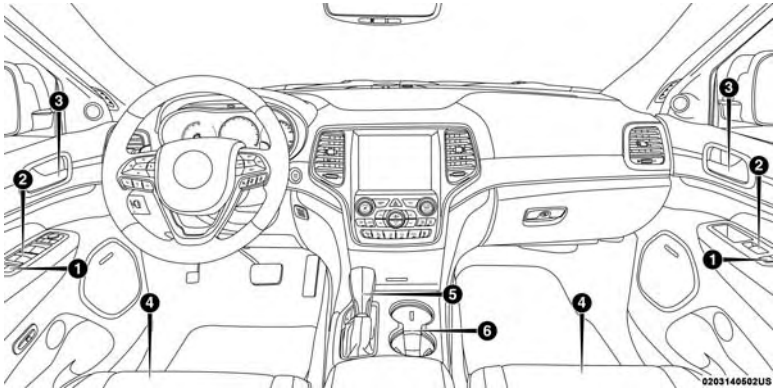

Interior Features

1 — Door Locks
2 — Window Switches
3 — Door Handles
4 — Seats
5 — Gear Selector
6 — Cupholders

GETTING TO KNOW YOUR VEHICLE

CONTENTS

■ VEHICLE USER GUIDE — IF EQUIPPED 18

■ KEYS 20

□ Key Fob 20

■ IGNITION SWITCH 25

□ Keyless Enter-N-Go — Ignition 25

□ Vehicle On Message 27

■ REMOTE STARTING SYSTEM — IF EQUIPPED . . .28

□ How To Use Remote Start. 29

□ Remote Start Abort Message 29

□ To Enter Remote Start Mode 30

□ To Exit Remote Start Mode Without Driving The Vehicle 30

□ To Exit Remote Start Mode And Drive The Vehicle 30

□ Remote Start Comfort Systems — If Equipped . . .31

□ General Information 31

■ SENTRY KEY 31

□ Key Programming 32

□ Replacement Keys 32

□ Irregular Operation 32

□ General Information 33

■ VEHICLE SECURITY ALARM — IF EQUIPPED . . .33

□ To Arm The System 34

□ To Disarm The System 34

□ Rearming Of The System 35

□ Security System Manual Override 35

□ Tamper Alert. 35

■ DOORS 35

□ Manual Door Locks 35

- Power Door Locks 36
- Keyless Enter-N-Go — Passive Entry 37
- Locking The Doors With One Or More Doors Open 41
- Automatic Unlock Doors On Exit 41
- Auto Relocking — If Equipped 42
- Child-Protection Door Lock System — Rear Doors 42

■ SEATS 43
- Manual Adjustment (Front Seats) — If Equipped .43
- Manual Adjustment (Rear Seats) 47
- Power Adjustment (Front Seats) — If Equipped . .49
- Driver Memory Seat — If Equipped 51
- Heated Seats — If Equipped 54
- Front Ventilated Seats — If Equipped 57

■ HEAD RESTRAINTS 58
- Supplemental Active Head Restraints — Front Seats. 58
- Adjustment — Rear Seats 61
- Head Restraint Removal — Rear Seats. 61

■ STEERING WHEEL 63
- Manual Tilt/Telescoping Steering Column — If Equipped 63
- Power Tilt/Telescoping Steering Column — If Equipped 64
- Heated Steering Wheel — If Equipped. 64

■ MIRRORS 66
- Inside Day/Night Mirror — If Equipped 66
- Automatic Dimming Mirror — If Equipped 66
- Outside Mirrors 67
- Outside Automatic Dimming Mirrors — If Equipped 68
- Power Mirrors 68
- Power Folding Outside Mirrors — If Equipped. . .68
- Heated Mirrors — If Equipped 70

- Tilt Side Mirrors In Reverse (Available With Memory Seat Only) — If Equipped 70
- Illuminated Vanity Mirrors 70

■ EXTERIOR LIGHTS 71
- Headlight Switch 71
- Multifunction Lever 72
- Daytime Running Lights — If Equipped 72
- High/Low Beam Switch 73
- Automatic High Beam — If Equipped 73
- Flash-To-Pass 73
- Automatic Headlights — If Equipped 74
- Parking Lights And Panel Lights 74
- Headlights On Automatically With Wipers 74
- Headlight Delay 74
- Lights-On Reminder 75
- Fog Lights — If Equipped 75
- Turn Signals 76
- Lane Change Assist — If Equipped 76
- Battery Saver 76

■ INTERIOR LIGHTS 76
- Courtesy Lights 77

■ WINDSHIELD WIPERS AND WASHERS 79
- Windshield Wiper Operation. 80
- Rain Sensing Wipers — If Equipped 82
- Rear Window Wiper/Washer 84

■ HEADLIGHT WASHERS — IF EQUIPPED 85

■ CLIMATE CONTROLS 85
- Automatic Climate Controls Overview 86
- Climate Control Functions 92
- Automatic Temperature Control (ATC) 93
- Operating Tips 94

■ WINDOWS 96
- Power Window Controls 96
- Auto-Down Feature 97

- Auto-Up Feature With Anti-Pinch Protection 97
- Reset Auto-Up. 98
- Window Lockout Switch. 98
- Wind Buffeting 98

■ POWER SUNROOF — IF EQUIPPED 99
- Opening Sunroof 99
- Closing Sunroof 100
- Wind Buffeting 100
- Sunshade Operation 100
- Pinch Protect Feature 101
- Venting Sunroof — Express 101
- Sunroof Maintenance 101
- Relearn Procedure 101

■ COMMANDVIEW SUNROOF WITH POWER SHADE — IF EQUIPPED 102
- Opening Sunroof 103
- Closing Sunroof 103
- Wind Buffeting 104
- Opening Power Shade 104
- Closing Power Shade 104
- Pinch Protect Feature 105
- Venting Sunroof — Express 105
- Sunroof Maintenance 105

■ HOOD 106
- To Open The Hood 106
- To Close The Hood 106

■ LIFTGATE 107
- Opening 107
- Closing 108
- Power Liftgate — If Equipped 109
- Cargo Area Features 111

■ GARAGE DOOR OPENER — IF EQUIPPED 114
- Before You Begin Programming HomeLink 114
- Canadian/Gate Operator Programming 117

- Using HomeLink 118
- Security 119
- Troubleshooting Tips 119
- General Information 120

■ INTERNAL EQUIPMENT 120

- Storage 120
- Cupholders 124
- Electrical Power Outlets 125
- Power Inverter — If Equipped 129
- Sunglasses Bin Door 130

■ ROOF LUGGAGE RACK — IF EQUIPPED 130

VEHICLE USER GUIDE — IF EQUIPPED

Access your Owner's Information right through your Uconnect 4C or 4C NAV touchscreen system — If Equipped.

To access the Vehicle User Guide on your Uconnect Touchscreen: Press the Uconnect **Apps** button. From there, press the **Vehicle User Guide** icon on your touchscreen. No Uconnect registration is required.

Uconnect 4C NAV With 8.4–inch Display Vehicle User Guide Touchscreen Icon

NOTE: Vehicle User Guide features are not available while the vehicle is moving. If you try to access while the vehicle is in motion, the system will display: Feature not available while the vehicle is in motion.

Pre-Installed Features

Your User Guide — Updated in real-time	Available when and where you need it
Touchscreen convenience	Customizable interface
Maintenance schedules and information	Multilingual
Comprehensive icon & symbol glossary	

Once you launch your Vehicle User Guide, you will be able to explore your warranty information and radio manual when and where you need them. Your Uconnect system displays the Vehicle User Guide on your touchscreen radio to assist in better understanding your vehicle. There's no app to download, no phone to connect and no external device needed for playback. Plus, it's updated throughout the year, in real-time, so it never goes out of date.

Features/Benefits

- Pre-installed on your Uconnect touchscreen radio
- Enhanced search and browsing capability
- Robust NAV application — If Equipped
- Add selected topics to a fast-access Favorites category
- Icon and symbol glossary
- Warranty information
- Crucial driver information and assistance:

Operating Instructions	Maintenance Schedules
Warranty Information	Emergency Procedures
Fluid Level Standards	911 Contact and More

Tip: When viewing a topic, tap the star icon to add it to your Favorites, for easy access in the future.

KEYS

Key Fob

Your vehicle uses a keyless ignition system. The ignition system consists of a key fob with Remote Keyless Entry (RKE) and a START/STOP push button ignition system. The Remote Keyless Entry system consists of a key fob and Keyless Enter-N-Go feature if equipped.

NOTE: The key fob may not be found if it is located next to a mobile phone, laptop or other electronic device; these devices may block the key fob's wireless signal.

The key fob allows you to lock or unlock the doors and liftgate from distances up to approximately 66 ft (20 m) using a handheld key fob. The key fob does not need to be pointed at the vehicle to activate the system.

NOTE:

- With ignition on/start and the vehicle moving at 5 mph (8 km/h), all RKE commands are disabled.

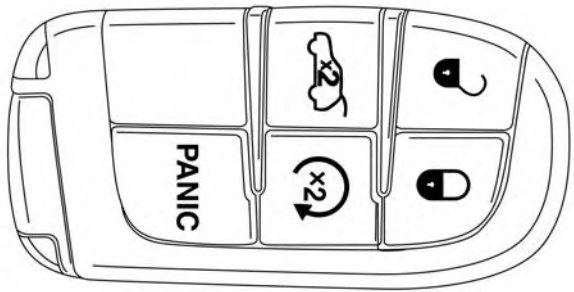

0301101271NA

Key Fob

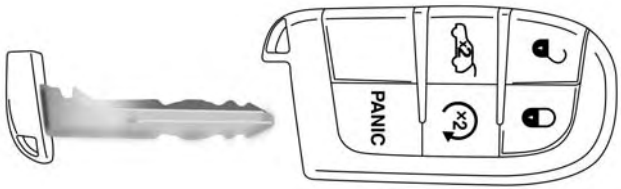

Key Fob With Emergency Key

In case the ignition switch does not change with the push of a button, the key fob may have a low or fully depleted battery. A low key fob battery can be verified by referring to the instrument cluster, which will display directions to follow.

To Unlock The Doors And Liftgate

Push and release the unlock button on the key fob once to unlock the driver's door or twice within five seconds to unlock all doors and the liftgate.

All doors can be programmed to unlock on the first push of the unlock button. Refer to "Uconnect Settings" in "Multimedia" for further information.

NOTE: If the vehicle is unlocked by a key fob, and no door is opened within 60 seconds, the vehicle will re-lock and if equipped, the security alarm will arm.

The turn signal lights will flash twice to acknowledge the unlock signal. The illuminated entry system will be activated.

1st Push Of Key Fob Unlock Button

This feature lets you program the system to unlock either the driver's door or all doors on the first push of the unlock button on the key fob. To change the current setting, refer to "Uconnect Settings" in "Multimedia" for further information.

NOTE: If the vehicle is equipped with Passive Entry, refer to "Keyless Enter-N-Go — Passive Entry" located in "Doors" in "Getting To Know Your Vehicle" for further information.

To Lock The Doors And Liftgate

Push and release the lock button on the key fob to lock all doors and liftgate.

The turn signal lights will flash and the horn will chirp to acknowledge the signal. Refer to "Uconnect Settings" located in "Multimedia" for further programmable information.

If the vehicle is equipped with Passive Entry, refer to "Keyless Enter-N-Go — Passive Entry" located in "Doors" in "Getting To Know Your Vehicle" for further information.

If one or more doors are open, or the liftgate is open, the doors will lock. The doors will unlock again automatically if the key is left inside the passenger compartment, otherwise the doors will stay locked.

Replacing The Battery In The Key With Remote Control

The recommended replacement battery is one CR2032 battery.

NOTE:

- Perchlorate Material — special handling may apply. See www.dtsc.ca.gov/hazardouswaste/perchlorate for further information.
- Do not touch the battery terminals that are on the back housing or the printed circuit board.

1. Remove the emergency key by sliding the mechanical latch on the back of the key fob sideways with your thumb and pull the emergency key out with your other hand.

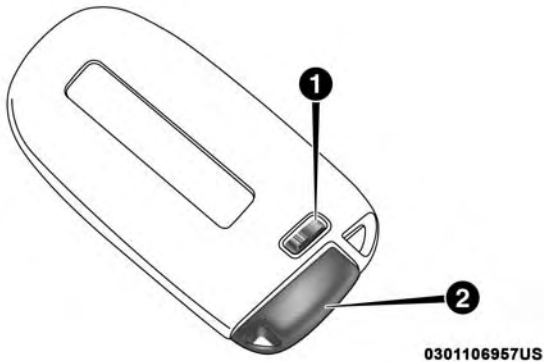

Emergency Key Removal

1 — Emergency Key Release Button
2 — Emergency Key

2. Separate the key fob halves using the tip of the emergency key, a #2 flat blade screwdriver, or a coin and gently pry the two halves of the key fob apart. Make sure not to damage the seal during removal.

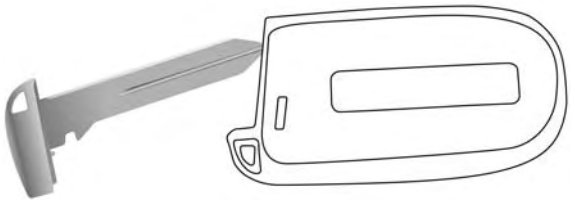

0301101915NA

Emergency Key Removal

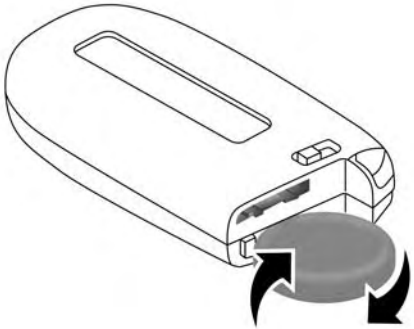

0301101916NA

Separating Case With A Coin

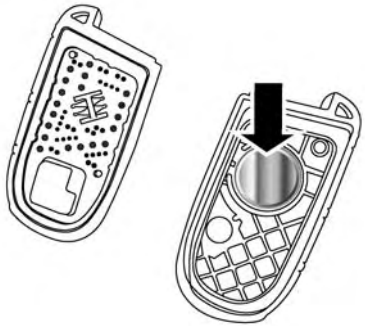

Key Fob Battery Replacement

3. Remove the battery by turning the back cover over (battery facing downward) and tapping it lightly on a solid surface such as a table or similar and replace the battery. When replacing the battery, match the + sign on the battery to the + sign on the inside of the battery clip, located on the back cover. Avoid touching the new battery with your fingers. Skin oils may cause battery deterioration. If you touch a battery, clean it with rubbing alcohol.
4. To assemble the key fob case, snap the two halves together.

Programming Additional Key Fobs

Programming the key fob may be performed by an authorized dealer.

NOTE: Once a key fob is programmed to a vehicle, it cannot be repurposed and reprogrammed to another vehicle.

Request For Additional Key Fobs

NOTE: Only key fobs that are programmed to the vehicle electronics can be used to start and operate the vehicle. Once a key fob is programmed to a vehicle, it cannot be programmed to any other vehicle.

WARNING!

- **Always remove the key fobs from the vehicle and lock all doors when leaving the vehicle unattended.**
- **Always remember to place the ignition in the OFF mode.**

Duplication of key fobs may be performed at an authorized dealer. This procedure consists of programming a blank key fob to the vehicle electronics. A blank key fob is one that has never been programmed.

NOTE:

- When having the Sentry Key Immobilizer System serviced, bring all vehicle keys with you to an authorized dealer.
- Keys must be ordered to the correct key cut to match the vehicle locks.

General Information

The following regulatory statement applies to all radio frequency (RF) devices equipped in this vehicle:

This device complies with Part 15 of the FCC Rules and with Industry Canada license-exempt RSS standard(s). Operation is subject to the following two conditions:

1. This device may not cause harmful interference, and
2. This device must accept any interference received, including interference that may cause undesired operation.

NOTE: Changes or modifications not expressly approved by the party responsible for compliance could void the user's authority to operate the equipment.

IGNITION SWITCH

Keyless Enter-N-Go — Ignition

This feature allows the driver to operate the ignition switch with the push of a button as long as the key fob is in the passenger compartment.

The Keyless Push Button Ignition has several operating modes that are labeled and will illuminate when in position. These modes are OFF, ACC, RUN, and START.

NOTE: If the ignition switch does not change with the push of a button, the key fob may have a low or dead battery. In this situation, a back up method can be used to operate the ignition switch. Put the nose side (side opposite of the emergency key) of the key fob against the ENGINE START/STOP button and push to operate the ignition switch.

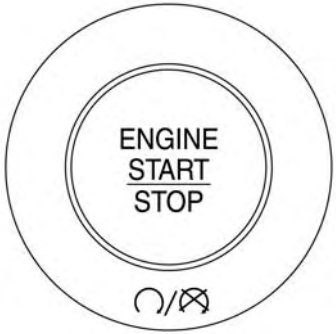

0302110417US

START/STOP Ignition Button

The push button ignition can be placed in the following modes:

OFF

- The engine is stopped.
- Some electrical devices (e.g. Central locking, alarm, etc.) are still available.

ACC

- Engine is not started.
- Some electrical devices are available.

RUN

- Driving position.
- All the electrical devices are available.

START

- The engine will start.

WARNING!

- **When exiting the vehicle, always remove the key fob from the vehicle and lock your vehicle.**
- **Never leave children alone in a vehicle, or with access to an unlocked vehicle.**
- **Allowing children to be in a vehicle unattended is dangerous for a number of reasons. A child or others could be seriously or fatally injured. Children should be warned not to touch the parking brake, brake pedal or the gear selector.**
- **Do not leave the key fob in or near the vehicle, or in a location accessible to children, and do not leave the ignition of a vehicle equipped with Keyless Enter-N-Go in the ON/RUN mode. A child could operate power windows, other controls, or move the vehicle.**

(Continued)

WARNING! *(Continued)*

- **Do not leave children or animals inside parked vehicles in hot weather. Interior heat build-up may cause serious injury or death.**

CAUTION!

An unlocked vehicle is an invitation for thieves. Always remove key fob from the vehicle and lock all doors when leaving the vehicle unattended.

NOTE: Refer to "Starting The Engine," in "Starting And Operating" for further information.

Vehicle On Message

When opening the driver's door when the ignition is in RUN (engine not running), a chime will sound to remind you to place the ignition in the OFF position. In addition to the chime, the message will display "Ignition Or Accessory On" in the cluster.

NOTE: The power window switches and power sunroof (if equipped) will remain active up to ten minutes after the ignition is cycled to the OFF position. Opening either front door will cancel this feature. The time for this feature is programmable.

WARNING!

- **Before exiting a vehicle, always come to a complete stop, then shift the automatic transmission into PARK, apply the parking brake, place the engine in the OFF position, remove the key fob from the vehicle and lock your vehicle. If equipped with Keyless Enter-N-Go, always make sure the keyless ignition is in "OFF" position, remove the key fob from the vehicle and lock the vehicle.**
- **Never leave children alone in a vehicle, or with access to an unlocked vehicle.**
- **Allowing children to be in a vehicle unattended is dangerous for a number of reasons. A child or others could be seriously or fatally injured. Children should be warned not to touch the parking brake, brake pedal or the gear selector.**

(Continued)

WARNING! *(Continued)*

- **Do not leave the key fob in or near the vehicle, or in a location accessible to children, and do not leave the ignition of a vehicle equipped with Keyless Enter-N-Go in the ON/RUN mode. A child could operate power windows, other controls, or move the vehicle.**
- **Do not leave children or animals inside parked vehicles in hot weather. Interior heat build-up may cause serious injury or death.**

CAUTION!

An unlocked vehicle is an invitation for thieves. Always remove key fob from the vehicle and lock all doors when leaving the vehicle unattended.

REMOTE STARTING SYSTEM — IF EQUIPPED

This system uses the key fob to start the engine conveniently from outside the vehicle while still maintaining security. The system has a range of 328 ft (100 m).

The Remote Starting System also activates the Climate Control, vented seats (if equipped) in temperatures above 80° F (26.7° C), and the optional heated seats, and optional heated steering wheel in temperatures below 40° F (4.4° C). Refer to "Seats" in "Getting To Know Your Vehicle" for further information.

NOTE:

- The vehicle must be equipped with an automatic transmission to be equipped with Remote Start.
- Obstructions between the vehicle and key fob may reduce this range.

WARNING!

- **Do not start or run an engine in a closed garage or confined area. Exhaust gas contains Carbon Monoxide (CO) which is odorless and colorless. Carbon Monoxide is poisonous and can cause serious injury or death when inhaled.**
- **Keep key fobs away from children. Operation of the Remote Start System, windows, door locks or other controls could cause serious injury or death.**

How To Use Remote Start

- Push Remote Start button on the key fob twice within five seconds. Pushing the Remote Start button a third time shuts the engine off.
- With remote start, the engine will only run for 15 minutes (time out) unless the ignition is placed in the ON/RUN position.
- The vehicle must be manually started with a push of the ignition START/STOP button after two consecutive time outs.

All of the following conditions must be met before the engine will remote start:

- Gear Selector in PARK
- Doors closed
- Hood closed
- Liftgate closed
- Hazard switch off
- Brake switch inactive (brake pedal not pushed)
- Battery at an acceptable charge level
- PANIC button not pushed
- System not disabled from previous remote start event
- Vehicle alarm system indicator flashing
- Ignition in STOP/OFF position
- Fuel level meets minimum requirement

WARNING!

- **Do not start or run an engine in a closed garage or confined area. Exhaust gas contains Carbon Monoxide (CO) which is odorless and colorless. Carbon Monoxide is poisonous and can cause serious injury or death when inhaled.**
- **Keep key fobs away from children. Operation of the Remote Start System, windows, door locks or other controls could cause serious injury or death.**

Remote Start Abort Message

The following messages will display in the instrument cluster display if the vehicle fails to remote start or exits remote start prematurely:

- Remote Start Cancelled — Door Open
- Remote Start Cancelled — Hood Open
- Remote Start Cancelled — Fuel Low

- Remote Start Aborted Timer Expired
- Remote Start Aborted Liftgate Open
- Remote Start Disabled — Start Vehicle To Reset

The instrument cluster display message stays active until the ignition is turned to the ON/RUN position.

To Enter Remote Start Mode

Push and release the Remote Start button on the key fob twice within five seconds. The vehicle doors will lock, the turn signals will flash twice, and the horn will chirp twice. Then the engine will start, and the vehicle will remain in the Remote Start mode for a 15-minute cycle.

NOTE:

- If an engine fault is present or fuel level is low, the vehicle will start and then shut down in 10 seconds.
- The park lamps will turn on and remain on during Remote Start mode.
- For security, power window operation is disabled when the vehicle is in the Remote Start mode.
- The engine can be started two consecutive times (two 15-minute cycles) with the key fob. However, the ignition must be placed in the ON/RUN position before you can repeat the start sequence for a third cycle.

To Exit Remote Start Mode Without Driving The Vehicle

Push and release the Remote Start button one time or allow the remote start cycle to complete the entire 15-minute cycle.

NOTE: To avoid unintentional shutdowns, the system will disable the one time push of the Remote Start button for two seconds after receiving a valid Remote Start request.

To Exit Remote Start Mode And Drive The Vehicle

Before the end of 15-minute cycle, push and release the unlock button on the key fob to unlock the doors, or unlock the vehicle using Keyless Enter-N-Go — Passive Entry via the door handles, and disarm the vehicle security alarm (if equipped). Then, prior to the end of the 15-minute cycle, push and release the START/STOP button.

NOTE: For vehicles equipped with the Keyless Enter-N-Go — Passive Entry feature, the message “Remote Start Active — Push Start Button” will display in the instrument cluster display until you push the ignition START button.

Remote Start Comfort Systems — If Equipped

When remote start is activated, the heated steering wheel and driver heated seat features will automatically turn on in cold weather. In warm weather, the driver vented seat feature will automatically turn on when the remote start is activated. These features will stay on through the duration of remote start or until the ignition switch is cycled to the ON/RUN position.

NOTE: The Auto Comfort System can be activated and deactivated through the Uconnect system. For more information on Comfort System operation, refer to "Uconnect Settings" in "Multimedia" for further information.

General Information

The following regulatory statement applies to all radio frequency (RF) devices equipped in this vehicle:

This device complies with Part 15 of the FCC Rules and with Industry Canada license-exempt RSS standard(s). Operation is subject to the following two conditions:

1. This device may not cause harmful interference, and
2. This device must accept any interference received, including interference that may cause undesired operation.

NOTE: Changes or modifications not expressly approved by the party responsible for compliance could void the user's authority to operate the equipment.

SENTRY KEY

The Sentry Key Immobilizer system prevents unauthorized vehicle operation by disabling the engine. The system does not need to be armed or activated. Operation is automatic, regardless of whether the vehicle is locked or unlocked.

The system uses a key fob, keyless push button ignition and a RF receiver to prevent unauthorized vehicle operation. Therefore, only key fobs that are programmed to the vehicle can be used to start and operate the vehicle. The system will not allow the engine to crank if an invalid key fob is used to start and operate the vehicle. The system will shut the engine off in two seconds if an invalid key fob is used to start the engine.

After turning the ignition switch to the ON/RUN position, the vehicle security light will turn on for three seconds for a bulb check. If the light remains on after the bulb check, it indicates that there is a problem with the electronics. In addition, if the light begins to flash after the bulb check, it indicates that someone used an invalid key fob to start the engine. Either of these conditions will result in the engine being shut off after two seconds.

If the vehicle security light turns on during normal vehicle operation (vehicle running for longer than ten seconds), it indicates that there is a fault in the electronics. Should this occur, have the vehicle serviced as soon as possible by an authorized dealer.

CAUTION!

The Sentry Key Immobilizer system is not compatible with some aftermarket remote starting systems. Use of these systems may result in vehicle starting problems and loss of security protection.

All of the key fobs provided with your new vehicle have been programmed to the vehicle electronics.

Key Programming

Key fob programming is performed at an authorized dealer.

Replacement Keys

NOTE: Only key fobs that are programmed to the vehicle electronics can be used to start and operate the vehicle. Once a key fob is programmed to a vehicle, it cannot be programmed to any other vehicle.

CAUTION!

- **Always remove the key fobs from the vehicle and lock all doors when leaving the vehicle unattended.**
- **For vehicles equipped with Keyless Enter-N-Go — Ignition, always remember to place the ignition in the OFF position.**

NOTE: Duplication of key fobs may be performed at an authorized dealer. This procedure consists of programming a blank key fob to the vehicle electronics. A blank key fob is one that has never been programmed.

When having the Sentry Key Immobilizer System serviced, bring all vehicle keys with you to an authorized dealer.

Irregular Operation

The system uses a key fob, an Ignition Node Module, Keyless Push Button Ignition and a RF receiver to prevent unauthorized vehicle operation. Therefore, only key fobs that are programmed to the vehicle can be used to start and operate the vehicle. The system will not allow the engine to crank if an invalid key fob is used to start and operate the vehicle. The system will shut the engine off in two seconds if an invalid key fob is used to start the engine.

NOTE: A key fob that has not been programmed is also considered an invalid key.

During normal operation, after placing the keyless ignition in the ON/RUN mode, the Vehicle Security Light will turn on for three seconds for a bulb check. If the light remains on after the bulb check, it indicates that there is a problem with the electronics. In addition, if the light begins to flash after the bulb check, it indicates that someone used an invalid key fob to try to start the engine. Either of these conditions will result in the engine being shut off after two seconds.

If the Vehicle Security Light turns on during normal vehicle operation (vehicle running for longer than 10 seconds), it indicates that there is a fault in the electronics. Should this occur, have the vehicle serviced as soon as possible by an authorized dealer.

General Information

The following regulatory statement applies to all radio frequency (RF) devices equipped in this vehicle:

This device complies with Part 15 of the FCC Rules and with Industry Canada license-exempt RSS standard(s). Operation is subject to the following two conditions:

1. This device may not cause harmful interference, and
2. This device must accept any interference received, including interference that may cause undesired operation.

NOTE: Changes or modifications not expressly approved by the party responsible for compliance could void the user's authority to operate the equipment.

VEHICLE SECURITY ALARM — IF EQUIPPED

The vehicle security alarm monitors the vehicle doors, hood, liftgate, and the Keyless Enter-N-Go — Ignition for unauthorized operation. While the vehicle security alarm is armed, interior switches for door locks and liftgate release are disabled. If something triggers the alarm, the vehicle security alarm will provide the following audible and visible signals:

- The horn will pulse.
- The turn signals will flash.
- The vehicle security light in the instrument cluster will flash.

To Arm The System

Follow these steps to arm the vehicle security alarm:

1. Make sure the vehicle's ignition is placed in the "OFF" mode.
   - For vehicles equipped with Keyless Entry, make sure the vehicle's keyless ignition system is OFF.
2. Perform one of the following methods to lock the vehicle:
   - Push the lock button on the interior power door lock switch with the driver and/or passenger door open.
   - Push the lock button on the exterior Passive Entry Door Handle with a valid key fob available in the same exterior zone (refer to "Doors" in "Getting To Know Your Vehicle" for further information).
   - Push the lock button on the key fob.
3. If any doors are open, close them.

To Disarm The System

The vehicle security alarm can be disarmed using any of the following methods:

- Push the unlock button on the key fob.
- Grasp the passive entry door handle to unlock the door, refer to "Doors" in "Getting To Know Your Vehicle" for further information.
- Cycle the ignition out of the off mode to disarm the system.

NOTE:

- The driver's door key cylinder and the liftgate button on the key fob cannot arm or disarm the vehicle security alarm.
- The vehicle security alarm remains armed during power liftgate entry. Pushing the liftgate button will not disarm the vehicle security alarm. If someone enters the vehicle through the liftgate and opens any door, the alarm will sound.
- When the vehicle security alarm is armed, the interior power door lock switches will not unlock the doors.

The vehicle security alarm is designed to protect your vehicle. However, you can create conditions where the system will give you a false alarm. If one of the previously described arming sequences has occurred, the vehicle security alarm will arm, regardless of whether you are in

the vehicle or not. If you remain in the vehicle and open a door, the alarm will sound. If this occurs, disarm the vehicle security alarm.

If the vehicle security alarm is armed and the battery becomes disconnected, the vehicle security alarm will remain armed when the battery is reconnected; the exterior lights will flash, and the horn will sound. If this occurs, disarm the vehicle security alarm.

Rearming Of The System

If something triggers the alarm, and no action is taken to disarm it, the vehicle security alarm will turn the horn off after 29 seconds, five seconds between cycles, up to eight cycles if the trigger remains active and the vehicle security alarm will rearm itself.

Security System Manual Override

The vehicle security alarm will not arm if you lock the doors using the manual door lock plunger.

Tamper Alert

If something has triggered the vehicle security alarm in your absence, the horn will sound three times and the exterior lights will blink three times when you disarm the vehicle security alarm. Check the vehicle for tampering.

DOORS

Manual Door Locks

The power door locks can be manually locked from inside the vehicle by using the door lock knob. To lock each door, push the door lock knob on each door trim panel downward. To unlock the front doors, pull the inside door handle to the first detent. To unlock the rear doors, pull the door lock knob on the door trim panel upward. If the lock knob is down when the door is closed, the door will lock. Therefore, make sure the key fob is not inside the vehicle before closing the door.

NOTE: Manually locking the vehicle will not arm the vehicle security alarm.

WARNING!

- **For personal security and safety in the event of a collision, lock the vehicle doors before you drive as well as when you park and leave the vehicle.**
- **When exiting the vehicle, always make sure the keyless ignition node is in the OFF mode, remove the key fob from the vehicle and lock your vehicle.**

(Continued)

WARNING! *(Continued)*

- **Never leave children alone in a vehicle, or with access to an unlocked vehicle. Allowing children to be in a vehicle unattended is dangerous for a number of reasons. A child or others could be seriously or fatally injured. Children should be warned not to touch the parking brake, brake pedal or the gear selector.**
- **Do not leave the key fob in or near the vehicle, or in a location accessible to children, and do not leave the ignition of a vehicle equipped with Keyless Enter-N-Go in the ACC or ON/RUN mode. A child could operate power windows, other controls, or move the vehicle.**

Power Door Locks

The power door lock switches are located on each front door panel. Push the switch to lock or unlock the doors.

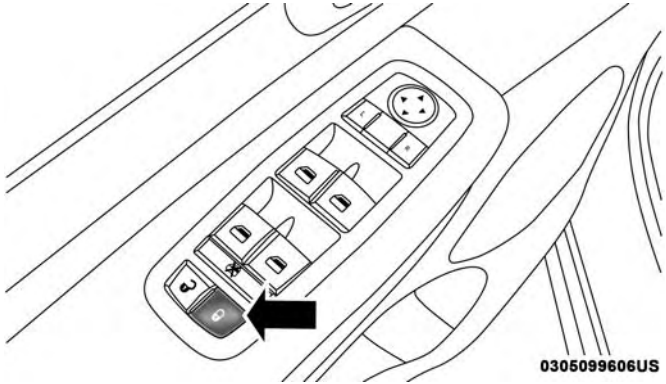

Power Door Lock Switch

The driver's door will unlock automatically if the keys are found inside the car when door lock button on trim is used to lock the door.

NOTE: If the key fob is located next to a mobile phone, laptop, or other electronic device, the wireless signal may get blocked, and the driver's door may not unlock automatically.

At the third attempt, the doors will lock even if the key is inside.

If the door lock switch is pushed while the ignition is in ACC or ON/RUN and the driver's door is open, the doors will not lock.

If a rear door is locked, it cannot be opened from inside the vehicle without first unlocking the door. The door may be unlocked manually by raising the lock knob.

Keyless Enter-N-Go — Passive Entry

The Passive Entry system is an enhancement to the vehicle's key fob and a feature of Keyless Enter-N-Go — Passive Entry. This feature allows you to lock and unlock the vehicle's door(s) and fuel door without having to push the key fob lock or unlock buttons.

NOTE:

- Passive Entry may be programmed ON/OFF; refer to "Uconnect Settings" in "Multimedia" for further information.
- The key fob may not be able to be detected by the vehicle passive entry system if it is located next to a mobile phone, laptop, or other electronic device; these devices may block the key fob's wireless signal and prevent the passive entry system from locking/unlocking the vehicle.
- Passive Entry Unlock initiates illuminated approach (Low Beams, License Plate Lamp, Position Lamps) for whichever time duration is set between 0, 30 (default), 60 or 90 seconds. Passive Entry Unlock also initiates two flashes of the turn signal lamps.
- If wearing gloves on your hands, or if it has been raining/snowing on the Passive Entry door handle, the unlock sensitivity can be affected, resulting in a slower response time.
- If the vehicle is unlocked by Passive Entry and no door is opened within 60 seconds, the vehicle will re-lock and if equipped will arm the security alarm.

To Unlock From The Driver Side

With a valid Passive Entry key fob within 5 ft (1.5 m) of the driver's door handle, grab the front driver door handle to unlock the driver's door automatically.

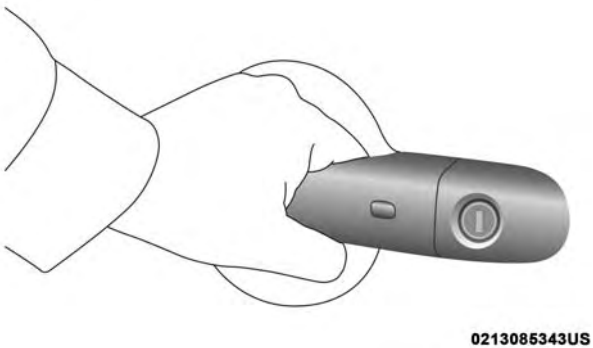

Grab The Door Handle To Unlock

NOTE: If "Unlock All Doors 1st Press" is programmed all doors will unlock when you grab hold of the front driver's door handle. To select between "Unlock Driver Door 1st Push" and "Unlock All Doors 1st Press," refer to "Uconnect Settings" in "Multimedia" for further information.

To Unlock From The Passenger Side

With a valid Passive Entry key fob within 5 ft (1.5 m) of the passenger door handle, grab the front passenger door handle to unlock all four doors and the liftgate automatically.

NOTE: All doors will unlock when the front passenger door handle is grabbed regardless of the driver's door unlock preference setting ("Unlock Driver Door 1st Press" or "Unlock All Doors 1st Press").

Preventing Inadvertent Locking Of Passive Entry Key Fob In Vehicle (FOBIK-Safe)

To minimize the possibility of unintentionally locking a Passive Entry key fob inside your vehicle, the Passive Entry system is equipped with an automatic door unlock feature which will function if the ignition switch is in the OFF position.

FOBIK-Safe only executes in vehicles with passive entry. There are five situations that trigger a FOBIK-Safe search in any passive entry vehicle:

- A lock request is made by a valid Passive Entry key fob while a door is open.
- A lock request is made by the Passive Entry door handle while a door is open.

- A lock request is made by the door panel switch while the door is open.
- When the vehicle security alarm is in pre-arm or armed status and the liftgate transitions from open to closed.
- When the liftgate transitions from opened to closed and remote start is active.

When any of these situations occur, after all open doors are shut, the FOBIK-Safe search will be executed. If it finds a Passive Entry key fob inside the car, the car will unlock and alert the customer.

NOTE: The vehicle will only unlock the doors when a valid Passive Entry key fob is detected inside the vehicle. The vehicle will not unlock the doors when any of the following conditions are true:

- The doors are manually locked using the door lock knobs.
- Three attempts are made to lock the doors using the door panel switch and then close the doors.
- There is a valid Passive Entry key fob outside the vehicle within 5 ft. (1.5 m) of a Passive Entry door handle.

To Lock The Vehicle's Doors And Liftgate

With one of the vehicle's Passive Entry key fob within 5 ft (1.5 m) of the driver or passenger front door handles, pushing the passive entry lock button will lock the vehicle.

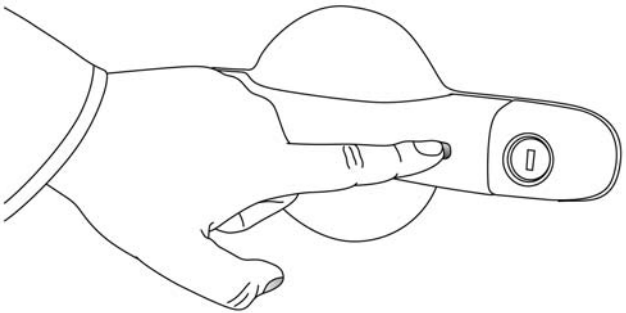

Push The Door Handle Button To Lock

NOTE: DO NOT grab the door handle, when pushing the door handle lock button. This could unlock the door(s).

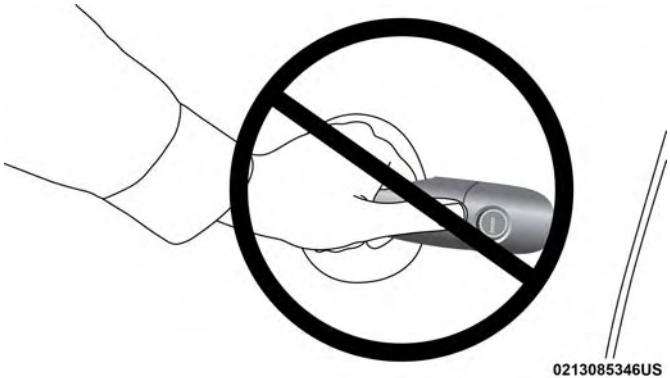

DO NOT Grab The Door Handle When Locking

NOTE:

- After pushing the door handle button, you must wait two seconds before you can lock or unlock the doors, using either Passive Entry door handle. This is done to allow you to check if the vehicle is locked by pulling the door handle without the vehicle reacting and unlocking.
- If Passive Entry is disabled using Uconnect System, the key protection described in "Preventing Inadvertent Locking of Passive Entry Key Fob in Vehicle" remains active/functional.
- The Passive Entry system will not operate if the key fob battery is dead.

The vehicle doors can also be locked by using the lock button located on the vehicle's interior door panel.

To Unlock/Enter The Liftgate

The liftgate passive entry unlock feature is built into the electronic liftgate release. With a valid Passive Entry key fob within 5 ft (1.5 m) of the liftgate, push the electronic liftgate release to open with one fluid motion.

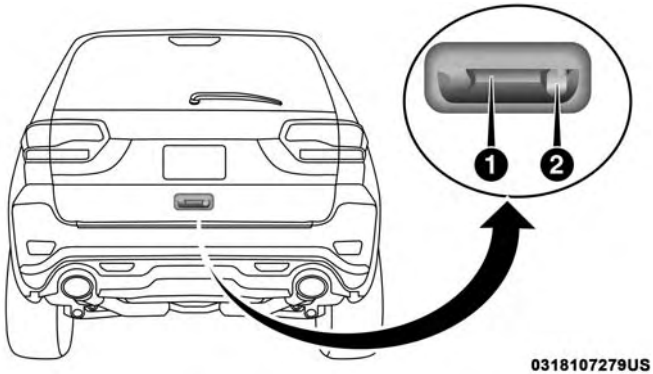

Electronic Liftgate Release/Liftgate Passive Entry Location

1 — Electronic Liftgate Release
2 — Lock Button Location

To Lock The Liftgate

With a valid Passive Entry key fob within 5 ft (1.5 m) of the liftgate, push the passive entry lock button located on the outside liftgate door handle.

NOTE: The liftgate passive entry lock button will lock all doors and the liftgate. The liftgate unlock feature is built into the electronic liftgate release.

General Information

The following regulatory statement applies to all radio frequency (RF) devices equipped in this vehicle:

This device complies with Part 15 of the FCC Rules and with Industry Canada license-exempt RSS standard(s). Operation is subject to the following two conditions:

1. This device may not cause harmful interference, and
2. This device must accept any interference received, including interference that may cause undesired operation.

NOTE: Changes or modifications not expressly approved by the party responsible for compliance could void the user's authority to operate the equipment.

Locking The Doors With One Or More Doors Open

If the door lock switch is pushed while the ignition is in ACC or ON/RUN and the driver's door is open, the doors will not lock.

Automatic Unlock Doors On Exit

The doors will unlock automatically on vehicles with power door locks after the following sequence of actions:

1. The Automatic Unlock Doors On Exit feature is enabled.

2. All doors are closed.
3. The transmission gear selector was not in PARK, then is placed in PARK.
4. Any door is opened.

Auto Relocking — If Equipped

The auto door lock feature default condition is enabled. When enabled, the door locks will lock automatically when the vehicle's speed exceeds 15 mph (24 km/h). The auto door lock feature can be enabled or disabled by your authorized dealer. The auto door lock feature is enabled/disabled in the Uconnect Settings.

Child-Protection Door Lock System — Rear Doors

To provide a safer environment for small children riding in the rear seats, the rear doors are equipped with a Child-Protection Door Lock system.

To use the system, open each rear door, use a flat blade screwdriver (or emergency key) and rotate the dial to the lock or unlock position. When the system on a door is engaged, that door can only be opened by using the outside door handle even if the inside door lock is in the unlocked position.

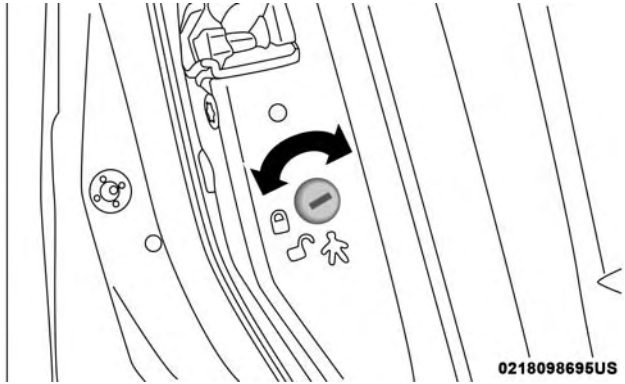

Child-Protection Door Lock Function

NOTE:

- When the child lock system is engaged, the door can be opened only by using the outside door handle even though the inside door lock is in the unlocked position.
- After disengaging the Child-Protection Door Lock system, always test the door from the inside to make certain it is in the desired position.
- After engaging the Child-Protection Door Lock system, always test the door from the inside to make certain it is in the desired position.

- For emergency exit with the system engaged, pull up on the door lock knob (unlocked position), roll down the window, and open the door with the outside door handle.

WARNING!

Avoid trapping anyone in a vehicle in a collision. Remember that the rear doors can only be opened from the outside when the Child-Protection locks are engaged (locked).

NOTE: Always use this device when carrying children. After engaging the child lock on both rear doors, check for effective engagement by trying to open a door with the internal handle. Once the Child-Protection Door Lock system is engaged, it is impossible to open the doors from inside the vehicle. Before getting out of the car, be sure to check that there is no one left inside.

SEATS

Seats are a part of the Occupant Restraint System of the vehicle.

WARNING!

- **It is dangerous to ride in a cargo area, inside or outside of a vehicle. In a collision, people riding in these areas are more likely to be seriously injured or killed.**
- **Do not allow people to ride in any area of your vehicle that is not equipped with seats and seat belts. In a collision, people riding in these areas are more likely to be seriously injured or killed.**
- **Be sure everyone in your vehicle is in a seat and using a seat belt properly.**

Manual Adjustment (Front Seats) — If Equipped

WARNING!

- **Adjusting a seat while the vehicle is moving is dangerous. The sudden movement of the seat could cause you to lose control. The seat belt might not be adjusted properly and you could be injured. Adjust the seat only while the vehicle is parked.**

(Continued)

WARNING! ***(Continued)***

- **Do not ride with the seatback reclined so that the shoulder belt is no longer resting against your chest. In a collision you could slide under the seat belt and be seriously or even fatally injured. Use the recliner only when the vehicle is parked.**

Manual Front Seats Forward/Rearward Adjustment

Some models may be equipped with a manual front passenger seat. The seat can be adjusted forward or rearward by using a bar located by the front of the seat cushion, near the floor.

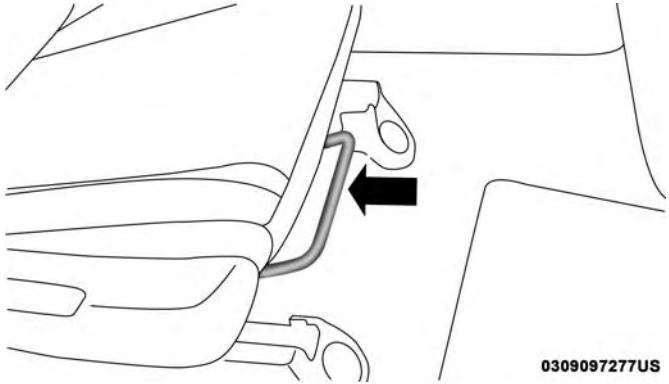

Adjustment Bar

While sitting in the seat, lift up on the bar located under the seat cushion and move the seat forward or rearward. Release the bar once you have reached the desired position. Then, using body pressure, move forward and rearward on the seat to be sure that the seat adjusters have latched.

WARNING!

- **Adjusting a seat while driving may be dangerous. Moving a seat while driving could result in loss of control which could cause a collision and serious injury or death.**
- **Seats should be adjusted before fastening the seat belts and while the vehicle is parked. Serious injury or death could result from a poorly adjusted seat belt.**

Manual Front Passenger Seatback Adjustment — Recline

To adjust the seatback, lift the lever located on the outboard side of the seat, lean back to the desired position and release the lever. To return the seatback, lift the lever, lean forward and release the lever.

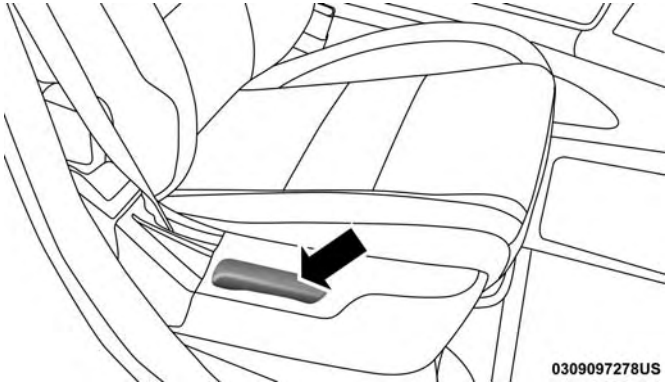

Recline Lever

WARNING!

Do not ride with the seatback reclined so that the shoulder belt is no longer resting against your chest. In a collision you could slide under the seat belt, which could result in serious injury or death.

Front Passenger Seat Fold-Flat Feature — If Equipped

To fold the seatback to the flat load-floor position, lift the recline lever and push the seatback forward. To return to the seating position, raise the seatback and lock it into place.

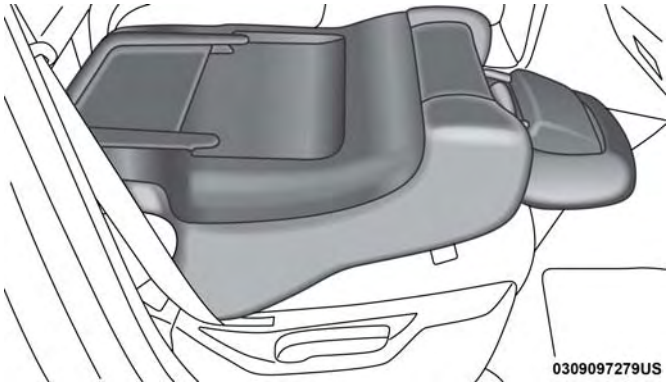

Fold-Flat Passenger Seat

WARNING!

- **Adjusting a seat while the vehicle is moving is dangerous. The sudden movement of the seat could cause you to lose control. The seat belt might not be properly adjusted, and you could be severely injured or killed. Only adjust a seat while the vehicle is parked.**
- **Do not ride with the seatback reclined so that the seat belt is no longer resting against your chest. In a collision, you could slide under the seat belt and be severely injured or killed. Use the recliner only when the vehicle is parked.**

CAUTION!

Do not place any article under a power seat or impede its ability to move as it may cause damage to the seat controls. Seat travel may become limited if movement is stopped by an obstruction in the seat's path.

Manual Adjustment (Rear Seats)

WARNING!

Do not pile luggage or cargo higher than the top of the seatback. This could impair visibility or become a dangerous projectile in a sudden stop or collision.

Reclining Rear Seat

To recline the seatback, lift the lever located on the outboard side of the seat, lean back and release the lever at the desired position. To return the seatback, lift the lever, lean forward and release the lever.

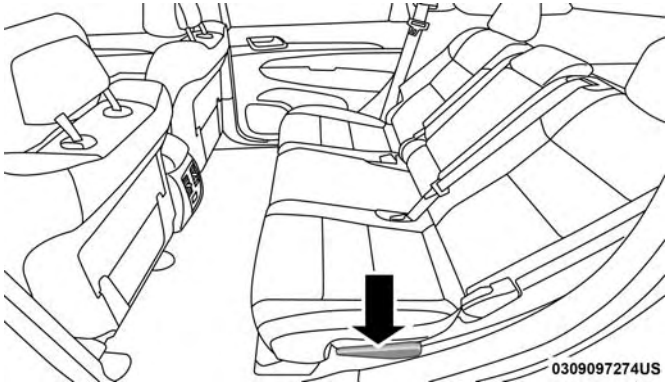

Rear Seat Recline

WARNING!

Do not ride with the seatback reclined so that the shoulder belt is no longer resting against your chest. In a collision you could slide under the seat belt, which could result in serious injury or death.

To Lower Rear Seat

Either side of the rear seat can be lowered to allow for extended cargo space and still maintain some rear seating room.

NOTE: Be sure that the front seats are fully upright and positioned forward. This will allow the rear seatback to fold down easily.

1. Pull upward on the release lever to release the seat.

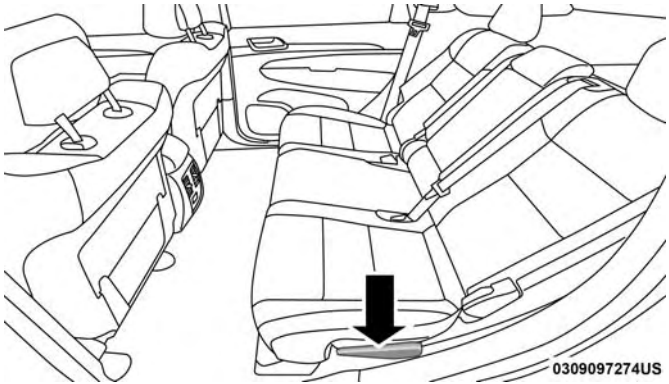

Rear Seat Release

NOTE:

- Do not fold the 60% rear seat down with the left outboard or rear center seat belt buckled.
- Do not fold the 40% rear seat down with the right outboard seat belt buckled.

2. Fold the rear seat completely forward.

Rear Seat Folded

NOTE: You may experience deformation in the seat cushion from the seat belt buckles if the seats are left folded for an extended period of time. This is normal and by simply opening the seats to the open position, over time the seat cushion will return to its normal shape.

To Raise Rear Seat

Raise the rear seatback and lock it into place. If interference from the cargo area prevents the seatback from fully locking, you will have difficulty returning the seat to its proper position.

WARNING!

- **Be certain that the seatback is securely locked into position. If the seatback is not securely locked into position the seat will not provide the proper stability for child seats and/or passengers. An improperly latched seat could cause serious injury.**
- **The cargo area in the rear of the vehicle (with the rear seatbacks in the locked-up or folded down position) should not be used as a play area by children when the vehicle is in motion. They could be seriously injured in a collision. Children should be seated and using the proper restraint system.**

Power Adjustment (Front Seats) — If Equipped

Some models may be equipped with eight-way power driver and front passenger seats. The power seat switches are located on the outboard side of the seat. There are two switches that control the movement of the seat cushion and the seatback.

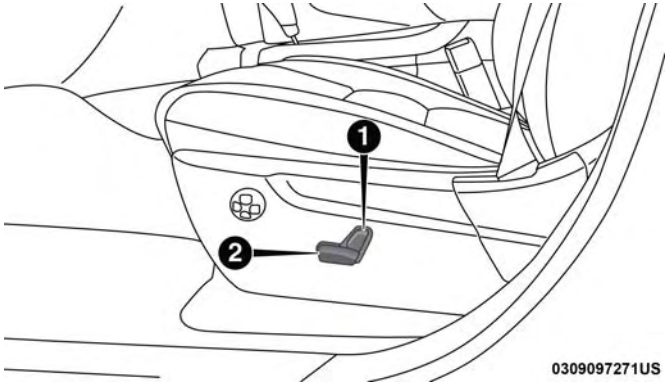

Power Seat Switches

1 — Seatback Switch
2 — Seat Switch

Adjusting The Seat Forward Or Rearward

The seat can be adjusted both forward and rearward. Push the seat switch forward or rearward. The seat will move in the direction of the switch. Release the switch when the desired position has been reached.

Adjusting The Seat Up Or Down

The height of the seats can be adjusted up or down. Pull upward or push downward on the seat switch; the seat will move in the direction of the switch. Release the switch when the desired position has been reached.

Tilting The Seat Up Or Down

The angle of the seat cushion can be adjusted up or down. Pull upward or push downward on the front of the seat switch. The front of the seat cushion will move in the direction of the switch. Release the switch when the desired position has been reached.

Reclining The Seatback

The angle of the seatback can be adjusted forward or rearward. Push the seatback switch forward or rearward, the seat will move in the direction of the switch. Release the switch when the desired position is reached.

WARNING!

- **Adjusting a seat while driving may be dangerous. Moving a seat while driving could result in loss of control which could cause a collision and serious injury or death.**
- **Seats should be adjusted before fastening the seat belts and while the vehicle is parked. Serious injury or death could result from a poorly adjusted seat belt.**
- **Do not ride with the seatback reclined so that the shoulder belt is no longer resting against your chest. In a collision you could slide under the seat belt, which could result in serious injury or death.**

CAUTION!

Do not place any article under a power seat or impede its ability to move as it may cause damage to the seat controls. Seat travel may become limited if movement is stopped by an obstruction in the seat's path.

Power Lumbar — If Equipped

Vehicles equipped with power driver or passenger seats may also be equipped with power lumbar. The power lumbar switch is located on the outboard side of the power seat. Push the switch forward to increase the lumbar support. Push the switch rearward to decrease the lumbar support. Pushing upward or downward on the switch will raise and lower the position of the support.

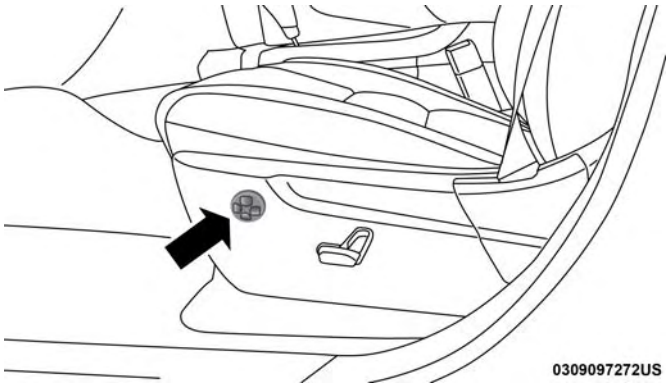

Power Lumbar Switch

Driver Memory Seat — If Equipped

This feature allows the driver to store up to two different memory profiles for easy recall through a memory switch. Each memory profile contains desired position settings for the driver seat, side mirrors, and power tilt and telescopic steering column (if equipped) and a set of desired radio station presets. Your key fob can also be programmed to recall the same positions when the unlock button is pushed.

NOTE: Your vehicle is equipped with two key fobs, one key fob can be linked to memory position 1 and the other key fob can be linked to memory position 2.

The memory seat switch is located on the driver's door trim panel. The switch consists of three buttons:

- The set (S) button, which is used to activate the memory save function.

- The (1) and (2) buttons which are used to recall either of two pre-programmed memory profiles.

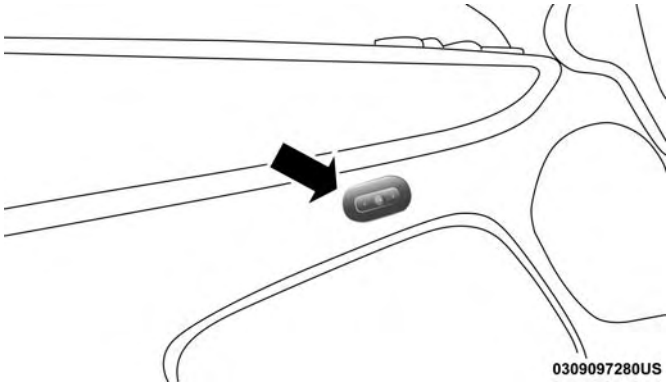

Memory Seat Switch

Programming The Memory Feature

NOTE: To create a new memory profile, perform the following:

1. Cycle the vehicle's ignition to the ON/RUN position (do not start the engine).
2. Adjust all memory profile settings to desired preferences (i.e., seat, side mirror, power tilt and telescopic steering column [if equipped], and radio station presets).
3. Push and release the set (S) button on the memory switch.
4. Within five seconds, push and release either of the memory buttons (1) or (2). The instrument cluster display will display which memory position has been set.

NOTE:

- Memory profiles can be set without the vehicle in PARK, but the vehicle must be in PARK to recall a memory profile.
- To set a memory profile to your key fob, refer to "Linking And Unlinking The Remote Keyless Entry Key Fob To Memory" in this section.

Linking And Unlinking The Remote Keyless Entry Key Fob To Memory

Your key fobs can be programmed to recall one of two pre-programmed memory profiles by pushing the unlock button on the key fob.

NOTE: Before programming your key fobs you must select the "Memory Linked To Fob" feature through the Uconnect system screen. Refer to "Uconnect Settings" in "Multimedia" for further information.

To program your key fobs, perform the following:

1. Cycle the vehicle's ignition to the OFF position.
2. Select a desired memory profile, 1 or 2.

NOTE: If a memory profile has not already been set, refer to "Programming The Memory Feature" in this section for instructions on how to set a memory profile.

3. Once the profile has been recalled, push and release the set (S) button on the memory switch.
4. Within five seconds, push and release button (1) or (2) accordingly. "Memory Profile Set" (1 or 2) will display in the instrument cluster.
5. Push and release the lock button on the key fob within 10 seconds.

NOTE: Your key fobs can be unlinked to your memory settings by pushing the set (S) button, and within 10 seconds, followed by pushing the unlock button on the key fob.

Memory Position Recall

NOTE: The vehicle must be in PARK to recall memory positions. If a recall is attempted when the vehicle is not in PARK, a message will be displayed in the instrument cluster display.

Driver One Memory Position Recall

- To recall the memory settings for driver one using the memory switch, push memory button (1) on the memory switch.
- To recall the memory settings for driver one using the key fob, push the unlock button on the key fob linked to memory position 1.

Driver Two Memory Position Recall

- To recall the memory setting for driver two using the memory switch, push memory button (2) on the memory switch.
- To recall the memory settings for driver two using the key fob, push the unlock button on the key fob linked to memory position 2.

A recall can be canceled by pushing any of the memory buttons during a recall (S, 1, or 2), or by pushing any of the seat adjustment switches. When a recall is canceled, the driver's seat and steering column (if equipped) stop moving. A delay of one second will occur before another recall can be selected.

Easy Entry/Exit Seat

This feature provides automatic driver seat positioning to enhance driver mobility when entering and exiting the vehicle.

The distance the driver seat moves depends on where you have the driver seat positioned when you cycle the vehicle's ignition to the OFF position.

- When you cycle the vehicle's ignition to the OFF position, the driver seat will move about 2.4 inches (60 mm) rearward if the driver seat position is greater than or equal to 2.7 inches (67.7 mm) forward of the rear stop. The seat will return to its previously set position when you cycle the vehicle's ignition to the ACC or RUN position.
- The Easy Entry/Easy Exit feature is disabled when the driver seat position is less than 0.9 of an inch (22.7 mm) forward of the rear stop. At this position, there is no benefit to the driver by moving the seat for Easy Exit or Easy Entry.

Each stored memory setting will have an associated Easy Entry and Easy Exit position.

NOTE: The Easy Entry/Exit feature is not enabled when the vehicle is delivered from the factory. The Easy Entry/Exit feature is enabled (or later disabled) through the programmable features in the Uconnect system. Refer to "Uconnect Settings" in "Multimedia".

Heated Seats — If Equipped

On some models, the front and rear seats may be equipped with heaters located in the seat cushions and seat backs.

WARNING!

- **Persons who are unable to feel pain to the skin because of advanced age, chronic illness, diabetes, spinal cord injury, medication, alcohol use, exhaustion or other physical condition must exercise care when using the seat heater. It may cause burns even at low temperatures, especially if used for long periods of time.**

(Continued)

WARNING! *(Continued)*

- **Do not place anything on the seat or seatback that insulates against heat, such as a blanket or cushion. This may cause the seat heater to overheat. Sitting in a seat that has been overheated could cause serious burns due to the increased surface temperature of the seat.**

Front Heated Seats

The front heated seat control buttons are located within the climate or controls screen of the touchscreen.

You can choose from HI, LO, or OFF heat settings. The indicator arrows in touchscreen buttons indicate the level of heat in use. Two indicator arrows will illuminate for HI, and one for LO. Turning the heating elements off will return the user to the radio screen.

- Press the heated seat button once to turn the HI setting on.
- Press the heated seat button a second time to turn the LO setting on.
- Press the heated seat button a third time to turn the heating elements off.

NOTE:

- Once a heat setting is selected, heat will be felt within two to five minutes.
- The engine must be running for the heated seats to operate.
- The level of heat selected will stay on until the operator changes it.

Vehicles Equipped With Remote Start

On models that are equipped with remote start, the heated seats can be programmed to come on during a remote start.

This feature can be programmed through the Uconnect system. Refer to “Uconnect Settings” in “Multimedia” for further information.

WARNING!

- **Persons who are unable to feel pain to the skin because of advanced age, chronic illness, diabetes, spinal cord injury, medication, alcohol use, exhaustion or other physical condition must exercise care when using the seat heater. It may cause burns even at low temperatures, especially if used for long periods of time.**

(Continued)

WARNING! ***(Continued)***

- **Do not place anything on the seat or seatback that insulates against heat, such as a blanket or cushion. This may cause the seat heater to overheat. Sitting in a seat that has been overheated could cause serious burns due to the increased surface temperature of the seat.**

Rear Heated Seats — If Equipped

On some models, the two rear outboard seats may be equipped with heated seats. There are two heated seat switches that allow the rear passengers to operate the seats independently. The heated seat switches for each heater are located on the rear of the center console.

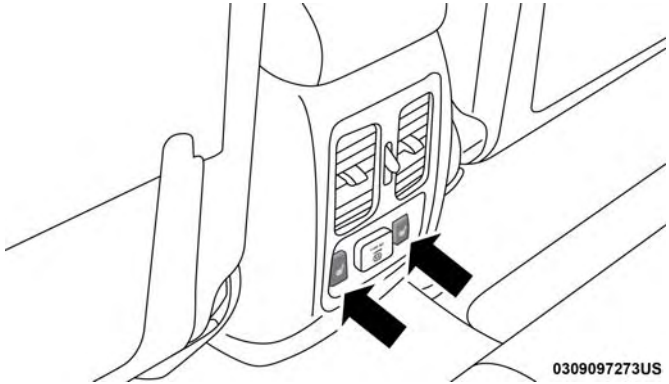

Rear Heated Seat Switches

You can choose from HI, LO, or OFF heat settings. Amber indicator lights in each switch indicate the level of heat in use. Two indicator lights will illuminate for HI, one for LO and none for OFF.

- Push the switch once to turn the HI setting on.
- Push the switch a second time to turn the LO setting on.
- Push the switch a third time to turn the heating elements off.

The level of heat selected will stay on until the operator changes it.

WARNING!

- **Persons who are unable to feel pain to the skin because of advanced age, chronic illness, diabetes, spinal cord injury, medication, alcohol use, exhaustion or other physical condition must exercise care when using the seat heater. It may cause burns even at low temperatures, especially if used for long periods of time.**
- **Do not place anything on the seat or seatback that insulates against heat, such as a blanket or cushion. This may cause the seat heater to overheat. Sitting in a seat that has been overheated could cause serious burns due to the increased surface temperature of the seat.**

Front Ventilated Seats — If Equipped

Located in the seat cushion and seat back are fans that draw the air from the passenger compartment and move air through fine perforations in the seat cover to help keep the driver and front passenger cooler in higher ambient temperatures. The fans operate at two speeds, HI and LO.

The front ventilated seats control buttons are located within the Uconnect system. You can gain access to the control buttons through the climate screen or the controls screen.

- Press the ventilated seat button once to choose HI.
- Press the ventilated seat button a second time to choose LO.
- Press the ventilated seat button a third time to turn the ventilated seat off.

NOTE: The engine must be running for the ventilated seats to operate.

Vehicles Equipped With Remote Start

On models that are equipped with remote start, the ventilated seats can be programmed to come on during a remote start.

This feature can be programmed through the Uconnect system. Refer to "Uconnect Settings" in "Multimedia" for further information.

HEAD RESTRAINTS

Head restraints are designed to reduce the risk of injury by restricting head movement in the event of a rear-impact. Head restraints should be adjusted so that the top of the head restraint is located above the top of your ear.

WARNING!

- **All occupants, including the driver, should not operate a vehicle or sit in a vehicle's seat until the head restraints are placed in their proper positions in order to minimize the risk of neck injury in the event of a crash.**
- **Head restraints should never be adjusted while the vehicle is in motion. Driving a vehicle with the head restraints improperly adjusted or removed could cause serious injury or death in the event of a collision.**

Supplemental Active Head Restraints — Front Seats

Active Head Restraints are passive, deployable components, and vehicles with this equipment cannot be readily identified by any markings, only through visual inspection of the head restraint. The Active Head Restraints (AHR) will be split in two halves, with the front half being soft foam and trim, the back half being decorative plastic.

When AHRs deploy during a rear impact, the front half of the head restraint extends forward to reduce the gap between the back of the occupant's head and the AHR. This system is design to reduce the risk of injury to the driver or front passenger in certain types of rear impacts. Refer to "Occupant Restraint Systems" in "Safety" for further information.

To raise the head restraint, pull upward on the head restraint. To lower the head restraint, push the adjustment button, located at the base of the head restraint, and push downward on the head restraint.

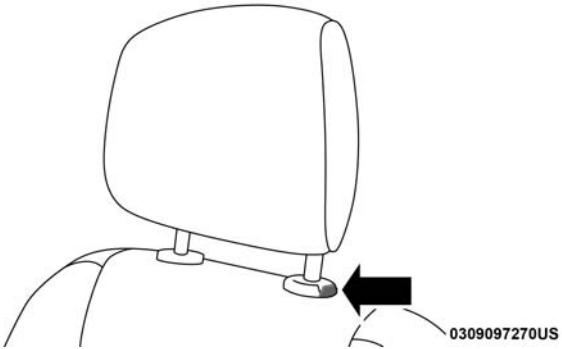

Adjustment Button

For comfort, the Active Head Restraints can be tilted forward and rearward. To tilt the head restraint closer to the back of your head, pull forward on the bottom of the head restraint. Push rearward on the bottom of the head restraint to move the head restraint away from your head.

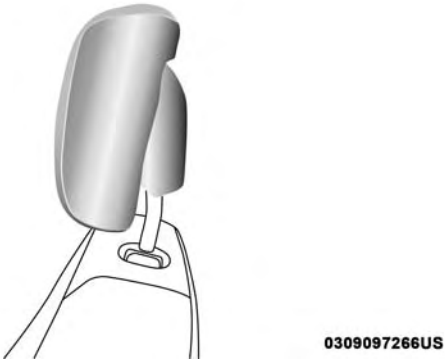

Active Head Restraint (Normal Position)

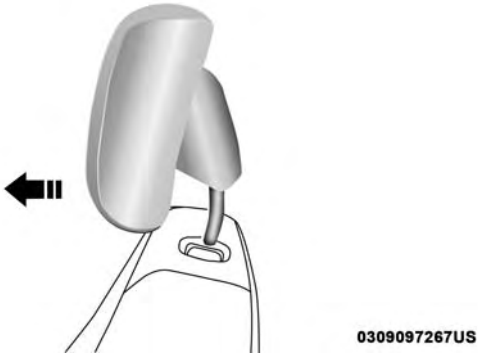

Active Head Restraint (Tilted)

NOTE:

- The head restraints should only be removed by qualified technicians, for service purposes only. If either of the head restraints require removal, see an authorized dealer.
- In the event of deployment of an Active Head Restraint, refer to "Occupant Restraint Systems/Resetting Active Head Restraints (AHR)" in "Safety" for further information.

WARNING!

- **ALL the head restraints MUST be reinstalled in the vehicle to properly protect the occupants.**
- **All occupants, including the driver, should not operate a vehicle or sit in a vehicle's seat until the head restraints are placed in their proper positions in order to minimize the risk of neck injury in the event of a collision.**
- **Do not place items over the top of the Active Head Restraint, such as coats, seat covers or portable DVD players. These items may interfere with the operation of the Active Head Restraint in the event of a collision and could result in serious injury or death.**
- **Active Head Restraints may be deployed if they are struck by an object such as a hand, foot or loose cargo. To avoid accidental deployment of the Active Head Restraint ensure that all cargo is secured, as loose cargo could contact the Active Head Restraint during sudden stops. Failure to follow this warning could cause personal injury if the Active Head Restraint is deployed.**

Adjustment — Rear Seats

The head restraints on the outboard seats are not adjustable. They automatically fold forward when the rear seat is folded to a load floor position, but do not return to their normal position when the rear seat is raised. After returning either seat to its upright position, raise the head restraint until it locks in place. The outboard head restraints are not removable.

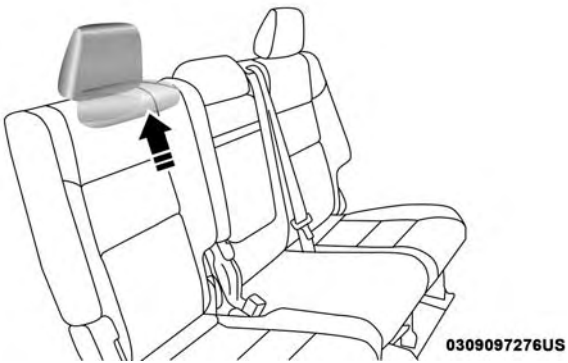

Folded Rear Head Restraint

The center head restraint has limited adjustment. Lift upward on the head restraint to raise it, or push downward on the head restraint to lower it.

Head Restraint Removal — Rear Seats

The center head restraint can be adjusted when occupied, or removed for Child Seat Tethering. To remove the head restraint, raise it as far as it can go by pulling upward. Then, push the release button at the base of the post while pulling the head restraint upward. To reinstall the head restraint, put the head restraint posts into the holes and push downward. Then, adjust the head restraint to the appropriate height.

WARNING!

- **ALL the head restraints MUST be reinstalled in the vehicle to properly protect the occupants. Follow the re-installation instructions above prior to operating the vehicle or occupying a seat.**
- **Sitting in a seat with the head restraint in its lowered position could result in serious injury or death in a collision. Always make sure the outboard head restraints are in their upright positions when the seat is to be occupied.**

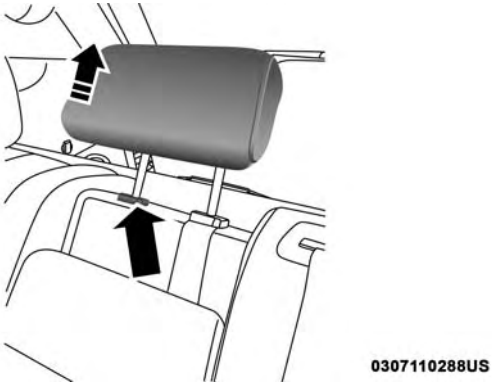

Center Head Restraint Release Button

NOTE: For proper routing of a Child Seat Tether, refer to "Occupant Restraint Systems" in "Safety" for further information.

WARNING!

- **A loose head restraint thrown forward in a collision or hard stop could cause serious injury or death to occupants of the vehicle. Always securely stow removed head restraints in a location outside the occupant compartment.**
- **ALL the head restraints MUST be reinstalled in the vehicle to properly protect the occupants. Follow the re-installation instructions above prior to operating the vehicle or occupying a seat.**

STEERING WHEEL

Manual Tilt/Telescoping Steering Column — If Equipped

This feature allows you to tilt the steering column upward or downward. It also allows you to lengthen or shorten the steering column. The tilt/telescoping lever is located below the steering wheel at the end of the steering column.

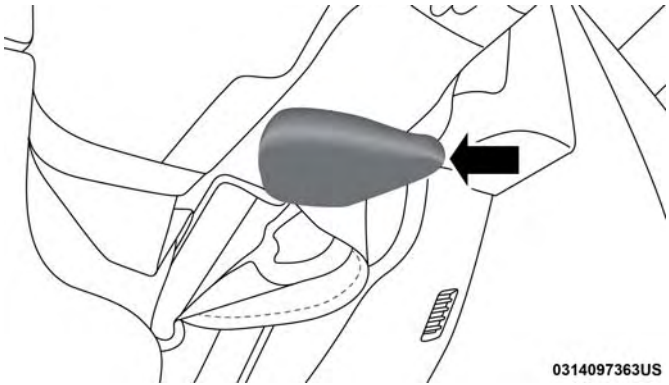

Tilt/Telescoping Lever

To unlock the steering column, push the lever downward (toward the floor). To tilt the steering column, move the steering wheel upward or downward as desired. To lengthen or shorten the steering column, pull the steering wheel outward or push it inward as desired. To lock the steering column in position, push the lever upward until fully engaged.

WARNING!

Do not adjust the steering column while driving. Adjusting the steering column while driving or driving with the steering column unlocked, could cause the driver to lose control of the vehicle. Failure to follow this warning may result in serious injury or death.

Power Tilt/Telescoping Steering Column — If Equipped

This feature allows you to tilt the steering column upward or downward. It also allows you to lengthen or shorten the steering column. The power tilt/telescoping steering column lever is located below the multifunction lever on the steering column.

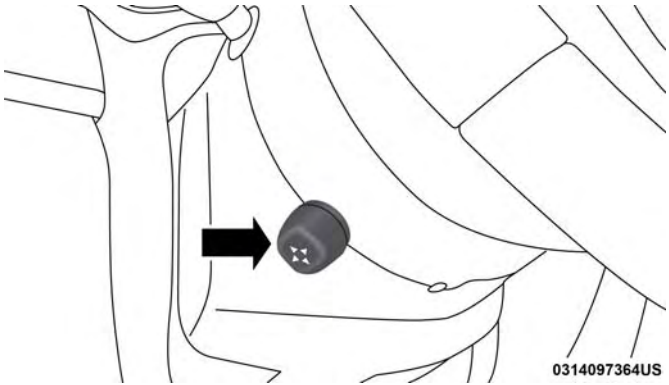

Power Tilt/Telescoping Steering Column

To tilt the steering column, move the lever up or down as desired. To lengthen or shorten the steering column, pull the lever toward you or push the lever away from you as desired.

NOTE: For vehicles equipped with Driver Memory Seat, you can use your key fob or the memory switch on the driver's door trim panel to return the tilt/telescopic steering column to pre-programmed positions. Refer to "Driver Memory Seat" in this section for further information.

WARNING!

Do not adjust the steering column while driving. Adjusting the steering column while driving or driving with the steering column unlocked, could cause the driver to lose control of the vehicle. Failure to follow this warning may result in serious injury or death.

Heated Steering Wheel — If Equipped

The steering wheel contains a heating element that helps warm your hands in cold weather. The heated steering wheel has only one temperature setting. Once the heated steering wheel has been turned on, it will stay on until the operator turns it off. The heated steering wheel may not turn on when it is already warm.

The heated steering wheel control button is located on the center of the instrument panel below the touchscreen and within the climate or controls screen of the touchscreen.

- Push the heated steering wheel button once to turn the heating element on.
- Push the heated steering wheel button a second time to turn the heating element off.

NOTE: The engine must be running for the heated steering wheel to operate.

Vehicles Equipped With Remote Start

On models that are equipped with remote start, the heated steering wheel can be programmed to come on during a remote start.

This feature can be programmed through the Uconnect system. Refer to "Uconnect Settings" in "Multimedia" for further information.

WARNING!

- **Persons who are unable to feel pain to the skin because of advanced age, chronic illness, diabetes, spinal cord injury, medication, alcohol use, exhaustion, or other physical conditions must exercise care when using the steering wheel heater. It may cause burns even at low temperatures, especially if used for long periods.**
- **Do not place anything on the steering wheel that insulates against heat, such as a blanket or steering wheel covers of any type and material. This may cause the steering wheel heater to overheat.**

MIRRORS

Inside Day/Night Mirror — If Equipped

The mirror head can be adjusted up, down, left, and right for various drivers. The mirror should be adjusted to center on the view through the rear window.

Headlight glare from vehicles behind you can be reduced by moving the small control under the mirror to the night position (toward the rear of the vehicle). The mirror should be adjusted while set in the day position (toward the windshield).

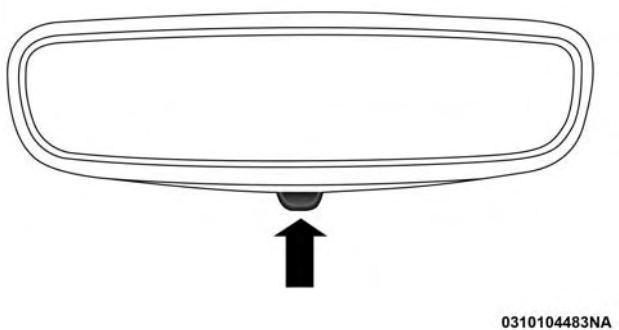

Adjusting Rearview Mirror

Automatic Dimming Mirror — If Equipped

The mirror head can be adjusted up, down, left, and right for various drivers. The mirror should be adjusted to center on the view through the rear window.

This mirror automatically adjusts for headlight glare from vehicles behind you.

NOTE: The Automatic Dimming Mirror feature is disabled when the vehicle is in REVERSE to improve the driver's rear view.

You can turn the feature on or off by pushing the button at the base of the mirror. A light in the button will illuminate to indicate when the dimming feature is activated.

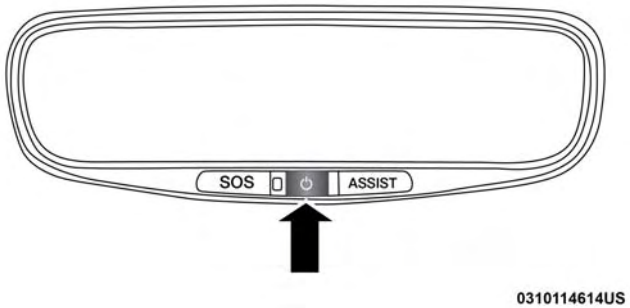

Automatic Dimming Mirror Button

CAUTION!

To avoid damage to the mirror during cleaning, never spray any cleaning solution directly onto the mirror. Apply the solution onto a clean cloth and wipe the mirror clean.

Outside Mirrors

To receive maximum benefit, adjust the outside mirror(s) to center on the adjacent lane of traffic with a slight overlap of the view obtained on the inside mirror.

WARNING!

Vehicles and other objects seen in an outside convex mirror will look smaller and farther away than they really are. Relying too much on side convex mirrors could cause you to collide with another vehicle or other object. Use your inside mirror when judging the size or distance of a vehicle seen in a side convex mirror.

Outside Mirrors Folding Feature

All outside mirrors are hinged and may be moved either forward or rearward to resist damage. The hinges have three detent positions:

- Full forward position
- Full rearward position
- Normal position

Outside Automatic Dimming Mirrors — If Equipped

The outside mirrors will automatically adjust for glare from vehicles behind you. This feature is controlled by the inside automatic dimming mirror. The mirrors will automatically adjust for headlight glare when the inside mirror adjusts.

Power Mirrors

The power mirror switch is located on the driver's side door trim panel.

The power mirror controls consist of mirror select buttons and a four-way mirror control switch. To adjust a mirror, push the mirror select button for the mirror that you want to adjust. Using the mirror control switch, push on any of the four arrows for the direction that you want the mirror to move.

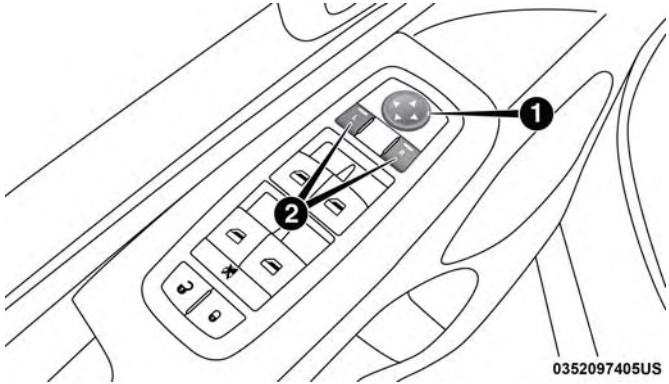

Power Mirror Switch

1 — Mirror Direction Control
2 — Mirror Selection

Power mirror preselected positions can be controlled by the optional Memory Seat Feature. Refer to "Driver Memory Seat" in "Getting To Know Your Vehicle" for further information.

Power Folding Outside Mirrors — If Equipped

If equipped with power folding mirrors, they can be electrically folded rearward and unfolded into the drive position.

The switch for the power folding mirrors is located between the power mirror switches L (left) and R (right). Push the switch once and the mirrors will fold in, push the switch a second time and the mirrors will return to the normal driving position.

If the mirror is manually folded after electrically cycled, a potential extra button push is required to get the mirrors back to the home position. If the mirror does not electrically fold, check for ice or dirt build up at the pivot area which can cause excessive drag.

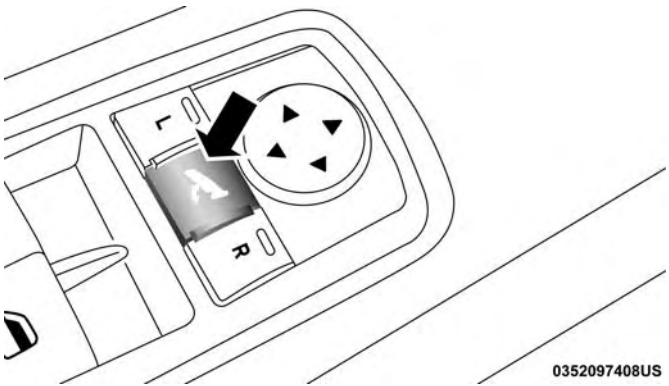

Power Folding Mirror Switch

Automatic Power Folding Mirrors

When the Automatic Fold Mirrors feature is enabled, the exterior mirrors will fold in when exiting the vehicle (the ignition is OFF, all doors are closed, and the doors are locked).

- If the exterior mirrors were auto-folded, they will unfold when the ignition is turned ON.
- If the exterior mirrors were manually folded, they will not automatically unfold.

NOTE: The Automatic Fold/Unfold Mirrors feature is not turned on when delivered from the factory. The Automatic Fold/Unfold Mirrors feature can be turned on and off using the Uconnect System. Refer to “Uconnect Settings” in “Multimedia” for further information.

Resetting The Power Folding Outside Mirrors

You may need to reset the power folding mirrors if the following occurs:

- The mirrors are accidentally blocked while folding.
- The mirrors are accidentally manually folded/unfolded.
- The mirrors come out of the unfolded position.
- The mirrors shake and vibrate at normal driving speeds.

To reset the power folding mirrors: Fold and unfold them by pushing the button (this may require multiple button pushes). This resets them to their normal position.

Heated Mirrors — If Equipped

These mirrors are heated to melt frost or ice. This feature will be activated whenever you turn on the rear window defroster (if equipped). Refer to "Climate Controls" in "Getting To Know Your Vehicle" for further information.

Tilt Side Mirrors In Reverse (Available With Memory Seat Only) — If Equipped

Tilt Side Mirrors In Reverse provides automatic outside mirror positioning which will aid the driver's view of the ground rearward of the front doors. Outside mirrors will move slightly downward from the present position when the vehicle is shifted into REVERSE. Outside mirrors will then return to the original position when the vehicle is shifted out of REVERSE position. Each stored memory seat setting will have an associated Tilt Side Mirrors In Reverse position.

NOTE: The Tilt Side Mirrors In Reverse feature is not turned on when delivered from the factory. The Tilt Side Mirrors In Reverse feature can be turned on and off using the Uconnect System. Refer to "Uconnect Settings" in "Multimedia" for further information.

Illuminated Vanity Mirrors

To access an illuminated vanity mirror, flip down one of the visors.

Lift the cover to reveal the mirror. The light will turn on automatically.

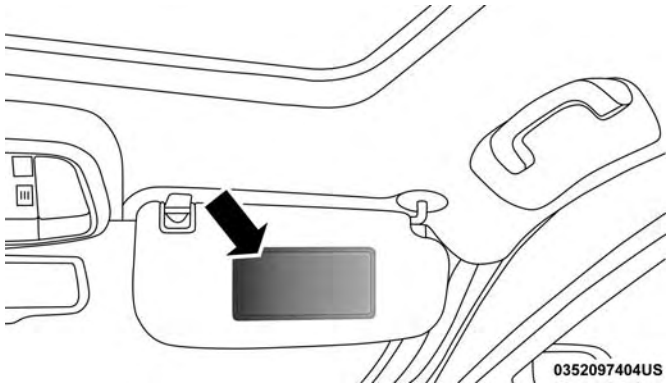

Illuminated Vanity Mirror

Sun Visor "Slide-On-Rod" Feature — If Equipped

The sun visor "Slide-On-Rod" feature allows for additional flexibility in positioning the sun visor to block out the sun.

1. Fold down the sun visor.
2. Unclip the visor from the center clip.
3. Pivot the sun visor toward the side window.
4. Extend the sun visor blade for additional sun blockage.

NOTE: The sun visor blade can also be extended while the sun visor is against the windshield for additional sun blockage through the front of the vehicle.

EXTERIOR LIGHTS

Headlight Switch

The headlight switch is located on the left side of the instrument panel, next to the steering wheel. The headlight switch controls the operation of the headlights, parking lights, instrument panel lights, cargo lights, and fog lights (if equipped).

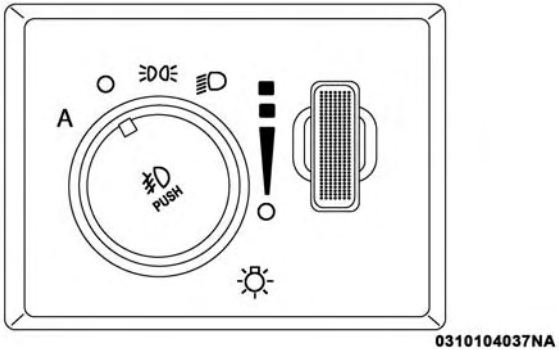

Headlight Switch

To turn on the headlights, rotate the headlight switch clockwise. When the headlight switch is on, the parking lights, taillights, license plate light and instrument panel lights are also turned on. To turn off the headlights, rotate the headlight switch back to the O (off) position.

NOTE:

- Your vehicle is equipped with plastic headlight and fog light (if equipped) lenses that are lighter and less susceptible to stone breakage than glass lights. Plastic is not as scratch resistant as glass and therefore different lens cleaning procedures must be followed.
- To minimize the possibility of scratching the lenses and reducing light output, avoid wiping with a dry cloth. To remove road dirt, wash with a mild soap solution followed by rinsing.

CAUTION!

Do not use abrasive cleaning components, solvents, steel wool or other abrasive materials to clean the lenses.

Multifunction Lever

The multifunction lever is located on the left side of the steering column.

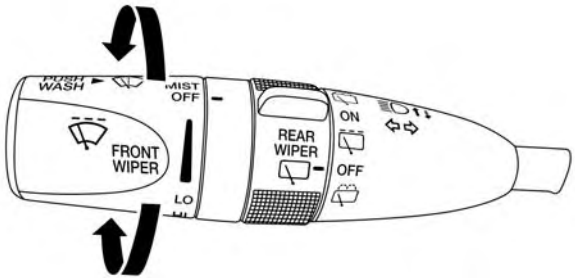

Multifunction Lever

Daytime Running Lights — If Equipped

The Daytime Running Lights (low intensity) come on whenever the engine is running, and the transmission is not in the PARK position. The lights will remain on until the ignition is switched to the OFF or ACC position or the parking brake is engaged.

NOTE:

- If a turn signal is activated, the DRL lamp on the same side of the vehicle will turn off for the duration of the turn signal activation. Once the turn signal is no longer active, the DRL lamp will illuminate.

- The DRL function may be disabled through the Uconnect system. Refer to “Uconnect Settings” in “Multimedia” for further information.

The headlight switch must be used for normal nighttime driving.

High/Low Beam Switch

Push the multifunction lever toward the instrument panel to switch the headlights to high beams. Pulling the multifunction back toward the steering wheel will turn the low beams back on, or shut the high beams off.

Automatic High Beam — If Equipped

The Automatic High Beam Headlamp Control system provides increased forward lighting at night by automating high beam control through the use of a digital camera mounted on the inside rearview mirror. This camera detects vehicle specific light and automatically switches from high beams to low beams until the approaching vehicle is out of view.

NOTE:

- The Automatic High Beam Headlamp Control can be turned on or off by selecting “ON” under “Auto High Beam” within your Uconnect settings, as well as turning the headlight switch to the AUTO position. Refer to “Uconnect Settings” in “Multimedia” for further information.
- Broken, muddy, or obstructed headlights and taillights of vehicles in the field of view will cause headlights to remain on longer (closer to the vehicle). Also, dirt, film, and other obstructions on the windshield or camera lens will cause the system to function improperly.

If the windshield or Automatic High Beam Headlamp Control mirror is replaced, the mirror must be re-aimed to ensure proper performance. See a local authorized dealer.

Flash-To-Pass

You can signal another vehicle with your headlights by lightly pulling the multifunction lever toward you. This will cause the high beam headlights to turn on, and remain on, until the lever is released.

Automatic Headlights — If Equipped

This system automatically turns the headlights on or off according to ambient light levels. To turn the system on, rotate the headlight switch to the A (auto) position.

When the system is on, the Headlight Delay feature is also on. This means the headlights will stay on for up to 90 seconds after you turn the ignition switch to the OFF position. To turn the automatic headlights off, turn the headlight switch out of the A (auto) position.

NOTE: The engine must be running before the headlights will turn on in the Automatic Mode.

Parking Lights And Panel Lights

To turn on the parking lights and instrument panel lights, rotate the headlight switch clockwise. To turn off the parking lights, rotate the headlight switch back to the O (off) position.

Headlights On Automatically With Wipers

If your vehicle is equipped with Automatic Headlights, it also has this customer-programmable feature. When your headlights are in the automatic mode and the engine is running, they will automatically turn on when the wiper system is on. This feature is programmable through the Uconnect system screen. Refer to “Uconnect Settings” in “Multimedia” for further information.

If your vehicle is equipped with a “Rain Sensitive Wiper System” and it is activated, the headlights will automatically turn on after the wipers complete five wipe cycles within approximately one minute, and they will turn off approximately four minutes after the wipers completely stop.

Refer to “Windshield Wipers And Washers” in “Getting To Know Your Vehicle” for further information.

NOTE: When your headlights come on during the daytime, the instrument panel lights will automatically dim to the lower nighttime intensity.

Headlight Delay

To aid in your exit, your vehicle is equipped with a headlight delay that will leave the headlights on for approximately up to 90 seconds. This delay is initiated when the ignition is turned OFF while the headlight switch is on, and then the headlight switch is cycled off. Headlight delay can be cancelled by either turning the headlight switch on then off, or by turning the ignition ON.

NOTE:

- This feature can be programmed through the Uconnect system. Refer to "Uconnect Settings" in "Multimedia" for further information.
- The headlight delay feature is automatically activated if the headlight switch is left in the A (auto) position when the ignition is placed in the OFF position.

Lights-On Reminder

If the headlights, parking lights, or cargo lights are left on after the ignition is turned OFF, a chime will sound when the driver's door is opened.

Fog Lights — If Equipped

The fog lights are turned on by rotating the headlight switch to the parking light or headlight position and pushing in the headlight rotary control.

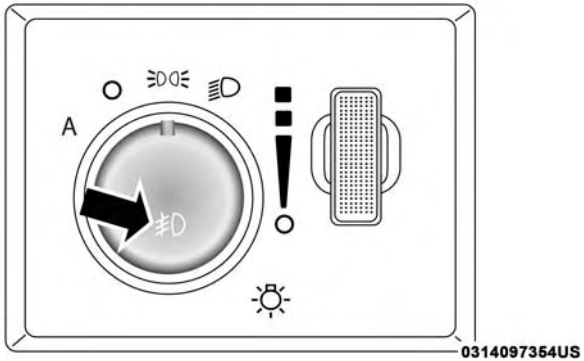

Fog Light Operation

The fog lights will operate only when the parking lights are on or when the vehicle headlights are on low beam. An indicator light located in the instrument cluster will illuminate when the fog lights are on. The fog lights will turn off when the switch is pushed a second time, when the headlight switch is rotated to the off position, or the high beam is selected.

Turn Signals

Move the multifunction lever up or down and the arrows on each side of the instrument cluster flash to show proper operation of the front and rear turn signal lights.

NOTE: If either light remains on and does not flash, or there is a very fast flash rate, check for a defective outside light bulb. If an indicator fails to light when the lever is moved, it would suggest that the indicator bulb is defective.

Lane Change Assist — If Equipped

Tap the multifunction lever up or down once, without moving beyond the detent, and the turn signal (right or left) will flash three times then automatically turn off.

Battery Saver

To protect the life of your vehicle's battery, load shedding is provided for both the interior and exterior lights.

If the ignition is OFF and any door is left ajar for 10 minutes or the dimmer control is rotated all the way up to the dome on position for 10 minutes, the interior lights will automatically turn off.

NOTE: Battery saver mode is canceled if the ignition is ON.

If the headlights remain on while the ignition is cycled OFF, the exterior lights will automatically turn off after eight minutes. If the headlights are turned on and left on for eight minutes while the ignition is OFF, the exterior lights will automatically turn off.

INTERIOR LIGHTS

Courtesy and dome lights are turned on when the front doors are opened or when the dimmer control (rotating wheel on the right side of the headlight switch) is rotated to its farthest upward position. If your vehicle is equipped with remote keyless entry and the unlock button is pushed on the key fob, the courtesy and dome lights will turn on. When a door is open and the interior lights are on, rotating the dimmer control all the way down, to the last (off) detent, will cause all the interior lights to go out. This is also known as the "Party" mode because it allows the doors to stay open for extended periods of time without discharging the vehicle's battery.

Courtesy Lights

The courtesy lights can be turned on by pushing the top corner of the lens. To turn the lights off, push the lens a second time.

Courtesy Lights

Front Map/Reading Lights — If Equipped

The front map/reading lights are mounted in the overhead console.

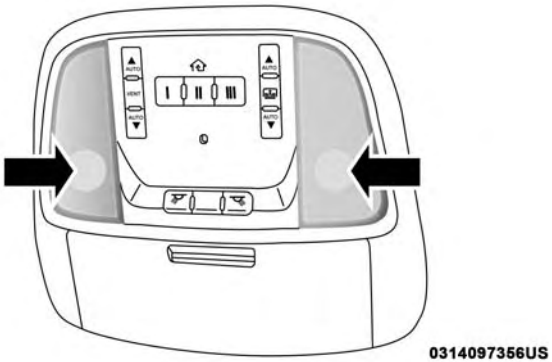

Front Map/Reading Lights

Each light can be turned on by pushing a switch on either side of the console. These buttons are backlit for night time visibility. To turn the lights off, push the switch a second time. The lights will also turn on when the unlock button on the remote keyless entry key fob is pushed.

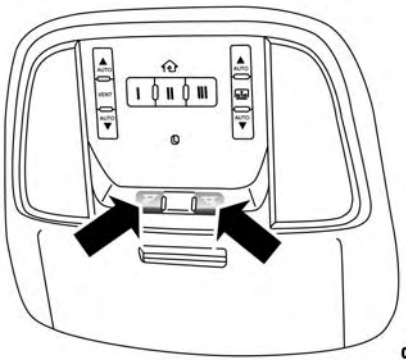

0314097357US

Front Map/Reading Light Switches

Ambient Light — If Equipped

The overhead console is equipped with an ambient light feature. This light casts illumination for improved visibility of the floor and center console area.

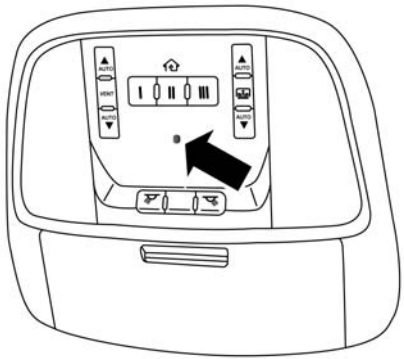

0314097362US

Ambient Light

Dimmer Controls

The brightness of the instrument panel lighting can be regulated by rotating the dimmer control up (brighter) or down (dimmer). When the headlights are on you can supplement the brightness of the instrument cluster display, radio and overhead console by rotating the control to its farthest position up until you hear a click. This feature is termed the "Parade" mode and is useful when headlights are required during the day.

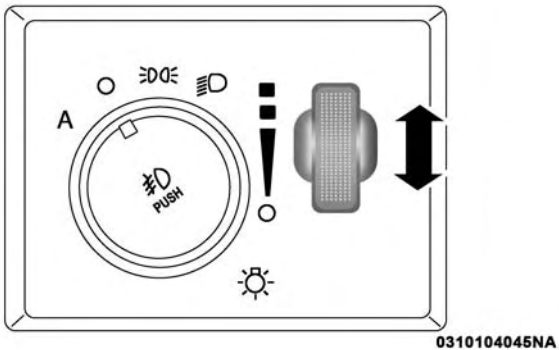

Dimmer Control

WINDSHIELD WIPERS AND WASHERS

The windshield wiper/washer controls are located on the multifunction lever on the left side of the steering column. The front wipers are operated by rotating a switch, located on the end of the lever. For information on the rear wiper/washer, refer to "Rear Window Wiper/Washer" in this section.

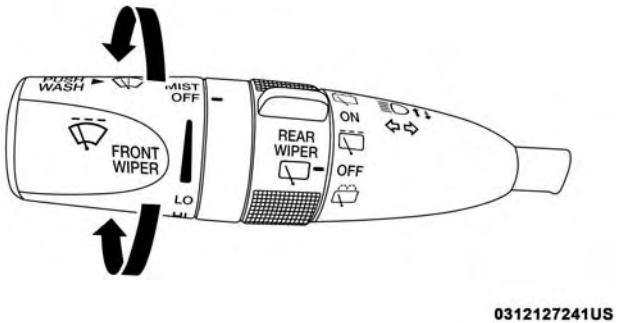

Multifunction Lever

Windshield Wiper Operation

Rotate the end of the lever to one of the first four detent positions for intermittent settings, the fifth detent for low wiper operation and the sixth detent for high wiper operation.

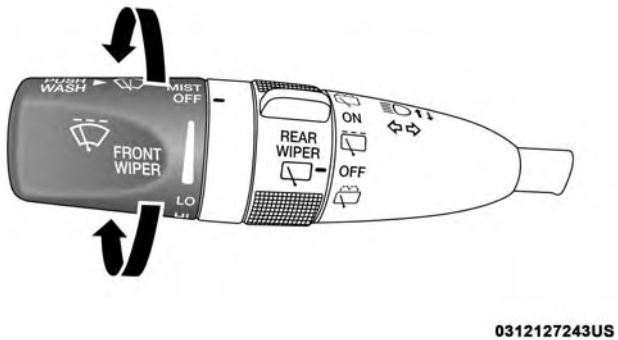

Windshield Wiper Operation

CAUTION!

Always remove any buildup of snow that prevents the windshield wiper blades from returning to the "park" position. If the windshield wiper switch is turned off, and the blades cannot return to the "park" position, damage to the wiper motor may occur.

Intermittent Wiper System

Use one of the four intermittent wiper settings when weather conditions make a single wiping cycle, with a variable delay between cycles, desirable. At driving speeds above 10 mph (16 km/h), the delay can be regulated from a maximum of approximately 18 seconds between cycles (first detent), to a cycle every one second (fourth detent).

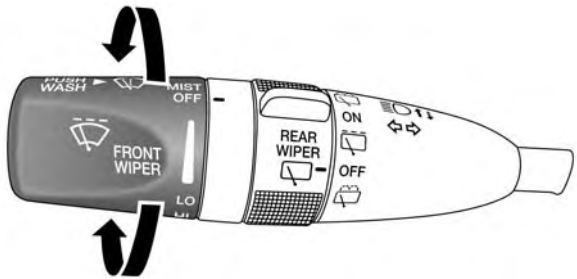

0312127243US

Intermittent Wiper Operation

NOTE: If the vehicle is moving less than 10 mph (16 km/h), delay times will be doubled.

Windshield Washer Operation

To use the washer, push on the end of the lever (toward the steering wheel) and hold while spray is desired. If the lever is pushed while in the intermittent setting, the wipers will turn on and operate for several wipe cycles after the end of the lever is released, and then resume the intermittent interval previously selected.

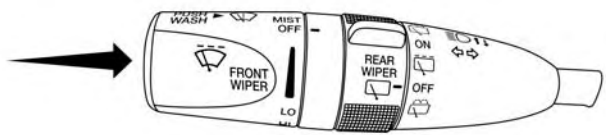

0312127244US

Windshield Washer Operation

If the end of the lever is pushed while the wipers are in the off position, the wipers will operate for several wipe cycles, then turn off.

NOTE: As a protective measure, the pump will stop if the switch is held for more than 20 seconds. Once the switch is released the pump will resume normal operation.

WARNING!

Sudden loss of visibility through the windshield could lead to a collision. You might not see other vehicles or other obstacles. To avoid sudden icing of the windshield during freezing weather, warm the windshield with the defroster before and during windshield washer use.

Mist

Use the Mist feature when weather conditions make occasional usage of the wipers necessary. Rotate the end of the lever downward to the MIST position and release for a single wiping cycle.

NOTE: The Mist feature does not activate the washer pump; therefore, no washer fluid will be sprayed on the windshield. The wash function must be used in order to spray the windshield with washer fluid.

Rain Sensing Wipers — If Equipped

This feature senses rain or snowfall on the windshield and automatically activates the wipers for the driver. The feature is especially useful for road splash or overspray from the windshield washers of the vehicle ahead. Rotate the end of the multifunction lever to one of four settings to activate this feature.

The sensitivity of the system can be adjusted with the multifunction lever. Wiper delay position one is the least sensitive, and wiper delay position four is the most sensitive.

NOTE: Wiper delay position three should be used for normal rain conditions.

Settings one and two can be used if the driver desires less wiper sensitivity. Setting four can be used if the driver desires more sensitivity. Place the wiper switch in the OFF position when not using the system.

NOTE:

- The Rain Sensing feature will not operate when the wiper switch is in the low or high-speed position.

- The Rain Sensing feature may not function properly when ice, or dried salt water is present on the windshield.
- Use of Rain-X or products containing wax or silicone may reduce Rain Sensing performance.
- The Rain Sensing feature can be turned on and off using the Uconnect System, refer to "Uconnect Settings" in "Multimedia" for further information.

The Rain Sensing system has protection features for the wiper blades and arms, and will not operate under the following conditions:

- **Low Ambient Temperature** — When the ignition is first turned ON, the Rain Sensing system will not operate until the wiper switch is moved, vehicle speed is greater than 3 mph (5 km/h), or the outside temperature is greater than 32°F (0°C).
- **Transmission In NEUTRAL Position** — When the ignition is ON, and the automatic transmission is in the NEUTRAL position, the Rain Sensing system will not operate until the wiper switch is moved, vehicle speed is greater than 3 mph (5 km/h), or the gear selector is moved out of the NEUTRAL position.

Remote Start Mode Inhibit — On vehicles equipped with Remote Starting system, Rain Sensing wipers are not operational when the vehicle is in the remote start mode. Once the operator is in the vehicle and has placed the ignition switch in the RUN position, rain sensing wiper operation can resume, if it has been selected, and no other inhibit conditions (mentioned previously) exist.

Rear Window Wiper/Washer

The rear wiper/washer controls are located on the multi-function lever on the left side of the steering column. The rear wiper/washer is operated by rotating a switch, located at the middle of the lever.

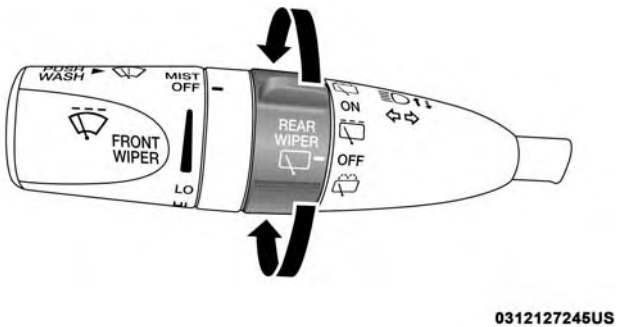

Rear Wiper/Washer Control

Rotate the center portion of the lever upward to the first detent for intermittent operation and to the second detent for continuous rear wiper operation.

Rotating the center portion upward once more will activate the washer pump which will continue to operate as long as the switch is held. Upon release of the switch, the wipers will resume the continuous rear wiper operation. When this rotary control is in the OFF position, rotating it downward will activate the rear washer pump which will continue to operate as long as the switch is held. Once the switch is released it will return to the OFF position and the wipers will cycle several times before returning to the parked position.

NOTE: As a protective measure, the pump will stop if the switch is held for more than 20 seconds. Once the switch is released the pump will resume normal operation.

If the rear wiper is operating when the ignition is turned OFF, the wiper will automatically return to the “park” position.

HEADLIGHT WASHERS — IF EQUIPPED

The multifunction lever operates the headlight washers when the ignition switch is in the ON position and the headlights are turned on. The multifunction lever is located on the left side of the steering column.

To use the headlight washers, push the multifunction lever inward (toward the steering column) and release it. The headlight washers will spray a timed high-pressure spray of washer fluid onto each headlight lens. In addition, the windshield washers will spray the windshield and the windshield wipers will cycle.

NOTE: After turning the ignition switch and headlights ON, the headlight washers will operate on the first spray of the windshield washer and then every eleventh spray after that.

CLIMATE CONTROLS

The Climate Control System allows you to regulate the temperature, air flow, and direction of air circulating throughout the vehicle. The controls are located on the touchscreen (if equipped) and on the instrument panel below the radio.

Automatic Climate Controls Overview

Uconnect 4 With 7–inch Display Automatic Climate Controls

Uconnect 4C/4C NAV With 8.4–inch Display Automatic Climate Controls

Control Descriptions

Icon	Description
MAX A/C	**MAX A/C Button** Press and release to change the current setting, the indicator illuminates when MAX A/C is on. Performing this function again will cause the MAX A/C operation to switch into manual mode and the MAX A/C indicator will turn off. **NOTE:** The MAX A/C setting is only available on the touchscreen.
A/C	**A/C Button** Press and release to change the current setting. The indicator illuminates when A/C is on.
	Recirculation Button Press and release this button on the touchscreen, or push the button on the faceplate, to change the system between recirculation mode and outside air mode. Recirculation can be used when outside conditions, such as smoke, odors, dust, or high humidity are present. Recirculation can be used in all modes. Recirculation may be unavailable (button on the touchscreen greyed out) if conditions exist that could create fogging on the inside of the windshield. The A/C can be deselected manually without disturbing the mode control selection. Continuous use of the Recirculation mode may make the inside air stuffy and window fogging may occur. Extended use of this mode is not recommended.

Icon	Description
AUTO	**AUTO Button** Automatically controls the interior cabin temperature by adjusting airflow distribution and amount. Toggling this function will cause the system to switch between manual mode and automatic modes. Refer to "Automatic Operation" within this section for more information.
FRONT	**Front Defrost Button** The Front Defrost button changes the current airflow setting to Defrost mode. The indicator illuminates when this feature is on. Air comes from the windshield and side window demist outlets. When the defrost button is selected, the blower level may increase. Use Defrost mode with maximum temperature settings for best windshield and side window defrosting and defogging. When toggling the front defrost mode button, the climate system will return to previous setting.
REAR	**Rear Defrost Button** The Rear Defrost Control button turns on the rear window defroster and the heated outside mirrors (if equipped). An indicator will illuminate when the rear window defroster is on. The rear window defroster automatically turns off after ten minutes.
	Driver And Passenger Temperature Up And Down Buttons Provides the driver and passenger with independent temperature control. Push the red button on the faceplate or touchscreen or press and slide the temperature bar towards the red arrow button on the touchscreen for warmer temperature settings. Push the blue button on the faceplate or touchscreen or press and slide the temperature bar towards the blue arrow button on the touchscreen for cooler temperature settings.

Icon	Description
SYNC	**SYNC Button** Press the SYNC button on the touchscreen to toggle the SYNC feature on/off. The SYNC indicator is illuminated when this feature is enabled. SYNC is used to synchronize the passenger temperature setting with the driver temperature setting. Changing the passenger's temperature setting while in SYNC will automatically exit this feature. **NOTE:** The SYNC setting is only available on the touchscreen.
Faceplate Knob **Touchscreen Buttons**	**Blower Control** Blower Control is used to regulate the amount of air forced through the climate system. There are seven blower speeds available. The speeds can be selected using either the blower control knob on the faceplate or the buttons on the touchscreen. • **Faceplate:** The blower speed increases as you turn the blower control knob clockwise from the lowest blower setting. The blower speed decreases as you turn the blower control knob counterclockwise. • **Touchscreen:** Use the small blower icon to reduce the blower setting and the large blower icon to increase the blower setting. The blower can also be selected by pressing the blower bar area between the icons.

Icon	Description
Mode Control	Select Mode by pressing one of the Mode buttons on the touchscreen to change the airflow distribution mode. The airflow distribution mode can be adjusted so air comes from the instrument panel outlets, floor outlets, defrost outlets and demist outlets. The Mode settings are as follows:
Panel Mode	**Panel Mode** Air comes from the outlets in the instrument panel. Each of these outlets can be individually adjusted to direct the flow of air. The air vanes of the center outlets and outboard outlets can be moved up and down or side to side to regulate airflow direction. There is a shut off wheel located below the air vanes to shut off or adjust the amount of airflow from these outlets.
Bi-Level Mode	**Bi-Level Mode** Air comes from the instrument panel outlets and floor outlets. A slight amount of air is directed through the defrost and side window demister outlets. **NOTE:** Bi-Level mode is designed under comfort conditions to provide cooler air out of the panel outlets and warmer air from the floor outlets.
Floor Mode	**Floor Mode** Air comes from the floor outlets. A slight amount of air is directed through the defrost and side window demister outlets.

Icon	Description
Mix Mode	**Mix Mode** Air is directed through the floor, defrost, and side window demister outlets. This setting works best in cold or snowy conditions that require extra heat to the windshield. This setting is good for maintaining comfort while reducing moisture on the windshield.
OFF	**Climate Control OFF Button** This button turns the Climate Control System off.

Climate Control Functions

A/C (Air Conditioning)

The Air Conditioning (A/C) button allows the operator to manually activate or deactivate the air conditioning system. When the air conditioning system is turned on, cool dehumidified air will flow through the outlets into the cabin. For improved fuel economy, press the A/C button to turn off the air conditioning and manually adjust the blower and airflow mode settings. Also, make sure to select only Panel, Bi-Level, or Floor modes.

NOTE:

- For Manual Climate Controls, if the system is in Mix, Floor or Defrost Mode, the A/C can be turned off, but the A/C system shall remain active to prevent fogging of the windows.
- If fog or mist appears on the windshield or side glass, select Defrost mode, and increase blower speed if needed.
- If your air conditioning performance seems lower than expected, check the front of the A/C condenser (located in front of the radiator), for an accumulation of dirt or insects. Clean with a gentle water spray from the front of the radiator and through the condenser.

MAX A/C

MAX A/C sets the control for maximum cooling performance.

Press and release to toggle between MAX A/C and the prior settings. The button illuminates when MAX A/C is on.

In MAX A/C, the blower level and mode position can be adjusted to desired user settings. Pressing other settings will cause the MAX A/C operation to switch to the selected setting and MAX A/C to exit.

Recirculation

In cold weather, use of Recirculation mode may lead to excessive window fogging. The Recirculation feature may be unavailable (button on the touchscreen greyed out) if conditions exist that could create fogging on the inside of the windshield.

Automatic Temperature Control (ATC)

Automatic Operation

1. Push the AUTO button on the faceplate, or the AUTO button on the touchscreen on the Automatic Temperature Control (ATC) Panel.
2. Next, adjust the temperature that you would like the system to maintain by adjusting the driver and passenger temperature control buttons. Once the desired temperature is displayed, the system will achieve and automatically maintain that comfort level.
3. When the system is set up for your comfort level, it is not necessary to change the settings. You will experience the greatest efficiency by simply allowing the system to function automatically.

NOTE:

- It is not necessary to move the temperature settings for cold or hot vehicles. The system automatically adjusts the temperature, mode, and blower speed to provide comfort as quickly as possible.
- The temperature can be displayed in U.S. or Metric units by selecting the US/Metric customer-programmable feature. Refer to the “Uconnect Settings” in “Multimedia” for further information.

To provide you with maximum comfort in the Automatic mode during cold start-ups, the blower fan will remain on low until the engine warms up. The blower will increase in speed and transition into Auto mode.

Manual Operation Override

This system offers a full complement of manual override features. The AUTO symbol in the front ATC display will be turned off when the system is being used in the manual mode.

Operating Tips

NOTE: Refer to the chart at the end of this section for suggested control settings for various weather conditions.

Summer Operation

The engine cooling system must be protected with a high-quality antifreeze coolant to provide proper corrosion protection and to protect against engine overheating. OAT coolant (conforming to MS.90032) is recommended.

Winter Operation

To ensure the best possible heater and defroster performance, make sure the engine cooling system is functioning properly and the proper amount, type, and concentration of coolant is used. Use of the Air Recirculation mode during Winter months is not recommended, because it may cause window fogging.

Vacation/Storage

Before you store your vehicle, or keep it out of service (i.e., vacation) for two weeks or more, run the air conditioning system at idle for about five minutes, in fresh air with the blower setting on high. This will ensure adequate system lubrication to minimize the possibility of compressor damage when the system is started again.

Window Fogging

Vehicle windows tend to fog on the inside in mild, rainy, and/or humid weather. To clear the windows, select Defrost or Mix mode and increase the front blower speed. Do not use the Recirculation mode without A/C for long periods, as fogging may occur.

CAUTION!

Failure to follow these cautions can cause damage to the heating elements:

- **Use care when washing the inside of the rear window. Do not use abrasive window cleaners on the interior surface of the window. Use a soft cloth and a mild washing solution, wiping parallel to the heating elements. Labels can be peeled off after soaking with warm water.**

(Continued)

CAUTION! *(Continued)*

- **Do not use scrapers, sharp instruments, or abrasive window cleaners on the interior surface of the window.**
- **Keep all objects a safe distance from the window.**

Outside Air Intake

Make sure the air intake, located directly in front of the windshield, is free of obstructions, such as leaves. Leaves collected in the air intake may reduce airflow, and if they enter the plenum, they could plug the water drains. In Winter months, make sure the air intake is clear of ice, slush, and snow.

Cabin Air Filter

The climate control system filters out dust and pollen from the air. Contact an authorized dealer to service your cabin air filter, and to have it replaced when needed.

Operating Tips Chart

WEATHER	CONTROL SETTINGS
Hot weather and vehicle interior is very hot	Set the mode control to , on, and blower on high. Roll down the windows for a minute to flush out the hot air. Once comfort is achieved adjust controls for comfort.
Warm weather	Turn on and set the mode control to the position.
Cool Sunny	Operate in position.
Cool & Humid conditions	Set the mode control to and turn on to keep windows clear.
Cold Weather	Set the mode control to the position. If windshield fogging starts to occur, move the control towards the position.

8000cb71

WINDOWS

Power Window Controls

The window controls on the driver's door control all the door windows.

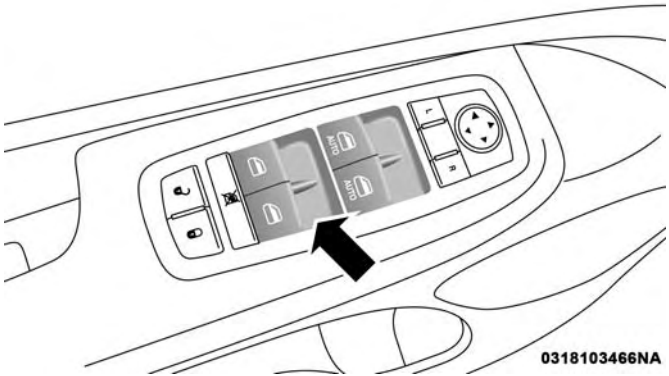

Power Window Switches

There are single window controls on each passenger door trim panel, which operate the passenger door windows. The window controls will operate only when the ignition is in the ACC or ON/RUN position.

If equipped, the key fob may also be used to raise or lower vehicle windows while the ignition is in the "OFF" position. Refer to "Keys" in "Getting To Know Your Vehicle" for further information.

NOTE: For vehicles equipped with Uconnect, the power window switches will remain active for up to 10 minutes after the ignition is cycled to the OFF position. Opening either front door will cancel this feature. The time is programmable. Refer to "Uconnect Settings" in "Multimedia" for further information.

WARNING!

Never leave children unattended in a vehicle, and do not let children play with power windows. Do not leave the key fob in or near the vehicle, or in a location accessible to children, and do not leave the ignition of a vehicle equipped with Keyless Enter-N-Go in the ACC or ON/RUN mode. Occupants, particularly unattended children, can become entrapped by the windows while operating the power window switches. Such entrapment may result in serious injury or death.

Auto-Down Feature

The driver door power window switch and the front and rear passenger doors window switches have an Auto-Down feature.

Push the window switch down for half a second and release. The window will go down automatically.

To stop the window from going all the way down during the Auto-Down operation, pull up or push down on the switch briefly.

To open the window part way (manually), push the window switch down briefly and release.

Auto-Up Feature With Anti-Pinch Protection

Lift the window switch up, for a short period of time, and release and the window will go up automatically.

To stop the window from going all the way up during the Auto-Up operation, push down on the switch briefly.

To close the window part way, lift the window switch briefly and release it when you want the window to stop.

NOTE:

- If the window runs into any obstacle during auto-closure, it will reverse direction and then go back down. Remove the obstacle and use the window switch again to close the window.
- Any impact due to rough road conditions may trigger the auto-reverse function unexpectedly during auto-closure. If this happens, pull the switch lightly and hold to close the window manually.

WARNING!

There is no anti-pinch protection when the window is almost closed. To avoid personal injury be sure to clear your arms, hands, fingers and all objects from the window path before closing.

Reset Auto-Up

Should the Auto-Up feature stop working, the window probably needs to be reset. To reset Auto-Up:

1. Pull the window switch up to close the window completely and continue to hold the switch up for an additional two seconds after the window is closed.
2. Push the window switch down firmly to open the window completely and continue to hold the switch down for an additional two seconds after the window is fully open.

Window Lockout Switch

The window lockout switch on the driver's door trim panel allows you to disable the window controls on the rear passenger doors. To disable the window controls, push and release the window lockout button (the indicator light on the button with turn on). To enable the window controls, push and release the window lockout button again (the indicator light on the button will turn back off).

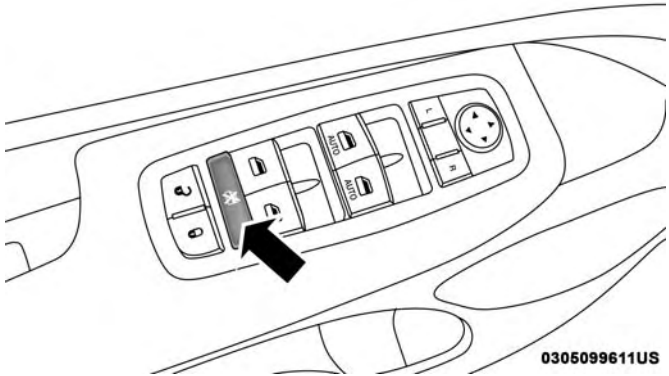

Window Lockout Switch

Wind Buffeting

Wind buffeting can be described as the perception of pressure on the ears or a helicopter-type sound in the ears. Your vehicle may exhibit wind buffeting with the windows down, or the sunroof (if equipped) in certain open or partially open positions. This is a normal occurrence and can be minimized. If the buffeting occurs with the rear windows open, open the front and rear windows together to minimize the buffeting. If the buffeting occurs with the sunroof open, adjust the sunroof opening to minimize the buffeting or open any window.

POWER SUNROOF — IF EQUIPPED

The power sunroof switch is located between the sun visors on the overhead console.

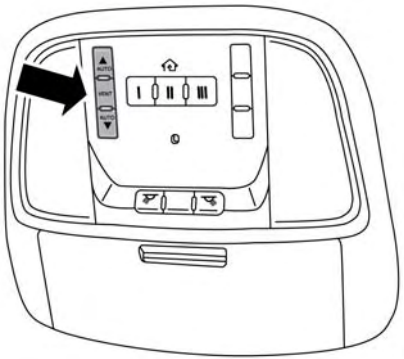

Power Sunroof Switch

WARNING!

- **Never leave children unattended in a vehicle, or with access to an unlocked vehicle. Never leave the key fob in or near the vehicle, or in a location accessible to children. Do not leave the ignition of a vehicle**

(Continued)

WARNING! *(Continued)*

equipped with Keyless Enter-N-Go in the ACC or ON/RUN mode. Occupants, particularly unattended children, can become entrapped by the power sunroof while operating the power sunroof switch. Such entrapment may result in serious injury or death.

- **In a collision, there is a greater risk of being thrown from a vehicle with an open sunroof. You could also be seriously injured or killed. Always fasten your seat belt properly and make sure all passengers are also properly secured.**
- **Do not allow small children to operate the sunroof. Never allow your fingers, other body parts, or any object, to project through the sunroof opening. Injury may result.**

Opening Sunroof

Express

Push the switch rearward and release it within one-half second and the sunroof will open automatically from any position. The sunroof will open fully and stop automatically. This is called "Express Open". During Express Open operation, any other actuation of the sunroof switch will stop the sunroof.

Manual

To open the sunroof, push and hold the switch rearward to full open. Any release of the switch will stop the movement. The sunroof and sunshade will remain in a partially opened condition until the sunroof switch is pushed again.

Closing Sunroof

Express

Push the switch forward and release it within one-half second and the sunroof will close automatically from any position. The sunroof will close fully and stop automatically. This is called “Express Close”. During Express Close operation, any other actuation of the switch will stop the sunroof.

Manual

To close the sunroof, push and hold the switch in the forward position. Any release of the switch will stop the movement and the sunroof will remain in a partially closed condition until the sunroof switch is pushed again.

Wind Buffeting

Wind buffeting can be described as the perception of pressure on the ears or a helicopter-type sound in the ears. Your vehicle may exhibit wind buffeting with the windows down, or the sunroof (if equipped) in certain open or partially open positions. This is a normal occurrence and can be minimized. If the buffeting occurs with the rear windows open, then open the front and rear windows together to minimize the buffeting. If the buffeting occurs with the sunroof open, adjust the sunroof opening to minimize the buffeting or open any window.

Sunshade Operation

The sunshade can be opened manually. However, the sunshade will open automatically as the sunroof opens.

NOTE: The sunshade cannot be closed if the sunroof is open.

Pinch Protect Feature

This feature will detect an obstruction in the closing of the sunroof during the Express Close operation. If an obstruction in the path of the sunroof is detected, the sunroof will automatically retract. Remove the obstruction if this occurs.

NOTE: If three consecutive sunroof close attempts result in Pinch Protect reversals, Pinch Protect will disable and the sunroof must be closed in Manual Mode.

Venting Sunroof — Express

Push and release the Vent button within one half second and the sunroof will open to the vent position. This is called "Express Vent" and it will occur regardless of sunroof position. During Express Vent operation, any movement of the switch will stop the sunroof.

Sunroof Maintenance

Use only a non-abrasive cleaner and a soft cloth to clean the glass panel.

Relearn Procedure

For vehicles equipped with a single-pane sunroof, there is a relearn procedure that allows you to reset the sunroof when the "Express Open" feature stops working. To reset the sunroof, follow these steps:

1. Set the ignition to the ACC or ON/RUN position.
2. Make sure that the sunroof is fully closed.
3. Push sunroof switch forward and hold. The sunroof will close fully then move to the Vent position after 10 seconds.
4. Release the sunroof switch, then push forward and hold the switch again within 5 seconds to begin the relearn process. The sunroof will complete one full cycle and return to the Fully Closed position.

NOTE: If the sunroof switch is released anytime during the relearn cycle, the procedure will need to be repeated starting from the first step.

5. Once the sunroof has stopped in the Fully Closed position, release the sunroof switch. The sunroof is now reset and ready to use.

COMMANDVIEW SUNROOF WITH POWER SHADE — IF EQUIPPED

The CommandView sunroof switch is located to the left between the sun visors on the overhead console.

The power shade switch is located to the right between the sun visors on the overhead console.

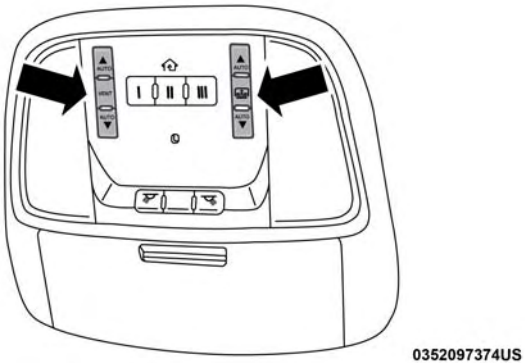

CommandView Sunroof And Power Shade Switches

WARNING!

- **Never leave children unattended in a vehicle, or with access to an unlocked vehicle. Never leave the key fob in or near the vehicle, or in a location accessible to children. Do not leave the ignition of a vehicle equipped with Keyless Enter-N-Go in the ACC or ON/RUN mode. Occupants, particularly unattended children, can become entrapped by the power sunroof while operating the power sunroof switch. Such entrapment may result in serious injury or death.**
- **In a collision, there is a greater risk of being thrown from a vehicle with an open sunroof. You could also be seriously injured or killed. Always fasten your seat belt properly and make sure all passengers are also properly secured.**
- **Do not allow small children to operate the sunroof. Never allow your fingers, other body parts, or any object, to project through the sunroof opening. Injury may result.**

Opening Sunroof

The sunroof has two programmed automatic stops for the sunroof open position; a comfort stop position and a full open position. The comfort stop position has been optimized to minimize wind buffeting.

Express

Push the switch rearward and release it within one-half second. The sunroof will open automatically to the comfort stop position. Push the switch rearward and release it again, the sunroof will open to the full open position and automatically stop. This is called “Express Open”. During Express Open operation, any movement of the sunroof switch will stop the sunroof.

Manual Mode

To open the sunroof, push and hold the switch rearward. The sunroof will stop automatically at the comfort stop position. Push and hold the switch rearward again, the sunroof will open to the full open position and automatically stop. Any release of the switch will stop the movement. The sunroof and sunshade will remain in a partially opened condition until the switch is pushed and held rearward again.

NOTE: If the sunshade is in the closed position when Express or Manual Open operation is initiated the sunshade will automatically open to the half open position prior to the sunroof opening.

Closing Sunroof

Express Close

Push the switch forward and release it within one-half second and the sunroof will close automatically from any position. During Express Close operation, any other actuation of the sunroof switches will stop the sunroof in a partially open position.

Manual Close

Push and hold the switch forward and the sunroof will close from any position and stop at full closed position. Releasing the switch while the sunroof is in motion will stop the sunroof in a partially open position.

Wind Buffeting

Wind buffeting can be described as the perception of pressure on the ears or a helicopter-type sound in the ears. Your vehicle may exhibit wind buffeting with the windows down, or the sunroof (if equipped) in certain open or partially open positions. This is a normal occurrence and can be minimized. If the buffeting occurs with the rear windows open, then open the front and rear windows together to minimize the buffeting. If the buffeting occurs with the sunroof open, adjust the sunroof opening to minimize the buffeting or open any window.

Opening Power Shade

The sunshade has two programmed positions: half open and full open positions. When operating the sunshade from the closed position, the sunshade will always stop at the half open position regardless of express or manual open operation. The switch must be actuated again to continue on to full open position.

Express Open

Push the sunshade switch rearward and release it within one-half second, the sunshade will open to the half open position and stop automatically. Push and release the switch again from the half open position and the sunshade will open to the full open position and stop automatically. During Express Open operation, any other actuation of the sunroof switches will stop the sunshade in a partially open position.

Manual Open

Push and hold the sunshade switch rearward, the sunshade will open to the half open position and stop automatically. Push and hold the sunshade switch again and the sunshade will open to the full open position. Releasing the switch while the sunshade is in motion will stop the sunshade in a partially open position.

Closing Power Shade

If the sunroof is open or vented, the sunshade cannot be closed beyond the half open position. Pushing the sunshade close switch when the sunroof is open/vented and the sunshade is at half open position will first automatically close the sunroof prior to the sunshade closing.

Express Close

Push the sunshade switch forward and release it within one-half second and the sunshade will close automatically. During Express Close operation, any other actuation of the sunroof switches will stop the sunshade in a partially open position.

Manual Close

Push and hold the switch forward and the sunshade will close and stop at full closed position. Releasing the switch while the sunshade is in motion will stop the sunshade in a partially open position.

Pinch Protect Feature

This feature will detect an obstruction in the opening of the sunroof during Express Close operation. If an obstruction in the path of the sunroof is detected, the sunroof will automatically retract. Remove the obstruction if this occurs.

NOTE: If three consecutive sunroof close attempts result in Pinch Protect reversals, Pinch Protect will disable and the sunroof must be closed in Manual Mode.

Venting Sunroof — Express

Push and release the ″Vent″ button within one-half second and the sunroof will open to the vent position. This is called “Express Vent”, and it will occur regardless of sunroof position. During Express Vent operation, any movement of the switch will stop the sunroof.

NOTE: If the sunshade is in the closed position when the vent switch is pushed, the sunshade will automatically cycle to the halfway open position prior to the sunroof opening to the Vent position.

Sunroof Maintenance

Use only a non-abrasive cleaner and a soft cloth to clean the glass panel.

HOOD

To Open The Hood

To open the hood, two latches must be released.

1. Pull the release lever located below the instrument panel and in front of the driver's door.

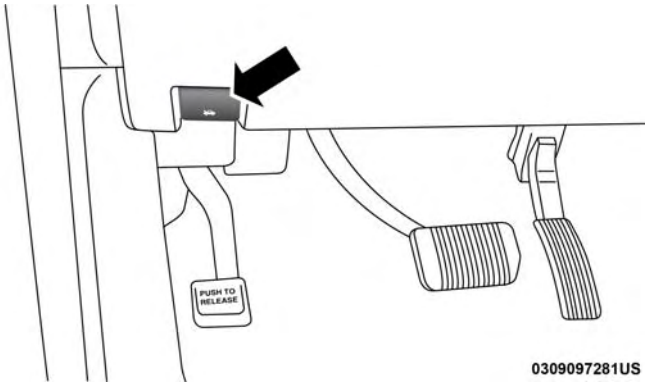

Hood Release

2. Reach under the hood, move safety latch to the left and lift the hood.

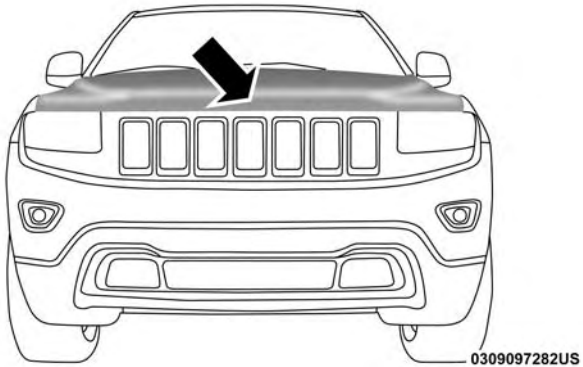

Safety Latch Location

To Close The Hood

1. Hold up the hood with one hand and with the other hand remove the support rod from its seat and reinsert it into the locking tab.
2. Lower the hood to approximately 12 inches (30 cm) from the engine compartment and drop it. Make sure that the hood is completely closed.

WARNING!

Be sure the hood is fully latched before driving your vehicle. If the hood is not fully latched, it could open when the vehicle is in motion and block your vision. Failure to follow this warning could result in serious injury or death.

CAUTION!

To prevent possible damage, do not slam the hood to close it. Lower hood to approximately 12 inches (30 cm) and drop the hood to close. Make sure hood is fully closed for both latches. Never drive vehicle unless hood is fully closed, with both latches engaged.

LIFTGATE

Opening

The liftgate can be opened from inside the vehicle using the power liftgate button on the overhead console, using the key fob outside of the vehicle or the electronic liftgate release.

To Unlock/Enter The Liftgate

The liftgate may be released in several ways:

- Key fob
- Outside handle
- Button on overhead console

The liftgate passive entry unlock feature is built into the electronic liftgate release. With a valid Passive Entry key fob within 5 ft (1.5 m) of the liftgate, push the electronic liftgate release to open with one fluid motion. Push the button on the key fob twice within five seconds to release the liftgate.

NOTE: If "Unlock All Doors 1st Press" is programmed in the instrument cluster display, all doors will unlock when you push the electronic release on the liftgate. If "Unlock Driver Door 1st Press" is programmed in Uconnect, only the liftgate will unlock when you push the electronic release on the liftgate. Refer to "Uconnect Settings" in "Multimedia" for further information.

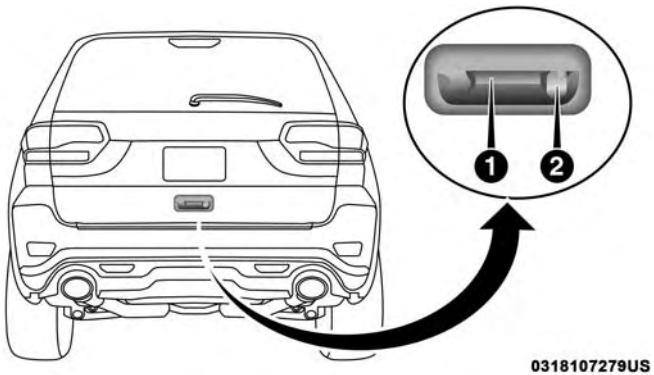

Passive Entry/Lock Button Location

1 — Electronic Liftgate Release 2 — Lock Button Location

NOTE: Use the power door lock switch on either front door trim panel or the key fob to lock and unlock the liftgate. The manual door locks on the doors and the driver's door lock cylinder will not lock and unlock the liftgate.

WARNING!

Driving with the liftgate open can allow poisonous exhaust gases into your vehicle. You and your passengers could be injured by these fumes. Keep the liftgate closed when you are operating the vehicle.

Closing

To manually close the liftgate, grasp the liftgate closing handle and initiate the lowering of the liftgate. Release the handle when the liftgate is partially closed and the momentum will fully close the liftgate.

To Lock The Liftgate

With a valid Passive Entry key fob within 5 ft (1.5 m) of the liftgate, pushing the Keyless Enter-N-Go — Passive Entry lock button located to the left of the outside handle release will lock the vehicle.

The power liftgate may be closed by pushing the button, located in the upper left trim in the liftgate opening. Pushing button will only close the liftgate. This button cannot be used to open the liftgate.

NOTE: The liftgate unlock feature is built into the electronic liftgate release.

Power Liftgate — If Equipped

The power liftgate may be opened by pushing the electronic liftgate release (refer to "Keyless Enter-N-Go — Passive Entry" located in "Getting To Know Your Vehicle" for further information), or by pushing the liftgate button on the key fob. Push the liftgate button on the key fob twice within five seconds to open the power liftgate. Once the liftgate is open, pushing the button twice within five seconds a second time will close the liftgate.

The power liftgate may also be opened or closed by pushing the liftgate button located on the front overhead console. If the liftgate is fully open, the liftgate can be closed by pushing the liftgate button located on the left rear trim panel, near the liftgate opening. If the liftgate is in motion, pushing the liftgate button located on the left rear trim panel will reverse the liftgate.

When the liftgate button on the key fob is pushed two times, the turn signals will flash to signal that the liftgate is opening or closing (if Flash Lamps with Lock is enabled in the Uconnect settings), and the liftgate chime will be audible. Refer to "Uconnect Settings" in "Multimedia" for further information.

NOTE:

- In the event of a power malfunction to the liftgate, an emergency liftgate latch release can be used to open the liftgate. The emergency liftgate latch release can be accessed through a snap-in cover located on the liftgate trim panel.
- If liftgate is left open for an extended period of time, the liftgate may need to be closed manually to reset power liftgate functionality.

WARNING!

During power operation, personal injury or cargo damage may occur. Ensure the liftgate travel path is clear. Make sure the liftgate is closed and latched before driving away.

NOTE:

- The power liftgate will not operate in temperatures below –22°F (–30°C) or temperatures above 150° F (65° C). Be sure to remove any buildup of snow or ice from the liftgate before pushing any of the power liftgate switches.
- If anything obstructs the power liftgate while it is closing or opening, the liftgate will automatically reverse to the closed or open position, provided it meets sufficient resistance.
- There are also pinch sensors attached to the side of the liftgate. Light pressure anywhere along these strips will cause the liftgate to return to the open position.
- If the liftgate is not fully open, push the liftgate button on the key fob twice to operate the liftgate.
- If the electronic liftgate release is pushed while the power liftgate is closing, the liftgate will reverse to the full open position.
- If the electronic liftgate release is pushed while the power liftgate is opening, the liftgate motor will disengage to allow manual operation.
- If the power liftgate encounters multiple obstructions within the same cycle, the system will automatically stop and the liftgate must be opened or closed manually.

WARNING!

- **Driving with the liftgate open can allow poisonous exhaust gases into your vehicle. You and your passengers could be injured by these fumes. Keep the liftgate closed when you are operating the vehicle.**
- **If you are required to drive with the liftgate open, make sure that all windows are closed, and the climate control blower switch is set at high speed. Do not use the recirculation mode.**

Cargo Area Features

Cargo Storage Bins

There are up to four removable storage bins located in the rear cargo area. There are two storage bins located on either side of the cargo area.

NOTE: If your vehicle is equipped with a rear subwoofer, the storage bin on that side will not be available.

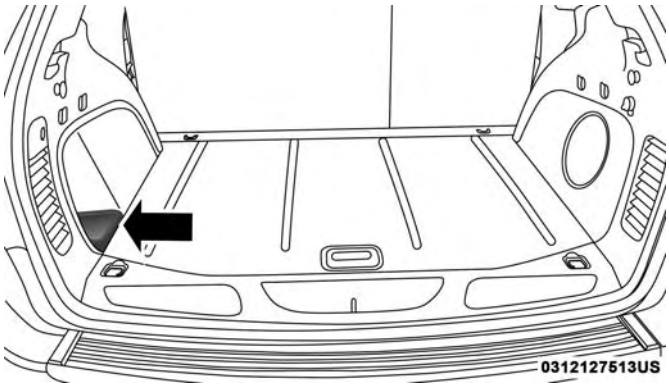

Rear Storage Bin

Two additional storage bins are located under the load floor. To access the lower storage bins, raise the load floor and attach the tether strap (attached to the bottom of the load floor) to the liftgate opening.

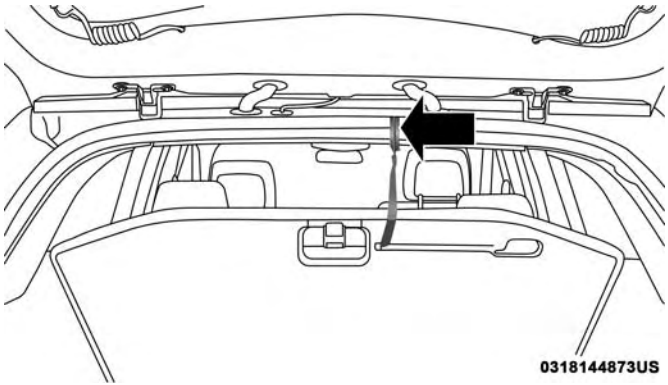

Tether Strap

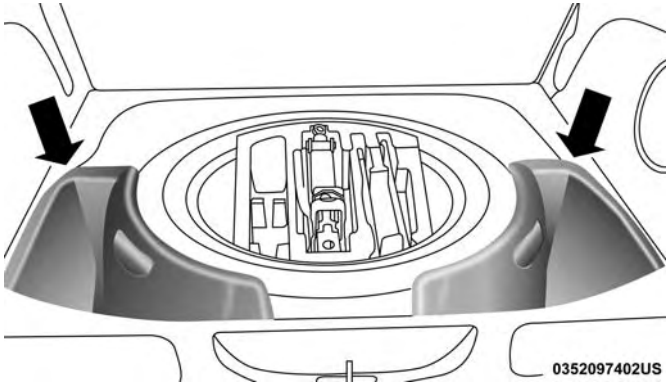

Rear Lower Storage Bins

Retractable Cargo Area Cover — If Equipped

NOTE: The purpose of this cover is for privacy, not to secure loads. It will not prevent cargo from shifting or protect passengers from loose cargo.

To cover the cargo area:

1. Grasp the cover at the center handle. Pull it over the cargo area.
2. Insert the pins on the ends of the cover into the slots in the pillar trim cover.
3. The liftgate may be opened with the cargo cover in place.

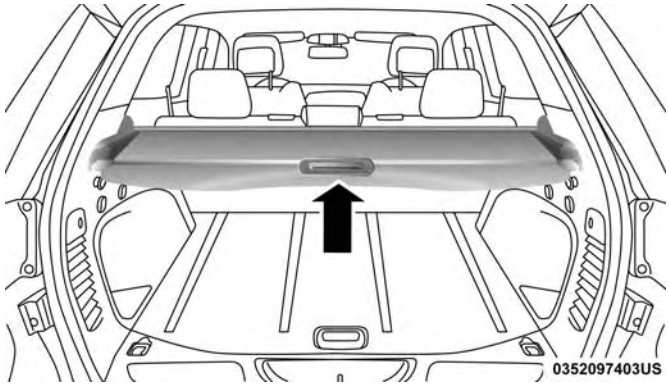

Rear Cargo Cover

WARNING!

In a collision, a loose cargo cover in the vehicle could cause injury. It could fly around in a sudden stop and strike someone in the vehicle. Do not store the cargo cover on the cargo floor or in the passenger compartment. Remove the cover from the vehicle when taken from its mounting. Do not store it in the vehicle.

Rear Cargo Tie-Downs

The rear cargo tie-downs, located on the cargo area floor, should be used to safely secure loads when the vehicle is moving.

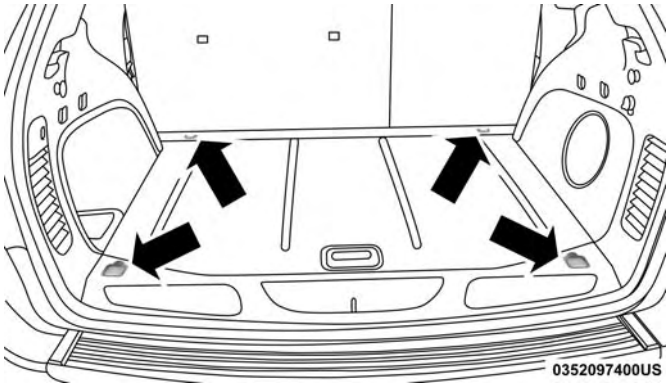

Rear Cargo Tie-Downs

WARNING!

- **To help protect against personal injury, passengers should not be seated in the rear cargo area. The rear cargo space is intended for load carrying purposes only, not for passengers, who should sit in seats and use seat belts.**
- **Cargo tie-down hooks are not safe anchors for a child seat tether strap. In a sudden stop or accident, a hook could pull loose and allow the child seat to come loose. A child could be badly injured. Use only the anchors provided for child seat tethers.**

The weight and position of cargo and passengers can change the vehicle center of gravity and vehicle handling. To avoid loss of control resulting in personal injury, follow these guidelines for loading your vehicle:

- **Do not carry loads which exceed the load limits described on the label attached to the left door or left door center pillar.**
- **Always place cargo evenly on the cargo floor. Put heavier objects as low and as far forward as possible.**

(Continued)

WARNING! *(Continued)*

- **Place as much cargo as possible in front of the rear axle. Too much weight or improperly placed weight over or behind the rear axle can cause the rear of the vehicle to sway.**
- **Do not pile luggage or cargo higher than the top of the seatback. This could impair visibility or become a dangerous projectile in a sudden stop or accident.**

GARAGE DOOR OPENER — IF EQUIPPED

HomeLink replaces up to three hand-held transmitters that operate devices such as garage door openers, motorized gates, lighting or home security systems. The HomeLink unit is powered by your vehicle's 12 Volt battery.

The HomeLink buttons, located on the overhead console, designate the three different HomeLink channels. The HomeLink indicator is located above the center button.

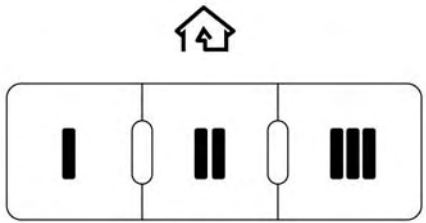

0449097657US

HomeLink Buttons/Overhead Console

NOTE: HomeLink is disabled when the Vehicle Security Alarm is active.

Before You Begin Programming HomeLink

Be sure that your vehicle is parked outside of the garage before you begin programming.

For more efficient programming and accurate transmission of the radio-frequency signal it is recommended that a new battery be placed in the hand-held transmitter of the device that is being programmed to the HomeLink system.

To erase the channels, place the ignition in the ON/RUN position, and push and hold the two outside HomeLink buttons (I and III) for up to 20 seconds or until the orange indicator flashes.

NOTE:

- Erasing all channels should only be performed when programming HomeLink for the first time. Do not erase channels when programming additional buttons.
- If you have any problems, or require assistance, please call toll-free 1-800-355-3515 or, on the Internet at HomeLink.com for information or assistance.

Programming A Rolling Code

For programming garage door openers that were manufactured after 1995. These garage door openers can be identified by the "LEARN" or "TRAIN" button located where the hanging antenna is attached to the garage door opener.

NOTE: It is NOT the button that is normally used to open and close the door. The name and color of the button may vary by manufacturer.

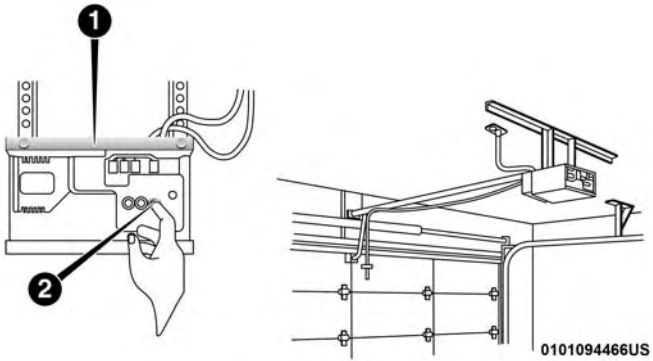

Training The Garage Door Opener

1 — Door Opener
2 — Training Button

1. Place the ignition in the ON/RUN position.
2. Place the hand-held transmitter 1 to 3 inches (3 to 8 cm) away from the HomeLink button you wish to program while keeping the HomeLink indicator light in view.
3. Push and hold the HomeLink button you want to program while you push and hold the hand-held transmitter button.

4. Continue to hold both buttons and observe the indicator light. The HomeLink indicator will flash slowly and then rapidly after HomeLink has received the frequency signal from the hand-held transmitter. Release both buttons after the indicator light changes from slow to rapid.

5. At the garage door opener motor (in the garage), locate the "LEARN" or "TRAINING" button. This can usually be found where the hanging antenna wire is attached to the garage door opener/device motor. Firmly push and release the "LEARN" or "TRAINING" button. On some garage door openers/devices there may be a light that blinks when the garage door opener/device is in the LEARN/TRAIN mode.

NOTE: You have 30 seconds in which to initiate the next step after the LEARN button has been pushed.

6. Return to the vehicle and push the programmed HomeLink button twice (holding the button for two seconds each time). If the garage door opener/device activates, programming is complete.

NOTE: If the garage door opener/device does not activate, push the button a third time (for two seconds) to complete the training.

To program the remaining two HomeLink buttons, repeat each step for each remaining button. DO NOT erase the channels.

Reprogramming A Single HomeLink Button (Rolling Code)

To reprogram a channel that has been previously trained, follow these steps:

1. Cycle the ignition to the ON/RUN position.

2. Push and hold the desired HomeLink button until the indicator light begins to flash after 20 seconds. Do not release the button.

3. Without releasing the button proceed with "Programming A Rolling Code" step 2 and follow all remaining steps."

Programming A Non-Rolling Code

For programming Garage Door Openers manufactured before 1995.

1. Cycle the ignition to the ON/RUN position.

2. Place the hand-held transmitter 1 to 3 inches (3 to 8 cm) away from the HomeLink button you wish to program while keeping the HomeLink indicator light in view.

3. Press and hold the HomeLink button you want to program while you press and hold the hand-held transmitter button.

4. Continue to hold both buttons and observe the indicator light. The HomeLink indicator will flash slowly and then rapidly after HomeLink has received the frequency signal from the hand-held transmitter. Release both buttons after the indicator light changes from slow to rapid.

5. Press and hold the programmed HomeLink button and observe the indicator light.
   - If the indicator light stays on constantly, programming is complete and the garage door/device should activate when the HomeLink button is pressed.
   - To program the two remaining HomeLink buttons, repeat each step for each remaining button. DO NOT erase the channels.

Reprogramming A Single HomeLink Button (Non-Rolling Code)

To reprogram a channel that has been previously trained, follow these steps:

1. Cycle the ignition to the ON/RUN position.

2. Press and hold the desired HomeLink button until the indicator light begins to flash after 20 seconds. Do not release the button.

3. Without releasing the button, proceed with "Programming A Non-Rolling Code" step 2 and follow all remaining steps.

Canadian/Gate Operator Programming

For programming transmitters in Canada/United States that require the transmitter signals to "time-out" after several seconds of transmission.

Canadian radio frequency laws require transmitter signals to time-out (or quit) after several seconds of transmission – which may not be long enough for HomeLink to pick up the signal during programming. Similar to this Canadian law, some U.S. gate operators are designed to time-out in the same manner.

It may be helpful to unplug the device during the cycling process to prevent possible overheating of the garage door or gate motor.

1. Cycle the ignition to the ON/RUN position.

2. Place the hand-held transmitter 1 to 3 inches (3 to 8 cm) away from the HomeLink button you wish to program while keeping the HomeLink indicator light in view.
3. Continue to press and hold the HomeLink button, while you press and release ("cycle") your hand-held transmitter every two seconds until HomeLink has successfully accepted the frequency signal. The indicator light will flash slowly and then rapidly when fully trained.
4. Watch for the HomeLink indicator to change flash rates. When it changes, it is programmed. It may take up to 30 seconds or longer in rare cases. The garage door may open and close while you are programming.
5. Press and hold the programmed HomeLink button and observe the indicator light.

NOTE:

- If the indicator light stays on constantly, programming is complete and the garage door/device should activate when the HomeLink button is pressed.
- To program the two remaining HomeLink buttons, repeat each step for each remaining button. DO NOT erase the channels.

If you unplugged the garage door opener/device for programming, plug it back in at this time.

Reprogramming A Single HomeLink Button (Canadian/ Gate Operator)

To reprogram a channel that has been previously trained, follow these steps:

1. Cycle the ignition to the ON/RUN position.
2. Press and hold the desired HomeLink button until the indicator light begins to flash after 20 seconds. Do not release the button.
3. Without releasing the button, proceed with "Canadian/ Gate Operator Programming" step 2 and follow all remaining steps.

Using HomeLink

To operate, push and release the programmed HomeLink button. Activation will now occur for the programmed device (i.e. garage door opener, gate operator, security system, entry door lock, home/office lighting, etc.). The hand-held transmitter of the device may also be used at any time.

Security

It is advised to erase all channels before you sell or turn in your vehicle.

To do this, push and hold the two outside buttons for 20 seconds until the orange indicator flashes. Note that all channels will be erased. Individual channels cannot be erased.

The HomeLink Universal Transceiver is disabled when the Vehicle Security Alarm is active.

Troubleshooting Tips

If you are having trouble programming HomeLink, here are some of the most common solutions:

- Replace the battery in the Garage Door Opener hand-held transmitter.
- Push the LEARN button on the Garage Door Opener to complete the training for a Rolling Code.
- Did you unplug the device for programming and remember to plug it back in?

If you have any problems, or require assistance, please call toll-free 1-800-355-3515 or, on the Internet at HomeLink.com for information or assistance.

WARNING!

- **Vehicle exhaust contains carbon monoxide, a dangerous gas. Do not run your vehicle in the garage while programming the transceiver. Exhaust gas can cause serious injury or death.**
- **Your motorized door or gate will open and close while you are programming the universal transceiver. Do not program the transceiver if people, pets or other objects are in the path of the door or gate. Only use this transceiver with a garage door opener that has a "stop and reverse" feature as required by Federal safety standards. This includes most garage door opener models manufactured after 1982. Do not use a garage door opener without these safety features. Call toll-free 1-800-355-3515 or, on the Internet at HomeLink.com for safety information or assistance.**

General Information

The following regulatory statement applies to all Radio Frequency (RF) devices equipped in this vehicle:

This device complies with Part 15 of the FCC Rules and with Innovation, Science and Economic Development Canada license-exempt RSS standard(s). Operation is subject to the following two conditions:

1. This device may not cause harmful interference, and
2. This device must accept any interference received, including interference that may cause undesired operation.

NOTE: Changes or modifications not expressly approved by the party responsible for compliance could void the user's authority to operate the equipment.

INTERNAL EQUIPMENT

Storage

Glove Compartment

The glove compartment is located on the passenger side of the instrument panel.

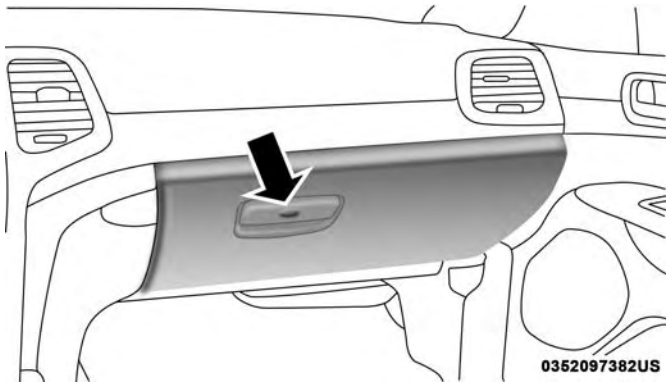

Glove Compartment

To open the glove compartment, pull the release handle.

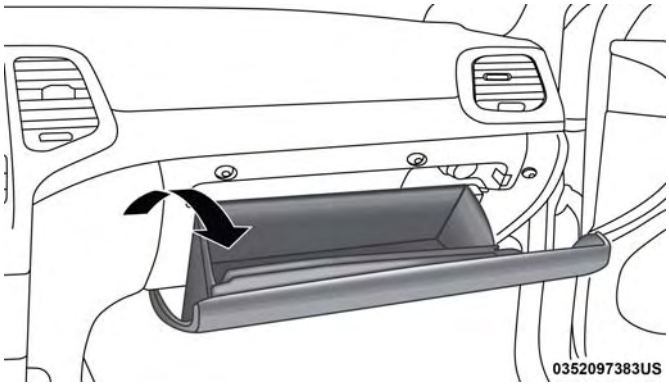

Opened Glove Compartment

WARNING!

Do not operate this vehicle with a glove compartment in the open position. Driving with the glove compartment open may result in injury in a collision.

Door Storage

Large storage areas are built into the door panels for easy access.

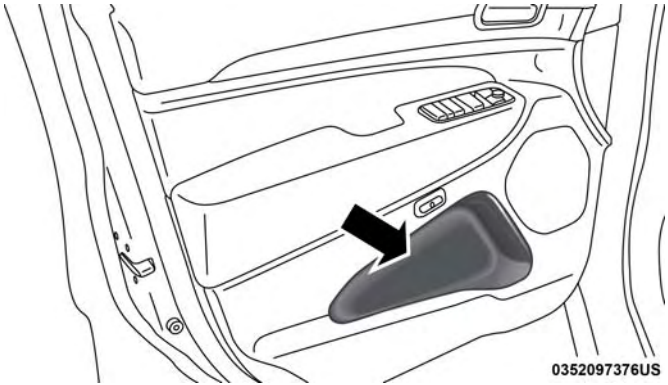

Door Panel Storage

Console Features

The center console contains both an upper and a lower storage area.

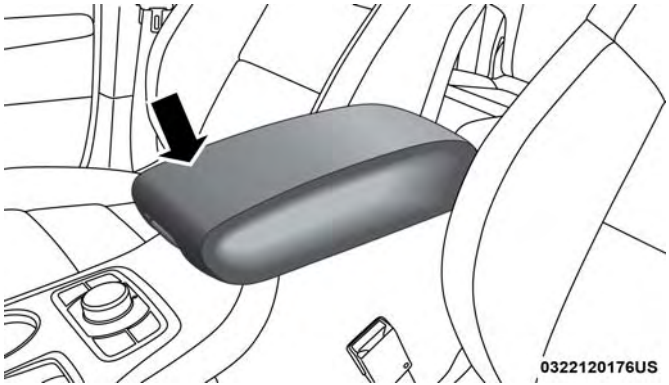

Storage Compartment

To open the upper storage compartment, pull upward on the small latch located on the lid.

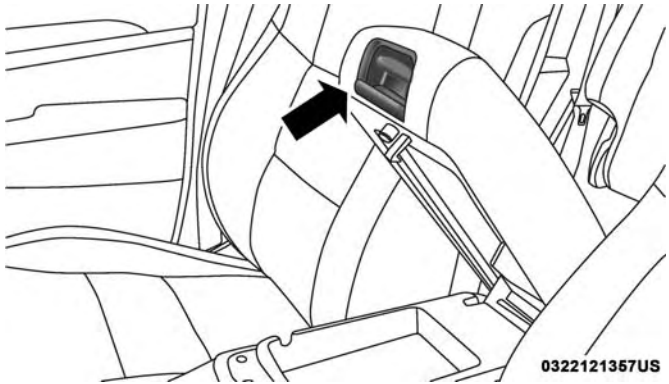

Storage Compartment Latches

Lift upward on the larger of the latches to access the lower storage compartment.

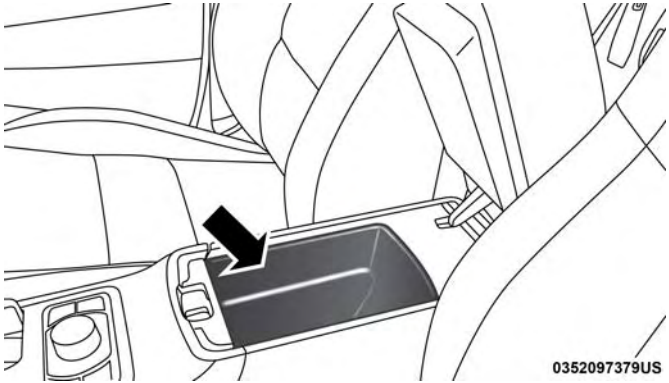

Lower Storage Compartment

Your vehicle may have an optional CD or DVD player located in the center console.

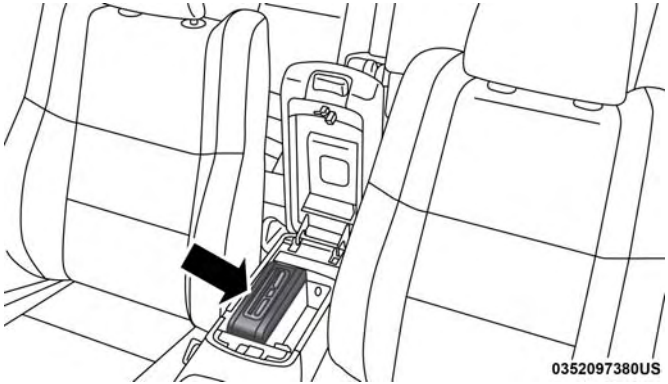

Lower Storage Compartment CD/DVD Player — If Equipped

WARNING!

Do not operate this vehicle with a console compartment lid in the open position. Driving with the console compartment lid open may result in injury in a collision.

Overhead Console

The overhead console contains courtesy/reading lights and storage for sunglasses. Universal Garage Door Opener (HomeLink), power liftgate and power sunroof switches may also be included, if equipped.

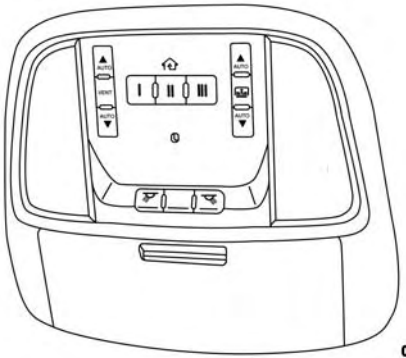

0352097372US

Overhead Console

Cupholders

There are two cupholders for the front seat passengers located in the center console.

0352097381US

Front Cupholders

There are two cupholders for the rear seat passengers located in the fold-down center armrest.

Rear Cupholders

Electrical Power Outlets

Your vehicle is equipped with 12 Volt (15 Amp) power outlets that can be used to power cellular phones, small electronics and other low powered electrical accessories. The power outlets are labeled with either a “key” or a “battery” symbol to indicate how the outlet is powered. Power outlets labeled with a “key” are powered when the ignition is in the ON or ACC position, while the outlets labeled with a “battery” are connected directly to the battery and powered at all times.

NOTE:

- All accessories connected to the “battery” powered outlets should be removed or turned off when the vehicle is not in use to protect the battery against discharge.

CAUTION!

Power outlets are designed for accessory plugs only. Do not insert any other object in the power outlets as this will damage the outlet and blow the fuse. Improper use of the power outlet can cause damage not covered by your New Vehicle Limited Warranty.

The front power outlet is located inside the storage area on the center stack of the instrument panel. Push inward on the storage lid to open the compartment and gain access to this power outlet.

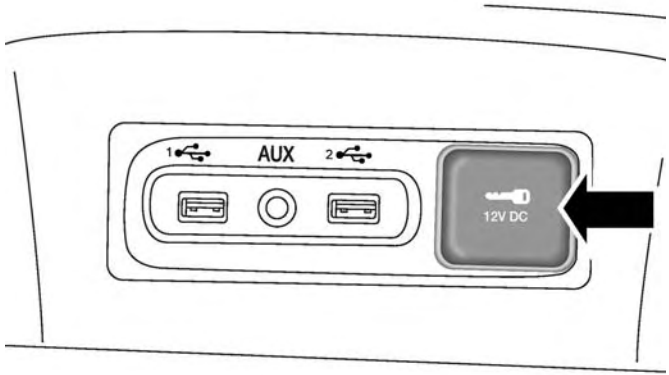

0322135353US

Front Power Outlet

In addition to the front power outlet, there is also a power outlet located in the storage area of the center console.

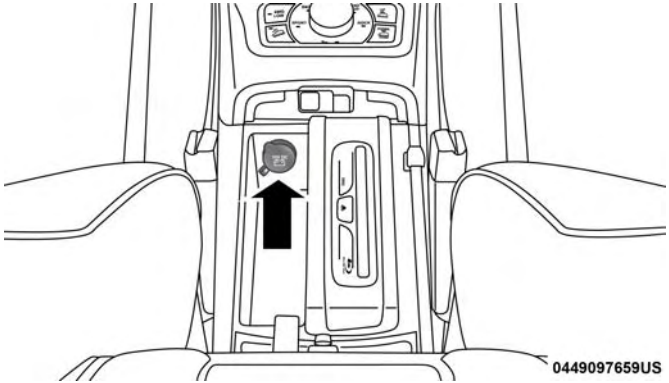

Center Console Outlet

The rear power outlet is located in the right rear cargo area.

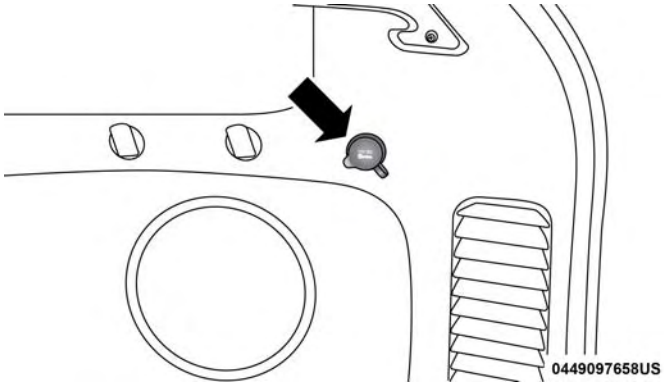

Rear Cargo Power Outlet

NOTE: The rear power outlet can be switched from switched "ignition" only to constant "battery" powered all the time. See your local authorized dealer for details.

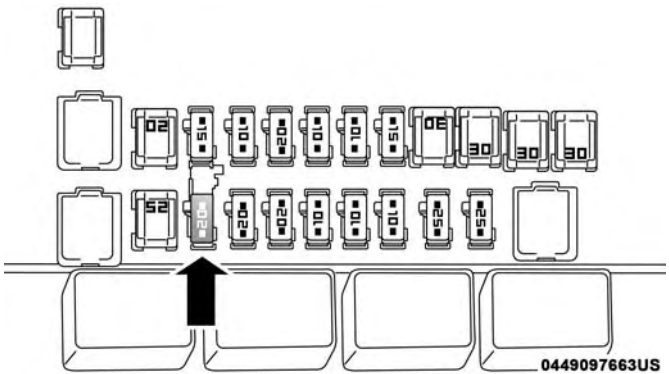

Power Outlet Right Rear Quarter Panel Fuse

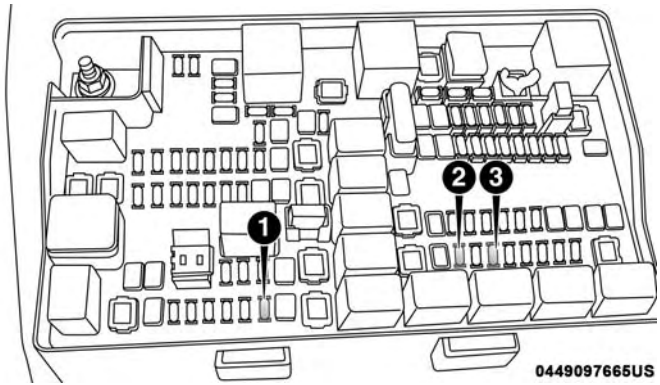

Power Outlet Fuse Locations

1 — F104 Fuse 20 Amp Yellow Power Outlet Console Bin
2 — F90–F91 Fuse 20 Amp Yellow Power Outlet Right Rear Quarter Panel
3 — F93 Fuse 20 Amp Yellow Cigar Lighter Instrument Panel

WARNING!

To avoid serious injury or death:
- **Only devices designed for use in this type of outlet should be inserted into any 12 Volt outlet.**
- **Do not touch with wet hands.**

(Continued)

WARNING! *(Continued)*

- **Close the lid when not in use and while driving the vehicle.**
- **If this outlet is mishandled, it may cause an electric shock and failure.**

CAUTION!

- **Many accessories that can be plugged in draw power from the vehicle's battery, even when not in use (i.e., cellular phones, etc.). Eventually, if plugged in long enough, the vehicle's battery will discharge sufficiently to degrade battery life and/or prevent the engine from starting.**
- **Accessories that draw higher power (i.e., coolers, vacuum cleaners, lights, etc.) will degrade the battery even more quickly. Only use these intermittently and with greater caution.**
- **After the use of high power draw accessories, or long periods of the vehicle not being started (with accessories still plugged in), the vehicle must be driven a sufficient length of time to allow the generator to recharge the vehicle's battery.**

Power Inverter — If Equipped

There is a 115 Volt, 150 Watt inverter outlet located on the back of the center console to convert DC current to AC current. This outlet can power cellular phones, electronics and other low power devices requiring power up to 150 Watts.

NOTE: Certain high-end video game consoles, new computers and power tools will exceed this power limit.

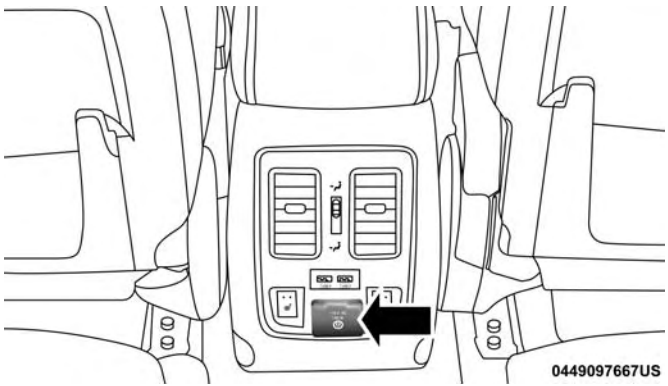

Power Inverter

The power inverter is designed with built-in overload protection. If the power rating of 150 Watts is exceeded, the power inverter will automatically shut down. Once the electrical device has been removed from the outlet, the inverter should automatically reset. To avoid overloading the circuit, check the power ratings on electrical devices prior to using the inverter.

WARNING!

To avoid serious injury or death:
- **Do not insert any objects into the receptacles.**
- **Do not touch with wet hands.**
- **Close the lid when not in use.**
- **If this outlet is mishandled, it may cause an electric shock and failure.**

Sunglasses Bin Door

At the front of the console, a compartment is provided for storing a pair of sunglasses. The storage compartment access is a "push/push" design. Push the chrome pad on the door to open. Push the chrome pad on the door to close.

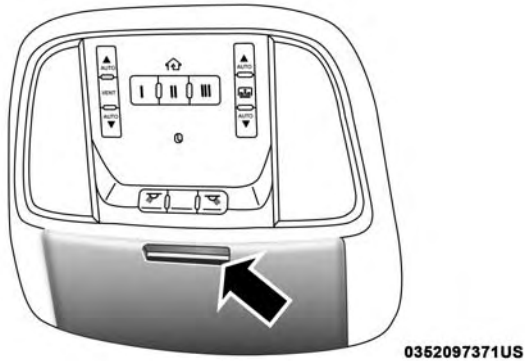

Sunglasses Bin Door

ROOF LUGGAGE RACK — IF EQUIPPED

The crossbars and siderails are designed to carry the weight on vehicles equipped with a luggage rack. The load must not exceed 150 lbs (68 kg), and should be uniformly distributed over the luggage rack crossbars.

NOTE: If not equipped with crossbars, your authorized dealer can order and install Mopar crossbars built specifically for this roof rack system.

Distribute cargo weight evenly on the roof rack crossbars. The roof rack does not increase the total load carrying capacity of the vehicle. Be sure the total load of cargo inside the vehicle plus that on the external rack does not exceed the maximum vehicle load capacity.

To move the crossbars, loosen the attachments, located at the upper edge of each crossbar, approximately eight turns using the anti-theft wrench provided with the Mopar crossbars. Then, move the crossbar to the desired position, keeping the crossbars parallel to the rack frame. Once the crossbar is in the desired position, retighten the with the wrench to lock the crossbar into position.

NOTE:

- To help control wind noise when the crossbars are not in use, place the front and rear crossbars approximately 24 inches (61 cm) apart. Optimal noise reduction can then be achieved by adjusting the front crossbar forward or aft using increments of 1 inch (2.5 cm).
- If any cargo (or any metallic object) is placed over the satellite radio antenna (if equipped), you may experience interruption of satellite radio reception. For improved satellite radio reception, avoid placing the rear crossbar over the satellite radio antenna.

WARNING!

Cargo must be securely tied down before driving your vehicle. Improperly secured loads can fly off the vehicle, particularly at high speeds, resulting in personal injury or property damage. Follow the roof rack cautions when carrying cargo on your roof rack.

CAUTION!

- **To prevent damage to the roof of your vehicle, do not carry any loads on the roof rack without the crossbars installed. The load should be secured and placed on top of the crossbars, not directly on the roof. If it is necessary to place the load on the roof, place a blanket or some other protection between the load and the roof surface.**

(Continued)

CAUTION! *(Continued)*

- **To avoid damage to the roof rack and vehicle, do not exceed the maximum roof rack load capacity of 150 lb (68 kg). Always distribute heavy loads as evenly as possible and secure the load appropriately.**
- **Long loads which extend over the windshield, such as wood panels or surfboards, or loads with large frontal area should be secured to both the front and rear of the vehicle.**
- **Place a blanket or other protection between the surface of the roof and the load.**
- **Travel at reduced speeds and turn corners carefully when carrying large or heavy loads on the roof rack. Wind forces, due to natural causes or nearby truck traffic, can add sudden upward lift to a load. This is especially true on large flat loads and may result in damage to the cargo or your vehicle.**
- **The use of Sport Mode is not recommended when using the Roof Luggage Rack to carry a load.**

GETTING TO KNOW YOUR INSTRUMENT PANEL

CONTENTS

■ INSTRUMENT CLUSTER 134

□ Instrument Cluster Descriptions. 135

■ INSTRUMENT CLUSTER DISPLAY 136

□ Instrument Cluster Display Location And Controls 136

□ Oil Change Reset — If Equipped 138

□ Instrument Cluster Display Messages 139

□ Instrument Cluster Display Menu Items 141

□ Battery Saver On/Battery Saver Mode Message — Electrical Load Reduction Actions (If Equipped) .146

■ TRIP COMPUTER 148

■ WARNING LIGHTS AND MESSAGES 149

□ Red Warning Lights 149

□ Yellow Warning Lights 153

□ Yellow Indicator Lights. 158

□ Green Indicator Lights 159

□ White Indicator Lights 160

□ Blue Indicator Lights 161

■ ONBOARD DIAGNOSTIC SYSTEM — OBD II . . .161

□ Onboard Diagnostic System (OBD II) Cybersecurity 162

■ EMISSIONS INSPECTION AND MAINTENANCE PROGRAMS 163

INSTRUMENT CLUSTER

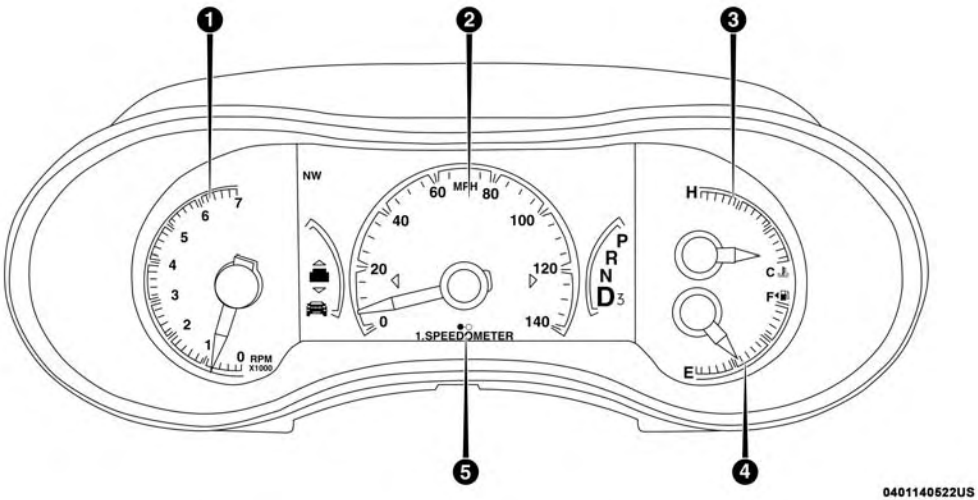

Instrument Cluster

Instrument Cluster Descriptions

1. Tachometer
   - Indicates the engine speed in revolutions per minute (RPM x 1000).
2. Speedometer
   - Indicates vehicle speed.
3. Temperature Gauge
   - The temperature gauge shows engine coolant temperature. Any reading within the normal range indicates that the engine cooling system is operating satisfactorily.
   - The gauge pointer will likely indicate a higher temperature when driving in hot weather or up mountain grades. It should not be allowed to exceed the upper limits of the normal operating range.

WARNING!

A hot engine cooling system is dangerous. You or others could be badly burned by steam or boiling coolant. You may want to call an authorized dealer for service if your vehicle overheats.

CAUTION!

Driving with a hot engine cooling system could damage your vehicle. If the temperature gauge reads "H" pull over and stop the vehicle. Idle the vehicle with the air conditioner turned off until the pointer drops back into the normal range. If the pointer remains on the "H", turn the engine off immediately and call an authorized dealer for service.

4. Fuel Gauge
   - The pointer shows the level of fuel in the fuel tank when the ignition is in the ON/RUN position.
   - The fuel pump symbol points to the side of the vehicle where the fuel door is located.
5. Instrument Cluster Display
   - The instrument cluster display features a driver-interactive display. Refer to "Instrument Cluster Display" in "Getting To Know Your Instrument Panel" for further information.

INSTRUMENT CLUSTER DISPLAY

Your vehicle will be equipped with an instrument cluster display, which offers useful information to the driver. With the ignition in the STOP/OFF mode, opening/closing of a door will activate the display for viewing, and display the total miles, or kilometers, in the odometer. Your instrument cluster display is designed to display important information about your vehicle's systems and features. Using a driver interactive display located on the instrument panel, your instrument cluster display can show you how systems are working and give you warnings when they are not. The steering wheel mounted controls allow you to scroll through the main menus and submenus. You can access the specific information you want and make selections and adjustments.

Instrument Cluster Display Location And Controls

The instrument cluster display is located in the center of the instrument cluster.

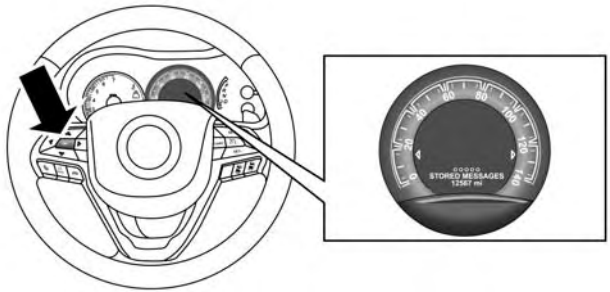

0301104093NA

Instrument Cluster Display Location And Controls

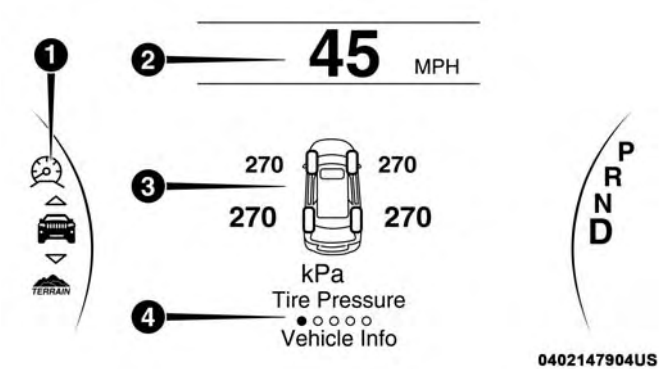

Instrument Cluster Display

1 — Driver Interactive Display
2 — Speedometer Display
3 — Main Display
4 — Menu Name And Menu Page

The Main Menu items selectable in the driver interactive display consist of the following:

- Speedometer
- Vehicle Info
- Terrain — If Equipped
- Driver Assist — If Equipped
- Fuel Economy
- Trip
- Stop/Start — If Equipped
- Audio
- Stored Messages
- Screen Setup

The system allows the driver to select information by pushing the following buttons mounted on the steering wheel:

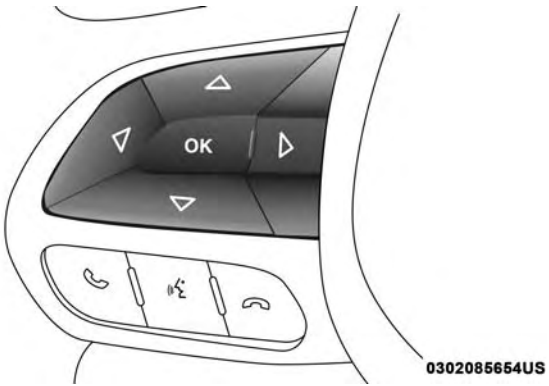

Instrument Cluster Display Control Buttons

- *Up Arrow Button*

△ Push and release the **up** arrow button to scroll upward through the Main Menu items.

- *Down Arrow Button*

▽ Push and release the **down** arrow button to scroll downward through the Main Menu items.

- *Right Arrow Button*

▷ Push and release the **right** arrow button to access the information screens or submenu screens of a main menu item.

- *Left Arrow Button*

◁ Push and release the **left** arrow button to access the information screens or submenu screens of a main menu item.

- *OK Button*

Push the **OK** button to access/select the information screens or submenu screens of a Main Menu item. Push and hold the **OK** arrow button for two seconds to reset displayed/selected features that can be reset.

Oil Change Reset — If Equipped

Your vehicle may be equipped with an engine oil change indicator system. The "Oil Change Required" message will display in the instrument cluster display for five seconds after a single chime has sounded to indicate the next scheduled oil change interval. The engine oil change indicator system is duty cycle based, which means the engine oil change interval may fluctuate, dependent upon your personal driving style.

Unless reset, this message will continue to display each time you place the ignition in the ON/RUN position. To turn off the message temporarily, push and release the **OK** button. To reset the oil change indicator system (after performing the scheduled maintenance), refer to the following procedure.

Oil Life Reset

1. Without pushing the brake pedal, place the ignition in the ON/RUN mode (do not start the engine).
2. Navigate to "Oil Life" submenu in "Vehicle Info" in the instrument cluster display.
3. Push and hold the **OK** button until the gauge resets to 100%.

Secondary Method For Oil Change Reset Procedure

1. Without pushing the brake pedal, place the ignition in the ON/RUN position (do not start the engine).
2. Fully press the accelerator pedal, slowly, three times within ten seconds.
3. Without pushing the brake pedal, place the ignition in the OFF/LOCK position.

NOTE: If the indicator message illuminates when you start the vehicle, the oil change indicator system did not reset. If necessary, repeat this procedure.

Instrument Cluster Display Messages

Includes the following, but not limited to:

- Front Seatbelts Unbuckled
- Driver Seat Belt Unbuckled
- Passenger Seat Belt Unbuckled
- Traction Control Off
- Washer Fluid Low
- Oil Pressure Low
- Oil Change Due
- Fuel Low
- Service Anti-lock Brake System
- Service Electronic Throttle Control
- Service Power Steering
- Cruise Control Off
- Cruise Control Ready
- ACC Driver Override
- Cruise Control Set To XXX MPH
- Tire Pressure Screen With Low Tire(s) “Inflate Tire to XX”
- Service Tire Pressure System
- Speed Warning Set To XXX MPH
- Speed Warning Exceeded
- Parking Brake Engaged
- Brake Fluid Low
- Service Electronic Braking System
- Engine Temperature Hot
- Lights On

- Right Front Turn Signal Light Out
- Right Rear Turn Signal Light Out
- Left Front Turn Signal Light Out
- Left Rear Turn Signal Light Out
- Ignition Or Accessory On
- Vehicle Not In Park
- Remote Start Active Push Start Button — If Equipped
- Remote Start Canceled Fuel Low — If Equipped
- Remote Start Canceled Too Cold — If Equipped
- Remote Start Canceled Door Open — If Equipped
- Remote Start Canceled Hood Open — If Equipped
- Remote Start Canceled Liftgate Open — If Equipped
- Remote Start Canceled Time Expired — If Equipped
- Remote Start Disabled Start To Reset — If Equipped
- Service Air Bag System
- Service Air Bag Warning Light
- Door Open
- Doors Open
- Liftgate Open
- Hood Open
- Shift Not Allowed
- Vehicle Speed Is Too High To Shift To D
- Vehicle Speed Is Too High To Shift To R
- Vehicle Speed Is Too High To Shift To P
- Service Transmission
- Service Shifter
- Service Air Suspension System
- Normal Ride Height Achieved
- Aerodynamic Ride Height Achieved
- Off Road 1 Ride Height Achieved
- Off Road 2 Ride Height Achieved
- Entry/Exit Ride Height Achieved
- Selected Ride Height Not Permitted
- Service Air Suspension System Immediately
- Reduce Speed To Maintain Selected Ride Height
- Air Suspension System Cooling Down Please Wait

- Vehicle Cannot Be Lowered Door Open
- Air Suspension Temporarily Disabled
- Battery Low Start Engine To Change Ride Height

For further information on the color warning and indicator lights in the instrument cluster, refer to "Warning Lights And Messages" in "Getting To Know Your Instrument Panel".

Instrument Cluster Display Menu Items

The instrument cluster display can be used to view the main menu items for several features. Use the **up** and **down** arrow buttons to scroll through the driver interactive display menu options until the desired menu is reached.

NOTE: Depending on the vehicle's options, feature settings may vary.

Speedometer

Push and release the **up** or **down** arrow button until the main gauge menu icon is displayed in the instrument cluster display. Push and release the **left** or **right** arrow button to select the analog or digital type speedometer display. Push and release the **OK** button to toggle units (mph or km/h) of the speedometer.

Accessibility — If Equipped

Accessibility is a feature of the DVD/Blu-ray system that announces a function prior to performing the action. For further information refer to "Uconnect Settings" in "Multimedia."

Vehicle Info

Push and release the **up** or **down** arrow button until the Vehicle Info menu icon is displayed in the instrument cluster display. Push and release the **left** or **right** arrow button to scroll through the information submenus and push and release the **OK** button to select or reset the resettable submenus.

• Tire Pressure	• Oil Pressure
• Transmission Temperature	• Oil Life
• Oil Temperature	• Battery Voltage

Terrain — If Equipped

Push and release the **up** or **down** arrow button until the Terrain icon/title is highlighted in the instrument cluster display. Push and release the **right** or **left** arrow button to display the Selec-Terrain, Air Suspension, Drivetrain, and Wheel Articulation.

- Selec-Terrain: Displays messages concerning Selec-Terrain status.
- Air Suspension — If Equipped: Displays messages concerning Air Suspension status.
- Drivetrain: Displays information on drivetrain status of Front Wheel Angle, T-Case, and Axle Lock.
- Wheel Articulation: Displays current wheel articulation.

Driver Assist

Push and release the **up** or **down** arrow button until the Driver Assist menu title is highlighted in the instrument cluster display.

Adaptive Cruise Control (ACC) Menu — If Equipped

The instrument cluster display displays the current ACC and LaneSense system settings. The information displayed depends on the status of ACC and LaneSense.

Push the Adaptive Cruise Control (ACC) on/off button (located on the steering wheel) until one of the following displays in the instrument cluster display:

Adaptive Cruise Control Off

When ACC is deactivated, the display will read “Adaptive Cruise Control Off.”

Adaptive Cruise Control Ready

When ACC is activated but the vehicle speed setting has not been selected, the display will read “Adaptive Cruise Control Ready.”

Push and release the SET + or the SET- button (located on the steering wheel) and the following will display in the instrument cluster display:

ACC SET

When ACC is set, the set speed will display in the instrument cluster.

The ACC screen may display once again if any ACC activity occurs, which may include any of the following:

- Distance Setting Change
- System Cancel
- Driver Override

- System Off
- ACC Proximity Warning
- ACC Unavailable Warning

NOTE: The instrument cluster display will return to the last display selected after five seconds of no ACC display activity.

Refer to "Adaptive Cruise Control (ACC) — If Equipped" in "Starting And Operating" for further information.

LaneSense — If Equipped

The instrument cluster display displays the current LaneSense system settings. The information displayed depends on LaneSense system status and the conditions that need to be met. Refer to "LaneSense — If Equipped" in "Starting And Operating" for further information.

Fuel Economy

Push and release the **up** or **down** arrow button until the Fuel Economy Icon is highlighted in the instrument cluster display. Push and hold the **OK** button to reset average fuel economy feature.

Toggle left or right to select a display with or without Current Fuel Economy Information.

- Range – The display shows the estimated distance (mi or km) that can be traveled with the fuel remaining in the tank. When the Range value is less than 30 miles (48 km) estimated driving distance, the Range display will change to a "RANGE LOW" message. Adding a significant amount of fuel to the vehicle will turn off the "RANGE LOW" message and a new Range value will display. Range cannot be reset through the **OK** button.

NOTE: Significant changes in driving style or vehicle loading will greatly affect the actual drivable distance of the vehicle, regardless of the Range displayed value.

- Average – The display shows the average fuel economy (MPG, L/100 km, or km/L) since the last reset.
- Current – This display shows the current fuel economy (MPG, L/100 km, km/L) while driving.

Trip Info

Push and release the **up** or **down** arrow button until the Trip menu title is displayed in the instrument cluster display. Toggle the **left** or **right** arrow button to select Trip A or Trip B. The Trip information will display the following:

- Distance – Shows the total distance (mi or km) traveled for Trip A or Trip B since the last reset.
- Average Fuel Economy – Shows the average fuel economy (MPG or L/100 km or km/L) of Trip A or Trip B since the last reset.
- Elapsed Time – Shows the total elapsed time of travel since Trip A or Trip B has been reset.

Hold the **OK** button to reset feature information.

Stop/Start – If Equipped

Push and release the **up** or **down** arrow button on the steering wheel to scroll to the Stop/Start menu in the driver interactive display. This menu will give access to Stop/Start settings using the **left** and **right** arrow buttons on the steering wheel.

For further information on the use and different modes of the Stop/Start System accessible through these settings, refer to “Stop/Start System – If Equipped” in “Starting And Operating”.

Audio

Push and release the **up** or **down** arrow button until the Audio menu title is displayed in the instrument cluster display.

Stored Messages

Push and release the **up** or **down** arrow button until the Messages Menu Icon is highlighted in the instrument cluster display. This feature shows the number of stored warning messages. Pushing the **left** or **right** arrow button will allow you to scroll through the stored messages.

Screen Setup

Push and release the **up** or **down** arrow button until the Screen Setup Menu Icon/Title is highlighted in the instrument cluster display. Push and release the **OK** button to enter the sub-menus and follow the prompts on the screen as needed. The Screen Setup feature allows you to change what information is displayed in the instrument cluster as well as the location that information is displayed.

Screen Setup Driver Selectable Items

Gear Display

- Full (default setting)
- Single

Upper Left

- None
- Compass (default setting)
- Outside Temp
- Time
- Range
- Fuel Economy Average
- Fuel Economy Current
- Trip A
- Trip B

Upper Right

- None
- Compass
- Outside Temp (default setting)
- Time
- Range
- Fuel Economy Average
- Fuel Economy Current
- Trip A
- Trip B

Defaults (Restores All Settings To Default Settings)

- Cancel
- Restore

Current Gear

- On
- Off (default setting)

Favorite Menus — Equipped

- Speedometer
- Vehicle Info
- Terrain (show/hide)
- Driver Assist (show/hide)
- Fuel Economy (show/hide)

- Trip Info (show/hide)
- Stop/Start
- Audio (show/hide)
- Messages
- Screen Setup

The menu with (show/hide) means user can press **OK** button to choose show or hide this menu on the instrument cluster display.

Battery Saver On/Battery Saver Mode Message — Electrical Load Reduction Actions (If Equipped)

This vehicle is equipped with an Intelligent Battery Sensor (IBS) to perform additional monitoring of the electrical system and status of the vehicle battery.

In cases when the IBS detects charging system failure, or the vehicle battery conditions are deteriorating, electrical load reduction actions will take place to extend the driving time and distance of the vehicle. This is done by reducing power to or turning off non-essential electrical loads.

Load reduction is only active when the engine is running. It will display a message if there is a risk of battery depletion to the point where the vehicle may stall due to lack of electrical supply, or will not restart after the current drive cycle.

When load reduction is activated, the message “Battery Saver On” or “Battery Saver Mode” will appear in the instrument cluster display.

These messages indicate the vehicle battery has a low state of charge and continues to lose electrical charge at a rate that the charging system cannot sustain.

NOTE:

- The charging system is independent from load reduction. The charging system performs a diagnostic on the charging system continuously.
- If the Battery Charge Warning Light is on it may indicate a problem with the charging system. Refer to “Battery Charge Warning Light” in “Warning Lights And Messages” located in ”Getting To Know Your Instrument Panel” for further information.

The electrical loads that may be switched off (if equipped), and vehicle functions which can be effected by load reduction:

- Heated Seat/Vented Seats/Heated Wheel
- Rear Defroster And Heated Mirrors
- HVAC System
- 150W Power Inverter System
- Audio and Telematics System

Loss of the battery charge may indicate one or more of the following conditions:

- The charging system cannot deliver enough electrical power to the vehicle system because the electrical loads are larger than the capability of charging system. The charging system is still functioning properly.
- Turning on all possible vehicle electrical loads (e.g. HVAC to max settings, exterior and interior lights, overloaded power outlets +12V, 150W, USB ports) during certain driving conditions (city driving, towing, frequent stopping).
- Installing options like additional lights, upfitter electrical accessories, audio systems, alarms and similar devices.
- Unusual driving cycles (short trips separated by long parking periods).
- The vehicle was parked for an extended period of time (weeks, months).
- The battery was recently replaced and was not charged completely.
- The battery was discharged by an electrical load left on when the vehicle was parked.
- The battery was used for an extended period with the engine not running to supply radio, lights, chargers, +12V portable appliances like vacuum cleaner's, game consoles and similar devices.

What to do when an electrical load reduction action message is present ("Battery Saver On" or "Battery Saver Mode")

During a trip:

- Reduce power to unnecessary loads if possible:
  - Turn off redundant lights (interior or exterior)
  - Check what may be plugged in to power outlets +12V, 150W, USB ports
  - Check HVAC settings (blower, temperature)
  - Check the audio settings (volume)

After a trip:

- Check if any aftermarket equipment was installed (additional lights, upfitter electrical accessories, audio systems, alarms) and review specifications if any (load and Ignition Off Draw currents).
- Evaluate the latest driving cycles (distance, driving time and parking time).
- The vehicle should have service performed if the message is still present during consecutive trips and the evaluation of the vehicle and driving pattern did not help to identify the cause.

TRIP COMPUTER

Push and release the up or down arrow button until the Trip A or Trip B icon is highlighted in the instrument cluster display (Toggle left or right to select Trip A or Trip B). Push and release the OK button to display the Trip information.

Trip A

- Shows the total distance traveled for Trip A since the last reset.
- Shows the elapsed time traveled for Trip A since the last reset.

Trip B

- Shows the total distance traveled for Trip B since the last reset.
- Shows the elapsed time traveled for Trip B since the last reset.

Elapsed Time

Shows the total elapsed time of travel since the last reset when the ignition switch is in the ACC position. Elapsed time will increment when the ignition switch is in the ON or START position.

To Reset A Trip Function

Reset will only occur while a resettable function is selected (highlighted). Push and hold the **OK** button to clear the resettable function being displayed.

WARNING LIGHTS AND MESSAGES

The warning/indicator lights will illuminate in the instrument panel together with a dedicated message and/or acoustic signal when applicable. These indications are indicative and precautionary and as such must not be considered as exhaustive. Always refer to the information in this chapter in the event of a failure indication. All active telltales will display first if applicable. The system check menu may appear different based upon equipment options and current vehicle status. Some telltales are optional and may not appear.

Red Warning Lights

— Air Bag Warning Light

This warning light will illuminate to indicate a fault with the air bag, and will turn on for four to eight seconds as a bulb check when the ignition is placed in the ON/RUN or ACC/ON/RUN position. This light will illuminate with a single chime when a fault with the air bag has been detected, it will stay on until the fault is cleared. If the light is either not on during startup, stays on, or turns on while driving, have the system inspected at an authorized dealer as soon as possible.

BRAKE — Brake Warning Light

This warning light monitors various brake functions, including brake fluid level and parking brake application. If the brake light turns on it may indicate that the parking brake is applied, that the brake fluid level is low, or that there is a problem with the anti-lock brake system reservoir.

If the light remains on when the parking brake has been disengaged, and the fluid level is at the full mark on the master cylinder reservoir, it indicates a possible brake hydraulic system malfunction or that a problem with the Brake Booster has been detected by the Anti-Lock Brake System (ABS) / Electronic Stability Control (ESC) system. In this case, the light will remain on until the condition has been corrected. If the problem is related to the brake booster, the ABS pump will run when applying the brake, and a brake pedal pulsation may be felt during each stop.

The dual brake system provides a reserve braking capacity in the event of a failure to a portion of the hydraulic system. A leak in either half of the dual brake system is indicated by the Brake Warning Light, which will turn on when the brake fluid level in the master cylinder has dropped below a specified level.

The light will remain on until the cause is corrected.

NOTE: The light may flash momentarily during sharp cornering maneuvers, which change fluid level conditions. The vehicle should have service performed, and the brake fluid level checked.

If brake failure is indicated, immediate repair is necessary.

WARNING!

Driving a vehicle with the red brake light on is dangerous. Part of the brake system may have failed. It will take longer to stop the vehicle. You could have a collision. Have the vehicle checked immediately.

Vehicles equipped with the Anti-Lock Brake System (ABS) are also equipped with Electronic Brake Force Distribution (EBD). In the event of an EBD failure, the Brake Warning Light will turn on along with the ABS Light. Immediate repair to the ABS system is required.

Operation of the Brake Warning Light can be checked by turning the ignition switch from the OFF position to the ON/RUN position. The light should illuminate for approximately two seconds. The light should then turn off unless the parking brake is applied or a brake fault is detected. If the light does not illuminate, have the light inspected by an authorized dealer.

The light also will turn on when the parking brake is applied with the ignition switch in the ON/RUN position.

NOTE: This light shows only that the parking brake is applied. It does not show the degree of brake application.

— Battery Charge Warning Light

This warning light will illuminate when the battery is not charging properly. If it stays on while the engine is running, there may be a malfunction with the charging system. Contact an authorized dealer as soon as possible.

This indicates a possible problem with the electrical system or a related component.

— Door Open Warning Light

This indicator will illuminate when a door is ajar/open and not fully closed.

NOTE: If the vehicle is moving, there will also be a single chime.

— Electric Power Steering Fault Warning Light

This warning light will turn on when there's a fault with the EPS (Electric Power Steering) system. Refer to "Power Steering" in "Starting And Operating" for further information.

WARNING!

Continued operation with reduced assist could pose a safety risk to yourself and others. Service should be obtained as soon as possible.

— Electronic Throttle Control (ETC) Warning Light

This warning light will illuminate to indicate a problem with the Electronic Throttle Control (ETC) system. If a problem is detected while the vehicle is running, the light will either stay on or flash depending on the nature of the problem. Cycle the ignition when the vehicle is safely and completely stopped and the transmission is placed in the PARK position. The light should turn off. If the light remains on with the vehicle running, your vehicle will usually be drivable; however, see an authorized dealer for service as soon as possible.

NOTE: This light may turn on if the accelerator and brake pedals are pressed at the same time.

If the light continues to flash when the vehicle is running, immediate service is required and you may experience reduced performance, an elevated/rough idle, or engine stall and your vehicle may require towing. The light will come on when the ignition is placed in the ON/RUN or ACC/ON/RUN position and remain on briefly as a bulb check. If the light does not come on during starting, have the system checked by an authorized dealer.

— Engine Coolant Temperature Warning Light

This warning light warns of an overheated engine condition. If the engine coolant temperature is too high, this indicator will illuminate and a single chime will sound. If the temperature reaches the upper limit, a continuous chime will sound for four minutes or until the engine is able to cool: whichever comes first.

If the light turns on while driving, safely pull over and stop the vehicle. If the A/C system is on, turn it off. Also, shift the transmission into NEUTRAL and idle the vehicle. If the temperature reading does not return to normal, turn the engine off immediately and call for service.

Refer to "If Your Engine Overheats" in "In Case Of Emergency" for further information.

— Hood Open Warning Light

This indicator will illuminate when the hood is ajar/open and not fully closed.

NOTE: If the vehicle is moving, there will also be a single chime.

— Liftgate Open Warning Light

This warning light will illuminate when the liftgate is open.

NOTE: If the vehicle is moving, there will also be a single chime.

— Oil Pressure Warning Light

This warning light will illuminate to indicate low engine oil pressure. If the light turns on while driving, stop the vehicle, shut off the engine as soon as possible, and contact an authorized dealer. A chime will sound when this light turns on.

Do not operate the vehicle until the cause is corrected. This light does not indicate how much oil is in the engine. The engine oil level must be checked under the hood.

— Oil Temperature Warning Light

This warning light will illuminate to indicate the engine oil temperature is high. If the light turns on while driving, stop the vehicle and shut off the engine as soon as possible. Wait for oil temperature to return to normal levels.

— Seat Belt Reminder Warning Light

This warning light indicates when the driver or passenger seat belt is unbuckled. When the ignition is first placed in the ON/RUN or ACC/ON/RUN position and if the driver's seat belt is unbuckled, a chime will sound and the light will turn on. When driving, if the driver or front passenger seat belt remains unbuckled, the Seat Belt Reminder Light will flash or remain on continuously and a chime will sound.

Refer to "Occupant Restraint Systems" in "Safety" for further information.

— Transmission Temperature Warning Light — If Equipped

This warning light will illuminate to warn of a high transmission fluid temperature. This may occur with strenuous usage such as trailer towing. If this light turns on, stop the vehicle and run the engine at idle or slightly faster, with the transmission in PARK or NEUTRAL, until the light turns off. Once the light turns off, you may continue to drive normally.

WARNING!

If you continue operating the vehicle when the Transmission Temperature Warning Light is illuminated you could cause the fluid to boil over, come in contact with hot engine or exhaust components and cause a fire.

CAUTION!

Continuous driving with the Transmission Temperature Warning Light illuminated will eventually cause severe transmission damage or transmission failure.

— Vehicle Security Warning Light — If Equipped

This light will flash at a fast rate for approximately 15 seconds when the vehicle security alarm is arming, and then will flash slowly until the vehicle is disarmed.

Yellow Warning Lights

— Service Adaptive Cruise Control Warning Light

This light will turn on when the ACC system is not operating and needs service. For further information, refer to “Adaptive Cruise Control (ACC)” in “Starting And Operating.”

— Anti-Lock Brake (ABS) Warning Light

This warning light monitors the Anti-Lock Brake System (ABS). The light will turn on when the ignition is placed in the ON/RUN or ACC/ON/RUN position and may stay on for as long as four seconds.

If the ABS light remains on or turns on while driving, then the Anti-Lock portion of the brake system is not functioning and service is required as soon as possible. However, the conventional brake system will continue to operate normally, assuming the Brake Warning Light is not also on.

If the ABS light does not turn on when the ignition is placed in the ON/RUN or ACC/ON/RUN position, have the brake system inspected by an authorized dealer.

— Electronic Stability Control (ESC) Off Warning Light — If Equipped

This warning light indicates the Electronic Stability Control (ESC) is off.

Each time the ignition is turned to ON/RUN or ACC/ON/RUN, the ESC system will be on, even if it was turned off previously.

— Electronic Stability Control (ESC) Active Warning Light — If Equipped

This warning light will indicate when the Electronic Stability Control system is Active. The "ESC Indicator Light" in the instrument cluster will come on when the ignition is placed in the ON/RUN or ACC/ON/RUN position, and when ESC is activated. It should go out with the engine running. If the "ESC Indicator Light" comes on continuously with the engine running, a malfunction has been detected in the ESC system. If this warning light remains on after several ignition cycles, and the vehicle has been driven several miles (kilometers) at speeds greater than 30 mph (48 km/h), see an authorized dealer as soon as possible to have the problem diagnosed and corrected.

- The "ESC Off Indicator Light" and the "ESC Indicator Light" come on momentarily each time the ignition is placed in the ON/RUN or ACC/ON/RUN position.
- The ESC system will make buzzing or clicking sounds when it is active. This is normal; the sounds will stop when ESC becomes inactive.
- This light will come on when the vehicle is in an ESC event.

— Service LaneSense Warning Light — If Equipped

This warning light will illuminate when the LaneSense system is not operating and requires service. Please see an authorized dealer.

— LaneSense Warning Light — If Equipped

The LaneSense Warning Light will be solid yellow when the vehicle is approaching a lane marker. The warning light will flash when the vehicle is crossing the lane marker.

Refer to "LaneSense — If Equipped" in "Starting And Operating" for further information.

— Loose Fuel Filler Cap Warning Light — If Equipped

This warning light will illuminate when the fuel filler cap is loose. Properly close the filler cap to disengage the light. If the light does not turn off, please see an authorized dealer.

— Low Fuel Warning Light

When the fuel level reaches approximately 2.4 gal (9.1 L) this light will turn on, and remain on until fuel is added.

A single warning chime will sound with Low Fuel Warning.

— Low Washer Fluid Warning Light — If Equipped

This warning light will illuminate when the windshield washer fluid is low.

— Engine Check/Malfunction Indicator Warning Light (MIL)

The Engine Check/Malfunction Indicator Light (MIL) is a part of an Onboard Diagnostic System called OBD II that monitors engine and automatic transmission control systems. This warning light will illuminate when the ignition is in the ON/RUN position before engine start. If the bulb does not come on when turning the ignition switch from OFF to ON/RUN, have the condition checked promptly.

Certain conditions, such as a loose or missing gas cap, poor quality fuel, etc., may illuminate the light after engine start. The vehicle should be serviced if the light stays on through several typical driving styles. In most situations, the vehicle will drive normally and will not require towing.

When the engine is running, the MIL may flash to alert serious conditions that could lead to immediate loss of power or severe catalytic converter damage. The vehicle should be serviced by an authorized dealer as soon as possible if this occurs.

WARNING!

A malfunctioning catalytic converter, as referenced above, can reach higher temperatures than in normal operating conditions. This can cause a fire if you drive slowly or park over flammable substances such as dry plants, wood, cardboard, etc. This could result in death or serious injury to the driver, occupants or others.

CAUTION!

Prolonged driving with the Malfunction Indicator Light (MIL) on could cause damage to the vehicle control system. It also could affect fuel economy and driveability. If the MIL is flashing, severe catalytic converter damage and power loss will soon occur. Immediate service is required.

SERV 4WD — Service 4WD Warning Light — If Equipped

This warning light will illuminate to signal a fault with the 4WD system. If the light stays on or comes on during driving, it means that the 4WD system is not functioning properly and that service is required. We recommend you drive to the nearest service center and have the vehicle serviced immediately.

— Service Forward Collision Warning (FCW) Light — If Equipped

This warning light will illuminate to indicate a fault in the Forward Collision Warning System. Contact an authorized dealer for service.

Refer to "Forward Collision Warning (FCW)" in "Safety" for further information.

— Service Stop/Start System Warning Light — If Equipped

This warning light will illuminate when the Stop/Start system is not functioning properly and service is required. Contact an authorized dealer for service.

— Tire Pressure Monitoring System (TPMS) Warning Light

The warning light switches on and a message is displayed to indicate that the tire pressure is lower than the recommended value and/or that slow pressure loss is occurring. In these cases, optimal tire duration and fuel consumption may not be guaranteed.

Should one or more tires be in the condition mentioned above, the display will show the indications corresponding to each tire.

CAUTION!

Do not continue driving with one or more flat tires as handling may be compromised. Stop the vehicle, avoiding sharp braking and steering. If a tire puncture occurs, repair immediately using the dedicated tire repair kit and contact an authorized dealer as soon as possible.

Each tire, including the spare (if provided), should be checked monthly when cold and inflated to the inflation pressure recommended by the vehicle manufacturer on the vehicle placard or tire inflation pressure label. (If your vehicle has tires of a different size than the size indicated on the vehicle placard or tire inflation pressure label, you should determine the proper tire inflation pressure for those tires.)

As an added safety feature, your vehicle has been equipped with a Tire Pressure Monitoring System (TPMS) that illuminates a low tire pressure telltale when one or more of your tires is significantly under-inflated. Accordingly, when the low tire pressure telltale illuminates, you should stop and check your tires as soon as possible, and inflate them to the proper pressure. Driving on a significantly under-inflated tire causes the tire to overheat and can lead to tire failure. Under-inflation also reduces fuel efficiency and tire tread life, and may affect the vehicle's handling and stopping ability.

Please note that the TPMS is not a substitute for proper tire maintenance, and it is the driver's responsibility to maintain correct tire pressure, even if under-inflation has not reached the level to trigger illumination of the TPMS low tire pressure telltale.

Your vehicle has also been equipped with a TPMS malfunction indicator to indicate when the system is not operating properly. The TPMS malfunction indicator is combined with the low tire pressure telltale. When the system detects a malfunction, the telltale will flash for approximately one minute and then remain continuously illuminated. This sequence will continue upon subsequent vehicle start-ups as long as the malfunction exists. When the malfunction indicator is illuminated, the system may not be able to detect or signal low tire pressure as intended. TPMS malfunctions may occur for a variety of reasons, including the installation of replacement or alternate tires or wheels on the vehicle that prevent the TPMS from functioning properly. Always check the TPMS malfunction telltale after replacing one or more tires or wheels on your vehicle to ensure that the replacement or alternate tires and wheels allow the TPMS to continue to function properly.

CAUTION!

The TPMS has been optimized for the original equipment tires and wheels. TPMS pressures and warning have been established for the tire size equipped on your vehicle. Undesirable system operation or sensor damage may result when using replacement equipment that is not of the same size, type, and/or style. Aftermarket wheels can cause sensor damage. Using aftermarket tire sealants may cause the Tire Pressure Monitoring System (TPMS) sensor to become inoperable. After using an aftermarket tire sealant it is recommended that you take your vehicle to your authorized dealer to have your sensor function checked.

Yellow Indicator Lights

— Air Suspension Active Indicator Light — If Equipped

This light will illuminate when the air suspension system is actively adjusting the ride height.

ENTRY/ EXIT **— Air Suspension Entry/Exit Indicator Light— If Equipped**

This light will illuminate when the vehicle is automatically lowered from ride height position downward for easy entry and exit of the vehicle.

AERO **— Air Suspension Aerodynamic Height Indicator Light— If Equipped**

This light will illuminate when the air suspension system is set to the Aerodynamic setting.

OFF RD 1 **— Air Suspension Off-Road 1 Indicator Light — If Equipped**

This light will illuminate when the air suspension system is set to the Off-Road 1 setting.

OFF RD 2 **— Air Suspension Off-Road 2 Indicator Light — If Equipped**

This light will illuminate when the air suspension system is set to the Off-Road 2 setting.

OFF **— Forward Collision Warning Off Indicator Light — If Equipped**

This indicator light illuminates to indicate that Forward Collision Warning is off.

4WD LOW — 4WD Low Indicator Light — If Equipped

This light alerts the driver that the vehicle is in the four-wheel drive LOW mode. The front and rear driveshafts are mechanically locked together forcing the front and rear wheels to rotate at the same speed. Low range provides a greater gear reduction ratio to provide increased torque at the wheels.

Refer to “Four-Wheel Drive Operation — If Equipped” in “Starting And Operating” for further information on four-wheel drive operation and proper use.

NEUTRAL — NEUTRAL Indicator Light — If Equipped

This light alerts the driver that the 4WD power transfer case is in the NEUTRAL mode and the front and rear driveshafts are disengaged from the powertrain.

Green Indicator Lights

— Adaptive Cruise Control (ACC) Set With No Target Detected Indicator Light — If Equipped

This light will turn on when the Adaptive Cruise Control is set and there is no target vehicle detected. Refer to "Adaptive Cruise Control (ACC) — If Equipped" in "Starting And Operating" for further information.

— Adaptive Cruise Control (ACC) Set With Target Light — If Equipped

This will display when the ACC is set and a target vehicle is detected. Refer to “Adaptive Cruise Control (ACC) — If Equipped” in “Starting And Operating” for further information.

— Cruise Control Set Indicator Light — If Equipped

This indicator light will illuminate when the cruise control is set to the desired speed. Refer to “Speed Control” in “Starting And Operating” for further information.

— Front Fog Indicator Light — If Equipped

This indicator light will illuminate when the front fog lights are on.

— LaneSense Indicator Light — If Equipped

The LaneSense indicator light illuminates solid green when both lane markings have been detected and the system is “armed” and ready to provide visual and torque warnings if an unintentional lane departure occurs.

Refer to “LaneSense — If Equipped” in “Starting And Operating” for further information.

— Park/Headlight On Indicator Light

This indicator light will illuminate when the park lights or headlights are turned on.

— Sport Mode Indicator Light

This light will turn on when Sport Mode is active.

— Stop/Start Active Indicator Light — If Equipped

This indicator light will illuminate when the Stop/Start function is in "Autostop" mode.

— Turn Signal Indicator Lights

When the left or right turn signal is activated, the turn signal indicator will flash independently and the corresponding exterior turn signal lamps will flash. Turn signals can be activated when the multifunction lever is moved down (left) or up (right).

NOTE:

- A continuous chime will sound if the vehicle is driven more than 1 mile (1.6 km) with either turn signal on.
- Check for an inoperative outside light bulb if either indicator flashes at a rapid rate.

White Indicator Lights

— Adaptive Cruise Control (ACC) Ready Light — If Equipped

This light will turn on when the vehicle equipped with Adaptive Cruise Control (ACC) has been turned on, but not set. Refer to "Adaptive Cruise Control (ACC) — If Equipped" in "Starting And Operating" for further information.

— Hill Descent Control (HDC) Indicator Light — If Equipped

This indicator shows when the Hill Descent Control (HDC) feature is turned on. The lamp will be on solid when HDC is armed. HDC can only be armed when the transfer case is in the "4WD LOW" position and the vehicle speed is less then 30 mph (48 km/h). If these conditions are not met while attempting to use the HDC feature, the HDC indicator light will flash on/off.

— LaneSense Indicator Light — If Equipped

When the LaneSense system is ON, but not armed, the LaneSense indicator light illuminates solid white. This occurs when only left, right, or neither lane line has been detected. If a single lane line is detected, the system is ready to provide only visual warnings if an unintentional lane departure occurs on the detected lane line.

Refer to "LaneSense — If Equipped" in "Starting And Operating" for further information.

— Cruise Control Ready Indicator Light

This light will turn on when the speed control has been turned on, but not set. Refer to "Speed Control — If Equipped" in "Starting And Operating" for further information.

— Selec Speed Control Indicator Light — If Equipped

This light will turn on when "Selec Speed Control" is activated.

To activate "Selec Speed Control", assure the vehicle is Four Wheel Drive Low (4WD) and push the button on the Instrument Panel.

NOTE: If the vehicle is not in 4WD Low, "To Enter Selec-Speed Shift to 4WD Low" will appear in the instrument cluster display.

Blue Indicator Lights

— High Beam Indicator Light

This indicator light will illuminate to indicate that the high beam headlights are on. With the low beams activated, push the multifunction lever forward (toward the front of the vehicle) to turn on the high beams. Pull the multifunction lever rearward (toward the rear of the vehicle) to turn off the high beams. If the high beams are off, pull the lever toward you for a temporary high beam on, "flash to pass" scenario.

ONBOARD DIAGNOSTIC SYSTEM — OBD II

Your vehicle is equipped with a sophisticated Onboard Diagnostic system called OBD II. This system monitors the performance of the emissions, engine, and transmission control systems. When these systems are operating properly, your vehicle will provide excellent performance and fuel economy, as well as engine emissions well within current government regulations.

If any of these systems require service, the OBD II system will turn on the Malfunction Indicator Light (MIL). It will also store diagnostic codes and other information to assist your service technician in making repairs. Although your vehicle will usually be drivable and not need towing, see an authorized dealer for service as soon as possible.

CAUTION!

- **Prolonged driving with the MIL on could cause further damage to the emission control system. It could also affect fuel economy and driveability. The vehicle must be serviced before any emissions tests can be performed.**
- **If the MIL is flashing while the vehicle is running, severe catalytic converter damage and power loss will soon occur. Immediate service is required.**

Onboard Diagnostic System (OBD II) Cybersecurity

Your vehicle is required to have an Onboard Diagnostic system (OBD II) and a connection port to allow access to information related to the performance of your emissions controls. Authorized service technicians may need to access this information to assist with the diagnosis and service of your vehicle and emissions system.

WARNING!

- **ONLY an authorized service technician should connect equipment to the OBD II connection port in order to read the VIN, diagnose, or service your vehicle.**
- **If unauthorized equipment is connected to the OBD II connection port, such as a driver-behavior tracking device, it may:**
  - **Be possible that vehicle systems, including safety related systems, could be impaired or a loss of vehicle control could occur that may result in an accident involving serious injury or death.**
  - **Access, or allow others to access, information stored in your vehicle systems, including personal information.**

For further information, refer to “Cybersecurity” in “Multimedia”.

EMISSIONS INSPECTION AND MAINTENANCE PROGRAMS

In some localities, it may be a legal requirement to pass an inspection of your vehicle's emissions control system. Failure to pass could prevent vehicle registration.

For states that require an Inspection and Maintenance (I/M), this check verifies the "Malfunction Indicator Light (MIL)" is functioning and is not on when the engine is running, and that the OBD II system is ready for testing.

Normally, the OBD II system will be ready. The OBD II system may **not** be ready if your vehicle was recently serviced, recently had a dead battery or a battery replacement. If the OBD II system should be determined not ready for the I/M test, your vehicle may fail the test.

Your vehicle has a simple ignition actuated test, which you can use prior to going to the test station. To check if your vehicle's OBD II system is ready, you must do the following:

1. Cycle the ignition switch to the ON position, but do not crank or start the engine.

NOTE: If you crank or start the engine, you will have to start this test over.

2. As soon as you cycle the ignition switch to the ON position, you will see the "Malfunction Indicator Light (MIL)" symbol come on as part of a normal bulb check.
3. Approximately 15 seconds later, one of two things will happen:

- The MIL will flash for about ten seconds and then return to being fully illuminated until you turn OFF the ignition or start the engine. This means that your vehicle's OBD II system is **not ready** and you should **not** proceed to the I/M station.
- The MIL will not flash at all and will remain fully illuminated until you place the ignition in the off position or start the engine. This means that your vehicle's OBD II system is **ready** and you can proceed to the I/M station.

If your OBD II system is **not ready,** you should see an authorized dealer or repair facility. If your vehicle was recently serviced or had a battery failure or replacement, you may need to do nothing more than drive your vehicle as you normally would in order for your OBD II system to update. A recheck with the above test routine may then indicate that the system is **now ready**.

Regardless of whether your vehicle's OBD II system is ready or not, if the MIL is illuminated during normal vehicle operation you should have your vehicle serviced before going to the I/M station. The I/M station can fail your vehicle because the MIL is on with the engine running.

SAFETY

CONTENTS

■ SAFETY FEATURES 166

- □ Anti-Lock Brake System (ABS) 166
- □ Electronic Brake Control System 167

■ AUXILIARY DRIVING SYSTEMS 181

- □ Blind Spot Monitoring (BSM) — If Equipped . . .181
- □ Forward Collision Warning (FCW) With Mitigation 189
- □ Tire Pressure Monitor System (TPMS) 192

■ OCCUPANT RESTRAINT SYSTEMS 198

- □ Occupant Restraint Systems Features 198
- □ Important Safety Precautions 198
- □ Seat Belt Systems 200
- □ Supplemental Restraint Systems (SRS) 212
- □ Child Restraints 225
- □ Transporting Pets 244

■ SAFETY TIPS 245

- □ Transporting Passengers 245
- □ Exhaust Gas 245
- □ Safety Checks You Should Make Inside The Vehicle 246
- □ Periodic Safety Checks You Should Make Outside The Vehicle 248

SAFETY FEATURES

Anti-Lock Brake System (ABS)

The Anti-Lock Brake System (ABS) provides increased vehicle stability and brake performance under most braking conditions. The system automatically prevents wheel lock, and enhances vehicle control during braking.

The ABS performs a self-check cycle to ensure that the ABS is working properly each time the vehicle is started and driven. During this self-check, you may hear a slight clicking sound as well as some related motor noises.

ABS is activated during braking when the system detects one or more wheels begin to lock. Road conditions such as ice, snow, gravel, bumps, railroad tracks, loose debris, or panic stops may increase the likelihood of ABS activation(s).

You also may experience the following when ABS activates:

- The ABS motor noise (it may continue to run for a short time after the stop).
- The clicking sound of solenoid valves.
- Brake pedal pulsations.
- A slight drop of the brake pedal at the end of the stop.

These are all normal characteristics of ABS.

WARNING!

- **The ABS contains sophisticated electronic equipment that may be susceptible to interference caused by improperly installed or high output radio transmitting equipment. This interference can cause possible loss of anti-lock braking capability. Installation of such equipment should be performed by qualified professionals.**
- **Pumping of the Anti-Lock Brakes will diminish their effectiveness and may lead to a collision. Pumping makes the stopping distance longer. Just press firmly on your brake pedal when you need to slow down or stop.**
- **The ABS cannot prevent the natural laws of physics from acting on the vehicle, nor can it increase braking or steering efficiency beyond that afforded by the condition of the vehicle brakes and tires or the traction afforded.**
- **The ABS cannot prevent collisions, including those resulting from excessive speed in turns, following another vehicle too closely, or hydroplaning.**

(Continued)

WARNING! *(Continued)*

- **The capabilities of an ABS equipped vehicle must never be exploited in a reckless or dangerous manner that could jeopardize the user's safety or the safety of others.**

ABS is designed to function with the OEM tires. Modification may result in degraded ABS performance.

Anti-Lock Brake Warning Light

The yellow "Anti-Lock Brake Warning Light" will turn on when the ignition is turned to the ON/RUN mode and may stay on for as long as four seconds.

If the "Anti-Lock Brake Warning Light" remains on or comes on while driving, it indicates that the anti-lock portion of the brake system is not functioning and that service is required. However, the conventional brake system will continue to operate normally if the "Anti-Lock Brake Warning Light" is on.

If the "Anti-Lock Brake Warning Light" is on, the brake system should be serviced as soon as possible to restore the benefits of anti-lock brakes. If the "Anti-Lock Brake Warning Light" does not come on when the ignition is turned to the ON/RUN mode, have the light repaired as soon as possible.

Electronic Brake Control System

Your vehicle is equipped with an advanced Electronic Brake Control system (EBC). This system includes Electronic Brake Force Distribution (EBD), Anti-Lock Brake System (ABS), Brake Assist System (BAS), Hill Start Assist (HSA), Traction Control System (TCS), Electronic Stability Control (ESC), and Electronic Roll Mitigation (ERM). These systems work together to enhance both vehicle stability and control in various driving conditions.

Your vehicle may also be equipped with Trailer Sway Control (TSC), Ready Alert Braking (RAB), Rain Brake Support (RBS), Dynamic Steering Torque (DST), Hill Descent Control (HDC), and Selec-Speed Control (SSC).

Electronic Brake Force Distribution (EBD)

This function manages the distribution of the braking torque between the front and rear axles by limiting braking pressure to the rear axle. This is done to prevent overslip of the rear wheels to avoid vehicle instability, and to prevent the rear axle from entering ABS before the front axle.

Brake System Warning Light

The red "Brake System Warning Light" will turn on when the ignition is turned to the ON/RUN mode and may stay on for as long as four seconds.

If the "Brake System Warning Light" remains on or comes on while driving, it indicates that the brake system is not functioning properly and that immediate service is required. If the "Brake System Warning Light" does not come on when the ignition is turned to the ON/RUN mode, have the light repaired as soon as possible.

Brake Assist System (BAS)

The BAS is designed to optimize the vehicle's braking capability during emergency braking maneuvers. The system detects an emergency braking situation by sensing the rate and amount of brake application and then applies optimum pressure to the brakes. This can help reduce braking distances. The BAS complements the anti-lock brake system (ABS). Applying the brakes very quickly results in the best BAS assistance. To receive the benefit of the system, you must apply continuous braking pressure during the stopping sequence, (do not "pump" the brakes). Do not reduce brake pedal pressure unless braking is no longer desired. Once the brake pedal is released, the BAS is deactivated.

WARNING!

The Brake Assist System (BAS) cannot prevent the natural laws of physics from acting on the vehicle, nor can it increase the traction afforded by prevailing road conditions. BAS cannot prevent collisions, including those resulting from excessive speed in turns, driving on very slippery surfaces, or hydroplaning. The capabilities of a BAS-equipped vehicle must never be exploited in a reckless or dangerous manner, which could jeopardize the user's safety or the safety of others.

Hill Start Assist (HSA)

The HSA system is designed to mitigate roll back from a complete stop while on an incline. If the driver releases the brake while stopped on an incline, HSA will continue to hold the brake pressure for a short period. If the driver does not apply the throttle before this time expires, the system will release brake pressure and the vehicle will roll down the hill as normal.

The following conditions must be met in order for HSA to activate:

- The feature must be enabled.
- The vehicle must be stopped.
- Park brake must be off.
- Driver door must be closed.
- The vehicle must be on a sufficient grade.
- The gear selection must match vehicle uphill direction (i.e., vehicle facing uphill is in forward gear; vehicle backing uphill is in REVERSE gear).
- HSA will work in REVERSE gear and all forward gears. The system will not activate if the transmission is in PARK or NEUTRAL. For vehicles equipped with a manual transmission, if the clutch is pressed, HSA will remain active.

WARNING!

There may be situations where the Hill Start Assist (HSA) will not activate and slight rolling may occur, such as on minor hills or with a loaded vehicle, or while pulling a trailer. HSA is not a substitute for active driving involvement. It is always the driver's responsibility to be attentive to distance to other vehicles, people, and objects, and most importantly brake operation to ensure safe operation of the vehicle under all road conditions. Your complete attention is always required while driving to maintain safe control of your vehicle. Failure to follow these warnings can result in a collision or serious personal injury.

Disabling And Enabling HSA

This feature can be turned on or turned off. To change the current setting, proceed as follows:

- If disabling HSA using your instrument cluster display, refer to "Instrument Cluster Display" in "Getting To Know Your Instrument Panel" for further information.
- If disabling HSA using Uconnect Settings, refer to "Uconnect Settings" in "Multimedia" for further information.

For vehicles not equipped with an instrument cluster display, perform the following steps:

1. Center the steering wheel (front wheels pointing straight forward).
2. Shift the transmission into PARK.
3. Apply the parking brake.
4. Start the engine.
5. Rotate the steering wheel slightly more than one-half turn to the left.
6. Push the "ESC Off" button located in the lower switch bank below the climate control four times within 20 seconds. The "ESC Off Indicator Light" should turn on and turn off two times.
7. Rotate the steering wheel back to center and then an additional slightly more than one-half turn to the right.
8. Turn the ignition to the OFF mode and then back to ON. If the sequence was completed properly, the "ESC Off Indicator Light" will blink several times to confirm HSA is disabled.
9. Repeat these steps if you want to return this feature to its previous setting.

Towing With HSA

HSA will also provide assistance to mitigate roll back while towing a trailer.

WARNING!

- **If you use a trailer brake controller with your trailer, the trailer brakes may be activated and deactivated with the brake switch. If so, there may not be enough brake pressure to hold both the vehicle and the trailer on a hill when the brake pedal is released. In order to avoid rolling down an incline while resuming acceleration, manually activate the trailer brake or apply more vehicle brake pressure prior to releasing the brake pedal.**
- **HSA is not a parking brake. Always apply the parking brake fully when exiting your vehicle. Also, be certain to place the transmission in PARK.**
- **Failure to follow these warnings can result in a collision or serious personal injury.**

Traction Control System (TCS)

This system monitors the amount of wheel spin of each of the driven wheels. If wheel spin is detected, the TCS may apply brake pressure to the spinning wheel(s) and/or reduce engine power to provide enhanced acceleration and stability. A feature of the TCS, Brake Limited Differential (BLD), functions similar to a limited slip differential and controls the wheel spin across a driven axle. If one wheel on a driven axle is spinning faster than the other, the system will apply the brake of the spinning wheel. This will allow more engine power to be applied to the wheel that is not spinning. BLD may remain enabled even if TCS and ESC are in a reduced mode.

Electronic Stability Control (ESC)

This system enhances directional control and stability of the vehicle under various driving conditions. ESC corrects for oversteering or understeering of the vehicle by applying the brake of the appropriate wheel(s) to assist in counteracting the oversteer or understeer condition. Engine power may also be reduced to help the vehicle maintain the desired path.

ESC uses sensors in the vehicle to determine the vehicle path intended by the driver and compares it to the actual path of the vehicle. When the actual path does not match the intended path, ESC applies the brake of the appropriate wheel to assist in counteracting the oversteer or understeer condition.

- Oversteer — when the vehicle is turning more than appropriate for the steering wheel position.
- Understeer — when the vehicle is turning less than appropriate for the steering wheel position.

The “ESC Activation/Malfunction Indicator Light” located in the instrument cluster will start to flash as soon as the ESC system becomes active. The “ESC Activation/Malfunction Indicator Light” also flashes when the TCS is active. If the “ESC Activation/Malfunction Indicator Light” begins to flash during acceleration, ease up on the accelerator and apply as little throttle as possible. Be sure to adapt your speed and driving to the prevailing road conditions.

WARNING!

- **Electronic Stability Control (ESC) cannot prevent the natural laws of physics from acting on the vehicle, nor can it increase the traction afforded by prevailing road conditions. ESC cannot prevent accidents, including those resulting from excessive speed in turns, driving on very slippery surfaces, or hydroplaning. ESC also cannot prevent accidents resulting from loss of vehicle control due to inappropriate driver input for the conditions. Only a safe, attentive, and skillful driver can prevent accidents. The capabilities of an ESC equipped vehicle must never be exploited in a reckless or dangerous manner which could jeopardize the user's safety or the safety of others.**
- **Vehicle modifications, or failure to properly maintain your vehicle, may change the handling characteristics of your vehicle, and may negatively affect the performance of the ESC system. Changes to the steering system, suspension, braking system, tire type and size or wheel size may adversely affect ESC performance. Improperly inflated and unevenly worn tires may also degrade ESC performance. Any**

(Continued)

WARNING! *(Continued)*

vehicle modification or poor vehicle maintenance that reduces the effectiveness of the ESC system can increase the risk of loss of vehicle control, vehicle rollover, personal injury and death.

ESC Operating Modes

NOTE: Depending upon model and mode of operation, the ESC system may have multiple operating modes.

ESC On

This is the normal operating mode for the ESC. Whenever the vehicle is started, the ESC system will be in this mode. This mode should be used for most driving conditions. Alternate ESC modes should only be used for specific reasons as noted in the following paragraphs.

Partial Off

The "Partial Off" mode is intended for times when a more spirited driving experience is desired. This mode may modify TCS and ESC thresholds for activation, which allows for more wheel spin than normally allowed. This mode may be useful if the vehicle becomes stuck.

To enter the "Partial Off" mode, momentarily push the "ESC Off" switch and the "ESC Off Indicator Light" will illuminate. To turn the ESC on again, momentarily push the "ESC Off" switch and the "ESC Off Indicator Light" will turn off.

NOTE: For vehicles with multiple partial ESC modes a momentary button push will toggle the ESC mode. Multiple momentary button pushed may be required to return to ESC On.

WARNING!

- **When in "Partial Off" mode, the TCS functionality of ESC, (except for the limited slip feature described in the TCS section), has been disabled and the "ESC Off Indicator Light" will be illuminated. When in "Partial Off" mode, the engine power reduction feature of TCS is disabled, and the enhanced vehicle stability offered by the ESC system is reduced.**
- **Trailer Sway control (TSC) is disabled when the ESC system is in the "Partial Off" mode.**

ESC Activation/Malfunction Indicator Light And ESC OFF Indicator Light

The "ESC Activation/Malfunction Indicator Light" in the instrument cluster will come on when the ignition is turned to the ON mode. It should go out with the engine running. If the "ESC Activation/Malfunction Indicator Light" comes on continuously with the engine running, a malfunction has been detected in the ESC system. If this light remains on after several ignition cycles, and the vehicle has been driven several miles (kilometers) at speeds greater than 30 mph (48 km/h), see an authorized dealer as soon as possible to have the problem diagnosed and corrected.

The "ESC Activation/Malfunction Indicator Light" (located in the instrument cluster) starts to flash as soon as the tires lose traction and the ESC system becomes active. The "ESC Activation/Malfunction Indicator Light" also flashes when TCS is active. If the "ESC Activation/Malfunction Indicator Light" begins to flash during acceleration, ease up on the accelerator and apply as little throttle as possible. Be sure to adapt your speed and driving to the prevailing road conditions.

NOTE:

- The "ESC Activation/Malfunction Indicator Light" and the "ESC OFF Indicator Light" come on momentarily each time the ignition is turned ON.
- Each time the ignition is turned ON, the ESC system will be on even if it was turned off previously.
- The ESC system will make buzzing or clicking sounds when it is active. This is normal; the sounds will stop when ESC becomes inactive following the maneuver that caused the ESC activation.

The "ESC OFF Indicator Light" indicates the customer has elected to have the Electronic Stability Control (ESC) in a reduced mode.

Electronic Roll Mitigation (ERM)

This system anticipates the potential for wheel lift by monitoring the driver's steering wheel input and the speed of the vehicle. When ERM determines that the rate of change of the steering wheel angle and vehicle's speed are sufficient to potentially cause wheel lift, it then applies the appropriate brake and may also reduce engine power to lessen the chance that wheel lift will occur. ERM can only reduce the chance of wheel lift occurring during severe or evasive driving maneuvers; it cannot prevent wheel lift due to other factors, such as road conditions, leaving the roadway, or striking objects or other vehicles.

NOTE: ERM is disabled anytime the ESC is in "Full Off" mode (if equipped). Refer to "Electronic Stability Control (ESC)" in this section for a complete explanation of the available ESC modes.

WARNING!

Many factors, such as vehicle loading, road conditions and driving conditions, influence the chance that wheel lift or rollover may occur. ERM cannot prevent all wheel lift or roll overs, especially those that involve leaving the roadway or striking objects or other vehicles. The capabilities of an ERM-equipped vehicle must never be exploited in a reckless or dangerous manner which could jeopardize the user's safety or the safety of others.

Trailer Sway Control (TSC)

TSC uses sensors in the vehicle to recognize an excessively swaying trailer and will take the appropriate actions to attempt to stop the sway. TSC will become active automatically once an excessively swaying trailer is recognized.

NOTE: TSC cannot stop all trailers from swaying. Always use caution when towing a trailer and follow the trailer tongue weight recommendations. Refer to "Trailer Towing" in "Starting And Operating" for further information.

When TSC is functioning, the "ESC Activation/ Malfunction Indicator Light" will flash, the engine power may be reduced and you may feel the brakes being applied to individual wheels to attempt to stop the trailer from swaying. TSC is disabled when the ESC system is in the "Partial Off" or "Full Off" modes.

WARNING!

If TSC activates while driving, slow the vehicle down, stop at the nearest safe location, and adjust the trailer load to eliminate trailer sway.

Ready Alert Braking (RAB)

Ready Alert Braking may reduce the time required to reach full braking during emergency braking situations. It anticipates when an emergency braking situation may occur by monitoring how fast the throttle is released by the driver. The EBC will prepare the brake system for a panic stop.

Rain Brake Support (RBS)

Rain Brake Support may improve braking performance in wet conditions. It will periodically apply a small amount of brake pressure to remove any water buildup on the front brake rotors. It functions when the windshield wipers are in LO or HI speed. When Rain Brake Support is active, there is no notification to the driver and no driver interaction is required.

Dynamic Steering Torque (DST)

Dynamic Steering Torque is a feature of the ESC and Electric Power Steering (EPS) modules that provides torque at the steering wheel for certain driving conditions in which the ESC module is detecting vehicle instability. The torque that the steering wheel receives is only meant to help the driver realize optimal steering behavior in order to reach/maintain vehicle stability. The only notification the driver receives that the feature is active is the torque applied to the steering wheel.

NOTE: The DST feature is only meant to help the driver realize the correct course of action through small torques on the steering wheel, which means the effectiveness of the DST feature is highly dependent on the driver's sensitivity and overall reaction to the applied torque. It is very important to realize that this feature will not steer the vehicle, meaning the driver is still responsible for steering the vehicle.

Hill Descent Control (HDC) — If Equipped

HDC is intended for low speed off road driving while in 4WD Low Range. HDC maintains vehicle speed while descending hills during various driving situations. HDC controls vehicle speed by actively controlling the brakes.

HDC Has Three States:

1. Off (feature is not enabled and will not activate).
2. Enabled (feature is enabled and ready but activation conditions are not met, or driver is actively overriding with brake or throttle application).
3. Active (feature is enabled and actively controlling vehicle speed).

Enabling HDC

HDC is enabled by pushing the HDC switch, but the following conditions must also be met to enable HDC:

- Driveline is in 4WD Low Range.
- Vehicle speed is below 5 mph (8 km/h).
- Parking brake is released.
- Driver door is closed.

Activating HDC

Once HDC is enabled it will activate automatically if driven down a grade of sufficient magnitude. The set speed for HDC is selectable by the driver, and can be adjusted by using the gear shift +/-. The following summarizes the HDC set speeds:

HDC Target Set Speeds

- P = No set speed. HDC may be enabled but will not activate.
- R = 0.6 mph (1 km/h)
- N = 1.2 mph (2 km/h)

- D = 0.6 mph (1 km/h)
- 1st = 0.6 mph (1 km/h)
- 2nd = 1.2 mph (2 km/h)
- 3rd = 1.8 mph (3 km/h)
- 4th = 2.5 mph (4 km/h)
- 5th = 3.1 mph (5 km/h)
- 6th = 3.7 mph (6 km/h)
- 7th = 4.3 mph (7 km/h)
- 8th = 5.0 mph (8 km/h)
- 9th = 5.6 mph (9 km/h) – If Equipped

NOTE: During HDC the +/- shifter input is used for HDC target speed selection, but will not affect the gear chosen by the transmission. When actively controlling HDC the transmission will shift appropriately for the driver-selected set speed and corresponding driving conditions.

Driver Override

The driver may override HDC activation with throttle or brake application at anytime.

Deactivating HDC

HDC will be deactivated but remain available if any of the following conditions occur:

- Driver overrides HDC set speed with throttle or brake application.
- Vehicle speed exceeds 20 mph (32 km/h) but remains below 40 mph (64 km/h).
- Vehicle is on a downhill grade of insufficient magnitude, is on level ground, or is on an uphill grade.
- Vehicle is shifted to park.

Disabling HDC

HDC will be deactivated and disabled if any of the following conditions occur:

- The driver pushes the HDC switch.
- The driveline is shifted out of 4WD Low Range.
- The parking brake is applied.
- Driver door opens.
- The vehicle is driven greater than 20 mph (32 km/h) for greater than 70 seconds.

- The vehicle is driven greater than 40 mph (64 km/h) (HDC exits immediately).
- HDC detects excessive brake temperature.

Feedback To The Driver

The instrument cluster has an HDC icon and the HDC switch has an LED icon, which offers feedback to the driver about the state HDC is in.

- The cluster icon and switch lamp will illuminate and remain on solid when HDC is enabled or activated. This is the normal operating condition for HDC.
- The cluster icon and switch lamp will flash for several seconds then extinguish when the driver pushes the HDC switch but enable conditions are not met.
- The cluster icon and switch lamp will flash for several seconds then extinguish when HDC disables due to excess speed.
- The cluster icon and switch lamp will flash when HDC deactivates due to overheated brakes. The flashing will stop and HDC will activate again once the brakes have cooled sufficiently.

WARNING!

HDC is only intended to assist the driver in controlling vehicle speed when descending hills. The driver must remain attentive to the driving conditions and is responsible for maintaining a safe vehicle speed.

Selec Speed Control (SSC) — If Equipped

SSC is intended for off road driving in 4WD Low Range only. SSC maintains vehicle speed by actively controlling engine torque and brakes.

SSC has three states:

1. Off (feature is not enabled and will not activate).
2. Enabled (feature is enabled and ready but activation conditions are not met, or driver is actively overriding with brake or throttle application).
3. Active (feature is enabled and actively controlling vehicle speed).

Enabling SSC

SSC is enabled by pushing the SSC switch, but the following conditions must also be met to enable SSC:

- Driveline is in 4WD Low Range.

- Vehicle speed is below 5 mph (8 km/h).
- Parking brake is released.
- Driver door is closed.
- Driver is not applying throttle.

Activating SSC

Once SSC is enabled it will activate automatically once the following conditions are met:

- Driver releases throttle.
- Driver releases brake.
- Transmission is in any selection other than P.
- Vehicle speed is below 20 mph (32 km/h).

The set speed for SSC is selectable by the driver, and can be adjusted by using the gear shift +/-. Additionally, the SSC set speed may be reduced when climbing a grade and the level of set speed reduction depends on the magnitude of grade. The following summarizes the SSC set speeds:

SSC Target Set Speeds

- 1st = .6 mph (1 km/h)
- 2nd = 1.2 mph (2 km/h)
- 3rd = 1.8 mph (3 km/h)
- 4th = 2.5 mph (4 km/h)
- 5th = 3.1 mph (5 km/h)
- 6th = 3.7 mph (6 km/h)
- 7th = 4.3 mph (7 km/h)
- 8th = 5 mph (8 km/h)
- 9th = 5.6 mph (9 km/h) – If Equipped
- REVERSE = .6 mph (1 km/h)
- NEUTRAL = 1.2 mph (2 km/h)
- PARK = SSC remains enabled but not active

NOTE:

- During SSC the +/- shifter input is used for SSC target speed selection but will not affect the gear chosen by the transmission. While actively controlling SSC the transmission will shift appropriately for the driver-selected set speed and corresponding driving conditions.
- SSC performance is influenced by the Terrain Select mode. This difference may be notable to the driver and may be perceived as a varying level of aggressiveness.

Driver Override:

The driver may override SSC activation with throttle or brake application at any time.

Deactivating SSC

SSC will be deactivated but remain available if any of the following conditions occur:

- Driver overrides SSC set speed with throttle or brake application.
- Vehicle speed exceeds 20 mph (32 km/h) but remains below 40 mph (64 km/h).
- Vehicle is shifted to PARK.

Disabling SSC

SSC will deactivate and be disabled if any of the following conditions occur:

- The driver pushes the SSC switch.
- The driveline is shifted out of 4WD Low Range.
- The parking brake is applied.
- Driver door opens.
- The vehicle is driven greater than 20 mph (32 km/h) for greater than 70 seconds.
- The vehicle is driven greater than 40 mph (64 km/h) (SSC exits immediately).

Feedback To The Driver:

The instrument cluster has an SSC icon and the SSC switch has an LED which offer feedback to the driver about the state SSC is in.

- The cluster icon and switch lamp will illuminate and remain on solid when SSC is enabled or activated. This is the normal operating condition for SSC.
- The cluster icon and switch lamp will flash for several seconds then extinguish when the driver pushes the SSC switch but enable conditions are not met.
- The cluster icon and switch lamp will flash for several seconds then extinguish when SSC disables due to excess speed.
- The cluster icon and switch lamp will flash then extinguish when SSC deactivates due to overheated brakes.

WARNING!

SSC is only intended to assist the driver in controlling vehicle speed when driving in off road conditions. The driver must remain attentive to the driving conditions and is responsible for maintaining a safe vehicle speed.

AUXILIARY DRIVING SYSTEMS

Blind Spot Monitoring (BSM) — If Equipped

The Blind Spot Monitoring (BSM) system uses two radar sensors, located inside the rear bumper fascia, to detect highway licensable vehicles (automobiles, trucks, motorcycles, etc.) that enter the blind spot zones from the rear/front/side of the vehicle.

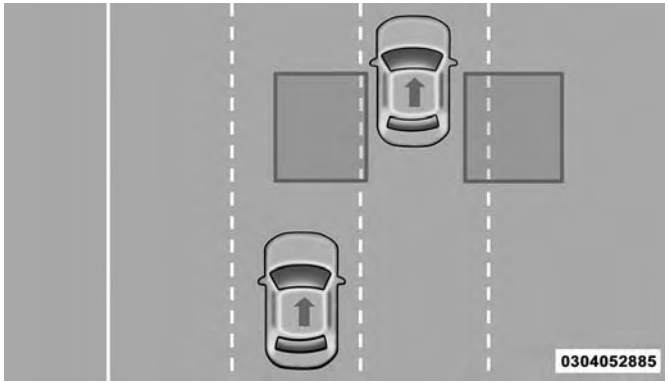

Rear Detection Zones

When the vehicle is started, the BSM warning light will momentarily illuminate in both outside rear view mirrors to let the driver know that the system is operational. The BSM system sensors operate when the vehicle is in any forward gear or REVERSE.

The BSM detection zone covers approximately one lane width on both sides of the vehicle 12 ft (3.8 m). The zone length starts at the side of the vehicle, near the B-Pillar, and extends approximately 10 ft (3 m) beyond the rear bumper of the vehicle. The BSM system monitors the detection zones on both sides of the vehicle when the vehicle speed reaches approximately 6 mph (10 km/h) or higher and will alert the driver of vehicles in these areas.

NOTE:

- The BSM system DOES NOT alert the driver about rapidly approaching vehicles that are outside the detection zones.
- The BSM system detection zone DOES NOT change if your vehicle is towing a trailer. Therefore, visually verify the adjacent lane is clear for both your vehicle and trailer before making a lane change. If the trailer or other object (i.e., bicycle, sports equipment) extends beyond the side of your vehicle, this may result in random false detections on the trailer, and false chimes when the turn signal is used.
- The BSM system may experience drop outs (blinking on and off) of the side mirror Warning Indicator lamps when a motorcycle or any small object remains at the side of the vehicle for extended periods of time (more than a couple of seconds).

The area on the rear fascia where the radar sensors are located must remain free of snow, ice, and dirt/road contamination so that the BSM system can function properly. Do not block the area of the rear fascia where the radar sensors are located with foreign objects (bumper stickers, bicycle racks, etc.).

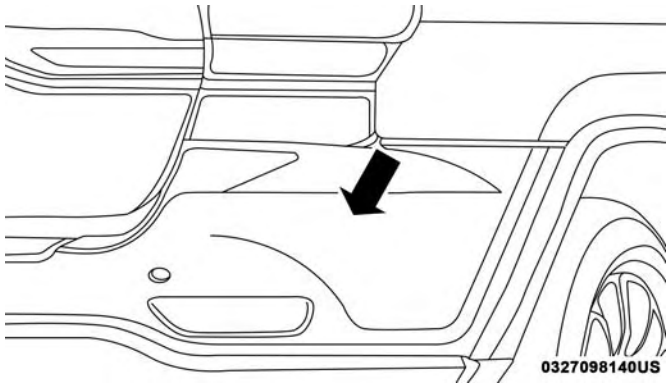

Sensor Location

The BSM system notifies the driver of objects in the detection zones by illuminating the BSM warning light located in the outside mirrors. In addition, when the turn signal is activated during the alert on the side of the vehicle corresponding to the alert, an audible (chime) alert can be heard. During this audible (chime) alert, the radio volume will be reduced. Refer to "Modes Of Operation" in this section for further information.

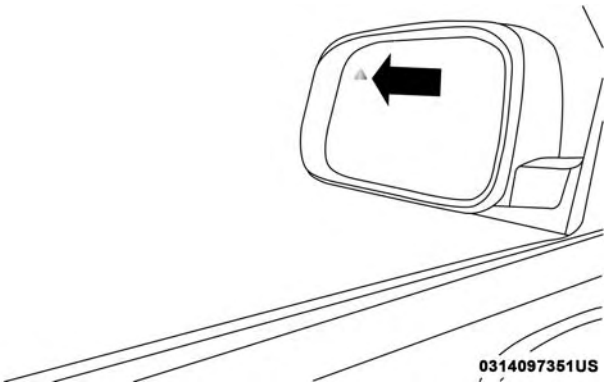

Warning Light Location

The BSM system monitors the detection zone from three different entry points (side, rear, front) while driving to see if an alert is necessary. The BSM system will issue an alert during these types of zone entries.

Entering From The Side

Vehicles that move into your adjacent lanes from either side of the vehicle.

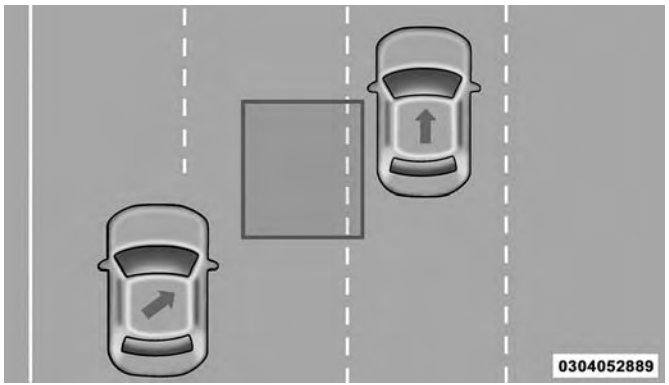

Side Monitoring

Entering From The Rear

Vehicles that come up from behind your vehicle on either side and enter the rear detection zone with a relative speed of less than 30 mph (48 km/h).

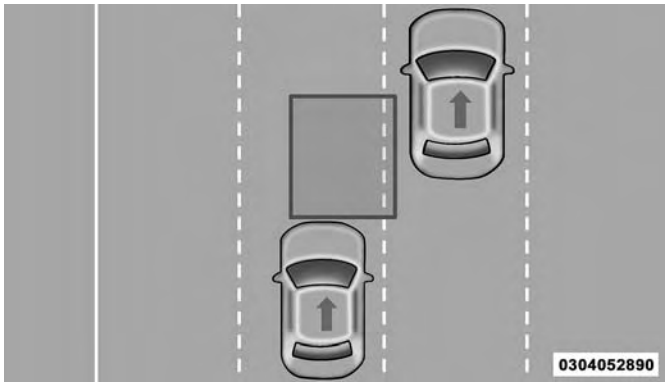

Rear Monitoring

Overtaking Traffic

If you pass another vehicle slowly with a relative speed less than 15 mph (24 km/h) and the vehicle remains in the blind spot for approximately 1.5 seconds, the warning light will be illuminated. If the difference in speed between the two vehicles is greater than 15 mph (24 km/h), the warning light will not illuminate.

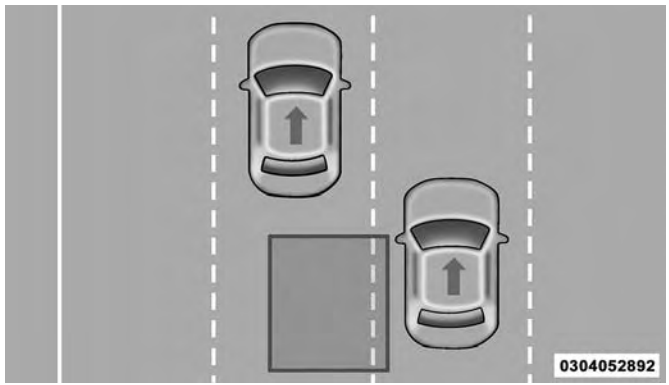

Overtaking/Approaching

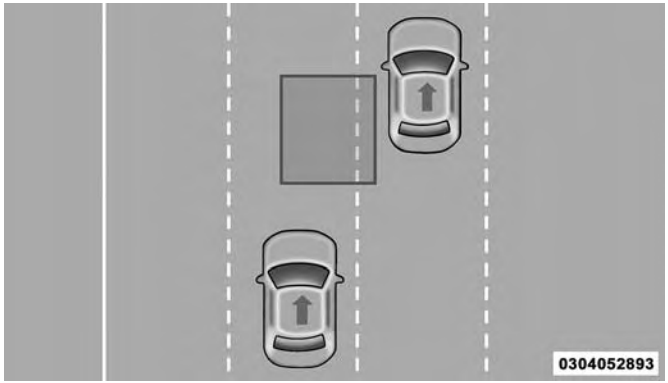

Overtaking/Passing

The BSM system is designed not to issue an alert on stationary objects such as guardrails, posts, walls, foliage, berms, etc. However, occasionally the system may alert on such objects. This is normal operation and your vehicle does not require service.

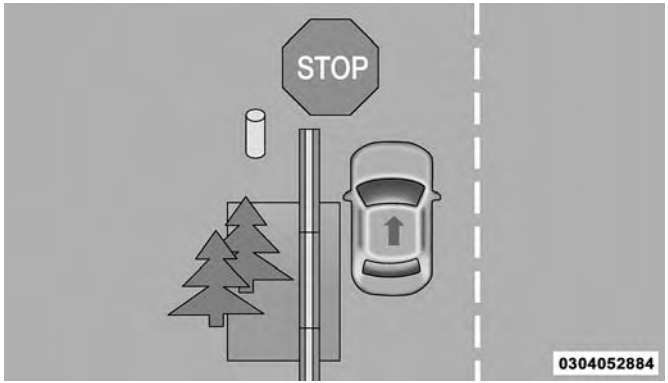

Stationary Objects

The BSM system will not alert you of objects that are traveling in the opposite direction of the vehicle in adjacent lanes.

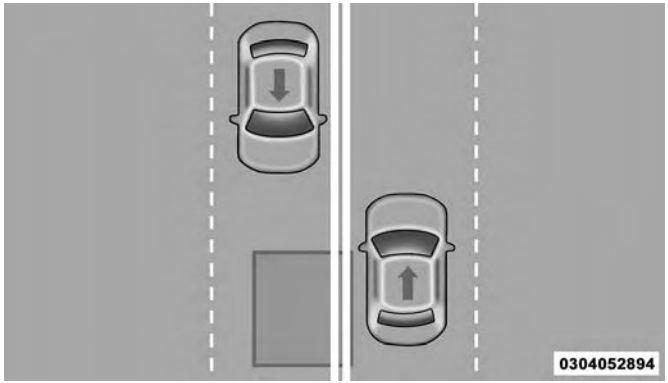

Opposing Traffic

WARNING!

The Blind Spot Monitoring system is only an aid to help detect objects in the blind spot zones. The BSM system is not designed to detect pedestrians, bicyclists, or animals. Even if your vehicle is equipped with the BSM system, always check your vehicle's mirrors, glance over your shoulder, and use your turn signal before changing lanes. Failure to do so can result in serious injury or death.

Rear Cross Path (RCP)

The Rear Cross Path (RCP) feature is intended to aid the driver when backing out of parking spaces where their vision of oncoming vehicles may be blocked. Proceed slowly and cautiously out of the parking space until the rear end of the vehicle is exposed. The RCP system will then have a clear view of the cross traffic and if an oncoming vehicle is detected, alert the driver.

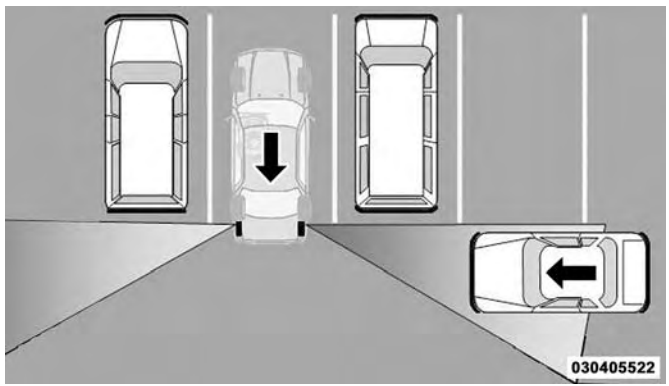

RCP Detection Zones

RCP monitors the rear detection zones on both sides of the vehicle, for objects that are moving toward the side of the vehicle with a minimum speed of approximately 5 mph

(8 km/h), to objects moving a maximum of approximately 20 mph (32 km/h), such as in parking lot situations.

NOTE: In a parking lot situation, oncoming vehicles can be obscured by vehicles parked on either side. If the sensors are blocked by other structures or vehicles, the system will not be able to alert the driver.

When RCP is on and the vehicle is in REVERSE, the driver is alerted using both the visual and audible alarms, including reducing the radio volume.

WARNING!

Rear Cross Path Detection (RCP) is not a back up aid system. It is intended to be used to help a driver detect an oncoming vehicle in a parking lot situation. Drivers must be careful when backing up, even when using RCP. Always check carefully behind your vehicle, look behind you, and be sure to check for pedestrians, animals, other vehicles, obstructions, and blind spots before backing up. Failure to do so can result in serious injury or death.

Modes Of Operation

Three selectable modes of operation are available in the Uconnect System. Refer to "Uconnect Settings" in "Multimedia" for further information.

Blind Spot Alert Lights Only

When operating in Blind Spot Alert mode, the BSM system will provide a visual alert in the appropriate side view mirror based on a detected object. However, when the system is operating in Rear Cross Path (RCP) mode, the system will respond with both visual and audible alerts when a detected object is present. Whenever an audible alert is requested, the radio is muted.

Blind Spot Alert Lights/Chime

When operating in Blind Spot Alert Lights/Chime mode, the BSM system will provide a visual alert in the appropriate side view mirror based on a detected object. If the turn signal is then activated, and it corresponds to an alert present on that side of the vehicle, an audible chime will also be sounded. Whenever a turn signal and detected object are present on the same side at the same time, both the visual and audible alerts will be issued. In addition to the audible alert the radio (if on) will also be muted.

NOTE: Whenever an audible alert is requested by the BSM system, the radio is also muted.

When the system is in RCP, the system shall respond with both visual and audible alerts when a detected object is present. Whenever an audible alert is requested, the radio is also muted. Turn/hazard signal status is ignored; the RCP state always requests the chime.

Blind Spot Alert Off

When the BSM system is turned off there will be no visual or audible alerts from either the BSM or RCP systems.

NOTE: The BSM system will store the current operating mode when the vehicle is shut off. Each time the vehicle is started the previously stored mode will be recalled and used.

General Information

The following regulatory statement applies to all Radio Frequency (RF) devices equipped in this vehicle:

This device complies with Part 15 of the FCC Rules and with Industry Canada license-exempt RSS standard(s). Operation is subject to the following two conditions:

1. This device may not cause harmful interference.
2. This device must accept any interference received, including interference that may cause undesired operation.

NOTE: Changes or modifications not expressly approved by the party responsible for compliance could void the user's authority to operate the equipment.

Forward Collision Warning (FCW) With Mitigation

The Forward Collision Warning (FCW) with Mitigation system provides the driver with audible warnings, visual warnings (within the instrument cluster display), and may apply a brake jerk to warn the driver when it detects a potential frontal collision. The warnings and limited braking are intended to provide the driver with enough time to react, avoid or mitigate the potential collision.

NOTE: FCW monitors the information from the forward looking sensors as well as the Electronic Brake Controller (EBC), to calculate the probability of a forward collision. When the system determines that a forward collision is probable, the driver will be provided with audible and visual warnings and may provide a brake jerk warning. If the driver does not take action based upon these progressive warnings, then the system will provide a limited level of active braking to help slow the vehicle and mitigate the potential forward collision. If the driver reacts to the warnings by braking and the system determines that the driver intends to avoid the collision by braking but has not applied sufficient brake force, the system will compensate and provide additional brake force as required.

If a Forward Collision Warning with Mitigation event begins at a speed below 26 mph (42 km/h), the system may provide the maximum or partial braking to mitigate the potential forward collision. If the Forward Collision Warning with Mitigation event stops the vehicle completely, the system will hold the vehicle at a standstill for two seconds and then release the brakes.

FCW Message

When the system determines a collision with the vehicle in front of you is no longer probable, the warning message will be deactivated.

NOTE:

- The minimum speed for FCW activation is 1 mph (2 km/h).
- The FCW alerts may be triggered on objects other than vehicles such as guard rails or sign posts based on the course prediction. This is expected and is a part of normal FCW activation and functionality.
- It is unsafe to test the FCW system. To prevent such misuse of the system, after four Active Braking events within an ignition cycle, the Active Braking portion of FCW will be deactivated until the next ignition cycle.
- The FCW system is intended for on-road use only. If the vehicle is taken off-road, the FCW system should be deactivated to prevent unnecessary warnings to the surroundings. If the vehicle enters 4WD Low Range or ESC Full-Off Mode is active, the FCW system will be automatically deactivated.

WARNING!

Forward Collision Warning (FCW) is not intended to avoid a collision on its own, nor can FCW detect every type of potential collision. The driver has the responsibility to avoid a collision by controlling the vehicle via braking and steering. Failure to follow this warning could lead to serious injury or death.

FCW Braking Status And Sensitivity

The FCW Sensitivity and Active Braking status are programmable through the Uconnect System. Refer to “Uconnect Settings” in “Multimedia” for further information.

The default sensitivity of FCW is the “Medium” setting and the system status is “Warning & Braking”. This allows the system to warn the driver of a possible collision with the vehicle in front using audible/visual warnings and it applies autonomous braking.

Changing the FCW status to “Far” setting allows the system to warn the driver of a possible collision with the vehicle in front using audible/visual warning when the

latter is at a farther distance than "Medium" setting. This provides the most reaction time to avoid a possible collision.

Changing the FCW status to the "Near" setting, allows the system to warn the driver of a possible collision with the vehicle in front when the distance between the vehicle in the front is much closer. This setting provides less reaction time than the "Far" and "Medium" settings, which allows for a more dynamic driving experience.

NOTE:

- Changing the FCW status to "Only Warning" prevents the system from providing limited active braking, or additional brake support if the driver is not braking adequately in the event of a potential frontal collision, but maintains the audible and visual warnings.
- Changing the FCW status to "Off" prevents the system from providing autonomous braking, or additional brake support if the driver is not braking adequately in the event of a potential frontal collision.
- The system will retain the last setting selected by the driver after ignition shut down.
- FCW may not react to irrelevant objects such as overhead objects, ground reflections, objects not in the path of the vehicle, stationary objects that are far away, oncoming traffic, or leading vehicles with the same or higher rate of speed.
- FCW will be disabled like ACC, with the unavailable screens.

FCW Limited Warning

If the instrument cluster displays "ACC/FCW Limited Functionality" or "ACC/FCW Limited Functionality Clean Front Windshield" momentarily, there may be a condition that limits FCW functionality. Although the vehicle is still drivable under normal conditions, the active braking may not be fully available. Once the condition that limited the system performance is no longer present, the system will return to its full performance state. If the problem persists, see your authorized dealer.

Service FCW Warning

If the system turns off, and the instrument cluster displays:

- ACC/FCW Unavailable Service Required
- Cruise/FCW Unavailable Service Required

This indicates there is an internal system fault. Although the vehicle is still drivable under normal conditions, have the system checked by an authorized dealer.

General Information

The following regulatory statement applies to all Radio Frequency (RF) devices equipped in this vehicle:

This device complies with Part 15 of the FCC Rules and with Industry Canada license-exempt RSS standard(s). Operation is subject to the following two conditions:

1. This device may not cause harmful interference.
2. This device must accept any interference received, including interference that may cause undesired operation.

NOTE: Changes or modifications not expressly approved by the party responsible for compliance could void the user's authority to operate the equipment.

Tire Pressure Monitor System (TPMS)

The Tire Pressure Monitoring System (TPMS) will warn the driver of a low tire pressure based on the vehicle recommended cold tire pressure.

The tire pressure will vary with temperature by about 1 psi (7 kPa) for every 12°F (6.5°C). This means that when the outside temperature decreases, the tire pressure will decrease. Tire pressure should always be set based on cold inflation tire pressure. This is defined as the tire pressure after the vehicle has not been driven for at least three hours, or driven less than 1 mile (1.6 km) after a three-hour period. **Refer to "Tires" in "Servicing And Maintenance" for information on how to properly inflate the vehicle's tires.** The tire pressure will also increase as the vehicle is driven - this is normal and there should be no adjustment for this increased pressure.

The TPMS will warn the driver of a low tire pressure if the tire pressure falls below the low pressure warning threshold for any reason, including low temperature effects, or natural pressure loss through the tire.

The TPMS will continue to warn the driver of low tire pressure as long as the condition exists, and will not turn off until the tire pressure is at or above recommended cold tire pressure. Once the low tire pressure warning has been illuminated, the tire pressure must be increased to the recommended cold tire pressure in order for the TPMS Warning Light to be turned off.

NOTE: When filling warm tires, the tire pressure may need to be increased up to an additional 4 psi (28 kPa) above the recommended cold placard pressure in order to turn the TPMS Warning Light off.

The system will automatically update and the TPMS Warning Light will extinguish once the updated tire pressures have been received. The vehicle may need to be driven for up to 20 minutes above 15 mph (24 km/h) to receive this information.

For example, your vehicle has a recommended cold (parked for more than three hours) tire pressure of 33 psi (227 kPa). If the ambient temperature is 68°F (20°C) and the measured tire pressure is 28 psi (193 kPa), a temperature drop to 20°F (-7°C) will decrease the tire pressure to approximately 24 psi (165 kPa). This tire pressure is sufficiently low enough to turn on the TPMS Warning Light. Driving the vehicle may cause the tire pressure to rise to approximately 28 psi (193 kPa), but the TPMS Warning Light will still be on. In this situation, the TPMS Warning Light will turn off only after the tires have been inflated to the vehicle's recommended cold tire pressure value.

CAUTION!

- **The TPMS has been optimized for the original equipment tires and wheels. TPMS pressures and warnings have been established for the tire size equipped on your vehicle. Undesirable system operation or sensor damage may result when using replacement equipment that is not of the same size, type, and/or style. The TPM sensor is not designed for use on aftermarket wheels and may contribute to a poor overall system performance or sensor damage. Customers are encouraged to use OEM wheels to assure proper TPM feature operation.**
- **Using aftermarket tire sealants may cause the Tire Pressure Monitoring System (TPMS) sensor to become inoperable. After using an aftermarket tire sealant it is recommended that you take your vehicle to an authorized dealership to have your sensor function checked.**
- **After inspecting or adjusting the tire pressure, always reinstall the valve stem cap. This will prevent moisture and dirt from entering the valve stem, which could damage the Tire Pressure Monitoring Sensor.**

NOTE:

- The TPMS is not intended to replace normal tire care and maintenance, or to provide warning of a tire failure or condition.
- The TPMS should not be used as a tire pressure gauge while adjusting your tire pressure.
- Driving on a significantly under-inflated tire causes the tire to overheat and can lead to tire failure. Under-inflation also reduces fuel efficiency and tire tread life, and may affect the vehicle's handling and stopping ability.
- The TPMS is not a substitute for proper tire maintenance, and it is the driver's responsibility to maintain correct tire pressure using an accurate tire gauge, even if under-inflation has not reached the level to trigger illumination of the TPMS Warning Light.
- Seasonal temperature changes will affect tire pressure, and the TPMS will monitor the actual tire pressure in the tire.

The Tire Pressure Monitor System (TPMS) uses wireless technology with wheel rim-mounted electronic sensors to monitor tire pressure levels. Sensors, mounted to each wheel as part of the valve stem, transmit tire pressure readings to the Receiver Module.

Tire Pressure Monitor Display

NOTE: It is particularly important, for you to regularly check the tire pressure in all of your tires and to maintain the proper pressure.

The Tire Pressure Monitor System (TPMS) consists of the following components:

- Receiver Module
- Four Tire Pressure Monitoring Sensors
- Various Tire Pressure Monitoring System Messages, which display in the instrument cluster, and a graphic displaying tire pressures
- TPMS Warning Light

Tire Pressure Monitoring Low Pressure Warnings

The TPMS Warning Light will illuminate in the instrument cluster, and an audible chime will be activated, when one or more of the four active road tire pressures are low. In addition, the instrument cluster will display an "Inflate to XX" message and a graphic display of the pressure value(s) with the low tire(s) in a different color. Refer to "Instrument Cluster Display" in "Getting To Know Your Instrument Panel" for further information.

NOTE: Your system can be set to display pressure units in PSI, BAR or kPa.

Low Tire Pressure Monitor Display

Should a low tire condition occur on any of the four active road tire(s), you should stop as soon as possible, and inflate the low tire(s) that is in a different color on the graphic display to the vehicle's recommended cold tire pressure displayed in the "Inflate to XX" message.

NOTE: When filling warm tires, the tire pressure may need to be increased up to an additional 4 psi (28 kPa) above the recommended cold placard pressure in order to turn the TPMS Warning Light off.

The system will automatically update, the graphic display of the pressure value(s) will return to its original color and the TPMS Warning Light will extinguish once the updated tire pressure(s) have been received. The vehicle may need to be driven for up to 20 minutes above 15 mph (24 km/h) to receive this information.

Service TPM System Warning

The Tire Pressure Monitoring System Warning Light will flash on and off for 75 seconds, and remain on solid when a system fault is detected. The system fault will also sound a chime. The instrument cluster display will display a "SERVICE TPM SYSTEM" message for a minimum of five seconds. This message is then followed by a graphic display, with "- -" in place of the pressure value(s), indicating which Tire Pressure Monitoring Sensor(s) is not being received.

If the ignition switch is cycled, this sequence will repeat, providing the system fault still exists. If the system fault no longer exists, the Tire Pressure Monitoring System Warning Light will no longer flash, the "SERVICE TPM SYSTEM" message will not be present, and a pressure value will be displayed instead of dashes. A system fault can occur by any of the following:

- Jamming due to electronic devices or driving next to facilities emitting the same Radio Frequencies as the TPM sensors.
- Lots of snow or ice around the wheels or wheel housings.
- Using tire chains on the vehicle.
- Using wheels/tires not equipped with TPM sensors.

NOTE: There is no tire pressure monitoring sensor in the spare tire. The TPMS will not be able to monitor the tire pressure. If you install the spare tire in place of a road tire that has a pressure below the low-pressure warning limit, upon the next ignition switch cycle, the Tire Pressure Monitoring System Warning Light will remain on, a chime will sound, and the instrument cluster display will still display a pressure value in the different color graphic display and an "Inflate to XX" message will be displayed. After driving the vehicle for up to 20 minutes above 15 mph (24 km/h), the Tire Pressure Monitoring System Warning Light will flash on and off for 75 seconds and then remain on solid. In addition, the instrument cluster display will display a "SERVICE TPM SYSTEM" message for five seconds and then display dashes (- -) in place of the pressure value. For each subsequent ignition switch cycle, a chime will sound, the Tire Pressure Monitoring System Warning Light will flash on and off for 75 seconds and then remain on solid, and the instrument cluster display will display a "SERVICE TPM SYSTEM" message for five seconds and then display dashes (- -) in place of the pressure value. Once you repair or replace the original road tire, and reinstall it on the vehicle in place of the spare tire, the TPMS will update automatically.

In addition, the Tire Pressure Monitoring System Warning Light will turn off and the graphic in the instrument cluster display will display a new pressure value instead of dashes (- -), as long as no tire pressure is below the low-pressure warning limit in any of the four active road tires. The vehicle may need to be driven for up to 20 minutes above 15 mph (24 km/h) in order for the TPMS to receive this information.

TPMS Deactivation — If Equipped

The Tire Pressure Monitoring System (TPMS) can be deactivated if replacing all four wheel and tire assemblies (road tires) with wheel and tire assemblies that do not have TPMS Sensors, such as when installing winter wheel and tire assemblies on your vehicle.

To deactivate the TPMS, first, replace all four wheel and tire assemblies (road tires) with tires not equipped with Tire Pressure Monitoring (TPM) Sensors. Then, drive the vehicle for 20 minutes above 15 mph (24 km/h). The TPMS will chime, the TPMS Warning Light will flash on and off for 75 seconds and then remain on. The instrument cluster will display the "SERVICE TPM SYSTEM" message and then display dashes (--) in place of the pressure values.

Beginning with the next ignition cycle, the TPMS will no longer chime or display the "SERVICE TPM SYSTEM" message in the instrument cluster but dashes (--) will remain in place of the pressure values.

To reactivate the TPMS, replace all four wheel and tire assemblies (road tires) with tires equipped with TPM sensors. Then, drive the vehicle for up to 20 minutes above 15 mph (24 km/h). The TPMS will chime, the TPMS Warning Light will flash on and off for 75 seconds and then turn off. The instrument cluster will display the "SERVICE TPM SYSTEM" message and then display pressure values in place of the dashes. On the next ignition cycle the "SERVICE TPM SYSTEM" message will no longer be displayed as long as no system fault exists.

General Information

The following regulatory statement applies to all radio frequency (RF) devices equipped in this vehicle:

This device complies with Part 15 of the FCC Rules and with Industry Canada license-exempt RSS standard(s). Operation is subject to the following two conditions:

(1) This device may not cause harmful interference, and

(2) This device must accept any interference received, including interference that may cause undesired operation.

NOTE: Changes or modifications not expressly approved by the party responsible for compliance could void the user's authority to operate the equipment.

OCCUPANT RESTRAINT SYSTEMS

Some of the most important safety features in your vehicle are the restraint systems:

Occupant Restraint Systems Features

- Seat Belt Systems
- Supplemental Restraint Systems (SRS) Air Bags
- Supplemental Active Head Restraints
- Child Restraints

Some of the safety features described in this section may be standard equipment on some models, or may be optional equipment on others. If you are not sure, ask an authorized dealer.

Important Safety Precautions

Please pay close attention to the information in this section. It tells you how to use your restraint system properly, to keep you and your passengers as safe as possible.

Here are some simple steps you can take to minimize the risk of harm from a deploying air bag:

1. Children 12 years old and under should always ride buckled up in the rear seat of a vehicle with a rear seat.
2. A child who is not big enough to wear the vehicle seat belt properly (Refer to "Child Restraints" in this section for further information) must be secured in the appropriate child restraint or belt-positioning booster seat in a rear seating position.
3. If a child from 2 to 12 years old (not in a rear-facing child restraint) must ride in the front passenger seat, move the seat as far back as possible and use the proper child restraint (Refer to "Child Restraints" in this section for further information).
4. Never allow children to slide the shoulder belt behind them or under their arm.
5. You should read the instructions provided with your child restraint to make sure that you are using it properly.
6. All occupants should always wear their lap and shoulder belts properly.
7. The driver and front passenger seats should be moved back as far as practical to allow the front air bags room to inflate.
8. Do not lean against the door or window. If your vehicle has side air bags, and deployment occurs, the side air bags will inflate forcefully into the space between occupants and the door and occupants could be injured.
9. If the air bag system in this vehicle needs to be modified to accommodate a disabled person, refer to the "Customer Assistance" section for customer service contact information.

WARNING!

- **Never place a rear-facing child restraint in front of an air bag. A deploying passenger front air bag can cause death or serious injury to a child 12 years or younger, including a child in a rear-facing child restraint.**
- **Never install a rear-facing child restraint in the front seat of a vehicle. Only use a rear-facing child restraint in the rear seat. If the vehicle does not have a rear seat, do not transport a rear-facing child restraint in that vehicle.**

Seat Belt Systems

Buckle up even though you are an excellent driver, even on short trips. Someone on the road may be a poor driver and could cause a collision that includes you. This can happen far away from home or on your own street.

Research has shown that seat belts save lives, and they can reduce the seriousness of injuries in a collision. Some of the worst injuries happen when people are thrown from the vehicle. Seat belts reduce the possibility of ejection and the risk of injury caused by striking the inside of the vehicle. Everyone in a motor vehicle should be belted at all times.

Enhanced Seat Belt Use Reminder System (BeltAlert)

Driver and Passenger BeltAlert (if equipped)

BeltAlert is a feature intended to remind the driver and outboard front seat passenger (if equipped with outboard front passenger seat BeltAlert) to buckle their seat belts. The Belt Alert feature is active whenever the ignition switch is in the START or ON/RUN position.

Initial Indication

If the driver is unbuckled when the ignition switch is first in the START or ON/RUN position, a chime will signal for a few seconds. If the driver or outboard front seat passenger (if equipped with outboard front passenger seat BeltAlert) is unbuckled when the ignition switch is first in the START or ON/RUN position the Seat Belt Reminder Light will turn on and remain on until both outboard front seat belts are buckled. The outboard front passenger seat BeltAlert is not active when an outboard front passenger seat is unoccupied.

BeltAlert Warning Sequence

The BeltAlert warning sequence is activated when the vehicle is moving above a specified vehicle speed range and the driver or outboard front seat passenger is unbuckled (if equipped with outboard front passenger seat BeltAlert) (the outboard front passenger seat BeltAlert is not active when the outboard front passenger seat is unoccupied). The BeltAlert warning sequence starts by blinking the Seat Belt Reminder Light and sounding an intermittent chime. Once the BeltAlert warning sequence has completed, the Seat Belt Reminder Light will remain on until the seat belts are buckled. The BeltAlert warning sequence may repeat based on vehicle speed until the driver and occupied outboard front seat passenger seat belts are buckled. The driver should instruct all occupants to buckle their seat belts.

Change of Status

If the driver or outboard front seat passenger (if equipped with outboard front passenger seat BeltAlert) unbuckles their seat belt while the vehicle is traveling, the BeltAlert warning sequence will begin until the seat belts are buckled again.

The outboard front passenger seat BeltAlert is not active when the outboard front passenger seat is unoccupied. BeltAlert may be triggered when an animal or other items are placed on the outboard front passenger seat or when the seat is folded flat (if equipped). It is recommended that pets be restrained in the rear seat (if equipped) in pet harnesses or pet carriers that are secured by seat belts, and cargo is properly stowed.

BeltAlert can be activated or deactivated by an authorized dealer. FCA US LLC does not recommend deactivating BeltAlert.

NOTE: If BeltAlert has been deactivated and the driver or outboard front seat passenger (if equipped with outboard front passenger seat BeltAlert) is unbuckled the Seat Belt Reminder Light will turn on and remain on until the driver and outboard front seat passenger seat belts are buckled.

Lap/Shoulder Belts

All seating positions in your vehicle are equipped with lap/shoulder belts.

The seat belt webbing retractor will lock only during very sudden stops or collisions. This feature allows the shoulder part of the seat belt to move freely with you under normal conditions. However, in a collision the seat belt will lock and reduce your risk of striking the inside of the vehicle or being thrown out of the vehicle.

WARNING!

- **Relying on the air bags alone could lead to more severe injuries in a collision. The air bags work with your seat belt to restrain you properly. In some collisions, the air bags won't deploy at all. Always wear your seat belt even though you have air bags.**
- **In a collision, you and your passengers can suffer much greater injuries if you are not properly buckled up. You can strike the interior of your vehicle or other passengers, or you can be thrown out of the vehicle. Always be sure you and others in your vehicle are buckled up properly.**

(Continued)

WARNING! *(Continued)*

- It is dangerous to ride in a cargo area, inside or outside of a vehicle. In a collision, people riding in these areas are more likely to be seriously injured or killed.
- Do not allow people to ride in any area of your vehicle that is not equipped with seats and seat belts.
- Be sure everyone in your vehicle is in a seat and using a seat belt properly. Occupants, including the driver, should always wear their seat belts whether or not an air bag is also provided at their seating position to minimize the risk of severe injury or death in the event of a crash.
- Wearing your seat belt incorrectly could make your injuries in a collision much worse. You might suffer internal injuries, or you could even slide out of the seat belt. Follow these instructions to wear your seat belt safely and to keep your passengers safe, too.
- Two people should never be belted into a single seat belt. People belted together can crash into one another in a collision, hurting one another badly. Never use a lap/shoulder belt or a lap belt for more than one person, no matter what their size.

WARNING!

- A lap belt worn too high can increase the risk of injury in a collision. The seat belt forces won't be at the strong hip and pelvic bones, but across your abdomen. Always wear the lap part of your seat belt as low as possible and keep it snug.
- A twisted seat belt may not protect you properly. In a collision, it could even cut into you. Be sure the seat belt is flat against your body, without twists. If you can't straighten a seat belt in your vehicle, take it to an authorized dealer immediately and have it fixed.
- A seat belt that is buckled into the wrong buckle will not protect you properly. The lap portion could ride too high on your body, possibly causing internal injuries. Always buckle your seat belt into the buckle nearest you.
- A seat belt that is too loose will not protect you properly. In a sudden stop, you could move too far forward, increasing the possibility of injury. Wear your seat belt snugly.

(Continued)

WARNING! *(Continued)*

- **A seat belt that is worn under your arm is dangerous. Your body could strike the inside surfaces of the vehicle in a collision, increasing head and neck injury. A seat belt worn under the arm can cause internal injuries. Ribs aren't as strong as shoulder bones. Wear the seat belt over your shoulder so that your strongest bones will take the force in a collision.**
- **A shoulder belt placed behind you will not protect you from injury during a collision. You are more likely to hit your head in a collision if you do not wear your shoulder belt. The lap and shoulder belt are meant to be used together.**
- **A frayed or torn seat belt could rip apart in a collision and leave you with no protection. Inspect the seat belt system periodically, checking for cuts, frays, or loose parts. Damaged parts must be replaced immediately. Do not disassemble or modify the seat belt system. Seat belt assemblies must be replaced after a collision.**

Lap/Shoulder Belt Operating Instructions

1. Enter the vehicle and close the door. Sit back and adjust the seat.
2. The seat belt latch plate is above the back of the front seat, and next to your arm in the rear seat (for vehicles equipped with a rear seat). Grasp the latch plate and pull out the seat belt. Slide the latch plate up the webbing as far as necessary to allow the seat belt to go around your lap.

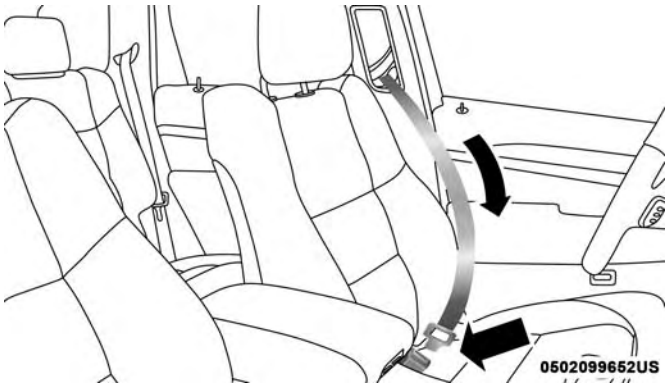

Pulling Out The Latch Plate

3. When the seat belt is long enough to fit, insert the latch plate into the buckle until you hear a “click.”

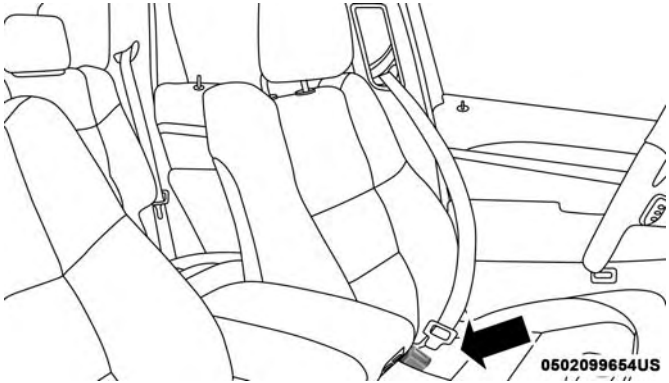

Inserting Latch Plate Into Buckle

4. Position the lap belt so that it is snug and lies low across your hips, below your abdomen. To remove slack in the lap belt portion, pull up on the shoulder belt. To loosen the lap belt if it is too tight, tilt the latch plate and pull on the lap belt. A snug seat belt reduces the risk of sliding under the seat belt in a collision.

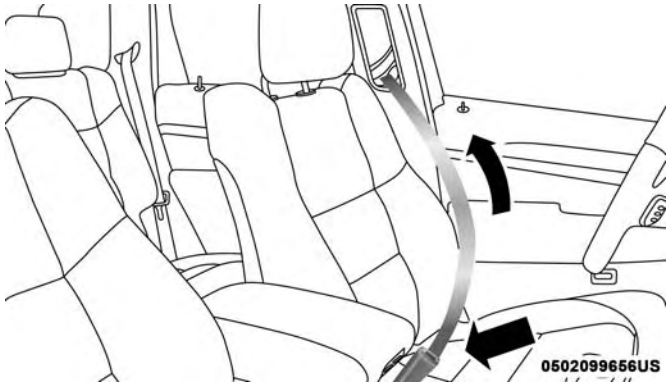

Positioning The Lap Belt

5. Position the shoulder belt across the shoulder and chest with minimal, if any slack so that it is comfortable and not resting on your neck. The retractor will withdraw any slack in the shoulder belt.

6. To release the seat belt, push the red button on the buckle. The seat belt will automatically retract to its stowed position. If necessary, slide the latch plate down the webbing to allow the seat belt to retract fully.

Lap/Shoulder Belt Untwisting Procedure

Use the following procedure to untwist a twisted lap/shoulder belt.

1. Position the latch plate as close as possible to the anchor point.
2. At about 6 to 12 inches (15 to 30 cm) above the latch plate, grasp and twist the seat belt webbing 180 degrees to create a fold that begins immediately above the latch plate.
3. Slide the latch plate upward over the folded webbing. The folded webbing must enter the slot at the top of the latch plate.
4. Continue to slide the latch plate up until it clears the folded webbing and the seat belt is no longer twisted.

Adjustable Upper Shoulder Belt Anchorage

In the driver and outboard front passenger seats, the top of the shoulder belt can be adjusted upward or downward to position the seat belt away from your neck. Push or squeeze the anchorage button to release the anchorage, and move it up or down to the position that serves you best.

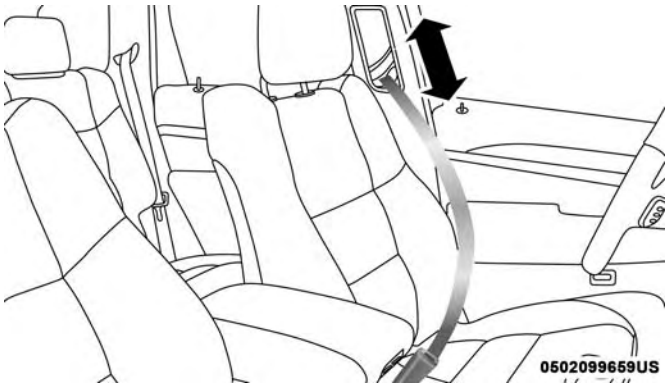

Adjustable Anchorage

As a guide, if you are shorter than average, you will prefer the shoulder belt anchorage in a lower position, and if you are taller than average, you will prefer the shoulder belt anchorage in a higher position. After you release the anchorage button, try to move it up or down to make sure that it is locked in position.

NOTE: The adjustable upper shoulder belt anchorage is equipped with an Easy Up feature. This feature allows the shoulder belt anchorage to be adjusted in the upward position without pushing or squeezing the release button. To verify the shoulder belt anchorage is latched, pull downward on the shoulder belt anchorage until it is locked into position.

WARNING!

- **Wearing your seat belt incorrectly could make your injuries in a collision much worse. You might suffer internal injuries, or you could even slide out of the seat belt. Follow these instructions to wear your seat belt safely and to keep your passengers safe, too.**
- **Position the shoulder belt across the shoulder and chest with minimal, if any slack so that it is comfortable and not resting on your neck. The retractor will withdraw any slack in the shoulder belt.**
- **Misadjustment of the seat belt could reduce the effectiveness of the safety belt in a crash.**
- **Always make all seat belt height adjustments when the vehicle is stationary.**

Seat Belt Extender

If a seat belt is not long enough to fit properly, even when the webbing is fully extended and the adjustable upper shoulder belt anchorage (if equipped) is in its lowest position, an authorized dealer can provide you with a Seat Belt Extender. The Seat Belt Extender should be used only if the existing seat belt is not long enough. When the Seat Belt Extender is not required for a different occupant, it must be removed.

WARNING!

- **ONLY use a Seat Belt Extender if it is physically required in order to properly fit the original seat belt system. DO NOT USE the Seat Belt Extender if, when worn, the distance between the front edge of the Seat Belt Extender buckle and the center of the occupant's body is LESS than 6 inches.**
- **Using a Seat Belt Extender when not needed can increase the risk of serious injury or death in a collision. Only use the Seat Belt Extender when the lap belt is not long enough and only use in the recommended seating positions. Remove and store the Seat Belt Extender when not needed.**

Seat Belts And Pregnant Women

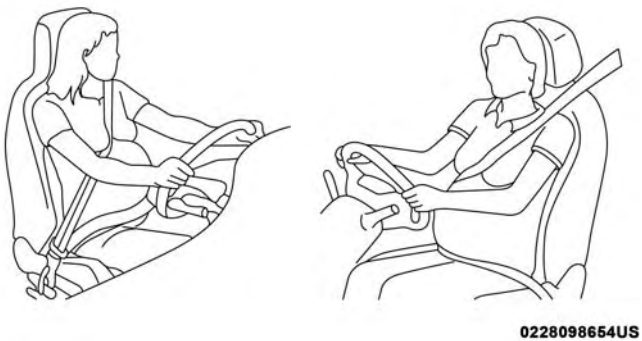

Pregnant Women And Seat Belts

Seat belts must be worn by all occupants including pregnant women: the risk of injury in the event of an accident is reduced for the mother and the unborn child if they are wearing a seat belt.

Position the lap belt snug and low below the abdomen and across the strong bones of the hips. Place the shoulder belt across the chest and away from the neck. Never place the shoulder belt behind the back or under the arm.

Seat Belt Pretensioner

The front outboard seat belt system is equipped with pretensioning devices that are designed to remove slack from the seat belt in the event of a collision. These devices may improve the performance of the seat belt by removing slack from the seat belt early in a collision. Pretensioners work for all size occupants, including those in child restraints.

NOTE: These devices are not a substitute for proper seat belt placement by the occupant. The seat belt still must be worn snugly and positioned properly.

The pretensioners are triggered by the Occupant Restraint Controller (ORC). Like the air bags, the pretensioners are single use items. A deployed pretensioner or a deployed air bag must be replaced immediately.

Energy Management Feature

The front outboard seat belt system is equipped with an Energy Management feature that may help further reduce the risk of injury in the event of a collision. The seat belt system has a retractor assembly that is designed to release webbing in a controlled manner.

Switchable Automatic Locking Retractor (ALR)

The seat belts in the passenger seating positions are equipped with a Switchable Automatic Locking Retractor (ALR) which is used to secure a child restraint system. For additional information, refer to “Installing Child Restraints Using The Vehicle Seat Belt” under the “Child Restraints” section of this manual. The figure below illustrates the locking feature for each seating position.

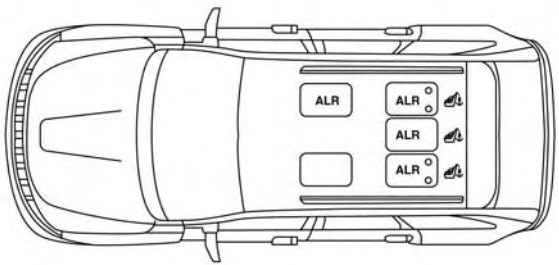

0502108064US

Automatic Locking Retractor (ALR) Locations

If the passenger seating position is equipped with an ALR and is being used for normal usage, only pull the seat belt webbing out far enough to comfortably wrap around the occupant’s mid-section so as to not activate the ALR. If the ALR is activated, you will hear a clicking sound as the seat belt retracts. Allow the webbing to retract completely in this case and then carefully pull out only the amount of webbing necessary to comfortably wrap around the occupant’s mid-section. Slide the latch plate into the buckle until you hear a ″click.″

In Automatic Locking Mode, the shoulder belt is automatically pre-locked. The seat belt will still retract to remove any slack in the shoulder belt. Use the Automatic Locking Mode anytime a child restraint is installed in a seating position that has a seat belt with this feature. Children 12 years old and under should always be properly restrained in the rear seat of a vehicle with a rear seat.

WARNING!

- **Never place a rear-facing child restraint in front of an air bag. A deploying passenger front air bag can cause death or serious injury to a child 12 years or younger, including a child in a rear-facing child restraint.**
- **Never install a rear-facing child restraint in the front seat of a vehicle. Only use a rear-facing child restraint in the rear seat. If the vehicle does not have a rear seat, do not transport a rear-facing child restraint in that vehicle.**

How To Engage The Automatic Locking Mode

1. Buckle the combination lap and shoulder belt.
2. Grasp the shoulder portion and pull downward until the entire seat belt is extracted.
3. Allow the seat belt to retract. As the seat belt retracts, you will hear a clicking sound. This indicates the seat belt is now in the Automatic Locking Mode.

How To Disengage The Automatic Locking Mode

Unbuckle the combination lap/shoulder belt and allow it to retract completely to disengage the Automatic Locking Mode and activate the vehicle sensitive (emergency) locking mode.

WARNING!

- **The seat belt assembly must be replaced if the switchable Automatic Locking Retractor (ALR) feature or any other seat belt function is not working properly when checked according to the procedures in the Service Manual.**
- **Failure to replace the seat belt assembly could increase the risk of injury in collisions.**
- **Do not use the Automatic Locking Mode to restrain occupants who are wearing the seat belt or children who are using booster seats. The locked mode is only used to install rear-facing or forward-facing child restraints that have a harness for restraining the child.**

Supplemental Active Head Restraints (AHR)

These head restraints are passive, deployable components, and vehicles with this equipment cannot be readily identified by any markings, only through visual inspection of the head restraint. The head restraint will be split in two halves, with the front half being soft foam and trim, the back half being decorative plastic.

How The Active Head Restraints (AHR) Work

The Occupant Restraint Controller (ORC) determines whether the severity or type of rear impact will require the Active Head Restraints (AHR) to deploy. If a rear impact requires deployment, both the driver and front passenger seat AHRs will be deployed.

When AHRs deploy during a rear impact, the front half of the head restraint extends forward to minimize the gap between the back of the occupant's head and the AHR. This system is designed to help prevent or reduce the extent of injuries to the driver and front passenger in certain types of rear impacts.

NOTE: The Active Head Restraints (AHR) may or may not deploy in the event of a front or side impact. However, if during a front impact, a secondary rear impact occurs, the AHR may deploy based on the severity and type of the impact.

Active Head Restraint (AHR) Components:

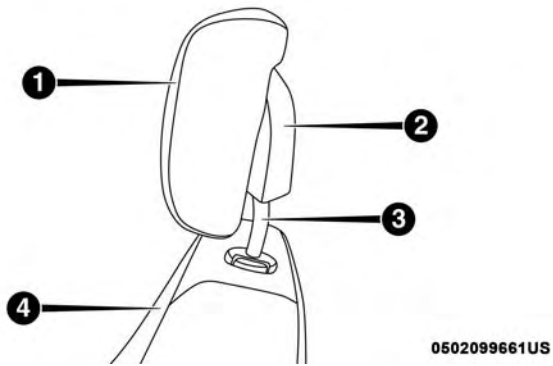

Active Head Restraint (AHR) Components

1 — Head Restraint Front Half (Soft Foam And Trim)
2 — Head Restraint Back Half (Decorative Plastic Rear Cover)
3 — Head Restraint Guide Tubes
4 — Seat Back

WARNING!

- **All occupants, including the driver, should not operate a vehicle or sit in a vehicle's seat until the head restraints are placed in their proper positions in order to minimize the risk of neck injury in the event of a collision.**
- **Do not place items over the top of the Active Head Restraint, such as coats, seat covers or portable DVD players. These items may interfere with the operation of the Active Head Restraint in the event of a collision and could result in serious injury or death.**
- **Active Head Restraints may be deployed if they are struck by an object such as a hand, foot or loose cargo. To avoid accidental deployment of the Active Head Restraint, ensure that all cargo is secured, as loose cargo could contact the Active Head Restraint during sudden stops. Failure to follow this warning could cause personal injury if the Active Head Restraint is deployed.**

NOTE: For more information on properly adjusting and positioning the head restraint, refer to "Head Restraints" in "Getting To Know Your Vehicle."

Resetting Active Head Restraints (AHR)

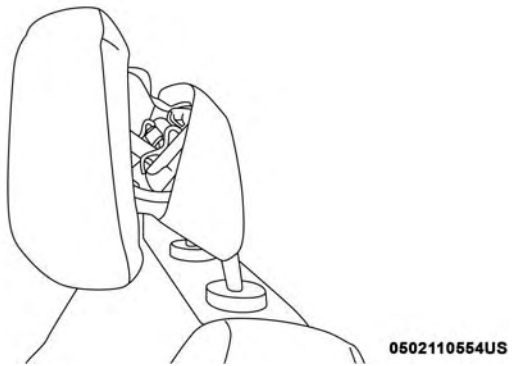

Active Head Restraint (AHR) Deployed

If the Active Head Restraints are triggered during a collision, the front half of the head restraint will be extended forward and separated from the rear half of the head restraint (See Image). Do not drive your vehicle after the AHRs have deployed. The head restraint must be reset into the original position to best protect the occupant for all types of collisions. An authorized FCA US LLC dealer must reset the AHRs on the driver's and front passenger's seat before driving. Personally attempting to reset the AHRs may result in damage to the AHRs that could impair their function.

WARNING!

Deployed AHRs are not able to best protect you in all types of collisions. Have deployed AHRs reset by an authorized dealer immediately.

Supplemental Restraint Systems (SRS)

Some of the safety features described in this section may be standard equipment on some models, or may be optional equipment on others. If you are not sure, ask an authorized dealer.

The air bag system must be ready to protect you in a collision. The Occupant Restraint Controller (ORC) monitors the internal circuits and interconnecting wiring associated with the electrical Air Bag System Components. Your vehicle may be equipped with the following Air Bag System Components:

Air Bag System Components

- Occupant Restraint Controller (ORC)
- Air Bag Warning Light
- Steering Wheel and Column
- Instrument Panel
- Knee Impact Bolsters
- Driver and Front Passenger Air Bags
- Seat Belt Buckle Switch
- Supplemental Side Air Bags
- Supplemental Knee Air Bags
- Front and Side Impact Sensors
- Seat Belt Pretensioners

Air Bag Warning Light

The ORC monitors the readiness of the electronic parts of the air bag system whenever the ignition switch is in the START or ON/RUN position. If the ignition switch is in the OFF position or in the ACC position, the air bag system is not on and the air bags will not inflate.

The ORC contains a backup power supply system that may deploy the air bag system even if the battery loses power or it becomes disconnected prior to deployment.

The ORC turns on the Air Bag Warning Light in the instrument panel for approximately four to eight seconds for a self-check when the ignition switch is first in the ON/RUN position. After the self-check, the Air Bag Warning Light will turn off. If the ORC detects a malfunction in any part of the system, it turns on the Air Bag Warning Light, either momentarily or continuously. A single chime will sound to alert you if the light comes on again after initial startup.

The ORC also includes diagnostics that will illuminate the instrument panel Air Bag Warning Light if a malfunction is detected that could affect the air bag system. The diagnostics also record the nature of the malfunction. While the air bag system is designed to be maintenance free, if any of the following occurs, have an authorized dealer service the air bag system immediately.

- The Air Bag Warning Light does not come on during the four to eight seconds when the ignition switch is first in the ON/RUN position.
- The Air Bag Warning Light remains on after the four to eight-second interval.
- The Air Bag Warning Light comes on intermittently or remains on while driving.

NOTE: If the speedometer, tachometer, or any engine related gauges are not working, the Occupant Restraint Controller (ORC) may also be disabled. In this condition the air bags may not be ready to inflate for your protection. Have an authorized dealer service the air bag system immediately.

WARNING!

Ignoring the Air Bag Warning Light in your instrument panel could mean you won't have the air bag system to protect you in a collision. If the light does not come on as a bulb check when the ignition is first turned on, stays on after you start the vehicle, or if it comes on as you drive, have an authorized dealer service the air bag system immediately.

Redundant Air Bag Warning Light

If a fault with the Air Bag Warning Light is detected, which could affect the Supplemental Restraint System (SRS), the Redundant Air Bag Warning Light will illuminate on the instrument panel. The Redundant Air Bag Warning Light will stay on until the fault is cleared. In addition, a single chime will sound to alert you that the Redundant Air Bag Warning

Light has come on and a fault has been detected. If the Redundant Air Bag Warning Light comes on intermittently or remains on while driving have an authorized dealer service the vehicle immediately.

For additional information regarding the Redundant Air Bag Warning Light refer to "Getting To Know Your Instrument Panel" section of this manual.

Front Air Bags

This vehicle has front air bags and lap/shoulder belts for both the driver and front passenger. The front air bags are a supplement to the seat belt restraint systems. The driver front air bag is mounted in the center of the steering wheel. The passenger front air bag is mounted in the instrument panel, above the glove compartment. The words "SRS AIRBAG" or "AIRBAG" are embossed on the air bag covers.

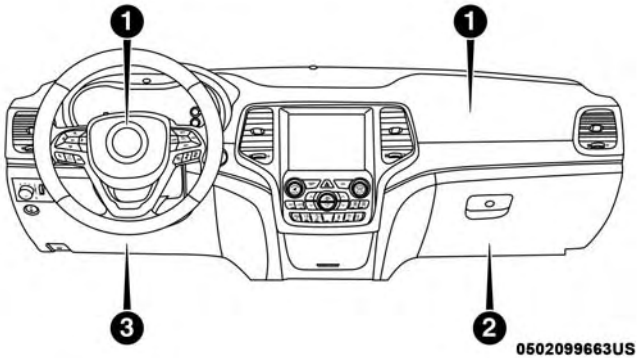

Front Air Bag/Knee Bolster Locations

1 — Driver And Passenger Front Air Bags
2 — Passenger Knee Impact Bolster
3 — Driver Knee Impact Bolster/Supplemental Knee Air Bag

WARNING!

- **Being too close to the steering wheel or instrument panel during front air bag deployment could cause serious injury, including death. Air bags need room to inflate. Sit back, comfortably extending your arms to reach the steering wheel or instrument panel.**

(Continued)

WARNING! *(Continued)*

- **Never place a rear-facing child restraint in front of an air bag. A deploying passenger front air bag can cause death or serious injury to a child 12 years or younger, including a child in a rear-facing child restraint.**
- **Never install a rear-facing child restraint in the front seat of a vehicle. Only use a rear-facing child restraint in the rear seat. If the vehicle does not have a rear seat, do not transport a rear-facing child restraint in that vehicle.**

Driver And Passenger Front Air Bag Features

The Advanced Front Air Bag system has multistage driver and front passenger air bags. This system provides output appropriate to the severity and type of collision as determined by the Occupant Restraint Controller (ORC), which may receive information from the front impact sensors (if equipped) or other system components.

The first stage inflator is triggered immediately during an impact that requires air bag deployment. A low energy output is used in less severe collisions. A higher energy output is used for more severe collisions.

This vehicle may be equipped with a driver and/or front passenger seat belt buckle switch that detects whether the driver or front passenger seat belt is buckled. The seat belt buckle switch may adjust the inflation rate of the Advanced Front Air Bags.

WARNING!

- **No objects should be placed over or near the air bag on the instrument panel or steering wheel because any such objects could cause harm if the vehicle is in a collision severe enough to cause the air bag to inflate.**
- **Do not put anything on or around the air bag covers or attempt to open them manually. You may damage the air bags and you could be injured because the air bags may no longer be functional. The protective covers for the air bag cushions are designed to open only when the air bags are inflating.**
- **Relying on the air bags alone could lead to more severe injuries in a collision. The air bags work with your seat belt to restrain you properly. In some collisions, air bags won't deploy at all. Always wear your seat belts even though you have air bags.**

Front Air Bag Operation

Front Air Bags are designed to provide additional protection by supplementing the seat belts. Front air bags are not expected to reduce the risk of injury in rear, side, or rollover collisions. The front air bags will not deploy in all frontal collisions, including some that may produce substantial vehicle damage — for example, some pole collisions, truck underrides, and angle offset collisions.

On the other hand, depending on the type and location of impact, front air bags may deploy in crashes with little vehicle front-end damage but that produce a severe initial deceleration.

Because air bag sensors measure vehicle deceleration over time, vehicle speed and damage by themselves are not good indicators of whether or not an air bag should have deployed.

Seat belts are necessary for your protection in all collisions, and also are needed to help keep you in position, away from an inflating air bag.

When the ORC detects a collision requiring the front air bags, it signals the inflator units. A large quantity of non-toxic gas is generated to inflate the front air bags.

The steering wheel hub trim cover and the upper passenger side of the instrument panel separate and fold out of the way as the air bags inflate to their full size. The front air bags fully inflate in less time than it takes to blink your eyes. The front air bags then quickly deflate while helping to restrain the driver and front passenger.

Knee Impact Bolsters

The Knee Impact Bolsters help protect the knees of the driver and front passenger, and position the front occupants for improved interaction with the front air bags.

WARNING!

- **Do not drill, cut, or tamper with the knee impact bolsters in any way.**
- **Do not mount any accessories to the knee impact bolsters such as alarm lights, stereos, citizen band radios, etc.**

Supplemental Driver Knee Air Bag

This vehicle is equipped with a Supplemental Driver Knee Air Bag mounted in the instrument panel below the steering column. The Supplemental Driver Knee Air Bag provides enhanced protection during a frontal impact by working together with the seat belts, pretensioners, and front air bags.

Supplemental Side Air Bags

Supplemental Seat-Mounted Side Air Bags (SABs)

This vehicle is equipped with Supplemental Seat-Mounted Side Air Bags (SABs).

Supplemental Seat-Mounted Side Air Bags (SABs) are located in the outboard side of the front seats. The SABs are marked with "SRS AIRBAG" or "AIRBAG" on a label or on the seat trim on the outboard side of the seats.

The SABs may help to reduce the risk of occupant injury during certain side impacts, in addition to the injury reduction potential provided by the seat belts and body structure.

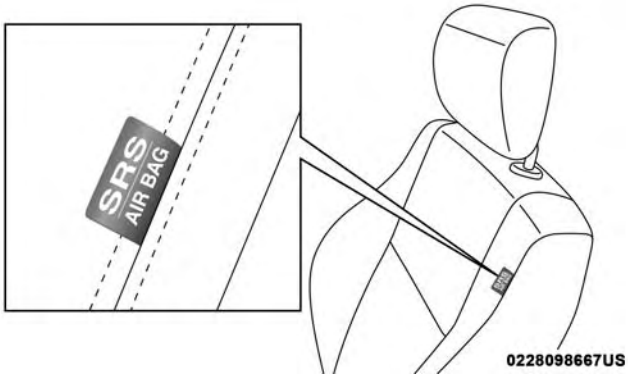

Front Supplemental Seat-Mounted Side Air Bag Label

When the SAB deploys, it opens the seam on the outboard side of the seatback's trim cover. The inflating SAB deploys through the seat seam into the space between the occupant and the door. The SAB moves at a very high speed and with such a high force that it could injure occupants if they are not seated properly, or if items are positioned in the area where the SAB inflates. Children are at an even greater risk of injury from a deploying air bag.

WARNING!

Do not use accessory seat covers or place objects between you and the Side Air Bags; the performance could be adversely affected and/or objects could be pushed into you, causing serious injury.

Supplemental Side Air Bag Inflatable Curtains (SABICs)

This vehicle is equipped with Supplemental Side Air Bag Inflatable Curtains (SABICs).

Supplemental Side Air Bag Inflatable Curtains (SABICs) are located above the side windows. The trim covering the SABICs is labeled "SRS AIRBAG" or "AIRBAG."

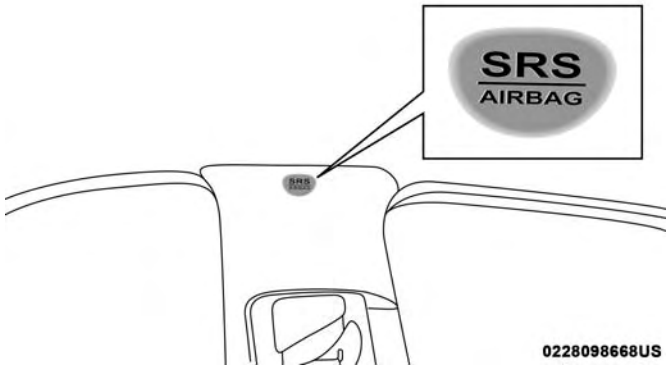

Supplemental Side Air Bag Inflatable Curtain (SABIC) Label Location

SABICs may help reduce the risk of head and other injuries to front and rear seat outboard occupants in certain side impacts, in addition to the injury reduction potential provided by the seat belts and body structure.

The SABIC deploys downward, covering the side windows. An inflating SABIC pushes the outside edge of the headliner out of the way and covers the window. The SABICs inflate with enough force to injure occupants if

they are not belted and seated properly, or if items are positioned in the area where the SABICs inflate. Children are at an even greater risk of injury from a deploying air bag.

The SABICs may help reduce the risk of partial or complete ejection of vehicle occupants through side windows in certain side impact events.

WARNING!

- **Do not mount equipment, or stack luggage or other cargo up high enough to block the deployment of the SABICs. The trim covering above the side windows where the SABIC and its deployment path are located should remain free from any obstructions.**
- **In order for the SABICs to work as intended, do not install any accessory items in your vehicle which could alter the roof. Do not add an aftermarket sunroof to your vehicle. Do not add roof racks that require permanent attachments (bolts or screws) for installation on the vehicle roof. Do not drill into the roof of the vehicle for any reason.**

Side Impacts

The Side Air Bags are designed to activate in certain side impacts. The Occupant Restraint Controller (ORC) determines whether the deployment of the Side Air Bags in a particular impact event is appropriate, based on the severity and type of collision. The side impact sensors aid the ORC in determining the appropriate response to impact events. The system is calibrated to deploy the Side Air Bags on the impact side of the vehicle during impacts that require Side Air Bag occupant protection. In side impacts, the Side Air Bags deploy independently; a left side impact deploys the left Side Air Bags only and a right-side impact deploys the right Side Air Bags only. Vehicle damage by itself is not a good indicator of whether or not Side Air Bags should have deployed.

The Side Air Bags will not deploy in all side collisions, including some collisions at certain angles, or some side collisions that do not impact the area of the passenger compartment. The Side Air Bags may deploy during angled or offset frontal collisions where the front air bags deploy.

Side Air Bags are a supplement to the seat belt restraint system. Side Air Bags deploy in less time than it takes to blink your eyes.

WARNING!

- **Occupants, including children, who are up against or very close to Side Air Bags can be seriously injured or killed. Occupants, including children, should never lean on or sleep against the door, side windows, or area where the side air bags inflate, even if they are in an infant or child restraint.**
- **Seat belts (and child restraints where appropriate) are necessary for your protection in all collisions. They also help keep you in position, away from an inflating Side Air Bag. To get the best protection from the Side Air Bags, occupants must wear their seat belts properly and sit upright with their backs against the seats. Children must be properly restrained in a child restraint or booster seat that is appropriate for the size of the child.**

WARNING!

- **Side Air Bags need room to inflate. Do not lean against the door or window. Sit upright in the center of the seat.**
- **Being too close to the Side Air Bags during deployment could cause you to be severely injured or killed.**
- **Relying on the Side Air Bags alone could lead to more severe injuries in a collision. The Side Air Bags work with your seat belt to restrain you properly. In some collisions, Side Air Bags won't deploy at all. Always wear your seat belt even though you have Side Air Bags.**

NOTE: Air bag covers may not be obvious in the interior trim, but they will open during air bag deployment.

Rollover Events

Side Air Bags are designed to activate in certain rollover events. The ORC determines whether the deployment of the Side Air Bags in a particular rollover event is appropriate, based on the severity and type of collision. Vehicle damage by itself is not a good indicator of whether or not Side Air Bags should have deployed.

The Side Air Bags will not deploy in all rollover events. The rollover sensing system determines if a rollover event may be in progress and whether deployment is appropriate. In the event the vehicle experiences a rollover or near rollover event, and deployment of the Side Air Bags is appropriate, the rollover sensing system will also deploy the seat belt pretensioners on both sides of the vehicle.

The SABICs may help reduce the risk of partial or complete ejection of vehicle occupants through side windows in certain rollover or side impact events.

Air Bag System Components

NOTE: The Occupant Restraint Controller (ORC) monitors the internal circuits and interconnecting wiring associated with electrical Air Bag System Components listed below:

- Occupant Restraint Controller (ORC)
- Air Bag Warning Light
- Steering Wheel and Column
- Instrument Panel
- Knee Impact Bolsters
- Driver and Front Passenger Air Bags
- Seat Belt Buckle Switch
- Supplemental Side Air Bags
- Supplemental Knee Air Bags
- Front and Side Impact Sensors
- Seat Belt Pretensioners

If A Deployment Occurs

The front air bags are designed to deflate immediately after deployment.

NOTE: Front and/or side air bags will not deploy in all collisions. This does not mean something is wrong with the air bag system.

If you do have a collision which deploys the air bags, any or all of the following may occur:

- The air bag material may sometimes cause abrasions and/or skin reddening to the occupants as the air bags deploy and unfold. The abrasions are similar to friction rope burns or those you might get sliding along a carpet or gymnasium floor. They are not caused by contact with chemicals. They are not permanent and normally heal quickly. However, if you haven't healed significantly within a few days, or if you have any blistering, see your doctor immediately.

- As the air bags deflate, you may see some smoke-like particles. The particles are a normal by-product of the process that generates the non-toxic gas used for air bag inflation. These airborne particles may irritate the skin, eyes, nose, or throat. If you have skin or eye irritation, rinse the area with cool water. For nose or throat irritation, move to fresh air. If the irritation continues, see your doctor. If these particles settle on your clothing, follow the garment manufacturer's instructions for cleaning.

Do not drive your vehicle after the air bags have deployed. If you are involved in another collision, the air bags will not be in place to protect you.

WARNING!

Deployed air bags and seat belt pretensioners cannot protect you in another collision. Have the air bags, seat belt pretensioners, and the seat belt retractor assemblies replaced by an authorized dealer immediately. Also, have the Occupant Restraint Controller System serviced as well.

NOTE:

- Air bag covers may not be obvious in the interior trim, but they will open during air bag deployment.
- After any collision, the vehicle should be taken to an authorized dealer immediately.

Enhanced Accident Response System

In the event of an impact, if the communication network remains intact, and the power remains intact, depending on the nature of the event, the ORC will determine whether to have the Enhanced Accident Response System perform the following functions:

- Cut off fuel to the engine (If Equipped)
- Cut off battery power to the electric motor (If Equipped)
- Flash hazard lights as long as the battery has power
- Turn on the interior lights, which remain on as long as the battery has power or for 15 minutes from the intervention of the Enhanced Accident Response System.
- Unlock the power door locks.

Your vehicle may also be designed to perform any of these other functions in response to the Enhanced Accident Response System:

- Turn off the Fuel Filter Heater, Turn off the HVAC Blower Motor, Close the HVAC Circulation Door
- Cut off battery power to the:
  - Engine
  - Electric Motor (if equipped)
  - Electric power steering
  - Brake booster
  - Electric park brake
  - Automatic transmission gear selector
  - Horn
  - Front wiper
  - Headlamp washer pump

NOTE: After an accident, remember to cycle the ignition to the STOP (OFF/LOCK) position and remove the key from the ignition switch to avoid draining the battery. Carefully check the vehicle for fuel leaks in the engine compartment and on the ground near the engine compartment and fuel tank before resetting the system and starting the engine. If there are no fuel leaks or damage to the vehicle electrical devices (e.g. headlights) after an accident, reset the system by following the procedure described below. If you have any doubt, contact an authorized dealer.

Enhanced Accident Response System Reset Procedure

In order to reset the Enhanced Accident Response System functions after an event, the ignition switch must be changed from ignition START or ON/RUN to ignition OFF. Carefully check the vehicle for fuel leaks in the engine compartment and on the ground near the engine compartment and fuel tank before resetting the system and starting the engine.

Maintaining Your Air Bag System

WARNING!

- **Modifications to any part of the air bag system could cause it to fail when you need it. You could be injured if the air bag system is not there to protect you. Do not modify the components or wiring, including adding any kind of badges or stickers to the steering wheel hub trim cover or the upper passenger side of the instrument panel. Do not modify the front bumper, vehicle body structure, or add aftermarket side steps or running boards.**
- **It is dangerous to try to repair any part of the air bag system yourself. Be sure to tell anyone who works on your vehicle that it has an air bag system.**
- **Do not attempt to modify any part of your air bag system. The air bag may inflate accidentally or may not function properly if modifications are made. Take your vehicle to an authorized dealer for any air bag system service. If your seat, including your trim cover and cushion, needs to be serviced in any way (including removal or loosening/tightening of seat attachment bolts), take the vehicle to an authorized**

(Continued)

WARNING! *(Continued)*

dealer. Only manufacturer approved seat accessories may be used. If it is necessary to modify the air bag system for persons with disabilities, contact an authorized dealer.

Event Data Recorder (EDR)

This vehicle is equipped with an event data recorder (EDR). The main purpose of an EDR is to record, in certain crash or near crash-like situations, such as an air bag deployment or hitting a road obstacle, data that will assist in understanding how a vehicle's systems performed. The EDR is designed to record data related to vehicle dynamics and safety systems for a short period of time, typically 30 seconds or less. The EDR in this vehicle is designed to record such data as:

- How various systems in your vehicle were operating;
- Whether or not the driver and passenger safety belts were buckled/fastened;
- How far (if at all) the driver was depressing the accelerator and/or brake pedal; and,
- How fast the vehicle was traveling.

These data can help provide a better understanding of the circumstances in which crashes and injuries occur.

NOTE: EDR data are recorded by your vehicle only if a non-trivial crash situation occurs; no data are recorded by the EDR under normal driving conditions and no personal data (e.g., name, gender, age, and crash location) are recorded. However, other parties, such as law enforcement, could combine the EDR data with the type of personally identifying data routinely acquired during a crash investigation.

To read data recorded by an EDR, special equipment is required, and access to the vehicle or the EDR is needed. In addition to the vehicle manufacturer, other parties, such as law enforcement, that have the special equipment, can read the information if they have access to the vehicle or the EDR.

Child Restraints

Everyone in your vehicle needs to be buckled up at all times, including babies and children. Every state in the United States, and every Canadian province, requires that small children ride in proper restraint systems. This is the law, and you can be prosecuted for ignoring it.

Children 12 years or younger should ride properly buckled up in a rear seat, if available. According to crash statistics, children are safer when properly restrained in the rear seats rather than in the front.

WARNING!

In a collision, an unrestrained child can become a projectile inside the vehicle. The force required to hold even an infant on your lap could become so great that you could not hold the child, no matter how strong you are. The child and others could be badly injured or killed. Any child riding in your vehicle should be in a proper restraint for the child's size.

There are different sizes and types of restraints for children from newborn size to the child almost large enough for an adult safety belt. Always check the child seat Owner's Manual to make sure you have the correct seat for your child. Carefully read and follow all the instructions and warnings in the child restraint Owner's Manual and on all the labels attached to the child restraint.

Before buying any restraint system, make sure that it has a label certifying that it meets all applicable Safety Standards. You should also make sure that you can install it in the vehicle where you will use it.

NOTE:

- For additional information, refer to http://www.nhtsa.gov/parents-and-caregivers or call: 1–888–327–4236
- Canadian residents should refer to Transport Canada's website for additional information: http://www.tc.gc.ca/eng/motorvehiclesafety/safedrivers-childsafety-index-53.htm

Summary Of Recommendations For Restraining Children In Vehicles

	Child Size, Height, Weight Or Age	Recommended Type Of Child Restraint
Infants and Toddlers	Children who are two years old or younger and who have not reached the height or weight limits of their child restraint	Either an Infant Carrier or a Convertible Child Restraint, facing rearward in a rear seat of the vehicle
Small Children	Children who are at least two years old or who have outgrown the height or weight limit of their rear-facing child restraint	Forward-Facing Child Restraint with a five-point Harness, facing forward in a rear seat of the vehicle

	Child Size, Height, Weight Or Age	Recommended Type Of Child Restraint
Larger Children	Children who have outgrown their forward-facing child restraint, but are too small to properly fit the vehicle's seat belt	Belt Positioning Booster Seat and the vehicle seat belt, seated in a rear seat of the vehicle
Children Too Large for Child Restraints	Children 12 years old or younger, who have outgrown the height or weight limit of their booster seat	Vehicle Seat Belt, seated in a rear seat of the vehicle

Infant And Child Restraints

Safety experts recommend that children ride rear-facing in the vehicle until they are two years old or until they reach either the height or weight limit of their rear-facing child restraint. Two types of child restraints can be used rear-facing: infant carriers and convertible child seats.

The infant carrier is only used rear-facing in the vehicle. It is recommended for children from birth until they reach the weight or height limit of the infant carrier. Convertible child seats can be used either rear-facing or forward-facing in the vehicle. Convertible child seats often have a higher weight limit in the rear-facing direction than infant carriers do, so they can be used rear-facing by children who have outgrown their infant carrier but are still less than at least two years old. Children should remain rear-facing until they reach the highest weight or height allowed by their convertible child seat.

WARNING!

- **Never place a rear-facing child restraint in front of an air bag. A deploying passenger front air bag can cause death or serious injury to a child 12 years or younger, including a child in a rear-facing child restraint.**
- **Never install a rear-facing child restraint in the front seat of a vehicle. Only use a rear-facing child restraint in the rear seat. If the vehicle does not have a rear seat, do not transport a rear-facing child restraint in that vehicle.**

Older Children And Child Restraints

Children who are two years old or who have outgrown their rear-facing convertible child seat can ride forward-facing in the vehicle. Forward-facing child seats and convertible child seats used in the forward-facing direction are for children who are over two years old or who have outgrown the rear-facing weight or height limit of their rear-facing convertible child seat. Children should remain in a forward-facing child seat with a harness for as long as possible, up to the highest weight or height allowed by the child seat.

All children whose weight or height is above the forward-facing limit for the child seat should use a belt-positioning booster seat until the vehicle's seat belts fit properly. If the child cannot sit with knees bent over the vehicle's seat cushion while the child's back is against the seatback, they should use a belt-positioning booster seat. The child and belt-positioning booster seat are held in the vehicle by the seat belt.

WARNING!

- **Improper installation can lead to failure of an infant or child restraint. It could come loose in a collision. The child could be badly injured or killed. Follow the child restraint manufacturer's directions exactly when installing an infant or child restraint.**
- **After a child restraint is installed in the vehicle, do not move the vehicle seat forward or rearward because it can loosen the child restraint attachments. Remove the child restraint before adjusting the vehicle seat position. When the vehicle seat has been adjusted, reinstall the child restraint.**
- **When your child restraint is not in use, secure it in the vehicle with the seat belt or LATCH anchorages, or remove it from the vehicle. Do not leave it loose in the vehicle. In a sudden stop or accident, it could strike the occupants or seatbacks and cause serious personal injury.**

Children Too Large For Booster Seats

Children who are large enough to wear the shoulder belt comfortably, and whose legs are long enough to bend over the front of the seat when their back is against the seatback, should use the seat belt in a rear seat. Use this simple 5-step test to decide whether the child can use the vehicle's seat belt alone:

1. Can the child sit all the way back against the back of the vehicle seat?
2. Do the child's knees bend comfortably over the front of the vehicle seat – while the child is still sitting all the way back?
3. Does the shoulder belt cross the child's shoulder between the neck and arm?
4. Is the lap part of the belt as low as possible, touching the child's thighs and not the stomach?
5. Can the child stay seated like this for the whole trip?

If the answer to any of these questions was "no," then the child still needs to use a booster seat in this vehicle. If the child is using the lap/shoulder belt, check seat belt fit periodically and make sure the seat belt buckle is latched. A child's squirming or slouching can move the belt out of position. If the shoulder belt contacts the face or neck, move the child closer to the center of the vehicle, or use a booster seat to position the seat belt on the child correctly.

WARNING!

Never allow a child to put the shoulder belt under an arm or behind their back. In a crash, the shoulder belt will not protect a child properly, which may result in serious injury or death. A child must always wear both the lap and shoulder portions of the seat belt correctly.

Recommendations For Attaching Child Restraints

Restraint Type	Combined Weight of the Child + Child Restraint	Use Any Attachment Method Shown With An "X" Below			
		LATCH – Lower Anchors Only	Seat Belt Only	LATCH – Lower Anchors + Top Tether Anchor	Seat Belt + Top Tether Anchor
Rear-Facing Child Restraint	Up to 65 lbs (29.5 kg)	X	X		
Rear-Facing Child Restraint	More than 65 lbs (29.5 kg)		X		
Forward-Facing Child Restraint	Up to 65 lbs (29.5 kg)			X	X
Forward-Facing Child Restraint	More than 65 lbs (29.5 kg)				X

Lower Anchors And Tethers For CHildren (LATCH) Restraint System

LATCH Label

Your vehicle is equipped with the child restraint anchorage system called LATCH, which stands for Lower Anchors and Tethers for CHildren. The LATCH system has three vehicle anchor points for installing LATCH-equipped child seats. There are two lower anchorages located at the back of the seat cushion where it meets the seatback and one top tether anchorage located behind the seating position. These anchorages are used to install LATCH-equipped child seats without using the vehicle's seat belts. Some seating positions may have a top tether anchorage but no lower anchorages. In these seating positions, the seat belt must be used with the top tether anchorage to install the child restraint. Please see the following table for more information.

LATCH Positions For Installing Child Restraints In This Vehicle

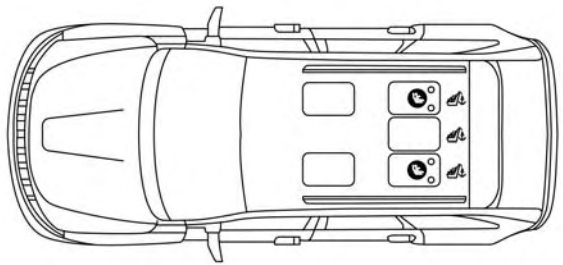

LATCH Positions For Installing Child Restraints In This Vehicle

Lower Anchorage Symbol (2 Anchorages Per Seating Position)
Top Tether Anchorage Symbol

Frequently Asked Questions About Installing Child Restraints With LATCH		
What is the weight limit (child's weight + weight of the child restraint) for using the LATCH anchorage system to attach the child restraint?	65 lbs (29.5 kg)	Use the LATCH anchorage system until the combined weight of the child and the child restraint is 65 lbs (29.5 kg). Use the seat belt and tether anchor instead of the LATCH system once the combined weight is more than 65 lbs (29.5 kg).
Can the LATCH anchorages and the seat belt be used together to attach a rear-facing or forward-facing child restraint?	No	Do not use the seat belt when you use the LATCH anchorage system to attach a rear-facing or forward-facing child restraint. Booster seats may be attached to the LATCH anchorages if allowed by the booster seat manufacturer. See your booster seat owner's manual for more information.
Can a child seat be installed in the center position using the inner LATCH lower anchorages?	No	Use the seat belt and tether anchor to install a child seat in the center seating position.

Frequently Asked Questions About Installing Child Restraints With LATCH		
Can two child restraints be attached using a common lower LATCH anchorage?	No	Never “share” a LATCH anchorage with two or more child restraints. If the center position does not have dedicated LATCH lower anchorages, use the seat belt to install a child seat in the center position next to a child seat using the LATCH anchorages in an outboard position.
Can the rear-facing child restraint touch the back of the front passenger seat?	Yes	The child seat may touch the back of the front passenger seat if the child restraint manufacturer also allows contact. See your child restraint owner’s manual for more information.
Can the rear head restraints be removed?	Yes	The head restraint may be removed in only the center seating position if it interferes with the installation of the child restraint. Refer to “Head Restraints” in Getting To Know Your Vehicle for further information.

Locating The LATCH Anchorages

The lower anchorages are round bars that are found at the rear of the seat cushion where it meets the seatback, below the anchorage symbols on the seatback. They are just visible when you lean into the rear seat to install the child restraint. You will easily feel them if you run your finger along the gap between the seatback and seat cushion.

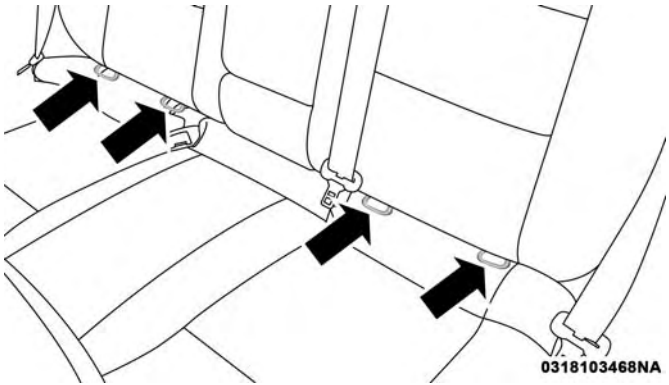

LATCH Anchorages

Locating The Upper Tether Anchorages

There are tether strap anchorages behind each rear seating position located on the back of the seat. To access them, pull the carpeted floor panel away from the seat back, this will expose the top tether strap anchorages.

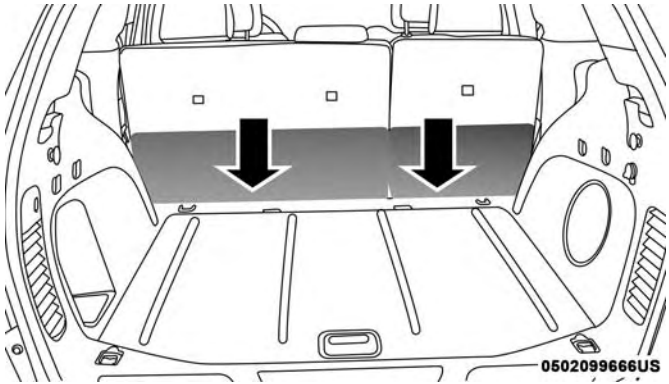

Pulling Down The Carpet Floor Panel To Access Top Tether Strap Anchorage

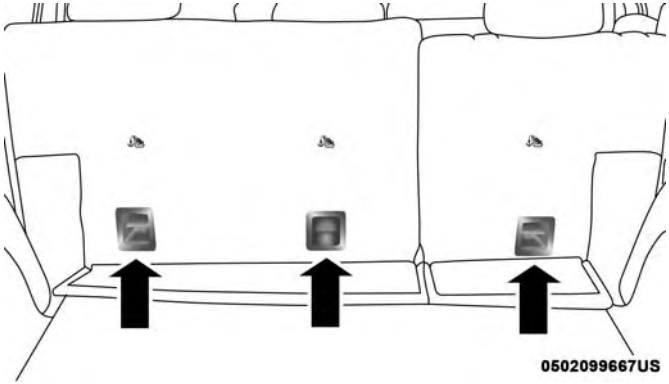

Pulling Down The Carpet Floor Panel To Access Top Tether Strap Anchorage

LATCH-compatible child restraint systems will be equipped with a rigid bar or a flexible strap on each side. Each will have a hook or connector to attach to the lower anchorage and a way to tighten the connection to the anchorage. Forward-facing child restraints and some rear-facing child restraints will also be equipped with a tether strap. The tether strap will have a hook at the end to attach to the top tether anchorage and a way to tighten the strap after it is attached to the anchorage.

Center Seat LATCH

WARNING!

- **Do not install a child restraint in the center position using the LATCH system. This position is not approved for installing child seats using the LATCH attachments. You must use the seat belt and tether anchor to install a child seat in the center seating position.**
- **Never use the same lower anchorage to attach more than one child restraint. Please refer to "To Install A LATCH-Compatible Child Restraint" for typical installation instructions.**

Vehicle With A Center Arm Rest Tether

For rear-facing child restraints secured in the center seat position with the vehicle seat belts, the rear center seat position has an armrest tether that secures the arm rest in the upward position.

1. To access the center seat arm rest tether, first lower the arm rest. The tether is located behind the armrest and hooked onto the plastic seat backing.

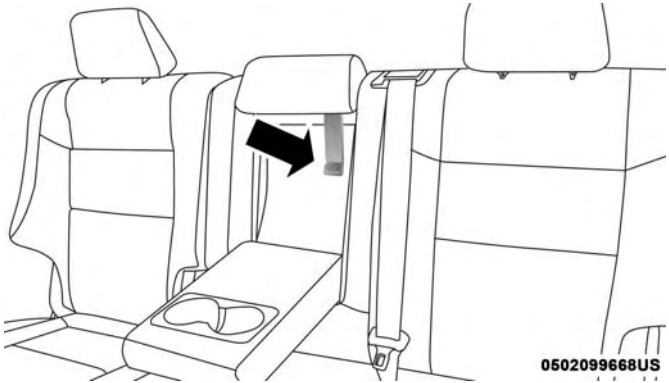

Center Seat Position Arm Rest Tether

2. Pull down on the tether to unhook it from the plastic seat backing.
3. Raise the armrest and attach the tether hook to the strap located on the front of the arm rest.

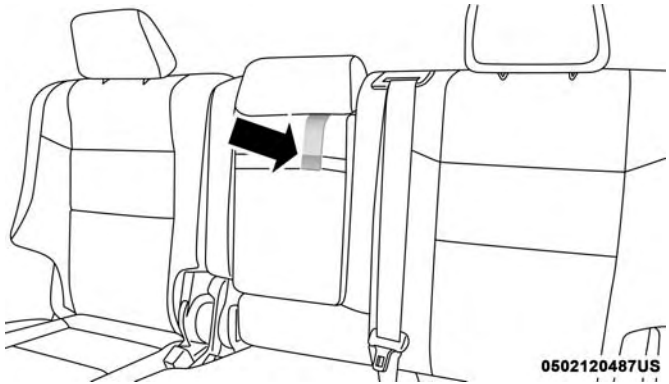

Center Seat Position Arm Rest Tether

Always follow the directions of the child restraint manufacturer when installing your child restraint. Not all child restraint systems will be installed as described here.

To Install A LATCH-Compatible Child Restraint

If the selected seating position has a Switchable Automatic Locking Retractor (ALR) seat belt, stow the seat belt, following the instructions below. See the section "Installing Child Restraints Using the Vehicle Seat Belt" to check what type of seat belt each seating position has.

1. Loosen the adjusters on the lower straps and on the tether strap of the child seat so that you can more easily attach the hooks or connectors to the vehicle anchorages.
2. Place the child seat between the lower anchorages for that seating position. For some second row seats, you may need to recline the seat and / or raise the head restraint (if adjustable) to get a better fit. If the rear seat can be moved forward and rearward in the vehicle, you may wish to move it to its rear-most position to make room for the child seat. You may also move the front seat forward to allow more room for the child seat.
3. Attach the lower hooks or connectors of the child restraint to the lower anchorages in the selected seating position.
4. If the child restraint has a tether strap, connect it to the top tether anchorage. See the section "Installing Child Restraints Using the Top Tether Anchorage" for directions to attach a tether anchor.
5. Tighten all of the straps as you push the child restraint rearward and downward into the seat. Remove slack in the straps according to the child restraint manufacturer's instructions.
6. Test that the child restraint is installed tightly by pulling back and forth on the child seat at the belt path. It should not move more than 1 inch (25.4 mm) in any direction.

How To Stow An Unused Switchable-ALR (ALR) Seat Belt:

When using the LATCH attaching system to install a child restraint, stow all ALR seat belts that are not being used by other occupants or being used to secure child restraints. An unused belt could injure a child if they play with it and accidentally lock the seat belt retractor. Before installing a child restraint using the LATCH system, buckle the seat belt behind the child restraint and out of the child's reach. If the buckled seat belt interferes with the child restraint installation, instead of buckling it behind the child restraint, route the seat belt through the child restraint belt path and then buckle it. Do not lock the seat belt. Remind all children in the vehicle that the seat belts are not toys and that they should not play with them.

WARNING!

- **Improper installation of a child restraint to the LATCH anchorages can lead to failure of the restraint. The child could be badly injured or killed. Follow the child restraint manufacturer's directions exactly when installing an infant or child restraint.**
- **Child restraint anchorages are designed to withstand only those loads imposed by correctly-fitted child restraints. Under no circumstances are they to be used for adult seat belts, harnesses, or for attaching other items or equipment to the vehicle.**

Installing Child Restraints Using The Vehicle Seat Belt

Child restraint systems are designed to be secured in vehicle seats by lap belts or the lap belt portion of a lap/shoulder belt.

WARNING!

- **Improper installation or failure to properly secure a child restraint can lead to failure of the restraint. The child could be badly injured or killed.**

(Continued)

WARNING! *(Continued)*

- **Follow the child restraint manufacturer's directions exactly when installing an infant or child restraint.**

The seat belts in the passenger seating positions are equipped with a Switchable Automatic Locking Retractor (ALR) that is designed to keep the lap portion of the seat belt tight around the child restraint so that it is not necessary to use a locking clip. The ALR retractor can be "switched" into a locked mode by pulling all of the webbing out of the retractor and then letting the webbing retract back into the retractor. If it is locked, the ALR will make a clicking noise while the webbing is pulled back into the retractor.

Refer to the "Automatic Locking Mode" description in "Switchable Automatic Locking Retractors (ALR)" under "Occupant Restraint Systems" for additional information on ALR.

Please see the table below and the following sections for more information.

Lap/Shoulder Belt Systems For Installing Child Restraints In This Vehicle

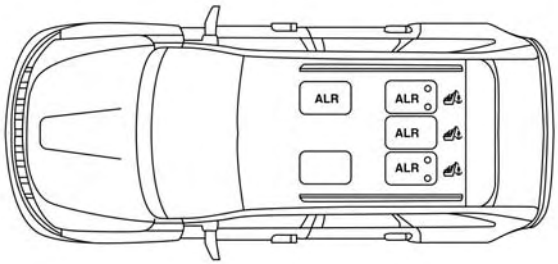

0502108064US

Automatic Locking Retractor (ALR) Locations

ALR = Switchable Automatic Locking Retractor
Top Tether Anchorage Symbol

Frequently Asked Questions About Installing Child Restraints With Seat Belts		
What is the weight limit (child's weight + weight of the child restraint) for using the Tether Anchor with the seat belt to attach a forward facing child restraint?	Weight limit of the Child Restraint	Always use the tether anchor when using the seat belt to install a forward facing child restraint, up to the recommended weight limit of the child restraint.
Can the rear-facing child restraint touch the back of the front passenger seat?	Yes	Contact between the front passenger seat and the child restraint is allowed, if the child restraint manufacturer also allows contact.
Can the rear head restraints be removed?	Yes	The head restraint may be removed in only the center seating position if it interferes with the installation of the child restraint. Refer to "Head Restraints" in "Getting To Know Your Vehicle" for further information.
Can the buckle stalk be twisted to tighten the seat belt against the belt path of the child restraint?	No	Do not twist the buckle stalk in a seating position with an ALR retractor.

Installing A Child Restraint With A Switchable Automatic Locking Retractor (ALR):

Child restraint systems are designed to be secured in vehicle seats by lap belts or the lap belt portion of a lap/shoulder belt.

WARNING!

- **Improper installation or failure to properly secure a child restraint can lead to failure of the restraint. The child could be badly injured or killed.**
- **Follow the child restraint manufacturer's directions exactly when installing an infant or child restraint.**

1. Place the child seat in the center of the seating position. For some second row seats, you may need to recline the seat and/or raise the head restraint (if adjustable) to get a better fit. If the rear seat can be moved forward and rearward in the vehicle, you may wish to move it to its rear-most position to make room for the child seat. You may also move the front seat forward to allow more room for the child seat.
2. Pull enough of the seat belt webbing from the retractor to pass it through the belt path of the child restraint. Do not twist the belt webbing in the belt path.
3. Slide the latch plate into the buckle until you hear a "click."
4. Pull on the webbing to make the lap portion tight against the child seat.
5. To lock the seat belt, pull down on the shoulder part of the belt until you have pulled all the seat belt webbing out of the retractor. Then, allow the webbing to retract back into the retractor. As the webbing retracts, you will hear a clicking sound. This means the seat belt is now in the Automatic Locking mode.
6. Try to pull the webbing out of the retractor. If it is locked, you should not be able to pull out any webbing. If the retractor is not locked, repeat step 5.
7. Finally, pull up on any excess webbing to tighten the lap portion around the child restraint while you push the child restraint rearward and downward into the vehicle seat.

8. If the child restraint has a top tether strap and the seating position has a top tether anchorage, connect the tether strap to the anchorage and tighten the tether strap. See the section "Installing Child Restraints Using the Top Tether Anchorage" for directions to attach a tether anchor.

9. Test that the child restraint is installed tightly by pulling back and forth on the child seat at the belt path. It should not move more than 1 inch (25.4 mm) in any direction.

Any seat belt system will loosen with time, so check the belt occasionally, and pull it tight if necessary.

Installing Child Restraints Using The Top Tether Anchorage:

WARNING!

Do not attach a tether strap for a rear-facing car seat to any location in front of the car seat, including the seat frame or a tether anchorage. Only attach the tether strap of a rear-facing car seat to the tether anchorage

(Continued)

WARNING! *(Continued)*

that is approved for that seating position, located behind the top of the vehicle seat. See the section "Lower Anchors and Tethers for CHildren (LATCH) Restraint System" for the location of approved tether anchorages in your vehicle.

1. Look behind the seating position where you plan to install the child restraint to find the tether anchorage. You may need to move the seat forward to provide better access to the tether anchorage. If there is no top tether anchorage for that seating position, move the child restraint to another position in the vehicle if one is available.

2. To access the top tether strap anchorages behind the rear seat, pull the carpeted floor panel away from the seat back, this will expose the top tether strap anchorages.

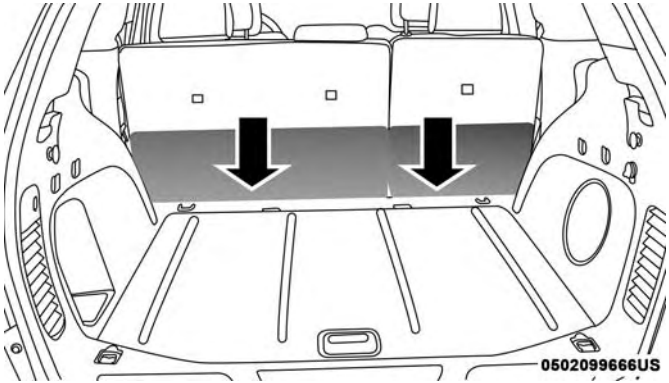

Pulling Down The Carpet Floor Panel To Access Top Tether Strap Anchorage

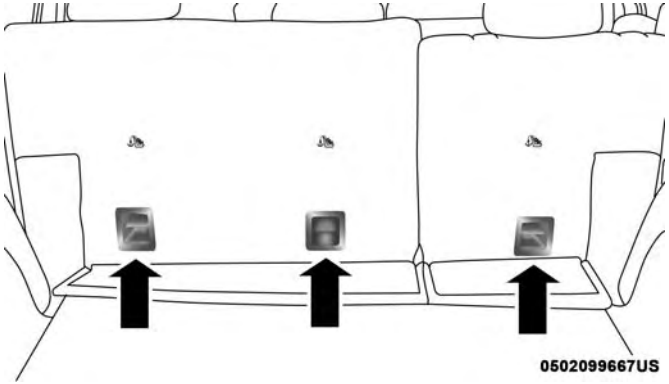

Top Tether Strap Anchorage (Located On Seatback)

3. Route the tether strap to provide the most direct path for the strap between the anchor and the child seat. If your vehicle is equipped with adjustable rear head restraints, raise the head restraint, and where possible, route the tether strap under the head restraint and between the two posts. If not possible, lower the head restraint and pass the tether strap around the outboard side of the head restraint.

4. For the center seating position, route the tether strap over the seatback and headrest then attach the hook to the tether anchor located on the back of the seat.

5. Attach the tether strap hook of the child restraint to the top tether anchorage as shown in the diagram.

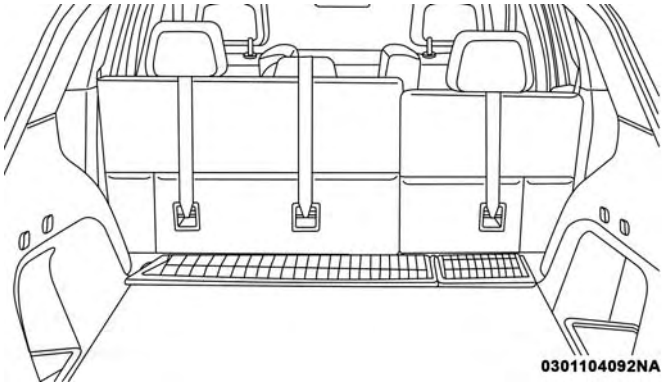

Top Tether Strap Mounting

6. Remove slack in the tether strap according to the child restraint manufacturer's instructions.

WARNING!

- **The top tether anchorages are not visible until the gap panel is folded down. Do not use the visible cargo tie down hooks, located on the floor behind the seats, to attach a child restraint tether anchor.**

(Continued)

WARNING! *(Continued)*

- **An incorrectly anchored tether strap could lead to increased head motion and possible injury to the child. Use only the anchorage position directly behind the child seat to secure a child restraint top tether strap.**
- **If your vehicle is equipped with a split rear seat, make sure the tether strap does not slip into the opening between the seatbacks as you remove slack in the strap.**

Transporting Pets

Air Bags deploying in the front seat could harm your pet. An unrestrained pet will be thrown about and possibly injured, or injure a passenger during panic braking or in a collision.

Pets should be restrained in the rear seat (if equipped) in pet harnesses or pet carriers that are secured by seat belts.

SAFETY TIPS

Transporting Passengers

NEVER TRANSPORT PASSENGERS IN THE CARGO AREA.

WARNING!

- **Do not leave children or animals inside parked vehicles in hot weather. Interior heat build-up may cause serious injury or death.**
- **It is extremely dangerous to ride in a cargo area, inside or outside of a vehicle. In a collision, people riding in these areas are more likely to be seriously injured or killed.**
- **Do not allow people to ride in any area of your vehicle that is not equipped with seats and seat belts.**
- **Be sure everyone in your vehicle is in a seat and using a seat belt properly.**

Exhaust Gas

WARNING!

Exhaust gases can injure or kill. They contain carbon monoxide (CO), which is colorless and odorless. Breathing it can make you unconscious and can eventually poison you. To avoid breathing (CO), follow these safety tips:

- **Do not run the engine in a closed garage or in confined areas any longer than needed to move your vehicle in or out of the area.**
- **If you are required to drive with the trunk/liftgate/rear doors open, make sure that all windows are closed and the climate control BLOWER switch is set at high speed. DO NOT use the recirculation mode.**
- **If it is necessary to sit in a parked vehicle with the engine running, adjust your heating or cooling controls to force outside air into the vehicle. Set the blower at high speed.**

The best protection against carbon monoxide entry into the vehicle body is a properly maintained engine exhaust system.

Whenever a change is noticed in the sound of the exhaust system, when exhaust fumes can be detected inside the vehicle, or when the underside or rear of the vehicle is damaged, have a competent mechanic inspect the complete exhaust system and adjacent body areas for broken, damaged, deteriorated, or mispositioned parts. Open seams or loose connections could permit exhaust fumes to seep into the passenger compartment. In addition, inspect the exhaust system each time the vehicle is raised for lubrication or oil change. Replace as required.

Safety Checks You Should Make Inside The Vehicle

Seat Belts

Inspect the seat belt system periodically, checking for cuts, frays, and loose parts. Damaged parts must be replaced immediately. Do not disassemble or modify the system.

Front seat belt assemblies must be replaced after a collision. Rear seat belt assemblies must be replaced after a collision if they have been damaged (i.e., bent retractor, torn webbing, etc.). If there is any question regarding seat belt or retractor condition, replace the seat belt.

Air Bag Warning Light

The Air Bag warning light will turn on for four to eight seconds as a bulb check when the ignition switch is first turned to ON/RUN. If the light is either not on during starting, stays on, or turns on while driving, have the system inspected at an authorized dealer as soon as possible. After the bulb check, this light will illuminate with a single chime when a fault with the Air Bag System has been detected. It will stay on until the fault is removed. If the light comes on intermittently or remains on while driving, have an authorized dealer service the vehicle immediately.

Refer to “Occupant Restraint Systems” in “Safety” for further information.

Defroster

Check operation by selecting the defrost mode and place the blower control on high speed. You should be able to feel the air directed against the windshield. See an authorized dealer for service if your defroster is inoperable.

Floor Mat Safety Information

Always use floor mats designed to fit your vehicle. Only use a floor mat that does not interfere with the operation of the accelerator, brake or clutch pedals. Only use a floor mat that is securely attached using the floor mat fasteners so it cannot slip out of position and interfere with the accelerator, brake or clutch pedals or impair safe operation of your vehicle in other ways.

WARNING!

An improperly attached, damaged, folded, or stacked floor mat, or damaged floor mat fasteners may cause your floor mat to interfere with the accelerator, brake, or clutch pedals and cause a loss of vehicle control. To prevent SERIOUS INJURY or DEATH:

- **ALWAYS securely attach your floor mat using the floor mat fasteners. DO NOT install your floor mat upside down or turn your floor mat over. Lightly pull to confirm mat is secured using the floor mat fasteners on a regular basis.**
- **ALWAYS REMOVE THE EXISTING FLOOR MAT FROM THE VEHICLE before installing any other floor mat. NEVER install or stack an additional floor mat on top of an existing floor mat.**
- **ONLY install floor mats designed to fit your vehicle. NEVER install a floor mat that cannot be properly attached and secured to your vehicle. If a floor mat needs to be replaced, only use a FCA approved floor mat for the specific make, model, and year of your vehicle.**

(Continued)

WARNING! ***(Continued)***

- **ONLY use the driver's side floor mat on the driver's side floor area. To check for interference, with the vehicle properly parked with the engine off, fully depress the accelerator, the brake, and the clutch pedal (if present) to check for interference. If your floor mat interferes with the operation of any pedal, or is not secure to the floor, remove the floor mat from the vehicle and place the floor mat in your trunk.**
- **ONLY use the passenger's side floor mat on the passenger's side floor area.**
- **ALWAYS make sure objects cannot fall or slide into the driver's side floor area when the vehicle is moving. Objects can become trapped under accelerator, brake, or clutch pedals and could cause a loss of vehicle control.**
- **NEVER place any objects under the floor mat (e.g., towels, keys, etc.). These objects could change the position of the floor mat and may cause interference with the accelerator, brake, or clutch pedals.**

(Continued)

WARNING! *(Continued)*

- **If the vehicle carpet has been removed and re-installed, always properly attach carpet to the floor and check the floor mat fasteners are secure to the vehicle carpet. Fully depress each pedal to check for interference with the accelerator, brake, or clutch pedals then re-install the floor mats.**
- **It is recommended to only use mild soap and water to clean your floor mats. After cleaning, always check your floor mat has been properly installed and is secured to your vehicle using the floor mat fasteners by lightly pulling mat.**

Periodic Safety Checks You Should Make Outside The Vehicle

Tires

Examine tires for excessive tread wear and uneven wear patterns. Check for stones, nails, glass, or other objects lodged in the tread or sidewall. Inspect the tread for cuts and cracks. Inspect sidewalls for cuts, cracks, and bulges. Check the wheel nuts for tightness. Check the tires (including spare) for proper cold inflation pressure.

Lights

Have someone observe the operation of brake lights and exterior lights while you work the controls. Check turn signal and high beam indicator lights on the instrument panel.

Door Latches

Check for proper closing, latching, and locking.

Fluid Leaks

Check area under the vehicle after overnight parking for fuel, coolant, oil, or other fluid leaks. Also, if gasoline fumes are detected or if fuel, or brake fluid leaks are suspected. The cause should be located and corrected immediately.

STARTING AND OPERATING

CONTENTS

■ STARTING THE ENGINE — GAS 253
- □ Automatic Transmission 253
- □ Normal Starting 254
- □ If Engine Fails To Start 257
- □ Cold Weather Operation (Below –22°F Or –30°C) 258
- □ After Starting 258

■ ENGINE BLOCK HEATER — IF EQUIPPED 258

■ ENGINE BREAK-IN RECOMMENDATIONS — 3.6L & 5.7L ENGINES 259

■ PARKING BRAKE 260

■ AUTOMATIC TRANSMISSION 262
- □ Ignition Park Interlock 263
- □ Brake/Transmission Shift Interlock System 263
- □ Fuel Economy (ECO) Mode 264
- □ Eight–Speed Automatic Transmission 264

■ SPORT MODE — IF EQUIPPED 272

■ FOUR WHEEL DRIVE OPERATION 273
- □ Quadra-Trac I Operating Instructions/Precautions — If Equipped 273
- □ Quadra-Trac II Operating Instructions/Precautions — If Equipped 273
- □ Shift Positions 274
- □ Shifting Procedures 275
- □ Quadra-Drive II System — If Equipped 279

■ QUADRA-LIFT — IF EQUIPPED 279
- □ Description 279
- □ Air Suspension Modes 282
- □ Instrument Cluster Display Messages 283
- □ Operation 283

■ SELEC-TERRAIN — IF EQUIPPED 285
□ Selec-Terrain Mode Selection 285
□ Instrument Cluster Display Messages 286
■ FUEL SAVER TECHNOLOGY 5.7L ONLY — IF EQUIPPED 286
■ POWER STEERING 286
■ STOP/START SYSTEM — IF EQUIPPED 287
□ Automatic Mode 287
□ Possible Reasons The Engine Does Not Autostop 288
□ To Start The Engine While In Autostop Mode . .289
□ To Manually Turn Off The Stop/Start System . .289
□ To Manually Turn On The Stop/Start System . . .290
□ System Malfunction 290
■ SPEED CONTROL — IF EQUIPPED 290
□ To Activate 291
□ To Set A Desired Speed 291
□ To Vary The Speed Setting 291
□ To Accelerate For Passing 292
□ To Resume Speed 293
□ To Deactivate 293
■ ADAPTIVE CRUISE CONTROL (ACC) — IF EQUIPPED 293
□ Adaptive Cruise Control (ACC) Operation 295
□ Activating Adaptive Cruise Control (ACC) 296
□ To Activate/Deactivate 296
□ To Set A Desired ACC Speed 297
□ To Cancel 297
□ To Turn Off 298
□ To Resume 298
□ To Vary The Speed Setting 299
□ Setting The Following Distance In ACC 301
□ Overtake Aid 303
□ ACC Operation At Stop 304
□ Adaptive Cruise Control (ACC) Menu 304

- Display Warnings And Maintenance 305
- Precautions While Driving With ACC. 307
- General Information 310
- Normal (Fixed Speed) Cruise Control Mode 311

■ PARKSENSE REAR PARK ASSIST — IF EQUIPPED 313

- ParkSense Sensors 315
- ParkSense Display 315
- ParkSense Warning Display. 319
- Enabling And Disabling ParkSense 319
- Service The ParkSense Rear Park Assist System. .320
- Cleaning The ParkSense System. 320
- ParkSense System Usage Precautions 320

■ PARKSENSE FRONT AND REAR PARK ASSIST — IF EQUIPPED. 322

- ParkSense Sensors 323
- ParkSense Display 324
- ParkSense Warning Display. 328
- Enabling And Disabling ParkSense 329
- Service The ParkSense Park Assist System 329
- Cleaning The ParkSense System. 330
- ParkSense System Usage Precautions 330

■ PARKSENSE ACTIVE PARK ASSIST SYSTEM — IF EQUIPPED 332

- Enabling And Disabling The ParkSense Active Park Assist System 333
- Parallel Parking Space Assistance Operation/Display 334
- Perpendicular Parking Space Assistance Operation/Display 343

■ LANESENSE — IF EQUIPPED 352

- LaneSense Operation 352
- Turning LaneSense On Or Off 353
- LaneSense Warning Message 354
- Changing LaneSense Status. 357

■ PARKVIEW REAR BACK UP CAMERA 357

■ REFUELING THE VEHICLE — GASOLINE ENGINE 359
□ Emergency Fuel Filler Door Release 361
■ VEHICLE LOADING 362
□ Certification Label 362
■ TRAILER TOWING 364
□ Common Towing Definitions. 364
□ Trailer Hitch Classification 366
□ Trailer Towing Weights (Maximum Trailer Weight Ratings) 367
□ Trailer Hitch Receiver Cover Removal (Summit Models) — If Equipped 368
□ Trailer And Tongue Weight 369
□ Towing Requirements 370
□ Towing Tips 374
■ SNOW PLOW 375
■ RECREATIONAL TOWING (BEHIND MOTORHOME, ETC.) 376
□ Towing This Vehicle Behind Another Vehicle. . . .376
□ Recreational Towing — Two Wheel Drive Models 377
□ Recreational Towing — Quadra-Trac I (Single-Speed Transfer Case) Four-Wheel Drive Models 378
□ Recreational Towing — Quadra–Trac II/Quadra–Drive II Four-Wheel Drive Models. 378
■ DRIVING TIPS 382
□ On-Road Driving Tips 382
□ Off-Road Driving Tips 383

STARTING THE ENGINE — GAS

Before starting your vehicle, adjust your seat, adjust the inside and outside mirrors, fasten your seat belt, and if present, instruct all other occupants to buckle their seat belts.

WARNING!

- **Before exiting a vehicle, always come to a complete stop, then shift the automatic transmission into PARK and apply the parking brake.**
- **Always make sure the keyless ignition node is in the OFF mode, key fob is removed from the vehicle and vehicle is locked.**
- **Never leave children alone in a vehicle, or with access to an unlocked vehicle. Leaving children in a vehicle unattended is dangerous for a number of reasons. A child or others could be seriously or fatally injured. Children should be warned not to touch the parking brake, brake pedal or the gear selector.**

(Continued)

WARNING! ***(Continued)***

- **Do not leave the key fob in or near the vehicle, or in a location accessible to children, and do not leave the ignition of a vehicle equipped with Keyless Enter-N-Go in the ACC or ON/RUN mode. A child could operate power windows, other controls, or move the vehicle.**
- **Do not leave children or animals inside parked vehicles in hot weather. Interior heat build-up may cause serious injury or death.**

Automatic Transmission

The gear selector must be in the NEUTRAL or PARK position before you can start the engine. Apply the brakes before shifting into any driving gear.

CAUTION!

Damage to the transmission may occur if the following precautions are not observed:

- **Do not shift from REVERSE, PARK, or NEUTRAL into any forward gear when the engine is above idle speed.**

(Continued)

CAUTION! ***(Continued)***

- **Shift into PARK only after the vehicle has come to a complete stop.**
- **Shift into or out of REVERSE only after the vehicle has come to a complete stop and the engine is at idle speed.**
- **Before shifting into any gear, make sure your foot is firmly on the brake pedal.**

Normal Starting

To Turn On The Engine Using The ENGINE START/STOP Button

1. The transmission must be in PARK or NEUTRAL.
2. Press and hold the brake pedal while pushing the ENGINE START/STOP button once.
3. The system takes over and attempts to start the vehicle. If the vehicle fails to start, the starter will disengage automatically after 10 seconds.
4. If you wish to stop the cranking of the engine prior to the engine starting, push the button again.

NOTE: Normal starting of either a cold or a warm engine is obtained without pumping or pressing the accelerator pedal.

To Turn Off The Engine Using ENGINE START/STOP Button

1. Place the gear selector in PARK, then push and release the ENGINE START/STOP button.
2. The ignition will return to the OFF mode.
3. If the gear selector is not in PARK (with vehicle stopped) and the ENGINE START/STOP button is pushed once, the transmission will automatically select PARK and the engine will turn off, however the ignition will remain in the ACC mode (NOT the OFF mode). Never leave a vehicle out of the PARK position, or it could roll.
4. If the gear selector is in NEUTRAL, and the vehicle speed is below 5 mph (8 km/h), pushing the START/STOP button once will turn the engine off. The ignition will remain in the ACC mode.

5. If the vehicle speed is above 5 mph (8 km/h), the ENGINE START/STOP button must be held for two seconds (or three short pushes in a row) to turn the engine off. The ignition will remain in the ACC mode (NOT the OFF mode) if the engine is turned off when the transmission is not in PARK.

NOTE: The system will automatically time out and the ignition will cycle to the OFF mode after 30 minutes of inactivity if the ignition is left in the ACC or RUN (engine not running) mode and the transmission is in PARK.

ENGINE START/STOP Button Functions — With Driver's Foot OFF The Brake Pedal (In PARK Or NEUTRAL Position)

The ENGINE START/STOP button operates similar to an ignition switch. It has three modes: OFF, ACC, and RUN. To change the ignition modes without starting the vehicle and use the accessories, follow these steps:

1. Starting with the ignition in the OFF mode,
2. Push the ENGINE START/STOP button once to place the ignition to the ACC mode (instrument cluster will display "ACC"),
3. Push the ENGINE START/STOP button a second time to place the ignition to the RUN mode (instrument cluster will display "ON/RUN"),
4. Push the ENGINE START/STOP button a third time to return the ignition to the OFF mode (instrument cluster will display "OFF").

NOTE: Only press one pedal at a time while driving the vehicle. Torque performance of the vehicle could be reduced if both pedals are pressed at the same time. If pressure is detected on both pedals simultaneously, a warning message will display in the instrument cluster. For further information, refer to "Instrument Cluster Display" in "Getting To Know Your Instrument Panel".

AutoPark

AutoPark is a supplemental feature to assist in placing the vehicle in PARK should the situations on the following pages occur. It is a back up system and should not be relied upon as the primary method by which the driver shifts the vehicle into PARK.

The conditions under which AutoPark will engage are outlined on the following pages.

WARNING!

- **Driver inattention could lead to failure to place the vehicle in PARK. ALWAYS DO A VISUAL CHECK that your vehicle is in PARK by verifying that a solid (not blinking) "P" is indicated in the instrument cluster display and on the gear selector. If the "P" indicator is blinking, your vehicle is not in PARK. As an added precaution, always apply the parking brake when exiting the vehicle.**
- **AutoPark is a supplemental feature. It is not designed to replace the need to shift your vehicle into PARK. It is a back up system and should not be relied upon as the primary method by which the driver shifts the vehicle into PARK.**

If the vehicle is not in PARK and the driver turns off the engine, the vehicle may AutoPark.

AutoPark will engage when all of these conditions are met:

- Vehicle is equipped with an 8-speed transmission
- Vehicle is not in PARK
- Vehicle Speed is 1.2 MPH (1.9 km/h) or less
- Ignition switched from RUN to ACC

NOTE: For Keyless Go equipped vehicles, The engine will turn off and the ignition switch will change to ACC mode. After 30 minutes the ignition switches to OFF automatically, unless the driver turns the ignition switch OFF.

If the vehicle is not in PARK and the driver exits the vehicle with the engine running, the vehicle may AutoPark.

AutoPark will engage when all of these conditions are met:

- Vehicle is equipped with an 8-speed transmission
- Vehicle is not in PARK
- Vehicle Speed is 1.2 MPH (1.9 km/h) or less
- Driver's seat belt is unbuckled
- Driver's door is ajar
- Brake Pedal is not depressed

The MESSAGE " **AutoPark Engaged Shift to P then Shift to Gear**"will display in the instrument cluster.

NOTE: In some cases the ParkSense graphic will be displayed in the instrument cluster. In these cases, the shifter must be returned to "P" to select desired gear.

If the driver shifts into PARK while moving, the vehicle may AutoPark.

AutoPark will engage **ONLY** when vehicle speed is 1.2 MPH (1.9 km/h) or less.

The MESSAGE " **Vehicle Speed is Too High to Shift to P**"will be displayed in the instrument cluster if vehicle speed is above 1.2 MPH (1.9 km/h).

WARNING!

If vehicle speed is above 1.2 MPH (1.9 km/h), the transmission will default to NEUTRAL until the vehicle speed drops below 1.2 MPH (1.9 km). A vehicle left in the NEUTRAL position can roll. As an added precaution, always apply the parking brake when exiting the vehicle.

4WD LOW — If Equipped

AutoPark will be disabled when operating the vehicle in 4WD LOW.

The MESSAGE " **AutoPark Disabled**" will be displayed in the instrument cluster.

Additional customer warnings will be given when both of these conditions are met:

- Vehicle is not in PARK
- Driver's Door is ajar

The MESSAGE " **AutoPark Not Engaged**" will be displayed in the instrument cluster. A warning chime will continue until you shift the vehicle into PARK or the Driver's Door is closed.

ALWAYS DO A VISUAL CHECK that your vehicle is in PARK by looking for the "P" in the instrument cluster display and on the shifter. As an added precaution, always apply the parking brake when exiting the vehicle.

If Engine Fails To Start

If the engine fails to start after you have followed the "Normal Starting" or "Extreme Cold Weather" procedure it may be flooded. Push the accelerator pedal all the way to the floor and hold it there. Crank the engine for no more than 15 seconds. This should clear any excess fuel in case the engine is flooded. Leave the ignition key in the RUN position, release the accelerator pedal and repeat the "Normal Starting" procedure.

WARNING!

- **Never pour fuel or other flammable liquid into the throttle body air inlet opening in an attempt to start the vehicle. This could result in flash fire causing serious personal injury.**
- **Do not attempt to push or tow your vehicle to get it started. Vehicles equipped with an automatic transmission cannot be started this way. Unburned fuel could enter the catalytic converter and once the engine has started, ignite and damage the converter and vehicle.**
- **If the vehicle has a discharged battery, booster cables may be used to obtain a start from a booster battery or the battery in another vehicle. This type of start can be dangerous if done improperly. Refer to "Jump Starting Procedure" in "In Case Of Emergency" for further information.**

CAUTION!

To prevent damage to the starter, do not continuously crank the engine for more than 25 seconds at a time. Wait 60 seconds before trying again.

Cold Weather Operation (Below –22°F Or –30°C)

To ensure reliable starting at these temperatures, use of an externally powered electric engine block heater (available from your authorized dealer) is recommended.

After Starting

The idle speed is controlled automatically, and it will decrease as the engine warms up.

ENGINE BLOCK HEATER — IF EQUIPPED

The engine block heater warms the engine, and permits quicker starts in cold weather. Connect the cord to a standard 110-115 Volt AC electrical outlet with a grounded, three-wire extension cord.

The engine block heater must be plugged in at least one hour to have an adequate warming effect on the engine.

The engine block heater cord is located:

- 3.6L Engine — Coiled and strapped to the engine oil dipstick tube.
- 5.7L Engine — Bundled and fastened to the injector harness.

WARNING!

Remember to disconnect the engine block heater cord before driving. Damage to the 110-115 Volt electrical cord could cause electrocution.

ENGINE BREAK-IN RECOMMENDATIONS — 3.6L & 5.7L ENGINES

A long break-in period is not required for the drivetrain (engine, transmission, clutch, and rear axle) in your new vehicle.

Drive moderately during the first 300 miles (500 km). After the initial 60 miles (100 km), speeds up to 50 or 55 mph (80 or 90 km/h) are desirable.

While cruising, brief full-throttle acceleration within the limits of local traffic laws contributes to a good break-in. However, wide-open throttle acceleration in low gear can be detrimental and should be avoided.

The engine oil, transmission fluid, and axle lubricant installed at the factory is high-quality and energy-conserving. Oil, fluid, and lubricant changes should be consistent with anticipated climate and conditions under which vehicle operations will occur. For the recommended viscosity and quality grades, refer to “Fluids And Lubricants” in ″Technical Specifications”.

CAUTION!

Never use Non-Detergent Oil or Straight Mineral Oil in the engine or damage may result.

NOTE: A new engine may consume some oil during its first few thousand miles (kilometers) of operation. This should be considered a normal part of the break-in and not interpreted as an indication of difficulty. Please check your oil level with the engine oil indicator often during the break in period. Add oil as required.

PARKING BRAKE

Before leaving the vehicle, make sure that the parking brake is fully applied and place the gear selector in the PARK position.

The foot operated parking brake is located below the lower left corner of the instrument panel. To apply the park brake, firmly push the park brake pedal fully. To release the parking brake, press the park brake pedal a second time and let your foot up as you feel the brake disengage.

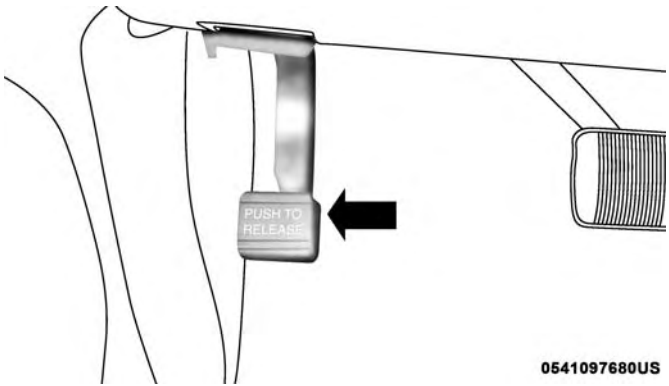

Parking Brake

When the parking brake is applied with the ignition switch in the ON mode, the Brake Warning Light in the instrument cluster will illuminate.

NOTE:

- When the parking brake is applied and the transmission is placed in gear, the Brake Warning Light will flash. If vehicle speed is detected, a chime will sound to alert the driver. Fully release the parking brake before attempting to move the vehicle.
- This light only shows that the parking brake is applied. It does not show the degree of brake application.

When parking on a hill, it is important to turn the front wheels toward the curb on a downhill grade and away from the curb on an uphill grade. Apply the parking brake before placing the gear selector in PARK, otherwise the load on the transmission locking mechanism may make it difficult to move the gear selector out of PARK. The parking brake should always be applied whenever the driver is not in the vehicle.

WARNING!

- Never use the PARK position as a substitute for the parking brake. Always apply the parking brake fully when parked to guard against vehicle movement and possible injury or damage.
- When leaving the vehicle, always remove the key fob from the ignition and lock your vehicle.
- Never leave children alone in a vehicle, or with access to an unlocked vehicle. Allowing children to be in a vehicle unattended is dangerous for a number of reasons. A child or others could be seriously or fatally injured. Children should be warned not to touch the parking brake, brake pedal or the gear selector.
- When leaving the vehicle, always make sure the keyless ignition node is in the OFF mode, remove the key fob from the vehicle and lock the vehicle.
- Do not leave the key fob in or near the vehicle or in a location accessible to children, and do not leave the ignition of a vehicle equipped with Keyless Enter-N-Go in the ACC or ON/RUN mode. A child could operate power windows, other controls, or move the vehicle.

(Continued)

WARNING! *(Continued)*

- Be sure the parking brake is fully disengaged before driving; failure to do so can lead to brake failure and a collision.
- Always fully apply the parking brake when leaving your vehicle, or it may roll and cause damage or injury. Also be certain to leave the transmission in PARK. Failure to do so may allow the vehicle to roll and cause damage or injury.

CAUTION!

If the Brake Warning Light remains on with the parking brake released, a brake system malfunction is indicated. Have the brake system serviced by an authorized dealer immediately.

AUTOMATIC TRANSMISSION

WARNING!

- **Never use the PARK position as a substitute for the parking brake. Always apply the parking brake fully when exiting the vehicle to guard against vehicle movement and possible injury or damage.**
- **Your vehicle could move and injure you and others if it is not in PARK. Check by trying to move the transmission gear selector out of PARK with the brake pedal released. Make sure the transmission is in PARK before exiting the vehicle.**
- **The transmission may not engage PARK if the vehicle is moving. Always bring the vehicle to a complete stop before shifting to PARK, and verify that the transmission gear position indicator solidly indicates PARK (P) without blinking. Ensure that the vehicle is completely stopped, and the PARK position is properly indicated, before exiting the vehicle.**
- **It is dangerous to shift out of PARK or NEUTRAL if the engine speed is higher than idle speed. If your foot is not firmly pressing the brake pedal, the**

(Continued)

WARNING! ***(Continued)***

vehicle could accelerate quickly forward or in reverse. You could lose control of the vehicle and hit someone or something. Only shift into gear when the engine is idling normally and your foot is firmly pressing the brake pedal.
- **Unintended movement of a vehicle could injure those in or near the vehicle. As with all vehicles, you should never exit a vehicle while the engine is running. Before exiting a vehicle, always come to a complete stop, then apply the parking brake, shift the transmission into PARK, and turn the ignition OFF. When the ignition is in the OFF mode, the transmission is locked in PARK, securing the vehicle against unwanted movement.**
- **When exiting the vehicle, always make sure the ignition is in the OFF mode, remove the key fob from the vehicle, and lock the vehicle.**
- **Never leave children alone in a vehicle, or with access to an unlocked vehicle. Allowing children to be in a vehicle unattended is dangerous for a number of reasons. A child or others could be seriously or fatally injured. Children should be warned not to**

(Continued)

WARNING! *(Continued)*

touch the parking brake, brake pedal or the transmission gear selector.

- **Do not leave the key fob in or near the vehicle (or in a location accessible to children), and do not leave the ignition in the ACC or ON/RUN mode. A child could operate power windows, other controls, or move the vehicle.**

CAUTION!

Damage to the transmission may occur if the following precautions are not observed:

- **Shift into or out of PARK or REVERSE only after the vehicle has come to a complete stop.**
- **Do not shift between PARK, REVERSE, NEUTRAL, or DRIVE when the engine is above idle speed.**
- **Before shifting into any gear, make sure your foot is firmly pressing the brake pedal.**

NOTE: You must press and hold the brake pedal while shifting out of PARK.

Ignition Park Interlock

This vehicle is equipped with an Ignition Park Interlock which requires the transmission to be in PARK before the ignition can be turned to the OFF mode. This helps the driver avoid inadvertently leaving the vehicle without placing the transmission in PARK. This system also locks the transmission in PARK whenever the ignition is in the OFF mode.

NOTE: The transmission is NOT locked in PARK when the ignition is in the ACC mode (even though the engine will be off). Ensure that the transmission is in PARK, and the ignition is **OFF** (not in ACC mode) before exiting the vehicle.

Brake/Transmission Shift Interlock System

This vehicle is equipped with a Brake Transmission Shift Interlock system (BTSI) that holds the transmission gear selector in PARK unless the brakes are applied. To shift the transmission out of PARK, the engine must be running and the brake pedal must be pressed. The brake pedal must also be pressed to shift from NEUTRAL into DRIVE or REVERSE when the vehicle is stopped or moving at low speeds.

Fuel Economy (ECO) Mode

The Fuel Economy (ECO) mode can improve the vehicle's overall fuel economy during normal driving conditions. Push the "ECO" switch in the center stack of the instrument panel to activate or disable ECO mode. A light on the switch indicates when ECO mode is disabled.

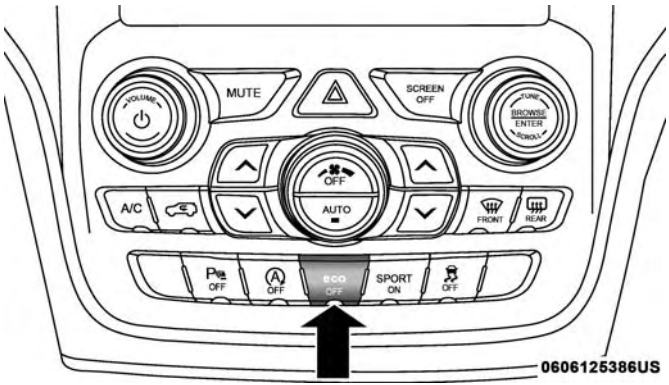

Fuel Economy Mode Switch

When the Fuel Economy (ECO) Mode is engaged, the vehicle control systems will change the following:

- The transmission will upshift sooner and downshift later.
- The overall driving performance will be more conservative.
- Vehicles with Quadra-Lift air suspension will operate in "Aero" mode over a broader speed range. Refer to the section on Quadra-Lift for further information.
- Some ECO mode functions may be temporarily inhibited based on temperature and other factors.

Active Noise Cancellation — If Equipped

Your vehicle is equipped with an Active Noise Cancellation System. This system uses four microphones embedded in the headliner to detect undesirable exhaust noise, which sometimes occurs when operating in specific driving conditions such as ECO and Tow mode. An onboard frequency generator creates counteracting sound waves through the audio system to help keep the vehicle quiet.

Eight–Speed Automatic Transmission

The transmission gear range (PRNDM) is displayed both beside the gear selector and in the instrument cluster. To select a gear range, press the lock button on the gear selector and move the selector rearward or forward. To shift the transmission out of PARK, the engine must be running and the brake pedal must be pressed. You must also press the brake pedal to shift from NEUTRAL into

DRIVE or REVERSE when the vehicle is stopped or moving at low speeds. Select the DRIVE range for normal driving.

NOTE: In the event of a mismatch between the gear selector position and the actual transmission gear (for example, driver selects PARK while driving), the position indicator will blink continuously until the selector is returned to the proper position, or the requested shift can be completed.

The electronically-controlled transmission adapts its shift schedule based on driver inputs, along with environmental and road conditions. The transmission electronics are self-calibrating; therefore, the first few shifts on a new vehicle may be somewhat abrupt. This is a normal condition, and precision shifts will develop within a few hundred miles (kilometers).

Only shift from DRIVE to PARK or REVERSE when the accelerator pedal is released and the vehicle is stopped. Be sure to keep your foot on the brake pedal when shifting between these gears.

The transmission gear selector provides PARK, REVERSE, NEUTRAL, DRIVE and MANUAL (AutoStick) shift positions. Manual shifts can be made using the AutoStick shift control. Toggling the gear selector forward (-) or rearward (+) while in the MANUAL (AutoStick) position (beside the DRIVE position), or tapping the shift paddles (+/-), if equipped, will manually select the transmission gear, and will display the current gear in the instrument cluster. Refer to "AutoStick" in this section for further information.

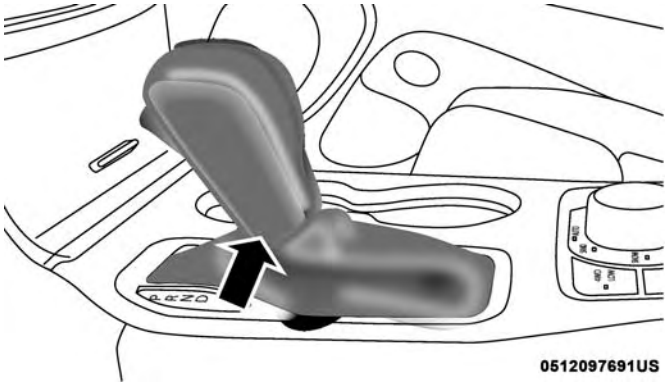

Gear Selector

NOTE: If the gear selector cannot be moved to the PARK, REVERSE, or NEUTRAL position (when pushed forward), it is probably in the AutoStick (+/-) position (beside the DRIVE position). In AutoStick mode, the transmission gear (1, 2, 3, etc.) is displayed in the instrument cluster. Move the gear selector to the right (into the DRIVE [D] position) for access to PARK, REVERSE, and NEUTRAL.

Gear Ranges

Do not depress the accelerator pedal when shifting from PARK or NEUTRAL into another gear range.

NOTE: After selecting any gear range, wait a moment to allow the selected gear to engage before accelerating. This is especially important when the engine is cold.

PARK (P)

This range supplements the parking brake by locking the transmission. The engine can be started in this range. Never attempt to use PARK while the vehicle is in motion. Apply the parking brake when exiting the vehicle in this range.

When parking on a level surface, you may shift the transmission into PARK first, and then apply the parking brake.

When parking on a hill, apply the parking brake before shifting the transmission to PARK. As an added precaution, turn the front wheels toward the curb on a downhill grade and away from the curb on an uphill grade.

When exiting the vehicle, always:

- Apply the parking brake,
- Shift the transmission into PARK,
- Turn the ignition OFF and,
- Remove the key fob from the vehicle.

NOTE: On four-wheel drive vehicles be sure that the transfer case is in a drive position.

WARNING!

- **Never use the PARK position as a substitute for the parking brake. Always apply the parking brake fully when exiting the vehicle to guard against vehicle movement and possible injury or damage.**
- **Your vehicle could move and injure you and others if it is not in PARK. Check by trying to move the transmission gear selector out of PARK with the brake pedal released. Make sure the transmission is in PARK before exiting the vehicle.**

(Continued)

WARNING! *(Continued)*

- The transmission may not engage PARK if the vehicle is moving. Always bring the vehicle to a complete stop before shifting to PARK, and verify that the transmission gear position indicator solidly indicates PARK (P) without blinking. Ensure that the vehicle is completely stopped, and the PARK position is properly indicated, before exiting the vehicle.
- It is dangerous to shift out of PARK or NEUTRAL if the engine speed is higher than idle speed. If your foot is not firmly pressing the brake pedal, the vehicle could accelerate quickly forward or in reverse. You could lose control of the vehicle and hit someone or something. Only shift into gear when the engine is idling normally and your foot is firmly pressing the brake pedal.
- Unintended movement of a vehicle could injure those in or near the vehicle. As with all vehicles, you should never exit a vehicle while the engine is running. Before exiting a vehicle, always come to a

(Continued)

WARNING! *(Continued)*

complete stop, then apply the parking brake, shift the transmission into PARK, and turn the ignition OFF. When the ignition is in the OFF mode, the transmission is locked in PARK, securing the vehicle against unwanted movement.

- When exiting the vehicle, always make sure the ignition is in the OFF mode, remove the key fob from the vehicle, and lock the vehicle.
- Never leave children alone in a vehicle, or with access to an unlocked vehicle. Allowing children to be in a vehicle unattended is dangerous for a number of reasons. A child or others could be seriously or fatally injured. Children should be warned not to touch the parking brake, brake pedal or the transmission gear selector.
- Do not leave the key fob in or near the vehicle (or in a location accessible to children), and do not leave the ignition in the ACC or ON/RUN mode. A child could operate power windows, other controls, or move the vehicle.

CAUTION!

- **Before moving the transmission gear selector out of PARK, you must start the engine, and also press the brake pedal. Otherwise, damage to the gear selector could result.**
- **DO NOT race the engine when shifting from PARK or NEUTRAL into another gear range, as this can damage the drivetrain.**

The following indicators should be used to ensure that you have properly engaged the transmission into the PARK position:

- When shifting into PARK, push the lock button on the gear selector and firmly move the selector all the way forward until it stops and is fully seated.
- Look at the transmission gear position display and verify that it indicates the PARK position (P), and is not blinking.
- With brake pedal released, verify that the gear selector will not move out of PARK.

NOTE: If the gear selector cannot be moved to the PARK position (when pushed forward), it is probably in the AutoStick (+/-) position (beside the DRIVE position). In AutoStick mode, the transmission gear (1, 2, 3, etc.) is displayed in the instrument cluster. Move the gear selector to the right (into the DRIVE [D] position) for access to PARK, REVERSE, and NEUTRAL.

REVERSE (R)

This range is for moving the vehicle backward. Shift into REVERSE only after the vehicle has come to a complete stop.

NEUTRAL (N)

Use this range when the vehicle is standing for prolonged periods with the engine running. Apply the parking brake and shift the transmission into PARK if you must exit the vehicle.

WARNING!

Do not coast in NEUTRAL and never turn off the ignition to coast down a hill. These are unsafe practices that limit your response to changing traffic or road conditions. You might lose control of the vehicle and have a collision.

CAUTION!

Towing the vehicle, coasting, or driving for any other reason with the transmission in NEUTRAL can cause severe transmission damage.
Refer to "Recreational Towing" in "Starting And Operating" and "Towing A Disabled Vehicle" in "In Case Of Emergency" for further information.

DRIVE (D)

This range should be used for most city and highway driving. It provides the smoothest upshifts and downshifts, and the best fuel economy. The transmission automatically upshifts through all forward gears. The DRIVE position provides optimum driving characteristics under all normal operating conditions.

When frequent transmission shifting occurs (such as when operating the vehicle under heavy loading conditions, in hilly terrain, traveling into strong head winds, or while towing a heavy trailer), use the AutoStick shift control (refer to "AutoStick" in this section for further information) to select a lower gear. Under these conditions, using a lower gear will improve performance and extend transmission life by reducing excessive shifting and heat buildup.

During extremely cold temperatures (-22°F [-30°C] or below), transmission operation may be modified depending on engine and transmission temperature as well as vehicle speed. Normal operation will resume once the transmission temperature has risen to a suitable level.

MANUAL (M)

The MANUAL (M, +/-) position (beside the DRIVE position) enables full manual control of transmission shifting (also known as AutoStick mode; refer to "AutoStick" in this section for further information). Toggling the gear selector forward (-) or rearward (+) while in the MANUAL (AutoStick) position will manually select the transmission gear, and will display the current gear in the instrument cluster.

Transmission Limp Home Mode

Transmission function is monitored electronically for abnormal conditions. If a condition is detected that could result in transmission damage, Transmission Limp Home Mode is activated. In this mode, the transmission may operate only in certain gears, or may not shift at all. Vehicle performance may be severely degraded and the engine may stall. In some situations, the transmission may not re-engage if the engine is turned off and restarted. The Malfunction Indicator Light (MIL) may be illuminated. A message in the instrument cluster will inform the driver of the more serious conditions, and indicate what actions may be necessary.

In the event of a momentary problem, the transmission can be reset to regain all forward gears by performing the following steps:

NOTE: In cases where the instrument cluster message indicates the transmission may not re-engage after engine shutdown, perform this procedure only in a desired location (preferably, at an authorized dealer).

1. Stop the vehicle.
2. Shift the transmission into PARK, if possible. If not, shift the transmission to NEUTRAL.
3. Push and hold the ignition switch until the engine turns OFF.
4. Wait approximately 30 seconds.
5. Restart the engine.
6. Shift into the desired gear range. If the problem is no longer detected, the transmission will return to normal operation.

NOTE: Even if the transmission can be reset, we recommend that you visit an authorized dealer at your earliest possible convenience. An authorized dealer has diagnostic equipment to assess the condition of your transmission.

If the transmission cannot be reset, authorized dealer service is required.

AutoStick

AutoStick is a driver-interactive transmission feature providing manual shift control, giving you more control of the vehicle. AutoStick allows you to maximize engine braking, eliminate undesirable upshifts and downshifts, and improve overall vehicle performance. This system can also provide you with more control during passing, city driving, cold slippery conditions, mountain driving, trailer towing, and many other situations.

Operation

To activate AutoStick mode, move the gear selector into the MANUAL (M) position (beside the DRIVE position), or tap one of the shift paddles on the steering wheel (if equipped). Tapping the (-) shift paddle (if equipped) to enter AutoStick mode will downshift the transmission to the next lower gear, while tapping (+) to enter AutoStick mode will retain the current gear. The current transmission gear will be displayed in the instrument cluster. In AutoStick mode, you can use the gear selector (in the MANUAL position), or the shift paddles (if equipped), to manually shift the transmission. Tapping the gear selector forward (-) while in the MANUAL (M) position, or tapping the (-) shift paddle (if equipped), will downshift the transmission to the next lower gear. Tapping the selector rearward (+) (or tapping the (+) shift paddle, if equipped) will command an upshift.

NOTE: The shift paddles (if equipped) may be disabled (or re-enabled, as desired) using the Uconnect Personal Settings.

In AutoStick mode, the transmission will shift up or down when (+/-) is manually selected by the driver (using the gear selector, or the shift paddles, if equipped), unless an engine lugging or overspeed condition would result. It will remain in the selected gear until another upshift or downshift is chosen, except as described below.

- The transmission will automatically downshift as the vehicle slows (to prevent engine lugging) and will display the current gear.
- The transmission will automatically downshift to first gear when coming to a stop. After a stop, the driver should manually upshift (+) the transmission as the vehicle is accelerated.
- You can start out, from a stop, in first or second gear (or third gear, in 4LO range, Snow mode, or Sand mode). Tapping (+) (at a stop) will allow starting in second gear. Starting out in second or third gear can be helpful in snowy or icy conditions.
- If a requested downshift would cause the engine to over-speed, that shift will not occur.
- The system will ignore attempts to upshift at too low of a vehicle speed.
- Holding the (-) paddle depressed (if equipped), or holding the gear selector in the (-) position, will downshift the transmission to the lowest gear possible at the current speed.

- Transmission shifting will be more noticeable when AutoStick is enabled.
- The system may revert to automatic shift mode if a fault or overheat condition is detected.

NOTE: When Selec-Speed or Hill Descent Control is enabled, AutoStick is not active.

To disengage AutoStick, return the gear selector to the DRIVE position, or press and hold the (+) shift paddle (if equipped, and the gear selector is already in DRIVE) until "D" is once again indicated in the instrument cluster. You can shift in or out of AutoStick at any time without taking your foot off the accelerator pedal.

WARNING!

Do not downshift for additional engine braking on a slippery surface. The drive wheels could lose their grip and the vehicle could skid, causing a collision or personal injury.

SPORT MODE — IF EQUIPPED

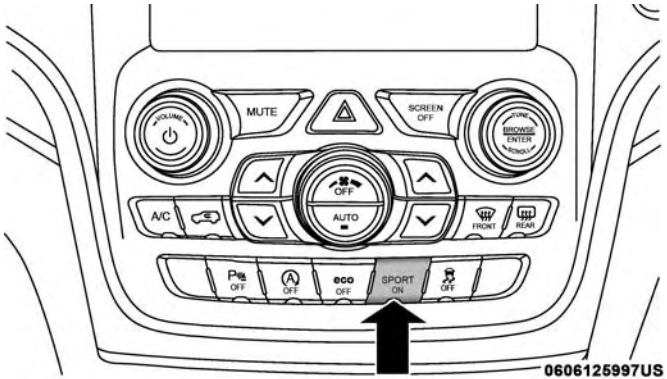

Sport Mode Button

Your vehicle is equipped with a Sport Mode feature. This mode is a configuration set up for typical enthusiast driving. The engine, transmission, and steering systems are all set to their SPORT settings. Sport Mode will provide improved throttle response and modified shifting for an enhanced driving experience, as well the greatest amount of steering feel. This mode may be activated and deactivated by pushing the Sport button on the instrument panel switch bank.

FOUR WHEEL DRIVE OPERATION

Quadra-Trac I Operating Instructions/Precautions — If Equipped

The Quadra-Trac I is a single-speed (HI range only) transfer case, which provides convenient full-time four-wheel drive. No driver interaction is required. The Brake Traction Control (BTC) System, which combines standard ABS and Traction Control, provides resistance to any wheel that is slipping to allow additional torque transfer to wheels with traction.

NOTE: The Quadra-Trac I system is not appropriate for conditions where 4WD LOW range is recommended. Refer to "Off-Road Driving Tips" in "Starting And Operating"

Quadra-Trac II Operating Instructions/Precautions — If Equipped

The Quadra-Trac II transfer case is fully automatic in the normal driving 4WD AUTO mode. The Quadra-Trac II transfer case provides three mode positions:

- 4WD HI
- NEUTRAL
- 4WD LOW

This transfer case is fully automatic in the 4WD HI mode.

When additional traction is required, the 4WD LOW position can be used to lock the front and rear driveshafts together and force the front and rear wheels to rotate at the same speed. The 4WD LOW position is intended for loose, slippery road surfaces only. Driving in the 4WD LOW position on dry, hard-surfaced roads may cause increased tire wear and damage to driveline components.

When operating your vehicle in 4WD LOW, the engine speed is approximately three times that of the 4WD HI position at a given road speed. Take care not to overspeed the engine and do not exceed 25 mph (40 km/h).

Proper operation of four-wheel drive vehicles depends on tires of equal size, type, and circumference on each wheel. Any difference will adversely affect shifting and cause damage to the transfer case.

Because four-wheel drive provides improved traction, there is a tendency to exceed safe turning and stopping speeds. Do not go faster than road conditions permit.

WARNING!

You or others could be injured or killed if you leave the vehicle unattended with the transfer case in the NEUTRAL position without first fully engaging the parking brake. The transfer case NEUTRAL position disengages both the front and rear drive shafts from the powertrain and will allow the vehicle to roll, even if the transmission is in PARK. The parking brake should always be applied when the driver is not in the vehicle.

Shift Positions

For additional information on the appropriate use of each 4WD system mode position, see the information below:

4WD AUTO

This range is used on surfaces such as ice, snow, gravel, sand, and dry hard pavement.

NOTE: Refer to "Selec-Terrain — If Equipped" further on in this section for further information on the various positions and their intended usages.

NEUTRAL

This range disengages the driveline from the powertrain. It is to be used for flat towing behind another vehicle. Refer to "Recreational Towing" in "Starting And Operating" for further information.

WARNING!

You or others could be injured or killed if you leave the vehicle unattended with the transfer case in the NEUTRAL position without first fully engaging the parking brake. The transfer case NEUTRAL position disengages both the front and rear drive shafts from the powertrain and will allow the vehicle to roll, even if the transmission is in PARK. The parking brake should always be applied when the driver is not in the vehicle.

4WD LOW

This range is for low speed four-wheel drive. It provides an additional gear reduction which allows for increased torque to be delivered to both the front and rear wheels while providing maximum pulling power for loose, slippery road surfaces only. Do not exceed 25 mph (40 km/h).

NOTE: Refer to "Selec-Terrain — If Equipped" for further information on the various positions and their intended usages.

Shifting Procedures

4WD HI To 4WD LOW

With the vehicle at speeds of 0 to 3 mph (0 to 5 km/h), the ignition switch in the ON position or the engine running, shift the transmission into "N", and push the "4WD LOW" button once on the transfer case switch. The "4WD LOW" indicator light in the instrument cluster will begin to flash and remain on solid when the shift is complete.

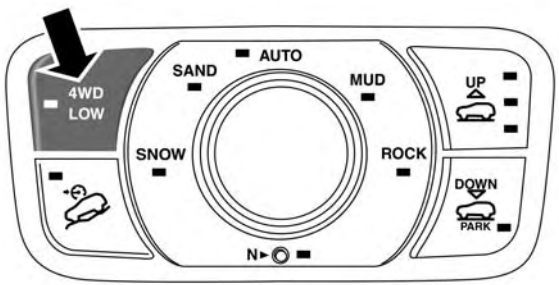

Transfer Case Switch

NOTE: If shift conditions/interlocks are not met, or a transfer case motor temperature protection condition exists, a "For 4x4 Low Slow Below 3 mph (5 km/h) Put Trans in "N" Press 4 Low" message will flash from the instrument cluster display. Refer to "Instrument Cluster Display" in "Getting To Know Your Instrument Panel" for further information.

4WD LOW To 4WD HI

With the vehicle at speeds of 0 to 3 mph (0 to 5 km/h), the ignition switch in the ON position or the engine running, shift the transmission into NEUTRAL, and push the "4WD LOW" button once on the transfer case switch. The "4WD LOW" indicator light in the instrument cluster will flash and go out when the shift is complete.

NOTE:

- If shift conditions/interlocks are not met, or a transfer case motor temperature protection condition exists, a "For 4x4 High Slow Below 3 mph (5 km/h) Put Trans in N push 4 Low" message will flash from the instrument cluster display. Refer to "Instrument Cluster Display" in "Getting To Know Your Instrument Panel" for further information.
- Shifting into or out of 4WD LOW is possible with the vehicle completely stopped; however, difficulty may occur due to the mating clutch teeth not being properly aligned. Several attempts may be required for clutch teeth alignment and shift completion to occur. The preferred method is with the vehicle rolling 0 to 3 mph (0 to 5 km/h). If the vehicle is moving faster than 3 mph (5 km/h), the transfer case will not allow the shift.

Shifting Into NEUTRAL (N)

WARNING!

You or others could be injured or killed if you leave the vehicle unattended with the transfer case in the NEUTRAL (N) position without first fully engaging the parking brake. The NEUTRAL (N) position disengages both the front and rear drive shafts from the powertrain and will allow the vehicle to roll, even if the transmission is in PARK. The parking brake should always be applied when the driver is not in the vehicle.

1. Bring the vehicle to a complete stop, with the engine running.
2. Press and hold the brake pedal.
3. Shift the transmission into NEUTRAL.
4. If vehicle is equipped with Quadra-Lift air suspension, ensure the vehicle is set to Normal Ride Height.

5. Using a ballpoint pen or similar object, push and hold the recessed transfer case NEUTRAL (N) button (located by the selector switch) for four seconds. The light behind the NEUTRAL (N) symbol will blink, indicating shift in progress. The light will stop blinking (stay on solid) when the shift to NEUTRAL (N) is complete. A "NEUTRAL" message will appear in the instrument cluster display. Refer to "Instrument Cluster Display" in "Getting To Know Your Instrument Panel" for further information.

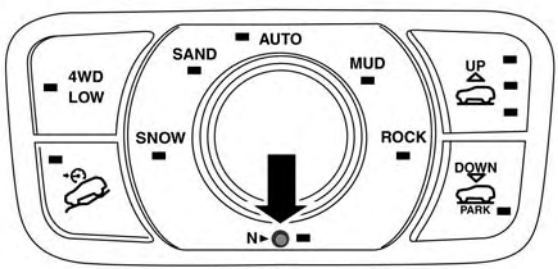

NEUTRAL (N) Switch

6. After the shift is completed and the NEUTRAL (N) light stays on, release the NEUTRAL (N) button.
7. Shift the transmission into REVERSE.
8. Release the brake pedal for five seconds and ensure that there is no vehicle movement.
9. Press and hold the brake pedal. Shift the transmission back into NEUTRAL.
10. Firmly apply the parking brake.
11. With the transmission and transfer case in NEUTRAL, push and hold the ENGINE START/STOP button until the engine turns off.
12. Place the transmission gear selector in PARK. Release the brake pedal.
13. Push the ENGINE STOP/START button twice (without pressing the brake pedal), to turn the ignition to the OFF mode.
14. Release the parking brake only when the vehicle is securely attached to a tow vehicle.

NOTE: If shift conditions/interlocks are not met, a "To Tow Vehicle Safely, Read Neutral Shift Procedure in Owner's Manual" message will flash from the instrument cluster display. Refer to "Instrument Cluster Display" in "Getting To Know Your Instrument Panel" for further information.

Shifting Out Of NEUTRAL (N)

Use the following procedure to prepare your vehicle for normal usage.

1. Bring the vehicle to a complete stop.
2. Firmly apply the parking brake.
3. Start the engine.
4. Press and hold the brake pedal.
5. Shift the transmission into NEUTRAL.
6. Using a ballpoint pen or similar object, push and hold the recessed transfer case NEUTRAL (N) button (located by the selector switch) for one second.

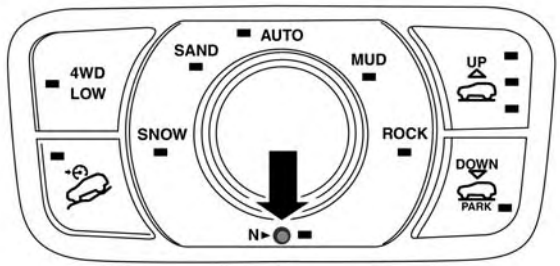

NEUTRAL (N) Switch

7. When the NEUTRAL (N) indicator light turns off, release the NEUTRAL (N) button.
8. After the NEUTRAL (N) button has been released, the transfer case will shift to the position indicated by the selector switch.

Quadra-Drive II System — If Equipped

The optional Quadra-Drive II System features two torque transfer couplings. The couplings include an Electronic Limited-Slip Differential (ELSD) rear axle and the Quadra-Trac II transfer case. The optional ELSD axle is fully automatic and requires no driver input to operate. Under normal driving conditions, the unit functions as a standard axle, balancing torque evenly between left and right wheels. With a traction difference between left and right wheels, the coupling will sense a speed difference. As one wheel begins to spin faster than the other, torque will automatically transfer from the wheel that has less traction, to the wheel that has traction. While the transfer case and axle coupling differ in design, their operation is similar. Follow the Quadra-Trac II transfer case shifting information, preceding this section, for shifting this system.

QUADRA-LIFT — IF EQUIPPED

Description

The Quadra-Lift air suspension system provides full time load leveling capability along with the benefit of vehicle height adjustment by the push of a button. The vehicle will automatically raise and lower the ride height to adapt to the appropriate driving conditions. At higher speeds, the vehicle will lower to an aerodynamic ride height and when operating in off-road modes, the vehicle will raise the ride height accordingly. The buttons near the terrain switch in the center console area can be used to set preferred ride height to match the appropriate conditions.

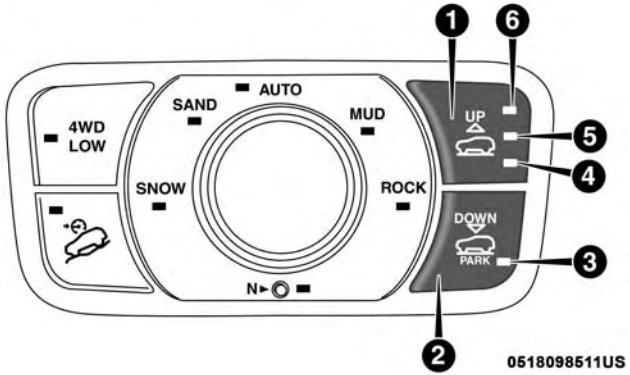

Selec-Terrain Switch

1 — UP Button
2 — DOWN Button
3 — Entry/Exit Mode Indicator Lamp (Customer Selectable)
4 — Normal Ride Height Indicator Lamp (Customer Selectable)
5 — Off-Road 1 Indicator Lamp (Customer Selectable)
6 — Off-Road 2 Indicator Lamp (Customer Selectable)

- **Normal Ride Height (NRH)** – This is the standard position of the suspension and is meant for normal driving.
- **Off-Road 1 (OR1) (Raises the vehicle approximately 1.1 inches (28 mm))** – This is the primary position for all off-road driving until OR2 is needed. A smoother and more comfortable ride will result. Push the "UP" button once from the NRH position while the vehicle speed is below 38 mph (61 km/h). When in the OR1 position, if the vehicle speed remains between 40 mph (64 km/h) and 50 mph (80 km/h) for greater than 20 seconds or if the vehicle speed exceeds 50 mph (80 km/h), the vehicle will be automatically lowered to NRH. Refer to "Driving Tips" in "Starting And Operating" for further information.
- **Off-Road 2 (OR2) (Raises the vehicle approximately 2.2 inches (55 mm))** – This position is intended for off-roading use only where maximum ground clearance is required. To enter OR2, push the "UP" button twice from the NRH position or once from the OR1 position while vehicle speed is below 20 mph (32 km/h). While in OR2, if the vehicle speed exceeds 25 mph (40 km/h) the vehicle height will be automatically lowered to OR1. Refer to "Driving Tips" in "Starting And Operating" for further information.
- **Aero Mode (Lowers the vehicle approximately 0.6 inches (15 mm))** – This position provides improved aerodynamics by lowering the vehicle. The vehicle will automatically enter Aero Mode when the vehicle speed remains between 52 mph (83 km/h) and 56 mph (90 km/h) for greater than 20 seconds or if the vehicle speed exceeds 56 mph (90 km/h). The vehicle will return to NRH from Aero Mode if the vehicle speed remains between 20 mph (32 km/h) and 25 mph (40 km/h) for greater than 20 seconds or if the vehicle speed falls below 20 mph (32 km/h). The vehicle will enter Aero Mode, regardless of vehicle speed if the vehicle is in "SPORT" mode.
- **Entry/Exit Mode (Lowers the vehicle approximately 1.6 inches (40 mm)** – This position lowers the vehicle for easier passenger entry and exit as well as lowering the rear of the vehicle for easier loading and unloading of cargo. To enter Entry/Exit Mode, push the "DOWN" button once from (NRH) while the vehicle speed is below 25 mph (40 km/h). Once the vehicle speed goes below 15 mph (24 km/h) the vehicle height will begin to lower. If the vehicle speed remains between 15 mph (24 km/h) and 25 mph (40 km/h) for greater than 60 seconds, or the vehicle speed exceeds 25 mph (40 km/h) the Entry/Exit Mode change will be cancelled. To exit

Entry/Exit Mode, press the "Up" button once while in Entry/Exit Mode or drive the vehicle over 15 mph (24 km/h).

NOTE: Automatic lowering of the vehicle into Entry/Exit Mode can be enabled through the Uconnect Touch-Screen Radio. If this feature is enabled, the vehicle will only lower if the gear selector is in "PARK", the terrain switch is in "AUTO", the transfer-case is in "AUTO" and the vehicle level should be either in Normal or Aero Mode. The Vehicle will not automatically lower if the air suspension level is in Off Rd 2 or Off Rd 1. If the vehicle is equipped with Intrusion Theft Module (ITM), the lowering will be suppressed when the ignition is switched OFF and the door is open to prevent setting the alarm off.

The Selec-Terrain switch will automatically change the vehicle to the proper height based on the position of the Selec-Terrain switch. The height can be changed from the default Selec-Terrain setting by normal use of the air suspension buttons. Refer to "Selec-Terrain" in "Starting And Operating" for further information.

The system requires that the engine be running for all changes. When lowering the vehicle all of the doors, including the liftgate, must be closed. If a door is opened at any time while the vehicle is lowering the change will not be completed until the open door(s) is/are closed.

The Quadra-Lift air suspension system uses a lifting and lowering pattern which keeps the headlights from incorrectly shining into oncoming traffic. When raising the vehicle, the rear of the vehicle will move up first and then the front. When lowering the vehicle, the front will move down first and then the rear.

After the engine is turned off, it may be noticed that the air suspension system operates briefly, this is normal. The system is correcting the position of the vehicle to ensure a proper appearance.

To assist with changing a spare tire, the Quadra-Lift air suspension system has a feature which allows the automatic leveling to be disabled. Refer to "Uconnect Settings" in "Multimedia" for further information.

For further information refer to "Driving Tips" in "Starting And Operating" section.

NOTE: If equipped with a touch screen radio all enabling/disabling of air suspension features must be done through the radio. Refer to "Uconnect Settings" in "Multimedia" for further information.

WARNING!

The air suspension system uses a high pressure volume of air to operate the system. To avoid personal injury or damage to the system, see your authorized dealer for service.

Air Suspension Modes

The Air Suspension system has multiple modes to protect the system in unique situations:

Tire/Jack Mode

To assist with changing a spare tire, the air suspension system has a feature which allows the automatic leveling to be disabled. Refer to "Uconnect Settings" in "Multimedia" for further information.

NOTE: This mode is intended to be enabled with engine running.

Auto Entry/Exit Mode

To assist in entering and exiting the vehicle, the air suspension system has a feature which automatically lowers the vehicle to entry/exit ride height. Refer to "Uconnect Settings" in "Multimedia" for further information.

NOTE: This mode is intended to be enabled with engine running.

Transport Mode

To assist with flat bed towing, the air suspension system has a feature which will put the vehicle into Entry/Exit height and disable the automatic load leveling system. Refer to "Uconnect Settings" in "Multimedia" for further information.

NOTE: This mode is intended to be enabled with engine running.

Suspension Display Messages Mode

The "Suspension Display Messages" setting allows you to only display suspension warnings. Refer to "Uconnect Settings" in "Multimedia" for further information.

NOTE: This mode is intended to be enabled with engine running.

Wheel Alignment Mode

Before performing a wheel alignment this mode must be enabled. Refer to "Uconnect Settings" in "Multimedia" for further information.

NOTE: This mode is intended to be enabled with engine running.

If equipped with a touch screen radio all enabling/disabling of air suspension features must be done through the radio. Refer to "Uconnect Settings" in "Multimedia" for further information.

Instrument Cluster Display Messages

When the appropriate conditions exist, a message will appear in the instrument cluster. Refer to "Instrument Cluster Display" in "Getting To Know Your Instrument Panel" for further information.

Operation

The indicator lamps 3 through 6 will illuminate to show the current position of the vehicle. Flashing indicator lamps will show a position which the system is working to achieve. When raising, if multiple indicator lamps are flashing on the "UP" button, the highest flashing indicator lamp is the position the system is working to achieve. When lowering, if multiple indicators are flashing on the "DOWN" button the lowest solid indicator lamp is the position the system is working to achieve.

Pushing the "UP" button once will move the suspension one position higher from the current position, assuming all conditions are met (i.e. engine running, speed below threshold, etc). The "UP" button can be pushed multiple times, each push will raise the requested level by one position up to a maximum position of OR2 or the highest position allowed based on current conditions (i.e. vehicle speed, etc).

Pushing the "DOWN" button once will move the suspension one position lower from the current level, assuming all conditions are met (i.e. engine running, doors closed, speed below threshold, etc). The "DOWN" button can be pressed multiple times. Each push will lower the requested level by one position down to a minimum of Park Mode or the lowest position allowed based on current conditions (i.e. vehicle speed, etc.)

Automatic height changes will occur based on vehicle speed and the current vehicle height. The indicator lamps and instrument cluster display messages will operate the same for automatic changes and user requested changes.

- Off-Road 2 (OR2) – Indicator lamps 4, 5, and 6 will be illuminated when the vehicle is in OR2.
- Off-Road 1 (OR1) – Indicator lamps 4 and 5 will be illuminated when the vehicle is in OR1.
- Normal Ride Height (NRH) – Indicator lamp 4 will be illuminated when the vehicle is in this position.
- Entry/Exit Mode – Indicator lamp 3 will be illuminated when the vehicle is in Entry/Exit Mode. If Entry/Exit Mode is requested while vehicle speed is between 15 mph (24 km/h) and 25 mph (40 km/h), indicator lamp 4 will remain on solid and indicator lamp 3 will flash as the system waits for the vehicle to reduce speed. If vehicle speed is reduced to, and kept below, 15 mph (24 km/h) indicator lamp 4 will turn off and indicator lamp 3 will flash until Entry/Exit Mode is achieved at which point indicator lamp 3 will go solid. If during the height change to Entry/Exit Mode, the vehicle speed exceeds 15 mph (24 km/h), the height change will be paused until the vehicle speed either goes below 15 mph (24 km/h) and the height change continues to Entry/Exit Mode, or exceeds 25 mph (40 km/h) and the vehicle height will return to NRH. Entry/Exit Mode may be selected while the vehicle is not moving provided that the engine is still running and all doors remain closed.
- Transport Mode - No indicator lamps will be illuminated. Customer driving will disable Transport Mode.
- Tire/Jack Mode - Indicator lamps 3 and 6 will be illuminated. Customer driving will disable Tire/Jack Mode.
- Wheel Alignment Mode - Indicator lamps 3 and 4 will be illuminated. Customer driving will disable Wheel Alignment Mode.

SELEC-TERRAIN — IF EQUIPPED

Selec-Terrain Mode Selection

Selec-Terrain combines the capabilities of the vehicle control systems, along with driver input, to provide the best performance for all terrains.

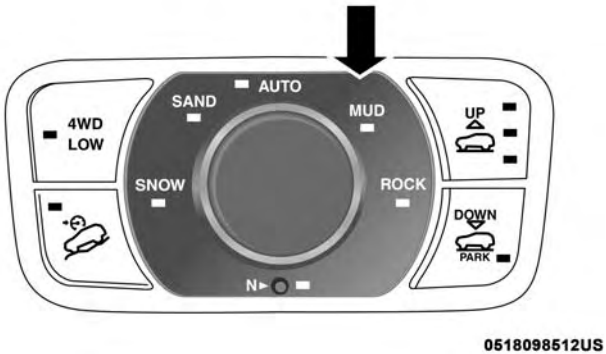

Selec-Terrain Switch

Selec-Terrain consists of the following positions:

- **Snow** – Tuning set for additional stability in inclement weather. Use on and off road on loose traction surfaces such as snow. When in Snow mode (depending on certain operating conditions), the transmission may use second gear (rather than first gear) during launches, to minimize wheel slippage. If equipped with air suspension, the default ride height for Snow is Normal Ride Height (NRH).
- **Auto** – Fully automatic full time four-wheel drive operation can be used on and off road. Balances traction with seamless steering feel to provide improved handling and acceleration over two-wheel drive vehicles. If equipped with air suspension, the level will change to Normal Ride Height (NRH).
- **Sand** – Off road calibration for use on low traction surfaces such as sand or wet grass. Driveline is maximized for traction. Some binding may be felt on less forgiving surfaces. The electronic brake controls are set to limit traction control management of throttle and wheel spin. If equipped with air suspension, the default ride height for Sand is Normal Ride Height (NRH).
- **Mud** – Off road calibration for use on low traction surfaces such as mud. Driveline is maximized for traction. Some binding may be felt on less forgiving surfaces. The electronic brake controls are set to limit traction control management of throttle and wheel spin. If equipped with air suspension, the level will change to Off Road 1.

- **Rock** – Off road calibration only available in 4WD Low range. The vehicle is raised (if equipped with Air Suspension) for improved ground clearance. Traction based tuning with improved steer-ability for use on high traction off-road surfaces. Use for low speed obstacles such as large rocks, deep ruts, etc. If equipped with air suspension, the vehicle level will change to Off-Road 2. If the Selec-Terrain switch is in ROCK mode, and the transfer case is switched from 4WD Low to 4WD High, the Selec-Terrain system will return to AUTO.

NOTE: Activate the Hill Descent Control or Selec Speed Control for steep downhill control. See "Electronic Brake Control System" in this section for further information.

Instrument Cluster Display Messages

When the appropriate conditions exist, a message will appear in the instrument cluster. Refer to "Instrument Cluster Display" in "Getting To Know Your Instrument Panel" for further information.

FUEL SAVER TECHNOLOGY 5.7L ONLY — IF EQUIPPED

This feature offers improved fuel economy by shutting off four of the engine's eight cylinders during light load and cruise conditions. The system is automatic with no driver inputs or additional driving skills required.

NOTE: This system may take some time to return to full functionality after a battery disconnect.

POWER STEERING

The electric power steering system will give you good vehicle response and increased ease of maneuverability in tight spaces. The system will vary its assist to provide light efforts while parking and good feel while driving. If the electric steering system experiences a fault that prevents it from providing assist, you will still have the ability to steer the vehicle manually.

WARNING!

Continued operation with reduced assist could pose a safety risk to yourself and others. Service should be obtained as soon as possible.

Alternate electric power steering efforts can be selected through the Uconnect System. Refer to "Customer Programmable Features" within "Uconnect Settings" in "Multimedia" for further information.

If the Electric Power Steering warning icon is displayed and the "SERVICE POWER STEERING" or the "POWER STEERING ASSIST OFF – SERVICE SYSTEM" message is displayed within the instrument cluster display, this indicates the vehicle needs to be taken to the dealer for service. Refer to "Warning Lights And Messages" in "Getting To Know Your Instrument Panel" for further information.

NOTE:

- Even if the power steering assistance is no longer operational, it is still possible to steer the vehicle. Under these conditions there will be a substantial increase in steering effort, especially at low speeds and during parking maneuvers.
- If the condition persists, see your authorized dealer for service.

If the Steering icon is displayed and the "POWER STEERING SYSTEM OVER TEMP" message is displayed on the instrument cluster screen, they indicate that extreme steering maneuvers may have occurred which caused an over temperature condition in the power steering system. Once driving conditions are safe, pull over and let the vehicle idle for a few moments until the icon and message turn off.

STOP/START SYSTEM — IF EQUIPPED

The Stop/Start function is developed to reduce fuel consumption. The system will stop the engine automatically during a vehicle stop if the required conditions are met. Releasing the brake pedal or pressing the accelerator pedal will automatically re-start the engine.

This vehicle has been upgraded with a heavy duty starter, enhanced battery, and other upgraded engine parts, to handle the additional engine starts.

Automatic Mode

The Stop/Start feature is enabled after every normal customer engine start. At that time, the system will go into STOP/START READY and if all other conditions are met, can go into a STOP/START AUTOSTOP ACTIVE "Autostop" mode.

To Activate The Autostop Mode, The Following Must Occur:

- The system must be in STOP/START READY state. A STOP/START READY message will be displayed in the instrument cluster display within the Stop/Start section. Refer to "Instrument Cluster" in "Getting To Know Your Instrument Panel" for further information.
- The vehicle must be completely stopped.
- The shifter must be in a forward gear and the brake pedal depressed.

The engine will shut down, the tachometer will move to the zero position and the Stop/Start telltale will illuminate indicating you are in Autostop. Customer settings will be maintained upon return to an engine running condition.

Refer to the "Stop/Start System" in the "Starting And Operating" section for further information.

Possible Reasons The Engine Does Not Autostop

Prior to engine shut down, the system will check many safety and comfort conditions to see if they are fulfilled. Detailed information about the operation of the Stop/Start system may be viewed in the instrument cluster display Stop/Start Screen. In the following situations, the engine will not stop:

- Driver's seat belt is not buckled.
- Driver's door is not closed.
- Battery temperature is too warm or cold.
- Battery charge is low.
- The vehicle is on a steep grade.
- Cabin heating or cooling is in process and an acceptable cabin temperature has not been achieved.
- HVAC is set to full defrost mode at a high blower speed.
- HVAC set to MAX A/C.
- Engine has not reached normal operating temperature.
- The transmission is not in a forward gear.
- Hood is open.
- Vehicle is in 4LO transfer case mode.
- Brake pedal is not pressed with sufficient pressure.

Other Factors Which Can Inhibit Autostop Include:

- Accelerator pedal input.
- Engine temp too high.
- 5 mph (8 km/h) threshold not achieved from previous AUTOSTOP.

- Steering angle beyond threshold.
- ACC is on and speed is set.

It may be possible for the vehicle to be driven several times without the STOP/START system going into a STOP/START READY state under more extreme conditions of the items listed above.

To Start The Engine While In Autostop Mode

While in a forward gear, the engine will start when the brake pedal is released or the throttle pedal is depressed. The transmission will automatically re-engage upon engine restart.

Conditions That Will Cause The Engine To Start Automatically While In Autostop Mode:

- The transmission selector is moved out of DRIVE.
- To maintain cabin temperature comfort.
- HVAC is set to full defrost mode.
- HVAC system temperature or fan speed is manually adjusted.
- Battery voltage drops too low.
- Low brake vacuum (e.g. after several brake pedal applications).
- STOP/START OFF switch is pushed.
- A STOP/START system error occurs.
- 4WD system is put into 4LO mode.

To Manually Turn Off The Stop/Start System

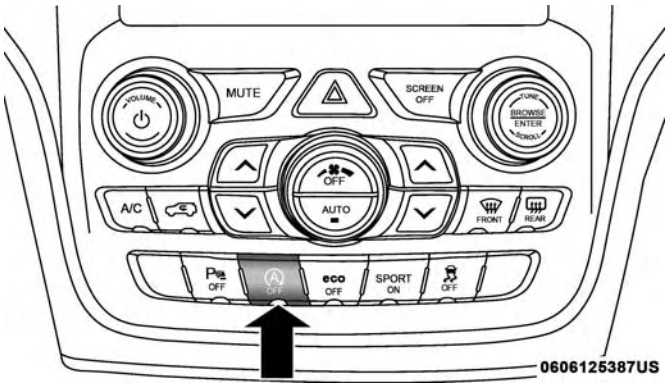

STOP/START Off Switch

1. Push the STOP/START OFF switch (located on the switch bank). The light on the switch will illuminate.

2. The "STOP/START OFF" message will appear in instrument cluster display within the Stop/Start section. Refer to "Instrument Cluster" in "Getting To Know Your Instrument Panel" for further information.
3. At the next vehicle stop (after turning off the STOP/START system), the engine will not be stopped.
4. The STOP/START system will reset itself back to an ON condition every time the ignition is turned off and back on.

To Manually Turn On The Stop/Start System

Push the STOP/START OFF switch (located on the switch bank). The light on the switch will turn off.

System Malfunction

If there is a malfunction in the STOP/START system, the system will not shut down the engine. A "SERVICE STOP/START SYSTEM" message will appear in the instrument cluster display. Refer to "Instrument Cluster Display" in "Getting to Know Your Instrument Panel" for further information.

If the "SERVICE STOP/START SYSTEM" message appears in the instrument cluster display, have the system checked by an authorized dealer.

SPEED CONTROL — IF EQUIPPED

When engaged, the Speed Control takes over accelerator operations at speeds greater than 20 mph (32 km/h).

The Speed Control buttons are located on the right side of the steering wheel.

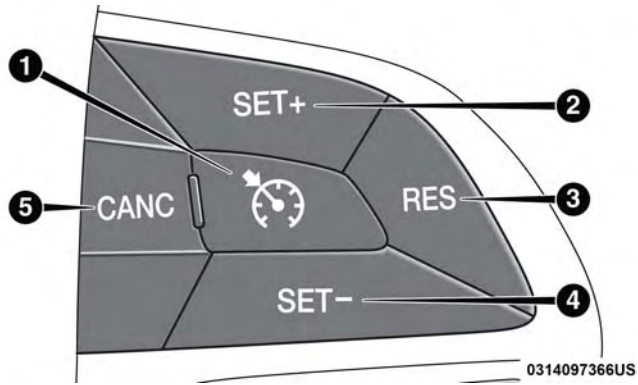

Speed Control Buttons

1 — On/Off
2 — SET (+)/Accel
3 — RES/Resume
4 — SET (-)/Decel
5 — CANC/Cancel

NOTE: In order to ensure proper operation, the Speed Control System has been designed to shut down if multiple Speed Control functions are operated at the same time. If this occurs, the Speed Control System can be reactivated by pushing the Speed Control on/off button and resetting the desired vehicle set speed.

WARNING!

Speed Control can be dangerous where the system cannot maintain a constant speed. Your vehicle could go too fast for the conditions, and you could lose control and have an accident. Do not use Speed Control in heavy traffic or on roads that are winding, icy, snow-covered or slippery.

To Activate

Push the on/off button to activate the Speed Control. "CRUISE CONTROL READY" will appear in the instrument cluster display to indicate the Speed Control is on. To turn the system off, push the on/off button a second time. "CRUISE CONTROL OFF" will appear in the instrument cluster display to indicate the Speed Control is off. The system should be turned off when not in use.

WARNING!

Leaving the Speed Control system on when not in use is dangerous. You could accidentally set the system or cause it to go faster than you want. You could lose control and have an accident. Always leave the system OFF when you are not using it.

To Set A Desired Speed

Turn the Speed Control on. When the vehicle has reached the desired speed, push the SET (+) or SET (-) button and release. Release the accelerator and the vehicle will operate at the selected speed. Once a speed has been set, a message "CRUISE CONTROL SET TO MPH (km/h)" will appear indicating what speed was set. A cruise indicator lamp, along with set speed will also appear and stay on in the instrument cluster when the speed is set.

To Vary The Speed Setting

To Increase Speed

When the Speed Control is set, you can increase speed by pushing the SET **(+)** button.

The driver's preferred units can be selected through the instrument cluster display. Refer to "Getting To Know Your Instrument Panel" for more information. The speed increment shown is dependant on the chosen speed unit of U.S. (mph) or Metric (km/h):

U.S. Speed (mph)

- Pushing the SET **(+)** button once will result in a 1 mph increase in set speed. Each subsequent tap of the button results in an increase of 1 mph.
- If the button is continually pushed, the set speed will continue to increase until the button is released, then the new set speed will be established.

Metric Speed (km/h)

- Pushing the SET **(+)** button once will result in a 1 km/h increase in set speed. Each subsequent tap of the button results in an increase of 1 km/h.
- If the button is continually pushed, the set speed will continue to increase until the button is released, then the new set speed will be established.

To Decrease Speed

When the Speed Control is set, you can decrease speed by pushing the SET **(-)** button.

The driver's preferred units can be selected through the instrument cluster display. Refer to "Getting To Know Your Instrument Panel" for more information. The speed decrement shown is dependant on the chosen speed unit of U.S. (mph) or Metric (km/h):

U.S. Speed (mph)

- Pushing the SET **(-)** button once will result in a 1 mph decrease in set speed. Each subsequent tap of the button results in a decrease of 1 mph.
- If the button is continually pushed, the set speed will continue to decrease until the button is released, then the new set speed will be established.

Metric Speed (km/h)

- Pushing the SET **(-)** button once will result in a 1 km/h decrease in set speed. Each subsequent tap of the button results in a decrease of 1 km/h.
- If the button is continually pushed, the set speed will continue to decrease until the button is released, then the new set speed will be established.

To Accelerate For Passing

Press the accelerator as you would normally. When the pedal is released, the vehicle will return to the set speed.

Using Speed Control On Hills

The transmission may downshift on hills to maintain the vehicle set speed.

NOTE: The Speed Control system maintains speed up and down hills. A slight speed change on moderate hills is normal.

On steep hills, a greater speed loss or gain may occur so it may be preferable to drive without Speed Control.

WARNING!

Speed Control can be dangerous where the system cannot maintain a constant speed. Your vehicle could go too fast for the conditions, and you could lose control and have an accident. Do not use Speed Control in heavy traffic or on roads that are winding, icy, snow-covered or slippery.

To Resume Speed

To resume a previously set speed, push the RES button and release. Resume can be used at any speed above 20 mph (32 km/h).

To Deactivate

A soft tap on the brake pedal, pushing the CANC button, or normal brake pressure while slowing the vehicle will deactivate the Speed Control without erasing the set speed from memory.

Pushing the on/off button or turning the ignition switch OFF erases the set speed from memory.

ADAPTIVE CRUISE CONTROL (ACC) — IF EQUIPPED

Adaptive Cruise Control (ACC) increases the driving convenience provided by cruise control while traveling on highways and major roadways. However, it is not a safety system and not designed to prevent collisions. **Speed Control function performs differently. Please refer to the proper section within this chapter.**

ACC will allow you to keep cruise control engaged in light to moderate traffic conditions without the constant need to reset your cruise control. ACC utilizes a radar sensor and a forward facing camera designed to detect a vehicle directly ahead of you.

NOTE:

- If the sensor does not detect a vehicle ahead of you, ACC will maintain a fixed set speed.
- If the ACC sensor detects a vehicle ahead, ACC will apply limited braking or accelerate (not to exceed the original set speed) automatically to maintain a preset following distance, while matching the speed of the vehicle ahead.

The Cruise Control system has two control modes:

- Adaptive Cruise Control mode for maintaining an appropriate distance between vehicles.
- Normal (Fixed Speed) Cruise Control mode for cruising at a constant preset speed. For additional information, refer to "Normal (Fixed Speed) Cruise Control Mode" in this section.

NOTE: Normal (Fixed Speed) Cruise Control will not react to preceding vehicles. Always be aware of the mode selected.

You can change the mode by using the Cruise Control buttons. The two control modes function differently. Always confirm which mode is selected.

WARNING!

- **Adaptive Cruise Control (ACC) is a convenience system. It is not a substitute for active driving involvement. It is always the driver's responsibility to be attentive of road, traffic, and weather conditions, vehicle speed, distance to the vehicle ahead; and, most importantly, brake operation to ensure safe operation of the vehicle under all road conditions. Your complete attention is always required while driving to maintain safe control of your vehicle. Failure to follow these warnings can result in a collision and death or serious personal injury.**
- **The ACC system:**
  - **Does not react to pedestrians, oncoming vehicles, and stationary objects (e.g., a stopped vehicle in a traffic jam or a disabled vehicle).**
  - **Cannot take street, traffic, and weather conditions into account, and may be limited upon adverse sight distance conditions.**
  - **Does not always fully recognize complex driving conditions, which can result in wrong or missing distance warnings.**

(Continued)

WARNING! *(Continued)*

- **Will bring the vehicle to a complete stop while following a target vehicle and hold the vehicle for 2 seconds in the stop position. If the target vehicle does not start moving within two seconds the ACC system will display a message that the system will release the brakes and that the brakes must be applied manually. An audible chime will sound when the brakes are released.**

You should switch off the ACC system:

- **When driving in fog, heavy rain, heavy snow, sleet, heavy traffic, and complex driving situations (i.e., in highway construction zones).**
- **When entering a turn lane or highway off ramp; when driving on roads that are winding, icy, snow-covered, slippery, or have steep uphill or downhill slopes.**
- **When towing a trailer up or down steep slopes.**
- **When circumstances do not allow safe driving at a constant speed.**

Adaptive Cruise Control (ACC) Operation

The Speed Control buttons (located on the right side of the steering wheel) operates the ACC system.

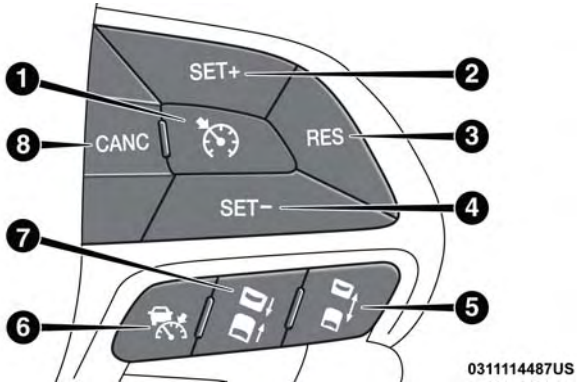

Adaptive Cruise Control Buttons

1 — Normal (Fixed Speed) Cruise Control On/Off	5 — Distance Setting Increase
2 — SET(+)/Accel	6 — Adaptive Cruise Control (ACC) On/Off
3 — RES/Resume	7 — Distance Setting Decrease
4 — SET (-)/Decel	8 — CANC/Cancel

NOTE: Any chassis/suspension or tire size modifications to the vehicle will effect the performance of the Adaptive Cruise Control and Forward Collision Warning System.

Activating Adaptive Cruise Control (ACC)

You can only engage ACC if the vehicle speed is above 0 mph (0 km/h).

The minimum set speed for the ACC system is 20 mph (32 km/h).

When the system is turned on and in the ready state, the instrument cluster displays "ACC Ready."

When the system is off, the instrument cluster displays "Adaptive Cruise Control (ACC) Off."

NOTE: You cannot engage ACC under the following conditions:

- When in Four-Wheel Drive Low.
- When you apply the brakes.
- When the parking brake is applied.
- When the automatic transmission is in PARK, REVERSE or NEUTRAL.
- When the vehicle speed is outside of the speed range.
- When the brakes are overheated.
- When the driver's door is open at low speeds.
- When the driver's seat belt is unbuckled at low speeds.
- ESC Full-Off Mode is active.

To Activate/Deactivate

Push and release the Adaptive Cruise Control (ACC) on/off button. The ACC menu in the instrument cluster displays "ACC Ready."

Adaptive Cruise Control Ready

To turn the system off, push and release the Adaptive Cruise Control (ACC) on/off button again. At this time, the system will turn off and the instrument cluster displays "Adaptive Cruise Control (ACC) Off."

Adaptive Cruise Control Off

WARNING!

Leaving the Adaptive Cruise Control (ACC) system on when not in use is dangerous. You could accidentally set the system or cause it to go faster than you want. You could lose control and have a collision. Always leave the system off when you are not using it.

To Set A Desired ACC Speed

When the vehicle reaches the speed desired, push the SET **(+)** button or the SET **(-)** button and release. The instrument cluster display will display the set speed.

If the system is set when the vehicle speed is below 20 mph (32 km/h), the set speed shall be defaulted to 20 mph (32 km/h). If the system is set when the vehicle speed is above 20 mph (32 km/h), the set speed shall be the current speed of the vehicle.

NOTE: ACC cannot be set if there is a stationary vehicle in front of your vehicle in close proximity.

Remove your foot from the accelerator pedal. If you do not, the vehicle may continue to accelerate beyond the set speed. If this occurs:

- The message “DRIVER OVERRIDE” will display in the instrument cluster display.
- The system will not be controlling the distance between your vehicle and the vehicle ahead. The vehicle speed will only be determined by the position of the accelerator pedal.

To Cancel

The following conditions cancel the system:

- The brake pedal is applied.
- The CANC button is pushed.
- An Anti-Lock Brake System (ABS) event occurs.

- The gear selector is removed from the DRIVE position.
- The Electronic Stability Control/Traction Control System (ESC/TCS) activates.
- The vehicle parking brake is applied.
- Driver seatbelt is unbuckled at low speeds.
- Driver door is opened at low speeds.
- The braking temperature exceeds normal range (overheated).
- A Trailer Sway Control (TSC) event occurs.

To Turn Off

The system will turn off and clear the set speed in memory if:

- The Adaptive Cruise Control (ACC) on/off button is pushed.
- The Normal (Fixed Speed) Cruise Control on/off button is pushed.
- The ignition is turned OFF.
- You switch to Four-Wheel Drive Low.

To Resume

If there is a set speed in memory push the RES (resume) button and then remove your foot from the accelerator pedal. The instrument cluster display will display the last set speed.

NOTE:

- If your vehicle stays at standstill for longer than two seconds, then the system will cancel and the brake force will be ramped-out. The driver will have to apply the brakes to keep the vehicle at a standstill.
- ACC cannot be resumed if there is a stationary vehicle in-front of your vehicle in close proximity.

WARNING!

The Resume function should only be used if traffic and road conditions permit. Resuming a set speed that is too high or too low for prevailing traffic and road conditions could cause the vehicle to accelerate or decelerate too sharply for safe operation. Failure to follow these warnings can result in a collision and death or serious personal injury.

To Vary The Speed Setting

To Increase Speed

While ACC is set, you can increase the set speed by pushing the SET **(+)** button.

The driver's preferred units can be selected through the instrument panel settings. Refer to "Getting To Know Your Instrument Panel" for more information. The speed increment shown is dependant on the chosen speed unit of U.S. (mph) or Metric (km/h):

U.S. Speed (mph)

- Pushing the SET **(+)** button once will result in a 1 mph increase in set speed. Each subsequent tap of the button results in an increase of 1 mph.
- If the button is continually pushed, the set speed will continue to increase in 5 mph increments until the button is released. The increase in set speed is reflected in the instrument cluster display.

Metric Speed (km/h)

- Pushing the SET **(+)** button once will result in a 1 km/h increase in set speed. Each subsequent tap of the button results in an increase of 1 km/h.
- If the button is continually pushed, the set speed will continue to increase in 10 km/h increments until the button is released. The increase in set speed is reflected in the instrument cluster display.

To Decrease Speed

While ACC is set, the set speed can be decreased by pushing the SET **(-)** button.

The driver's preferred units can be selected through the instrument panel settings. Refer to "Getting To Know Your Instrument Panel" for more information. The speed decrement shown is dependant on the chosen speed unit of U.S. (mph) or Metric (km/h):

U.S. Speed (mph)

- Pushing the SET **(-)** button once will result in a 1 mph decrease in set speed. Each subsequent tap of the button results in a decrease of 1 mph.
- If the button is continually pushed, the set speed will continue to decrease in 5 mph decrements until the button is released. The decrease in set speed is reflected in the instrument cluster display.

Metric Speed (km/h)

- Pushing the SET **(-)** button once will result in a 1 km/h decrease in set speed. Each subsequent tap of the button results in a decrease of 1 km/h.
- If the button is continually pushed, the set speed will continue to decrease in 10 km/h decrements until the button is released. The decrease in set speed is reflected in the instrument cluster display.

NOTE:

- When you override and push the SET **(+)** button or SET **(-)** buttons, the new set speed will be the current speed of the vehicle.
- When you use the SET **(-)** button to decelerate, if the engine's braking power does not slow the vehicle sufficiently to reach the set speed, the brake system will automatically slow the vehicle.
- The ACC system applies the brake down to a full stop when following a target vehicle. If an ACC host vehicle follows a target vehicle to a standstill, the host vehicle will release the vehicle brakes two seconds after coming to a full stop.
- The ACC system maintains set speed when driving up hill and down hill. However, a slight speed change on moderate hills is normal. In addition, downshifting may occur while climbing uphill or descending downhill. This is normal operation and necessary to maintain set speed. When driving up hill and down hill, the ACC system will cancel if the braking temperature exceeds normal range (overheated).

Setting The Following Distance In ACC

The specified following distance for ACC can be set by varying the distance setting between four bars (longest), three bars (long), two bars (medium) and one bar (short). Using this distance setting and the vehicle speed, ACC calculates and sets the distance to the vehicle ahead. This distance setting displays in the instrument cluster display.

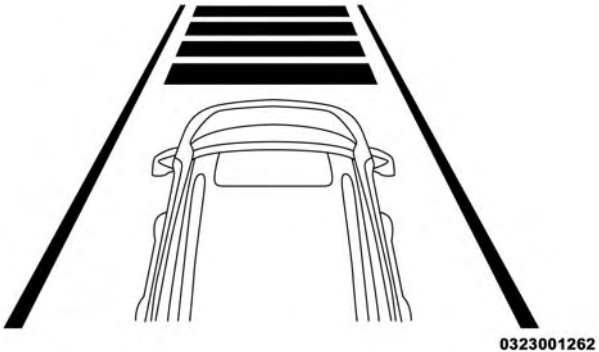

Distance Setting 4 Bars (Longest)

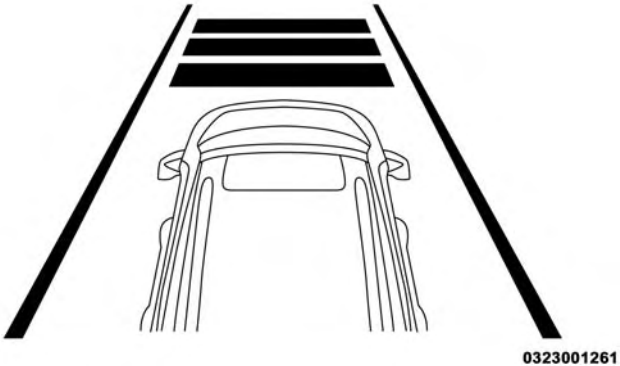

Distance Setting 3 Bars (Long)

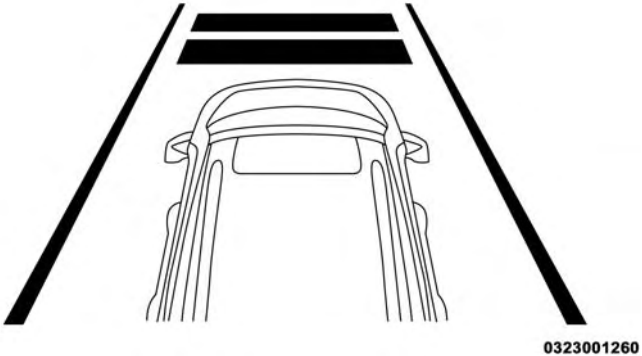

Distance Setting 2 Bars (Medium)

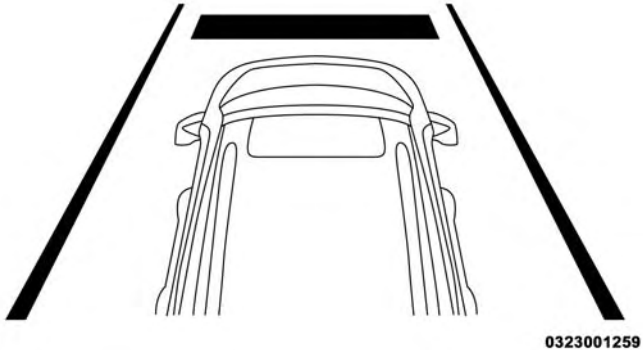

Distance Setting 1 Bar (Short)

To increase the distance setting, push the Distance Setting — Increase button and release. Each time the button is pushed, the distance setting increases by one bar (longer).

To decrease the distance setting, push the Distance Setting — Decrease button and release. Each time the button is pushed, the distance setting decreases by one bar (shorter).

If there is no vehicle ahead, the vehicle will maintain the set speed. If a slower moving vehicle is detected in the same lane, the instrument cluster displays the “Sensed Vehicle

Indicator" icon, and the system adjusts vehicle speed automatically to maintain the distance setting, regardless of the set speed.

The vehicle will then maintain the set distance until:

- The vehicle ahead accelerates to a speed above the set speed.
- The vehicle ahead moves out of your lane or view of the sensor.
- The distance setting is changed.
- The system disengages. (Refer to the information on ACC Activation).

The maximum braking applied by ACC is limited; however, the driver can always apply the brakes manually, if necessary.

NOTE: The brake lights will illuminate whenever the ACC system applies the brakes.

A Proximity Warning will alert the driver if ACC predicts that its maximum braking level is not sufficient to maintain the set distance. If this occurs, a visual alert "BRAKE" will flash in the instrument cluster display and a chime will sound while ACC continues to apply its maximum braking capacity.

Brake Alert

NOTE: The "Brake!" Screen in the instrument cluster display is a warning for the driver to take action and does not necessarily mean that the Forward Collision Warning system is applying the brakes autonomously.

Overtake Aid

When driving with ACC engaged and following a vehicle, the system will provide an additional acceleration up to the ACC set speed to assist in passing the vehicle. This additional acceleration is triggered when the driver utilizes the left turn signal and will only be active when passing on the left hand side.

ACC Operation At Stop

If the ACC system brings your vehicle to a standstill while following a target vehicle, if the target vehicle starts moving within two seconds of your vehicle coming to a standstill, your vehicle will resume motion without the need for any driver action.

If the target vehicle does not start moving within two seconds of your vehicle coming to a standstill, the ACC with Stop system will cancel and the brakes will release. A cancel message will display on the instrument cluster display and produce a warning chime. Driver intervention will be required at this moment.

While ACC with Stop is holding your vehicle at a standstill, if the driver seatbelt is unbuckled or the driver door is opened, the ACC with Stop system will cancel and the brakes will release. A cancel message will display on the instrument cluster display and produce a warning chime. Driver intervention will be required at this moment.

WARNING!

When the ACC system is resumed, the driver must ensure that there are no pedestrians, vehicles or objects in the path of the vehicle. Failure to follow these warnings can result in a collision and death or serious personal injury.

Adaptive Cruise Control (ACC) Menu

The instrument cluster display will show the current ACC system settings. The instrument cluster display is located in the center of the instrument cluster. The information it displays depends on ACC system status.

Push the Adaptive Cruise Control (ACC) on/off button (located on the steering wheel) until one of the following appears in the instrument cluster display:

Adaptive Cruise Control Off

When ACC is deactivated, the display will read “Adaptive Cruise Control Off.”

Adaptive Cruise Control Ready

When ACC is activated, but the vehicle speed setting has not been selected, the display will read “Adaptive Cruise Control Ready.”

Adaptive Cruise Control Set

When the SET (+) or the SET (-) button (located on the steering wheel) is pushed, the display will read "ACC SET."

When ACC is set, the set speed will show in the instrument cluster display.

The ACC screen may display once again if any ACC activity occurs, which may include any of the following:

- System Cancel
- Driver Override
- System Off
- ACC Proximity Warning
- ACC Unavailable Warning
- The instrument cluster display will return to the last display selected after five seconds of no ACC display activity

Display Warnings And Maintenance

"Wipe Front Radar Sensor In Front Of Vehicle" Warning

The "ACC/FCW Unavailable Wipe Front Radar Sensor" warning will display and also a chime will indicate when conditions temporarily limit system performance.

This most often occurs at times of poor visibility, such as in snow or heavy rain. The ACC system may also become temporarily blinded due to obstructions, such as mud, dirt or ice. In these cases, the instrument cluster display will display "ACC/FCW Unavailable Wipe Front Radar Sensor" and the system will deactivate.

The "ACC/FCW Unavailable Wipe Front Radar Sensor" message can sometimes be displayed while driving in highly reflective areas (i.e. tunnels with reflective tiles, or ice and snow). The ACC system will recover after the vehicle has left these areas. Under rare conditions, when the radar is not tracking any vehicles or objects in its path this warning may temporarily occur.

NOTE: If the "ACC/FCW Unavailable Wipe Front Radar Sensor" warning is active Normal (Fixed Speed) Cruise Control is still available. For additional information refer to "Normal (Fixed Speed) Cruise Control Mode" in this section.

If weather conditions are not a factor, the driver should examine the sensor. It may require cleaning or removal of an obstruction. The sensor is located in the center of the vehicle behind the lower grille.

To keep the ACC System operating properly, it is important to note the following maintenance items:

- Always keep the sensor clean. Carefully wipe the sensor lens with a soft cloth. Be cautious not to damage the sensor lens.
- Do not remove any screws from the sensor. Doing so could cause an ACC system malfunction or failure and require a sensor realignment.
- If the sensor or front end of the vehicle is damaged due to a collision, see your authorized dealer for service.
- Do not attach or install any accessories near the sensor, including transparent material or aftermarket grilles. Doing so could cause an ACC system failure or malfunction.

When the condition that deactivated the system is no longer present, the system will return to the "Adaptive Cruise Control Off" state and will resume function by simply reactivating it.

NOTE:

- If the "ACC/FCW Unavailable Wipe Front Radar Sensor" message occurs frequently (e.g. more than once on every trip) without any snow, rain, mud, or other obstruction, have the radar sensor realigned at your authorized dealer.
- Installing a snow plow, front-end protector, an aftermarket grille or modifying the grille is not recommended. Doing so may block the sensor and inhibit ACC/FCW operation.

"Clean Front Windshield" Warning

The "ACC/FCW Limited Functionality Clean Front Windshield" warning will display and also a chime will indicate when conditions temporarily limit system performance. This most often occurs at times of poor visibility, such as in snow or heavy rain and fog. The ACC system may also become temporarily blinded due to obstructions, such as mud, dirt, or ice on windshield and fog on the inside of glass. In these cases, the instrument cluster display will display "ACC/FCW Limited Functionality Clean Front Windshield" and the system will have degraded performance.

The "ACC/FCW Limited Functionality Clean Front Windshield" message can sometimes be displayed while driving in adverse weather conditions. The ACC/FCW system will recover after the vehicle has left these areas. Under rare conditions, when the camera is not tracking any vehicles or objects in its path this warning may temporarily occur.

If weather conditions are not a factor, the driver should examine the windshield and the camera located on the back side of the inside rear view mirror. They may require cleaning or removal of an obstruction.

When the condition that created limited functionality is no longer present, the system will return to full functionality.

NOTE: If the "ACC/FCW Limited Functionality Clean Front Windshield" message occurs frequently (e.g. more than once on every trip) without any snow, rain, mud, or other obstruction, have the windshield and forward facing camera inspected at your authorized dealer.

Service ACC/FCW Warning

If the system turns off, and the instrument cluster displays "ACC/FCW Unavailable Service Required" or "Cruise/FCW Unavailable Service Required", there may be an internal system fault or a temporary malfunction that limits ACC functionality. Although the vehicle is still drivable under normal conditions, ACC will be temporarily unavailable. If this occurs, try activating ACC again later, following an ignition cycle. If the problem persists, see your authorized dealer.

Precautions While Driving With ACC

In certain driving situations, ACC may have detection issues. In these cases, ACC may brake late or unexpectedly. The driver needs to stay alert and may need to intervene.

Towing A Trailer

Towing a trailer is not advised when using ACC.

Offset Driving

ACC may not detect a vehicle in the same lane that is offset from your direct line of travel, or a vehicle merging in from a side lane. There may not be sufficient distance to the vehicle ahead. The offset vehicle may move in and out of the line of travel, which can cause your vehicle to brake or accelerate unexpectedly.

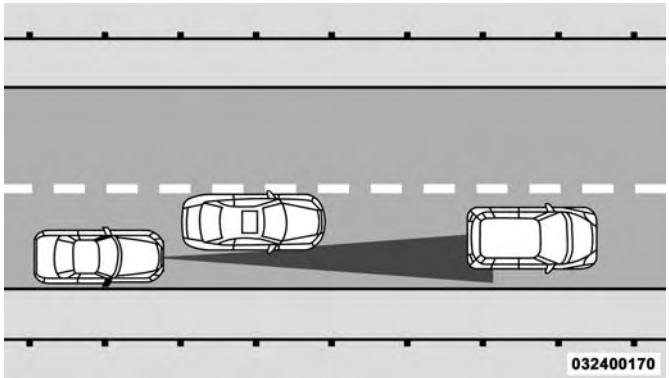

Offset Driving Condition Example

Turns And Bends

When driving on a curve with ACC engaged, the system may decrease the vehicle speed and acceleration for stability reasons, with no target vehicle detected. Once the vehicle is out of the curve the system will resume your original set speed. This is a part of normal ACC system functionality.

NOTE: On tight turns ACC performance may be limited.

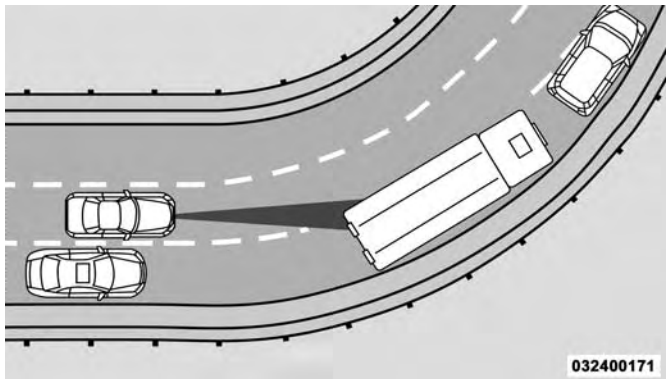

Turn Or Bend Example

Using ACC On Hills

When driving on hills, ACC may not detect a vehicle in your lane. Depending on the speed, vehicle load, traffic conditions, and the steepness of the hills, ACC performance may be limited.

ACC Hill Example

Lane Changing

ACC may not detect a vehicle until it is completely in the lane in which you are traveling. In the illustration shown, ACC has not yet detected the vehicle changing lanes and it may not detect the vehicle until it's too late for the ACC system to take action. ACC may not detect a vehicle until it is completely in the lane. There may not be sufficient distance to the lane-changing vehicle. Always be attentive and ready to apply the brakes if necessary.

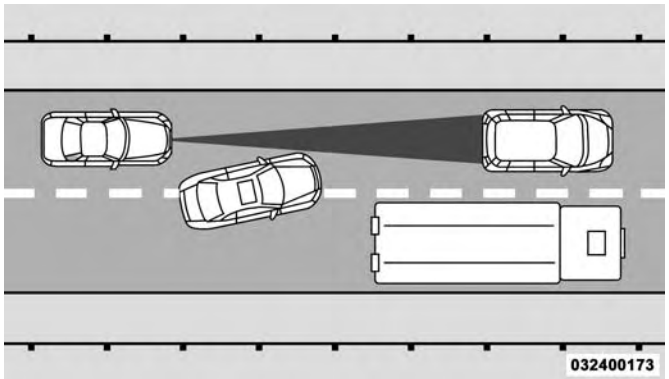

Lane Changing Example

Narrow Vehicles

Some narrow vehicles traveling near the outer edges of the lane or edging into the lane are not detected until they have moved fully into the lane. There may not be sufficient distance to the vehicle ahead.

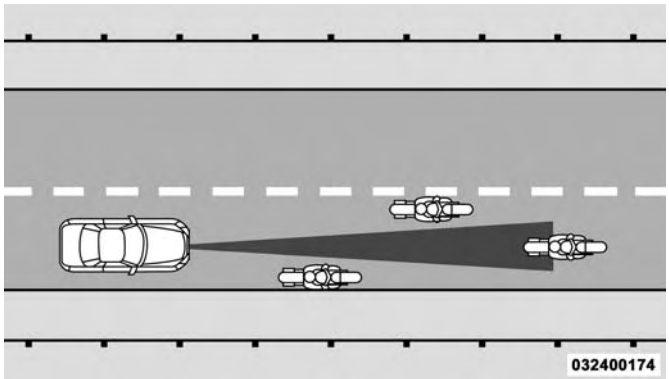

Narrow Vehicle Example

Stationary Objects And Vehicles

ACC does not react to stationary objects and stationary vehicles. For example, ACC will not react in situations where the vehicle you are following exits your lane and the vehicle ahead is stopped in your lane. Always be attentive and ready to apply the brakes if necessary.

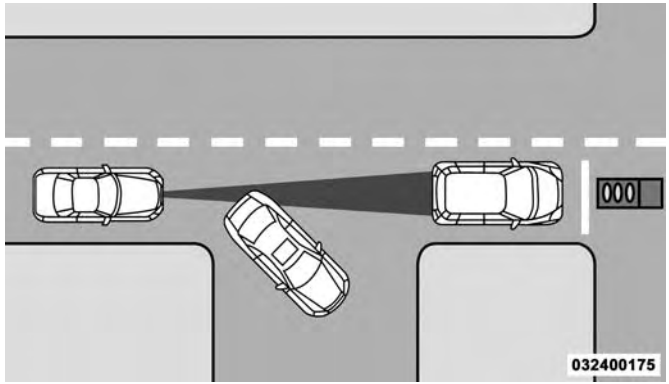

Stationary Object And Stationary Vehicle Example

General Information

The following regulatory statement applies to all Radio Frequency (RF) devices equipped in this vehicle:

This device complies with Part 15 of the FCC Rules and with Industry Canada license-exempt RSS standard(s). Operation is subject to the following two conditions:

1. This device may not cause harmful interference.
2. This device must accept any interference received, including interference that may cause undesired operation.

NOTE: Changes or modifications not expressly approved by the party responsible for compliance could void the user's authority to operate the equipment.

Normal (Fixed Speed) Cruise Control Mode

In addition to Adaptive Cruise Control mode, a Normal (Fixed Speed) Cruise Control mode is available for cruising at fixed speeds. The Normal (Fixed Speed) Cruise Control mode is designed to maintain a set cruising speed without requiring the driver to operate the accelerator. Cruise Control can only be operated if the vehicle speed is above 20 mph (32 km/h).

To change between the different control modes, push the Adaptive Cruise Control (ACC) on/off button which turns the ACC and the Normal (Fixed Speed) Cruise Control off. Pushing the Normal (Fixed Speed) Cruise Control on/off button will result in turning on (changing to) the Normal (Fixed Speed) Cruise Control mode.

WARNING!

In the Normal (Fixed Speed) Cruise Control mode, the system will not react to vehicles ahead. In addition, the proximity warning does not activate and no alarm will sound even if you are too close to the vehicle ahead since neither the presence of the vehicle ahead nor the vehicle-to-vehicle distance is detected. Be sure to maintain a safe distance between your vehicle and the vehicle ahead. Always be aware which mode is selected.

To Set A Desired Speed

Turn the Normal (Fixed Speed) Cruise Control on. When the vehicle has reached the desired speed, push the SET (+) or SET (-) button and release. Release the accelerator and the vehicle will operate at the selected speed. Once a speed has been set a message "CRUISE CONTROL SET TO MPH (km/h)" will appear indicating what speed was set. This light will turn on when the system is turned on via the on/off control. It turns green when the cruise control is set.

To Vary The Speed Setting

To Increase Speed

When the Normal (Fixed Speed) Cruise Control is set, you can increase speed by pushing the SET **(+)** button.

The driver's preferred units can be selected through the instrument cluster display. Refer to "Getting To Know Your Instrument Panel" for more information. The speed increment shown is dependant on the speed of U.S. (mph) or Metric (km/h) units:

U.S. Speed (mph)

- Pushing the SET **(+)** button once will result in a 1 mph increase in set speed. Each subsequent tap of the button results in an increase of 1 mph.
- If the button is continually pushed, the set speed will continue to increase in 5 mph increments until the button is released. The increase in set speed is reflected in the instrument cluster display.

Metric Speed (km/h)

- Pushing the SET **(+)** button once will result in a 1 km/h increase in set speed. Each subsequent tap of the button results in an increase of 1 km/h.
- If the button is continually pushed, the set speed will continue to increase in 10 km/h increments until the button is released. The increase in set speed is reflected in the instrument cluster display.

To Decrease Speed

When the Normal (Fixed Speed) Cruise Control is set, you can decrease speed by pushing the SET **(-)** button.

The driver's preferred units can be selected through the instrument cluster display. Refer to "Getting To Know Your Instrument Panel" for more information. The speed decrement shown is dependant on the speed of U.S. (mph) or Metric (km/h) units:

U.S. Speed (mph)

- Pushing the SET **(-)** button once will result in a 1 mph decrease in set speed. Each subsequent tap of the button results in a decrease of 1 mph.
- If the button is continually pushed, the set speed will continue to decrease in 5 mph decrements until the button is released. The decrease in set speed is reflected in the instrument cluster display.

Metric Speed (km/h)

- Pushing the SET **(-)** button once will result in a 1 km/h decrease in set speed. Each subsequent tap of the button results in a decrease of 1 km/h.
- If the button is continually pushed, the set speed will continue to decrease in 10 km/h decrements until the button is released. The decrease in set speed is reflected in the instrument cluster display.

To Cancel

The following conditions will cancel the Normal (Fixed Speed) Cruise Control without clearing the memory:

- The brake pedal is applied.
- The CANC button is pushed.
- The Electronic Stability Control/Traction Control System (ESC/TCS) activates.
- The vehicle parking brake is applied.
- The braking temperature exceeds normal range (overheated).
- The gear selector is removed from the DRIVE position.
- The driver switches ESC to full-off mode.

To Resume Speed

To resume a previously set speed, push the RES button and release. Resume can be used at any speed above 20 mph (32 km/h).

To Turn Off

The system will turn off and erase the set speed in memory if:

- The Normal (Fixed Speed) Cruise Control on/off button is pushed.
- The ignition is turned OFF.
- You engage Four-Wheel Drive Low.
- The Adaptive Cruise Control (ACC) on/off button is pushed.

PARKSENSE REAR PARK ASSIST — IF EQUIPPED

The ParkSense Rear Park Assist system provides visual and audible indications of the distance between the rear fascia and a detected obstacle when backing up, e.g. during a parking maneuver. If your vehicle is equipped with an automatic transmission, the vehicle brakes may be automatically applied and released when performing a reverse parking maneuver if the system detects a possible collision with an obstacle.

NOTE:

- The driver can override the automatic braking function by pressing the gas pedal, turning ParkSense off via ParkSense switch, or changing the gear while the automatic brakes are being applied.
- Automatic brakes are not available if the vehicle is in 4LO.
- Automatic brakes will not be available if there is a faulted condition detected with the ParkSense Park Assist system or the Braking System Module.
- The automatic braking function may only be applied if the vehicle deceleration is not enough to avoid colliding with a detected obstacle.
- The automatic braking function may not be applied fast enough for obstacles that move toward the rear of the vehicle from the left and/or right sides.
- The automatic braking function can be enabled/disabled from the Customer-Programmable Features section of the Uconnect System.
- ParkSense will retain its last known configuration state for the automatic braking function through ignition cycles.

The automatic braking function is intended to assist the driver in avoiding possible collisions with detected obstacles when backing up in REVERSE gear.

NOTE:

- The driver is always responsible for controlling the vehicle.
- The system is provided to assist the driver and not to substitute the driver.
- The driver must stay in full control of the vehicle's acceleration and braking and is responsible for the vehicle's movements.

Refer to "ParkSense System Usage Precautions" in this section for limitations of this system and recommendations.

ParkSense will retain the last system state (enabled or disabled) from the last ignition cycle when the ignition is changed to the ON/RUN position.

ParkSense can be active only when the gear selector is in REVERSE. If ParkSense is enabled at this gear selector position, the system will remain active until the vehicle speed is increased to approximately 7 mph (11 km/h) or

above. When in REVERSE and above the system's operating speed, a warning will appear within the instrument cluster display indicating the vehicle speed is too fast. The system will become active again if the vehicle speed is decreased to speeds less than approximately 6 mph (9 km/h).

ParkSense Sensors

The four ParkSense sensors, located in the rear fascia/bumper, monitor the area behind the vehicle that is within the sensors' field of view. The sensors can detect obstacles from approximately 12 inches (30 cm) up to 79 inches (200 cm) from the rear fascia/bumper in the horizontal direction, depending on the location, type and orientation of the obstacle.

ParkSense Display

The ParkSense display is always shown in the instrument cluster display as long as the vehicle is in REVERSE.

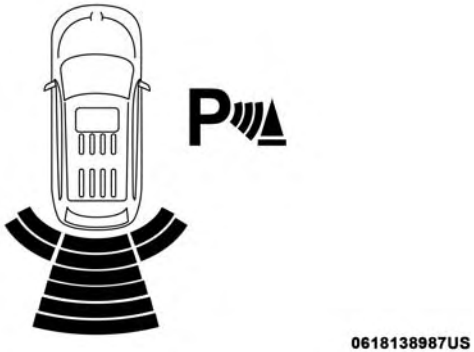

Park Assist Ready

The system will indicate a detected obstacle by showing a single arc in the left and/or right rear regions based on the obstacle's distance and location relative to the vehicle.

If an obstacle is detected in the left and/or right rear region, the display will show a single arc in the left and/or right rear region and the system will produce a tone. As the vehicle moves closer to the obstacle, the display will show the single arc moving closer to the vehicle and the tone will change from a single 1/2 second tone to slow, to fast, to continuous.

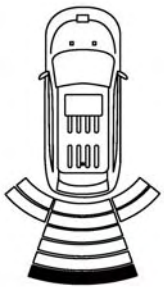

0329098152US

Single 1/2 Second Tone

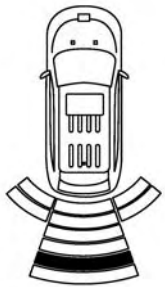

0329098154US

Slow Tone

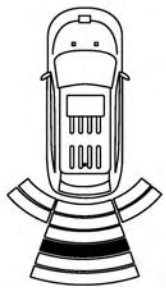

0329098156US

Slow Tone

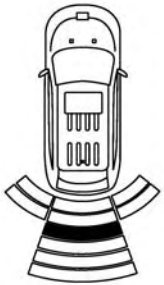

0329098158US

Fast Tone

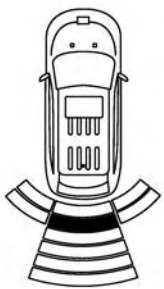

0329098160US

Fast Tone

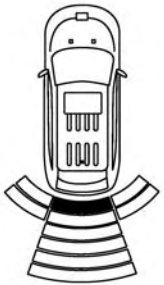

0329098162US

Continuous Tone

The vehicle is close to the obstacle when the warning display shows one flashing arc and sounds a continuous tone. The following chart shows the warning alert operation when the system is detecting an obstacle:

WARNING ALERTS							
Rear Distance (inches/cm)	Greater than 79 inches (200 cm)	79-59 inches (200-150 cm)	59-47 inches (150-120 cm)	47-39 inches (120-100 cm)	39-25 inches (100-65 cm)	25-12 inches (65-30 cm)	Less than 12 inches (30 cm)
Audible Alert Chime	None	Single 1/2 Second Tone	Slow	Slow	Fast	Fast	Continuous
Arcs-Left	None	None	None	None	None	2nd Flashing	1st Flashing
Arcs-Center	None	6th Solid	5th Solid	4th Solid	3rd Flashing	2nd Flashing	1st Flashing
Arcs-Right	None	None	None	None	None	2nd Flashing	1st Flashing
Radio Volume Reduced	No	Yes	Yes	Yes	Yes	Yes	Yes

NOTE: ParkSense will reduce the volume of the radio, if on, when the system is sounding an audio tone.

Adjustable Chime Volume Settings

Rear chime volume settings can be selected from the Customer-Programmable Features section of the Uconnect System, refer to “Uconnect Settings” in “Multimedia” for further information.

The chime volume settings include low, medium, and high. The factory default volume setting is medium.

ParkSense will retain its last known configuration state through ignition cycles.

ParkSense Warning Display

The ParkSense Warning screen will only be displayed if Sound and Display is selected from the Customer - Programmable Features section of the Uconnect System.

Refer to ″Uconnect Settings” in “Multimedia” for further information.

The ParkSense Warning screen is located within the instrument cluster display. It provides visual warnings to indicate the distance between the rear fascia/bumper and the detected obstacle.

Refer to “Instrument Cluster Display” in “Getting To Know Your Instrument Panel” for further information.

Enabling And Disabling ParkSense

ParkSense can be enabled and disabled with the ParkSense switch.

When the ParkSense switch is pushed to disable the system, the instrument cluster will display the “PARKSENSE OFF” message for approximately five seconds. When the gear selector is moved to REVERSE and the system is disabled, the instrument cluster display will display the “PARKSENSE OFF” message for as long as the vehicle is in REVERSE.

Refer to “Instrument Cluster Display” in “Getting To Know Your Instrument Panel” for further information.

The ParkSense switch LED will be on when ParkSense is disabled or requires service. The ParkSense switch LED will be off when the system is enabled. If the ParkSense switch is pushed, and the system requires service, the ParkSense switch LED will blink momentarily, and then the LED will be on.

Service The ParkSense Rear Park Assist System

During vehicle start up, when the ParkSense Rear Park Assist System has detected a faulted condition, the instrument cluster will actuate a single chime, once per ignition cycle, and it will display the "PARKSENSE UNAVAILABLE WIPE REAR SENSORS" or the "PARKSENSE UNAVAILABLE SERVICE REQUIRED" message. Refer to "Instrument Cluster Display". When the gear selector is moved to REVERSE and the system has detected a faulted condition, the instrument cluster display will display the "PARKSENSE UNAVAILABLE WIPE REAR SENSORS" or "PARKSENSE UNAVAILABLE SERVICE REQUIRED" message for as long as the vehicle is in REVERSE. Under this condition, ParkSense will not operate.

If "PARKSENSE UNAVAILABLE WIPE REAR SENSORS" appears in the instrument cluster display make sure the outer surface and the underside of the rear fascia/bumper is clean and clear of snow, ice, mud, dirt or other obstruction and then cycle the ignition. If the message continues to appear, see an authorized dealer.

If "PARKSENSE UNAVAILABLE SERVICE REQUIRED" appears in the instrument cluster display, see an authorized dealer.

Cleaning The ParkSense System

Clean the ParkSense sensors with water, car wash soap and a soft cloth. Do not use rough or hard cloths. Do not scratch or poke the sensors. Otherwise, you could damage the sensors.

ParkSense System Usage Precautions

NOTE:

- Ensure that the rear bumper is free of snow, ice, mud, dirt and debris to keep the ParkSense system operating properly.
- Jackhammers, large trucks, and other vibrations could affect the performance of ParkSense.
- When you turn ParkSense off, the instrument cluster will display "PARKSENSE OFF." Furthermore, once you turn ParkSense off, it remains off until you turn it on again, even if you cycle the ignition.
- When you move the gear selector to the REVERSE position and ParkSense is turned off, the instrument cluster display will display "PARKSENSE OFF" message for as long as the vehicle is in REVERSE.
- ParkSense, when on, will reduce the volume of the radio when it is sounding a tone.

- Clean the ParkSense sensors regularly, taking care not to scratch or damage them. The sensors must not be covered with ice, snow, slush, mud, dirt or debris. Failure to do so can result in the system not working properly. The ParkSense system might not detect an obstacle behind the fascia/bumper, or it could provide a false indication that an obstacle is behind the fascia/bumper.
- Use the ParkSense switch to turn the ParkSense system off if objects such as bicycle carriers, trailer hitches, etc. are placed within 12 inches (30 cm) from the rear fascia/bumper. Failure to do so can result in the system misinterpreting a close object as a sensor problem, causing the "PARKSENSE UNAVAILABLE SERVICE REQUIRED" message to be displayed in the instrument cluster display.
- ParkSense should be disabled when the liftgate is in the open position and the vehicle is in REVERSE. An open liftgate could provide a false indication that an obstacle is behind the vehicle.

WARNING!

- **Drivers must be careful when backing up even when using ParkSense. Always check carefully behind your vehicle, look behind you, and be sure to check for pedestrians, animals, other vehicles, obstructions, and blind spots before backing up. You are responsible for safety and must continue to pay attention to your surroundings. Failure to do so can result in serious injury or death.**
- **Before using ParkSense, it is strongly recommended that the ball mount and hitch ball assembly is disconnected from the vehicle when the vehicle is not used for towing. Failure to do so can result in injury or damage to vehicles or obstacles because the hitch ball will be much closer to the obstacle than the rear fascia when the loudspeaker sounds the continuous tone. Also, the sensors could detect the ball mount and hitch ball assembly, depending on its size and shape, giving a false indication that an obstacle is behind the vehicle.**

CAUTION!

- **ParkSense is only a parking aid and it is unable to recognize every obstacle, including small obstacles. Parking curbs might be temporarily detected or not detected at all. Obstacles located above or below the sensors will not be detected when they are in close proximity.**
- **The vehicle must be driven slowly when using ParkSense in order to be able to stop in time when an obstacle is detected. It is recommended that the driver looks over his/her shoulder when using ParkSense.**

PARKSENSE FRONT AND REAR PARK ASSIST — IF EQUIPPED

The ParkSense Park Assist system provides visual and audible indications of the distance between the rear and/or front fascia and a detected obstacle when backing up or moving forward, e.g. during a parking maneuver. If your vehicle is equipped with an automatic transmission, the vehicle brakes may be automatically applied and released when performing a reverse parking maneuver if the system detects a possible collision with an obstacle.

NOTE:

- The driver can override the automatic braking function by pressing the gas pedal, turning ParkSense off via ParkSense switch, or changing the gear while the automatic brakes are being applied.
- Automatic brakes are not available if the vehicle is in 4LO.
- Automatic brakes will not be available if there is a faulted condition detected with the ParkSense Park Assist system or the Braking System Module.
- The automatic braking function may only be applied if the vehicle deceleration is not enough to avoid colliding with a detected obstacle.
- The automatic braking function may not be applied fast enough for obstacles that move toward the rear of the vehicle from the left and/or right sides.
- The automatic braking function can be enabled/disabled from the Customer Programmable Features section of the Uconnect System.
- ParkSense will retain its last known configuration state for the automatic braking function through ignition cycles.

The automatic braking function is intended to assist the driver in avoiding possible collisions with detected obstacles when backing up in REVERSE gear.

NOTE:

- The driver is always responsible for controlling the vehicle.
- The system is provided to assist the driver and not to substitute the driver.
- The driver must stay in full control of the vehicle's acceleration and braking and is responsible for the vehicle's movements.

Refer to "ParkSense System Usage Precautions" for limitations of this system and recommendations.

ParkSense will retain the last system state (enabled or disabled) from the last ignition cycle when the ignition is changed to the ON/RUN position.

ParkSense can be active only when the gear selector is in REVERSE or DRIVE. If ParkSense is enabled at one of these gear selector positions, the system will remain active until the vehicle speed is increased to approximately 7 mph (11 km/h) or above. The system will become active again if the vehicle speed is decreased to speeds less than approximately 6 mph (9 km/h). A display warning will appear in the instrument cluster display if the vehicle is in REVERSE and the speed exceeds 7 mph (11 km/h).

ParkSense Sensors

The four ParkSense sensors (or six, if equipped with Active Park Assist), located in the rear fascia/bumper, monitor the area behind the vehicle that is within the sensors' field of view. The sensors can detect obstacles from approximately 12 inches (30 cm) up to 79 inches (200 cm) from the rear fascia/bumper in the horizontal direction, depending on the location, type and orientation of the obstacle.

The six ParkSense sensors, located in the front fascia/bumper, monitor the area in front of the vehicle that is within the sensors' field of view. The sensors can detect obstacles from approximately 12 inches (30 cm) up to 47 inches (120 cm) from the front fascia/bumper in the horizontal direction, depending on the location, type and orientation of the obstacle.

ParkSense Display

The warning display will turn on indicating the system status when the vehicle is in REVERSE or when the vehicle is in DRIVE and an obstacle has been detected.

0618138986US

Park Assist Ready

The system will indicate a detected obstacle by showing a single arc in the left and/or right front or rear regions based on the object's distance and location relative to the vehicle.

If an object is detected in the left and/or right rear region, the display will show a single arc in the left and/or right rear region and the system will produce a tone. As the vehicle moves closer to the object, the display will show the single arc moving closer to the vehicle and the tone will change from a single 1/2 second tone to slow, to fast, to continuous.

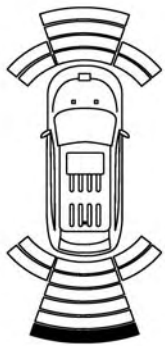

0329098151US

Single 1/2 Second Tone

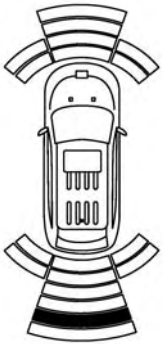

0329098153US

Slow Tone

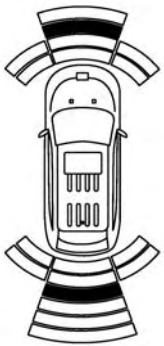

0329098157US

Fast Tone For Rear Only

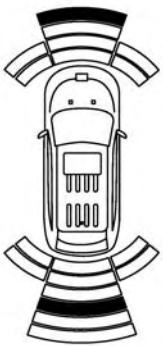

0329098155US

Slow Tone For Rear Only

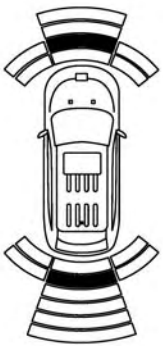

0329098159US

Fast Tone

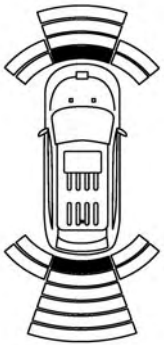

0329098161US

Continuous Tone

The vehicle is close to the obstacle when the instrument cluster display shows one flashing arc and sounds a continuous tone. The following chart shows the warning alert operation when the system is detecting an obstacle:

WARNING ALERTS FOR REAR							
Rear Distance (inches/cm)	Greater than 79 inches (200 cm)	79-59 inches (200-150 cm)	59-47 inches (150-120 cm)	47-39 inches (120-100 cm)	39-25 inches (100-65 cm)	25-12 inches (65-30 cm)	Less than 12 inches (30 cm)
Audible Alert Chime	None	Single 1/2 Second Tone	Slow	Slow	Fast	Fast	Continuous
Arcs-Left	None	None	None	None	None	2nd Flashing	1st Flashing
Arcs-Center	None	6th Solid	5th Solid	4th Solid	3rd Flashing	2nd Flashing	1st Flashing
Arcs-Right	None	None	None	None	None	2nd Flashing	1st Flashing
Radio Volume Reduced	No	Yes	Yes	Yes	Yes	Yes	Yes

WARNING ALERTS FOR FRONT					
Front Distance (inches/cm)	Greater than 47 inches (120 cm)	47-39 inches (120-100 cm)	39-25 inches (100-65 cm)	25-12 inches (65-30 cm)	Less than 12 inches (30 cm)
Audible Alert Chime	None	None	None	Fast	Continuous
Arcs-Left	None	None	None	2nd Flashing	1st Flashing
Arcs-Center	None	4th Solid	3rd Flashing	2nd Flashing	1st Flashing
Arcs-Right	None	None	None	2nd Flashing	1st Flashing
Radio Volume Reduced	No	No	No	Yes	Yes

NOTE: ParkSense will reduce the volume of the radio, if on, when the system is sounding an audio tone.

Front Park Assist Audible Alerts

ParkSense will turn off the Front Park Assist audible alert (chime) after approximately 3 seconds when an obstacle has been detected, the vehicle is stationary, and brake pedal is applied.

Adjustable Chime Volume Settings

Front and Rear chime volume settings can be selected from the Uconnect System. Refer to "Uconnect Settings" in "Multimedia" for further information.

The chime volume settings include low, medium, and high. The factory default volume setting is medium.

ParkSense will retain its last known configuration state through ignition cycles.

ParkSense Warning Display

The ParkSense Warning screen will only be displayed if Sound and Display is selected from the Customer Programmable Features section of the Uconnect System. Refer to "Uconnect Settings" in "Multimedia" for further information.

The ParkSense Warning screen is located within the instrument cluster display. It provides visual warnings to indicate the distance between the rear fascia/bumper and/or front fascia/bumper and the detected obstacle. Refer to "Instrument Cluster Display" in "Getting To Know Your Instrument Panel" for further information.

Enabling And Disabling ParkSense

ParkSense can be enabled and disabled with the ParkSense switch.

When the ParkSense switch is pushed to disable the system, the instrument cluster will display the "PARKSENSE OFF" message for approximately five seconds. When the gear selector is moved to REVERSE and the system is disabled, the instrument cluster display will display the "PARKSENSE OFF" message for as long as the vehicle is in REVERSE.

Refer to "Instrument Cluster Display" in "Getting To Know Your Instrument Panel" for further information.

NOTE: When ParkSense is disabled and the gear selector is moved to the DRIVE position, no warning message will be displayed.

The ParkSense switch LED will be on when ParkSense is disabled or requires service. The ParkSense switch LED will be off when the system is enabled. If the ParkSense switch is pushed, and the system requires service, the ParkSense switch LED will blink momentarily, and then the LED will be on.

Service The ParkSense Park Assist System

During vehicle start up, when the ParkSense System has detected a faulted condition, the instrument cluster will actuate a single chime, once per ignition cycle, and it will display the "PARKSENSE UNAVAILABLE WIPE REAR SENSORS", "PARKSENSE UNAVAILABLE WIPE FRONT SENSORS", or the "PARKSENSE UNAVAILABLE SERVICE REQUIRED" message for five seconds. When the gear selector is moved to REVERSE and the system has detected a faulted condition, the instrument cluster display will display a "PARKSENSE UNAVAILABLE WIPE REAR SENSORS", "PARKSENSE UNAVAILABLE WIPE FRONT SENSORS" or "PARKSENSE UNAVAILABLE SERVICE REQUIRED" pop up message for five seconds. After five seconds, a vehicle graphic will be displayed with "UNAVAILABLE" at either the front or rear sensor location depending on where the fault is detected. The system will continue to provide arc alerts for the side that is functioning properly. These arc alerts will interrupt the "PARKSENSE UNAVAILABLE WIPE REAR SENSORS", "PARKSENSE UNAVAILABLE WIPE FRONT SENSORS",

or "PARKSENSE UNAVAILABLE SERVICE REQUIRED" messages if an object is detected within the five second pop-up duration. The vehicle graphic will remain displayed for as long as the vehicle is in REVERSE.

Refer to "Instrument Cluster Display" in "Getting To Know Your Instrument Panel" for further information.

If "PARKSENSE UNAVAILABLE WIPE REAR SENSORS" or "PARKSENSE UNAVAILABLE WIPE FRONT SENSORS" appears in the instrument cluster display make sure the outer surface and the underside of the rear fascia/bumper and/or front fascia/bumper is clean and clear of snow, ice, mud, dirt or other obstruction and then cycle the ignition. If the message continues to appear see your authorized dealer.

If the "PARKSENSE UNAVAILABLE SERVICE REQUIRED" message appears in the instrument cluster display, see your authorized dealer.

Cleaning The ParkSense System

Clean the ParkSense sensors with water, car wash soap and a soft cloth. Do not use rough or hard cloths. Do not scratch or poke the sensors. Otherwise, you could damage the sensors.

ParkSense System Usage Precautions

NOTE:

- Ensure that the front and rear bumper are free of snow, ice, mud, dirt and debris to keep the ParkSense system operating properly.
- Jackhammers, large trucks, and other vibrations could affect the performance of ParkSense.
- When you turn ParkSense off, the instrument cluster will display "PARKSENSE OFF." Furthermore, once you turn ParkSense off, it remains off until you turn it on again, even if you cycle the ignition.
- When you move the gear selector to the REVERSE position and ParkSense is turned off, the instrument cluster will display "PARKSENSE OFF" for as long as the vehicle is in REVERSE.
- ParkSense, when on, will reduce the volume of the radio when it is sounding a tone.

- Clean the ParkSense sensors regularly, taking care not to scratch or damage them. The sensors must not be covered with ice, snow, slush, mud, dirt or debris. Failure to do so can result in the system not working properly. The ParkSense system might not detect an obstacle behind or in front of the fascia/bumper, or it could provide a false indication that an obstacle is behind or in front of the fascia/bumper.
- Use the ParkSense switch to turn the ParkSense system off if objects such as bicycle carriers, trailer hitches, etc. are placed within 12 inches (30 cm) from the rear fascia/bumper. Failure to do so can result in the system misinterpreting a close object as a sensor problem, causing the "PARKSENSE UNAVAILABLE SERVICE REQUIRED" message to be displayed in the instrument cluster.
- ParkSense should be disabled when the liftgate is in the open position. An opened liftgate could provide a false indication that an obstacle is behind the vehicle.

WARNING!

- **Drivers must be careful when backing up even when using ParkSense. Always check carefully behind your vehicle, look behind you, and be sure to check for pedestrians, animals, other vehicles, obstructions, and blind spots before backing up. You are responsible for safety and must continue to pay attention to your surroundings. Failure to do so can result in serious injury or death.**
- **Before using ParkSense, it is strongly recommended that the ball mount and hitch ball assembly is disconnected from the vehicle when the vehicle is not used for towing. Failure to do so can result in injury or damage to vehicles or obstacles because the hitch ball will be much closer to the obstacle than the rear fascia when the loudspeaker sounds the continuous tone. Also, the sensors could detect the ball mount and hitch ball assembly, depending on its size and shape, giving a false indication that an obstacle is behind the vehicle.**

CAUTION!

- **ParkSense is only a parking aid and it is unable to recognize every obstacle, including small obstacles. Parking curbs might be temporarily detected or not detected at all. Obstacles located above or below the sensors will not be detected when they are in close proximity.**
- **The vehicle must be driven slowly when using ParkSense in order to be able to stop in time when an obstacle is detected. It is recommended that the driver looks over his/her shoulder when using ParkSense.**

PARKSENSE ACTIVE PARK ASSIST SYSTEM — IF EQUIPPED

The ParkSense Active Park Assist system is intended to assist the driver during parallel and perpendicular parking maneuvers by identifying a proper parking space, providing audible/visual instructions, and controlling the steering wheel. The ParkSense Active Park Assist system is defined as "semi-automatic" since the driver maintains control of the accelerator, gear selector and brakes. Depending on the driver's parking maneuver selection, the ParkSense Active Park Assist system is capable of maneuvering a vehicle into a parallel or a perpendicular parking space on either side (i.e., driver side or passenger side).

NOTE:

- The driver is always responsible for controlling the vehicle, responsible for any surrounding objects, and must intervene as required.
- The system is provided to assist the driver and not to substitute the driver.
- During a semi-automatic maneuver, if the driver touches the steering wheel after being instructed to remove their hands from the steering wheel, the system will cancel, and the driver will be required to manually complete the parking maneuver.
- The system may not work in all conditions (e.g. environmental conditions such as heavy rain, snow, etc., or if searching for a parking space that has surfaces that will absorb the ultrasonic sensor waves).

- New vehicles from the dealership must have at least 30 miles (48 km) accumulated before the ParkSense Active Park Assist system is fully calibrated and performs accurately. This is due to the system's dynamic vehicle calibration to improve the performance of the feature. The system will also continuously perform the dynamic vehicle calibration to account for differences such as over or under inflated tires and new tires.

Enabling And Disabling The ParkSense Active Park Assist System

The ParkSense Active Park Assist system can be enabled and disabled with the ParkSense Active Park Assist switch, located on the switch panel below the Uconnect display.

To enable the ParkSense Active Park Assist system, push the ParkSense Active Park Assist switch once (LED turns on).

To disable the ParkSense Active Park Assist system, push the ParkSense Active Park Assist switch again (LED turns off).

The ParkSense Active Park Assist system will turn off automatically for any of the following conditions:

- The parking maneuver is completed.
- Vehicle speed greater than 18 mph (30 km/h) when searching for a parking space.
- Vehicle speed greater than 5 mph (7 km/h) during active steering guidance into the parking space.
- Touching the steering wheel during active steering guidance into the parking space.
- Pushing the ParkSense Front and Rear Park Assist switch.
- Driver's door is opened.
- Rear liftgate is opened.
- Electronic Stability Control/Anti-lock Braking System intervention.
- The ParkSense Active Park Assist system will allow a maximum of six shifts between DRIVE and REVERSE. If the maneuver cannot be completed within six shifts, the system will cancel and the instrument cluster display will instruct the driver to complete the maneuver manually.

The ParkSense Active Park Assist system will only operate and search for a parking space when the following conditions are present:

- Gear position is in DRIVE.
- Ignition is in the RUN position.
- ParkSense Active Park Assist switch is activated.
- Driver's door is closed.
- Rear liftgate is closed.
- Vehicle speed is less than 15 mph (25 km/h).

NOTE: If the vehicle is driven above approximately 15 mph (25 km/h), the instrument cluster display will instruct the driver to slow down. If the vehicle is driven above approximately 18 mph (30 km/h), the system will cancel. The driver must then reactivate the system by pushing the ParkSense Active Park Assist switch.

- The outer surface and the underside of the front and rear fascias/bumpers are clean and clear of snow, ice, mud, dirt or other obstruction.

When pushed, the LED on the ParkSense Active Park Assist switch will blink momentarily, and then the LED will turn off if any of the above conditions are not present.

Parallel Parking Space Assistance Operation/ Display

When the ParkSense Active Park Assist system is enabled the "Active ParkSense Searching - Press OK to Switch to Perpendicular" message will appear in the instrument cluster display. You may switch to perpendicular parking if you desire. Push the OK button on the left side steering wheel switch to change your parking space setting.

NOTE:

- When searching for a parking space, use the turn signal indicator to select which side of the vehicle you want to perform the parking maneuver. The ParkSense Active Park Assist system will automatically search for a parking space on the passenger's side of the vehicle if the turn signal is not activated.
- The driver needs to make sure that the selected parking space for the maneuver remains free and clear of any obstructions (e.g. pedestrians, bicycles, etc.).
- The driver is responsible to ensure that the selected parking space is suitable for the maneuver and free/ clear of anything that may be overhanging or protruding into the parking space (e.g., ladders, tailgates, etc. from surrounding objects/vehicles).

- When seeking for a parking space, the driver should drive as parallel or perpendicular (depending on the type of maneuver) to other vehicles as possible.
- The feature will only indicate the last detected parking space (example: if passing multiple available parking spaces, the system will only indicate the last detected parking space for the maneuver).

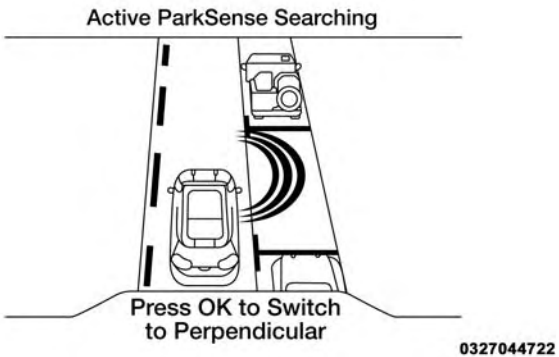

Active ParkSense Searching

When an available parking space has been found, and the vehicle is not in position, you will be instructed to move forward to position the vehicle for a parallel parking sequence.

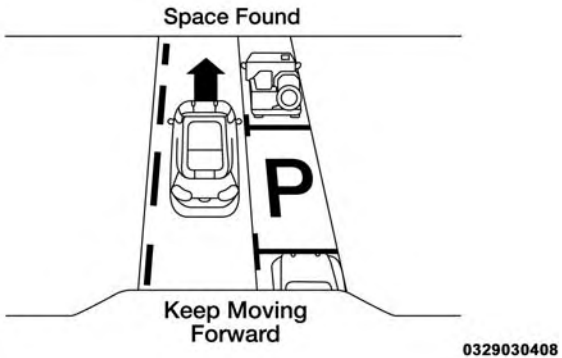

Space Found — Keep Moving Forward

Once the vehicle is in position, you will be instructed to stop the vehicle's movement and remove your hands from the steering wheel.

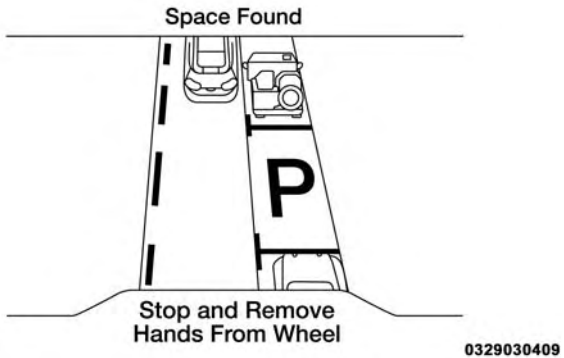

Space Found — Stop And Remove Hands From Wheel

Once the vehicle is at a standstill with your hands removed from the steering wheel, you will be instructed to place the gear selector into the REVERSE position.

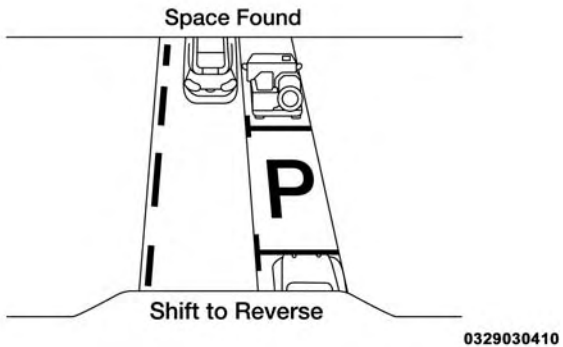

Space Found — Shift To Reverse

When the driver places the gear selector into the REVERSE position, the system may instruct the driver to wait for steering to complete.

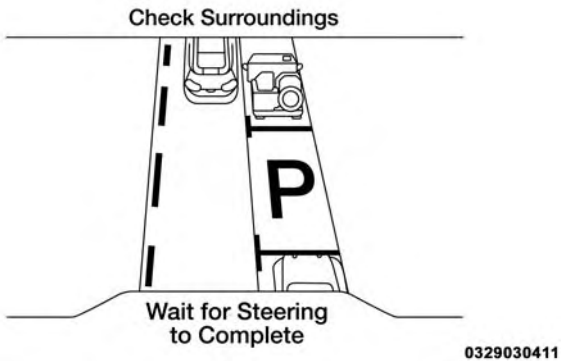

Check Surroundings — Wait For Steering To Complete

The system will then instruct the driver to check their surroundings and move backward.

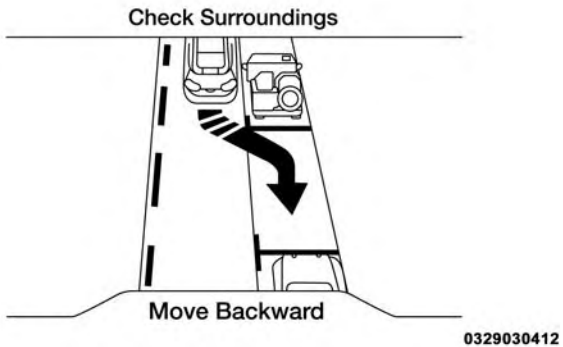

Check Surroundings — Move Backward

NOTE:

- It is the driver's responsibility to use the brake and accelerator during the semi-automatic parking maneuver.
- When the system instructs the driver to remove their hands from the steering wheel, the driver should check their surroundings and begin to back up slowly.

- The ParkSense Active Park Assist system will allow a maximum of six shifts between DRIVE and REVERSE. If the maneuver cannot be completed within six shifts, the system will cancel and the instrument cluster display will instruct the driver to complete the maneuver manually.
- The system will cancel the maneuver if the vehicle speed exceeds 5 mph (7 km/h) during active steering guidance into the parking space. The system will provide a warning to the driver at 3 mph (5 km/h) that tells them to slow down. The driver is then responsible for completing the maneuver if the system is canceled.
- If the system is canceled during the maneuver for any reason, the driver must take control of the vehicle.

When the vehicle has reached the end of its backward movement, the system will instruct the driver to check their surroundings and stop the vehicle's movement.

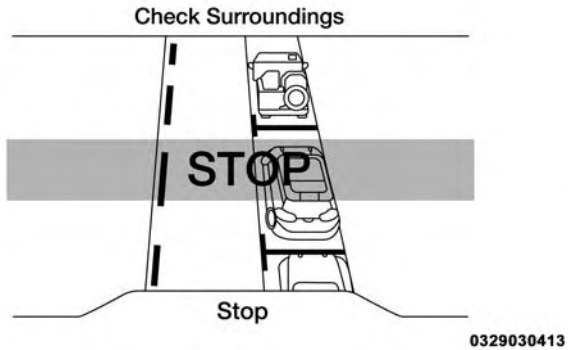

Check Surroundings — STOP

NOTE: It is the driver's responsibility to use the brake and stop the vehicle. The driver should check their surroundings and be prepared to stop the vehicle either when instructed to, or when driver intervention is required.

Once the vehicle is in a standstill condition, the driver will be instructed to place the gear selector into the DRIVE position.

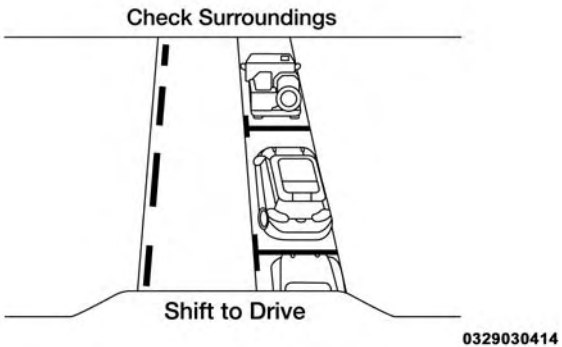

Check Surroundings — Shift To Drive

When the driver places the gear selector into the DRIVE position, the system may instruct the driver to wait for steering to complete.

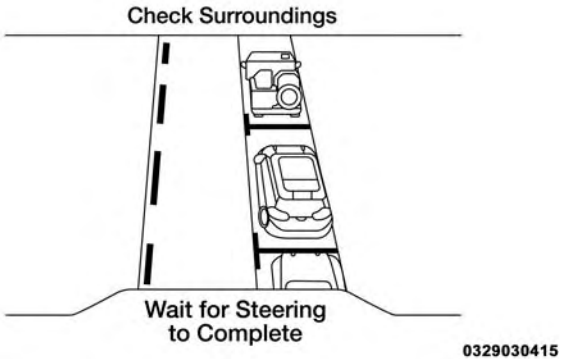

Check Surroundings — Wait For Steering To Complete

The system will then instruct the driver to check their surroundings and move forward.

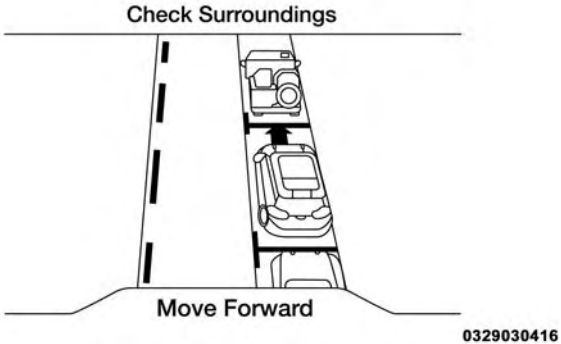

Check Surroundings — Move Forward

When the vehicle has reached the end of its forward movement, the system will instruct the driver to check their surroundings and stop the vehicle's movement.

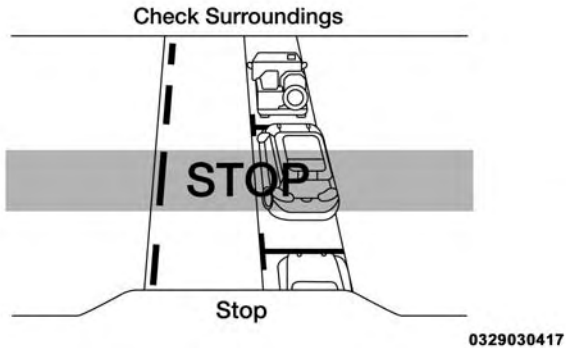

Check Surroundings — STOP

NOTE: It is the driver's responsibility to use the brake and stop the vehicle. The driver should check their surroundings and be prepared to stop the vehicle either when instructed to, or when driver intervention is required.

Once the vehicle is in a standstill condition, the driver will be instructed to place the gear selector into the REVERSE position.

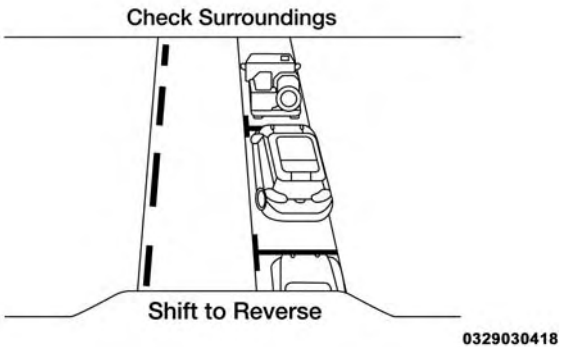

Check Surroundings — Shift To Reverse

When the driver places the gear selector into the REVERSE position, the system may instruct the driver to wait for steering to complete.

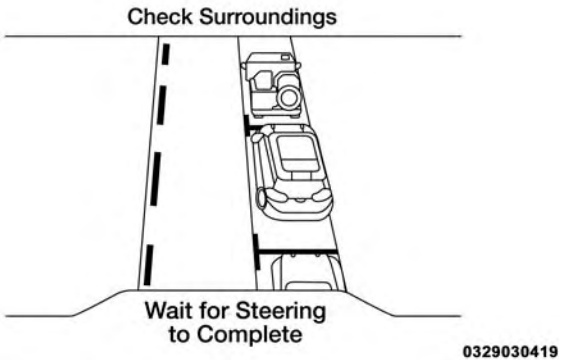

Check Surroundings — Wait For Steering To Complete

The system will then instruct the driver to check their surroundings and move backward.

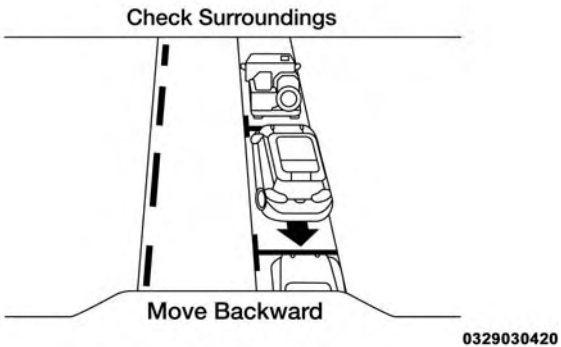

Check Surroundings — Move Backward

Your vehicle is now in the parallel park position. When the maneuver is complete, the driver will be instructed to check the vehicle's parking position. If the driver is satisfied with the vehicle position, they should shift to PARK. The "Active ParkSense Complete - Check Parking Position" message will be momentarily displayed.

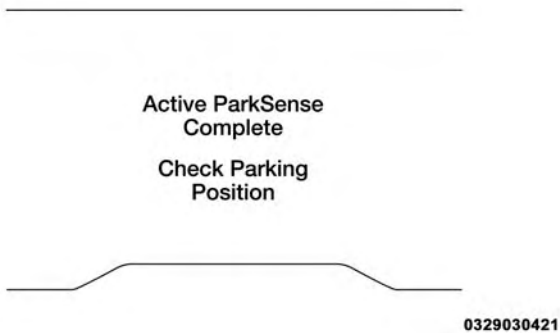

Active ParkSense Complete — Check Parking Position

Perpendicular Parking Space Assistance Operation/Display

When the ParkSense Active Park Assist system is enabled, the "Active ParkSense Searching - Press OK to Switch to Perpendicular" message will show in the instrument cluster display. Push the OK button on the left side steering wheel switch to change your parking space setting to a perpendicular maneuver. You may switch back to parallel parking if you desire.

Once the driver pushes OK for a perpendicular parking maneuver, the "Active ParkSense Searching - Press OK to Switch to Parallel" message will appear in the instrument cluster display.

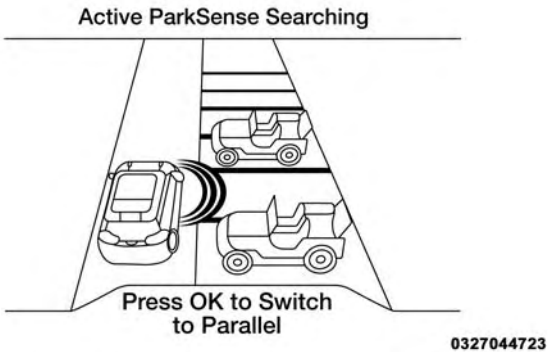

Active ParkSense Searching Display

NOTE:

- When searching for a parking space, use the turn signal indicator to select which side of the vehicle you want to perform the parking maneuver. The ParkSense Active Park Assist system will automatically search for a parking space on the passenger's side of the vehicle if the turn signal is not activated.

- The driver needs to make sure that the selected parking space for the maneuver remains free and clear of any obstructions (e.g. pedestrians, bicycles, etc.).
- The driver is responsible to ensure that the selected parking space is suitable for the maneuver and free/clear of anything that may be overhanging or protruding into the parking space (e.g., ladders, tailgates, etc. from surrounding objects/vehicles).
- When seeking for a parking space, the driver should drive as parallel or perpendicular (depending on the type of maneuver) to other vehicles as possible.
- The feature will only indicate the last detected parking space (example: if passing multiple available parking spaces, the system will only indicate the last detected parking space for the maneuver).

When an available parking space has been found, and the vehicle is not in position, you will be instructed to move forward to position the vehicle for a perpendicular parking sequence.

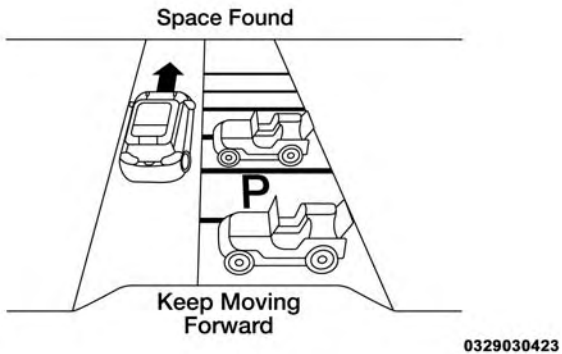

Space Found — Keep Moving Forward

Once the vehicle is in position, you will be instructed to stop the vehicle's movement and remove your hands from the steering wheel.

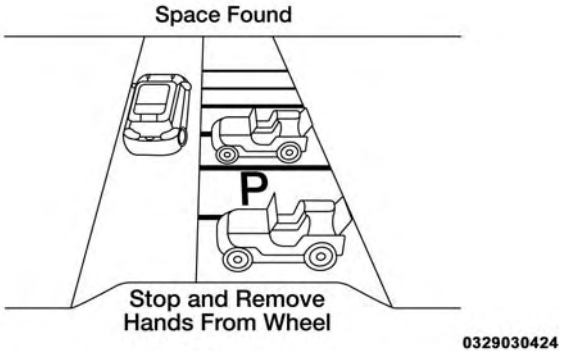

Space Found — Stop And Remove Hands From Wheel

Once the vehicle is at a standstill with your hands removed from the steering wheel, you will be instructed to place the gear selector into the REVERSE position.

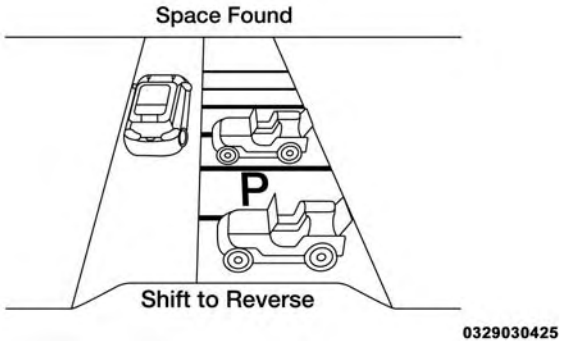

Space Found — Shift To Reverse

When the driver places the gear selector into the REVERSE position, the system may instruct the driver to wait for steering to complete.

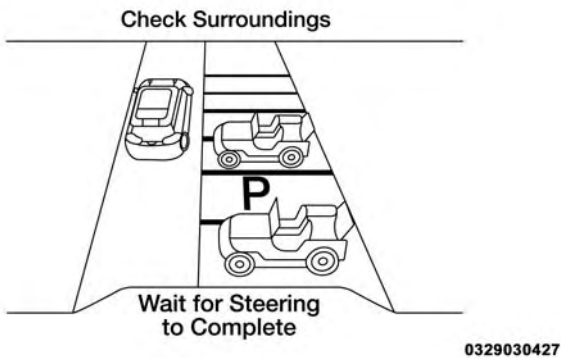

Check Surroundings — Wait For Steering To Complete

The system will then instruct the driver to check their surroundings and move backward.

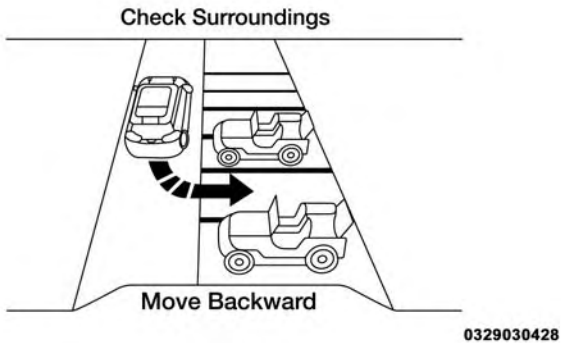

Check Surroundings — Move Backward

NOTE:

- It is the driver's responsibility to use the brake and accelerator during the semi-automatic parking maneuver.
- When the system instructs the driver to remove their hands from the steering wheel, the driver should check their surroundings and begin to back up slowly.

- The ParkSense Active Park Assist system will allow a maximum of six shifts between DRIVE and REVERSE. If the maneuver cannot be completed within six shifts, the system will cancel and the instrument cluster display will instruct the driver to complete the maneuver manually.
- The system will cancel the maneuver if the vehicle speed exceeds 5 mph (7 km/h) during active steering guidance into the parking space. The system will provide a warning to the driver at 3 mph (5 km/h) that tells them to slow down. The driver is then responsible for completing the maneuver if the system is canceled.
- If the system is canceled during the maneuver for any reason, the driver must take control of the vehicle.

When the vehicle has reached the end of its backward movement, the system will instruct the driver to check their surroundings and stop the vehicle's movement.

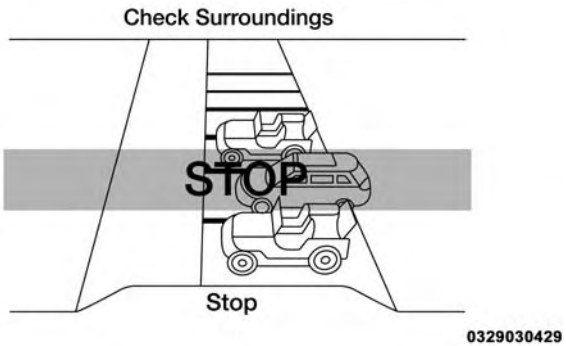

Check Surroundings — STOP

NOTE: It is the driver's responsibility to use the brake and stop the vehicle. The driver should check their surroundings and be prepared to stop the vehicle either when instructed to, or when driver intervention is required.

Once the vehicle is in a standstill condition, the driver will be instructed to place the gear selector into the DRIVE position.

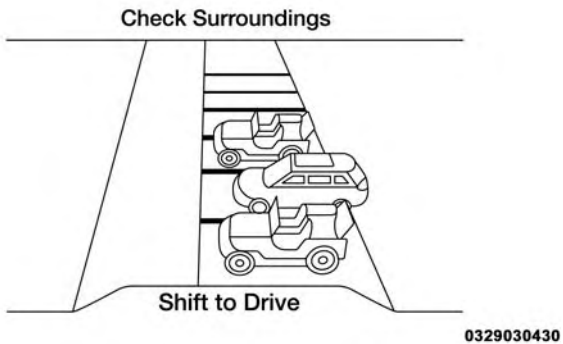

Check Surroundings — Shift To Drive

When the driver places the gear selector into the DRIVE position, the system may instruct the driver to wait for steering to complete.

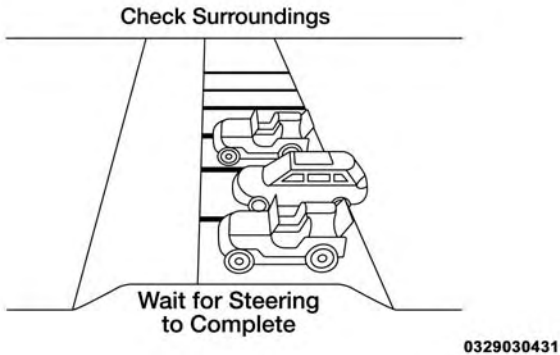

Check Surroundings — Wait For Steering To Complete

The system will then instruct the driver to check their surroundings and move forward.

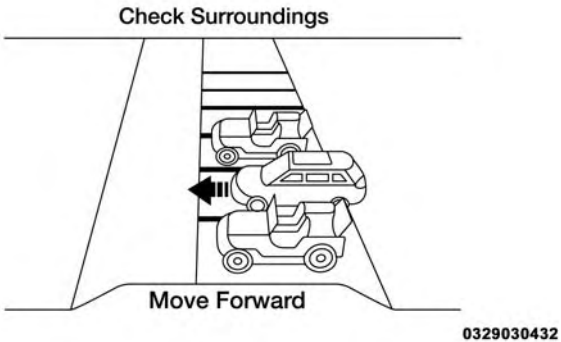

Check Surroundings — Move Forward

When the vehicle has reached the end of its forward movement, the system will instruct the driver to check their surroundings and stop the vehicle's movement.

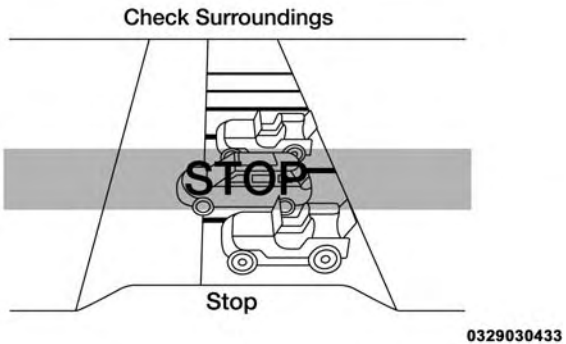

Check Surroundings — STOP

NOTE: It is the driver's responsibility to use the brake and stop the vehicle. The driver should check their surroundings and be prepared to stop the vehicle either when instructed to, or when driver intervention is required.

Once the vehicle is in a standstill condition, the driver will be instructed to place the gear selector into the REVERSE position.

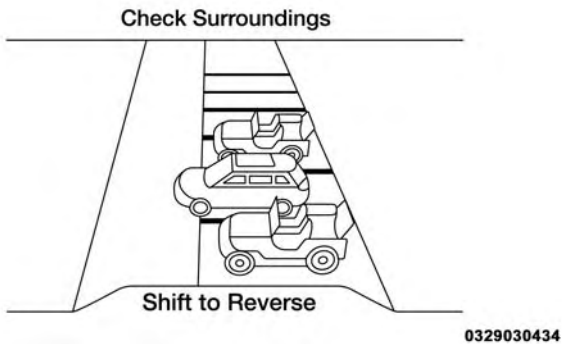

Check Surroundings — Shift To Reverse

When the driver places the gear selector into the REVERSE position, the system may instruct the driver to wait for steering to complete.

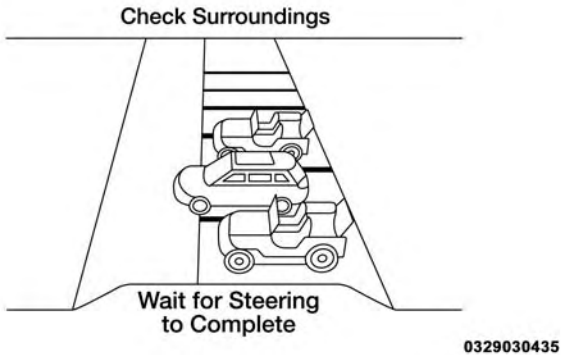

Check Surroundings — Wait For Steering To Complete

The system will then instruct the driver to check their surroundings and move backward.

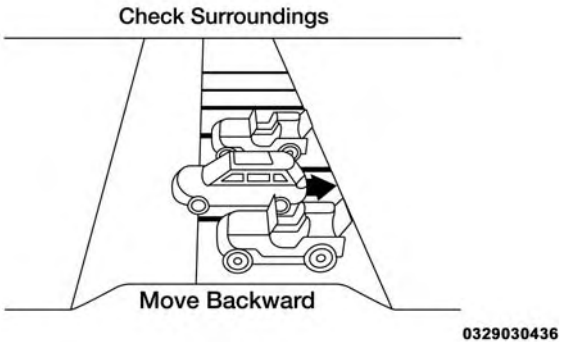

Check Surroundings — Move Backward

Your vehicle is now in the perpendicular park position. When the maneuver is complete, the driver will be instructed to check the vehicle's parking position. If the driver is satisfied with the vehicle position, they should shift to PARK. The "Active ParkSense Complete - Check Parking Position" message will be momentarily displayed.

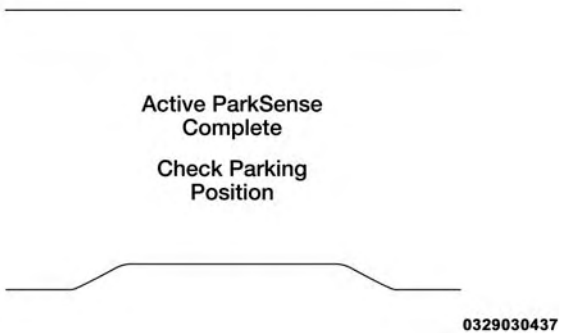

Active ParkSense Complete — Check Parking Position

WARNING!

- **Drivers must be careful when performing parallel or perpendicular parking maneuvers even when using the ParkSense Active Park Assist system. Always check carefully behind and in front of your vehicle, look behind and in front of you, and be sure to check for pedestrians, animals, other vehicles, obstructions, and blind spots before backing up and moving forward. You are responsible for safety and must continue to pay attention to your surroundings. Failure to do so can result in serious injury or death.**
- **Before using the ParkSense Active Park Assist system, it is strongly recommended that the ball mount and hitch ball assembly is disconnected from the vehicle when the vehicle is not used for towing. Failure to do so can result in injury or damage to vehicles or obstacles because the hitch ball will be much closer to the obstacle than the rear fascia when the loudspeaker sounds the continuous tone. Also, the sensors could detect the ball mount and hitch ball assembly, depending on its size and shape, giving a false indication that an obstacle is behind the vehicle.**

CAUTION!

- **The ParkSense Active Park Assist system is only a parking aid and it is unable to recognize every obstacle, including small obstacles. Parking curbs might be temporarily detected or not detected at all. Obstacles located above or below the sensors will not be detected when they are in close proximity.**
- **The vehicle must be driven slowly when using the ParkSense Active Park Assist system in order to be able to stop in time when an obstacle is detected. It is recommended that the driver looks over his/her shoulder when using the ParkSense Active Park Assist system.**

LANESENSE — IF EQUIPPED

LaneSense Operation

The LaneSense system is operational at speeds above 37 mph (60 km/h) and below 112 mph (180 km/h). The LaneSense system uses a forward looking camera to detect lane markings and measure vehicle position within the lane boundaries.

When both lane markings are detected and the driver unintentionally drifts out of the lane (no turn signal applied), the LaneSense system provides a haptic warning in the form of torque applied to the steering wheel to prompt the driver to remain within the lane boundaries. If the driver continues to unintentionally drift out of the lane, the LaneSense system provides a visual warning through the instrument cluster display to prompt the driver to remain within the lane boundaries.

The driver may manually override the haptic warning by applying torque into the steering wheel at any time.

When only a single lane marking is detected and the driver unintentionally drifts across the lane marking (no turn signal applied), the LaneSense system provides visual warnings through the instrument cluster display to prompt the driver to remain within the lane. When only a single lane marking is detected, a haptic (torque) warning will not be provided.

NOTE: When operating conditions have been met, the LaneSense system will monitor if the driver's hands are on the steering wheel and provides an audible warning to the driver when the driver's hands are not detected on the steering wheel. The system will cancel if the driver does not return their hands to the wheel.

Turning LaneSense On Or Off

The default status of LaneSense is off. The LED in LaneSense button will be illuminated while the system is deactivated.

The LaneSense button is located on the switch panel below the Uconnect display.

To turn the LaneSense system on, push the LaneSense button (LED turns off). A "LaneSense On" message is shown in the instrument cluster display.

0617094650US

LaneSense On Message

To turn the LaneSense system off, push the LaneSense button once (LED turns on).

NOTE: The LaneSense system will retain the last system state on or off from the last ignition cycle when the ignition is changed to the ON/RUN position.

LaneSense Warning Message

The LaneSense system will indicate the current lane drift condition through the instrument cluster display.

Premium Instrument Cluster Display

When the LaneSense system is on; the lane lines are gray when both of the lane boundaries have not been detected and the LaneSense telltale is solid white.

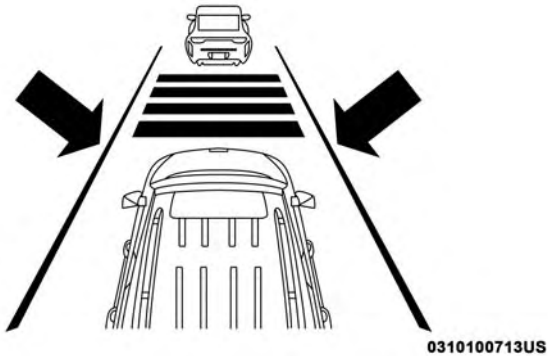

System On (Gray Lines/White Telltale)

Left Lane Departure — Only Left Lane Detected

- When the LaneSense system is on, the LaneSense telltale is solid white when only the left lane marking has been detected and the system is ready to provide visual warnings in the instrument cluster display if an unintentional lane departure occurs.

- When the LaneSense system senses the lane has been approached and is in a lane departure situation, the left thick lane line flashes yellow (on/off), the left thin line remains solid yellow and the LaneSense telltale changes from solid white to flashing yellow.

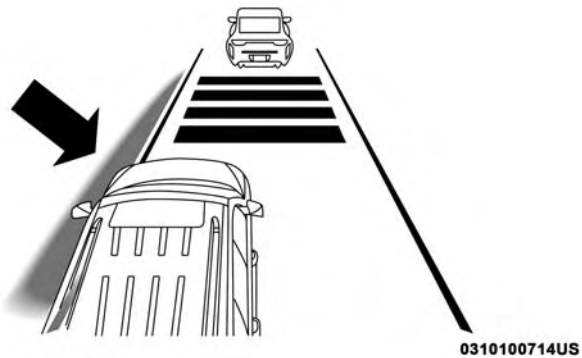

Lane Approached (Flashing Yellow Thick Line, Solid Yellow Thin Line/Flashing Yellow Telltale)

NOTE: The LaneSense system operates with the similar behavior for a right lane departure when only the right lane marking has been detected.

Left Lane Departure — Both Lanes Detected

- When the LaneSense system is on, the lane lines turn from gray to white to indicate that both of the lane markings have been detected. The LaneSense telltale is solid green when both lane markings have been detected and the system is on to provide visual warnings in the instrument cluster display and a torque warning in the steering wheel if an unintentional lane departure occurs.

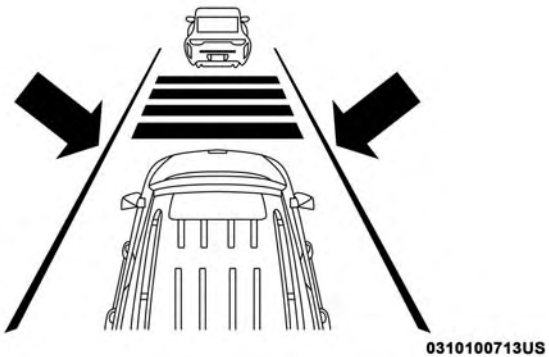

Lanes Sensed (White Lines/Green Telltale)

- When the LaneSense system senses a lane drift situation, the left thick lane line and left thin line turn solid yellow. The LaneSense telltale changes from solid green to solid yellow. At this time torque is applied to the steering wheel in the opposite direction of the lane boundary.
- For example: If approaching the left side of the lane the steering wheel will turn to the right.

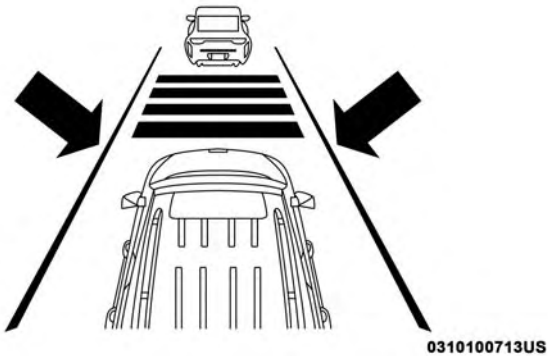

Lane Sensed (Solid Yellow Thick Line, Solid Yellow Thin Line/Solid Yellow Telltale)

- When the LaneSense system senses the lane has been approached and is in a lane departure situation, the left thick lane line flashes yellow (on/off) and the left thin line remains solid yellow. The LaneSense telltale changes from solid yellow to flashing yellow. At this time torque is applied to the steering wheel in the opposite direction of the lane boundary.
- For example: If approaching the left side of the lane the steering wheel will turn to the right.

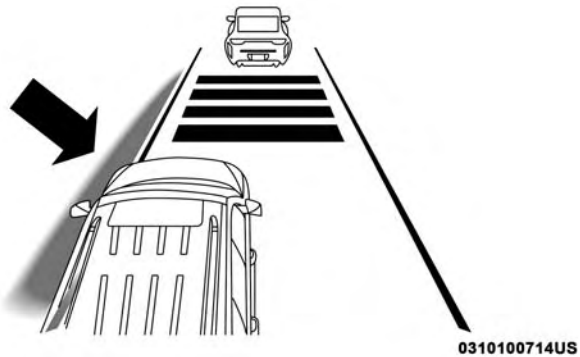

Lane Approached (Flashing Yellow Thick Line, Solid Yellow Thin Line/Flashing Yellow Telltale)

NOTE: The LaneSense system operates with the similar behavior for a right lane departure.

Changing LaneSense Status

The LaneSense system has settings to adjust the intensity of the torque warning and the warning zone sensitivity (early/late) that you can configure through the Uconnect system screen. Refer to "Uconnect Settings" in "Multimedia" for further information.

NOTE:

- When enabled the system operates above 37 mph (60 km/h) and below 112 mph (180 km/h).
- Use of the turn signal suppresses the warnings.
- The system will not apply torque to the steering wheel whenever a safety system engages (anti-lock brakes, traction control system, electronic stability control, forward collision warning, etc.).

PARKVIEW REAR BACK UP CAMERA

The ParkView Rear Back Up Camera allows you to see an on-screen image of the rear surroundings of your vehicle whenever the gear selector is put into REVERSE. The image will be displayed on the Navigation/Multimedia radio display screen along with a caution note to "check entire surroundings" across the top of the screen. After five seconds this note will disappear. The ParkView camera is located on the rear of the vehicle above the rear license plate.

When the vehicle is shifted out of REVERSE (with camera delay turned off), the rear camera mode is exited and the navigation or audio screen appears again.

Manual Activation Of The Rear View Camera

1. Press the "Controls" button located on the bottom of the Uconnect display.
2. Press the "Backup Camera" button to turn the Rear View Camera system on.

NOTE: The ParkView Rear Back Up Camera has programmable modes of operation that may be selected through the Uconnect System.

Refer to "Uconnect Settings" in "Multimedia" for further information.

When the vehicle is shifted out of REVERSE (with camera delay turned off), the rear camera mode is exited and the previous screen appears again. When the vehicle is shifted out of REVERSE (with camera delay turned on), the camera image will continue to be displayed for up to ten seconds after shifting out of REVERSE unless the vehicle speed

exceeds 8 mph (13 km/h), the vehicle is shifted into PARK, the vehicle's ignition is cycled to the OFF position, or the user presses image defeat [X] to exit out of the camera video display.

When enabled, active guide lines are overlaid on the image to illustrate the width of the vehicle and its projected backup path based on the steering wheel position. A dashed center line overlay indicates the center of the vehicle to assist with parking or aligning to a hitch/receiver. Different colored zones indicate the distance to the rear of the vehicle. The following table shows the approximate distances for each zone:

Zone	Distance To The Rear Of The Vehicle
Red	0 - 1 ft (0 - 30 cm)
Yellow	1 ft - 6.5 ft (30 cm - 2 m)
Green	6.5 ft or greater (2 m or greater)

WARNING!

Drivers must be careful when backing up even when using the ParkView Rear Back Up Camera. Always check carefully behind your vehicle, and be sure to check for pedestrians, animals, other vehicles, obstructions, or blind spots before backing up. You are responsible for the safety of your surroundings and must continue to pay attention while backing up. Failure to do so can result in serious injury or death.

CAUTION!

- **To avoid vehicle damage, ParkView should only be used as a parking aid. The ParkView camera is unable to view every obstacle or object in your drive path.**
- **To avoid vehicle damage, the vehicle must be driven slowly when using ParkView to be able to stop in time when an obstacle is seen. It is recommended that the driver look frequently over his/her shoulder when using ParkView.**

NOTE: If snow, ice, mud, or any foreign substance builds up on the camera lens, clean the lens, rinse with water, and dry with a soft cloth. Do not cover the lens.

Rear Camera — Viewing At Speed

When the vehicle is in park, neutral or drive, the Rear View Camera can be activated with the "Rear View Camera" button in the Controls menu. This feature allows the customer to monitor the area directly behind the vehicle (or trailer, if equipped) for up to ten seconds while at speed. If the vehicle speed remains below 8 mph (13 km/h), the Rear View Camera image will be displayed continuously until deactivated via the "X" button on the touchscreen.

REFUELING THE VEHICLE — GASOLINE ENGINE

1. Push the fuel filler door release switch (located under the headlamp switch).

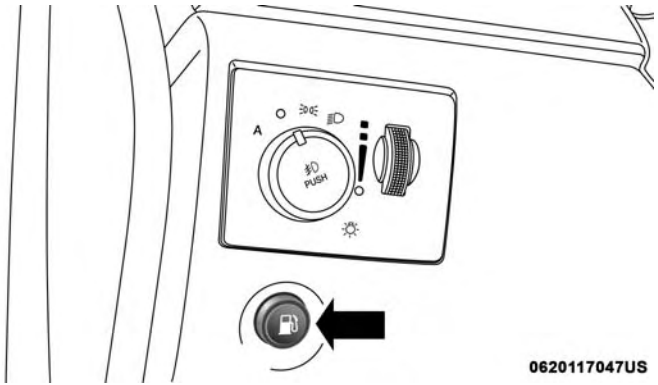

Fuel Filler Door Release Switch

2. Open the fuel filler door.

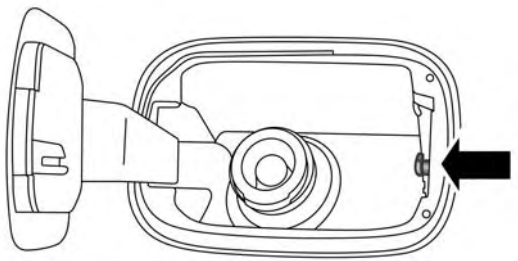

0568098509US

Fuel Filler Door Latch

NOTE: In certain cold conditions, ice may prevent the fuel door from opening. If this occurs, lightly push on the fuel door to break the ice buildup and re-release the fuel door using the inside release button. Do not pry on the door.

3. There is no fuel filler cap. Two flapper doors inside the pipe seals the system.
4. Insert the fuel nozzle fully into the filler pipe, the nozzle opens and holds the flapper doors while refueling.
5. Fill the vehicle with fuel, when the fuel nozzle “clicks” or shuts off the fuel tank is full.
6. Wait five seconds before removing the fuel nozzle to allow fuel to drain from nozzle.
7. Remove the fuel nozzle and close the fuel door.

Emergency Gas Can Refueling

Most gas cans will not open the flapper doors.

A funnel is provided to open the flapper doors to allow emergency refueling with a gas can.

1. Retrieve funnel from the spare tire storage area.
2. Insert funnel into same filler pipe opening as the fuel nozzle.
3. Ensure funnel is inserted fully to hold flapper doors open.
4. Pour fuel into funnel opening.
5. Remove funnel from filler pipe, clean off prior to putting back in the spare tire storage area.

WARNING!

- **Never have any smoking materials lit in or near the vehicle when the fuel door is open or the tank is being filled.**
- **Never add fuel when the engine is running. This is in violation of most state and federal fire regulations and may cause the "Malfunction Indicator Light" to turn on.**
- **A fire may result if fuel is pumped into a portable container that is inside of a vehicle. You could be burned. Always place fuel containers on the ground while filling.**

CAUTION!

To avoid fuel spillage and overfilling, do not "top off" the fuel tank after filling.

Emergency Fuel Filler Door Release

If you are unable to open the fuel filler door, use the fuel filler door emergency release.

1. Open the liftgate.
2. Push the inboard edge of the left storage bin to the center, this will pop up the outboard edge.
3. Grab popped up outboard edge with other hand to disengage snaps.
4. Remove the storage bin.
5. Pull the release cable to open the fuel door, push the release cable back to the home position to re-seat the fuel door latch to the closed position.

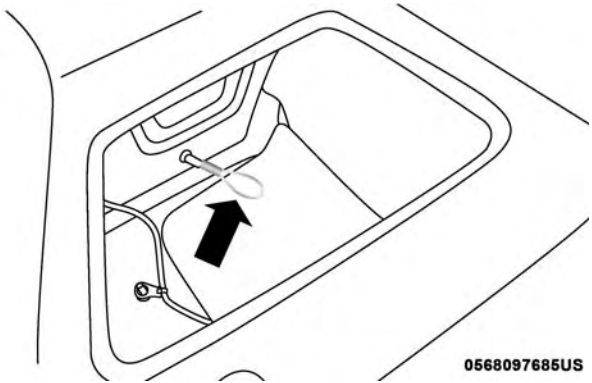

Release Cable

NOTE: If the fuel door does not latch after the manual release cable has been activated, the actuator latch should be manually returned to the closed position.

VEHICLE LOADING

Certification Label

As required by National Highway Traffic Safety Administration regulations, your vehicle has a certification label affixed to the driver's side door or pillar.

This label contains the month and year of manufacture, Gross Vehicle Weight Rating (GVWR), Gross Axle Weight Rating (GAWR) front and rear, and Vehicle Identification Number (VIN). A Month-Day-Hour (MDH) number is included on this label and indicates the Month, Day and Hour of manufacture. The bar code that appears on the bottom of the label is your VIN.

Gross Vehicle Weight Rating (GVWR)

The GVWR is the total permissible weight of your vehicle including driver, passengers, vehicle, options and cargo. The label also specifies maximum capacities of front and rear axle systems (GAWR). Total load must be limited so GVWR and front and rear GAWR are not exceeded.

Payload

The payload of a vehicle is defined as the allowable load weight a truck can carry, including the weight of the driver, all passengers, options and cargo.

Gross Axle Weight Rating (GAWR)

The GAWR is the maximum permissible load on the front and rear axles. The load must be distributed in the cargo area so that the GAWR of each axle is not exceeded.

Each axle GAWR is determined by the components in the system with the lowest load carrying capacity (axle, springs, tires or wheels). Heavier axles or suspension components sometimes specified by purchasers for increased durability does not necessarily increase the vehicle's GVWR.

Tire Size

The tire size on the Vehicle Certification Label represents the actual tire size on your vehicle. Replacement tires must be equal to the load capacity of this tire size.

Rim Size

This is the rim size that is appropriate for the tire size listed.

Inflation Pressure

This is the cold tire inflation pressure for your vehicle for all loading conditions up to full GAWR.

Curb Weight

The curb weight of a vehicle is defined as the total weight of the vehicle with all fluids, including vehicle fuel, at full capacity conditions, and with no occupants or cargo loaded into the vehicle. The front and rear curb weight values are determined by weighing your vehicle on a commercial scale before any occupants or cargo are added.

Loading

The actual total weight and the weight of the front and rear of your vehicle at the ground can best be determined by weighing it when it is loaded and ready for operation.

The entire vehicle should first be weighed on a commercial scale to insure that the GVWR has not been exceeded. The weight on the front and rear of the vehicle should then be determined separately to be sure that the load is properly distributed over the front and rear axle. Weighing the vehicle may show that the GAWR of either the front or rear axles has been exceeded but the total load is within the specified GVWR. If so, weight must be shifted from front to rear or rear to front as appropriate until the specified weight limitations are met. Store the heavier items down low and be sure that the weight is distributed equally. Stow all loose items securely before driving.

Improper weight distributions can have an adverse effect on the way your vehicle steers and handles and the way the brakes operate.

CAUTION!

Do not load your vehicle any heavier than the GVWR or the maximum front and rear GAWR. If you do, parts on your vehicle can break, or it can change the way your vehicle handles. This could cause you to lose control. Also overloading can shorten the life of your vehicle.

TRAILER TOWING

In this section you will find safety tips and information on limits to the type of towing you can reasonably do with your vehicle. Before towing a trailer, carefully review this information to tow your load as efficiently and safely as possible.

To maintain the New Vehicle Limited Warranty coverage, follow the requirements and recommendations in this manual concerning vehicles used for trailer towing.

Common Towing Definitions

The following trailer towing related definitions will assist you in understanding the following information:

Gross Vehicle Weight Rating (GVWR)

The GVWR is the total allowable weight of your vehicle. This includes driver, passengers, cargo and tongue weight. The total load must be limited so that you do not exceed the GVWR. Refer to "Vehicle Loading/Vehicle Certification Label" in "Starting And Operating" for further information.

Gross Trailer Weight (GTW)

The GTW is the weight of the trailer plus the weight of all cargo, consumables and equipment (permanent or temporary) loaded in or on the trailer in its "loaded and ready for operation" condition.

The recommended way to measure GTW is to put your fully loaded trailer on a vehicle scale. The entire weight of the trailer must be supported by the scale.

WARNING!

If the gross trailer weight is 5,000 lbs (2,267 kg) or more, it is recommended to use a weight-distributing hitch to ensure stable handling of your vehicle. If you use a standard weight-carrying hitch, you could lose control of your vehicle and cause a collision.

Gross Combination Weight Rating (GCWR)

The GCWR is the total allowable weight of your vehicle and trailer when weighed in combination.

Gross Axle Weight Rating (GAWR)

The GAWR is the maximum capacity of the front and rear axles. Distribute the load over the front and rear axles evenly. Make sure that you do not exceed either front or rear GAWR. Refer to "Vehicle Loading/Vehicle Certification Label" in "Starting And Operating" for further information.

WARNING!

It is important that you do not exceed the maximum front or rear GAWR. A dangerous driving condition can result if either rating is exceeded. You could lose control of the vehicle and have a collision.

Tongue Weight (TW)

The tongue weight is the downward force exerted on the hitch ball by the trailer. You must consider this as part of the load on your vehicle.

Trailer Frontal Area

The frontal area is the maximum height multiplied by the maximum width of the front of a trailer.

Trailer Sway Control

The trailer sway control can be a mechanical telescoping link that can be installed between the hitch receiver and the trailer tongue that typically provides adjustable friction associated with the telescoping motion to dampen any unwanted trailer swaying motions while traveling.

If equipped, the electronic Trailer Sway Control (TSC) recognizes a swaying trailer and automatically applies individual wheel brakes and/or reduces engine power to attempt to eliminate the trailer sway.

Weight-Carrying Hitch

A weight-carrying hitch supports the trailer tongue weight, just as if it were luggage located at a hitch ball or some other connecting point of the vehicle. These kinds of hitches are the most popular on the market today and they are commonly used to tow small and medium sized trailers.

Weight-Distributing Hitch

A weight-distributing system works by applying leverage through spring (load) bars. They are typically used for heavier loads to distribute trailer tongue weight to the tow vehicle's front axle and the trailer axle(s). When used in accordance with the manufacturer's directions, it provides for a more level ride, offering more consistent steering and brake control thereby enhancing towing safety. The addition of a friction/hydraulic sway control also dampens sway caused by traffic and crosswinds and contributes positively to tow vehicle and trailer stability. Trailer sway control and a weight distributing (load equalizing) hitch are recommended for heavier Tongue Weights (TW) and may be required depending on vehicle and trailer configuration/loading to comply with Gross Axle Weight Rating (GAWR) requirements.

WARNING!

- **An improperly adjusted Weight Distributing Hitch system may reduce handling, stability, braking performance, and could result in a collision.**
- **Weight Distributing Systems may not be compatible with Surge Brake Couplers. Consult with your hitch and trailer manufacturer or a reputable Recreational Vehicle dealer for additional information.**

Trailer Hitch Classification

The following chart provides the industry standard for the maximum trailer weight a given trailer hitch class can tow and should be used to assist you in selecting the correct trailer hitch for your intended towing condition.

Trailer Hitch Classification Definitions	
Class	**Max. Trailer Hitch Industry Standards**
Class I - Light Duty	2,000 lbs (907 kg)
Class II - Medium Duty	3,500 lbs (1,587 kg)
Class III - Heavy Duty	5,000 lbs (2,267 kg)
Class IV - Extra Heavy Duty	10,000 lbs (4,535 kg)
Refer to the "Trailer Towing Weights (Maximum Trailer Weight Ratings)" chart for the Maximum Gross Trailer Weight (GTW) towable for your given drivetrain.	
All trailer hitches should be professionally installed on your vehicle.	

Trailer Towing Weights (Maximum Trailer Weight Ratings)

The following chart provides the maximum trailer weight ratings towable for your given drivetrain:

Engine	Model	Frontal Area	Max. GTW (Gross Trailer Wt.)	Max. Trailer Tongue Wt. (See Note)
3.6L (Std Cooling)	4x2	55 sq ft (5.11 sq m)	3,500 lbs (1,587 kg)	350 lbs (158 kg)
3.6L (Std Cooling)	4x4	55 sq ft (5.11 sq m)	3,500 lbs (1,587 kg)	350 lbs (158 kg)
3.6L (HD Cooling)	4x2	55 sq ft (5.11 sq m)	6,200 lbs (2,812 kg)	620 lbs (281 kg)
3.6L (HD Cooling)	4x4	55 sq ft (5.11 sq m)	6,200 lbs (2,812 kg)	620 lbs (281 kg)
5.7L (Std Cooling)	4x4	55 sq ft (5.11 sq m)	5,000 lbs (2,267 kg)	500 lbs (226 kg)
5.7L (HD Cooling)	4x4	55 sq ft (5.11 sq m)	7,200 lbs (3,265 kg)	720 lbs (326 kg)
Refer to local laws for maximum trailer towing speeds.				

NOTE: The trailer tongue weight must be considered as part of the combined weight of occupants and cargo, and should never exceed the weight referenced on the Tire and Loading Information placard. Refer to "Tires" in "Servicing And Maintenance" for further information. The addition of passengers and cargo may require reducing trailer tongue load and Gross Trailer Weight (GTW). Redistributing cargo (to the trailer) may be necessary to avoid exceeding Rear Gross Axle Weight Rating (GAWR) of 3,700 lbs (1,678 kg).

Trailer Hitch Receiver Cover Removal (Summit Models) — If Equipped

Your vehicle may be equipped with a trailer hitch receiver cover, this must be removed to access the trailer hitch receiver (if equipped). This hitch receiver cover is located at the bottom center of the rear fascia.

1. Turn the two locking retainers located at the bottom of the hitch receiver cover a 1/4 turn counterclockwise.

NOTE: Use a suitable tool such as a coin in the slot of the locking retainer if needed for added leverage.

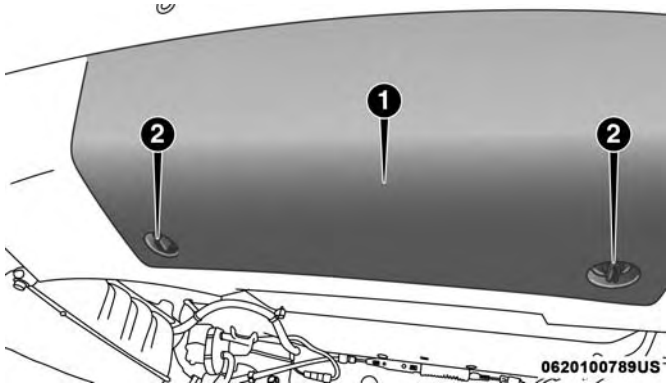

Hitch Receiver Cover

1 — Hitch Receiver Cover
2 — Locking Retainers

2. Pull the bottom of the cover outward (towards you), pull downwards to disengage the tabs located at the top of the hitch receiver cover.

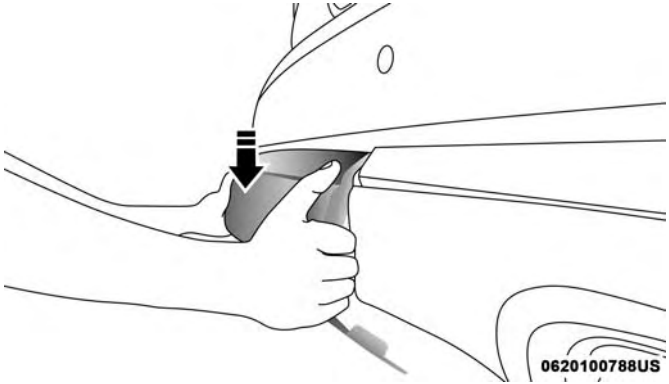

Hitch Receiver Cover

To reinstall the hitch receiver cover after towing repeat the procedure in reverse order.

NOTE: Be sure to engage all tabs of the hitch receiver cover in the bumper fascia prior to installation.

Trailer And Tongue Weight

Never exceed the maximum tongue weight stamped on your bumper or trailer hitch.

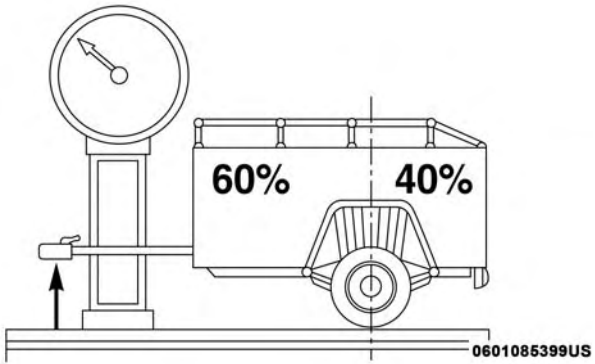

Weight Distribution

CAUTION!

Always load a trailer with 60% of the weight in the front of the trailer. This places 10% of the GTW on the tow hitch of your vehicle. Loads balanced over the wheels or heavier in the rear can cause the trailer to sway severely side to side which will cause loss of control of the vehicle and trailer. Failure to load trailers heavier in front is the cause of many trailer collisions.

Consider the following items when computing the weight on the rear axle of the vehicle:

- The tongue weight of the trailer.
- The weight of any other type of cargo or equipment put in or on your vehicle.
- The weight of the driver and all passengers.

NOTE: Remember that everything put into or on the trailer adds to the load on your vehicle. Also, additional factory-installed options or dealer-installed options must be considered as part of the total load on your vehicle. Refer to the "Tire And Loading Information" placard for the maximum combined weight of occupants and cargo for your vehicle.

Towing Requirements

To promote proper break-in of your new vehicle drivetrain components, the following guidelines are recommended.

CAUTION!

- **Do not tow a trailer at all during the first 500 miles (805 km) the new vehicle is driven. The engine, axle or other parts could be damaged.**

(Continued)

CAUTION! *(Continued)*

- **Then, during the first 500 miles (805 km) that a trailer is towed, do not drive over 50 mph (80 km/h) and do not make starts at full throttle. This helps the engine and other parts of the vehicle wear in at the heavier loads.**

Perform the maintenance listed in the "Scheduled Servicing". Refer to "Scheduled Servicing" in "Servicing And Maintenance" for the proper maintenance intervals. When towing a trailer, never exceed the GAWR or GCWR ratings.

WARNING!

Improper towing can lead to a collision. Follow these guidelines to make your trailer towing as safe as possible:

- **Make certain that the load is secured in the trailer and will not shift during travel. When trailering cargo that is not fully secured, dynamic load shifts can occur that may be difficult for the driver to control. You could lose control of your vehicle and have a collision.**

(Continued)

WARNING! ***(Continued)***

- **When hauling cargo or towing a trailer, do not overload your vehicle or trailer. Overloading can cause a loss of control, poor performance or damage to brakes, axle, engine, transmission, steering, suspension, chassis structure or tires.**
- **Safety chains must always be used between your vehicle and trailer. Always connect the chains to the hook retainers of the vehicle hitch. Cross the chains under the trailer tongue and allow enough slack for turning corners.**
- **Vehicles with trailers should not be parked on a grade. When parking, apply the parking brake on the tow vehicle. Put the tow vehicle transmission in PARK. For four-wheel drive vehicles, make sure the transfer case is not in NEUTRAL. Always, block or "chock" the trailer wheels.**
- **GCWR must not be exceeded.**

(Continued)

WARNING! ***(Continued)***

- **Total weight must be distributed between the tow vehicle and the trailer such that the following four ratings are not exceeded:**

  1. GVWR

  2. GTW

  3. GAWR

  4. Tongue weight rating for the trailer hitch utilized.

Towing Requirements — Tires

- Do not attempt to tow a trailer while using a compact spare tire.
- Do not drive more than 50 mph (80 km/h) when towing while using a full size spare tire.
- Proper tire inflation pressures are essential to the safe and satisfactory operation of your vehicle. Refer to "Tires" in "Servicing And Maintenance" for proper tire inflation procedures.

- Check the trailer tires for proper tire inflation pressures before trailer usage.
- Check for signs of tire wear or visible tire damage before towing a trailer. Refer to "Tires" in "Servicing And Maintenance" for the proper inspection procedure.
- When replacing tires, refer to "Tires" in "Servicing And Maintenance" for the proper tire replacement procedures. Replacing tires with a higher load carrying capacity will not increase the vehicle's GVWR and GAWR limits.

Towing Requirements — Trailer Brakes

- Do **not** interconnect the hydraulic brake system or vacuum system of your vehicle with that of the trailer. This could cause inadequate braking and possible personal injury.
- An electronically actuated trailer brake controller is required when towing a trailer with electronically actuated brakes. When towing a trailer equipped with a hydraulic surge actuated brake system, an electronic brake controller is not required.
- Trailer brakes are recommended for trailers over 1,000 lbs (453 kg) and required for trailers in excess of 2,000 lbs (907 kg).

WARNING!

- **Do not connect trailer brakes to your vehicle's hydraulic brake lines. It can overload your brake system and cause it to fail. You might not have brakes when you need them and could have an accident.**
- **Towing any trailer will increase your stopping distance. When towing, you should allow for additional space between your vehicle and the vehicle in front of you. Failure to do so could result in an accident.**

CAUTION!

If the trailer weighs more than 1,000 lbs (453 kg) loaded, it should have its own brakes and they should be of adequate capacity. Failure to do this could lead to accelerated brake lining wear, higher brake pedal effort, and longer stopping distances.

Towing Requirements — Trailer Lights And Wiring

Whenever you pull a trailer, regardless of the trailer size, stoplights and turn signals on the trailer are required for motoring safety.

The Trailer Tow Package may include a four- and seven-pin wiring harness. Use a factory approved trailer harness and connector.

NOTE: Do not cut or splice wiring into the vehicle's wiring harness.

The electrical connections are all complete to the vehicle but you must mate the harness to a trailer connector. Refer to the following illustrations.

NOTE:

- Disconnect trailer wiring connector from the vehicle before launching a boat (or any other device plugged into vehicle's electrical connect) into water.
- Be sure to reconnect once clear from water area.

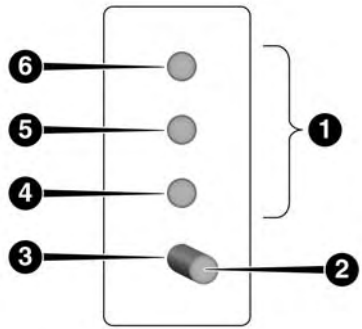

0601085400US

Four-Pin Connector

1 — Female Pins	4 — Park
2 — Male Pin	5 — Left Stop/Turn
3 — Ground	6 — Right Stop/Turn

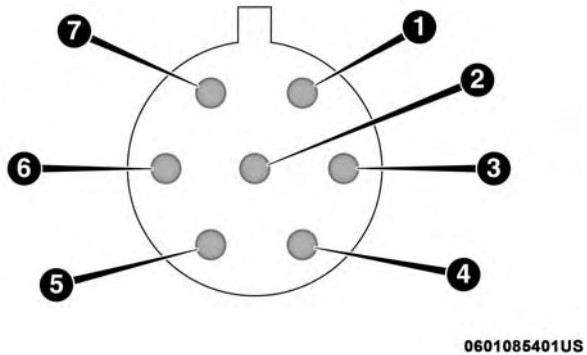

Seven-Pin Connector

1 — Battery
2 — Backup Lamps
3 — Right Stop/Turn
4 — Electric Brakes
5 — Ground
6 — Left Stop/Turn
7 — Running Lamps

Towing Tips

Before setting out on a trip, practice turning, stopping, and backing up the trailer in an area located away from heavy traffic.

Automatic Transmission

Select the DRIVE range when towing. The transmission controls include a drive strategy to avoid frequent shifting when towing. However, if frequent shifting does occur while in DRIVE, you can use the AutoStick shift control to manually select a lower gear.

NOTE: Using a lower gear (using the AutoStick shift control) while operating the vehicle under heavy loading conditions, will improve performance and extend transmission life by reducing excessive shifting and heat buildup. This action will also provide better engine braking.

AutoStick

- When using the AutoStick shift control, select the highest gear that allows for adequate performance and avoids frequent downshifts. For example, choose “5” if the desired speed can be maintained. Choose “4” or “3” if needed to maintain the desired speed.
- To prevent excess heat generation, avoid continuous driving at high RPM. Reduce vehicle speed as necessary to avoid extended driving at high RPM. Return to a higher gear or vehicle speed when grade and road conditions allow.

Speed Control — If Equipped

- Do not use on hilly terrain or with heavy loads.
- When using the speed control, if you experience speed drops greater than 10 mph (16 km/h), disengage until you can get back to cruising speed.
- Use speed control in flat terrain and with light loads to maximize fuel efficiency.

Cooling System

To reduce potential for engine and transmission overheating, take the following actions:

City Driving

- In city traffic — while stopped, place the transmission in NEUTRAL, but do not increase engine idle speed.

Highway Driving

- Reduce speed.
- Temporarily turn off air conditioning.

SNOW PLOW

Snow plows, winches, and other aftermarket equipment should **not** be added to the front end of your vehicle. The airbag crash sensors may be affected by the change in the front end structure. The airbags could deploy unexpectedly or could fail to deploy during a collision.

WARNING!

Do not add a snow plow, winches, or any other aftermarket equipment to the front of your vehicle. This could adversely affect the functioning of the airbag system and you could be injured.

RECREATIONAL TOWING (BEHIND MOTORHOME, ETC.)

Towing This Vehicle Behind Another Vehicle

Towing Condition	Wheels OFF The Ground	Two-Wheel Drive Models	Four-Wheel Drive Models Without 4-LO Range	Four-Wheel Drive Models With 4-LO Range
Flat Tow	NONE	NOT ALLOWED	NOT ALLOWED	**See Instructions** • Transmission in PARK • Transfer case in NEUTRAL (N) • Tow in forward direction
Dolly Tow	Front	**NOT ALLOWED**	**NOT ALLOWED**	**NOT ALLOWED**
	Rear	OK	**NOT ALLOWED**	**NOT ALLOWED**
On Trailer	ALL	OK	OK	OK

NOTE:

- When towing your vehicle, always follow applicable state and provincial laws. Contact state and provincial Highway Safety offices for additional details.
- Vehicles equipped with Quadra-Lift must be placed in Transport Mode before tying them down (from the body) on a trailer or flatbed truck. Refer to "Quadra-Lift" in "Starting and Operating" for more information. If the vehicle cannot be placed in Transport mode (for example, engine will not run), tie-downs should be fastened over the tires using specific straps (not to the body). Failure to follow these instructions may cause fault codes to be set and/or cause loss of proper tie-down tension.

Recreational Towing — Two Wheel Drive Models

DO NOT flat tow this vehicle. Damage to the drivetrain will result.

Recreational towing (for two-wheel drive models) is allowed ONLY if the rear wheels are OFF the ground. This may be accomplished using a tow dolly or vehicle trailer. If using a tow dolly, follow this procedure:

1. Properly secure the dolly to the tow vehicle, following the dolly manufacturer's instructions.

NOTE: If vehicle is equipped with Quadra-Lift air suspension, ensure the vehicle is set to Normal Ride Height.

2. Drive the rear wheels onto the tow dolly.
3. Firmly apply the parking brake. Shift the transmission into PARK.
4. Turn the ignition OFF.
5. Properly secure the rear wheels to the dolly, following the dolly manufacturer's instructions.
6. Install a suitable clamping device, designed for towing, to secure the front wheels in the straight position.

CAUTION!

Towing with the rear wheels on the ground will cause severe transmission damage. Damage from improper towing is not covered under the New Vehicle Limited Warranty.

Recreational Towing — Quadra-Trac I (Single-Speed Transfer Case) Four-Wheel Drive Models

Recreational towing is not allowed. These models do not have a NEUTRAL (N) position in the transfer case.

NOTE: This vehicle may be towed on a flatbed or vehicle trailer provided all four wheels are **OFF** the ground.

CAUTION!

Towing this vehicle in violation of the above requirements can cause severe transmission and/or transfer case damage. Damage from improper towing is not covered under the New Vehicle Limited Warranty.

Recreational Towing — Quadra–Trac II/Quadra–Drive II Four-Wheel Drive Models

The transfer case must be shifted into NEUTRAL (N) and the transmission must be in PARK for recreational towing. The NEUTRAL (N) selection button is adjacent to the transfer case selector switch. Shifts into and out of transfer case NEUTRAL (N) can take place with the selector switch in any mode position.

CAUTION!

- **DO NOT dolly tow any 4WD vehicle. Towing with only one set of wheels on the ground (front or rear) will cause severe transmission and/or transfer case damage. Tow with all four wheels either ON the ground, or OFF the ground (using a vehicle trailer).**
- **Tow only in a forward direction. Towing this vehicle backwards can cause severe damage to the transfer case.**
- **The transmission must be in PARK for recreational towing.**
- **Before recreational towing, perform the procedure outlined under "Shifting into NEUTRAL (N)" to be certain that the transfer case is fully in NEUTRAL (N). Otherwise, internal damage will result.**
- **Towing this vehicle in violation of the above requirements can cause severe transmission and/or transfer case damage. Damage from improper towing is not covered under the New Vehicle Limited Warranty.**
- **Do not use a bumper-mounted clamp-on tow bar on your vehicle. The bumper face bar will be damaged.**

Shifting Into NEUTRAL (N)

WARNING!

You or others could be injured or killed if you leave the vehicle unattended with the transfer case in the NEUTRAL (N) position without first fully engaging the parking brake. The transfer case NEUTRAL (N) position disengages both the front and rear driveshafts from the powertrain and will allow the vehicle to roll, even if the transmission is in PARK. The parking brake should always be applied when the driver is not in the vehicle.

Use the following procedure to prepare your vehicle for recreational towing.

CAUTION!

It is necessary to follow these steps to be certain that the transfer case is fully in NEUTRAL (N) before recreational towing to prevent damage to internal parts.

1. Bring the vehicle to a complete stop on level ground, with the engine running.
2. Press and hold the brake pedal.
3. Shift the transmission into NEUTRAL.
4. If vehicle is equipped with Quadra-Lift air suspension, ensure the vehicle is set to Normal Ride Height.
5. Using a ballpoint pen or similar object, push and hold the recessed transfer case NEUTRAL (N) button (located by the selector switch) for four seconds. The light behind the N symbol will blink, indicating shift in progress. The light will stop blinking (stay on solid) when the shift to NEUTRAL (N) is complete. A "FOUR WHEEL DRIVE SYSTEM IN NEUTRAL" message will appear in the instrument cluster.

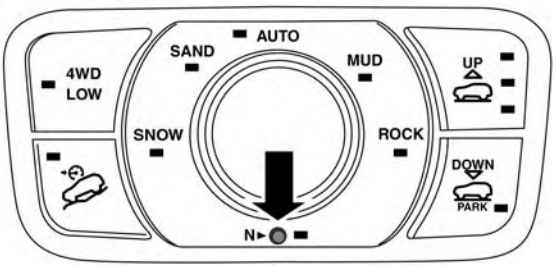

0518098513US

NEUTRAL (N) Switch

6. After the shift is completed and the NEUTRAL (N) light stays on, release the NEUTRAL (N) button.
7. Shift the transmission into REVERSE.
8. Release the brake pedal for five seconds and ensure that there is no vehicle movement.
9. Press and hold the brake pedal. Shift the transmission back into NEUTRAL.
10. Firmly apply the parking brake.
11. With the transmission and transfer case in NEUTRAL, push and hold the ENGINE START/STOP button until the engine turns off.
12. Place the transmission gear selector in PARK. Release the brake pedal.
13. Push the ENGINE STOP/START button twice (without pressing the brake pedal), to turn the ignition to the OFF mode.
14. Attach the vehicle to the tow vehicle using a suitable tow bar.
15. Release the parking brake.

NOTE:

- Steps 1 through 4 are requirements that must be met before pushing the NEUTRAL (N) button, and must continue to be met until the shift has been completed. If any of these requirements are not met before pushing the NEUTRAL (N) button or are no longer met during the shift, then the NEUTRAL (N) indicator light will flash continuously until all requirements are met or until the NEUTRAL (N) button is released.
- The ignition must be in the ON/RUN mode for a shift to take place and for the position indicator lights to be operable. If the ignition is not in the ON/RUN mode, the shift will not take place and no position indicator lights will be on or flashing.
- A flashing NEUTRAL (N) position indicator light indicates that shift requirements have not been met.
- If the vehicle is equipped with Quadra-Lift air suspension, the engine should be started and left running for a minimum of 60 seconds (with all the doors closed) at least once every 24 hours. This process allows the air suspension to adjust the vehicle's ride height to compensate for temperature effects.

Shifting Out Of NEUTRAL (N)

Use the following procedure to prepare your vehicle for normal usage.

1. Bring the vehicle to a complete stop, leaving it connected to the tow vehicle.
2. Firmly apply the parking brake.
3. Start the engine.
4. Press and hold the brake pedal.
5. Shift the transmission into NEUTRAL.
6. Using a ballpoint pen or similar object, push and hold the recessed transfer case NEUTRAL (N) button (located by the selector switch) for one second.

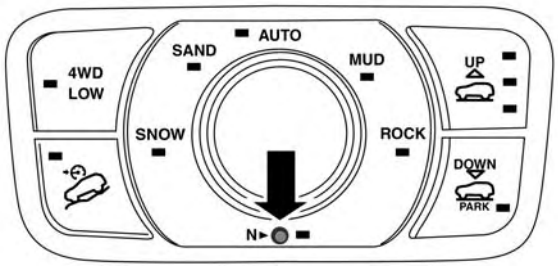

0518098513US

NEUTRAL (N) Switch

7. When the NEUTRAL (N) indicator light turns off, release the NEUTRAL (N) button. After the NEUTRAL (N) button has been released, the transfer case will shift to the position indicated by the selector switch.
8. Shift the transmission into PARK. Turn the engine OFF.
9. Release the brake pedal.

10. Disconnect vehicle from the tow vehicle.
11. Start the engine.
12. Press and hold the brake pedal.
13. Release the parking brake.
14. Shift the transmission into DRIVE, release the brake pedal, and check that the vehicle operates normally.

NOTE:

- Steps 1 through 5 are requirements that must be met before pushing the NEUTRAL (N) button, and must continue to be met until the shift has been completed. If any of these requirements are not met before pushing the NEUTRAL (N) button or are no longer met during the shift, the NEUTRAL (N) indicator light will flash continuously until all requirements are met or until the NEUTRAL (N) button is released.
- The ignition must be in the ON/RUN mode for a shift to take place and for the position indicator lights to be operable. If the ignition is not in the ON/RUN mode, the shift will not take place and no position indicator lights will be on or flashing.
- A flashing NEUTRAL (N) position indicator light indicates that shift requirements have not been met.

DRIVING TIPS

On-Road Driving Tips

Utility vehicles have higher ground clearance and a narrower track to make them capable of performing in a wide variety of off-road applications. Specific design characteristics give them a higher center of gravity than conventional passenger cars.

An advantage of the higher ground clearance is a better view of the road, allowing you to anticipate problems. They are not designed for cornering at the same speeds as conventional passenger cars any more than low-slung sports cars are designed to perform satisfactorily in off-road conditions. Avoid sharp turns or abrupt maneuvers. As with other vehicles of this type, failure to operate this vehicle correctly may result in loss of control or vehicle rollover.

Off-Road Driving Tips

NOTE: Prior to off-road driving with non-Summit models that are also equipped with an Off Road Package, remove the lower fascia to prevent damage. The lower fascia is attached to the lower part of the front fascia with seven quarter turn fasteners and can be removed by hand. The front license plate bracket must be removed first if equipped.

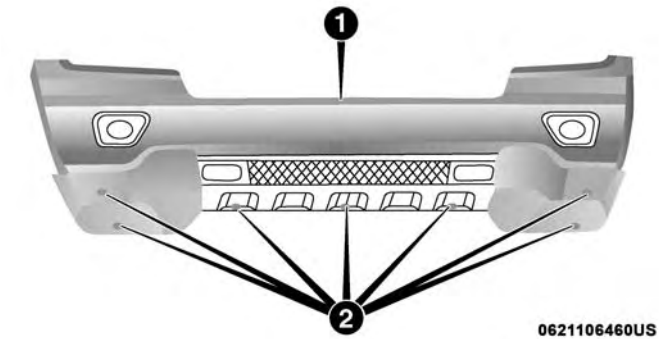

Front Air Dam

1 — Front Bumper
2 — Front Air Dam Fasteners

NOTE: On Summit models the lower front fascia is not removable.

Lower Front Fascia Removal:

1. Remove the seven quarter turn fasteners.
2. Starting on one side of the vehicle, disengage lower fascia from the upper fascia. Grasp the portion inside the wheel well. Pulling it downwards and toward you, separate the tabs from the slots in the upper fascia.
3. Continue working your way across the vehicle, separating the remaining tabs from the slots in the upper fascia.

NOTE: Do not allow the lower fascia to freely hang from the tabs in the opposite corner as damage to lower and upper fascia may result.

4. Store the lower fascia in a safe location.

NOTE: It is recommend to also remove the radar sensor on vehicle equipped to Adaptive Cruise Control (ACC). This radar sensor is specifically calibrated to your vehicle and is not interchangeable with other radar sensors.

Radar Sensor Removal Procedure (If Equipped With Adaptive Cruise Control [ACC]):

1. With the lower fascia removed, which provides access to the sensor and bracket, disconnect the wiring harness from the sensor.
2. Using a suitable tool, disconnect the wire clip from the bracket.
3. Using a suitable tool, remove the two fasteners that hold the sensor bracket to the bumper beam.

NOTE: It is recommended to scribe location to assist in reinstallation.

4. Locate the protective connector on the rear of the bumper beam.

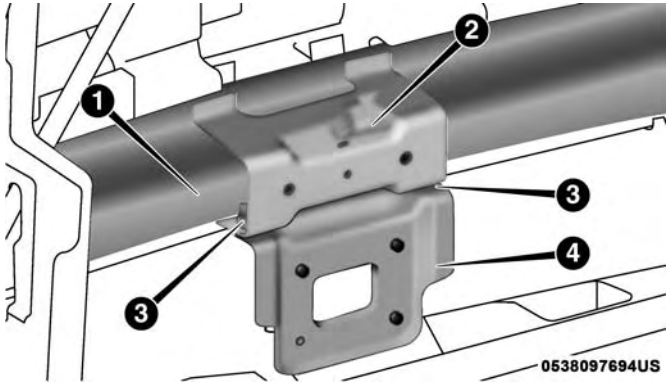

Bumper Beam

1 — Inside Bumper Beam
2 — Protective Connector Location
3 — Sensor Bracket Fasteners
4 — Sensor Bracket

NOTE: Only models with the Off Road Package are equipped with the a protective connector.

5. Remove the plug from the protective connector and install on the sensor.
6. Insert the wiring harness connector into the protective connector.

7. Store sensor and bracket in a safe place.

NOTE: All cruise control functions will be disabled when the radar sensor is disconnected.

Radar Sensor Installation Procedure (If Equipped With Adaptive Cruise Control [ACC]):

1. Disconnect the wiring harness connector from the protective connector on the bumper beam.
2. Remove plug from radar sensor and install in protective connector.
3. Using the previously scribed marks, reinstall the radar sensor and bracket using the two fasteners.

NOTE: Some alignment may be required upon fascia installation to align sensor with fascia.

4. Install the wiring harness connector into the radar sensor.

NOTE: If you receive a fault, see your authorized dealer they may need to perform a sensor alignment.

Lower Front Fascia Installation

NOTE: This will only work if you have a helper.

1. Starting at the center of the vehicle, engage a sufficient number of tabs to support the weight of the lower fascia (typically one or two tabs) into the upper fascia.
2. Working your way outward, engage the tabs into the slots on one side of the vehicle.
3. Return to the center of the vehicle and repeat Step 2 to the opposite side of the vehicle.

NOTE:

- It may be necessary to apply additional force to individual tabs to make sure they are fully engaged.
- Do not use any tools to apply additional force to the tabs as damage to the upper and lower fascias may result.

4. Reinstall the seven quarter turn fasteners.

Quadra-Lift — If Equipped

When off-roading, it is recommended that the lowest useable vehicle height that will clear the current obstacle or terrain be selected. The vehicle height should then be raised as required by the changes in terrain.

The Selec-Terrain switch will automatically change the vehicle to the optimized height based on the Selec-Terrain switch position. The vehicle height can be changed from the default height for each Selec-Terrain mode by normal use of the air suspension switches. Refer to "Four Wheel Drive Operation" in "Starting And Operating" for further information.

When To Use 4WD LOW Range — If Equipped

When off-road driving, shift to 4WD LOW for additional traction. This range should be limited to extreme situations such as deep snow, mud, or sand where additional low speed pulling power is needed. Vehicle speeds in excess of 25 mph (40 km/h) should be avoided when in 4WD LOW range.

WARNING!

Do not drive in 4WD-LOW Range on dry pavement; driveline damage may result. 4WD-LOW Range locks front and rear drivelines together and does not allow for differential action between the front to rear driveshafts. Driving in 4WD-LOW on pavement will cause driveline binding; use only on wet or slippery surfaces.

Driving Through Water

Although your vehicle is capable of driving through water, there are a number of precautions that must be considered before entering the water.

NOTE: Your vehicle is capable of water fording in up to 20 inches (51 cm) of water, while crossing small rivers or streams. To maintain optimal performance of your vehicle's heating and ventilation system it is recommended to switch the system into recirculation mode during water fording.

CAUTION!

When driving through water, do not exceed 5 mph (8 km/h). Always check water depth before entering as a precaution, and check all fluids afterward. Driving through water may cause damage that may not be covered by the New Vehicle Limited Warranty.

Driving through water more than a few inches/centimeters deep will require extra caution to ensure safety and prevent damage to your vehicle. If you must drive through water, try to determine the depth and the bottom condition (and location of any obstacles) prior to entering. Proceed

with caution and maintain a steady controlled speed less than 5 mph (8 km/h) in deep water to minimize wave effects.

Flowing Water

If the water is swift flowing and rising (as in storm run-off), avoid crossing until the water level recedes and/or the flow rate is reduced. If you must cross flowing water avoid depths in excess of 9 inches (23 cm). The flowing water can erode the streambed, causing your vehicle to sink into deeper water. Determine exit point(s) that are downstream of your entry point to allow for drifting.

Standing Water

Avoid driving in standing water deeper than 20 inches (51 cm), and reduce speed appropriately to minimize wave effects. Maximum speed in 20 inches (51 cm) of water is less than 5 mph (8 km/h).

Maintenance

After driving through deep water, inspect your vehicle fluids and lubricants (engine oil, transmission oil, axle, transfer case) to assure the fluids have not been contaminated. Contaminated fluid (milky, foamy in appearance) should be flushed/changed as soon as possible to prevent component damage.

Driving In Snow, Mud And Sand

In heavy snow, when pulling a load, or for additional control at slower speeds, shift the transmission to a low gear and shift the transfer case to 4WD LOW if necessary. Refer to “Four-Wheel Drive Operation” in “Starting and Operating” for further information. Do not shift to a lower gear than necessary to maintain forward motion. Over-revving the engine can spin the wheels and traction will be lost.

Avoid abrupt downshifts on icy or slippery roads, because engine braking may cause skidding and loss of control.

Hill Climbing

NOTE: Before attempting to climb a hill, determine the conditions at the crest and/or on the other side.

Before climbing a steep hill, shift the transmission to a lower gear and shift the transfer case to 4WD LOW. Use first gear and 4WD LOW for very steep hills.

If you stall or begin to lose forward motion while climbing a steep hill, allow your vehicle to come to a stop and immediately apply the brakes. Restart the engine, and shift into REVERSE. Back slowly down the hill, allowing the compression braking of the engine to help regulate your speed. If the brakes are required to control vehicle speed, apply them lightly and avoid locking or skidding the tires.

WARNING!

If the engine stalls, you lose forward motion, or cannot make it to the top of a steep hill or grade, never attempt to turn around. To do so may result in tipping and rolling the vehicle. Always back carefully straight down a hill in REVERSE gear. Never back down a hill in NEUTRAL using only the brake.

Remember, never drive diagonally across a hill. Always drive straight up or down.

If the wheels start to slip as you approach the crest of a hill, ease off the accelerator and maintain forward motion by turning the front wheels slowly. This may provide a fresh "bite" into the surface and will usually provide traction to complete the climb.

Traction Downhill

When descending mountains or hills, use Hill Descent or Selec-Speed Control to avoid repeated heavy braking.

If not equipped with Hill Descent or Selec-Speed Control use the following procedure:

Shift the transmission into a low gear, and the transfer case into 4WD LOW range. Let the vehicle go slowly down the hill with all four wheels turning against engine compression drag. This will permit you to control the vehicle speed and direction.

When descending mountains or hills, repeated braking can cause brake fade with loss of braking control. Avoid repeated heavy braking by downshifting the transmission whenever possible.

After Driving Off-Road

Off-road operation puts more stress on your vehicle than does most on-road driving. After going off-road, it is always a good idea to check for damage. That way you can get any problems taken care of right away and have your vehicle ready when you need it.

- Completely inspect the underbody of your vehicle. Check tires, body structure, steering, suspension, and exhaust system for damage.
- Inspect the radiator for mud and debris and clean as required.
- Check threaded fasteners for looseness, particularly on the chassis, drivetrain components, steering, and suspension. Retighten them, if required, and torque to the values specified in the Service Manual.
- Check for accumulations of plants or brush. These things could be a fire hazard. They might hide damage to fuel lines, brake hoses, axle pinion seals, and propeller shafts.
- After extended operation in mud, sand, water, or similar dirty conditions, have the radiator, fan, brake rotors, wheels, brake linings, and axle yokes inspected and cleaned as soon as possible.

WARNING!

Abrasive material in any part of the brakes may cause excessive wear or unpredictable braking. You might not have full braking power when you need it to prevent a collision. If you have been operating your vehicle in dirty conditions, get your brakes checked and cleaned as necessary.

- If you experience unusual vibration after driving in mud, slush or similar conditions, check the wheels for impacted material. Impacted material can cause a wheel imbalance and freeing the wheels of it will correct the situation.

IN CASE OF EMERGENCY

CONTENTS

- HAZARD WARNING FLASHERS 392
- ASSIST AND SOS MIRROR — IF EQUIPPED 392
- BULB REPLACEMENT 398
  - Replacement Bulbs 398
  - Bulb Replacement 400
- FUSES 405
  - General Information 406
  - Underhood Fuses 407
- JACKING AND TIRE CHANGING 413
  - Jack Location 414
  - Spare Tire Stowage 414
  - Preparations For Jacking 414
  - Jacking Instructions 415
  - Road Tire Installation 421
- JUMP STARTING 421
  - Preparations For Jump Start 422
  - Jump Starting Procedure 423
- REFUELING IN EMERGENCY 424
- IF YOUR ENGINE OVERHEATS 425
- MANUAL PARK RELEASE 426
- FREEING A STUCK VEHICLE 428
- TOWING A DISABLED VEHICLE 430
  - Two-Wheel Drive Models 431
  - Four-Wheel Drive Models 432
  - Emergency Tow Hooks — If Equipped 432
- ENHANCED ACCIDENT RESPONSE SYSTEM (EARS) 433
- EVENT DATA RECORDER (EDR) 433

HAZARD WARNING FLASHERS

The Hazard Warning flasher switch is located on the switch bank just above the climate controls.

Push the switch to turn on the Hazard Warning flasher. When the switch is activated, all directional turn signals will flash on and off to warn oncoming traffic of an emergency. Push the switch a second time to turn off the Hazard Warning flashers.

This is an emergency warning system and it should not be used when the vehicle is in motion. Use it when your vehicle is disabled and it is creating a safety hazard for other motorists.

When you must leave the vehicle to seek assistance, the Hazard Warning flashers will continue to operate even though the ignition is placed in the OFF position.

NOTE: With extended use, the Hazard Warning flashers may discharge the battery.

ASSIST AND SOS MIRROR — IF EQUIPPED

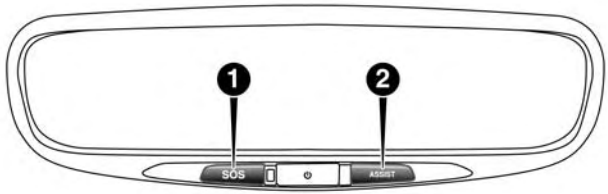

0310119905US

Assist And SOS Mirror

1 — SOS Button
2 — ASSIST Button

If equipped, the rearview mirror contains an ASSIST and a SOS button.

WARNING!

ALWAYS obey traffic laws and pay attention to the road. ALWAYS drive safely with your hands on the steering wheel. You have full responsibility and assume all risks related to the use of the features and applications in this vehicle. Only use the features and applications when it is safe to do so. Failure to do so may result in an accident involving serious injury or death.

NOTE:

- Your vehicle may be transmitting data as authorized by the subscriber.
- The SOS and ASSIST buttons will only function if you are connected to an operable LTE (voice/data) or 4G (data) network. Other Uconnect services will only be operable if your SiriusXM Guardian service is active and you are connected to an operable LTE (voice/data) or 4G (data) network.

ASSIST Call

The ASSIST Button is used to automatically connect you to any one of the following support centers:

- Roadside Assistance – If you get a flat tire, or need a tow, just push the ASSIST button and you will be connected to a representative for assistance. Roadside Assistance will know what vehicle you're driving and its location. Additional fees may apply for roadside assistance.
- SiriusXM Guardian Customer Care – In-vehicle support for SiriusXM Guardian.
- Vehicle Customer Care – Total support for all other vehicle issues.

SOS Call

1. Push the SOS Call button on the Rearview Mirror.

NOTE: In case the SOS Call button is pushed in error, there will be a ten second delay before the SOS Call system initiates a call to a SOS operator. To cancel the SOS Call connection, push the SOS call button on the Rearview Mirror or press the cancellation button on the Device Screen. Termination of the SOS Call will turn off the green LED light on the Rearview Mirror.

2. The LED light located between the ASSIST and SOS buttons on the Rearview Mirror will turn green once a connection to a SOS operator has been made.

3. Once a connection between the vehicle and a SOS operator is made, the SOS Call system may transmit the following important vehicle information to a SOS operator:
   - Indication that the occupant placed a SOS Call.
   - The vehicle brand.
   - The last known GPS coordinates of the vehicle.
4. You should be able to speak with the SOS operator through the vehicle audio system to determine if additional assistance is needed.

WARNING!

ALWAYS obey traffic laws and pay attention to the road. ALWAYS drive safely with your hands on the steering wheel. You have full responsibility and assume all risks related to the use of the features and applications in this vehicle. Only use the features and applications when it is safe to do so. Failure to do so may result in an accident involving serious injury or death.

NOTE:

- Your vehicle may be transmitting data as authorized by the subscriber.
- Once a connection is made between the vehicle's SOS Call system and the SOS operator, the SOS operator may be able to open a voice connection with the vehicle to determine if additional assistance is needed. Once the SOS operator opens a voice connection with the vehicle's SOS Call system, the operator should be able to speak with you or other vehicle occupants and hear sounds occurring in the vehicle. The vehicle's SOS Call system will attempt to remain connected with the SOS operator until the SOS operator terminates the connection.

5. The SOS operator may attempt to contact appropriate emergency responders and provide them with important vehicle information and GPS coordinates.

WARNING!

- **If anyone in the vehicle could be in danger (e.g., fire or smoke is visible, dangerous road conditions or location), do not wait for voice contact from an Emergency Services Agent. All occupants should exit the vehicle immediately and move to a safe location.**
- **Never place anything on or near the vehicle's operable network and GPS antennas. You could prevent operable network and GPS signal reception, which can prevent your vehicle from placing an emergency call. An operable network and GPS signal reception is required for the SOS Call system to function properly.**
- **The SOS Call system is embedded into the vehicle's electrical system. Do not add aftermarket electrical equipment to the vehicle's electrical system. This may prevent your vehicle from sending a signal to initiate an emergency call. To avoid interference that can cause the SOS Call system to fail, never add aftermarket equipment (e.g., two-way mobile radio, CB radio, data recorder, etc.) to your vehicle's electrical system or modify the antennas on your vehicle. IF YOUR VEHICLE LOSES BATTERY POWER FOR**

(Continued)

WARNING! *(Continued)*

ANY REASON (INCLUDING DURING OR AFTER AN ACCIDENT), THE UCONNECT FEATURES, APPS AND SERVICES, AMONG OTHERS, WILL NOT OPERATE.

- **Modifications to any part of the SOS Call system could cause the air bag system to fail when you need it. You could be injured if the air bag system is not there to help protect you.**

SOS Call System Limitations

Vehicles sold in Mexico **DO NOT** have SOS Call system capabilities.

SOS or other emergency line operators in Mexico may not answer or respond to SOS system calls.

If the SOS Call system detects a malfunction, any of the following may occur at the time the malfunction is detected, and at the beginning of each ignition cycle:

- The Rearview Mirror light located between the ASSIST and SOS buttons will continuously be illuminated red.
- The Device Screen will display the following message "Vehicle device requires service. Please contact your dealer."

- An In-Vehicle Audio message will state "Vehicle device requires service. Please contact your dealer."

WARNING!

- **Ignoring the Rearview Mirror light could mean you will not have SOS Call services. If the Rearview Mirror light is illuminated, have your authorized dealer service the SOS Call system immediately.**
- **The Occupant Restraint Control module turns on the air bag Warning Light on the instrument panel if a malfunction in any part of the system is detected. If the Air Bag Warning Light is illuminated, have your authorized dealer service the Occupant Restraint Control system immediately.**

Even if the SOS Call system is fully functional, factors beyond FCA US LLC's control may prevent or stop the SOS Call system operation. These include, but are not limited to, the following factors:

- Delayed accessories mode is active.
- The ignition is in the OFF position.
- The vehicle's electrical systems are not intact.
- The SOS Call system software and/or hardware are damaged during a crash.
- The vehicle battery loses power or becomes disconnected during a vehicle crash.
- LTE (voice/data) or 4G (data) network and/or Global Positioning Satellite signals are unavailable or obstructed.
- Equipment malfunction at the SOS operator facility.
- Operator error by the SOS operator.
- LTE (voice/data) or 4G (data) network congestion.
- Weather.
- Buildings, structures, geographic terrain, or tunnels.

WARNING!

ALWAYS obey traffic laws and pay attention to the road. ALWAYS drive safely with your hands on the steering wheel. You have full responsibility and assume all risks related to the use of the features and applications in this vehicle. Only use the features and applications when it is safe to do so. Failure to do so may result in an accident involving serious injury or death.

NOTE:

- Your vehicle may be transmitting data as authorized by the subscriber.
- Never place anything on or near the vehicle's LTE (voice/data) or 4G (data) and GPS antennas. You could prevent LTE (voice/data) or 4G (data) and GPS signal reception, which can prevent your vehicle from placing an emergency call. An operable LTE (voice/data) or 4G (data) network connection and a GPS signal is required for the SOS Call system to function properly.

General Information

This device complies with Part 15 of the FCC Rules. Operation is subject to the following two conditions: (1) This device may not cause harmful interference, and (2) this device must accept any interference received, including interference that may cause undesired operation.

NOTE: Changes or modifications not expressly approved by the party responsible for compliance could void the user's authority to operate the equipment.

CAUTION!

To avoid damage to the mirror during cleaning, never spray any cleaning solution directly onto the mirror. Apply the solution onto a clean cloth and wipe the mirror clean.

BULB REPLACEMENT

Replacement Bulbs

Interior Bulbs

	Bulb Number
Glove Compartment Lamp	194
Grab Handle Lamp	L002825W5W
Overhead Console Reading Lamps	VT4976
Rear Cargo Lamp	214–2
Visor Vanity Lamp	V26377
Underpanel Courtesy Lamps	906
Instrument Cluster (General Illumination)	103
Telltale/Hazard Lamp	74

Exterior Bulbs

	Bulb Number
Headlamps (Low Beam) — If Equipped	H11
Premium Headlamps (Low/High Beam)	D3S (Service At Authorized Dealer)
Headlamps (High Beam) — If Equipped	H9
Premium Park/Turn Signal Lamp	LED - (Service At Authorized Dealer)
Premium Daytime Running Lamp (DRL)	LED - (Service At Authorized Dealer)
Front Fog Lamps	H11 LED - (Service At Authorized Dealer)
Front Side Marker — If Equipped	W5W
Premium Front Side Marker — If Equipped	LED - (Service At Authorized Dealer)
Front Park/Turn Lamp — If Equipped	7444NA (WY28/8W)
Rear Body Side Backup Lamp	7440 (W21W)
Auxiliary Liftgate Tail Lamps	LED - (Service At Authorized Dealer)
Liftgate Backup Lamps	921 (W16W)
Rear License Lamps	LED - (Service At Authorized Dealer)
Rear Body Side Stop/Turn Lamps	3157KRD LCP (P27/7W)
Rear Body Side Tail Lamps	LED - (Service At Authorized Dealer)
CHMSL - Center High Mounted Stop Lamp	LED - (Service At Authorized Dealer)

NOTE: Numbers refer to commercial bulb types that can be purchased from your authorized dealer.

If a bulb needs to be replaced, visit your authorized dealer or refer to the applicable Service Manual.

Bulb Replacement

High Intensity Discharge Headlamps (HID) — If Equipped

The headlamps are a type of high voltage discharge tube. High voltage can remain in the circuit even with the headlamp switch off and the key removed. **Because of this, you should not attempt to service a headlamp bulb yourself. If a headlamp bulb fails, take your vehicle to an authorized dealer for service.**

WARNING!

A transient high voltage occurs at the bulb sockets of High Intensity Discharge (HID) headlamps when the headlamp switch is turned ON. It may cause serious electrical shock or electrocution if not serviced properly. See your authorized dealer for service.

NOTE: On vehicles equipped with High Intensity Discharge (HID) headlamps, when the headlamps are turned on, there is a blue hue to the lamps. This diminishes and becomes more white after approximately 10 seconds, as the system charges.

Halogen Headlamps — If Equipped

NOTE: Lens fogging can occur under certain atmospheric conditions. This will usually clear as atmospheric conditions change to allow the condensation to change back to vapor. Turning the lamps on will usually accelerate the clearing process.

1. Open the hood.
2. Access the back of the headlamp.

NOTE:

- The air filter housing must be removed.
- The windshield washer reservoir may need to be rotated out of the way by removing the fastener.
- Coolant reservoir (if equipped) will need to be repositioned by removing the fasteners, and moving the unit out of the way.

3. To access the low beam bulb you must remove the rubber boot seal from backside of the lamp housing.

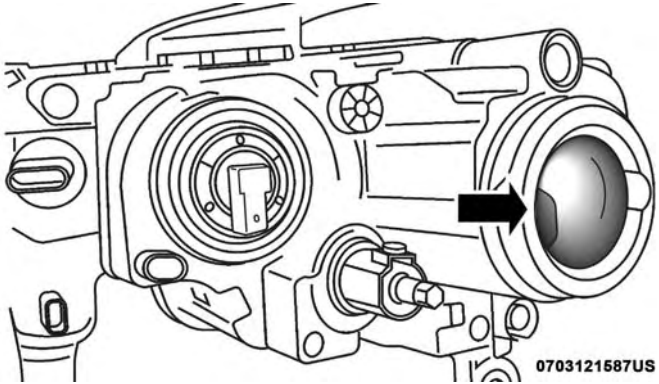

Rubber Boot Seal

NOTE: Ensure the rubber boot is properly reinstalled to prevent water and moisture from entering the lamp.

CAUTION!

- **Do not contaminate the bulb glass by touching it with your fingers or by allowing it to contact other oily surfaces. Shortened bulb life will result.**
- **Always use the correct bulb size and type for replacement. An incorrect bulb size or type may overheat and cause damage to the lamp, the bulb socket, or the lamp wiring.**

4. Turn the low or high beam bulb one–quarter turn counterclockwise to remove from housing.
5. Disconnect the electrical connector and replace the bulb.

Front Turn Signal Lamp

1. Open the hood.
2. Access the back of the headlamp.

NOTE:

- The air filter housing must be removed.
- The windshield washer reservoir may need to be rotated out of the way by removing the fastener.
- Coolant reservoir (if equipped) will need to be repositioned by removing the fasteners, and moving the unit out of the way.

3. Turn the turn signal bulb one–quarter turn counterclockwise to remove from housing.
4. Disconnect the electrical connector and replace the bulb.

CAUTION!

Do not touch the new bulb with your fingers. Oil contamination will severely shorten bulb life. If the bulb comes in contact with any oily surface, clean the bulb with rubbing alcohol.

Front Fog Lamps

Please see your authorized dealer for service.

Rear Tail, Stop, and Turn Signal Lamps

1. Raise the liftgate.
2. Remove the two push-pins from the tail lamp housing.

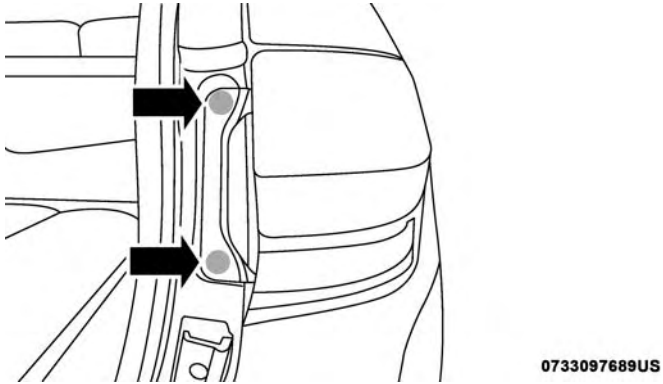

Tail Lamp Push Pins

3. Grasp the tail lamp and pull firmly rearward to disengage the lamp from the aperture panel.

4. Twist socket counter clockwise and remove from lamp.

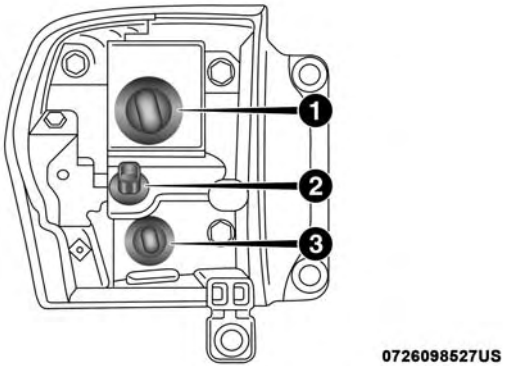

Rear Of Tail Lamp

1 — Rear Turn/Stop Bulb Socket
2 — LED Tail Connector – Do Not Remove
3 — Backup Bulb Socket

5. Pull the bulb to remove it from the socket.
6. Replace the bulb, reinstall the socket, and reattach the lamp assembly.

Rear Liftgate Mounted Tail Lamp

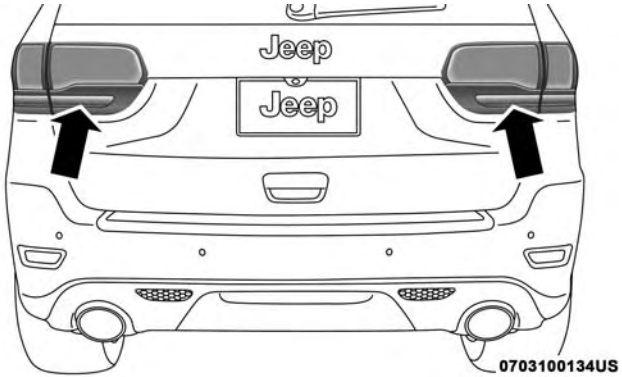

Rear Liftgate Tail Lamps

1. Raise the liftgate.

2. Use a suitable tool to pry the lower trim from the liftgate.

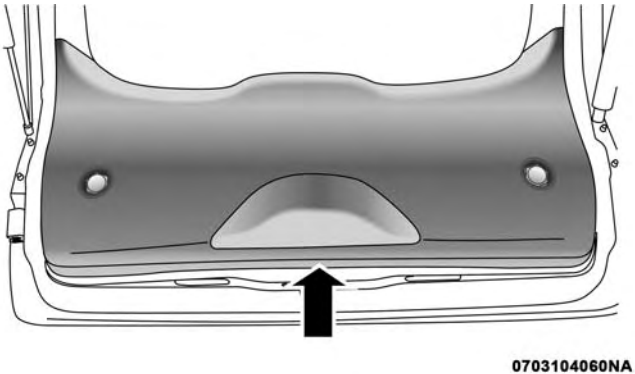

Liftgate Lower Trim

3. Continue removing the trim.
4. Disconnect the two trim panel lights.
5. Tail lamps are now visible. Rotate socket(s) counter clockwise.

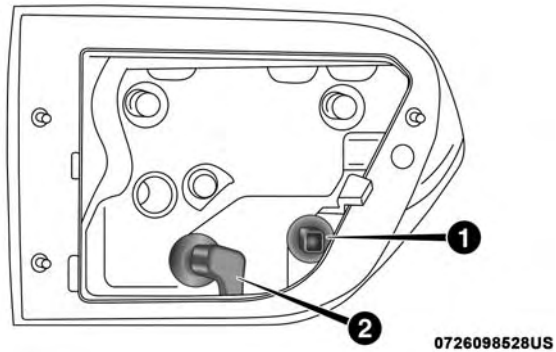

Rear Of Liftgate Tail Lamp

1 — Auxiliary LED Tail Connector – Do Not Remove
2 — Backup Bulb Socket

6. Remove/replace bulb(s).
7. Reinstall the socket(s).
8. Reverse process to reinstall the liftgate trim.

Center High-Mounted Stop Lamp (CHMSL)

The center high mounted stop lamp is an LED. Service at an authorized dealer.

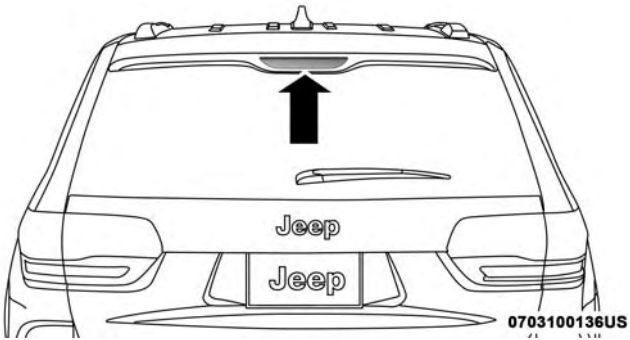

Center High-Mounted Stop Lamp

Rear License Lamp

The rear license lamps are LEDs. See your authorized dealer for service.

FUSES

WARNING!

- **When replacing a blown fuse, always use an appropriate replacement fuse with the same amp rating as the original fuse. Never replace a fuse with another fuse of higher amp rating. Never replace a blown fuse with metal wires or any other material. Do not place a fuse inside a circuit breaker cavity or vice versa. Failure to use proper fuses may result in serious personal injury, fire and/or property damage.**
- **Before replacing a fuse, make sure that the ignition is off and that all the other services are switched off and/or disengaged.**
- **If the replaced fuse blows again, contact an authorized dealer.**
- **If a general protection fuse for safety systems (air bag system, braking system), power unit systems (engine system, transmission system) or steering system blows, contact an authorized dealer.**

General Information

The fuses protect electrical systems against excessive current.

When a device does not work, you must check the fuse element inside the blade fuse for a break/melt.

Also, please be aware that when using power outlets for extended periods of time with the engine off may result in vehicle battery discharge.

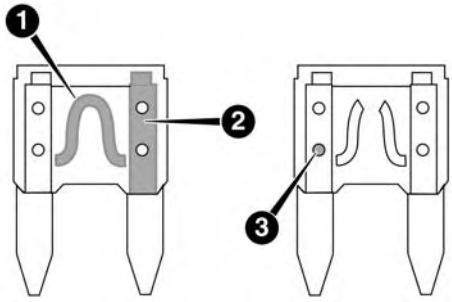

0704085531US

Blade Fuses

1 — Fuse Element
2 — Blade Fuse with a good/functional fuse element.
3 — Blade fuse with a NOT functional / BAD fuse element (blown fuse).

Underhood Fuses

The Power Distribution Center is located in the engine compartment near the battery. This center contains cartridge fuses, micro fuses, relays, and circuit breakers. A description of each fuse and component may be stamped on the inside cover, otherwise the cavity number of each fuse is stamped on the inside cover that corresponds to the following chart.

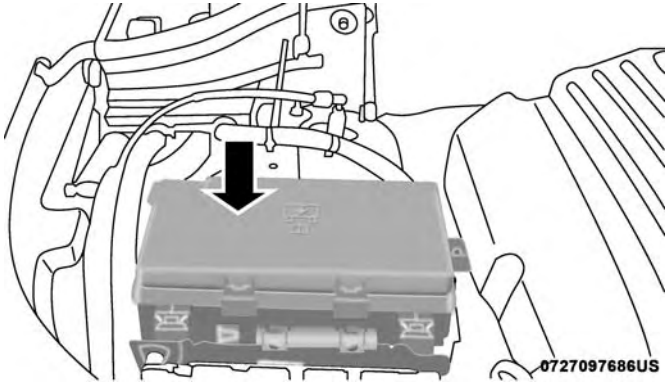

Power Distribution Center

Cavity	Cartridge Fuse	Micro Fuse	Description
F03	60 Amp Yellow	–	Radiator Fan — If Equipped
F05	40 Amp Green	–	Compressor for Air Suspension — If Equipped
F06	40 Amp Green	–	Anti-lock Brakes/Electronic Stability Control Pump
F07	30 Amp Pink	–	Starter Solenoid
F09	30 Amp Pink	–	Diesel Fuel Heater (Diesel Engine Only)/ Brake Vacuum Pump
F10	40 Amp Green	–	Body Controller/Exterior Lighting #2

Cavity	Cartridge Fuse	Micro Fuse	Description
F11	30 Amp Pink	–	Trailer Tow Electric Brake — If Equipped
F12	40 Amp Green	–	Body Controller #3/Power Locks
F13	40 Amp Green	–	Blower Motor Front
F14	40 Amp Green	–	Body Controller #4/Exterior Lighting #1
F15	40 Amp Green	–	LTR (Low Temperature Radiator) Engine Cooling Pump — If Equipped
F17	30 Amp Pink	–	Headlamp Washer — If Equipped
F19	20 Amp Blue	–	Headrest Solenoid — If Equipped
F20	30 Amp Pink	–	Passenger Door Module
F22	20 Amp Blue	–	Engine Control Module
F23	30 Amp Pink	–	Interior Lights #1
F24	30 Amp Pink	–	Driver Door Module
F25	30 Amp Pink	–	Front Wipers
F26	30 Amp Pink	–	Anti-lock Brakes/Stability Control Module, ECU and Valves
F28	20 Amp Blue	–	Trailer Tow Backup Lights — If Equipped
F29	20 Amp Blue	–	Trailer Tow Parking Lights — If Equipped
F30	30 Amp Pink	–	Trailer Tow (Receptacle) / Trailer Tow (Separate E-Brake) / Trailer Tow (BUX) — If Equipped

Cavity	Cartridge Fuse	Micro Fuse	Description
F32	30 Amp Pink	–	Drive Train Control Module
F34	30 Amp Pink	–	Slip Differential Control — If Equipped
F35	30 Amp Pink	–	Sunroof - If Equipped
F36	30 Amp Pink	–	Rear Defroster
F37	25 Amp Clear	–	Rear Blower Motor — If Equipped
F38	30 Amp Pink	–	Power Inverter 115V AC — If Equipped
F39	30 Amp Pink	–	Power Liftgate — If Equipped
F40	–	10 Amp Red	Daytime Running Lights/Headlamp Leveling
F42	–	20 Amp Yellow	Horn
F44	–	10 Amp Red	Diagnostic Port
F45	–	5 Amp Tan	Cyber Security Gateway
F49	–	10 Amp Red	Integrated Central Stack/Climate Control
F50	–	20 Amp Yellow	Air Suspension Control Module/Slip Differential - If Equipped
F51	–	15 Amp Blue	KIN/RF HUB/Steering Column Lock — If Equipped
F53	–	20 Amp Yellow	Trailer Tow – Left Turn/Stop Lights — If Equipped
F56	–	15 Amp Blue	Additional Content (Diesel Engine Only)

Cavity	Cartridge Fuse	Micro Fuse	Description
F57	–	20 Amp Yellow	NOX Sensor — If Equipped
F58	–	15 Amp Blue	HID Headlamps LH — If Equipped
F59	–	10 Amp Red	Purging Pump (Diesel Engine Only)
F60	–	15 Amp Blue	Transmission Control Module
F61	–	10 Amp Red	Transmission Control Module/PM Sensor (Diesel Engine Only)
F62	–	10 Amp Red	Air Conditioning Clutch
F63	–	20 Amp Yellow	Ignition Coils / Ignition Coil Capacitors / Short Runner Valve Actuator — If Equipped (Gas) Urea Heater (Diesel)
F64	–	25 Amp Clear	Fuel Injectors/Powertrain
F66	–	10 Amp Red	Sunroof/Rain Sensor/Inside Rear View Mirror / USB Port / DSCR / DTV — If Equipped
F67	–	15 Amp Blue	CD/DVD/UCI Port/USB Charging Port
F68	–	20 Amp Yellow	Rear Wiper Motor
F69	–	15 Amp Blue	Spotlight Feed — If Equipped
F70	–	20 Amp Yellow	Fuel Pump Motor
F71	–	30 Amp Green	Amplifier/ANCM — If Equipped
F72	–	10 Amp Red	ECM

Cavity	Cartridge Fuse	Micro Fuse	Description
F73	–	15 Amp Blue	HID Headlamp RH — If Equipped
F75	–	10 Amp Red	Dual Batt Control — If Equipped
F76	–	10 Amp Red	Anti-lock Brakes/Electronic Stability Control
F77	–	10 Amp Red	Drivetrain Control Module/Front Axle Disconnect Module — If Equipped
F78	–	10 Amp Red	Engine Control Module/Electric Power Steering
F80	–	10 Amp Red	Universal Garage Door Opener/Anti-Intrusion Module — If Equipped/Siren — If Equipped
F81	–	20 Amp Yellow	Trailer Tow Right Turn/Stop Lights — If Equipped
F82	–	10 Amp Red	Steering Column Control Module/Cruise Control/DTV — If Equipped
F83	–	10 Amp Red	Fuel Door
F84	–	15 Amp Blue	Instrument Cluster
F85	–	10 Amp Red	Airbag Module
F86	–	10 Amp Red	Airbag Module
F87	–	10 Amp Red	Air Suspension — If Equipped
F88	–	15 Amp Blue	Instrument Panel Cluster/SGW/ITBM — If Equipped

Cavity	Cartridge Fuse	Micro Fuse	Description
F90/F91	–	20 Amp Yellow	Power Outlet (Rear Seats) Selectable
F92	–	10 Amp Red	Rear Console Lamp — If Equipped
F93	–	20 Amp Yellow	Cigar Lighter
F94	–	10 Amp Red	Shifter/Transfer Case Module
F95	–	10 Amp Red	Rear Camera / Blind Spot Sensor — If Equipped
F96	–	10 Amp Red	Rear Seat Heater Switch/Flashlamp Charger — If Equipped
F97	–	20 Amp Yellow	Rear Heated Seats & Heated Steering Wheel — If Equipped
F98	–	20 Amp Yellow	Ventilated Seats/Front Heated Seats — If Equipped
F99	–	10 Amp Red	Climate Control/Driver Assistance Systems Module/HALF/Park Assist
F100	–	10 Amp Red	Active Damping — If Equipped
F101	–	15 Amp Blue	In Car Temperature Sensor/Humidity Sensor
F102	–	15 Amp Blue	Spare
F103	–	10 Amp Red	Cabin Heater (Diesel Engine Only)/Rear HVAC — If Equipped
F104	–	20 Amp Yellow	Power Outlets (Instrument Panel/Center Console/Rear Cargo — If Equipped)

CAUTION!

- When installing the power distribution center cover, it is important to ensure the cover is properly positioned and fully latched. Failure to do so may allow water to get into the power distribution center and possibly result in an electrical system failure.
- When replacing a blown fuse, it is important to use only a fuse having the correct amperage rating. The use of a fuse with a rating other than indicated may result in a dangerous electrical system overload. If a properly rated fuse continues to blow, it indicates a problem in the circuit that must be corrected.

JACKING AND TIRE CHANGING

WARNING!

- Do not attempt to change a tire on the side of the vehicle close to moving traffic. Pull far enough off the road to avoid the danger of being hit when operating the jack or changing the wheel.

(Continued)

WARNING! *(Continued)*

- Being under a jacked-up vehicle is dangerous. The vehicle could slip off the jack and fall on you. You could be crushed. Never put any part of your body under a vehicle that is on a jack. If you need to get under a raised vehicle, take it to a service center where it can be raised on a lift.
- Never start or run the engine while the vehicle is on a jack.
- The jack is designed to be used as a tool for changing tires only. The jack should not be used to lift the vehicle for service purposes. The vehicle should be jacked on a firm level surface only. Avoid ice or slippery areas.

Jack Location

The scissor-type jack and tire changing tools are located in the rear cargo area, below the load floor.

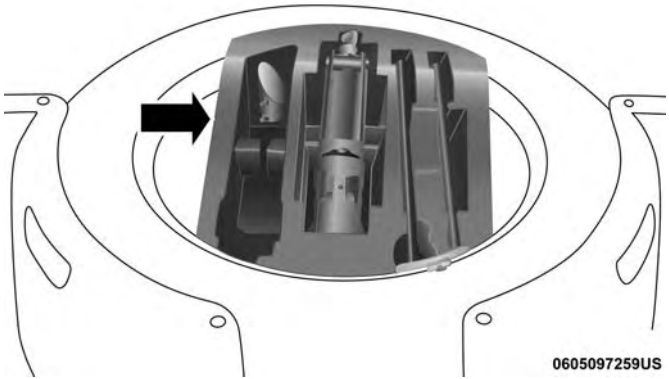

Jack Storage Location

NOTE: The funnel for the Cap-Less Fuel System is located on top of the spare tire. If your vehicle is out of fuel and an auxiliary fuel can is needed, insert the funnel into the filler neck and proceed to fill the vehicle. For vehicles not equipped with a spare tire, the fuel filler funnel is stored in the left storage bin under the load floor. For more information on the Cap-Less Fuel System, refer to “Refueling The Vehicle” in “Starting And Operating”.

Spare Tire Stowage

The spare tire is stowed under the load floor in the rear cargo area and is secured to the body with a special wing nut.

Preparations For Jacking

CAUTION!

Always lift or jack the vehicle from the correct jacking points. Failure to follow this information could cause damage to the vehicle or underbody components.

1. Park the vehicle on a firm, level surface. Avoid ice or slippery surfaces.

WARNING!

Do not attempt to change a tire on the side of the vehicle close to moving traffic. Pull far enough off the road to avoid being hit when operating the jack or changing the wheel.

2. Turn on the Hazard Warning flasher.
3. Apply the parking brake.
4. Place the gear selector into PARK.

5. Turn the ignition OFF.

6. Block both the front and rear of the wheel diagonally opposite of the jacking position. For example, if changing the right front tire, block the left rear wheel.

NOTE: Passengers should not remain in the vehicle when the vehicle is being jacked.

7. For vehicles equipped with Quadra-Lift, refer to "Quadra-Lift — If Equipped" in "Starting And Operating" for further information on disabling automatic leveling.

Jacking Instructions

WARNING!

Carefully follow these tire changing warnings to help prevent personal injury or damage to your vehicle:

- **Always park on a firm, level surface as far from the edge of the roadway as possible before raising the vehicle.**
- **Turn on the Hazard Warning flasher.**

(Continued)

WARNING! *(Continued)*

- **Block the wheel diagonally opposite the wheel to be raised.**
- **Apply the parking brake firmly and set the transmission in PARK.**
- **Never start or run the engine with the vehicle on a jack.**
- **Do not let anyone sit in the vehicle when it is on a jack.**
- **Do not get under the vehicle when it is on a jack. If you need to get under a raised vehicle, take it to a service center where it can be raised on a lift.**
- **Only use the jack in the positions indicated and for lifting this vehicle during a tire change.**
- **If working on or near a roadway, be extremely careful of motor traffic.**
- **To assure that spare tires, flat or inflated, are securely stowed, spares must be stowed with the valve stem facing the ground.**

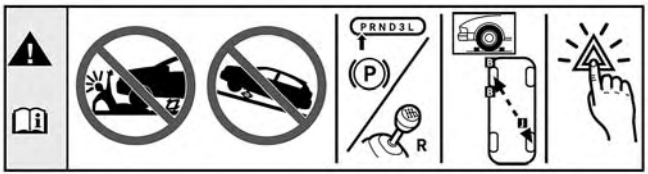

060600714

Jack Warning Label

CAUTION!

Do not attempt to raise the vehicle by jacking on locations other than those indicated in the Jacking Instructions for this vehicle.

1. Remove the spare tire, jack, and tools from storage.
2. Loosen (but do not remove) the wheel lug nuts by turning them to the left, one turn, while the wheel is still on the ground.
3. Assemble the jack and jacking tools.

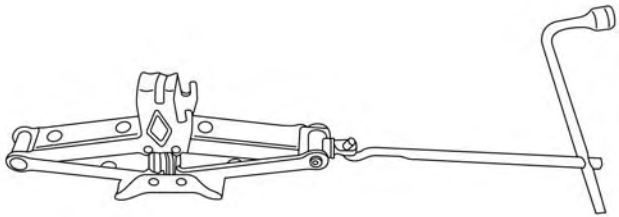

0605097244US

Jack And Tool Assembly

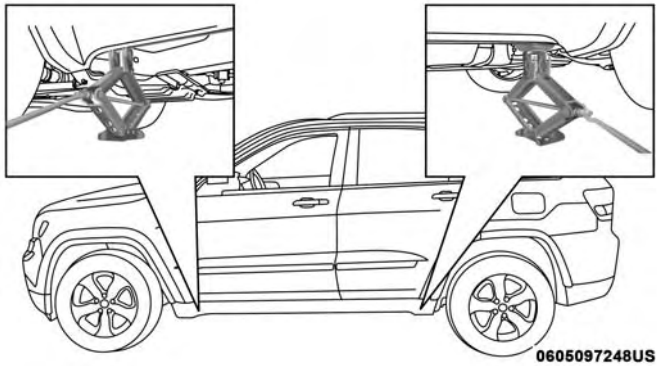

Jacking Locations

4. For the front axle, place the jack on the body flange just behind the front tire as indicated by the triangular lift point symbol on the sill molding. **Do not raise the vehicle until you are sure the jack is fully engaged.**

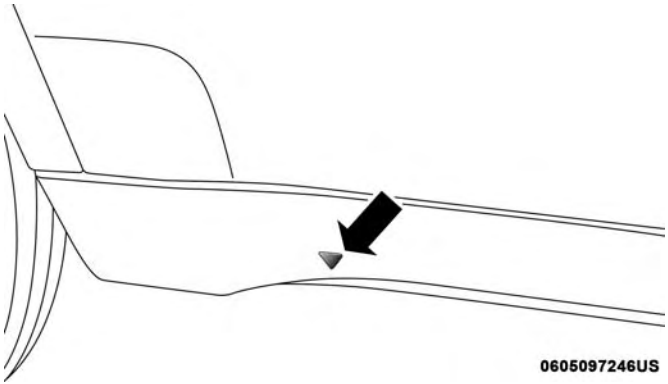

Lift Point Symbol On Sill Molding

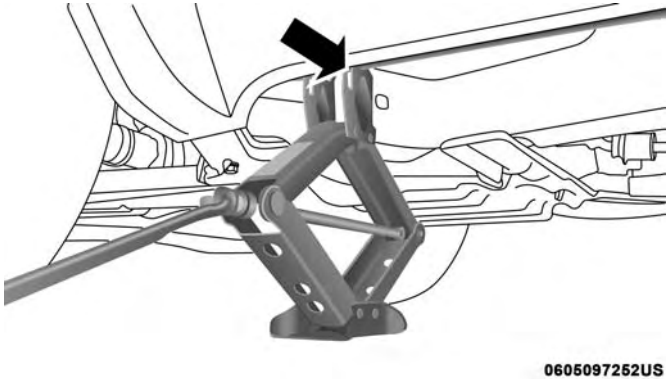

Front Jacking Location

5. For a rear tire, place the jack in the slot on the rear tie-down bracket, just forward of the rear tire (as indicated by the triangular lift point symbol on the sill molding). **Do not raise the vehicle until you are sure the jack is fully engaged.**

CAUTION!

Do NOT raise the vehicle by the body side sill molding. Be sure the jack is placed in the proper engagement location on the inside of the panel. Damage of the vehicle may occur if the procedure is not properly followed.

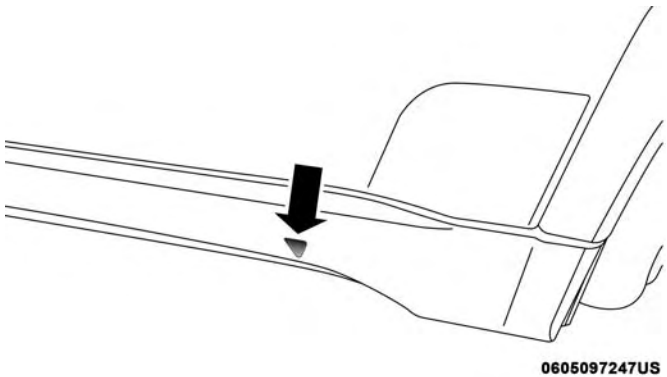

Lift Point Symbol On Sill Molding

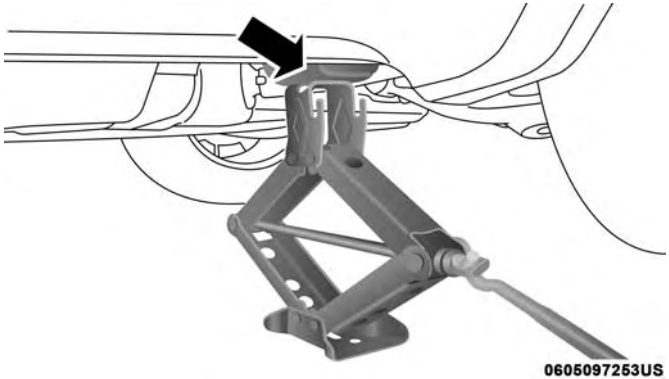

Rear Jacking Location

6. Raise the vehicle by turning the jack screw clockwise. Raise the vehicle only until the tire just clears the surface and enough clearance is obtained to install the spare tire. Minimum tire lift provides maximum stability.

WARNING!

Raising the vehicle higher than necessary can make the vehicle less stable. It could slip off the jack and hurt someone near it. Raise the vehicle only enough to remove the tire.

7. Remove the lug nuts and wheel.
8. Position the spare wheel/tire on the vehicle and install the lug nuts with the cone-shaped end toward the wheel. Lightly tighten the nuts.

CAUTION!

Be sure to mount the spare tire with the valve stem facing outward. The vehicle could be damaged if the inflatable spare tire is mounted incorrectly.

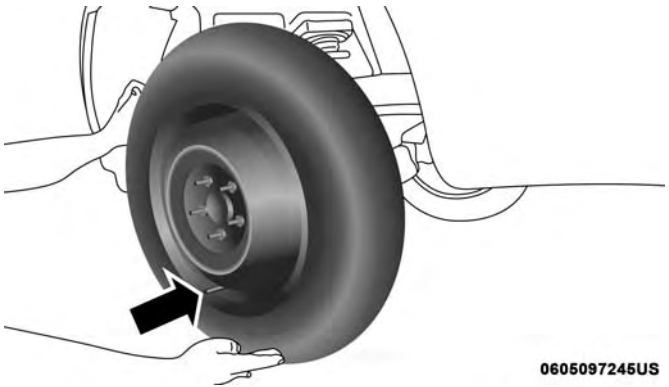

Mounting Spare Tire

WARNING!

To avoid the risk of forcing the vehicle off the jack, do not tighten the wheel nuts fully until the vehicle has been lowered. Failure to follow this warning may result in serious injury.

9. Lower the vehicle by turning the jack screw counterclockwise, and remove the jack and wheel blocks.
10. Finish tightening the lug nuts. Push down on the wrench while at the end of the handle for increased leverage. Tighten the lug nuts in a star pattern until each nut has been tightened twice. For correct lug nut torque, refer to "Torque Specifications" in "Technical Specifications". If in doubt about the correct tightness, have them checked with a torque wrench by an authorized dealer or at a service station.
11. Lower the jack to the fully closed position and return it and the tools to the proper positions in the foam tray.
12. Remove the small center cap and securely store the road wheel in the cargo area.

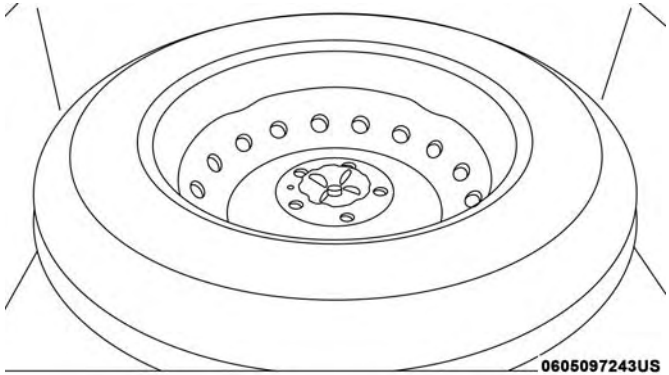

Stowed Spare

13. Have the aluminum road wheel and tire repaired as soon as possible, properly secure the spare tire with the special wing nut torqued to 3.7 ft-lbs (5 N·m), reinstall the jack and tool kit foam tray, and latch the rear load floor cover.

NOTE: Do not drive with the spare tire installed for more than 50 miles (80 km) at a max speed of 50 mph (80 km/h).

WARNING!

A loose tire or jack thrown forward in a collision or hard stop could endanger the occupants of the vehicle. Always stow the jack parts and the spare tire in the places provided. Have the deflated (flat) tire repaired or replaced immediately.

Road Tire Installation

1. Mount the road tire on the axle.
2. Install the remaining lug nuts with the cone shaped end of the nut toward the wheel. Lightly tighten the lug nuts.

WARNING!

To avoid the risk of forcing the vehicle off the jack, do not tighten the wheel nuts fully until the vehicle has been lowered. Failure to follow this warning may result in serious injury.

3. Lower the vehicle to the ground by turning the jack handle counterclockwise.
4. Refer to "Torque Specifications" in "Technical Specifications" for proper lug nut torque.
5. After 25 miles (40 km), check the lug nut torque with a torque wrench to ensure that all lug nuts are properly seated against the wheel.

JUMP STARTING

If your vehicle has a discharged battery, it can be jump started using a set of jumper cables and a battery in another vehicle, or by using a portable battery booster pack. Jump starting can be dangerous if done improperly, so please follow the procedures in this section carefully.

WARNING!

Do not attempt jump starting if the battery is frozen. It could rupture or explode and cause personal injury.

CAUTION!

Do not use a portable battery booster pack or any other booster source with a system voltage greater than 12 Volts or damage to the battery, starter motor, alternator or electrical system may occur.

NOTE: When using a portable battery booster pack, follow the manufacturer's operating instructions and precautions.

Preparations For Jump Start

The battery in your vehicle is located under the passenger's front seat. There are remote terminals located under the hood to assist in jump starting.

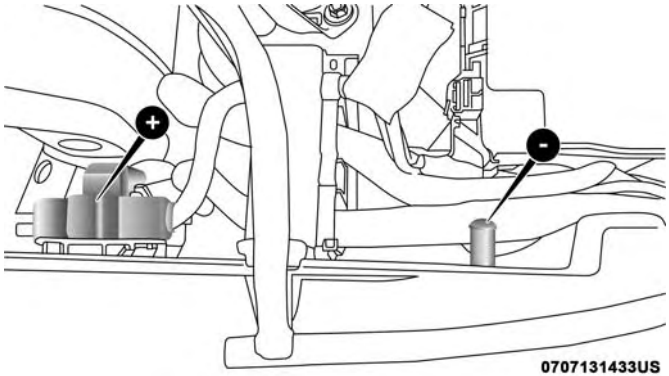

Jump Starting Locations

(+) — Remote Positive Post (Covered With Protective Cap)
(-) — Remote Negative Post

WARNING!

- **Take care to avoid the radiator cooling fan whenever the hood is raised. It can start anytime the ignition switch is ON. You can be injured by moving fan blades.**
- **Remove any metal jewelry such as rings, watch bands and bracelets that could make an inadvertent electrical contact. You could be seriously injured.**
- **Batteries contain sulfuric acid that can burn your skin or eyes and generate hydrogen gas which is flammable and explosive. Keep open flames or sparks away from the battery.**

NOTE: Be sure that the disconnected cable ends do not touch each other, or either vehicle, until properly connected for jump starting.

1. Apply the parking brake, shift the automatic transmission into PARK and turn the ignition OFF.
2. Turn off the heater, radio, and all unnecessary electrical accessories.
3. Remove the protective cover over the remote positive **(+)** battery post. Pull upward on the cover to remove it.

4. If using another vehicle to jump start the battery, park the vehicle within the jumper cables reach, apply the parking brake and make sure the ignition is OFF.

WARNING!

Do not allow vehicles to touch each other as this could establish a ground connection and personal injury could result.

Jump Starting Procedure

WARNING!

Failure to follow this jump starting procedure could result in personal injury or property damage due to battery explosion.

CAUTION!

Failure to follow these procedures could result in damage to the charging system of the booster vehicle or the discharged vehicle.

NOTE: Make sure at all times that unused ends of jumper cables are not contacting each other or either vehicle while making connections.

Connecting The Jumper Cables

1. Connect the positive **(+)** end of the jumper cable to the remote positive **(+)** post of the discharged vehicle.
2. Connect the opposite end of the positive **(+)** jumper cable to the positive **(+)** post of the booster battery.
3. Connect the negative end **(-)** of the jumper cable to the negative **(-)** post of the booster battery.
4. Connect the opposite end of the negative **(-)** jumper cable to the remote negative **(-)** post of the vehicle with the discharged battery.

WARNING!

Do not connect the jumper cable to the negative (-) post of the discharged battery. The resulting electrical spark could cause the battery to explode and could result in personal injury. Only use the specific ground point, do not use any other exposed metal parts.

5. Start the engine in the vehicle that has the booster battery, let the engine idle a few minutes, and then start the engine in the vehicle with the discharged battery.

CAUTION!

Do not run the booster vehicle engine above 2,000 rpm since it provides no charging benefit, wastes fuel, and can damage booster vehicle engine.

6. Once the engine is started, remove the jumper cables in the reverse sequence:

Disconnecting The Jumper Cables

1. Disconnect the negative **(-)** end of the jumper cable from the remote negative **(-)** post of the discharged vehicle.
2. Disconnect the opposite end of the negative **(-)** jumper cable from the negative **(-)** post of the booster battery.
3. Disconnect the positive **(+)** end of the jumper cable from the positive **(+)** post of the booster battery.
4. Disconnect the opposite end of the positive **(+)** jumper cable from the remote positive **(+)** post of the discharged vehicle.
5. Reinstall the protective cover over the remote positive **(+)** post of the discharged vehicle.

If frequent jump starting is required to start your vehicle you should have the battery and charging system tested at an authorized dealer.

CAUTION!

Accessories plugged into the vehicle power outlets draw power from the vehicle's battery, even when not in use (i.e., cellular devices, etc.). Eventually, if plugged in long enough without engine operation, the vehicle's battery will discharge sufficiently to degrade battery life and/or prevent the engine from starting.

REFUELING IN EMERGENCY

The funnel for the Cap-Less Fuel System is located in the spare tire storage area. If your vehicle is out of fuel and an auxiliary fuel can is needed, insert the funnel into the filler neck and proceed to fill the vehicle.

For more information on the Cap-Less Fuel System refer to "Refueling The Vehicle" in "Starting And Operating".

IF YOUR ENGINE OVERHEATS

In any of the following situations, you can reduce the potential for overheating by taking the appropriate action.

- On the highways — slow down.
- In city traffic — while stopped, place the transmission in NEUTRAL, but do not increase the engine idle speed while preventing vehicle motion with the brakes.

NOTE: There are steps that you can take to slow down an impending overheat condition:

- If your air conditioner (A/C) is on, turn it off. The A/C system adds heat to the engine cooling system and turning the A/C off can help remove this heat.
- You can also turn the temperature control to maximum heat, the mode control to floor and the blower control to high. This allows the heater core to act as a supplement to the radiator and aids in removing heat from the engine cooling system.

WARNING!

You or others can be badly burned by hot engine coolant (antifreeze) or steam from your radiator. If you see or hear steam coming from under the hood, do not open the hood until the radiator has had time to cool. Never try to open a cooling system pressure cap when the radiator or coolant bottle is hot.

CAUTION!

Driving with a hot cooling system could damage your vehicle. If the temperature gauge reads HOT (H), pull over and stop the vehicle. Idle the vehicle with the air conditioner turned off until the pointer drops back into the normal range. If the pointer remains on HOT (H), and you hear continuous chimes, turn the engine off immediately and call for service.

MANUAL PARK RELEASE

WARNING!

Always secure your vehicle by fully applying the parking brake before activating the Manual Park Release. In addition, you should be seated in the driver's seat with your foot firmly on the brake pedal when activating the Manual Park Release. Activating the Manual Park Release will allow your vehicle to roll away if it is not secured by the parking brake, or by proper connection to a tow vehicle. Activating the Manual Park Release on an unsecured vehicle could lead to serious injury or death for those in or around the vehicle.

In order to move the vehicle in cases where the transmission will not shift out of PARK (such as a dead battery), a Manual Park Release is available.

Follow these steps to use the Manual Park Release:

1. Firmly apply the parking brake.
2. Open the center console and locate the Manual Park Release cover, remove it by snapping the cover away from the console hinges.

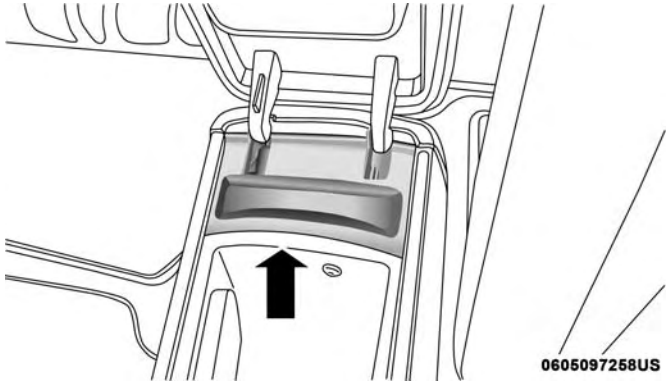

Manual Park Release Cover

3. Press and maintain firm pressure on the brake pedal.

4. Using a screwdriver or similar tool, push the metal latch in towards the tether strap.

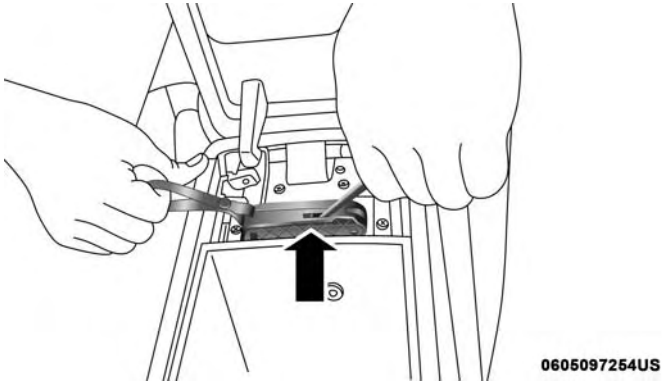

Release Latch

5. While the metal latch is in the open position, pull upward on the tether strap until the lever clicks and latches in the released position. The transmission is now out of PARK and the vehicle can be moved.

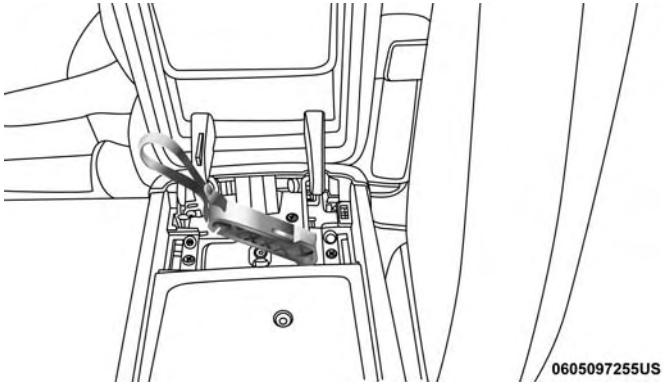

Released Position

CAUTION!

Closing the armrest while the Manual Park Release is activated may damage the Manual Park Release mechanism, the transmission, and/or the armrest.

NOTE: To prevent the vehicle from rolling unintentionally, firmly apply the parking brake.

To Disengage The Manual Park Release Lever:

1. To disengage the Manual Park Release, apply tension upward while pushing the release latch towards the tether to unlock the lever.

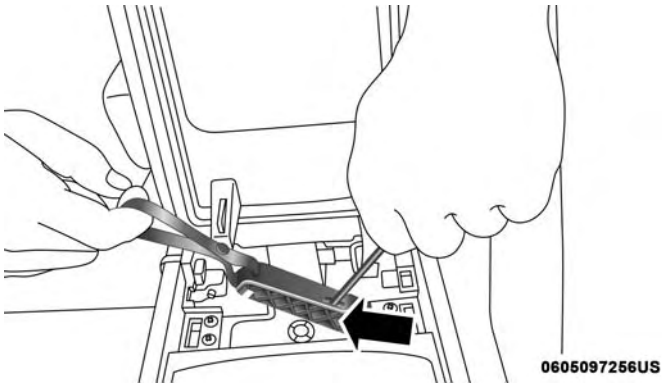

Release Latch

2. Once the tension has been released and the lever has been unlocked, be sure it is stowed properly and locks into position.

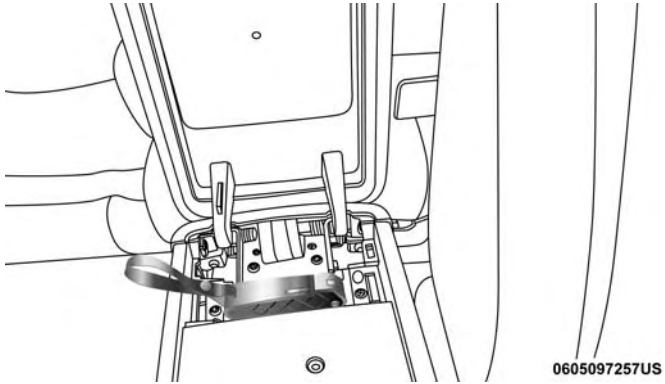

Stowed Position

NOTE: Be sure to replace the cover by snapping it back in place.

FREEING A STUCK VEHICLE

If your vehicle becomes stuck in mud, sand or snow, it can often be moved using a rocking motion. Turn the steering wheel right and left to clear the area around the front wheels. Push and hold the lock button on the gear selector. Then, shift back and forth between DRIVE and REVERSE while gently pressing the accelerator.

NOTE: Shifts between DRIVE and REVERSE can only be achieved at wheel speeds of 5 mph (8 km/h) or less. Whenever the transmission remains in NEUTRAL for more than two seconds, you must press the brake pedal to engage DRIVE or REVERSE.

Use the least amount of accelerator pedal pressure that will maintain the rocking motion without spinning the wheels or racing the engine.

NOTE: Push the "ESC Off" switch, to place the Electronic Stability Control (ESC) system in "Partial Off" mode, before rocking the vehicle. Refer to "Electronic Brake Control" in "Safety" for further information. Once the vehicle has been freed, push the "ESC Off" switch again to restore "ESC On" mode.

WARNING!

Fast spinning tires can be dangerous. Forces generated by excessive wheel speeds may cause damage, or even failure, of the axle and tires. A tire could explode and injure someone. Do not spin your vehicle's wheels faster than 30 mph (48 km/h) or for longer than 30 seconds continuously without stopping when you are stuck and do not let anyone near a spinning wheel, no matter what the speed.

CAUTION!

- **Racing the engine or spinning the wheels may lead to transmission overheating and failure. Allow the engine to idle with the transmission in NEUTRAL for at least one minute after every five rocking-motion cycles. This will minimize overheating and reduce the risk of transmission failure during prolonged efforts to free a stuck vehicle.**
- **When "rocking" a stuck vehicle by shifting between DRIVE and REVERSE, do not spin the wheels faster than 15 mph (24 km/h), or drivetrain damage may result.**
- **Revving the engine or spinning the wheels too fast may lead to transmission overheating and failure. It can also damage the tires. Do not spin the wheels above 30 mph (48 km/h) while in gear (no transmission shifting occurring).**

TOWING A DISABLED VEHICLE

This section describes procedures for towing a disabled vehicle using a commercial towing service. If the transmission and drivetrain are operable, disabled vehicles may also be towed as described under "Recreational Towing" in the "Starting And Operating" section.

NOTE: Vehicles equipped with Quadra-Lift must be placed in Transport mode, before tying them down (from the body) on a trailer or flatbed truck. Refer to the section on Quadra-Lift for more information. If the vehicle cannot be placed in Transport mode (for example, engine will not run), tie-downs should be fastened over the tires using specific tire tie-down nets. Failure to follow these instructions may cause fault codes to be set and/or cause loss of proper tie-down tension.

Towing Condition	Wheels OFF The Ground	Two-Wheel Drive Models	Four-Wheel Drive Models Without 4WD LOW Range	Four-Wheel Drive Models With 4WD LOW Range
Flat Tow	NONE	If transmission is operable: • Transmission in NEUTRAL • 30 mph (48 km/h) max speed • 30 miles (48 km) max distance	**NOT ALLOWED**	**See Instructions** • Transmission in PARK • Transfer case in NEUTRAL (N) • Tow in forward direction
Wheel Lift Or Dolly Tow	Front		**NOT ALLOWED**	**NOT ALLOWED**
	Rear	OK	**NOT ALLOWED**	**NOT ALLOWED**
On Trailer	ALL	BEST METHOD	OK	BEST METHOD

Proper towing or lifting equipment is required to prevent damage to your vehicle. Use only tow bars and other equipment designed for this purpose, following equipment manufacturer's instructions. Use of safety chains is mandatory. Attach a tow bar or other towing device to main structural members of the vehicle, not to bumpers or associated brackets. State and local laws regarding vehicles under tow must be observed.

If you must use the accessories (wipers, defrosters, etc.) while being towed, the ignition must be in the ON/RUN mode, not the ACC mode.

If the key fob is unavailable, or the vehicle's battery is discharged, refer to "Manual Park Release" in this section for instructions on shifting the transmission out of PARK for towing.

CAUTION!

- **Do not use sling type equipment when towing. Vehicle damage may occur.**
- **When securing the vehicle to a flat bed truck, do not attach to front or rear suspension components. Damage to your vehicle may result from improper towing.**

Two-Wheel Drive Models

The manufacturer recommends towing your vehicle with all four wheels **OFF** the ground using a flatbed.

If flatbed equipment is not available, and the transmission is operable, the vehicle may be towed (with rear wheels on the ground) under the following conditions:

- The transmission must be in NEUTRAL. Refer to "Manual Park Release" in this section for instructions on shifting the transmission to NEUTRAL when the engine is off.
- The towing speed must not exceed 30 mph (48 km/h).
- The towing distance must not exceed 30 miles (48 km).

If the transmission is not operable, or the vehicle must be towed faster than 30 mph (48 km/h) or farther than 30 miles (48 km), tow with the rear wheels **OFF** the ground. Acceptable methods are to tow the vehicle on a flatbed, or with the front wheels raised and the rear wheels on a towing dolly, or (when using a suitable steering wheel stabilizer to hold the front wheels in the straight position) with the rear wheels raised and the front wheels on the ground.

CAUTION!

- **Towing faster than 30 mph (48 km/h) or farther than 30 miles (48 km) with rear wheels on the ground can cause severe transmission damage. Damage from improper towing is not covered under the New Vehicle Limited Warranty.**

Four-Wheel Drive Models

The manufacturer recommends towing with all wheels **OFF** the ground. Acceptable methods are to tow the vehicle on a flatbed or with one end of vehicle raised and the opposite end on a towing dolly.

If flatbed equipment is not available, and the transfer case is operable, vehicles **with a two-speed transfer case** may be towed (in the forward direction, with **ALL** wheels on the ground), **IF** the transfer case is in NEUTRAL (N) and the transmission is in **PARK**. Refer to "Recreational Towing" in "Starting And Operating" for detailed instructions.

Vehicles equipped with a single-speed transfer case have no NEUTRAL position, and therefore **must** be towed with all four wheels **OFF** the ground.

CAUTION!

- **Front or rear wheel lifts must not be used (if the remaining wheels are on the ground). Internal damage to the transmission or transfer case will occur if a front or rear wheel lift is used when towing.**
- **Towing this vehicle in violation of the above requirements can cause severe transmission and/or transfer case damage. Damage from improper towing is not covered under the New Vehicle Limited Warranty.**

Emergency Tow Hooks — If Equipped

If your vehicle is equipped with tow hooks, there will be one in the rear and two mounted on the front of the vehicle. The rear hook will be located on the driver's side of the vehicle.

NOTE: For off-road recovery, it is recommended to use both of the front tow hooks to minimize the risk of damage to the vehicle.

WARNING!

- **Do not use a chain for freeing a stuck vehicle. Chains may break, causing serious injury or death.**
- **Stand clear of vehicles when pulling with tow hooks. Tow straps may become disengaged, causing serious injury.**

CAUTION!

Tow hooks are for emergency use only, to rescue a vehicle stranded off road. Do not use tow hooks for tow truck hookup or highway towing. You could damage your vehicle.

ENHANCED ACCIDENT RESPONSE SYSTEM (EARS)

This vehicle is equipped with an Enhanced Accident Response System.

Please refer to "Occupant Restraint Systems" in "Safety" for further information on the Enhanced Accident Response System (EARS) function.

EVENT DATA RECORDER (EDR)

This vehicle is equipped with an Event Data Recorder (EDR). The main purpose of an EDR is to record data that will assist in understanding how a vehicle's systems performed under certain crash or near crash-like situations, such as an air bag deployment or hitting a road obstacle.

Please refer to "Occupant Restraint Systems" in "Safety" for further information on the Event Data Recorder (EDR).

SERVICING AND MAINTENANCE

CONTENTS

■ SCHEDULED SERVICING 437
- □ Scheduled Servicing — Gasoline Engine 437

■ ENGINE COMPARTMENT 442
- □ 3.6L Engine 442
- □ 5.7L Engine 443
- □ Checking Oil Level — Gasoline Engine 444
- □ Adding Washer Fluid 444
- □ Maintenance-Free Battery 445

■ DEALER SERVICE 445
- □ Engine Oil 446
- □ Engine Oil Filter 448
- □ Engine Air Cleaner Filter 448
- □ Air Conditioner Maintenance 450
- □ Accessory Drive Belt Inspection 454
- □ Body Lubrication 455
- □ Windshield Wiper Blades 456
- □ Exhaust System 460
- □ Cooling System 462
- □ Brake System 467
- □ Automatic Transmission 468
- □ Front/Rear Axle Fluid 469
- □ Transfer Case 470

■ RAISING THE VEHICLE 470

■ TIRES 471
- □ Tire Safety Information 471
- □ Tires — General Information 477
- □ Tire Types 483
- □ Spare Tires — If Equipped 485

- Wheel And Wheel Trim Care 487
- Tire Chains (Traction Devices) 488
- Tire Rotation Recommendations 489

■ DEPARTMENT OF TRANSPORTATION UNIFORM TIRE QUALITY GRADES 490

- Treadwear 490
- Traction Grades 491
- Temperature Grades 491

■ STORING THE VEHICLE 491

■ BODYWORK 492

- Protection From Atmospheric Agents 492
- Body And Underbody Maintenance 492
- Preserving The Bodywork 493

■ INTERIORS 494

- Seats And Fabric Parts 494
- Plastic And Coated Parts. 494
- Leather Parts 495
- Glass Surfaces 495

SCHEDULED SERVICING

Scheduled Servicing — Gasoline Engine

Your vehicle is equipped with an automatic oil change indicator system. The oil change indicator system will remind you that it is time to take your vehicle in for scheduled maintenance.

Based on engine operation conditions, the oil change indicator message will illuminate. This means that service is required for your vehicle. Operating conditions such as frequent short-trips, trailer tow, extremely hot or cold ambient temperatures, and E85 fuel usage will influence when the "Oil Change Required" message is displayed. Severe operating conditions can cause the change oil message to illuminate as early as 3,500 miles (5,600 km) since last reset. Have your vehicle serviced as soon as possible, within the next 500 miles (805 km).

Your authorized dealer will reset the oil change indicator message after completing the scheduled oil change.

NOTE: Under no circumstances should oil change intervals exceed 10,000 miles (16,000 km), twelve months or 350 hours of engine run time, whichever comes first. The 350 hours of engine run or idle time is generally only a concern for fleet customers.

Severe Duty All Models

Change Engine Oil at 4,000 miles (6,500 km) or 350 hours of engine run time if the vehicle is operated in a dusty and off-road environment, or is operated predominantly at idle or only very low engine RPM's. This type of vehicle use is considered Severe Duty.

Once A Month Or Before A Long Trip:

- Check engine oil level.
- Check windshield washer fluid level.
- Check the tire inflation pressures and look for unusual wear or damage.
- Check the fluid levels of the coolant reservoir, brake master cylinder and fill as needed.
- Check function of all interior and exterior lights

Maintenance Plan

Required Maintenance

Refer to the Maintenance Plans on the following pages for required maintenance.

At Every Oil Change Interval As Indicated By Oil Change Indicator System:
• Change oil and filter.
• Rotate the tires. **Rotate at the first sign of irregular wear, even if it occurs before the oil indicator system turns on.**
• Inspect battery and clean and tighten terminals as required.
• Inspect brake pads, shoes, rotors, drums, hoses and park brake.
• Inspect engine cooling system protection and hoses.
• Inspect exhaust system.
• Inspect engine air cleaner if using in dusty or off-road conditions.

Mileage or time passed (whichever comes first)	20,000	30,000	40,000	50,000	60,000	70,000	80,000	90,000	100,000	110,000	120,000	130,000	140,000	150,000
Or Years:	**2**	**3**	**4**	**5**	**6**	**7**	**8**	**9**	**10**	**11**	**12**	**13**	**14**	**15**
Or Kilometers:	32,000	48,000	64,000	80,000	96,000	112,000	128,000	144,000	160,000	176,000	192,000	208,000	224,000	240,000
Additional Inspections														
Inspect the CV joints.		X			X			X			X			X
Inspect front suspension, tie rod ends, and replace if necessary.	X		X		X		X		X		X		X	
Inspect the front and rear axle fluid, change if using your vehicle for police, taxi, fleet, off-road or frequent trailer towing.	X		X		X		X		X		X		X	
Inspect the brake linings, parking brake function.	X		X		X		X		X		X		X	
Inspect transfer case fluid.		X			X			X						X
Additional Maintenance														
Replace engine air filter.		X			X			X			X			X
Replace the air conditioning filter.	X		X		X		X		X		X		X	
Replace spark plugs.**									X					

Mileage or time passed (whichever comes first)	20,000	30,000	40,000	50,000	60,000	70,000	80,000	90,000	100,000	110,000	120,000	130,000	140,000	150,000
Or Years:	2	3	4	5	6	7	8	9	10	11	12	13	14	15
Or Kilometers:	32,000	48,000	64,000	80,000	96,000	112,000	128,000	144,000	160,000	176,000	192,000	208,000	224,000	240,000
Flush and replace the engine coolant at 10 years or 150,000 miles (240,000 km) whichever comes first.									X					X
Change transfer case fluid.											X			
Inspect and replace PCV valve if necessary.									X					

** The spark plug change interval is mileage based only, yearly intervals do not apply.

WARNING!

- **You can be badly injured working on or around a motor vehicle. Do only service work for which you have the knowledge and the right equipment. If you have any doubt about your ability to perform a service job, take your vehicle to a competent mechanic.**
- **Failure to properly inspect and maintain your vehicle could result in a component malfunction and effect vehicle handling and performance. This could cause an accident.**

Heavy Duty Use Of The Vehicle

Change engine oil at 4,000 miles (6,500 km) or 350 hours of engine run time if the vehicle is operated in a dusty and off road environment or is operated predominately at idle or only very low engine RPM's. This type of vehicle use is considered Severe Duty.

ENGINE COMPARTMENT

3.6L Engine

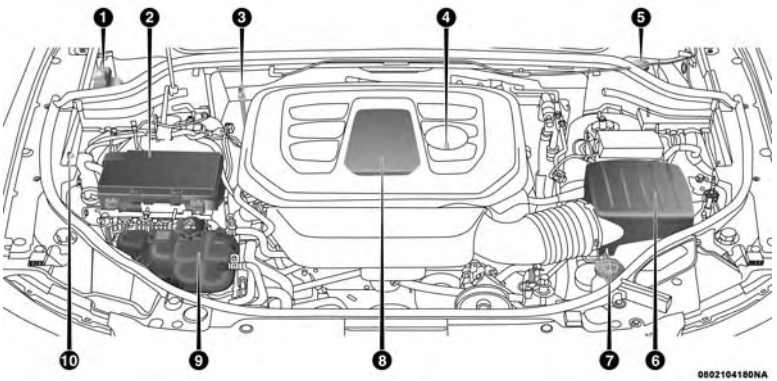

1 — Remote Jump Start Positive Terminal
2 — Power Distribution Center (Fuses)
3 — Engine Oil Dipstick
4 — Engine Oil Fill
5 — Brake Fluid Reservoir
6 — Air Cleaner Filter
7 — Washer Fluid Reservoir
8 — Engine Oil Filter Access
9 — Engine Coolant Reservoir
10 — Remote Jump Start Negative Terminal

5.7L Engine

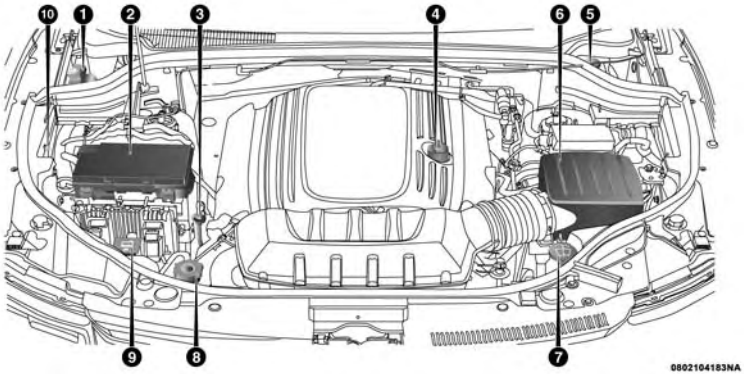

1 — Remote Jump Start Positive Terminal
2 — Power Distribution Center (Fuses)
3 — Engine Oil Dipstick
4 — Engine Oil Fill
5 — Brake Fluid Reservoir
6 — Air Cleaner Filter
7 — Washer Fluid Reservoir
8 — Coolant Pressure Cap (Radiator)
9 — Engine Coolant Reservoir
10 — Remote Jump Start Negative Terminal

Checking Oil Level — Gasoline Engine

To assure proper lubrication of your vehicle's engine, the engine oil must be maintained at the correct level. Check the oil level at regular intervals, such as every fuel stop. The best time to check the engine oil level is about five minutes after a fully warmed up engine is shut off.

Checking the oil while the vehicle is on level ground will improve the accuracy of the oil level readings. Always maintain the oil level within the SAFE zone on the dipstick. Adding one quart of oil when the reading is at the bottom of the SAFE zone will result in a reading at the top of the safe zone on these engines.

CAUTION!

Overfilling or underfilling the crankcase will cause aeration or loss of oil pressure. This could damage your engine.

Adding Washer Fluid

The instrument cluster display will indicate when the washer fluid level is low. When the sensor detects a low fluid level, the windshield will light on the vehicle graphic outline and the "WASHER FLUID LOW" message will be displayed.

The fluid reservoir for the windshield washers and the rear window washer is shared. The fluid reservoir is located in the engine compartment, be sure to check the fluid level at regular intervals. Fill the reservoir with windshield washer solvent only (not radiator antifreeze). When refilling the washer fluid reservoir, take some washer fluid and apply it to a cloth or towel and wipe clean the wiper blades, this will help blade performance. To prevent freeze-up of your windshield washer system in cold weather, select a solution or mixture that meets or exceeds the temperature range of your climate. This rating information can be found on most washer fluid containers.

WARNING!

Commercially available windshield washer solvents are flammable. They could ignite and burn you. Care must be exercised when filling or working around the washer solution.

Maintenance-Free Battery

Your vehicle is equipped with a maintenance-free battery. You will never have to add water, nor is periodic maintenance required.

WARNING!

- **Battery fluid is a corrosive acid solution and can burn or even blind you. Do not allow battery fluid to contact your eyes, skin, or clothing. Do not lean over a battery when attaching clamps. If acid splashes in eyes or on skin, flush the area immediately with large amounts of water. Refer to "Jump Starting Procedure" in "In Case Of Emergency" for further information.**
- **Battery gas is flammable and explosive. Keep flame or sparks away from the battery. Do not use a booster battery or any other booster source with an output greater than 12 Volts. Do not allow cable clamps to touch each other.**
- **Battery posts, terminals, and related accessories contain lead and lead compounds. Wash hands after handling.**

CAUTION!

- **It is essential when replacing the cables on the battery that the positive cable is attached to the positive post and the negative cable is attached to the negative post. Battery posts are marked positive (+) and negative (-) and are identified on the battery case. Cable clamps should be tight on the terminal posts and free of corrosion.**
- **If a "fast charger" is used while the battery is in the vehicle, disconnect both vehicle battery cables before connecting the charger to the battery. Do not use a "fast charger" to provide starting voltage.**

DEALER SERVICE

An authorized dealer has the qualified service personnel, special tools, and equipment to perform all service operations in an expert manner. Service Manuals are available which include detailed service information for your vehicle. Refer to these Service Manuals before attempting any procedure yourself.

NOTE: Intentional tampering with emissions control systems may void your warranty and could result in civil penalties being assessed against you.

WARNING!

You can be badly injured working on or around a motor vehicle. Only do service work for which you have the knowledge and the proper equipment. If you have any doubt about your ability to perform a service job, take your vehicle to a competent mechanic.

Engine Oil

Change Engine Oil — Gasoline Engine

Refer to "Scheduled Servicing" in this section for the proper maintenance intervals.

NOTE: Under no circumstances should oil change intervals exceed 10,000 miles (16,000 km), 12 months or 350 hours of engine run time, whichever comes first. The 350 hours of engine run or idle time is generally only a concern for fleet customers.

Gasoline Engine Oil Selection

For best performance and maximum protection under all types of operating conditions, the manufacturer only recommends engine oils that are API Certified and meet the requirements of FCA Material Standard MS-6395.

American Petroleum Institute (API) Engine Oil Identification Symbol

This symbol means that the oil has been certified by the American Petroleum Institute (API). The manufacturer only recommends API Certified engine oils.

This symbol certifies 0W-20, 5W-20, 0W-30, 5W-30 and 10W-30 engine oils.

CAUTION!

Do not use chemical flushes in your engine oil as the chemicals can damage your engine. Such damage is not covered by the New Vehicle Limited Warranty.

Engine Oil Viscosity (SAE Grade) — 3.6L Engine

Mopar SAE 0W-20 engine oil approved to FCA Material Standard MS-6395 such as Pennzoil, Shell Helix or equivalent is recommended for all operating temperatures. This engine oil improves low temperature starting and vehicle fuel economy.

The engine oil filler cap also shows the recommended engine oil viscosity for your engine. For information on engine oil filler cap location, refer to the "Engine Compartment" illustration in this section.

Lubricants which do not have both the engine oil certification mark and the correct SAE viscosity grade number should not be used.

Engine Oil Viscosity (SAE Grade) — 5.7L Engine

Mopar SAE 5W-20 engine oil approved to FCA Material Standard MS-6395 such as Pennzoil, Shell Helix or equivalent is recommended for all operating temperatures. This engine oil improves low temperature starting and vehicle fuel economy.

The engine oil filler cap also shows the recommended engine oil viscosity for your engine. For information on engine oil filler cap location, refer to the "Engine Compartment" illustration in this section.

NOTE: Vehicles equipped with a 5.7L engine must use SAE 5W-20 oil. Failure to do so may result in improper operation of the Fuel Saver Technology. Refer to "Fuel Saver Technology – If Equipped" in "Starting And Operating" for further information.

Lubricants which do not have both the engine oil certification mark and the correct SAE viscosity grade number should not be used.

Synthetic Engine Oils

You may use synthetic engine oils provided the recommended oil quality requirements are met, and the recommended maintenance intervals for oil and filter changes are followed.

Synthetic engine oils which do not have both the engine oil certification mark and the correct SAE viscosity grade number should not be used.

Materials Added To Engine Oil

The manufacturer strongly recommends against the addition of any additives (other than leak detection dyes) to the engine oil. Engine oil is an engineered product and its performance may be impaired by supplemental additives.

Disposing Of Used Engine Oil And Oil Filters

Care should be taken in disposing of used engine oil and oil filters from your vehicle. Used oil and oil filters, indiscriminately discarded, can present a problem to the environment. Contact an authorized dealer, service station or governmental agency for advice on how and where used oil and oil filters can be safely discarded in your area.

Engine Oil Filter

The engine oil filter should be replaced with a new filter at every engine oil change.

Engine Oil Filter Selection

This manufacturer's engines have a full-flow type disposable oil filter. Use a filter of this type for replacement. The quality of replacement filters varies considerably. Only high quality filters should be used to assure most efficient service. Mopar engine oil filters are high quality oil filters and are recommended.

Engine Air Cleaner Filter

Refer to the "Maintenance Plan" in this section for the proper maintenance intervals.

NOTE: Be sure to follow the "Severe Duty Conditions" maintenance interval if applicable.

WARNING!

The air induction system (air cleaner, hoses, etc.) can provide a measure of protection in the case of engine backfire. Do not remove the air induction system (air cleaner, hoses, etc.) unless such removal is necessary for repair or maintenance. Make sure that no one is near the engine compartment before starting the vehicle with the air induction system (air cleaner, hoses, etc.) removed. Failure to do so can result in serious personal injury.

Engine Air Cleaner Filter Selection

The quality of replacement engine air cleaner filters varies considerably. Only high quality filters should be used to assure most efficient service. Mopar engine air cleaner filters are a high quality filter and are recommended.

Air Cleaner Filter Inspection and Replacement — Gasoline Engine

Inspect engine air cleaner filter for dirt and or debris, if you find evidence of either dirt or debris you should change your air cleaner filter.

Engine Air Cleaner Filter Removal

1. Release the spring clips from the air cleaner cover.

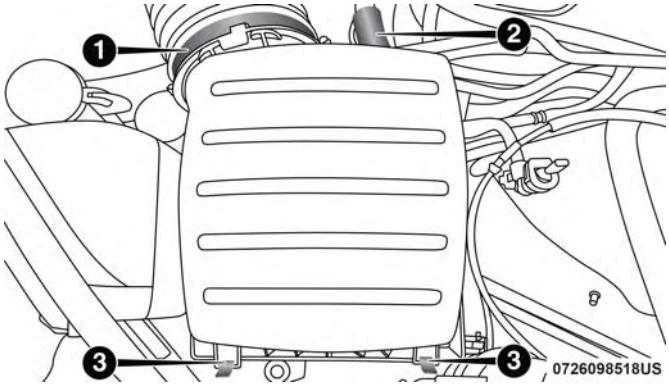

Air Cleaner Filter Cover

1 — Clean Air Hose Clamp
2 — Air Hose
3 — Spring Clips

2. Lift the air cleaner cover to access the air cleaner filter.

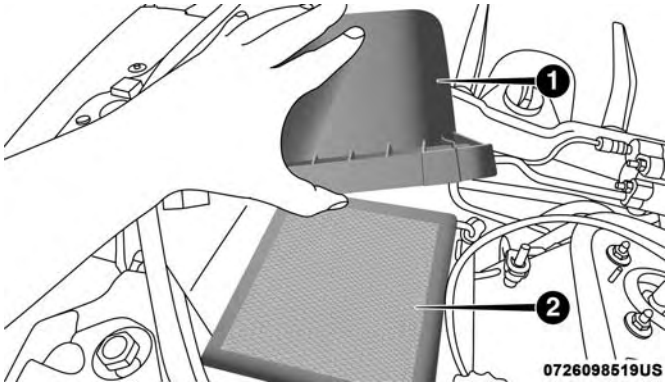

Open Air Cleaner Filter Assembly

1 — Air Cleaner Cover
2 — Air Cleaner Filter

3. Remove the air cleaner filter element from the housing assembly.

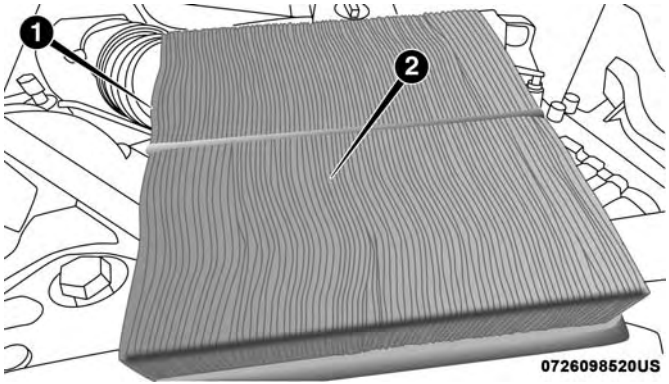

Air Cleaner Filter

1 — Air Cleaner Filter
2 — Air Cleaner Filter Inspection Surface

Engine Air Cleaner Filter Installation

NOTE: Inspect and clean the housing if dirt or debris is present before replacing the air filter element.

1. Install the air cleaner filter element into the housing assembly with the air cleaner filter inspection surface facing downward.
2. Install the air cleaner cover onto the housing assembly locating tabs.
3. Latch the spring clips and lock the air cleaner cover to the housing assembly.

Air Conditioner Maintenance

For best possible performance, your air conditioner should be checked and serviced by an authorized dealer at the start of each warm season. This service should include cleaning of the condenser fins and a performance test. Drive belt tension should also be checked at this time.

WARNING!

- **Use only refrigerants and compressor lubricants approved by the manufacturer for your air conditioning system. Some unapproved refrigerants are flammable and can explode, injuring you. Other unapproved refrigerants or lubricants can cause the system to fail, requiring costly repairs. Refer to Warranty Information Book, for further warranty information.**

(Continued)

WARNING! *(Continued)*

- **The air conditioning system contains refrigerant under high pressure. To avoid risk of personal injury or damage to the system, adding refrigerant or any repair requiring lines to be disconnected should be done by an experienced technician.**

CAUTION!

Do not use chemical flushes in your air conditioning system as the chemicals can damage your air conditioning components. Such damage is not covered by the New Vehicle Limited Warranty.

Refrigerant Recovery And Recycling R-134a — If Equipped

R-134a Air Conditioning Refrigerant is a hydrofluorocarbon (HFC) that is an ozone-friendly substance. The manufacturer recommends that air conditioning service be performed by an authorized dealer or other service facilities using recovery and recycling equipment.

NOTE: Use only manufacturer approved A/C system PAG compressor oil and refrigerants.

Refrigerant Recovery And Recycling — R–1234yf

R–1234yf Air Conditioning Refrigerant is a hydrofluoroolefin (HFO) that is endorsed by the Environmental Protection Agency and is an ozone-friendly substance with a low global-warming potential. The manufacturer recommends that air conditioning service be performed by an authorized dealer using recovery and recycling equipment.

NOTE: Use only manufacturer approved A/C system PAG compressor oil, and refrigerants.

Air Conditioning Filter Replacement (A/C Air Filter)

Refer to "Scheduled Servicing" in this section for the proper maintenance intervals.

WARNING!

Do not remove the cabin air filter while the vehicle is running, or while the ignition is in the ACC or ON/RUN mode. With the cabin air filter removed and the blower operating, the blower can contact hands and may propel dirt and debris into your eyes, resulting in personal injury.

The A/C air filter is located in the fresh air inlet behind the glove compartment. Perform the following procedure to replace the filter:

1. Open the glove compartment and remove all contents.

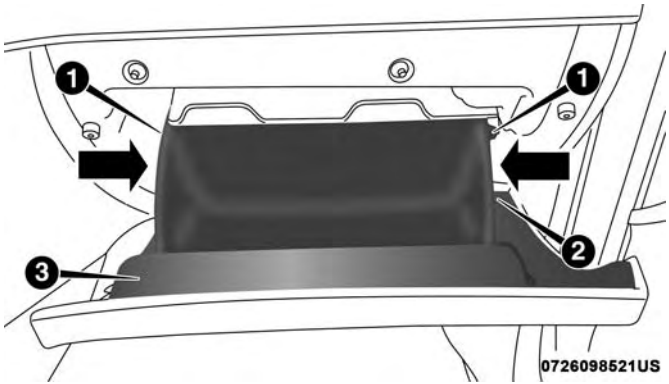

Glove Compartment

1 — Glove Compartment Travel Stops
2 — Glove Compartment Tension Tether
3 — Glove Compartment Door

2. There are glove compartment travel stops on both sides of the glove compartment door, partially close the glove compartment door and push inward to release the glove compartment travel stop on one side and repeat this procedure for the opposite side.
3. Pull the right hand side of the glove compartment door toward the rear of the vehicle to disengage the glove compartment door from its hinges.

NOTE: When disengaging the glove compartment door from its hinges, there will be some resistance.

4. With the glove compartment door loose, remove the glove compartment tension tether and tether clip by sliding the clip toward the face of the glove compartment door and lifting the clip out of glove compartment door.

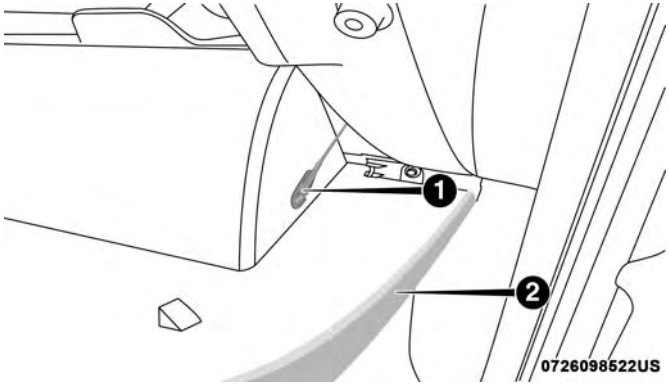

Right Side Of Glove Compartment

1 — Glove Compartment Tension Tether
2 — Glove Compartment Door

5. Remove the filter cover by disengaging the retaining tab and mid way snap that secures the filter cover to the HVAC housing. Disengage the mid way snap by pulling the door outward. Unhinge the filter cover on the right side to fully remove the cover.

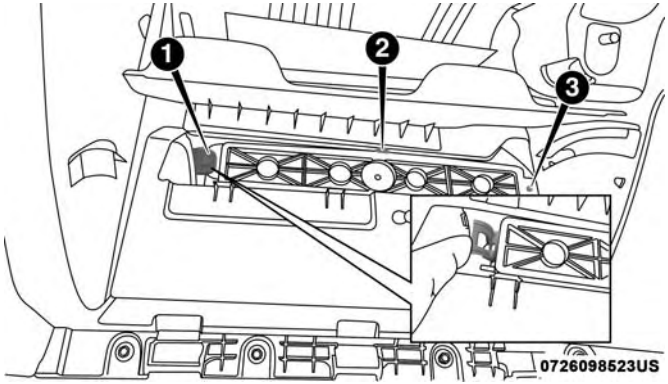

A/C Air Filter Cover

1 — Retaining Tab
2 — Mid Way Snap
3 — Filter Cover Hinge

6. Remove the A/C air filter by pulling it straight out of the housing.
7. Install the A/C air filter with the arrow on the filter pointing toward the floor. When installing the filter cover, make sure the retaining tabs fully engage the cover.

CAUTION!

The cabin air filter is identified with an arrow to indicate airflow direction through the filter. Failure to properly install the filter will result in the need to replace it more often.

8. Reinstall the glove compartment door on the door hinge and reattach the tension tether by inserting the tether clip in the glove compartment and sliding the clip away from the face of the glove compartment door.
9. Push the door to the near closed position to reengage the glove compartment travel stops.

NOTE: Ensure the glove compartment door hinges and glove compartment travel stops are fully engaged.

Accessory Drive Belt Inspection

WARNING!

- **Do not attempt to inspect an accessory drive belt with vehicle running.**

(Continued)

WARNING! *(Continued)*

- **When working near the radiator cooling fan, disconnect the fan motor lead. The fan is temperature controlled and can start at any time regardless of ignition mode. You could be injured by the moving fan blades.**
- **You can be badly injured working on or around a motor vehicle. Only do service work for which you have the knowledge and the proper equipment. If you have any doubt about your ability to perform a service job, take your vehicle to a competent mechanic.**

When inspecting accessory drive belts, small cracks that run across ribbed surface of belt from rib to rib, are considered normal. These are not a reason to replace belt. However, cracks running along a rib (not across) are not normal. Any belt with cracks running along a rib must be replaced. Also have the belt replaced if it has excessive wear, frayed cords or severe glazing.

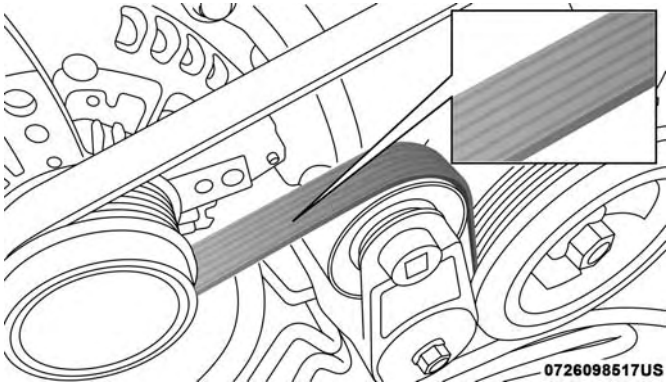

Accessory Belt (Serpentine Belt)

Conditions that would require replacement:

- Rib chunking (one or more ribs has separated from belt body)
- Rib or belt wear
- Longitudinal belt cracking (cracks between two ribs)
- Belt slips
- "Groove jumping" (belt does not maintain correct position on pulley)
- Belt broken (note: identify and correct problem before new belt is installed)
- Noise (objectionable squeal, squeak, or rumble is heard or felt while drive belt is in operation)

Some conditions can be caused by a faulty component such as a belt pulley. Belt pulleys should be carefully inspected for damage and proper alignment.

Belt replacement on some models requires the use of special tools, we recommend having your vehicle serviced at an authorized dealer.

Body Lubrication

Locks and all body pivot points, including such items as seat tracks, door hinge pivot points and rollers, liftgate, tailgate, decklid, sliding doors and hood hinges, should be lubricated periodically with a lithium based grease, such as Mopar Spray White Lube to assure quiet, easy operation and to protect against rust and wear. Prior to the application of any lubricant, the parts concerned should be wiped clean to remove dust and grit; after lubricating excess oil and grease should be removed. Particular attention should also be given to hood latching components to ensure proper function. When performing other underhood services, the hood latch, release mechanism and safety catch should be cleaned and lubricated.

The external lock cylinders should be lubricated twice a year, preferably in the Fall and Spring. Apply a small amount of a high quality lubricant, such as Mopar Lock Cylinder Lubricant directly into the lock cylinder.

Windshield Wiper Blades

Clean the rubber edges of the wiper blades and the windshield periodically with a sponge or soft cloth and a mild nonabrasive cleaner. This will remove accumulations of salt or road film.

Operation of the wipers on dry glass for long periods may cause deterioration of the wiper blades. Always use washer fluid when using the wipers to remove salt or dirt from a dry windshield.

Avoid using the wiper blades to remove frost or ice from the windshield. Keep the blade rubber out of contact with petroleum products such as engine oil, gasoline, etc.

NOTE: Life expectancy of wiper blades varies depending on geographical area and frequency of use. Poor performance of blades may be present with chattering, marks, water lines or wet spots. If any of these conditions are present, clean the wiper blades or replace as necessary.

The wiper blades and wiper arms should be inspected periodically, not just when wiper performance problems are experienced. This inspection should include the following points:

- Wear or uneven edges
- Foreign material
- Hardening or cracking
- Deformation or fatigue

If a wiper blade or wiper arm is damaged, replace the affected wiper arm or blade with a new unit. Do not attempt to repair a wiper arm or blade that is damaged.

Front Wiper Blade Removal/Installation

CAUTION!

Do not allow the wiper arm to spring back against the glass without the wiper blade in place or the glass may be damaged.

1. Lift the wiper arm to raise the wiper blade off of the glass, until the wiper arm is in the full up position.

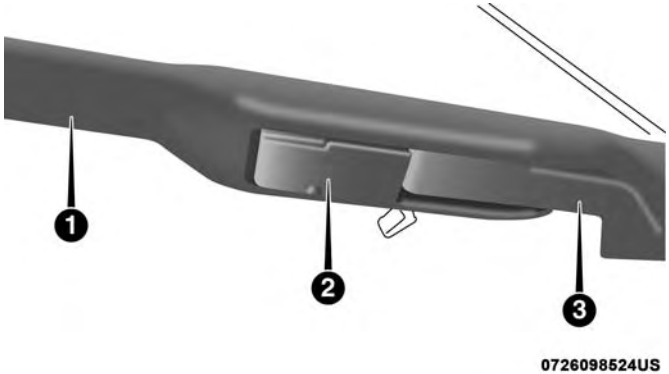

Wiper Blade With Release Tab In Locked Position

1 — Wiper
2 — Release Tab
3 — Wiper Arm

2. To disengage the wiper blade from the wiper arm, flip up the release tab on the wiper blade and while holding the wiper arm with one hand, slide the wiper blade down towards the base of the wiper arm.

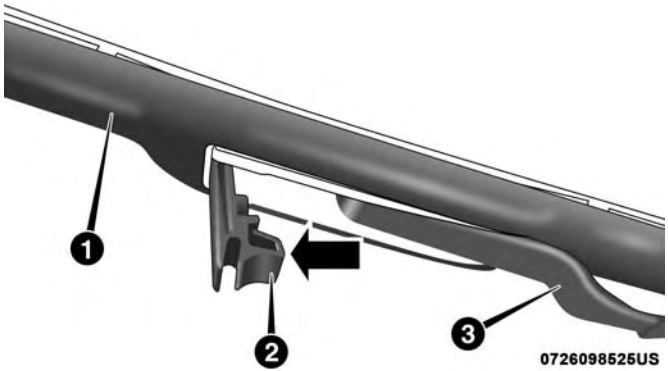

Wiper Blade With Release Tab In Unlocked Position

1 — Wiper Blade
2 — Release Tab
3 — Wiper Arm

3. With the wiper blade disengaged, remove the wiper blade from the wiper arm by holding the wiper arm with one hand and separating the wiper blade from the wiper arm with the other hand (move the wiper blade toward the right side of the vehicle to separate the wiper blade from the wiper arm).

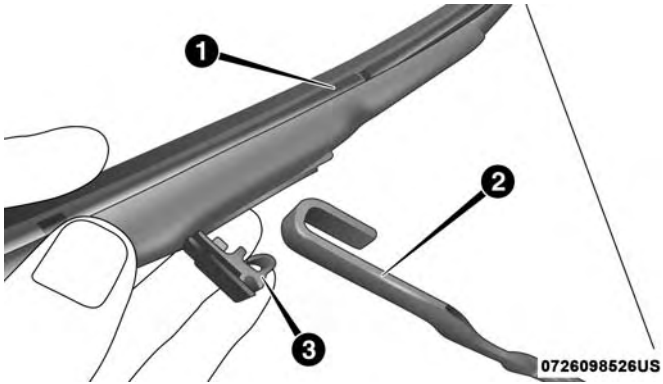

Wiper Blade Removed From Wiper Arm

1 — Wiper Blade
2 — Wiper Arm
3 — Release Tab

4. Gently lower the wiper arm onto the glass.

Installing The Front Wipers

1. Lift the wiper arm off of the glass, until the wiper arm is in the full up position.
2. Position the wiper blade near the hook on the tip of the wiper arm with the wiper release tab open and the blade side of the wiper facing up and away from the windshield.
3. Insert the hook on the tip of the arm through the opening in the wiper blade under the release tab.
4. Slide the wiper blade up into the hook on the wiper arm and rotate the wiper blade until it is flush against the wiper arm. Fold down the latch release tab and snap it into its locked position. Latch engagement will be accompanied by an audible click.
5. Gently lower the wiper blade onto the glass.

Rear Wiper Blade Removal/Installation

1. Lift the rear wiper arm pivot cap away from the glass to allow the rear wiper blade to be raised off of the glass.

NOTE: The rear wiper arm cannot be fully raised off the glass unless the wiper arm pivot cap is unsnapped first. Attempting to fully raise the rear wiper arm without unsnapping the wiper arm pivot cap may damage the vehicle.

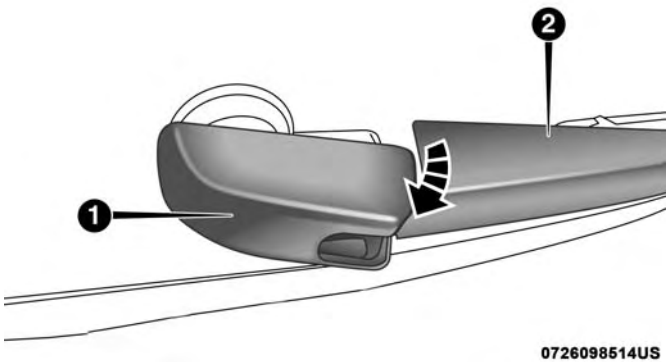

Wiper Pivot Cap In Unlocked Position

1 — Wiper Arm Pivot Cap
2 — Wiper Arm

2. Lift the rear wiper arm fully off the glass.

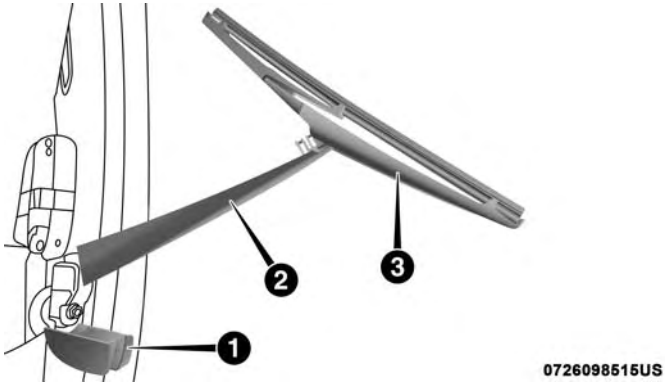

Wiper Blade In Folded Out Position

1 — Wiper Arm Pivot Cap
2 — Wiper Arm
3 — Wiper Blade

3. To remove the wiper blade from the wiper arm, grasp the bottom end of the wiper blade nearest to wiper arm with your right hand. With your left hand hold the wiper arm as you pull the wiper blade away from the wiper arm past its stop far enough to unsnap the wiper blade pivot pin from the receptacle on the end of the wiper arm.

NOTE: Resistance will be accompanied by an audible snap.

4. Still grasping the bottom end of the wiper blade, move the wiper blade upward and away from the wiper arm to disengage.

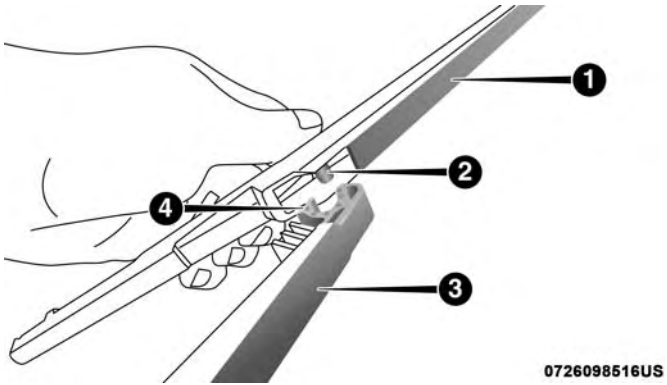

Wiper Blade Removed From Wiper Arm

1 — Wiper Blade
2 — Wiper Blade Pivot Pin
3 — Wiper Arm
4 — Wiper Arm Receptacle

5. Gently lower the tip of the wiper arm onto the glass.

Installing The Rear Wiper

1. Lift the rear wiper arm pivot cap away from the glass to allow the rear wiper blade to be raised off of the glass.

NOTE: The rear wiper arm cannot be fully raised off the glass unless the wiper arm pivot cap is unsnapped first. Attempting to fully raise the rear wiper arm without unsnapping the wiper arm pivot cap may damage the vehicle.

2. Lift the rear wiper arm fully off the glass.
3. Insert the wiper blade pivot pin into the opening on the end of the wiper arm. Grab the bottom end of the wiper arm with one hand, and press the wiper blade flush with the wiper arm until it snaps into place.
4. Lower the wiper blade onto the glass and snap the wiper arm pivot cap back into place.

Exhaust System

The best protection against carbon monoxide entry into the vehicle body is a properly maintained engine exhaust system.

If you notice a change in the sound of the exhaust system; or if the exhaust fumes can be detected inside the vehicle; or when the underside or rear of the vehicle is damaged; have an authorized technician inspect the complete exhaust system and adjacent body areas for broken, damaged, deteriorated, or mispositioned parts. Open seams or loose connections could permit exhaust fumes to seep into the passenger compartment. In addition, have the exhaust system inspected each time the vehicle is raised for lubrication or oil change. Replace as required.

WARNING!

- **Exhaust gases can injure or kill. They contain carbon monoxide (CO), which is colorless and odorless. Breathing it can make you unconscious and can eventually poison you. To avoid breathing CO, refer to "Safety Tips" in "Safety" for further information.**
- **A hot exhaust system can start a fire if you park over materials that can burn. Such materials might be grass or leaves coming into contact with your exhaust system. Do not park or operate your vehicle in areas where your exhaust system can contact anything that can burn.**

CAUTION!

- **The catalytic converter requires the use of unleaded fuel only. Leaded gasoline will destroy the effectiveness of the catalyst as an emissions control device and may seriously reduce engine performance and cause serious damage to the engine.**
- **Damage to the catalytic converter can result if your vehicle is not kept in proper operating condition. In the event of engine malfunction, particularly involving engine misfire or other apparent loss of performance, have your vehicle serviced promptly. Continued operation of your vehicle with a severe malfunction could cause the converter to overheat, resulting in possible damage to the converter and vehicle.**

Under normal operating conditions, the catalytic converter will not require maintenance. However, it is important to keep the engine properly tuned to assure proper catalyst operation and prevent possible catalyst damage.

NOTE: Intentional tampering with emissions control systems can result in civil penalties being assessed against you.

In unusual situations involving grossly malfunctioning engine operation, a scorching odor may suggest severe and abnormal catalyst overheating. If this occurs, stop the vehicle, turn off the engine and allow it to cool. Service, including a tune-up to manufacturer's specifications, should be obtained immediately.

To minimize the possibility of catalytic converter damage:

- Do not interrupt the ignition when the transmission is in gear and the vehicle is in motion.
- Do not try to start the vehicle by pushing or towing the vehicle.
- Do not idle the engine with any ignition components disconnected or removed, such as when diagnostic testing, or for prolonged periods during very rough idle or malfunctioning operating conditions.

Cooling System

WARNING!

- **You or others can be badly burned by hot engine coolant (antifreeze) or steam from your radiator. If you see or hear steam coming from under the hood,**

(Continued)

WARNING! *(Continued)*

do not open the hood until the radiator has had time to cool. Never open a cooling system pressure cap when the radiator or coolant bottle is hot.

- **Keep hands, tools, clothing, and jewelry away from the radiator cooling fan when the hood is raised. The fan starts automatically and may start at any time, whether the engine is running or not.**
- **When working near the radiator cooling fan, disconnect the fan motor lead or turn the ignition to the OFF mode. The fan is temperature controlled and can start at any time the ignition is in the ON mode.**

Engine Coolant Checks

Check the engine coolant (antifreeze) protection every 12 months (before the onset of freezing weather, where applicable). If the engine coolant (antifreeze) is dirty, the system should be drained, flushed, and refilled with fresh OAT coolant (conforming to MS.90032) by an authorized dealer. Check the front of the A/C condenser for any accumulation of bugs, leaves, etc. If dirty, clean by gently spraying water from a garden hose vertically down the face of the condenser.

Check the engine cooling system hoses for brittle rubber, cracking, tears, cuts, and tightness of the connection at the coolant recovery bottle and radiator. Inspect the entire system for leaks. DO NOT REMOVE THE COOLANT PRESSURE CAP WHEN THE COOLING SYSTEM IS HOT.

Cooling System — Drain, Flush And Refill

NOTE: Some vehicles require special tools to add coolant properly. Failure to fill these systems properly could lead to severe internal engine damage. If any coolant is needed to be added to the system please contact an authorized dealer.

If the engine coolant (antifreeze) is dirty or contains visible sediment, have an authorized dealer clean and flush with OAT coolant (antifreeze) (conforming to MS.90032).

Refer to the "Maintenance Plan" in this section for the proper maintenance intervals.

Selection Of Coolant

Refer to "Fluids And Lubricants" in "Technical Specifications" for further information.

NOTE:

- Mixing of engine coolant (antifreeze) other than specified Organic Additive Technology (OAT) engine coolant (antifreeze), may result in engine damage and may decrease corrosion protection. Organic Additive Technology (OAT) engine coolant is different and should not be mixed with Hybrid Organic Additive Technology (HOAT) engine coolant (antifreeze) or any "globally compatible" coolant (antifreeze). If a non-OAT engine coolant (antifreeze) is introduced into the cooling system in an emergency, the cooling system will need to be drained, flushed, and refilled with fresh OAT coolant (conforming to MS.90032), by an authorized dealer as soon as possible.
- Do not use water alone or alcohol-based engine coolant (antifreeze) products. Do not use additional rust inhibitors or antirust products, as they may not be compatible with the radiator engine coolant and may plug the radiator.
- This vehicle has not been designed for use with propylene glycol-based engine coolant (antifreeze). Use of propylene glycolbased engine coolant (antifreeze) is not recommended.

- Some vehicles require special tools to add coolant properly. Failure to fill these systems properly could lead to severe internal engine damage. If any coolant is needed to be added to the system please contact an authorized dealer.

Adding Coolant

Your vehicle has been built with an improved engine coolant (OAT coolant conforming to MS.90032) that allows extended maintenance intervals. This engine coolant (antifreeze) can be used up to ten years or 150,000 miles (240,000 km) before replacement. To prevent reducing this extended maintenance period, it is important that you use the same engine coolant (OAT coolant conforming to MS.90032) throughout the life of your vehicle.

Please review these recommendations for using Organic Additive Technology (OAT) engine coolant (antifreeze) that meets the requirements of FCA Material Standard MS.90032. When adding engine coolant (antifreeze):

- We recommend using Mopar Antifreeze/Coolant 10 Year/150,000 Mile (240,000 km) Formula OAT (Organic Additive Technology) that meets the requirements of FCA Material Standard MS.90032.
- Mix a minimum solution of 50% OAT engine coolant that meets the requirements of FCA Material Standard MS.90032 and distilled water. Use higher concentrations (not to exceed 70%) if temperatures below −34°F (−37°C) are anticipated. Please contact an authorized dealer for assistance.
- Use only high purity water such as distilled or deionized water when mixing the water/engine coolant (antifreeze) solution. The use of lower quality water will reduce the amount of corrosion protection in the engine cooling system.

NOTE:

- It is the owner's responsibility to maintain the proper level of protection against freezing according to the temperatures occurring in the area where the vehicle is operated.
- Some vehicles require special tools to add coolant properly. Failure to fill these systems properly could lead to severe internal engine damage. If any coolant is needed to be added to the system, please contact a local authorized dealer.

- Mixing engine coolant (antifreeze) types is not recommended and can result in cooling system damage. If HOAT and OAT coolant are mixed in an emergency, have a authorized dealer drain, flush, and refill with OAT coolant (conforming to MS.90032) as soon as possible.

Cooling System Pressure Cap

The cap must be fully tightened to prevent loss of engine coolant (antifreeze), and to ensure that engine coolant (antifreeze) will return to the radiator from the coolant expansion bottle/recovery tank if so equipped.

The cap should be inspected and cleaned if there is any accumulation of foreign material on the sealing surfaces.

WARNING!

- **Do not open hot engine cooling system. Never add engine coolant (antifreeze) when the engine is overheated. Do not loosen or remove the cap to cool an overheated engine. Heat causes pressure to build up in the cooling system. To prevent scalding or injury, do not remove the pressure cap while the system is hot or under pressure.**

(Continued)

WARNING! *(Continued)*

- **Do not use a pressure cap other than the one specified for your vehicle. Personal injury or engine damage may result.**

Disposal Of Used Coolant

Used ethylene glycol-based coolant (antifreeze) is a regulated substance requiring proper disposal. Check with your local authorities to determine the disposal rules for your community. To prevent ingestion by animals or children, do not store ethylene glycol-based coolant in open containers or allow it to remain in puddles on the ground. If ingested by a child or pet, seek emergency assistance immediately. Clean up any ground spills immediately.

Coolant Level

The coolant bottle provides a quick visual method for determining that the coolant level is adequate. With the engine OFF and cold, the level of the engine coolant (antifreeze) in the bottle should be between the ranges indicated on the bottle.

The radiator normally remains completely full, so there is no need to remove the radiator/coolant pressure cap unless checking for engine coolant (antifreeze) freeze point or replacing coolant. Advise your service attendant of this. As long as the engine operating temperature is satisfactory, the coolant bottle need only be checked once a month.

When additional engine coolant (antifreeze) is needed to maintain the proper level, only OAT coolant that meets the requirements of FCA Material Standard MS.90032 should be added to the coolant bottle. Do not overfill.

Points To Remember

NOTE: When the vehicle is stopped after a few miles/kilometers of operation, you may observe vapor coming from the front of the engine compartment. This is normally a result of moisture from rain, snow, or high humidity accumulating on the radiator and being vaporized when the thermostat opens, allowing hot engine coolant (antifreeze) to enter the radiator.

If an examination of your engine compartment shows no evidence of radiator or hose leaks, the vehicle may be safely driven. The vapor will soon dissipate.

- Do not overfill the coolant expansion bottle.
- Check the coolant freeze point in the radiator and in the coolant expansion bottle. If engine coolant (antifreeze) needs to be added, the contents of the coolant expansion bottle must also be protected against freezing.
- If frequent engine coolant (antifreeze) additions are required, the cooling system should be pressure tested for leaks.
- Maintain engine coolant (antifreeze) concentration at a minimum of 50% OAT coolant (conforming to MS.90032) and distilled water for proper corrosion protection of your engine which contains aluminum components.
- Make sure that the coolant expansion bottle overflow hoses are not kinked or obstructed.
- Keep the front of the radiator clean. If your vehicle is equipped with air conditioning, keep the front of the condenser clean.
- Do not change the thermostat for Summer or Winter operation. If replacement is ever necessary, install ONLY the correct type thermostat. Other designs may result in unsatisfactory engine coolant (antifreeze) performance, poor gas mileage, and increased emissions.

Brake System

In order to assure brake system performance, all brake system components should be inspected periodically. Refer to the "Maintenance Plan" in this section for the proper maintenance intervals.

WARNING!

Riding the brakes can lead to brake failure and possibly a collision. Driving with your foot resting or riding on the brake pedal can result in abnormally high brake temperatures, excessive lining wear, and possible brake damage. You would not have your full braking capacity in an emergency.

Fluid Level Check — Brake Master Cylinder

The fluid level of the master cylinder should be checked whenever the vehicle is serviced, or immediately if the brake system warning light is on. If necessary, add fluid to bring level within the designated marks on the side of the reservoir of the brake master cylinder. Be sure to clean the top of the master cylinder area before removing cap. With disc brakes, fluid level can be expected to fall as the brake pads wear. Brake fluid level should be checked when pads are replaced. If the brake fluid is abnormally low, check the system for leaks.

Refer to "Fluids And Lubricants" in "Technical Specifications" for further information.

WARNING!

- **Use only manufacturer's recommended brake fluid. Refer to "Fluids And Lubricants" in "Technical Specifications" for further information. Using the wrong type of brake fluid can severely damage your brake system and/or impair its performance. The proper type of brake fluid for your vehicle is also identified on the original factory installed hydraulic master cylinder reservoir.**
- **To avoid contamination from foreign matter or moisture, use only new brake fluid or fluid that has been in a tightly closed container. Keep the master cylinder reservoir cap secured at all times. Brake fluid in a open container absorbs moisture from the air resulting in a lower boiling point. This may cause it to boil unexpectedly during hard or prolonged braking, resulting in sudden brake failure. This could result in a collision.**

(Continued)

WARNING! *(Continued)*

- **Overfilling the brake fluid reservoir can result in spilling brake fluid on hot engine parts, causing the brake fluid to catch fire. Brake fluid can also damage painted and vinyl surfaces, care should be taken to avoid its contact with these surfaces.**
- **Do not allow petroleum based fluid to contaminate the brake fluid. Brake seal components could be damaged, causing partial or complete brake failure. This could result in a collision.**

Automatic Transmission

Selection Of Lubricant

It is important to use the proper transmission fluid to ensure optimum transmission performance and life. Use only the manufacturer's specified transmission fluid. Refer to "Fluids And Lubricants" in "Technical Specifications" for fluid specifications. It is important to maintain the transmission fluid at the correct level using the recommended fluid.

NOTE: No chemical flushes should be used in any transmission; only the approved lubricant should be used.

CAUTION!

Using a transmission fluid other than the manufacturer's recommended fluid may cause deterioration in transmission shift quality and/or torque converter shudder. Refer to "Fluids And Lubricants" in "Technical Specifications" for fluid specifications.

Special Additives

The manufacturer strongly recommends against using any special additives in the transmission. Automatic Transmission Fluid (ATF) is an engineered product and its performance may be impaired by supplemental additives. Therefore, do not add any fluid additives to the transmission. Avoid using transmission sealers as they may adversely affect seals.

CAUTION!

Do not use chemical flushes in your transmission as the chemicals can damage your transmission components. Such damage is not covered by the New Vehicle Limited Warranty.

Fluid Level Check

The fluid level is preset at the factory and does not require adjustment under normal operating conditions. Routine fluid level checks are not required; therefore the transmission has no dipstick. An authorized dealer can check your transmission fluid level using special service tools. If you notice fluid leakage or transmission malfunction, visit an authorized dealer immediately to have the transmission fluid level checked. Operating the vehicle with an improper fluid level can cause severe transmission damage.

CAUTION!

If a transmission fluid leak occurs, visit an authorized dealer immediately. Severe transmission damage may occur. An authorized dealer has the proper tools to adjust the fluid level accurately.

Fluid And Filter Changes

Under normal operating conditions, the fluid installed at the factory will provide satisfactory lubrication for the life of the vehicle.

Routine fluid and filter changes are not required. However, change the fluid and filter if the fluid becomes contaminated (with water, etc.), or if the transmission is disassembled for any reason.

Front/Rear Axle Fluid

For normal service, periodic fluid level checks are not required. When the vehicle is serviced for other reasons the exterior surfaces of the axle assembly should be inspected. If gear oil leakage is suspected inspect the fluid level. Refer to “Fluids And Lubricants” in “Technical Specifications” for further information.

Front Axle Fluid Level Check

The front axle oil level needs to be no lower than 1/8 inch (3 mm) below the bottom of the fill hole.

The front axle fill and drain plugs should be tightened to 22 to 29 ft lbs (30 to 40 N·m).

CAUTION!

Do not overtighten the plugs as it could damage them and cause them to leak.

Rear Axle Fluid Level Check

The rear axle oil level needs to be no lower than 1/8 inch (3 mm) below the bottom of the fill hole.

The rear axle fill and drain plugs should be tightened to 22 to 29 ft lbs (30 to 40 N·m).

CAUTION!

Do not overtighten the plugs as it could damage them and cause them to leak.

Selection Of Lubricant

Use only the manufacturer's recommended fluid. Refer to "Fluids And Lubricants" in "Technical Specifications" for further information.

Transfer Case

Fluid Level Check

For normal service, periodic fluid level checks are not required. When the vehicle is serviced for other reasons the exterior surfaces of the transfer case assembly should be inspected. If oil leakage is suspected inspect the fluid level. Refer to "Fluids And Lubricants" in "Technical Specifications" for further information.

Adding Fluid

Add fluid at the filler hole, until it runs out of the hole, when the vehicle is in a level position.

Drain

First remove fill plug, then remove drain plug. Recommended tightening torque for drain and fill plugs is 15 to 25 ft lbs (20 to 34 N·m).

CAUTION!

When installing plugs, do not overtighten. You could damage them and cause them to leak.

Selection Of Lubricant

Use only the manufacturer's recommended fluid. Refer to "Fluids And Lubricants" in "Technical Specifications" for further information.

RAISING THE VEHICLE

In the case where it is necessary to raise the vehicle, go to an authorized dealer or service station.

TIRES

Tire Safety Information

Tire safety information will cover aspects of the following information: Tire Markings, Tire Identification Numbers, Tire Terminology and Definitions, Tire Pressures, and Tire Loading.

Tire Markings

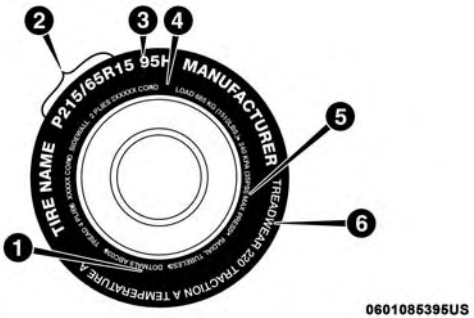

Tire Markings

1 — U.S. DOT Safety Standards Code (TIN)	4 — Maximum Load
2 — Size Designation	5 — Maximum Pressure
3 — Service Description	6 — Treadwear, Traction and Temperature Grades

NOTE:

- P (Passenger) — Metric tire sizing is based on U.S. design standards. P-Metric tires have the letter "P" molded into the sidewall preceding the size designation. Example: P215/65R15 95H.
- European — Metric tire sizing is based on European design standards. Tires designed to this standard have the tire size molded into the sidewall beginning with the section width. The letter "P" is absent from this tire size designation. Example: 215/65R15 96H.
- LT (Light Truck) — Metric tire sizing is based on U.S. design standards. The size designation for LT-Metric tires is the same as for P-Metric tires except for the letters "LT" that are molded into the sidewall preceding the size designation. Example: LT235/85R16.
- Temporary spare tires are designed for temporary emergency use only. Temporary high pressure compact spare tires have the letter "T" or "S" molded into the sidewall preceding the size designation. Example: T145/80D18 103M.
- High flotation tire sizing is based on U.S. design standards and it begins with the tire diameter molded into the sidewall. Example: 31x10.5 R15 LT.

Tire Sizing Chart

EXAMPLE:

Example Size Designation: P215/65R15XL 95H, 215/65R15 96H, LT235/85R16C, T145/80D18 103M, 31x10.5 R15 LT
P = Passenger car tire size based on U.S. design standards, or **"....blank...."** = Passenger car tire based on European design standards, or **LT** = Light truck tire based on U.S. design standards, or **T or S** = Temporary spare tire or **31** = Overall diameter in inches (in)
215, 235, 145 = Section width in millimeters (mm)
65, 85, 80 = Aspect ratio in percent (%) – Ratio of section height to section width of tire, or **10.5** = Section width in inches (in)
R = Construction code – "R" means radial construction, or – "D" means diagonal or bias construction
15, 16, 18 = Rim diameter in inches (in)
Service Description:
95 = Load Index – A numerical code associated with the maximum load a tire can carry

EXAMPLE:

H = Speed Symbol
– A symbol indicating the range of speeds at which a tire can carry a load corresponding to its load index under certain operating conditions
– The maximum speed corresponding to the speed symbol should only be achieved under specified operating conditions (i.e., tire pressure, vehicle loading, road conditions, and posted speed limits)

Load Identification:
Absence of the following load identification symbols on the sidewall of the tire indicates a Standard Load (SL) tire:

- **XL** = Extra load (or reinforced) tire, or
- **LL** = Light load tire or
- **C, D, E, F, G** = Load range associated with the maximum load a tire can carry at a specified pressure

Maximum Load – Maximum load indicates the maximum load this tire is designed to carry

Maximum Pressure – Maximum pressure indicates the maximum permissible cold tire inflation pressure for this tire

Tire Identification Number (TIN)

The TIN may be found on one or both sides of the tire; however, the date code may only be on one side. Tires with white sidewalls will have the full TIN, including the date code, located on the white sidewall side of the tire. Look for the TIN on the outboard side of black sidewall tires as mounted on the vehicle. If the TIN is not found on the outboard side, then you will find it on the inboard side of the tire.

EXAMPLE:
DOT MA L9 ABCD 0301
DOT = Department of Transportation – This symbol certifies that the tire is in compliance with the U.S. Department of Transportation tire safety standards and is approved for highway use
MA = Code representing the tire manufacturing location (two digits)
L9 = Code representing the tire size (two digits)
ABCD = Code used by the tire manufacturer (one to four digits)
03 = Number representing the week in which the tire was manufactured (two digits) – 03 means the 3rd week
01 = Number representing the year in which the tire was manufactured (two digits) – 01 means the year 2001 – Prior to July 2000, tire manufacturers were only required to have one number to represent the year in which the tire was manufactured. Example: 031 could represent the 3rd week of 1981 or 1991

Tire Terminology And Definitions

Term	Definition
B-Pillar	The vehicle B-Pillar is the structural member of the body located behind the front door.
Cold Tire Inflation Pressure	Cold tire inflation pressure is defined as the tire pressure after the vehicle has not been driven for at least three hours, or driven less than 1 mile (1.6 km) after sitting for a minimum of three hours. Inflation pressure is measured in units of PSI (pounds per square inch) or kPa (kilopascals).
Maximum Inflation Pressure	The maximum inflation pressure is the maximum permissible cold tire inflation pressure for this tire. The maximum inflation pressure is molded into the sidewall.
Recommended Cold Tire Inflation Pressure	Vehicle manufacturer's recommended cold tire inflation pressure as shown on the tire placard.
Tire Placard	A label permanently attached to the vehicle describing the vehicle's loading capacity, the original equipment tire sizes and the recommended cold tire inflation pressures.

Tire Loading And Tire Pressure

NOTE: The proper cold tire inflation pressure is listed on the driver's side B-Pillar or the rear edge of the driver's side door.

Check the inflation pressure of each tire, including the spare tire (if equipped), at least monthly and inflate to the recommended pressure for your vehicle.

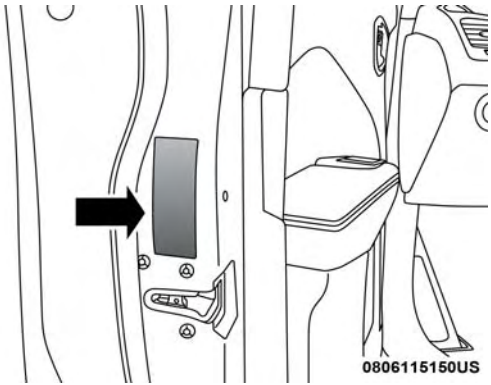

Example Tire Placard Location (Door)

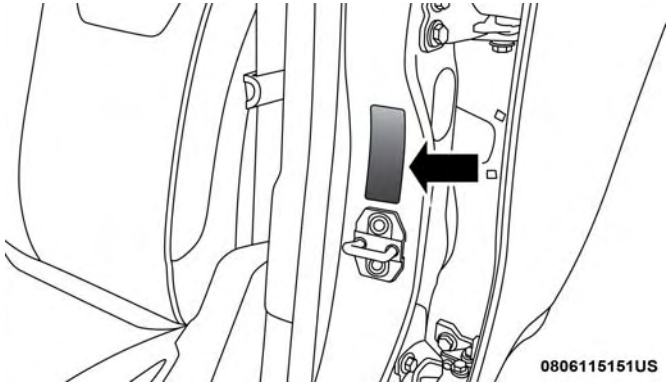

Example Tire Placard Location (B-Pillar)

Tire And Loading Information Placard

Tire And Loading Information Placard

This placard tells you important information about the:

1. Number of people that can be carried in the vehicle.
2. Total weight your vehicle can carry.
3. Tire size designed for your vehicle.
4. Cold tire inflation pressures for the front, rear, and spare tires.

Tires — General Information

Tire Pressure

Proper tire inflation pressure is essential to the safe and satisfactory operation of your vehicle. Four primary areas are affected by improper tire pressure:

- Safety and Vehicle Stability
- Economy
- Tread Wear
- Ride Comfort

Safety

WARNING!

- **Improperly inflated tires are dangerous and can cause collisions.**
- **Underinflation increases tire flexing and can result in overheating and tire failure.**
- **Overinflation reduces a tire's ability to cushion shock. Objects on the road and chuckholes can cause damage that result in tire failure.**

(Continued)

WARNING! *(Continued)*

- **Overinflated or underinflated tires can affect vehicle handling and can fail suddenly, resulting in loss of vehicle control.**
- **Unequal tire pressures can cause steering problems. You could lose control of your vehicle.**
- **Unequal tire pressures from one side of the vehicle to the other can cause the vehicle to drift to the right or left.**
- **Always drive with each tire inflated to the recommended cold tire inflation pressure.**

Both under-inflation and over-inflation affect the stability of the vehicle and can produce a feeling of sluggish response or over responsiveness in the steering.

NOTE:

- Unequal tire pressures from side to side may cause erratic and unpredictable steering response.
- Unequal tire pressure from side to side may cause the vehicle to drift left or right.

Fuel Economy

Underinflated tires will increase tire rolling resistance resulting in higher fuel consumption.

Tread Wear

Improper cold tire inflation pressures can cause abnormal wear patterns and reduced tread life, resulting in the need for earlier tire replacement.

Ride Comfort And Vehicle Stability

Proper tire inflation contributes to a comfortable ride. Over-inflation produces a jarring and uncomfortable ride.

Tire Inflation Pressures

The proper cold tire inflation pressure is listed on the driver's side B-Pillar or rear edge of the driver's side door.

At least once a month:

- Check and adjust tire pressure with a good quality pocket-type pressure gauge. Do not make a visual judgement when determining proper inflation. Tires may look properly inflated even when they are under-inflated.
- Inspect tires for signs of tire wear or visible damage.

CAUTION!

After inspecting or adjusting the tire pressure, always reinstall the valve stem cap. This will prevent moisture and dirt from entering the valve stem, which could damage the valve stem.

Inflation pressures specified on the placard are always "cold tire inflation pressure". Cold tire inflation pressure is defined as the tire pressure after the vehicle has not been driven for at least three hours, or driven less than 1 mile (1.6 km) after sitting for a minimum of three hours. The cold tire inflation pressure must not exceed the maximum inflation pressure molded into the tire sidewall.

Check tire pressures more often if subject to a wide range of outdoor temperatures, as tire pressures vary with temperature changes.

Tire pressures change by approximately 1 psi (7 kPa) per 12°F (7°C) of air temperature change. Keep this in mind when checking tire pressure inside a garage, especially in the Winter.

Example: If garage temperature = 68°F (20°C) and the outside temperature = 32°F (0°C) then the cold tire inflation pressure should be increased by 3 psi (21 kPa), which equals 1 psi (7 kPa) for every 12°F (7°C) for this outside temperature condition.

Tire pressure may increase from 2 to 6 psi (13 to 40 kPa) during operation. DO NOT reduce this normal pressure build up or your tire pressure will be too low.

Tire Pressures For High Speed Operation

The manufacturer advocates driving at safe speeds and within posted speed limits. Where speed limits or conditions are such that the vehicle can be driven at high speeds, maintaining correct tire inflation pressure is very important. Increased tire pressure and reduced vehicle loading may be required for high-speed vehicle operation. Refer to an authorized tire dealer or original equipment vehicle dealer for recommended safe operating speeds, loading and cold tire inflation pressures.

WARNING!

High speed driving with your vehicle under maximum load is dangerous. The added strain on your tires could cause them to fail. You could have a serious collision. Do not drive a vehicle loaded to the maximum capacity at continuous speeds above 75 mph (120 km/h).

Radial Ply Tires

WARNING!

Combining radial ply tires with other types of tires on your vehicle will cause your vehicle to handle poorly. The instability could cause a collision. Always use radial ply tires in sets of four. Never combine them with other types of tires.

Tire Repair

If your tire becomes damaged, it may be repaired if it meets the following criteria:

- The tire has not been driven on when flat.
- The damage is only on the tread section of your tire (sidewall damage is not repairable).
- The puncture is no greater than a ¼ of an inch (6 mm).

Consult an authorized tire dealer for tire repairs and additional information.

Damaged Run Flat tires, or Run Flat tires that have experienced a loss of pressure should be replaced immediately with another Run Flat tire of identical size and service description (Load Index and Speed Symbol). Replace the tire pressure sensor as well as it is not designed to be reused.

Run Flat Tires — If Equipped

Run Flat tires allow you the capability to drive 50 miles (80 km) at 50 mph (80 km/h) after a rapid loss of inflation pressure. This rapid loss of inflation is referred to as the Run Flat mode. A Run Flat mode occurs when the tire inflation pressure is of/or below 14 psi (96 kPa). Once a Run Flat tire reaches the run flat mode it has limited driving capabilities and needs to be replaced immediately. A Run Flat tire is not repairable. When a run flat tire is changed after driving with underinflated tire condition, please replace the TPM sensor as it is not designed to be reused when driven under run flat mode (14 psi (96 kPa)) condition.

NOTE: TPM Sensor must be replaced after driving the vehicle on a flat tire condition.

It is not recommended driving a vehicle loaded at full capacity or to tow a trailer while a tire is in the run flat mode.

See the tire pressure monitoring section for more information.

Tire Spinning

When stuck in mud, sand, snow, or ice conditions, do not spin your vehicle's wheels above 30 mph (48 km/h) or for longer than 30 seconds continuously without stopping.

Refer to "Freeing A Stuck Vehicle" in "In Case Of Emergency" for further information.

WARNING!

Fast spinning tires can be dangerous. Forces generated by excessive wheel speeds may cause tire damage or failure. A tire could explode and injure someone. Do not spin your vehicle's wheels faster than 30 mph (48 km/h) for more than 30 seconds continuously when you are stuck, and do not let anyone near a spinning wheel, no matter what the speed.

Tread Wear Indicators

Tread wear indicators are in the original equipment tires to help you in determining when your tires should be replaced.

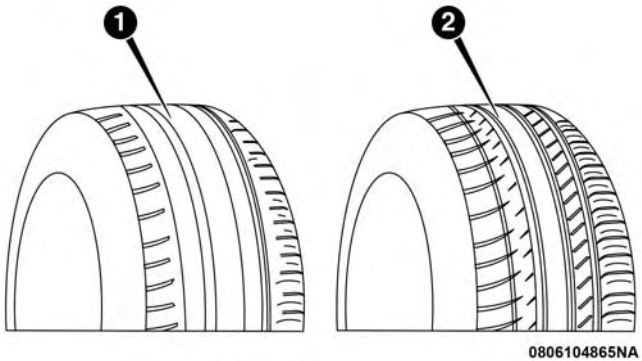

Tire Tread

1 — Worn Tire
2 — New Tire

These indicators are molded into the bottom of the tread grooves. They will appear as bands when the tread depth becomes a 1/16 of an inch (1.6 mm). When the tread is worn to the tread wear indicators, the tire should be replaced.

Refer to "Replacement Tires" in this section for further information.

Life Of Tire

The service life of a tire is dependent upon varying factors including, but not limited to:

- Driving style.
- Tire pressure - Improper cold tire inflation pressures can cause uneven wear patterns to develop across the tire tread. These abnormal wear patterns will reduce tread life, resulting in the need for earlier tire replacement.
- Distance driven.
- Performance tires, tires with a speed rating of V or higher, and Summer tires typically have a reduced tread life. Rotation of these tires per the vehicle scheduled maintenance is highly recommended.

WARNING!

Tires and the spare tire should be replaced after six years, regardless of the remaining tread. Failure to follow this warning can result in sudden tire failure. You could lose control and have a collision resulting in serious injury or death.

NOTE: Wheel Valve Stem must be replaced as well when installing new tires due to wear and tear in existing tires.

Keep dismounted tires in a cool, dry place with as little exposure to light as possible. Protect tires from contact with oil, grease, and gasoline.

Replacement Tires

The tires on your new vehicle provide a balance of many characteristics. They should be inspected regularly for wear and correct cold tire inflation pressures. The manufacturer strongly recommends that you use tires equivalent to the originals in size, quality and performance when replacement is needed. Refer to the paragraph on “Tread Wear Indicators” in this section. Refer to the Tire and Loading Information placard or the Vehicle Certification Label for the size designation of your tire. The Load Index and Speed Symbol for your tire will be found on the original equipment tire sidewall.

See the Tire Sizing Chart example found in the “Tire Safety Information” section of this manual for more information relating to the Load Index and Speed Symbol of a tire.

It is recommended to replace the two front tires or two rear tires as a pair. Replacing just one tire can seriously affect your vehicle’s handling. If you ever replace a wheel, make sure that the wheel’s specifications match those of the original wheels.

It is recommended you contact an authorized tire dealer or original equipment dealer with any questions you may have on tire specifications or capability. Failure to use equivalent replacement tires may adversely affect the safety, handling, and ride of your vehicle.

WARNING!

- **Do not use a tire, wheel size, load rating, or speed rating other than that specified for your vehicle. Some combinations of unapproved tires and wheels may change suspension dimensions and performance characteristics, resulting in changes to steering, handling, and braking of your vehicle. This can cause unpredictable handling and stress to steering and suspension components. You could lose control and have a collision resulting in serious injury or death. Use only the tire and wheel sizes with load ratings approved for your vehicle.**
- **Never use a tire with a smaller load index or capacity, other than what was originally equipped on your vehicle. Using a tire with a smaller load index could result in tire overloading and failure. You could lose control and have a collision.**

(Continued)

WARNING! ***(Continued)***

- **Failure to equip your vehicle with tires having adequate speed capability can result in sudden tire failure and loss of vehicle control.**

CAUTION!

Replacing original tires with tires of a different size may result in false speedometer and odometer readings.

Tire Types

All Season Tires — If Equipped

All Season tires provide traction for all seasons (Spring, Summer, Fall, and Winter). Traction levels may vary between different all season tires. All season tires can be identified by the M+S, M&S, M/S or MS designation on the tire sidewall. Use all season tires only in sets of four; failure to do so may adversely affect the safety and handling of your vehicle.

Summer Or Three Season Tires — If Equipped

Summer tires provide traction in both wet and dry conditions, and are not intended to be driven in snow or on ice. If your vehicle is equipped with Summer tires, be aware these tires are not designed for Winter or cold driving conditions. Install Winter tires on your vehicle when ambient temperatures are less than 40°F (5°C) or if roads are covered with ice or snow. For more information, contact an authorized dealer.

Summer tires do not contain the all season designation or mountain/snowflake symbol on the tire sidewall. Use Summer tires only in sets of four; failure to do so may adversely affect the safety and handling of your vehicle.

WARNING!

Do not use Summer tires in snow/ice conditions. You could lose vehicle control, resulting in severe injury or death. Driving too fast for conditions also creates the possibility of loss of vehicle control.

Snow Tires

Some areas of the country require the use of snow tires during the Winter. Snow tires can be identified by a "mountain/snowflake" symbol on the tire sidewall.

If you need snow tires, select tires equivalent in size and type to the original equipment tires. Use snow tires only in sets of four; failure to do so may adversely affect the safety and handling of your vehicle.

Snow tires generally have lower speed ratings than what was originally equipped with your vehicle and should not be operated at sustained speeds over 75 mph (120 km/h). For speeds above 75 mph (120 km/h) refer to original equipment or an authorized tire dealer for recommended safe operating speeds, loading and cold tire inflation pressures.

While studded tires improve performance on ice, skid and traction capability on wet or dry surfaces may be poorer than that of non-studded tires. Some states prohibit studded tires; therefore, local laws should be checked before using these tire types.

Spare Tires — If Equipped

NOTE: For vehicles equipped with Tire Service Kit instead of a spare tire, please refer to "Tire Service Kit" in "In Case Of Emergency" for further information.

CAUTION!

Because of the reduced ground clearance, do not take your vehicle through an automatic car wash with a compact or limited use temporary spare installed. Damage to the vehicle may result.

Refer to the "Towing Requirements - Tires" in "Starting And Operating" for restrictions when towing with a spare tire designated for temporary emergency use.

Spare Tire Matching Original Equipped Tire And Wheel — If Equipped

Your vehicle may be equipped with a spare tire and wheel equivalent in look and function to the original equipment tire and wheel found on the front or rear axle of your vehicle. This spare tire may be used in the tire rotation for your vehicle. If your vehicle has this option, refer to an authorized tire dealer for the recommended tire rotation pattern.

Compact Spare Tire — If Equipped

The compact spare is for temporary emergency use only. You can identify if your vehicle is equipped with a compact spare by looking at the spare tire description on the Tire and Loading Information Placard located on the driver's side door opening or on the sidewall of the tire. Compact spare tire descriptions begin with the letter "T" or "S" preceding the size designation. Example: T145/80D18 103M.

T, S = Temporary Spare Tire

Since this tire has limited tread life, the original equipment tire should be repaired (or replaced) and reinstalled on your vehicle at the first opportunity.

Do not install a wheel cover or attempt to mount a conventional tire on the compact spare wheel, since the wheel is designed specifically for the compact spare tire. Do not install more than one compact spare tire and wheel on the vehicle at any given time.

WARNING!

Compact and collapsible spares are for temporary emergency use only. With these spares, do not drive more than 50 mph (80 km/h). Temporary use spares have limited tread life. When the tread is worn to the tread wear indicators, the temporary use spare tire needs to be replaced. Be sure to follow the warnings, which apply to your spare. Failure to do so could result in spare tire failure and loss of vehicle control.

Collapsible Spare Tire — If Equipped

The collapsible spare is for temporary emergency use only. You can identify if your vehicle is equipped with a collapsible spare by looking at the spare tire description on the Tire and Loading Information Placard located on the driver's side door opening or on the sidewall of the tire.

Collapsible spare tire description example: 165/80-17 101P.

Since this tire has limited tread life, the original equipment tire should be repaired (or replaced) and reinstalled on your vehicle at the first opportunity.

Inflate collapsible tire only after the wheel is properly installed to the vehicle. Inflate the collapsible tire using the electric air pump before lowering the vehicle.

Do not install a wheel cover or attempt to mount a conventional tire on the collapsible spare wheel, since the wheel is designed specifically for the collapsible spare tire.

WARNING!

Compact and Collapsible spares are for temporary emergency use only. With these spares, do not drive more than 50 mph (80 km/h). Temporary use spares have limited tread life. When the tread is worn to the tread wear indicators, the temporary use spare tire needs to be replaced. Be sure to follow the warnings, which apply to your spare. Failure to do so could result in spare tire failure and loss of vehicle control.

Full Size Spare — If Equipped

The full size spare is for temporary emergency use only. This tire may look like the originally equipped tire on the front or rear axle of your vehicle, but it is not. This spare tire may have limited tread life. When the tread is worn to the tread wear indicators, the temporary use full size spare tire needs to be replaced. Since it is not the same as your original equipment tire, replace (or repair) the original equipment tire and reinstall on the vehicle at the first opportunity.

Limited Use Spare — If Equipped

The limited use spare tire is for temporary emergency use only. This tire is identified by a label located on the limited use spare wheel. This label contains the driving limitations for this spare. This tire may look like the original equipped tire on the front or rear axle of your vehicle, but it is not. Installation of this limited use spare tire affects vehicle handling. Since it is not the same as your original equipment tire, replace (or repair) the original equipment tire and reinstall on the vehicle at the first opportunity.

WARNING!

Limited use spares are for emergency use only. Installation of this limited use spare tire affects vehicle handling. With this tire, do not drive more than the speed listed on the limited use spare wheel. Keep inflated to the cold tire inflation pressures listed on your Tire and Loading Information Placard located on the driver's side B-Pillar or the rear edge of the driver's side door. Replace (or repair) the original equipment tire at the first opportunity and reinstall it on your vehicle. Failure to do so could result in loss of vehicle control.

Wheel And Wheel Trim Care

All wheels and wheel trim, especially aluminum and chrome plated wheels, should be cleaned regularly using mild (neutral Ph) soap and water to maintain their luster and to prevent corrosion. Wash wheels with the same soap solution recommended for the body of the vehicle and remember to always wash when the surfaces are not hot to the touch.

Your wheels are susceptible to deterioration caused by salt, sodium chloride, magnesium chloride, calcium chloride, etc., and other road chemicals used to melt ice or control dust on dirt roads. Use a soft cloth or sponge and mild soap to wipe away promptly. Do not use harsh chemicals or a stiff brush. They can damage the wheel's protective coating that helps keep them from corroding and tarnishing.

CAUTION!

Avoid products or automatic car washes that use acidic solutions or strong alkaline additives or harsh brushes. Many aftermarket wheel cleaners and automatic car washes may damage the wheel's protective finish. Such damage is not covered by the New Vehicle Limited Warranty. Only car wash soap, Mopar Wheel Cleaner or equivalent is recommended.

When cleaning extremely dirty wheels including excessive brake dust, care must be taken in the selection of tire and wheel cleaning chemicals and equipment to prevent damage to the wheels. Mopar Wheel Treatment or Mopar Chrome Cleaner or their equivalent is recommended or select a non-abrasive, non-acidic cleaner for aluminum or chrome wheels.

CAUTION!

Do not use scouring pads, steel wool, a bristle brush, metal polishes or oven cleaner. These products may damage the wheel's protective finish. Such damage is not covered by the New Vehicle Limited Warranty. Only car wash soap, Mopar Wheel Cleaner or equivalent is recommended.

NOTE: If you intend parking or storing your vehicle for an extended period after cleaning the wheels with wheel cleaner, drive your vehicle and apply the brakes to remove the water droplets from the brake components. This activity will remove the red rust on the brake rotors and prevent vehicle vibration when braking.

Dark Vapor Chrome, Black Satin Chrome, or Low Gloss Clear Coat Wheels

CAUTION!

If your vehicle is equipped with these specialty wheels, DO NOT USE wheel cleaners, abrasives, or polishing compounds. They will permanently damage this finish and such damage is not covered by the New Vehicle Limited Warranty. HAND WASH ONLY USING MILD SOAP AND WATER WITH A SOFT CLOTH. Used on a regular basis; this is all that is required to maintain this finish.

Tire Chains (Traction Devices)

Use of traction devices require sufficient tire-to-body clearance. Follow these recommendations to guard against damage.

- Traction device must be of proper size for the tire, as recommended by the traction device manufacturer.
- Install on Rear Tires Only
- Due to limited clearance, Thule XG-12 Pro or equivalent is recommended on P245/70R17, 265/60R18 or 265/50R20 tires.

WARNING!

Using tires of different size and type (M+S, Snow) between front and rear axles can cause unpredictable handling. You could lose control and have a collision.

CAUTION!

To avoid damage to your vehicle or tires, observe the following precautions:

- **Because of restricted traction device clearance between tires and other suspension components, it is important that only traction devices in good condition are used. Broken devices can cause serious damage. Stop the vehicle immediately if noise occurs that could indicate device breakage. Remove the damaged parts of the device before further use.**
- **Install device as tightly as possible and then retighten after driving about ½ mile (0.8 km).**
- **Do not exceed 30 mph (48 km/h).**
- **Drive cautiously and avoid severe turns and large bumps, especially with a loaded vehicle.**
- **Do not drive for a prolonged period on dry pavement.**

(Continued)

CAUTION! ***(Continued)***

- **Observe the traction device manufacturer's instructions on the method of installation, operating speed, and conditions for use. Always use the suggested operating speed of the device manufacturer's if it is less than 30 mph (48 km/h).**
- **Do not use traction devices on a compact spare tire.**

Tire Rotation Recommendations

The tires on the front and rear of your vehicle operate at different loads and perform different steering, handling, and braking functions. For these reasons, they wear at unequal rates.

These effects can be reduced by timely rotation of tires. The benefits of rotation are especially worthwhile with aggressive tread designs such as those on On/Off-Road type tires. Rotation will increase tread life, help to maintain mud, snow, and wet traction levels, and contribute to a smooth, quiet ride.

Refer to the "Maintenance Plan" for the proper maintenance intervals. More frequent rotation is permissible if desired. The reasons for any rapid or unusual wear should be corrected prior to rotation being performed.

NOTE: The premium Tire Pressure Monitor System will automatically locate the pressure values displayed in the correct vehicle position following a tire rotation.

The suggested rotation method is the "rearward-cross" shown in the following diagram.

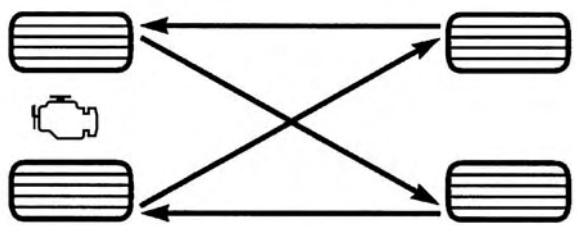

Tire Rotation

DEPARTMENT OF TRANSPORTATION UNIFORM TIRE QUALITY GRADES

The following tire grading categories were established by the National Highway Traffic Safety Administration. The specific grade rating assigned by the tire's manufacturer in each category is shown on the sidewall of the tires on your vehicle.

All passenger vehicle tires must conform to Federal safety requirements in addition to these grades.

Treadwear

The Treadwear grade is a comparative rating, based on the wear rate of the tire when tested under controlled conditions on a specified government test course. For example, a tire graded 150 would wear one and one-half times as well on the government course as a tire graded 100. The relative performance of tires depends upon the actual conditions of their use, however, and may depart significantly from the norm due to variations in driving habits, service practices, and differences in road characteristics and climate.

Traction Grades

The Traction grades, from highest to lowest, are AA, A, B, and C. These grades represent the tire's ability to stop on wet pavement, as measured under controlled conditions on specified government test surfaces of asphalt and concrete. A tire marked C may have poor traction performance.

WARNING!

The traction grade assigned to this tire is based on straight-ahead braking traction tests, and does not include acceleration, cornering, hydroplaning, or peak traction characteristics.

Temperature Grades

The Temperature grades are A (the highest), B, and C, representing the tire's resistance to the generation of heat and its ability to dissipate heat, when tested under controlled conditions on a specified indoor laboratory test wheel.

Sustained high temperature can cause the material of the tire to degenerate and reduce tire life, and excessive temperature can lead to sudden tire failure. The grade C corresponds to a level of performance, which all passenger vehicle tires must meet under the Federal Motor Vehicle Safety Standard No. 109. Grades B and A represent higher levels of performance on the laboratory test wheel, than the minimum required by law.

WARNING!

The temperature grade for this tire is established for a tire that is properly inflated and not overloaded. Excessive speed, under-inflation, or excessive loading, either separately or in combination, can cause heat buildup and possible tire failure.

STORING THE VEHICLE

If you are storing your vehicle for more than 21 days, we recommend that you take the following steps to minimize the drain on your vehicle's battery:

- Disconnect the negative cable from battery.

- Any time you store your vehicle or keep it out of service (i.e., vacation) for two weeks or more, run the air conditioning system at idle for about five minutes in the fresh air and high blower setting. This will ensure adequate system lubrication to minimize the possibility of compressor damage when the system is started again.

BODYWORK

Protection From Atmospheric Agents

Vehicle body care requirements vary according to geographic locations and usage. Chemicals that make roads passable in snow and ice and those that are sprayed on trees and road surfaces during other seasons are highly corrosive to the metal in your vehicle. Outside parking, which exposes your vehicle to airborne contaminants, road surfaces on which the vehicle is operated, extreme hot or cold weather and other extreme conditions will have an adverse effect on paint, metal trim, and underbody protection.

The following maintenance recommendations will enable you to obtain maximum benefit from the corrosion resistance built into your vehicle.

What Causes Corrosion?

Corrosion is the result of deterioration or removal of paint and protective coatings from your vehicle.

The most common causes are:

- Road salt, dirt and moisture accumulation.
- Stone and gravel impact.
- Insects, tree sap and tar.
- Salt in the air near seacoast localities.
- Atmospheric fallout/industrial pollutants.

Body And Underbody Maintenance

Cleaning Headlights

Your vehicle is equipped with plastic headlights and fog lights that are lighter and less susceptible to stone breakage than glass headlights.

Plastic is not as scratch resistant as glass and therefore different lens cleaning procedures must be followed.

To minimize the possibility of scratching the lenses and reducing light output, avoid wiping with a dry cloth. To remove road dirt, wash with a mild soap solution followed by rinsing.

Do not use abrasive cleaning components, solvents, steel wool or other aggressive material to clean the lenses.

Preserving The Bodywork

Washing

- Wash your vehicle regularly. Always wash your vehicle in the shade using Mopar Car Wash, or a mild car wash soap, and rinse the panels completely with clear water.
- If insects, tar, or other similar deposits have accumulated on your vehicle, use Mopar Super Kleen Bug and Tar Remover to remove.
- Use a high quality cleaner wax, such as Mopar Cleaner Wax to remove road film, stains and to protect your paint finish. Take care never to scratch the paint.
- Avoid using abrasive compounds and power buffing that may diminish the gloss or thin out the paint finish.

CAUTION!

- **Do not use abrasive or strong cleaning materials such as steel wool or scouring powder that will scratch metal and painted surfaces.**
- **Use of power washers exceeding 1,200 psi (8,274 kPa) can result in damage or removal of paint and decals.**

Special Care

- If you drive on salted or dusty roads or if you drive near the ocean, hose off the undercarriage at least once a month.
- It is important that the drain holes in the lower edges of the doors, rocker panels, and trunk be kept clear and open.
- If you detect any stone chips or scratches in the paint, touch them up immediately. The cost of such repairs is considered the responsibility of the owner.
- If your vehicle is damaged due to a collision or similar cause that destroys the paint and protective coating, have your vehicle repaired as soon as possible. The cost of such repairs is considered the responsibility of the owner.
- If you carry special cargo such as chemicals, fertilizers, de-icer salt, etc., be sure that such materials are well packaged and sealed.
- If a lot of driving is done on gravel roads, consider mud or stone shields behind each wheel.
- Use Mopar Touch Up Paint on scratches as soon as possible. An authorized dealer has touch up paint to match the color of your vehicle.

INTERIORS

Seats And Fabric Parts

Use Mopar Total Clean to clean fabric upholstery and carpeting.

WARNING!

Do not use volatile solvents for cleaning purposes. Many are potentially flammable, and if used in closed areas they may cause respiratory harm.

Seat Belt Maintenance

Do not bleach, dye or clean the belts with chemical solvents or abrasive cleaners. This will weaken the fabric. Sun damage can also weaken the fabric.

If the belts need cleaning, use a mild soap solution or lukewarm water. Do not remove the belts from the vehicle to wash them. Dry with a soft cloth.

Replace the belts if they appear frayed or worn or if the buckles do not work properly.

WARNING!

A frayed or torn belt could rip apart in a collision and leave you with no protection. Inspect the belt system periodically, checking for cuts, frays, or loose parts. Damaged parts must be replaced immediately. Do not disassemble or modify the system. Seat belt assemblies must be replaced after a collision if they have been damaged (i.e., bent retractor, torn webbing, etc.).

Plastic And Coated Parts

Use Mopar Total Clean to clean vinyl upholstery.

CAUTION!

- **Direct contact of air fresheners, insect repellents, suntan lotions, or hand sanitizers to the plastic, painted, or decorated surfaces of the interior may cause permanent damage. Wipe away immediately.**
- **Damage caused by these type of products may not be covered by your New Vehicle Limited Warranty.**

Cleaning Plastic Instrument Cluster Lenses

The lenses in front of the instruments in this vehicle are molded in clear plastic. When cleaning the lenses, care must be taken to avoid scratching the plastic.

1. Clean with a wet soft cloth. A mild soap solution may be used, but do not use high alcohol content or abrasive cleaners. If soap is used, wipe clean with a clean damp cloth.
2. Dry with a soft cloth.

Leather Parts

Mopar Total Clean is specifically recommended for leather upholstery.

Your leather upholstery can be best preserved by regular cleaning with a damp soft cloth. Small particles of dirt can act as an abrasive and damage the leather upholstery and should be removed promptly with a damp cloth. Stubborn soils can be removed easily with a soft cloth and Mopar Total Clean. Care should be taken to avoid soaking your leather upholstery with any liquid. Please do not use polishes, oils, cleaning fluids, solvents, detergents, or ammonia-based cleaners to clean your leather upholstery. Application of a leather conditioner is not required to maintain the original condition.

NOTE: If equipped with light colored leather, it tends to show any foreign material, dirt, and fabric dye transfer more so than darker colors. The leather is designed for easy cleaning, and FCA recommends Mopar total care leather cleaner applied on a cloth to clean the leather seats as needed.

CAUTION!

Do not use Alcohol and Alcohol-based and/or Ketone based cleaning products to clean leather upholstery, as damage to the upholstery may result.

Glass Surfaces

All glass surfaces should be cleaned on a regular basis with Mopar Glass Cleaner, or any commercial household-type glass cleaner. Never use an abrasive type cleaner. Use caution when cleaning the inside rear window equipped with electric defrosters or windows equipped with radio antennas. Do not use scrapers or other sharp instruments that may scratch the elements.

When cleaning the rear view mirror, spray cleaner on the towel or cloth that you are using. Do not spray cleaner directly on the mirror.

TECHNICAL SPECIFICATIONS

CONTENTS

■ IDENTIFICATION DATA 498
- □ Vehicle Identification Number 498

■ BRAKE SYSTEM 499

■ WHEEL AND TIRE TORQUE SPECIFICATIONS . .499
- □ Torque Specifications 499

■ FUEL REQUIREMENTS 501
- □ 3.6L Engine 501
- □ 5.7L Engine 501
- □ Reformulated Gasoline 502
- □ Materials Added To Fuel 502
- □ Gasoline/Oxygenate Blends 502
- □ Do Not Use E-85 In Non-Flex Fuel Vehicles 503
- □ CNG And LP Fuel System Modifications 503
- □ MMT In Gasoline 503
- □ Fuel System Cautions 504
- □ Carbon Monoxide Warnings 504

■ FLUID CAPACITIES 505

■ FLUIDS AND LUBRICANTS 506
- □ Engine 506
- □ Chassis 508

IDENTIFICATION DATA

Vehicle Identification Number

The Vehicle Identification Number (VIN) is found on a label located on the left front corner of the instrument panel pad, visible from outside of the vehicle through the windshield. This number also is stamped on the right front floor, behind the right front seat. Move the right front seat forward to allow better viewing of the stamped VIN. This number also appears on the Automobile Information Disclosure Label affixed to a window on your vehicle. Save this label for a convenient record of your vehicle identification number and optional equipment.

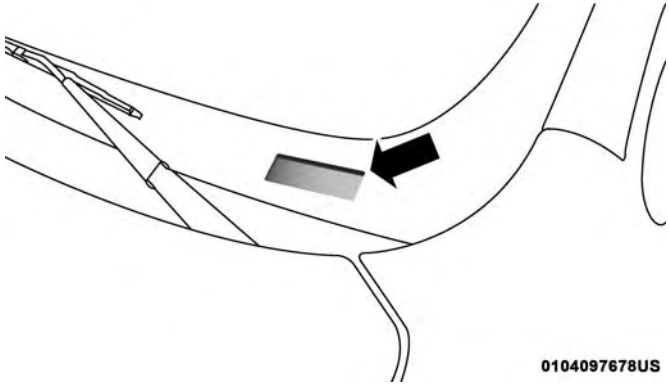

Windshield VIN Label Location

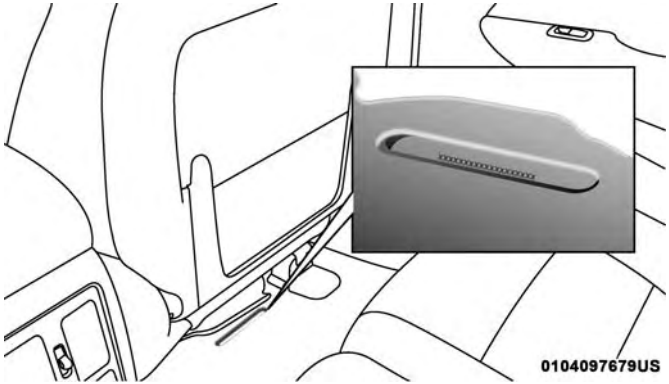

Right Front Body VIN Location

NOTE: It is illegal to remove or alter the VIN.

BRAKE SYSTEM

Your vehicle is equipped with dual hydraulic brake systems. If either of the two hydraulic systems loses normal capability, the remaining system will still function. However, there will be some loss of overall braking effectiveness. You may notice increased pedal travel during application, greater pedal force required to slow or stop, and potential activation of the Brake Warning Light.

In the event power assist is lost for any reason (i.e., repeated brake applications with the engine OFF) the brakes will still function. However, the effort required to brake the vehicle will be much greater than that required with the power system operating.

WHEEL AND TIRE TORQUE SPECIFICATIONS

Proper lug nut/bolt torque is very important to ensure that the wheel is properly mounted to the vehicle. Any time a wheel has been removed and reinstalled on the vehicle, the lug nuts/bolts should be torqued using a properly calibrated torque wrench using a high quality six sided (hex) deep wall socket.

Torque Specifications

Lug Nut/Bolt Torque	**Lug Nut/Bolt Size	Lug Nut/Bolt Socket Size
130 Ft-Lbs (176 N·m)	M14 x 1.50	22 mm

**Use only your authorized dealer recommended lug nuts/bolts and clean or remove any dirt or oil before tightening.

Inspect the wheel mounting surface prior to mounting the tire and remove any corrosion or loose particles.

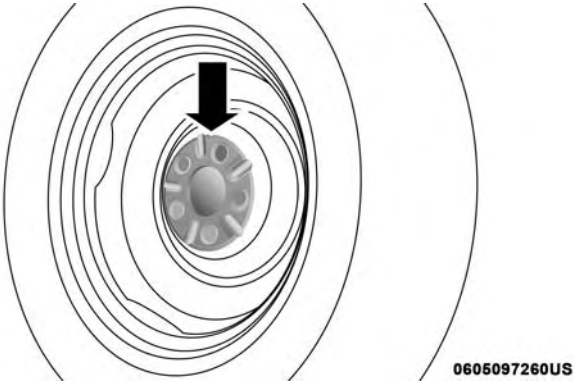

Wheel Mounting Surface

Tighten the lug nuts/bolts in a star pattern until each nut/bolt has been tightened twice. Ensure that the socket is fully engaged on the lug nut/bolt (do not insert it half way).

NOTE: If in doubt about the correct tightness, have them checked with a torque wrench by your authorized dealer or service station.

After 25 miles (40 km), check the lug nut/bolt torque to be sure that all the lug nuts/bolts are properly seated against the wheel.

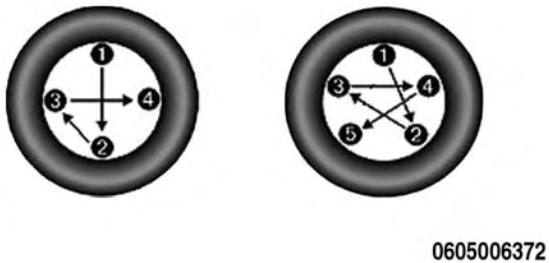

Torque Patterns

WARNING!

To avoid the risk of forcing the vehicle off the jack, do not tighten the lug nuts/bolts fully until the vehicle has been lowered. Failure to follow this warning may result in personal injury.

FUEL REQUIREMENTS

3.6L Engine

Do not use E-85 flex fuel or ethanol blends greater than 15% in this engine.

These engines are designed to meet all emissions regulations and provide optimum fuel economy and performance when using high quality unleaded "Regular" gasoline having a posted octane number of 87 as specified by the (R+M)/2 method. The use of higher octane "Premium" gasoline is not required, as it will not provide any benefit over "Regular" gasoline in these engines.

While operating on gasoline with an octane number of 87, hearing a light knocking sound from the engine is not a cause for concern. However, if the engine is heard making a heavy knocking sound, see an dealer immediately. Use of gasoline with an octane number lower than 87 can cause engine failure and may void or not be covered by the New Vehicle Limited Warranty.

Poor quality gasoline can cause problems such as hard starting, stalling, and hesitations. If you experience these symptoms, try another brand of gasoline before considering service for the vehicle.

5.7L Engine

Do not use E-85 flex fuel or ethanol blends greater than 15% in this engine.

This engine is designed to meet all emissions regulations and provide satisfactory fuel economy and performance when using high-quality unleaded gasoline having an octane range of 87 to 89 as specified by the (R+M)/2 method. The use of 89 octane "Plus" gasoline is recommended for optimum performance and fuel economy.

While operating on gasoline with an octane number of 87, hearing a light knocking sound from the engine is not a cause for concern. However, if the engine is heard making a heavy knocking sound, see your dealer immediately. Use of gasoline with an octane number lower than 87 can cause engine failure and may void or not be covered by the New Vehicle Limited Warranty.

Poor quality gasoline can cause problems such as hard starting, stalling, and hesitations. If you experience these symptoms, try another brand of gasoline before considering service for the vehicle.

Reformulated Gasoline

Many areas of the country require the use of cleaner burning gasoline referred to as "Reformulated Gasoline". Reformulated gasoline contains oxygenates and are specifically blended to reduce vehicle emissions and improve air quality.

The use of reformulated gasoline is recommended. Properly blended reformulated gasoline will provide improved performance and durability of engine and fuel system components.

Materials Added To Fuel

Besides using unleaded gasoline with the proper octane rating, gasolines that contain detergents, corrosion and stability additives are recommended. Using gasolines that have these additives will help improve fuel economy, reduce emissions, and maintain vehicle performance.

Designated TOP TIER Detergent Gasoline contains a higher level of detergents to further aide in minimizing engine and fuel system deposits. When available, the usage of TOP TIER Detergent gasoline is recommended. Visit www.toptiergas.com for a list of TOP TIER Detergent Gasoline Retailers.

Indiscriminate use of fuel system cleaning agents should be avoided. Many of these materials intended for gum and varnish removal may contain active solvents or similar ingredients. These can harm fuel system gasket and diaphragm materials.

Gasoline/Oxygenate Blends

Some fuel suppliers blend unleaded gasoline with oxygenates such as ethanol.

CAUTION!

DO NOT use E-85, gasoline containing methanol, or gasoline containing more than 15% ethanol (E-15). Use of these blends may result in starting and drivability problems, damage critical fuel system components,

(Continued)

CAUTION! ***(Continued)***

cause emissions to exceed the applicable standard, and/or cause the Malfunction Indicator Light to illuminate. Please observe pump labels as they should clearly communicate if a fuel contains greater than 15% ethanol (E-15).

Problems that result from using gasoline containing more than 15% ethanol (E-15) or gasoline containing methanol are not the responsibility of the manufacturer and may void or not be covered under New Vehicle Limited Warranty.

Do Not Use E-85 In Non-Flex Fuel Vehicles

Non-Flex Fuel Vehicles (FFV) are compatible with gasoline containing up to 15% ethanol (E-15). Use of gasoline with higher ethanol content may void the New Vehicle Limited Warranty.

If a Non-FFV vehicle is inadvertently fueled with E-85 fuel, the engine will have some or all of these symptoms:

- Operate in a lean mode.
- OBD II Malfunction Indicator Light on.
- Poor engine performance.
- Poor cold start and cold drivability.
- Increased risk for fuel system component corrosion.

CNG And LP Fuel System Modifications

Modifications that allow the engine to run on Compressed Natural Gas (CNG) or Liquid Propane (LP) may result in damage to the engine, emissions, and fuel system components. Problems that result from running CNG or LP are not the responsibility of the manufacturer and may void or not be covered under the New Vehicle Limited Warranty.

MMT In Gasoline

Methylcyclopentadienyl Manganese Tricarbonyl (MMT) is a manganese-containing metallic additive that is blended into some gasoline to increase octane. Gasoline blended with MMT provides no performance advantage beyond gasoline of the same octane number without MMT. Gasoline blended with MMT reduces spark plug life and reduces emissions system performance in some vehicles. The manufacturer recommends that gasoline without MMT be used in your vehicle. The MMT content of gasoline may not be indicated on the gasoline pump; therefore, you should ask your gasoline retailer whether the gasoline contains MMT. MMT is prohibited in Federal and California reformulated gasoline.

Fuel System Cautions

CAUTION!

Follow these guidelines to maintain your vehicle's performance:

- **The use of leaded gasoline is prohibited by Federal law. Using leaded gasoline can impair engine performance and damage the emissions control system.**
- **An out-of-tune engine or certain fuel or ignition malfunctions can cause the catalytic converter to overheat. If you notice a pungent burning odor or some light smoke, your engine may be out of tune or malfunctioning and may require immediate service. Contact an authorized dealer for service assistance.**
- **The use of fuel additives, which are now being sold as octane enhancers, is not recommended. Most of these products contain high concentrations of methanol. Fuel system damage or vehicle performance problems resulting from the use of such fuels or additives is not the responsibility of the manufacturer and may void or not be covered under the New Vehicle Limited Warranty.**

NOTE: Intentional tampering with the emissions control system can result in civil penalties being assessed against you.

Carbon Monoxide Warnings

WARNING!

Carbon monoxide (CO) in exhaust gases is deadly. Follow the precautions below to prevent carbon monoxide poisoning:

- **Do not inhale exhaust gases. They contain carbon monoxide, a colorless and odorless gas, which can kill. Never run the engine in a closed area, such as a garage, and never sit in a parked vehicle with the engine running for an extended period. If the vehicle is stopped in an open area with the engine running for more than a short period, adjust the ventilation system to force fresh, outside air into the vehicle.**
- **Guard against carbon monoxide with proper maintenance. Have the exhaust system inspected every time the vehicle is raised. Have any abnormal conditions repaired promptly. Until repaired, drive with all side windows fully open.**

FLUID CAPACITIES

	U.S.	Metric
Fuel (Approximate)		
3.6L Engine	24.6 Gallons	93.1 Liters
5.7L Engine	24.6 Gallons	93.1 Liters
Engine Oil With Filter		
3.6L Engine (SAE 0W-20, API Certified)	6 Quarts	5.6 Liters
5.7L Engine (SAE 0W-20, API Certified)	7 Quarts	6.6 Liters
Cooling System*		
3.6L Engine (Mopar Antifreeze/Engine Coolant 10 Year/150,000 Mile Formula or equivalent)	10.4 Quarts	9.9 Liters
5.7L Engine (Mopar Antifreeze/Engine Coolant 10 Year/150,000 Mile Formula or equivalent) – Without Trailer Tow Package	15.4 Quarts	14.6 Liters
5.7L Engine (Mopar Antifreeze/Engine Coolant 10 Year/150,000 Mile Formula or equivalent) – With Trailer Tow Package	16 Quarts	15.2 Liters
* Includes heater and coolant recovery bottle filled to MAX level.		

FLUIDS AND LUBRICANTS

Engine

Component	Fluid, Lubricant, or Genuine Part
Engine Coolant	We recommend you use Mopar Antifreeze/Coolant 10 Year/150,000 Mile Formula OAT (Organic Additive Technology).
Engine Oil – 3.6L Engine	We recommend you use API Certified SAE 0W-20 Engine Oil, meeting the requirements of FCA Material Standard MS-6395 such as Mopar, Pennzoil, and Shell Helix. Refer to your engine oil filler cap for correct SAE grade.
Engine Oil – 5.7L Engine	We recommend you use API Certified SAE 5W-20 Engine Oil, meeting the requirements of FCA Material Standard MS-6395 such as Mopar, Pennzoil, and Shell Helix. Refer to your engine oil filler cap for correct SAE grade.
Engine Oil Filter	We recommend you use Mopar Engine Oil Filter or equivalent.
Spark Plugs	We recommend you use Mopar Spark Plugs.
Fuel Selection – 3.6L Engine	87 Octane, 0-15% Ethanol (Do Not Use E-85).
Fuel Selection – 5.7L Engine	89 Octane Recommended - 87 Octane Acceptable, 0-15% Ethanol (Do Not Use E-85).

CAUTION!

- **Mixing of engine coolant (antifreeze) other than specified Organic Additive Technology (OAT) engine coolant (antifreeze), may result in engine damage and may decrease corrosion protection. Organic Additive Technology (OAT) engine coolant is different and should not be mixed with Hybrid Organic Additive Technology (HOAT) engine coolant (antifreeze) or any "globally compatible" coolant (antifreeze). If a non-OAT engine coolant (antifreeze) is introduced into the cooling system in an emergency, the cooling system will need to be drained, flushed, and refilled with fresh OAT coolant (conforming to MS.90032), by an authorized dealer as soon as possible.**

(Continued)

CAUTION! *(Continued)*

- **Do not use water alone or alcohol-based engine coolant (antifreeze) products. Do not use additional rust inhibitors or antirust products, as they may not be compatible with the radiator engine coolant and may plug the radiator.**
- **This vehicle has not been designed for use with propylene glycol-based engine coolant (antifreeze). Use of propylene glycol-based engine coolant (antifreeze) is not recommended.**

Chassis

Component	Fluid, Lubricant, or Genuine Part
Automatic Transmission	Use only Mopar ZF 8&9 Speed ATF Automatic Transmission Fluid or equivalent. Failure to use the correct fluid may affect the function or performance of your transmission.
Transfer Case – Single-Speed (Quadra-Trac I)	We recommend you use Automatic Transmission Fluid 3353.
Transfer Case – Two-Speed (Quadra-Trac II)	We recommend you use Mopar ATF+4 Automatic Transmission Fluid.
Axle Differential (Front)	We recommend you use Mopar GL-5 Synthetic Axle Lubricant SAE 75W-85.
Axle Differential (Rear) – With Electronic Limited-Slip Differential (ELSD)	We recommend you use Mopar GL-5 Synthetic Axle Lubricant SAE 75W-85 with friction modifier.
Axle Differential (Rear) – Without Electronic Limited-Slip Differential (ELSD)	We recommend you use Mopar GL-5 Synthetic Axle Lubricant SAE 75W-85.
Brake Master Cylinder	We recommend you use Mopar DOT 3 Brake Fluid, SAE J1703 should be used.

MULTIMEDIA

CONTENTS

- UCONNECT SYSTEMS 511
- DRAG & DROP MENU BAR 511
- CYBERSECURITY 512
- UCONNECT SETTINGS 513
  - Customer Programmable Features — Uconnect 4 Settings 514
  - Customer Programmable Features — Uconnect 4C/4C NAV Settings 536
- OFF ROAD PAGES — IF EQUIPPED 557
  - Off Road Pages Status Bar. 558
  - Vehicle Dynamics. 559
  - Suspension 560
  - Pitch And Roll. 561
  - Accessory Gauges 562
  - Selec-Terrain — If Equipped 563
- STEERING WHEEL AUDIO CONTROLS — IF EQUIPPED 564
  - Radio Operation. 564
  - Media Mode 564
- IPOD/USB/MP3 CONTROL — IF EQUIPPED . . .565
- UCONNECT REAR SEAT ENTERTAINMENT (RSE) SYSTEM — IF EQUIPPED 565
  - Getting Started 565
  - Dual Video Screen 567
  - Blu-ray Disc Player. 567
  - Play Video Games 570
  - Play A DVD/Blu-ray Disc Using The Touchscreen Radio 570

- Important Notes For Dual Video Screen System 572
- Blu-ray Disc Player Remote Control — If Equipped 573
- Headphones Operation 574
- Controls 574
- Replacing The Headphone Batteries 575
- Accessibility — If Equipped 575
- Stereo Headphone Lifetime Limited Warranty . . .576

■ RADIO OPERATION AND MOBILE PHONES . . .581

- Regulatory And Safety Information 581

■ UCONNECT VOICE RECOGNITION QUICK TIPS 582

- Introducing Uconnect 582
- Get Started 583
- Basic Voice Commands 584
- Radio 584
- Media 585
- Phone 586
- Voice Text Reply — If Equipped 587
- Climate 589
- Navigation (4C NAV) — If Equipped 590
- SiriusXM Guardian (4C/4C NAV) — If Equipped 591
- Register (4C/4C NAV) 591
- Vehicle Health Report/Alert (4C/4C NAV) 592
- Mobile App (4C/4C NAV) 592
- SiriusXM Travel Link (4C NAV) 593
- Siri Eyes Free — If Equipped 594
- Do Not Disturb 595
- Android Auto — If Equipped 595
- Apple CarPlay — If Equipped 597
- General Information 599
- Additional Information 599

■ CD/DVD DISC MAINTENANCE 599

UCONNECT SYSTEMS

For detailed information about your Uconnect system, refer to your Uconnect Owner's Manual Supplement.

NOTE: Uconnect screen images are for illustration purposes only and may not reflect exact software for your vehicle.

DRAG & DROP MENU BAR

The Uconnect features and services in the main menu bar are easily changed for your convenience. Simply follow these steps:

Uconnect 4 Apps Menu

Uconnect 4C/4C NAV Apps Menu

1. Press the "Apps ⓤ" button to open the App screen.
2. Press and hold, then drag the selected App to replace an existing shortcut in the main menu bar.

The new shortcut will now be an active App/shortcut on the main menu bar.

CYBERSECURITY

Your vehicle may be a connected vehicle and may be equipped with both wired and wireless networks. These networks allow your vehicle to send and receive information. This information allows systems and features in your vehicle to function properly.

Your vehicle may be equipped with certain security features to reduce the risk of unauthorized and unlawful access to vehicle systems and wireless communications. Vehicle software technology continues to evolve over time and FCA US LLC, working with its suppliers, evaluates and takes appropriate steps as needed. Similar to a computer or other devices, your vehicle may require software updates to improve the usability and performance of your systems or to reduce the potential risk of unauthorized and unlawful access to your vehicle systems.

The risk of unauthorized and unlawful access to your vehicle systems may still exist, even if the most recent version of vehicle software (such as Uconnect software) is installed.

WARNING!

- **It is not possible to know or to predict all of the possible outcomes if your vehicle's systems are breached. It may be possible that vehicle systems, including safety related systems, could be impaired or a loss of vehicle control could occur that may result in an accident involving serious injury or death.**
- **ONLY insert media (e.g., USB, SD card, or CD) into your vehicle if it came from a trusted source. Media of unknown origin could possibly contain malicious software, and if installed in your vehicle, it may increase the possibility for vehicle systems to be breached.**
- **As always, if you experience unusual vehicle behavior, take your vehicle to your nearest authorized dealer immediately.**

NOTE:

- FCA US LLC or your dealer may contact you directly regarding software updates.
- To help further improve vehicle security and minimize the potential risk of a security breach, vehicle owners should:
  - Routinely check www.driveuconnect.com (U.S. Residents) or www.driveuconnect.ca (Canadian Residents) to learn about available Uconnect software updates.
  - Only connect and use trusted media devices (e.g. personal mobile phones, USBs, CDs).

Privacy of any wireless and wired communications cannot be assured. Third parties may unlawfully intercept information and private communications without your consent. For further information, refer to “Data Collection & Privacy” in your Uconnect Owner’s Manual Supplement or “Onboard Diagnostic System (OBD II) Cybersecurity” in “Getting To Know Your Instrument Panel”.

UCONNECT SETTINGS

The Uconnect system uses a combination of buttons on the touchscreen and buttons on the faceplate located on the center of the instrument panel that allow you to access and change the customer programmable features. Many features can vary by vehicle.

Uconnect 4 Buttons On Touchscreen And Buttons On Faceplate

1 — Uconnect Buttons On The Touchscreen
2 — Uconnect Buttons On The Faceplate

Uconnect 4C/4C NAV Buttons On Faceplate And Buttons On Touchscreen

1 — Uconnect Buttons On The Touchscreen
2 — Uconnect Buttons On The Faceplate

Customer Programmable Features — Uconnect 4 Settings

Press the "Apps" button, then press the "Settings" button on the touchscreen to display the menu setting screen. In this mode the Uconnect system allows you to access programmable features that may be equipped such as Display, Units, Voice, Clock, Safety & Driving Assistance, Lights, Doors & Locks, Auto-On Comfort, Engine Off Options, Audio, Phone/Bluetooth, SiriusXM Setup, Restore Settings, Clear Personal Data, and System Information.

NOTE: Only one touchscreen area may be selected at a time.

When making a selection, press the button on the touchscreen to enter the desired mode. Once in the desired mode, press and release the preferred setting and make your selection. Once the setting is complete, either press the Back Arrow/Done button on the touchscreen or the Back button on the faceplate to return to the previous menu or press the "X" button on the touchscreen to close out of the settings screen. Pressing the "Up" or "Down" Arrow buttons on the right side of the screen will allow you to toggle up or down through the available settings.

NOTE: All settings should be changed with the ignition in the RUN position.

Display

After pressing the "Display" button on the touchscreen, the following settings will be available:

Setting Name	Selectable Options	
Display Mode	Auto	Manual
Display Brightness With Headlights On	-	+
NOTE: To make changes to the "Display Brightness With Headlights ON" setting, the headlights must be on and the interior dimmer switch must not be in the "party" or "parade" positions.		
Display Brightness With Headlights Off	-	+
NOTE: To make changes to the "Display Brightness With Headlights OFF" setting, the headlights must be off and the interior dimmer switch must not be in the "party" or "parade" positions.		
AutoShow Smartphone Display Upon Connection	On	Off
Touchscreen Beep	On	Off
Control Screen Time-Out — If Equipped	On	Off

Units

After pressing the “Units” button on the touchscreen, the following settings will be available:

Setting Name	Selectable Options		
Units	US	Metric	Custom
NOTE: The “Custom” option allows you to set the “Speed” (MPH, or km/h), “Distance” (mi, or km), “Fuel Consumption” [MPG (US), MPG (UK), L/100 km, or km/L], “Pressure” (psi, kPa, or bar), and “Temperature” (°C, or °F) units of measure independently.			

Voice

After pressing the “Voice” button on the touchscreen, the following settings will be available:

Setting Name	Selectable Options		
Voice Response Length	Brief	Detailed	
Show Command List	Never	With Help	Always

Clock & Date

After pressing the "Clock & Date" button on the touchscreen, the following settings will be available:

Setting Name	Selectable Options	
Set Time and Format	12 hour	24 hour
	AM	PM
NOTE: Within the "Set Time and Format" setting, press the corresponding arrow buttons on the touchscreen to adjust to the correct time.		
Set Date — If Equipped	Up Arrow	Down Arrow
NOTE: Within the "Set Date" setting, press the corresponding arrow buttons on the touchscreen to adjust to the correct date.		

Safety/Assistance

After pressing the “Safety/Assistance” button on the touchscreen, the following settings will be available:

Setting Name	Selectable Options	
ParkView Backup Camera Delay — If Equipped	On	Off
NOTE: The “ParkView Backup Camera Delay” setting determines whether or not the screen displays the rear view image with dynamic grid lines for up to ten seconds after the vehicle is shifted out of REVERSE. This delay cancels if the vehicle’s speed exceeds 8 mph (13 km/h), the transmission is shifted into PARK, or the ignition is switched to the OFF position.		
ParkView Backup Camera Active Guide Lines — If Equipped	On	Off
NOTE: The “ParkView Backup Camera Active Guide Lines” feature overlays the Rear Backup Camera image with active, or dynamic, grid lines to help illustrate the width of the vehicle and its project back up path, based on the steering wheel position when the option is checked. A dashed center line overlay indicates the center of the vehicle to assist with parking or aligning to a hitch/receiver.		

Setting Name	Selectable Options		
Forward Collision Warning — If Equipped	Off	Warning Only	Warning & Braking
NOTE: Changing the FCW status to “Off” prevents the system from warning you of a possible collision with the vehicle in front of you. The FCW system state is kept in memory from one ignition cycle to the next. If the system is turned OFF, it will remain off when the vehicle is restarted. Forward Collision Warning includes Advanced Brake Assist (ABA). The ABA applies additional brake pressure when the driver requests insufficient brake pressure to avoid a potential frontal collision. When the “Sound Only” option is selected a chime sounds alerting you of a possible collision with the vehicle in front of you and more brake pressure is needed. When the “Sound and Brake” option is selected, it applies the brakes to slow your vehicle in case of potential forward collision and sound an audible chime to alert you.			
Forward Collision Warning Sensitivity — If Equipped	Far	Med	Near
NOTE: The “Forward Collision Warning Sensitivity” setting determines at what relative distance the vehicle directly in front of you needs to be at, before the system warns you of a possible collision with the vehicle directly in front of you, based on the option is selected. “Far” gives you the most amount of reaction time, whereas “Near” will give you the least amount of reaction time, based on the distance between the two vehicles.			

Setting Name	Selectable Options		
ParkSense — If Equipped	Sound Only	Sound & Display	
NOTE: The "ParkSense" system setting scans for objects behind the vehicle when the transmission gear selector is in REVERSE and the vehicle speed is less than 7 mph (11 km/h), when enabled. It provides an alert (audible and/or visual) to indicate the proximity to other objects. The system can be enabled with "Sound Only," or "Sound & Display."			
Front ParkSense Volume	Low	Medium	High
Rear ParkSense Volume	Low	Medium	High
Rear ParkSense Braking Assist — If Equipped	On	Off	
NOTE: When the "Rear ParkSense Braking Assist" feature is selected, the park assist system detects objects located behind the vehicle and utilize autonomous braking to stop the vehicle.			
LaneSense Warning— If Equipped	Early	Medium	Late
NOTE: The "LaneSense Warning" setting determines at what distance the LaneSense system warns you, through steering wheel feedback, of a possible lane departure.			

Setting Name	Selectable Options		
LaneSense Strength (LDW) — If Equipped	Low	Medium	High
Blind Spot Alert — If Equipped	Off	Lights	Lights & Chime
NOTE: When the "Blind Spot Alert" feature is selected, the Blind Spot Monitor (BSM) system is activated and shows a visual alert in the outside mirrors, or it shows a visual alert in the outside mirrors as well as play an audible alert when the turn signal is on. When "Off" is selected, the Blind Spot Monitor (BSM) system is deactivated. If your vehicle has experienced any damage in the area where the sensor is located, even if the fascia is not damaged, the sensor may have become misaligned. Take your vehicle to an authorized dealer to verify sensor alignment. A sensor that is misaligned results in the BSM not operating to specification.			
Rain Sensing Auto Wipers — If Equipped	On	Off	
Hill Start Assist — If Equipped	On	Off	
Tilt Mirrors in Reverse	On	Off	
Paddle Shifters	Enable	Disable	

Setting Name	Selectable Options		
Steering Feel Options	Sport	Normal	Comfort

NOTE:
The "Steering Feel Options" setting allows you to adjust the steering effort and feel. Press the "Comfort" button on the touchscreen to provide a balance of steering feel and steering effort. Press the "Normal" button on the touchscreen to provide greater steering feel, requiring greater steering effort. Press the "Sport" button on the touchscreen to provide the greatest amount of steering feel, requiring the highest amount of steering effort.

Lights

After pressing the "Lights" button on the touchscreen, the following settings will be available:

Setting Name	Selectable Options	
Headlight Off Delay	0 sec	30 sec
	60 sec	90 sec

NOTE:
When the "Headlight Off Delay" feature is selected, it allows the adjustment of the amount of time the headlights remain on after the engine is shut off.

Setting Name	Selectable Options	
Headlight Illumination On Approach	0 sec	30 sec
	60 sec	90 sec
NOTE: When this feature is selected, it allows the adjustment of the amount of time the headlights remain on after the doors are unlocked with the key fob.		
Headlights With Wipers — If Equipped	On	Off
Auto High Beam — If Equipped	On	Off
NOTE: When the "Auto High Beams" is selected, the high beam headlights will activate/deactivate automatically under certain conditions.		
Daytime Running Lights	On	Off
Flash Lights With Lock	On	Off

Doors & Locks

After pressing the "Doors & Locks" button on the touchscreen, the following settings will be available:

Setting Name	Selectable Options		
Auto Door Locks	On		Off
NOTE: The "Auto Door Locks" feature locks all doors automatically when the vehicle reaches a speed of 12 mph (20 km/h).			
Auto Unlock On Exit	On		Off
NOTE: When the "Auto Unlock On Exit" feature is selected, all doors unlock when the vehicle is stopped, the transmission is in the PARK or NEUTRAL position, and the driver's door is opened.			
Flash Lights With Lock	On		Off
Sound Horn With Lock	Off	1st Press	2nd Press
Sound Horn With Remote Start — If Equipped	On		Off

Setting Name	Selectable Options	
Remote Door Unlock	Driver Door	All Doors
NOTE: When "Driver" is selected, only the driver's door unlocks on the first push of the key fob unlock button, you must push the key fob unlock button twice to unlock the passenger's doors. When "All" is selected, all of the doors unlocks on the first press of the key fob unlock button. If "All" is programmed, all doors unlock no matter which Passive Entry equipped door handle is grasped. If "Driver" is programmed, only the driver's door unlocks when the driver's door is grasped. Touching the handle more than once only results in the driver's door opening once. If the driver's door is opened, the interior door lock/unlock switch can be used to unlock all doors (or use key fob).		
Passive Entry	On	Off
Memory Linked To FOB — If Equipped	On	Off
NOTE: The "Memory Linked To FOB" feature provides automatic recall of all settings stored to a memory location (driver's seat, exterior mirrors, steering column position and radio station pre-sets) to enhance driver mobility when entering and exiting the vehicle.		
Power Liftgate Alert — If Equipped	On	Off
NOTE: The "Power Liftgate Alert" feature plays an alert when the power liftgate is raising or lowering.		

Auto-On Comfort — If Equipped

After pressing the "Auto-On Comfort & Remote Start" button on the touchscreen, the following settings will be available:

Setting Name	Selectable Options		
Auto-On Driver Heated Seat & Steering Wheel — If Equipped	Off	Remote Start	All Starts

NOTE:
When this feature is selected, the driver's heated seat and heated steering wheel will automatically turn ON when temperatures are below 40° F (4.4° C). When temperatures are above 80° F (26.7° C), the driver vented seat will turn ON.

Engine Off Options

After pressing the "Engine Off Options" button on the touchscreen, the following settings will be available:

Setting Name	Selectable Options			
Engine Off Power Delay — If Equipped	0 sec	45 sec	5 min	10 min

NOTE:
When the "Engine Off Power Delay" feature is selected, the power window switches, radio, Uconnect Phone system (if equipped), power sunroof (if equipped), and power outlets will remain active for up to ten minutes after the ignition is cycled to OFF. Opening either front door will cancel this feature.

Setting Name	Selectable Options			
Headlight Off Delay	0 sec	30 sec	60 sec	90 sec
NOTE: When the "Headlight Off Delay" feature is selected, it allows the adjustment of the amount of time the headlights remain on after the engine is shut OFF.				
Easy Exit Seat — If Equipped	On		Off	
NOTE: When the "Easy Exit Seat" feature is selected, it provides automatic driver seat positioning to enhance driver mobility when entering and exiting the vehicle.				
Auto Entry/Exit — If Equipped	On		Off	
NOTE: The "Auto Entry/Exit" feature automatically lowers the vehicle ride height position when shifted into PARK, when it is selected.				

Compass Settings — If Equipped

After pressing the "Compass Settings" button on the touchscreen, the following settings will be available:

NOTE: Before compass calibration is performed, the compass variance zone should be set for best results.

Setting Name	Selectable Options														
Compass Variance	1	2	3	4	5	6	7	8	9	10	11	12	13	14	15
When the "Compass Variance" feature is selected, it allows the compass variance to be set to any number from 1 to 15 per the compass variance zone map figure. Compass Variance is the difference between Magnetic North and Geographic North. To compensate for the differences, the variance should be set for the zone where the vehicle is being driven, illustrated in the zone map. Once properly set, the compass will automatically compensate for the differences when calibrated, and provide the most accurate compass headings.															

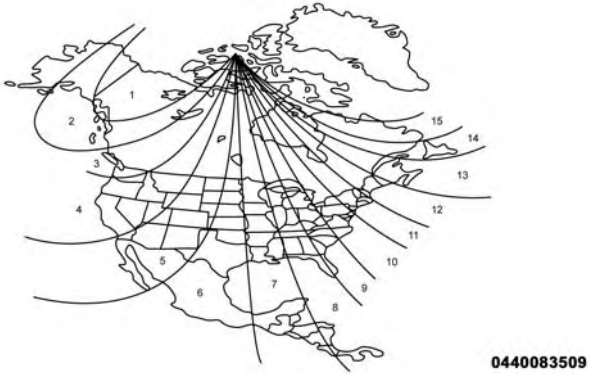

Compass Variance Zone Map

Compass Calibration	Start
NOTE: Press “Compass Calibration” on the touchscreen to enter calibration. To start calibration of the compass, press the “Yes” button on the touchscreen and complete one or more 360-degree turns (in an area free from large metal or metallic objects). A message will appear on the touchscreen when the compass has been successfully calibrated. Keep magnetic materials away from the rear view mirror, such as Mobile Phones, Laptops and Radar Detectors. This is where the compass module is located, and it can cause interference with the compass sensor, and it may give false readings.	

Audio

After pressing the "Audio" button on the touchscreen, the following settings will be available:

Setting Name	Selectable Options				
Balance/Fade	Up Arrow Button	Down Arrow Button	Left Arrow Button	Right Arrow Button	Center "C" Button
NOTE: When in this display you may adjust the "Balance/Fade" of the audio by using the "Arrow" button on the touchscreen to adjust the sound level from the front and rear or right and left side speakers. Press the "Center 'C' Button" on the touchscreen to reset the balance and fade to the factory setting.					
Equalizer	Bass		Mid		Treble
NOTE: When in this display you may adjust the "Bass", "Mid", and "Treble" settings. Adjust the settings with the "+" and "–" setting buttons on the touchscreen or by selecting any point on the scale between the "+" and "–" buttons on the touchscreen. Bass/Mid/Treble also allow you to simply slide your finger up or down to change the setting as well as press directly on the desired setting.					
Speed Adjusted Volume	Off	1		2	3
Surround Sound — If Equipped	On		Off		

Setting Name	Selectable Options	
Auto Play	On	Off
NOTE: When selecting the "Auto Play" sub setting, a message will pop up stating "USB devices will automatically play media when AutoPlay is turned On."		
Loudness — If Equipped	Yes	No
NOTE: This feature improves sound quality at lower volumes when enabled.		
AUX Volume Offset — If Equipped	-3	+3
NOTE: This feature provides the ability to tune the audio level for portable devices connected through the AUX input.		

Phone/Bluetooth

After pressing the "Phone/Bluetooth" button on the touchscreen, the following settings will be available:

Setting Name	Selectable Options
Do Not Disturb	List of Settings
NOTE: Press "Do Not Disturb" to access the available settings. The following settings are: Auto Reply (both, text, call), Auto Reply Message (custom, default) and Custom Auto Reply Message (create message).	

Setting Name	Selectable Options	
Paired Phones And Audio Devices	List of Paired Phones	
NOTE: The "Paired Phones and Audio Devices" feature shows which phones and audio devices are paired to the Phone/ Bluetooth system. For further information, refer to the Uconnect Owner's Manual Supplement.		
Display Phone Info In Cluster — If Equipped	Off	On

Suspension — If Equipped

After pressing the "Suspension" button on the touchscreen, the following settings will be available:

Setting Name	Selectable Options	
Auto Entry/Exit Suspension	On	Off
NOTE: When the "Auto Entry/Exit Suspension" setting is selected, the vehicle automatically lowers from ride height position when the vehicle is shifted to PARK for easy entry/exit.		
Display Suspension Messages	All	Warnings Only
NOTE: The "Display Suspension Messages" setting allows you to choose whether you want the Suspension system to display all suspension messages, or to only display suspension warnings.		

Setting Name	Selectable Options	
Tire Jack Mode	On	Off
NOTE: When the “Tire Jack Mode” setting is selected, the air suspension system is disabled to prevent auto leveling of the suspension while the vehicle is on a jack, changing a tire.		
Transport Mode	On	Off
NOTE: When the “Transport Mode” setting is selected, the air suspension system is disabled to assist with flat bed towing.		
Wheel Alignment Mode	On	Off
NOTE: The “Wheel Alignment Mode” setting prevents auto leveling of the air suspension while performing a wheel alignment service.		

SiriusXM Setup — If Equipped

After pressing the "SiriusXM Setup" button on the touchscreen, the following settings will be available:

Setting Name	Selectable Options	
Tune Start	Off	On
NOTE: The "Tune Start" feature begins playing the current song from the beginning when you tune to a music channel using one of the twelve presets, so you can enjoy the complete song. This feature occurs the first time the preset is selected during that current song. Tune Start works in the background, so you will not even realize it's on, except that you will miss the experience of joining your favorite song with only a few seconds left to play.		
Channel Skip	List of Channels	
NOTE: SiriusXM can be programmed to designate a group of channels that are the most desirable to listen to or to exclude undesirable channels while scanning. This feature allows you to select the channels you would like to skip.		
Subscription Info	Sirius ID	
NOTE: New vehicle purchasers or lessees will receive a free limited time subscription to SiriusXM Satellite Radio with your radio. Following the expiration of the free services, it will be necessary to access the information on the Subscription Information screen to re-subscribe. 1. Press the "Subscription Info" button on the touchscreen to access the Subscription Information screen. 2. Write down the Sirius ID numbers for your receiver. To reactivate your service, either call the number listed on the screen or visit the provider online.		

Restore Settings

After pressing the "Restore Settings" button on the touchscreen, the following settings will be available:

Setting Name	Selectable Options	
Restore Settings	OK	Cancel
NOTE: When this feature is selected, it will reset all settings to their default settings.		

Clear Personal Data

After pressing the "Clear Personal Data" button on the touchscreen, the following settings will be available:

Setting Name	Selectable Options	
Clear Personal Data	OK	Cancel
NOTE: When the "Clear Personal Data" feature is selected, it will remove all personal data including Bluetooth devices and presets.		

System Information — If Equipped

After pressing the "System Information" button on the touchscreen, the following settings will be available:

Setting Name	Selectable Options
System Information	System Software Information Screen
NOTE: When this feature is selected, a "System Information" screen will appear, displaying the system software version.	

Customer Programmable Features — Uconnect 4C/4C NAV Settings

Press the "Apps " button, then press the "Settings" button on the touchscreen to display the menu setting screen. In this mode the Uconnect system allows you to access programmable features that may be equipped such as Language, Display, Units, Voice, Clock, Safety & Driving Assistance, Mirrors & Wipers, Lights, Doors & Locks, Auto-On Comfort, Engine Off Options, Suspension, Audio, Phone/Bluetooth, SiriusXM Setup, Accessibility, Reset, and System Information.

NOTE: Depending on the vehicles options, feature settings may vary.

When making a selection, press the button on the touchscreen to enter the desired mode. Once in the desired mode, press and release the preferred setting "option" until a check-mark appears next to the setting, showing that setting has been selected. Once the setting is complete, either press the "Back" Arrow button on the touchscreen to return to the previous menu, or press the "X" button on the touchscreen to close out of the settings screen. Pressing the "Up" or "Down" Arrow button on the right side of the screen will allow you to toggle up or down through the available settings.

Language

After pressing the “Language” button on the touchscreen, the following settings will be available:

Setting Name	Selectable Options		
Language	English	Espanol	Francais
When the “Set Language” feature is selected, you may select one of multiple languages (English / Français / Español) for all display nomenclature, including the trip functions and the navigation system (if equipped). Press the “Set Language” button on the touchscreen, then press the desired language button on the touchscreen until a check-mark appears next to the language, showing that setting has been selected.			

Display

After pressing the “Display” button on the touchscreen, the following settings will be available:

Setting Name	Selectable Options	
Display Mode	Auto	Manual
Display Brightness With Headlights ON	+	-
NOTE: To make changes to the ″Display Brightness With Headlights ON″ setting, the headlights must be on and the interior dimmer switch must not be in the ″party″ or ″parade″ positions.		

Setting Name	Selectable Options	
Display Brightness With Headlights OFF	+	-
NOTE: To make changes to the "Display Brightness With Headlights OFF" setting, the headlights must be off and the interior dimmer switch must not be in the "party" or "parade" positions.		
Set Theme — If Equipped	On	Off
NOTE: When the "Set Theme" feature is selected, you may select the theme for the display screen. To make your selection, press the "Set Theme" button on the touchscreen, then select the desired theme option button until a check-mark appears showing that the setting has been selected.		
Touchscreen Beep	On	Off
Control Screen Time-Out — If Equipped	On	Off
NOTE: When the "Control Screen Time-Out" feature is selected, the Controls Screen will stay open for five seconds before the screen times out. With the feature deselected, the screen will stay open until it is manually closed.		

Setting Name	Selectable Options	
Navigation Turn-By-Turn In Cluster — If Equipped	On	Off
NOTE: When the "Navigation Turn-By-Turn In Cluster" feature is selected, the turn-by-turn directions will appear in the instrument cluster display as the vehicle approaches a designated turn within a programmed route.		
Phone Pop-ups Displayed In Cluster	On	Off

Units

After pressing the "Units" button on the touchscreen, the following settings will be available:

Setting Name	Selectable Options		
Units	US	Metric	Custom
NOTE: The "Custom" option allows you to set the "Speed" (MPH, or km/h), "Distance" (mi, or km), "Fuel Consumption" [MPG (US), MPG (UK), L/100 km, or km/L], "Pressure" (psi, kPa, or bar), and "Temperature" (°C, or °F) units of measure independently.			

Voice

After pressing the "Voice" button on the touchscreen, the following settings will be available:

Setting Name	Selectable Options		
Voice Response Length	Brief	Detailed	
Show Command List	Always	With Help	Never

Clock

After pressing the "Clock" button on the touchscreen, the following settings will be available:

Setting Name	Selectable Options	
Sync Time With GPS	On	Off
Set Time Hours	+	-
NOTE: The "Set Time Hours" feature will allow you to adjust the hours. The "Sync time with GPS" button on the touch-screen must be unchecked.		
Set Time Minutes	+	-
NOTE: The "Set Time Minutes" feature will allow you to adjust the minutes. The "Sync time with GPS" button on the touch-screen must be unchecked.		
Time Format	12hrs	24hrs
Show Time in Status Bar — If Equipped	On	Off

Safety/Assistance

After pressing the "Safety/Assistance" button on the touchscreen, the following settings will be available:

Setting Name	Selectable Options	
ParkView Backup Camera Delay	On	Off
NOTE: The "ParkView Backup Camera Delay" setting determines whether or not the screen will display the rear view image with dynamic grid lines for up to ten seconds after the vehicle is shifted out of REVERSE. This delay will be canceled if the vehicle's speed exceeds 8 mph (13 km/h), the transmission is shifted into PARK, or the ignition is switched to the OFF position.		
Active ParkView Backup Camera Guidelines	On	Off
NOTE: The "Active ParkView Backup Camera Guidelines" feature overlays the Rear Backup Camera image with active, or dynamic, grid lines to help illustrate the width of the vehicle and its project back up path, based on the steering wheel position when the option is checked. A dashed center line overlay indicates the center of the vehicle to assist with parking or aligning to a hitch/receiver.		

Setting Name	Selectable Options		
Forward Collision Warning — If Equipped	Off	Only Warning	Warning & Active Braking
NOTE: Changing the FCW status to “Off” prevents the system from warning you of a possible collision with the vehicle in front of you. The FCW system state is kept in memory from one ignition cycle to the next. If the system is turned OFF, it remains off when the vehicle is restarted. Forward Collision Warning includes Advanced Brake Assist (ABA). The ABA applies additional brake pressure when the driver requests insufficient brake pressure to avoid a potential frontal collision. When the “Only Warning” option is selected a chime sound alerting you of a possible collision with the vehicle in front of you and more brake pressure is needed. When the “Warning & Active Braking” option is selected, it applies the brakes to slow your vehicle in case of potential forward collision and sound an audible chime to alert you.			
Forward Collision Warning Sensitivity — If Equipped	Near	Med	Far
NOTE: The “Forward Collision Warning Plus (FCW+) Sensitivity” setting determines at what relative distance the vehicle directly in front of you needs to be at, before the system warns you of a possible collision with the vehicle directly in front of you, based on the option is selected. “Far” gives you the most amount of reaction time, whereas “Near” gives you the least amount of reaction time, based on the distance between the two vehicles.			

Setting Name	Selectable Options		
LaneSense Warning — If Equipped	Early	Med	Late
NOTE: The "LaneSense Warning" setting determines at what distance the LaneSense system warns you, through steering wheel feedback, of a possible lane departure.			
LaneSense Strength — If Equipped	Low	Med	High
ParkSense — If Equipped	Sound	Sound & Display	
NOTE: The "ParkSense" system setting scans for objects behind the vehicle when the transmission gear selector is in REVERSE and the vehicle speed is less than 7 mph (11 km/h), when enabled. It provides an alert (audible and/or visual) to indicate the proximity to other objects. The system can be enabled with "Sound," or "Sound & Display."			
Front ParkSense Volume	Low	Med	High
Rear ParkSense Volume	Low	Med	High
Rear ParkSense Braking Assist — If Equipped	On	Off	
NOTE: When the "Rear ParkSense Braking Assist" feature is selected, the park assist system detects objects located behind the vehicle and utilize autonomous braking to stop the vehicle.			

Setting Name	Selectable Options		
Electric Power Steering Default	Normal	Sport	Comfort
NOTE: When the “Electric Power Steering Default” is selected, it allows you to change the default setting of your vehicle to either normal, sport, or comfort.			
Paddle Shifters	Enable	Disable	
Blind Spot Alert — If Equipped	Off	Lights	Lights & Chime
NOTE: When the “Blind Spot Alert” feature is selected, the Blind Spot Monitoring (BSM) system is activated and shows a visual alert in the outside mirrors, or it shows a visual alert in the outside mirrors as well as play an audible alert when the turn signal is on. When “Off” is selected, the Blind Spot Monitoring (BSM) system is deactivated. If your vehicle has experienced any damage in the area where the sensor is located, even if the fascia is not damaged, the sensor may have become misaligned. Take your vehicle to an authorized dealer to verify sensor alignment. A sensor that is misaligned results in the BSM not operating to specification.			
Hill Start Assist — If Equipped	On	Off	

Mirror and Wipers

After pressing the "Mirror and Wipers" button on the touchscreen, the following settings will be available:

Setting Name	Selectable Options	
Rain Sensing Auto Wipers — If Equipped	On	Off
Tilt Side Mirrors in Reverse	On	Off
Auto Folding Side Mirrors — If Equipped	On	Off
Headlights with Wipers	On	Off

Lights

After pressing the "Lights" button on the touchscreen, the following settings will be available:

Setting Name	Selectable Options	
Headlight Off Delay	0 sec	30 sec
	60 sec	90 sec
NOTE: When the "Headlight Off Delay" feature is selected, it allows the adjustment of the amount of time the headlights remain on after the engine is shut off.		
Headlight Illuminated On Approach	0 sec	30 sec
	60 sec	90 sec

Setting Name	Selectable Options	
Headlights With Wipers — If Equipped	On	Off
Auto Dim High Beams — If Equipped	On	Off
NOTE: When the "Auto Dim High Beams" feature is selected, the high beam headlights will activate/deactivate automatically under certain conditions.		
Daytime Running Lights — If Equipped	On	Off
Flash Lights With Lock	On	Off

Doors & Locks

After pressing the "Doors & Locks" button on the touchscreen, the following settings will be available:

Setting Name	Selectable Options	
Auto Door Locks	On	Off
NOTE: When the "Auto Door Locks" feature is selected, all doors lock automatically when the vehicle reaches a speed of 12 mph (20 km/h).		

Setting Name	Selectable Options		
Auto Unlock On Exit	On		Off
NOTE: When this feature is selected, all doors unlock when the vehicle is stopped, the transmission is in the PARK or NEUTRAL position, and the driver's door is opened.			
Flash Lights With Lock	On		Off
Sound Horn With Lock	Off	1st Press	2nd Press
Sound Horn With Remote Start	On		Off
1st Press Of Key Fob Unlocks	Driver Door		All Doors
NOTE: When "Driver Door" is selected with 1st Press Of Key Fob Unlocks, only the driver's door unlocks with the first push of the key fob unlock button. You must press the key fob unlock button twice to unlock the passenger's doors. When "All Doors" is selected for 1st Press Of Key Fob Unlocks, all doors unlock on the first push of the key fob unlock button. If the vehicle is programmed 1st Press Of Key Fob Unlocks "All Doors," all doors unlock no matter which Passive Entry equipped door handle is grasped. If 1st Press Of Key Fob Unlocks "Driver Door" is programmed, only the driver's door unlocks when the driver's door is grasped. With Passive Entry, if 1st Press Of Key Fob Unlocks "Driver Door" is programmed, touching the handle more than once results in only the driver's door opening. If "Driver Door" is selected, once the driver door is opened, the interior door lock/unlock switch can be used to unlock all doors (or use key fob).			

Setting Name	Selectable Options	
Passive Entry — If Equipped	On	Off
NOTE: This feature allows you to lock and unlock the vehicles door(s) without having to push the key fob lock or unlock buttons.		
Personal Settings Linked to Key Fob — If Equipped	On	Off
NOTE: This feature provides automatic recall of all settings stored to a memory location (driver's seat, exterior mirrors, steering column position and radio station pre-sets) to enhance driver mobility when entering and exiting the vehicle.		
Power Lift Gate Alert — If Equipped	On	Off

Auto-On Comfort Systems — If Equipped

After pressing the "Auto-On Comfort & Remote Start" button on the touchscreen, the following settings will be available:

Setting Name	Selectable Options		
Auto-On Driver Heated/ Ventilated Seat & Steering Wheel With Vehicle Start — If Equipped	Off	Remote Start	All Starts
NOTE: When this feature is selected the driver's heated seat and heated steering wheel will automatically turn ON when temperatures are below 40° F (4.4° C).			

Engine Off Options

After pressing the "Engine Off Options" button on the touchscreen, the following settings will be available:

Setting Name	Selectable Options	
Easy Exit Seat	On	Off
Engine Off Power Delay	0 sec	45 sec
	5 min	10 min
Headlight Off Delay	0 sec	30 sec
	60 sec	90 sec
Auto Entry/Exit Suspension — If Equipped	On	Off

Suspension — If Equipped

After pressing the "Suspension" button on the touchscreen, the following settings will be available:

Setting Name	Selectable Options	
Auto Entry/Exit Suspension	On	Off
NOTE: When the "Auto Entry/Exit Suspension" setting is selected, the vehicle automatically lowers from ride height position when the vehicle is shifted to PARK for easy entry/exit.		
Display Suspension Messages	All	Warning
NOTE: The "Display Suspension Messages" setting allows you to choose whether you want the Suspension system to display all suspension messages, or to only display suspension warnings.		
Tire Jack Mode	On	Off
NOTE: When the "Tire Jack Mode" setting is selected, the air suspension system is disabled to prevent auto leveling of the suspension while the vehicle is on a jack, changing a tire.		
Transport Mode	On	Off
NOTE: When the "Transport Mode" setting is selected, the air suspension system is disabled to assist with flat bed towing.		

Setting Name	Selectable Options	
Wheel Alignment Mode	On	Off
NOTE: The “Wheel Alignment Mode” setting prevents auto leveling of the air suspension while performing a wheel alignment service.		

Audio

After pressing the “Audio” button on the touchscreen, the following settings will be available:

Setting Name	Selectable Options			
Balance/Fade	Speaker Icon			
NOTE: When in this display you may adjust the “Balance/Fade” of the audio by pressing and dragging the “Speaker Icon” toward any location in the box.				
Equalizer	Bass	Mid		Treble
NOTE: When in this display you may adjust the “Bass”, “Mid” and “Treble” settings. Adjust the settings with the “+” and “–” setting buttons on the touchscreen or by selecting any point on the scale between the “+” and “–” buttons on the touchscreen. Bass/Mid/Treble also allow you to simply slide your finger up or down to change the setting as well as press directly on the desired setting.				
Speed Adjusted Volume	Off	1	2	3

Setting Name	Selectable Options	
Surround Sound — If Equipped	On	Off
AUX Volume Offset — If Equipped	+	-
NOTE: This feature provides the ability to tune the audio level for portable devices connected through the AUX input.		
AutoPlay	On	Off
NOTE: The “AutoPlay” setting, when activated, automatically starts playing music off of a connected device as soon as it is connected.		

Phone/Bluetooth

After pressing the "Phone/Bluetooth" button on the touchscreen, the following settings will be available:

Setting Name	Selectable Options	
Phone Pop-Ups Displayed In Cluster	On	Off
Do Not Disturb	Do Not Disturb Options	
NOTE: The "Do Not Disturb" feature allows the paired phone to send a predetermined call, text, or both, to any incoming call, or text, before sending it directly to voicemail. It also keeps a counter of all missed calls and texts while on the road.		
Paired Phones and Audio Sources	List Of Paired Phones and Audio Sources	
NOTE: The "Paired Phones and Audio Sources" feature shows which phones and audio sources are paired to the Phone and Audio Sources Settings system. For further information, refer to the Uconnect Owner's Manual Supplement.		
Display Phone Info In Cluster	On	Off

SiriusXM Setup — If Equipped

After pressing the "SiriusXM Setup" button on the touchscreen, the following settings will be available:

Setting Name	Selectable Options	
SXM Tune Start	On	Off
NOTE: The "Tune Start" feature begins playing the current song from the beginning when you tune to a music channel using one of the 12 presets, so you can enjoy the complete song. This feature occurs the first time the preset is selected during that current song. Tune Start works in the background, so you will not even realize it's on, except that you will miss the experience of joining your favorite song with only a few seconds left to play.		
Channel Skip	List of Channels	
NOTE: SiriusXM can be programmed to designate a group of channels that are the most desirable to listen to or to exclude undesirable channels while scanning. This feature allows you to select the channels you would like to skip.		

Setting Name	Selectable Options
Subscription Info	Sirius ID

NOTE:
New vehicle purchasers or lessees will receive a free limited time subscription to SiriusXM Satellite Radio with your radio. Following the expiration of the free services, it will be necessary to access the information on the Subscription Information screen to re-subscribe.

1. Press the "Subscription Info" button on the touchscreen to access the Subscription Information screen.
2. Write down the Sirius ID numbers for your receiver. To reactivate your service, either call the number listed on the screen or visit the provider online.

SiriusXM Travel Link is a separate subscription.

Accessibility — If Equipped
After pressing the "Accessibility" button on the touchscreen, the following settings will be available:

Setting Name	Selectable Options	
Video Button Readback	On	Off

NOTE:
The "Video Button Readback" feature announces a function prior to performing the action selected when using DVD/Blu-ray functions, when it is activated. For example, when activated, and the "Play" button is selected, the system will announce "Play Button Selected", and then once pressed again the "Play" button will perform its action.

Reset

After pressing the "Reset" button on the touchscreen, the following settings will be available:

Setting Name	Selectable Options	
Reset App Drawer	OK	Cancel
Restore Settings	OK	Cancel
NOTE: When this feature is selected it will reset all settings to their default settings.		
Clear Personal Data	OK	Cancel
NOTE: When the "Clear Personal Data" feature is selected, it will remove all personal data including Bluetooth devices and presets.		

System Information

After pressing the "System Information" button on the touchscreen, the following settings will be available:

Setting Name	Selectable Options
Software License	System Software Information Screen
NOTE: When this feature is selected, a "Software License" screen will appear, displaying the system software license and version.	

OFF ROAD PAGES — IF EQUIPPED

Your vehicle is equipped with Off Road Pages, which provides the vehicle status while operating on off road conditions. It supplies information relating to the vehicle ride height, the status of the transfer case, the pitch and roll of the vehicle (if equipped), and the active Selec-Terrain mode.

To access Off Road Pages, press the "Apps" button on the touchscreen, and then select "Off Road Pages".

Main Menu

1 — Off Road Pages App
2 — Uconnect Apps Button

Off Road Pages has the following selectable pages:

- Vehicle Dynamics
- Suspension
- Pitch and Roll — If Equipped

- Accessory Gauge
- Selec-Terrain — If Equipped

Off Road Pages Status Bar

The Off Road Pages Status Bar is located along the bottom of Off Road Pages and is present in each of the five selectable page options. It provides continually updating information for the following items:

- Current Transfer Case Status (only appears when in 4WD LOW)
- Current Selec-Terrain mode — If Equipped
- Current Latitude/Longitude
- Current Altitude of the vehicle
- Status of Hill Descent
- Selec-Speed Control and Selected Speed in MPH (km/h)

Status Bar

1 — Transfer Case Status (Only When In 4WD LOW)
2 — Selec-Terrain Mode — If Equipped
3 — Current Latitude/Longitude
4 — Current Altitude
5 — Hill Descent
6 — Selec-Speed Status And Set Speed

Vehicle Dynamics

The Vehicle Dynamics page displays information concerning the vehicle's drivetrain.

The following information is displayed:

- Steering angle in degrees
- Status of Transfer case
- Status of the Rear Axles — If Equipped

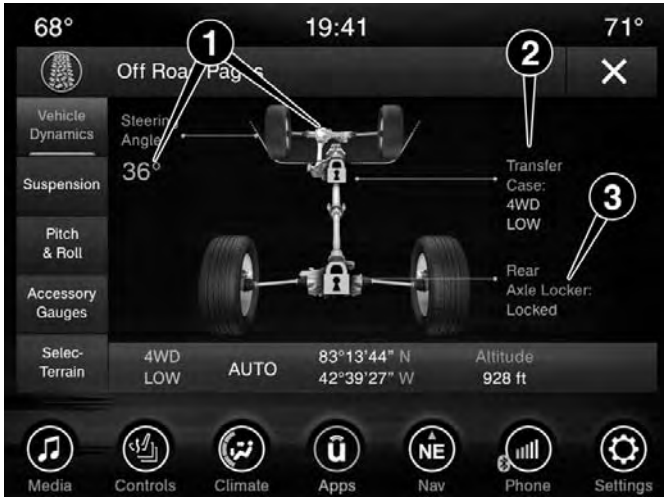

Vehicle Dynamics Menu

1 — Steering Angle
2 — Transfer Case Status
3 — Rear Axle Locker Status

Suspension

The Suspension page displays information concerning the vehicle's suspension.

The following information is displayed:

- Suspension Articulation Indicator
- Current Ride Height Status — If Equipped
  - Normal
  - Off Road 1
  - Off Road 2
  - Entry/Exit
  - Aero

NOTE: The wheel articulation will be represented by a yellow color in the Suspension Articulation Indicator. If Ride Height is adjusted, the Ride Height indicator on the screen will switch to the appropriate height and the Suspension Articulation Indicator will show the movement and change in height.

Suspension Menu

1 — Suspension Articulation Indicator
2 — Current Ride Height

Pitch And Roll

The Pitch And Roll page displays the vehicle's current pitch (angle up and down) and roll (angle side to side) in degrees. The pitch and roll gauges provide a visualization of the current vehicle angle.

Pitch And Roll Menu

1 — Current Pitch
2 — Current Roll

Accessory Gauges

The Accessory Gauges page displays the current status of the vehicle's Coolant Temperature, Oil Temperature, Oil Pressure (Gas Vehicles Only), Transmission Temperature, and Battery Voltage.

Accessory Gauges Menu

1 — Coolant Temperature
2 — Oil Temperature
3 — Oil Pressure (Gas Vehicles Only)
4 — Battery Voltage
5 — Transmission Temperature

Selec-Terrain — If Equipped

The Selec-Terrain page displays the current Selec-Terrain mode through a high resolution image. Adjusting the Selec-Terrain mode will alter the image on the screen. The vehicle must be in the ON/RUN position to display Selec-Terrain information.

The selectable modes are as follows:

- Snow
- Sand
- Auto — Default
- Mud
- Rock — Vehicle Must Be In 4 Wheel Drive Low

NOTE: While in the Selec-Terrain pages, the Off Road Pages Status Bar will also display the current Selec-Terrain mode.

Current Selec-Terrain Mode

STEERING WHEEL AUDIO CONTROLS — IF EQUIPPED

The remote sound system controls are located on the rear surface of the steering wheel. Reach behind the wheel to access the switches.

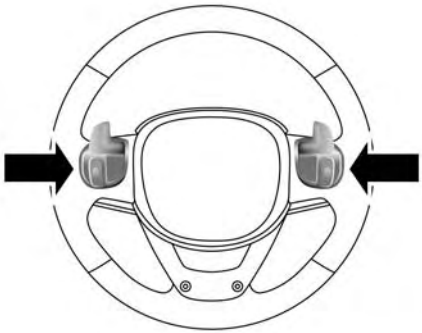

Steering Wheel Audio Controls (Back View Of Steering Wheel)

The right-hand control is a rocker-type switch with a push-button in the center and controls the volume and mode of the sound system. Pushing the top of the rocker switch increases the volume, and pushing the bottom of the rocker switch decreases the volume.

Pushing the center button makes the radio switch between the various modes available (AM/FM/SXM or Media etc.)

The left-hand control is a rocker-type switch with a push-button in the center. The function of the left-hand control is different depending on which mode you are in.

The following describes the left-hand control operation in each mode.

Radio Operation

Pushing the top of the switch will “Seek” up for the next listenable station and pushing the bottom of the switch will “Seek” down for the next listenable station.

The button located in the center of the left-hand control will tune to the next preset station that you have programmed in the radio preset button.

Media Mode

Pushing the top of the switch once goes to the next track on the selected media (AUX/USB/Bluetooth). Pushing the bottom of the switch once goes to the beginning of the current track, or to the beginning of the previous track if it is within eight seconds after the current track begins to play.

IPOD/USB/MP3 CONTROL — IF EQUIPPED

This feature allows an iPod or external USB device to be plugged into the USB port.

iPod control supports Mini, 4G, Photo, Nano, 5G iPod and iPhone devices. Some iPod software versions may not fully support the iPod control features. Please visit Apple's website for software updates.

For further information, refer to the Uconnect Owner's Manual Supplement.

UCONNECT REAR SEAT ENTERTAINMENT (RSE) SYSTEM — IF EQUIPPED

Your Rear Seat Entertainment System is designed to give your family years of enjoyment. You can play your favorite CDs, DVDs or Blu-ray Discs, listen to audio over the wireless headphones, or plug and play a variety of standard video games or audio devices.

Please review this Owner's Manual to become familiar with its features and operation.

Getting Started

- **Screen(s) located in the rear of front seats**: Open the LCD screen cover by lifting up on the cover.

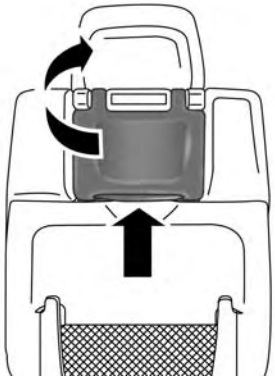

RSE System Screen

- Place the ignition in the ON or ACC position.
- Your vehicle may be equipped with a Blu-ray disc player. If equipped with a Blu-ray disc player, the icon will be present on the player.
- Turn on the Rear Seat Entertainment system by pushing the power button on the remote control.

- When the Video Screen(s) are open and a DVD/Blu-ray disc is inserted into the disc player, the screen(s) turn(s) on automatically, the headphone transmitters turn on and playback begins.

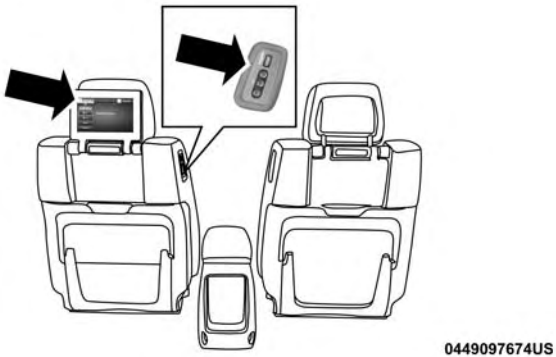

RSE System Channel 1 (Rear 1)

- With the Dual Video Screen System, Channel 1 (Rear 1) on the remote control and headphones, refers to Screen 1 (driver's side) and Channel 2 (Rear 2) on the Remote Control and Headphones refers to Screen 2 (passenger side).

RSE System Remote Control Channel Selectors

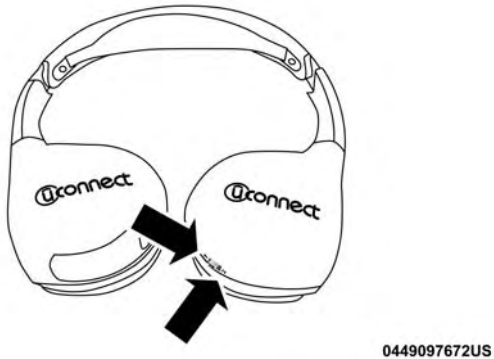

RSE System Headphone Channel Selectors

- The system can be controlled either by the front seat occupants utilizing the touchscreen radio or by the rear seat occupants using the remote control.

Dual Video Screen

NOTE: Typically there are two different ways to operate the features of the Rear Seat Entertainment System.

- The Remote Control
- The Touchscreen Radio (If Equipped)

Blu-ray Disc Player

Play A Blu-ray Disc

The Blu-ray disc player is located in the center console.

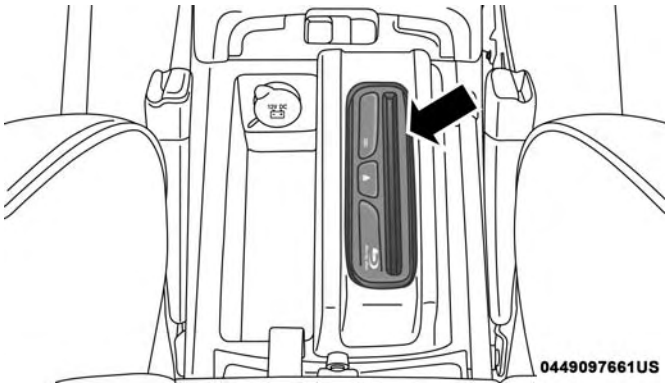

Blu-ray Disc Player Location

1. Insert a Blu-ray disc into the VES disc player with the label facing as indicated on the Blu-ray player. The radio automatically selects the appropriate mode after the disc is recognized and displays the menu screen, the language screen, or starts playing the first track.
2. To watch a Blu-ray disc on Rear 1 for driver's side rear passengers, ensure the Remote Control and Headphone switch is on Rear 1.
3. To watch a Blu-ray disc on Rear 2 for passenger side rear passengers, ensure the Remote Control and Headphone switch is on Rear 2.

NOTE:

- To view a Blu-ray disc on the radio, press the "Media" button on the touchscreen, and then press the "Disc" button. Press the "Play" button, and then the "full screen" button.
- Viewing a Blu-ray disc on the radio screen is not available in all states/provinces. The vehicle must be stopped, and the gear selector must be in the PARK position for vehicles with automatic transmission.

Using The Touchscreen Radio

Rear Media Control Screen

1. **RSE Channel 1 Mode**

Indicates the current source for Screen 1/Channel 1. This button will be highlighted when it is the active Screen/Channel being controlled by the front user. If this button is not highlighted, select button to access controls for Screen 1/Channel 1 source.

2. **RSE Power**

Press to turn RSE On/Off.

3. **RSE Mute**

Mute rear headphones for the current ignition cycle. Pressing mute again will unmute rear headphones.

4. **RSE Remote Control Lock Out**

Press to enable/disable remote control functions.

5. **RSE Channel 2 Mode**

Indicates the current source for Screen 2/Channel 2. This button will be highlighted when it is the active Screen/Channel being controlled by the front user. If this button is not highlighted, select button to access controls for Screen 2/Channel 2 source.

6. **Cabin Audio Mode**

Select this button to change the cabin audio to the rear entertainment source currently shown on the rear media control screen.

7. **Radio Full Screen Mode**

Select this button to change to Full Screen Mode.

8. **RSE Mode**

Select this button to change source for the active (highlighted) rear Screen/Channel on the rear media control screen.

- Press the Media button on the touchscreen, and then press the rear media button on the touchscreen.
- Press the OK button on the touchscreen to begin playing the Blu-ray disc on the touchscreen radio.

Using The Remote Control

- Select an audio channel (Rear 1 for driver's side rear screen and Rear 2 for passenger's side rear screen), and then press the source key, and using the up and down arrows, highlight disc from the menu and press the OK button.
- Press the popup/menu key to navigate the disc menu and options.

Play Video Games

Connect the video game console to the Audio/Video RCA/HDMI input jacks located on the side of each seat.

Audio/Video RCA/HDMI Jacks (AUX/HDMI Jacks) on the side of each seat enable the monitor to display video directly from a video camera, connect video games for display on the screen, or play music directly from an MP3 player.

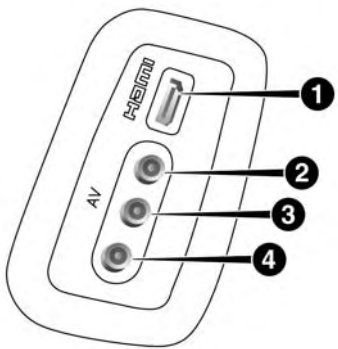

0449097671US

Audio/Video RCA/HDMI Input Jacks

When connecting an external source to the AUX/HDMI input, ensure to follow the standard color coding for the audio/video jacks:

1. HDMI Input.
2. Right audio in (red).
3. Left audio in (white).
4. Video in (yellow).

NOTE: Certain high-end video games consoles may exceed the power limit of the vehicle's Power Inverter.

Play A DVD/Blu-ray Disc Using The Touchscreen Radio

1. Insert the DVD/Blu-ray Disc with the label facing as indicated on the DVD/Blu-ray Disc player. The radio automatically selects the appropriate mode after the disc is recognized and displays the menu screen or starts playing the first track.
2. To watch a DVD/Blu-ray Disc on Rear 1 (driver's side rear passenger), ensure the Remote Control and Headphone channel selector switch is on Rear 1.
3. To watch a DVD/Blu-ray Disc on Rear 2 (passenger's side rear passenger), ensure the Remote Control and Headphone channel selector switch is on Rear 2.

Using The Remote Control

1. Push the SOURCE button on the Remote Control.
2. While looking at Rear 1 or 2, highlight DISC by either pushing Up/Down/Left/Right buttons, then push ENTER/OK.

Select DISC Mode On The Rear Seat Entertainment Screen

Using The Touchscreen Radio Controls

1. Press the Media button on the Uconnect system touch-screen.
2. Press the Rear Media button to display the Rear Media Control screen.

Rear Media Control Screen

3. Press the 1 or 2 buttons on the touchscreen, and the select source button on the touchscreen. Press the DISC button on the touchscreen in the MEDIA column. To exit, press the X at the top right of the screen.

Rear Seat Entertainment Source Screen

NOTE: Pressing the screen on the radio while a DVD or Blu-ray Disc is playing, brings up the basic remote control functions for DVD play such as scene selection, Play, Pause, FF, RW, and Stop. Pressing the X in the upper corner will turn OFF the remote control screen functions.

Important Notes For Dual Video Screen System

- The Rear Seat Entertainment System is able to transmit two channels of stereo audio and video simultaneously.
- The Blu-ray Disc Player can play CDs, DVDs and Blu-ray Discs.
- Selecting a video source on Rear 1, the video source will display on Rear 1 and can be heard on Rear 1.
- Selecting a video source on Rear 2, the video source will display on Rear 2 and can be heard on Rear 2.
- Audio can be heard through the headphones even when the screen(s) are closed.

Blu-ray Disc Player Remote Control — If Equipped

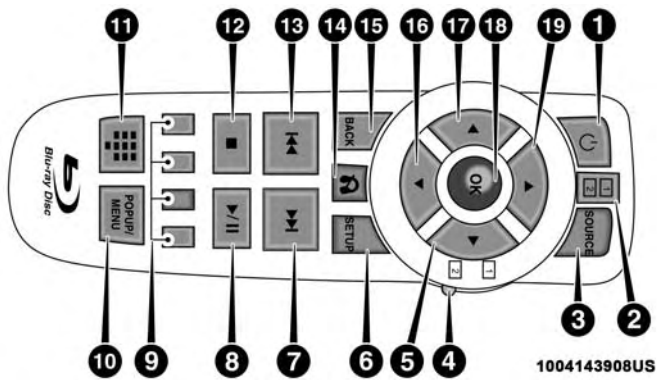

Blu-ray Player Remote Control

Controls And Indicators

1. Power — Turns the screen and wireless headphone transmitter for the selected Channel on or off. To hear audio while the screen is closed, push the Power button to turn the headphone transmitter on.
2. Channel Selector Indicators — When a button is pushed, the currently affected channel or channel button is illuminated momentarily.
3. SOURCE — Push to enter Source Selection screen.
4. Channel/Screen Selector Switch — Indicates which channel is being controlled by the remote control. When the selector switch is in the Rear 1 position, the remote controls the functionality of headphone Channel 1 (left screen). When the selector switch is in the Rear 2 position, the remote controls the functionality of headphone Channel 2 (right screen).
5. ▶ — Push to navigate menus.
6. SETUP — Push to access the screen settings menu.
7. ▶▶| — Push and hold to fast forward through the current audio track or video chapter.
8. ▶ / ‖ (Play/Pause) — Begin/resume or pause disc play.
9. Four Colored Buttons — Push to access Blu-ray Disc features.
10. POPUP/MENU — Push to bring up repeat and shuffle options, the Blu-ray Disc popup menu, the DVD title menu, or to access disc menus.
11. Keypad — Push to navigate chapters or titles.
12. ■ (Stop) — Stops disc play.

13. |◀◀ — Push and hold to fast rewind through the current audio track or video chapter.
14. 🎧 — Mutes headphone audio.
15. BACK — Push to exit out of menus or return to source selection screen.
16. ▼ — Push to navigate menus.
17. ◀ — Push to navigate menus.
18. OK— Push to select the highlighted option in a menu.
19. ▲ — Push to navigate menus.

Headphones Operation

The headphones receive two separate channels of audio using an infrared transmitter from the video screen.

If no audio is heard after increasing the volume control, verify that the screen is turned on, the channel is not muted and the headphone channel selector switch is on the desired channel. If audio is still not heard, check that fully charged batteries are installed in the headphones.

Rear Seat Entertainment Headphones

1 — Power Button
2 — Volume Control
3 — Channel Selection Switch

Controls

The headphone power indicator and controls are located on the right ear cup.

NOTE: The rear video system must be turned on before sound can be heard from the headphones. To conserve battery life, the headphones will automatically turn off approximately three minutes after the rear video system is turned off.

Changing the Audio Mode for Headphones

1. Ensure the Remote Control channel/screen selector switch is in the same position as the headphone selector switch.

NOTE:

- When both the headphone and the remote control channel selector switches are on Channel 1, the Remote is controlling Channel 1 and the headphones are tuned to the audio on Channel 1.
- When both the headphone and the remote control channel selector switches are on Channel 2, the Remote is controlling Channel 2 and the headphones are tuned to the audio on Channel 2.

2. Push the SOURCE button on the remote control.
3. Pushing the SOURCE button will advance to the next mode.
4. When the Mode Selection menu appears on screen, use the cursor buttons on the remote control to navigate to the available modes and push the OK button to select the new mode.
5. To cancel out of the Mode Selection menu, push the BACK button on the remote control.

Replacing The Headphone Batteries

Each set of headphones requires two AAA batteries for operation. To replace the batteries:

1. Locate the battery compartment on the left ear cup of the headphones, and then slide the battery cover downward.
2. Replace the batteries, making sure to orient them according to the polarity diagram shown.
3. Replace the battery compartment cover.

Accessibility — If Equipped

Accessibility is a feature of the DVD/Blu-ray system that announces a function prior to performing the action. For further information refer to “Uconnect Settings” in “Multimedia.”

Stereo Headphone Lifetime Limited Warranty

Who Does This Warranty Cover? This warranty covers the initial user or purchaser (″you″ or ″your″) of this particular Aptiv PLC (“Aptiv”) wireless headphone (″Product″). The warranty is not transferable.

How Long Does the Coverage Last? This warranty lasts as long as you own the Product.

What Does This Warranty Cover? Except as specified below, this warranty covers any Product that in normal use is defective in workmanship or materials.

What Does This Warranty Not Cover? This warranty does not cover any damage or defect that results from misuse, abuse or modification of the Product other than by Aptiv. Foam earpieces, which will wear over time through normal use, are specifically not covered (replacement foam is available for a nominal charge). APTIV IS NOT LIABLE FOR ANY INJURIES OR DAMAGES TO PERSONS OR PROPERTY RESULTING FROM THE USE OF, OR ANY FAILURE OR DEFECT IN, THE PRODUCT, NOR IS APTIV LIABLE FOR ANY GENERAL, SPECIAL, DIRECT, INDIRECT, INCIDENTAL, CONSEQUENTIAL, EXEMPLARY, PUNITIVE OR OTHER DAMAGES OF ANY KIND OR NATURE WHATSOEVER. Some states and jurisdictions may not allow the exclusion or limitation of incidental or consequential damages, so the above limitation may not apply to you. This warranty gives you specific legal rights. You may also have other rights, which vary from jurisdiction to jurisdiction.

What Will Aptiv Do? Aptiv, at its option, will repair or replace any defective Product. Aptiv reserves the right to replace any discontinued Product with a comparable model. THIS WARRANTY IS THE SOLE WARRANTY FOR THIS PRODUCT, SETS FORTH YOUR EXCLUSIVE REMEDY REGARDING DEFECTIVE PRODUCTS, AND IS IN LIEU OF ALL OTHER WARRANTIES (EXPRESS OR IMPLIED), INCLUDING ANY WARRANTY FOR MERCHANTABILITY OR FITNESS FOR A PARTICULAR PURPOSE.

If you have any questions or comments regarding your Aptiv wireless headphones, or to register your wireless headphones, please phone:

1-248-724-5900

System Information

Disc Menu

When listening to a CD Audio or CD Data disc, pushing the remote control’s POP UP/MENU button displays a list of all commands which control playback of the disc.

Display Settings

Video Screen Display Settings

When watching a video source (Blu-ray Disc or DVD Video with the disc in Play mode, Aux Video, etc.), pushing the remote control's SETUP button activates the Display Settings menu. These settings control the appearance of the video on the screen. The factory default settings are already set for optimum viewing, so there is no need to change these settings under normal circumstances.

To change the settings, push the remote control's navigation buttons (▲, ▼) to select an item, then push the remote control's navigation buttons (▶, ◀) to change the value for the currently selected item. To reset all values back to the original settings, select the Default Settings menu option and push the remote control's ENTER/OK button.

Disc Features control the remote Blu-ray Disc player's settings of DVD being watched in the remote player.

Listening To Audio With The Screen Closed

To listen to only audio portion of the channel with the screen closed:

- Set the audio to the desired source and channel.
- Close the video screen.
- To change the current audio mode, push the remote control's SOURCE button. This will automatically select the next available audio mode without using the Mode/Source Select menu.
- When the screen is reopened, the video screen will automatically turn back on and show the appropriate display menu or media.

If the screen is closed and there is no audio heard, verify that the headphones are turned on (the ON indicator is illuminated) and the headphone selector switch is on the desired channel. If the headphones are turned on, push the

remote control's power button to turn audio on. If audio is still not heard, check that fully charged batteries are installed in the headphones.

Disc Formats

The Blu-ray Disc player is capable of playing the following types of 4.7 inches (12 cm) diameter discs:

- BD: BDMV (Profile 1.1), BDAV (Profile 1.1)
- DVD: DVD-Video, DVD-Audio, AVCREC, AVCHD, DVD-VR
- CD: CD-DA, VCD, CD-TEXT
- DVD/CD: MP3, WMA, AAC, DivX (versions 3 – 6) profile 3.0

DVD Region Codes

The Blu-ray Disc player and many DVD discs are coded by geographic region. These region codes must match in order for the disc to play. If the region code for the DVD disc does not match the region code for the player, the disc will not play.

DVD Audio Support

When a DVD-Audio disc is inserted in the Blu-ray Disc player, the DVD-Audio title on the disc is played by default (most DVD-Audio discs also have a Video title, but the Video title is ignored). All multi-channel program material is automatically mixed down to two channels, which may result in a lowered apparent volume level. If you increase the volume level to account for this change in level, remember to lower the volume before changing the disc or to another mode.

Recorded Discs

The Blu-ray Disc player will play CD-R and CD-RW discs recorded in CD-Audio or Video-CD format, or as a CD-ROM containing MP3 or WMA files. The player will also play DVD-Video content recorded to a DVD-R or DVD-RW disc. DVD-ROM discs (either pressed or recorded) are not supported.

If you record a disc using a personal computer, there may be cases where the Blu-ray Disc player may not be able to play some or the entire disc, even if it is recorded in a compatible format and is playable on other players. To help avoid playback problems, use the following guidelines when recording discs.

- Open sessions are ignored. Only sessions that are closed are playable.

- For multi-session CDs that contain only multiple CD-Audio sessions, the player will renumber the tracks so each track number is unique.
- For CD Data (or CD-ROM) discs, always use the ISO-9660 (Level 1 or Level 2), Joliet, or Romeo format. Other formats (such as UDF, HFS, or others) are not supported.
- The player recognizes a maximum of 512 files and 99 folders per CD-R and CD-RW disc.
- Mixed media recordable DVD formats will only play the Video_TS portion of the disc.

If you are still having trouble writing a disc that is playable in the Blu-ray Disc player, check with the disc recording software publisher for more information about burning playable discs.

The recommended method for labeling recordable discs (CD-R, CD-RW, and DVD-R) is with a permanent marker. Do not use adhesive labels as they may separate from the disc, become stuck, and cause permanent damage to the DVD player.

Compressed Audio Files (MP3 and WMA)

The Blu-ray Disc player is capable of playing MP3 (MPEG-1 Audio Layer 3) and WMA (Windows Media Audio) files from a CD Data disc (usually a CD-R or CD-RW).

- The Blu-ray Disc player always uses the file extension to determine the audio format, so MP3 files must always end with the extension ".mp3" or ".MP3" and WMA files must always end with the extension ".wma" or ".WMA". To prevent incorrect playback, do not use these extensions for any other types of files.
- For MP3 files, only version 1 ID3 tag data (such as artist name, track title, album, etc.) are supported.
- Any file that is copy protected (such as those downloaded from many online music stores) will not play. The Blu-ray player will automatically skip the file and begin playing the next available file.
- Other compression formats such as AAC, MP3 Pro, Ogg Vorbis, and ATRAC3 will not play. The Blu-ray player will automatically skip the file and begin playing the next available file.

- If you are creating your own files, the recommended fixed bit rate for MP3 files is between 96 and 192Kbps and the recommended fixed bit rate for WMA files is between 64 and 192Kbps. Variable bit rates are also supported. For both formats, the recommended sample rate is either 44.1kHz or 48kHz.
- To change the current file, use the remote control's or Blu-ray Disc player's ▲ button to advance to the next file, or the ▼ button to return to the start of the current or previous file.

Disc Errors

If the Blu-ray Disc player is unable to read the disc, a "Disc Error" message is displayed on the rear screen and Radio displays. A dirty, damaged, or incompatible disc format are all potential causes for a "Disc Error" message.

If a disc has a damaged track which results in audible or visible errors that persists for two seconds, the Blu-ray Disc player will attempt to continue playing the disc by skipping forward one to three seconds at a time. If the end of the disc is reached, the Blu-ray Disc player will return to the beginning of the disc and attempt to play the start of the first track.

The Blu-ray Disc player may shut down during extremely hot conditions, such as when the vehicle's interior temperature is above 120° F (48.9° C). When this occurs, the player will display "High Temp" and will shut off the rear seat displays until a safe temperature is reached. This shutdown is necessary to protect the optics of the Blu-ray Disc player.

Product Agreement

This product incorporates copyright protection technology that is protected by U.S. patents and other intellectual property rights. Use of this copyright protection technology must be authorized by Macrovision, and is intended for home or other limited viewing uses otherwise authorized by Macrovision. Reverse engineering or disassembly is prohibited.

Dolby Digital and MLP Lossless Manufactured under license from Dolby Laboratories. "Dolby", "MLP Lossless", and the double-D symbol are trademarks of Dolby Laboratories. Confidential unpublished works. Copyright 1992-1997 Dolby Laboratories. All rights reserved.

RADIO OPERATION AND MOBILE PHONES

Under certain conditions, the mobile phone being on in your vehicle can cause erratic or noisy performance from your radio. This condition may be lessened or eliminated by relocating the mobile phone antenna. This condition is not harmful to the radio. If your radio performance does not satisfactorily "clear" by the repositioning of the antenna, it is recommended that the radio volume be turned down or off during mobile phone operation when not using Uconnect (if equipped).

Regulatory And Safety Information

USA/CANADA

Exposure to Radio Frequency Radiation

The radiated output power of the internal wireless radio is far below the FCC and IC radio frequency exposure limits. Nevertheless, the wireless radio will be used in such a manner that the radio is 8 in (20 cm) or further from the human body.

The internal wireless radio operates within guidelines found in radio frequency safety standards and recommendations, which reflect the consensus of the scientific community.

The radio manufacturer believes the internal wireless radio is safe for use by consumers. The level of energy emitted is far less than the electromagnetic energy emitted by wireless devices such as mobile phones. However, the use of wireless radios may be restricted in some situations or environments, such as aboard airplanes. If you are unsure of restrictions, you are encouraged to ask for authorization before turning on the wireless radio.

The following regulatory statement applies to all Radio Frequency (RF) devices equipped in this vehicle:

This device complies with Part 15 of the FCC Rules and with Industry Canada license-exempt RSS standard(s). Operation is subject to the following two conditions:

1. This device may not cause harmful interference, and
2. This device must accept any interference received, including interference that may cause undesired operation.

NOTE: Changes or modifications not expressly approved by the party responsible for compliance could void the user's authority to operate the equipment.

NOTE:

- This equipment has been tested and found to comply with the limits for a Class B digital device, pursuant to Part 15 of the FCC Rules. These limits are designed to provide reasonable protection against harmful interference in a residential installation. This equipment generates, uses and can radiate radio frequency energy and, if not installed and used in accordance with the instructions, may cause harmful interference to radio communications. However, there is no guarantee that interference will not occur in a particular installation.
- If this equipment does cause harmful interference to radio or television reception, which can be determined by turning the equipment off and on, the user is encouraged to try to correct the interference by one or more of the following measures:
  1. Increase the separation between the equipment and receiver.
  2. Consult an authorized dealer or an experienced radio technician for help.

UCONNECT VOICE RECOGNITION QUICK TIPS

Introducing Uconnect

Start using Uconnect Voice Recognition with these helpful quick tips. It provides the key Voice Commands and tips you need to know to control your Uconnect 4, or Uconnect 4C/4C NAV system.

Uconnect 4

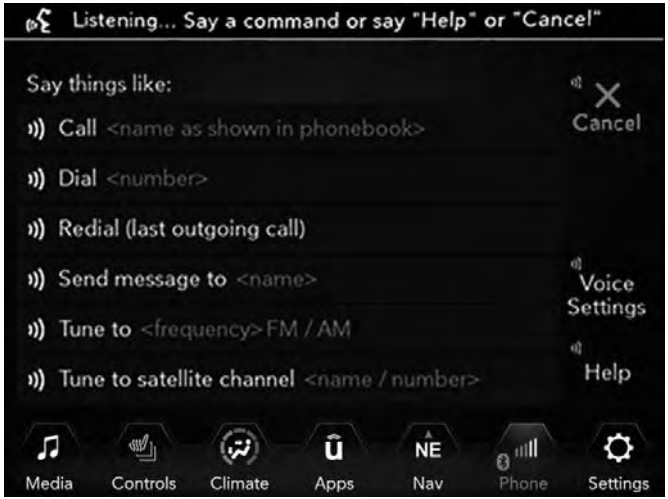

Uconnect 4C/4C NAV

If you see the NAV icon on the bottom bar, or in the Apps menus, of your 8.4-inch touchscreen, you have the Uconnect 4C NAV system. If not, you have a Uconnect 4C with 8.4-inch display system.

Get Started

All you need to control your Uconnect system with your voice are the buttons on your steering wheel.

Helpful hints for using Voice Recognition:

- Visit UconnectPhone.com to check mobile device and feature compatibility and to find phone pairing instructions.
- Reduce background noise. Wind and passenger conversations are examples of noise that may impact recognition.
- Speak clearly at a normal pace and volume while facing straight ahead. The microphone is positioned on the rearview mirror and aimed at the driver.
- Each time you give a Voice Command, you must first push either the Voice Recognition (VR) or Phone button, wait until **after** the beep, then say your Voice Command.

- You can interrupt the help message or system prompts by pushing the VR or Phone button and saying a Voice Command from the current category.

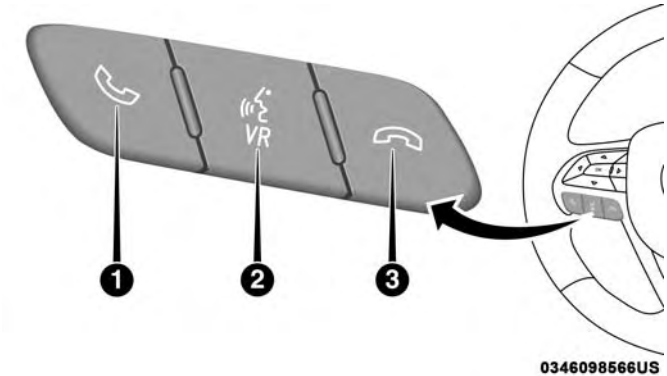

Uconnect Voice Command Buttons

1 — Push To Initiate Or To Answer A Phone Call, Send Or Receive A Text
2 — For All Radios: Push To Begin Voice Commands
3 — Push To End Call

Basic Voice Commands

The basic Voice Commands below can be given at any point while using your Uconnect system.

Push the VR button . After the beep, say:

- " **Cancel**" to stop a current voice session
- " **Help**" to hear a list of suggested Voice Commands
- " **Repeat**" to listen to the system prompts again

Notice the visual cues that inform you of your voice recognition system's status. Cues appear on the touch-screen.

Radio

Use your voice to quickly get to the AM, FM or SiriusXM Satellite Radio stations you would like to hear. (Subscription or included SiriusXM Satellite Radio trial required.)

Push the VR button . After the beep, say:

- " **Tune to** ninety-five-point-five FM"
- " **Tune to** Satellite Channel Hits 1"

TIP: At any time, if you are not sure of what to say or want to learn a Voice Command, push the VR button and say " **Help**." The system provides you with a list of commands.

Uconnect 4 Radio

Uconnect 4C/4C NAV Radio

Media

Uconnect offers connections via USB, Bluetooth and auxiliary ports (If Equipped). Voice operation is only available for connected USB and AUX devices.

Push the VR button . After the beep, say one of the following commands and follow the prompts to switch your media source or choose an artist.

- " **Change source to** Bluetooth"
- " **Change source to** AUX"
- " **Change source to** USB"
- " **Play artist** Beethoven"; " **Play album** Greatest Hits"; " **Play song** Moonlight Sonata"; " **Play genre** Classical"

TIP: Press the Browse button on the touchscreen to see all of the music on your USB device. Your Voice Command must match **exactly** how the artist, album, song and genre information is displayed.

Uconnect 4 Media

Uconnect 4C/4C NAV Media

Phone

Making and answering hands-free phone calls is easy with Uconnect. When the Phonebook button is illuminated on your touchscreen, your system is ready. Check UconnectPhone.com for mobile phone compatibility and pairing instructions.

Push the Phone button . After the beep, say one of the following commands:

- " **Call** John Smith"
- " **Dial** 123-456-7890 and follow the system prompts"
- " **Redial** (call previous outgoing phone number)"
- " **Call back** (call previous incoming phone number)"

TIP: When providing a Voice Command, push the Phone button and say " **Call**," then pronounce the name **exactly** as it appears in your phone book. When a contact has multiple phone numbers, you can say " **Call** John Smith **work**."

Uconnect 4 Phone

Uconnect 4C/4C NAV Phone

Voice Text Reply — If Equipped

Uconnect announces **incoming** text messages. Push the VR button or Phone button (if enabled) and say " **Listen**." (Must have compatible mobile phone paired to Uconnect system.)

1. Once an incoming text message is read to you, push the VR button or Phone button (if enabled). After the beep, say: " **Reply**."

2. Listen to the Uconnect prompts. After the beep, repeat one of the pre-defined messages and follow the system prompts.

PRE-DEFINED VOICE TEXT REPLY RESPONSES		
Yes.	Stuck in traffic.	See you later.
No.	Start without me.	I'll be late.
Okay.	Where are you?	I will be 5 <or 10, 15, 20, 25, 30, 45, 60> minutes late.
Call me.	Are you there yet?	
I'll call you later.	I need directions.	See you in 5 <or 10, 15, 20, 25, 30, 45, 60> minutes.
I'm on my way.	Can't talk right now.	
I'm lost.		Thanks.

NOTE: Only use the numbering listed, otherwise the system does not transpose the message.

TIP: Your mobile phone must have the full implementation of the **Message Access Profile (MAP)** to take advantage of this feature. For details about MAP, visit UconnectPhone.com.

Apple iPhone iOS 6 or later supports reading **incoming** text messages only. To enable this feature on your Apple iPhone, follow these four simple steps:

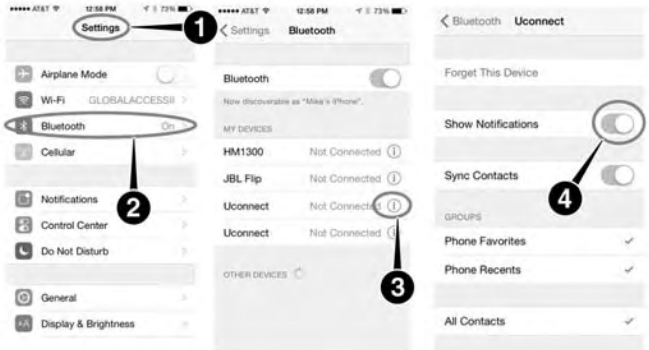

iPhone Notification Settings

1 — Select "Settings"
2 — Select "Bluetooth"
3 — Select The (i) For The Paired Vehicle
4 — Turn On "Show Notifications"

TIP: Voice Text Reply is not compatible with iPhone, but if your vehicle is equipped with Siri Eyes Free, you can use your voice to send a text message.

Climate

Too hot? Too cold? Adjust vehicle temperatures hands-free and keep everyone comfortable while you keep moving ahead. (If vehicle is equipped with climate control.)

Push the VR button . After the beep, say one of the following commands:

- " **Set the driver temperature to** 70 **degrees**"
- " **Set the passenger temperature to** 70 **degrees**"

TIP: Voice Command for Climate may only be used to adjust the interior temperature of your vehicle. Voice Command will not work to adjust the heated seats or steering wheel if equipped.

Uconnect 4 Climate

Uconnect 4C/4C NAV Climate

Navigation (4C NAV) — If Equipped

The Uconnect navigation feature helps you save time and become more productive when you know exactly how to get to where you want to go.

1. To enter a destination, push the VR button . After the beep, say: " **Find address** 800 Chrysler Drive Auburn Hills, Michigan."
2. Then follow the system prompts.

TIP: To start a POI search, push the VR button . After the beep, say: " **Find nearest** coffee shop."

Uconnect 4C NAV Navigation

SiriusXM Guardian (4C/4C NAV) — If Equipped

CAUTION!

Some SiriusXM Guardian services, including SOS Call and Roadside Assistance Call will NOT work without an operable LTE (voice/data) or 3G or 4G (data) network connection compatible with your device.

NOTE: Your vehicle may be transmitting data as authorized by the subscriber.

An included trial and/or subscription is required to take advantage of the SiriusXM Guardian services in the next section of this guide. To register with SiriusXM Guardian, press the Apps button on the Uconnect 4C/4C NAV touchscreen to get started.

NOTE: SiriusXM Guardian is available only on equipped vehicles purchased within the continental United States, Alaska, Hawaii and Canada. Services can only be used where coverage is available; see coverage map for details.

SOS Call

Theft Alarm Notification

Remote Door Lock/Unlock

Send & Go

Vehicle Finder

Stolen Vehicle Assistance

Remote Vehicle Start**

Remote Horn & Lights

Roadside Assistance Call

Vehicle Health Reports**

Vehicle Health Alert**

Performance Pages Plus**

**If vehicle is equipped.

Register (4C/4C NAV)

To unlock the full potential of SiriusXM Guardian in your vehicle, you must activate your SiriusXM Guardian services.

1. Press the Apps icon on the bottom of your in-vehicle touchscreen.
2. Select the Activate Services icon from your list of apps.

3. Select “Customer Care” to speak with a SiriusXM Guardian Customer Care agent who will activate services in your vehicle, or select “Enter Email” to activate on the web.

- U.S. residents visit: www.siriusxm.com/guardian.
- Canadian residents visit: www.siriusxm.ca/guardian.

Vehicle Health Report/Alert (4C/4C NAV)

Your vehicle will send you a monthly email report, which summarizes the performance of your vehicle’s key systems so you can stay on top of your vehicle’s maintenance needs if you are registered for SiriusXM Guardian. Your vehicle will also send you Vehicle Health Alerts when it detects issues with its key systems that need your attention. For further information, refer to your Uconnect Owner’s Manual Supplement.

Mobile App (4C/4C NAV)

You’re only a few steps away from using remote commands and sending a destination from your phone to your vehicle.

Mobile App

To use the Uconnect Mobile App:

1. Once you have registered your SiriusXM Guardian services, download the Uconnect App to your mobile device. Use your Owner Account login and password to open the app.
2. Once on the “Remote” screen, you can begin using Remote Door Lock/Unlock, Remote Vehicle Start, and activate your horn and lights remotely, if equipped.

3. Press the "Location" button on the bottom menu bar of the app to bring up a map to locate your vehicle or send a location to your Uconnect Navigation using Vehicle Finder and Send & Go , if equipped.
4. Press the "Settings" side menu in the upper left corner of the app to bring up app settings.

NOTE: For further information please visit DriveUconnect.com (U.S. Residents) or DriveUconnect.ca (Canadian Residents).

SiriusXM Travel Link (4C NAV)

Need to find a gas station, view local movie listings, check a sports score or the 5 - day weather forecast? SiriusXM Travel Link is a suite of services that brings a wealth of information right to your Uconnect 4C NAV system. (Not available for Uconnect 4 system.)

Push the VR button . After the beep, say one of the following commands:

- " **Show fuel prices**"
- " **Show 5 - day weather forecast**"
- " **Show extended weather**"

TIP: Traffic alerts are not accessible with Voice Command.

SiriusXM Travel Link

Siri Eyes Free — If Equipped

Siri lets you use your voice to send text messages, select media, place phone calls and much more. Siri uses your natural language to understand what you mean and responds back to confirm your requests. The system is designed to keep your eyes on the road and your hands on the wheel by letting Siri help you perform useful tasks.

To enable Siri, push and hold, then release the Uconnect Voice Recognition (VR) button on the steering wheel. After you hear a double beep you can ask Siri to play podcasts and music, get directions, read text messages and many other useful requests.

Uconnect 4 Siri Eyes Free Available

Uconnect 4C/4C NAV With 8.4–inch Siri Eyes Free Available

Do Not Disturb

With Do Not Disturb, you can disable notifications from incoming calls and texts, allowing you to keep your eyes on the road and hands on the wheel. For your convenience, there is a counter display to keep track of your missed calls and text messages while you were using Do Not Disturb.

Do Not Disturb can automatically reply with a text message, a call or both, when declining an incoming call and send it to voicemail.

Automatic reply messages can be:

- "I am driving right now, I will get back to you shortly."
- Create a custom auto reply message up to 160 characters.

NOTE: Only the first 25 characters can be seen on the touchscreen while typing a custom message.

While in Do Not Disturb, Conference Call can be selected so you can still place a second call without being interrupted by incoming calls.

NOTE:

- Reply with text message is not compatible with iPhones.
- Auto reply with text message is only available on phones that support Bluetooth MAP.

Android Auto — If Equipped

NOTE: Feature availability depends on your carrier and mobile phone manufacturer. Some Android Auto features may or may not be available in every region and/or language.

Android Auto allows you to use your voice to interact with Android's best-in-class speech technology through your vehicle's voice recognition system, and use your smartphone's data plan to project your Android powered smartphone and a number of its apps onto your Uconnect touchscreen. Connect your Android 5.0 (Lollipop), or higher, to one of the media USB ports, using the factory-provided USB cable, and press the new Android Auto icon that replaces your "Phone" icon on the main menu bar to begin Android Auto. Push and hold the VR button on the steering wheel, or press and hold the "Microphone" icon within Android Auto, to activate Android's VR, which recognizes natural voice commands, to use a list of your smartphone's features:

- Maps
- Music
- Phone
- Text Messages
- Additional Apps

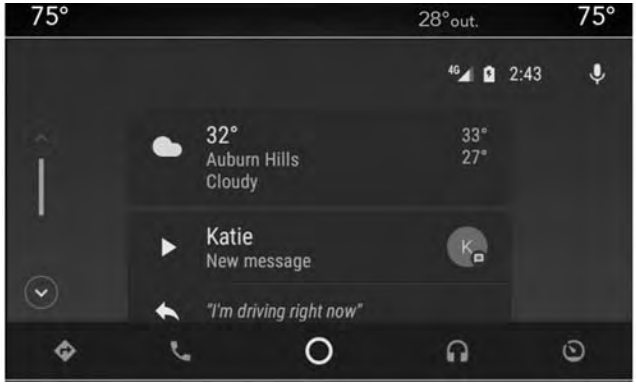

Android Auto On 7-inch Display

Android Auto On 8.4-inch Display

Refer to your Uconnect Owner's Manual Supplement for further information.

NOTE: Requires compatible smartphone running Android 5.0 Lollipop or higher and download app on Google Play. Android, Android Auto, and Google Play are trademarks of Google Inc.

Apple CarPlay — If Equipped

NOTE: Feature availability depends on your carrier and mobile phone manufacturer. Some Apple CarPlay features may or may not be available in every region and/or language.

Apple CarPlay allows you to use your voice to interact with Siri through your vehicle's voice recognition system, and use your smartphone's data plan to project your iPhone and a number of its apps onto your Uconnect touchscreen. Connect your iPhone 5, or higher, to one of the media USB ports, using the factory-provided Lightning cable, and press the new CarPlay icon that replaces your "Phone" icon on the main menu bar to begin Apple CarPlay. Push and hold the VR button on the steering wheel, or press and hold the "Home" button within Apple CarPlay, to activate Siri, which recognizes natural voice commands to use a list of your iPhone's features:

- Phone
- Music
- Messages

- Maps — if equipped
- Additional Apps — if equipped

Apple CarPlay On 7-inch Display

Apple CarPlay On 8.4-inch Display

Refer to your Uconnect Owner's Manual Supplement for further information.

NOTE: Requires compatible iPhone. See dealer for phone compatibility. Data plan rates apply. Vehicle user interface is a product of Apple. Apple CarPlay is a trademark of Apple Inc. iPhone is a trademark of Apple Inc., registered in the US and other countries. Apple terms of use and privacy statements apply.

General Information

The following regulatory statement applies to all Radio Frequency (RF) devices equipped in this vehicle:

This device complies with Part 15 of the FCC Rules and with Industry Canada license-exempt RSS standard(s). Operation is subject to the following two conditions:

1. This device may not cause harmful interference, and
2. This device must accept any interference received, including interference that may cause undesired operation.

NOTE: Changes or modifications not expressly approved by the party responsible for compliance could void the user's authority to operate the equipment.

Additional Information

© 2018 FCA US LLC. All rights reserved. Mopar and Uconnect are registered trademarks and Mopar Owner Connect is a trademark of FCA US LLC. Android is a trademark of Google Inc. SiriusXM and all related marks and logos are trademarks of SiriusXM Radio Inc.

Uconnect System Support:

- U.S. residents visit www.DriveUconnect.com or call: 1-877-855-8400(24 hours a day 7 days a week)
- Canadian residents visit www.DriveUconnect.ca or call: 1-800-465-2001(English) or 1-800-387-9983(French)

SiriusXM Guardian services support:

- U.S. residents visit www.siriusxm.com/guardian or call: 1-844-796-4827
- Canadian residents visit www.siriusxm.ca/guardian or call: 1-877-324-9091

CD/DVD DISC MAINTENANCE

To keep a CD/DVD in good condition, take the following precautions:

- Handle the disc by its edge; avoid touching the surface.
- If the disc is stained, clean the surface with a soft cloth, wiping from center to edge.
- Do not apply paper or tape to the disc; avoid scratching the disc.

- Do not use solvents such as benzene, thinner, cleaners, or anti-static sprays.
- Store the disc in its case after playing.
- Do not expose the disc to direct sunlight.
- Do not store the disc where temperatures may become too high.

NOTE: If you experience difficulty in playing a particular disc, it may be damaged (e.g., scratched, reflective coating removed, a hair, moisture or dew on the disc), oversized, or have protection encoding. Try a known good disc before considering disc player service.

CUSTOMER ASSISTANCE

CONTENTS

- SUGGESTIONS FOR OBTAINING SERVICE FOR YOUR VEHICLE 602
  - Prepare For The Appointment 602
  - Prepare A List 602
  - Be Reasonable With Requests 602
- IF YOU NEED ASSISTANCE 602
  - FCA US LLC Customer Center 603
  - FCA Canada Inc. Customer Center. 603
  - In Mexico Contact 603
  - Puerto Rico And U.S. Virgin Islands. 603
  - Customer Assistance For The Hearing Or Speech Impaired (TDD/TTY) 603
  - Service Contract 604
- WARRANTY INFORMATION 605
- MOPAR PARTS 605
- REPORTING SAFETY DEFECTS 605
  - In The 50 United States And Washington, D.C. . .605
  - In Canada 605
- PUBLICATION ORDER FORMS 606

SUGGESTIONS FOR OBTAINING SERVICE FOR YOUR VEHICLE

Prepare For The Appointment

If you are having warranty work done, be sure to have the right papers with you. Take your warranty folder. All work to be performed may not be covered by the warranty. Discuss additional charges with the service manager. Keep a maintenance log of your vehicle's service history. This can often provide a clue to the current problem.

Prepare A List

Make a written list of your vehicle's problems or the specific work you want done. If you've had an accident or work done that is not on your maintenance log, let the service advisor know.

Be Reasonable With Requests

If you list a number of items and you must have your vehicle by the end of the day, discuss the situation with the service advisor and list the items in order of priority. At many authorized dealers, you may obtain a rental vehicle at a minimal daily charge. If you need a rental, it is advisable to make these arrangements when you call for an appointment.

IF YOU NEED ASSISTANCE

The manufacturer and its authorized dealer are vitally interested in your satisfaction. We want you to be happy with our products and services.

Warranty service must be done by an authorized dealer. We strongly recommend that you take the vehicle to an authorized dealer. They know your vehicle the best, and are most concerned that you get prompt and high quality service. The manufacturer's authorized dealer have the facilities, factory-trained technicians, special tools, and the latest information to ensure the vehicle is fixed correctly and in a timely manner.

This is why you should always talk to an authorized dealer service manager first. Most matters can be resolved with this process.

- If for some reason you are still not satisfied, talk to the general manager or owner of the authorized dealer. They want to know if you need assistance.
- If an authorized dealer is unable to resolve the concern, you may contact the manufacturer's customer center.

Any communication to the manufacturer's customer center should include the following information:

- Owner's name and address
- Owner's telephone number (home and office)
- Authorized dealer name
- Vehicle Identification Number (VIN)
- Vehicle delivery date and mileage

FCA US LLC Customer Center

P.O. Box 21–8004

Auburn Hills, MI 48321–8004

Phone: (877) 426-5337

FCA Canada Inc. Customer Center

P.O. Box 1621

Windsor, Ontario N9A 4H6

Phone: (800) 465-2001 English / (800) 387-9983 French

In Mexico Contact

Av. Prolongacion Paseo de la Reforma, 1240

Sante Fe C.P. 05109

Mexico, D. F.

In Mexico City: 800-505-1300

Outside Mexico City: +(52)55 50817568

Puerto Rico And U.S. Virgin Islands

FCA Caribbean LLC

P.O. Box 191857

San Juan 00919-1857

Phone: (877) 426-5337

Fax: (787) 782-3345

Customer Assistance For The Hearing Or Speech Impaired (TDD/TTY)

To assist customers who have hearing difficulties, the manufacturer has installed special TDD (Telecommunication Devices for the Deaf) equipment at its customer center. Any hearing or speech impaired customer, who has access to a TDD or a conventional teletypewriter (TTY) in the United States, can communicate with the manufacturer by dialing 1-800-380-CHRY.

Canadian residents with hearing difficulties that require assistance can use the special needs relay service offered by Bell Canada. For TTY teletypewriter users, dial 711 and for Voice callers, dial 1-800-855-0511 to connect with a Bell Relay Service operator.

Service Contract

You may have purchased a service contract for a vehicle to help protect you from the high cost of unexpected repairs after the manufacturer's New Vehicle Limited Warranty expires. The manufacturer stands behind only the manufacturer's service contracts. If you purchased a manufacturer's service contract, you will receive Plan Provisions and an Owner Identification Card in the mail within three weeks of the vehicle delivery date. If you have any questions about the service contract, call the manufacturer's Service Contract National Customer Hotline at 1-800-521-9922 (Canadian residents, call (800) 465-2001 English / (800) 387-9983 French).

The manufacturer will not stand behind any service contract that is not the manufacturer's service contract. It is not responsible for any service contract other than the manufacturer's service contract. If you purchased a service contract that is not a manufacturer's service contract, and you require service after the manufacturer's New Vehicle Limited Warranty expires, please refer to the contract documents, and contact the person listed in those documents.

We appreciate that you have made a major investment when you purchased the vehicle. An authorized dealer has also made a major investment in facilities, tools, and training to assure that you are absolutely delighted with the ownership experience. You will be pleased with their sincere efforts to resolve any warranty issues or related concerns.

WARNING!

Engine exhaust (internal combustion engines only), some of its constituents, and certain vehicle components contain, or emit, chemicals known to the State of California to cause cancer and birth defects, or other reproductive harm. In addition, certain fluids contained in vehicles and certain products of component wear contain, or emit, chemicals known to the State of California to cause cancer and birth defects, or other reproductive harm.

WARRANTY INFORMATION

See the Warranty Information Booklet for the terms and provisions of FCA US LLC warranties applicable to this vehicle and market.

MOPAR PARTS

Mopar fluids, lubricants, parts, and accessories are available from an authorized dealer. They are recommended for your vehicle in order to help keep the vehicle operating at its best.

REPORTING SAFETY DEFECTS

In The 50 United States And Washington, D.C.

If you believe that your vehicle has a defect that could cause a crash or cause injury or death, you should immediately inform the National Highway Traffic Safety Administration (NHTSA) in addition to notifying FCA US LLC.

If NHTSA receives similar complaints, it may open an investigation, and if it finds that a safety defect exists in a group of vehicles, it may order a recall and remedy campaign. However, NHTSA cannot become involved in individual problems between you, an authorized dealer or FCA US LLC.

To contact NHTSA, you may call the Vehicle Safety Hotline toll free at 1-888-327-4236 (TTY: 1-800-424-9153); or go to http://www.safercar.gov; or write to: Administrator, NHTSA, 1200 New Jersey Avenue, SE., West Building, Washington, D.C. 20590. You can also obtain other information about motor vehicle safety from http://www.safercar.gov.

In Canada

If you believe that your vehicle has a safety defect, you should contact the Customer Service Department immediately. Canadian customers who wish to report a safety defect to the Canadian government should contact Transport Canada, Motor Vehicle Defect Investigations and Recalls at 1-800-333-0510 or go to http://www.tc.gc.ca/roadsafety/.

PUBLICATION ORDER FORMS

To order the following manuals, you may use either the website or the phone numbers listed below.

Service Manuals

These comprehensive Service Manuals provide the information that students and professional technicians need in diagnosing/troubleshooting, problem solving, maintaining, servicing, and repairing FCA US LLC vehicles. A complete working knowledge of the vehicle, system, and/or components is written in straightforward language with illustrations, diagrams, and charts.

Diagnostic Procedure Manuals

Diagnostic Procedure Manuals are filled with diagrams, charts and detailed illustrations. These practical manuals make it easy for students and technicians to find and fix problems on computer-controlled vehicle systems and features. They show exactly how to find and correct problems the first time, using step-by-step troubleshooting and drivability procedures, proven diagnostic tests and a complete list of all tools and equipment.

Owner's Manuals

These Owner's Manuals have been prepared with the assistance of service and engineering specialists to acquaint you with specific FCA US LLC vehicles. Included are starting, operating, emergency and maintenance procedures as well as specifications, capabilities and safety tips.

Call toll free at:

- **1-800-890-4038 (U.S.)**
- **1-800-387-1143 (Canada)**

Or

Visit us on the Worldwide Web at:

- www.techauthority.com (U.S.)

INDEX

About Your Brakes 499
Adaptive Cruise Control (ACC) (Cruise Control) 293
Adding Engine Coolant (Antifreeze) 464
Adding Fuel 359
Additives, Fuel 502
Adjust
  Forward 49
  Rearward 49
Air Bag
  Air Bag Operation 216
  Air Bag Warning Light 212
  Driver Knee Air Bag 217
  Enhanced Accident Response 222, 433
  Event Data Recorder (EDR) 433
  Front Air Bag 214
  If Deployment Occurs 221
  Knee Impact Bolsters 216
  Maintaining Your Air Bag System 224
  Maintenance 224
  Redundant Air Bag Warning Light 213
  Side Air Bags 217
  Transporting Pets 244
Air Bag Light. 149, 212, 246
Air Cleaner, Engine (Engine Air Cleaner Filter). 448
Air Conditioner Maintenance 450
Air Conditioner Refrigerant 450, 451
Air Conditioner System 450
Air Conditioning. 92
Air Conditioning Filter 95, 448, 451
Air Conditioning, Operating Tips 94
Air Filter 448
Air Pressure
  Tires 478
Alarm
  Arm The System 34, 35
  Disarm The System 34
  Rearm The System 35
  Security Alarm 33, 153
Alterations/Modifications
  Vehicle 6
Ambient Light 78
Android Auto 595
Antifreeze (Engine Coolant) 463, 505
  Disposal 465
Anti-Lock Brake System (ABS) 166
Anti-Lock Warning Light 153
Apple CarPlay 597
Assist, Hill Start 168
Audio Systems (Radio). 511
Auto Down Power Windows 97

Automatic Dimming Mirror 66
Automatic Door Locks 41, 42
Automatic Headlights 74
Automatic High Beams 73
Automatic Temperature Control (ATC) 93
Automatic Transmission 253, 264
Adding Fluid 469
Fluid And Filter Change 469
Fluid Change 469
Fluid Level Check 468, 469
Fluid Type 468, 508
Gear Ranges 266
Special Additives 468
Automatic Transmission Limp Home Mode 270
Auto Up Power Windows 97
Auxiliary Driving Systems 181
Auxiliary Electrical Outlet (Power Outlet) 125
Auxiliary Power Outlet 125
Axle Fluid 508

Battery. 150, 445
Charging System Light 150
Keyless Key Fob Replacement 22
Battery Saver Feature. 76
Belts, Seat 246
Blind Spot Monitoring 181
Body Mechanism Lubrication 455
B-Pillar Location 476
Brake Assist System. 168
Brake Control System, Electronic. 167
Brake Fluid 467, 508
Brake System 467, 499
Anti-Lock (ABS) 499
Fluid Check 467
Master Cylinder 467
Parking 260
Warning Light 149
Brake/Transmission Interlock 263
Break-In Recommendations, New Vehicle. 259
Bulb Replacement 398
Bulbs, Light 248

Camera, Rear 357
Capacities, Fluid 505
Caps, Filler
Fuel 424
Oil (Engine) 442, 447
Radiator (Coolant Pressure) 465
Carbon Monoxide Warning 245, 504
Cargo Area Cover 111, 112

Cargo Compartment. 111
Cargo Tie-Downs. 113
Car Washes. 493
Cellular Phone 581
Certification Label 362
Chains, Tire 488
Changing A Flat Tire 413, 470
Chart, Tire Sizing. 472
Check Engine Light (Malfunction Indicator Light). . . .163
Checking Your Vehicle For Safety 245
Checks, Safety 245
Child Restraint 225
Child Restraints
  Booster Seats 229
  Child Seat Installation 241
  How To Stow An unused ALR Seat Belt 238
  Infant And Child Restraints 227
  LATCH Positions 231
  Lower Anchors And Tethers For Children 231
  Older Children And Child Restraints 228
  Seating Positions 230
Clean Air Gasoline 502
Cleaning
  Wheels 487
Climate Control 85
  Automatic 86
Cold Weather Operation. 258
Compact Disc (CD) Maintenance. 599
Compact Spare Tire 485
Console
  Storage 122
Console, Overhead 124
Contract, Service 604
Cooling Pressure Cap (Radiator Cap) 465
Cooling System 462
  Adding Coolant (Antifreeze) 464
  Coolant Level 465
  Cooling Capacity 505
  Disposal Of Used Coolant 465
  Drain, Flush, And Refill 463
  Inspection 462, 465
  Points To Remember 466
  Pressure Cap 465
  Radiator Cap 465
  Selection Of Coolant (Antifreeze) 463, 505, 506
Corrosion Protection 492
Cruise Control (Speed Control). 290, 293
Cruise Light 159, 161
Cupholders. 124
Customer Assistance 602

Cybersecurity 512

Daytime Running Lights 72
Dealer Service 445
Defroster, Windshield. 246
Diagnostic System, Onboard 161
Dimmer Control Switch 79
Dipsticks
  Oil (Engine) 444
Disabled Vehicle Towing 430
Disposal
  Antifreeze (Engine Coolant) 465
Do Not Disturb 595
Door Ajar. 150, 152
Door Ajar Light 150, 152
Door Locks
  Automatic 41, 42
Drag And Drop Menu 511
Driver's Seat Back Tilt 43
Driving. 382
DVD Player (Video Entertainment System). 565

Economy (Fuel) Mode 264
Electrical Outlet, Auxiliary (Power Outlet) 125
Electric Brake Control System 167
  Anti-Lock Brake System 166
  Electronic Roll Mitigation 171, 174
Electric Remote Mirrors 68
Electronic Speed Control (Cruise Control) 291
Electronic Stability Control (ESC) 171
Electronic Throttle Control Warning Light 151
Emergency, In Case Of
  Freeing Vehicle When Stuck 428
  Hazard Warning Flasher 392
  Jacking 413, 470
  Jump Starting 421
  Tow Hooks 432
Emission Control System Maintenance. 163
Engine 442
  Air Cleaner 448
  Block Heater 258
  Break-In Recommendations 259
  Checking Oil Level 444
  Compartment 442, 443
  Compartment Identification 442, 443
  Coolant (Antifreeze) 506
  Cooling 462
  Exhaust Gas Caution 245, 504
  Fails To Start 257
  Flooded, Starting 257

Fuel Requirements 501
Jump Starting 421
Oil 446, 505, 506
Oil Filler Cap 442, 447
Oil Filter 448
Oil Reset 138
Oil Selection 446, 505
Oil Synthetic 447
Overheating 425
Starting 253, 254
Engine Oil Viscosity 446, 447
Engine Oil Viscosity Chart 446, 447
Enhanced Accident Response Feature 222, 433
Ethanol. 502
Exhaust Gas Cautions 245, 504
Exhaust System 245, 460
Exterior Lights 71, 248

Filters
Air Cleaner 448
Air Conditioning 95, 448, 451
Engine Oil 448, 506
Engine Oil Disposal 448
Flashers 392
Hazard Warning 392
Turn Signals 160, 248, 401
Flash-To-Pass 73
Flooded Engine Starting. 257
Fluid, Brake 508
Fluid Capacities. 505
Fluid Leaks. 248
Fluid Level Checks
Brake 467
Fluids And Lubricants 506
Fog Lights 75
Fold-Flat Seats 43
Forward Collision Warning. 189
Four-Way Hazard Flasher. 392
Four Wheel Drive 273, 285
Operation 273
System 273
Four Wheel Drive Operation 273
Freeing A Stuck Vehicle 428
Front Axle (Differential) 469
Fuel 501
Adding 359
Additives 502
Clean Air 502
Economy Mode 264
Ethanol 502

Gasoline 501
Light 155
Materials Added 502
Methanol 502
Octane Rating 501, 506
Requirements 501
Tank Capacity 505
Fueling 359
Fuses 405

Garage Door Opener (HomeLink) 114
Gasoline, Clean Air 502
Gasoline, (Fuel) 501
Gasoline, Reformulated 502
Gear Ranges 266
Glass Cleaning 495
Glove Compartment Storage 120
Gross Axle Weight Rating 365
Gross Vehicle Weight Rating 364
GVWR 362

Hazard Warning Flashers 392
Headlights
Cleaning 492
Delay 74
High Beam/Low Beam Select Switch 73
Lights On Reminder 75
On With Wipers 74
Passing 73
Switch 71
Washers 85
Headlight Washers 85
Head Restraints 58
Head Rests 58
Heated Mirrors 70
Heated Seats 54
Heated Steering Wheel 63, 64
Heater, Engine Block 258
Hill Descent Control 176
Hill Descent Control Indicator 176
Hill Start Assist 168
Hitches
Trailer Towing 366
Hood
Closing 106
Opening 106
Hood Prop 106
Hood Release 106

Ignition 25

Switch 25
Inside Rearview Mirror 66, 392
Instrument Cluster
Descriptions 160
Display 136
Engine Oil Reset 138
Menu Items 141
Instrument Panel Lens Cleaning 495
Interior Appearance Care 494
Interior Lights. 76
Intermittent Wipers (Delay Wipers). 80
Introduction 4
In Vehicle Help
Vehicle User Guide 18
Inverter
Power 129
iPod Control 565
iPod/USB/MP3 Control. 565
Bluetooth Streaming Audio 565

Jacking Instructions 415
Jack Location 414
Jack Operation 413, 415, 470
Jump Starting 421

Key Fob
Arm The System 34
Disarm The System 34
Programming Additional Key Fobs 24, 32
Key Fob Battery Service (Remote Keyless Entry) 22
Key Fob Programming (Remote Keyless Entry) 24
Key-In Reminder. 27
Keyless Enter-N-Go. 37
Passive Entry 37
Keys 20
Replacement 24, 32

Lane Change Assist. 76
LaneSense. 352
Lap/Shoulder Belts 201
Latches. 248
Hood 106
Lead Free Gasoline 501
Leaks, Fluid 248
Life Of Tires 482
Liftgate. 107
Closing 108
Opening 107
Power 109
Liftgate Window Wiper/Washer 84

Light Bulbs 248
Lights. 248
Air Bag 149, 212, 246
Ambient 78
Automatic Headlights 74
Brake Assist Warning 173
Brake Warning 149
Bulb Replacement 398
Courtesy/Reading 77
Cruise 159, 161
Daytime Running 72
Dimmer Switch, Headlight 79
Electronic Stability Program(ESP) Indicator 151
Exterior 71, 248
Fog 75
Hazard Warning Flasher 392
Headlights On With Wipers 74
High Beam/Low Beam Select 72, 73
Hill Descent Control Indicator 176
Interior 76
Lights On Reminder 75
Low Fuel 155
Malfunction Indicator (Check Engine) 155
Map 77
Park 74, 160
Passing 73
Reading 77
Seat Belt Reminder 152
Security Alarm 153
Service 398
Side Marker 401
Traction Control 173
Turn Signals 76, 160, 248, 401
Vanity Mirror 70
Warning Instrument Cluster Descriptions 151, 160
Loading Vehicle. 362
Tires 476
Load Shed Battery Saver Mode 146
Load Shed Battery Saver On. 146
Load Shed Electrical Load Reduction. 146
Load Shed Intelligent Battery Sensor 146
Locks
Automatic Door 41, 42
Child Protection 42
Power Door 36
Lubrication, Body 455
Luggage Carrier 130
Lug Nuts/Bolts 499

Maintenance. 101, 105

Maintenance Free Battery 445
Maintenance Schedule 437
Malfunction Indicator Light (Check Engine) 155, 163
Manual
  Service 606
Memory Feature (Memory Seats) 51
Memory Seat 51
Methanol 502
Mirrors 66
  Automatic Dimming 66
  Electric Remote 68
  Exterior Folding 67
  Heated 70
  Outside 67
  Rearview 66, 392
  Vanity 70
Modifications/Alterations
  Vehicle 6
Monitor, Tire Pressure System. 192
Mopar Parts 605
Multi-Function Control Lever. 72

New Vehicle Break-In Period 259

Occupant Restraints. 198
Octane Rating, Gasoline (Fuel) 501
Oil, Engine. 446, 506
  Capacity 505
  Change Interval 446
  Checking 444
  Disposal 448
  Filter 448, 506
  Filter Disposal 448
  Identification Logo 446
  Materials Added To 447
  Pressure Warning Light 152
  Recommendation 446, 505
  Synthetic 447
  Viscosity 446, 447, 505
Oil Filter, Change 448
Oil Filter, Selection. 448
Oil Pressure Light 152
Oil Reset. 138
Onboard Diagnostic System 161
Operating Precautions 161
Operator Manual
  Owner's Manual 5, 606
Outside Rearview Mirrors 67
Overhead Console 124

Overheating, Engine 425

Paddle Shifters 270
Paint Care. 492
Parking Brake 260
ParkSense Active Park Assist 332
ParkSense System, Rear 313, 322
Passive Entry 37
Personalized Main Menu 511
Pets 244
Pinch Protection 101, 105
Placard, Tire And Loading Information 476
Power
  Brakes 499
  Distribution Center (Fuses) 407
  Door Locks 36
  Inverter 129
  Mirrors 68
  Outlet (Auxiliary Electrical Outlet) 125
  Seats 49
  Steering 286
  Sunroof 99, 102
  Tilt/Telescoping Steering Column 64
  Windows 96
Power Seats
  Forward 49
  Rearward 49
  Recline 50
Pregnant Women And Seat Belts 207
Preparation For Jacking 414
Pretensioners
  Seat Belts 207

Quadra-Lift. 279
Quadra-Trac 273

Radial Ply Tires 480
Radiator Cap (Coolant Pressure Cap). 465
Radio Frequency
  General Information 25, 31, 33, 41
Radio Operation 581
Radio Remote Controls 564
Rain Sensitive Wiper System 82
Rear Axle (Differential) 469
Rear Camera 357
Rear Cross Path. 186
Rear Cupholders 124
Rear ParkSense System 313, 322
Rearview Mirror 66

Rear Wiper/Washer 84
Reclining Front Seats 45
Recreational Towing 376
Reformulated Gasoline 502
Refrigerant 451
Release, Hood 106
Reminder, Seat Belt 200
Remote Control
  Starting System 28
Remote Keyless Entry 21
  Arm The Alarm 34
  Disarm The Alarm 34
  Programming Additional Key Fobs 24, 32
Remote Sound System (Radio) Control 564
Remote Starting
  Exit Remote Start Mode 30
Remote Starting System 28
Replacement Bulbs 398
Replacement Keys 24, 32
Replacement Tires 482
Reporting Safety Defects 605
Restraints, Child 225
Restraints, Head 58
Retractable Cargo Area Cover 112
Roll Over Warning 5
Roof Luggage Rack 130
Rotation, Tires 489

Safety Checks Inside Vehicle 246
Safety Checks Outside Vehicle 248
Safety Defects, Reporting 605
Safety, Exhaust Gas 245
Safety Information, Tire 471
Safety Tips 245
Schedule, Maintenance 437
Seat Belt Reminder 152
Seat Belts 200, 246
  Adjustable Shoulder Belt 205
  Adjustable Upper Shoulder Anchorage 205
  Adjustable Upper Shoulder Belt Anchorage 205
  Automatic Locking Retractor (ALR) 208
  Child Restraints 225
  Energy Management Feature 207
  Extender 206
  Front Seat 200, 201, 203
  Inspection 246
  Lap/Shoulder Belt Operation 203
  Lap/Shoulder Belts 201
  Lap/Shoulder Belt Untwisting 205
  Operating Instructions 203

Pregnant Women 207
Pretensioners 207
Rear Seat 201
Reminder 200
Seat Belt Extender 206
Seat Belt Pretensioner 207
Untwisting Procedure 205
Seat Belts Maintenance. 494
Seats 43, 49, 55
Adjustment 43, 49
Easy Entry 54
Head Restraints 58
Heated 54, 55
Rear Folding 43
Reclining 45
Seatback Release 43
Tilting 43
Vented 57
Ventilated 57
Security Alarm 33, 153
Arm The System 34
Disarm The System 34
Selec-Terrain 285
Selection Of Coolant (Antifreeze) 506
Sentry Key
Key Programming 32
Sentry Key Replacement 24, 32
Service Assistance 602
Service Contract 604
Service Manuals 606
Shifting 262
Automatic Transmission 262, 264
Shoulder Belts. 201
Signals, Turn 160, 248, 401
Siri. 594
SiriusXM Guardian
Vehicle Health Alert 592
Snow Chains (Tire Chains) 488
Snow Plow 375
Snow Tires 484
Spare Tires 414, 485, 486, 487
Spark Plugs 506
Speed Control
Accel/Decel 291, 292
Accel/Decel (ACC Only) 299
Cancel 293
Resume 293
Set 291
Speed Control (Cruise Control) 290, 291, 293

Starting 253, 254
Button 25
Cold Weather 258
Engine Block Heater 258
Engine Fails To Start 257
Remote 28
Starting And Operating 253, 254
Starting Procedures 253, 254
Steering
Power 286
Tilt Column 63, 64
Wheel, Heated 63, 64
Wheel, Tilt 63, 64
Steering Wheel Audio Controls 564
Steering Wheel Mounted Sound System Controls 564
Storage 120
Console 122
Door 121
Glove Compartment 120
Sunglasses 130
Storage Bin 111
Storage, Vehicle 94, 491
Storing Your Vehicle 491
Sunglasses Storage 130
Sun Roof 99, 101, 102, 105
Closing 100, 103
Opening 99, 103
Venting 101, 105
Sunshade Operation 100, 104
Sun Visor 71
Sway Control, Trailer 174
Synthetic Engine Oil 447
System, Remote Starting 28

Telescoping Steering Column 63, 64
Temperature Control, Automatic (ATC) 93
Tie Down Hooks, Cargo 113
Tilt Steering Column 63, 64
Tire And Loading Information Placard 476
Tire Markings 471
Tires 248, 477, 485, 490
Aging (Life Of Tires) 482
Air Pressure 477
Chains 488
Changing 413, 421, 470
Compact Spare 485
Flat Changing 421
General Information 477, 485
High Speed 479
Inflation Pressure 478

Jacking 413, 470
Life Of Tires 482
Load Capacity 476
Pressure Monitoring System (TPMS) 156, 192
Quality Grading 490
Radial 480
Replacement 421, 482
Rotation 489
Safety 471, 477
Sizes 472
Snow Tires 484
Spare Tires 414, 485, 486, 487
Spinning 481
Trailer Towing 371
Tread Wear Indicators 481
Wheel Mounting 421
Wheel Nut Torque 499
Tire Safety Information. 471
Tongue Weight/Trailer Weight 369
To Open Hood 106
Tow Hooks
Emergency 432
Towing 364, 430
Disabled Vehicle 430
Guide 367
Recreational 376
Weight 367
Towing Behind A Motorhome 376
Traction Control 171
Trailer Sway Control (TSC). 174
Trailer Towing. 364
Cooling System Tips 375
Hitches 366
Minimum Requirements 370
Tips 374
Trailer And Tongue Weight 369
Wiring 373
Trailer Towing Guide. 367
Trailer Weight 367
Transfer Case 470
Fluid 508
Maintenance 470
Transmission. 264
Automatic 264, 468
Fluid 508
Maintenance 468
Shifting 262
Transmitter, Garage Door Opener (Homelink). 114
Transporting Pets 244
Tread Wear Indicators 481

Trip Computer 148
Turn Signals 76, 160, 401

Uconnect Settings
  Customer Programmable Features 37
  Passive Entry Programming 37
Uconnect Voice Command 582
Uniform Tire Quality Grades 490
Universal Garage Door Opener (HomeLink). 114
Universal Transmitter. 114
Unleaded Gasoline 501
Untwisting Procedure, Seat Belt 205

Vanity Mirrors 70
Vehicle Identification Number (VIN) 498
Vehicle Loading. 362
Vehicle Modifications/Alterations. 6
Vehicle Storage. 94, 491
Vehicle User Guide
  In Vehicle Help 18
  Navigation 18
  Operating Instructions 18
  Searching User Guide 18
Viscosity, Engine Oil 446, 447
Voice Recognition System (VR) 582

Warning Flashers, Hazard 392
Warning Lights (Instrument Cluster Descriptions). . . .154
Warnings And Cautions 6
Warnings, Roll Over 5
Warranty Information 605
Washers, Headlight 85
Washers, Windshield. 79, 444
Washing Vehicle 493
Wheel And Wheel Tire Care 487
Wheel And Wheel Tire Trim 487
Wind Buffeting 98, 100, 104
Window Fogging 94
Windows
  Power 96
Windshield Defroster 246
Windshield Washers 79, 444
  Fluid 444
Windshield Wiper Blades 456
Windshield Wipers 79
Wipers Blade Replacement 456
Wipers, Intermittent 80
Wipers, Rain Sensitive 82

INSTALLATION OF RADIO TRANSMITTING EQUIPMENT

Special design considerations are incorporated into this vehicle's electronic system to provide immunity to radio frequency signals. Mobile two-way radios and telephone equipment must be installed properly by trained personnel. The following must be observed during installation.

The positive power connection should be made directly to the battery and fused as close to the battery as possible. The negative power connection should be made to body sheet metal adjacent to the negative battery connection. This connection should not be fused.

Antennas for two-way radios should be mounted on the roof or the rear area of the vehicle. Care should be used in mounting antennas with magnet bases. Magnets may affect the accuracy or operation of the compass on vehicles so equipped.

The antenna cable should be as short as practical and routed away from the vehicle wiring when possible. Use only fully shielded coaxial cable.

Carefully match the antenna and cable to the radio to ensure a low Standing Wave Ratio (SWR).

Mobile radio equipment with output power greater than normal may require special precautions.

All installations should be checked for possible interference between the communications equipment and the vehicle's electronic systems.

⚠ WARNING:

Operating, servicing and maintaining a passenger vehicle or off-road highway motor vehicle can expose you to chemicals including engine exhaust, carbon monoxide, phthalates, and lead, which are known to the State of California to cause cancer and birth defects or other reproductive harm. To minimize exposure, avoid breathing exhaust, do not idle the engine except as necessary, service your vehicle in a well-ventilated area and wear gloves or wash your hands frequently when servicing your vehicle. For more information go to www.P65Warnings.ca.gov/passenger-vehicle.

19WK-126-AB
©2018 FCA US LLC. All Rights Reserved.
Jeep is a registered trademark of FCA US LLC.

Second Edition
Printed in the U.S.A.