BRAKE SYSTEM

SECTION BR

CONTENTS

PRECAUTIONS 3
Supplemental Restraint System (SRS) "AIR BAG" 3
Precautions for Brake System 3
Wiring Diagrams and Trouble Diagnoses 3
PREPARATION 4
Commercial Service Tools 4
NOISE, VIBRATION AND HARSHNESS (NVH) TROUBLESHOOTING 5
NVH Troubleshooting Chart 5
ON-VEHICLE SERVICE 6
Checking Brake Fluid Level 6
Checking Brake Line 6
Changing Brake Fluid 6
Checking Brake Booster, Vacuum Hoses, Connections and Check Valve 6
Checking Disc Brake 7
ROTOR 7
CALIPER 7
PAD 7
Bleeding Brake System 8
BRAKE HYDRAULIC LINE 9
Hydraulic Circuit 9
Removal 9
Inspection 10
Installation 10
PROPORTIONING VALVE 11
Inspection 11
Removal and Installation (Built-in type) 11
BRAKE PEDAL AND BRACKET 12
Removal and Installation 12
Inspection 12
Adjustment 12
MASTER CYLINDER 14
Removal 14
Disassembly 15
Inspection 15
Assembly 15
Installation 16
BRAKE BOOSTER 17
On-vehicle Service 17
OPERATING CHECK 17
AIRTIGHT CHECK 17
Removal 17
Inspection 17
OUTPUT ROD LENGTH CHECK 17
Installation 18
VACUUM PIPING 19
Vacuum Hose 19
Removal and Installation 19
Inspection 19
HOSES AND CONNECTORS 19
CHECK VALVE 19
FRONT DISC BRAKE 20
Components 20
Pad Replacement 21
REMOVAL 21
INSTALLATION 22
Removal 23
Disassembly 23
Inspection 24
CALIPER 24
PISTON 24
PAD PIN AND CLIPS 24
ROTOR 24
Assembly 25
Installation 26
Brake Burnishing Procedure 26
REAR DISC BRAKE 27
Components 27
Removal 28
Disassembly 28
Inspection - Caliper 29
CYLINDER BODY 29
TORQUE MEMBER 29
PISTON 29
PIN AND PIN BOOT 30
Inspection - Rotor 30
RUBBING SURFACE 30

CONTENTS (Cont'd)

RUNOUT....30
THICKNESS....30
Assembly....30
Installation....32
PARKING BRAKE CONTROL....33
Components....33
Removal and Installation....33
Inspection....34
Adjustment....34

ABS

DESCRIPTION....35
Purpose....35
Operation....35
ABS Hydraulic Circuit....35
System Components....36
System Description....36
SENSOR....36
CONTROL UNIT....36
ABS ACTUATOR....37
Component Parts and Harness Connector Location....38
Schematic....39
Wiring Diagram - ABS -....40
ON BOARD DIAGNOSTIC SYSTEM DESCRIPTION....43
CONSULT-II....43
CONSULT-II APPLICATION TO ABS....43
ECU (ABS CONTROL UNIT) PART NUMBER MODE....43
CONSULT-II Inspection Procedure....44
SELF-DIAGNOSIS PROCEDURE....44
SELF-DIAGNOSTIC RESULTS MODE....45
DATA MONITOR PROCEDURE....46
ACTIVE TEST PROCEDURE....47
DATA MONITOR MODE....48
ACTIVE TEST MODE....48
TROUBLE DIAGNOSIS - INTRODUCTION....49
How to Perform Trouble Diagnoses for Quick and Accurate Repair....49
INTRODUCTION....49
TROUBLE DIAGNOSIS - BASIC INSPECTION....50
Preliminary Check....50
Ground Circuit Check....53
ABS CONTROL UNIT GROUND....53
ABS ACTUATOR GROUND....53
TROUBLE DIAGNOSES FOR SELF-DIAGNOSTIC ITEMS....54
Wheel Sensor or Rotor....54
DIAGNOSTIC PROCEDURE 1....54
ABS Actuator Solenoid Valve....56
DIAGNOSTIC PROCEDURE 2....56
Solenoid Valve Relay....59
DIAGNOSTIC PROCEDURE 3....59
Motor Relay or Motor....64
DIAGNOSTIC PROCEDURE 4....64
Low Voltage....70
DIAGNOSTIC PROCEDURE 5....70
Control Unit....72
DIAGNOSTIC PROCEDURE 6....72
TROUBLE DIAGNOSES FOR SYMPTOMS....73
1. ABS Works Frequently....73
2. Unexpected Pedal Action....73
3. Long Stopping Distance....75
4. ABS Does Not Work....75
5. Pedal Vibration and Noise....76
6. Warning Lamp Does Not Come On When Ignition Switch Is Turned On....77
7. Warning Lamp Stays On When Ignition Switch Is Turned On....81
REMOVAL AND INSTALLATION....87
Wheel Sensors....87
Sensor Rotor....87
REMOVAL....87
INSTALLATION....88
Control Unit....88
ABS Actuator....89
REMOVAL....89
INSTALLATION....89

SERVICE DATA AND SPECIFICATIONS (SDS)....90
General Specifications....90
Front Disc Brake....90
Rear Disc Brake....90
Brake Pedal....90
Parking Brake Control....91

Supplemental Restraint System (SRS) "AIR BAG"

NMBR0122

The Supplemental Restraint System such as "AIR BAG" used along with a seat belt, helps to reduce the risk or severity of injury to the driver and front passenger for certain types of collision. The SRS system composition which is available to NISSAN MODEL S15 is as follows:
The Supplemental Restraint System consists of driver air bag module (located in the center of the steering wheel), front passenger air bag module (located on the instrument panel on passenger side), a diagnosis sensor unit, warning lamp, wiring harness and spiral cable.
Information necessary to service the system safely is included in the **RS section** of this Service Manual.

WARNING:

- **To avoid rendering the SRS inoperative, which could increase the risk of personal injury or death in the event of a collision which would result in air bag inflation, all maintenance should be performed by an authorized NISSAN dealer.**
- **Improper maintenance, including incorrect removal and installation of the SRS, can lead to personal injury caused by unintentional activation of the system. For removal of Spiral Cable and Air Bag Module, see the RS section.**
- **Do not use electrical test equipment on any circuit related to the SRS unless instructed to in this Service Manual. SRS wiring harnesses can be identified with yellow harness connector.**

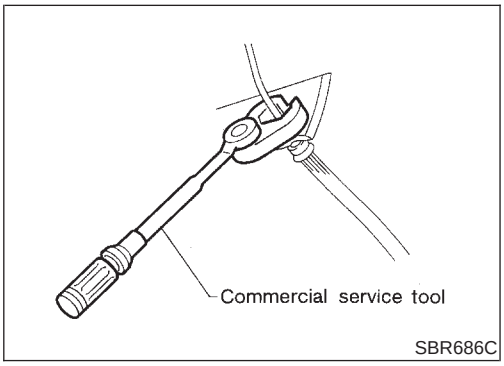

Precautions for Brake System

NMBR0002

- **Use brake fluid "DOT 3".**
- **Never reuse drained brake fluid.**
- **Be careful not to splash brake fluid on painted areas; it may cause paint damage. If brake fluid is splashed on painted areas, wash it away with water immediately.**
- **To clean master cylinder parts, disc brake caliper parts or wheel cylinder parts, use clean brake fluid.**
- **Never use mineral oils such as gasoline or kerosene. They will ruin rubber parts of hydraulic system.**
- **Use flare nut wrench when removing and installing brake tubes.**
- **Always torque brake lines when installing.**

WARNING:

- **Clean brakes with a vacuum dust collector to minimize risk of health hazard from powder caused by friction.**

Wiring Diagrams and Trouble Diagnoses

NMBR0003

When you read wiring diagrams, refer to the following:

- GI-11, "HOW TO READ WIRING DIAGRAMS"
- EL-7, "POWER SUPPLY ROUTING" for power distribution circuit

When you perform trouble diagnoses, refer to the following:

- GI-30, "HOW TO FOLLOW TEST GROUPS IN TROUBLE DIAGNOSES"
- GI-20, "HOW TO PERFORM EFFICIENT DIAGNOSIS FOR AN ELECTRICAL INCIDENT"

Commercial Service Tools

NMBR0005

Tool name	Description	
1 Flare nut crowfoot 2 Torque wrench	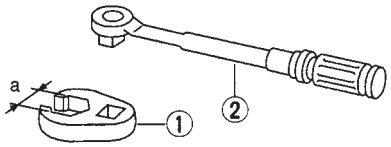 NT360	Removing and installing each brake piping **a: 10 mm (0.39 in)**
Brake fluid pressure gauge	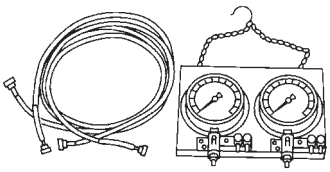 NT151	Measuring brake fluid pressure

NVH Troubleshooting Chart

NMBR0085S01

Use the chart below to help you find the cause of the symptom. If necessary, repair or replace these parts.

		Reference page	BR-20, BR-27	BR-20, BR-27	BR-27	BR-20	—	—	BR-24, BR-30	—	—	—	BR-25	—	PD-3	PD-3	AX-3	AX-3	SU-4	SU-4	SU-4	ST-5
Possible cause and SUSPECTED PARTS			Linings or pads - damaged	Linings or pads - uneven wear	Return spring damaged	Shims damaged	Rotor or drum imbalance	Rotor or drum damage	Rotor or drum runout	Rotor or drum deformation	Rotor or drum deflection	Rotor or drum rust	Rotor thickness variation	Drum out of round	PROPELLER SHAFT	DIFFERENTIAL	DRIVE SHAFT	AXLE	SUSPENSION	TIRES	ROAD WHEEL	STEERING
Symptom	BRAKE	Noise	×	×	×	×									×	×	×	×	×	×	×	×
		Shake					×								×		×	×	×	×	×	×
		Shimmy, Judder					×	×	×	×	×	×	×	×				×	×	×	×	×

×: Applicable

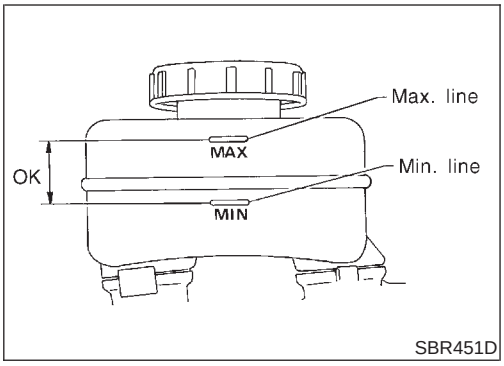

SBR451D

Checking Brake Fluid Level

NMBR0006

- Check fluid level in reservoir tank. It should be between Max and Min lines on reservoir tank.
- If fluid level is extremely low, check brake system.
- If the brake warning lamp comes on, check brake fluid level switch and parking brake switch.

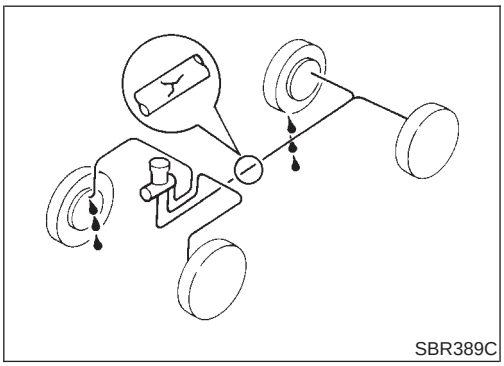
SBR389C

Checking Brake Line

NMBR0007

CAUTION:

If leakage occurs around joints, retighten or, if necessary, replace damaged parts.

1. Check brake lines (tubes and hoses) for cracks, deterioration and other damage. Replace any damaged parts.
2. Check for oil leakage by fully depressing brake pedal while engine is running.

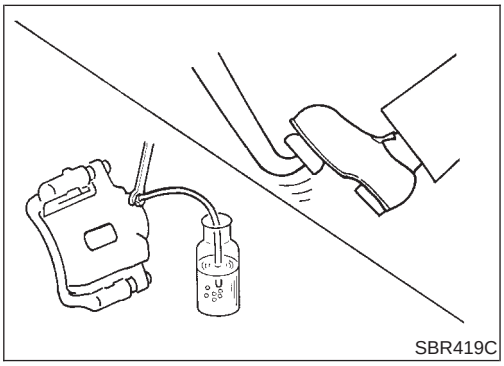
SBR419C

Changing Brake Fluid

NMBR0008

CAUTION:

- **Refill with new brake fluid “DOT 3”.**
- **Always keep fluid level higher than minimum line on reservoir tank.**
- **Never reuse drained brake fluid.**
- **Be careful not to splash brake fluid on painted areas; it may cause paint damage. If brake fluid is splashed on painted areas, wash it away with water immediately.**

1. Clean inside of reservoir tank, and refill with new brake fluid.
2. Connect a vinyl tube to each air bleeder valve.
3. Drain brake fluid from each air bleeder valve by depressing brake pedal.
4. Refill until brake fluid comes out of each air bleeder valve.
   Use same procedure as in bleeding hydraulic system to refill brake fluid.
   Refer to “Bleeding Brake System”, BR-8.

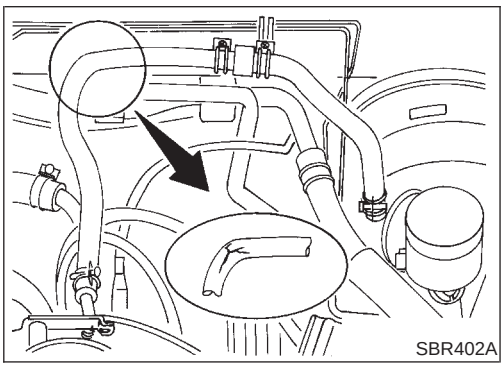
SBR402A

Checking Brake Booster, Vacuum Hoses, Connections and Check Valve

NMBR0123

Check vacuum lines, connections and check valve for improper attachment, air tightness, chafing and deterioration.

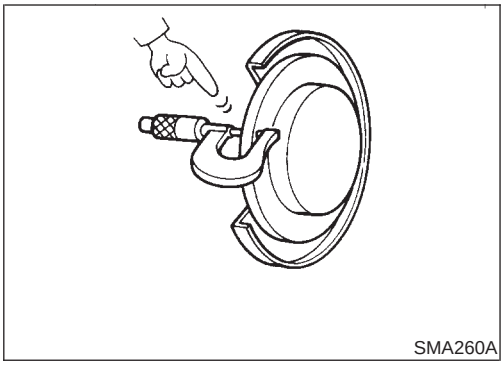

SMA260A

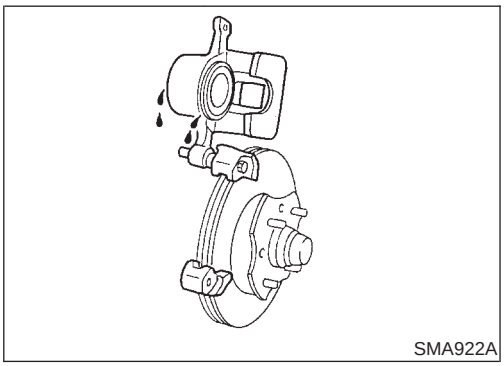

SMA922A

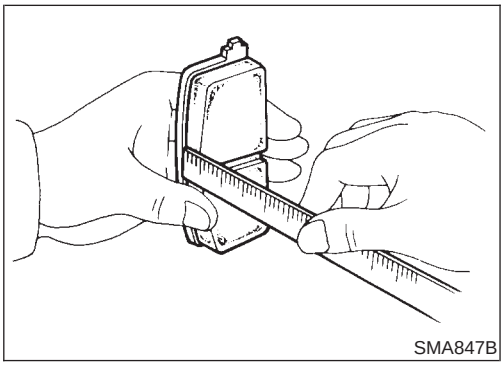

SMA847B

Checking Disc Brake

NMBR0124

ROTOR

NMBR0124S01

Check condition and thickness.

Unit: mm (in)

	Front	Rear
Disc brake type	OPF25VA	CL11H
Standard thickness	30.0 (1.181)	9.0 (0.354)
Minimum thickness	28.0 (1.102)	8.0 (0.315)

CALIPER

NMBR0124S02

Check for leakage.

PAD

NMBR0124S03

Check for wear or damage.

Unit: mm (in)

	Front	Rear
Disc brake type	OPF25VA	CL11H
Standard thickness	10.0 (0.394)	9.5 (0.374)
Minimum thickness	2.0 (0.079)	

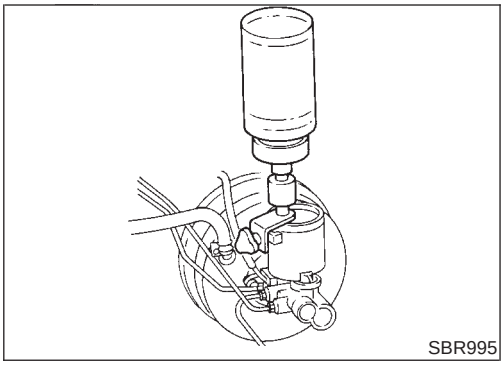
SBR995

Bleeding Brake System

=NMBR0009

CAUTION:

- **Carefully monitor brake fluid level at master cylinder during bleeding operation.**
- **If master cylinder is suspected to have air inside, bleed air from master cylinder first. Refer to "Installation", "MASTER CYLINDER", BR-16.**
- **Fill reservoir with new brake fluid "DOT 3". Make sure it is full at all times while bleeding air out of system.**
- **Place a container under master cylinder to avoid spillage of brake fluid.**
- **Turn ignition switch OFF and disconnect ABS actuator and electric unit connectors or battery ground cable.**
- **Bleed air in the following order.**

1. Left rear brake
2. Right rear brake
3. Left front brake
4. Right front brake

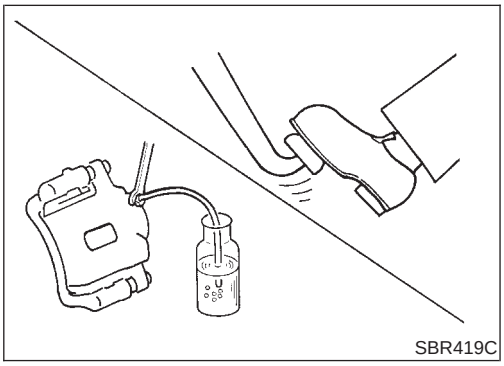
SBR419C

1. Connect a transparent vinyl tube to air bleeder valve.
2. Fully depress brake pedal several times.
3. With brake pedal depressed, open air bleeder valve to release air.
4. Close air bleeder valve.
5. Release brake pedal slowly.
6. Repeat steps 2. through 5. until clear brake fluid comes out of air bleeder valve.
7. Tighten air bleeder valve.

   : 7 - 9 N·m (0.7 - 0.9 kg-m, 61 - 78 in-lb)

Hydraulic Circuit

NMBR0010

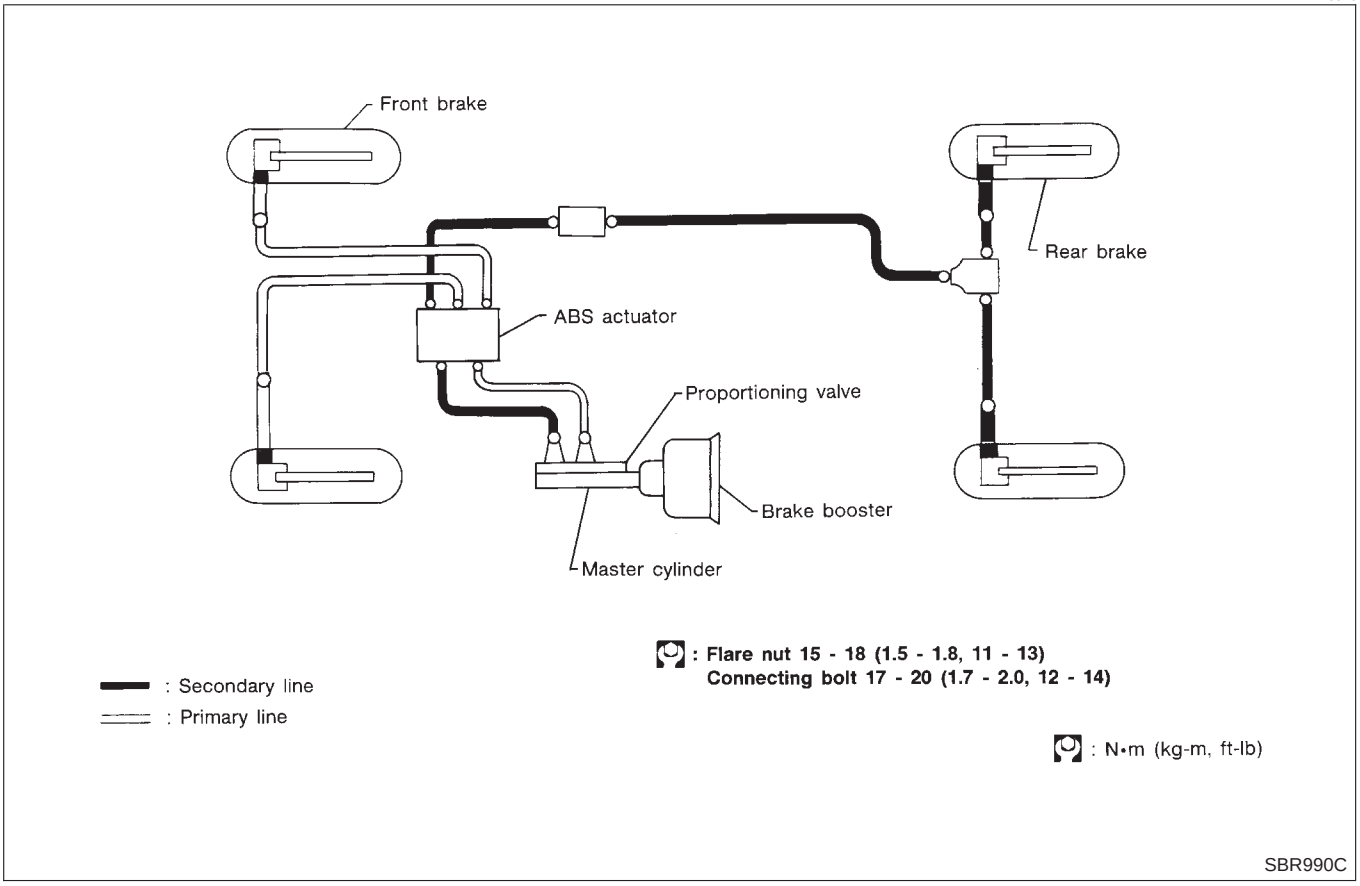

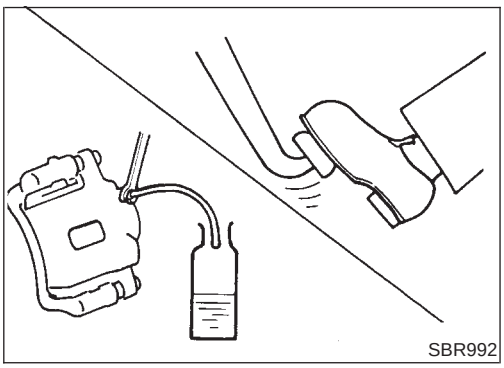

Removal

NMBR0011

CAUTION:

- **Be careful not to splash brake fluid on painted areas; it may cause paint damage. If brake fluid is splashed on painted areas, wash it away with water immediately.**
- **All hoses must be free from excessive bending, twisting and pulling.**

1. Connect vinyl tube to air bleeder valve.
2. Drain brake fluid from each air bleeder valve by depressing brake pedal.
3. Remove flare nut connecting brake tube and hose, then withdraw lock spring.
4. Cover openings to prevent entrance of dirt whenever disconnecting brake line.

Inspection

NMBR0012

Check brake lines (tubes and hoses) for cracks, deterioration and other damage. Replace any damaged parts.

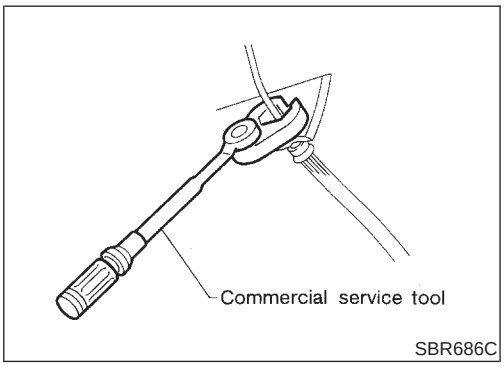

Installation

NMBR0013

CAUTION:

- **Refill with new brake fluid “DOT 3”.**
- **Never reuse drained brake fluid.**

1. Tighten all flare nuts and connecting bolts.

   Flare nut:

   : 15 - 17 N·m (1.5 - 1.8 kg-m, 11 - 13 ft-lb)

   Connecting bolt:

   : 17 - 19 N·m (1.7 - 2.0 kg-m, 12 - 14 ft-lb)

2. Refill until new brake fluid comes out of each air bleeder valve.
3. Bleed air. Refer to “Bleeding Brake System”, BR-8.

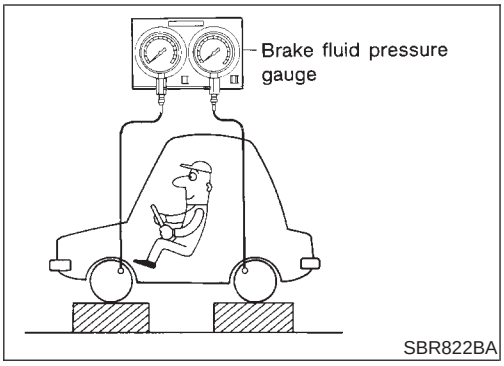

SBR822BA

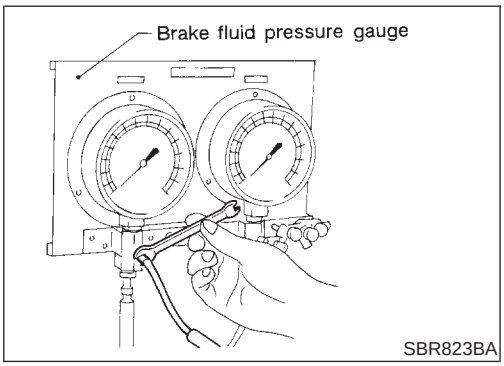

SBR823BA

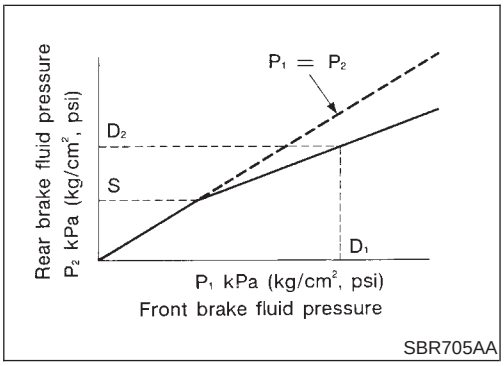

SBR705AA

Inspection

NMBR0086

CAUTION:

- **Carefully monitor brake fluid level at master cylinder.**
- **Use new brake fluid "DOT 3".**
- **Be careful not to splash brake fluid on painted areas; it may cause paint damage. If brake fluid is splashed on paint areas, wash it away with water immediately.**
- **Depress pedal slowly when raising front brake pressure.**
- **Check rear brake pressure 2 seconds after front brake pressure reaches specified value.**
- **Disconnect harness connectors from ABS actuator and electric unit before checking.**

1. Remove front LH tire.
2. Connect tool to air bleeders on front LH brake caliper and rear LH or RH brake wheel cylinder.
3. Install front LH tire.

Before installing front LH tire, confirm the tool is not touching the front LH wheel.

4. Bleed air from the tool.
5. Check fluid pressure by depressing brake pedal.

kPa (kg/cm^2, psi)

Applied pressure (Front brake) D_1	7,218 (73.6, 1,047)
Output pressure (Rear brake) D_2	5,002 - 5,384 (51.0 - 54.9, 725 - 781)

If output pressure is out of specifications, replace master cylinder assembly (built-in type).

6. Bleed air after disconnecting the tool. Refer to "Bleeding Brake System", BR-8.
7. Install front LH tire.

Removal and Installation (Built-in type)

NMBR0087

Always replace together with master cylinder as an assembly.

- Refer to "MASTER CYLINDER", BR-14.

Removal and Installation

NMBR0016

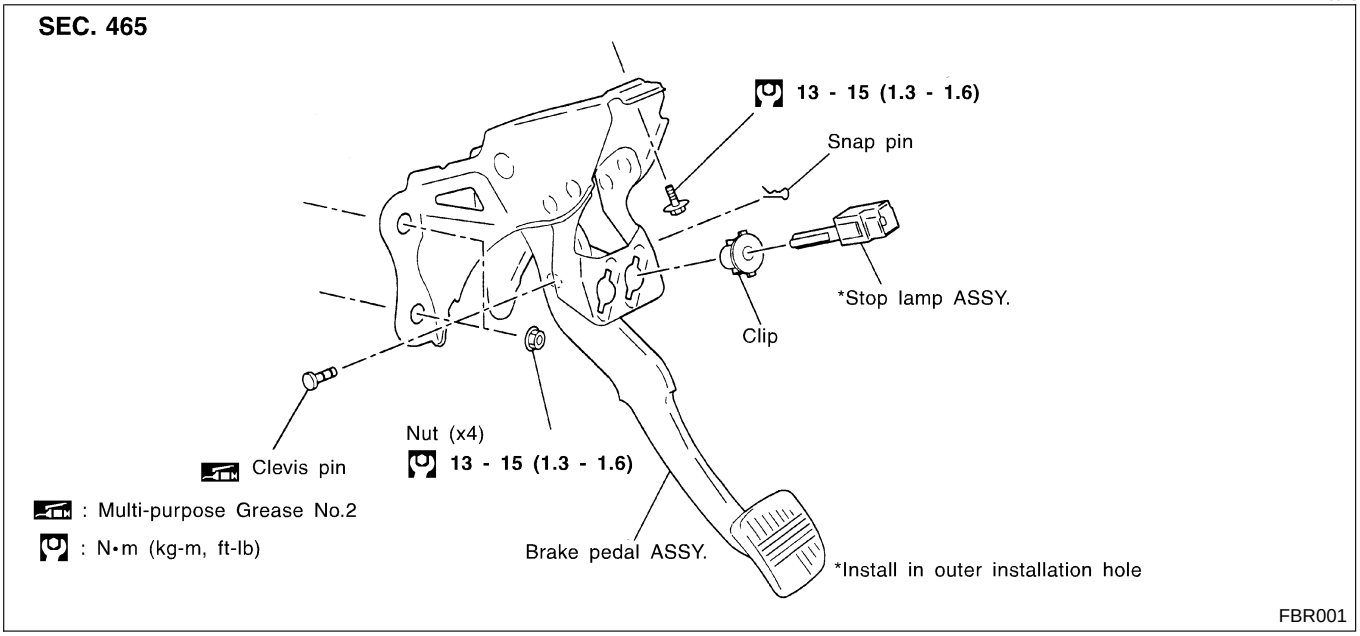

Inspection

NMBR0017

Check brake pedal for following items.

- Brake pedal bend
- Clevis pin deformation
- Crack of any welded portion
- Crack or deformation of clevis pin stopper

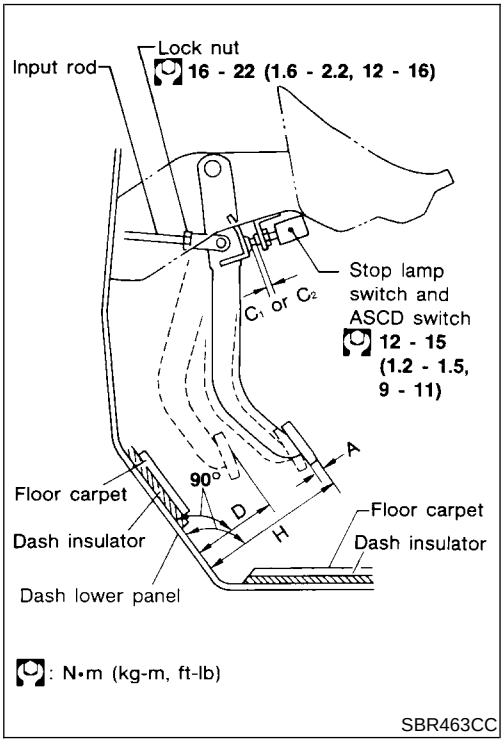

Adjustment

NMBR0018

Check brake pedal free height from metal panel.

H: Free height

Refer to SDS (BR-90).

D: Depressed height

Refer to SDS (BR-90).

Under force of 490 N (50 kg, 110 lb) with engine running

C_1, C_2: Clearance between pedal stopper and threaded end of stop lamp switch and ASCD switch

0.3 - 1.0 mm (0.012 - 0.039 in)

A: Pedal free play

1 - 3 mm (0.04 - 0.12 in)

If necessary, adjust brake pedal free height.

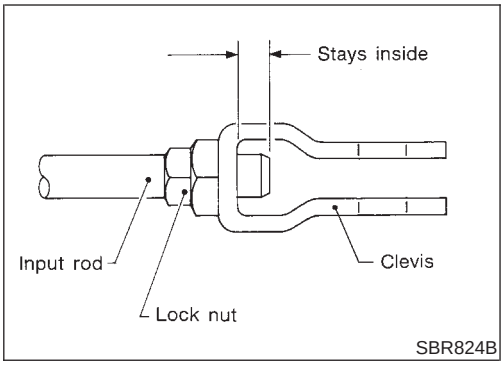

1. Loosen lock nut and adjust pedal free height by turning brake booster input rod. Then tighten lock nut.

Make sure that tip of input rod stays inside.

2. Adjust clearance "C_1" and "C_2 " with stop lamp switch. Then tighten lock nuts.
3. Check pedal free play.

Make sure that stop lamp is off when pedal is released.

4. Check brake pedal's depressed height while engine is running. If depressed height is below specified value, check brake system for leaks, accumulation of air or any damage to components (master cylinder, wheel cylinder, etc.). Then make necessary repairs.

Removal

NMBR0019

CAUTION:

- **Be careful not to splash brake fluid on painted areas; it may cause paint damage. If brake fluid is splashed on painted areas, wash it away with water immediately.**
- **In the case of brake fluid leakage from the master cylinder, disassemble the cylinder. Then check piston cups for deformation and scratches and replace necessary parts.**

1. Connect a vinyl tube to air bleeder valve.
2. Drain brake fluid from each air bleeder valve, depressing brake pedal to empty fluid from master cylinder.
3. Remove brake pipe flare nuts.
4. Remove master cylinder mounting nuts.

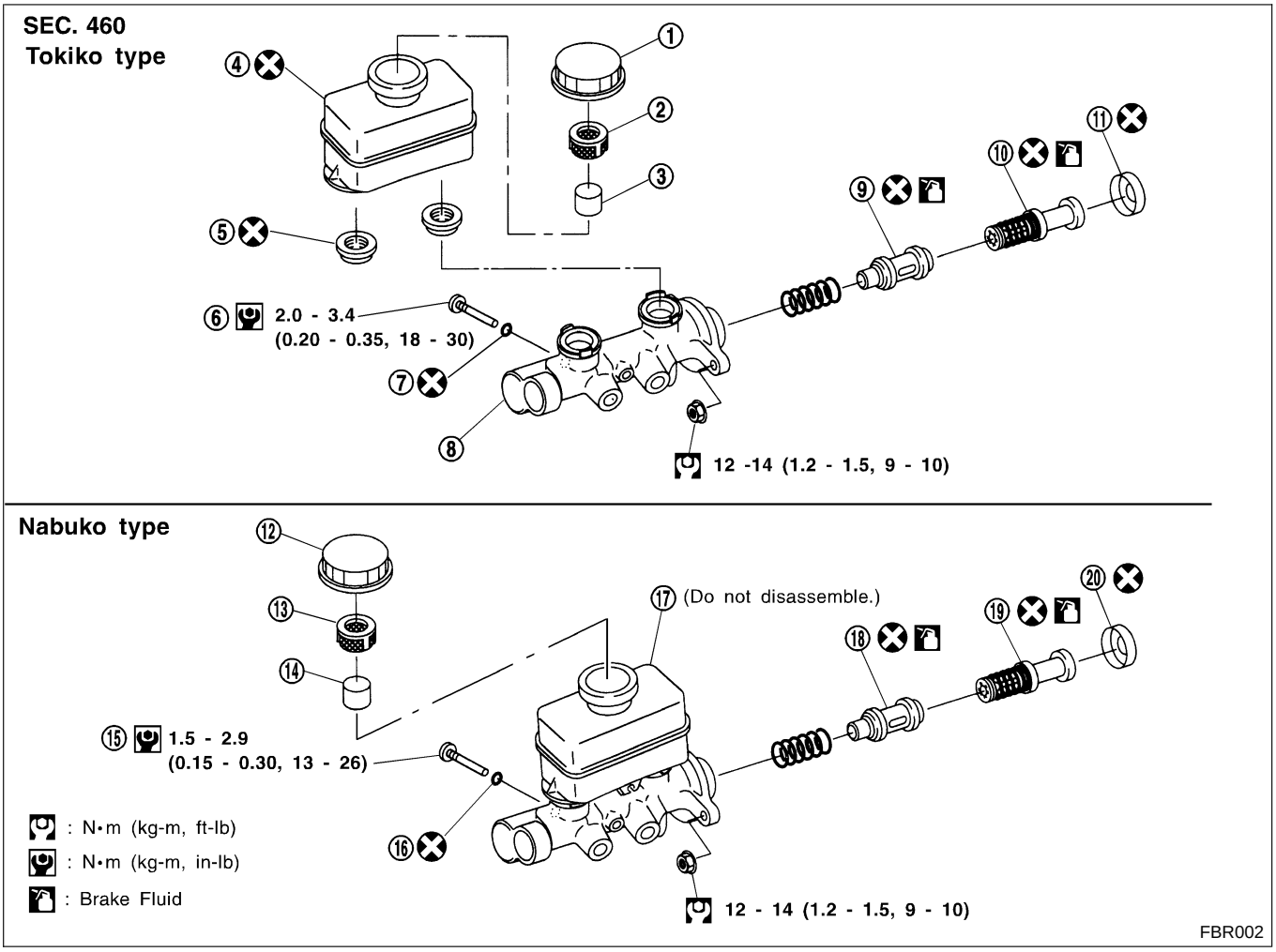

1	Reservoir cap	8	Cylinder body	15	Piston stopper
2	Oil filter	9	Secondary piston assembly	16	O-ring
3	Float	10	Primary piston assembly	17	Reservoir tank
4	Reservoir tank	11	Stopper cap	18	Secondary piston assembly
5	Grommet	12	Reservoir cap	19	Primary piston assembly
6	Piston stopper	13	Oil filter	20	Stopper cap
7	O-ring	14	Float		

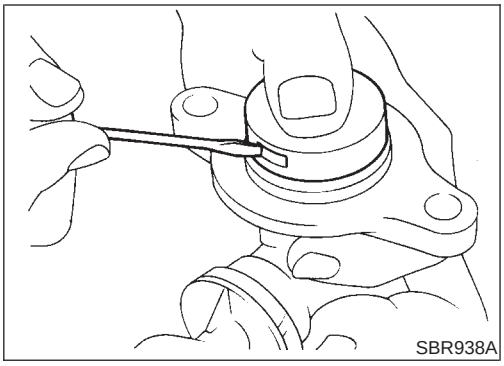
SBR938A

Disassembly

NMBR0020

1. Bend claws of stopper cap outward.

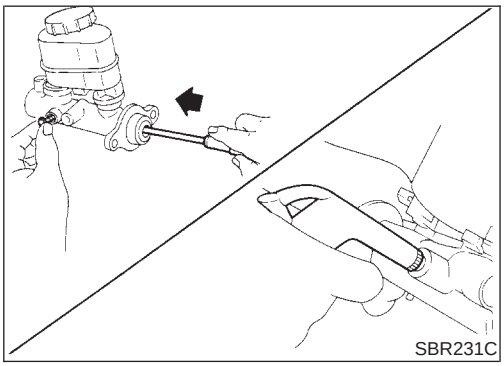
SBR231C

2. Remove piston stopper while piston is pushed into cylinder.
3. Remove piston assemblies.

If it is difficult to remove secondary piston assembly, gradually apply compressed air through fluid outlet.

4. Draw out reservoir tank (TOKIKO made-master cylinder).

Inspection

NMBR0021

Check master cylinder inner wall for pin holes and scratches. Replace if damaged.

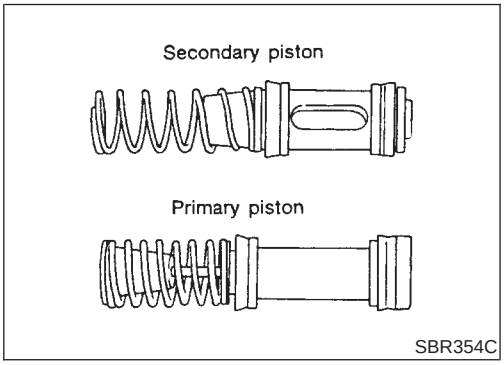

SBR354C

Assembly

NMBR0022

1. Insert secondary piston assembly. Then insert primary piston assembly.

- **Do not reuse primary and secondary pistons.**
- **Pay attention to direction of piston cups in figure at left. Also, insert pistons squarely to avoid scratches on cylinder bore.**
- **Pay attention to alignment of secondary piston slit with valve stopper mounting hole of cylinder body.**

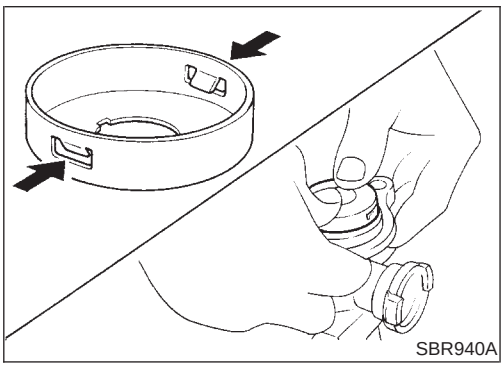
SBR940A

2. Install stopper cap.

Before installing stopper cap, ensure that claws are bent inward.

3. Push reservoir tank seals into cylinder body.
4. Push reservoir tank into cylinder body.

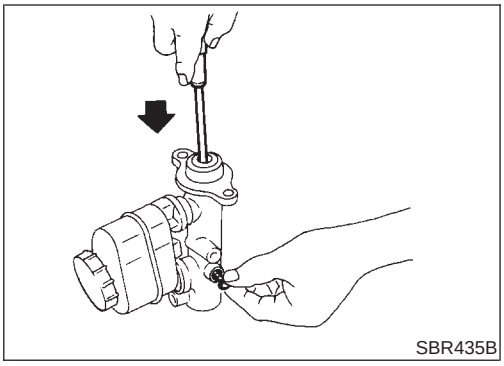

5. Install valve stopper while piston is pushed into cylinder.

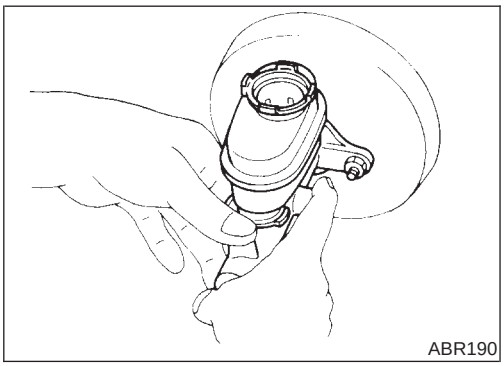

Installation

NMBR0023

CAUTION:

- **Refill with new brake fluid "DOT 3".**
- **Never reuse drained brake fluid.**

1. Place master cylinder onto brake booster and secure mounting nuts lightly.
2. Torque mounting nuts.
   : 12 - 15 N·m (1.2 - 1.5 kg-m, 9 - 11 ft-lb)
3. Fill up reservoir tank with new brake fluid.
4. Plug all ports on master cylinder with fingers to prevent air suction while releasing brake pedal.
5. Have driver depress brake pedal slowly several times until no air comes out of master cylinder.
6. Fit brake lines to master cylinder.
7. Tighten flare nuts.
   : 15 - 17 N·m (1.5 - 1.8 kg-m, 11 - 13 ft-lb)
8. Bleed air. Refer to "Bleeding Brake System", BR-8.

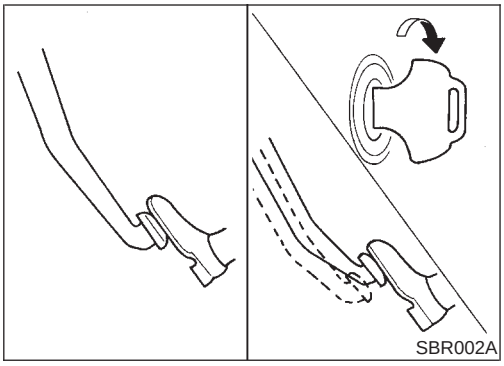

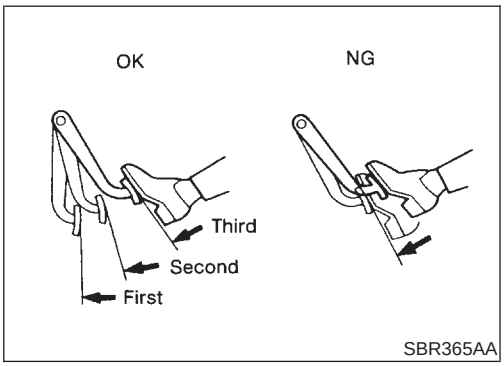

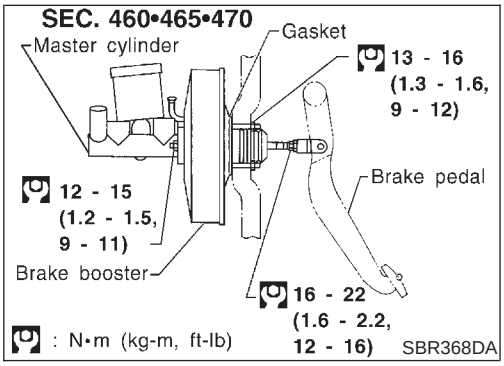

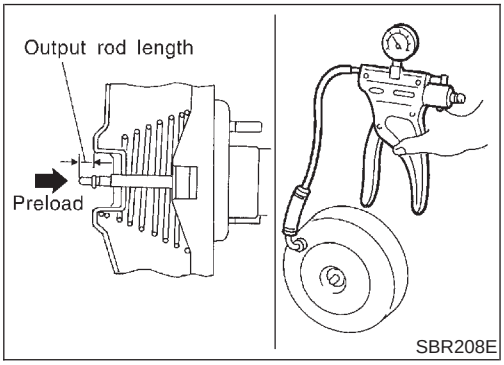

On-vehicle Service

NMBR0024

OPERATING CHECK

NMBR0024S01

1. Depress brake pedal several times with engine off. After exhausting vacuum, make sure there is no change in pedal stroke.
2. Depress brake pedal, then start engine. If pedal goes down slightly, operation is normal.

AIRTIGHT CHECK

NMBR0024S02

1. Start engine, and stop it after one or two minutes. Depress brake pedal several times slowly. Booster is airtight if pedal stroke is less each time.
2. Depress brake pedal while engine is running, and stop engine with pedal depressed. The pedal stroke should not change after holding pedal down for **30 seconds**.

Removal

NMBR0025

CAUTION:

- **Be careful not to splash brake fluid on painted areas; it may cause paint damage. If brake fluid is splashed on painted areas, wash it away with water immediately.**
- **Be careful not to deform or bend brake pipes, during removal of booster.**

Inspection

NMBR0026

OUTPUT ROD LENGTH CHECK

NMBR0026S01

1. Apply vacuum of −66.7 kPa (−500 mmHg, −19.69 inHg) to brake booster with a hand vacuum pump.
2. Add preload of 19.6 N (2.0 kg, 4.4 lb) to output rod.
3. Check output rod length.

   Specified length:
   10.4 mm (0.409 in)

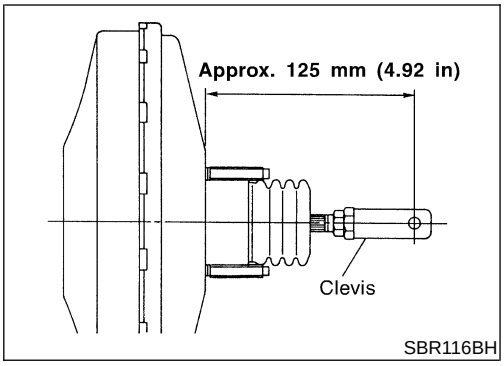

Installation

=NMBR0027

CAUTION:

- **Be careful not to deform or bend brake pipes during installation of booster.**
- **Replace clevis pin if damaged.**
- **Refill with new brake fluid “DOT 3”.**
- **Never reuse drained brake fluid.**
- **Take care not to damage brake booster mounting bolt thread when installing. Due to the narrow angle of installation, the threads can be damaged by the dash panel.**

1. Before fitting booster, temporarily adjust clevis to dimension shown.
2. Fit booster, then secure mounting nuts (brake pedal bracket to brake booster) lightly.
3. Connect brake pedal and booster input rod with clevis pin.
4. Secure mounting nuts.

   Specification: 13 - 16 N·m (1.3 - 1.6 kg-m, 9 - 12 ft-lb)
5. Install master cylinder. Refer to “Installation” in “MASTER CYLINDER”, BR-16.
6. Adjust brake pedal height and free play. Refer to “Adjustment” in “BRAKE PEDAL AND BRACKET”, BR-12.
7. Secure lock nut for clevis.

   : 16 - 22 N·m (1.6 - 2.2 kg-m, 12 - 16 ft-lb)
8. Bleed air. Refer to “Bleeding Brake System”, BR-8.

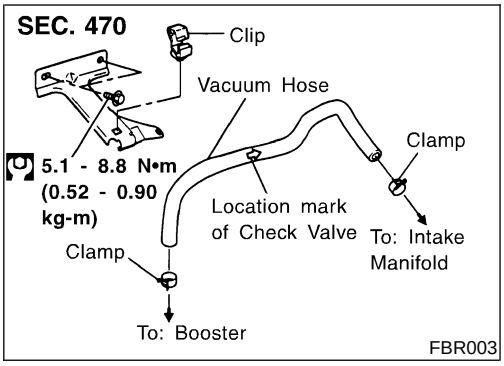

Vacuum Hose

NMBR0028

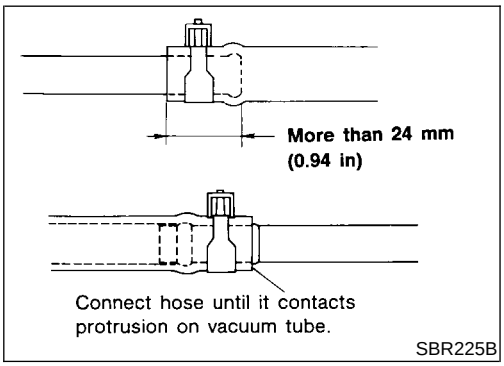

Removal and Installation

NMBR0029

CAUTION:

When installing vacuum hoses, pay attention to the following points.

- **Do not apply any oil or lubricants to vacuum hose and check valve.**
- **Insert vacuum tube into vacuum hose as shown.**

Inspection

NMBR0030

HOSES AND CONNECTORS

NMBR0030S01

Check vacuum lines, connections and check valve for airtightness, improper attachment chafing and deterioration.

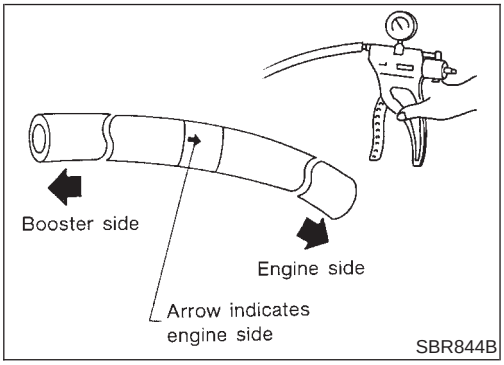

CHECK VALVE

NMBR0030S02

Check vacuum with a vacuum pump.

Connect to booster side	Vacuum should exist.
Connect to engine side	Vacuum should not exist.

Components

NMBR0031

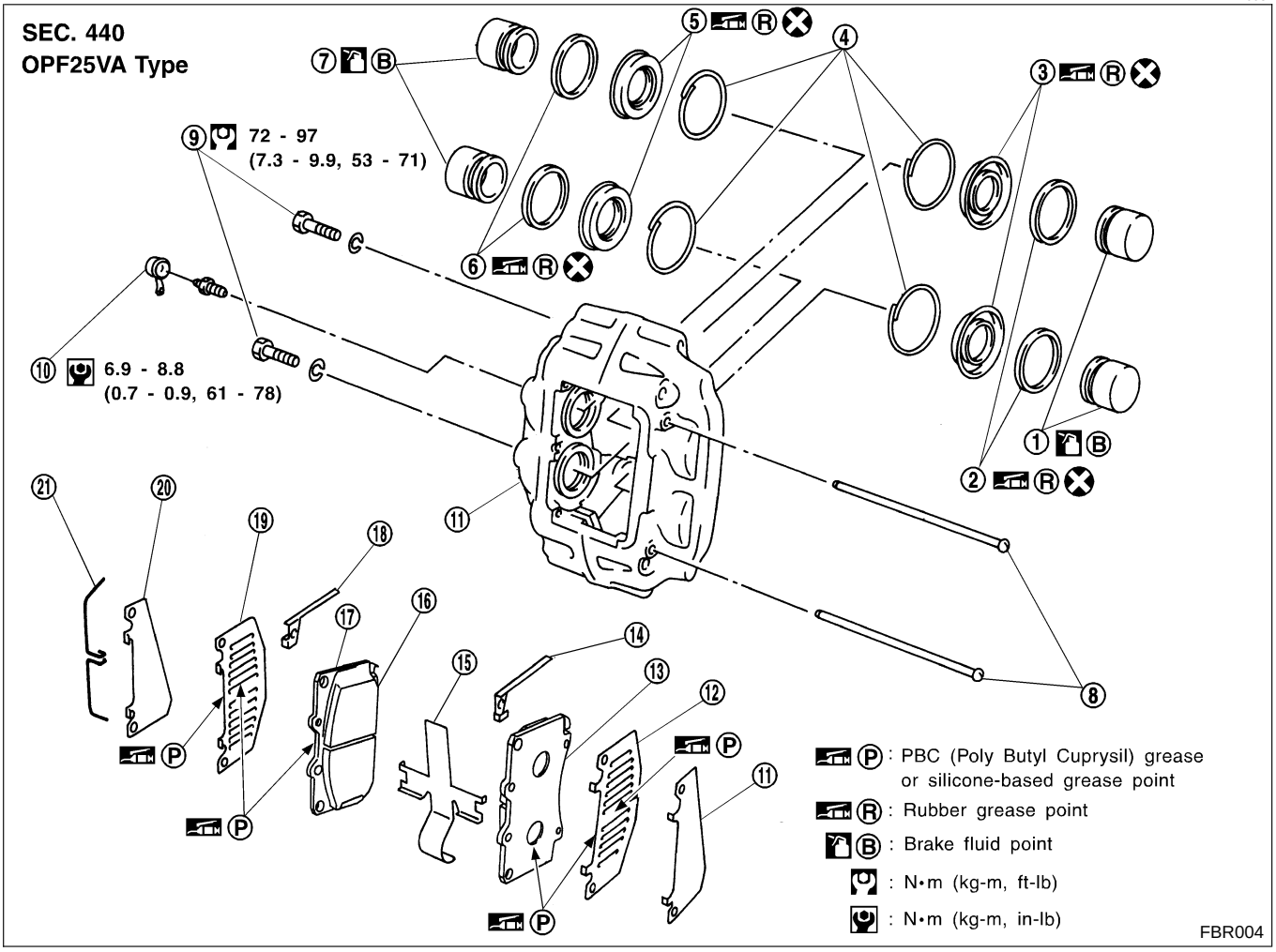

1	Piston	8	Pad pin	15	Cross spring
2	Piston seal	9	Caliper holding bolt	16	Pad wear sensor
3	Piston boot	10	Air bleeder	17	Inner pad
4	Retaining ring	11	Caliper assembly	18	L-type spacer
5	Piston boot	12	Outer shim A	19	Inner shim A
6	Piston seal	13	Outer pad	20	Inner shim B
7	Piston	14	L-type spacer	21	Clip

Pad Replacement

=NMBR0125

CAUTION:

- **Use a vacuum type of cleaning unit for cleaning dust particles etc. off the calipers and brake pads. Do not use an air gun.**
- **Do not depress the brake pedal while the brake pad is removed as the piston can pop out.**
- **Only replace the shims if there is a significant amount of rust on them.**
- **Where the brake pads are replaced, make sure that the inner shim A, B and the outer shim A, B are replaced as a set.**

REMOVAL

NMBR0125S01

1. Remove the pad pin from the clip.

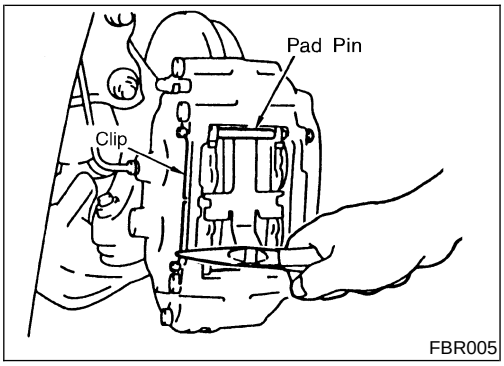

FBR005

2. Remove the pad pin by holding the cross spring with your hand and using a screwdriver.

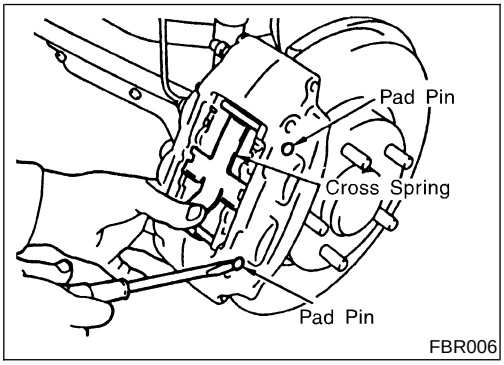

FBR006

3. Using pliers, remove the pad from the shim.

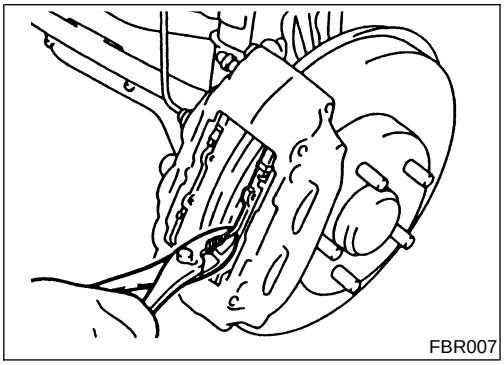
FBR007

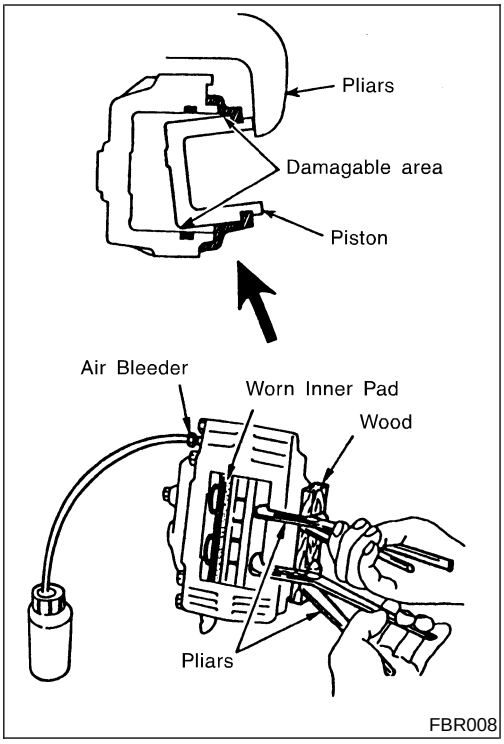

INSTALLATION

NMBR0125S02

1. Reinstall the inner pad.
2. Connect the air bleeder to the plastic tube, open the air bleeder, and at the same time push the two outer pistons inwards with pliers. Use two pieces of wood to prevent any damage to the calipers.

CAUTION:
Care must be taken to prevent any damage to inner wall of the cylinder by the piston when pushing it inwards by evenly changing the position of the pliers.

3. Install new pads to the outer side.

CAUTION:
- **Confirm the position when installing the outer shim A and B.**
- **Take care when installing the outer and the inner pad as they are shaped differently.**

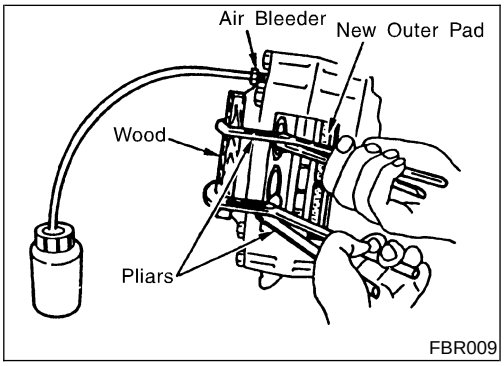

4. Remove the inner side pad.
5. Patch the outer side in the same way with wood, then using pliers, press the inner pistons (2) at the same time.
6. Tighten the air bleeder.
7. Install new pads to the inner side.

CAUTION:
- **Check the positioning of the inner shim A and B when installing them.**
- **Install in the L-type spacer so that it is in the same direction as the long hole.**

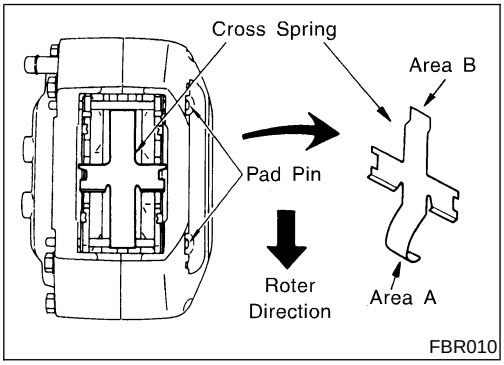

8. Insert the lower side pad pin form the outer cylinder, and insert through the lower side of the pad hole to the inner cylinder side correctly.
9. Lay the cross spring area "A" over the pad pin on the lower side, then insert the pad pin that was pushed in from the top "B" side from the outer cylinder side through to the inner cylinder side firmly, and then set the cross spring.

CAUTION:
If the direction or position of the cross spring is mistaken this could result in noise or whining.

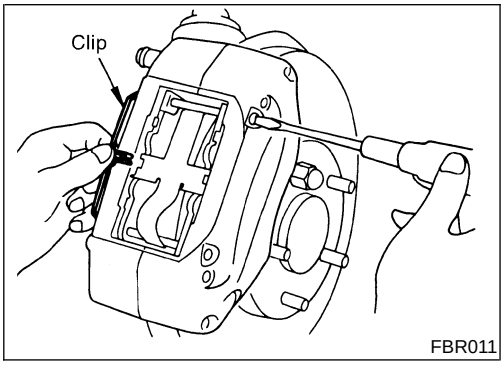

10. Rotate the pad pin, after fixing a clip to the small hole at the end of the pad pin. Using pliers, bend the center of the clip to the center hole of the inner body.

CAUTION:
If the clip is not positioned properly there is a danger it could fall out when driving.

Removal

NMBR0033

WARNING:

Clean brake pads with a vacuum dust collector to minimize the hazard of airborne particles or other materials.

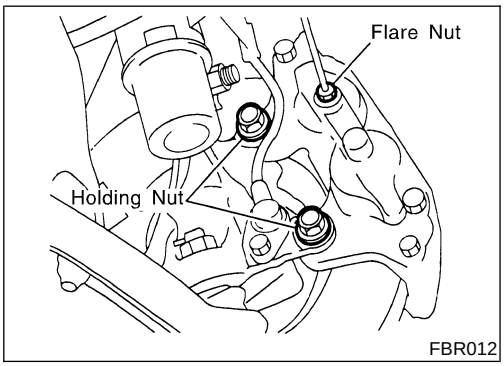

FBR012

1. Drain brake fluid.
2. Remove the brake pads.
3. Separate the caliper assembly and the brake tube using a flare nut spanner.
4. Remove the caliper holding bolt and then remove the caliper assembly.
5. Remove the disc rotor.

Disassembly

NMBR0034

1. Remove the caliper assembly.
2. Using a screwdriver as shown in the figure to the left, remove the retaining ring.

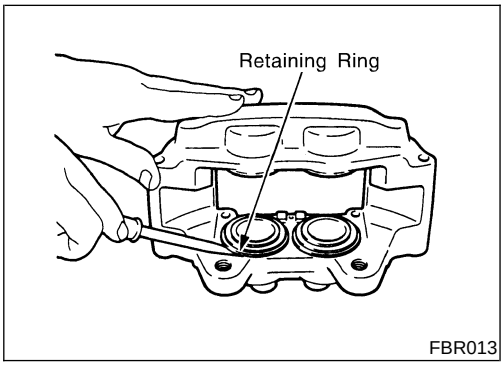

FBR013

3. Insert pieces of wood as shown in the figure to the left and then, place air into the flare nuts holes and then remove the piston and the piston boots. At this time should the 4 pistons not be removed evenly, insert the removed piston inwards slightly and then blow air into the flare nut holes once more.
4. Remove the piston boots from the pistons.

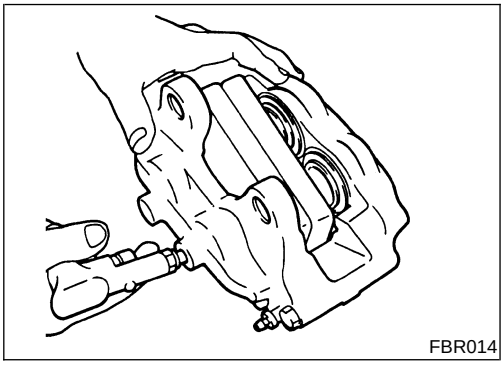
FBR014

5. Using a screwdriver, remove the piston seals.

CAUTION:

Care should be taken not to scratch the inner side of the cylinder.

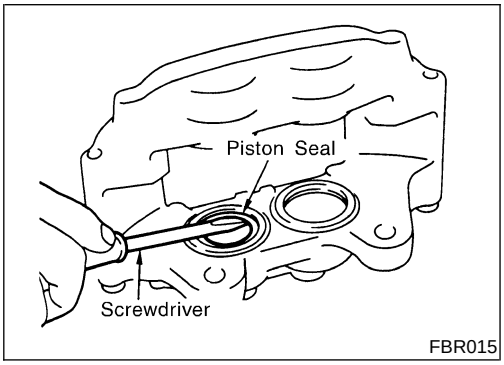

FBR015

Inspection

NMBR0035

CALIPER

NMBR0035S01

- Check dust seals for damage.
- Check calipers for damage, rust or foreign materials.
- Check inside surface of cylinder for scoring, rust, wear, damage or foreign materials. Replace if any such condition exists.
- Eliminate minor damage from rust or foreign materials by polishing surface with fine emery paper.

CAUTION:
Use brake fluid to clean.

PISTON

NMBR0035S03

Check piston for scoring, rust, wear, damage or foreign materials. Replace if any condition exists.

CAUTION:
Piston sliding surface is plated. Do not polish with emery paper even if rust or foreign materials are stuck to sliding surface.

PAD PIN AND CLIPS

NMBR0035S04

Check for wear, cracks deformation, deterioration, rust or other damage. Replace if any such condition exists.

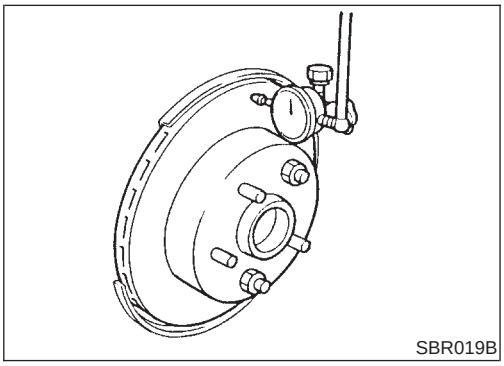
SBR019B

ROTOR

NMBR0035S02

Runout

NMBR0035S0201

1. Secure rotor to wheel hub with at least two nuts.
2. Check runout using a dial indicator.

Make sure that wheel bearing axial end play is within the specifications before measuring. Refer to AX-3, “Front Wheel Bearing”.

Measuring point:
Inspect 10 mm (0.39 in) from the outer perimeter of the disc.

Maximum runout:
0.07 mm (0.0028 in)

3. If the runout is out of specification, find minimum runout position as follows:

a. Remove nuts and rotor from wheel hub.
b. Shift the rotor one hole and secure rotor to wheel hub with nuts.
c. Measure runout.
d. Repeat steps a. to c. so that minimum runout position can be found.

4. If the runout is still out of specification, turn rotor with on-car brake lathe (“MAD, DL-8700”, “AMMCO 700 and 705” or equivalent).

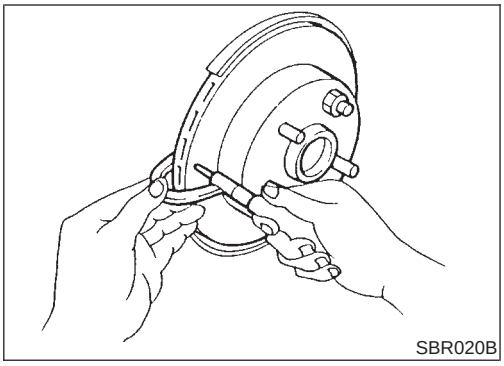

Thickness

NMBR0035S0202

Thickness variation (At least 8 positions):
Maximum 0.02 mm (0.0008 in)

If thickness variation exceeds the specification, turn rotor with on-car brake lathe.

Rotor repair limit:
28.0 mm (1.1024 in)

Assembly

NMBR0036

CAUTION:
Do not use Nissan Rubber Grease when assembling.

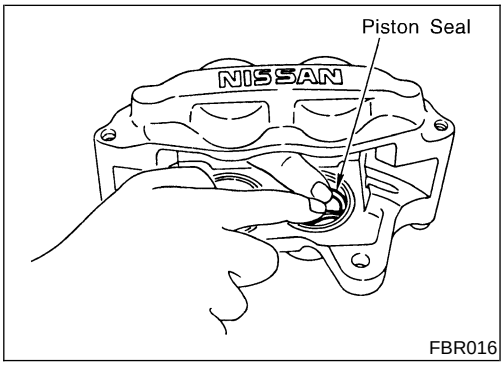

1. Apply Nissan Rubber Lubricant to the piston seals and then install them to the cylinder body.

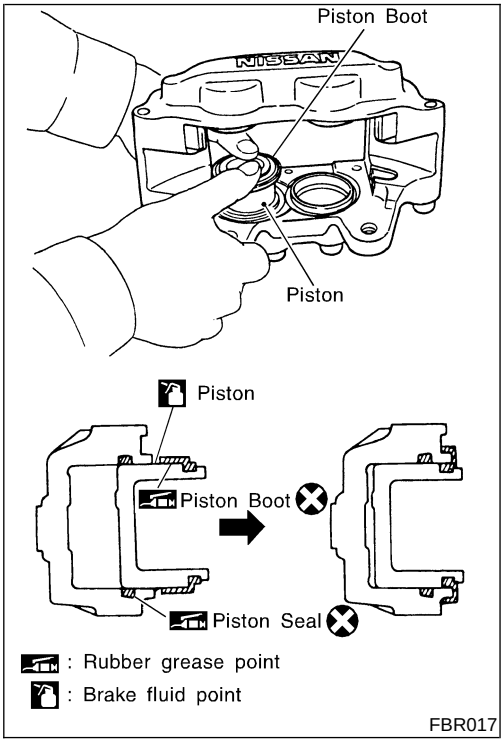

2. Apply DOT 3 brake fluid or Nissan Lubricant to the piston boots, and then cover the end of the piston with the piston boots. Make sure that the lip on the piston side of the piston boots goes into the groove of the piston.
3. Push the piston into the cylinder body by hand, and then make sure that the lip on the piston boots goes into the groove on the piston.

CAUTION:
Take care not scratch the inside of the cylinder wall when pushing the piston into the cylinder.

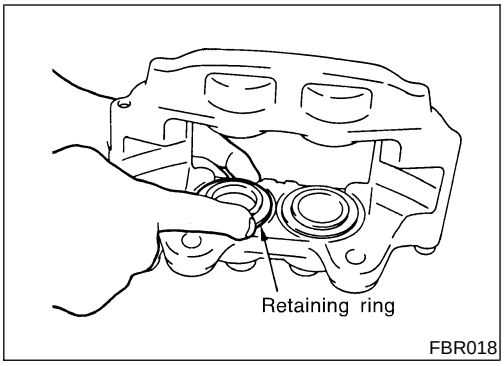

4. Set the retaining ring to the piston boots.

CAUTION:

Make sure that the boots are fitted into the groove of the cylinder body properly.

5. Install the caliper assembly.

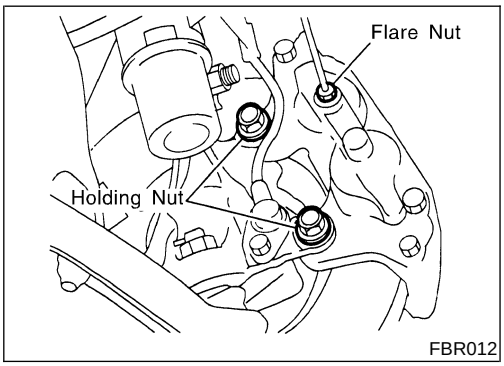

Installation

NMBR0037

1. Install the disc rotor.

CAUTION:

Do not get any water or oil on the installation area of the knuckle, caliper and screw installation areas, holding bolts and the washers.

2. Install the caliper assembly and then tighten the holding bolts to the specified torque.
3. Install the brake tube to the caliper assembly and then temporarily tighten with the flare nut.
4. Tighten to the specified torque using the flare nut.

   Tightening torque: Refer to BR-9.
5. Install the brake pads.
6. After installing the caliper assembly, replace with new brake fluid and bleed any air in the system. Refer to BR-8.

Brake Burnishing Procedure

NMBR0088

When experiencing soft brake pedal feel at very low mileage, or after replacing the rotor, burnish the brake pad contact surfaces according to the following procedures.

CAUTION:

Only perform this procedure under safe road and traffic conditions. Use extreme caution.

1. Drive the vehicle on a straight smooth road at 50 km/h (31 MPH).
2. Use medium brake pedal/foot effort to bring the vehicle to a complete stop from 50 km/h (31 MPH). Adjust brake pedal/foot pressure such that vehicle stopping time equals 3 to 5 seconds.
3. To cool the brake system, drive the vehicle at 50 km/h (31 MPH) for 1 minute without stopping.
4. Repeat steps 1 to 3 10 times or more to complete the burnishing procedure.

Components

NMBR0038

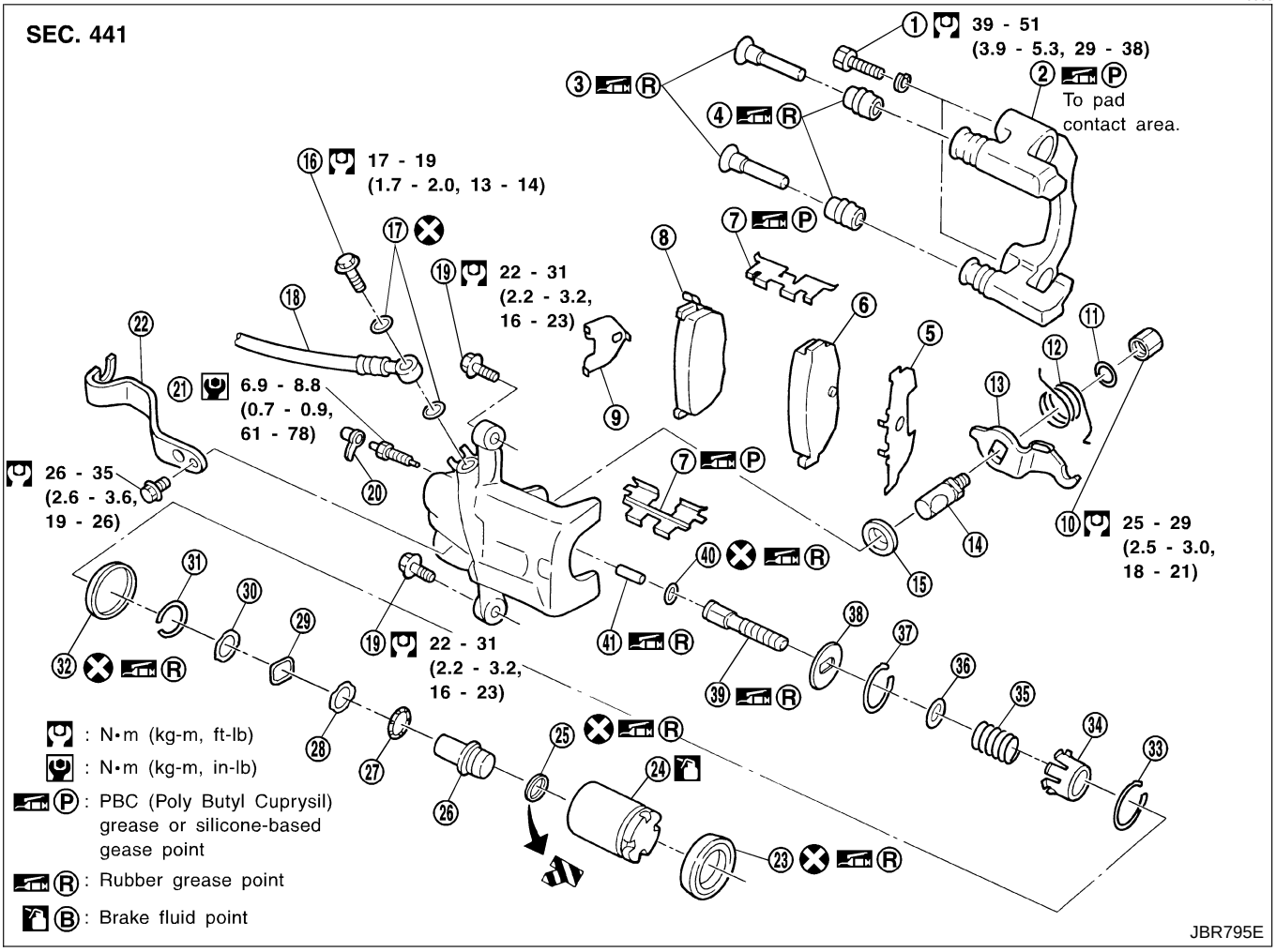

1	Torque member fixing bolt	15	Cam boot	29	Wave washer
2	Torque member	16	Connecting bolt	30	Spacer
3	Pin	17	Copper washer	31	Snap ring
4	Pin boot	18	Brake hose	32	Piston seal
5	Outer shim	19	Pin bolt	33	Snap ring
6	Outer pad	20	Cap	34	Spring cover
7	Pad retainer	21	Air bleeder	35	Spring
8	Inner pad	22	Cable mounting bracket	36	Spring seat
9	Inner shim	23	Piston boot	37	Snap ring
10	Nut	24	Piston	38	Key plate
11	Washer	25	Cup	39	Push rod
12	Return spring	26	Adjusting nut	40	O-ring
13	Parking brake lever	27	Bearing	41	Strut
14	Cam	28	Spacer		

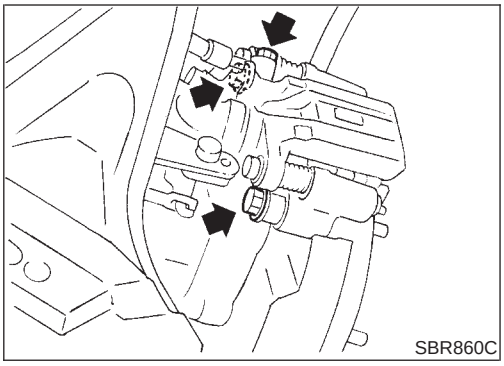
SBR860C

Removal

NMBR0039

WARNING:

Clean brake pads with a vacuum dust collector to minimize the hazard of airborne particles or other materials.

1. Remove brake cable mounting bracket bolt and lock plate.
2. Remove torque member fixing bolts and connecting bolt.

It is not necessary to remove connecting bolt except for disassembly or replacement of caliper assembly. In this case, suspend caliper assembly with wire so as not to stretch brake hose.

Disassembly

NMBR0126

1. Remove piston by turning it counterclockwise with suitable commercial service tool or long nose pliers.

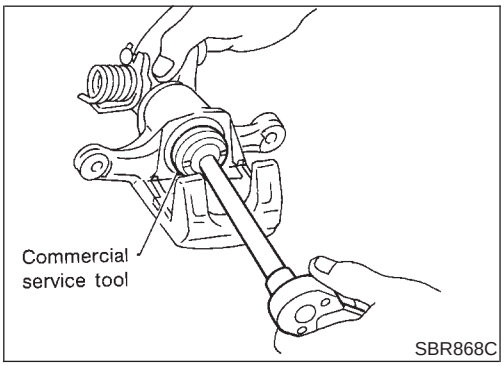

SBR868C

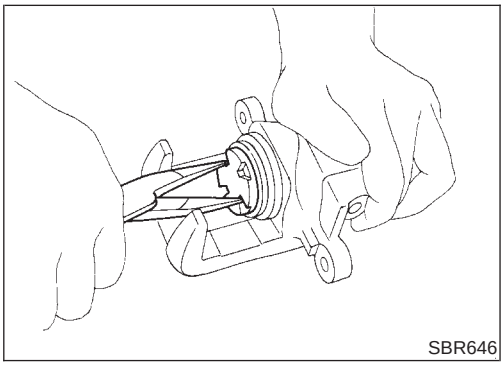
SBR646

2. Pry off snap ring from piston with suitable pliers and remove adjusting nut.

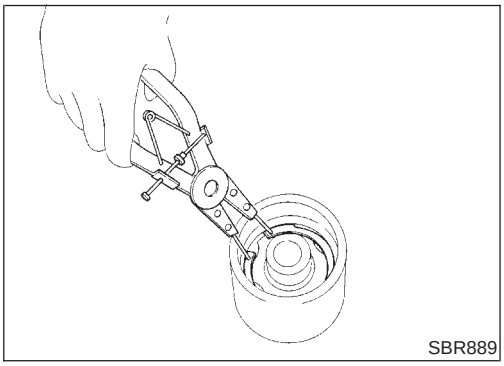
SBR889

3. Disassemble cylinder body.

a. Pry off snap ring with suitable pliers, then remove spring cover, spring and spring seat.

b. Pry off snap ring, then remove key plate, push rod and strut.

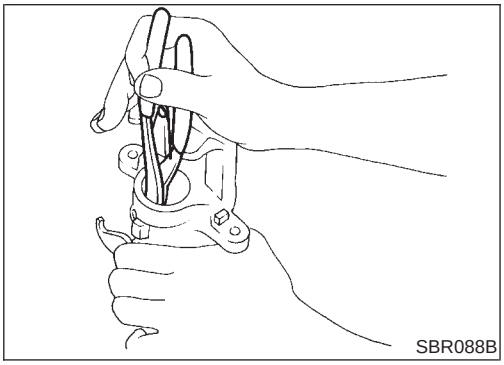
SBR088B

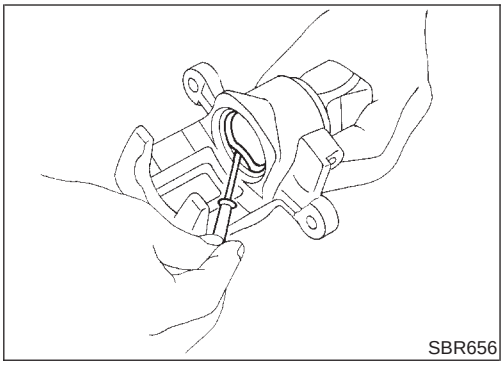

c. Remove piston seal.

Be careful not to damage cylinder body.

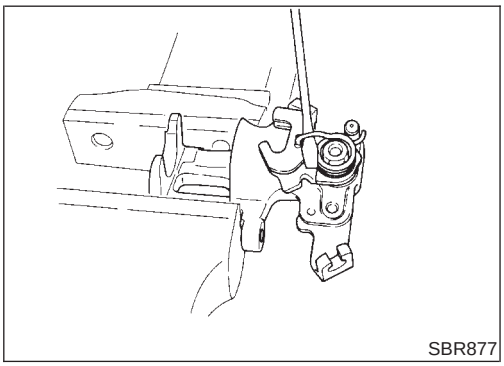

4. Remove return spring, nut and parking brake lever.

Inspection — Caliper

NMBR0127

CAUTION:

Use brake fluid to clean cylinder. Never use mineral oil.

CYLINDER BODY

NMBR0127S01

- Check inside surface of cylinder for score, rust, wear, damage or presence of foreign materials. If any of the above conditions are observed, replace cylinder body.
- Minor damage from rust or foreign materials may be eliminated by polishing surface with a fine emery paper.
  Replace cylinder body if necessary.

TORQUE MEMBER

NMBR0127S02

Check for wear, cracks or other damage. Replace if necessary.

PISTON

NMBR0127S03

CAUTION:

Piston sliding surface is plated. Do not polish with emery paper even if rust or foreign matter is stuck to sliding surface.

Check piston for score, rust, wear, damage or presence of foreign materials.

Replace if any of the above conditions are observed.

PIN AND PIN BOOT

NMBR0127S04

Check for wear, cracks or other damage.
Replace if any of the above conditions are observed.

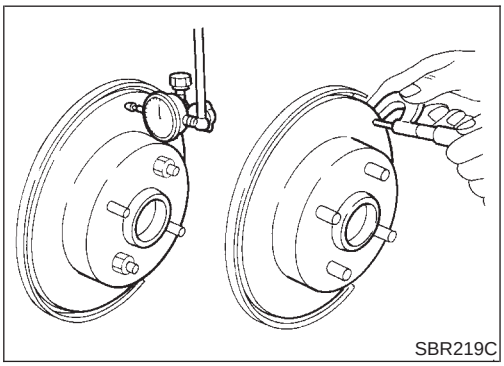

Inspection — Rotor

NMBR0128

RUBBING SURFACE

NMBR0128S01

Check rotor for roughness, cracks or chips.

RUNOUT

NMBR0128S02

1. Secure rotor to wheel hub with two nuts.
2. Check runout using a dial indicator.

Make sure that axial end play is within the specifications before measuring. Refer to "Rear Wheel Bearing", AX-13.

3. Change relative positions of rotor and wheel hub so that runout is minimized.

Maximum runout:
0.07 mm (0.0028 in)

THICKNESS

NMBR0128S03

Rotor repair limit:
Standard thickness
9 mm (0.35 in)
Minimum thickness
8 mm (0.31 in)
Thickness variation (At least 8 portions)
Maximum 0.02 mm (0.0008 in)

Assembly

NMBR0129

1. Install cup in the specified direction.

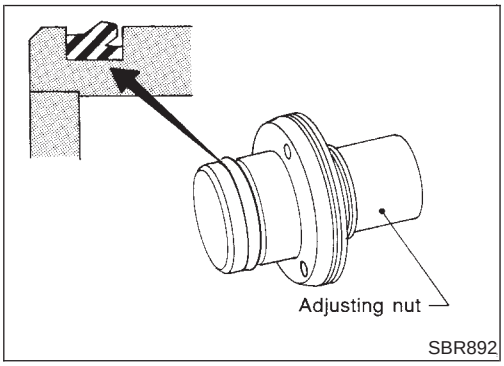

2. Fit push rod into square hole in key plate. Also match convex portion of key plate with concave portion of cylinder.

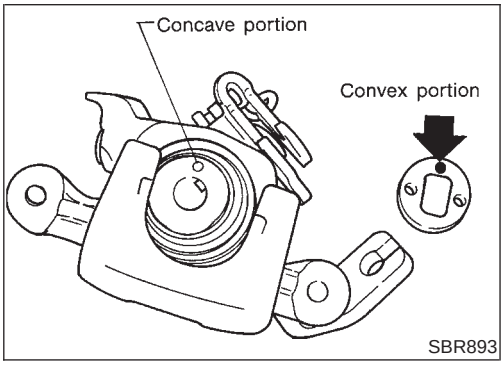

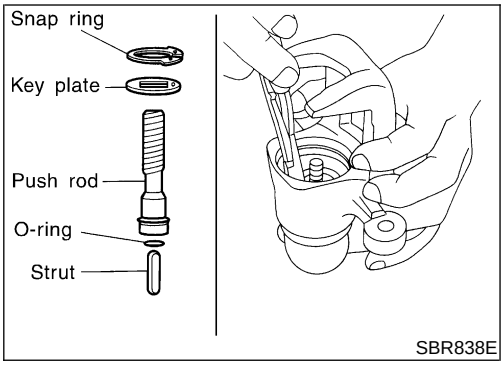

3. Install snap ring with a suitable tool.

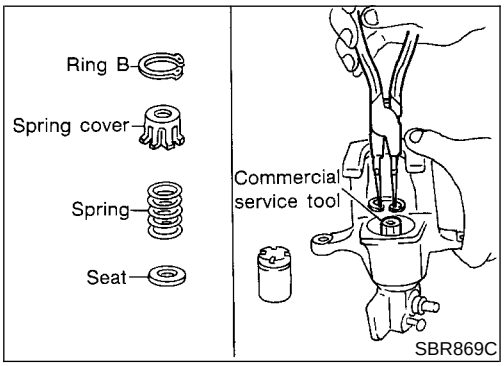

4. Install seat, spring, spring cover and ring B while depressing with suitable commercial service tool or press and drift.

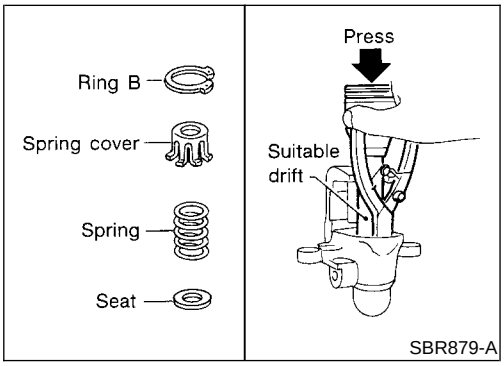

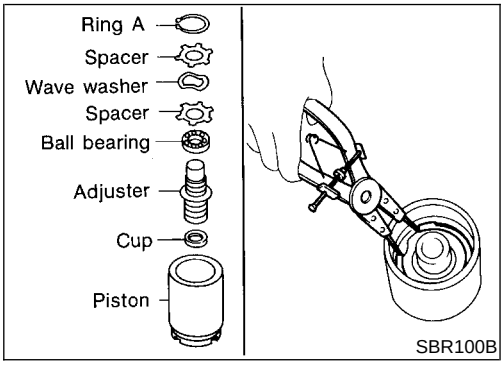

5. Install cup, adjuster, bearing, spacers, washers and ring A with a suitable tool.

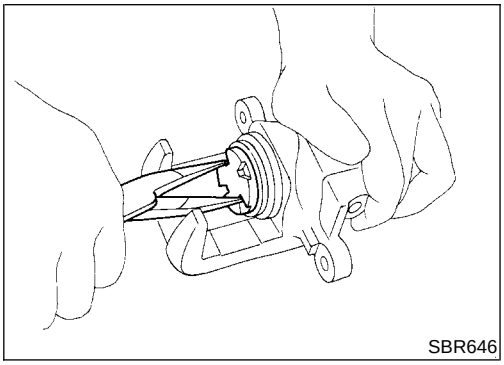

6. Insert piston seal into groove on cylinder body.
7. With piston boot fitted to piston, insert piston boot into groove on cylinder body and fit piston by turning it clockwise with long nose pilers, or suitable tool.

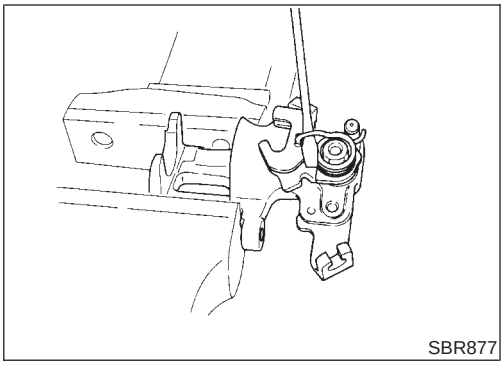

8. Fit parking brake lever and tighten nut.
9. Fit return spring in the order shown.

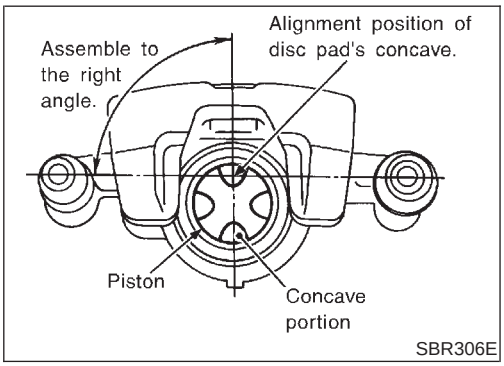

10. Adjust the piston to the right angle as shown in the figure.

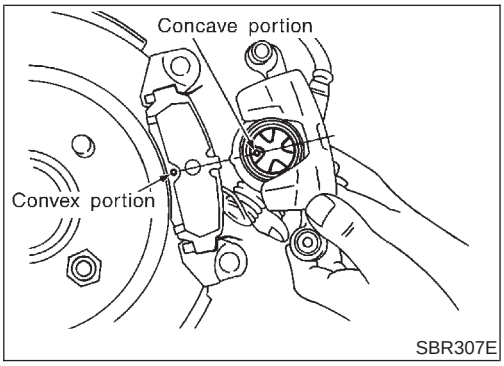

Installation

NMBR0130

CAUTION:

- **Refill with new brake fluid "DOT 3".**
- **Never reuse drained brake fluid.**

1. Install caliper assembly.
   - As shown in the figure, align the piston's concave to the pad's convex, then install the cylinder body to the torque member.
2. Install brake hose to caliper securely.
3. Install all parts and secure all bolts.
4. Bleed air. Refer to "Bleeding Brake System", BR-8.

Components

NMBR0044

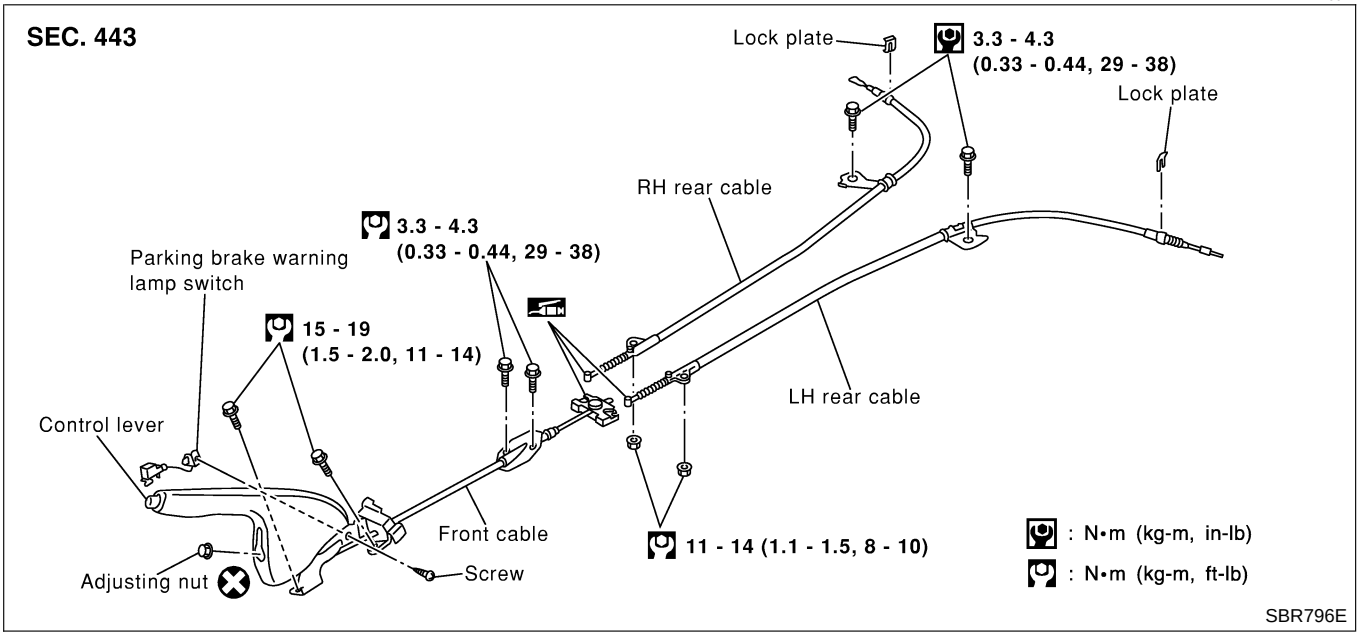

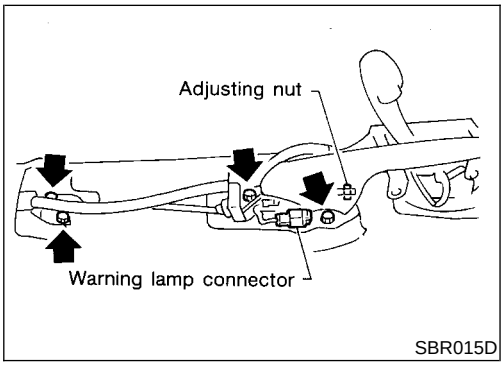

Removal and Installation

NMBR0045

1. To remove parking brake cable, first remove center console.
2. Disconnect warning lamp connector.
3. Remove bolts, slacken off and remove adjusting nut.

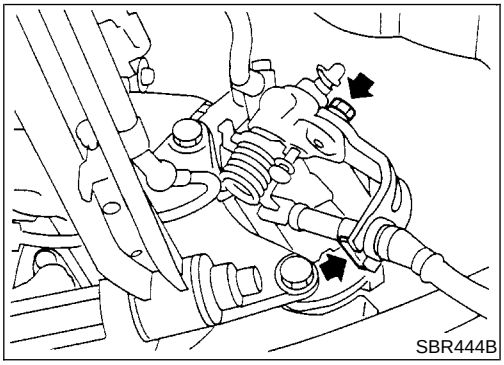

4. Remove lock plate, then disconnect cable from caliper.

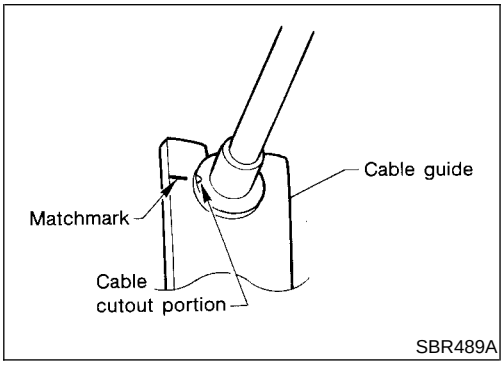

- When installing parking brake cable at rear caliper, make sure to align matchmark on cable guide.

Inspection

NMBR0046

1. Check control lever for wear and other damage. Replace if necessary.
2. Check wires for discontinuity and deterioration. Replace if necessary.
3. Check warning lamp and switch. Replace if necessary.
4. Check parts at each connecting portion and, if deformed or damaged, replace.

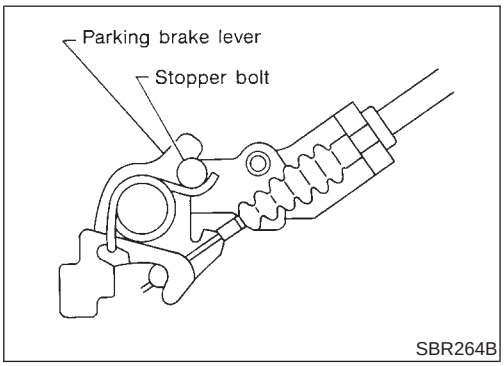

Adjustment

NMBR0047

Pay attention to the following points after adjustment.

- There is no drag when control lever is being released.
- Parking brake lever returns to stopper bolt when control lever for rear disc brake is released.

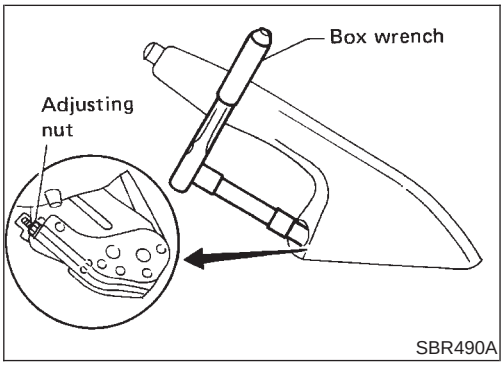

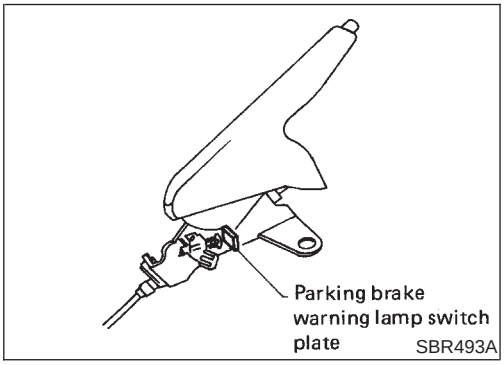

1. Pull control lever up by 4 or 5 notches.
2. Insert a box wrench into opening in control lever and loosen self-lock adjusting nut to slacken cables.
3. Completely push control lever down.
4. Forcefully depress brake pedal about five times (so that caliper is automatically set in position).
5. Pull lever up by 4 or 5 notches.
6. Turn adjusting nut as shown in figure and adjust lever stroke to specified value.
7. 7. Pull control lever with specified amount of force. Check lever stroke and ensure smooth operation.

   Number of notches : 7 - 9 [196 N (20 kg, 44 lb)]
8. Bend warning lamp switch plate to ensure the following. Warning lamp comes on when lever is lifted “A” notches, and goes out when fully released.

   Number of “A” notches : 1

Purpose

NMBR0089

The Anti-Lock Brake System (ABS) consists of electronic and hydraulic components. It allows for control of braking force so locking of the wheels can be avoided.

1) Improves proper tracking performance through steering wheel operation.
2) Eases obstacle avoidance through steering wheel operation.
3) Improves vehicle stability.

Operation

NMBR0090

- When the vehicle speed is less than 10 km/h (6 MPH) this system does not work.
- The Anti-Lock Brake System (ABS) has a self-test function. The system turns on the ABS warning lamp for 1 second each time the ignition switch is turned “ON”. After the engine is started, the ABS warning lamp turns off. The system performs a test the first time the vehicle reaches 6 km/h (4 MPH). A mechanical noise may be heard as the ABS performs this self-test. This is a normal part of the self-test feature. If a malfunction is found during this check, the ABS warning lamp will stay on.
- While driving, a mechanical noise may be heard during ABS operation. This is a normal condition.

ABS Hydraulic Circuit

NMBR0091

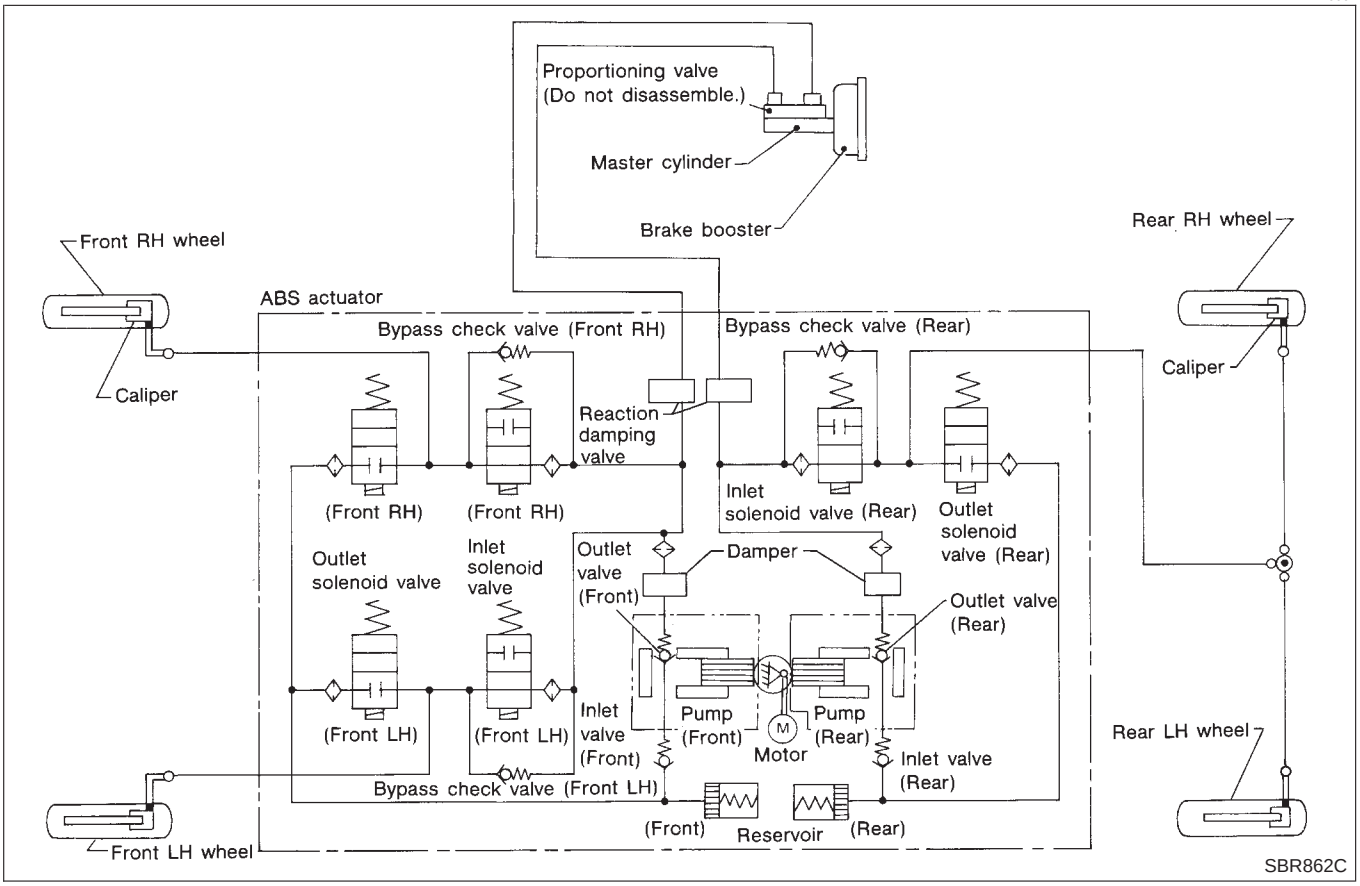

System Components

NMBR0092

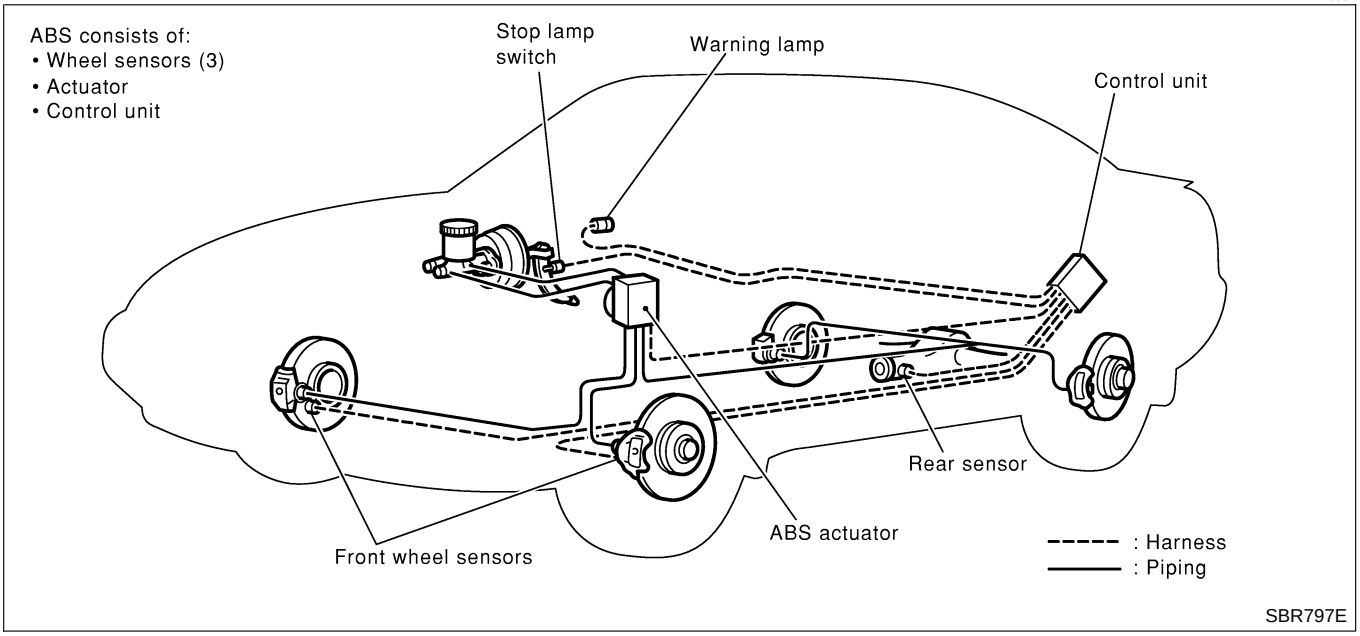

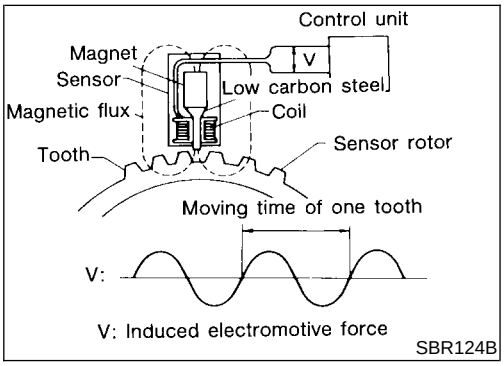

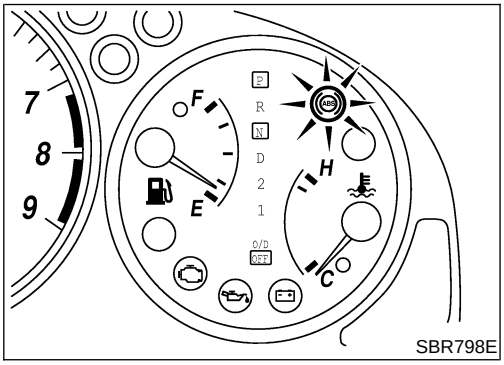

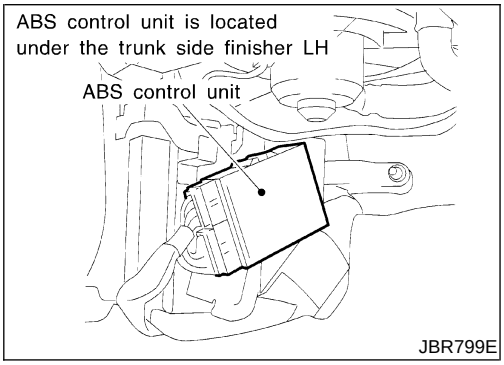

System Description

NMBR0093

SENSOR

NMBR0093S01

The sensor unit consists of a gear-shaped sensor rotor and a sensor element. The element contains a bar magnet around which a coil is wound. The front sensors are installed on the front spindles and the rear sensors are installed on the final drive. As the wheel rotates, the sensor generates a sine-wave pattern. The frequency and voltage increase(s) as the rotating speed increases.

CONTROL UNIT

NMBR0093S02

The control unit computes the wheel rotating speed by the signal current sent from the sensor. Then it supplies a DC current to the actuator solenoid valve. It also controls ON-OFF operation of the solenoid valve relay and motor relay. If any electrical malfunction should be detected in the system, the warning lamp is turned on. In this condition, the ABS will be deactivated, and the vehicle's brake system reverts to normal operation.

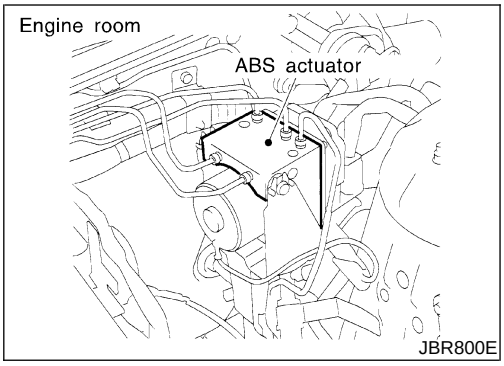

ABS ACTUATOR

NMBR0093S03

The ABS actuator contains:

- An electric motor and pump
- Two relays
- Six solenoid valves, each inlet and outlet for
  — LH front
  — RH front
  — Rear

This component controls the hydraulic circuit and increases, holds or decreases hydraulic pressure to all or individual wheels. The ABS actuator and electric unit is serviced as an assembly.

ABS Actuator Operation

NMBR0093S0301

		Inlet solenoid valve	Outlet solenoid valve	
Normal brake operation		OFF (Open)	OFF (Closed)	Master cylinder brake fluid pressure is directly transmitted to caliper via the inlet solenoid valve.
ABS operation	Pressure hold	ON (Closed)	OFF (Closed)	Hydraulic circuit is shut off to hold the caliper brake fluid pressure.
	Pressure decrease	ON (Closed)	ON (Open)	Caliper brake fluid is sent to reservoir via the outlet solenoid valve. Then it is pushed up to the master cylinder by pump.
	Pressure increase	OFF (Open)	OFF (Closed)	Master cylinder brake fluid pressure is transmitted to caliper.

Component Parts and Harness Connector Location

NMBR0094

ABS consists of:
- Wheel sensors (3)
- Actuator
- Control unit

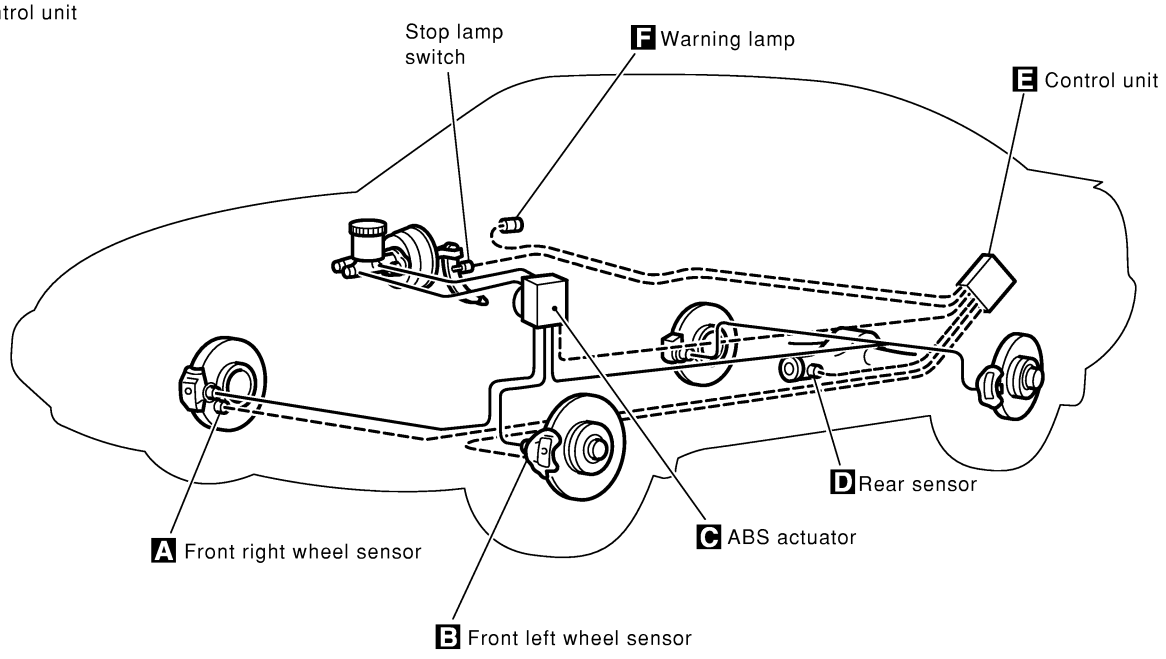

------ : Harness
——— : Piping

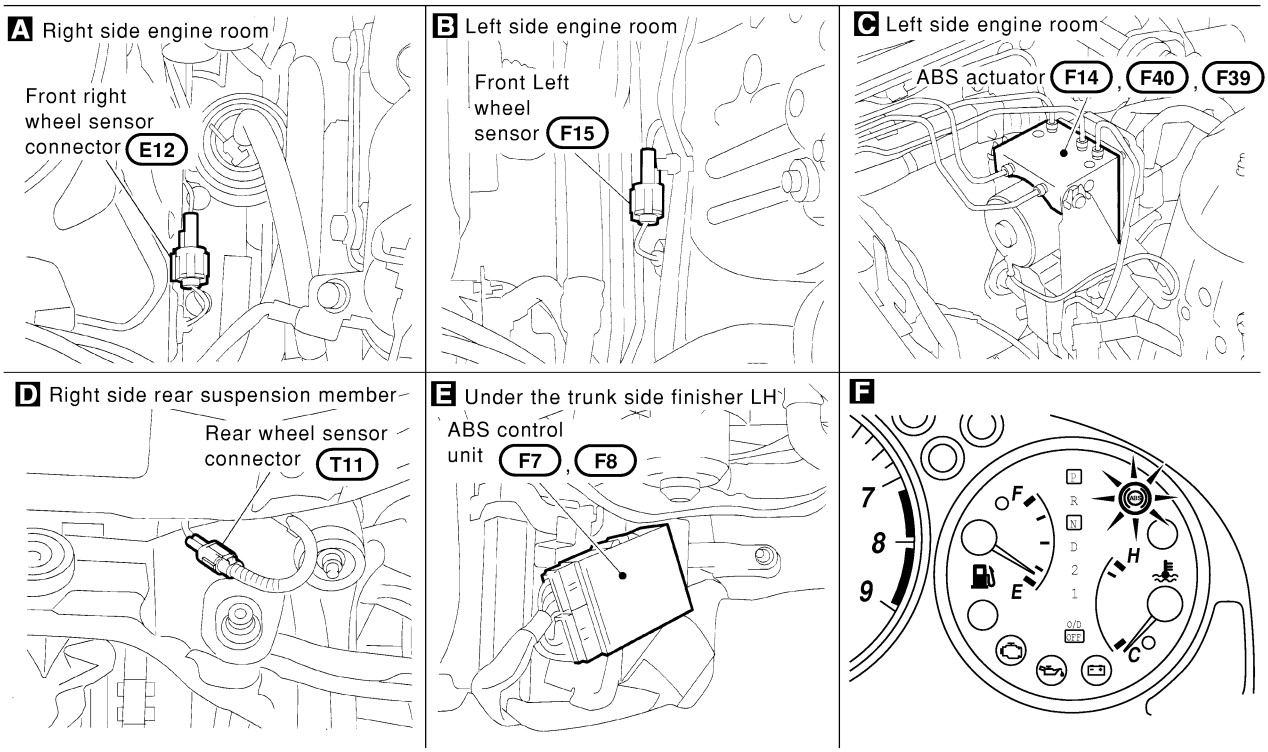

JBR801E

Schematic

NMBR0095

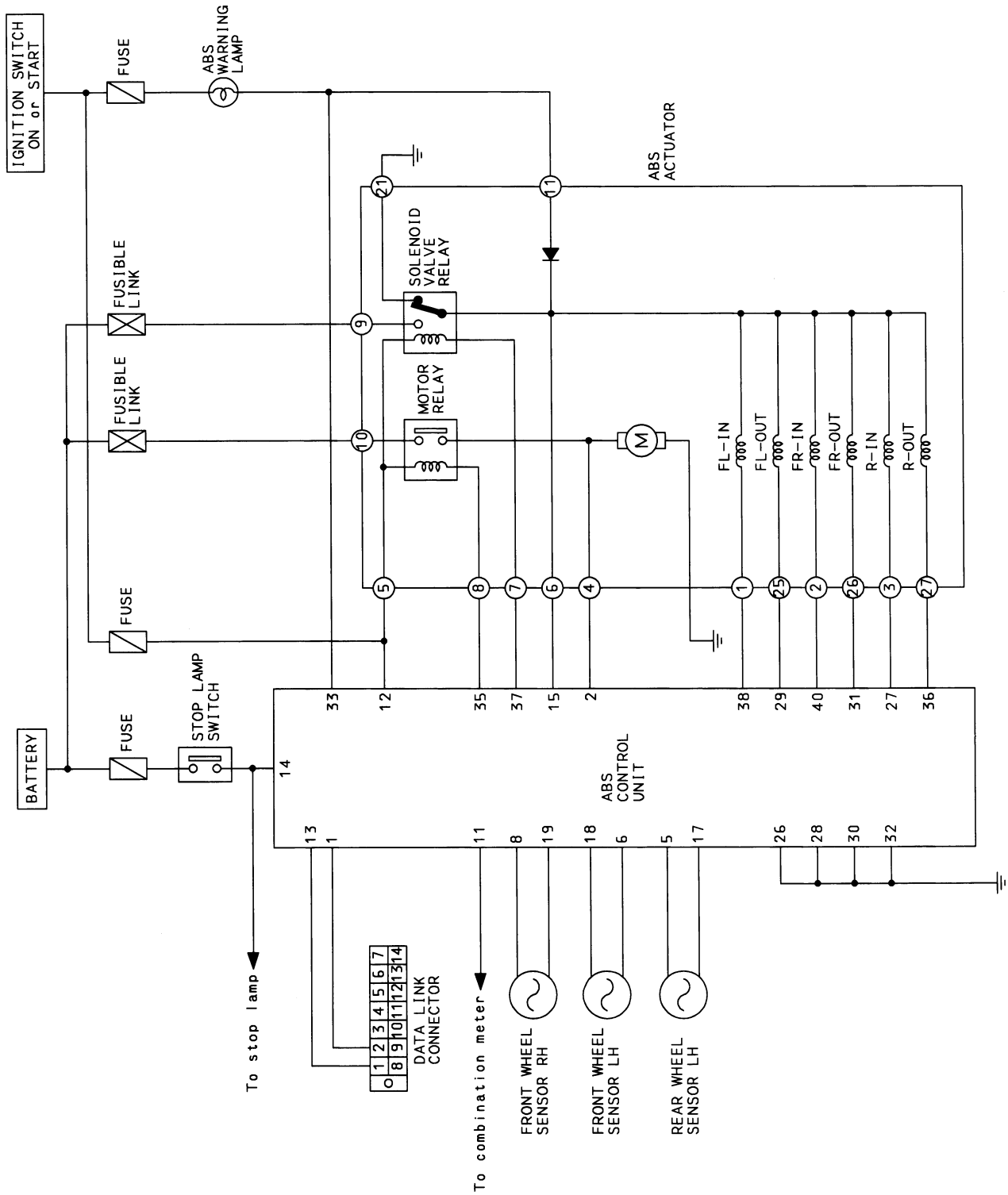

TBR177

Wiring Diagram — ABS —

NMBR0096

BR-ABS-01

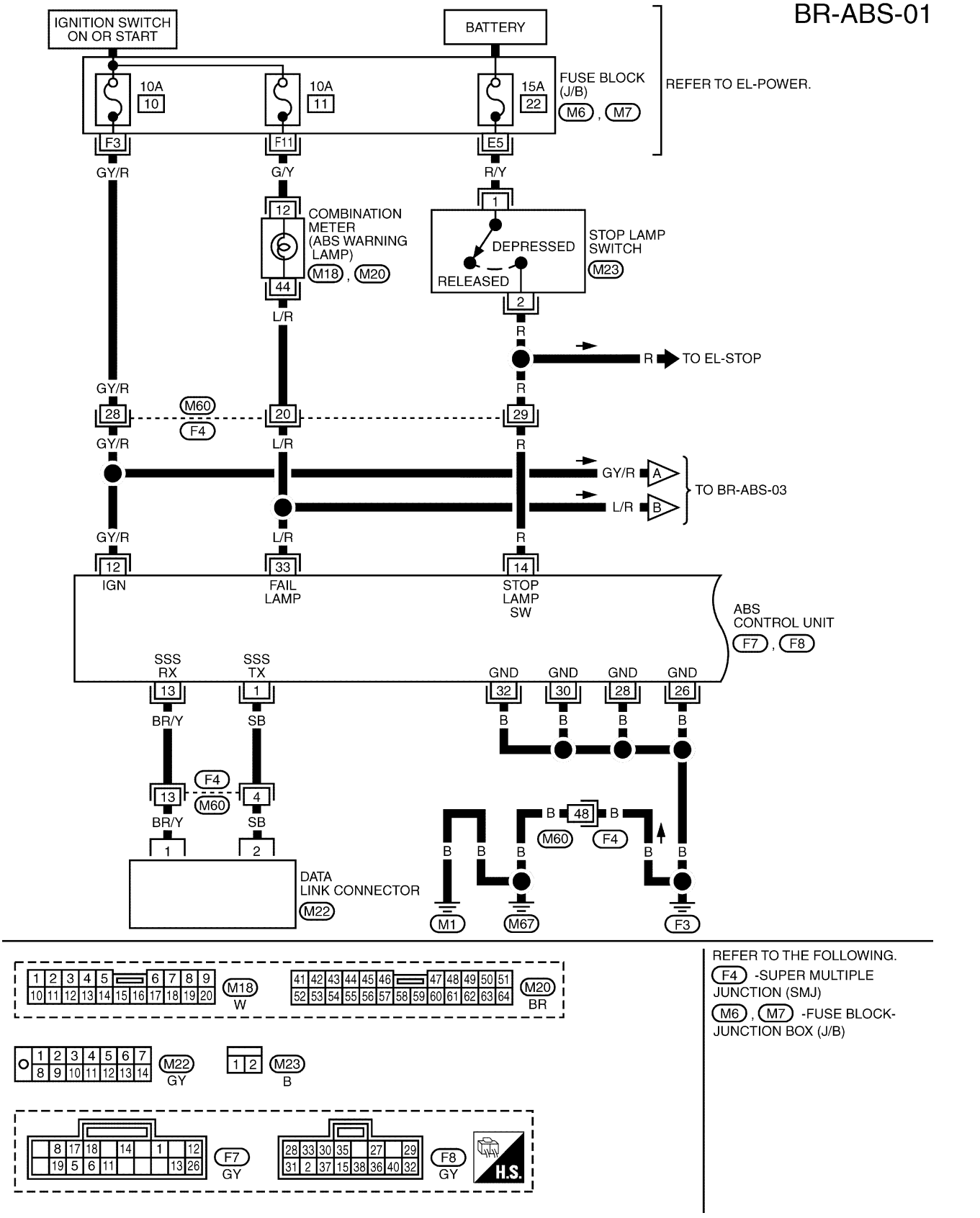

REFER TO THE FOLLOWING.
F4 -SUPER MULTIPLE JUNCTION (SMJ)
M6 , M7 -FUSE BLOCK-JUNCTION BOX (J/B)

TBR178

BR-ABS-02

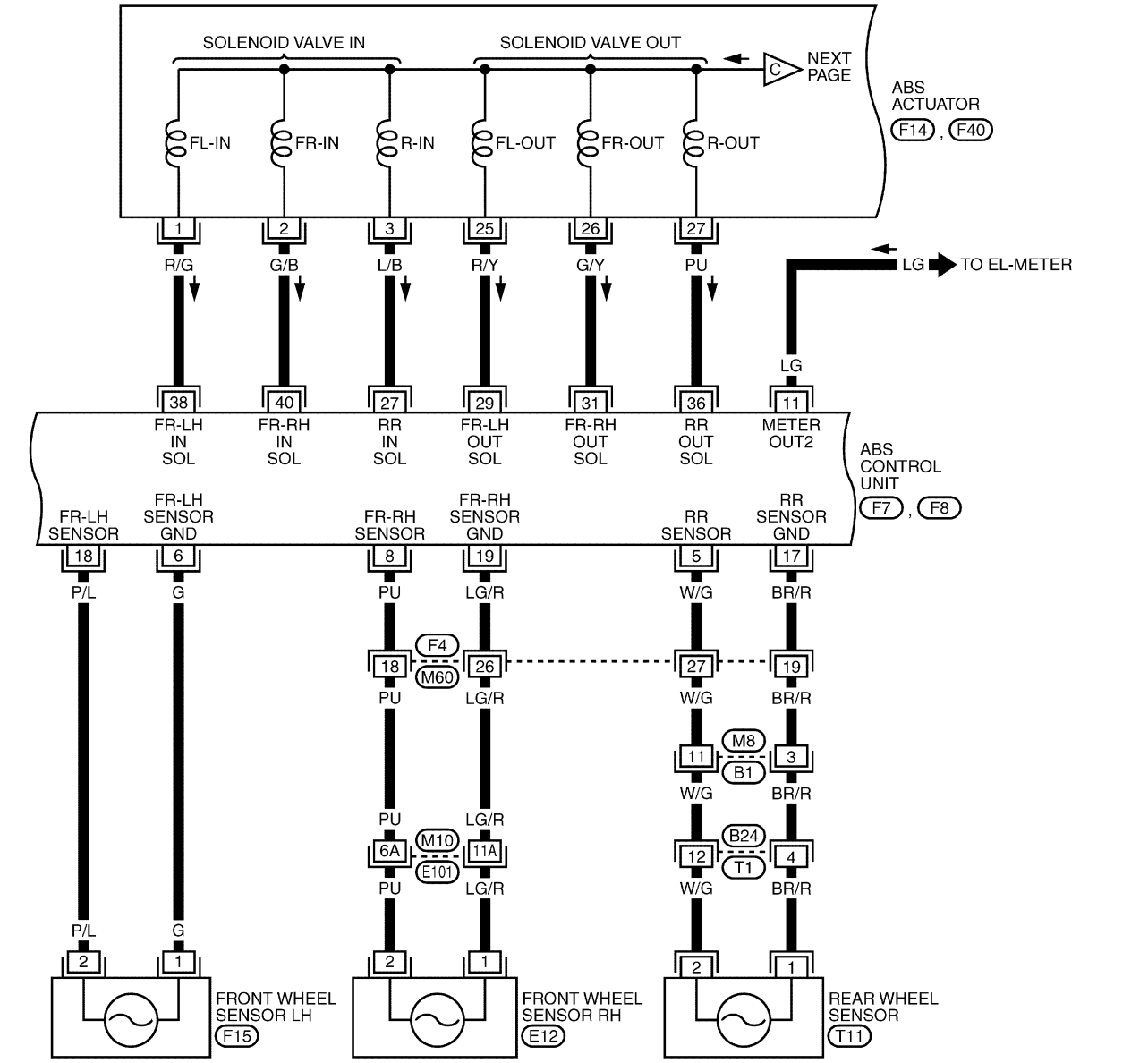

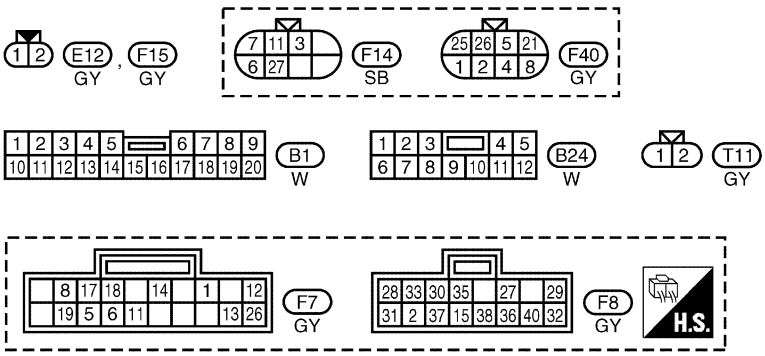

REFER TO THE FOLLOWING.
E101 , F4 -SUPER MULTIPLE JUNCTION (SMJ)

TBR179

Wiring Diagram — ABS — (Cont'd)

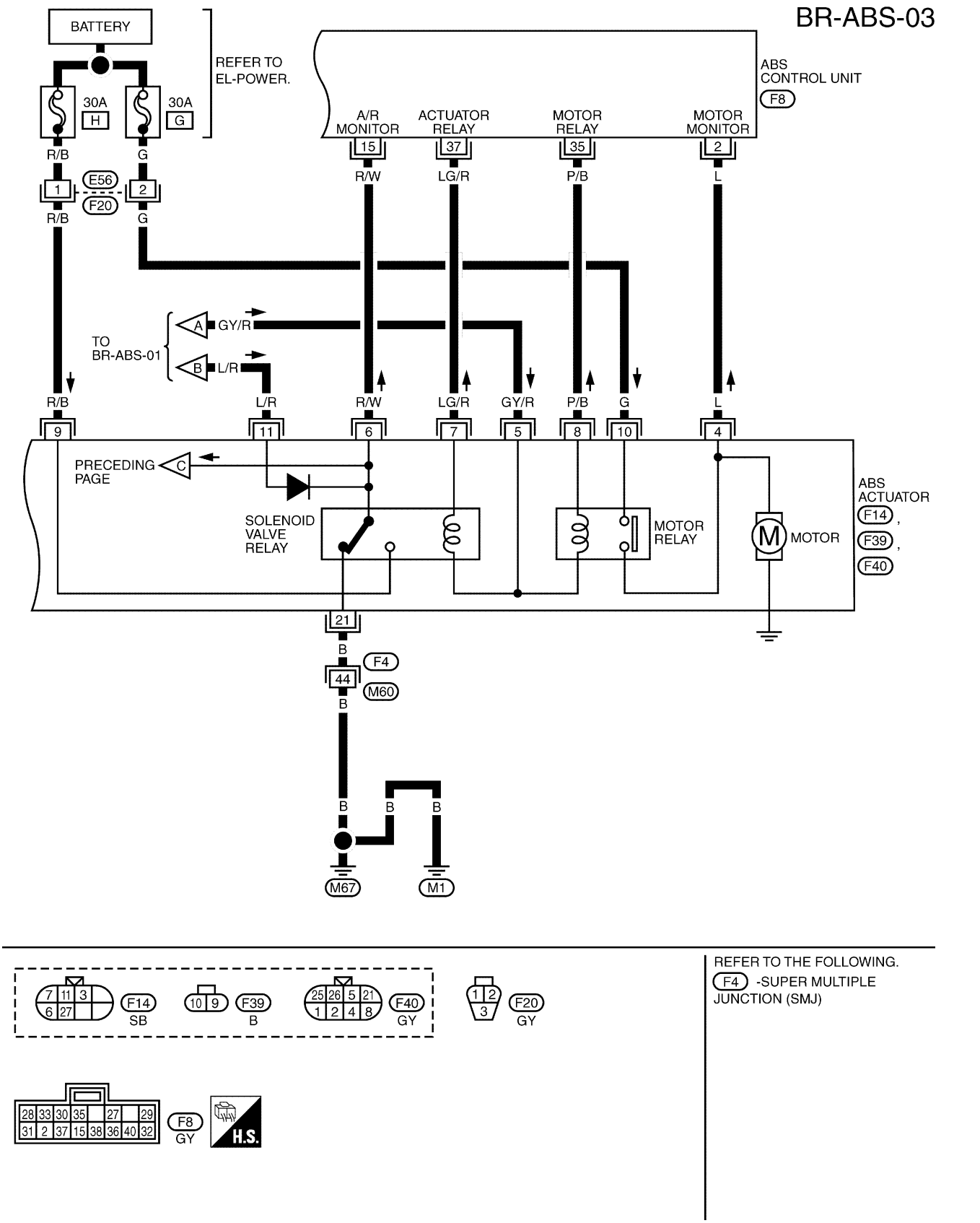

REFER TO THE FOLLOWING.
F4 -SUPER MULTIPLE JUNCTION (SMJ)

TBR180

CONSULT-II

=NMBR0098

CONSULT-II APPLICATION TO ABS

NMBR0098S01

ITEM	SELF-DIAGNOSTIC RESULTS	DATA MONITOR	ACTIVE TEST
Front right wheel sensor	×	×	—
Front left wheel sensor	×	×	—
Rear wheel sensor	×	×	—
ABS sensor	×	—	—
Stop lamp switch	—	×	—
Front right inlet solenoid valve	×	×	×
Front right outlet solenoid valve	×	×	×
Front left inlet solenoid valve	×	×	×
Front left outlet solenoid valve	×	×	×
Rear inlet solenoid valve	×	×	×
Rear outlet solenoid valve	×	×	×
Actuator solenoid valve relay	×	×	—
Actuator motor relay (ABS MOTOR is shown on the Data Monitor screen.)	×	×	×
ABS warning lamp	—	×	—
Battery voltage	×	×	—
Control unit	×	—	—
ABS operating signal	—	×	×

×: Applicable
—: Not applicable

ECU (ABS CONTROL UNIT) PART NUMBER MODE

NMBR0098S02

Ignore the ECU part number displayed in the ECU PART NUMBER MODE. Refer to parts catalog to order the ECU.

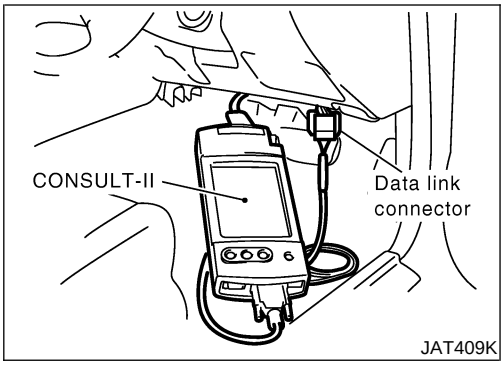

JAT409K

CONSULT-II Inspection Procedure

=NMBR0099

SELF-DIAGNOSIS PROCEDURE

NMBR0099S01

1. Turn ignition switch OFF.
2. Connect CONSULT-II to data link connector.
3. Start engine.
4. Drive vehicle over 30 km/h (19 MPH) for at least one minute.

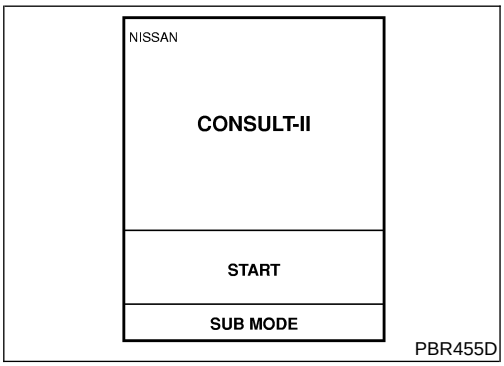

PBR455D

5. Stop vehicle with engine running and touch “START” on CONSULT-II screen.

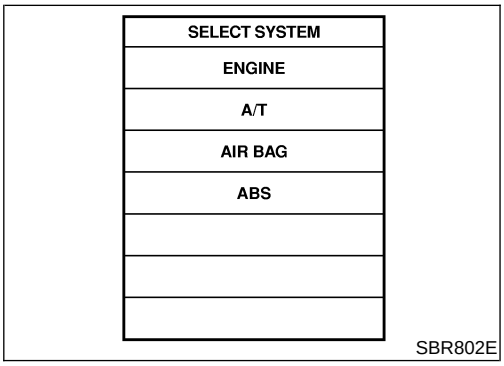

SBR802E

6. Touch “ABS”.

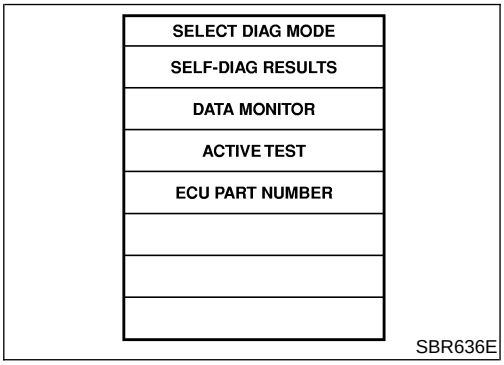

SBR636E

7. Touch “SELF-DIAG RESULTS”.

- The screen shows the detected malfunction and how many times the ignition switch has been turned ON since the malfunction.

8. Make the necessary repairs following the diagnostic procedures.

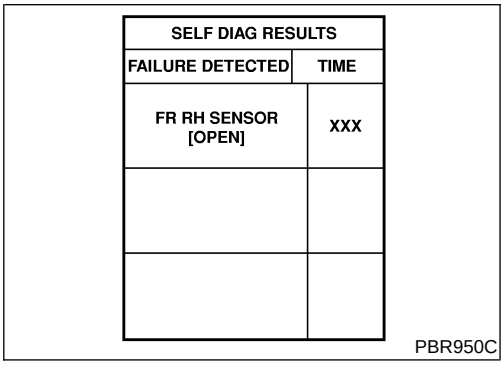

PBR950C

9. After the malfunctions are repaired, erase the self-diagnostic results stored in the control unit by touching “ERASE”.
10. Check warning lamp for deactivation after driving vehicle over 30 km/h (19 MPH) for at least one minute.
11. Test the ABS in a safe area to verify that it functions properly.

NOTE:
“SELF-DIAG RESULTS” screen shows the detected malfunction and how many times the ignition switch has been turned since the malfunction.

SELF-DIAGNOSTIC RESULTS MODE

=NMBR0099S02

Diagnostic item	Diagnostic item is detected when ...	Reference Page
FR RH SENSOR★1 [OPEN]	● Circuit for front right wheel sensor is open. (An abnormally high input voltage is entered.)	BR-54
FR LH SENSOR★1 [OPEN]	● Circuit for front left wheel sensor is open. (An abnormally high input voltage is entered.)	BR-54
REAR SENSOR★1 [OPEN]	● Circuit for rear right sensor is open. (An abnormally high input voltage is entered.)	BR-54
FR RH SENSOR★1 [SHORT]	● Circuit for front right wheel sensor is shorted. (An abnormally low input voltage is entered.)	BR-54
FR LH SENSOR★1 [SHORT]	● Circuit for front left wheel sensor is shorted. (An abnormally low input voltage is entered.)	BR-54
REAR SENSOR★1 [SHORT]	● Circuit for rear right sensor is shorted. (An abnormally low input voltage is entered.)	BR-54
ABS SENSOR★1 [ABNORMAL SIGNAL]	● Teeth damage on sensor rotor or improper installation of wheel sensor. (Abnormal wheel sensor signal is entered.)	BR-54
FR RH IN ABS SOL [OPEN, SHORT]	● Circuit for front right inlet solenoid valve is open. (An abnormally low output voltage is entered.)	BR-56
FR LH IN ABS SOL [OPEN, SHORT]	● Circuit for front left inlet solenoid valve is open. (An abnormally low output voltage is entered.)	BR-56
FR RH OUT ABS SOL [OPEN, SHORT]	● Circuit for front right outlet solenoid valve is open. (An abnormally low output voltage is entered.)	BR-56
FR LH OUT ABS SOL [OPEN, SHORT]	● Circuit for front left outlet solenoid valve is open. (An abnormally low output voltage is entered.)	BR-56
RR IN ABS SOL [OPEN, SHORT]	● Circuit for rear inlet solenoid valve is shorted. (An abnormally high output voltage is entered.)	BR-56
RR OUT ABS SOL [OPEN, SHORT]	● Circuit for rear outlet solenoid valve is shorted. (An abnormally high output voltage is entered.)	BR-56
ABS ACTUATOR RELAY [ABNORMAL]	● Actuator solenoid valve relay is ON, even if control unit sends off signal. ● Actuator solenoid valve relay is OFF, even if control unit sends on signal.	BR-56
ABS MOTOR RELAY [ABNORMAL]	● Circuit for ABS motor relay is open or shorted. ● Circuit for actuator motor is open or shorted. ● Actuator motor relay is stuck.	BR-59
BATTERY VOLT [VB-LOW]	● Power source voltage supplied to ABS control unit is abnormally low.	BR-70
CONTROL UNIT	● Function of calculation in ABS control unit has failed.	BR-72

★1: If one or more wheels spin on a rough or slippery road for 40 seconds or more, the ABS warning lamp will illuminate. This does not indicate a malfunction. Only in the case of the short-circuit (Code Nos. 26, 22, 32 and 36), after repair the ABS warning lamp also illuminates when the ignition switch is turned ON. In this case, drive the vehicle at speeds greater than 30 km/h (19 MPH) for approximately 1 minute as specified in "SELF-DIAGNOSIS PROCEDURE", BR-44. Check to ensure that the ABS warning lamp goes out while the vehicle is being driven.

DATA MONITOR PROCEDURE

=NMBR0099S03

1. Turn ignition switch OFF.
2. Connect CONSULT-II to data link connector for CONSULT-II.
3. Turn ignition switch ON.
4. Touch "START" on CONSULT-II screen.

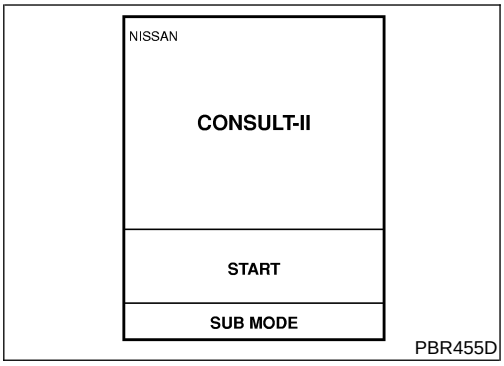

PBR455D

5. Touch "ABS".

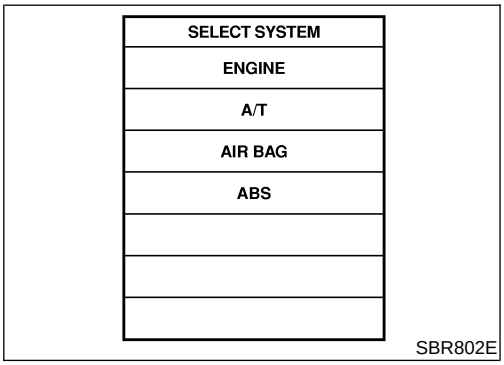

SBR802E

6. Touch "DATA MONITOR".

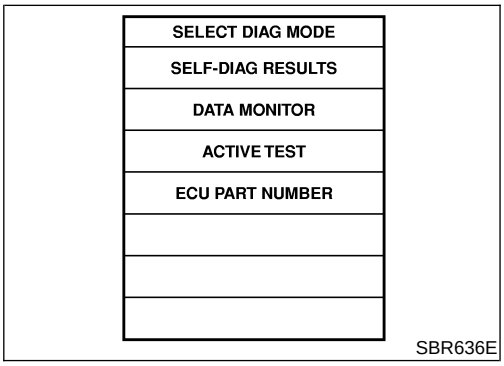

SBR636E

7. Touch "SETTING" on "SELECT MONITOR ITEM" screen.

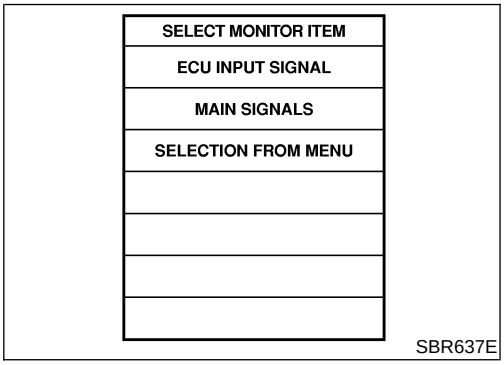

SBR637E

ACTIVE TEST PROCEDURE

=NMBR0099S04

- When conducting Active test, vehicle must be stationary.
- When ABS warning lamp stays on, never conduct Active test.

1. Turn ignition switch OFF.
2. Connect CONSULT-II to data link connector.
3. Start engine.
4. Touch "START" on CONSULT-II screen.

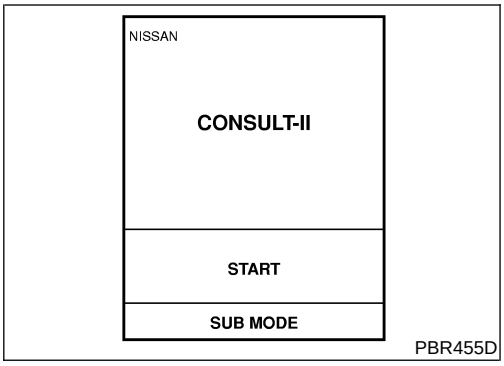

PBR455D

5. Touch "ABS".

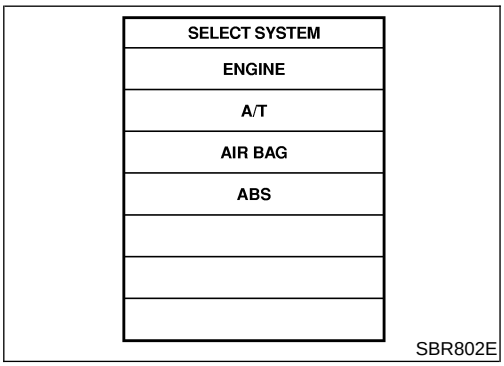

SBR802E

6. Touch "ACTIVE TEST".

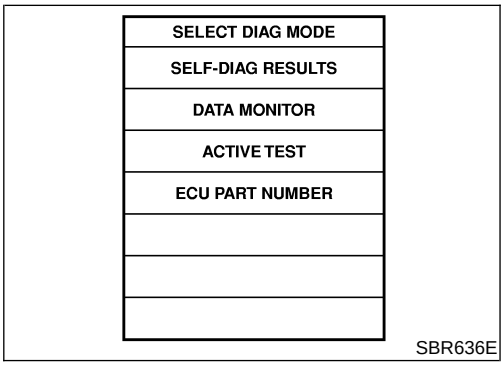

SBR636E

7. Select active test item by touching screen.

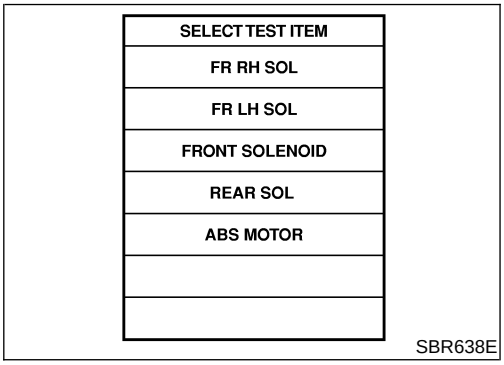

SBR638E

8. Touch "START".
9. Carry out the active test by touching screen key.

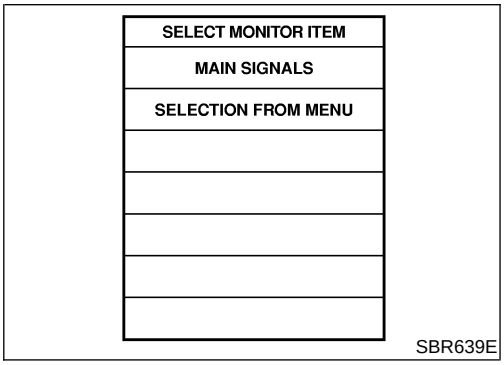

SBR639E

DATA MONITOR MODE

=NMBR0099S05

MONITOR ITEM	CONDITION	SPECIFICATION
FR RH SENSOR FR LH SENSOR REAR SENSOR	Drive vehicle. (Each wheel is rotating.)	Wheel speed signal (Almost the same speed as speedometer.)
STOP LAMP SW	Brake is depressed.	Depress the pedal: ON Release the pedal: OFF
FR RH IN SOL FR RH OUT SOL FR LH IN SOL FR LH OUT SOL RR IN SOL RR OUT SOL	1. Drive vehicle at speeds over 30 km/h (19 MPH) for at least 1 minute. 2. Engine is running.	Operating conditions for each solenoid valve are indicated. ABS is not operating: OFF
MOTOR RELAY		ABS is not operating: OFF ABS is operating: ON
ACTUATOR RELAY	Ignition switch is ON or engine is running.	Ignition switch ON (Engine stops): OFF Engine running: ON
WARNING LAMP		ABS warning lamp is turned on: ON ABS warning lamp is turned off: OFF
BATTERY VOLT		Power supply voltage for control unit
ABS OPER SIG		ABS is not operating: OFF ABS is operating: ON

ACTIVE TEST MODE

NMBR0099S06

TEST ITEM	CONDITION	JUDGEMENT		
FR RH SOLENOID FR LH SOLENOID RR SOLENOID	Engine is running.	Brake fluid pressure control operation		
			IN SOL	OUT SOL
		UP (Increase):	OFF	OFF
		KEEP (Hold):	ON	OFF
		DOWN (Decrease):	ON	ON
ABS MOTOR		ABS actuator motor ON: Motor runs (ABS motor relay ON) OFF: Motor stops (ABS motor relay OFF)		
ABS OPER SIG	Ignition switch is ON or engine is running.	ON: Set ABS OPER SIG "ON" (ABS is operating.) OFF: Set ABS OPER SIG "OFF" (ABS is not operating.)		

NOTE:
Active test will automatically stop ten seconds after the test starts. (TEST IS STOPPED monitor shows ON.)

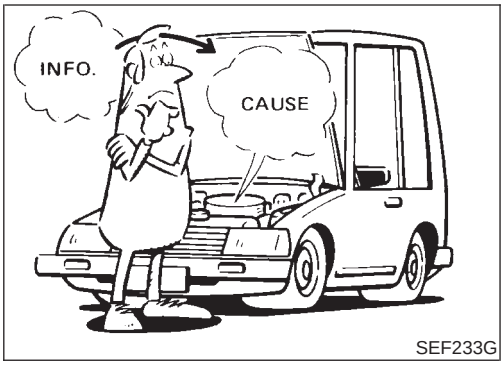

SEF233G

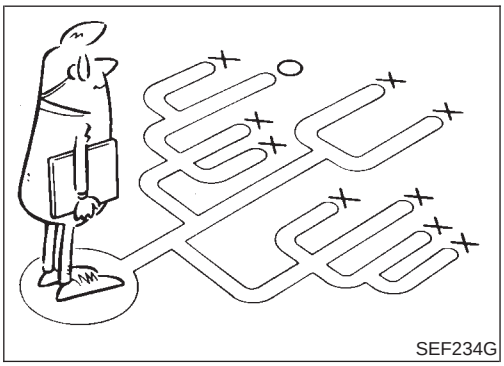
SEF234G

How to Perform Trouble Diagnoses for Quick and Accurate Repair

NMBR0100

INTRODUCTION

NMBR0100S01

The ABS system has an electronic control unit to control major functions. The control unit accepts input signals from sensors and instantly drives the actuators. It is essential that both kinds of signals are proper and stable. It is also important to check for conventional problems: such as air leaks in booster lines, lack of brake fluid, or other problems with the brake system.

It is much more difficult to diagnose a problem that occurs intermittently rather than continuously. Most intermittent problems are caused by poor electric connections or faulty wiring. In this case, careful checking of suspicious circuits may help prevent the replacement of good parts.

A visual check only may not find the cause of the problems, so a road test should be performed.

Before undertaking actual checks, take a few minutes to talk with a customer who approaches with an ABS complaint. The customer is a very good source of information on such problems; especially intermittent ones. By talking to the customer, find out what symptoms are present and under what conditions they occur. Start your diagnosis by looking for “conventional” problems first. This is one of the best ways to troubleshoot brake problems on an ABS controlled vehicle.

Also check related Service bulletins for information.

Preliminary Check

NMBR0101

1	CHECK BRAKE FLUID	
Check brake fluid for contamination.		
Has brake fluid been contaminated?		
Yes	▶	Replace. GO TO 2.
No	▶	GO TO 2.

2	CHECK BRAKE FLUID LEVEL	
Check brake fluid level in reservoir tank. Low fluid level may indicate brake pad wear or leakage from brake line.		
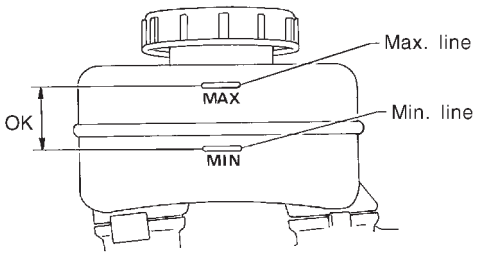 SBR451D		
Is brake fluid filled between MAX and MIN lines on reservoir tank?		
Yes	▶	GO TO 3.
No	▶	Fill up brake fluid. GO TO 3.

3	CHECK BRAKE LINE	
Check brake line for leakage.		
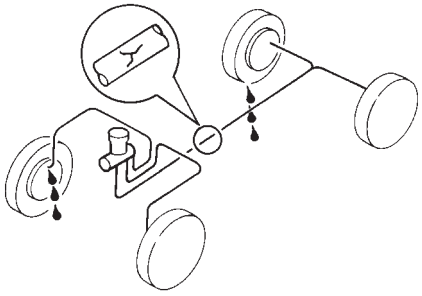 SBR389C		
Is leakage present at or around brake lines, tubes or hoses or are any of these parts cracked or damaged?		
Yes	▶	Repair. GO TO 4.
No	▶	GO TO 4.

4	CHECK BRAKE BOOSTER OPERATION	
Check brake booster for operation and air tightness. Refer to "On-vehicle Service", "BRAKE BOOSTER", BR-17.		
Is brake booster airtight and functioning properly?		
Yes	▶	GO TO 5.
No	▶	Replace. GO TO 5.

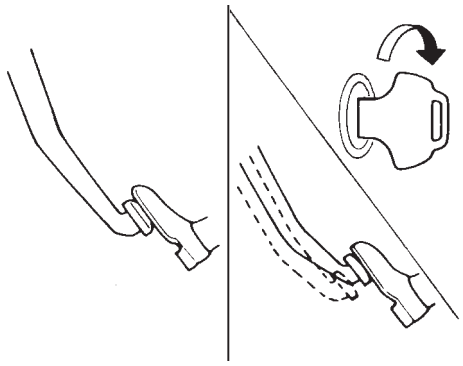

SBR058C

5	CHECK BRAKE PAD AND ROTOR	
Check brake pad and rotor. Refer to (BR-7).		
Are brake pads and rotors functioning properly?		
Yes	▶	GO TO 6.
No	▶	Replace.

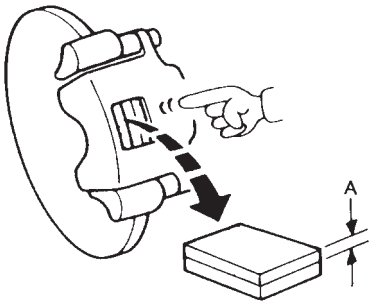

SBR059C

6	RECHECK BRAKE FLUID LEVEL

Check brake fluid level in reservoir tank again.

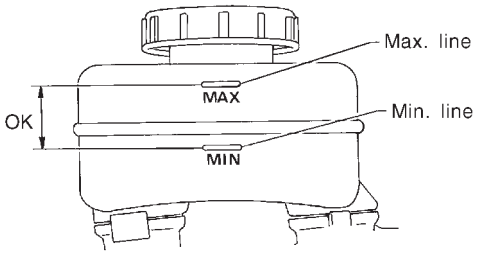

SBR451D

Is brake fluid filled between MAX and MIN lines on reservoir tank?

Yes	▶	GO TO 7.
No	▶	Fill up brake fluid.

7	CHECK WARNING LAMP ACTIVATION

Check warning lamp activation.

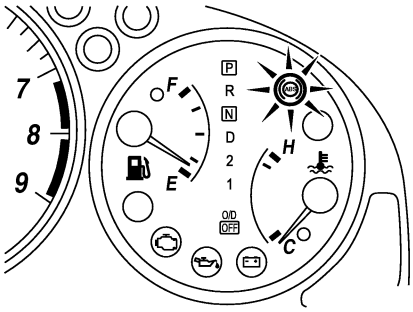

SBR803E

Does warning lamp turn on when ignition switch is turned ON?

Yes	▶	GO TO 8.
No	▶	Check fuse, warning lamp bulb and warning lamp circuit.

8	CHECK WARNING LAMP DEACTIVATION

Check warning lamp for deactivation after engine is started.

Does warning lamp turn off when engine is started?

Yes	▶	GO TO 9.
No	▶	Go to Self-diagnosis (BR-44).

9	DRIVE VEHICLE

Drive vehicle at speeds over 30 km/h (19 MPH) for at least one minute.

Does warning lamp remain off after vehicle has been driven at 30 km/h (19 MPH) for at least one minute?

Yes	▶	**INSPECTION END**
No	▶	Go to Self-diagnosis (BR-44).

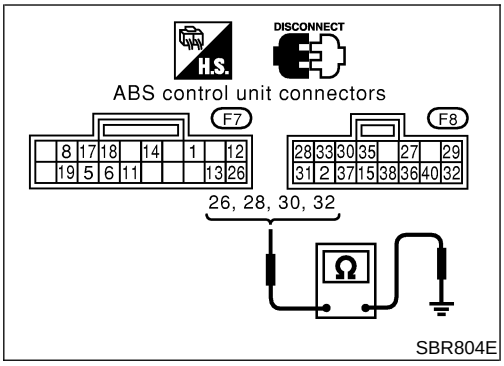

Ground Circuit Check

ABS CONTROL UNIT GROUND

=NMBR0102

NMBR0102S01

- Check continuity between ABS control unit connector terminals 26 (B), 28 (B), 30 (B), 32 (B) and ground.

  Continuity should exist.

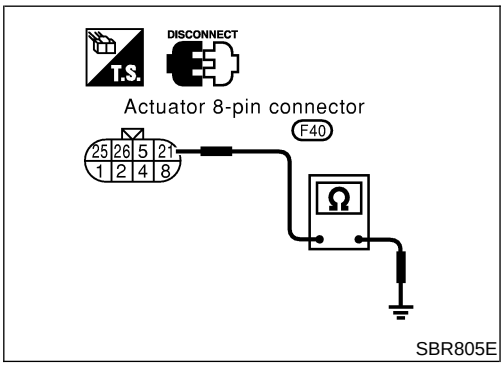

ABS ACTUATOR GROUND

NMBR0102S04

- Check resistance between actuator harness 8-pin connector (body side) terminal 21 (B) and ground.

  Resistance: approximately 0Ω

Wheel Sensor or Rotor

DIAGNOSTIC PROCEDURE 1

NMBR0104

NOTE:
Wheel position should be distinguished by code No. except code No. 18 (sensor rotor).

1	INSPECTION START

Wheel sensor inspection

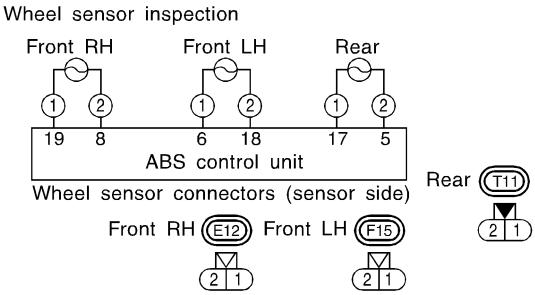

SBR806E

	▶	GO TO 2.

2	CHECK CONNECTOR

1. Disconnect connectors from ABS control unit and wheel sensor of malfunction code No. Check terminals for damage or loose connection. Then reconnect connectors.
2. Carry out self-diagnosis again.

Does warning lamp activate again?

Yes	▶	GO TO 3.
No	▶	**INSPECTION END**

3	CHECK WHEEL SENSOR ELECTRICAL

1. Disconnect ABS control unit connector.
2. Check resistance between ABS control unit connector F7 (body side) terminals.
   Code No. 21 or 22 (Front RH wheel)
   Terminals 8 (PU) and 19 (LG/R)
   Code No. 25 or 26 (Front LH wheel)
   Terminals 6 (G) and 18 (P/L)
   Code No. 31 or 32 (Rear wheel)
   Terminals 5 (W/G) and 17 (BR/R)

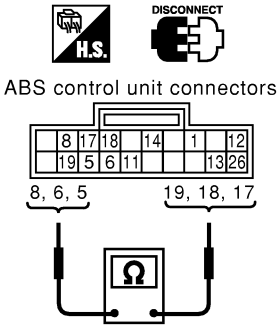

SBR807E

Resistance:
0.6 - 3.25 kΩ

Is resistance 0.6 - 3.25 kΩ?

Yes	▶	GO TO 5.
No	▶	GO TO 4.

4	CHECK WHEEL SENSOR

Check each sensor for resistance.

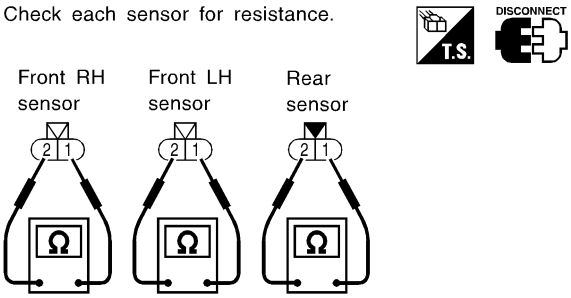

Resistance:
0.6 - 3.25 kΩ

Is resistance 0.6 - 3.25 kΩ?

Yes	▶	**Check the following.** If NG, repair harness or connectors. ● Harness connectors F7, E12, F15, T11 ● Harness for open or short between wheel sensor connectors and ABS control unit
No	▶	Replace wheel sensor.

5	CHECK TIRE

Check for inflation pressure, wear and size of each tire. (See NOTE.)

Are tire pressure and size correct and is tire wear within specifications?

Yes	▶	GO TO 6.
No	▶	Adjust tire pressure or replace tire(s). (See NOTE.)

6	CHECK WHEEL BEARING

Check wheel bearing axial end play. (See NOTE.)

Is wheel bearing axial end play within specifications? Refer to AX-3, "Front wheel bearing", AX-10, "Rear wheel bearing".

Yes	▶	GO TO 7.
No	▶	Check wheel bearing. Refer to AX-3, "Front wheel bearing", AX-10, "Rear wheel bearing".

7	CHECK SENSOR ROTOR

Check sensor rotor for teeth damage. (See NOTE.)

Is sensor rotor free from damage?

Yes	▶	Check ABS control unit pin terminals for damage or the connection of ABS control unit harness connector. Reconnect ABS control unit harness connector. Then retest.
No	▶	Replace sensor rotor. (See NOTE.)

ABS Actuator Solenoid Valve

DIAGNOSTIC PROCEDURE 2

=NMBR0105

1	INSPECTION START

Solenoid valve relay inspection

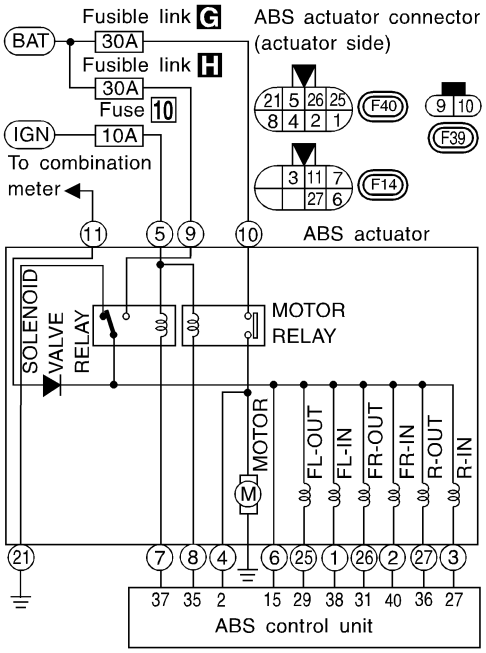

SBR809E

▶	GO TO 2.

2	CHECK CONNECTOR

1. Disconnect connector from ABS actuator and control unit. Check terminals for damage or loose connection. Then reconnect connector.
2. Carry out self-diagnosis again.

Does warning lamp activate again?

Yes	▶	GO TO 3.
No	▶	**INSPECTION END**

3	CHECK ABS ACTUATOR GROUND CIRCUIT

Refer to “ABS ACTUATOR GROUND” in “Ground Circuit Check”, BR-53.

Is ground circuit OK?

Yes	▶	GO TO 4.
No	▶	Repair harness or connector.

4	ABS ACTUATOR SOLENOID VALVE CHECK

1. Disconnect connectors from control unit.
2. Check resistance between control unit connector terminal (body side) and ground.

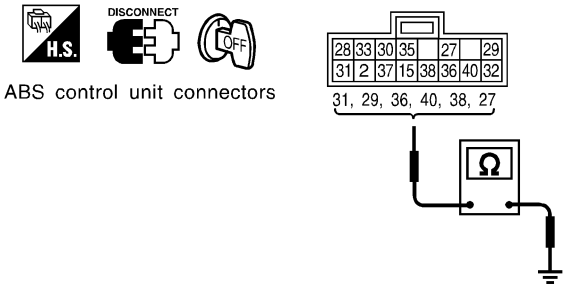

SBR810E

Code No.	Control unit connector F8 (wire color)	Ground	Resistance
41	31 (G/Y)	–	2.9 - 6Ω
45	29 (R/Y)	–	
55	36 (PU)	–	
42	40 (G/B)	–	5.2 - 10.6Ω
46	38 (R/G)	–	
56	27 (L/B)	–	

MTBL0639

OK or NG

OK	▶	GO TO DIAGNOSTIC PROCEDURE 3. (BR-59)
NG	▶	GO TO 5.

5	ABS ACTUATOR SOLENOID VALVE CHECK

1. Disconnect ABS actuator 8-pin connectors F14, F40.
2. Check resistance between ABS actuator 8-pin connector terminal (actuator side).

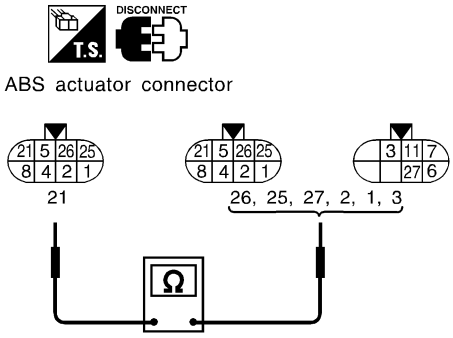

SBR811E

Code No.	ABS actuator connectors F14, F40 (actuator side)		Resistance
41	26	21	2.9 - 6Ω
45	25	21	
55	27	21	
42	2	21	5.2 - 10.6Ω
46	1	21	
56	3	21	

MTBL0640

OK or NG

OK	▶	**Check the following.** Harness connectors F14, F40 Harness for open or short between ABS actuator and control unit
NG	▶	GO TO 6.

6	ABS ACTUATOR SOLENOID VALVE CHECK

1. Check resistance between solenoid valve terminals 26, 25, 27, 2, 1, 3.
   Resistance: 7.4 - 16Ω

OK or NG

OK	▶	**Check the following.** Harness connectors F14, F40 Harness for open or short between ABS actuator and control unit
NG	▶	Replace ABS actuator.

Solenoid Valve Relay

DIAGNOSTIC PROCEDURE 3

=NMBR0106

1	INSPECTION START

ABS solenoid valve relay inspection.

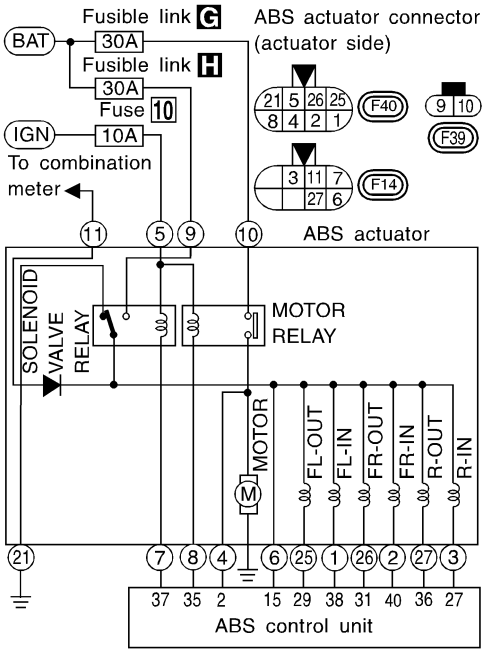

SBR809E

	▶	GO TO 2.

2	CHECK FUSIBLE LINK	
Check 30A fusible link **H**. For fusible link layout, refer to EL-7, “POWER SUPPLY ROUTING”.		
Is fusible link OK?		
Yes	▶	GO TO 3.
No	▶	GO TO 9.

3	FUSE CHECK	
Check 10A fuse No. 10. For fuse layout, refer to EL-7, “POWER SUPPLY ROUTING”.		
Is fuse OK?		
OK	▶	GO TO 4.
NG	▶	GO TO 12.

4	CHECK CONNECTOR	
1. Disconnect connector from ABS actuator and control unit. Check terminals for damage or loose connection. Then reconnect connector. 2. Carry out self-diagnosis again.		
Does warning lamp activate again?		
Yes	▶	GO TO 5.
No	▶	**INSPECTION END**

5	CHECK ABS ACTUATOR GROUND CIRCUIT	
Refer to "ABS ACTUATOR GROUND" in "Ground Circuit Check", BR-53.		
Is ground circuit OK?		
Yes	▶	GO TO 6.
No	▶	Repair harness or connector.

6	CHECK SOLENOID VALVE RELAY POWER SUPPLY CIRCUIT	
1. Disconnect ABS actuator 2-pin connector F39. 2. Check voltage between ABS actuator 2-pin connector F39 (body side) terminal 9 (R/B) and ground.		
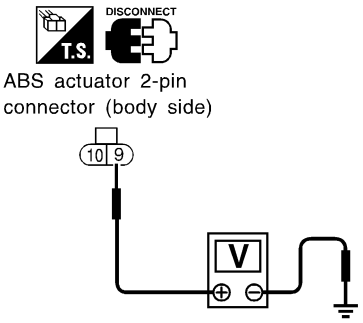 SBR812E		
Does battery voltage exist?		
Yes	▶	GO TO 7.
No	▶	**Check the following.** ● Harness connector F39 ● Harness for open or short between ABS actuator and fusible link If NG, repair harness or connector.

7	CIRCUIT CHECK

1. Disconnect ABS actuator 8-pin connectors F14, F40.
2. Check resistance between ABS actuator 8-pin connector terminal (body side) and ABS control unit connector (body side).

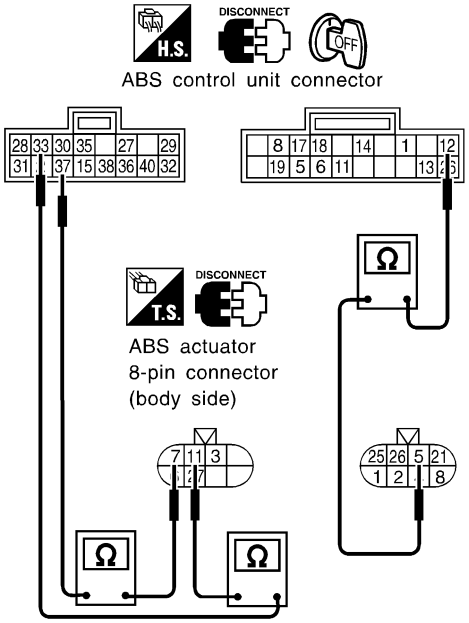

SBR813E

Control unit connectors F7, F8 (wire color)	ABS actuator connectors F14, F40 (wire color)
37 (LG/R)	7 (LG/R)
33 (L/R)	11 (L/R)
12 (GY/R)	5 (GY/R)

MTBL0641

Continuity should exist.

OK or NG

OK	▶	GO TO 8.
NG	▶	**Check the following.** ● Harness connectors F14, F40, F7, F8 ● Harness for open or short between ABS actuator connector and control unit If NG, repair harness or connectors.

8	ABS ACTUATOR SOLENOID VALVE RELAY CHECK

Check ABS solenoid valve relay.

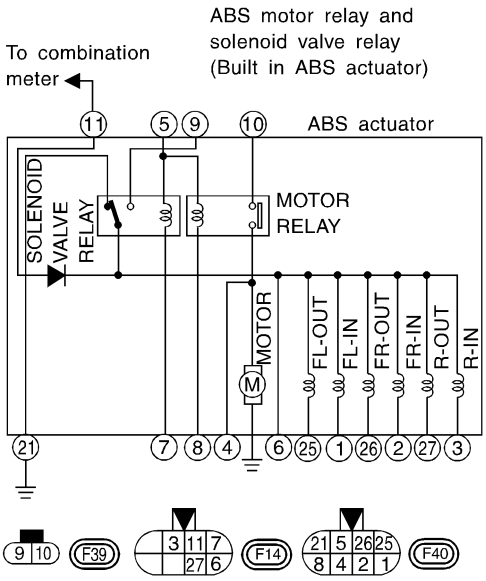

SBR814E

Relay type (ABS actuator connectors F14, F40)		Solenoid valve relay (ABS actuator connectors F14, F40)
Condition		Continuity between terminals 6 and 21
Battery voltage not applied between each terminal.	5 and 7	Yes
Battery voltage applied between each terminal.	5 and 7	No
Check resistance between each terminal.	5 and 7	Approx. 100 Ω

MTBL0642

OK or NG

OK	▶	GO TO DIAGNOSTIC PROCEDURE 2, BR-56.
NG	▶	Replace ABS actuator.

9	FUSIBLE LINK CHECK

Replace fusible link.

Does the fusible link blow out when ignition switch is turned "ON"?

Yes	▶	GO TO 10.
No	▶	**INSPECTION END**

10	RELAY POWER SUPPLY CIRCUIT

1. Disconnect ABS actuator 2-pin connector F39.
2. Check continuity between ABS actuator 2-pin connector F39 (body side) terminal 9 (R/B) and ground.

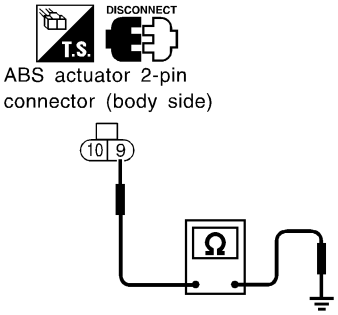

SBR815E

Continuity should not exist.

OK or NG

OK	▶	GO TO 11.
NG	▶	**Check the following.** ● Harness connector F39 ● Harness for open or short between ABS actuator connector and fusible link If NG, repair harness or connector.

11	RELAY POWER SUPPLY CIRCUIT

1. Disconnect ABS actuator connector F14.
2. Check continuity between ABS actuator 8-pin connector F14 (actuator side) terminal 6 (R/W) and ground.

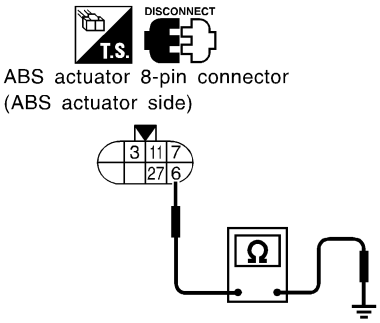

SBR816E

Continuity should exist.

OK or NG

OK	▶	GO TO DIAGNOSTIC PROCEDURE 2, BR-56.
NG	▶	Replace ABS actuator.

12	FUSE CHECK

Replace fuse.

Does the fuse blow out when ignition switch is turned "ON"?

Yes	▶	**Check the following.** ● Harness connector F40 ● Harness for open or short between ABS actuator connector and fuse If NG, repair harness or connector.
No	▶	**INSPECTION END**

Motor Relay or Motor

DIAGNOSTIC PROCEDURE 4

=NMBR0131

1	INSPECTION START

ABS motor relay inspection

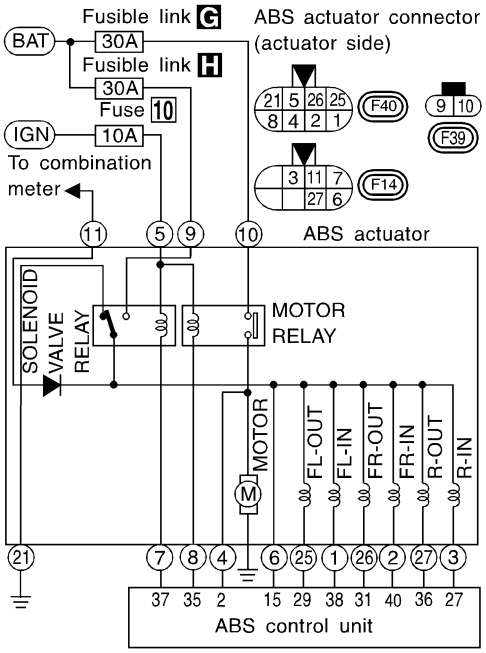

SBR809E

	▶	GO TO 2.

2	CHECK FUSIBLE LINK

Check 30A fusible link **G**. For fusible link layout, refer to EL-7, “POWER SUPPLY ROUTING”.

Is fusible link OK?

Yes	▶	GO TO 3.
No	▶	GO TO 10.

3	FUSE CHECK

Check 10A fuse No. 10. For fuse layout, refer to EL-7, “POWER SUPPLY ROUTING”.

Is fuse OK?

Yes	▶	GO TO 4.
No	▶	GO TO 15.

4	CHECK CONNECTOR

1. Disconnect connector from ABS actuator and control unit connector. Check terminals for damage or loose connection. Then reconnect connector.
2. Carry out self-diagnosis again.

Does warning lamp activate again?

Yes	▶	GO TO 5.
No	▶	**INSPECTION END**

5	CHECK ABS ACTUATOR GROUND CIRCUIT	
Refer to "ABS ACTUATOR GROUND" in "Ground Circuit Check", BR-53. **Is ground circuit OK?**		
Yes	▶	GO TO 6.
No	▶	Repair harness or connector.

6	CHECK MOTOR RELAY POWER SUPPLY CIRCUIT	
1. Disconnect ABS actuator 2-pin connector F39. 2. Check voltage between ABS actuator 2-pin connector F39 (body side) terminal 10 (G) and ground. 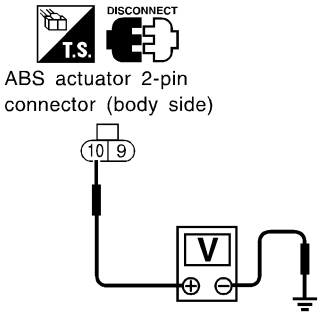 SBR817E **Does battery voltage exist?**		
Yes	▶	GO TO 7.
No	▶	**Check the following.** ● Harness connector F39 ● Harness for open or short between ABS actuator and fusible link If NG, repair harness or connector.

7	CIRCUIT CHECK

1. Disconnect ABS actuator 8-pin connector and control unit connectors F7, F8.
2. Check resistance between ABS actuator 8-pin connector terminal (body side) and ABS control unit connector (body side).

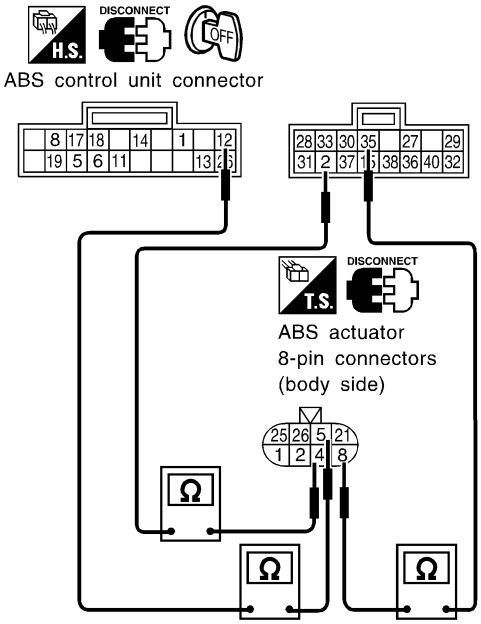

SBR818E

Control unit connectors F7, F8 (wire color)	ABS actuator connector F40 (wire color)
35 (P/B)	8 (P/B)
2(L)	4 (L)
12 (GY/R)	5 (GY/R)

MTBL0643

Continuity should exist.

OK or NG

OK	▶	GO TO 8.
NG	▶	**Check the following.** ● Harness connectors F40, F7, F8 ● Harness for open or short between ABS actuator connector and control unit If NG, repair harness or connectors.

8	MOTOR RELAY CHECK

Check motor relay.

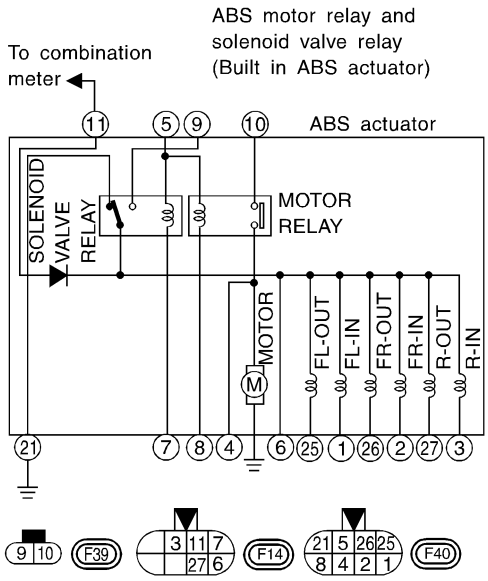

SBR814E

Relay type (ABS actuator connector F40)		Solenoid valve relay (ABS actuator connectors F39, F40)
Condition		Continuity between terminals 4 and 10
Battery voltage not applied between each terminal.	5 and 8	Yes
Battery voltage applied between each terminal.	5 and 8	No
Check resistance between each terminal.	5 and 8	Approx. 100 Ω

MTBL0644

OK or NG

OK	▶	GO TO 9.
NG	▶	Replace ABS actuator.

9	MOTOR CHECK

1. Disconnect ABS actuator connector.
2. Apply battery voltage to 8-pin connector terminal 4 (actuator side) and ground.
   Do not apply battery voltage more than 5 seconds.

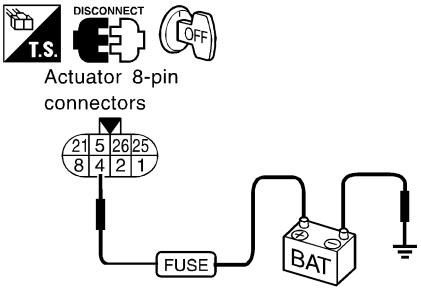

SBR822E

Does motor operate?

Yes	▶	GO TO "DIAGNOSTIC PROCEDURE 5", BR-70.
No	▶	Replace ABS actuator.

10	FUSIBLE LINK CHECK	
Replace fusible link.		
Does the fusible link blow out when ignition switch is turned "ON"?		
Yes	▶	GO TO 11.
No	▶	**INSPECTION END**

11	MOTOR POWER SUPPLY CIRCUIT	
1. Disconnect battery cable ABS actuator 2-pin connector F39. 2. Check continuity between ABS actuator 2-pin connector F39 (body side) terminal 10 (G) and ground.		

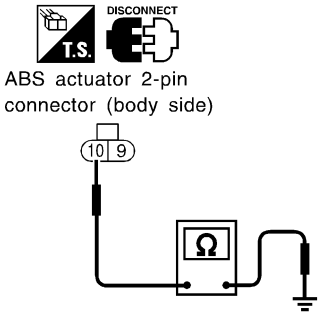

SBR819E

Continuity should not exist.

OK or NG

OK	▶	GO TO 12.
NG	▶	**Check the following.** ● Harness connector F39 ● Harness for open or short between ABS actuator connector and fusible link If NG, repair harness or connector.

12	RELAY POWER SUPPLY CIRCUIT	
1. Disconnect ABS actuator connector and control unit connector. 2. Check continuity between ABS actuator 8-pin connector F40 (body side) terminal 4 (L) and ground.		

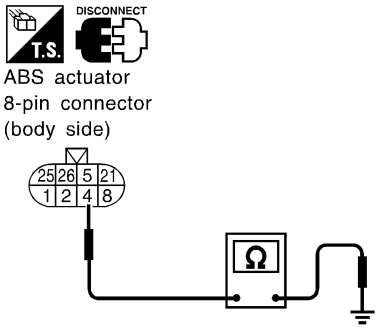

SBR820E

Continuity should not exist.

OK or NG

OK	▶	GO TO 13.
NG	▶	**Check the following.** ● Harness connector F40 ● Harness for open or short between ABS actuator connector (body side) and ABS control unit If NG, repair harness or connector.

13	RELAY POWER SUPPLY CIRCUIT

Check continuity between ABS 8-pin connector F40 (ABS actuator side) terminal 4 and ground, 2-pin connector F39 (ABS actuator side) terminal 10 and ground.

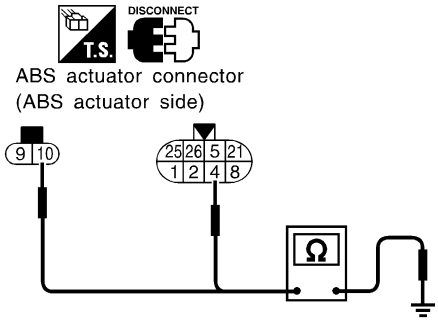

SBR821E

Continuity should not exist.

OK or NG

OK	▶	GO TO 14.
NG	▶	Replace ABS actuator.

14	MOTOR CHECK

Go to "9 MOTOR CHECK" in "DIAGNOSTIC PROCEDURE 4", BR-64.

	▶	Check ABS control unit pin terminals for damage or the connection of ABS control unit harness connector. Reconnect ABS control unit harness connector then retest.

15	FUSE CHECK

Replace fuse.

Does the fuse blow out when ignition switch is turned "ON"?

Yes	▶	**Check the following.** ● Harness connector F40 ● Harness for open or short between ABS actuator connector and fuse If NG, repair harness or connector.
No	▶	**INSPECTION END**

Low Voltage

DIAGNOSTIC PROCEDURE 5

=NMBR0107

1	INSPECTION START

ABS control unit power supply and ground circuit inspection

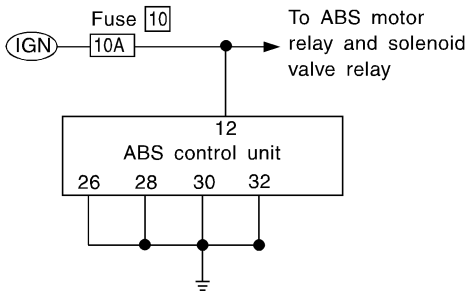

SBR839E

	▶	GO TO 2.

2	CONTROL UNIT POWER SUPPLY CHECK

1. Disconnect control unit connector F7.
2. Check voltage between control unit connector F7 (body side) terminal 12 (GY/R) and ground.

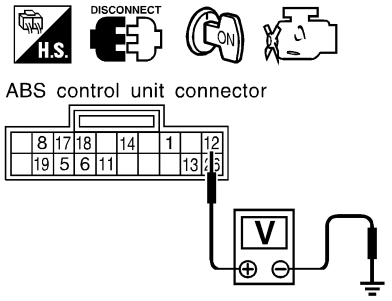

SBR823E

Does battery voltage exist when ignition switch is turned "ON"?

Yes	▶	GO TO 3.
No	▶	GO TO 4.

3	CONTROL UNIT GROUND CHECK

Refer to CONTROL UNIT GROUND in Ground Circuit Check, BR-53.

Does the fusible link blow out when ignition switch is turned "ON"?

Yes	▶	Check control unit pin terminals for damage or the connection of control unit harness connector. Reconnect control unit harness connector. Then retest.
No	▶	Repair harness and connectors.

4	FUSE CHECK

Check fuse 10A No. 10. Refer to "POWER SUPPLY ROUTING", EL-7.

OK	▶	GO TO 5.
NG	▶	Replace fuse.

5	FUSE CHECK
1. Disconnect ABS control unit connector. 2. Check continuity between battery and control unit F7 connector (body side) terminal 12 (GY/R). **Continuity should exist.** **OK or NG**	
OK ▶	Check battery. Refer to "BATTERY", SC-3.
NG ▶	**Check the following.** ● Harness connector F7 ● Harness for open or short between ABS control unit and fuse If NG, repair harness or connector.

Control Unit

DIAGNOSTIC PROCEDURE 6

=NMBR0108

1	INSPECTION START

ABS control unit power supply and ground circuit inspection

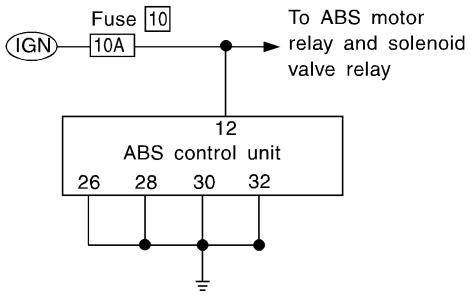

SBR839E

	▶	GO TO 2.

2	CHECK CONNECTOR

1. Disconnect control unit connector.
   Check terminals for damage or loose connection. Then reconnect connector.
2. Carry out self-diagnosis again.

Does warning lamp activate again?

Yes	▶	GO TO 3.
No	▶	**INSPECTION END**

3	CHECK ABS ACTUATOR AND ELECTRIC UNIT POWER SUPPLY CIRCUIT

Check voltage. Refer to “5. CHECK ABS CONTROL UNIT POWER SUPPLY CIRCUIT” in “DIAGNOSTIC PROCEDURE 5”, “Low Voltage”, BR-70.

Does battery voltage exist when ignition switch is turned ON?

Yes	▶	GO TO 4.
No	▶	Repair.

4	CHECK WARNING LAMP INDICATION

Does warning lamp indicate code No. 71 again?

Yes or No

Yes	▶	Replace ABS control unit.
No	▶	Inspect the system according to the code No.

1. ABS Works Frequently

NMBR0109

1	CHECK BRAKE FLUID PRESSURE	
Check brake fluid pressure distribution. Refer to “Inspection”, “PROPORTIONING VALVE”, BR-11. **Is brake fluid pressure distribution normal?**		
Yes	▶	GO TO 2.
No	▶	Repair. Then perform Preliminary Check. Refer to BR-50.

2	CHECK WHEEL SENSOR	
1. Check wheel sensor connector for terminal damage or loose connections. 2. Perform wheel sensor mechanical check. Refer to “7. CHECK SENSOR ROTOR” in “DIAGNOSTIC PROCEDURE 1”, “Wheel Sensor or Rotor”, BR-54. **Is wheel sensor mechanism OK?**		
Yes	▶	GO TO 3.
No	▶	Repair.

3	CHECK FRONT AXLE	
Check front axles for excessive looseness. Refer to AX-3, “Front Wheel Bearing”. **Is front axle installed properly?**		
Yes	▶	Go to “3. CHECK WARNING LAMP INDICATION” in “2. Unexpected Pedal Action”, BR-73.
No	▶	Repair.

2. Unexpected Pedal Action

NMBR0110

1	CHECK BRAKE PEDAL STROKE	
Check brake pedal stroke. 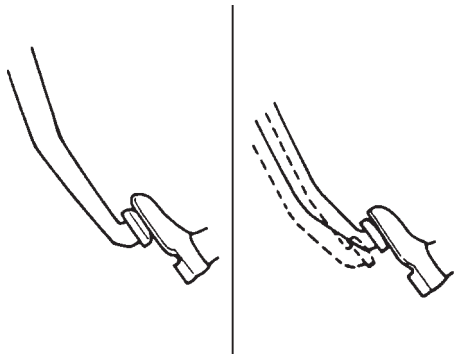 SBR540A **Is brake pedal stroke excessively large?**		
Yes	▶	Perform Preliminary Check. Refer to BR-50.
No	▶	GO TO 2.

2	CHECK MECHANICAL BRAKE SYSTEM PERFORMANCE	
Disconnect ABS actuator connector and check whether brake is effective. **Does brake system function properly when brake pedal is depressed?**		
Yes	▶	GO TO 3.
No	▶	Perform Preliminary Check. Refer to BR-50.

3	CHECK WARNING LAMP INDICATION	
Ensure warning lamp remains off while driving. 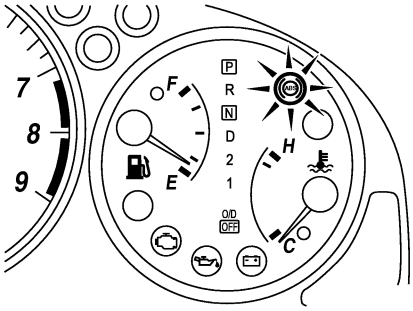 SBR803E **Is warning lamp turned off?**		
Yes	▶	GO TO 4.
No	▶	Carry out self-diagnosis. Refer to BR-44.

4	CHECK WHEEL SENSOR	
1. Check wheel sensor connector for terminal damage or loose connection. 2. Perform wheel sensor mechanical check. Refer to "7. CHECK SENSOR ROTOR" in "DIAGNOSTIC PROCEDURE 1", "Wheel Sensor or Rotor", BR-54. **Is wheel sensor mechanism OK?**		
Yes	▶	Check ABS control unit pin terminals for damage or the connection of ABS control unit harness connector. Reconnect ABS control unit harness connector. Then retest.
No	▶	Repair.

3. Long Stopping Distance

=NMBR0111

1	CHECK MECHANICAL BRAKE SYSTEM PERFORMANCE	
Disconnect ABS actuator connector and check whether stopping distance is still long. **Does brake system function properly when brake pedal is depressed?**		
Yes	▶	Perform Preliminary Check and air bleeding (if necessary).
No	▶	Go to “3. CHECK WARNING LAMP INDICATION” in “2. Unexpected Pedal Action”, BR-73.

NOTE:
Stopping distance may be longer for vehicles without ABS when road condition is slippery.

4. ABS Does Not Work

NMBR0112

1	CHECK WARNING LAMP INDICATION	
Does the ABS warning lamp activate? **Yes or No**		
Yes	▶	Carry out self-diagnosis. Refer to BR-44.
No	▶	Go to “3. CHECK WARNING LAMP INDICATION” in “2. Unexpected Pedal Action”, BR-73.

NOTE:
ABS does not work when vehicle speed is under 10 km/h (6 MPH).

5. Pedal Vibration and Noise

NMBR0113

1	INSPECTION START
Pedal vibration and noise inspection	

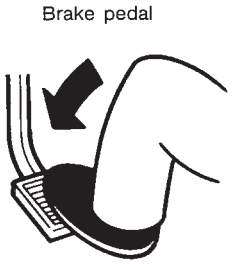

SAT797A

	▶	GO TO 2.

2	CHECK SYMPTOM	
1. Apply brake. 2. Start engine.		
	Does the symptom appear only when engine is started?	
Yes	▶	Carry out self-diagnosis. Refer to BR-44.
No	▶	Go to “3. CHECK WARNING LAMP INDICATION” in “2. Unexpected Pedal Action”, BR-73.

NOTE:
ABS may operate and cause vibration under any of the following conditions.

- Applying brake gradually when shifting or operating clutch.
- Low friction (slippery) road.
- High speed cornering.
- Driving over bumps and pot holes.
- Engine speed is over 5,000 rpm with vehicle stopped.

6. Warning Lamp Does Not Come On When Ignition Switch Is Turned On

NMBR0114

1	INSPECTION START

Warning lamp circuit inspection

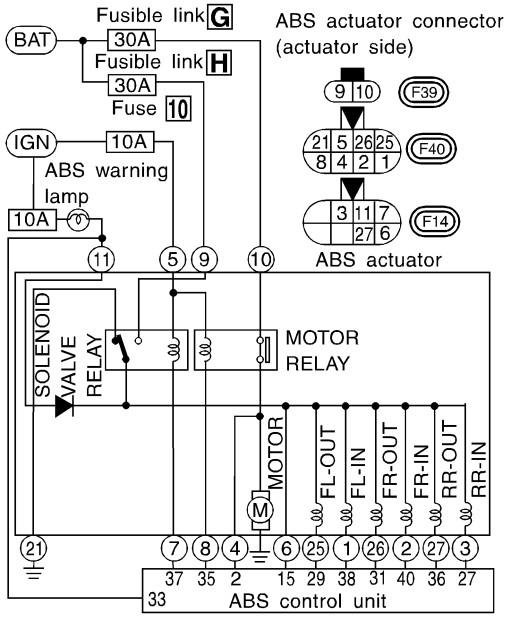

SBR824E

	▶	GO TO 2.

2	CHECK FUSE

Check 10A fuse No. 11. For fuse layout, refer to EL-7, “POWER SUPPLY ROUTING”.

Is fuse OK?

Yes	▶	GO TO 3.
No	▶	Replace fuse.

3	CHECK WARNING LAMP ACTIVATES

1. Disconnect connectors from ABS actuator and control unit connector.
2. Check voltage between control unit connector F8 (body side) terminal 33 (L/R) and ground after turning ignition switch “ON”.

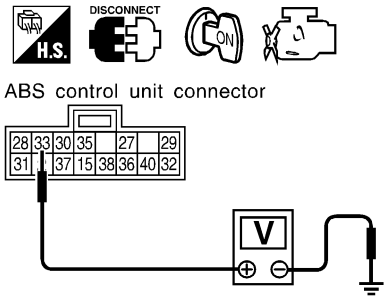

SBR825E

Battery voltage should exist after turning ignition switch “ON”.

OK	▶	GO TO 4.
NG	▶	GO TO 9.

4	CIRCUIT CHECK

1. Turn ignition switch "OFF".
2. Check continuity between control unit connector F8 (body side) terminal 33 (L/R) and ABS actuator connector F14 (body side) terminal 11 (L/R).

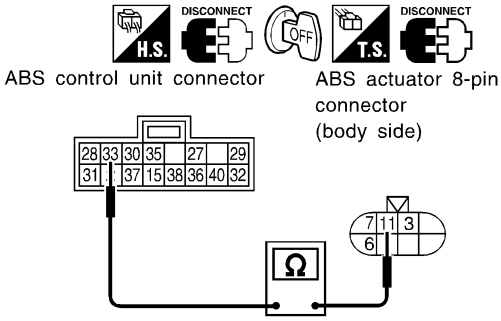

SBR826E

Continuity should exist.

OK or NG

OK	▶	GO TO 5.
NG	▶	Repair harness and connectors between warning lamp (combination meter) and ABS actuator connector F14 (body side) terminal 11 (L/R).

5	CIRCUIT CHECK

1. Disconnect ABS actuator connector.
2. Check continuity between ABS actuator connector F40 (body side) terminal 21 (B) and ground.

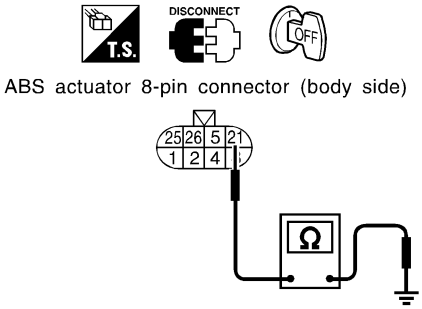

SBR827E

Continuity should exist.

OK or NG

OK	▶	GO TO 6.
NG	▶	Repair harness and connector.

6	CIRCUIT CHECK

1. Disconnect ABS actuator connector.
2. Check continuity between ABS actuator connectors F14, F40 (actuator side) terminals 11 (−) and 21 (+).

NOTE:
Pay attention to tester polarity.
Specifications may vary depending on the type of tester.
Before performing this inspection, refer to the instruction manual of the tester.

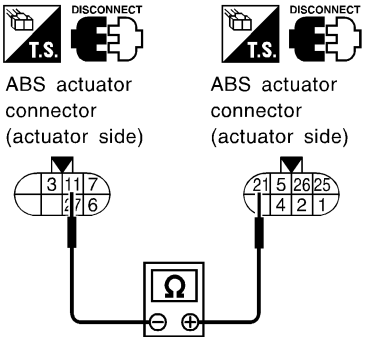

SBR828E

Continuity should exist.

OK or NG

OK	▶	GO TO 7.
NG	▶	Replace ABS actuator.

7	CONTROL UNIT POWER SUPPLY CIRCUIT

Go to "2 CONTROL UNIT POWER SUPPLY CHECK" in "DIAGNOSTIC PROCEDURE 5", BR-70.

OK	▶	GO TO 8.
NG	▶	Repair harness and connectors.

8	ABS ACTUATOR SOLENOID VALVE RELAY CHECK

Check ABS solenoid valve relay.

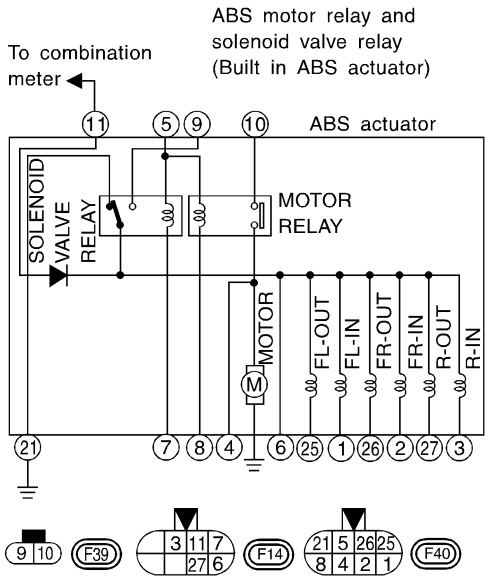

SBR814E

Relay type (ABS actuator connectors F14, F40)		Solenoid valve relay (ABS actuator connectors F14, F40)
Condition		Continuity between terminals 6 and 21
Battery voltage not applied between each terminal.	5 and 7	Yes
Battery voltage applied between each terminal.	5 and 7	No
Check resistance between each terminal.	5 and 7	Approx. 100 Ω

MTBL0642

OK or NG

OK	▶	GO TO "DIAGNOSTIC PROCEDURE 5", BR-70.
NG	▶	Replace ABS actuator.

9	CHECK WARNING LAMP BULB

Go to "2 CONTROL UNIT POWER SUPPLY CHECK" in "DIAGNOSTIC PROCEDURE 5", BR-70.

OK	▶	Repair harness or connection between battery and control unit connector F8 (body side) terminal 33 (including combination meter).
NG	▶	Replace bulb.

7. Warning Lamp Stays On When Ignition Switch Is Turned On

=NMBR0115

1	INSPECTION START

ABS control unit inspection

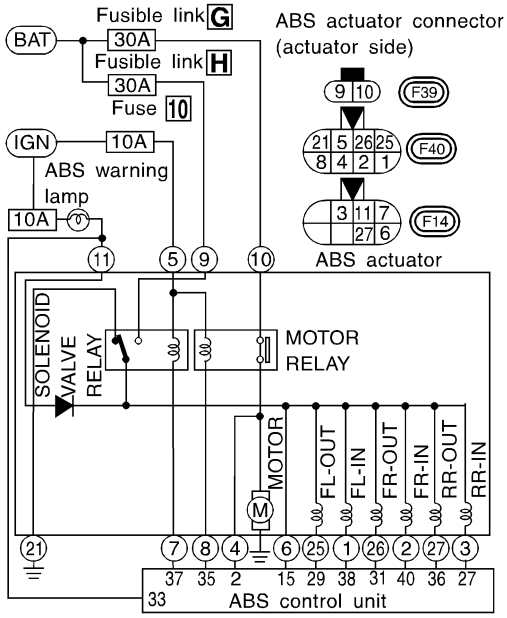

SBR824E

	▶	GO TO 2.

2	CHECK FUSE	
Check 10A fuse No. 10. For fuse layout, refer to EL-7, “POWER SUPPLY ROUTING”.		
Is fuse OK?		
Yes	▶	GO TO 3.
No	▶	GO TO 12.

3	CHECK HARNESS CONNECTOR	
Check ABS control unit pin terminals for damage or bad connection of ABS control unit harness connector. Reconnect ABS actuator and control unit harness connector. Then retest.		
Does warning lamp stay on when ignition switch is turned ON?		
Yes	▶	GO TO 4.
No	▶	**INSPECTION END**

4	CHECK ABS CONTROL UNIT GROUND CIRCUIT	
Refer to “ABS CONTROL UNIT GROUND” in “Ground Circuit Check”, BR-53.		
Is ground circuit OK?		
Yes	▶	GO TO 5.
No	▶	Repair harness or connector.

5	POWER SUPPLY CHECK

1. Disconnect control unit connector F7.
2. Check voltage between control unit connector F7 (body side) terminal 12 (GY/R) and ground.

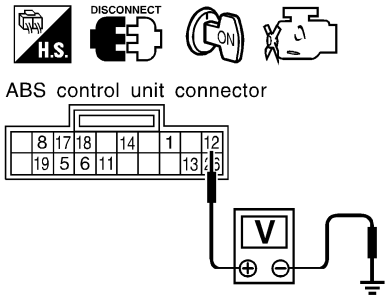

SBR823E

Does battery voltage exist when ignition switch is turned "ON"?

Yes	▶	GO TO 6.
No	▶	**Check the following.** ● Harness connector F7 ● Harness for open or short between control unit and fuse If NG, repair harness or connector.

6	SOLENOID VALVE RELAY COIL POWER SUPPLY CHECK

1. Turn ignition switch "OFF". Disconnect ABS actuator 8-pin connector.
2. Check continuity between ABS control unit connector (body side) terminal and ABS actuator 8-pin connector (body side) terminal.

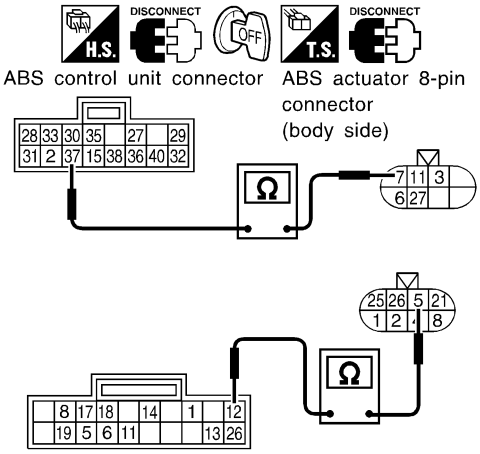

SBR829E

Control unit connectors F7, F8 (wire color)	ABS actuator connectors F14, F40 (wire color)
37 (LG/R)	7 (LG/R)
12(GY/R)	5 (GY/R)

MTBL0646

Continuity should exist.

OK or NG

OK	▶	GO TO 6.
NG	▶	**Check the following.** ● Harness connectors F14, F40, F7, F8 ● Harness for open or short between ABS actuator connector and control unit If NG, repair harness or connectors.

7	CIRCUIT CHECK

1. Disconnect ABS actuator connector.
2. Connect continuity between ABS actuator connectors F14, F40 (actuator side) terminals 5 and 7.

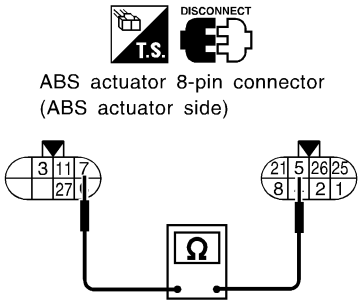

SBR830E

Continuity should exist.

OK or NG

OK	▶	GO TO 8.
NG	▶	Replace ABS actuator.

8	SOLENOID VALVE RELAY CHECK

Go to "8 ABS ACTUATOR SOLENOID VALVE RELAY CHECK" in "Warning Lamp Does Not Come On When Ignition Switch Is Turned ON", BR-77.

OK	▶	GO TO 9.
NG	▶	Replace ABS actuator.

9	GROUND-SHORT CHECK FOR WARNING LAMP CIRCUIT

1. Turn ignition switch "OFF".
2. Disconnect connectors from ABS control unit and ABS actuator 8-pin connector.
3. Check continuity between ABS control unit connector F8 (body side) terminal 33 (L/R) and ground.

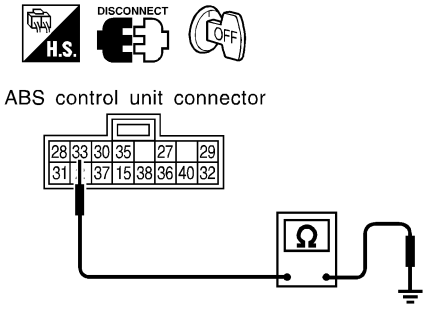

SBR831E

Continuity should not exist.

OK or NG

OK	▶	GO TO 10.
NG	▶	**Check the following.** ● Harness connector F8 ● Harness for open or short between control unit and fuse If NG, repair harness or connector.

10	GROUND-SHORT CHECK FOR WARNING LAMP CIRCUIT

1. Disconnect ABS actuator ground terminal and ABS 8-pin connector.
2. Check continuity between ABS actuator 8-pin connector (actuator side) F14 terminal 11 (–) and ground.
   NOTE:
   Pay attention to tester polarity.
   Specifications may vary depending on the type of tester.
   Before performing this inspection, refer to the instruction manual of the tester.

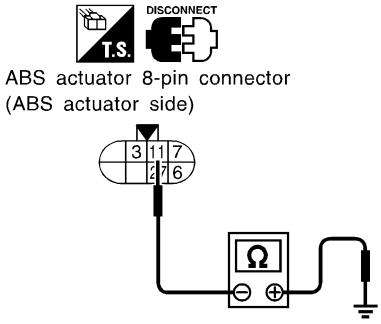

SBR832E

Continuity should not exist.

OK or NG

OK	▶	GO TO 11.
NG	▶	Replace ABS actuator.

11	SOLENOID VALVE CIRCUIT

1. Disconnect ABS 8-pin connector.
2. Check continuity between ABS actuator 8-pin connectors (actuator side) F14, F40 terminals 3, 27, 1, 2, 25, 26 and ground.

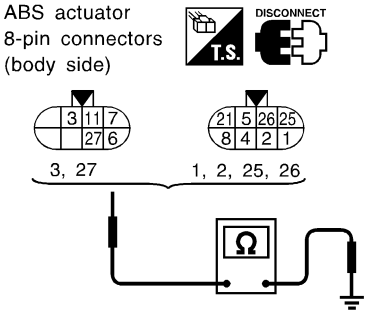

SBR833E

Continuity should not exist.

OK or NG

OK	▶	Check control unit pin terminals for damage or the connection of ABS control unit harness connector. Reconnect control unit harness connector. Then retest.
NG	▶	Replace ABS actuator.

12	FUSE CHECK

Replace fuse.

Does the fuse blow out when ignition switch is turned "ON"?

Yes	▶	GO TO 13.
No	▶	**INSPECTION END**

13	CONTROL UNIT POWER SUPPLY CIRCUIT

1. Disconnect ABS control unit connector.
2. Check continuity between ABS control unit connector F7 (body side) terminal 12 (GY/R) and ground.

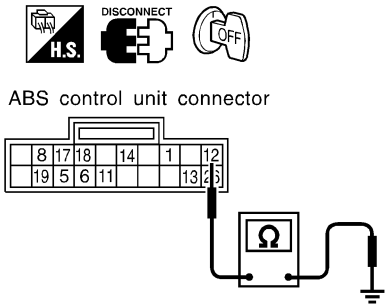

SBR834E

Continuity should not exist.

OK or NG

OK	▶	Check control unit pin terminals for damage or the connection of ABS control unit harness connector. Reconnect control unit harness connector. Then retest.
NG	▶	**Check the following.** ● Harness connector F7 ● Harness for open or short between control unit and fuse If NG, repair harness or connector.

Wheel Sensors

NMBR0079S01

CAUTION:

Be careful not to damage sensor edge and sensor rotor teeth. When removing the front wheel hub or final drive assemblies, first remove the ABS wheel sensor from the assembly. Failure to do so may result in damage to the sensor wires making the sensor inoperative.

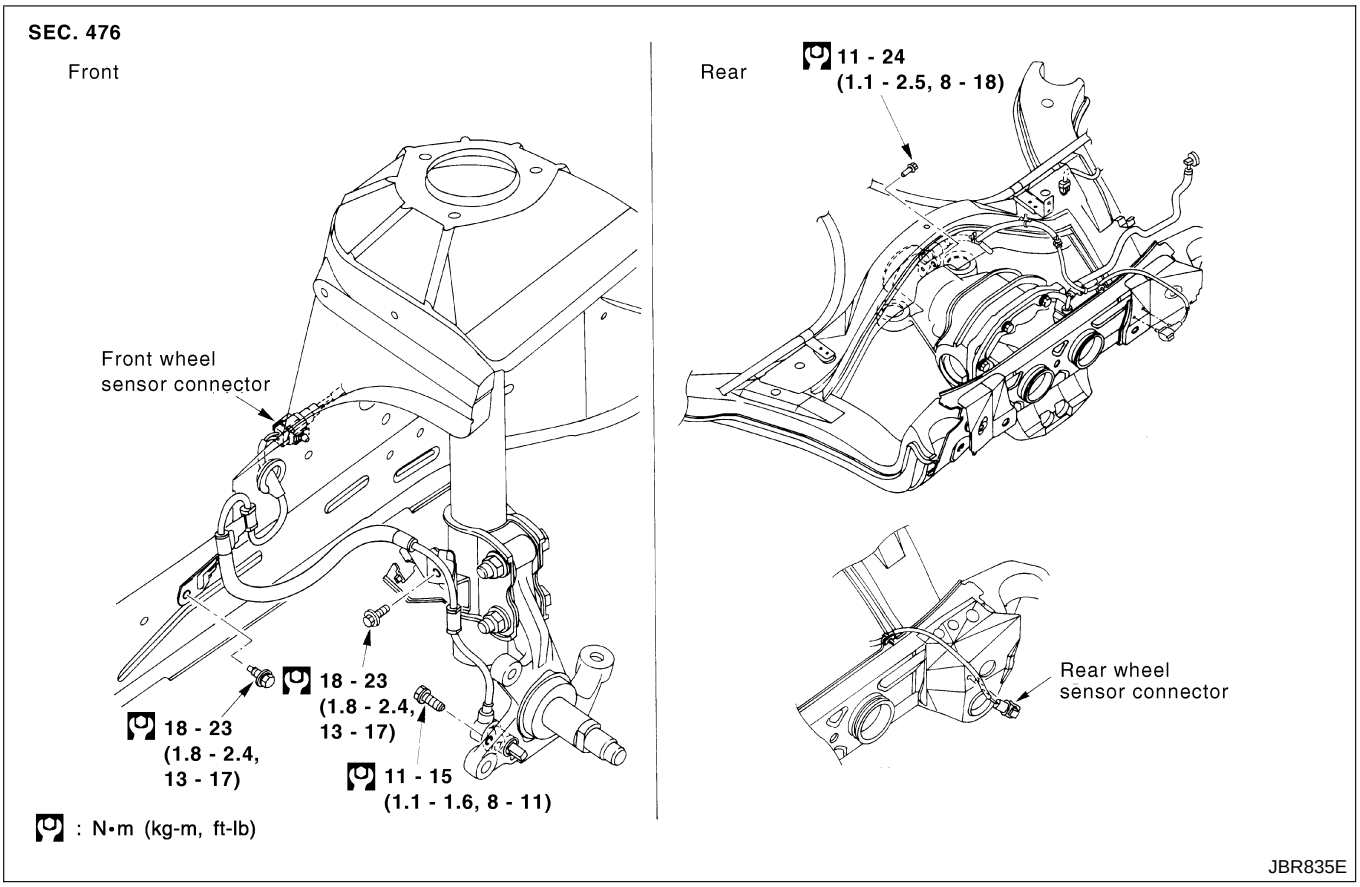

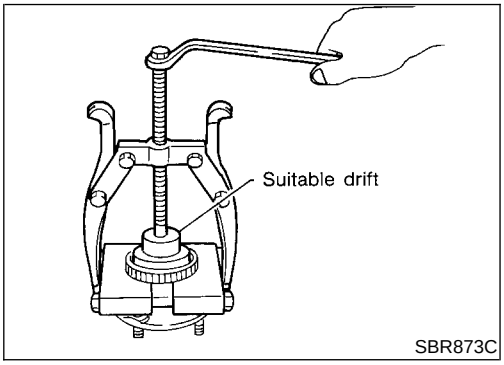

Sensor Rotor

NMBR0079S03

REMOVAL

NMBR0079S0301

1. Remove the front wheel hub or final drive companion flange. Refer to AX-7, “Removal”, “ABS Sensor Rotor” and PD-15, “Components”, “REAR FINAL DRIVE”.
2. Remove the sensor rotor using suitable puller, drift and bearing replacer.

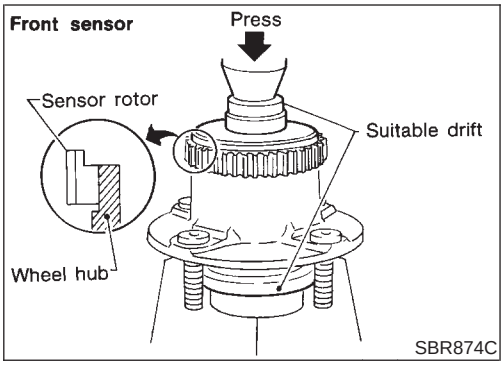

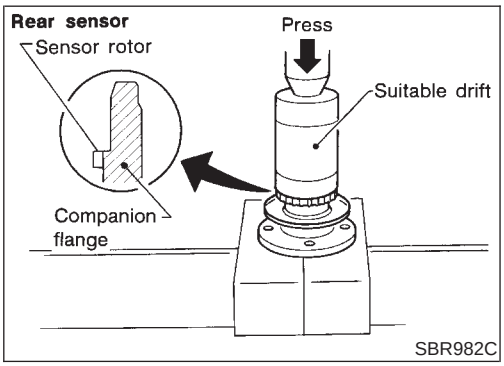

INSTALLATION

NMBR0079S0302

Install the sensor rotor using suitable drift and press.

- Always replace sensor rotor with new one.
- Pay attention to the direction of front sensor rotor as show in figure.

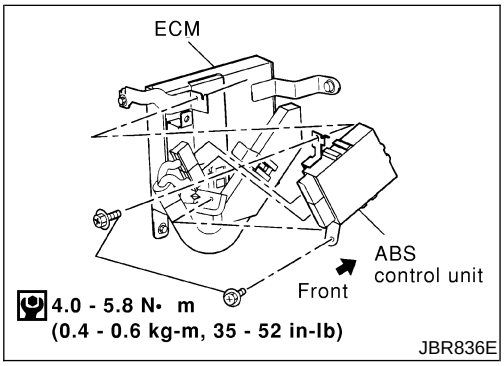

Control Unit

NMBR0079S09

Location: Under trunk side finisher LH.

ABS Actuator

NMBR0079S07

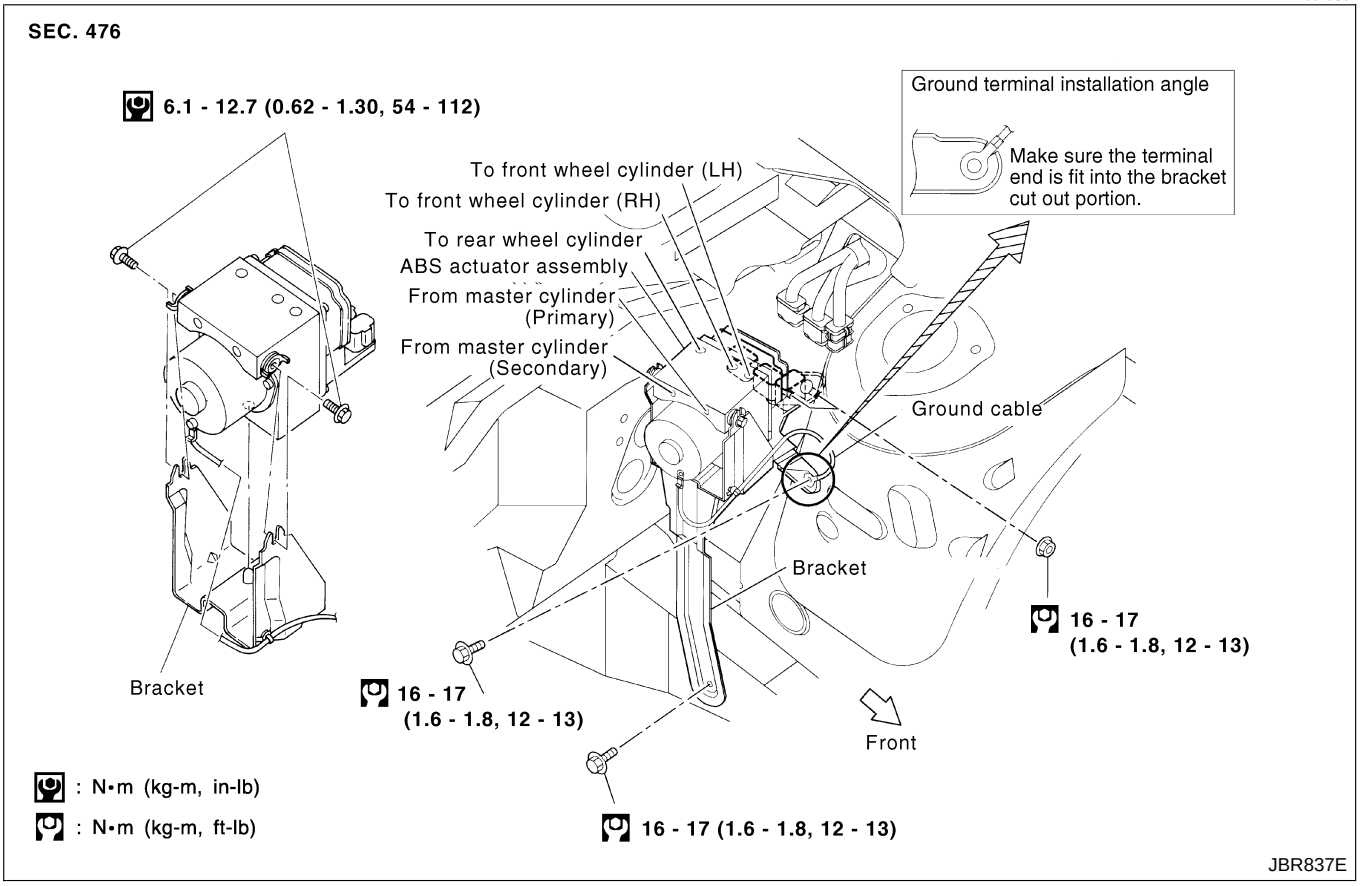

REMOVAL

NMBR0079S0701

1. Disconnect battery cable.
2. Drain brake fluid. Refer to “Changing Brake Fluid”, BR-6.
3. Remove mounting bracket fixing bolts and nuts.
4. Disconnect connector, brake pipes and remove fixing nuts and actuator ground cable.

INSTALLATION

NMBR0079S0702

CAUTION:

After installation, refill brake fluid. Then bleed air. Refer to “Bleeding Brake System”, BR-8.

1. Tighten actuator ground cable.

Place ground cable at a notch of mounting bracket.

2. Connect brake pipes temporarily.
3. Tighten fixing bolts and nuts.
4. Tighten brake pipes.
5. Connect connector and battery cable.

General Specifications

NMBR0080
Unit: mm (in)

Front brake	Brake model	OPF25VA
	Cylinder bore diameter × number of pistons	40.4 (1.591) × 2
	Pad Length × width × thickness	116 × 50.0 × 10.0 (4.57 × 1.969 × 0.394)
	Rotor outer diameter × thickness	280 × 30 (11.02 × 1.18)
Rear brake	Brake model	CL11H
	Cylinder bore diameter	38.18 (1-1/2)
	Pad length × width × thickness	75.0 × 40.0 × 9.5 (2.953 × 1.575 × 0.374)
	Rotor outer diameter × thickness	258 × 9 (10.16 × 0.35)
Master cylinder	Bore diameter	25.40 (1)
Control valve	Valve model	Proportioning valve within master cylinder
	Split point kPa (kg/cm^2, psi) × reducing ratio	2,942 (30, 427) × 0.2
Brake booster	Booster model	A215T
	Diaphragm diameter	Pri: 230 (9.06) Sec: 205 (8.07)
Recommended brake fluid		DOT 3

Front Disc Brake

NMBR0081
Unit: mm (in)

Brake model		OPF25VA
Pad wear limit	Minimum thickness	2.0 (0.079)
Rotor repair limit	Minimum thickness	28.0 (1.10)

Rear Disc Brake

NMBR0082
Unit: mm (in)

Brake model		CL11H
Pad wear limit	Minimum thickness	2.0 (0.079)
Rotor repair limit	Minimum thickness	8.0 (0.315)

Brake Pedal

NMBR0083
Unit: mm (in)

Transmission		M/T	A/T
Free height “H”*		179 - 189 (7.05 - 7.44)	189 - 199 (7.44 - 7.83)
Depressed height “D”* [under force of 490 N (50 kg, 110 lb) with engine running]		110 (4.33)	
Clearance “C” between pedal stopper and threaded end of stop lamp switch or ASCD switch		0.3 - 1.0 (0.012 - 0.039)	
Pedal free play	At clevis	1.0 - 3.0 (0.039 - 0.118)	
	At pedal pad	1 - 3 (0.04 - 0.12)	

*: Measured from surface of metal panel to pedal pad

Parking Brake Control

NMBR0084
Unit: notch

Control Type	Center lever
Lever stroke [under force of 196 N (20 kg, 44 lb)]	7 - 9
Lever stroke when warning switch comes on	1 or less

NOTES