SECTION AT

CONTENTS

PRECAUTIONS AND PREPARATION

Precautions 5
Preparation 5

AUTOMATIC TRANSAXLE FLUID (ATF)

Change 7
Change Interval 7
Inspection 7

A/T SYSTEM

Shift Mechanism 9
Control System Diagram 10
Remarks on Fail-Safe Function 10

TROUBLE DIAGNOSIS

Fail-Safe Function 11
Trouble Diagnosis Procedure 12
Diagnosis Flow 13
Diagnosis Sheet 14
Components Location 17
Circuit Diagram 18
Wiring Diagram 19
Preliminary Inspection 25
Stall Test 25
Defective Section 27
Line Pressure Test 27
Trouble Location 29
Road Test 29
Inspection before Engine Start 30
Inspection During Idle 30
Road Test Part 1 32
Road Test Part 2 34
Road Test Part 3 36
Shifting Speed 38
Lockup Speed 38
Trouble Diagnosis by Symptoms 39
A/T Control Unit Input/Output Signal Standards 48
CONSULT-II Function 50
Self-Diagnosis 50
Self-Diagnosis (Without Using CONSULT-II) 53

VEHICLE SPEED SENSOR 1 (OUTPUT SHAFT REVOLUTION SENSOR) SYSTEM

Inspection Procedure 55
Component Inspection 56

VEHICLE SPEED SENSOR 2 SYSTEM

A/T Control Unit Input/Output Signal Standard 57
Inspection Procedure 57
Component Inspection 58

THROTTLE POSITION SENSOR SYSTEM

CONSULT-II Data Monitor Display 59
A/T Control Unit Input/Output Signal Standards 59
Inspection Procedure 59
Components Inspection 61

CONTENTS

SHIFT SOLENOID A SYSTEM

A/T Control Unit Input/Output Signal Standards 63

Inspection Procedure 63

Component Inspection 64

SHIFT SOLENOID B SYSTEM

A/T Control Unit Input/Output Signal Standards 65

Inspection Procedure 65

Component Inspection 66

OVERRUN CLUTCH SOLENOID SYSTEM

A/T Control Unit Input/Output Signal Standards 67

Inspection Procedure 67

Component Inspection 68

LOCKUP SOLENOID SYSTEM

CONSULT-II Data Monitor Display 69

A/T Control Unit Input/Output Signal Standards 69

Inspection Procedure 69

Component Inspection 70

FLUID PRESSURE SENSOR SYSTEM AND A/T CONTROL UNIT POWER SYSTEM

CONSULT-II Data Monitor Display 71

A/T Control Unit Input/Output Signal Standards 71

Inspection Procedure 71

Component Inspection 73

ENGINE CIRCUIT SIGNAL SYSTEM

Inspection Procedure 74

LINE PRESSURE SOLENOID SYSTEM

CONSULT-II Data Monitor Display 76

A/T Control Unit Input/Output Signal Standards 76

Inspection Procedure 76

Component Inspection 77

INHIBITOR SWITCH, O/D SWITCH, IDLE SWITCH AND FULL SWITCH SYSTEMS

Inspection Procedure 79

Component Inspection 82

TROUBLE DIAGNOSIS BY SYMPTOMS

A/T CHECK Indicator Light does not Turn ON 84

Engine does not Start in P and N Ranges 85

The Vehicle Moves in P Range when Pushed 86

The Vehicle Drives in N Range 86

Too much Shift Shock when Shifting from N to R Range 88

The Vehicle cannot Drive in R Range or Extremely Bad Acceleration 89

The Vehicle cannot Drive in D, 3, 2, 1 Range or Extremely Bad Acceleration 91

The Vehicle does not Start from D1 93

Does not Shift from D1 to D2 in D Range. Does not Kickdown from D4 to D2 96

Does not Shift from D2 to D3 in D Range 98

Does not Shift from D3 to D4 in D Range 101

Does not Lockup 103

Does not Maintain the Lockup State 104

Lockup does not Release 105

Engine Speed does not Drop to Idle RPM when Decelerating in D Range (D4 D3) 106

Does not Shift from D4 to D3 in D Range under When Shifted from D to 3 108

Does not Shift from D3 to 2_2 when Selector Lever is Moved from D Range to 2 Range 109

Does not Shift from 2_2 to 1_1 when Selector Lever is Moved from 2 Range to 1 Range 109

No Engine Brake in “1” Range 110

Cannot do Self-Diagnosis 110

A/T Shift Lock does not Work Properly 115

SHIFT CONTROL SYSTEM

Shift Control System 119

Removal • Installation of Control Device 119

Removal • Installation of Control Cable 119

Adjustment During Installation 120

CONTENTS

CONTROL VALVE AND ACCUMULATOR

Removal • Installation 121

INHIBITOR SWITCH

Removal • Installation 123

A/T Position Inspection 123

A/T Position Adjustment 123

VEHICLE SPEED SENSOR 1
(OUTPUT SHAFT REVOLUTION SENSOR)

Removal • Installation 124

SIDE OIL SEAL

Removal • Installation 125

SHIFT LOCK SYSTEM

Components Location 126

Shift Lock Circuit Diagram 126

AIR BLEEDER HOSE

Removal • Installation 127

TRANSAXLE ASSEMBLY

Removal from the Vehicle 128

Removal • Installation 129

Standard Model 131

Fluid Pressure Circuit Hole 134

Adjust Shim, Neutral Bearing, Thrust Washer and Snap Ring Location - standard model 135

Clutch and Brake Specification 136

DISASSEMBLY

Disassembly 137

COMPONENT REPAIR

Manual Shaft 149

Oil Pump 151

Control Valve Assembly 155

Control Valve Upper Body 163

Control Valve Lower Body 166

UNIT ASSEMBLY REPAIR

Reverse Clutch 169

High Clutch 174

Forward Clutch & Overrun Clutch 179

Low and Reverse Brake 185

Rear Internal Gear, Forward Clutch Hub and Overrun Clutch Hub 189

Output Shaft, Idler Gear, Reduction Gear and Bearing Retainer 193

Band Servo Piston Assembly 198

Final Drive 203

ASSEMBLY

Assembly 207

SPECIFICATIONS

General Specifications 227

Shifting Speed 227

Lockup Speed 227

Control Valve Specifications 228

Control Valve Spring Specifications 228

Accumulator Spring 229

Accumulator O-ring 229

Band Servo 229

Band Servo Return Spring 229

Clutch Brake 230

Oil Pump 230

Planetary Carrier 231

Input Shaft 231

Reduction Gear 231

Reduction Gear Adjust Shim 231

Output Shaft 231

Output Shaft Adjust Spacer 232

Bearing Retainer 232

Total Endplay 232

Total Endplay Bearing Race 232

Reverse Clutch Drum Endplay 232

CONTENTS

Reverse Clutch Drum Endplay Thrust Washer 232
Final Drive 233
Differential Side Gear Clearance 233
Shift Solenoid Valve 234
Resistance 234
ATF Temperature Sensor 234
Revolution Sensor 234
Dropping Resistor 234

Precautions

Caution

Always use “Genuine NISSAN ATF Matic Fluid D or equivalent” as ATF.

Apply Genuine NISSAN ATF Matic Fluid D or equivalent on the O-rings and oil seals.

Choose clean location for operation and perform the disassembly operation in limited space as much as possible.

Wipe out all sand and mud on the unit surfaces using a steam or white gasoline before disassembly and be careful not to let them enter into the unit during disassembly and assembly. (Do not let steam enter into the transaxle to wipe the rubber material components with gasoline.)

Remove the torque converter from the unit and drain the ATF after cleaning.

Check for any damages, deformations or wear at component exterior after disassembly. Replace with new component(s) if necessary.

Replace the gasket, O-ring, D-ring and lip seal at each disassembly.

Tighten the bolts from the center to outer edge diagonally in 2 to 3 turns. Be sure to follow the instructions if the sequence is specified.

Be careful not to damage the mating surfaces.

Use paper towel during operation.

Use bare hands or vinyl gloves for disassembly and assembly operation.

Do not use cotton gloves or cloth dusters to prevent the waste thread to get into the system.

Check the assembling direction for thrust bearing races and perform the operation after applying the vaseline to fit correctly.

Observe the specified torque during assembly. Always apply new Genuine NISSAN ATF Matic Fluid D or equivalent or vaseline on the components.

Follow the local laws and regulations for wasting or cleaning the used fluids after ATF change.

Preparation

Special Service Tools

Item	Description
Drift ST35325000 KV31103000	Installing differential oil seal
ST2505S001 Oil pressure gauge set 1. ST25051001 Oil pressure gauge 2. ST25052000 Hose 3. ST25053000 Joint pipe 4. ST25054000 Adapter 5. ST25055000 Adapter	Measuring line pressure
ST25480000 Pressure output plug wrench	Remove fluid pressure detection plug

Automatic Transaxle Fluid (ATF)

Change

For ATF change, fill the new fluid to the charging pipe during idle and at the same time drain the fluid from the radiator cooler hose return side.

If the drained fluid color becomes similar with the new fluid, end the process. The amount of new fluid should be 3 to 5 % of the specified capacity.

ATF specification: Genuine NISSAN ATF Matic Fluid D or equivalent

Specified capacity: Approx. 7.0 liters

CAUTION:

Use “Genuine NISSAN ATF Matic Fluid D or equivalent” for RE4F03B as an ATF. If other company’s ATF is used or mixed with other fluids, it may cause deteriorated performance.

Use a paper towel and do not use cloth with fluff.

Always inspect the ATF level after change.

Change Interval

Normal conditions: Replace during disassembly

Severe conditions: Refer to MA section.

REFERENCE:

Use the ATF tester for change determination under severe conditions.

Clean zone: Normal

Yellow zone: Change right away

Red zone: Change

Inspection

FLUID LEVEL INSPECTION

For level inspection, follow the steps below to be in the “HOT” range (ATF temperature: 50 - 80°C).

1. Warm up the engine and drive for approx. 10 minutes. (When ambient temperature is 20°C, the ATF temperature usually increases to approx. 50 - 80°C with 10 minutes of driving).
2. Park the vehicle on the level ground.
3. Securely apply the parking brake.
4. At engine idle, select the lever from “P” to “1” while stepping on the brake pedal.
5. Check if the ATF level is at fluid level gauge’s “HOT” range in “P” or “N” position.

CAUTION:

When it is needed to inspect the ATF level at low ATF temperature (30 - 50°C) or changing ATF, adjust the fluid level to the “COLD” level first and check again the ATF level to be the HOT range.

Use a paper towel when wiping out the ATF from the fluid level gauge.

Securely fasten the fluid level gauge to the charging pipe with a stopper.

CONDITION INSPECTION

ATF Condition	Possible Cause	Required Operation
Varnishing (It becomes tacky as varnish)	The clutch and band are burning	Change the ATF and inspect for any defects in A/T assembly or vehicle (such as harness wire and cooler pipe)
Milky white or dark while	Water mixed	Change ATF and inspect for any water inflow
Metal particles much mixed	The moving parts of the A/T is wearing out too much	Change ATF and inspect for any A/T bad operation

A/T System

Shift Mechanism

COMPONENTS AND OPERATION

		Reverse clutch (R/C)	High clutch (H/C)	Forward clutch (F/C)	Overrun clutch (O/C)	Band servo			Forward one-way clutch (F/O C)	Low one-way clutch (L/O C)	Low and reverse brake (L&R/B)	Remarks
						2nd apply	3rd release	4th apply				
P												Park
R												Reverse
N												Neutral
3	1st											Automatic shift
D	2nd											1 2 3 4
	3rd					1						
	4th					2						
3	1st											Automatic shift
	2nd											1 2 3
	3rd											
2	1st											Automatic shift
	2nd											1 2 3
	3rd					1						
1	1st											Automatic shift
	2nd											1 2 3
	3rd					1						

1: Oil pressure is applied to both 2nd “apply” side and 3rd “release” side of band servo piston. However, brake band does not contract because fluid pressure area on the “release” side is greater than that on the “apply” side.

2: Fluid pressure is applied to 4th “apply” side in condition “ 1” above, and brake band contracts.

3: A/T will not shift to 4th when overdrive switch is set in “OFF” position (3rd).

Tightens.

Operates under accelerating condition.

Operates but not work for power transmission.

Engages by less than set accelerator travel, but not work for engine brake.

Engages by less than set accelerator travel and work for engine brake.

Control System Diagram

Remarks on Fail-Safe Function

The A/T control unit has an electronic fail-safe. This allows the vehicle to be driven even if a major electrical input/output device circuit is damaged. Under fail-safe, the vehicle always runs in third gear with shift lever position of 1, 2 or D, customer may say “sluggish, poor acceleration”. When fail-safe operation occurs the next time the ignition key is turned to the ON position, the O/D OFF indicator light will blink for approx. 8 seconds. {Refer to “Self-Diagnosis” (Without Using CONSULT-II) (AT-53)}.

Fail-safe may activate without electrical circuit damages if the vehicle is driven under extreme conditions (such as excessive wheel spins and emergency braking immediately afterwards). In this case, turn ignition key OFF for 5 seconds and then ON to recover normal shift pattern. The blinking of the O/D OFF indicator light for about 8 seconds will appear only once and be cleared. The customer may resume normal driving conditions by chance. Always follow the “Diagnosis Program”. When self-diagnosis is operated, the following results will occur.

At first, damage is indicated at the vehicle speed sensor 1 or 2. When performing the self-diagnosis again after sensor inspection, nothing will be indicated.

Trouble Diagnosis

Fail-Safe Function

When defect is found at sensors and solenoids, it allows driving under the fail-safe function as below.

VEHICLE SPEED SENSOR

Two vehicle speed sensor signals are input from the vehicle speed sensor 1 (revolution sensor) installed to the transaxle and the vehicle speed sensor 2 from the meter control unit inside the combination meter. Therefore, it is possible to drive the vehicle in normal condition even though one of the systems is malfunctioning.

THROTTLE POSITION SENSOR

It calculates the accelerator opening by the idle switch and full switch and then controls the line pressure as below if the throttle sensor is malfunctioning.

Idle switch	Full switch	Line pressure	Accelerator
-	“ON”		Throttle position 4 / 8
“OFF”	“OFF”		Throttle position 2 / 8
“ON”	“OFF”	Min. pressure	Throttle position 0 / 8

INHIBITOR SWITCH

When multiple signals are inputted to the A/T control unit from the inhibitor switch, A/T control unit determines the priority of the selector lever position as D, N, R, 2, 1 in order.

But, while resuming normal operation, 4th gear is prohibited and actual vehicle driving conditions will be as chart below because the control valve’s fluid pressure circuit is converted to manual valve by the selector lever position.

Actual selector position	Input signal of the inhibitor switch	Vehicle driving status
P range	“P” and other range signals	P
R range	“R” and other range signals	R
D range	“N” and other range signals	N
D 3 range	“D” and other range signals	D_1 D_2 D_3
2 range	“2” and other range signals (except for “1” range signal)	2_1 2_2 2_3
	“2” and “1” range signals	2_1 2_2
1 range	“1” and other range signals (except for “1” range signal)	1_1 1_2 1_3
	“1” and “2” range signals	1_1 1_2

SHIFT SOLENOID A AND B

When the solenoid is defective, the gear position will as below so that the normal driving is possible.

Selector position	When normal			When solenoid A is defective			When solenoid B is defective			When solenoid A & B are defective		
	A	B	Gear	A	B	Gear	A	B	Gear	A	B	Gear
D range			1st	-	x	3rd	x	-	3rd	-	-	3rd
	x		2nd	-	x		x	-		-	-	
	x	x	3rd	-	x		x	-		-	-	
		x	4th	-	x		x	-		-	-	
3 range			1st	-	x		x	-		-	-	
	x		2nd	-	x		x	-		-	-	
	x	x	3rd	-	x		x	-		-	-	
2 range			1st	-	x		x	-		-	-	
	x		2nd	-	x		x	-		-	-	
	x	x	3rd	-	x		x	-		-	-	
1 range			1st	-	x		x	-		-	-	
	x		2nd	-	x		x	-		-	-	
	x	x	3rd	-	x		x	-		-	-	

: Continuity x : No continuity - : When defective

LINE PRESSURE SOLENOID

When solenoid signal is inputted in the A/T control unit, it turns the line pressure solenoid “OFF” and increases the line pressure to maximum.

LOCKUP SOLENOID

When defective solenoid signal is inputted in the A/T control unit, it turns the lockup solenoid “OFF” and releases the lockup.

OVERRUN CLUTCH SOLENOID

When defective solenoid signal is inputted in the A/T control unit, it turns the overrun clutch solenoid “OFF” and allows engine brake while decelerating by operating the overrun clutch.

Trouble Diagnosis Procedure

In order to perform the trouble diagnosis quickly and accurately, it is important to properly understand the defective symptoms. The same trouble symptom may be understood differently according to customers. It is necessary to understand the details of trouble symptoms and occurrence for customer’s complaints.

For proper troubles diagnosis, use the “Trouble Sheet” and “Diagnosis Sheet”.

INTRODUCTION

A/T control unit receives signals from vehicle speed sensor, throttle position sensor or inhibitor switch and controls the shift and the lockup by the solenoid valves. When A/T is operating, input and output signals should always be accurate and stable. For normal operation of the A/T system, all valves including solenoid valves should be in good state.

Intermittent troubles are more difficult than continuous troubles to be diagnosed. Intermittent troubles can be caused by electrical bad connections or defective wirings. In those cases, check the related circuits thoroughly but be carefully not to change components by misjudgment.

It is impossible to find the accurate cause of trouble only by visual inspection. In this case, perform the road test by connecting CONSULT-II or circuit tester according to “Diagnosis Flow”.

Before starting inspection, listen to customer complaints especially for the drivability troubles. In case of intermittent trouble, there could be information for proper diagnosis.

Determine the troubling conditions by using “Diagnosis Sheet”.

First of all, start to diagnose from the basic components or sections. If so, electronic control vehicle’s drivability problems can be diagnosed more easily.

Diagnosis Flow

DIAGNOSIS SHEET

Customer Information

Key Points

What	-	Vehicle and engine model
When	-	Date, frequency
Where	-	Road conditions
Conditions	-	Driving conditions, circumstances
How	-	Symptoms

Customer Name	Vehicle Model	VIN
A/T Model	Engine	Mileage (km)
Incident date	Registered date	Check-in date
Frequency	Continuous Under certain conditions Intermittent (Times/Day)	
Symptoms	Vehicle does not move. (Any position Particular position)	
	No up-shift (1st 2nd 2nd 3rd 3rd O/D)	
	No down-shift (O/D 3rd 3rd 2nd 2nd 1st)	
	Lockup malfunction	
	Shift point too high or too low	
	Shift shock and slip (N D Lockup D1 D2 N R)	
	Noise or vibration	
	No kickdown	
	No shift pattern changes when range is changed	
	Others	
A/T CHECK indicator	Blinks for approx. 8 seconds	
	Stays ON	Does not come ON

Diagnosis Sheet

1	Read the fail-safe remarks and listen to customer complaints				(AT - 10)
2	Check ATF				(AT - 25)
		Leakage (Repair the defective part) Condition Level			
3	Stall test and line pressure inspection				(AT - 25), (AT - 27)
		Stall test			
			Torque converter one-way clutch Reverse clutch Forward clutch Overrun clutch Forward one-way clutch	Low and reverse brake Low one-way clutch Engine Low line pressure Remove the high clutch and brake band	
		Line pressure inspection - Defective component			

4	Perform all road tests and mark on the required procedures			(AT - 29)
	4.1	Inspection before engine start Perform self-diagnosis - Mark on the detected items		(AT - 30)
			Inhibitor switch Fluid temperature sensor Vehicle speed sensor-1 (A/T) Engine speed signal Lockup solenoid valve Line pressure solenoid Shift solenoid valve A Shift solenoid valve B Throttle position sensor Overrun clutch solenoid valve Inhibitor switch, O/D switch, idle switch and full switch Fluid temperature sensor and A/T control unit power Vehicle speed sensor 2 (Meter) Battery Others	
	4.2	Inspection during idle		(AT - 30)
		A/T CHECK indicator light does not come on Engine does not start at “P” or “N” range Vehicle moves in “P” range when pushed Vehicle moves in “N” range Too much shock when shifting from “N” range to “P” range Cannot reverse in “R” range Cannot go forward in “D”, “2”, “1” range		
	4.3	Road test		(AT - 32), (AT - 34), (AT - 36)
		Part 1		
		Does not start from “D1” No shift from “D1” to “D2”. Or no kickdown from “D4” to “D2” No shift from “D2” to “D3” No shift from “D3” to “D4” No lockup Lockup is not continued Lockup does not release Engine speed does not drop to idle RPM		
		Part 2		
		Does not start from “D1” No shift from “D1” to “D2”. or No kickdown from “D4” to “D2” No shift from “D2” to “D3” No shift from “D3” to “D4”		

		Part 3		
		No shift from “D4” to “D3” when the shift lever is moved to “3” Engine speed does not drop to idle RPM No shift from “D3” to “D2” when selector lever is moved from “3” to “2” No shift from “D2” to “D1” when selector lever is moved from “2” to “1” No engine brake Mark on the item detected while self-diagnosis		
			Inhibitor switch Fluid temperature sensor Vehicle speed sensor 1 (A/T) Engine speed signal Lockup solenoid valve Line pressure solenoid Shift solenoid valve A Shift solenoid valve B Throttle position sensor Overrun clutch solenoid valve Inhibitor switch, O/D switch, idle switch and full switch Fluid temperature sensor and A/T control unit power Vehicle speed sensor 2 (Meter) Battery Others	
5	Inspect each systems detected as NG during self-diagnosis and repair or replace the defective component			
6	Perform the inspection before driving and mark on the required item			(AT - 29)
7	Perform the “Diagnosis Flow” for the remaining NG items and repair or replace the defective component. Refer to “Diagnosis by Symptoms” chart (The chart also contains other symptoms and inspection procedure).			(AT - 39)
8	Erase the self-diagnosis results from the A/T control unit			(AT - 51) (AT - 54)

Components Location

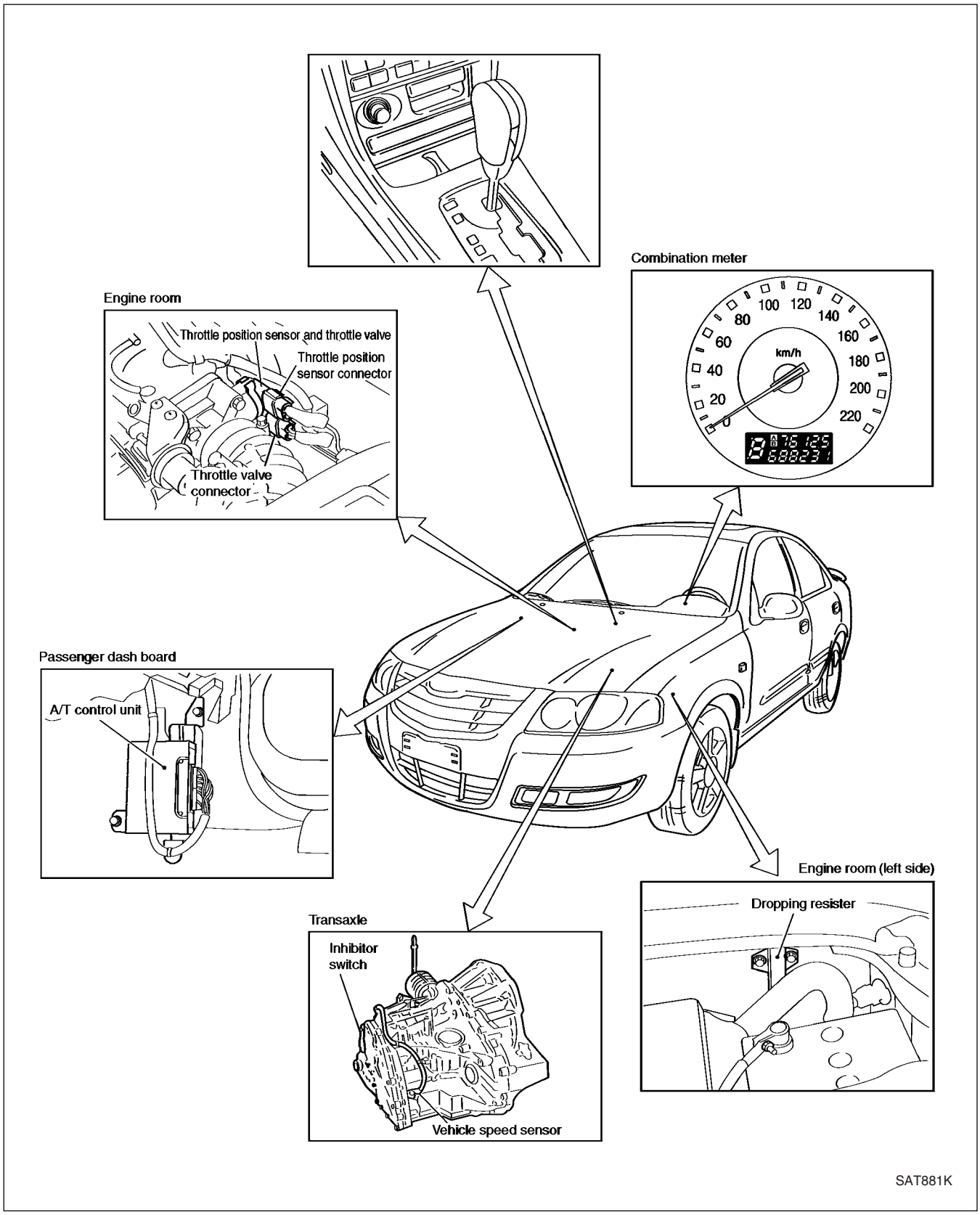

Circuit Diagram

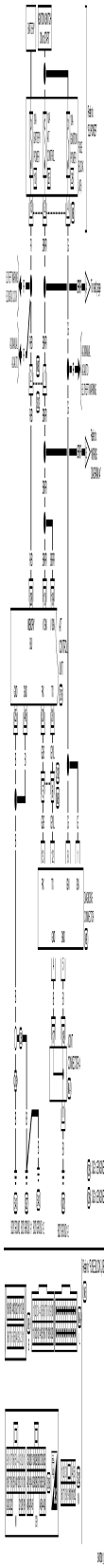

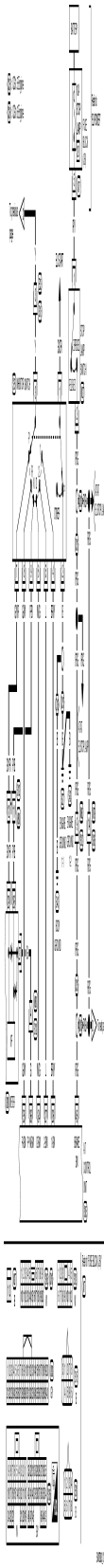

Preliminary Inspection

ATF INSPECTION

LEAKAGE AND FLUID LEVEL

Inspect the leakage and fluid level.

For level inspection, follow the steps below to be in the “HOT” range (ATF temperature: 50 - 80°C).

1. Warm up the engine and drive for approx. 10 minutes. (When ambient temperature is 20°C, the ATF temperature usually increases to approx. 50 - 80°C with 10 minutes of driving).
2. Park the vehicle on the level ground.
3. Securely apply the parking brake.
4. At engine idle, select the lever from P to 1 while stepping on the brake pedal.
5. Check if the ATF level is at fluid level gauge’s HOT range in P or N position.

CAUTION:

When it is needed to inspect the ATF level at low ATF temperature (30 - 50°C) or changing ATF, adjust the fluid level to the COLD level first and check again the ATF level to be the HOT range.

Use a paper towel when wiping out the ATF from the fluid level gauge.

Securely fasten the fluid level gauge to the charging pipe with a stopper.

CONDITION

Inspect the ATF condition

ATF Condition	Possible Cause	Required Operation
Varnishing (It becomes tacky as varnish)	The clutch and band are burning	Change the ATF and inspect for any defects in A/T assembly or vehicle (such as harness wire and cooler pipe)
Milky white or dark while	Water mixed	Change ATF and inspect for any water inflow
Metal particles much mixed	The moving parts of the A/T is wearing out too much	Change ATF and inspect for any A/T bad operation

STALL TEST

Test Procedure

1. Inspect the engine oil level. Add if necessary.
2. After approx. 10 minutes of driving, warm up the engine until ATF reaches 50 - 80°C. Add ATF if necessary.

CAUTION:

When ambient temperature is 20°C, the ATF temperature usually increases to approx. 50 - 80°C with 10 minutes of driving.

3. Securely apply the parking brake and block the wheel rotation.

4. Start the engine and place the selector lever to D while depressing the brake pedal.

5. Slowly depress the accelerator pedal while depressing the brake pedal.
6. Read stall RPM quickly and then release the accelerator pedal immediately.

CAUTION:

Do not depress the accelerator pedal for more than 5 seconds during the test.

7. Move the selector lever to N.
8. Cool off the ATF.

CAUTION:

Idle the engine for at least 1 minute.

Standard value: 2,300 - 2,700 RPM

Defective Section

	Selector Lever Position				Possible Trouble Cause
	D	1	2	R	
Stall test	H	H	H	O	● Forward clutch ● Forward one-way clutch ● Low one-way clutch
	O	O	O	H	● Low reverse brake ● Reverse clutch
	L	L	L	L	● Torque converter one-way clutch
	H	H	H	H	● Line pressure route (low line pressure) and [forward clutch, low one-way clutch, forward one-way clutch] ● Line pressure route (low line pressure) and [reverse switch, forward clutch] ● [Forward clutch, low one-way clutch, forward one-way clutch] and [reverse clutch, forward clutch] ● Line pressure route (low line pressure), [forward clutch, low one-way clutch, forward one-way clutch] and [reverse clutch, forward clutch]
	O	O	O	O	● Clutches and brakes are normal except for high clutch, brake band and overrun clutch (However, the state of high clutch, brake band and overrun clutch cannot be determined by the stall test)

O: Less than standard stall RPM. H: Stall RPM is higher than standard value. L: Stall RPM is lower than standard value.

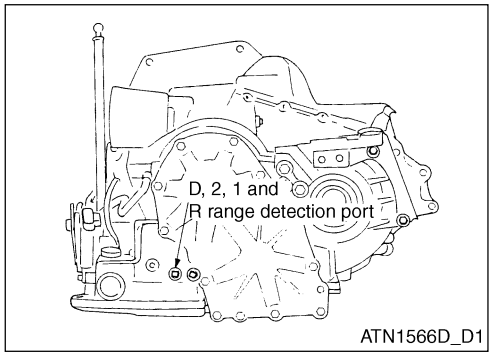

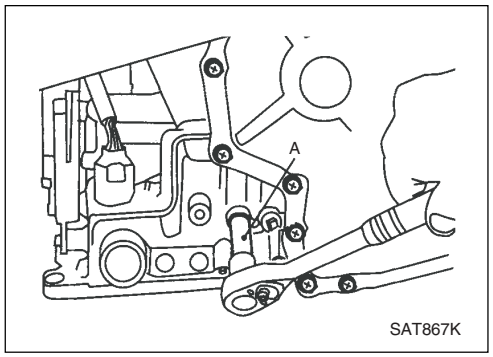

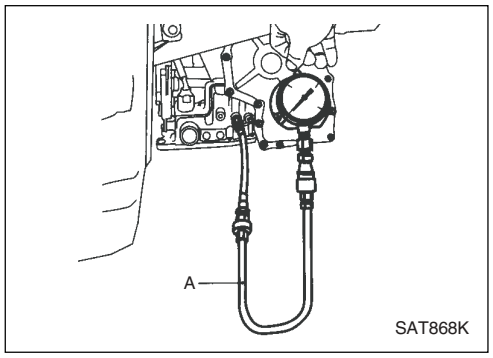

Line Pressure Test

LINE PRESSURE DETECTING PORT

Test Procedure

1. Inspect the engine oil level. Add if necessary.
2. After approx. 10 minutes of driving, warm up the engine until ATF reaches 50 - 80°C. Add ATF if necessary.

CAUTION:

- **When ambient temperature is 20°C, the ATF temperature usually increases to approx. 50 - 80°C with 10 minutes of driving.**

3. After warming up the A/T, remove the fluid pressure detection plug (A: ST25480000).

4. Install the oil pressure gauge (A: ST2505S001).

4. Securely apply the parking brake and block the wheel rotation.

5. Start the engine and measure the line pressure during idling and stall test.

CAUTION:

Securely depress the brake pedal during measurement.

Refer to “Stall Test” (AT-25) when measuring the line pressure during stall test.

6. After the measurement, install the fluid pressure detection plug and tighten to the specified torque.

Tightening torque: 5.0 - 6.8 N•m (0.5 - 0.7 kgf-m)

CAUTION:

Do not reuse the detection plug.

LINE PRESSURE STANDARD VALUE

Engine Speed	Drive Type	Engine Model	Model No.	Line Pressure (MPa {kgf/cm^2})	
				R range	D, 2, 1 range
While idling	Front wheel drive	QG15DE	3AX65	0.78 {7.9}	0.50 {5.1}
While stall test	Front wheel drive	QG15DE	3AX65	1.74 {17.8}	1.12 {11.4}
				1.81 {18.5}	1.17 {11.9}

Trouble Location

Results		Possible Troubles
During idling	Low in all ranges (P, R, D, 2, 1)	It is presumed to have defect in pressure supply system and low output of oil pump. For example: Worn oil pump Sticks in pressure regulator valve or plug, or worn spring Fluid pressure leakage in the oil strainer oil pump pressure regulator valve circuit Low engine idle RPM
	Low in a certain range	It is presumed to be the fluid pressure leakage in a certain range system and circuit after the pressure has supplied from the manual valve. The line pressure is low in R and 1 range when leakage is at low reverse brake system but the P, N, D, 3 and 2 ranges are normal.
	High	It is presumed to have defective sensors and defective pressure regulating function. For example: Defective throttle position sensor Defective fluid pressure sensor Bad operation of line pressure solenoid (stuck in OFF state, filter loading and open circuit) Pressure modifier valve stick Pressure regulator valve and plug stick
During stall test	Fluid pressure does not increase more than at idle	It is presumed to have defective sensors and defective pressure regulating function. For example: Defective slot sensor Defective A/T control unit Bad operation of line pressure solenoid (stuck in ON state, short circuit) Pressure regulator valve and plug stick Pressure modifier valve stick Pilot valve stick and pilot filter loading
	Pressure increases but not in standard value	It is presumed to have defectives common pressure system and sensors and defective pressure regulating function. For example: Defective slot sensor Bad operation of line pressure solenoid (stuck, filter loading) Pressure regulator valve and plug stick Pressure modifier valve stick and worn spring Pilot valve stick and pilot filter loading
	Low in a certain range	It is presumed to be the fluid pressure leakage in a certain range system and circuit after the pressure has supplied from the manual valve. The line pressure is low in R and 1 range when leakage is at low reverse brake system but the P, N, D, 3 and 2 ranges are normal.

ROAD TEST

General

Inspect the A/T performance in general through road test and analyze the trouble cause.

Perform the road test in 3 stages as below.

1. Inspection before engine start (Refer to “Inspection Before Engine Start” (AT-30)).
2. Inspection during idle (Refer to “Inspection During Idle” (AT-30)).
3. Road test.

   Inspect all items from part 1 to part 3.

(Refer to “Road Test Part 1” (AT-32), “Road Test Part 2” (AT-34) and “Road Test Part 3” (AT-36)).

Before road test, make sure of the test procedure and items.

Test all inspection items until the symptom is found. Perform the NG items again after completion of road test.

Inspection before Engine Start

1. A/T CHECK INDICATOR LIGHT

1. Park the vehicle on the level ground.
2. Select P range.
3. Wait approx. 5 seconds after turning the key switch OFF.
4. Turn the key switch “ON”. (Do not start the engine.)

Does the A/T CHECK indicator light on for approx. 2 seconds?

YES Go to No. 2.

NO Stop the road test and go to “A/T CHECK Indicator Light does not Come On” (AT-84).

2. A/T CHECK INDICATOR LIGHT

Does the A/T CHECK indicator light turn on for approx. 8 seconds?

YES Perform the self-diagnosis and record the NG items on the diagnosis sheet. (Refer to “Self-Diagnosis” (Without Using CONSULT-II) (AT-53))

NO
1. Turn the key switch “OFF”.
2. Perform the self-diagnosis and record the NG items on the diagnosis sheet. (Refer to “Self-Diagnosis” (Without Using CONSULT-II) (AT-53))
3. Go to “Inspection During Idle” (AT-30).

Inspection During Idle

1. ENGINE STARTING

1. Park the vehicle on the level ground.
2. Select P range.
3. Turn the key switch OFF.
4. Turn the key switch START.

Does the engine start?

YES Go to No. 2.

NO Stop the road test and go to “Engine does not Start in P and N” (AT-85).

2. ENGINE STARTING

1. Place the key switch to ACC.
2. Select R range for D, 1 and 2.
3. Turn the key switch “START”.

Does the engine start at all ranges?

YES Stop the road test and go to “Engine does not Start in P and N” (AT-85).

NO Go to No. 3.

3. P RANGE FUNCTION

1. Select P range.
2. Turn the key switch OFF.
3. Release the parking brake.
4. Push the vehicle forward or backward.
5. Apply the parking brake.

Does the vehicle move when pushed?

YES Mark on the “Vehicle moves in P range when pushed” in the diagnosis sheet and continue the road test.

NO Go to No. 4.

4. N RANGE FUNCTION

1. Start the engine.
2. Select N range.
3. Release the parking brake.

Does the vehicle move?

YES Mark on the “Vehicle moves in N range” in the diagnosis sheet and continue the road test.

NO Go to No. 5.

5. SHIFT SHOCK

1. Apply the parking brake.
2. Select R range.

Is there great shock when shifting from N to R?

YES Mark on the “Too much shift shock when shifting from N range to R range” in the diagnosis sheet and continue the road test.

NO Go to No. 6.

6. R RANGE FUNCTION

Release the brake for approx. 4 - 5 seconds.

Does the vehicle go reverse?

YES Go to No. 7.

NO Mark on the “Cannot reverse in R range” in the diagnosis sheet and continue the road test.

7. D, 3, 2, 1 RANGE FUNCTION

Inspect if the vehicle goes forward at D, 3, 2, 1 range.

Does the vehicle go forward at D, 3, 2, 1 range?

YES Go to Road test Part 1 (AT-32), Part 2 (AT-34)and Part 3 (AT-36).

NO Mark on the “Cannot go forward in D, 3, 2, 1 range” in the diagnosis sheet and continue the road test.

Road Test Part 1

ROAD TEST PART 1

1. DRIVING OFF AT D1

1. Drive for approx. 10 minutes to raise the engine oil and ATF temperature to the operating temperature.

   Proper ATF temperature: 50 - 80°C
2. Park the vehicle on the level ground.
3. Select P range.
4. Start the engine.
5. Select D range.
6. Press the accelerator pedal halfway to accelerate.

   When using CONSULT-II

   Read the gear position.

Does it start from “D1”?

YES Go to No. 2.

NO Mark on the “Does not start from D1” in the diagnosis sheet and continue the road test.

2. SHIFT UP D1 TO D2

Press the accelerator pedal halfway and inspect if shifts up (D1 to D2) in proper speed.

Refer to “Shifting Speed” (AT-38).

When using CONSULT-II

Check the gear position, throttle opening and vehicle speed.

Does it shift up from D1 to D2 with proper speed?

YES Go to No. 3.

NO Mark on the “No shift from D1 to D2” or “No kickdown from D4 to D2” in the diagnosis sheet and continue the road test.

3. SHIFT UP D2 TO D3

Press the accelerator pedal halfway and inspect if shifts up (D2 to D3) in proper speed.

Refer to “Shifting Speed” (AT-38).

When using CONSULT-II

Check the gear position, throttle opening and vehicle speed.

Does it shift up from D2 to D3 with proper speed?

YES Go to No. 4.

NO Mark on the “No shift from D2 to D3” in the diagnosis sheet and continue the road test.

4. SHIFT UP D3 TO D4

Press the accelerator pedal halfway and inspect if shifts up (D3 to D4) in proper speed.

Refer to “Shifting Speed” (AT-38).

When using CONSULT-II

Check the gear position, throttle opening and vehicle speed.

Does it shift up from D3 to D4 with proper speed?

YES Go to No. 5.

NO Mark on the “No shift from D3 to D4” in the diagnosis sheet and continue the road test.

5. LOCKUP

Press the accelerator pedal halfway and inspect if shifts up (D4 to D4 lockup) in proper speed.

Refer to “Shifting Speed” (AT-38).

When using CONSULT-II

Check the throttle opening and vehicle speed when the lockup duty is 94 %.

Does it lock up with proper speed?

YES Go to No. 6.

NO

6. MAINTAINING LOCKUP STATE

Does the lockup state continue for more than 30 seconds?

YES Go to No. 7.

NO Mark on the “Lockup is not continued” in the diagnosis sheet and continue the road test.

7. LOCKUP RELEASE

Release the accelerator pedal.

Does the lockup release by releasing the accelerator pedal?

YES Go to No. 8.

NO Mark on the “Lockup does not release” in the diagnosis sheet and continue the road test.

8. SHIFT DOWN D4 TO D3

Decelerate by lightly depressing the brake pedal.

When using CONSULT-II

Check the gear position and engine speed.

Does the engine speed drop smoothly to the idle RPM when shifted down from D4 to D3?

YES
1. Park the vehicle.
2. Go to “Road Test 2” (AT-34).

NO Mark on the “Engine speed does not drop to idle RPM” in the diagnosis sheet and continue the road test.

Road Test Part 2

ROAD TEST PART 2

1. DRIVING OFF AT D1

1. Select “D” range.
2. Press the accelerator pedal halfway to accelerate.

   When using CONSULT-II

   Read the gear position.

Does it start from D1?

YES Go to No. 2.

NO Mark on the “Does not start from D1” in the diagnosis sheet and continue the road test.

2. SHIFT UP D3 TO D4 AND SHIFT DOWN D4 TO D3

1. Accelerate up to 80 km/h.
2. Release the foot from the accelerator pedal and then quickly press the pedal.

   When using CONSULT-II

   Check the gear position and throttle position.

Does it shift down from D4 to D2 immediately when depress the accelerator pedal?

YES Go to No. 3.

NO Mark on the “No shift from D1 to D2” or “No kickdown from D4 to D2” in the diagnosis sheet and continue the road test.

3. SHIFT UP D2 TO D3

Press the accelerator pedal fully and inspect if shifts up (D2 to D3) in proper speed.

Refer to “Shifting Speed” (AT-38).

When using CONSULT-II

Check the gear position, throttle opening and vehicle speed.

Does it shift up with proper speed?

YES Go to No. 4.

NO Mark on the “No shift from D2 to D3” in the diagnosis sheet and continue the road test.

4. SHIFT UP D3 TO D4 AND ENGINE BRAKE

Release the accelerator pedal when shifted from D2 to D3.

Does the engine brake work after shifting up from D3 to D4?

YES
1. Park the vehicle.
2. Go to “Road Test Part 3” (AT-36).

NO Mark on the “No shift from D3 to D4” in the diagnosis sheet and continue the road test.

Road Test Part 3

ROAD TEST PART 3

1. SHIFT DOWN D4 TO D3

1. Select D range.
2. Accelerate up to D4 with half-throttle.
3. Release the accelerator pedal.
4. Switch the shift lever to “3” range while driving in D4.

   When using CONSULT-II

   Check the gear position and vehicle speed.

Does it shift down from D4 to D3?

YES Go to No. 3.

NO Mark on the “No shift from D4 to D3 when shift lever is moved from D to 3” in the diagnosis sheet and continue the road test.

2. ENGINE BRAKE

Does the vehicle decelerate due to engine brake?

YES Go to No. 4.

NO Mark on the “Engine speed does not drop to idle RPM” in the diagnosis sheet and continue the road test.

3. SHIFT DOWN D3 TO 2_2

Move the selector from 3 to 2 while driving in D3 (“3” range).

When using CONSULT-II

Check the gear position.

Does it shift down from D3 to 2_2?

YES Go to No. 5.

NO Mark on the “No shift from D3 to 2_2 when selector lever is moved from 3 to 2” in the diagnosis sheet and continue the road test.

4. ENGINE BRAKE

Does the vehicle decelerate due to engine brake?

YES Go to No. 6.

NO Put a checkmark at “The engine RPM does not drop to idle” in diagnosis sheet and continue the road test.

5. SHIFT DOWN 2_2 TO 1_1

Select 1 while driving in 2_2.

When using CONSULT-II

Check the gear position.

Does it shift down from 2_2 to 1_1?

YES Go to No. 7.

NO Mark on the “No shift from 2_2 to 1_1 when selector lever is moved from 2 to 1” in the diagnosis sheet and continue the road test.

6. ENGINE BRAKE

Does the vehicle decelerate due to engine brake?

YES 1. Stop the vehicle.

2. Perform the self-diagnosis. Refer to “Self-Diagnosis” (Without Using CONSULT-II) (AT-53).

NO Mark on the “No engine brake” in the diagnosis sheet and continue the road test.

Shifting Speed

Engine Model	QG16DE					
Model No.	3AX65					
Throttle opening (Accelerator opening)	Vehicle speed (km/h)					
	“D1” to “D2”	“D2” to “D3”	“D3” to “D4”	“D4” to “D3”	“D3” to “D2”	“D2” to “D1”
Throttle opening (Accelerator opening 8/8)	50 - 58	100 - 108	162 - 170	158 - 166	92 - 100	41 - 49
Throttle opening (Accelerator opening 4/8)	25 - 33	51 - 59	122 - 130	70 - 78	40 - 48	5 - 13

Lockup Speed

Drive type		Front wheel drive
Engine model		QG16DE
Model No.		3AX65
Vehicle speed when engaging (km/h)	At closed throttle	48 - 56
	At half-throttle	141 - 149
Vehicle speed when releasing (km/h)	At closed throttle	45 - 53
	At half-throttle	109 - 117

- The lockup speed is in D4 position.
- The closed throttle is that the idle switch is OFF when accelerator opening is less than 1/8.
- When the accelerator opening is 4/8, it will be half-throttle.

Trouble Diagnosis by Symptoms

The number in the diagnostic item column means inspection order. Inspect in order from the No. 1.

Symptom	Conditions	Diagnostic Item	Ref. Page
Bad starting in N or P range	On-vehicle condition	1. Key switch and starter	-
		2. Control cable adjustment	(AT-120)
		3. Inhibitor switch adjustment	(AT-123)
Engine starts other than N or P range	On-vehicle condition	1. Control cable adjustment	(AT-120)
		2. Inhibitor switch adjustment	(AT-123)
Transaxle noise in P or N range	On-vehicle condition	1. ATF level	(AT-7)
		2. Line pressure inspection	(AT-27)
		3. Throttle position sensor adjustment	(EC-76) (EC-114)
		4. Vehicle speed sensor 1 and 2	(AT-55) (AT-57)
		5. Engine revolution signal	(AT-74)
	Unit assembly	6. Oil pump	(AT-131)
		7. Torque converter	(AT-131)
Parking is not available in P range Parking condition is not released in other ranges	On-vehicle condition	1. Control cable adjustment	(AT-120)
	Unit assembly	2. Parking components	(AT-133)
Drives in N range	On-vehicle condition	1. Control cable adjustment	(AT-120)
	Unit assembly	2. Forward clutch	(AT-132)
		3. Reverse clutch	(AT-132)
		4. Overrun clutch	(AT-132)
Driving in R range (D, 3, 2, 1 range driving is possible) Clutch Slip Very bad acceleration	On-vehicle condition	1. Control cable adjustment	(AT-120)
		2. Line pressure inspection	(AT-27)
		3. Line pressure solenoid	(AT-76)
		4. Control valve assembly	(AT-121)
	Unit assembly	5. Reverse clutch	(AT-132)
		6. High clutch	(AT-132)
		7. Forward clutch	(AT-132)
		8. Overrun clutch	(AT-132)
		9. Low and reverse clutch	(AT-132)
Braking occurs in R range	On-vehicle condition	1. ATF level and condition	(AT-7)
		2. Control cable adjustment	(AT-120)
		3. Line pressure test	(AT-27)
		4. Line pressure solenoid	(AT-76)
		5. Control valve assembly	(AT-121)
	Unit assembly	6. High clutch	(AT-132)
		7. Brake clutch	(AT-132)
		8. Forward clutch	(AT-132)
		9. Overrun clutch	(AT-132)

Symptom	Conditions	Diagnostic Item	Ref. Page
Too much shock (N D)	On-vehicle condition	1. Engine idle RPM	(EC-11)
		2. Throttle position sensor adjustment	(EC-11) (EC-114)
		3. Line pressure test	(AT-27)
		4. Fluid temperature sensor	(AT-71)
		5. Engine revolution signal	(AT-74)
		6. Line pressure solenoid	(AT-76)
		7. Control valve	(AT-121)
		8. Accumulator N-D	(AT-121)
	Unit assembly	9. Forward clutch	(AT-132)
Cannot drive in D, 2 range (OK in 1, R rage)	On-vehicle condition	1. Control cable adjustment	(AT-120)
	Unit assembly	2. Low one-way clutch	(AT-132)
Cannot drive in D, 3, 2, 1 range (OK in R range) Clutch Slip Very bad acceleration	On-vehicle condition	1. ATF level and condition	(AT-7)
		2. Line pressure test	(AT-27)
		3. Line pressure solenoid	(AT-76)
		4. Control valve assembly	(AT-121)
		5. Accumulator N-D	(AT-121)
	Unit assembly	6. Reverse clutch	(AT-132)
		7. High clutch	(AT-132)
		8. Forward clutch	(AT-132)
		9. Forward one-way	(AT-132)
		10. Low one-way clutch	(AT-132)
Clutch and brake slips while drive off	On-vehicle condition	1. ATF level and condition	(AT-25)
		2. Control cable and adjustment	(AT-120)
		3. Throttle position sensor adjustment	(EC-76) (EC-114)
		4. Line pressure test	(AT-27)
		5. Line pressure solenoid	(AT-76)
		6. Control valve assembly	(AT-121)
		7. Accumulator N-D	(AT-121)
	Unit assembly	8. Forward clutch	(AT-132)
		9. Reverse clutch	(AT-132)
		10. Low reverse brake	(AT-132)
		11. Oil pump	(AT-131)
		12. Torque converter	(AT-131)
Excessive creep	On-vehicle condition	Engine idle RPM	(EC-11)
No creep	On-vehicle condition	1. ATF level and condition	(AT-25)
		2. Line pressure test	(AT-27)
		3. Control valve assembly	(AT-121)
	Unit assembly	4. Forward clutch	(AT-132)
		5. Oil pump	(AT-131)
		6. Torque converter	(AT-131)

Symptom	Conditions	Diagnostic Item	Ref. Page
D1 D2 bad shifting	On-vehicle condition	1. Inhibitor switch	(AT-123)
		2. Control cable adjustment	(AT-120)
		3. Shift solenoid valve A	(AT-63)
		4. Control valve assembly	(AT-121)
		5. Vehicle speed sensor 1 and 2	(AT-55) (AT-57)
	Unit assembly	6. Brake band	(AT-132)
D2 D3 bad shifting	On-vehicle condition	1. Inhibitor switch	(AT-123)
		2. Control cable adjustment	(AT-120)
		3. Shift solenoid valve B	(AT-65)
		4. Control valve assembly	(AT-121)
		5. Vehicle speed sensor 1 and 2	(AT-55) (AT-57)
	Unit assembly	6. High clutch	(AT-132)
		7. Brake band	(AT-132)
D3 D4 bad shifting	On-vehicle condition	1. Inhibitor switch	(AT-123)
		2. Control cable adjustment	(AT-120)
		3. Shift solenoid valve A	(AT-63)
		4. Vehicle speed sensor 1 and 2	(AT-55) (AT-57)
		5. Fluid temperature sensor	(AT-71)
	Unit assembly	6. Brake band	(AT-132)
High shifting points during D1 D2, D2 D3, D3 D4 shifts	On-vehicle condition	1. Throttle position sensor adjustment	(EC-73) (EC-114)
		2. Vehicle speed sensor 1 and 2	(AT-55) (AT-57)
		3. Shift solenoid valve A	(AT-63)
		4. Shift solenoid valve B	(AT-65)
Directly shifts from D1 to D3	On-vehicle condition	1. ATF level and condition	(AT-25)
		2. Accumulator S/R	(AT-121)
	Unit assembly	3. Brake band	(AT-132)
Engine stalls in R, D, 3, 2, 1 range	On-vehicle condition	1. Engine idle RPM	(EC-11)
		2. Lockup solenoid valve	(AT-69)
		3. Control valve	(AT-121)
	Unit assembly	4. Torque converter	(AT-131)
Too much shock in D1 D2 shift	On-vehicle condition	1. Throttle position sensor adjustment	(EC-73) (EC-114)
		2. Line pressure test	(AT-27)
		3. Accumulator S/R	(AT-121)
		4. Control valve assembly	(AT-121)
		5. Fluid temperature sensor	(AT-71)
	Unit assembly	6. Brake band	(AT-132)

Symptom	Conditions	Diagnostic Item	Ref. Page
Too much shock in D2 D3 shift	On-vehicle condition	1. Throttle position sensor adjustment	(EC-73), (EC-114)
		2. Line pressure test	(AT-27)
		3. Control valve assembly	(AT-121)
	Unit assembly	4. High clutch	(AT-132)
		5. Brake band	(AT-132)
Too much shock in D3 D4 shift	On-vehicle condition	1. Throttle position sensor adjustment	(EC-73), (EC-114)
		2. Line pressure test	(AT-27)
		3. Control valve assembly	(AT-121)
	Unit assembly	4. Brake band	(AT-132)
		5. Overrun clutch	(AT-132)
No shocks in D1 D2 shift or clutch slips	On-vehicle condition	1. ATF level and condition	(AT-25)
		2. Throttle position sensor adjustment	(EC-73), (EC-114)
		3. Line pressure test	(AT-27)
		4. Accumulator S/R	(AT-121)
		5. Control valve assembly	(AT-121)
	Unit assembly	6. Brake band	(AT-132)
No shocks or slips in D2 D3 shift	On-vehicle condition	1. ATF level and condition	(AT-25)
		2. Throttle position sensor adjustment	(EC-73), (EC-114)
		3. Line pressure test	(AT-27)
		4. Control valve assembly	(AT-121)
	Unit assembly	5. High clutch	(AT-132)
		6. Brake band	(AT-132)
No shocks or slips in D3 D4 shift	On-vehicle condition	1. ATF level and condition	(AT-25)
		2. Throttle position sensor adjustment	(EC-73), (EC-114)
		3. Line pressure test	(AT-27)
		4. Control valve assembly	(AT-121)
	Unit assembly	5. High clutch	(AT-132)
		6. Brake band	(AT-132)
Braking occurs during D1 D2 shift	On-vehicle condition	1. ATF level and condition	(AT-25)
	Unit assembly	2. Reverse clutch	(AT-132)
		3. Low and reverse clutch	(AT-132)
		4. High clutch	(AT-132)
		5. Low one-way clutch	(AT-132)
Braking occurs during D2 D3 shift	On-vehicle condition	1. ATF level and condition	(AT-25)
	Unit assembly	2. Brake band	(AT-132)
Braking occurs during D3 D4 shift	On-vehicle condition	1. ATF level and condition	(AT-25)
	Unit assembly	2. Overrun clutch	(AT-132)
		3. Low one-way clutch	(AT-132)
		4. Reverse clutch	(AT-132)

Symptom	Conditions	Diagnostic Item	Ref. Page
Low max. speed Bad acceleration	On-vehicle condition	1. ATF level and condition	(AT-25)
		2. Inhibitor adjustment	(AT-123)
		3. Shift solenoid A	(AT-63)
		4. Shift solenoid B	(AT-65)
		5. Control valve	(AT-121)
	Unit assembly	6. Reverse clutch	(AT-132)
		7. High clutch	(AT-132)
		8. Brake band	(AT-132)
		9. Low and reverse brake	(AT-132)
		10. Oil pump	(AT-131)
		11. Torque converter	(AT-131)
D4 D3 bad shifting	On-vehicle condition	1. ATF level and condition	(AT-25)
		2. Throttle position sensor adjustment	(EC-73), (EC-114)
		3. Overrun clutch solenoid valve	(AT-67)
		4. Shift solenoid A	(AT-63)
		5. Line pressure solenoid	(AT-76)
		6. Control valve assembly	(AT-121)
	Unit assembly	7. Low and reverse brake	(AT-132)
		8. Overrun clutch	(AT-132)
D3 D2 or D4 D2 bad shifting	On-vehicle condition	1. ATF level and condition	(AT-25)
		2. Throttle position sensor adjustment	(EC-73), (EC-114)
		3. Shift solenoid A	(AT-63)
		4. Shift solenoid B	(AT-65)
		5. Control valve assembly	(AT-121)
	Unit assembly	6. High clutch	(AT-132)
		7. Brake band	(AT-132)
D2 D1 or D3 D1 bad shifting	On-vehicle condition	1. ATF level and condition	(AT-25)
		2. Throttle position sensor adjustment	(EC-73), (EC-114)
		3. Shift solenoid A	(AT-63)
		4. Shift solenoid B	(AT-65)
		5. Control valve assembly	(AT-121)
	Unit assembly	6. Low one-way clutch	(AT-132)
		7. High clutch	(AT-132)
		8. Brake band	(AT-132)
Shifting shocks during deceleration when accelerator pedal is released	On-vehicle condition	1. Throttle position sensor adjustment	(EC-73), (EC-114)
		2. Line pressure test	(AT-27)
		3. Overrun clutch solenoid valve	(AT-67)
		4. Control valve assembly	(AT-121)
High shifting points during D4 D3, D3 D2, D2 D1 shifts	On-vehicle condition	1. Throttle position sensor adjustment	(EC-73), (EC-114)
		2. Vehicle speed sensor 1 and 2	(AT-55), (AT-57)

Symptom	Conditions	Diagnostic Item	Ref. Page
Kickdown does not occur on the kickdown range in D4 when accelerator pedal is depressed	On-vehicle condition	1. Throttle position sensor adjustment	(EC-73), (EC-114)
		2. Vehicle speed sensor 1 and 2	(AT-55), (AT-57)
		3. Shift solenoid A	(AT-63)
		4. Shift solenoid B	(AT-65)
Kickdown occurs or engine overruns under out of kickdown range in D4 when accelerator pedal is depressed	On-vehicle condition	1. Vehicle speed sensor 1 and 2	(AT-55), (AT-57)
		2. Throttle position sensor adjustment	(EC-73), (EC-114)
		3. Shift solenoid A	(AT-63)
		4. Shift solenoid B	(AT-65)
D4 D3 shift is too fast or slips when shifted by depressing accelerator pedal	On-vehicle condition	1. ATF level and condition	(AT-25)
		2. Throttle position sensor adjustment	(EC-73), (EC-114)
		3. Line pressure test	(AT-27)
		4. Line pressure solenoid valve	(AT-76)
		5. Control valve assembly	(AT-121)
	Unit assembly	6. High clutch	(AT-132)
		7. Forward clutch	(AT-132)
D4 D2 shift is too fast or slips when shifted by depressing accelerator pedal	On-vehicle condition	1. ATF level and condition	(AT-25)
		2. Throttle position sensor adjustment	(EC-73), (EC-114)
		3. Line pressure test	(AT-27)
		4. Line pressure solenoid valve	(AT-76)
		5. Shift solenoid valve A	(AT-63)
		6. Control valve assembly	(AT-121)
	Unit assembly	7. Brake valve	(AT-132)
		8. Forward clutch	(AT-132)
D3 D2 shift is too fast or slips when shifted by depressing accelerator pedal	On-vehicle condition	1. ATF level and condition	(AT-25)
		2. Throttle position sensor adjustment	(EC-73), (EC-114)
		3. Line pressure test	(AT-27)
		4. Line pressure solenoid valve	(AT-76)
		5. Control valve assembly	(AT-121)
		6. Fluid temperature sensor	(AT-71)
	Unit assembly	7. Brake band	(AT-132)
		8. Forward clutch	(AT-132)
		9. High clutch	(AT-132)

Symptom	Conditions	Diagnostic Item	Ref. Page
D4 D1 or D3 D1 shift is too fast or slips when shifted by depressing accelerator pedal	On-vehicle condition	1. ATF level and condition	(AT-25)
		2. Throttle position sensor adjustment	(EC-73), (EC-114)
		3. Line pressure test	(AT-27)
		4. Line pressure solenoid valve	(AT-76)
		5. Control valve assembly	(AT-121)
	Unit assembly	6. Forward clutch	(AT-132)
		7. Forward one-way clutch	(AT-132)
		8. Low one-way clutch	(AT-132)
Cannot drive in all ranges	On-vehicle condition	1. ATF level and condition	(AT-25)
		2. Control cable adjustment	(AT-120)
		3. Line pressure test	(AT-27)
		4. Line pressure solenoid valve	(AT-76)
	Unit assembly	5. Oil pump	(AT-131)
		6. High clutch	(AT-132)
		7. Brake band	(AT-132)
		8. Low and reverse brake	(AT-132)
		9. Torque converter	(AT-131)
		10. Parking linkage	(AT-133)
Transaxle noise in D, 3, 2, 1, R range	On-vehicle condition	1. ATF level and condition	(AT-25)
	Unit assembly	2. Torque converter	(AT-131)
D3 2_2 shift is bad when shifted into 2 range	On-vehicle condition	1. Inhibitor switch adjustment	(AT-123)
		2. Throttle position sensor adjustment	(EC-73), (EC-114)
		3. Overrun clutch solenoid valve	(AT-67)
		4. Shift solenoid A	(AT-63)
		5. Shift solenoid B	(AT-65)
		6. Control valve assembly	(AT-121)
		7. Control cable adjustment	(AT-120)
	Unit assembly	8. Brake band	(AT-132)
		9. Overrun clutch	(AT-132)
2_2 3_3 shift occurs in 2 range	On-vehicle condition	1. Inhibitor switch adjustment	(AT-123)
Bad engine brake in 1 range	On-vehicle condition	1. Inhibitor switch adjustment	(AT-123)
		2. Control cable adjustment	(AT-120)
		3. Throttle position sensor adjustment	(EC-73), (EC-114)
		4. Vehicle speed sensor 1 and 2	(AT-55), (AT-57)
		5. Shift solenoid A	(AT-63)
		6. Control valve assembly	(AT-121)
		7. Overrun clutch solenoid valve	(AT-67)
	Unit assembly	8. Overrun clutch	(AT-132)
		9. Low and reverse brake	(AT-132)
1_1 2_2 shift occurs in 1 range	On-vehicle condition	1. Inhibitor switch adjustment	(AT-123)
		2. Control cable adjustment	(AT-120)

Symptom	Conditions	Diagnostic Item	Ref. Page
1_2 1_1 shift occurs in 1 range	On-vehicle condition	1. Inhibitor switch adjustment	(AT-123)
		2. Vehicle speed sensor 1 and 2	(AT-55), (AT-57)
		3. Shift solenoid A	(AT-63)
		4. Control valve assembly	(AT-121)
		5. Overrun clutch solenoid valve	(AT-67)
	Unit assembly	6. Overrun clutch	(AT-132)
		7. Low reverse brake	(AT-132)
Too much shift shock during 1_2 1_1 shift in 1 range	On-vehicle condition	1. Control valve assembly	(AT-121)
	Unit assembly	2. Low reverse brake	(AT-132)
Transaxle overheating	On-vehicle condition	1. ATF level and condition	(AT-25)
		2. Engine idle RPM	(EC-11)
		3. Throttle position sensor adjustment	(EC-73), (EC-114)
		4. Line pressure test	(AT-27)
		5. Line pressure solenoid valve	(AT-76)
		6. Control valve assembly	(AT-121)
	Unit assembly	7. Oil pump	(AT-131)
		8. Reverse clutch	(AT-132)
		9. High clutch	(AT-132)
		10. Brake band	(AT-132)
		11. Forward clutch	(AT-132)
		12. Overrun clutch	(AT-132)
		13. Low and reverse brake	(AT-132)
		14. Torque converter	(AT-131)
ATF leaks during driving White smoke from the exhaust pipe	On-vehicle condition	1. ATF level and condition	(AT-25)
	Unit assembly	2. Reverse clutch	(AT-132)
		3. High clutch	(AT-132)
		4. Brake band	(AT-132)
		5. Forward clutch	(AT-132)
		6. Overrun clutch	(AT-132)
		7. Low and reverse brake	(AT-132)
Odor in the fluid charging pipe	On-vehicle condition	1. ATF level and condition	(AT-25)
	Unit assembly	2. Torque converter	(AT-131)
		3. Oil pump	(AT-131)
		4. Reverse clutch	(AT-132)
		5. High clutch	(AT-132)
		6. Brake band	(AT-132)
		7. Forward clutch	(AT-132)
		8. Overrun clutch	(AT-132)
		9. Low and reverse brake	(AT-132)

Symptom	Conditions	Diagnostic Item	Ref. Page
Bad lockup in the torque converter	On-vehicle condition	1. Throttle position sensor adjustment	(EC-73), (EC-114)
		2. Vehicle speed sensor 1 and 2	(AT-55), (AT-57)
		3. Inhibitor switch adjustment	(AT-123)
		4. Engine speed signal	(AT-74)
		5. Fluid temperature sensor	(AT-71)
		6. Line pressure test	(AT-27)
		7. Lockup solenoid valve	(AT-69)
		8. Control valve	(AT-121)
	Unit assembly	9. Torque converter	(AT-131)
Clutch piston slips in torque converter	On-vehicle condition	1. ATF level and condition	(AT-25)
		2. Throttle position sensor adjustment	(EC-73), (EC-114)
		3. Line pressure test	(AT-27)
		4. Lockup solenoid valve	(AT-69)
		5. Line pressure solenoid valve	(AT-76)
		6. Control valve assembly	(AT-121)
	Unit assembly	7. Torque converter	(AT-131)
Lockup point is too high or too low	On-vehicle condition	1. Throttle position sensor adjustment	(EC-73), (EC-114)
		2. Vehicle speed sensor 1 and 2	(AT-55), (AT-57)
		3. Lockup solenoid valve	(AT-69)
		4. Control valve assembly	(AT-121)
A/T does not shift to D4 while driving with shifting from “3” to “D”	On-vehicle condition	1. Throttle position sensor adjustment	(EC-73), (EC-114)
		2. Inhibitor switch adjustment	(AT-123)
		3. Vehicle speed sensor 1 and 2	(AT-55), (AT-57)
		4. Shift solenoid valve A	(AT-63)
		5. Overrun clutch solenoid valve	(AT-67)
		6. Control valve assembly	(AT-121)
		7. Fluid temperature sensor	(AT-71)
		8. Line pressure test	(AT-27)
	Unit assembly	9. Brake band	(AT-132)
		10. Overrun clutch	(AT-132)
Engine stalls in R, D, 3, 2, 1 range	On-vehicle condition	1. ATF level and condition	(AT-25)
		2. Lockup solenoid valve	(AT-69)
		3. Shift solenoid B	(AT-65)
		4. Shift solenoid A	(AT-63)
		5. Control valve assembly	(AT-121)

A/T Control Unit Input/Output Signal Standards

A/T CONTROL UNIT TERMINAL ARRANGEMENT

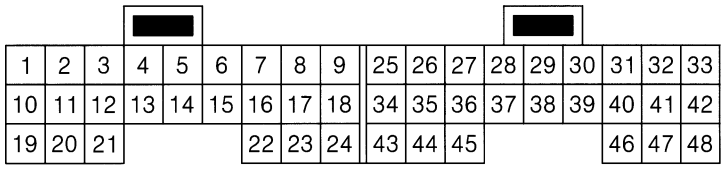

ATN1874D_D1

REFERENCE VALUE

Standard value by CONSULT-II

Item	Value	Measurement
THRTL POS SEN	Approx. 0.5 - 4.0 V	Accelerator pedal fully closed - fully opened
FLUID TEMP SE	Approx. 1.5 - 0.5 V	A/T fluid: Approx. 20 - 80°C
LINE PRES DTY	29 % - 94 %	Low line pressure - high line pressure
TCC S/V DUTY	9 % - 94 %	Released lockup - engaged lockup

STANDARD VALUE BY CIRCUIT TESTER

Terminal No.	Item	Operation or Conditions		Standard Value
1	Line pressure solenoid	Key switch ON	Release the accelerator pedal after engine warming up	Approx. 1.5 - 3.0 V
			Fully depress the accelerator pedal after engine warming up	Approx. 0 V
2	Line pressure solenoid (Dropping resistor information)		Release the accelerator pedal after engine warming up	Approx. 4 - 14 V
			Fully depress the accelerator pedal after engine warming up	Approx. 0 V
3	Lockup solenoid	When driving	With lockup	Approx. 8 - 15 V
			Without lockup	Approx. 0 V
5	Engine & A/T integrated control signal DT1	-		———
6	Engine & A/T integrated control signal DT2			
7	Engine & A/T integrated control signal DT3			
8	Engine & A/T integrated control signal DT5			
9	Engine & A/T integrated control signal DT4			
10	Power	Turn the key switch ON		Power voltage
		Turn the key switch OFF		Approx. 0 V

Terminal No.	Item	Operation or Conditions		Standard Value
11	Shift solenoid A	When driving	When solenoid A is operating (D1 or D4 driving)	Power voltage
			When solenoid A is not operating (D2 or D3 driving)	Approx. 0 V
12	Shift solenoid B		When solenoid B is operating (D1 or D2 driving)	Power voltage
			When solenoid B is not operating (D3 or D4 driving)	Approx. 0 V
13	O/D OFF indicator light	Key switch ON	O/D OFF indicator light: ON	Approx. 0 V
			O/D OFF indicator light: OFF	Power voltage
16	Idle switch		Release the accelerator pedal after engine warming up	Power voltage
			Depress the accelerator pedal after engine warming up	Approx. 0 V
17	Full switch		Depress the accelerator pedal over one-half after engine warming up	Power voltage
			Release the accelerator pedal after engine warming up	Approx. 0 V
19	Power	Turn the key switch ON		Power voltage
		Turn the key switch OFF		Approx. 0 V
20	Overrun clutch solenoid	When driving	When the overrun clutch solenoid is operating	Power voltage
			When the overrun clutch solenoid is not operating	Approx. 0 V
22	O/D “OFF” switch (A/T device)	Key switch ON	When O/D is ON (Contact point: OFF)	Power voltage
			When O/D is OFF (Contact point: ON)	Approx. 0 V
25	Ground		-	Approx. 0 V
26	Inhibitor 1 range switch		Selector lever: 1 range	Power voltage
			Selector lever: Other than 1 range	Approx. 0 V
27	Inhibitor 2 range switch		Selector lever: 2 range	Power voltage
			Selector lever: Other than 2 range	Approx. 0 V
28	Power (Backup)	Turn the key switch ON		Power voltage
		Turn the key switch OFF		Power voltage
29	Vehicle speed sensor 1 (Output shaft revolution sensor)	When driving at 20 km/h, use the pulse frequency measurement function of the CONSULT-II* Caution: Always connect the diagnosis data link gauge at the vehicle’s diagnosis connector *: This item cannot be measured by the circuit tester.		Approx. 150 Hz
30	Self-diagnosis (RX) signal	-		-
31	Self-diagnosis (TX) signal	-		-
32	Sensor power	Turn the key switch ON		Approx. 4.5 - 5.5 V
		Turn the key switch OFF		Approx. 0 V
34	Inhibitor D range switch	Key switch ON	Selector lever: D range	Power voltage
			Selector lever: Other than D range	Approx. 0 V
35	Inhibitor R range switch		Selector lever: R range	Power voltage
			Selector lever: Other than R range	Approx. 0 V
36	Inhibitor N, P range switch		Selector lever: N, P range	Power voltage
			Selector lever: Other than N, P range	Approx. 0 V

Terminal No.	Item	Operation or Conditions		Standard Value
39	Engine revolution signal	-		
40	Vehicle speed sensor 2 (Vehicle speed signal on the meter)	When moving the vehicle more than 1 m at 2 - 3 km/h		Intermittently changing between approx. 0 - 4.5 V
41	Throttle position sensor signal	Key switch ON	Depress the accelerator pedal after engine warming up	The voltage increases by depressing the pedal. When fully closed: Approx. 0.5 V When fully opened: Approx. 4.0 V
42	Sensor ground		-	Approx. 0 V
45	Stop lamp switch		Depress the brake pedal	Power voltage
			Release the brake pedal	Approx. 0 V
47	Fluid temperature sensor		When approx. 20°C	Approx. 1.5 V
			When approx. 80°C	Approx. 0.5 V
48	Ground		-	Approx. 0 V

CONSULT-II Function

GENERAL

CONSULT-II displays the solenoid's operating timing, that is, the electrical shift timing and lockup timing. Thus when there is a certain difference between the actual shift timing by gear shifting shock (or engine RPM change) and the shift timing displayed on CONSULT-II, it is considered that the device components (including the fluid pressure circuit) except the solenoid and sensor components are defective. In this case, inspect the device components using proper trouble diagnosis procedures.

There is a difference between the gear shifting point (gear position) displayed by CONSULT-II and shift patterns in the service manual. This is due to the following reasons.

There are some allowances in actual shifting patterns.

The shift pattern in the Service Manual shows the starting point of the gear shift but CONSULT-II shows the gear position when the gear shift is completed.

The shift solenoid A and B display (ON and OFF) in CONSULT-II changes at gear shift starting point and the gear position display changes when the control unit calculates that the gear shift has completed.

CAUTION:

"Function Check Support" can be selected from CONSULT-II's diagnosis mode but normally not in use.

SELF-DIAGNOSIS

Operation procedure

Refer to separate CONSULT-II operation manual for details.

1. Turn the key switch OFF.
2. Connect the CONSULT-II connector to the vehicle's diagnosis connector.
3. Start the engine.
4. Select "START (X-BADGE VHCL)", "A/T" and "SELF-DIAG RESULTS" in order from CONSULT-II.
5. The self-diagnosis result is displayed.

DISPLAY LIST

Defective Item	Failure Detecting Conditions	Check Point When Defective
CAN COMM CIRCUIT	When malfunction is detected in CAN communication line	Refer to LAN Section
VHCL SPEED SEN • A/T	When vehicle speed sensor 1 signal is not inputted due to open circuit When abnormal signal is inputted while driving When abnormal signal is inputted from vehicle speed sensor 2 until drive off after key switch turned ON	Vehicle speed sensor 1 route
VHCL SPEED SEN • MTR	When vehicle speed sensor 2 signal is not inputted due to open circuit When abnormal signal is inputted while driving	Vehicle speed sensor 2 route
THROTTLE POSI SEN	When the throttle position sensor signal voltage is abnormally high When the throttle position sensor signal voltage while idle switch OFF or wheel switch ON is abnormally low	Throttle position sensor route
SHIFT SOLENOID/V A	When regular voltage is not present at the solenoid due to open or short circuit	Shift solenoid A route
SHIFT SOLENOID/V B		Shift solenoid B route
OVERRUN CLUTCH S/V		Overrun clutch solenoid route
T/C CLUTCH SOL/V		Lockup solenoid route
LINE PRESSURE S/V		Line pressure solenoid route
BATT/FLUID TEMP SEN	When the supply voltage to the control unit is abnormally low while driving When the fluid temperature signal voltage is abnormally high while driving (The ATF temperature is abnormally low) Caution: There are no functions that can memorize the defect during key switch ON	Fluid temperature sensor route Control unit power route Throttle position sensor - power route
ENGINE SPEED SIG	When the engine speed is abnormally low while driving	Engine speed signal route
INITIAL START	When the function such as self-diagnosis memory is stopped when power is not supplied to the control unit due to battery removal	
CONTROL UNIT (RAM)	When defect is detected in the control unit's memory (RAM)	
CONTROL UNIT (ROM)	When defect is detected in the control unit's memory (ROM)	

ERASING SELF-DIAGNOSIS RESULTS

When trouble code is indicated in both ECCS control unit and A/T control unit, delete the trouble code from both control units following the procedure below.

1. When the key switch is ON after repair operation, turn it OFF and wait at least 5 seconds, then turn it ON (Do not start the engine).
2. Turn on CONSULT-II and press "A/T".
3. Press "SELF-DIAG RESULTS".
4. Press "ERASE".
5. Press "ENGINE".
6. Press "SELF-DIAG RESULTS".
7. Press "ERASE".

DATA MONITOR

Operation procedure

Refer to separate CONSULT-II operation manual for details.

1. Turn the key switch OFF.
2. Connect the CONSULT-II connector to the vehicle's diagnosis connector.
3. Start the engine.
4. Select "START (X-BADGE VHCL)", "A/T" and "DATA MONITOR" in order from CONSULT-II.

DISPLAY LIST

Item (Unit)	Monitor Item Selection			Remark
	TCM INPUT SIGNALS	MAIN SIGNALS	SELECTION FROM MENU	
VHCL/S SE - A/T (km/h)				
VHCL/S SE - MTR (km/h)				Error occurs at under vehicle speed of 10 km/h and does not indicate 0 km/h when stopped
THRTL POS SEN (V)				
FLUID TEMP SE (V)				
BATTERY VOLT (V)				
ENGINE SPEED (RPM)				0 is not indicated when engine stopped. This is not a defect.
TURBINE REV (RPM)				The turbine sensor is not installed but it is indicated.
OVERDRIVE SW (ON-OFF indicator)				When the O/D switch is turned ON, the switch contact point is OFF. Thus OFF is indicated.
PN POSI SW (ON OFF)				
R POSITION SW (ON-OFF)				
D POSITION SW (ON-OFF)				
2 POSITION SW (ON-OFF)				
1 POSITION SW (ON-OFF)				
ASCD - CRUISE (ON-OFF)				The ASCD is not installed but it is indicated.
ASCD - OD CUT (ON-OFF)				
KICKDOWN SW (ON-OFF)				The kickdown switch is not installed but it is indicated.
POWERSHIFT SW (ON-OFF)				The POWER switch is not installed but it is indicated.
CLOSED THL/SW (ON-OFF)				Idle contact point of the throttle valve switch.
W/O THRL/P - SW (ON-OFF)				Full contact point of the throttle valve switch.
*SHIFT S/V A (ON-OFF)				The check signal condition (re-input signal) of the control unit's control signal output is indicated. ON or OFF does not change when the solenoid is in open or short circuit.
*SHIFT S/V B (ON-OFF)				

Item (Unit)	Monitor Item Selection			Remark
	TCM INPUT SIGNALS	MAIN SIGNALS	SELECTION FROM MENU	
*OVRRUN/C S/V (Overrun clutch solenoid) (ON-OFF)				
HOLD SW (ON-OFF)				
BRAKE SW (ON-OFF)				Stopper lamp switch
GEAR				The gear position recognized by the control unit. It is renewed after completion of gear shift.
SLCT LVR POSI				The range position recognized by the control unit. Under fail-safe operation, the measured value used for control-ling is indicated.
VEHICLE SPEED				The speed recognized by the control unit.
THROTTLE POSI				The accelerator opening recognized in the control unit. Under fail-safe operation, the measured value used for controlling is indicated.
LINE PRES DTY				The control signal output of the control unit.
TCC S/V DUTY				
SHIFT S/V A (ON-OFF)				
SHIFT S/V B (ON-OFF)				
OVERRUN/C S/V (Overrun clutch solenoid) (ON-OFF)				
SELF-D DP LMP (ON-OFF)				
TC SLIP RATIO				
TC SLIP SPEED (rpm)				
Voltage (V)				Indicates measured voltage
Hertz (Hz)				Indicates measured pulse
DUTY-HI (%)				
DUTY-LOW (%)				
PLS WIDTH-HI (msec)				
PLS WIDTH-LOW (msec)				

: Standard : Optional selection

SELF-DIAGNOSIS (WITHOUT USING CONSULT-II)

General

When defect occurs in electrical system, the O/D OFF indicator light turns ON for 2 seconds and flashes for 8 seconds if the key switch is turned ON. If normal, it turns ON for 2 seconds. To locate the defective location, self-diagnosis starting number is inputted. Then the defect information is outputted and O/D OFF indicator light flashes to indicate the defective location.

SELF-DIAGNOSIS

Operation procedure

1. Warm up the engine.

2. Place the selector lever to D range.
3. Turn the key switch ON.
4. Place the selector lever to D range and turn the brake switch ON within 2 seconds after turning the key switch ON.
5. Place the selector lever to 2 range and turn the brake switch OFF.
6. Place the selector lever to 1 range and turn the brake switch ON.
7. Fully depress the accelerator and then fully release.
8. The A/T CHECK indicator light flashes and the self-diagnosis gets started.

CAUTION:

After performing the above procedures for the first time, the A/T CHECK indicator light might flashes rapidly and the self-diagnosis does not get started. In this condition, turn the key switch "OFF", wait for approximately 10 seconds and then perform the 2-8 steps above again.

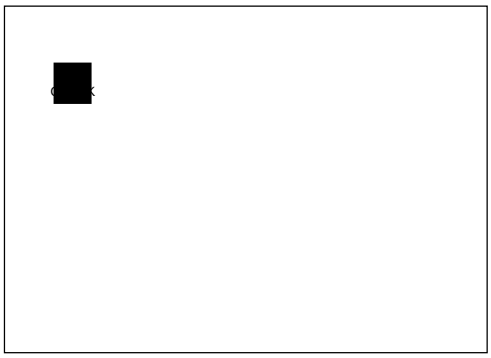

A/T CHECK indicator light operation

When defective, the light-on time for specific route is indicated longer.

Light ON order	Trouble Route
1	Vehicle speed sensor 1
2	Vehicle speed sensor 2
3	Throttle position sensor
4	Shift solenoid A
5	Shift solenoid B
6	Overrun clutch solenoid
7	Lockup solenoid
8	Fluid temperature sensor, control unit and throttle position sensor power
9	Engine revolution signal
10	Line pressure solenoid
11	Inhibitor switch, O/D switch, idle switch and full switch

Under the following cases it repeats in 4 Hz: Bad memory lockup power, when A/T control unit is replaced, when battery was disconnected for a long time, or battery performance is deteriorated.

Erasing self-diagnosis results

For easy diagnosis of intermittent troubles, the control unit stores trouble information frequently during operation. This memory will not be erased even the key switch is turn ON and OFF several times. However, it will be erased if turns the key switch OFF after performing the self-diagnosis or by using CONSULT-II.

Vehicle Speed Sensor 1 (Output Shaft Revolution Sensor) System

Inspection Procedure

1. VEHICLE SPEED SENSOR 1 (OUTPUT SHAFT REVOLUTION SENSOR)

- Refer to "Components Inspection" (AT-56).

Inspection results are OK?

OK → When using CONSULT-II: Go to No. 2.

NG → Repair or replace the vehicle speed sensor 1 (Output shaft revolution sensor).

2. INPUT SIGNAL (WHEN USING CONSULT-II)

When using CONSULT-II

1. Start the engine.
2. Select TCM INPUT SIGNALS from DATA MONITOR.
3. Check the vehicle speed sensor and A/T vehicle speed while driving. Inspect if the value changes during vehicle acceleration or deceleration.

Inspection results are OK?

OK → Go to No. 3.

NG → Inspect below items.

- Open or short circuit in the main harness between the A/T control unit, ECCS control unit and vehicle speed sensor 1 (Output shaft revolution sensor).
- Refer to ECCS control unit's ground circuit "POWER SUPPLY CIRCUIT FOR ECM" (QG16: EC-75).
- Remove the terminal from the connector housing and inspect for looseness, bends, or damages.

3. CHECK AFTER REPAIR

After driving for a while, perform the self-diagnosis again and check if still defective.

- Refer to "CONSULT-II Function" (AT-50) and "Self-Diagnosis (Without Using CONSULT-II)" (AT-53).

Inspection results are OK?

OK → End.

NG → 1. Inspect the A/T control unit's input and output signal.
2. If NG again, re-inspect if connector's pin terminals have defective contacts.

Component Inspection

VEHICLE SPEED SENSOR 1 (OUTPUT SHAFT REVOLUTION SENSOR)

While the vehicle is lifted, drive the front wheels. Check if there is power voltage (12 V) between the vehicle speed sensor 1 connector terminal No. 1 and No. 3, then check frequency of the terminal No. 2 using CONSULT-II pulse frequency meter.

CAUTION:

Connect the diagnosis data link cable to the vehicle.

When driving at 20 km/h: Approx. 150 Hz

Vehicle Speed Sensor 2 System

A/T Control Unit Input/Output Signal Standard

The value data is the reference value from the circuit tester.

Terminal No.	Item	Conditions	Standard
40	Vehicle speed sensor 2	Driving at least 1 m at 2 - 3 km/h	Intermittently changes between approx. 0 - 4.5 V

Inspection Procedure

1. INPUT SIGNAL

When using CONSULT-II

1. Start the engine.
2. Select TCM INPUT SIGNALS from DATA MONITOR.
3. While driving, check the vehicle speed sensor 2 and vehicle speed on the meter. Check if the value changes during vehicle acceleration or deceleration. (The vehicle speed sensor 2 meter indicates 5 km/h when stopped.)

Without using CONSULT-II

1. Start the engine.
2. While driving at least 1 m at 2 - 3 km/h, measure the voltage between the A/T control unit connector terminal and ground.

   Voltage: Intermittently changes between approx. 0 - 4.5 V

Inspection results are OK?

OK Go to No. 2.

NG Inspect below items.

Inspect the connection between the vehicle speed sensor 2 and meter control unit.

Open or short circuit in the main harness between the A/T control unit and vehicle speed sensor.

Inspect the connector housing for terminal disconnection, looseness, twists or fallen.

2. CHECK AFTER REPAIR

After driving for a while, perform the self-diagnosis again and check if still defective.

Refer to “CONSULT-II Function” (AT-50) and “Self-Diagnosis (Without Using CONSULT-II)” (AT-53).

Inspection results are OK?

OK End.

NG 1. Inspect the A/T control unit’s input and output signal.

2. If NG again, re-inspect if connector’s pin terminals have defective contacts.

Component Inspection

METER CONTROL UNIT

Refer to “COMBINATION METER - TROUBLE DIAGNOSIS” (EL-69).

Throttle Position Sensor System

CONSULT-II Data Monitor Display

The value data is the reference value.

Monitor Item	Condition	Standard Value
THRTL POS SEN	Accelerator fully closed	Approx. 0.5 V
	Accelerator fully opened	Approx. 4.0 V

A/T Control Unit Input/Output Signal Standards

The value data is the reference value from the circuit tester.

Terminal No.	Item	Condition	Standard
16	Switch	When the accelerator pedal is released after warming up	Power voltage
		When the accelerator pedal is depressed after warming up	Approx. 0 V
17	Full switch	When the accelerator pedal is depressed over one-half after warming up	Power voltage
		When the accelerator pedal is released after warming up	Approx. 0 V
32	Sensor (Power)	-	Approx. 4.5 - 5.5 V
41	Throttle position sensor	When the accelerator pedal is depressed slowly after warming up (When fully opened, it increases by the voltage value)	Fully closed: Approx. 0.5 V Fully opened: Approx. 4.0V
42	Sensor ground	-	-

Inspection Procedure

1. SELF-DIAGNOSIS (ENGINE)

Perform the self-diagnosis on engine control.

- Refer to “CONSULT- II Function” (QG16: EC-60).

Inspection results are OK?

OK → ● When using CONSULT-II: Go to No. 2.
● When without using CONSULT-II: Go to No. 3.

NG → Check the DTC detected item. Refer to “Index for DTC” (QG16: EC-11).

2. INPUT SIGNAL (WHEN USING CONSULT-II)

When using CONSULT-II

1. Turn the key switch ON (Do not start the engine).
2. Select TCM INPUT SIGNALS from DATA MONITOR.
3. Measure the voltage for the “THRT POS SEN” (When accelerator pedal is fully opened, it increases by the voltage value).
   Accelerator fully closed: Approx. 0.5 V
   Accelerator fully opened: Approx. 4.0 V

Inspection results are OK?

OK → Go to No. 4.

NG → ● Inspect if open or short circuit in the main harness between the A/T control unit and ECCS control unit for the throttle position sensor route.
● Inspect for terminal fall out, looseness, twist or damages from the connector housing.

3. INPUT SIGNAL (WITHOUT USING CONSULT-II)

Without using CONSULT-II

1. Turn the key switch ON (Do not start the engine).
2. Slowly depress the accelerator pedal and measure the voltage between the A/T control unit terminals (When fully opened, the voltage increases).

   Accelerator fully closed: Approx. 0.5 V

   Accelerator fully opened: Approx. 4.0 V

Inspection results are OK?

OK Go to No. 5.

NG Inspect if open or short circuit in the main harness between the A/T control unit and ECCS control unit for the throttle position sensor route.

Inspect for terminal fall out, looseness, twist or damages from the connector housing.

4. THROTTLE VALVE SWITCH (IDLE SWITCH/FULL SWITCH) CIRCUIT

When using CONSULT-II

1. Turn the key switch ON (Do not start the engine).
2. Select TCM INPUT SIGNALS from DATA MONITOR.
3. Slowly depressing and releasing the accelerator pedal, check if the idle switch and full switch signals are properly displayed.

Condition	Data Monitor	
	CLOSED THL/SW	W/O THRL/P - SW
Accelerator pedal is not depressed	ON	OFF
Accelerator pedal is fully depressed	OFF	ON

Inspection results are OK?

OK Go to No. 6.

NG Inspect below items.

Refer to “Throttle Valve Switch” (AT-62).

Open or short circuit at the main harness between the key switch and throttle valve switch.

Open or short circuit at the main harness between the throttle valve switch and A/T control unit.

5. THROTTLE VALVE SWITCH (IDLE SWITCH/FULL SWITCH) CIRCUIT (WITHOUT USING CONSULT-II)

Without using CONSULT-II

1. Turn the key switch ON (Do not start the engine).
2. Select the input items.
3. Fully depressing and releasing the accelerator pedal, measure the voltage between the A/T control unit terminal and ground. (Perform after warming up.)

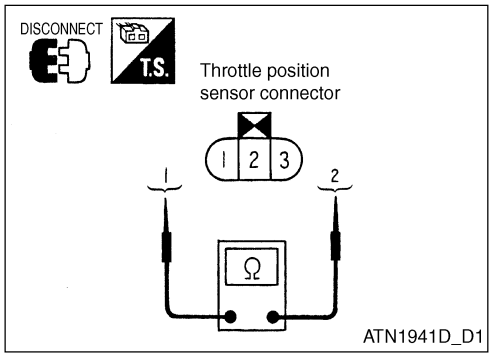

Condition	Voltage	
	Terminal No. 16	Terminal No. 17
Accelerator pedal is not depressed	Power voltage	Approx. 0 V
Accelerator pedal is fully depressed	Approx. 0 V	Power voltage

Inspection results are OK?

OK Go to No. 6.

NG Inspect below items.

Refer to "Throttle Valve Switch" (AT-62).

Open or short circuit at the main harness between the key switch and throttle valve switch.

Open or short circuit at the main harness between the throttle valve switch and A/T control unit.

6. CHECK AFTER REPAIR

After driving for a while, perform the self-diagnosis again and check if still defective.

Refer to "CONSULT-II Function" (AT-50) and "Self-Diagnosis (Without Using CONSULT-II)" (AT-53).

Inspection results are OK?

OK End.

NG 1. Inspect the A/T control unit's input and output signal.

2. If NG again, re-inspect if connector's pin terminals have defective contacts.

Components Inspection

THROTTLE POSITION SENSOR

Measure the resistance between the throttle position sensor connector terminals.

Accelerator pedal is not depressed: Approx. 0.8 k

Accelerator pedal is fully depressed: Approx. 4.6 k

CAUTION:

The resistance increases as depresses further.

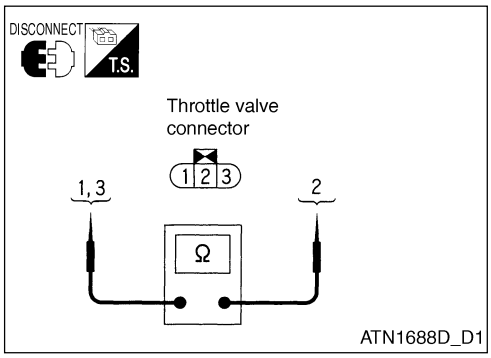

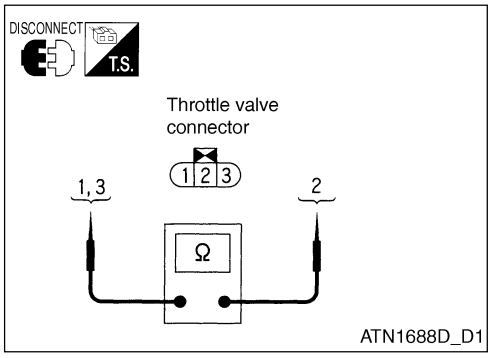

THROTTLE VALVE SWITCH

Valve Switch

- Check continuity between the terminal No. 1 and No. 2.
  Accelerator pedal is not depressed: Continuity
  Accelerator pedal is fully depressed: No continuity
- Refer to "Throttle Valve Closed Position Learning" (QG16: EC-23

Full Switch

- Check continuity between the terminal No. 2 and No. 3.
  Accelerator pedal is not depressed: No continuity
  Accelerator pedal is fully depressed: Continuity

Shift Solenoid A System

A/T Control Unit Input/Output Signal Standards

The value data is the reference value from the circuit tester.

Terminal No.	Item	Condition	Standards
11	Shift solenoid A	Shift solenoid A operates (While driving in D1 or D4)	Power voltage
		Shift solenoid A does not operate (While driving in D2 or D3)	Approx. 0 V

Inspection Procedure

1. GROUND CIRCUIT

1. Turn the key switch OFF.
2. Remove the A/T terminal assembly middle connector inside the engine room.
3. Check the resistance between the connector terminal and ground.

   Resistance: Approx. 20 - 30

Inspection results are OK?

OK Go to No. 2.

NG
1. Remove the control valve assembly. Refer to "Removal • Installation" (AT-121).
2. Inspect below items.

   Shift solenoid A (Refer to "Components Inspection" (AT-64)).

   Open or short circuit in A/T terminal assembly.

2. POWER CIRCUIT

1. Turn the key switch OFF.
2. Remove the A/T control unit connector.
3. Check for continuity between the terminals.
4. Inspect for any short circuit in between the harness and ground power.
5. Install the removed components.

Inspection results are OK?

OK Go to No. 3.

NG Repair the open circuit in the harness and connector and short circuit in ground and power.

3. CHECK AFTER REPAIR

After driving for a while, perform the self-diagnosis again and check if still defective.

Refer to "CONSULT-II Function" (AT-50) and "Self-Diagnosis (Without Using CONSULT-II)" (AT-53).

Inspection results are OK?

OK End.

NG
1. Inspect the A/T control unit's input and output signal.
2. If NG again, re-inspect if connector's pin terminals have defective contacts.

Component Inspection

SHIFT SOLENOID A

Refer to “Removal • Installation” (AT-121) in “Control Valve • Accumulator” for removal.

Resistance

Check the resistance between the terminals.

Solenoid Valve	Terminal No.		Resistance
Shift solenoid valve A	2	Ground	Approx. 20 - 30

Operation

Apply battery voltage between the terminal and ground and check for operation sound of the solenoid valve.

Shift Solenoid B System

A/T Control Unit Input/Output Signal Standards

The value data is the reference value from the circuit tester.

Terminal No.	Item	Condition	Standard
12	Shift solenoid B	Shift solenoid B operates (While driving in D1 or D2)	Power voltage
		Shift solenoid B does not operate (While driving in D3 or D4)	Approx. 0 V

Inspection Procedure

1. GROUND CIRCUIT

1. Turn the key switch OFF.
2. Remove the A/T terminal assembly middle connector inside the engine room.
3. Check the resistance between the connector terminal and ground.

   Resistance: Approx. 5 - 20

Inspection results are OK?

OK Go to No. 2.

NG
1. Remove the control valve assembly. Refer to "Removal • Installation" (AT-121).
2. Inspect below items.

Shift solenoid B (Refer to "Component Inspection" (AT-66)).

Open or short circuit in A/T terminal assembly.

2. POWER CIRCUIT

1. Turn the key switch OFF.
2. Remove the A/T control unit connector.
3. Check for continuity between the terminals.
4. Inspect for any short circuit in between the harness and ground power.
5. Install the removed components.

Inspection results are OK?

OK Go to No. 3.

NG Repair the open circuit in the harness and connector and short circuit in ground and power.

3. CHECK AFTER REPAIR

After driving for a while, perform the self-diagnosis again and check if still defective.

Refer to "CONSULT-II Function" (AT-50) and "Self-Diagnosis (Without Using CONSULT-II)" (AT-53).

Inspection results are OK?

OK End.

NG
1. Inspect the A/T control unit's input and output signal.
2. If NG again, re-inspect if connector's pin terminals have defective contacts.

Component Inspection

SHIFT SOLENOID B

Refer to "Removal • Installation" (AT-121) in "Control Valve • Accumulator" for removal.

Resistance

Check the resistance between the terminals.

Solenoid Valve	Terminal No.		Resistance
Shift solenoid valve B	1	Ground	Approx. 5 - 20

Operation

Apply battery voltage between the terminal and ground and check for operation sound of the solenoid valve.

Overrun Clutch Solenoid System

A/T Control Unit Input/Output Signal Standards

The value data is the reference value from the circuit tester.

Terminal No.	Item	Condition	Standards
20	Overrun clutch solenoid valve	Overrun clutch solenoid valve operates	Power voltage
		Overrun clutch solenoid valve does not operate	Approx. 0 V

Inspection Procedure

1. GROUND CIRCUIT

1. Turn the key switch OFF.
2. Remove the A/T terminal assembly middle connector inside the engine room.
3. Check the resistance between the connector terminal and ground.

   Resistance: Approx. 20 - 30

Inspection results are OK?

OK Go to No. 2.

NG
1. Remove the control valve assembly. Refer to "Removal • Installation" (AT-121).
2. Inspect below items.

   Overrun clutch solenoid valve (Refer to "Component Inspection" (AT-68)).

   Open or short circuit in A/T terminal assembly.

2. POWER CIRCUIT

1. Turn the key switch OFF.
2. Remove the A/T control unit connector.
3. Check for continuity between the terminals.
4. Inspect for any short circuit in between the harness and ground power.
5. Install the removed components.

Inspection results are OK?

OK Go to No. 3.

NG Repair the open circuit in the harness and connector and short circuit in ground and power.

3. CHECK AFTER REPAIR

After driving for a while, perform the self-diagnosis again and check if still defective.

Refer to "CONSULT-II Function" (AT-50) and "Self-Diagnosis (Without Using CONSULT-II)" (AT-53).

Inspection results are OK?

OK End.

NG
1. Inspect the A/T control unit's input and output signal.
2. If NG again, re-inspect if connector's pin terminals have defective contacts.

Component Inspection

OVERRUN CLUTCH SOLENOID VALVE

Refer to "Removal • Installation" (AT-121) in "Control Valve • Accumulator" for removal.

Resistance

Check the resistance between the terminals.

Solenoid Valve	Terminal No.		Resistance
Overrun clutch solenoid valve	3	Ground	Approx. 20 - 30

Operation

Apply battery voltage between the terminal and ground and check for operation sound of the solenoid valve.

Lockup Solenoid System

CONSULT-II Data Monitor Display

The value data is the reference value.

Monitor Item	Condition	Standard Value
TCC S/V DUTY	Lockup released	9 %
	Lockup engaged	94 %

A/T Control Unit Input/Output Signal Standards

The value data is the reference value from the circuit tester.

Terminal No.	Item	Condition	Standard
20	Lockup solenoid valve	Under lockup	Approx. 8 - 15 V
		Without lockup	Approx. 0 V

Inspection Procedure

1. GROUND CIRCUIT

1. Turn the key switch OFF.
2. Remove the A/T terminal assembly connector inside the engine room.
3. Check the resistance between the connector terminal and ground.

   Resistance: Approx. 5 - 20

Inspection results are OK?

OK Go to No. 2.

NG
1. Remove the oil pan. Refer to "Control Valve • Accumulator" (AT-121).
2. Inspect below items.

Lockup solenoid valve (Refer to "Component Inspection" (AT-70)).

Open or short circuit in A/T terminal assembly.

2. POWER CIRCUIT

1. Turn the key switch OFF.
2. Remove the A/T control unit connector.
3. Check for continuity between the terminals.
4. Inspect for any short circuit in between the harness and ground and power.
5. Install the removed components.

Inspection results are OK?

OK Go to No. 3.

NG Repair the open circuit in the harness and connector and short circuit in ground and power.

3. CHECK AFTER REPAIR

After driving for a while, perform the self-diagnosis again and check if still defective.

Refer to “CONSULT-II Function”(AT-50) and “Self-Diagnosis (Without Using CONSULT-II)” (AT-53).

Inspection results are OK?

OK End.

NG 1. Inspect the A/T control unit’s input and output signal.
2. If NG again, re-inspect if connector’s pin terminals have defective contacts.

Component Inspection

LOCKUP SOLENOID VALVE

Refer to “Removal • Installation” (AT-121) in “Control Valve • Accumulator” for removal.

Resistance

Check the resistance between the terminals.

Solenoid Valve	Terminal No.		Resistance
Lockup solenoid valve	5	Ground	Approx. 5 - 20

Operation

Apply battery voltage between the terminal and ground and check for operation sound of the solenoid valve.

CONSULT-II Data Monitor Display

The value data is the reference value.

Monitor Item	Condition	Standard Value
FLUID TEMP SE	A/T fluid temperature: Approx. 20°C	Approx. 1.5 V
	A/T fluid temperature: Approx. 80°C	Approx. 0.5 V

A/T Control Unit Input/Output Signal Standards

The value data is the reference value from the circuit tester.

Terminal No.	Item	Condition	Standards
10	Power	Turn the key switch ON	Power voltage
		Turn the key switch OFF	Approx. 0 V
19	Power	The same as terminal No. 10	
28	Power (Memory backup)	Turn the key switch OFF	Power voltage
		Turn the key switch ON	Power voltage
42	Ground (Fluid temperature sensor)	-	Approx. 0 V
47	Fluid temperature sensor	A/T fluid temperature: Approx. 20°C	Approx. 1.5 V
		A/T fluid temperature: Approx. 80°C	Approx. 0.5 V

Inspection Procedure

1. A/T CONTROL UNIT POWER

1. Turn the key switch ON (Do not start the engine).
2. Measure the voltage between the A/T control unit connector terminal and ground.

   Voltage: Power voltage
3. Turn the key switch OFF.
4. Measure the voltage between the A/T control unit connector terminal and ground.

   Voltage: Power voltage

Inspection results are OK?

OK Go to No. 2.

NG Inspect below items.

Open or short circuit in main harness between the key switch and A/T control unit.

Refer to “POWER SUPPLY ROUTING” (WH-147), “FUSE BLOCK-JUNCTION BLOCK (J/B)” (WH-183).

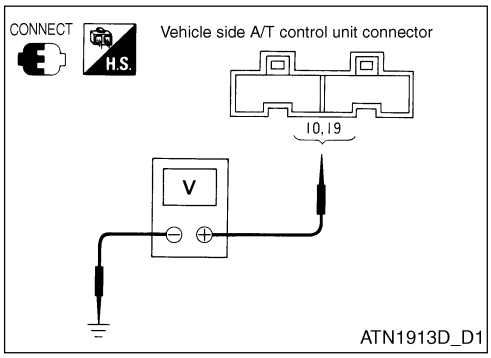

2. FLUID TEMPERATURE SENSOR AND A/T TERMINAL ASSEMBLY

1. Turn the key switch OFF.
2. Remove the A/T terminal assembly middle connection in the engine.
3. Measure the resistance between the connector terminals.
   Resistance: 2.5 kΩ (Fluid temperature: Approx. 20°C)
   : 0.3 kΩ (Fluid temperature: Approx. 80°C)
4. Install the removed components again.

Inspection results are OK?

OK → ● When using CONSULT-II: Go to No. 3.
● Without using CONSULT-II: Go to No. 4.

NG → 1. Remove the oil pan (Refer to "Control Valve • Accumulator" (AT-121)).
2. Inspect below items.
● Fluid temperature sensor (Refer to "Component Inspection" (AT-73)).
● Open or short circuit in A/T terminal assembly.

3. INPUT SIGNAL FROM THE FLUID TEMPERATURE SENSOR (WHEN USING CONSULT-II)

When using CONSULT-II

1. Start the engine.
2. Select TCM INPUT SIGNALS from DATA MONITOR.
3. Measure the voltage in the fluid temperature sensor.
   When cold (Fluid temperature: Approx. 20°C): Approx. 1.5 V
   When warm (Fluid temperature: Approx. 80°C): Approx. 0.5 V

Inspection results are OK?

OK → Go to No. 5.

NG → Inspect below items.
● Open or short circuit in the main harness between the A/T control unit, ECCS control unit and A/T terminal assembly.
● Refer to ECCS control unit ground circuit ("POWER SUPPLY CIRCUIT FOR ECM" (QG16: EC-75).

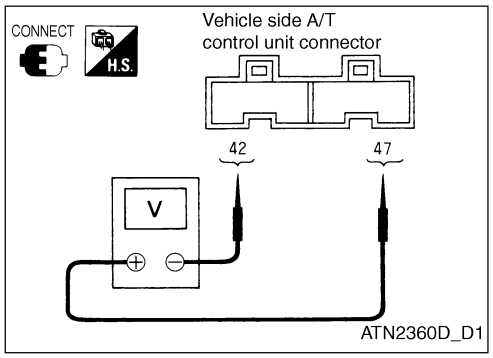

4. INPUT SIGNAL FROM THE FLUID TEMPERATURE SENSOR (WITHOUT USING CONSULT-II)

Without using CONSULT-II

1. Do not start the engine.
2. Warming up the system, measure the voltage between the A/T control unit connector terminal and ground.
   When cold (Fluid temperature: Approx. 20°C): Approx. 1.5 V
   When warm (Fluid temperature: Approx. 80°C): Approx. 0.5 V
3. Turn the key switch OFF.
4. Remove the A/T control unit connector.
5. Check for continuity between the connector terminal and ground.

Inspection results are OK?

OK → Go to No. 5.

NG → Inspect below items.

- Open or short circuit in the main harness between the A/T control unit, ECCS control unit and A/T terminal assembly.
- Refer to ECCS control unit ground circuit "POWER SUPPLY CIRCUIT FOR ECM" (QG16: EC-75).

5. CHECK AFTER REPAIR

After driving for a while, perform the self-diagnosis again and check if still defective.

- Refer to "CONSULT-II Function" (AT-50) and "Self-Diagnosis (Without Using CONSULT-II)" (AT-53).

Inspection results are OK?

OK → End.

NG → 1. Inspect the A/T control unit's input and output signal.
2. If NG again, re-inspect if connector's pin terminals have defective contacts.

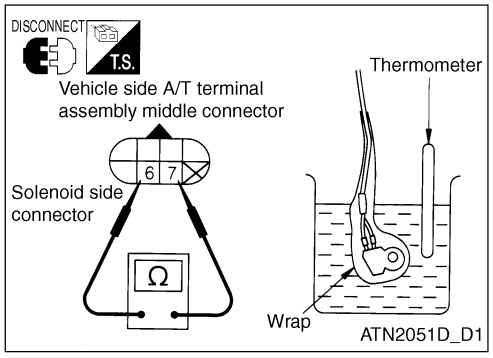

Component Inspection

FLUID TEMPERATURE SENSOR

- Refer to "Removal • Installation" (AT-121) in "Control Valve • Accumulator" for removal.
- Inspect the resistance between the terminals by varying the temperature as shown in the illustration.
  Approx. 20°C: Approx. 2.5 kΩ
  Approx. 80°C: Approx. 0.3 kΩ

Engine Circuit Signal System

Inspection Procedure

1. ENGINE SELF-DIAGNOSIS

Inspect the ignition signal circuit by ECCS control unit self-diagnosis.

Inspection results are OK?

OK → ● When using CONSULT-II: Go to No. 2.
● Without using CONSULT-II: Go to No. 3.

NG → Inspect the ignition signal circuit (Refer to ““DTC P0350 Ignition Signal Primary” (QG16: EC-118).

2. INPUT SIGNAL (WHEN USING CONSULT-II)

When using CONSULT-II

1. Start the engine.
2. Select TCM INPUT SIGNALS from DATA MONITOR.
3. Inspect if the engine RPM changes according with the accelerator pedal opening while looking at the engine RPM (When engine stopped, it indicates 0 RPM, but this is not malfunction).

Inspection results are OK?

OK → Go to No. 4.

NG → Inspect below items.

● Open or short circuit in the harness between the A/T control unit and ECCS control unit.

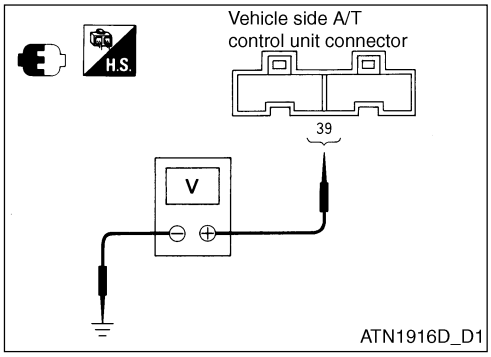

3. INPUT SIGNAL (WITHOUT USING CONSULT-II)

Without using CONSULT-II

1. Start the engine.
2. Measure the voltage between the A/T control unit connector terminal and ground.

   At idle: Approx. 0.5 - 1.5 V

Inspection results are OK?

OK → Go to No. 4.

NG → Inspect below items.

● Open or short circuit in the harness between the A/T control unit and ECCS control unit.

4. CHECK AFTER REPAIR

After driving for a while, perform the self-diagnosis again and check if still defective.

Refer to "CONSULT-II Function" (AT-50) and "Self-Diagnosis (Without Using CONSULT-II)" (AT-53).

Inspection results are OK?

OK End.

NG 1. Inspect the A/T control unit's input and output signal.

2. If NG again, re-inspect if connector's pin terminals have defective contacts.

Line Pressure Solenoid System

CONSULT-II Data Monitor Display

The value data is the reference value.

Monitor Item	Condition	Standard Value
LINE PRES DTY	Low line pressure	29 %
	High line pressure	94 %

A/T Control Unit Input/Output Signal Standards

The value data is the reference value from the circuit tester.

Terminal No.	Item	Condition	Standards
1	Line pressure solenoid valve	When accelerator pedal is released after engine warm up	Approx. 1.5 - 3.0 V
		When accelerator pedal is fully depressed after engine warm up	Approx. 0 V
2	Line pressure solenoid valve (Via dropping resistor)	When accelerator pedal is released after engine warm up	Approx. 4 - 14 V
		When accelerator pedal is fully depressed after engine warm up	Approx. 0 V

Inspection Procedure

1. GROUND CIRCUIT

1. Turn the key switch OFF.
2. Remove the A/T terminal assembly middle connection in the engine.
3. Measure the resistance between the connector terminals.

   Resistance: Approx. 2.5 - 5.0

Inspection results are OK?

OK Go to No. 2.

NG
1. Remove the control valve assembly. (Refer to "Removal • Installation" (AT-121)).
2. Inspect below items.

   Line pressure solenoid (Refer to "Component Inspection" (AT-77)).

   Open or short circuit in A/T terminal assembly.

2. POWER CIRCUIT

1. Start the engine.
2. Remove the A/T control unit connector.
3. Measure the resistance between the terminals.

   Resistance

   Terminal No. 2 - No. 4: Approx. 12

   Terminal No. 1 - No. 4: Approx. 0

Inspection results are OK?

OK Go to No. 3.

NG Inspect below items.

Dropping resistor (Refer to "Component Inspection" (AT-77)).

Open or short circuit of the main harness between the A/T control unit terminal No. 1 & 2 and the A/T terminal assembly.

3. CHECK AFTER REPAIR

After driving for a while, perform the self-diagnosis again and check if still defective.

Refer to "CONSULT-II Function" (AT-50) and "Self-Diagnosis (Without Using CONSULT-II)" (AT-53).

Inspection results are OK?

OK End.

NG
1. Inspect the A/T control unit's input and output signal.
2. If NG again, re-inspect if connector's pin terminals have defective contacts.

Component Inspection

LINE PRESSURE SOLENOID

Refer to "Removal • Installation" (AT-121) in "Control Valve • Accumulator".

Resistance

Measure the resistance between the terminals.

Solenoid Valve	Terminal No.		Resistance
Lockup solenoid valve	4	Ground	Approx. 2.5 - 5.0

Operation

Apply battery voltage between the terminal and ground and check for operation sound of the solenoid valve.

DROPPING RESISTOR

Measure the resistance between the terminals.

Resistance: Approx. 12

Inhibitor Switch, O/D Switch, Idle Switch and Full Switch Systems

Inspection Procedure

1. INHIBITOR SWITCH CIRCUIT (WHEN USING CONSULT-II)

When using CONSULT-II

1. Turn the key switch ON (Start the engine).
2. Select TCM INPUT SIGNALS from DATA MONITOR.
3. By moving the selector lever to P, R, N, D, 3, 2, and 1, check if the value on the display identical with selected position (At P range, the N range switch comes ON).

Inspection results are OK?

OK Go to No. 3.

NG Inspect below items.

- Open or short circuit in the main harness between the key switch and inhibitor switch.
- Inhibitor switch (Refer to “Component Inspection” (AT-82)).
- Open or short circuit in the main harness between the inhibitor switch and A/T control unit.
- Diode (P, N position).

2. INHIBITOR SWITCH CIRCUIT (WITHOUT USING CONSULT-II)

Without using CONSULT-II

1. Turn the key switch ON (Do not start the engine).
2. By moving the selector lever to P, R, N, D, 2, and 1, measure power between the A/T control unit connector terminal and ground.

   Voltage

   B: Power voltage

   O: Approx. 0 V

Range	Terminal				
	36	35	34	27	26
P, N	B	0	0	0	0
R	0	B	0	0	0
D	0	0	B	0	0
2	0	0	0	B	0
1	0	0	0	0	B

Inspection results are OK?

OK Go to No. 4.

NG Inspect below items.

Inhibitor switch (Refer to "Component Inspection" (AT-82)).

Open or short circuit in the main harness between the key switch and inhibitor switch.

Open or short circuit in the main harness between the inhibitor switch and A/T control unit.

Diode (P, N position).

3. O/D SWITCH CIRCUIT (WHEN USING CONSULT-II)

When using CONSULT-II

1. Turn the key switch ON (Do not start the engine).
2. Select TCM INPUT SIGNALS from DATA MONITOR.
3. Check if the lever switch indicator on the display changes ON and OFF when moving the shift lever from 3 to D. (When the shift lever is in 3, it displays as "ON" and When the shift lever is in D, it displays as "OFF".)

Inspection results are OK?

OK Go to No. 5.

NG Inspect below items.

O/D switch (Refer to "Component Inspection" (AT-82)).

Open or short circuit in the main harness between the A/T control unit and O/D switch.

Open or short circuit in the main harness O/D switch ground circuit.

4. O/D SWITCH CIRCUIT (WITHOUT USING CONSULT-II)

Without using CONSULT-II

1. Turn the key switch ON (Do not start the engine).
2. By turning ON and OFF the O/D switch, measure the voltage between the A/T control unit connector terminals and ground.

   O/D switch ON: Power voltage

   O/D switch OFF: Approx. 0 V

Inspection results are OK?

OK Go to No. 6.

NG Inspect below items.

O/D switch (Refer to “Components Inspection” (AT-82)).

Open or short circuit in the main harness between the A/T control unit and O/D switch.

Open or shirt circuit in the main harness O/D switch ground circuit.

5. THROTTLE VALVE SWITCH CIRCUIT (WITHOUT USING CONSULT-II)

Without using CONSULT-II

1. Turn the key switch ON (Do not start the engine).
2. Select TCM INPUT SIGNALS from DATA MONITOR.
3. By operating accelerator pedal, check if the idle switch and full switch properly turns ON and OFF.

Accelerator Pedal Operation	Monitor Item	
	CLOSED THL/SW	W/O THRL/P - SW
When released	“ON”	“OFF”
When fully depressed	“OFF”	“ON”

Inspection results are OK?

OK Go to No. 7.

NG Inspect below items.

Throttle valve switch (Refer to “Components Inspection” (AT-82)).

Open or short circuit in the main harness between the key switch and throttle valve switch.

Open or short circuit in the main harness between the throttle valve switch and A/T control unit.

6. THROTTLE VALVE SWITCH CIRCUIT (WITHOUT USING CONSULT-II)

Without using CONSULT-II

1. Turn the key switch ON (Engine warmed up/Do not start the engine).
2. By operating accelerator pedal, measure the voltage between the A/T control unit connector terminal and ground.

Accelerator Pedal Operation	Voltage	
	Terminal No. 16	Terminal No. 17
When released	Power voltage	Approx. 0 V
When fully depressed	Approx. 0 V	Power voltage

Inspection results are OK?

OK Go to No. 7.

NG Inspect below items.

Throttle valve switch (Refer to "Components Inspection" (AT-82)).

Open or short circuit in the main harness between the key switch and throttle valve switch.

Open or short circuit in the main harness between the throttle valve switch and A/T control unit.

7. CHECK AFTER REPAIR

After driving for a while, perform the self-diagnosis again and check if still defective.

Refer to "CONSULT-II Function" (AT-50) and "Self-Diagnosis (Without Using CONSULT-II)" (AT-53).

Inspection results are OK?

OK End.

NG 1. Inspect the A/T control unit's input and output signal.

2. If NG again, re-inspect if connector's pin terminals have defective contacts.

Component Inspection

INHIBITOR SWITCH

1. By moving the selector lever, check the continuity between the inhibitor switch connector terminals.

Range Position	Terminal No.	Continuity
P	1 - 2, 3 - 7	No continuity if not the selected position
R	3 - 8	
N	3 - 9	
D	3 - 6	
2	3 - 5	
1	3 - 4	

2. If NG, re-inspect while control cable removed. Refer the step 1.
3. If inspection becomes OK after removing the cable, adjust the control cable. (Refer to "Adjustment During Installation" (AT-120))

4. If still NG after removing the cable, remove the inhibitor switch and check for continuity between the inhibitor terminals. Refer to the step 1.
5. If OK after removing the inhibitor switch, inspect the inhibitor switch. (Refer to “Inhibitor Switch” (AT-123)).
6. If still NG after removing the inhibitor switch, then replace the inhibitor switch.

O/D SWITCH

Check the continuity between the terminals.

Range	Continuity
3	No continuity
D	Continuity

THROTTLE VALVE SWITCH

Idle switch

Check the continuity between the terminal No. 1 and No. 2.

Accelerator Pedal Operation	Continuity
Released	Continuity
Depressed over one-half	No continuity

Refer to “Throttle Position Sensor Adjustment” (QG:15 EC-114), “Throttle Valve Closed Position Learning” (QG16: EC-23).

FULL SWITCH

Check the continuity between the terminal No. 2 and No. 3.

Accelerator Pedal Operation	Continuity
Released	No continuity
Depressed over one-half	Continuity

Trouble Diagnosis by Symptoms

A/T CHECK Indicator Light does not Turn ON

SYMPTOM

A/T CHECK indicator light does not turn on for approx. 2 seconds after turning the key switch ON.

INSPECTION PROCEDURE

1. A/T CONTROL UNIT POWER

1. Turn the key switch ON (Do not start the engine).
2. Measure the voltage between A/T control unit terminal and ground.
   Voltage
   Terminal No. 10, 19, and 29 - Ground: Power voltage
3. Turn the key switch OFF.
4. Measure the voltage between A/T control unit terminal and ground.
   Voltage
   Terminal No. 28 - Ground: Power voltage
   Terminal No. 10 and 19 - Ground: Approx. 0V

Inspection results are OK?

OK Go to No. 2.

NG Inspect below items.

Open or short circuit in the main harness between the key switch and A/T control unit.

Key switch and fuse.

2. A/T CONTROL UNIT GROUND CIRCUIT

1. Turn the key switch OFF.
2. Remove the A/T control unit connector.
3. Check the continuity between the terminal No. 25, 28 and the ground.
4. If OK, then check if the harness is shorted to the ground and power.

Inspection results are OK?

OK Go to No. 3.

NG Repair the short circuit between the harness and connector ground and power.

3. A/T CHECK INDICATOR LIGHT CIRCUIT

1. Turn the key switch OFF.
2. Check the resistance between the A/T control unit connector terminal No. 10 and No. 13.
   Resistance: 50 - 100
3. Install all removed components.

Inspection results are OK?

OK Go to No. 4.

NG Inspect below items.

A/T CHECK indicator light: Refer to “COMBINATION METER - TROUBLE DIAGNOSIS” (EL-69).

Open or short circuit in the main harness and fuse between the key switch and O/D OFF indicator light.

Open or short circuit in the harness between the O/D OFF indicator light and A/T control unit.

4. CHECK AFTER REPAIR

Re-inspect if symptoms occur again.

Inspection results are OK?

OK Inspection results.

NG 1. Inspect the A/T control unit’s input and output signal.
2. If NG again, re-inspect if connector’s pin terminals have defective contacts.

Engine does not Start in P and N Ranges

SYMPTOM

Engine does not start in P and N ranges.

Engine does not start in D, 3, 2, 1, and R ranges.

INSPECTION TIPS

1. INHIBITOR SWITCH CIRCUIT

When using CONSULT-II

Check if the inhibitor switch circuit trouble is displayed in TCM INPUT SIGNALS from DATA MONITOR.

Without using CONSULT-II

From the results of self-diagnosis, check if the inhibitor switch circuit trouble is indicated.

Inspection results are OK?

OK Inspect the inhibitor switch circuit.

NG Go to No. 2.

2. INHIBITOR SWITCH

Inspect for any open or short circuit between the inhibitor switch connector terminals.

Refer to “Inhibitor Switch” (AT-82).

Inspection results are OK?

OK Go to No. 3.

NG Replace the inhibitor switch.

3. STARTER

Inspect the starter system. Refer to respective “Wire Diagram”.

Inspection results are OK?

OK End.

NG Repair or replace the defective component(s).

The Vehicle Moves in P Range when Pushed

SYMPTOM

While in P range, the vehicle moves when pushed without engaging the parking apparatus.

INSPECTION TIPS

1. PARKING APPARATUS

Inspect the parking apparatus.

Refer to “Standard Model” (AT-132).

Inspection results are OK?

OK End.

NG Repair or replace the defective component(s).

The Vehicle Drives in N Range

SYMPTOM

The vehicle drives forward or backward in N range.

INSPECTION TIPS

1. INHIBITOR SWITCH CIRCUIT

When using CONSULT-II

Check if the inhibitor switch circuit trouble is displayed in TCM INPUT SIGNALS from DATA MONITOR.

Without using CONSULT-II

From the results of self-diagnosis, check if the inhibitor switch circuit trouble is indicated.

Inspection results are OK?

OK	Inspect the inhibitor switch circuit.
NG	Go to No. 2.

2. CONTROL VALVE

Inspect the control valve.

Refer to “Shift Control System” (AT-119).

Inspection results are OK?

OK	Go to No. 3.
NG	Adjust the control cable. (Refer to “Shift Control System” (AT-119))

3. A/T ATF LEVEL

Re-inspect the A/T ATF level.

Inspection results are OK?

OK	Go to No. 4.
NG	Add A/T fluid.

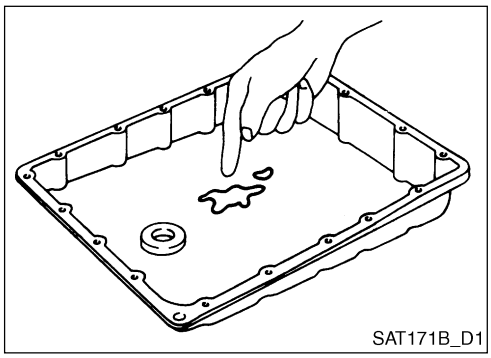

4. A/T ATF CONDITION

1. Remove the oil pan.
2. Inspect the A/T fluid condition.

Inspection results are OK?

OK → Go to No. 5.

NG → 1. Disassemble the A/T.
2. Inspect below items.
- Forward clutch assembly
- Overrun clutch assembly
- Reverse clutch assembly

5. CHECK AFTER REPAIR

Re-inspect if symptom occur again.

Inspection results are OK?

OK → End.

NG →
- Inspect the A/T control unit's input and output signal.
- If NG again, re-inspect if connector's pin terminals have defective contacts.

Too much Shift Shock when Shifting from N to R Range

SYMPTOM

There is high shift shock when shifting from N to R range.

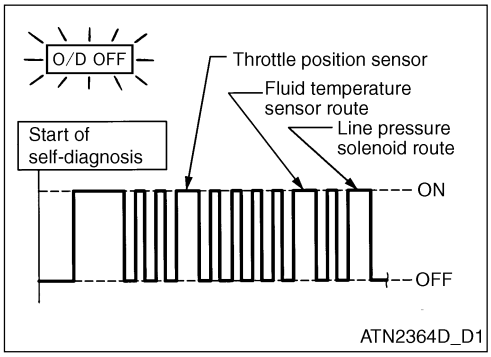

INSPECTION TIPS

1. SELF-DIAGNOSIS RESULTS

Does the self-diagnosis results indicate the fluid temperature sensor, line pressure solenoid valve and the lock sensor?

YES → Inspect the trouble system. Refer to "Fluid Temperature Sensor System and A/T Control Unit Power System" (AT-71), "Line Pressure Solenoid System" (AT-76) and "Throttle Position Sensor System" (AT-59).

NO → Go to No. 2.

2. THROTTLE POSITION SENSOR

Inspect the throttle position sensor.

- Refer to "Throttle Position Sensor System" "DTC P0122, P0123 Throttle Position Sensor-2 Circuit" (QG16: EC-148).

Inspection results are OK?

OK → Go to No. 3.

NG → Repair or replace the throttle position sensor.

3. LINE PRESSURE

Check the line pressure during idle in D range.

Refer to "Line Pressure Test" (AT-27).

Inspection results are OK?

OK Go to No. 4.

NG
1. Remove the control valve assembly. (Refer to "Removal • Installation" (AT-121))
2. Inspect below items.

   Line pressure control valve (pressure regulator valve, pressure modify valve, pilot valve and pilot filter).

   Line pressure solenoid valve.

4. CHECK AFTER REPAIR

Re-inspect if symptoms occur again.

Inspection results are OK?

OK End.

NG
1. Inspect the A/T control unit's input and output signal.
2. If NG again, re-inspect if connector's pin terminals have defective contacts.

The Vehicle cannot Drive in R Range or Extremely Bad Acceleration

SYMPTOM

The vehicle has no creep effect in R range. Or extremely bad acceleration.

INSPECTION TIPS

1. A/T FLUID LEVEL

Re-inspect the A/T fluid level.

Inspection results are OK?

OK Go to No. 2.

NG Add ATF.

2. STALL TEST

Inspect the stall RPM in 1 and R range.

Refer to "Stall Test" (AT-25).

Inspection results are OK?

OK Go to No. 3.

NG 1 When OK in 1 range and NG in R range

1. Remove the control valve assembly. (Refer to "Removal • Installation" (AT-121))
2. Inspect below items.
   - Line pressure control valve (pressure regulator valve, pressure modify valve, pilot valve and pilot filter)
   - Line pressure solenoid valve
3. Disassemble the A/T.
4. Inspect below items.
   - Oil pump assembly
   - Torque converter
   - Reverse clutch assembly
   - High clutch assembly

NG 2 Go to No. 6 if NG in 1 and R ranges.

3. LINE PRESSURE

Inspect the line pressure during idle in R range.

Refer to "Line Pressure Test" (AT-27).

Inspection results are OK?

OK Go to No. 4.

NG

1. Remove the control assembly. (Refer to "Removal • Installation" (AT-121))
2. Inspect below items.
   - Refer to line pressure control valve (pressure regulator valve, pressure modify valve, pilot valve and pilot filter)
   - Line pressure solenoid valve
3. Disassemble the A/T.
4. Inspect below items.
   - Oil pump

4. A/T FLUID CONDITION

1. Remove the oil pan.
2. Inspect the A/T fluid condition.

Inspection results are OK?

OK Go to No. 5.

NG Go to No. 6.

5. CHECK AFTER REPAIR

Re-inspect if symptom occurs again.

Inspection results are OK?

OK End.

NG
1. Inspect the A/T control unit's input and output signal.
2. If NG again, re-inspect if connector's pin terminals have defective contacts.

6. DETECTING DEFECTIVE ITEMS

1. Remove the control valve assembly. (Refer to "Removal • Installation" (AT-121))
2. Inspect below items.
   - Line pressure control valve (pressure regulator valve, pressure modify valve, pilot valve and pilot filter).
   - Disassemble the A/T.
3. Disassemble the A/T.
4. Inspect below items.
   - Oil pump assembly
   - Torque converter
   - Reverse clutch assembly
   - High clutch assembly
   - Low and reverse brake assembly
   - Low one-way clutch

Inspection results are OK?

OK Go to No. 5.

NG Repair or replace the defective component(s).

The Vehicle cannot Drive in D, 3, 2, 1 Range or Extremely Bad Acceleration

SYMPTOM

The vehicle has no creep effect in D, 3, 2, 1 range.

INSPECTION TIPS

1. A/T FLUID LEVEL

Re-inspect the A/T fluid level.

Inspection results are OK?

OK Go to No. 2.

NG Add A/T.

2. STALL TEST

Inspect the stall RPM in D range.

Refer to "Stall Test" (AT-25).

Inspection results are OK?

OK Go to No. 3.

NG Go to No. 6.

3. LINE PRESSURE

Inspect the line pressure during idle in D range.

Refer to "Line Pressure Test" (AT-27).

Inspection results are OK?

OK Go to No. 4.

NG
1. Remove the control assembly. (Refer to "Removal • Installation" (AT-121))
2. Inspect below items.
   - Line pressure control valve (pressure regulator valve, pressure modify valve, pilot valve and pilot filter)
   - Line pressure solenoid valve
3. Disassemble the A/T.
4. Inspect below items.
   - Oil pump

4. A/T FLUID CONDITION

1. Remove the oil pan.
2. Inspect the A/T fluid condition.

Inspection results are OK?

OK Go to No. 5.

NG Go to No. 6.

5. CHECK AFTER REPAIR

Re-inspect if symptom occurs again.

Inspection results are OK?

OK End.

NG 1. Inspect the A/T control unit's input and output signal.
2. If NG again, re-inspect if connector's pin terminals have defective contacts.

6. DETECTING DEFECTIVE ITEMS

1. Remove the control valve assembly. (Refer to "Removal • Installation" (AT-121))
2. Inspect below items.
   - Line pressure control valve (pressure regulator valve, pressure modify valve, pilot valve and pilot filter)
   - Line pressure solenoid valve
3. Disassemble the A/T.
4. Inspect below items.
   - Oil pump assembly
   - Forward clutch assembly
   - Forward one-way clutch
   - Low one-way clutch
   - Low and reverse brake assembly
   - Torque converter

Inspection results are OK?

OK Go to No. 5.

NG Repair or replace the defective component(s).

The Vehicle does not Start from D1

SYMPTOM

The vehicle does not start from D1 in road test part 1.

INSPECTION TIPS

1. SYMPTOM CHECK

Is there creep effect in R range?

OK Go to No. 2.

NG Go to “The Vehicle cannot Drive in R Range or Extremely Bad Acceleration” (AT-89).

2. SELF-DIAGNOSIS RESULTS

Does the self-diagnosis results indicate the vehicle speed sensor 1 (Output shaft revolution sensor), shift solenoid A and B or vehicle speed sensor 2 after road test?

YES Inspect the trouble system. Refer to “Vehicle Speed Sensor 1 (Output Shaft Revolution Sensor) System” (AT-55), “Shift Solenoid A System” (AT-63), “Shift Solenoid B System” (AT-65) and “Vehicle Speed Sensor 2 System” (AT-57).

NO Go to No. 2.

3. THROTTLE POSITION SENSOR

Inspect the throttle position sensor.

Refer to “Throttle Position Sensor System” (QG:15 EC-73), “DTC P0122, P0123 Throttle Position Sensor-2 Circuit” (QG16: EC-148).

Inspection results are OK?

OK Go to No. 3.

NG Repair or replace the throttle position sensor.

4. LINE PRESSURE

Check the line pressure under throttle point in D range.

Refer to “Line Pressure Test” (AT-27).

Inspection results are OK?

OK Go to No. 5.

NG Go to No. 8.

5. A/T FLUID CONDITION

1. Remove the oil pan.
2. Inspect the A/T fluid condition.

Inspection results are OK?

OK Go to No. 6.

NG Go to No. 8.

6. DETECTING DEFECTIVE ITEMS

1. Remove the control valve assembly. (Refer to "Removal • Installation" (AT-121))
2. Inspect below items.

   Sift valve A
   Sift valve B
   Sift solenoid A
   Sift solenoid B
   Pilot valve
   Pilot filter

Inspection results are OK?

OK Go to No. 7.

NG Repair or replace the defective component(s).

7. CHECK AFTER REPAIR

Re-inspect if symptom occurs again.

Inspection results are OK?

OK End.

NG
1. Inspect the A/T control unit's input and output signal.
2. If NG again, re-inspect if connector's pin terminals have defective contacts.

8. DETECTING DEFECTIVE ITEMS

1. Remove the control valve assembly. (Refer to "Removal • Installation" (AT-121))
2. Inspect below items.
   - Sift valve A
   - Sift valve B
   - Sift solenoid A
   - Sift solenoid B
   - Pilot valve
   - Pilot filter
3. Disassemble the A/T.
4. Inspect below items.
   - Forward clutch assembly
   - Forward one-way clutch
   - Low one-way clutch
   - High clutch assembly
   - Torque converter
   - Oil pump assembly

Inspection results are OK?

OK Go to No. 7.

NG Repair or replace the defective component.

Does not Shift from D1 to D2 in D Range. Does not Kickdown from D4 to D2

SYMPTOM

While in D range, it does not shift from D1 to D2. Also, it does not kickdown from D4 to D2 when fully depressing the accelerator pedal.

INSPECTION TIPS

1. SYMPTOM CHECK

Is there creep effect in D, 3, 2, and 1 range and can start from D1 during the road test?

YES Go to No. 2.

NO Go to "The Vehicle cannot Drive in D, 3, 2, 1 Range or Extremely Bad Acceleration" (AT-91) or "The Vehicle does not Start from D1" (AT-93).

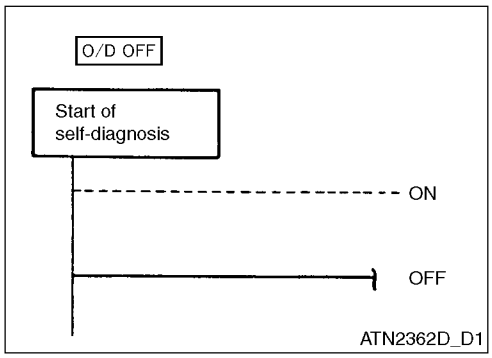

2. INHIBITOR SWITCH CIRCUIT

When using CONSULT-II

Check if the inhibitor switch circuit trouble is displayed in TCM INPUT SIGNALS from DATA MONITOR.

Without using CONSULT-II

From the results of self-diagnosis, check if the inhibitor switch circuit trouble is indicated.

Inspection results are OK?

OK → Inspect the inhibitor switch circuit.

NG → Go to No. 3.

3. VEHICLE SPEED SENSOR 1 (OUTPUT SHAFT REVOLUTION SENSOR) AND VEHICLE SPEED SENSOR 2 CIRCUIT

Inspect the vehicle speed sensor 1 (Output shaft revolution sensor) and vehicle speed sensor 2 circuit.

- Refer to "Vehicle Speed Sensor 1 (Output Shaft Revolution Sensor) System" (AT-55) and "Vehicle Speed Sensor 2 System" (AT-57).

Inspection results are OK?

OK → Go to No. 4.

NG → Repair or replace the vehicle speed sensor 1 (Output shaft revolution sensor) and vehicle speed sensor 2.

4. THROTTLE POSITION SENSOR

Inspect the throttle position sensor.

- Refer to "DTC P0122, P0123 Throttle Position Sensor-2 Circuit" (QG16: EC-148).

Inspection results are OK?

OK → Go to No. 5.

NG → Repair or replace the throttle position sensor.

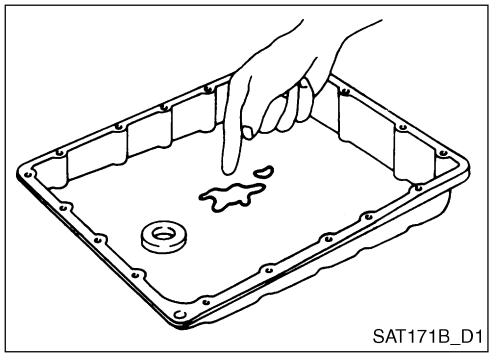

5. A/T FLUID CONDITION

1. Remove the oil pan.
2. Inspect the A/T fluid condition.

Inspection results are OK?

OK → Go to No. 6.

NG → Go to No. 8.

6. DETECTING DEFECTIVE ITEMS

1. Remove the control valve assembly. (Refer to "Removal • Installation" (AT-121))
2. Inspect below items.
   - Sift valve A
   - Sift solenoid A
   - Pilot valve
   - Pilot filter

Inspection results are OK?

OK Go to No. 7.

NG Repair or replace the defective component(s).

7. CHECK AFTER REPAIR

Re-inspect if symptom occurs again.

Inspection results are OK?

OK End.

NG
1. Inspect the A/T control unit's input and output signal.
2. If NG again, re-inspect if connector's pin terminals have defective contacts.

8. DETECTING DEFECTIVE ITEMS

1. Remove the control valve assembly. (Refer to "Removal • Installation" (AT-121))
2. Inspect below items.
   - Sift valve A
   - Sift solenoid A
   - Pilot valve
   - Pilot filter
3. Disassemble the A/T.
4. Inspect below items.
   - Servo piston assembly
   - Brake band
   - Oil pump assembly

Inspection results are OK?

OK Go to No. 7.

NG Repair or replace the defective component.

Does not Shift from D2 to D3 in D Range

SYMPTOM

While driving to specified speed, it does not shift from D2 to D3

INSPECTION TIPS

1. SYMPTOM CHECK

Is there creep effect in D, 3, 2, and 1 range and can start from D1 during the road test?

YES → Go to No. 2.

NO → Go to "The Vehicle cannot Drive in D, 3, 2, 1 Range or Extremely Bad Acceleration" (AT-91) or "The Vehicle does not Start from D1" (AT-93).

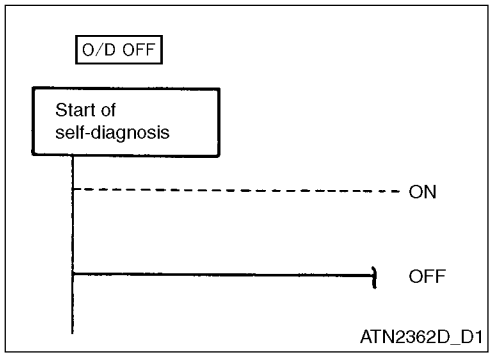

2. INHIBITOR SWITCH CIRCUIT

When using CONSULT-II

Check if the inhibitor switch circuit trouble is displayed in TCM INPUT SIGNALS from DATA MONITOR.

Without using CONSULT-II

From the results of self-diagnosis, check if the inhibitor switch circuit trouble is indicated.

Inspection results are OK?

OK → Inspect the inhibitor switch circuit.

NG → Go to No. 3.

3. THROTTLE POSITION SENSOR

Inspect the throttle position sensor.

- Refer to "DTC P0122, P0123 Throttle Position Sensor-2 Circuit" (QG16: EC-148).

Inspection results are OK?

OK → Go to No. 4.

NG → Repair or replace the throttle position sensor.

4. A/T FLUID CONDITION

1. Remove the oil pan.
2. Inspect the A/T fluid condition.

Inspection results are OK?

OK Go to No. 5.

NG Go to No. 7.

5. DETECTING DEFECTIVE ITEMS

1. Remove the control valve assembly. (Refer to "Removal • Installation" (AT-121))
2. Inspect below items.

   Sift valve B

   Sift solenoid B

   Pilot valve

   Pilot filter

Inspection results are OK?

OK Go to No. 6.

NG Repair or replace the defective component(s).

6. CHECK AFTER REPAIR

Re-inspect if symptom occurs again.

Inspection results are OK?

OK End.

NG 1. Inspect the A/T control unit's input and output signal.

2. If NG again, re-inspect if connector's pin terminals have defective contacts.

7. DETECTING DEFECTIVE ITEMS

1. Remove the control valve assembly. (Refer to “Removal • Installation” (AT-121))
2. Inspect below items.
   - Sift valve B
   - Sift solenoid B
   - Pilot valve
   - Pilot filter
3. Disassemble the A/T.
4. Inspect below items.
   - Servo piston assembly
   - High clutch assembly
   - Oil pump assembly

Inspection results are OK?

OK Go to No. 6.

NG Repair or replace the defective component.

Does not Shift from D3 to D4 in D Range

SYMPTOM

While driving to a specified speed, it does not shift from D3 to D4.

When A/T does not get warmed up, it does not shift from D3 to D4.

INSPECTION TIPS

1. Symptom Check

Is there creep effect in D, 3, 2, and 1 range and can start from D1 during the road test?

YES Go to No. 2.

NO Go to “The Vehicle cannot Drive in D, 3, 2, 1 Range or Extremely Bad Acceleration” (AT-91) or “The Vehicle does not Start from D1” (AT-93).

2. SELF-DIAGNOSIS RESULTS

When using CONSULT-II

After the road test, check if the self-diagnosis results indicate the following trouble items.

- Inhibitor switch
- O/D OFF switch
- Fluid temperature sensor
- Vehicle speed sensor 1 (Output shaft revolution sensor)
- Shift solenoid A and B
- Vehicle speed sensor 2

Inspection results are OK?

YES Inspect the defective system. (Refer to “Inhibitor Switch, O/D Switch, Idle Switch and Full Switch System” (AT-79), “Fluid Temperature Sensor System and A/T Control Unit Power System” (AT-71), “Vehicle Speed Sensor 1 (Output Shaft Revolution Sensor) System” (AT-55), “Shift Solenoid A System” (AT-63), “Shift Solenoid B System” (AT-65), and “Vehicle Speed Sensor 2 System” (AT-57))

NO Go to No. 3.

3. Throttle Position Sensor

Inspect the throttle position sensor.

- Refer to “DTC P0122, P0123 Throttle Position Sensor-2 Circuit” (QG16: EC-148).

Inspection results are OK?

OK → Go to No. 4.

NG → Repair or replace the throttle position sensor.

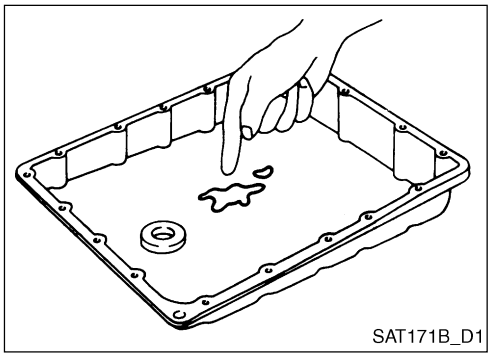

4. A/T Fluid Condition

1. Remove the oil pan.
2. Inspect the A/T fluid condition.

Inspection results are OK?

OK → Go to No. 5.

NG → Go to No. 7.

5. Detecting Defective Items

1. Remove the control valve assembly. (Refer to “Removal • Installation” (AT-121))
2. Inspect below items.
   - Sift valve B
   - Sift solenoid B
   - Pilot valve
   - Pilot filter

Inspection results are OK?

OK → Go to No. 6.

NG → Repair or replace the defective component(s).

6. Check After Repair

Re-inspect if symptom occurs again.

Inspection results are OK?

OK → End.

NG → 1. Inspect the A/T control unit’s input and output signal.
2. If NG again, re-inspect if connector’s pin terminals have defective contacts.

7. Detecting Defective Items

1. Remove the control valve assembly. (Refer to "Removal • Installation" (AT-121))
2. Inspect below items.
   - Sift valve B
   - Sift solenoid B
   - Pilot valve
   - Pilot filter
3. Disassemble the A/T.
4. Inspect below items.
   - Servo piston assembly
   - High clutch assembly
   - Oil pump assembly

Inspection results are OK?

OK → Go to No. 6.

NG → Repair or replace the defective component.

Does not Lockup

SYMPTOM

While driving to a specified speed, it does not lockup.

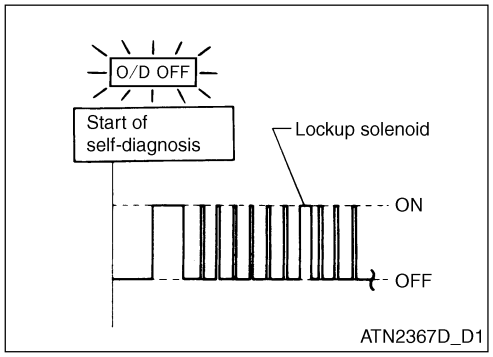

INSPECTION TIPS

1. Self-Diagnosis Result

Does the self-diagnosis results indicate the defect in the lockup solenoid valve circuit?

YES → Inspect the lockup solenoid valve circuit. (Refer to "Lockup Solenoid System" (AT-70).)

NO → Go to No. 2.

2. Throttle Position Sensor

Inspect the throttle position sensor.

- Refer to "DTC P0122, P0123 Throttle Position Sensor-2 Circuit" (QG16: EC-148).

Inspection results are OK?

OK → Go to No. 3.

NG → Repair or replace the throttle position sensor.

3. DETECTING DEFECTIVE ITEMS

1. Remove the control valve assembly. (Refer to "Removal • Installation" (AT-121))
2. Inspect below items.
   - Lockup control valve
   - Torque converter relief valve
   - Pilot valve
   - Pilot filter

Inspection results are OK?

OK Go to No. 4.

NG Repair or replace the defective component.

4. CHECK AFTER REPAIR

Re-inspect if symptom occurs again.

Inspection results are OK?

OK End.

NG
1. Inspect the A/T control unit's input and output signal.
2. If NG again, re-inspect if connector's pin terminals have defective contacts.

Does not Maintain the Lockup State

SYMPTOM

The lockup condition does not continue for more than 30 seconds.

INSPECTION TIPS

1. SELF-DIAGNOSIS RESULT

Does the self-diagnosis result indicate the defect in the engine revolution signal circuit?

YES Inspect the engine revolution signal circuit. (Refer to "Engine Revolution Signal Circuit" (AT-74))

NO Go to No. 2.

2. A/T FLUID CONDITION

1. Remove the oil pan.
2. Inspect the A/T fluid condition.

Inspection results are OK?

OK Go to No. 3.

NG Go to No. 5.

3. DETECTING DEFECTIVE ITEMS

1. Remove the control valve assembly. (Refer to “Removal • Installation” (AT-121))
2. Inspect below items.
   - Lockup control valve
   - Pilot valve
   - Pilot filter

Inspection results are OK?

OK Go to No. 4.

NG Repair or replace the defective component.

4. CHECK AFTER REPAIR

Re-inspect if symptom occurs again.

Inspection results are OK?

OK End.

NG
1. Inspect the A/T control unit’s input and output signal.
2. If NG again, re-inspect if connector’s pin terminals have defective contacts.

5. DETECTING DEFECTIVE ITEMS

1. Remove the control valve assembly. (Refer to “Removal • Installation” (AT-121))
2. Inspect below items.
   - Lockup solenoid valve
   - Pilot valve
   - Pilot filter
3. Disassemble the A/T.
4. Inspect below items.
   - Oil pump assembly
   - Torque converter

Inspection results are OK?

OK Go to No. 4.

NG Repair or replace the defective component.

Lockup does not Release

SYMPTOM

Lockup does not release even when the accelerator pedal is released.

INSPECTION TIPS

1. THROTTLE VALVE SWITCH (IDLE SWITCH/FULL SWITCH) CIRCUIT.

When using CONSULT-II

Check if throttle valve switch circuit defect is displayed in TCM INPUT SIGNALS from DATA MONITOR. Refer to "Inhibitor Switch, O/D Switch, Idle Switch and Full Switch System" (AT-79).

Without using CONSULT-II

Check if idle switch circuit defect is displayed as a result of self-diagnosis.

Inspection results are OK?

OK	Inspect the idle switch circuit. Refer to "Inhibitor Switch, O/D Switch, Idle Switch and Full Switch System" (AT-79).
NG	Go to No. 2.

2. CHECK AFTER REPAIR

Re-inspect if symptom occurs again.

Inspection results are OK?

OK	End.
NG	1. Inspect the A/T control unit's input and output signal. 2. If NG again, re-inspect if connector's pin terminals have defective contacts.

Engine Speed does not Drop to Idle RPM when Decelerating in D Range (D4 D3)

SYMPTOM

When accelerator pedal is released from D4 to D3, the engine speed does not return to idle RPM smoothly.

The engine brake does not work when shifted to 3.

The engine brake does not work when shifted from D to 2 range.

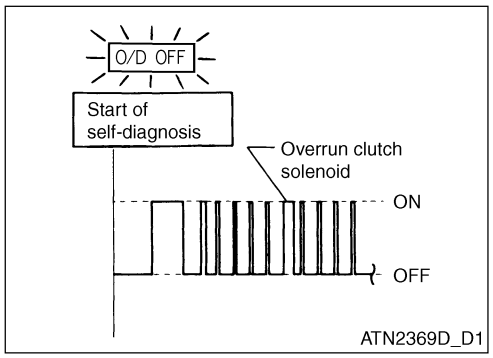

INSPECTION TIPS

1. SELF-DIAGNOSIS RESULT

Does the self-diagnosis result display defect in the overrun clutch solenoid valve circuit?

YES → Inspect the overrun clutch solenoid valve circuit. (Refer to "Overrun Clutch Solenoid System" (AT-67))

NO → Go to No. 2

2. THROTTLE POSITION SENSOR

Inspect the throttle position sensor.

- Refer to "DTC P0122, P0123 Throttle Position Sensor-2 Circuit" (QG16: EC-148).

Inspection results are OK?

OK → Go to No. 3.

NG → Repair or replace the throttle position sensor.

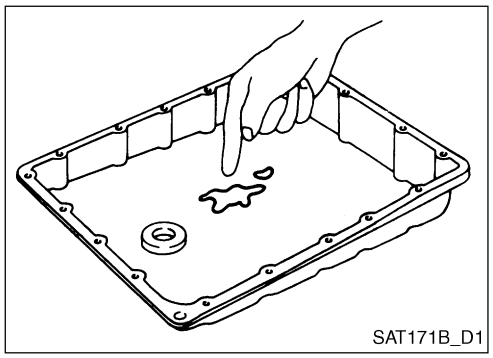

3. A/T FLUID CONDITION

1. Remove the oil pan.
2. Inspect the A/T fluid condition.

Inspection results are OK?

OK → Go to No. 4.

NG → Go to No. 6.

4. DETECTING DEFECTIVE ITEMS

1. Remove the control valve assembly. (Refer to "Removal • Installation" (AT-121))
2. Inspect below items.
   - Overrun clutch control valve
   - Overrun clutch reducing valve
   - Overrun clutch solenoid valve

Inspection results are OK?

OK → Go to No. 5.

NG → Repair or replace the defective component.

5. CHECK AFTER REPAIR

Re-inspect if symptom occurs again.

Inspection results are OK?

OK End.

NG 1. Inspect the A/T control unit's input and output signal.
2. If NG again, re-inspect if connector's pin terminals have defective contacts.

6. DETECTING DEFECTIVE ITEMS

1. Remove the control valve assembly. (Refer to "Removal • Installation" (AT-121))
2. Inspect below items.
   Overrun clutch control valve
   Overrun clutch reducing valve
   Overrun clutch solenoid valve
3. Disassemble the A/T.
4. Inspect below items.
   Overrun clutch assembly
   Oil pump assembly

Inspection results are OK?

OK Go to No. 5.

NG Repair or replace the defective component.

Does not Shift from D4 to D3 in D Range under When Shifted from D to 3

SYMPTOM

When shifted from D to 3, it does not shift from D4 to D3.

INSPECTION TIPS

1. O/D SWITCH CIRCUIT

When using CONSULT-II

Check if O/D switch circuit defect is displayed in TCM INPUT SIGNALS from DATA MONITOR. Refer to "Inhibitor Switch, O/D Switch, Idle Switch and Full Switch System" (AT-79).

Without using CONSULT-II

Check if O/D switch circuit defect is displayed as a result of self-diagnosis.

Inspection results are OK?

YES Inspect the O/D switch circuit. Refer to "Inhibitor Switch, O/D Switch, Idle Switch and Full Switch System" (AT-79).

NO Go to "Does not Shift from D2 to D3 in D Range" (AT-98).

Does not Shift from D3 to 2_2 when Selector Lever is Moved from D Range to 2 Range

SYMPTOM

It does not shift from D3 to 2_2 when selecting 2 range from D range.

INSPECTION TIPS

1. INHIBITOR SWITCH CIRCUIT

When using CONSULT-II

Check if inhibitor switch circuit defect is displayed in TCM INPUT SIGNALS from DATA MONITOR. Refer to "Inhibitor Switch, O/D Switch, Idle Switch and Full Switch System" (AT-79).

Without using CONSULT-II

Check if inhibitor switch circuit defect is displayed as a result of self-diagnosis (O/D OFF indicator does not come on).

Inspection results are OK?

YES → Inspect the inhibitor switch circuit. Refer to "Inhibitor Switch, O/D Switch, Idle Switch and Full Switch System" (AT-79).

NO → Go to "Does not Shift from D1 to D2 in D Range. Does not Kickdown from D4 to D2" (AT-96).

Does not Shift from 2_2 to 1_1 when Selector Lever is Moved from 2 Range to 1 Range

SYMPTOM

It does not shift from 2_2 to 1_1 when selecting 1 range from 2 range.

INSPECTION TIPS

1. INHIBITOR SWITCH CIRCUIT

When using CONSULT-II

Check if inhibitor switch circuit defect is displayed in TCM INPUT SIGNALS from DATA MONITOR. Refer to "Inhibitor Sswitch, O/D Switch, Idle Switch and Full Switch System" (AT-79).

Without using CONSULT-II

Check if inhibitor switch circuit defect is displayed as a result of self-diagnosis (O/D OFF indicator does not come on).

Inspection results are OK?

YES → Inspect the inhibitor switch circuit. Refer to "Inhibitor Switch, O/D Switch, Idle Switch and Full Switch System" (AT-79).

NO → Go to No. 2.

2. CHECK AFTER REPAIR

Re-inspect if symptom occurs again.

Inspection results are OK?

OK End.

NG
1. Inspect the A/T control unit's input and output signal.
2. If NG again, re-inspect if connector's pin terminals have defective contacts.

No Engine Brake in "1" Range

SYMPTOM

Engine brake does not work when shifting from 2_2 (1_2) to 1_1.

INSPECTION TIPS

1. CHECK AFTER REPAIR

Is there creep effect in R range?

YES Go to "Engine Speed does not Drop to Idle RPM when Decelerating in D Range (D4 D3)" (AT-106).

NO Go to "The Vehicle cannot Drive in R Range or Extremely Bad Acceleration" (AT-89).

Cannot do Self-Diagnosis

SYMPTOM

A/T CHECK indicator circuit is normal, but indicator light does not come on when self-diagnosis is performed.

INSPECTION TIPS

1. INHIBITOR SWITCH CIRCUIT (WHEN USING CONSULT-II)

When using CONSULT-II

1. Turn the key switch ON (Do not start the engine).
2. Select TCM INPUT SIGNALS from DATA MONITOR.
3. By moving the selector lever to P, R, N, D, 2, and 1, check if the value on the display identical with selected position (At P range, the N range switch comes ON).

Inspection results are OK?

OK Go to No. 3.

NG Inspect below items.

Inhibitor switch (Refer to "Component Inspection" (AT-114))

Open or short circuit in the main harness between the key switch and inhibitor switch.

Open or short circuit in the main harness between the inhibitor switch and A/T control unit.

Diode (P, N position).

2. INHIBITOR SWITCH CIRCUIT (WITHOUT USING CONSULT-II)

Without using CONSULT-II

1. Turn the key switch ON (Do not start the engine).
2. By moving the selector lever to P, R, N, D, 2, and 1, measure voltage between the A/T control unit connector terminal and ground.

Voltage

B: Power voltage

O: Approx. 0 V

Range	Terminal				
	36	35	34	27	26
"P", "N"	B	0	0	0	0
"R"	B	B	0	0	0
"D"	0	0	B	0	0
"2"	0	0	0	B	0
"1"	0	0	0	0	B

Inspection results are OK?

OK Go to No. 4.

NG Inspect below items.

Inhibitor switch (Refer to "Component Inspection" (AT-114)).

Open or short circuit in the main harness between the key switch and inhibitor switch.

Open or short circuit in the main harness between the inhibitor switch and A/T control unit.

Diode (P, N position).

3. O/D SWITCH CIRCUIT (WHEN USING CONSULT-II)

When using CONSULT-II

1. Turn the key switch ON (Do not start the engine).
2. Select TCM INPUT SIGNALS from DATA MONITOR.
3. Check if the shift indicator on the display changes ON and OFF when shifted from 3 to D. (When the shift lever is in 3, it displays as “ON” and when the shift lever is in D, it displays as “OFF”.)

Inspection results are OK?

OK Go to No. 5.

NG Inspect below items.

O/D switch (Refer to “Component Inspection” (AT-114)).

Open or short circuit in the main harness between the A/T control unit and O/D switch.

Open or short circuit in the main harness O/D switch circuit.

4. O/D SWITCH CIRCUIT (WITHOUT USING CONSULT-II)

Without using CONSULT-II

1. Turn the key switch ON (Do not start the engine).
2. By turning ON and OFF the O/D switch, measure the voltage between the A/T control unit connector terminals and ground.

   D range: Battery voltage

   3 range: Approx. 0 V

Inspection results are OK?

OK Go to No. 6.

NG Inspect below items.

O/D switch (Refer to “Components Inspection” (AT-114)).

Open or short circuit in the main harness between the A/T control unit and O/D switch.

Open or shirt circuit in the main harness O/D switch circuit.

5. THROTTLE VALVE SWITCH CIRCUIT (WHEN USING CONSULT-II)

When using CONSULT-II

1. Turn the key switch ON (Do not start the engine).
2. Select TCM INPUT SIGNALS from DATA MONITOR.
3. By operating accelerator pedal, check if the accelerator pedal switch and full switch properly turns ON and OFF on the display.

Accelerator pedal operation	Monitor Item	
	CLOSED THL/SW	W/O THRL/P - SW
When released	"ON"	"OFF"
When fully depressed	"OFF"	"ON"

Inspection results are OK?

OK Go to No. 7.

NG Inspect below items.

Throttle valve switch (Refer to "Components Inspection" (AT-114)).

Open or short circuit in the main harness between the key switch and throttle valve switch.

Open or short circuit in the main harness between the throttle valve switch and A/T control unit.

6. THROTTLE VALVE SWITCH CIRCUIT (WITHOUT USING CONSULT-II)

Without using CONSULT-II

1. Turn the key switch ON (Engine warmed up/Do not start the engine).
2. By depressing the accelerator pedal, measure the voltage between the A/T control unit connector terminal and ground.

Accelerator pedal operation	Voltage	
	Terminal No. 16	Terminal No. 17
When released	Power voltage	Approx. 0 V
When fully depressed	Approx. 0 V	Power voltage

Inspection results are OK?

OK Go to No. 7.

NG Inspect below items.

Throttle valve switch (Refer to "Components Inspection" (AT-114)).

Open or short circuit in the main harness between the key switch and throttle valve switch.

Open or short circuit in the main harness between the throttle valve switch and A/T control unit.

7. CHECK AFTER REPAIR

After driving for a while, perform the self-diagnosis again and check if still defective.

Refer to "CONSULT-II Function" (AT-50) and "Self-Diagnosis (Without Using CONSULT-II)" (AT-53).

Inspection results are OK?

OK End.

NG 1. Inspect the A/T control unit's input and output signal.

2. If NG again, re-inspect if connector's pin terminals have defective contacts.

COMPONENT INSPECTION

O/D switch

Check continuity between terminals.

Switch Position	Continuity
ON	No continuity
OFF	Continuity

INHIBITOR SWITCH

1. By moving the selector lever, check the continuity between the inhibitor switch connector terminals.

Range Position	Terminal No.	Continuity
"P"	1 - 2, 3 - 7	Continuity No continuity if not the selected position
"R"	3 - 8	
"N"	3 - 9	
"D"	3 - 6	
"2"	3 - 5	
"1"	3 - 4	

2. If NG, re-inspect while control cable removed. Refer the step 1.
3. If inspection becomes OK after removing the cable, adjust the control cable. (Refer to "Adjustment During Installation" (AT-120))
4. If still NG after removing the cable, remove the inhibitor switch and check for continuity between the inhibitor terminals. Refer to the step 1.
5. If OK after removing the inhibitor switch, adjust the inhibitor switch. (Refer to "Inhibitor Switch" (AT-123)).
6. If still NG after removing the inhibitor switch, then replace the inhibitor switch.

THROTTLE VALVE SWITCH

Idle switch

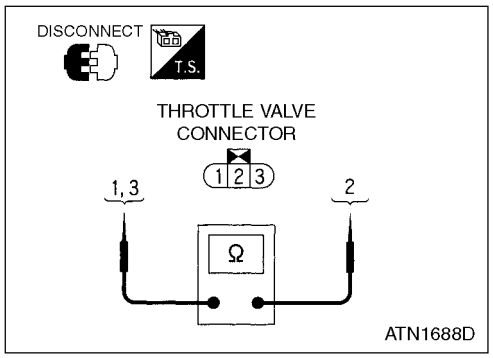

- Check continuity between the terminal No. 1 and No. 2.

Accelerator pedal operation	Continuity
Released	Yes
Depressed over one-half	No

- Refer to
  "Throttle Valve Closed Position Learning" (QG16: EC-23).

Full Switch

- Check continuity between the terminal No. 2 and No. 3.

Accelerator pedal operation	Continuity
Released	No
Depressed over one-half	Yes

A/T Shift Lock does not Work Properly

CIRCUIT DIAGRAM

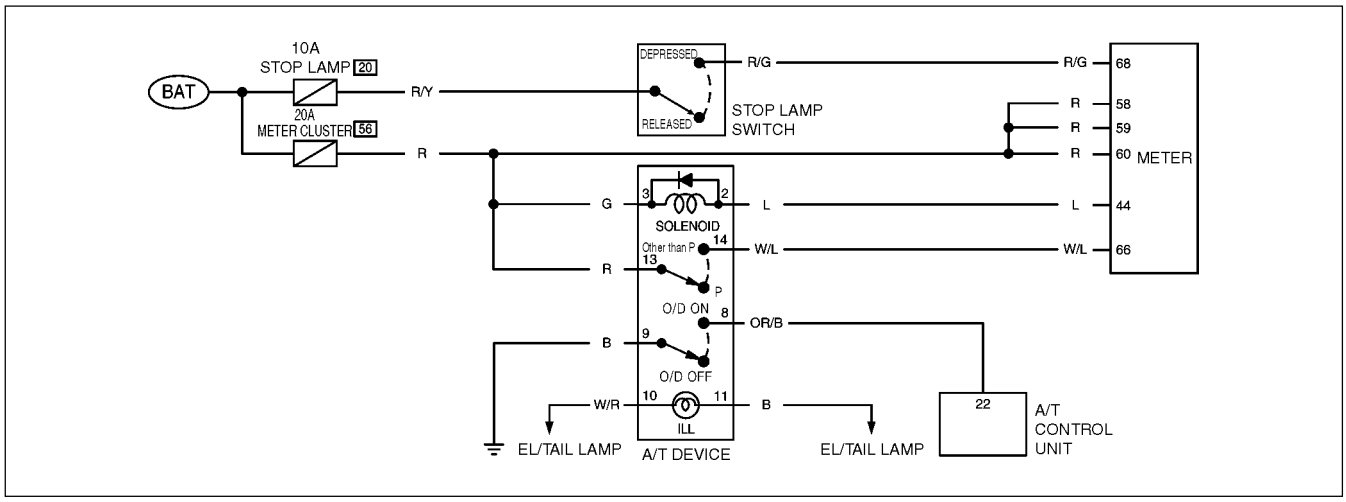

SYMPTOM

- The selector lever does not move from P range to other ranges while the key switch ON and brake pedal depressed.
- The selector lever moves from P range to other ranges while the key switch ON and brake pedal not depressed.
- The selector lever moves from P range to other ranges without the key in the key cylinder.
- The key cannot be removed in P range. The key can be removed other than P range.

INSPECTION TIPS

1. SELECTOR LEVER POSITION

Inspect for any damages in shift control system and inhibitor switch. Also inspect if the control cable is properly adjusted.

Inspection results are OK?

OK → Go to No. 3.

NG → Repair the defective component. (Refer to "Shift Control System" (AT-119) and "Inhibitor Switch" (AT-123).)

2. POWER

1. Turn the key switch ON (Do not start the engine).
2. Measure the voltage between the stop lamp switch connector terminal and ground.

   Terminal No. 1 - Ground : Battery voltage

Inspection results are OK?

OK Go to No. 3.

NG Inspect below items.

Open or short circuit in the harness between the battery and stop lamp switch.

Fuse

Key switch

3. Measure the voltage between the control device terminal No. 3, 13 and ground.

   Terminal No. 3 - Ground : Battery voltage

   Terminal No. 13 - Ground : Battery voltage

Inspection results are OK?

OK Go to No. 3.

NG Inspect below items.

Open or short circuit in the harness between the battery and stop lamp switch.

Fuse

3. INPUT SIGNAL (METER)

Turn the key switch ON (Do not start the engine).

Measure the voltage between the meter terminal No. 68 and ground.

Voltage

When depress the brake pedal: Power voltage

When release the brake pedal: Approx. 0 V

Measure the voltage between the meter terminal No. 66 and ground.

Voltage

When the shift lever is in P: Approx. 0 V

When the shift lever is in other than P: Power voltage

Inspection results are OK?

OK Go to No. 4.

NG Inspect below items.

Open or short circuit in the harness between the meter terminal No. 68 and stop lamp switch terminal No. 2.

Open or short circuit in the harness between the meter terminal No. 66 and control device terminal No. 14.

Stop lamp switch.

4. SHIFT LOCK SOLENOID

Inspect the shift solenoid.

Refer to “Shift Lock Circuit Diagram” (AT-126).

NG Repair the shift lock solenoid.

5. CHECK AFTER REPAIR

1. Connect the shift lock harness connector to its original position.
2. Turn the key switch from OFF to ON (Do not start the engine).
3. Check if the shift lock is operating properly by depressing and releasing the brake pedal.
4. If NG, re-inspect if connector’s pin terminals have defective contacts.

COMPONENTS INSPECTION

Shift solenoid

Inspect the operation of the shift lock solenoid in the control device by applying the battery power.

Shift Control System

Removal • Installation of Control Device

① Shift lever
② Yoke assembly
③ Cable bracket assembly
④ E-ring
⑤ Slide bush
⑥ Center pivet pin
⑦ Detention plunger assembly
⑧ Detention plunger spring
⑨ Housing assembly
⑩ Bulb assembly
⑪ Bulb box
⑫ P-N stopper lock pin
⑬ P-N stopper damper
⑭ P-N stopper
⑮ Dust cover
⑯ Solenoid assembly
⑰ Location bolt
⑱ Damper gate
⑲ Manual release lever
⑳ Plate position
㉑ Slide
㉒ E-ring
㉓ O/D switch mounting bracket
㉔ Switch/Wire/Connector assembly

Removal • Installation of Control Cable

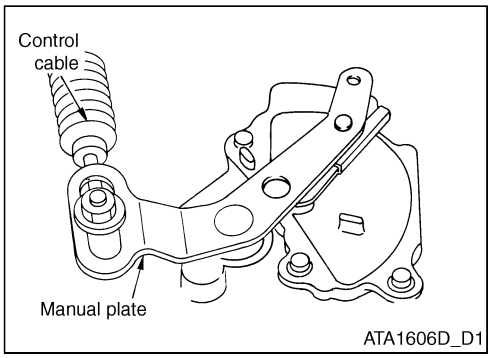

Adjustment During Installation

1. Tighten the lock nut connecting the manual plate and the control cable, and leave the control cable free.
2. Place the manual plate and inner accelerator lever to P position.

CAUTION:

- **Rotate the wheel more than 1/4 and apply the back lock.**

3. Hold the end of the control valve and press 2 or 3 times, then press with a force of approx. 9.8 N (1 kgf). Then release the hand and temporarily tighten with lock nuts while control cable is free.
4. Then tighten the control cable lock nut to the specified torque below.

   Tightening torque:

   11.76 - 16.6 N•m (1.2 - 1.7 kgf-m)

CAUTION:

- **Hold the manual plate securely while tightening.**

Control Valve and Accumulator

Removal • Installation

REMOVAL

1. Drain the ATF.
2. Remove the oil pan and gasket.
3. Disconnect the A/T terminal assembly middle connector.
4. Remove the stopper ring from the terminal and insert the terminal into the transaxle accelerator case with fingers.

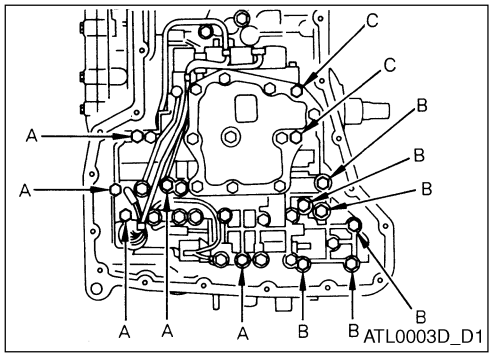

5. Remove the control valve mounting bolt.

Bolt Symbol	A	B	C
Bolt length (mm)	40.0	33.0	43.5
Quantity	5	6	2

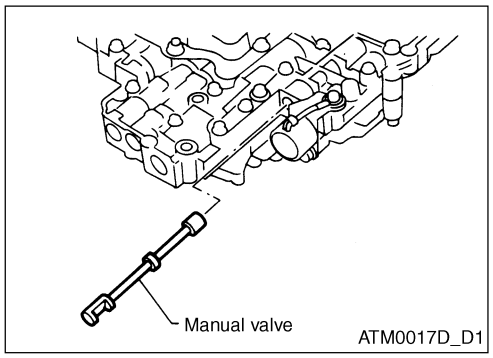

6. Remove the control valve assembly from the transaxle assembly.
7. Remove the manual valve from the control valve assembly.

CAUTION:

- **Be careful not to drop the manual valve.**

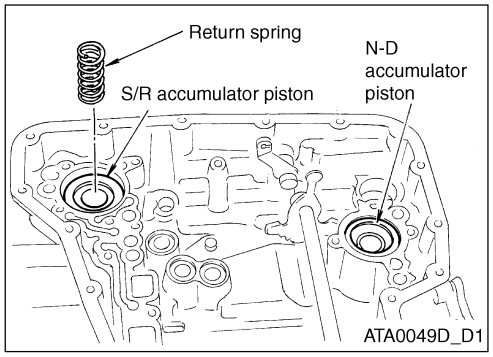

8. Remove the return springs from the S/R accumulator piston.

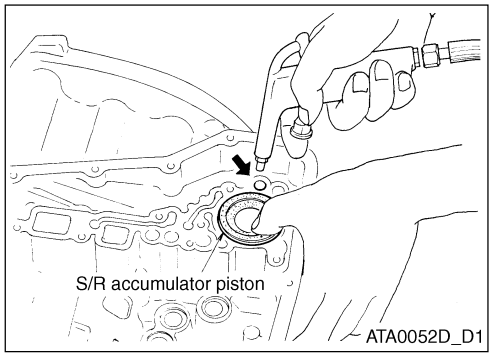

9. Blow the air into a hole as shown in the illustration and remove the S/R accumulator piston from the transaxle case.

CAUTION:

- **If air is blown too strongly, the accumulator piston and fluid may splatter. Thus slowly fill in the air by protecting them with paper towel.**
- **Cover the removed accumulator piston with a paper towel.**

10. Remove the O-ring from the S/R accumulator piston.

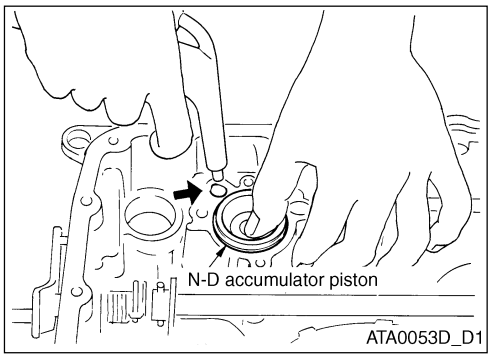

11. Blow the air into a hole as shown in the illustration and remove the N-D accumulator piston and return spring from the transaxle case.

CAUTION:

- **If air is blown too strongly, the accumulator piston and fluid may splatter. Thus slowly fill in the air by protecting them with paper towel.**
- **Cover the removed accumulator piston with a paper towel.**

12. Remove the O-ring from the N-D accumulator piston.

INSPECTION AFTER REMOVAL

- Inspect the valves and valve body mating surfaces for any damages or scratches.
- (Check the accumulator piston and transaxle case moving surfaces for any damages.)

INSTALLATION

Install in the reverse order of removal by cautioning as below.

- Use a new O-ring during accumulator piston installation.
- Always replace the oil pan mounting bolts with new and tighten to the specified torque.

  Tightening torque:

  6.8 - 8.8 N•m (0.7 - 0.9 kgf-m)

Inhibitor Switch

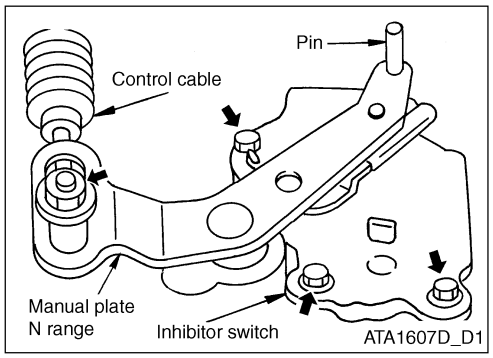

Removal • Installation

- During installation, insert the pin in the adjusting hole in inhibitor switch and manual plate. Adjust the position in N range.
- When installing the inhibitor switch, tighten to the specified torque.

  Specified torque:

  2.55 - 3.92 N•m (0.26 - 0.4 kgf-m)
- Check the continuity in the inhibitor switch after installation.

A/T Position Inspection

1. By operating the selector lever, be sure to get rid of “abnormal hardening”, “interference”, “noise” and “looseness”.
2. The selector lever must feel good and the locating position must be identical to the position indicator and transaxle assembly.
3. Each position should be moved as shown in the illustration.
4. When pressing the select button by not exerting too much force at the selector lever front and rear, there should be no interference in button operation.
5. The reverse lamp turns on in R range.
6. The engine starts in P or N ranges but not in other ranges.
7. The transaxle completely locks in P range.

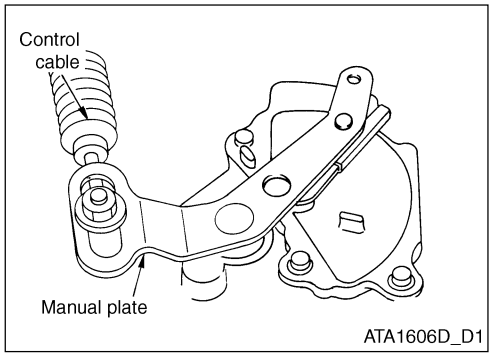

A/T Position Adjustment

1. Release the lock nut that connecting the manual plate and the control valve so that the control valve moves freely.
2. Position the manual plate and interior selector lever to P range.

CAUTION:

- **Rotate the wheel more than 1/4 and apply the back lock.**

3. Hold the end of the control valve and press 2 or 3 times, then press with a force of approx. 9.8 N (1 kgf). Then release the hand and temporarily tighten with lock nuts while control cable is free.
4. Then tighten the control cable lock nuts to the specified torque.

   Tightening torque:

   11.76 - 16.66 N•m (1.2 - 1.7 kgf-m)

CAUTION:

- **Hold the manual plate securely while tightening.**

Vehicle Speed Sensor 1 (Output Shaft Revolution Sensor)

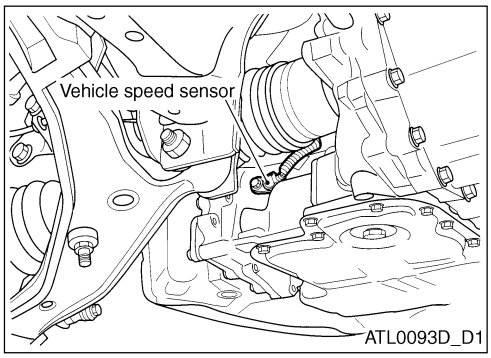

Removal • Installation

REMOVAL

- Remove the vehicle speed sensor 1 (Output shaft revolution sensor).

INSTALLATION

- Install in the reverse order of removal by cautioning as below.

  Tightening torque:

  4.9 - 6.86 N•m (0.5 - 0.7 kgf-m)

CAUTION:

- **Do not reuse the O-ring. Replace it with new.**

Side Oil Seal

Removal • Installation

REMOVAL

1. Remove the drive shaft from the transaxle assembly.

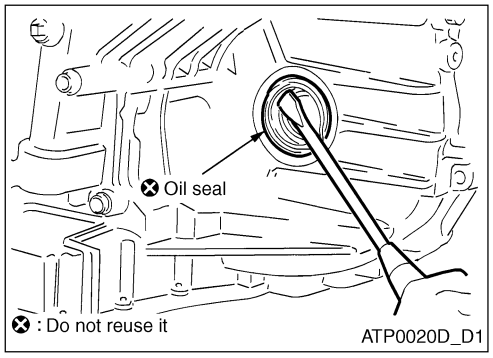

2. Remove the oil seal using a minus (-) screwdriver.

CAUTION:

- **Be careful not to damage the case surface while oil seal removing.**

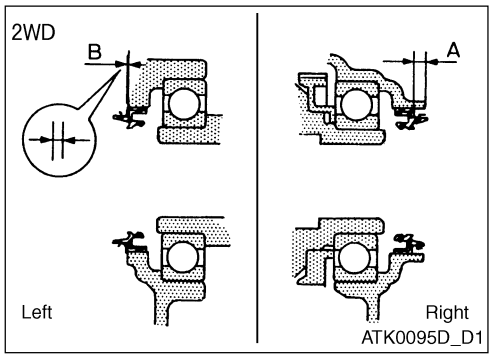

INSTALLATION

1. Using a drift (special tool), hit the oil seal from the case surface to be the value A and B.

REFERENCE:

- **The value is based on the oil seal moving direction.**

Value A: 5.5 - 6.5 mm from the case surface

Value B: Within 0 ± 0.5 mm from the case surface

Drift

Application	Drift
Transaxle case side (Left)	KV311 03000
Converter housing side (Right)	ST35325000

CAUTION:

- **Apply Genuine NISSAN ATF Matic Fluid D or equivalent at the oil seal surface during oil seal installation.**
- **Do not reuse the oil seal. Replace it with new.**

2. Install in the reverse order of removal and inspect the fluid level after installation.

Shift Lock System

Components Location

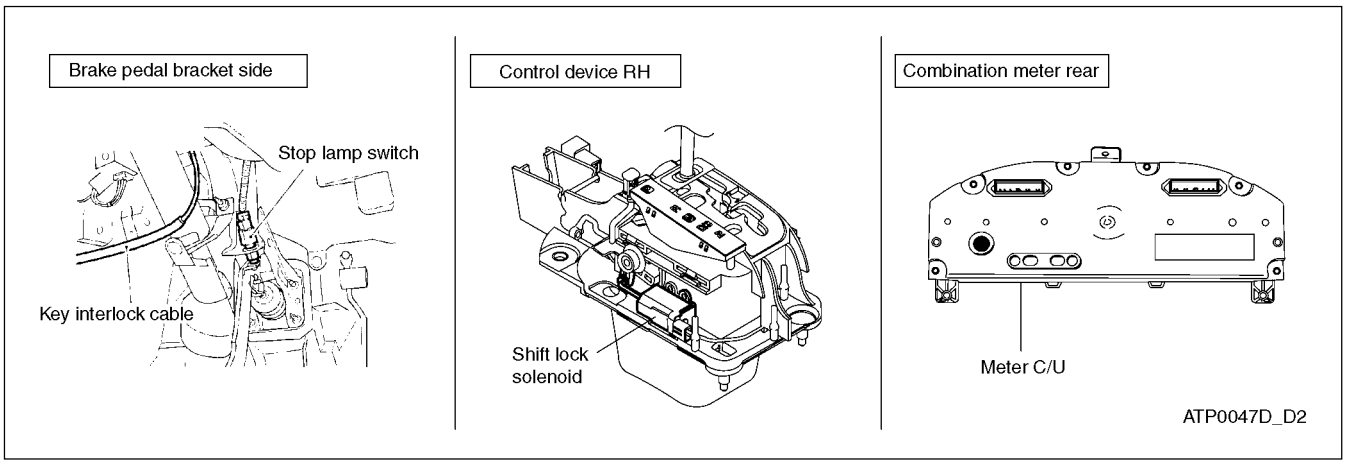

Shift Lock Circuit Diagram

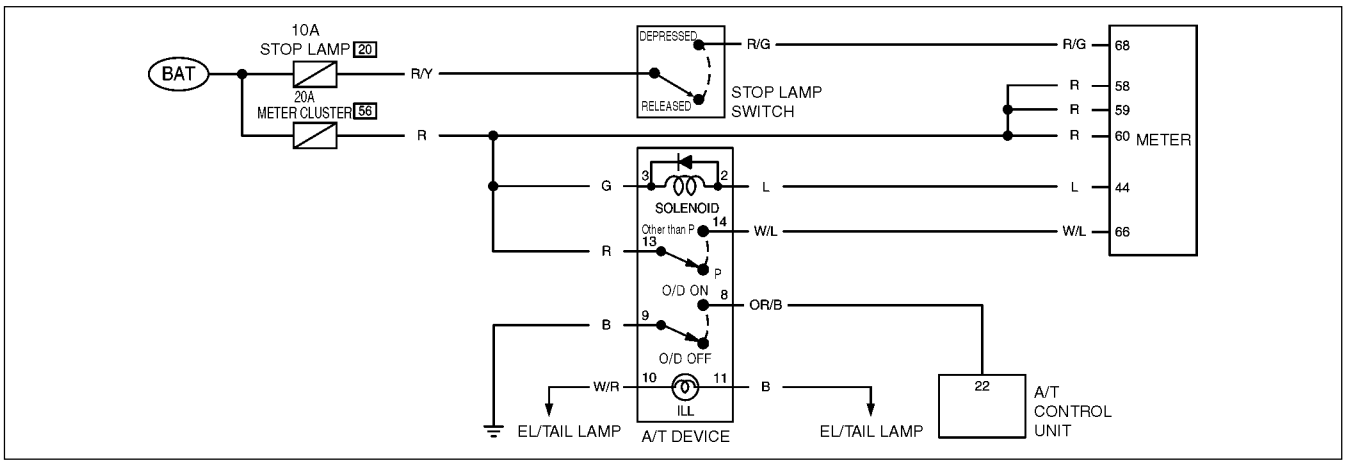

1. P-lock Function

   It is a function that inhibits the gear shift from “P” to other positions unless depressing the brake pedal and the ignition switch ON.

2. N-lock Function

   The gear cannot be shifted from “N” to “R” when the vehicle speed exceeds 14 km/h. The gear can be shifted from “N” to “R” when the vehicle speed is less than 8 km/h.

3. 3-minute Timer Function

   The gear can be shifted from “N” to “P” within 3 minutes after turning the ignition switch “OFF”.

CAUTION:

The “N” position includes “N”, “D”, “3”, “2” and “1”.

Air Bleeder Hose

Removal • Installation

Refer to the illustration for air bleeder hose removal.

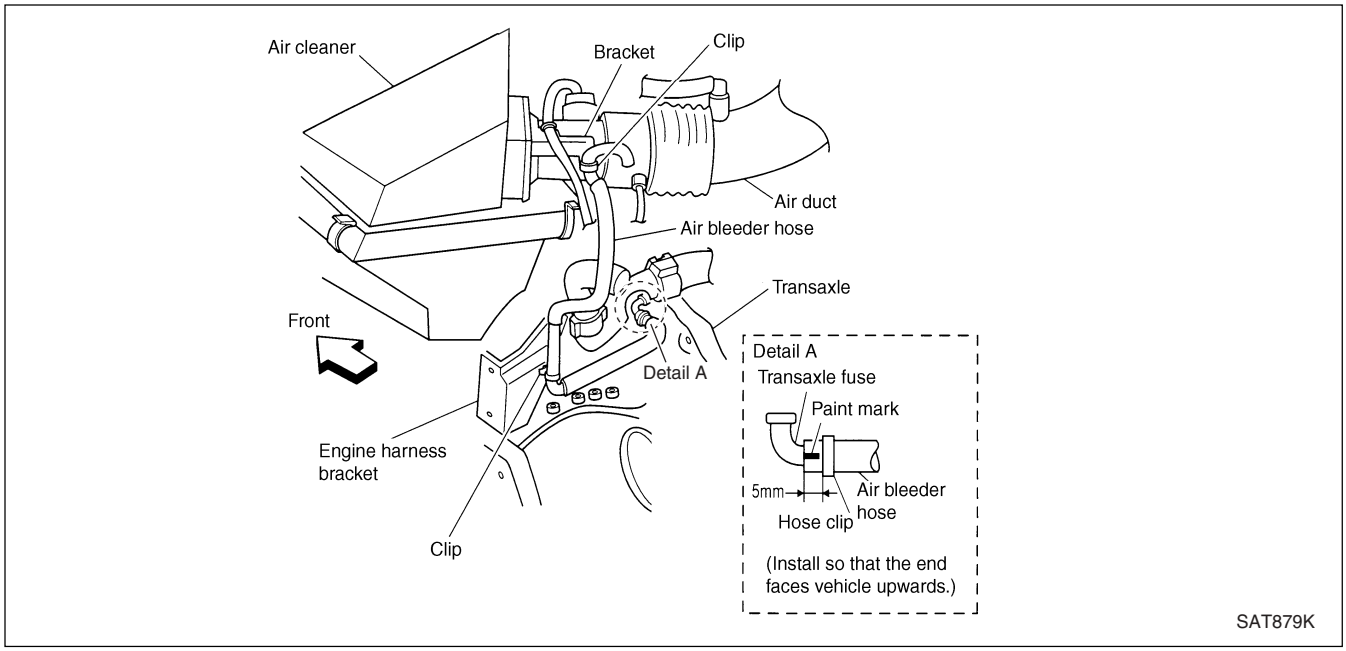

CAUTION:

- **Be sure not to have any disconnections, crushing or clogging during air bleeder hose installation.**
- **Insert the hose securely until it touches the R section on the transaxle fuse.**

Transaxle Assembly

Removal from the Vehicle

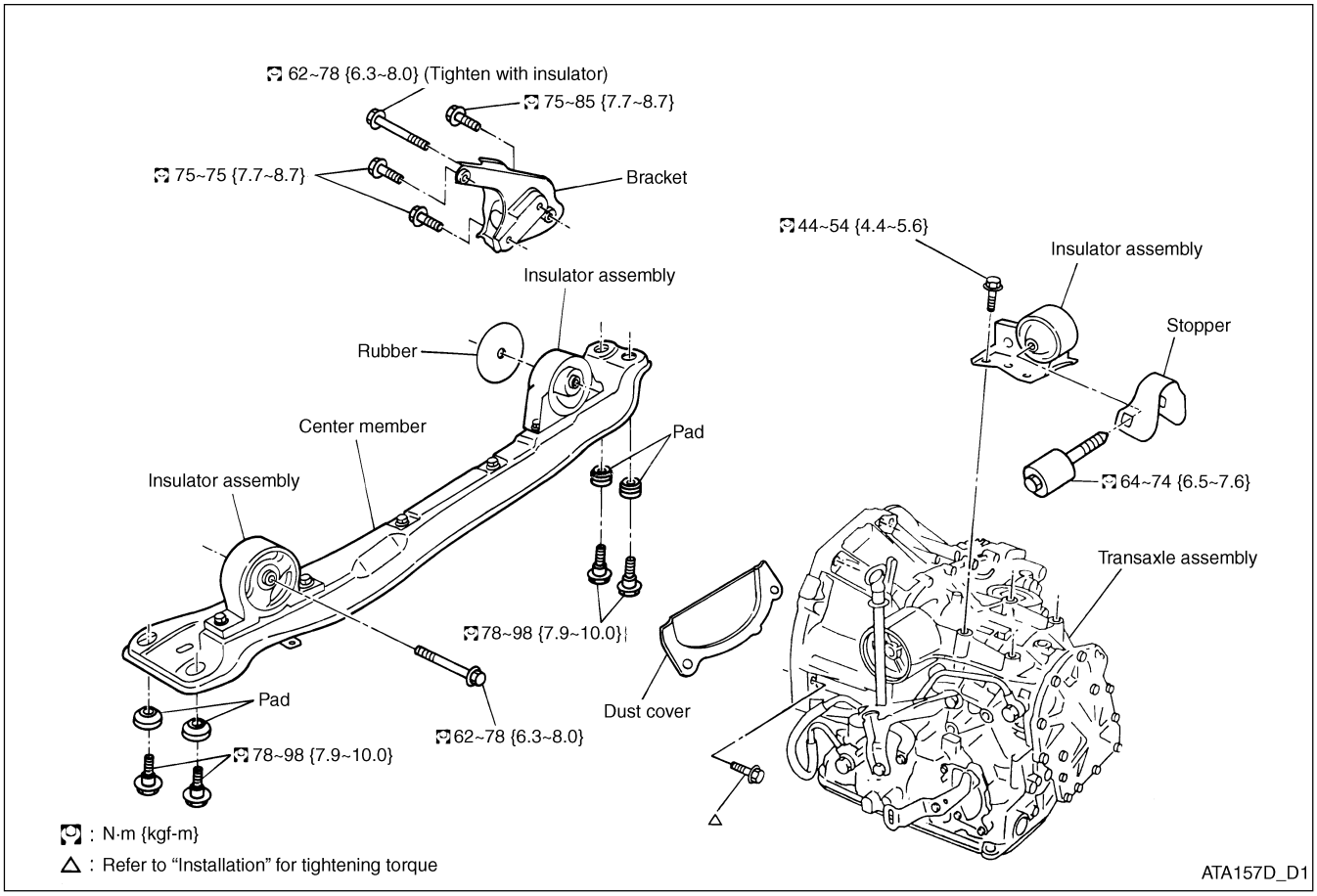

Removal • Installation

REMOVAL

1. Remove the battery, air cleaner and air duct.
2. Remove the air bleeder hose.
3. Remove the inhibitor switch, control valve, vehicle speed sensor for the speedometer, vehicle speed sensor 1 and ground connectors and harnesses.
4. Remove the control cable from the transaxle.
5. Remove the front exhaust tube and drive shaft.
6. Remove the oil cooler hose.
7. Remove the starter motor.
8. Set the transmission jack at the transaxle.

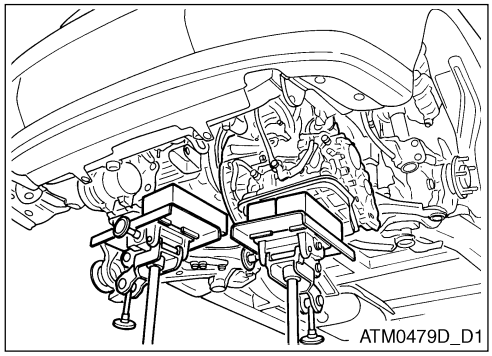

CAUTION:

- **Be careful not to touch the drain plug while setting the transmission jack.**

9. Remove the center member, engine insulator and engine mount bracket.
   - Refer to “Removal • Installation” (QG16: EM-56).
10. Remove the dust cover from the converter housing.
11. Rotate the crankshaft and remove the 4 mounting holders in the drive plate and torque converter.

CAUTION:

- **When rotating the crankshaft, rotate towards the right when viewed from the front of the vehicle.**

12. Set the transmission jack to the engine.
13. Remove the transaxle mounting bolts from the engine.
14. Remove the transaxle from the vehicle.

INSPECTION

Torque converter installation inspection

- After inserting the torque converter into the transaxle, inspect if the clearance A is within the standard value.

  Clearance A: More than 21.1 mm

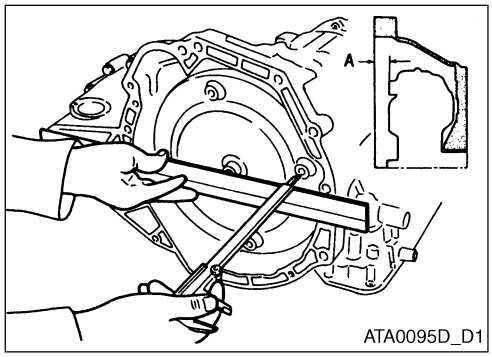

INSTALLATION

Install in the reverse order of removal by cautioning as below.

- While installing the transaxle to the engine, tighten the mounting bolts as specified.

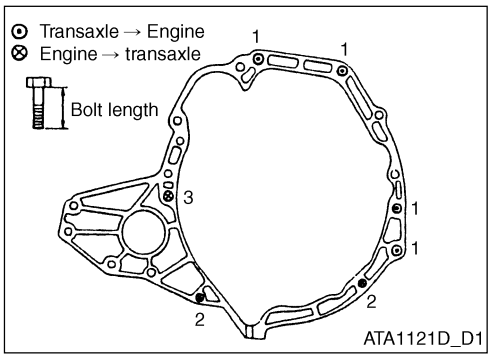

Bolt No.	1	2	3
Quantity	4	2	1
Bolt length (mm)	50	25	30
Tightening torque (N•m {kgf-m})	31 - 41 (3.1 - 4.1)	16 - 20 (1.6 - 2.1)	31 - 40 (3.1 - 4.1)

※ : Tighten the bolt No. 2 with gusset.

Engine gusset cylinder block side mounting bolts

Vehicle front (engine right) gusset mounting bolts

Bolt length: 20 mm

Tightening torque:

31 - 40 N•m (3.1 - 4.1 kgf-m)

Vehicle rear (engine left) gusset mounting bolts

Bolt length: 16 mm

Tightening torque:

16 - 20 N•m (1.6 - 2.1 kgf-m)

Standard Model

Converter housing, oil pump and differential gear

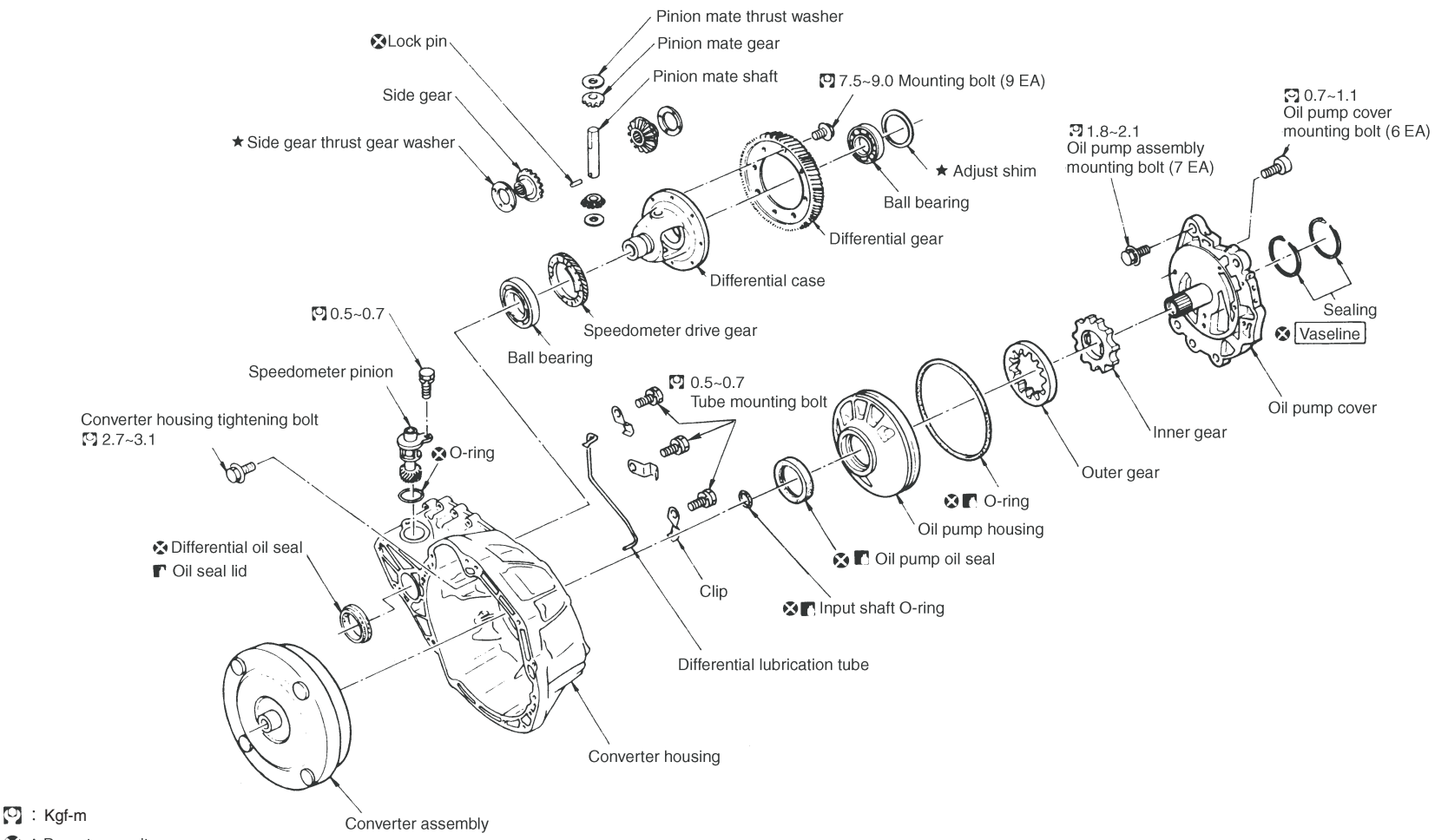

: Kgf-m
: Do not reuse it
★ : Select proper size
: Genuine NISSAN ATF Matic Fluid D or equivalent

SAT869K

Standard Model

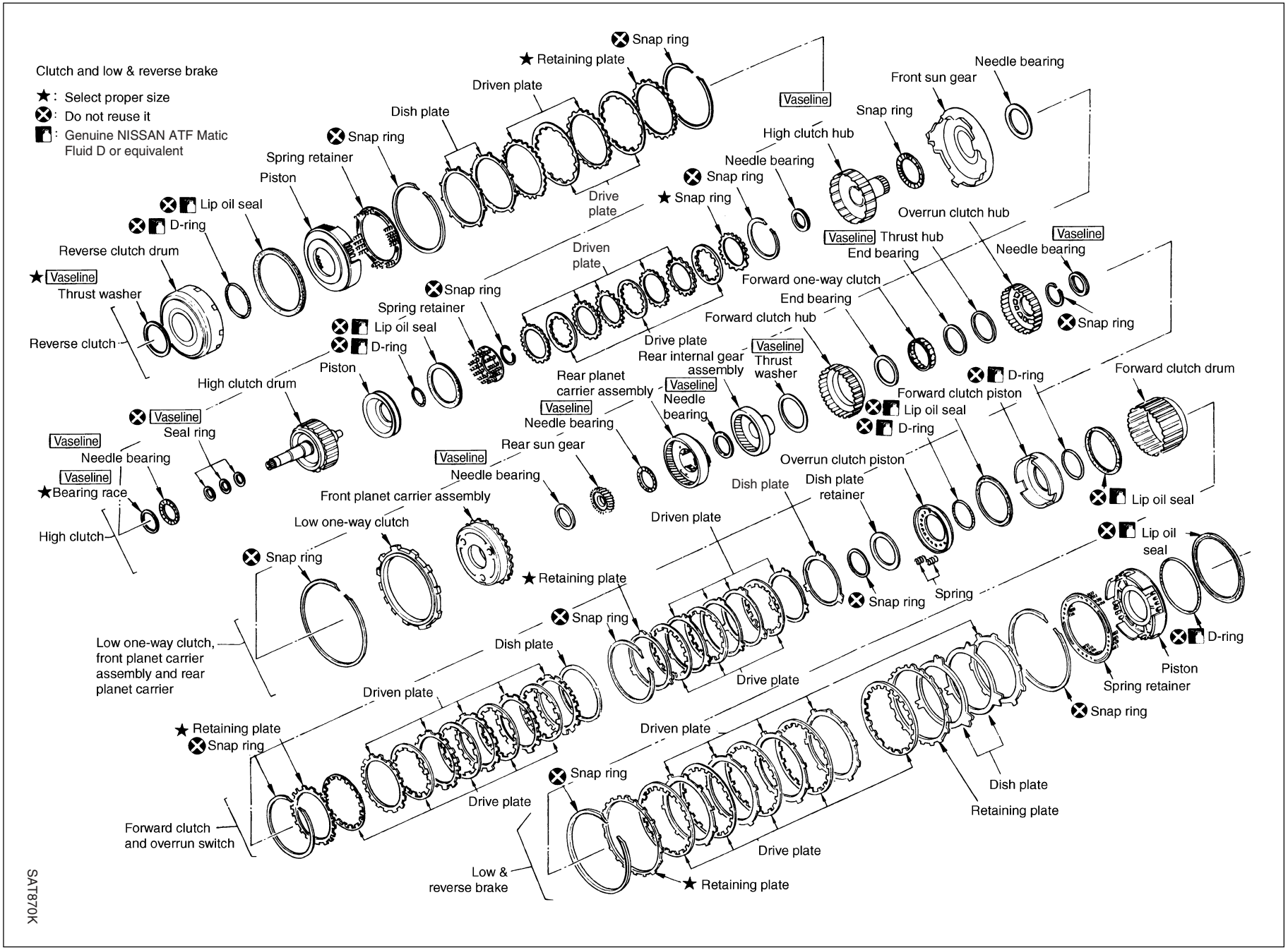

SAT870K

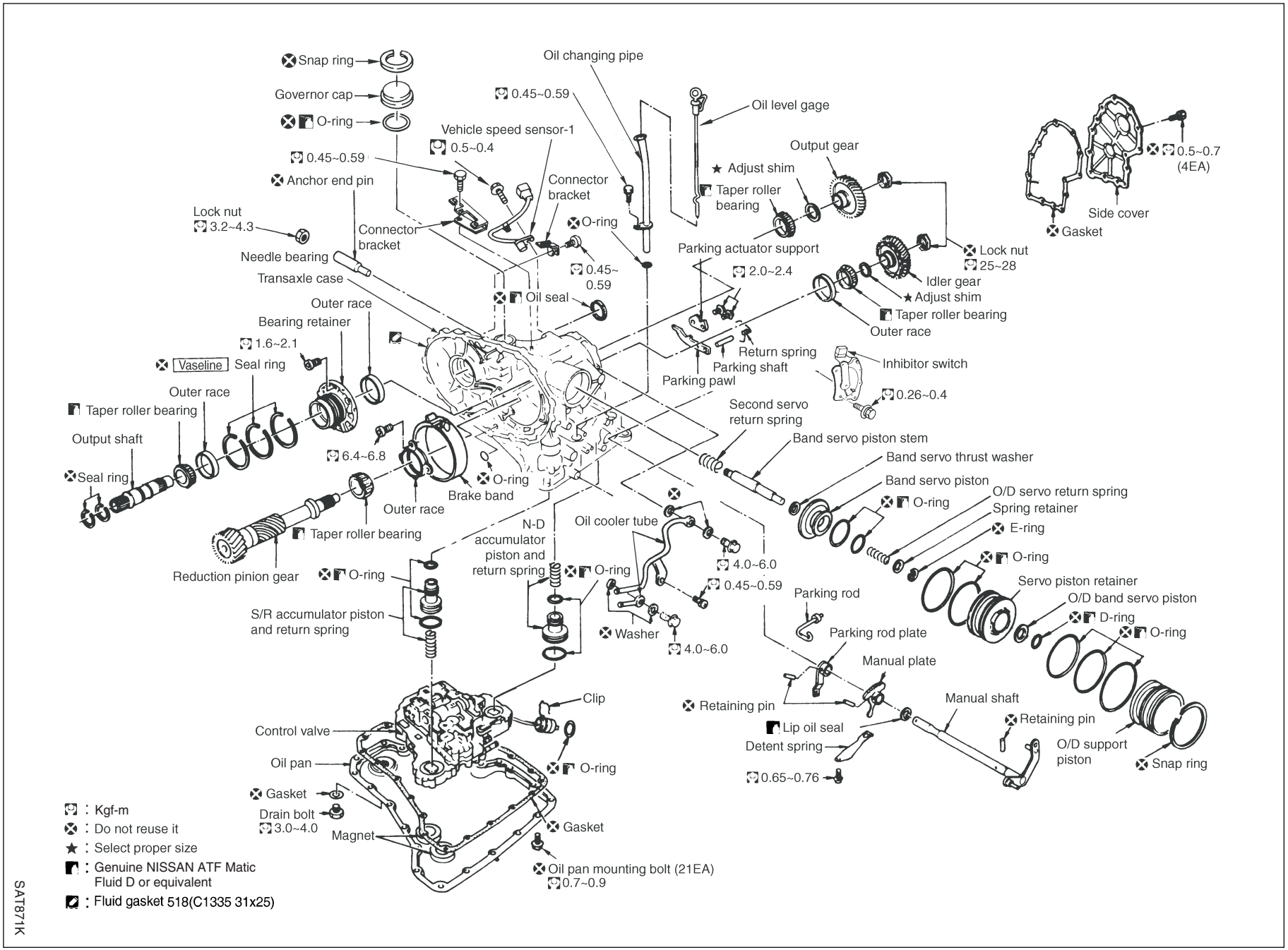
Snap ring
Governor cap
O-ring
Oil changing pipe
0.45~0.59
Oil level gage
Vehicle speed sensor-1
0.5~0.4
0.45~0.59
Anchor end pin
Connector bracket
Output gear
Adjust shim
Taper roller bearing
0.5~0.7 (4EA)
Side cover
Gasket
Lock nut
3.2~4.3
Connector bracket
O-ring
Needle bearing
Transaxle case
0.45~0.59
Parking actuator support
2.0~2.4
Lock nut
25~28
Idler gear
Adjust shim
Taper roller bearing
Outer race
Oil seal
Outer race
Bearing retainer
1.6~2.1
Vaseline
Seal ring
Return spring
Parking shaft
Parking pawl
Inhibitor switch
0.26~0.4
Outer race
Taper roller bearing
Output shaft
Seal ring
6.4~6.8
Second servo return spring
Band servo piston stem
Band servo thrust washer
Band servo piston
O-ring
Brake band
Outer race
Taper roller bearing
Reduction pinion gear
O-ring
N-D accumulator piston and return spring
Oil cooler tube
O-ring
4.0~6.0
0.45~0.59
O-ring
O/D servo return spring
Spring retainer
E-ring
O-ring
Servo piston retainer
O/D band servo piston
D-ring
O-ring
Parking rod
Parking rod plate
Manual plate
S/R accumulator piston and return spring
Washer
4.0~6.0
Clip
Retaining pin
Manual shaft
Retaining pin
Lip oil seal
Detent spring
0.65~0.76
O/D support piston
Snap ring
Control valve
Oil pan
O-ring
Gasket
Drain bolt
3.0~4.0
Magnet
Gasket
Oil pan mounting bolt (21EA)
0.7~0.9
: Kgf-m
: Do not reuse it
: Select proper size
: Genuine NISSAN ATF Matic Fluid D or equivalent
: Fluid gasket 518(C1335 31x25)

SAT871K

Fluid Pressure Circuit Hole

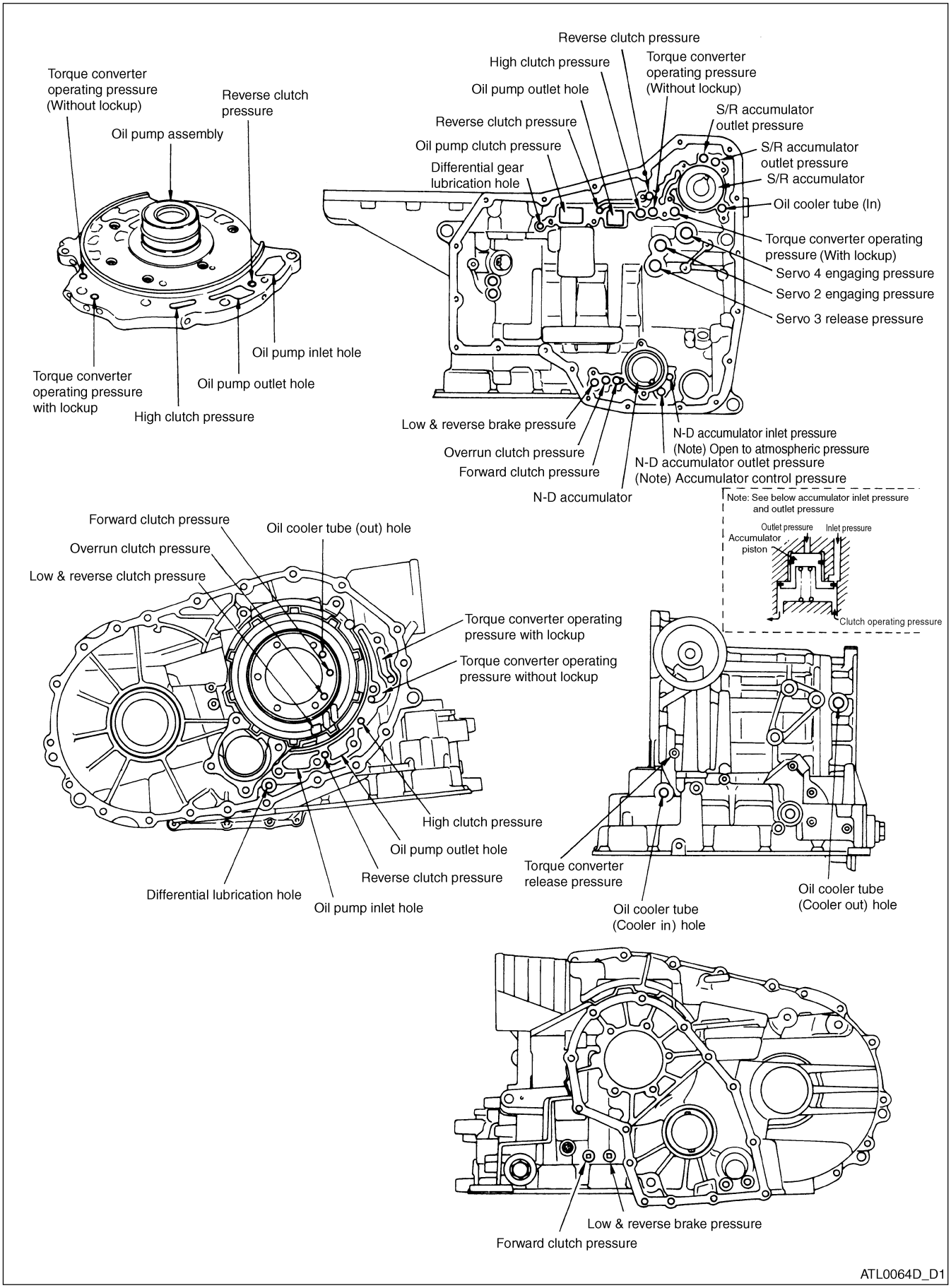

Adjust Shim, Neutral Bearing, Thrust Washer and Snap Ring Location - Standard Model

REFERENCE:

- **The vehicle with QG15DE engine is equipped with standard model.**

Item No.	Part No.	Outer Diameter: mm	Color
Ⓘ	★31508 31 X 10~	72.0	Black
Ⓙ	31508 31 X 09	78.5	

Inner diameter & outer diameter of neutral bearing

Item No.	Part No.	Outer Diameter: mm	Inner Diameter: mm
A	31407 31 X 10	47.0	32.0
B	31407 31 X 11	35.0	20.1
C	31407 31 X 01	60.0	42.0
D	31407 31 X 02	60.0	45.0
E	31407 31 X 03	47.0	30.0
F	31407 31 X 04	42.6	26.1
G	31407 31 X 05	48.0	33.5
H	31407 31 X 12	55.0	42.0

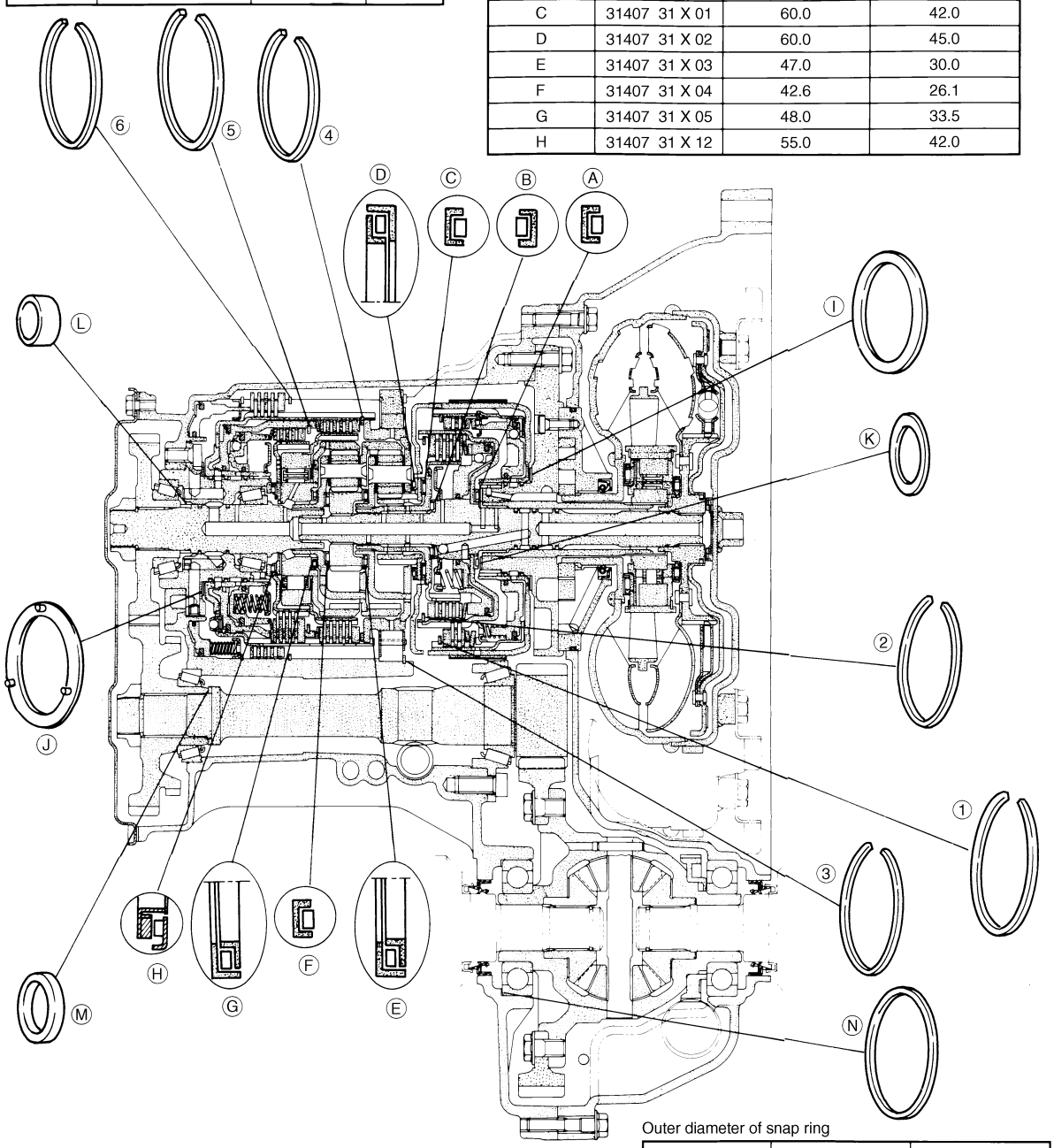

Bearing race and inner diameter & outer diameter of adjuster

Item No.	Part No.	Outer Diameter: mm	Inner Diameter: mm
Ⓚ	★31435 31 X 01~	48.0	33.0
Ⓛ	★31437 31 X 16~	29.0	25.0
Ⓜ	★31438 31 X 16~	34.3	26.0
Ⓝ	★38457 M8001~	79.5	72.0

Outer diameter of snap ring

Item No.	Outer Diameter: mm	Inner Diameter: mm
①	31506 31 X 06	142.0
②	31506 31 X 08	113.0
③	31506 31 X 11	162.4
④	31506 31 X 05	135.4
⑤	31506 31 X 03	126.0
⑥	31506 31 X 16	162.3

★ : Select proper size

ATA1579D_D1

Clutch and Brake Specification

Reverse Clutch	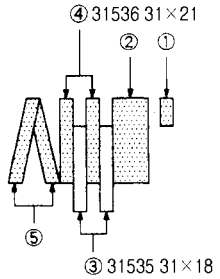	High Clutch	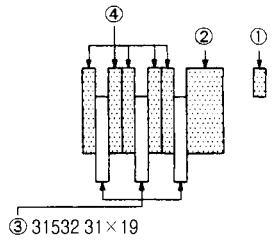	Forward Clutch	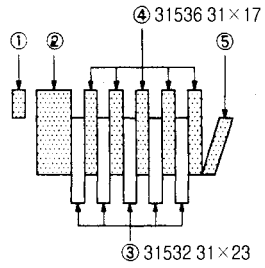
Overrun Clutch	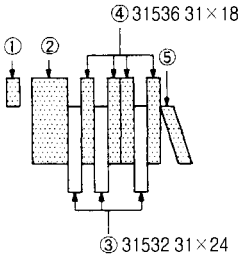	Low & Reverse Clutch	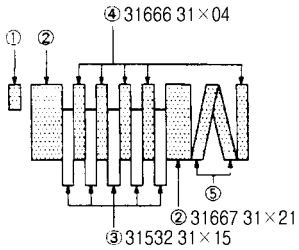		① Snap ring ② Retaining plate ③ Drive plate ④ Driven plate ⑤ Dish plate ※ (Drive/Driven) SCIA0137J_D1

Disassembly

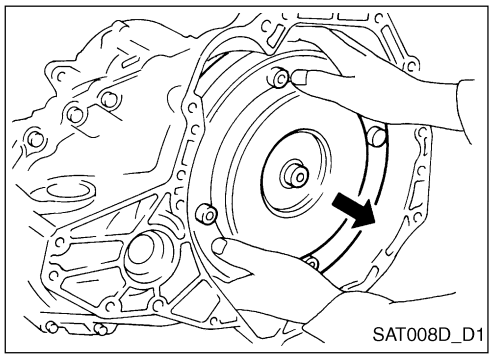

DISASSEMBLY

1. Drain the ATF.
2. Remove the torque converter.

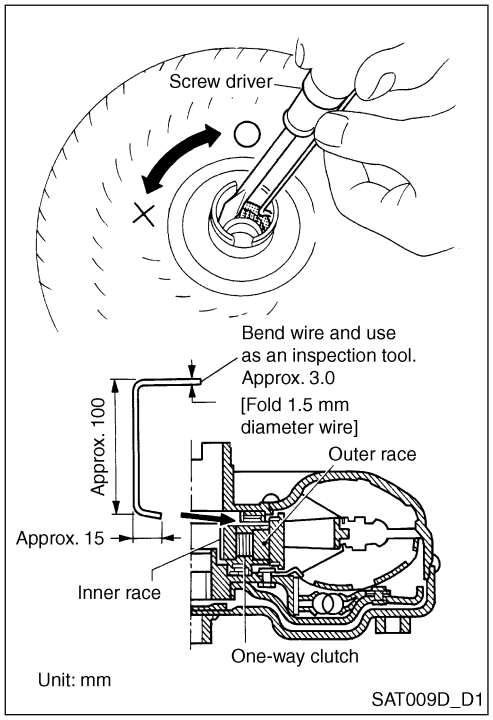

3. Inspect the one-way clutch of the torque converter using the inspection tool as in the illustration.
   a. Insert the inspection tool to the groove in the bearing support that is integrated in the one-way clutch out race.
   b. Hold the bearing support with the inspection tool and rotate the one-way clutch spline with a minus (-) screwdriver.
   c. Inspect if the inner race rotates clockwise only. If not, replace the torque converter assembly.

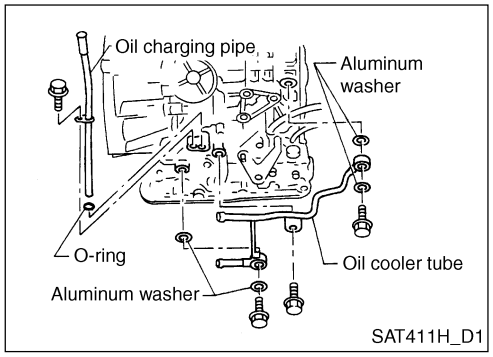

4. Remove the oil charging pipe and oil cooler tube.

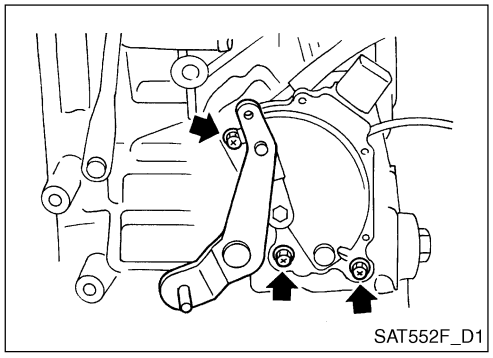

5. Place the manual lever to P.
6. Remove the inhibitor switch.

Disassembly (Continued)

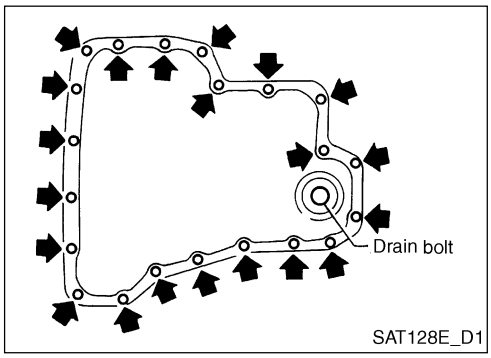

7. Remove the oil pan and gasket.
   - Do not reuse the oil pan bolt.
8. Inspect is there are any foreign particles that may induce trouble in the oil pan. If the ATF color is very dark, or has burnt smell or contains foreign particles, replace the frictional component (clutch and band). The gluey varnishing (hard to wipe out) is formed. The varnish sticks to the valve, servo and the clutch and may disturb the pump to generate pressure.

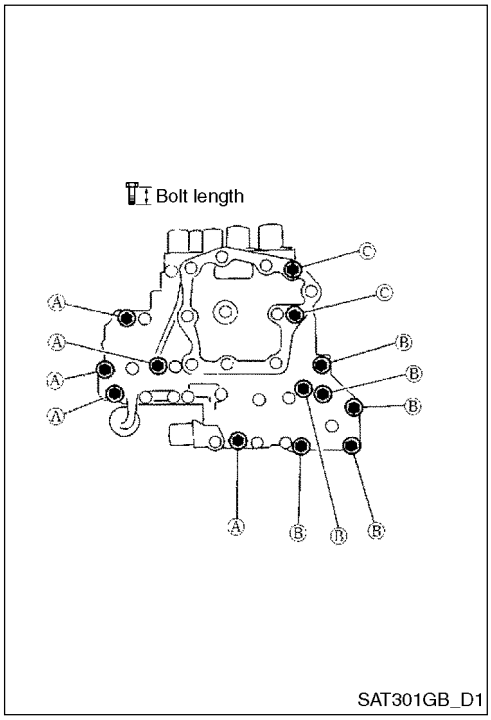

9. Remove the control valve assembly following the below order.
   a. Remove the control valve assembly mounting bolt “A”, “B” and “C”.

Bolt symbol	A	B	C
Bolt length	40	33	43.5
Bolt quantity	5	6	2

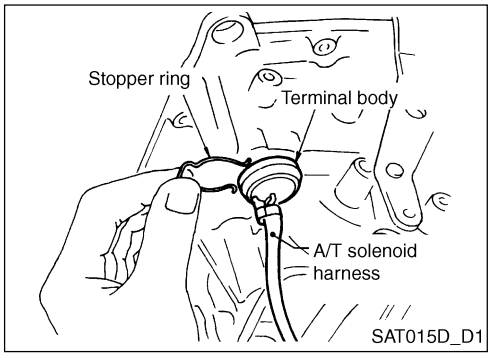

   b. Remove the stopper ring from the terminal body.
   c. Push the terminal body inside the transaxle case and pull out the solenoid harness.

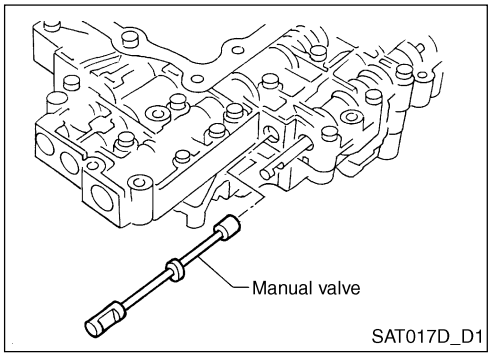

10. Remove the manual valve from the control valve assembly.

Disassembly (Continued)

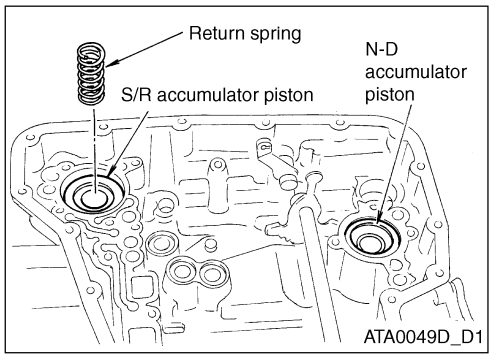

11. Remove the return spring from the servo release accumulator piston.

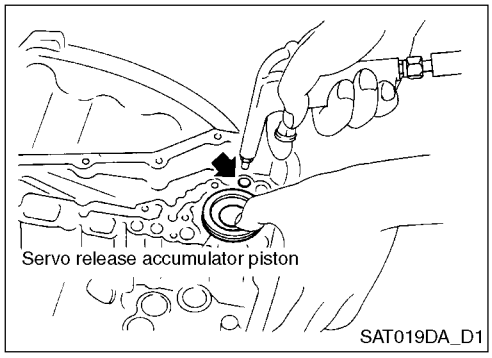

12. Disconnect the servo release accumulator piston with compressed air.
13. Remove the O-ring from the servo release accumulator piston.

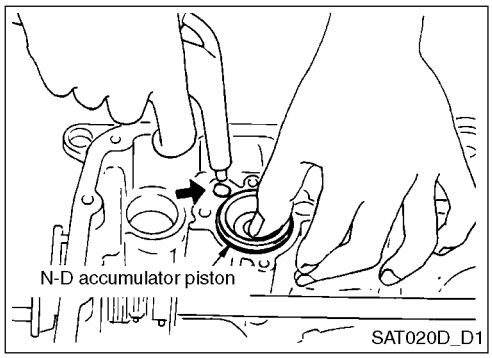

14. Remove the N-D accumulator piston and return spring with compressed air.
15. Remove the O-ring from the N-D accumulator piston.

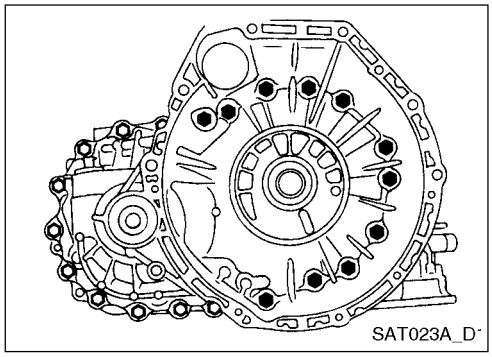

16. Inspect for any damages in the contact surfaces of accumulator piston and transaxle case.
17. Inspect for any damages and free height of accumulator return spring.

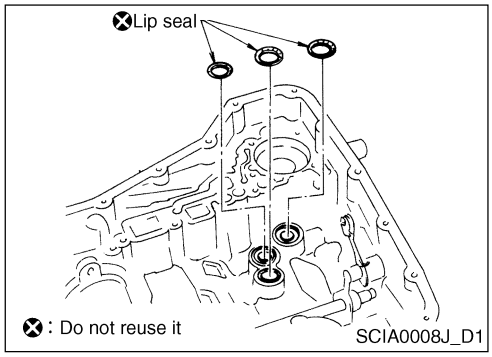

18. Remove the lip seal from the band servo oil port.

Disassembly (Continued)

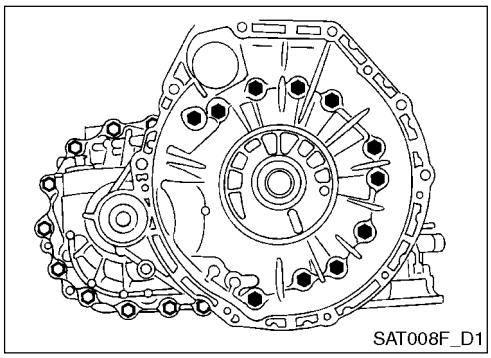

19. Remove the torque converter housing according to following order.
    a. Remove the torque converter housing mounting bolts.
    b. Remove the torque converter housing by lightly tapping it.

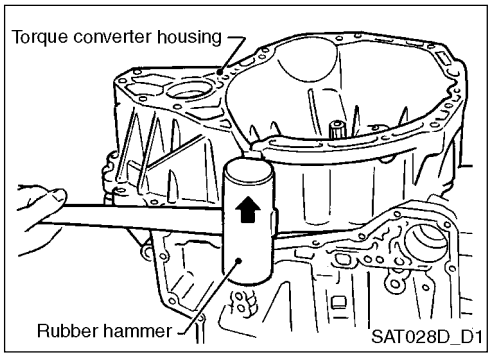

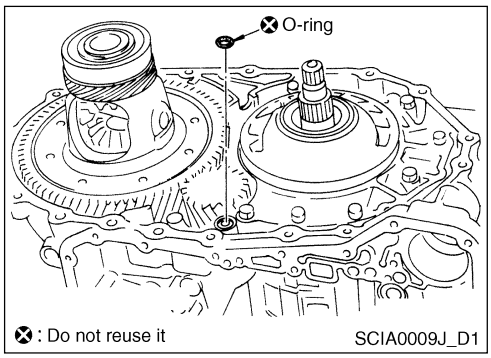

c. Remove the O-ring from the differential oil port.

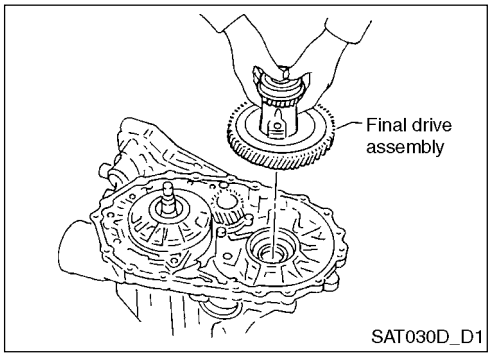

20. Remove the final drive assembly from the transaxle case.

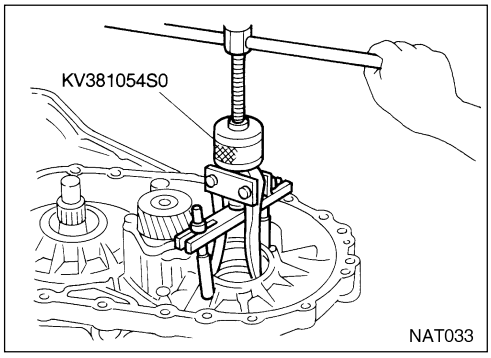

21. Remove the differential side bearing outer race from the transaxle case.

Disassembly (Continued)

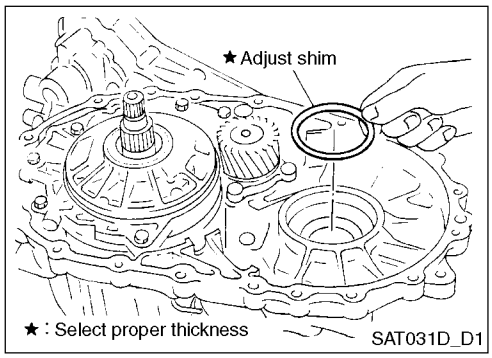

22. Remove the differential side bearing adjust shim from the transaxle case.

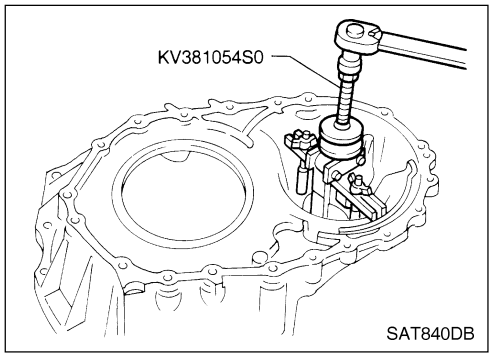

23. Remove the converter housing differential side bearing outer race.

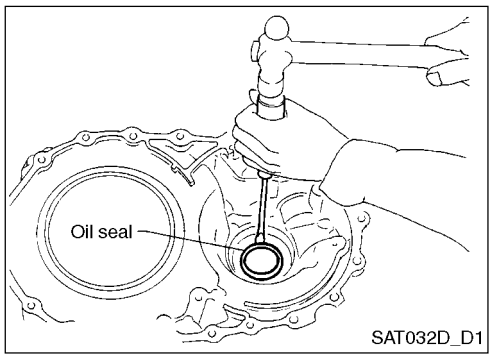

24. Remove the oil seal from the converter housing using a screwdriver.
    - Be careful not to damage the case.

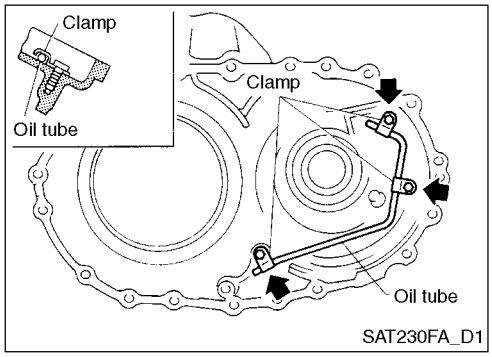

25. Remove the oil tube from the converter housing.

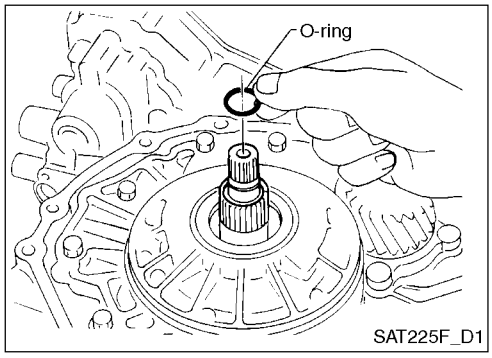

26. Remove the oil pump according to following order.
    a. Remove the O-ring from the input shaft.

Disassembly (Continued)

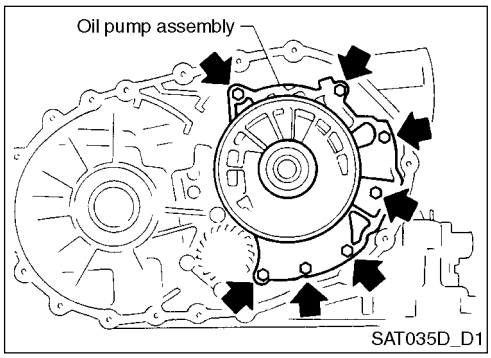

b. Remove the oil pump assembly, baffle plate and gasket from the transaxle case.

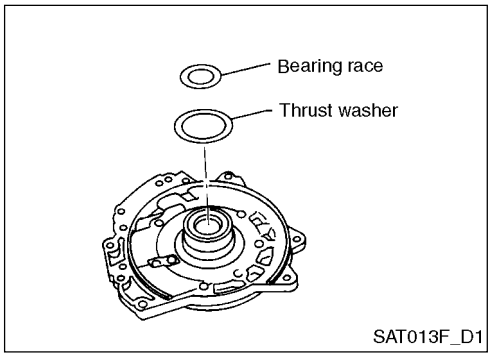

c. Remove the bearing race and thrust washer from the oil pump assembly.

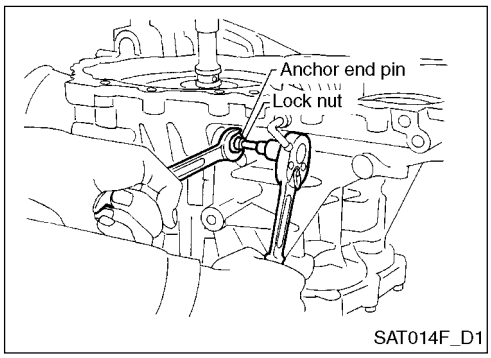

27. Remove the brake band according to following order.
    a. Release the band servo anchor end pin rearwards by loosening the lock nut.

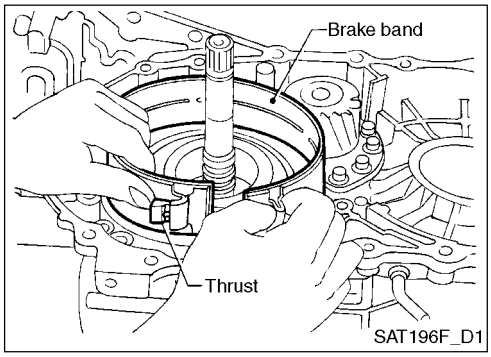

b. Remove the thrust and brake band from the transaxle case.

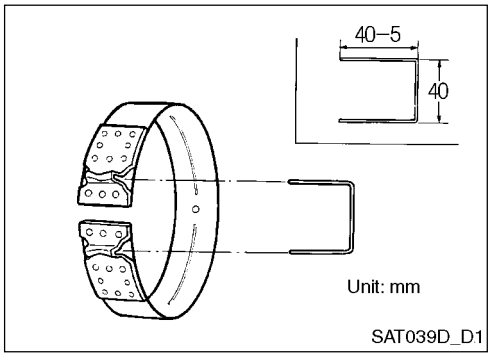

CAUTION:

- **Do not stretch the flexible band to prevent the brake linings from cracks or peels. Hold the brake band with a clip as in the illustration during removal.**

  Place the clip to its original position after removing the brake band.

Disassembly (Continued)

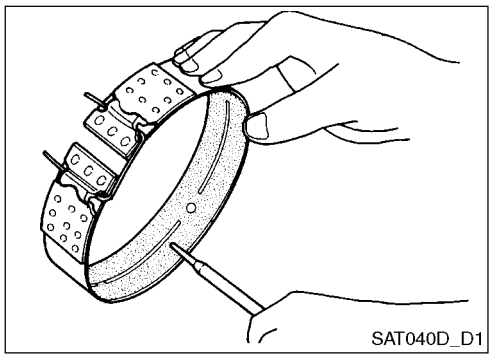

c. Inspect the brake band surface for any damages, cracks, wear and burns.

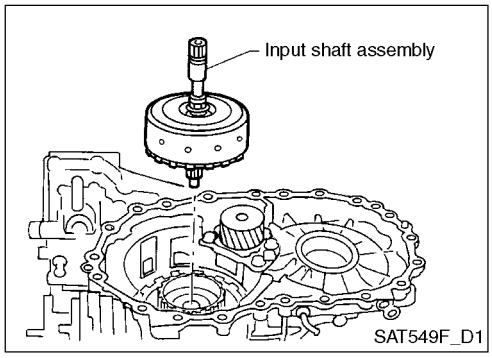

28. Remove the input shaft assembly (High clutch) and reverse clutch according to following order.
    a. Remove the input shaft assembly (High clutch) with the reverse clutch.

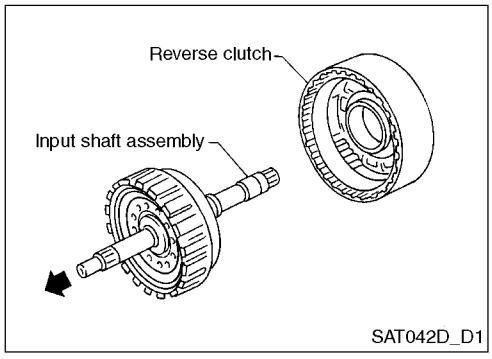

b. Remove the input shaft assembly (High clutch) from the reverse clutch.

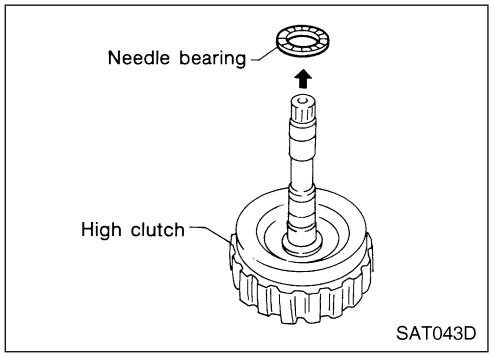

c. Disassemble the needle bearing from the high clutch drum and inspect for any damages or wear.

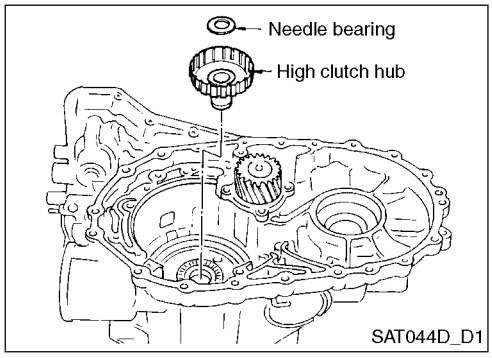

d. Remove the high clutch hub and needle bearing from the transaxle case and inspect the high clutch hub and needle bearing for any wear or damages.

Disassembly (Continued)

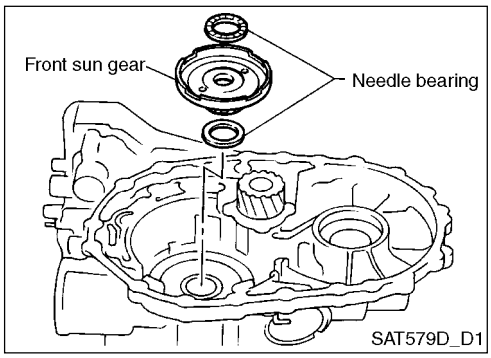

29. Remove the front sun gear and needle bearing from the transaxle case and inspect the front sun gear and needle bearing for any damages or wear.

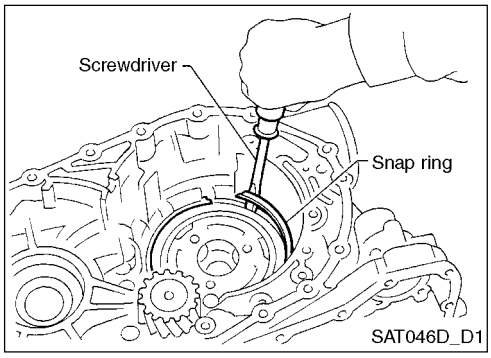

30. Remove the snap ring using a minus (-) screwdriver and remove the low one-way clutch and front planetary carrier assembly according to following order.

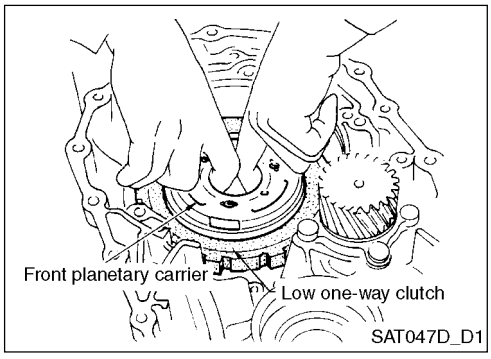

a. Remove the front planetary carrier with the low one-way clutch.

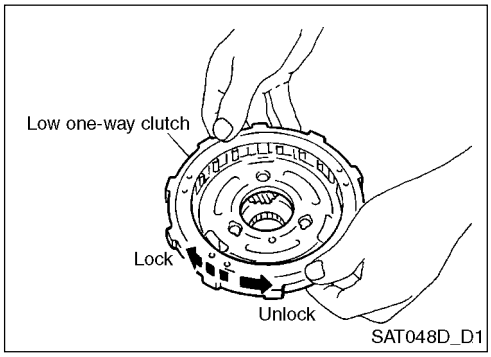

b. Inspect if the low one-way clutch rotates in the arrow direction and locks in the opposite direction.
c. Remove the low one-way clutch from the front planetary carrier by rotating in the loosening direction.

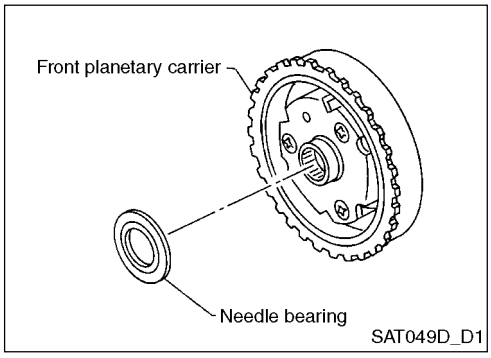

31. Remove the needle bearing from the front planetary carrier.

Disassembly (Continued)

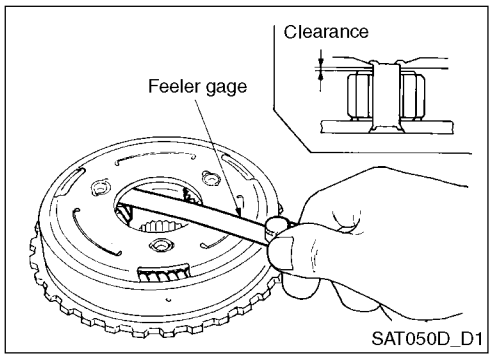

a. Inspect the one-way clutch and needle bearing for any damages or wear using the front planetary carrier.

b. Measure the clearance between the pinion washer and planetary carrier using a feeler gage.

Specified value:
0.15 - 0.70 mm (0.0059 - 0.0276 in)

Allowed value:
0.80 mm (0.0315 in)

If the clearance exceeds the allowed value, replace the front planetary carrier.

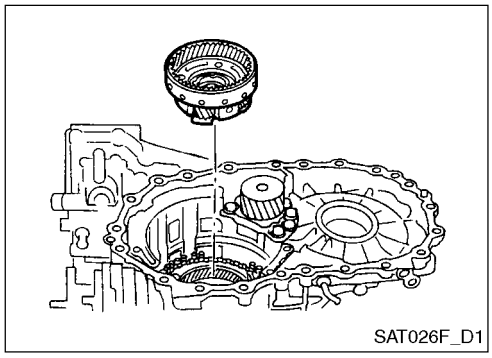

32. Remove the rear sun gear and rear planetary carrier assembly using the following procedure.

a. Remove the rear planetary carrier assembly from the transaxle carrier.

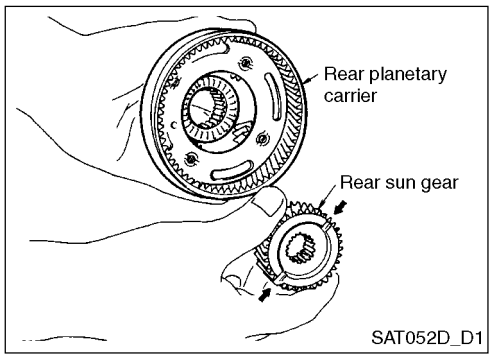

b. Remove the rear sun gear from the rear planetary carrier.

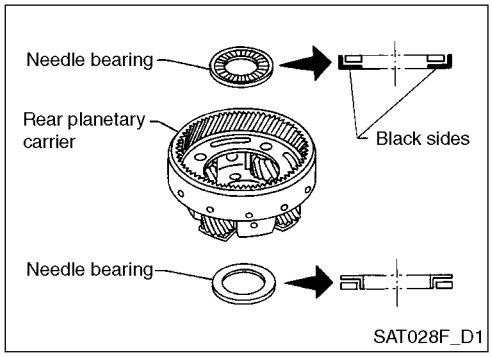

c. Remove the needle bearing from the rear planetary carrier assembly.

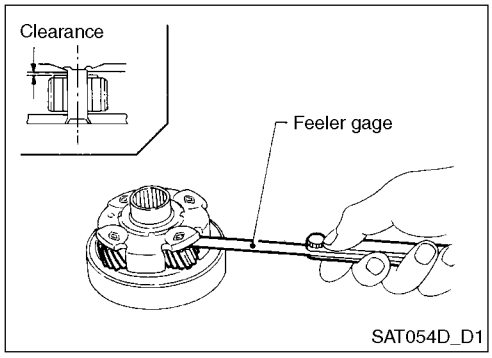

d. Inspect the rear planetary carrier, rear sun gear and needle bearing for any wear and damages.

e. Measure the clearance between the pinion washer and rear planetary carrier.

If the clearance exceeds the allowed value, replace the rear planetary carrier.

Disassembly (Continued)

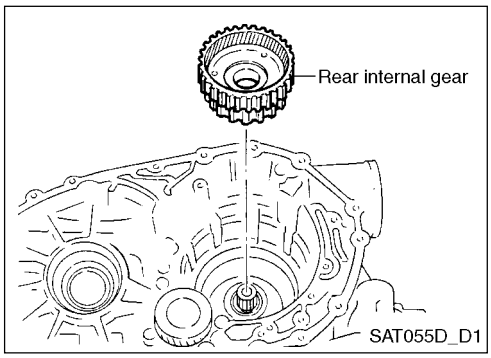

33. Remove the rear internal gear from the transaxle case.

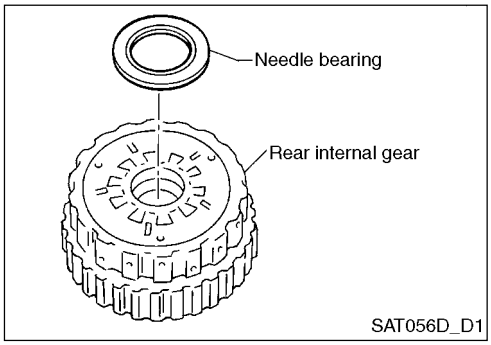

34. Remove the rear internal gear and forward clutch hub from the transaxle case.
35. Remove the needle bearing from the rear internal gear.
36. Inspect the needle bearing for any damages and wear.

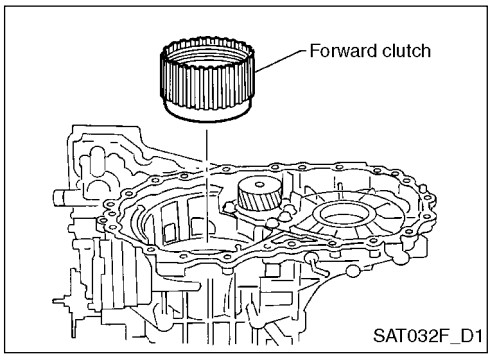

37. Remove the forward clutch assembly from the transaxle case.

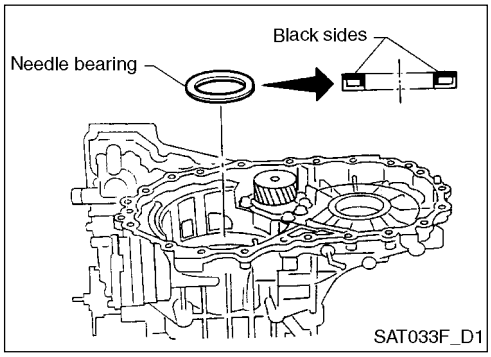

38. Remove the needle bearing from the transaxle case.

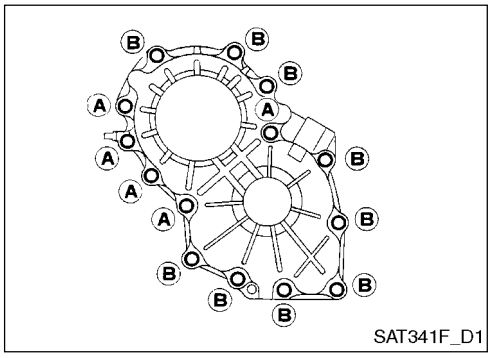

39. Remove the output shaft assembly according to following order.
    a. Remove the side cover bolt.
    - Do not mix the bolts “A” and “B” each other.
    - Always replace the “A” bolt with seal ring bolt.

Disassembly (Continued)

40. Remove the output shaft and reduction pinion gear according to following order.
    a. Put the manual shaft at P range and hold the idle gear using a parking pawl.
    b. Remove the output gear and idle gear lock nut.
    c. Remove the output gear and idle gear using the puller.
    d. Remove the adjust shim from the output shaft and reduction pinion gear.
    e. Remove the reduction pinion gear.
    f. Remove the adjust shim from the reduction pinion gear.
41. Remove the return spring from the parking shaft with a screwdriver.
42. Pull out the parking shaft from the transaxle case and remove the parking pawl.
43. Inspect the parking pawl and shaft for any damages or wear.
44. Remove the parking actuator support from the transaxle case.
45. Inspect the parking actuator support for any damages or wear.

Disassembly (Continued)

46. Remove the side oil seal from the transaxle case with a screwdriver.

47. Remove the revolution sensor from the transaxle case.

Manual Shaft

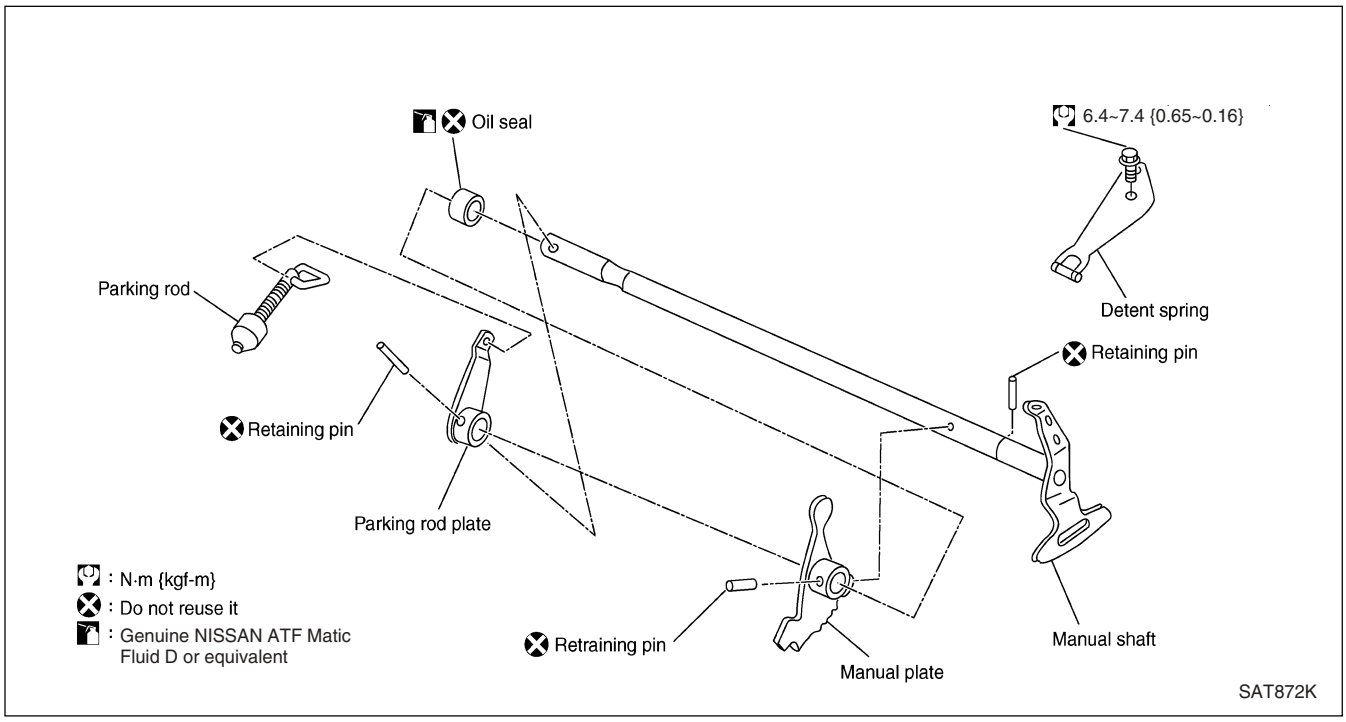

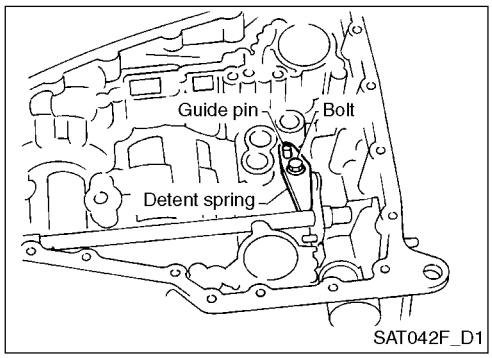

REMOVAL

1. Remove the detent spring from the transaxle case.

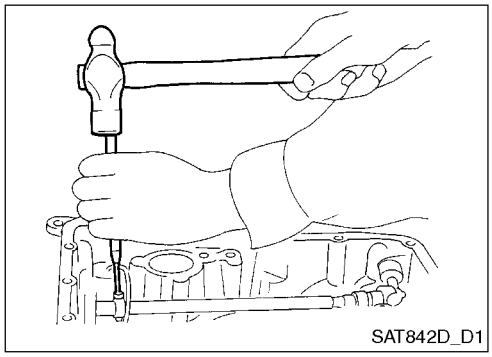

2. Remove the manual plate retaining pin.

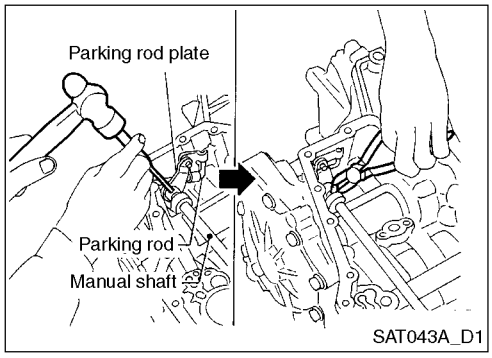

3. Remove the parking rod plate retaining pin.
4. Remove the parking rod plate from the manual shaft.
5. Remove the parking rod from the transaxle case.

GI
EM
LC
EC
FE
RS
AC
AV
EL
WH
CL
MT
AT
FA
RA
BR
ST
BT

Manual Shaft (Continued)

6. Pull out the manual shaft retaining pin.
7. Remove the manual shaft and manual plate from the transaxle case.

8. Remove the manual shaft oil seal.

INSPECTION

Inspect each component for wear and damage. Replace if necessary.

INSTALLATION

1. Install the manual shaft oil seal.

   Apply the ATF on the oil seal outer.

2. Install the manual shaft and manual plate.

3. Align the manual shaft groove with the transaxle case hole.
4. Install the manual shaft retaining pin to the bottom of the hole.

Manual Shaft (Continued)

5. Assembly the parking rod to the parking rod plate and install the manual shaft.

6. Press in the retaining pin into the manual plate and parking rod plate using a pin punch so that its end comes out approx. 5 - 6 mm.

7. Install the detent spring properly on to the guide pin.
   Tighten the mounting bolts to the specified torque.
   Mounting bolt:
   6.4 - 7.4 N•m (0.65 - 0.76 kgf-m)

Oil Pump

DISASSEMBLY

Oil Pump (Continued)

1. Remove the seal ring using a hook.

2. Loosen the bolts in crisscross sequence and then remove the oil pump cover.

3. Remove the inner and outer gear from the oil pump housing.

4. Remove the O-ring from the oil pump housing.

5. Remove the oil pump housing oil seal.

Oil Pump (Continued)

INSPECTION

Oil pump housing, oil pump cover, inner gear and outer gear

Inspect for wear and damages.

SIDE CLEARANCE

Measure the side clearance between the oil pump housing end and inner & outer gears. For oil pump diameter, measure at least 4 points. The measured maximum value should be within the specified value.

Model	RE4F03B
Standard clearance	0.02 - 0.04 mm

If the clearance is smaller than the specified value, select the outer gear and inner gear as a set and then make them to be within the specified value.

INNER AND OUTER GEAR

If the clearance is over the standard value, then replace the oil pump assembly except for the oil pump cover.

If not within the allowed limit values, replace the oil pump assembly except for the oil pump cover.

Measure the clearance between the outer gear and oil pump housing.

Model	RE4F03B
Standard clearance	0.08 - 0.15 mm
Allowed limit	0.15 mm

SEAL RING CLEARANCE

Measure the clearance between the seal ring and ring groove.

Standard clearance: 0.1 - 0.25 mm

Allowed limit: 0.25 mm

If not within the allowed limit, replace the oil pump cover assembly.

ASSEMBLY

1. Install the oil seal to the oil pump housing.

Oil Pump (Continued)

2. Install the O-ring to the oil pump housing.
   Apply the ATF to the O-ring.

3. Install the inner and outer gears on the oil pump housing.
   Be careful with the inner gear direction.

4. Install the oil pump cover to the oil pump housing.
   Cover the oil pump cover's spline with the masking tape to protect the seal. Place the oil pump cover assembly on the oil pump housing assembly and then remove the masking tape. Tighten the bolt in crisscross sequence.
   Tightening torque:
   0.7 - 1.1 kgf-m

5. Apply the Vaseline on the ring groove and install the new seal ring carefully.
   Do not over stretch the seal ring during installation. The ring may be deformed.

Control Valve Assembly

Disassembly • Assembly

DISASSEMBLY

1. By facing the upper body downwards, remove the bolts A - G (31 EA), reamer bolt F (2 EA), nuts (2 EA) and support brake (2 EA) according to following order and then disassemble the upper body, inter body and lower body.

Bolt symbol	A	B	C	D	E	F	G
Bolt length (mm)	13.5	58.0	40.0	66.0	33.0	78.0	18.0
Quantity	6	3	6	11	2	2	1

Control Valve Assembly (Continued)

2. Remove the oil strainer by removing bolt A (2 EA), bolt D (11 EA), reamer bolt F (1 EA) and nut (1 EA).

3. Remove the solenoid assembly by removing the bolt A (4 EA), bolt C (6 EA) and bolt G (1 EA).

4. Remove the O-ring from the solenoid assembly and terminal body.

5. Remove the bolt B (3 EA), reamer bolt F (1 EA) and nut (1 EA) by pressing the upper body, inter body and lower body with hand not to be dropped.

CAUTION:

When the upper body and inter body falls apart, steel balls may fall and get lost. Thus, remove the bolt by facing the upper body downwards.

6. Remove the lower body from the inter body.

Control Valve Assembly (Continued)

7. Release the bolt E (2 EA) by turning the lower body upside down as in the illustration and remove the support plate.
8. Remove the separate plate from the lower body.

9. Remove the check ball (3 EA), oil cooler relief valve spring (2 EA) and valve spring (1 EA) from the location in the illustration.

CAUTION:

Be careful not to lose the check ball, oil cooler relief valve spring and valve spring.

10. Remove the inter body from the upper body.

11. Check if the inter body's steel ball goes into the location in the illustration and remove the steel ball from the inter body.

CAUTION:

Be careful not to lose the steel ball.

12. Check if the upper body's steel ball goes into the location in the illustration and remove the steel ball from the upper body.

CAUTION:

Do not lose the steel ball.

Control Valve Assembly (Continued)

INSPECTION AFTER DISASSEMBLY

Lower body and upper body

Check if the retainer plate is attached in the illustrated location of the lower body.

Retainer plate quantity: 7 EA

Check if the retainer plate is attached in the illustrated location of the upper body.

Retainer plate quantity: 9 EA

Oil strainer

Inspect for any damages in the oil strainer's wire mesh.

SOLENOID VALVE

Measure the resistance between the solenoid terminals using a circuit tester.

Inspection standard value

Solenoid	Terminal No	Resistance
Solenoid A	2 ~ Solenoid case	Approx. 20 - 30
Shift solenoid B	1 ~ Solenoid case	Approx. 5 - 20
Overrun clutch solenoid	3 ~ Solenoid case	Approx. 20 - 30
Line pressure solenoid	4 ~ Ground terminal	Approx. 2.5 - 5.0
Lockup solenoid	5 ~ Solenoid case	Approx. 5 - 20

FLUID TEMPERATURE SENSOR

Place the fluid temperature sensor into water as in the illustration. Measure the resistance between the terminal No. 6 and No. 7 by changing the water temperature.

Standard value

Water temperature	Resistance
20°C	Approx. 2.5 k
80°C	Approx. 0.3 k

Control Valve Assembly (Continued)

OIL CLUTCH RELIEF VALVE SPRING

Inspect the measuring location in the illustration and replace if damaged, deformed or worn.

Inspection standard

Part No.	Length	Outer Diameter
31872 31 X 00	17.02 mm	8.0 mm

ASSEMBLY

1. Install the upper body, inter body and lower body according to below order.
   a. By facing the upper body fluid circuit surface upwards, install the steel ball in the location in the illustration.

   Steel ball quantity: 7 EA

REFERENCE:

The steel ball is the same as the inter body's steel ball.

   b. Install the reamer bolt F (2 EA) in the illustrated location from the lower of the upper body and install the separate plate by aligning it to the upper body's reamer bolt hole.

CAUTION:

The separate plate cannot be reused. Do not reuse.

Remove the reamer bolt F after installing the lower body since it is being used as a guide.

   c. Install the pilot filter in the illustrated location.

   d. By facing the inter body's lower body mating surface upwards, install the steel ball as shown in the left illustration.

   Steel ball quantity: 6 EA

Control Valve Assembly (Continued)

e. Install the inter body by aligning it to the upper body's reamer bolt F.

f. Install the valve clamp (1 EA), oil cooler relief valve spring (2 EA) and check ball (3 EA) to the illustrated location in the lower body.

g. Install the support plate fixing bolt E (2 EA) at the illustrated location in the lower body from the bottom. Then install the select plate by aligning it to the lower body's bolt E.

CAUTION:

The separate plate cannot be reused. Do not reuse.

h. Tighten the support plate temporarily with bolt E (2 EA).

i. Install the lower body by aligning it to the inter body's reamer bolt F and temporarily tighten the reamer bolt F (2 EA) with the nut.

2. Apply the Genuine NISSAN ATF Matic Fluid D or equivalent to the new O-ring and install it to the solenoid and terminal body.

CAUTION:

The O-ring cannot be reused. Do not reuse.

Control Valve Assembly (Continued)

3. Install the mounting bolt according to following order and tighten to specified torque.

Bolt symbol	A	B	C	D	E	F	G
Length (mm)	13.5	58.0	40.0	66.0	33.0	78.0	18.0
Quantity	6	3	6	11	2	2	1
Tightening torque (kg•m)	Bolt symbol E: 0.35 - 0.45 Other than bolt symbol E: 0.7 - 0.9						

a. Install the illustrated bolt B (3 EA) and tighten to specified torque.

b. Install the solenoid assembly to the lower body. Install the bolt A (4 EA), bolt C (6 EA) and bolt G (1 EA) and tighten to specified torque.

Control Valve Assembly (Continued)

c. Install the oil strainer at the illustrated location. Install the bolt A (2 EA), bolt D (11 EA), reamer bolt F (2 EA) and nut (2 EA) and tighten to specified torque.

CAUTION:

Remove the reamer bolt F (2 EA) used as a guide from the upper body and then install from the lower body side.

d. Tighten the support plate mounting bolts E (2 EA) to specified torque.

Control Valve Upper Body

Disassembly • Assembly

Control Valve Upper Body (Continued)

Location	Spring name	Free length (l)	Outer diameter (D)	Wire diameter (d)	No. of action coils (Direction)	Part number
L14	Pilot valve spring	38.98	8.9	1.2	15.94 (Left)	31742 3AX03
L15	1-2 accumulator valve spring	55.66	19.5	1.5	9.86 (Left)	31742 3AX09
	1-2 accumulator piston spring	20.5	6.95	0.45	7.47 (Left)	31742 3AX00
L16	1 reducing valve spring	27.0	7.0	0.8	10.7 (Left)	31742 80X05
L17	3-2 timing valve spring	23.0	6.65	0.65	8.5 (Left)	31742 01X00
L18	Overrun clutch reducing valve spring	37.5	7.0	1.1	19.2 (Left)	31742 80X06
L19	Torque converter relief valve spring	33.3	9.0	1.2	12.59 (Left)	31742 3AX04
L20	Lockup control valve spring	53.01	6.5	1.0	34.15 (Left)	31742 3AX02
L21	Cooler check valve clip	28.04	7.15	0.65	11.4 (Left)	31742 3AX05

CONTROL VALVE

Location	Valve name	Overall length (mm)	Part number
L14	Pilot valve	40.0	31772 80X11
L15	1-2 accumulator valve	42.0	31772 3AX01
	1-2 accumulator piston	24.0	31675 3AX00
L16	1 reducing valve	38.5	31772 21X00
L17	3-2 timing valve	38.5	31772 21X00
L18	Overrun clutch reducing valve spring	68.5	31772 80X04
L19	Torque converter relief valve spring	37.5	31780 80X00
L20	Lockup control valve spring	56.5	31832 3AX00
L21	Cooler check valve spring	38.5	31772 21X00

RETAINER PLATE

Location	Valve name	Type	Clearance A (mm)	Clearance B (mm)	Part number
L14	Pilot valve	A	6.0	21.5	31742 3AX03
L15	1-2 accumulator valve	A	6.0	40.5	31742 3AX03
	1-2 accumulator piston	A	6.0	40.5	31742 3AX03
L16	1 reducing valve	A	6.0	21.5	31742 3AX03
L17	3-2 timing valve	A	6.0	21.5	31742 3AX03
L18	Overrun clutch reducing valve	A	6.0	24.0	31742 3AX03
L19	Torque converter relief valve	A	6.0	21.5	31742 3AX03

Control Valve Upper Body (Continued)

Location	Valve name	Type	Clearance A (mm)	Clearance B (mm)	Part number
L14	Lockup control valve	A	6.0	21.5	31742 3AX03
L15	Cooler check valve	A	6.0	40.5	31742 3AX03

Control Valve Lower Body

Disassembly • Assembly

Control Valve Lower Body (Continued)

INSPECTION AFTER DISASSEMBLY

Valve spring

Location	Spring name	Free length (l)	Outer diameter (D)	Wire diameter (d)	No. of action coils (Direction)	Part number
L3	Pressure regulator valve spring	45.0	15.0	1.4	10.42 (Left)	31742 80X03
L4	Overrun clutch control valve spring	21.7	7.0	0.8	8.8 (Left)	31762 80X00
L5	Accumulator control valve spring	20.0	6.5	0.5	10.3 (Left)	31742 80X02
L6	Shift valve A spring	21.7	7.0	0.8	8.8 (Left)	31762 80X00
L7	Shuttle valve spring	51.0	5.65	0.75	27.6 (Left)	31762 41X04
L12	Shift valve B spring	21.7	7.0	0.8	8.8 (Left)	31762 80X00
L13	Pressure modifier valve spring	30.5	9.8	1.3	8.8 (Left)	31742 41X15
	Pressure modifier piston spring	32.0	6.9	0.9	15.5 (Left)	31742 80X16

Control Valve

Location	Valve name	Overall length (mm)	Part number
L2	Manual valve	119.75	31731 31X00
L3	Pressure regulator valve	68.0	31741 80X00
L4	Overrun clutch control valve	73.5	31772 80X00
L5	Accumulator control valve	66.0	31772 80X19
L6	Shift valve A	96.5	31766 80X00
L7	Shuttle valve	59.0	31772 3AX00
L12	Shift valve B	72.5	31766 80X01
L13	Pressure modifier valve	43.5	31751 80X00
	Pressure modifier piston	19.5	31675 41X07

Retainer Plate

Location	Valve name	Type	Clearance A (mm)	Clearance B (mm)	Part number
L3	Pressure regulator valve	A	6.0	28.0	31743 31X01
L4	Overrun clutch control valve	A	6.0	28.0	31743 31X01
L5	Accumulator control valve	A	6.0	28.0	31743 31X01
L6	Shift valve A	A	6.0	28.0	31743 31X01
L7	Shuttle valve	A	6.0	28.0	31743 31X01

Control Valve Lower Body (Continued)

Location	Valve name	Type	Clearance A (mm)	Clearance B (mm)	Part number
L12	Shift valve B	B	17.0	24.0	31743 80X05
L13	Pressure modifier valve	A	6.0	28.0	31743 31X01

Reverse Clutch

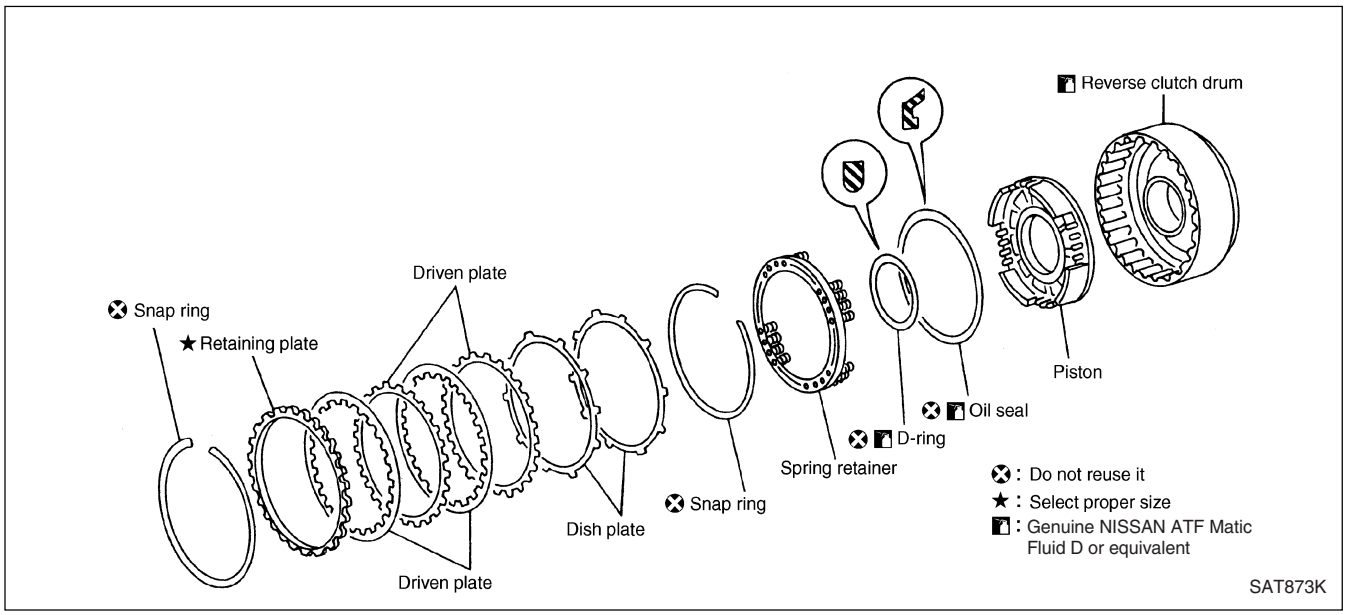

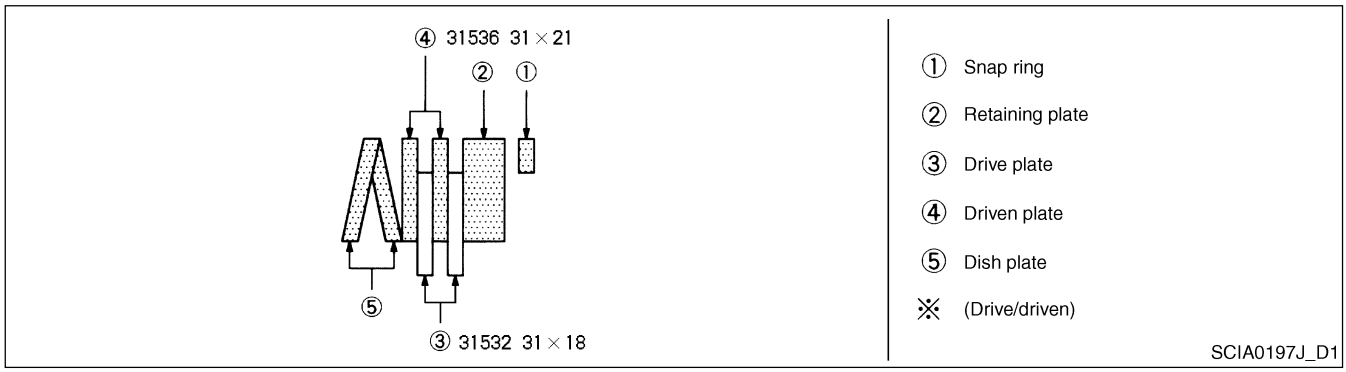

Reverse Clutch (Continued)

DISASSEMBLY

1. Inspect the reverse clutch operation.

   Install the seal ring to the oil pump cover's drum support and install the reverse clutch assembly. Blow compressed air into the fluid hole. Inspect if the retaining plate moves towards the snap ring. If the retaining plate does not move towards the snap ring, the D-ring or oil seal may be damaged.

2. Remove the snap ring.
3. Remove the drive plate, driven plate, retaining plate and dish plate.

4. Install the special tool on the spring retainer. Remove the snap ring from the reverse clutch drum by pressing the return spring.

   Install the special tool on the spring directly.

   Do not over stretch the snap ring.

5. Remove the spring retainer and return spring.

   Do not remove the spring from the spring retainer.

6. Remove the piston by rotating the reverse clutch drum.

7. Remove the D-ring and oil seal from the piston.

Reverse Clutch (Continued)

INSPECTION

1. Reverse clutch snap ring, spring retainer and return spring

   Inspect for deformation, aging and damages.

   Replace if necessary.

   Replace the spring retainer and return spring as a set.

2. Reverse clutch drive plate

   Inspect the facing for any burns, cracks and damages.

   Measure the facing thickness.

Drive plate thickness

Standard value	2.0 mm
Wear limit	1.8 mm

   Replace if out of the limit value.

3. Reverse clutch dish plate

   Inspect for any deformation or damages.

   Measure the dish plate thickness.

Thickness	“T” 2.8 mm

4. Reverse clutch piston

   The check ball should not be stuck.

   There should be no air leakage when applying the compressed air at the check ball fluid hole in the opposite side of the return spring.

   The air must flow the ball when applying the compressed air into the fluid hole at the return spring.

Reverse Clutch (Continued)

ASSEMBLY

1. Install the D-ring and oil seal on the piston.
   Be careful of the oil seal direction.
   Apply the ATF on the oil seal and D-ring.

2. Install the piston assembly by rotating it slowly.
   Apply the ATF inside the drum.

3. Install the return spring and spring retainer on the piston.

4. Install the special tool on the spring retainer and install the snap ring by pressing the return spring.
   Install the special tool on the return spring directly.

Reverse Clutch (Continued)

5. Install the drive plate, driven plate, retaining plate and dish plate.
   Do not align two or more dish plate's protrusion.
   Be careful of the plate order and direction.

6. Install the snap ring.

7. Measure the clearance between the retaining plate and snap ring. If the value is out of the allowed limit, select a proper retaining plate.
   Specified clearance:
   - Standard: 0.5 - 0.8 mm
   - Allowed limit: 1.2 mm
   - Retaining plate: Refer "Specifications" (AT-230).

8. Inspect the reverse clutch operation.
   Refer to "Disassembly" in "Reverse Clutch" (AT-170).

High Clutch

DISASSEMBLY

1. Inspect the high clutch operation.
   a. Blow the compressed air into the input shaft's fluid hole.
      Cover the opposite hole of the input shaft hole.
   b. Inspect if the retaining plate moves towards the snap ring.
   c. If the retaining plate does not touch the snap ring, the D-ring and oil seal may be damaged or fluid leakage from the piston check ball may be present.

2. Remove the seal ring from the input shaft.
   Always replace after removal.

3. Remove the snap ring.
4. Remove the drive plate, driven plate and retaining plate.

High Clutch (Continued)

5. Install the special tool on the spring retainer and remove the snap ring from the high clutch drum by pressing the return spring.
   - Install the special tool on the spring directly.
   - Do not over stretch the snap ring.
6. Remove the spring retainer and return spring.
   - Do not remove the return spring from the spring retainer.

7. Remove the piston from the high clutch drum by rotating the piston.

8. Remove the D-ring and oil seal from the piston.

INSPECTION

1. Reverse clutch snap ring, spring retainer and return spring
   - Inspect for deformation, aging and damages.
   - Replace if necessary.
   - Replace the spring retainer and return spring as a set.

2. High clutch drive plate
   - Inspect for any burns, cracks and damages.
   - Measure the facing thickness.
     - Drive plate thickness:
       - Standard value: 1.6 mm
       - Wear limit: 1.4 mm
   - Replace if out of the limit value.

High Clutch (Continued)

3. High clutch piston

   The check ball should not be stuck.

   There should be no air leakage when applying the compressed air at the check ball fluid hole in the opposite side of the return spring.

   The air must flow the ball when applying the compressed air into the fluid hole at the return spring.

4. Seal ring clearance

   Install a new seal ring to the input shaft.

   Measure the clearance between the seal ring and ring groove.

   Standard clearance: 0.08 - 0.23 mm

   Allowed limit: 0.23 mm

   If the value is out of the limit value, replace the input shaft assembly.

ASSEMBLY

1. Install the D-ring and oil seal to the piston.

   Be careful of the oil seal direction.

   Apply the ATF on the oil seal and D-ring.

2. Install the piston assembly by rotating it slowly.

   Apply the ATF inside the drum.

3. Install the return spring and spring retainer on the piston.

High Clutch (Continued)

4. Install the special tool on the spring retainer and install the snap ring by pressing the return spring.

   Install the special tool on the return spring directly.

   Do not align the snap ring clearance with the retainer stopper.

5. Install the drive plate, driven plate and retaining plate.

   Be careful of the plate order and direction.

6. Install the snap ring.

7. Measure the clearance between the retaining plate and snap ring. If the value is out of the limit value, select a proper retaining plate.

   Specified clearance

Standard	1.4 - 1.8 mm
Allowed limit	2.6 mm

   Retaining plate:

   Refer “Specifications” (AT-230).

8. Inspect the high clutch operation.

   Refer to “Disassembly” in “High Clutch” (AT-174).

High Clutch (Continued)

9. Install the seal ring to the input shaft.

   Apply the Vaseline on the seal ring.

   Wrap the input shaft seal ring with paper so that it does not unroll.

Forward Clutch & Overrun Clutch

DISASSEMBLY

1. Inspect the forward clutch and overrun clutch operations.
   a. Install the bearing retainer to the forward clutch drum.
   b. Blow the compressed air into the forward clutch drum fluid hole.
   c. Inspect if the retaining plate moves towards the snap ring.
   d. If the retaining plate does not move towards the snap ring, the D-ring and oil seal may be damaged or fluid leakage from the piston check ball may be present.
2. Remove the forward clutch snap ring.
3. Remove the drive plate, driven plate, retaining plate and dish plate from the forward clutch.

Forward Clutch & Overrun Clutch (Continued)

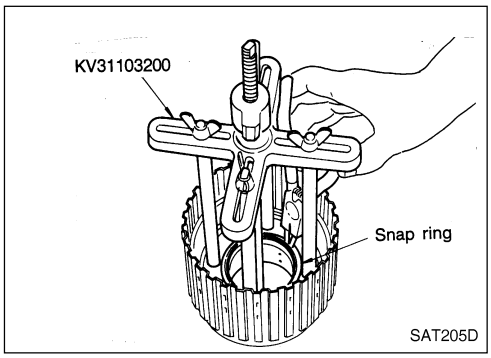

4. Remove the overrun clutch snap ring.
5. Remove the drive plate, driven plate, retaining plate and dish plate from the overrun clutch.

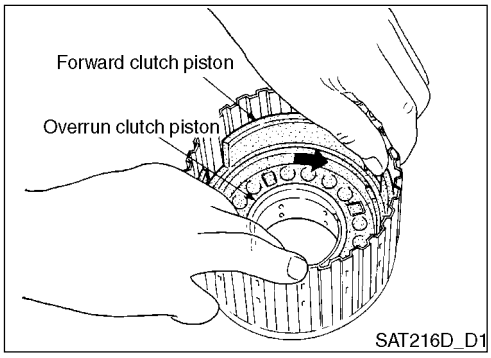

6. Install the special tool to the spring retainer and remove the snap ring from the forward clutch drum by pressing the return spring.
   Install the special tool on the return spring directly.
   Do not over stretch the snap ring.
7. Remove the spring retainer and return spring.
   Do not remove the return spring from the spring retainer.

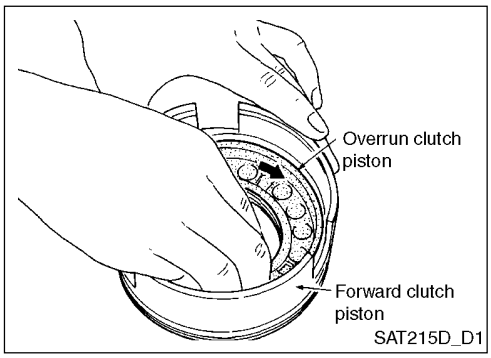

8. Remove the forward clutch piston with the overrun clutch piston by rotating it in the forward clutch drum.

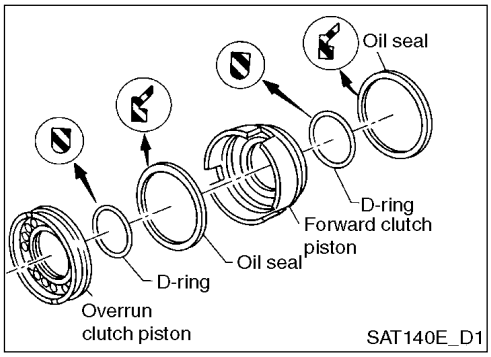

9. Remove the overrun clutch piston by rotating it from the forward clutch piston.

10. Remove the D-ring and oil seal from the forward clutch piston and overrun clutch piston.

Forward Clutch & Overrun Clutch (Continued)

INSPECTION

1. Snap ring and spring retainer

   Inspect for deformation, aging and damages.

   Replace if necessary.

   Replace the spring retainer and return spring as a set.

2. Forward clutch and overrun clutch return spring

   Inspect the facing for any damages and cracks.

   Measure the free length and outside diameter.

   Replace if deformed or worn.

3. Forward clutch and overrun clutch drive plate

   Inspect for facing burns, cracks and damages.

   Measure the facing thickness.

   Drive plate thickness

Forward clutch	Standard value	1.8 mm
	Wear limit	1.6 mm
Overrun clutch	Standard value	1.6 mm
	Wear limit	1.4 mm

   Replace if out of the limit value.

4. Forward clutch and overrun clutch dish plate

   Inspect for any deformation or damages.

   Measure the dish plate thickness.

   Dish plate thickness “t”

Forward clutch	2.5 mm
Overrun clutch	2.15 mm

   Replace if deformed or aged.

5. Forward clutch drum

   The check ball should not be stuck.

   The air must flow the ball when applying the compressed air into the fluid hole from the outer forward clutch drum.

   There should be no air leakage when applying the compressed into the fluid hole from the inner forward clutch drum.

Forward Clutch & Overrun Clutch (Continued)

6. Overrun clutch piston

   The check ball should not be stuck.

   There should be no air leakage when applying the compressed air at the check ball fluid hole in the opposite side of the return spring.

   The air must flow the ball when applying the compressed air into the fluid hole at the return spring.

ASSEMBLY

1. Install the D-ring and oil seal to the forward clutch piston and overrun clutch piston.

   Be careful of the oil seal direction.

   Apply ATF to both components.

2. Install the overrun clutch piston assembly to the forward clutch piston by rotating it.

   Apply ATF inside of the forward clutch piston.

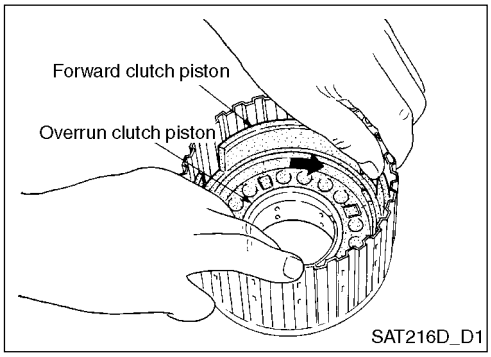

3. Install the forward clutch piston assembly to the forward clutch drum by rotating it slowly.

   Apply ATF inside of the drum.

4. Align the forward clutch piston notch with forward clutch drum groove.

Forward Clutch & Overrun Clutch (Continued)

5. Install the return spring to the piston.
6. Install the spring retainer to the return spring.

7. Install the snap ring by pressing the return spring after installing the special tool on the spring retainer.

   Install the special tool on the return spring directly.

   Do not align the snap ring clearance with the spring retainer stopper.

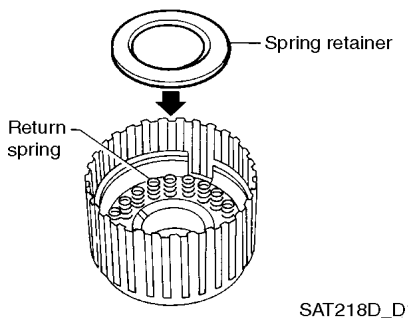

8. Install the drive plate, driven plate, retaining plate and dish plate of the overrun clutch.
9. Install the overrun clutch snap ring.

10. Measure the clearance between the overrun clutch retaining plate and the snap ring. If the value is out of the limit value, select a proper retaining plate.

    Specified clearance:

Standard	1.0 - 1.4 mm
Allowed limit	2.0 mm

Overrun plate retaining plate:

Refer to “Specifications” (AT-230).

Forward Clutch & Overrun Clutch (Continued)

11. Install the drive plate, driven plate, retaining plate and dish plate of the forward clutch.

    Be careful of the plate order and direction.

12. Install the forward clutch snap ring.

13. Measure the clearance between the forward clutch retaining plate and the snap ring. If the value is out of the limit value, select a proper retaining plate.

    Specified clearance:

Standard	0.45 - 0.85 mm
Allowed limit	1.85 mm

    Forward clutch retaining plate:

    Refer to “Specifications” (AT-230).

14. Inspect the forward clutch operation.

    Refer to “Disassembly” in “Forward Clutch & Overrun Clutch” (AT-179).

15. Inspect the overrun clutch operation.

    Refer to “Disassembly” in “Forward Clutch & Overrun Clutch” (AT-179).

Low and Reverse Brake

DISASSEMBLY

1. Inspect the low and reverse brake operation.
   a. Blow the compressed air into the transaxle case fluid hole.
   b. Inspect if the retaining plate moves towards the snap ring.
   c. If the retaining plate does not move towards the snap ring, the D-ring or oil seal may be damaged or probable leakage from the piston check ball is present.

2. Stand up the transaxle case.
3. Remove the snap ring.
4. Remove the dish plate, driven plate and retaining plate from the transaxle case.

5. Install the special tool on the spring retainer and remove the snap ring by pressing the return spring.
   Install the special tool on the return spring directly.
   Do not over stretch the snap ring.
6. Replace the spring retainer and snap ring.
   Do not remove the return spring from the spring retainer.

Low and Reverse Brake (Continued)

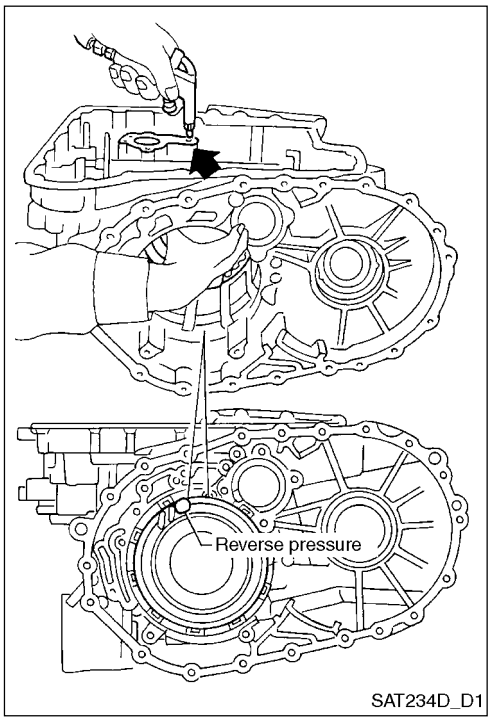

7. Blow the compressed air into the transaxle case fluid hole while holding the piston.
8. Remove the piston from the transaxle case by rotating it.

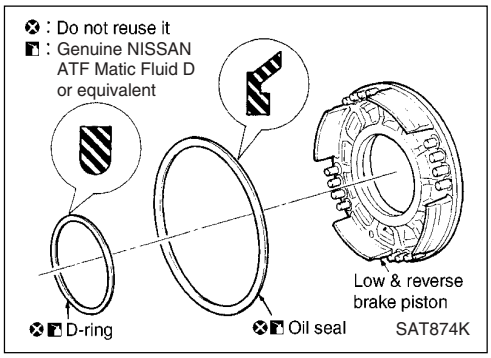

9. Remove the D-ring and oil seal from the piston.

INSPECTION

1. Low and reverse clutch snap ring, spring retainer and return spring
   - Inspect for any deformation, aging and damages.
   - Replace if necessary.
   - Replace the spring retainer and return spring as a set.

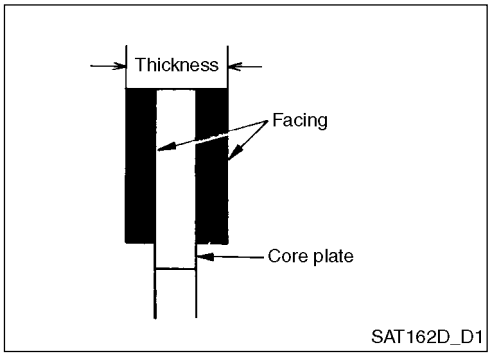

2. Low and reverse brake drive plate
   - Inspect the facing for any burns, cracks and damages.
   - Measure the facing thickness.

     Drive plate thickness

     Standard value: 2.0 mm

     Wear limit: 1.8 mm
   - Replace if out of the limit value.

Low and Reverse Brake (Continued)

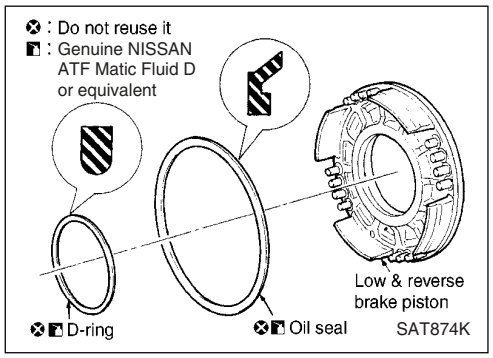

ASSEMBLY

1. Install the D-ring and oil seal to the piston.
   - Be careful of the oil seal direction.
   - Apply ATF to both components.

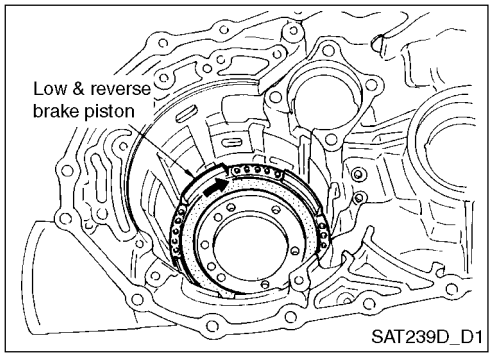

2. Stand up the transaxle case.
3. Install the piston assembly to the transaxle case by rotating it.
   - Apply the ATF inside of the transaxle case.

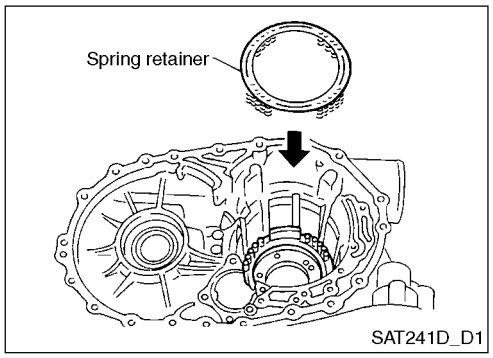

4. Install the return spring and spring retainer to the piston.

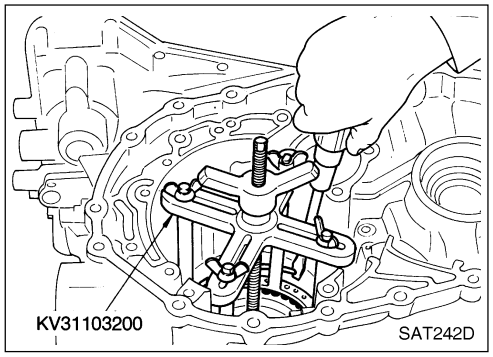

5. Install the snap ring by pressing the return spring.
   - Install the special tool on the return spring directly.

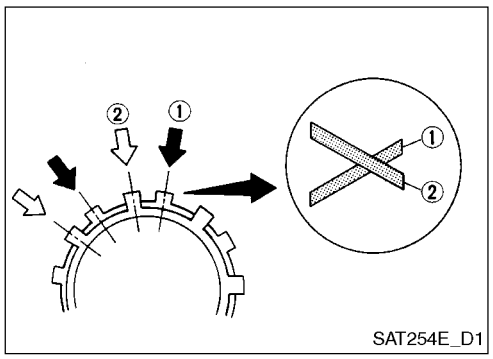

6. Install the drive plate, driven plate, retaining plate and dish plate.
   - Do not align two or more dish plate's protrusion.
   - Be careful of the plate order and direction.

Low and Reverse Brake (Continued)

7. Install the snap ring.

8. Measure the clearance between the retaining plate and snap ring. If the value is out of the limit value, select a proper retaining plate (front side).

   Specified clearance: Refer the “Specifications” (AT-230).

   Retaining plate: Refer the “Specifications” (AT-230).

9. Inspect the low and reverse brake operation.

   Refer to “Disassembly” in “Low and Reverse Brake” (AT-185).

Rear Internal Gear, Forward Clutch Hub and Overrun Clutch Hub

DISASSEMBLY

1. Remove the snap ring from the overrun clutch hub.
2. Remove the overrun clutch hub and thrust washer from the forward clutch hub.
3. Remove the forward clutch hub from the rear internal gear.
4. Disconnect the bearing from the rear internal gear.

Rear Internal Gear, Forward Clutch Hub and Overrun Clutch Hub (Continued)

5. Remove the thrust washer from the rear internal gear.

6. Disconnect the bearing from the forward one-way clutch.

7. Remove the forward one-way clutch from the forward clutch hub.

INSPECTION

Rear internal gear, forward clutch hub and overrun clutch hub.

Inspect the friction surface for any wear or damages.

Bearing and forward one-way clutch.

Inspect the bearing for any deformation and damages.

Inspect the forward one-way clutch for any wear or damages.

Rear Internal Gear, Forward Clutch Hub and Overrun Clutch Hub (Continued)

ASSEMBLY

1. Install the forward one-way clutch to the forward clutch.
   Be careful of the forward one-way clutch direction.

2. Install the bearing to the forward one-way clutch.
   Apply the Vaseline on the bearing.

3. Install the rear internal gear thrust washer.
   Apply the Vaseline on the thrust washer.
   Align the thrust washer hook with the rear internal gear hole.

4. Install the bearing to the rear internal gear.
   Apply the Vaseline on the bearing.

5. Install the forward clutch hub to the rear internal gear.
   Inspect the forward one-way clutch operation.

Rear Internal Gear, Forward Clutch Hub and Overrun Clutch Hub (Continued)

6. Install the thrust washer to the overrun clutch hub.
   - Apply the Vaseline on the thrust washer.
   - Align the thrust washer hook with the rear internal gear hole.
   - Align the rear internal gear protrusion with the overrun clutch hub hole.

7. Install the snap ring to the rear internal gear groove.

Output Shaft, Idler Gear, Reduction Gear and Bearing Retainer

Disassembly • Assembly

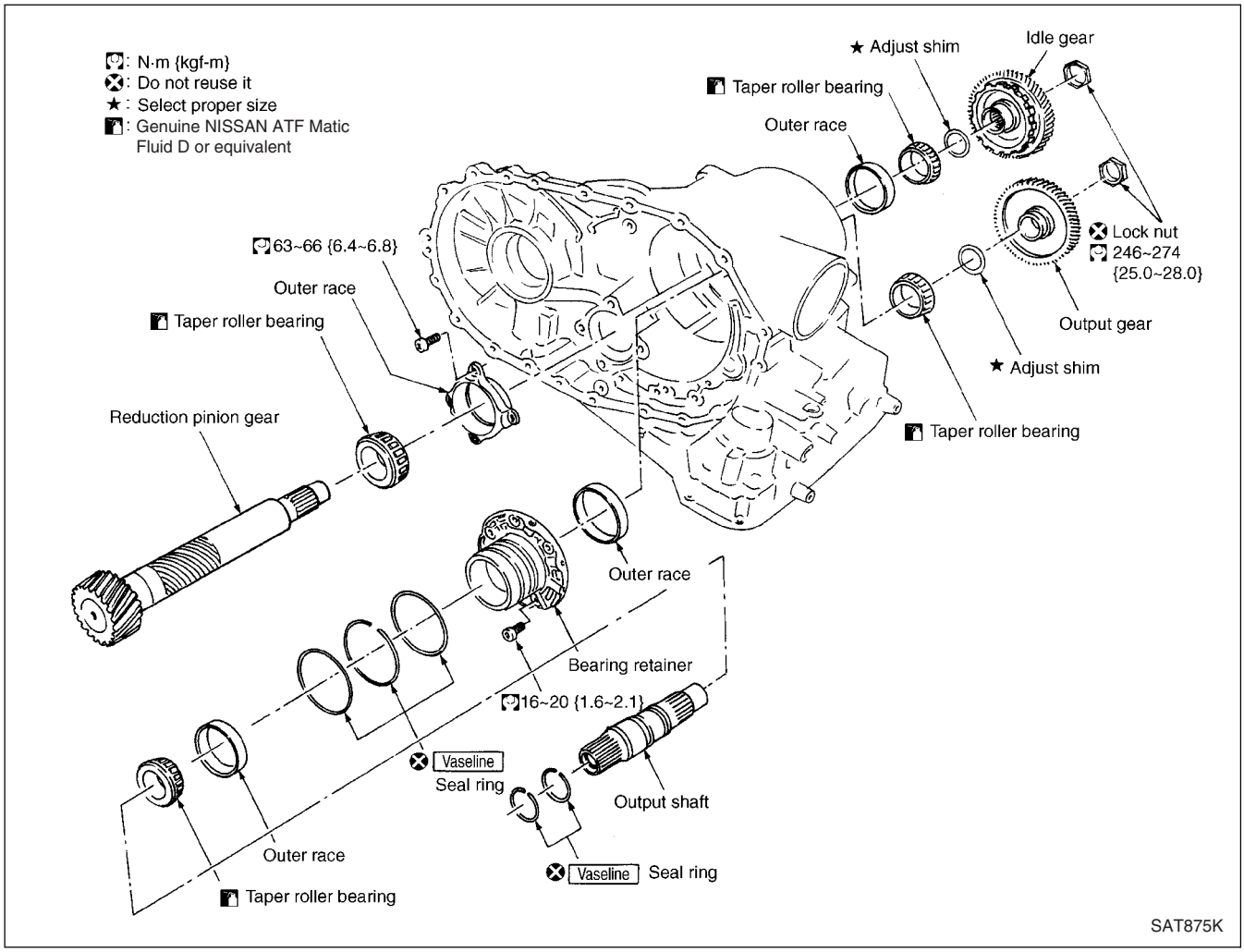

Output Shaft, Idler Gear, Reduction Gear and Bearing Retainer (Continued)

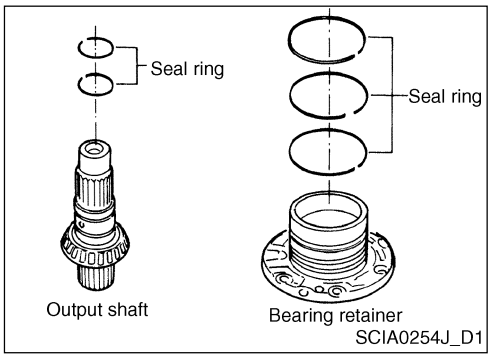

DISASSEMBLY

1. Remove the seal ring from the output shaft and bearing retainer.

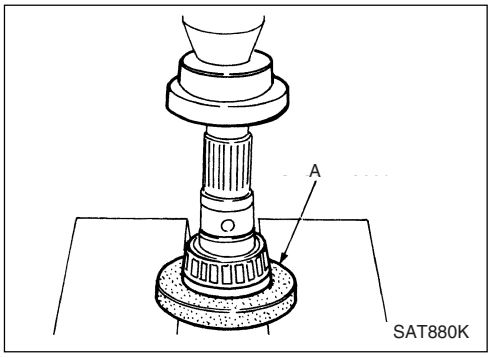

2. Remove the output shaft bearing and outer race using a drift (A: commercial tool).
   - Replace the bearing with new component when removed.
   - Be careful not to damage the output shaft.

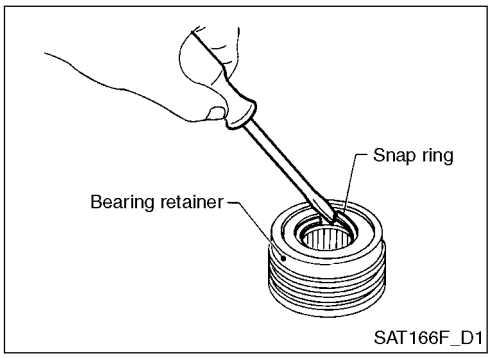

3. Disconnect the snap ring from the bearing retainer.

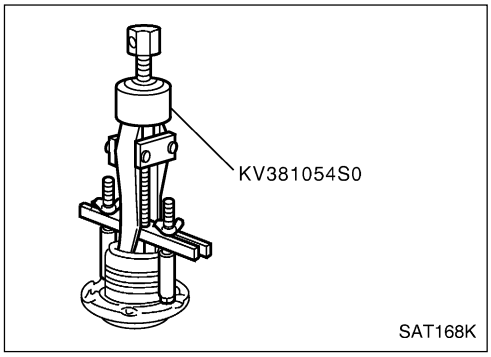

4. Disconnect the outer race from the bearing retainer.

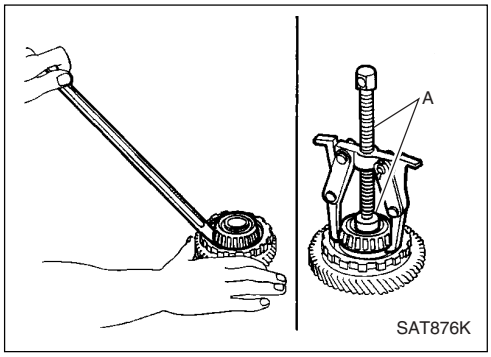

5. Remove the idler gear bearing from the idler gear. Tool A: Commercial service tool

Output Shaft, Idler Gear, Reduction Gear and Bearing Retainer (Continued)

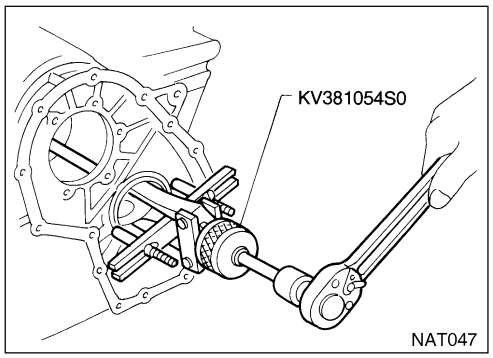

6. Remove the idler gear bearing outer race from the transaxle case.

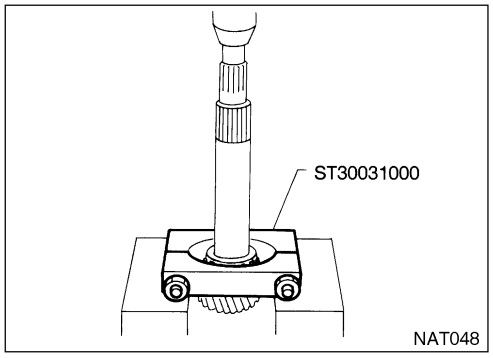

7. Remove the reduction pinion gear bearing inner race from the reduction pinion gear by pushing it.

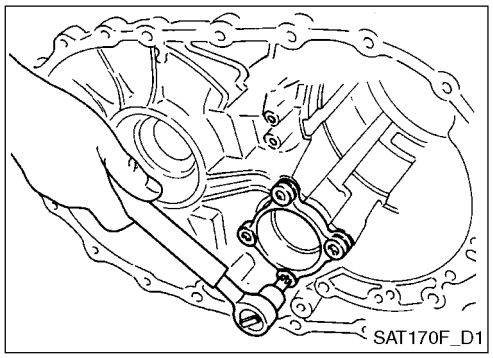

8. Remove the reduction pinion gear bearing outer race from the transaxle case.

INSPECTION

1. Output shaft, idler gear and reduction gear
   - Inspect the shaft for any cracks, wear and bends.
   - Inspect the gear for any wear, chips and cracks.

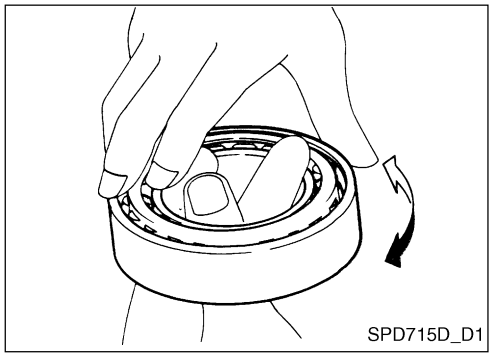

2. Bearing
   - The bearing should be freely rotating without any noises, cracks, dents and wears.
   - When replacing the taper roller bearing, replace the outer race and inner race as a set.

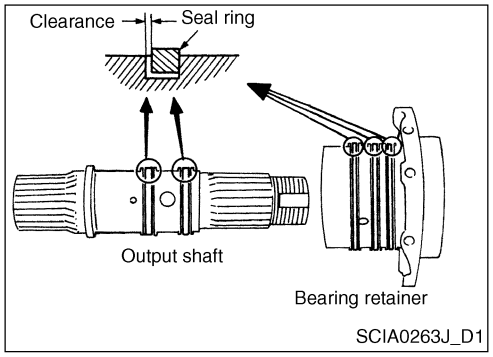

3. Seal ring clearance
   - Install the new seal ring to the output shaft.
   - Measure the clearance between the seal ring and output shaft ring groove.

     Standard clearance: 0.10 - 0.025 mm
     Allowed limit: 0.25 mm
   - If the measured value is not within the limit value, replace the output shaft.
   - Install the new seal ring to the bearing retainer.
   - Measure the clearance between the seal ring and bearing retainer ring groove.

Output Shaft, Idler Gear, Reduction Gear and Bearing Retainer (Continued)

Standard	0.10 - 1.25 mm
Allowed limit	0.25 mm

- If the measured value is not within the limit value, replace the bearing retainer.

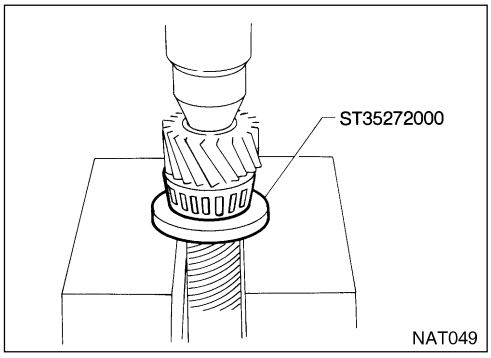

ASSEMBLY

1. Press in the reduction pinion gear bearing inner race to the reduction pinion gear.

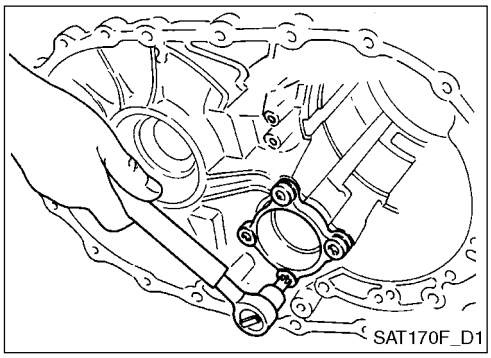

2. Install the reduction pinion gear bearing outer race to the transaxle case.

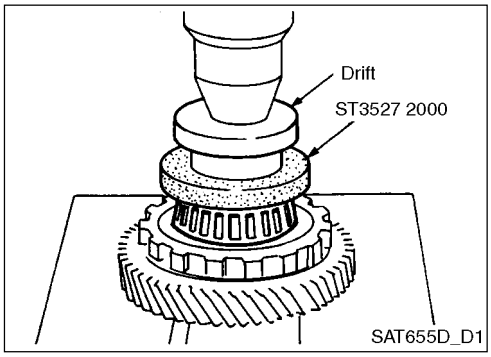

Place the new idle gear and bearing on the idle gear table and insert the bearing with pressure by using the drift.

3. Install the idler gear bearing inner race to the idler gear by pushing it.

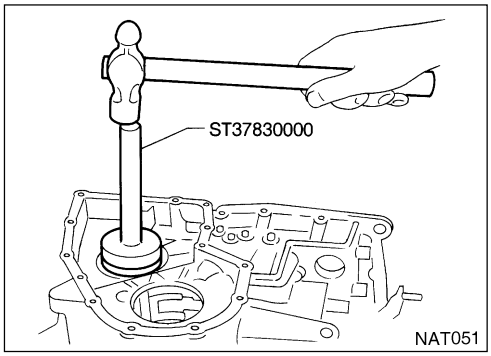

4. Install the idler gear bearing outer race to the transaxle case.

Output Shaft, Idler Gear, Reduction Gear and Bearing Retainer (Continued)

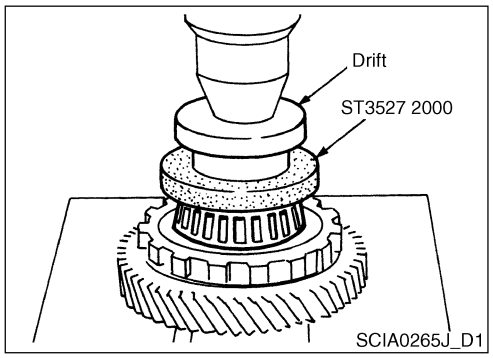

5. Install the output gear bearing.

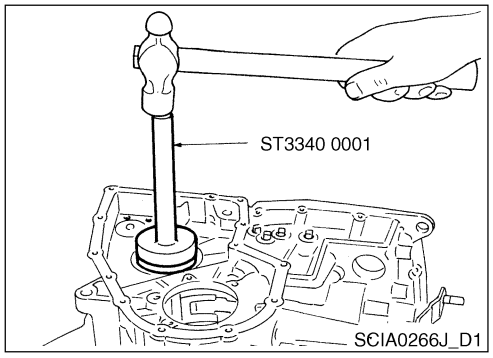

6. Press in the outer race to the bearing retainer.

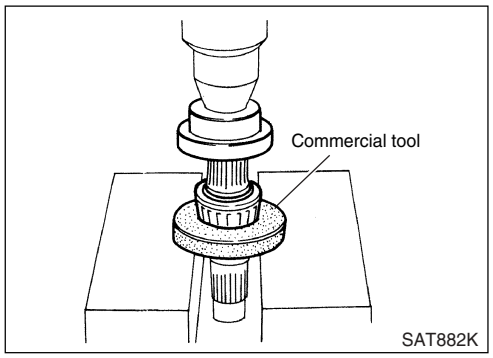

7. Press in the output shaft bearing.

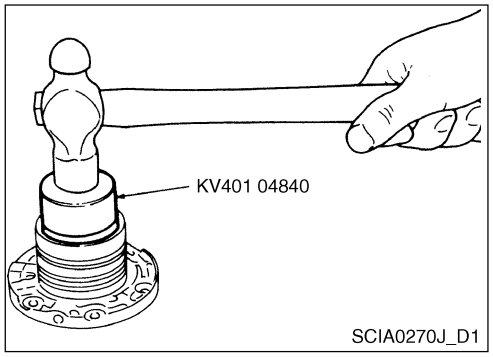

8. Install the outer race to the bearing retainer.

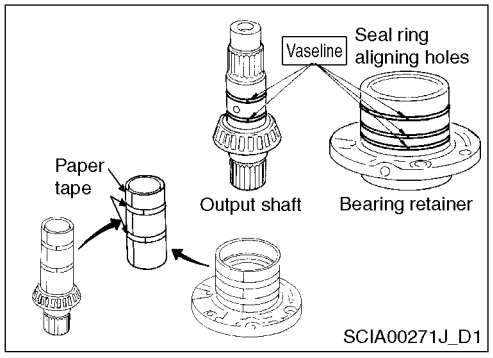

9. After applying the Vaseline on the ring groove, install the new seal ring to the output shaft and bearing retainer carefully.
   - Wrap the input shaft's seal ring with the paper so that it does not unroll.

Band Servo Piston Assembly

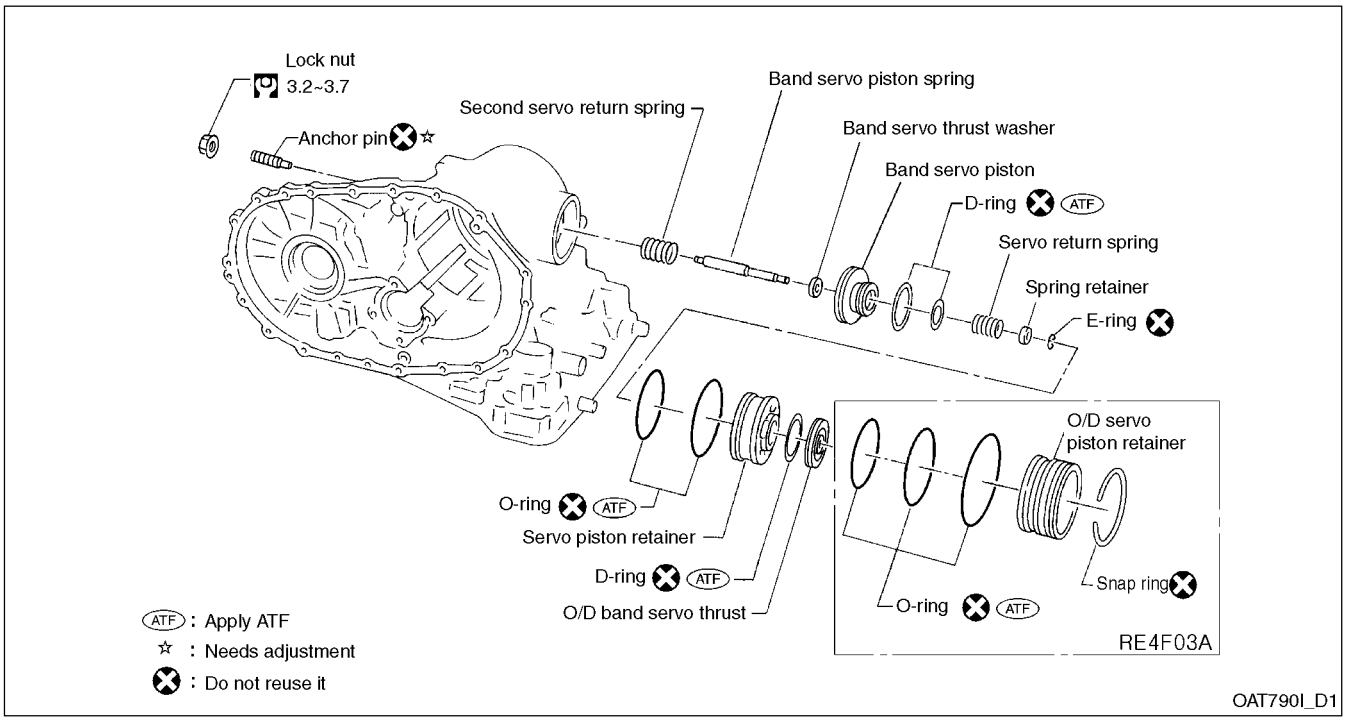

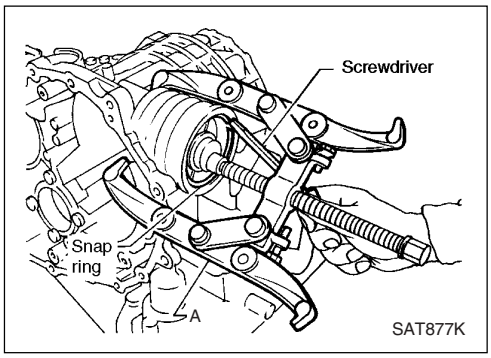

DISASSEMBLY

1. Remove the band servo piston snap ring.
   Tool A: Commercial service tool

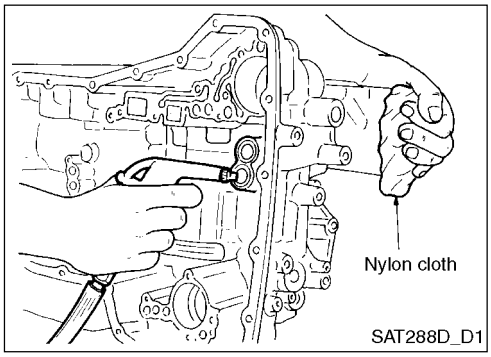

2. Remove the O/D servo piston retainer and band servo piston assembly by blowing the compressed air into the transaxle case fluid hole.
   - Hold the servo piston assembly with a cloth.

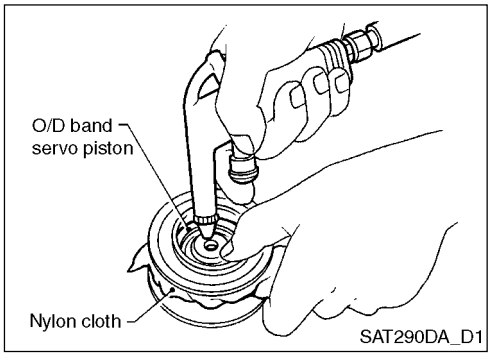

3. Remove the O/D band servo piston from the retainer by blowing the compressed air into the O/D servo piston retainer fluid hole.
   - Hold the O/D servo while blowing the compressed air.

Band Servo Piston Assembly (Continued)

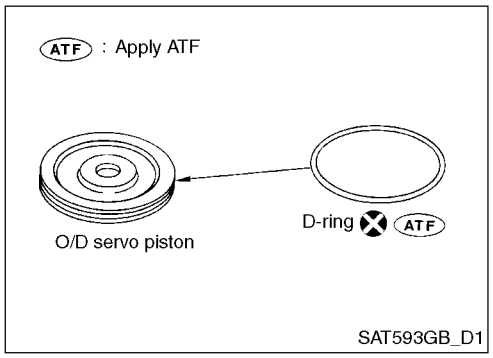

4. Remove the D-ring from the O/D servo piston.

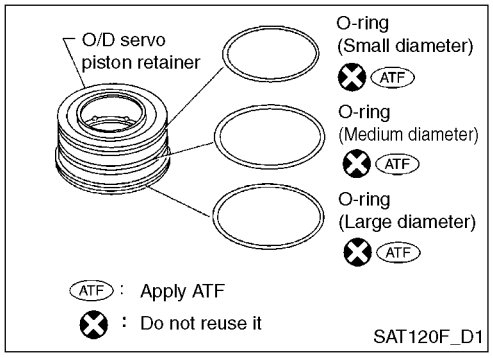

5. Remove the O-ring from the O/D servo piston retainer.

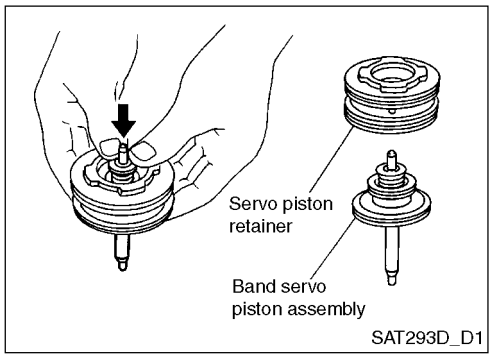

6. Remove the band servo piston assembly by pushing it forward from the servo piston retainer.

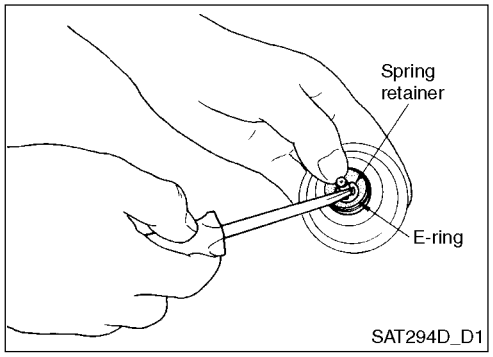

7. Place the piston stem end on a wood block and remove the E-ring while pressing the servo piston spring retainer downward.

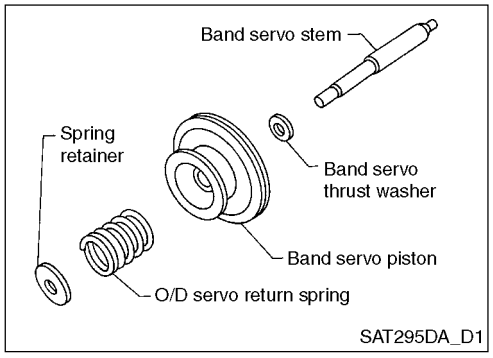

8. Remove the O/D servo return spring, band servo thrust washer and band servo piston stem from the band servo piston.

Band Servo Piston Assembly (Continued)

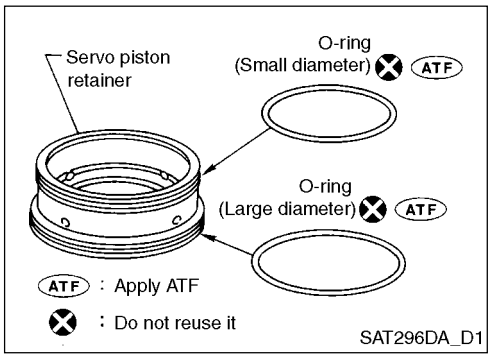

9. Remove the O-ring from the servo piston retainer.

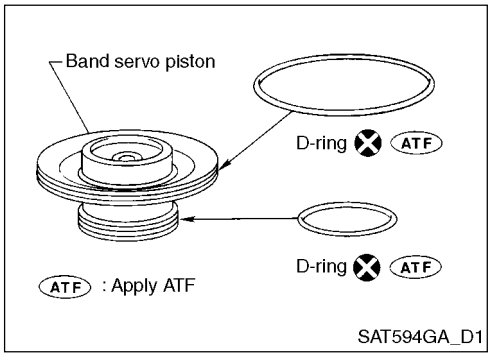

10. Remove the O-ring from the band servo piston.

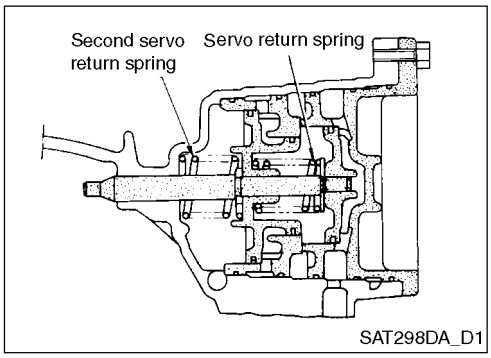

INSPECTION

1. Piston, retainer and piston stem
   - Inspect the surface for any abnormal wear and damages.

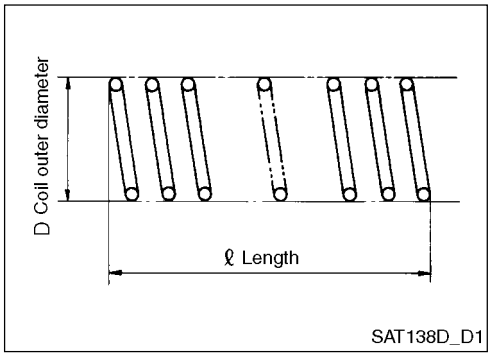

2. Return spring
   - Inspect for any deformation or damages.
   - Measure the free length and outer diameter.

Return spring	Free length
Second servo return spring	32.5 mm
O/D servo return spring	38.52 mm

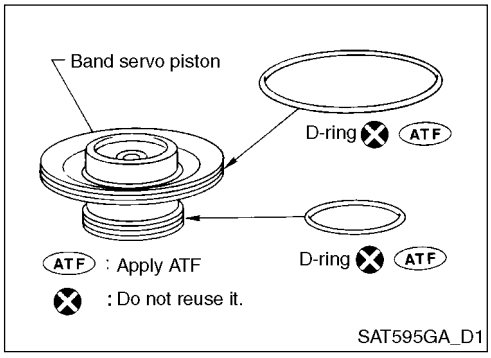

ASSEMBLY

1. Install the D-ring to the servo piston retainer.
   - Apply the ATF to the D-ring.
   - Be careful of the D-ring position.

Band Servo Piston Assembly (Continued)

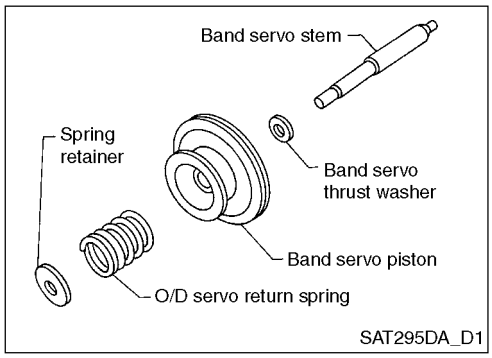

2. Install the band servo piston stem, band servo thrust washer, O/D servo return spring and spring retainer to the band servo piston.

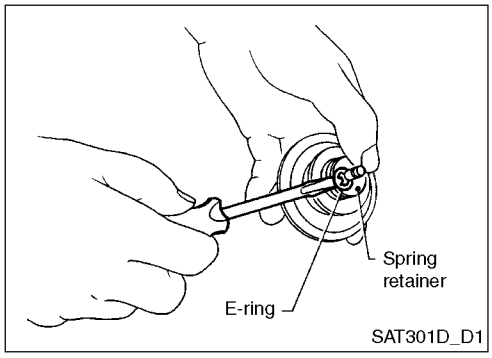

3. Place the piston stem end on a wood block and remove the E-ring while pressing the servo piston spring retainer downward.

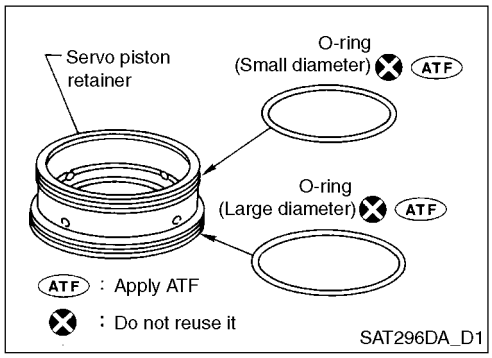

4. Install the O-ring to the servo piston retainer.
   - Apply the ATF to the O-ring.
   - Be careful of the O-ring position.

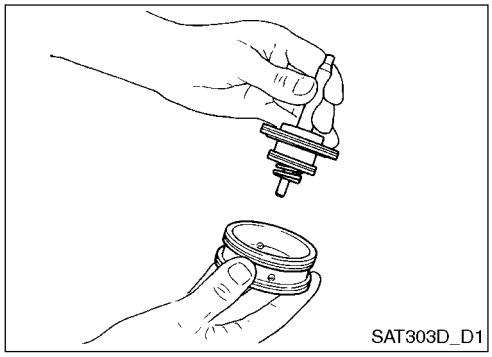

5. Install the band servo piston assembly by pushing it into the servo piston retainer.

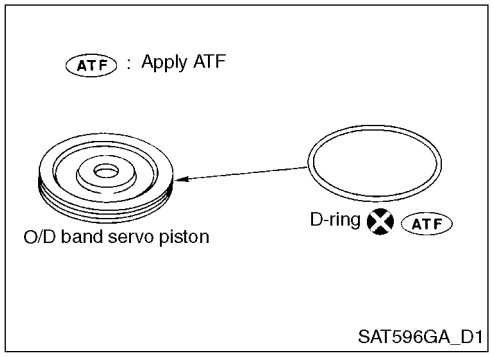

6. Install the D-ring to the O/D band servo piston.
   - Apply the ATF to the D-ring.

Band Servo Piston Assembly (Continued)

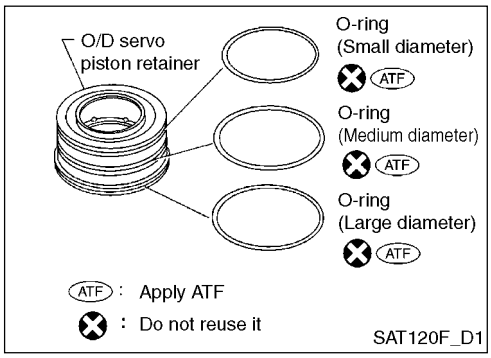

7. Install the O-ring to the O/D servo piston retainer.
   - Apply the ATF to the O-ring.
   - Be careful of the O-ring position.

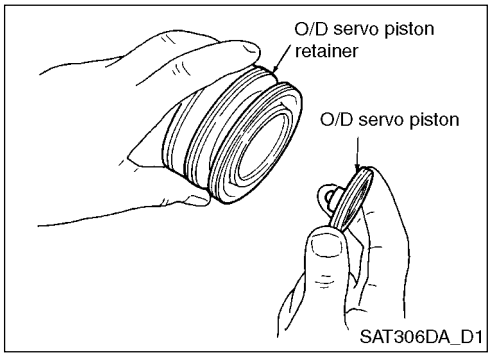

8. Install the O/D band servo piston to the O/D servo piston retainer.

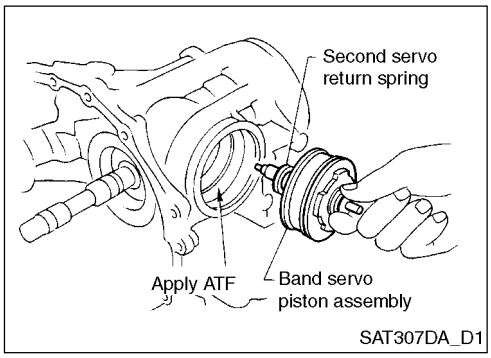

9. Install the band servo piston assembly and second servo return spring to the transaxle case.
   - Apply the ATF to the band servo piston O-ring and transaxle case.

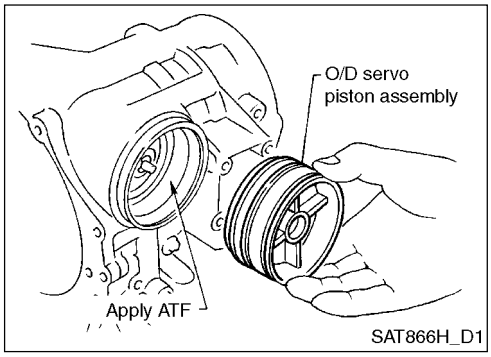

10. Install the O/D servo piston assembly to the transaxle case.
    - Apply the ATF to the band servo piston O-ring and transaxle case.

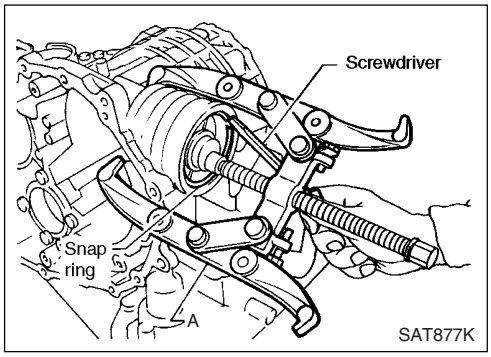

11. Install the band servo piston snap ring to the transaxle case.
    - The snap ring is not reusable. Do not reuse it.

    Tool A: Commercial service tool

Final Drive

FINAL DRIVE

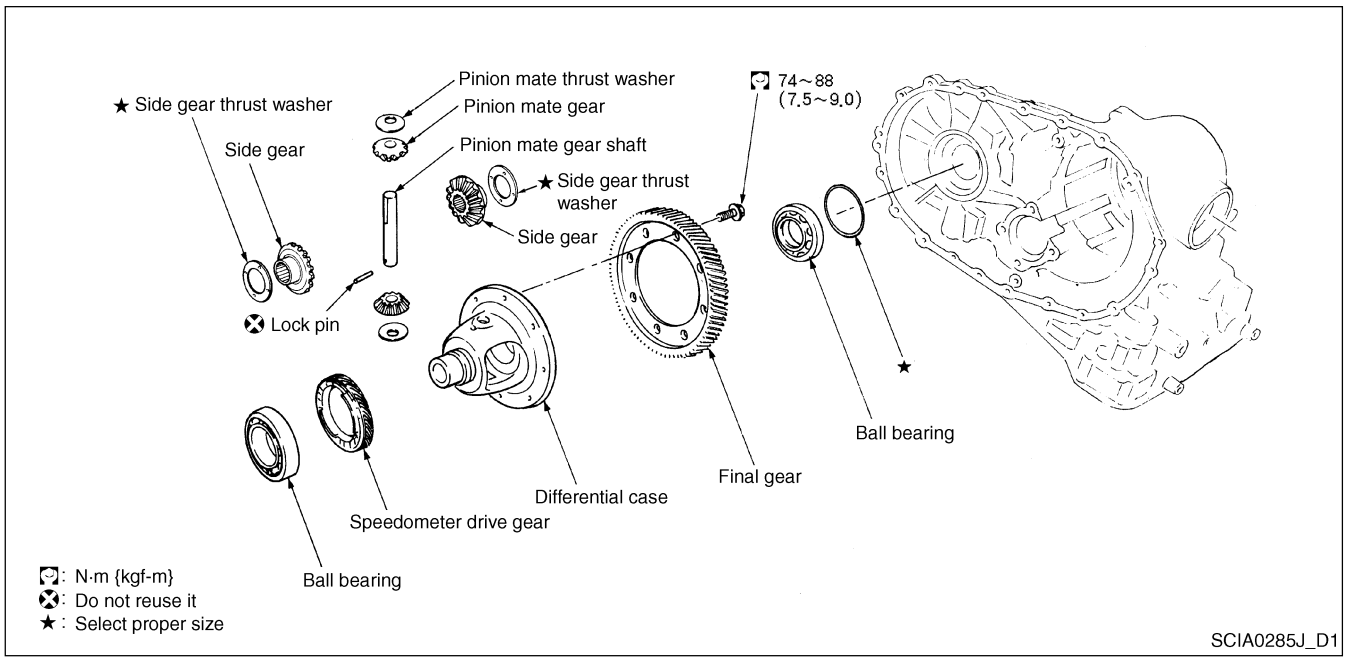

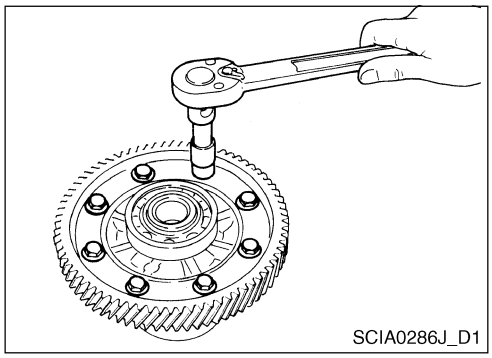

DISASSEMBLY

1. Remove the final gear.

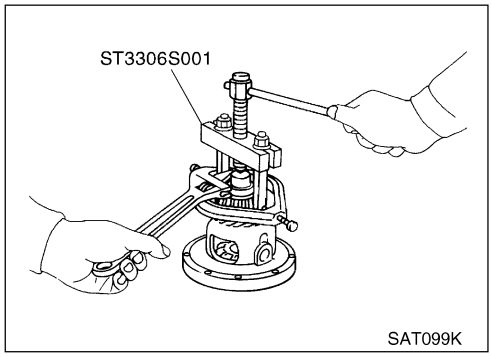

2. Remove the differential side bearing by pushing it.
   - Be careful not to mix the left and right bearings each other.

Final Drive (Continued)

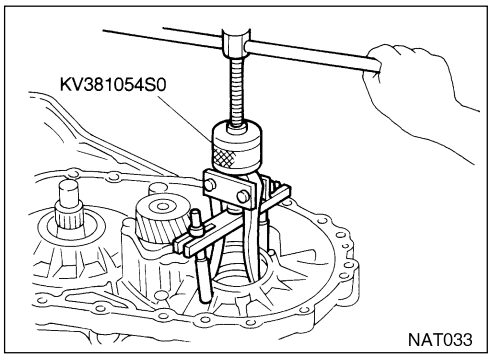

3. Remove the differential side bearing outer race and side bearing adjust shim from the transaxle case.

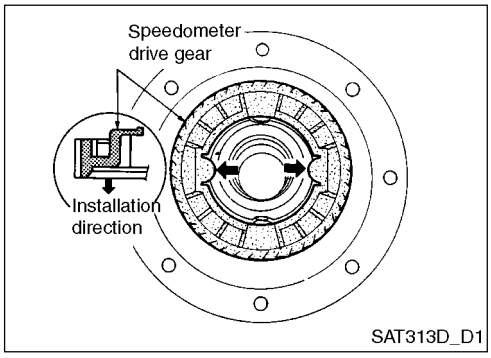

4. Remove the speedometer drive gear.

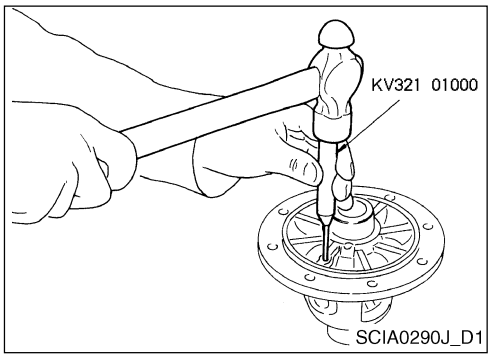

5. Remove the pinion mate shaft lock pin.

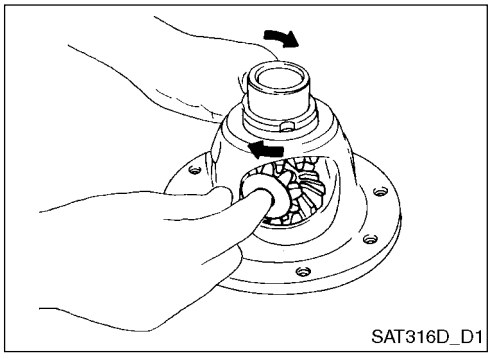

6. Remove the pinion mate shaft from the differential case.
7. Remove the pinion mate gear and side gear.

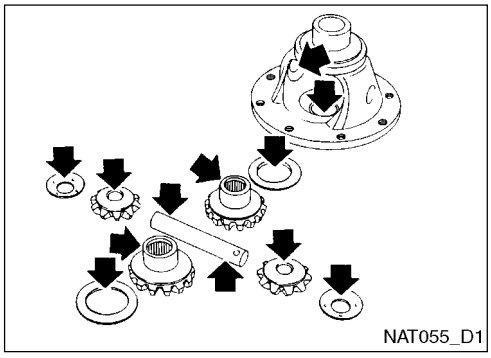

INSPECTION

1. Gear, washer, shaft and case
   - Inspect the contact surface of the differential case, side gear, and pinion mate gear.
   - Inspect the washer for any wear.

Final Drive (Continued)

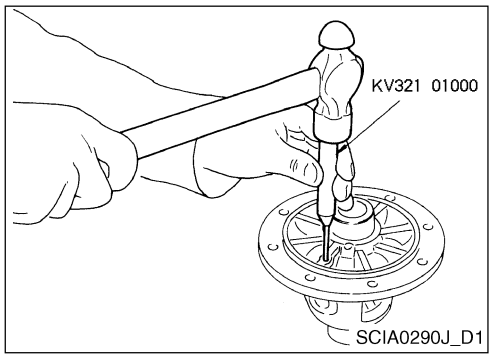

ASSEMBLY

1. Install the side gear and thrust washer to the differential case.
2. Install the pinion mate gear and thrust washer to the differential case by rotating them.
   - Apply ATF to all components thoroughly.

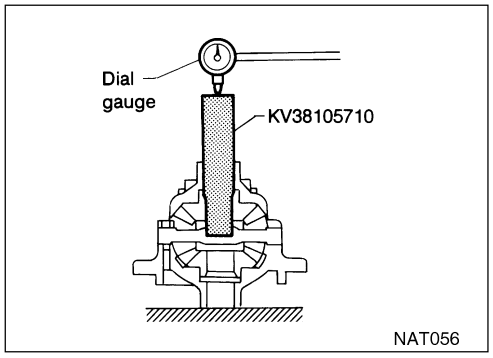

3. Measure the clearance between the side gear and the washer-installed differential case according to below order.
   a. Install the special tool and dial gage to the side gear.
   b. Read the dial gage by moving the side gear up and down.

      Clearance between the side gear and washer-installed differential case: 0.1 - 0.2 mm

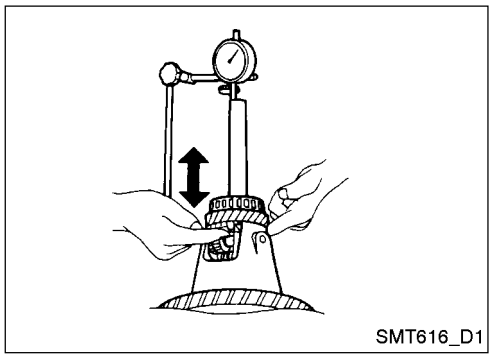

   c. If the value is out of the specified value, adjust the clearance by changing the side gear thrust washer thickness.

      Side gear thrust washer: Refer to “Specifications” (AT-233).

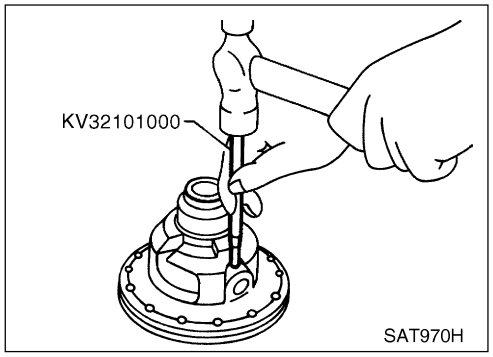

4. Install the lock pin.
   - The lock pin must be of the same height with the case.

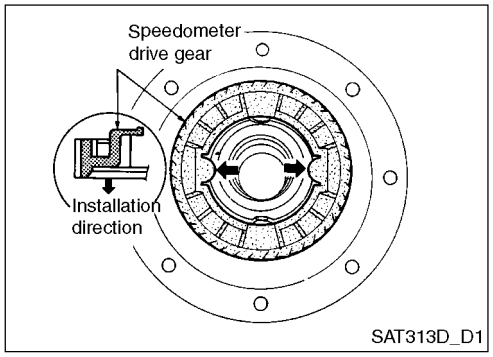

5. Install the speedometer drive gear to the differential case.
   - Adjust the speedometer drive gear protrusion with the differential case groove.

Final Drive (Continued)

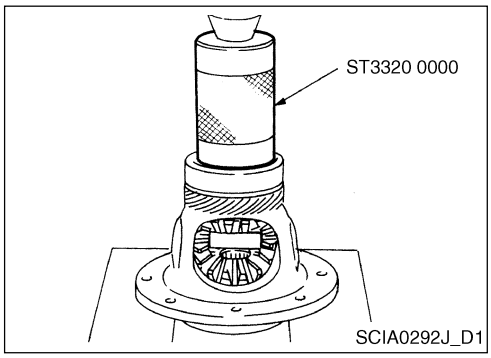

6. Press in the right side bearing using a drift.

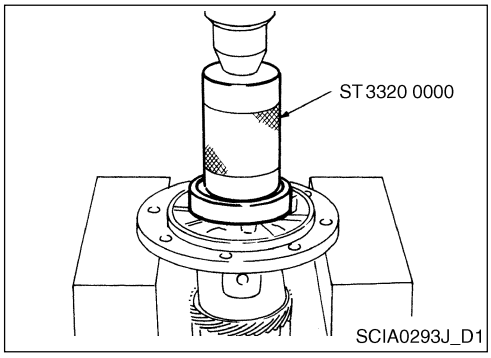

7. Press in the left side bearing using a drift.

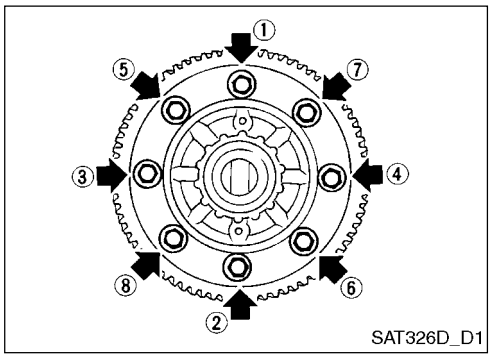

8. Tighten the final gear and mounting bolts according to illustrated sequence.

Assembly

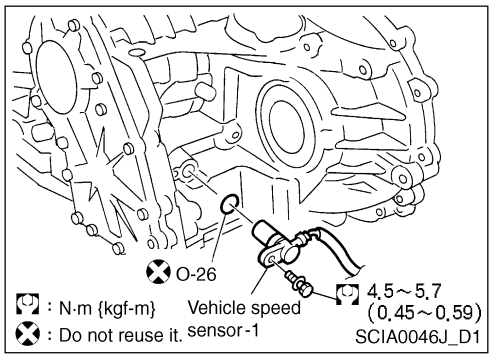

ASSEMBLY

1. Install the vehicle speed sensor.

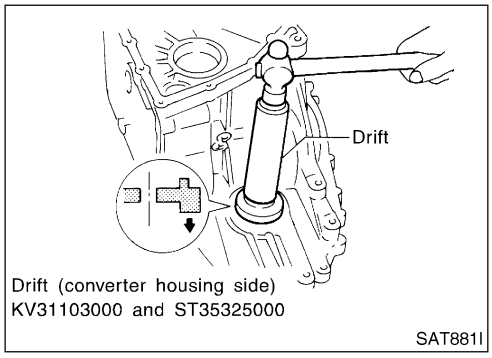

2. Install the differential side oil seal to the transaxle case and converter housing and make the A and B to be within the specified value.

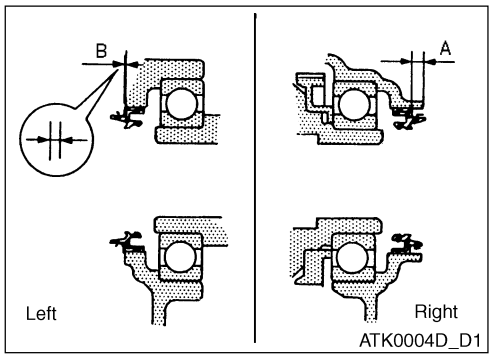

A	B
5.5 - 6.5 mm	-0.5 - 0.5 mm

- Apply the ATF on the oil seal.
- Do not reuse the oil seal.

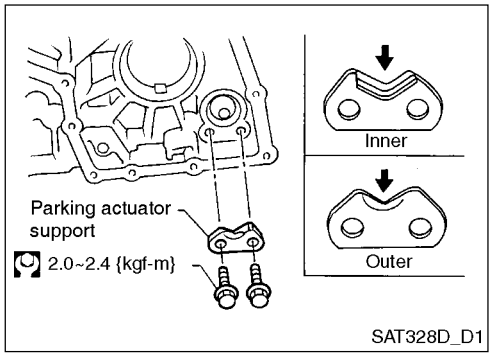

3. Install the parking actuator support to the transaxle case.
   - Be careful of the parking actuator support direction.

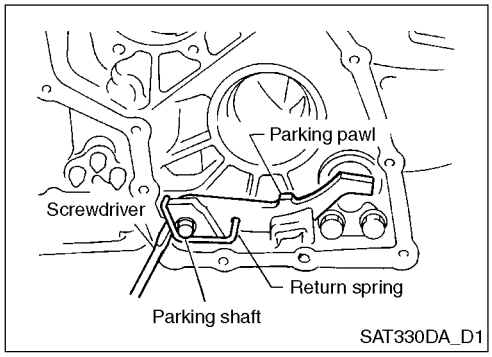

4. Install the parking pawl to the transaxle case and fix to the parking shaft.
5. Install the return spring.

Assembly (Continued)

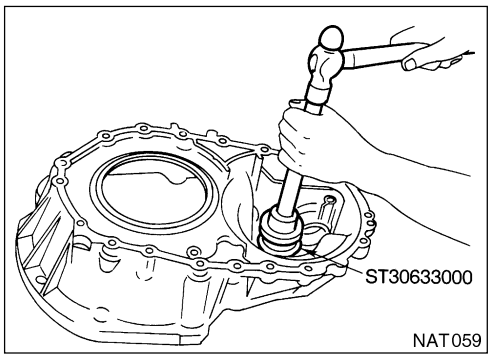

ADJUSTMENT

Differential side bearing freeload

1. Install the differential side bearing outer race to the transaxle case without the adjust shim.
2. Install the differential side bearing outer race to the converter housing.

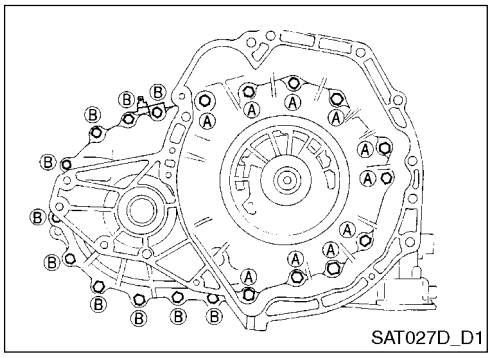

3. Install the final drive assembly to the transaxle case.
4. Install the transaxle case to the converter housing and tighten the transaxle mounting bolts A and B to the specified torque.

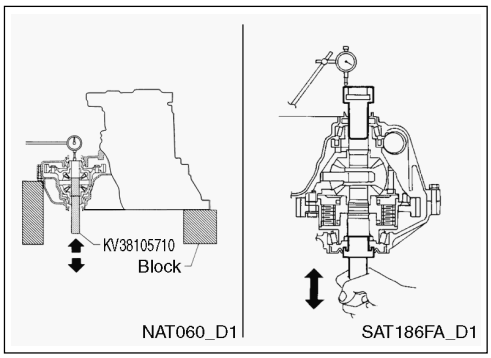

5. Install the dial gage to the transaxle case on the differential case side.
6. Insert the special tool from the converter housing towards the differential side gear side.
7. Read the dial gage by moving the special tool up and down.
8. Select the differential side bearing adjust shim with proper thickness.

   Shim thickness = Dial gage tilting value + Specified bearing freeload.
   Differential side bearing adjust shim: Refer to “Specifications” (AT-233).
   Bearing freeload: 0.04 - 0.09 mm

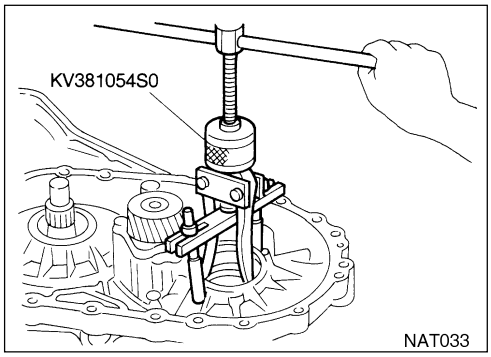

9. Remove the converter housing from the transaxle case.
10. Remove the final drive assembly from the transaxle case.
11. Remove the differential side bearing outer race from the transaxle case.
12. Install the differential side bearing outer race and shim selected from the “Specifications” to the transaxle case again.
13. Reinstall the converter housing to the transaxle case and tighten the transaxle case mounting bolts to the specified torque.

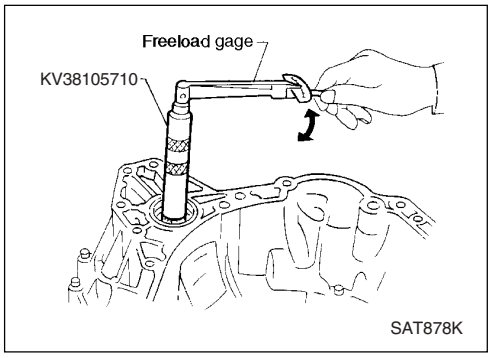

14. Insert the special tool into the differential case and measure the turning torque of the final drive assembly. Insert the special tool into the viscous coupling.
    - While measuring the turning torque, rotate the final drive assembly several times to both directions so that the bearing roller safely seats in its position.

      Final drive assembly (New bearing) turning torque: 5.0 - 11 kgf-cm
    - When reusing the bearing, the turning torque must be close to the specified torque above.

Assembly (Continued)

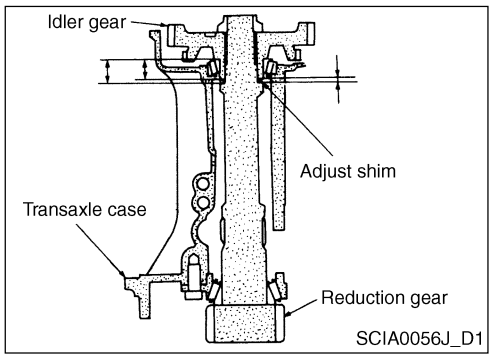

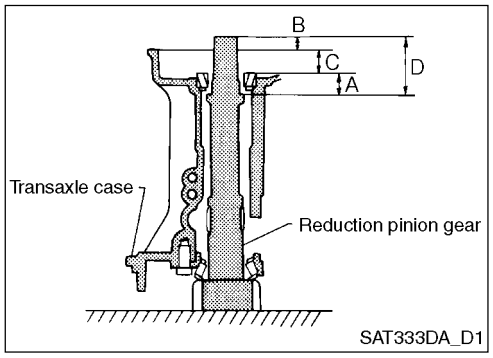

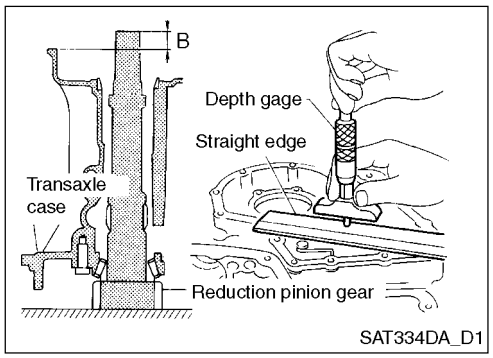

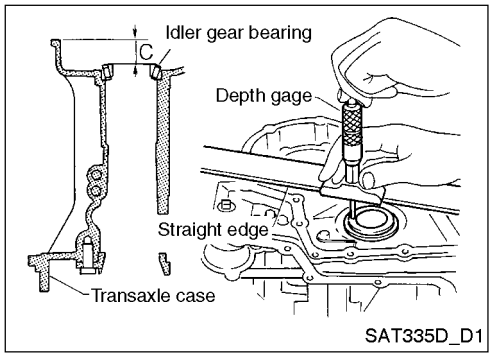

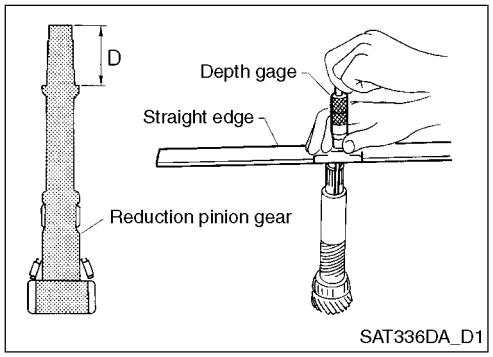

REDUCTION PINION GEAR BEARING FREELOAD

1. Remove the transaxle case and final drive assembly from the converter housing.
2. Select a proper thickness for the reduction pinion gear bearing adjust shim according to below order.
3. Calculate the T1 as below so that the freeload to be the standard value.
   a. T1 (Adjust shim thickness)
      T1 = A - E
      Freeload standard value: 0.11 - 0.68 N•m (0.11 - 0.07 kgf-m)
   b. Place the idler gear bearing on the transaxle case.
   c. Measure the B, C, and D and calculate the A.
      A = B - (B + C)
      A: The distance between the idler bearing inner race surface and reduction pinion gear's adjust shim contact surface.

- Measure the B, which is the distance between the reduction pinion gear end and transaxle case surface.
- Measure B from at least 2 points.

- Measure the C, which is the distance between the idler gear bearing inner race surface and transaxle case surface.
- Measure C from at least 2 points.

- Measure the D, which is the distance between the reduction pinion gear end and reduction pinion gear's adjust shim contact surface.
- Measure D from at least 2 points.
- Calculate A
  A = D - (B + C)

Assembly (Continued)

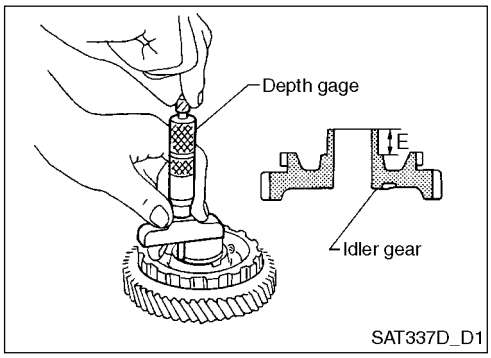

d. Measure the E, which is the distance between the idler gear end and idler gear bearing inner race contact surface.
   - Measure E from at least 2 points.
e. Select a proper thickness for the reduction pinion gear bearing adjust shim.

   (Proper shim thickness) = A - E - 0.5 mm

   Pinion gear bearing adjust shim: Refer to “Specifications” (AT-231).

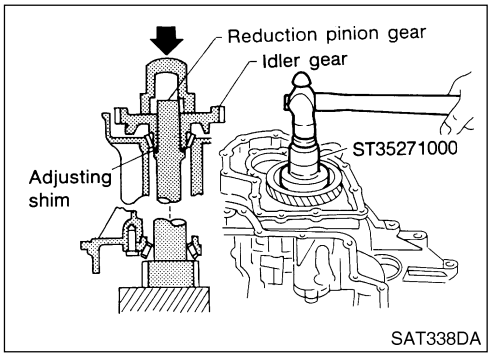

3. Install the reduction pinion gear and reduction pinion gear bearing adjust shim selected in step 2.e to the transaxle case.
4. Press in the idler gear bearing inner race to the idler gear.
5. Press in the idler gear to the reduction pinion gear.
   - Press the idler gear so that it completely touches the adjust shim.
   - If the turning torque exceeds the specified value, increase or decrease the thickness of the reduction pinion gear bearing adjust shim.

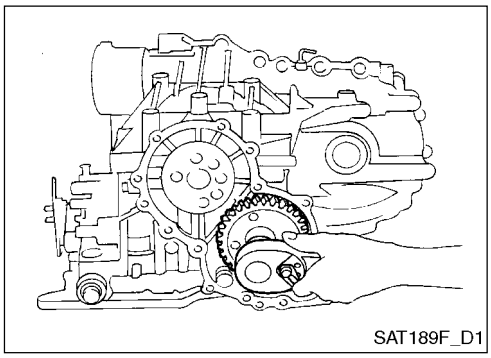

6. Tighten the idler gear lock nut to the specified torque.
   - Lock the idler gear with the parking pawl when tightening the lock nut.
7. Measure the reduction pinion gear’s turning torque.
   - While measuring the turning torque, rotate the reduction pinion gear several times to both directions so that the bearing roller accurately seats on it.

     Reduction pinion gear turning torque: 1.1 - 7.0 kgf-cm

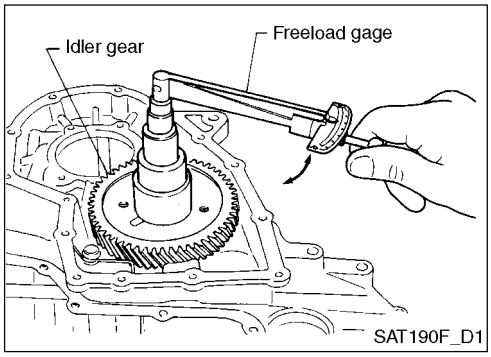

8. Secure the idler gear lock nut as shown in the illustration after properly adjusting the turning torque.

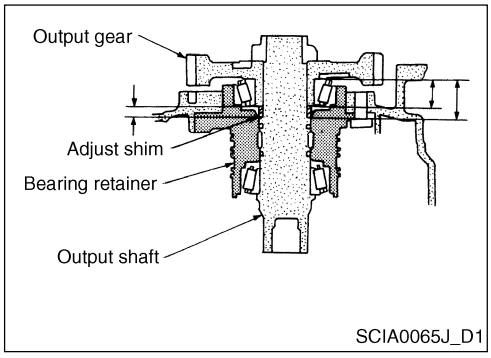

OUTPUT SHAFT BEARING FREELOAD

1. Calculate the T2 (Adjust shim thickness) and adjust the freeload to be the standard value.

   T2 = F - I

   Freeload standard value:

   0.25 - 0.88 N•m (0.025 - 0.09 kgf-cm)

Assembly (Continued)

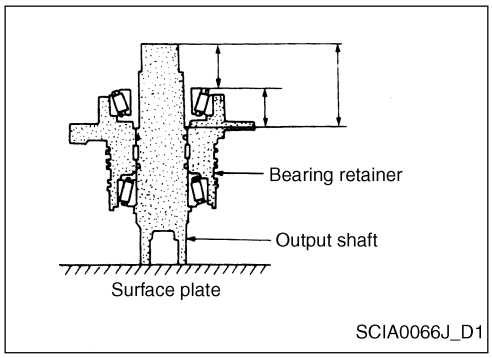

- Set the output shaft onto the bearing retainer and measure the F value to acquire the freeload standard value.
- Let F be the distance between the output gear bearing inner race contact surface and output shaft adjust shim contact surface. The F is calculated as below.

  F = H - G

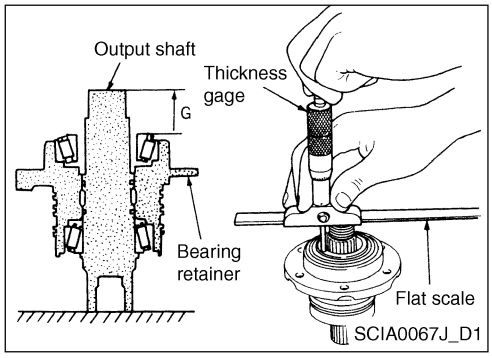

2. Measure the G from the output shaft surface to the output gear bearing inner race surface.

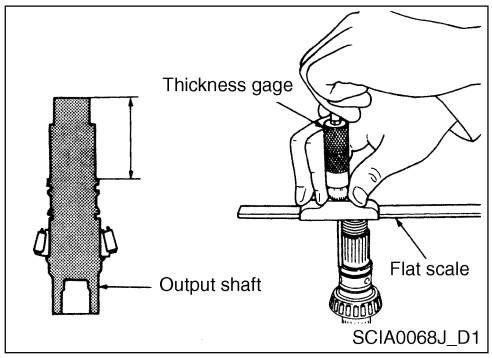

3. Measure the H from output shaft adjust contact surface to upper section.
   - Measure H from at least 2 points and get the mean value.

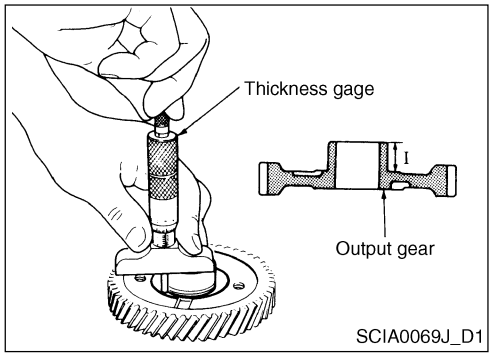

4. Measure the I-value from output gear bearing contact surface to upper section.
5. Calculate the thickness of the freeload adjust shim and select a proper shim.

   T2 = F - I - 0.03 ~ 0.08 (Freeload value)

   T2: Shim thickness

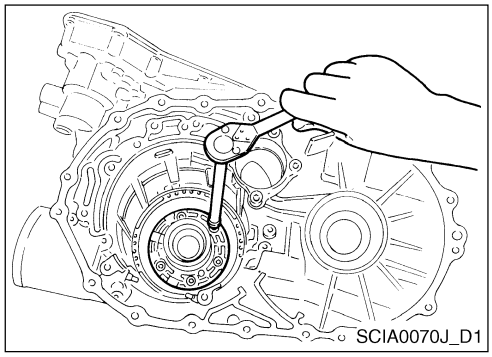

6. Install the bearing retainer to the transaxle and tighten to the specified torque.
7. Install the output shaft and selected shim to the bearing retainer.
   - Be careful not to damage the seal ring.

Assembly (Continued)

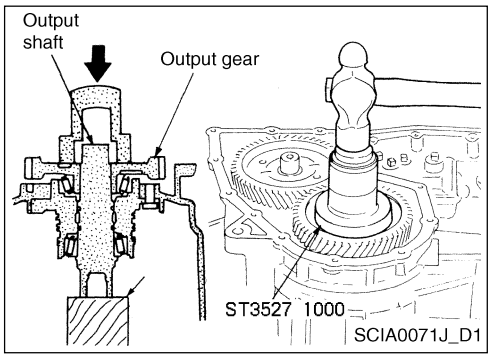

8. Press in the output gear using a drift.
   - Hold the parking puller reduction gear and tighten the output gear lock nut to the specified torque.

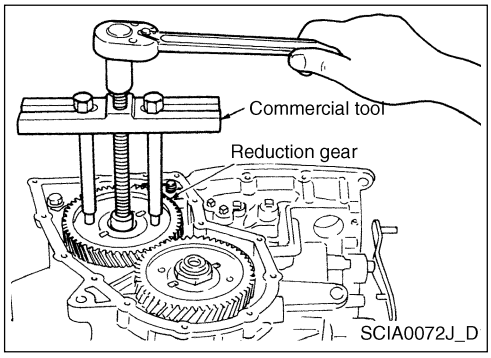

9. In order to measure the output gear unit's freeload, remove the idle gear lock nut and remove the idle gear using the puller.

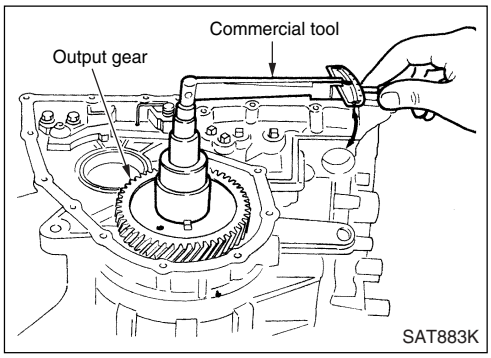

10. Check if the freeload value is within the standard value using the freeload gage.

    If exceeds the standard value, re-adjust with the shim.
    - Rotate the output gear thoroughly at least 10 times and measure the freeload.

      Freeload standard value:

      0.25 - 0.88 N•m (0.025 - 0.09 kgf-m)

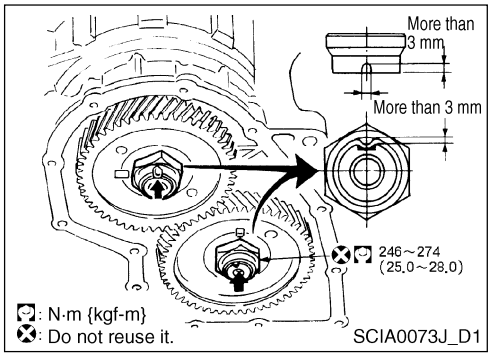

11. After adjusting the freeload, install the idle gear and tighten the lock nut.

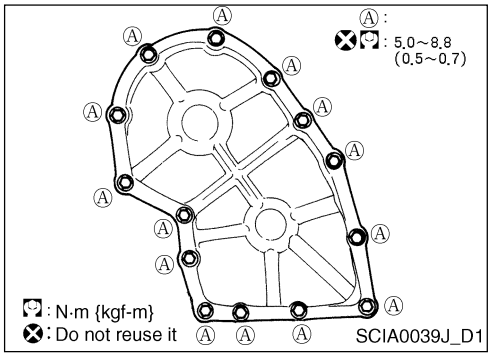

12. Perform punching onto the lock nuts in idle gear and output gear.
    - The lock nuts are not reusable. They should always be replaced.
13. Install the side cover and tighten the mounting bolts to the specified torque.

Assembly (Continued)

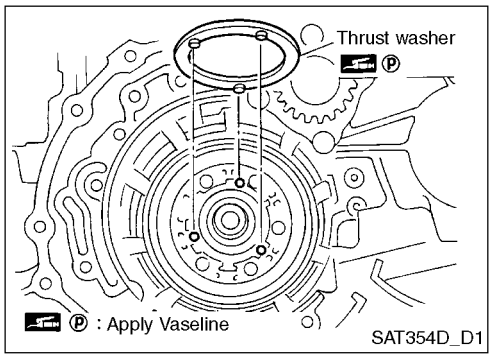

ASSEMBLY

1. Remove the paper covering the bearing retainer.
2. Install the thrust washer to the bearing retainer.
   - Apply the Vaseline on the thrust washer.

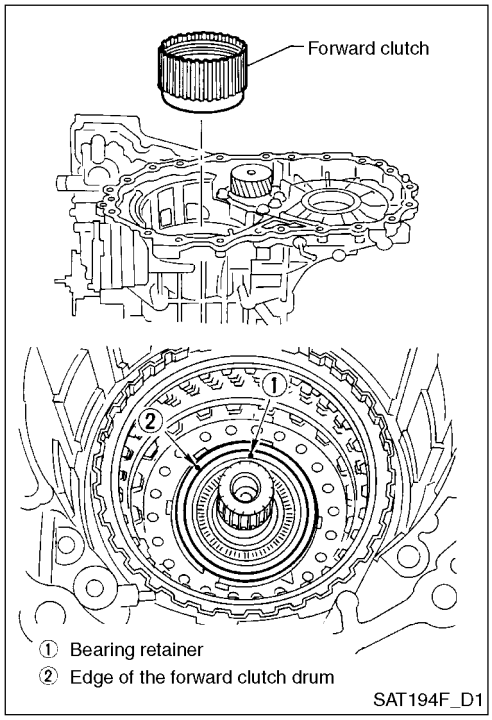

3. Install the forward clutch assembly.
   - Align the low and reverse brake drive plate's teeth before installation.
   - The bearing retainer seal ring should not stretch.

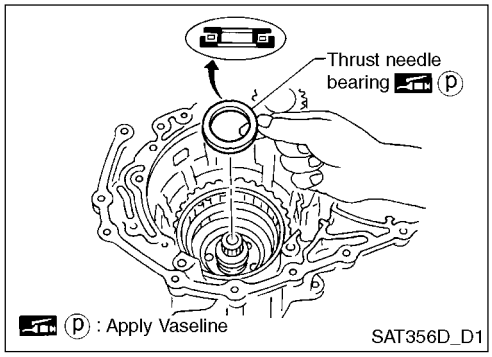

4. Install the thrust needle bearing to the bearing retainer.
   - Apply the Vaseline on the thrust bearing.
   - Be careful of the thrust needle bearing direction.
5. Install the thrust needle bearing to the rear internal gear.
   - Apply the Vaseline on the thrust bearing.
   - Be careful of the thrust needle bearing direction.

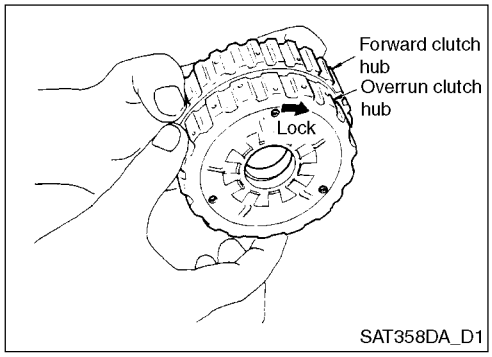

6. Rotate the clutch hub while holding the forward clutch hub.
   Inspect if the locking and unlocking direction of the overrun clutch hub is correct.
   - If not as shown in the illustration, inspect the installation direction of the forward one-way clutch.

Assembly (Continued)

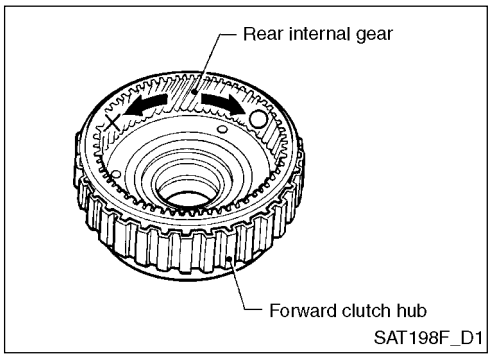

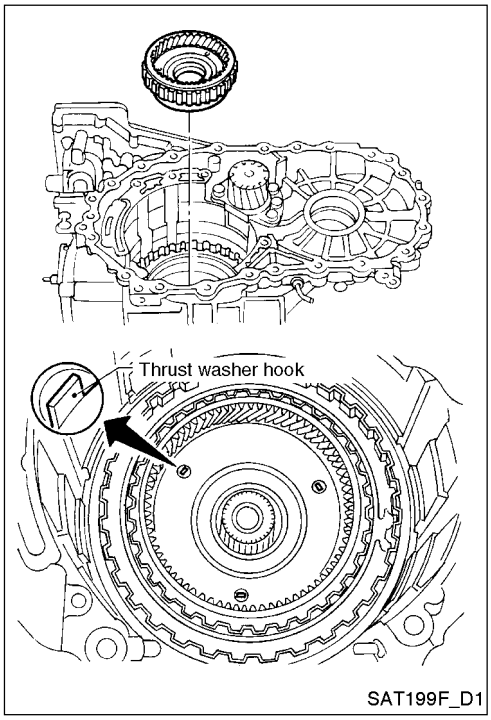

7. Install the forward clutch hub and rear internal gear assembly.
   - Align the forward clutch drive plate teeth before installation.
   - Inspect if the thrust washer's 3 hooks are correctly aligned before installation.

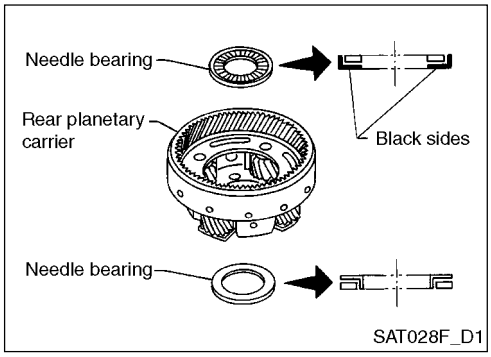

8. Install the needle bearing to the rear planetary carrier.
   - Apply the Vaseline on the needle bearing.
   - Be careful of the needle bearing direction.

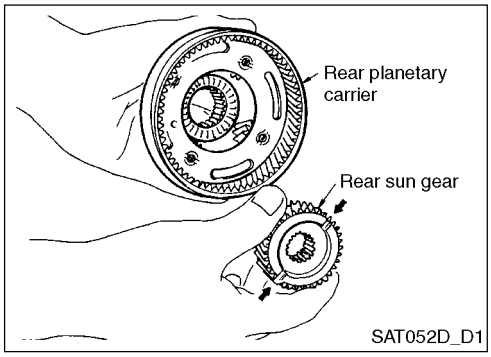

9. Install the rear sun gear to the rear planetary carrier.
   - Be careful of the rear sun gear direction.

Assembly (Continued)

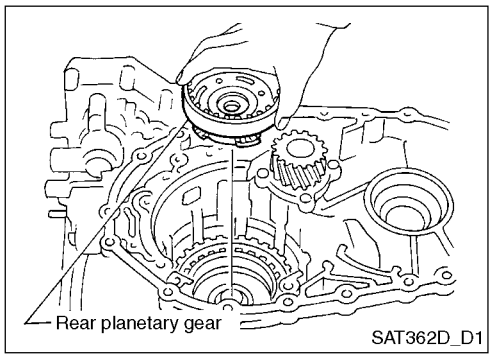

10. Install the rear planetary carrier to the transaxle case.

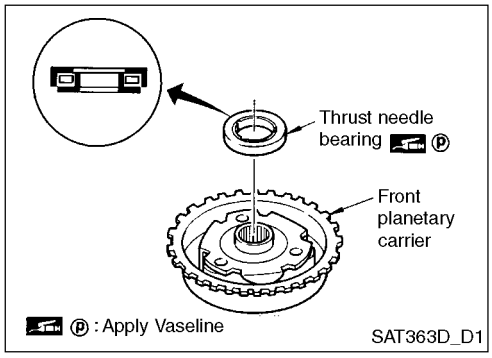

ASSEMBLY

1. Install the thrust needle bearing to the front planetary carrier.
   - Apply the Vaseline on the thrust needle bearing.
   - Be careful of the thrust needle bearing direction.

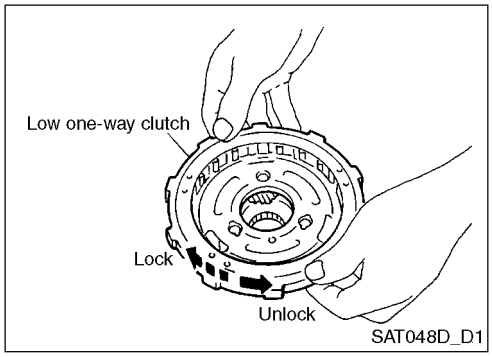

2. Install the low one-way clutch to the front planetary carrier by rotating the clutch in the arrow direction in the illustration.
3. Hold the front planetary carrier and rotate the low one-way clutch. Inspect the low one-way clutch has correct locking and unlocking direction.

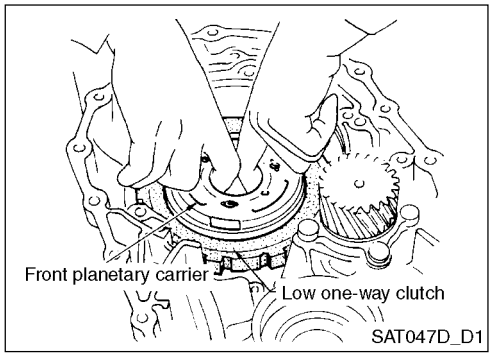

4. Install the front planetary carrier assembly to the transaxle case.

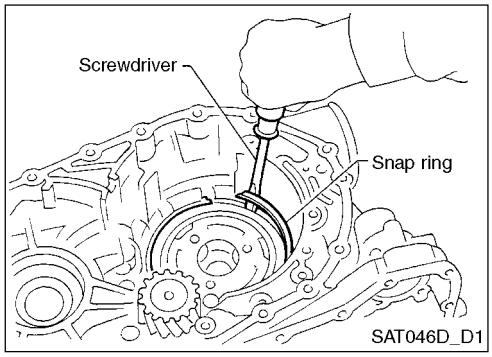

5. Install the snap ring with a screwdriver.
   - If the forward clutch and the bearing are not properly installed, then the snap ring will not match with the transaxle case groove.

Assembly (Continued)

6. Install the needle bearing to the front sun gear.
   Apply the Vaseline on the needle bearing.
   Be careful of the needle bearing direction.

7. Install the front sun gear to the front planetary carrier.

8. Install the needle bearing to the front sun gear.

9. Install the high clutch to the front sun gear.
   Install the needle bearing to the high clutch hub.
   Be careful of the needle bearing direction.

10. Install the needle bearing to the high clutch hub.
    Apply the Vaseline on the needle bearing.
    Be careful of the needle bearing direction.

Assembly (Continued)

11. Install the input shaft assembly after removing the paper around it.

    Align the high clutch drive plate gear direction before installation.

12. Install the reverse clutch assembly.

    Align the reverse clutch drive plate gear direction before installation.

ADJUSTMENT

When replacing the components listed below, adjust the total endplay and reverse clutch end play.

Item	Total endplay	Reverse clutch endplay
Transaxle case		
Overrun clutch hub		
Rear internal gear		
Rear planetary carrier		
Rear sun gear		
Front planetary carrier		
Front sun gear		
High clutch hub		
High clutch drum		
Oil pump cover		
Reverse clutch drum	-	

TOTAL ENDPLAY

1. Calculate the total endplay T3 using the formula shown below and check if it is within the adjustment standard.

   T3 = J - M

   Total endplay = 0.25 - 0.55 mm

2. Measure the K and L for total endplay.

   Let J be the distance from the transaxle case oil pump contact surface to the high clutch drum needle bearing contact surface. The J is calculated as below.

   J = K - L

Assembly (Continued)

3. Measure the K, which is the distance from the transaxle case upper to the high clutch needle bearing contact surface.

4. Measure the L, which is the distance from the rear of the oil pump in the transaxle case to the case upper.

5. Install the Vaseline-applied bearing race and needle bearing to the oil pump assembly.

6. Measure M to calculate the total endplay.

   Calculate the total endplay and select the bearing race.

   T3 = J - M

   T3 = Total endplay

REVERSE CLUTCH DRUM ENDPLAY

Measure the clearance between the oil pump cover and reverse clutch drum thrust washer.

Select a proper thickness bearing race for the endplay to be the standard value.

Reverse clutch drum endplay T4

T4 = N - Q

Assembly (Continued)

1. Measure the Q and P and calculate the N.

a. Install the thrust washer to the reverse clutch drum.
b. Measure the Q.

c. Measure the P.
d. Calculate the N.
N: The distance between the transaxle case oil pump installation surface and reverse clutch drum thrust washer.

2. Measure the R and S. Calculate the Q.

a. Measure the R.

Assembly (Continued)

a. Measure the S.

b. Measure the Q.

Q: The distance between the transaxle case oil pump installation surface and thrust washer contact surface.

Q = R - S

3. Reverse clutch endplay “T1”

T1 = N - Q (Unit: mm)

Reverse clutch endplay	0.65 - 1.00

Select a proper thickness thrust washer so that the reverse clutch endplay to be the standard value.

Thrust washer: Refer to “Specifications”(AT-232).

INSTALLATION

1. Install the anchor end pin, washer and lock nut to the transaxle case.
2. Place the brake band and thrust around the reverse clutch drum. Tighten the anchor end pin so that the brake band can evenly tighten around the reverse clutch drum.

3. Install the bearing race that is selected in the total endplay adjustment step to the oil pump cover.

   Apply the Vaseline on the bearing race.

4. Install the thrust washer that is selected in the reverse clutch endplay adjustment step to the reverse clutch drum.

   Apply the Vaseline on the thrust washer.

Assembly (Continued)

5. Install the oil pump assembly, baffle plate and gasket to the transaxle case.

6. Tighten the oil pump mounting bolts to the specified torque.

7. Install the O-ring to the input shaft.
   Apply the ATF on the O-ring.

8. Adjust the brake band.
   Tighten the anchor end pin to the specified torque.
   Anchor end pin:
   Specified torque: 0.35 - 0.6 kgf-m
   Reversely rotate the anchor end pin 2 and half times.
   RE4F03A: 2.5 ± 0.125
   RE4F04V: 2.5
   Hold the anchor end pin and tighten the lock nut.
   Lock nut specified torque: 3.2 - 3.7 kgf-m

9. Inspect the brake band operation by blowing the compressed air into the transaxle case fluid hole.

Assembly (Continued)

10. Install the differential side bearing adjust shim that is selected in the final drive end play adjustment step to the transaxle case.

11. Install the final drive assembly to the transaxle case.

12. Install the oil tube to the converter housing.
    Specified torque: 0.5 - 0.7 kgf-m

13. Install the O-ring to the transaxle case differential oil port.

14. Install the accumulator piston.
    a. Inspect the accumulator piston contacting surface for any damages.
    b. Install the O-ring to the accumulator piston.
    Apply the ATF to the O-ring.

(Unit: mm)

Accumulator	Diameter (Small)	Diameter (Large)
Servo release accumulator	26.9	44.2
N-D accumulator	34.6	39.4

Assembly (Continued)

15. Install the O-ring to the transaxle case differential oil port. Install the converter housing to the transaxle case.

    Apply the locking sealant to the converter housing contacting surface.

Bolt	Length
A	30 mm
B	40 mm

a. Install the accumulator piston and return spring to the transaxle case.

   Apply the ATF inner of the transaxle case.

   Return spring: Refer to “Specifications” (AT-229).

16. Place the lip seal on the transaxle case band servo fluid hole.

    Apply the Vaseline on the lip seal.

Assembly (Continued)

17. Install the control valve assembly.
    a. Insert the manual valve to the valve assembly.
       Apply the ATF on the manual valve.
    b. Place the manual shaft to neutral.
    c. Install the control valve assembly to the transaxle case by aligning the manual valve and manual plate.
    d. Pass the solenoid harness through the transaxle case and push the terminal body to the transaxle case.
    e. Install the stopper ring to the terminal body.
    f. Tighten the “A”, “B”, and “C”.
       Bolt length, quantity and location.

Bolt symbol	A	B	C
Bolt length “1” (mm)	40.4	33.0	43.5
Bolt quantity	5	6	2

Assembly (Continued)

18. Install the oil pan.
    Attach the magnet to the oil pan.
    Install the new oil pan gasket to the transaxle case.
    Install the oil pan to the transaxle case.
        Replace the oil pan bolt with new sealing bolt.
        Tighten the 4 bolts crisscross sequence so that the gasket can seat properly.
    Tighten the drain plug to the specified torque.

19. Install the inhibitor switch.
    Place the manual lever to P.
    Install the inhibitor switch to the manual shaft temporarily.
    Move the shift lever to N.

20. Insert the 4 mm diameter pin into the adjustment holes in both the inhibitor switch and the manual shaft as perpendicularly as possible.
    Tighten the inhibitor switch mounting bolt.
    After adjusting the inhibitor switch, remove the pin from the adjustment hole.

21. Install the fluid charging pipe and oil cooler tube to the transaxle case.

22. Fill the ATF into the torque converter.
        Approx. 1 liter of ATF is needed for the new torque converter.
        If the torque converter is already used, add as much as drained.

Assembly (Continued)

23. Install the torque converter while aligning the torque converter notch with the oil pump notch.

24. Measure the distance A and inspect if the torque converter is in its right position.

    Distance A: More than 21.1 mm

GENERAL SPECIFICATIONS

Engine		QG16DE
Auto transaxle model		RE4FO3B
Transaxle gear ratio	1st	2.861
	2nd	1.562
	3rd	1.000
	4th	0.698
	Reverse	2.310
	Final Drive	4.342
Recommended fluid		Genuine NISSAN ATF Matic Fluid D or equivalent
Fluid capacity		7.0 L (7-3/8 US qt, 6-1/8 Imp qt)

SHIFTING SPEED

Throttle pattern	Vehicle speed (km/h)					
Throttle opening (Accelerator opening)	D1 → D2	D2 → D3	D3 → D4	D4 → D3	D3 → D2	D2 → D1
Throttle opening (Accelerator opening: 8/8)	50 - 58	100 - 108	162 - 170	158 - 166	92 - 100	41 - 49
Throttle opening (Accelerator opening: 4/8)	25 - 33	51 - 59	122 - 130	70 - 78	40 - 48	5 - 13

LOCKUP SPEED

Engine model		QG16DE
Model No.		3AX65
Engaging speed (km/h)	Closed throttle	48 - 56
	Half throttle	141 - 149
Release speed (km/h)	Closed throttle	45 - 53
	Half throttle	109 - 117

- The lockup speed is in D4 gear.
- “Closed throttle” means the accelerator opening is less than 1/8 and idler switch is in OFF.
- Under “Half throttle”, the accelerator opening is 4/8.

CONTROL VALVE SPECIFICATIONS

Location		Valve	Overall length (mm)	Part number
Upper Body	L14	Pilot valve	40.0	31772 80X11
	L15	1-2 accumulator valve	42.0	31772 3AX01
		1-2 accumulator piston	24.0	31675 3AX00
	L16	1 reducing valve	38.5	31772 21X00
	L17	3-2 timing valve	38.5	31772 21X00
	L18	Overrun clutch reducing valve	68.5	31772 80X04
	L19	Torque converter relief valve	37.5	31780 80X00
	L20	Lockup control valve	56.5	31832 3AX00
	L21	Cooler check valve	38.5	31772 21X00
Lower Body	L2	Manual valve	119.75	31731 31X00
	L3	Pressure regulator valve	68.0	31741 80X00
	L4	Overrun clutch control valve	73.5	31772 80X00
	L5	Accumulator control valve	66.0	31772 80X19
	L6	Shift valve A	96.5	31776 80X00
	L7	Shuttle valve	59.0	31772 3AX00
	L12	Shift valve B	72.5	31766 80X01
	L13	Pressure modifier valve	43.5	31751 80X00
		Pressure modifier piston	19.5	31675 41X07

CONTROL VALVE SPRING SPECIFICATIONS

Location		Valve	Free length (l)	Outer diameter (D)	Wire diameter (d)	No. of action Coils (Direction)
Upper Body	L14	Pilot valve spring	38.98	8.9	1.2	15.94
	L15	1-2 accumulator valve spring	55.66	19.5	1.5	9.86
		1-2 accumulator piston spring	20.5	6.95	0.45	7.47
	L16	1 reducing valve spring	27.0	7.0	0.8	10.7
	L17	3-2 timing valve spring	23.0	6.65	0.65	8.5
	L18	Overrun clutch reducing valve spring	37.5	7.0	1.1	19.2
	L19	Torque converter relief valve spring	33.3	9.0	1.2	12.59
	L20	Lockup control valve spring	53.01	6.5	1.0	34.15
	L21	Cooler check valve spring	28.04	7.15	0.65	11.4
Lower Body	L3	Pressure regulator valve spring	45.0	15.0	1.4	10.42
	L4	Overrun clutch control valve spring	21.7	7.0	0.8	8.8
	L5	Accumulator control valve spring	22.0	6.5	0.5	10.3
	L6	Shift valve A spring	21.7	7.0	0.8	8.8
	L7	Shuttle valve spring	51.0	5.65	0.75	27.6
	L12	Shift valve B spring	21.7	7.0	0.8	8.8
	L13	Pressure modifier valve spring	30.5	9.8	1.3	8.8
		Pressure modifier piston spring	32.0	6.9	0.9	15.5

ACCUMULATOR

ACCUMULATOR SPRING

Spring name	Free length (mm)
S/R accumulator spring	52.5
N-D accumulator spring	45.0

ACCUMULATOR O-RING

O-ring name	O-ring Inner diameter	
	Large	Small
S/R accumulator O-ring	44.2	26.9
N-D accumulator O-ring	39.4	34.6

BAND SERVO

Anchor end pin tightening torque (Nm (kg•m))	4.0 - 5.8 (0.4 - 0.6)
Number of anchor end pin return (times)	2.5 ± 0.125
Lock nut tightening torque (Nm (kg•m))	32 - 36 (3.2 - 3.7)

BAND SERVO RETURN SPRING

Spring name	Free length (mm)
Second servo spring	32.5
O/D servo spring	38.52

CLUTCH BRAKE

Name		Reverse clutch	High clutch
Drive plate	Quantity	2	3
	Thickness (mm)	2.0	2.0
	Limit value (mm)	1.8	1.8
Driven plate	Quantity	2	5
	Thickness (mm)	2.0	2.0
Clearance	Standard value (mm)	0.5 - 0.8	1.4 - 1.8
	Limit value (mm)	1.2	2.4
Retaining plate		Thickness (mm)	Thickness (mm)
		4.4	3.6
		4.6	3.8
		4.8	4.0
		5.0	4.2
		5.2	4.4
			4.6
			4.8

Name		Forward clutch	Overrun clutch	Low & reverse clutch
Drive plate	Quantity	5	3	5
	Thickness (mm)	1.8	1.6	2.0
	Limit value (mm)	1.6	1.4	1.8
Driven plate	Quantity	5	4	5
	Thickness (mm)	2.0	2.0	2.0
Clearance	Standard value (mm)	1.45 - 0.85	1.0 - 1.4	1.4 - 1.8
	Limit value (mm)	1.85	2.0	2.8
Retaining plate		Thickness (mm)	Thickness (mm)	Thickness (mm)
		3.6	3.6	3.6
		3.8	3.8	3.8
		4.0	4.0	4.0
		4.2	4.2	4.2
		4.4	4.4	4.4
		4.6		4.6

OIL PUMP

Oil pump clearance (mm)	Inner & outer gear and housing	0.02 - 0.04
Clearance between oil pump cover and seal ring (mm)	Standard value	0.1 - 0.25
	Limit value	0.25

PLANETARY CARRIER

Unit: mm (in)

Clearance between the planetary carrier and pinion washer	Standard value	0.15 - 0.70 (0.0059 - 0.0276)
	Limit value	0.80 (0.0315)

INPUT SHAFT

Clearance between the input shaft and seal ring (mm)	Standard value	0.08 - 0.23
	Limit value	0.23

REDUCTION GEAR

Reduction gear turning torque (N•m [kgf-m])	0.11 - 0.68 [0.011 - 0.07]
Reduction gear installation torque (N•m [kgf-m])	246 - 274 [25.0 - 28.0]

REDUCTION GEAR ADJUST SHIM

Thickness (mm)	Thickness (mm)
1.74	2.16
1.78	2.18
1.82	2.20
1.86	2.22
1.90	2.24
1.92	2.26
1.94	2.28
1.96	2.30
1.98	2.34
2.00	2.38
2.02	2.42
2.04	2.46
2.06	2.50
2.08	2.54
2.10	2.58
2.12	2.62
2.14	2.66

OUTPUT SHAFT

Item	Standard value
Clearance between the seal ring and output shaft (mm)	0.1 - 0.25
Taper roller bearing manual torque (N•m [kgf-m])	0.25 - 0.08 [0.025 - 0.09]
Output shaft endplay (mm)	0 - 0.5
Output shaft mounting torque (N•m [kgf-m])	246 - 274 [25.0 - 28.0]

OUTPUT SHAFT ADJUST SPACER

3AX65 Model

Thickness (mm)	Thickness (mm)
6.26	6.78
6.30	6.80
6.34	6.82
6.38	6.84
6.42	6.86
6.46	6.88
6.50	6.90
6.54	6.92
6.58	6.94
6.62	6.96
6.64	6.98
6.66	7.00
6.68	7.02
6.70	7.06
6.72	7.10
6.74	7.14
6.76	7.18
	7.20

BEARING RETAINER

Clearance between the seal rings (mm)	0.1 - 0.25

TOTAL ENDPLAY

Total endplay (mm)	0.25 - 0.55

TOTAL ENDPLAY BEARING RACE

Thickness (mm)	Thickness (mm)
0.6	1.4
0.8	1.6
1.0	1.8
1.2	2.0

REVERSE CLUTCH DRUM ENDPLAY

Reverse clutch drum endplay (mm)	0.25 - 0.55

REVERSE CLUTCH DRUM ENDPLAY THRUST WASHER

Thickness (mm)	Thickness (mm)
0.65	1.4
0.80	1.6
0.95	1.8

FINAL DRIVE

Model No.	3AX65
Side gear washer endplay (mm)	0.1 - 0.2
Ball bearing endplay (mm)	0 - 0.15
Taper roller bearing manual torque (kg•m)	0.05 - 0.11

Differential Thrust Washer
3AX65 Model

Thickness (mm)	Thickness (mm)
0.75 - 0.80	0.90 - 0.95
0.80 - 0.85	0.95 - 1.00
0.85 - 0.90	

3AX66, 3AX67 Model

Thickness (mm)	Thickness (mm)
0.75 - 0.80	0.90 - 0.95
0.80 - 0.85	0.95 - 1.00
0.85 - 0.90	

Differential Side Bearing Adjust Shim
3AX65 Model

Thickness (mm)	Thickness (mm)
0.48	0.80
0.56	0.88
0.64	0.96
0.72	1.04

3AX66, 3AX67 Model

Thickness (mm)	Thickness (mm)
0.40	0.72
0.44	0.76
0.48	0.80
0.52	0.84
0.56	0.88
0.60	0.92
0.64	1.44
0.68	

Installation Torque

N•m (kgf-m)

Installation torque of transaxle - engine	From transaxle to engine	31 - 40 (3.1 - 4.1)
	From engine to transaxle	16 - 20 (1.6 - 2.1)
		31 - 40 (3.1 - 4.1)

DIFFERENTIAL SIDE GEAR CLEARANCE

Clearance between the side gear and differential case	0.1 - 0.2 mm (0.004 - 0.008 inch)

Clearance between the converter housing and torque converter	1.59 mm (0.06259 inch) or more

SHIFT SOLENOID VALVE

Gear	Solenoid A	Solenoid B
1st	ON	ON
2nd	OFF	ON
3rd	OFF	OFF
4th	ON	OFF

RESISTANCE

Shift Solenoid	Resistance	Terminal No.
Shift solenoid A	20 - 30	2
Shift solenoid B	5 - 20	1
Overrun clutch solenoid	20 - 30	3
Line pressure solenoid	2.5 - 5	4
Torque converter clutch solenoid	5 - 20	5

ATF TEMPERATURE SENSOR

Auto	Resistance
20°C (68°F)	2.5 k
80°C (176°F)	0.3 k

REVOLUTION SENSOR

Condition	Standard value
Measure the vehicle speed sensor frequency while driving at approx. 20 km/h	Approx. 150 Hz
	Under 1.3 V or over 4.5 V

DROPPING RESISTOR

Resistance	10 - 15