HONDA

Service Manual
1998 - 2002 Accord 2/4 Dr

General Information

Chassis and Paint Codes
1998 Model 1-2

Chassis and Paint Codes
1999 Model 1-3

Chassis and Paint Codes
2000 Model 1-4

Chassis and Paint Codes
2001 Model 1-5

Chassis and Paint Codes
2002 Model 1-6

Identification Number Locations 1-7

Warning/Caution Label Locations 1-8

Under-hood Emission
Control Label 1-12

Lift and Support Points 1-17

Towing 1-18

Parts Marking 1-19

Revised Component Terms 1-20

Chassis and Paint Codes - 1998 Model

Vehicle Identification Number

1HG CG5 5 4 * W A 000001

a b c d e f g h

a. Manufacturer, Make and Type of Vehicle
1HG: HONDA OF AMERICA MFG., INC., U.S.A.
HONDA Passenger vehicle

b. Line, Body and Engine Type
CF8: ACCORD/F23A5
CG3: ACCORD COUPE/F23A1, F23A4
CG5: ACCORD/F23A1
CG6: ACCORD/F23A4

c. Body Type and Transmission Type
1: 2-door Coupe/5-speed Manual
2: 2-door Coupe/4-speed Automatic
5: 4-door Sedan/5-speed Manual
6: 4-door Sedan/4-speed Automatic

d. Vehicle Grade (Series)

US model	Canada model
4: DX, LX	4: DX, LX
5: EX	5: EX
7: EX-ULEV	

e. Check Digit

f. Model Year
W: 1998

g. Factory Code
A: Marysville, Ohio Factory in U.S.A.

h. Serial Number
000001—: US model
800001—: Canada model

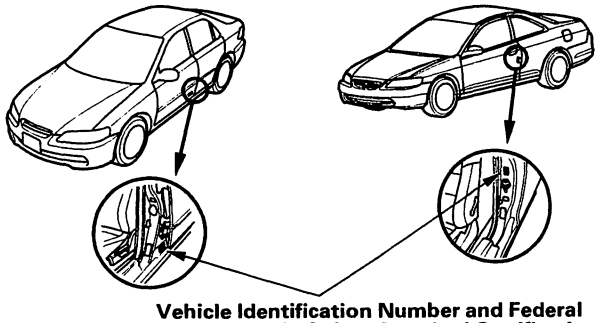

Vehicle Identification Number and Federal Motor Vehicle Safety Standard Certification.

Vehicle Identification Number and Canadian Motor Vehicle Safety Standard Certification.

Engine Number

F23A1 - 1000001

a b

a. Engine Type
F23A1: 2.3 ℓ SOHC VTEC Sequential Multiport Fuel-injected engine
F23A4: 2.3 ℓ SOHC VTEC Sequential Multiport Fuel-injected engine
F23A5: 2.3 ℓ SOHC Sequential Multiport Fuel-injected engine

b. Serial Number

Transmission Number

BAXA - 5000001

a b

a. Transmission Type
BAXA: 4-speed Automatic
P2A8: 5-speed Manual

b. Serial Number

Paint Code

Code	Color
B-80P	Mystic Blue Pearl
G-87P	Dark Emerald Pearl
NH-578	Taffeta White
NH-592P	Flamenco Black Pearl
NH-612M	Regent Silver Metallic
RP-25P	Black Currant Pearl
RP-29P	Raisin Pearl
R-94	San Marino Red
YR-508P	Heather Mist Metallic

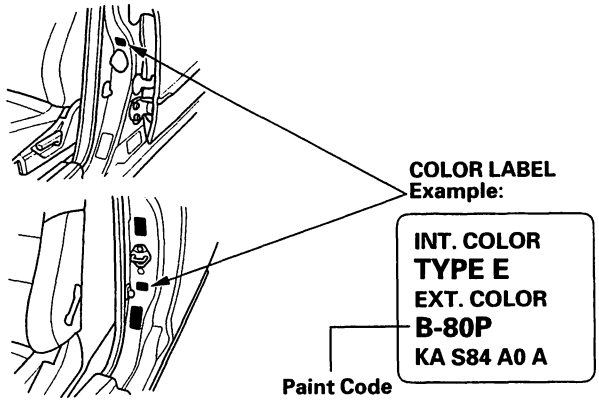

BACK

Chassis and Paint Codes - 1999 Model

Vehicle Identification Number

1HG CG5 5 4 * X A 000001

a b c d e f g h

a. Manufacturer, Make and Type of Vehicle
JHM: HONDA MOTOR CO., LTD.
HONDA Passenger vehicle
1HG: HONDA OF AMERICA MFG., INC., U.S.A.
HONDA Passenger vehicle

b. Line, Body and Engine Type
CF8: ACCORD/F23A5
CG3: ACCORD COUPE/F23A1, F23A4
CG5: ACCORD/F23A1
CG6: ACCORD/F23A1, F23A4

c. Body Type and Transmission Type
1: 2-door Coupe/5-speed Manual
2: 2-door Coupe/4-speed Automatic
5: 4-door Sedan/5-speed Manual
6: 4-door Sedan/4-speed Automatic

d. Vehicle Grade (Series)

US model	Canada model
4: DX, LX	4: DX, LX
5: EX, LX, LX-ULEV	5: EX
6: LX-ULEV	
7: EX, EX-ULEV	

e. Check Digit

f. Model Year
X: 1999

g. Factory Code
A: Marysville, Ohio Factory in U.S.A.
C: Saitama Factory in Japan (Sayama)

h. Serial Number
000001—: US model
800001—: Canada model

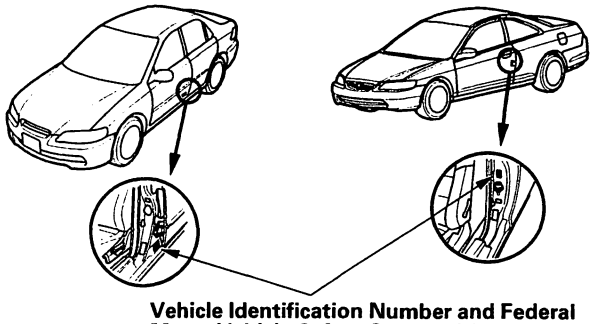

Vehicle Identification Number and Federal Motor Vehicle Safety Standard Certification.

Vehicle Identification Number and Canadian Motor Vehicle Safety Standard Certification.

Engine Number

F23A1 - 2000001

a b

a. Engine Type
F23A1: 2.3 ℓ SOHC VTEC Sequential Multiport Fuel-injected engine
F23A4: 2.3 ℓ SOHC VTEC Sequential Multiport Fuel-injected engine
F23A5: 2.3 ℓ SOHC Sequential Multiport Fuel-injected engine

b. Serial Number
F23A1, F23A4: 2000001— (Ohio)
F23A1, F23A4: 2500001— (Sayama)
F23A5: 2000001—

Transmission Number

BAXA - 6000001

a b

a. Transmission Type
BAXA: 4-speed Automatic (Ohio)
MAXA: 4-speed Automatic (Sayama)
P2A8: 5-speed Manual

b. Serial Number
BAXA: 6000001— (Ohio)
MAXA: 2000001— (Sayama)
P2A8: 2000001— (Ohio)
P2A8: 2500001— (Sayama)

Paint Code

Code	Color
B-80P	Mystic Blue Pearl
B-89P	Deep Velvet Blue Pearl
G-87P	Dark Emerald Pearl
NH-578	Taffeta White
NH-592P	Flamenco Black Pearl
NH-612M	Regent Silver Metallic
NH-623M	Satin Silver Metalic*Note
RP-25P	Black Currant Pearl
RP-29P	Raisin Pearl
R-94	San Marino Red
YR-508P	Heather Mist Metallic

*Note: US model only

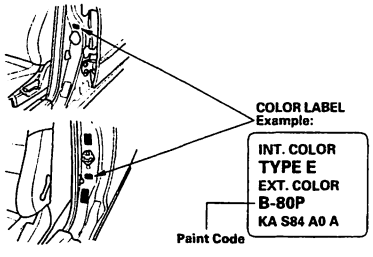

Chassis and Paint Codes - 2000 Model

Vehicle Identification Number

1HG CG5 5 4 * Y A 000001

a b c d e f g h

a. Manufacturer, Make and Type of Vehicle
JHM: HONDA MOTOR CO., LTD.
HONDA Passenger vehicle
1HG: HONDA OF AMERICA MFG., INC., U.S.A.
HONDA Passenger vehicle

b. Line, Body and Engine Type
CF8: ACCORD/F23A5
CG3: ACCORD COUPE/F23A1, F23A4
CG5: ACCORD/F23A1
CG6: ACCORD/F23A1, F23A4

c. Body Type and Transmission Type
1: 2-door Coupe/5-speed Manual
2: 2-door Coupe/4-speed Automatic
5: 4-door Sedan/5-speed Manual
6: 4-door Sedan/4-speed Automatic

d. Vehicle Grade (Series)

US model	Canada model
0: EX-SULEV	
4: DX, LX	4: DX, LX
5: EX, LX-ULEV	5: EX
6: EX, LX-ULEV	6: EX
7: EX-ULEV, LX-SE	7: LX-SE
8: EX-ULEV	
9: LX-SE	

e. Check Digit

f. Model Year
Y: 2000

g. Factory Code
A: Marysville, Ohio Factory in U.S.A.
C: Saitama Factory in Japan (Sayama)

h. Serial Number
000001—: US model
800001—: Canada model

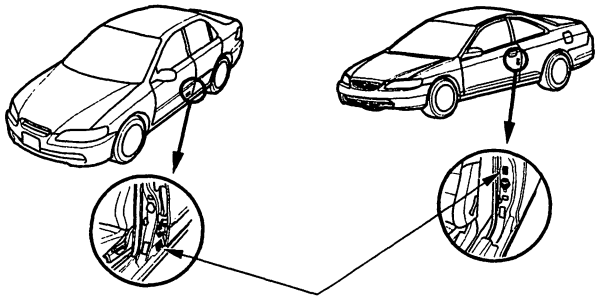

Vehicle Identification Number and Federal Motor Vehicle Safety Standard Certification.

Vehicle Identification Number and Canadian Motor Vehicle Safety Standard Certification.

Engine Number

F23A1 - 3000001

a b

a. Engine Type
F23A1: 2.3 ℓ SOHC VTEC Sequential Multiport Fuel-injected engine
F23A4: 2.3 ℓ SOHC VTEC Sequential Multiport Fuel-injected engine
F23A5: 2.3 ℓ SOHC Sequential Multiport Fuel-injected engine

b. Serial Number
F23A1, F23A4, F23A5: 3000001— (Ohio)
F23A1, F23A4, F23A5: 3500001— (Sayama)

Transmission Number

BAXA - 7000001

a b

a. Transmission Type
BAXA: 4-speed Automatic (Ohio)
MAXA: 4-speed Automatic (Sayama)
P2A8: 5-speed Manual

b. Serial Number
BAXA: 7000001— (Ohio)
MAXA: 3000001— (Sayama)
P2A8: 3000001— (Ohio)
P2A8: 3500001— (Sayama)

Paint Code

Code	Color
B-89P	Deep Velvet Blue Pearl
B-92P	Nighthawk Black Pearl
G-87P	Dark Emerald Pearl
NH-578	Taffeta White
NH-623M	Satin Silver Metallic
RP-31M	Signet Silver Metallic
R-94	San Marino Red
YR-524M	Naples Gold Metallic

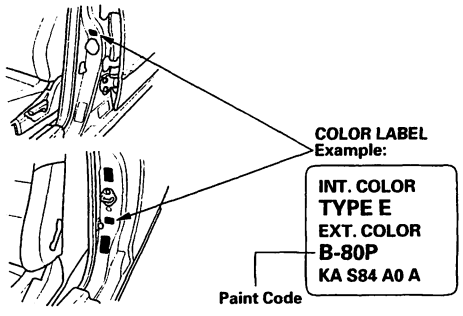

BACK

Chassis and Paint Codes - 2001 Model

Vehicle Identification Number

1HG CG5 5 4 * 1 A 000001

a b c d e f g h

a. Manufacturer, Make and Type of Vehicle
JHM: HONDA MOTOR CO., LTD.
HONDA Passenger vehicle
1HG: HONDA OF AMERICA MFG., INC., U.S.A.
HONDA Passenger vehicle
3HG: HONDA DE MEXICO,
HONDA Passenger vehicle

b. Line, Body and Engine Type
CF8: ACCORD/F23A5
CG3: ACCORD COUPE/F23A1, F23A4
CG5: ACCORD/F23A1
CG6: ACCORD/F23A4

c. Body Type and Transmission Type
1: 2-door Coupe/5-speed Manual
2: 2-door Coupe/4-speed Automatic
5: 4-door Sedan/5-speed Manual
6: 4-door Sedan/4-speed Automatic

d. Vehicle Grade (Series)

US model	Canada model
0: EX-SULEV	4: DX, LX
4: DX, LX	5: EX
5: EX, LX-ULEV, LX-A	6: EX
6: EX, LX-ULEV	8: LX
7: EX-ULEV, LX-A, LX-A ULEV	
8: EX-ULEV, LX	
9: LX-ULEV with Side Airbags	

e. Check Digit

f. Model Year
1: 2001

g. Factory Code
A: Marysville, Ohio Factory in U.S.A.
C: Saitama Factory in Japan (Sayama)
X: El Salto Factory in Mexico

h. Serial Number
000001—: US model
800001—: Canada model

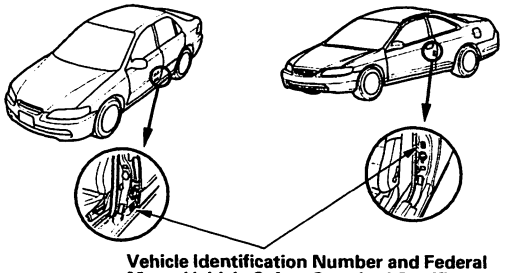

Vehicle Identification Number and Federal Motor Vehicle Safety Standard Certification.

Vehicle Identification Number and Canadian Motor Vehicle Safety Standard Certification.

Engine Number

F23A1 - 4000001

a b

a. Engine Type
F23A1: 2.3 ℓ SOHC VTEC Sequential Multiport Fuel-injected engine
F23A4: 2.3 ℓ SOHC VTEC Sequential Multiport Fuel-injected engine
F23A5: 2.3 ℓ SOHC Sequential Multiport Fuel-injected engine

b. Serial Number
F23A1, F23A4, F23A5: 4000001— (Ohio)
F23A1, F23A4, F23A5: 4500001— (Sayama)
F23A1: 4400001— (El Salto)

Transmission Number

BAXA - 7000001

a b

a. Transmission Type
BAXA: 4-speed Automatic (Ohio)
MAXA: 4-speed Automatic (Sayama)
P2A8: 5-speed Manual

b. Serial Number
BAXA: 7000001— (Ohio)
MAXA: 4000001— (Sayama)
P2A8: 4000001— (Ohio)
P2A8: 4500001— (Sayama)

Paint Code

Code	Color
B-92P	Nighthawk Black Pearl
B-96P	Eternal Blue Pearl
G-87P	Dark Emerald Pearl
NH-578	Taffeta White*Note
NH-623M	Satin Silver Metallic
R-94	San Marino Red
R-507P	Firepepper Pearl
RP-31M	Signet Silver Metallic
YR-524M	Naples Gold Metallic

*Note: US model only

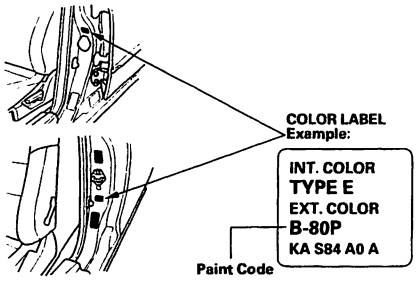

Chassis and Paint Codes - 2002 Model

Vehicle Identification Number

1HG CG5 5 4 * 2 A 000001

a b c d e f g h

a. Manufacturer, Make and Type of Vehicle
JHM: HONDA MOTOR CO., LTD.
HONDA Passenger vehicle
1HG: HONDA OF AMERICA MFG., INC., U.S.A.
HONDA Passenger vehicle

b. Line, Body and Engine Type
CF8: ACCORD/F23A5
CG3: ACCORD COUPE/F23A1, F23A4
CG5: ACCORD/F23A1
CG6: ACCORD/F23A4

c. Body Type and Transmission Type
1: 2-door Coupe/5-speed Manual
2: 2-door Coupe/4-speed Automatic
5: 4-door Sedan/5-speed Manual
6: 4-door Sedan/4-speed Automatic

d. Vehicle Grade (Series)

US model	Canada model
0: EX-SULEV, SE	0: SE
1: SE	4: DX, LX
2: SE	5: EX
3: SE	6: EX
4: DX, LX	7: SE
5: EX, LX-ULEV, LX-A	8: LX
6: EX, LX-ULEV, DX VP	
7: EX-ULEV, LX-SE, LX-A ULEV, SE	
8: EX-ULEV, LX, SE	
9: LX-ULEV	

e. Check Digit

f. Model Year
2: 2002

g. Factory Code
A: Marysville, Ohio Factory in U.S.A.
C: Saitama Factory in Japan (Sayama)

h. Serial Number
000001—: US model
800001—: Canada model

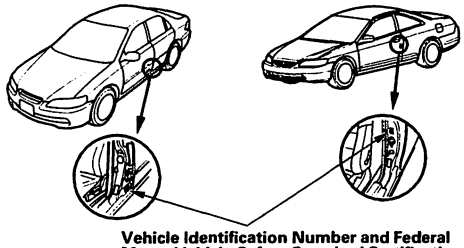

Vehicle Identification Number and Federal Motor Vehicle Safety Standard Certification.

Vehicle Identification Number and Canadian Motor Vehicle Safety Standard Certification.

Engine Number

F23A1 - 5000001

a b

a. Engine Type
F23A1: 2.3 ℓ SOHC VTEC Sequential Multiport Fuel-injected engine
F23A4: 2.3 ℓ SOHC VTEC Sequential Multiport Fuel-injected engine
F23A5: 2.3 ℓ SOHC Sequential Multiport Fuel-injected engine

b. Serial Number

Transmission Number

BAXA - 8000001

a b

a. Transmission Type
BAXA: 4-speed Automatic (Ohio)
MAXA: 4-speed Automatic (Sayama)
P2A8: 5-speed Manual

b. Serial Number
BAXA: 8000001— (Ohio)
MAXA: 5000001— (Sayama)
P2A8: 4000001— (Ohio)
P2A8: 4500001— (Sayama)

Paint Code

Code	Color
B-92P	Nighthawk Black Pearl
B-96P	Eternal Blue Pearl
G-508P	Noble Green Pearl*
NH-578	Taffeta White*
NH-623M	Satin Silver Metallic
R-94	San Marino Red*
R-507P	Firepepper Pearl
YR-524M	Naples Gold Metallic

*: US model only

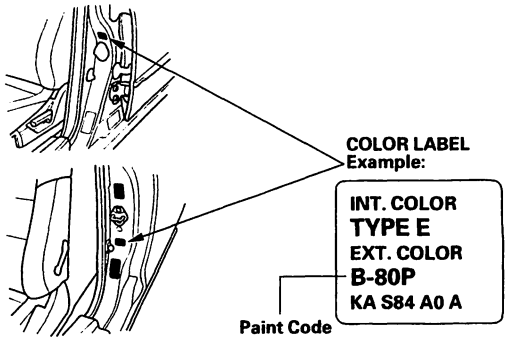

BACK

Identification Number Locations

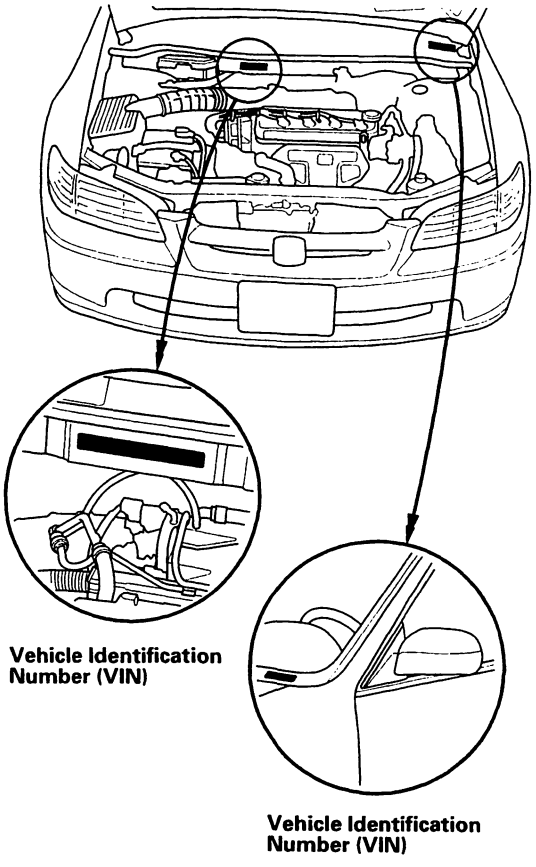

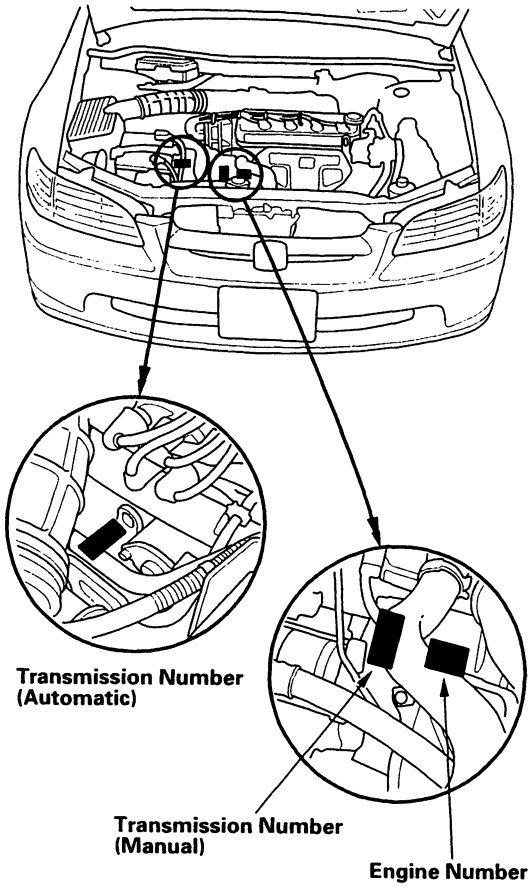

Warning/Caution Label Locations

CABLE REEL CAUTION

SRS

INSTALLATION OF THE SRS CABLE REEL IS CRITICAL TO THE PROPER OPERATION OF THE SRS SYSTEM. REFER TO THE SERVICE MANUAL FOR DETAILED INSTALLATION INSTRUCTIONS.

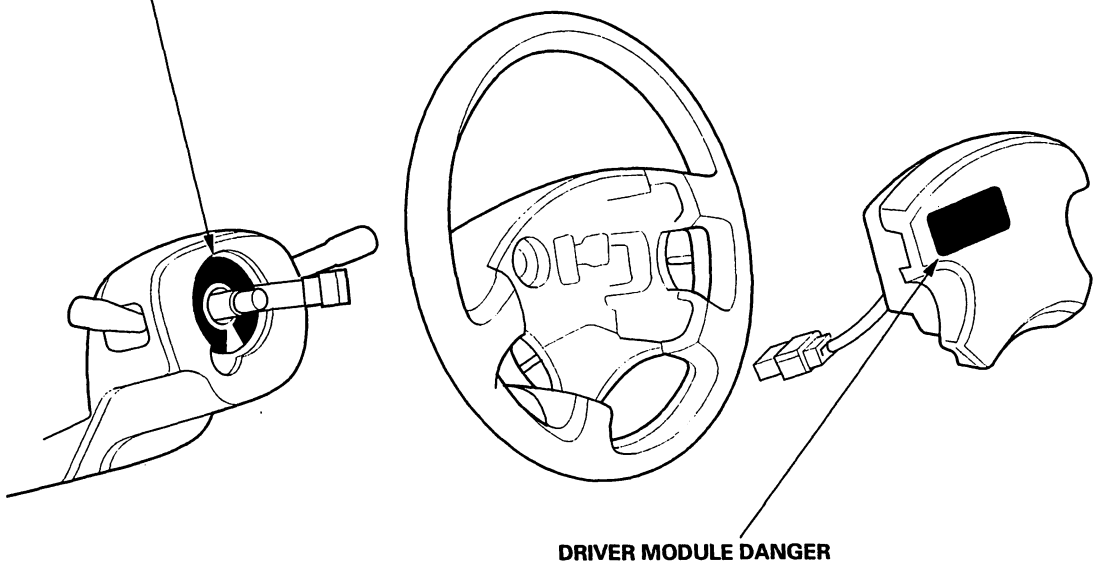

DRIVER MODULE DANGER

⚠ DANGER

EXPLOSIVE/FLAMMABLE
STORAGE TEMPERATURES MUST NOT EXCEED 200°F(93°C). FOR PROPER HANDLING STORAGE AND DISPOSAL PROCEDURES, REFER TO SERVICE MANUAL SRS SUPPLEMENT.
FIRST AID

IF CONTENTS ARE SWALLOWED, INDUCE VOMITING. FOR EYE CONTACT, FLUSH EYES WITH WATER FOR 15 MINUTES. IN EVERY CASE, GET PROMPT MEDICAL ATTENTION.
KEEP OUT OF REACH OF CHILDREN.

⚠ WARNING

THE AIRBAG INFLATOR IS EXPLOSIVE AND, IF ACCIDENTALLY DEPLOYED, CAN SERIOUSLY HURT OR KILL YOU.

- DO NOT USE ELECTRICAL TEST EQUIPMENT OR PROBING DEVICES. THEY CAN CAUSE ACCIDENTAL DEPLOYMENT.
- NO SERVICEABLE PARTS INSIDE. DO NOT DISASSEMBLE.
- PLACE AIRBAG UPRIGHT WHEN REMOVED.
- FOLLOW SERVICE MANUAL INSTRUCTIONS CAREFULLY.

SRS WARNING (HOOD)
'98-00 models with driver's and passenger's airbags

SUPPLEMENTAL RESTRAINT SYSTEM (SRS)
THIS VEHICLE IS EQUIPPED WITH DRIVER AND FRONT SEAT PASSENGER AIRBAGS. ALL SRS ELECTRICAL WIRING AND CONNECTORS ARE COLORED YELLOW. TAMPERING WITH, DISCONNECTING, OR USING ELECTRICAL TEST EQUIPMENT ON THE SRS WIRING CAN MAKE THE SYSTEM INOPERATIVE OR CAUSE ACCIDENTAL FIRING OF THE INFLATOR.

⚠ WARNING

THE AIRBAG INFLATOR IS EXPLOSIVE AND, IF ACCIDENTALLY DEPLOYED, CAN SERIOUSLY HURT YOU.
FOLLOW SERVICE MANUAL INSTRUCTIONS CAREFULLY.

SRS WARNING (HOOD)
'00-02 models with driver's and passenger's, and front seats side airbags

SUPPLEMENTAL RESTRAINT SYSTEM (SRS)
THIS VEHICLE IS EQUIPPED WITH DRIVER AND FRONT SEAT PASSENGER, AND FRONT AND SIDE AIRBAGS. ALL SRS ELECTRICAL WIRING AND CONNECTORS ARE COLORED YELLOW. TAMPERING WITH, DISCONNECTING, OR USING TEST EQUIPMENT ON THE SRS WIRING CAN MAKE THE SYSTEM INOPERATIVE OR CAUSE ACCIDENTAL DEPLOYMENT.

⚠ WARNING

ACCIDENTAL DEPLOYMENT CAN SERIOUSLY HURT OR KILL YOU.
FOLLOW SERVICE MANUAL INSTRUCTIONS CAREFULLY.

FRONT PASSENGER MODULE DANGER

⚠ DANGER

EXPLOSIVE/FLAMMABLE
STORAGE TEMPERATURES MUST NOT EXCEED 200°F (93°C). FOR PROPER HANDLING STORAGE AND DISPOSAL PROCEDURES REFER TO SERVICE MANUAL SRS SUPPLEMENT.
FIRST AID

IF CONTENTS ARE SWALLOWED, OBTAIN IMMEDIATE MEDICAL ATTENTION. FOR EYE CONTACT, FLUSH EYES WITH WATER FOR 15 MINUTES.
IN EVERY CASE, GET PROMPT MEDICAL ATTENTION.
KEEP OUT OF REACH OF CHILDREN.

⚠ WARNING

THE AIRBAG INFLATOR IS EXPLOSIVE AND, IF ACCIDENTALLY DEPLOYED, CAN SERIOUSLY HURT OR KILL YOU.

- DO NOT USE ELECTRICAL TEST EQUIPMENT OR PROBING DEVICES. THEY CAN CAUSE ACCIDENTAL DEPLOYMENT.
- NO SERVICEABLE PARTS INSIDE. DO NOT DISASSEMBLE.
- PLACE AIRBAG UPRIGHT WHEN REMOVED.
- FOLLOW SERVICE MANUAL INSTRUCTIONS CAREFULLY.

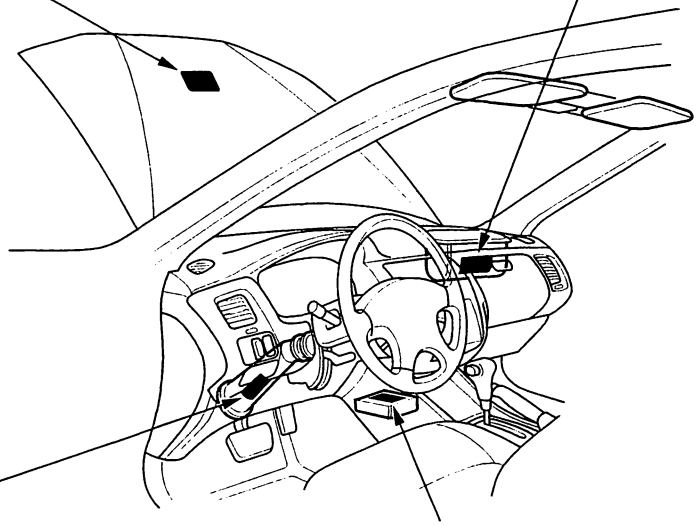

STEERING COLUMN NOTICE

NOTICE

TO PREVENT SRS DAMAGE, REMOVE STEERING WHEEL BEFORE REMOVING STEERING SHAFT CONNECTING BOLT.

MONITOR NOTICE

NOTICE SRS

- NO SERVICEABLE PARTS INSIDE.
- REFER TO SERVICE MANUAL FOR DETAILED INSTRUCTIONS.

(cont'd)

Warning/Caution Label Locations (cont'd)

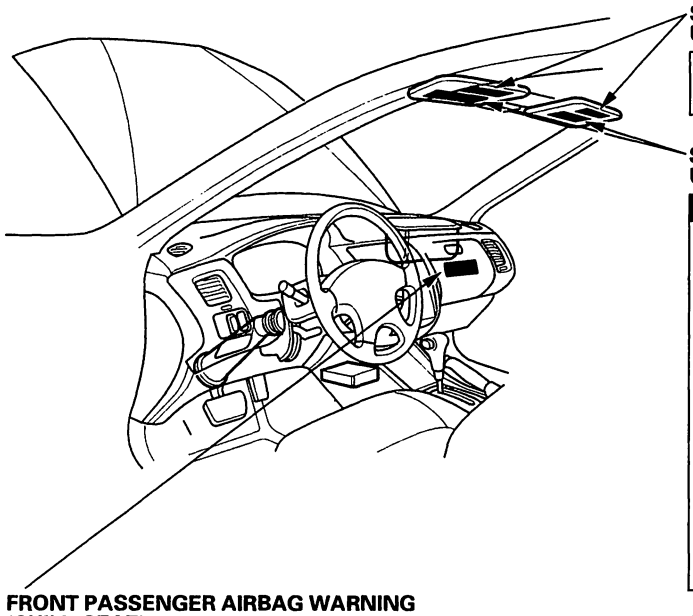

SRS INFORMATION
U.S.A. model

AIRBAG WARNING
FLIP VISOR OVER.

SRS WARNING INFORMATION
U.S.A. '98 model

⚠ WARNING

DEATH OR SERIOUS INJURY CAN OCCUR.
- CHILDREN 12 AND UNDER CAN BE KILLED BY THE AIRBAG.
- THE BACK SEAT IS THE SAFEST PLACE FOR CHILDREN.
- NEVER PUT A REAR-FACING CHILD SEAT IN THE FRONT.
- SIT AS FAR BACK AS POSSIBLE FROM THE AIRBAG.
- ALWAYS USE SEAT BELTS AND CHILD RESTRAINTS.
- THE SRS MUST BE INSPECTED TEN YEARS AFTER IT IS INSTALLED.
- THE DATE OF INSTALLATION IS SHOWN ON THE DRIVER'S DOORJAMB.

FRONT PASSENGER AIRBAG WARNING
(CHILD SEAT)
49ST '98, '99-02 models

⚠ WARNING

CHILDREN CAN BE KILLED OR INJURED BY THE PASSENGER AIRBAG.
THE BACK SEAT IS THE SAFEST PLACE FOR CHILDREN 12 AND UNDER.
MAKE SURE ALL CHILDREN USE SEAT BELTS OR CHILD SEATS.

SRS WARNING INFORMATION
U.S.A. '99-02 models

⚠ WARNING

DEATH OR SERIOUS INJURY CAN OCCUR.
- CHILDREN 12 AND UNDER CAN BE KILLED BY THE AIRBAG.
- THE BACK SEAT IS THE SAFEST PLACE FOR CHILDREN.
- NEVER PUT A REAR-FACING CHILD SEAT IN THE FRONT.
- SIT AS FAR BACK AS POSSIBLE FROM THE AIRBAG.
- ALWAYS USE SEAT BELTS AND CHILD RESTRAINTS.

FRONT PASSENGER AIRBAG WARNING
(CHILD SEAT)
California '98 model

⚠ WARNING

CHILDREN CAN BE KILLED OR INJURED BY THE PASSENGER AIRBAG.
MAKE SURE ALL CHILDREN USE SEAT BELTS OR CHILD SEATS.

SRS INFORMATION
Canada '98 model (located only driver side sun visor)

CAUTION
TO AVOID SERIOUS INJURY:
- FOR MAXIMUM SAFETY PROTECTION IN ALL TYPES OF CRASHES, YOU MUST ALWAYS WEAR YOUR SEAT BELT.
- DO NOT INSTALL REARWARD FACING CHILD SEATS IN ANY FRONT PASSENGER SEAT POSITION.
- DO NOT SIT OR LEAN UNNECESSARILY CLOSE TO THE AIRBAG.
- DO NOT PLACE ANY OBJECTS OVER THE AIRBAG OR BETWEEN THE AIRBAG AND YOURSELF.
- SEE THE OWNER'S MANUAL FOR FURTHER INFORMATION AND EXPLANATIONS
- THE SRS MUST BE INSPECTED TEN YEARS AFTER IT IS INSTALLED.
- THE DATE OF INSTALLATION IS SHOWN ON THE DRIVER'S DOORJAMB.

SRS INFORMATION
Canada '99-02 models (located only driver side sun visor)

CAUTION
TO AVOID SERIOUS INJURY:
- FOR MAXIMUM SAFETY PROTECTION IN ALL TYPES OF CRASHES, YOU MUST ALWAYS WEAR YOUR SEAT BELT.
- DO NOT INSTALL REARWARD FACING CHILD SEATS IN ANY FRONT PASSENGER SEAT POSITION.
- DO NOT SIT OR LEAN UNNECESSARILY CLOSE TO THE AIRBAG.
- DO NOT PLACE ANY OBJECTS OVER THE AIRBAG OR BETWEEN THE AIRBAG AND YOURSELF.
- SEE THE OWNER'S MANUAL FOR FURTHER INFORMATION AND EXPLANATIONS.

BACK

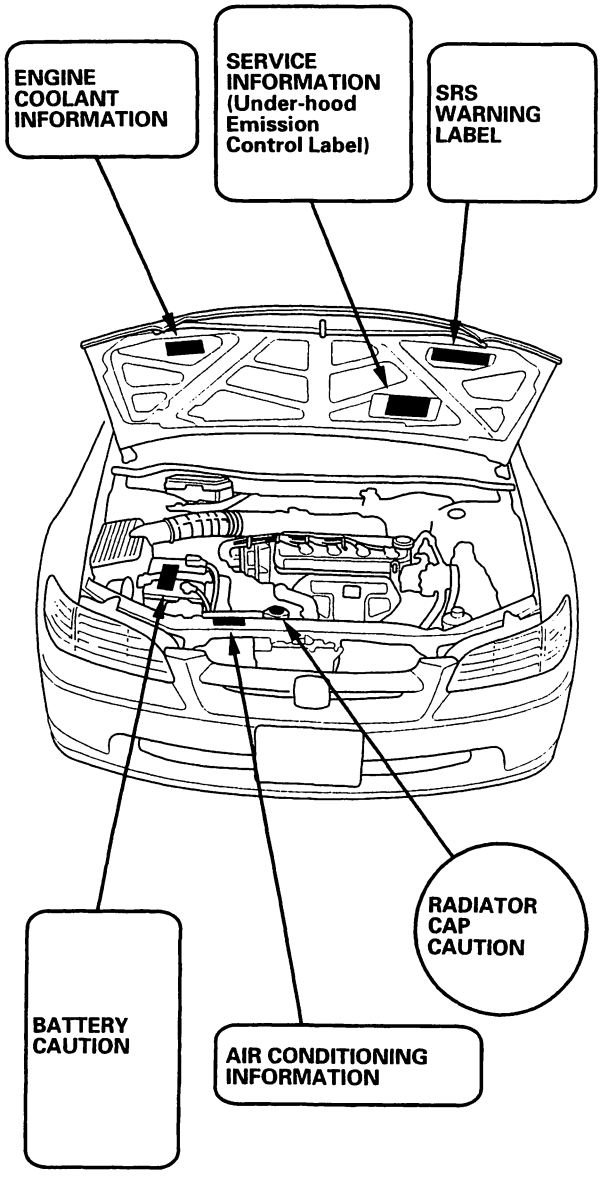

'98-99 models

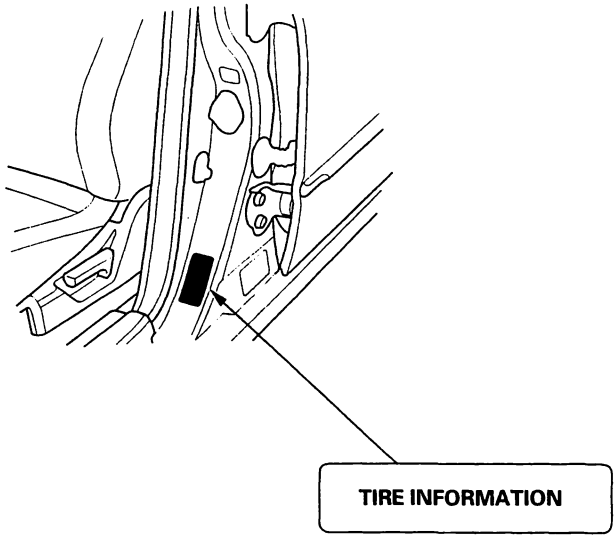

'00-02 models

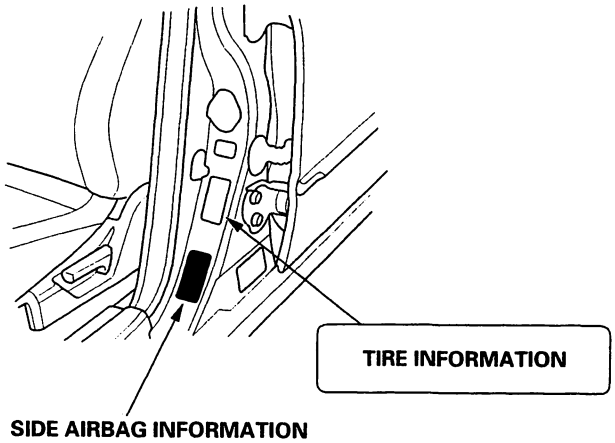

SIDE AIRBAG INFORMATION

- Labeled only on models with side airbags
- Located on driver's door jamb and passenger's door jamb (not shown)

SIDE AIRBAG

- THIS CAR IS EQUIPPED WITH SIDE AIRBAGS IN THE DRIVER'S AND PASSENGER'S SEAT.
- DO NOT LEAN AGAINST THE DOOR.
- SEE OWNER'S MANUAL FOR MORE INFORMATION.

Under-hood Emission Control Label (1998 Model)

Emission Group Identification

Example:

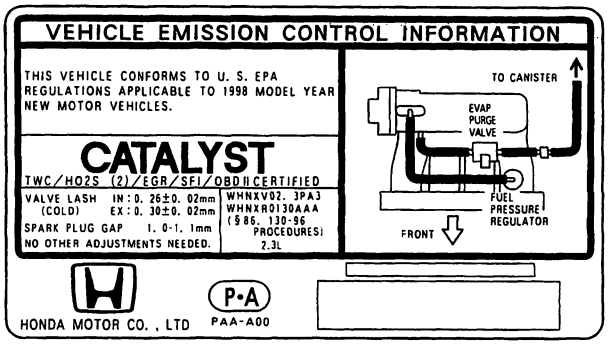

FEDERAL
THIS VEHICLE CONFORMS TO U.S. EPA REGULATIONS APPLICABLE TO 1998 MODEL YEAR NEW MOTOR VEHICLES.

CALIFORNIA TLEV
THIS VEHICLE CONFORMS TO U.S. EPA AND STATE OF CALIFORNIA REGULATIONS APPLICABLE TO 1998 NEW TLEV PASSENGER CARS PROVIDED THAT THIS VEHICLE IS ONLY INTRODUCED INTO COMMERCE FOR SALE IN THE STATE OF CALIFORNIA.

TIER 1/LEV
THIS VEHICLE CONFORMS TO U.S. EPA TIER 1 AND STATE OF CALIFORNIA LEV REGULATIONS APPLICABLE TO 1998 MODEL YEAR NEW MOTOR VEHICLES.

CALIFORNIA LEV
THIS VEHICLE CONFORMS TO U.S. EPA AND STATE OF CALIFORNIA REGULATIONS APPLICABLE TO 1998 NEW LEV PASSENGER CARS PROVIDED THAT THIS VEHICLE IS ONLY INTRODUCED INTO COMMERCE FOR SALE IN THE STATE OF CALIFORNIA.

CALIFORNIA ULEV
THIS VEHICLE CONFORMS TO U.S. EPA AND STATE OF CALIFORNIA REGULATIONS APPLICABLE TO 1998 NEW ULEV PASSENGER CARS PROVIDED THAT THIS VEHICLE IS ONLY INTRODUCED INTO COMMERCE FOR SALE IN THE STATE OF CALIFORNIA.

Engine and Evaporative Families:

Engine Family:

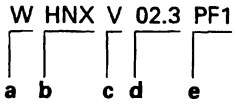

a. **Model Year**
W: 1998
b. **Manufacturer Subcode**
HNX: HONDA
c. **Family Type**
V: LDV
T: LDT
d. **Displacement**
e. **Sequence Characters**

Evaporative Family:

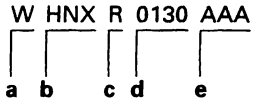

a. **Model Year**
W: 1998
b. **Manufacturer Subcode**
HNX: HONDA
c. **Family Type**
E: EVAP
R: EVAP/ORVR
d. **Canister Work Capacity**
e. **Sequence Characters**

BACK

Under-hood Emission Control Label (1999 Model)

Emission Group Identification

Example:

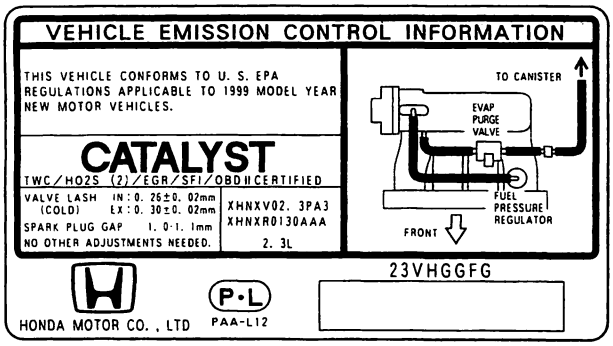

FEDERAL
THIS VEHICLE CONFORMS TO U.S. EPA REGULATIONS APPLICABLE TO 1999 MODEL YEAR NEW MOTOR VEHICLES.

CALIFORNIA TLEV
THIS VEHICLE CONFORMS TO U.S. EPA AND STATE OF CALIFORNIA REGULATIONS APPLICABLE TO 1999 NEW TLEV PASSENGER CARS PROVIDED THAT THIS VEHICLE IS ONLY INTRODUCED INTO COMMERCE FOR SALE IN THE STATE OF CALIFORNIA.

TIER 1/LEV
THIS VEHICLE CONFORMS TO U.S. EPA TIER 1 AND STATE OF CALIFORNIA LEV REGULATIONS APPLICABLE TO 1999 MODEL YEAR NEW MOTOR VEHICLES.

CALIFORNIA LEV
THIS VEHICLE CONFORMS TO U.S EPA AND STATE OF CALIFORNIA REGULATIONS APPLICABLE TO 1999 NEW LEV PASSENGER CARS PROVIDED THAT THIS VEHICLE IS ONLY INTRODUCED INTO COMMERCE FOR SALE IN THE STATE OF CALIFORNIA.

CALIFORNIA ULEV
THIS VEHICLE CONFORMS TO U.S. EPA AND STATE OF CALIFORNIA REGULATIONS APPLICABLE TO 1999 NEW ULEV PASSENGER CARS PROVIDED THAT THIS VEHICLE IS ONLY INTRODUCED INTO COMMERCE FOR SALE IN THE STATE OF CALIFORNIA.

Engine and Evaporative Families:

Engine Family:

X HNX V 02.3 PA3
a b c d e

a. **Model Year**
   X: 1999
b. **Manufacturer Subcode**
   HNX: HONDA
c. **Family Type**
   V: LDV
   T: LDT
d. **Displacement**
e. **Sequence Characters**

Evaporative Family:

X HNX R 0130 AAA
a b c d e

a. **Model Year**
   X: 1999
b. **Manufacturer Subcode**
   HNX: HONDA
c. **Family Type**
   E: EVAP
   R: EVAP/ORVR
d. **Canister Work Capacity**
e. **Sequence Characters**

Under-hood Emission Control Label (2000 Model)

Emission Group Identification

Example

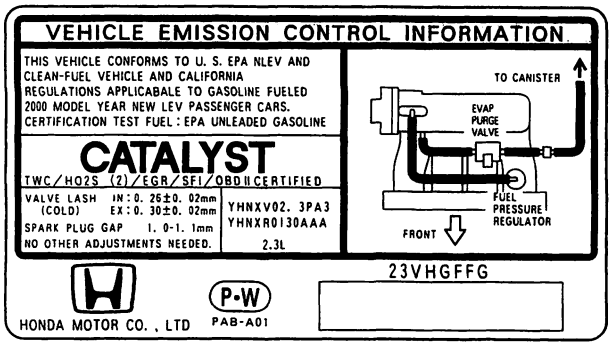

FEDERAL
THIS VEHICLE CONFORMS TO U.S. EPA NLEV AND CLEAN-FUEL VEHICLE AND CALIFORNIA REGULATIONS APPLICABLE TO GASOLINE FUELED 2000 MODEL YEAR NEW LEV PASSENGER CARS. CERTIFICATION TEST FUEL: EPA UNLEADED GASOLINE

CALIFORNIA ULEV
THIS VEHICLE CONFORMS TO U.S. EPA NLEV REGULATIONS APPLICABLE TO 2000 MODEL YEAR NEW ULEV PASSENGERS CARS, AND CALIFORNIA REGULATIONS APPLICABLE TO 2000 MODEL YEAR NEW ULEV PASSENGER CARS.

Engine and Evaporative Families:

Engine Family:

Y HNX V 02.3 PA3
a b c d e

a. **Model Year**
   Y: 2000
b. **Manufacturer Subcode**
   HNX: HONDA
c. **Family Type**
   V: LDV
   T: LDT
d. **Displacement**
e. **Sequence Characters**

Evaporative Family:

Y HNX R 0130 AAA
a b c d e

a. **Model Year**
   Y:2000
b. **Manufacturer Subcode**
   HNX: HONDA
c. **Family Type**
   E: EVAP
   R: EVAP/ORVR
d. **Canister Work Capacity**
e. **Sequence Characters**

BACK

Under-hood Emission Control Label (2001 Model)

Emission Group Identification

Example:

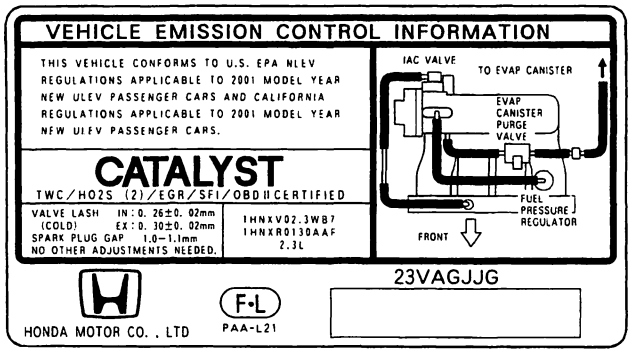

FEDERAL
THIS VEHICLE CONFORMS TO U.S. EPA NLEV AND CLEAN-FUEL VEHICLE REGULATIONS APPLICABLE TO GASOLINE FUELED 2001 MODEL YEAR NEW LEV PASSENGER CARS.

CALIFORNIA LEV
THIS VEHICLE CONFORMS TO U.S. EPA NLEV AND CLEAN-FUEL VEHICLE AND CALIFORNIA REGULATIONS APPLICABLE TO GASOLINE FUELED 2001 MODEL YEAR NEW LEV PASSENGER CARS.

CALIFORNIA ULEV
THIS VEHICLE CONFORMS TO U.S. EPA NLEV REGULATIONS APPLICABLE TO 2001 MODEL YEAR NEW ULEV PASSENGER CARS AND CALIFORNIA REGULATIONS APPLICABLE TO 2001 MODEL YEAR NEW ULEV PASSENGER CARS.

CALIFORNIA SULEV
THIS VEHICLE CONFORMS TO CALIFORNIA REGULATIONS APPLICABLE TO 2001 MODEL YEAR NEW LEVII SULEV PASSENGER CARS.
THIS VEHICLE MAY ONLY BE INTRODUCED INTO COMMERCE FOR SALE IN CALIFORNIA.

CANADIAN TIER 1
THIS VEHICLE CONFORMS TO U.S. EPA NLEV REGULATIONS AND CANADIAN TIER 1 STANDARDS FOR 2001 MODEL YEAR NEW PASSENGER CARS.

Engine and Evaporative Families:

Engine Family:

1 HNX V 02.3 WB7
a b c d e

a. **Model Year**
   1: 2001
b. **Manufacturer Subcode**
   HNX: HONDA
c. **Family Type**
   V: LDV
   T: LDT
d. **Displacement**
e. **Sequence Characters**

Evaporative Family:

1 HNX R 0130 AAF
a b c d e

a. **Model Year**
   1:2001
b. **Manufacturer Subcode**
   HNX: HONDA
c. **Family Type**
   E: EVAP
   R: EVAP/ORVR
d. **Canister Work Capacity**
e. **Sequence Characters**

Under-hood Emission Control Label (2002 Model)

Emission Group Identification

Example:

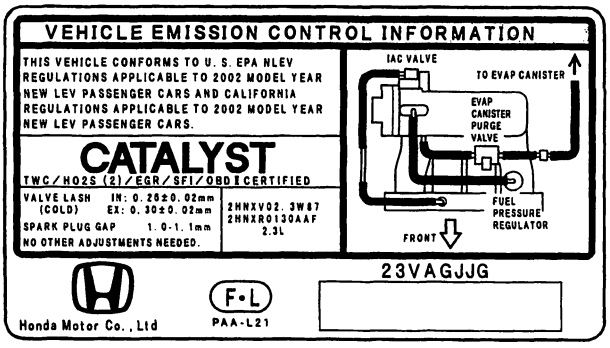

FEDERAL and CANADIAN TIER 1
THIS VEHICLE CONFORMS TO U.S. EPA NLEV REGULATIONS APPLICABLE TO 2002 MODEL YEAR NEW LEV PASSENGER CARS AND CALIFORNIA REGULATIONS APPLICABLE TO 2002 MODEL YEAR NEW LEV PASSENGER CARS.

Engine and Evaporative Families:

Engine Family:

2 HNX V 02.3 WB7

a b c d e

a. **Model Year**
   2: 2002
b. **Manufacturer Subcode**
   HNX: HONDA
c. **Family Type**
   V: LDV
   T: LDT
d. **Displacement**
e. **Sequence Characters**

Evaporative Family:

2 HNX R 0130 AAF

a b c d e

a. **Model Year**
   2:2002
b. **Manufacturer Subcode**
   HNX: HONDA
c. **Family Type**
   E: EVAP
   R: EVAP/ORVR
d. **Canister Work Capacity**
e. **Sequence Characters**

BACK

Lift and Support Points

Frame Hoist

If you are going to remove heavy components such as suspension or the fuel tank from the rear of the vehicle, first support the front of the vehicle with a tall safety stand. When substantial weight is removed from the rear of the vehicle, the center of gravity can change and cause the vehicle to tip forward on the hoist.

1. Position the hoist lift blocks (A), or safety stands, under the vehicle's front support points (B) and rear support points (C).

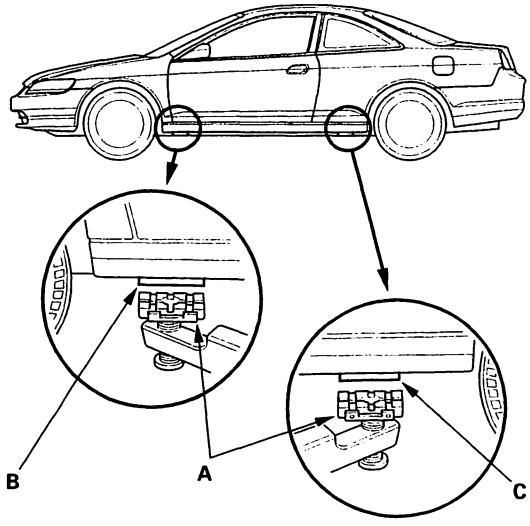

2. Raise the hoist a few inches, and rock the vehicle gently to be sure it is firmly supported.

3. Raise the hoist to full height, and inspect the lift points for solid contact with the lift blocks.

Safety Stands

To support the vehicle on safety stands, use the same support points (B and C) as for a frame hoist. Always use safety stands when working on or under any vehicle that is supported only by a jack.

Floor Jack

1. Set the parking brake.

2. Block the wheels that are not being lifted.

3. When lifting the rear of the vehicle, put the gearshift lever in reverse (or the automatic transmission in P position.)

4. Position the floor jack under the front jacking bracket (A) or rear jacking bracket (B), center the jack lift platform (C) on the jacking bracket, and jack up the vehicle high enough to fit the safety stands under it.

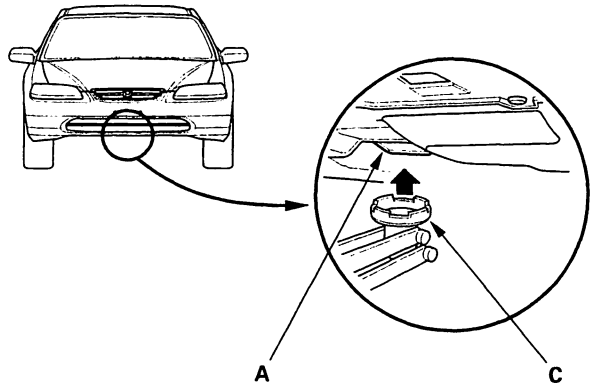

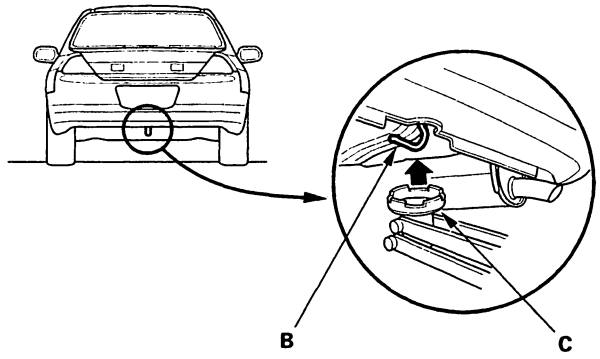

5. Position the safety stands under the support points and adjust them so the vehicle will be level.

6. Lower the vehicle onto the stands.

Towing

If the vehicle needs to be towed, call a professional towing service. Never tow the vehicle behind another vehicle with just a rope or chain. It is very dangerous.

There are three popular methods of towing a vehicle.

Flat-bed Equipment— The operator loads the vehicle on the back of a truck. This is the best way of transporting the vehicle.

To accommodate flat-bed equipment, the vehicle is equipped with a towing hook (A) and tie down hooks (B). The towing hook can be used with a winch to pull the vehicle onto the truck, and the tie down hooks can be used to secure the vehicle to the truck.

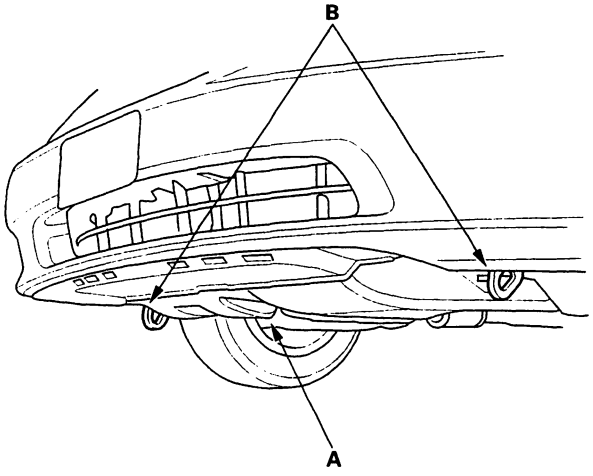

Wheel Lift Equipment— The tow truck uses two pivoting arms that go under the tires (front or rear) and lift them off the ground. The other two wheels remain on the ground.

Sling-type Equipment— The tow truck uses metal cables with hooks on the ends. These hooks go around parts of the frame or suspension and the cables lift that end of the vehicle off the ground. The vehicle's suspension and body can be seriously damaged. This method of towing is unacceptable.

If the vehicle cannot be transported by flat-bed, it should be towed with the front wheels off the ground. If due to damage, the vehicle must be towed with the front wheels on the ground, do the following:

Manual Transmission
- Release the parking brake.
- Shift the transmission to Neutral.

Automatic Transmission
- Release the parking brake.
- Start the engine.
- Shift to D4 position, then N position.
- Turn off the engine.

It is best to tow the vehicle no farther than 50 miles (80 km), and keep the speed below 35 mph (55 km/h).

NOTICE
- Improper towing preparation will damage the transmission. Follow the above procedure exactly. If you cannot shift the transmission or start the engine (automatic transmission), the vehicle must be transported on a flat-bed.
- Trying to lift or tow the vehicle by the bumpers will cause serious damage. The bumpers are not designed to support the vehicle's weight.

BACK

Parts Marking

To deter vehicle theft, certain major components are marked with the vehicle identification number (VIN). Original parts have self-adhesive labels. Replacement body parts have generic self-adhesive labels. The original engine or transmission VIN plate is transferred to a replacement engine or transmission and attached with break-off bolts.

NOTE: Be careful not to damage the parts marking labels during body repair. Mask the labels before repairing the part.

Revised Component Terms

Beginning with '01 models, the following component terms have been changed to conform with the standards in SAE document J1930. If you find a terms or abbreviation in a '01 manual that is unfamiliar to you, check this list. If a term is not listed below, it did not change.

00 and Earlier Models		'01 Model or later	
Meaning	**HONDA Abbreviations**	**Meaning**	**New Abbreviations SAE recommendation**
Heated Oxygen Sensor (for some models)	HO2S	Air Fuel Ratio Sensor	A/F SENSOR
Brake Switch		Brake Pedal Position Switch	BPP Switch
Clutch Switch		Clutch Pedal Position Switch	
Distributor Ignition Rotor	DI Rotor	Distributor Rotor	
Function Sensor		Engine Speed Fluctuation Sensor	RPM Fluctuation Sensor
Evaporative Emission Control Canister	EVAP Control Canister	Evaporative Emission Canister	EVAP Canister
Evaporative Emission Control Canister Vent Shut Valve	EVAP Control Canister Vent Shut Valve	Evaporative Emission Canister Vent Shut Valve	EVAP Canister Vent Shut Valve
Evaporative Emission Purge Control Solenoid Valve	EVAP Purge Control Solenoid Valve	Evaporative Emission Canister Purge Valve	EVAP Canister Purge Valve
Exhaust Gas Recirculation Valve Lift	EGR Valve Lift Sensor	Exhaust Gas Recirculation Valve Position	EGR Valve Position Sensor
Exhaust Gas Recirculation Control Solenoid Valve	EGR Control Solenoid Valve	Exhaust Gas Recirculation Valve Vacuum Control Solenoid Valve	EGR Valve Vacuum Control Solenoid Valve
Exhaust Gas Recirculation Vacuum Control Valve	EGR Vacuum Control Valve	Exhaust Gas Recirculation Valve Vacuum Control Solenoid Valve	EGR Valve Vacuum Control Solenoid Valve
Radiator Fan Control Module		Fan Control Module	
Fuel Tank Evaporative Emission Valve		Fuel Tank Vapor/Liquid Separation Valve	
ORVR Vent Shut Valve		Fuel Tank Vapor Control Valve	
ORVR Vapor Recirculation Tube		Fuel Tank Vapor Recirculation Tube	
First Idle Themo Valve		Idle Air Control Thermal Valve	IAC Thermal Valve
Fuel Injector		Injector	
Fuel Injection Air Control Valve	FIA Control Valve	Intake Air Bypass Control Valve	
Fuel Injection Air Control Solenoid Valve	FIA Control Solenoid Valve	Intake Air Bypass Control Themal Valve	
Intake Air Bypass Check Valve	IAB Check Valve	Intake Manifold Runner Control Vacuum Check Valve	IMRC Vacuum Check Valve
		Intake Manifold Runner Control Actuator	IMRC Actuator
		Intake Manifold Runner Control Actuator Wire	IMRC Actuator Wire
Intake Air Bypass Control Diaphragm	IAB Control Diaphragm	Intake Manifold Runner Control Actuator Diaghragm	IMRC Diaphragm
		Intake Manifold Runner Control Module	IMRC Module

BACK

00 and Earlier Models		'01 Model or later	
Meaning	**HONDA Abbreviations**	**Meaning**	**New Abbreviations SAE recommendation**
Intake Air Bypass Control Solenoid Valve	IAB Control Solenoid Valve	Intake Manifold Runner Control Solenoid Valve	IMRC Solenoid Valve
Intake Air Bypass Vacuum Tank	IAB Vacuum Tank	Intake Manifold Runner Control Vacuum	IMRC Vacuum Reservoir
Intake Air Bypass Valve Body Assembly	IAB Valve Body Assembly	Intake Manifold Runner Control Valve	IMRC Valve
Breather Chamber		Oil/Air Separator	
Fuel Pressure Regulator Control Solenoid Valve		Pressure Regulator Vacuum Control Solenoid Valve	
Air Control Valve Check Valve		Secondary Air Injection Control Vacuum Check Valve	Air Control Vacuum Check Valve
Air Control Valve Vacuum Tank		Secondary Air Injection Control Vacuum Reservoir	Air Control Vacuum Reservoir
Air Control Solenoid Valve		Secondary Air Injection Control Vacuum Control Solenoid Valve	Air Control Valve Vacuum Control Solenoid Valve
Air Pump		Secondary Air Injection Pump	Air Pump
Air Control Valve		Secondary Air Injection Pump Control Valve	Air Control Valve
Air Pump Electric Current Sensor		Secondary Air Injection Pump Electric Current Sensor	Air Pump Electric Current Sensor
Shift/Clutch Pressure Control Solenoid Valve Set		Shift Solenoid and Automatic Transaxle Clutch Pressure Control Solenoid Valve Set	SS and A/T Clutch Pressure Control Solenoid Valve Set
Shift Control Solenoid Valve Set		Shift Solenoid and Torque Converter Clutch Solenoid Valve Set	SS and TCC Solenoid Valve Set
Shift/Lock-up Clutch Control Solenoid Valve Assy		Shift Solenoid and Torque Converter Clutch Solenoid Valve	SS and TCC Solenoid Valve
Shift Control Solenoid Valve A		Shift Solenoid Valve A	SS Valve A
Shift Control Solenoid Valve B		Shift Solenoid Valve B	SS Valve B
Throttle Valve Control Module		Throttle Actuator	
Lock-up Clutch Control Solenoid Valve Set		Torque Converter Clutch Solenoid and Automatic Transaxle Clutch Pressure Control Solenoid Valve Set	TCC solenoid and A/T Clutch Pressure Control Solenoid Valve Set
Lock-up Clutch Control Solenoid Valve		Torque Converter Clutch Solenoid Valve	TCC solenoid Valve
Automatic Transaxle Position Switch	A/T Gear Position Switch	Transmission Range Switch	TR Switch
Variable Valve Timing and Valve Lift Electronic Control Pressure Switch	VTEC Pressure Switch	Variable Valve Timing and Valve lift Electronic Control Pressure Switch	VTEC Oil Pressure Switch

BACK

BACK

Specifications

Standards and Service Limits

Engine Electrical 2-2
Engine Assembly 2-2
Cylinder Head 2-3
Engine Block 2-4
Engine Lubrication 2-5
Cooling 2-6
Fuel and Emissions 2-6
Clutch 2-6
Manual Transmission and Differential 2-7
Automatic Transmission and Differential 2-10
Steering 2-16
Suspension 2-16
Brakes 2-17
Air Conditioning 2-17

Design Specifications

Dimensions 2-18
Weight (U.S.A.) 2-18
Weight (CANADA) 2-18
Engine 2-18
Starter 2-18
Clutch 2-18
Manual Transmission 2-19
Automatic Transmission 2-19
Steering 2-19
Suspension 2-19
Wheel Alignment 2-19
Brakes 2-19
Tires 2-19
Air Conditioning 2-19
Electrical Ratings 2-20

Body Specifications

Illustration 2-21

Standards and Service Limits

Engine Electrical

Item	Measurement	Qualification	Standard or New	Service Limit
Ignition coil	Rated voltage		12 V	
	Primary winding resistance	at 68°F (20°C)	F23A1 and F23A4 engines: 0.45–0.55 Ω F23A5 engine: 0.63–0.77 Ω	
	Secondary winding resistance	at 68°F (20°C)	F23A1 and F23A4 engines: 16.8–25.2 kΩ F23A5 engine: 12.8–19.2 kΩ	
	Firing order		1–3–4–2	
Ignition wire	Resistance	at 68°F (20°C)	25 kΩ max.	
Spark plug	Type	'98-99 models	NGK: ZFR5F-11 DENSO: KJ16CR-L11	
		'00-01 models	NGK: PZFR5F-11 DENSO: PKJ16CR-L11	
	Gap	'98-99 models	1.0–1.1 mm (0.039–0.043 in.)	
		'00-01 models	1.0–1.1 mm (0.039–0.043 in.)	1.3 mm (0.051 in.)
Ignition timing		At idle (check the *red* mark)	M/T (in neutral): 12±2° BTDC at 700±50 rpm	
			A/T (in N or P): 12±2° BTDC at 700±50 rpm	
Alternator belt NOTE: Adjust a *new* belt to the new belt spec., run the engine for 5 minutes, then readjust it to the *used* belt spec.	Deflection with 98 N (10 kgf, 22 lbs) applied mid-way between pulleys	Without A/C (with A/C, see "Compressor belt" in the A/C table)	Used belt: 10.5–12.5 mm (0.41–0.49 in.)	
			New belt: 8.0–10.0 mm (0.31–0.39 in.)	
	Tension (measured with belt tension gauge)	Without A/C (with A/C, see "Compressor belt" in the A/C table)	Used belt: 290–440 N (30–45 kgf, 66–99 lbs)	
			New belt: 540–740 N (55–75 kgf, 120–170 lbs)	
Alternator	Output	At 13.5 V and normal engine temperature	F23A1 engine: 80 A	
			F23A4 engine: 90 A	
			F23A5 engine: 80 A	
	Coil (rotor) resistance	at 68°F (20°C)	2.8–3.0 kΩ	
	Slip ring O.D.		14.4 mm (0.57 in.)	14.0 mm (0.55 in.)
	Brush length		10.5 mm (0.41 in.)	1.5 mm (0.06 in.)
	Brush spring tension		2.9–3.5 N (0.66–0.79 lbs)	
Starter for M/T (DENSO)	Output		1.2 kW	
	Commutator mica depth		0.5–0.8 mm (0.020–0.031 in.)	0.2 mm (0.008 in.)
	Commutator runout		0.02 mm (0.001 in.) max.	0.05 mm (0.002 in.)
	Commutator O.D.		29.9–30.0 mm (1.177–1.181 in.)	29.0 mm (1.142 in.)
	Brush length		15.0–15.5 mm (0.59–0.61 in.)	10.0 mm (0.39 in)
	Brush spring tension (new)		14–20 N (1.4–2.0 kgf, 4.0–5.3 lbs)	
Starter for A/T (MITSUBA)	Output		1.4 kW	
	Commutator mica depth		0.4–0.6 mm (0.016–0.020 in.)	0.2 mm (0.008 in.)
	Commutator runout		0.02 mm (0.001 in.) max.	0.05 mm (0.002 in.)
	Commutator O.D.		28.0–28.1 mm (1.102–1.106 in.)	27.5 mm (1.083 in.)
	Brush length		15.8–16.2 mm (0.62–0.64 in.)	11.0 mm (0.43 in.)
	Brush spring tension (new)		16–18 N (1.6–1.8 kgf, 3.5–4.0 lbs)	

Engine Assembly

Item	Measurement	Qualification	Standard or New	Service Limit
Compression	Pressure check at 200 rpm with wide open throttle. (See Design Specs for ratio.)	Minimum	930 kPa (9.5 kgf/cm², 135 psi)	———
		Maximum variation	200 kPa (2.0 kgf/cm², 28 psi)	———

BACK

Cylinder Head

Item	Measurement	Qualification	Standard or New	Service Limit
Head	Warpage		—	0.05 mm (0.002 in.)
	Height		99.95 – 100.05 mm (3.935 – 3.939 in.)	—
Camshaft	End play		0.05 – 0.15 mm (0.002 – 0.006 in.)	0.5 mm (0.02 in.)
	Camshaft-to-holder oil clearance		0.050 – 0.089 mm (0.0020 – 0.0035 in.)	0.15 mm (0.006 in.)
	Total runout		0.03 mm (0.001 in.) max.	0.04 mm (0.002 in.)
	Cam lobe height	VTEC intake, primary	37.775 mm (1.4872 in.)	—
		VTEC intake, mid	39.725 mm (1.5640 in.)	—
		VTEC intake, secondary	34.481 mm (1.3575 in.)	—
		VTEC exhaust	38.366 mm (1.5105 in.)	—
		Intake	38.339 mm (1.5094 in.)	—
		Exhaust	37.716 mm (1.4849 in.)	—
Valves	Clearance (cold)	Intake	0.24 – 0.28 mm (0.009 – 0.011 in.)	—
		Exhaust	0.28 – 0.32 mm (0.011 – 0.013 in.)	—
	Stem O.D.	Intake	5.485 – 5.495 mm (0.2159 – 0.2163 in.)	5.455 mm (0.2148 in.)
		Exhaust	5.450 – 5.460 mm (0.2146 – 0.2150 in.)	5.420 mm (0.2134 in.)
	Stem-to-guide clearance	Intake	0.020 – 0.045 mm (0.0008 – 0.0018 in.)	0.08 mm (0.003 in.)
		Exhaust	0.055 – 0.080 mm (0.0022 – 0.0031 in.)	0.12 mm (0.005 in.)
Valve seats	Width	Intake	1.25 – 1.55 mm (0.049 – 0.061 in.)	2.00 mm (0.079 in.)
		Exhaust	1.25 – 1.55 mm (0.049 – 0.061 in.)	2.00 mm (0.079 in.)
	Stem installed height	Intake	46.75 – 47.55 mm (1.841 – 1.872 in.)	47.80 mm (1.882 in.)
		Exhaust	46.68 – 47.48 mm (1.838 – 1.869 in.)	47.73 mm (1.879 in.)
Valve springs	Free length	VTEC intake	51.08 mm (2.011 in.)	—
		VTEC exhaust	55.58 mm (2.188 in.)	—
		Intake	53.66 mm (2.113 in.)	—
		Exhaust	55.58 mm (2.188 in.)	—
Valve guides	I.D.	Intake	5.515 – 5.530 mm (0.2171 – 0.2177 in.)	5.55 mm (0.219 in.)
		Exhaust	5.515 – 5.530 mm (0.2171 – 0.2177 in.)	5.55 mm (0.219 in.)
	Installed height	Intake	21.20 – 22.20 mm (0.835 – 0.874 in.)	—
		Exhaust	20.63 – 21.63 mm (0.812 – 0.852 in.)	—
Rocker arms	Arm-to-shaft clearance	Intake	0.026 – 0.067 mm (0.0010 – 0.0026 in.)	0.08 mm (0.003 in.)
		Exhaust	0.018 – 0.054 mm (0.0007 – 0.0021 in.)	0.08 mm (0.003 in.)

Standards and Service Limits

Engine Block

Item	Measurement	Qualification	Standard or New	Service Limit
Block	Warpage of deck		0.07 mm (0.003 in.) max.	0.10 mm (0.004 in.)
	Bore diameter	A or I	86.010 – 86.020 mm (3.3862 – 3.3866 in.)	86.070 mm (3.3886 in.)
		B or II	86.000 – 86.010 mm (3.3858 – 3.3862 in.)	86.070 mm (3.3886 in.)
	Bore taper		———	0.05 mm (0.002 in.)
	Reboring limit		———	0.25 mm (0.01 in.)
Piston	Skirt O.D. at 16.0 mm (0.63 in.) from bottom of skirt	No letter	85.980 – 85.990 mm (3.3850 – 3.3854 in.)	85.970 mm (3.3846 in.)
		Letter B	85.970 – 85.980 mm (3.3846 – 3.3850 in.)	85.960 mm (3.3842 in.)
	Clearance in cylinder		0.020 – 0.040 mm (0.0008 – 0.0016 in.)	0.05 mm (0.002 in.)
	Ring groove width	Top	1.220 – 1.230 mm (0.0480 – 0.0484 in.)	1.25 mm (0.049 in.)
		Second	1.220 – 1.230 mm (0.0480 – 0.0484 in.)	1.25 mm (0.049 in)
		Oil	2.805 – 2.825 mm (0.1104 – 0.1112 in)	2.85 mm (0.112 in.)
Piston rings	Ring-to-groove clearance	Top	0.035 – 0.060 mm (0.0014 – 0.024 in.)	0.13 mm (0.005 in.)
		Second	0.030 – 0.055 mm (0.0012 – 0.0022 in.)	0.13 mm (0.005 in.)
	Ring end gap	Top	0.20 – 0.35 mm (0.008 – 0.014 in.)	0.60 mm (0.024 in.)
		Second	0.40 – 0.55 mm (0.016 – 0.022 in.)	0.70 mm (0.028 in.)
		Oil	0.20 – 0.70 mm (0.008 – 0.028 in.)	0.80 mm (0.031 in.)
Piston pin	O.D.		21.962 – 21.965 mm (0.8646 – 0.8648 in.)	21.954 mm (0.8643 in.)
	Pin-to-piston clearance		– 0.0050 – + 0.0010 mm (– 0.00020 – + 0.00004 in.)	0.004 mm (0.0002 in.)
Connecting rod	Pin-to-rod clearance		0.005 – 0.014 mm (0.0002 – 0.0006 in.)	0.019 mm (0.0007 in.)
	Small-end bore diameter		21.970 – 21.976 mm (0.8650 – 0.8652 in.)	———
	Large-end bore diameter	Nominal	48.0 mm (1.89 in.)	———
	End play installed on crankshaft		0.15 – 0.30 mm (0.006 – 0.012 in.)	0.40 mm (0.061 in.)
Crankshaft	Main journal diameter	No. 1 journal No. 2 journal No. 4 journal	54.980 – 55.004 mm (2.1646 – 2.1655 in.)	———
		No. 3 journal	54.976 – 55.000 mm (2.1644 – 2.1654 in.)	———
		No. 5 journal	54.992 – 55.016 mm (2.1650 – 2.1660 in.)	———
	Rod journal diameter		44.976 – 45.000 mm (1.7707 – 1.7717 in.)	———
	Rod/main journal taper		0.005 mm (0.0002 in.) max.	0.006 mm (0.0002 in.)
	Rod/main journal out-of-round		0.005 mm (0.0002 in.) max.	0.006 mm (0.0002 in.)
	End play		0.10 – 0.35 mm (0.004 – 0.014 in.)	0.45 mm (0.018 in.)
	Runout		0.03 mm (0.001 in.) max.	0.04 mm (0.002 in.)
Crankshaft bearings	Main bearing-to-journal oil clearance F23A1 (1000001~, 2000001~, 3000001~, 4000001~), F23A4 (1000001~, 2000001~, 3000001~, 4000001~), F23A5 (1000001~, 2000001~, 3000001~, 4000001~), F23A1 (3400001~, 4400001~), F23A4 (3400001~, 4400001~) engines	No. 1 journal	0.021 – 0.045 mm (0.0008 – 0.0018 in.)	0.050 mm (0.0020 in.)
		No. 2 journal	0.021 – 0.045 mm (0.0008 – 0.0018 in.)	0.050 mm (0.0020 in.)
		No. 3 journal	0.025 – 0.049 mm (0.0010 – 0.0019 in.)	0.055 mm (0.0022 in.)
		No. 4 journal	0.021 – 0.045 mm (0.0008 – 0.0018 in.)	0.050 mm (0.0020 in.)
		No. 5 journal	0.009 – 0.033 mm (0.0004 – 0.0013 in.)	0.040 mm (0.0016 in.)
	Main bearing-to-journal oil clearance F23A1 (3500001~, 4500001), F23A4 (3500001~, 4500001), F23A5 (3500001~, 4500001) engines	No. 1 journal	0.025 – 0.049 mm (0.0010 – 0.0019 in.)	0.055 mm (0.0022 in.)
		No. 2 journal	0.025 – 0.049 mm (0.0010 – 0.0019 in.)	0.055 mm (0.0022 in.)
		No. 3 journal	0.021 – 0.045 mm (0.0008 – 0.0018 in.)	0.050 mm (0.0020 in.)
		No. 4 journal	0.013 – 0.037 mm (0.0005 – 0.0015 in.)	0.045 mm (0.0018 in.)
		No. 5 journal	0.009 – 0.033 mm (0.0004 – 0.0013 in.)	0.040 mm (0.0016 in.)
	Main bearing-to-journal oil clearance F23A1 (2500001~), F23A4 (2500001~) engines	No. 1 journal	0.013 – 0.037 mm (0.0005 – 0.0015 in.)	0.045 mm (0.0018 in.)
		No. 2 journal	0.021 – 0.045 mm (0.0008 – 0.0018 in.)	0.050 mm (0.0020 in.)
		No. 3 journal	0.025 – 0.049 mm (0.0010 – 0.0019 in.)	0.055 mm (0.0022 in.)
		No. 4 journal	0.013 – 0.037 mm (0.0005 – 0.0015 in.)	0.045 mm (0.0018 in.)
		No. 5 journal	0.009 – 0.033 mm (0.0004 – 0.0013 in.)	0.040 mm (0.0016 in.)
	Rod bearing clearance		0.021 – 0.049 mm (0.0008 – 0.0019 in.)	0.060 mm (0.0024 in.)

BACK

Item	Measurement	Qualification	Standard or New	Service Limit
Balancer shafts	Journal diameter	No. 1 journal, front shaft	42.722 – 42.734 mm (1.6820 – 1.6824 in.)	42.71 mm (1.681 in.)
		No. 1 journal, rear shaft	20.938 – 20.950 mm (0.8243 – 0.8248 in.)	20.92 mm (0.824 in.)
		No. 2 journal, front and rear shafts	38.712 – 38.724 mm (1.5241 – 1.5246 in.)	38.70 mm (1.524 in.)
		No. 3 journal, front and rear shafts	34.722 – 34.734 mm (1.3670 – 1.3675 in.)	34.71 mm (1.367 in.)
	Journal taper		0.005 mm (0.0002 in.)	———
	End play	Front shaft	0.10 – 0.40 mm (0.004 – 0.016 in.)	———
		Rear shaft	0.04 – 0.15 mm (0.002 – 0.006 in.)	———
	Total runout		0.02 mm (0.001 in.)	0.03 mm (0.001 in.)
	Shaft-to-bearing oil clearance	No. 1 journal, front shaft No. 3 journal, front and rear shafts	0.066 – 0.098 mm (0.0026 – 0.0039 in.)	0.12 mm (0.005 in.)
		No. 1 journal, rear shaft	0.050 – 0.075 mm (0.0020 – 0.0030 in.)	0.09 mm (0.004 in.)
		No. 2 journal, front and rear shafts	0.076 – 0.108 mm (0.0030 – 0.0043 in.)	0.13 mm (0.005 in.)
Balancer shaft bearings	I.D.	No. 1 journal, front shaft	42.800 – 42.820 mm (1.6850 – 1.6858 in.)	42.83 mm (1.686 in.)
		No. 1 journal, rear shaft	21.000 – 21.013 mm (0.8268 – 0.8273 in.)	21.02 mm (0.828 in.)
		No. 2 journal, front and rear shafts	38.800 – 38.820 mm (1.5276 – 1.5283 in.)	38.83 mm (1.529 in.)
		No. 3 journal, front and rear shafts	34.800 – 34.820 mm (1.3701 – 1.3709 in.)	34.83 mm (1.371 in.)

Engine Lubrication

Item	Measurement	Qualification	Standard or New	Service Limit
Engine oil	Capacity		5.6 ℓ (5.9 US qt, 4.9 Imp qt) for engine overhaul 4.3 ℓ (4.5 US qt, 3.8 Imp qt) for oil change, including filter 4.0 ℓ (4.2 US qt, 3.5 Imp qt) for oil change, without filter	
Oil pump	Inner-to-outer rotor clearance		0.02 – 0.16 mm (0.001 – 0.006 in.)	0.20 mm (0.008 in.)
	Pump housing-to-outer rotor clearance		0.10 – 0.19 mm (0.004 – 0.007 in.)	0.21 mm (0.008 in.)
	Pump housing-to-outer rotor axial clearance		0.02 – 0.07 mm (0.001 – 0.003 in.)	0.12 mm (0.005 in.)
Relief valve	Oil pressure with oil temperature at 176°F (80°C)	at idle	70 kPa (0.7 kgf/cm², 10 psi) min.	
		at 3,000 rpm	340 kPa (3.5 kgf/cm², 50 psi) min.	

Standards and Service Limits

Cooling

Item	Measurement	Qualification	Standard or New	Service Limit
Radiator	Coolant capacity (Includes engine, heater, hoses, and reservoir)	M/T: engine overhaul	7.0 ℓ (7.4 US qt, 6.2 Imp qt)	
		M/T: coolant change	5.5 ℓ (5.8 US qt, 4.8 Imp qt)	
		A/T: engine overhaul	6.9 ℓ (7.3 US qt, 6.1 Imp qt)	
		A/T: coolant change	5.4 ℓ (5.7 US qt, 4.8 Imp qt)	
Reservoir	Coolant capacity		0.6 ℓ (0.6 US qt, 0.5 Imp qt)	
Radiator cap	Opening pressure		93 – 123 kPa (0.95 – 1.25 kgf/cm², 14 – 18 psi)	
Thermostat	Opening temperature	Begins to open	169 – 176°F (76 – 80°C)	
		Fully open	194°F (90°C)	
	Valve lift at fully open		8.0 mm (0.31 in.) min.	
Radiator fan switch A	Thermoswitch "ON" temperature		196 – 203°F (91 – 95°C)	
	Thermoswitch "OFF" temperature		Subtract 5 – 15°F (3 – 8°C) from actual "ON" temperature	

Fuel and Emissions

Item	Measurement	Qualification	Standard or New	Service Limit
Fuel pressure regulator	Pressure with regulator vacuum hose disconnected		320 – 370 kPa (3.3 – 3.8 kgf/cm², 47 – 54 psi)	
Fuel tank	Capacity		64.8 ℓ (17.1 US gal, 14.3 Imp gal)	
Engine idle	Idle speed with headlights and radiator fan off	M/T in neutral	700 ± 50 rpm	
		A/T in N or P	700 ± 50 rpm	
	Fast idle	M/T in neutral	1,400 ± 50 rpm	
		A/T in N or P	1,400 ± 50 rpm	
	Idle CO %		0.1 max.	

Clutch

Item	Measurement	Qualification	Standard or New	Service Limit
Clutch pedal	Height	from the floor	190 mm (7.5 in.)	——
	Stroke		141 – 151 mm (5.6 – 5.9 in.)	——
	Play		9 – 15 mm (0.4 – 0.6 in.)	——
	Disengagement height	from the floor	96 mm (3.8 in.) min.	——
Flywheel	Runout on clutch mating surface		0.05 mm (0.002 in.) max.	0.15 mm (0.006 in.)
Clutch disc	Rivet head depth		1.650 – 1.225 mm (0.065 – 0.089 in.)	0.8 mm (0.03 in.)
	Rivet head thickness		8.5 – 9.1 mm (0.33 – 0.36 in.)	6.0 mm (0.24 in.)
Pressure plate	Warpage		0.03 mm (0.001 in.) max.	0.15 mm (0.006 in.)
	Height of diaphragm spring fingers	Measure with feeler gauge and special tool	0.6 mm (0.02 in.) max.	0.8 mm (0.03 in.)

BACK

Manual Transmission and Differential

Item	Measurement	Qualification	Standard or New	Service Limit
Transmission oil	Capacity	Use Honda MTF	For fluid change: 1.9 ℓ (2.0 US qt, 1.7 Imp qt) For overhaul: 2.0 ℓ (2.1 US qt, 1.8 Imp qt)	
Mainshaft	End play		0.10–0.16 mm (0.004–0.006 in.)	Adjust
	Diameter of ball bearing contact area		27.977–27.990 mm (1.1015–1.1020 in.)	27.940 mm (1.1000 in.)
	Diameter of needle bearing contact area		37.984–38.000 mm (1.4954–1.4961 in.)	37.930 mm (1.4933 in.)
	Diameter of ball bearing contact area		27.987–28.000 mm (1.1018–1.1024 in.)	27.940 mm (1.1000 in.)
	Runout		0.02 mm (0.001 in.) max.	0.05 mm (0.002 in.)
Mainshaft 3rd and 4th gears	I.D.		43.009–43.025 mm (1.6933–1.6939 in.)	43.080 mm (1.6961 in.)
	End play		0.06–0.21 mm (0.002–0.008 in.)	0.30 mm (0.012 in.)
	Thickness	3rd gear	32.42–32.47 mm (1.276–1.278 in.)	32.3 mm (1.27 in.)
		4th gear	30.92–30.97 mm (1.217–1.219 in.)	30.8 mm (1.21 in.)
Mainshaft 5th gear	I.D.		43.009–43.025 mm (1.6933–1.6939 in.)	43.080 mm (1.6961 in.)
	End play		0.06–0.21 mm (0.002–0.008 in.)	0.30 mm (0.012 in.)
	Thickness		30.92–30.97 mm (1.217–1.219 in.)	30.8 mm (1.21 in.)
Countershaft	Diameter of needle bearing contact area		38.000–38.015 mm (1.4961–1.4967 in.)	37.950 mm (1.4941 in.)
	Diameter of ball bearing and needle bearing contact area		24.987–25.000 mm (0.9837–0.9843 in.)	24.940 mm (0.9819 in.)
	Diameter of 1st gear contact area		39.984–40.000 mm (1.5742–1.5748 in.)	39.930 mm (1.5720 in.)
	Runout		0.02 mm (0.001 in.) max.	0.05 mm (0.002 in.)
Countershaft 1st gear	I.D.		46.009–46.025 mm (1.8114–1.8120 in.)	46.08 mm (1.814 in.)
	End play		0.06–0.23 mm (0.002–0.009 in.)	0.23 mm (0.009 in.)
	Thickness		32.95–33.00 mm (1.297–1.299 in.)	———
Countershaft 2nd gear	I.D.		47.009–47.025 mm (1.8507–1.8514 in.)	47.08 mm (1.854 in.)
	End play		0.10–0.15 mm (0.004–0.006 in.)	0.18 mm (0.007 in.)
	Thickness		28.92–28.97 mm (1.139–1.141 in.)	———
Countershaft 2nd gear spacer collar	I.D.		36.48–36.49 mm (1.4362–1.4366 in.)	36.50 mm (1.437 in.)
	O.D.		41.989–42.000 mm (1.6531–1.6535 in.)	41.94 mm (1.651 in.)
	Length		29.07–29.09 mm (1.1445–1.1453 in.)	———

(cont'd)

Standards and Service Limits

Manual Transmission and Differential (cont'd)

Item	Measurement	Qualification	Standard or New	Service Limit
Mainshaft 4th and 5th gears spacer collar	I.D.		31.002 – 31.012 mm (1.2205 – 1.2209 in.)	31.06 mm (1.223 in.)
	O.D.		37.989 – 38.000 mm (1.4956 – 1.4961 in.)	37.94 mm (1.494 in.)
	Length	A	56.45 – 56.55 mm (2.222 – 2.226 in.)	———
		B	26.03 – 26.08 mm (1.025 – 1.027 in.)	26.01 mm (1.024 in.)
Reverse idler gear	I.D.		20.016 – 20.043 mm (0.7880 – 0.7891 in.)	20.09 mm (0.7909 in.)
	Gear-to-reverse gear shaft clearance		0.036 – 0.084 mm (0.0014 – 0.0033 in.)	0.160 mm (0.0063 in.)
Synchro ring	Ring-to-gear clearance (ring pushed against gear)		0.85 – 1.10 mm (0.033 – 0.043 in.)	0.40 mm (0.016 in.)
Dual cone synchro	Outer synchro ring-to-synchro cone clearance	Ring pushed against gear	0.5 – 1.0 mm (0.02 – 0.04 in.)	0.3 mm (0.01 in.)
	Synchro cone-to-gear clearance	Ring pushed against gear	0.5 – 1.0 mm (0.02 – 0.04 in.)	0.3 mm (0.01 in.)
	Outer synchro ring-to-gear clearance	Ring pushed against gear	0.95 – 1.68 mm (0.037 – 0.066 in.)	0.6 mm (0.02 in.)
Shift fork	Finger thickness		6.2 – 6.4 mm (0.24 – 0.25 in.)	———
	Fork-to-synchro sleeve clearance		0.35 – 0.65 mm (0.014 – 0.026 in.)	1.0 mm (0.039 in.)
Reverse shift fork	Pawl groove width		13.0 – 13.3 mm (0.51 – 0.52 in.)	———
	Fork-to-reverse idler gear clearance		0.5 – 1.1 mm (0.02 – 0.04 in.)	1.8 mm (0.07 in.)
	Groove width	at A	7.05 – 7.25 mm (0.278 – 0.285 in.)	———
		at B	7.4 – 7.7 mm (0.29 – 0.30 in.)	———
	Fork-to-5th/reverse shift shaft clearance	at A	0.05 – 0.35 mm (0.002 – 0.014 in.)	0.5 mm (0.02 in.)
		at B	0.4 – 0.8 mm (0.02 – 0.03 in.)	1.0 mm (0.04 in.)
Shift arm	I.D.		15.973 – 16.000 mm (0.6289 – 0.6299 in.)	———
	Shift arm-to-shaft clearance		0.005 – 0.059 mm (0.0002 – 0.0023 in.)	———
	Shift fork diameter at contact area		12.9 – 13.0 mm (0.508 – 0.512 in.)	———
	Shift arm-to-shift fork shaft clearance		0.2 – 0.5 mm (0.008 – 0.020 in.)	0.6 mm (0.024 in.)

BACK

Item	Measurement	Qualification	Standard or New	Service Limit
Select lever	Shaft outer diameter		15.941 – 15.968 mm (0.6276 – 0.6287 in.)	———
	Shaft arm cover clearance		0.032 – 0.102 mm (0.0013 – 0.0040 in.)	———
Shift lever	O. D.		15.941 – 15.968 mm (0.6276 – 0.6287 in.)	———
	Transmission housing clearance		0.012 – 0.122 mm (0.0005 – 0.0048 in.)	———
Interlock	Bore diameter		16.00 – 16.05 mm (0.630 – 0.632 in.)	———
	Shift arm clearance		0.032 – 0.109 mm (0.0013 – 0.0043 in.)	———
M/T differential carrier	Pinion shaft contact area I.D.		18.000 – 18.018 mm (0.7087 – 0.7094 in.)	———
	Carrier-to-pinion shaft clearance		0.017 – 0.047 mm (0.0007 – 0.0019 in.)	0.1 mm (0.004 in.)
	Driveshaft and intermediate shaft contact area I.D.		28.005 – 28.025 mm (1.1026 – 1.1033 in.)	———
	Carrier-to-driveshaft clearance		0.025 – 0.066 mm (0.0010 – 0.0026 in.)	0.12 mm (0.005 in.)
	Carrier-to-intermediate shaft clearance		0.055 – 0.091 mm (0.0022 – 0.0036 in.)	0.15 mm (0.006 in.)
	Tapered roller bearing starting torque (preload)		1.4 – 2.5 N·m (14 – 26 kgf·cm, 12 – 23 lbf·in)	Adjust
M/T differential pinion gear	Backlash		0.05 – 0.15 mm (0.002 – 0.006 in.)	———
	I.D.		18.042 – 18.066 mm (0.7103 – 0.7113 in.)	———
	Pinion gear-to-pinion shaft clearance		0.055 – 0.095 mm (0.0022 – 0.0037 in.)	0.15 mm (0.006 in.)

Standards and Service Limits

Automatic Transmission and Differential

Item	Measurement	Qualification	Standard or New	Service Limit
ATF (Automatic Transmission Fluid)	Capacity	Honda ATF-Z1	For fluid change: 2.5 ℓ (2.6 US qt, 2.2 Imp qt) For overhaul: 6.1 ℓ (6.4 US qt, 5.4 Imp qt)	
ATF pressure	Line pressure	At 2,000 rpm in N or P position	850 – 910 kPa (8.7 – 9.3 kgf/cm², 120 – 130 psi)	800 kPa (8.2 kgf/cm², 120 psi)
	4th clutch pressure	At 2,000 rpm in D4 position	840 – 920 kPa (8.6 – 9.4 kgf/cm², 120 – 130 psi)	790 kPa (8.1 kgf/cm², 120 psi)
	3rd clutch pressure	At 2,000 rpm in D4 position	840 – 920 kPa (8.6 – 9.4 kgf/cm², 120 – 130 psi)	790 kPa (8.1 kgf/cm², 120 psi)
	2nd clutch pressure	At 2,000 rpm in 2 position	840 – 920 kPa (8.6 – 9.4 kgf/cm², 120 – 130 psi)	790 kPa (8.1 kgf/cm², 120 psi)
	1st clutch pressure	At 2,000 rpm in 1 position	840 – 920 kPa (8.6 – 9.4 kgf/cm², 120 – 130 psi)	790 kPa (8.1 kgf/cm², 120 psi)
Stall speed	Check with vehicle on level ground	F23A1/F23A4 engines		2,400 – 2,700 rpm
		F23A5 engine		2,350 – 2,650 rpm
Clutches	Clutch end plate-to-top disc clearance	1st		1.15 – 1.35 mm (0.045 – 0.053 in.)
		2nd		0.7 – 0.9 mm (0.028 – 0.035 in.)
		3rd		0.6 – 0.8 mm (0.024 – 0.031 in.)
		4th		0.4 – 0.6 mm (0.016 – 0.024 in.)
	Clutch return spring free length	1st, 2nd	45.7 mm (1.80 in.)	43.7 mm (1.72 in.)
		3rd, 4th	33.5 mm (1.32 in.)	31.5 mm (1.24 in.)
	Clutch disc thickness		1.94 mm (0.076 in.)	———
	Clutch plate thickness	1st	2.0 mm (0.079 in.)	When discolored
		2nd	2.3 mm (0.091 in.)	When discolored
		3rd	2.6 mm (0.102 in.)	When discolored
		4th	2.3 mm (0.091 in.)	When discolored
	1st and 2nd clutch end plate thickness	Mark 1	3.10 mm (0.122 in.)	When discolored
		Mark 2	3.20 mm (0.126 in.)	When discolored
		Mark 3	3.30 mm (0.130 in.)	When discolored
		Mark 4	3.40 mm (0.134 in.)	When discolored
		Mark 6	2.60 mm (0.102 in.)	When discolored
		Mark 7	2.70 mm (0.106 in.)	When discolored
		Mark 8	2.80 mm (0.110 in.)	When discolored
		Mark 9	2.90 mm (0.114 in.)	When discolored
		Mark 0	3.00 mm (0.118 in.)	When discolored
	3rd and 4th clutch end plate thickness	Mark 1	2.10 mm (0.083 in.)	When discolored
		Mark 2	2.20 mm (0.087 in.)	When discolored
		Mark 3	2.30 mm (0.091 in.)	When discolored
		Mark 4	2.40 mm (0.094 in.)	When discolored
		Mark 5	2.50 mm (0.098 in.)	When discolored
		Mark 6	2.60 mm (0.102 in.)	When discolored
		Mark 7	2.70 mm (0.106 in.)	When discolored
		Mark 8	2.80 mm (0.110 in.)	When discolored
		Mark 9	2.90 mm (0.114 in.)	When discolored

BACK

Item	Measurement	Qualification	Standard or New	Service Limit
Valve body	Stator shaft needle bearing contact I.D.	Torque converter side	27.000–27.021 mm (1.0630–1.0638 in.)	When worn or damaged
		ATF pump side	29.000–29.021 mm (1.1417–1.1426 in.)	When worn or damaged
	ATF pump gear thrust clearance		0.03–0.05 mm (0.001–0.002 in.)	0.07 mm (0.003 in.)
	ATF pump gear-to-body clearance	Drive gear	0.210–0.265 mm (0.0083–0.0104 in.)	———
		Driven gear	0.070–0.125 mm (0.0028–0.0049 in.)	———
	ATF pump driven gear I.D.		14.016–14.034 mm (0.5518–0.5525 in.)	When worn or damaged
	ATF pump driven gear shaft O.D.		13.980–13.99 mm (0.5504–0.5508 in.)	When worn or damaged
Reverse shift fork	Fork finger thickness		5.60–6.00 mm (0.220–0.236 in.)	5.40 mm (0.213 in.)
Park gear and pawl				When worn or damaged
Servo body	Shift fork shaft bore I.D.		14.000–14.010 mm (0.5512–0.5516 in.)	———
	Shift fork shaft valve bore I.D.		37.000–37.039 mm (1.4567–1.4582 in.)	37.045 mm (1.4585 in.)
Regulator valve body	Sealing ring contact I.D.		32.000–32.013 mm (1.2598–1.2604 in.)	32.050 mm (1.2618 in.)
Accumulator body	Sealing ring contact I.D.		35.000–35.025 mm (1.3780–1.3789 in.)	35.05 mm (1.3799 in.)
Stator shaft	Sealing ring contact I.D.		29.000–29.021 mm (1.1417–1.1426 in.)	29.050 mm (1.1437 in.)
Mainshaft	Diameter of needle bearing contact area	at stator shaft	22.984–23.000 mm (0.9049–0.9055 in.)	When worn or damaged
		at 3rd gear	55.975–55.991 mm (2.2037–2.2044 in.)	When worn or damaged
		at 4th gear collar	33.975–33.991 mm (1.3376–1.3382 in.)	When worn damaged
	I.D. of 3rd gear		61.000–61.019 mm (2.4016–2.4023 in.)	When worn or damaged
	I.D. of 4th gear		40.000–40.016 mm (1.5748–1.5754 in.)	When worn or damaged
	End play of 3rd gear		0.03–0.31 mm (0.001–0.012 in.)	———
	End play of 4th gear		0.10–0.22 mm (0.004–0.009 in.)	———
	41 x 72 mm thrust shim thickness	No. 1	6.35 mm (0.2500 in.)	When worn or damaged
		No. 2	6.40 mm (0.2520 in.)	When worn or damaged
		No. 3	6.45 mm (0.2539 in.)	When worn or damaged
		No. 4	6.50 mm (0.2559 in.)	When worn or damaged
		No. 5	6.55 mm (0.2579 in.)	When worn or damaged
		No. 6	6.60 mm (0.2598 in.)	When worn or damaged
	Thrust washer thickness	27 x 47 x 5 mm	5.00 mm (0.197 in.)	When worn or damaged
	Length of 4th gear collar		49.40–49.50 mm (1.9449–1.9448 in.)	———
	4th gear collar flange thickness		4.35–4.50 mm (0.171–0.177 in.)	When worn or damaged
	Sealing ring thickness	32 mm sealing ring	1.85–1.95 mm (0.073–0.077 in.)	1.800 mm (0.071 in.)
		29 mm sealing ring	1.85–1.95 mm (0.073–0.077 in.)	1.800 mm (0.071 in.)
	Width of sealing ring groove		2.025–2.060 mm (0.080–0.081 in.)	2.080 mm (0.082 in.)
	Clutch feed pipe O.D.	3rd clutch	5.97–5.98 mm (0.2350–0.2354 in.)	5.95 mm (0.2343 in.)
		4th clutch	11.47–11.48 mm (0.4516–0.4520 in.)	11.45 mm (0.4508 in.)
	Clutch feed pipe bushing I.D.	3rd clutch	6.018–6.030 mm (0.2369–0.2374 in.)	6.045 mm (0.2380 in.)
		4th clutch	11.500–11.518 mm (0.4528–0.4535 in.)	11.530 mm (0.4539 in.)

(cont'd)

Standards and Service Limits

Automatic Transmission and Differential (cont'd)

Item	Measurement	Qualification	Standard or New	Service Limit
Countershaft	Diameter of needle bearing contact area	at 4th gear	33.975–33.991 mm (1.3376–1.3382 in.)	When worn or damaged
		at 2nd gear	39.979–40.000 mm (1.5740–1.5748 in.)	When worn or damaged
		at park gear	41.964–41.980 mm (1.6521–1.6528 in.)	When worn or damaged
		at left end	36.005–36.015 mm (1.4175–1.4179 in.)	When worn or damaged
	I.D. of 4th gear		40.000–40.016 mm (1.5748–1.5754 in.)	When worn or damaged
	I.D. of idler gear		50.000–50.016 mm (1.9685–1.9691 in.)	When worn or damaged
	I.D. of reverse gear		46.000–46.016 mm (1.8110–1.8116 in.)	When worn or damaged
	End play of 1st gear		0.00–0.33 mm (0.000–0.013 in.)	———
	End play of 4th gear		0.04–0.28 mm (0.002–0.011 in.)	———
	End play of idler gear		0.015–0.045 mm (0.0006–0.0018 in.)	———
	End play of reverse gear		0.10–0.25 mm (0.004–0.010 in.)	———
	Length of distance collar		50.42–50.46 mm (1.985–1.987 in.)	———
	Cotter thickness		1.99–2.02 mm (0.078–0.080 in.)	———
	Reverse selector hub O.D.		55.87–55.90 mm (2.1996–2.2008 in.)	When worn or damaged

BACK

Item	Measurement	Qualification	Standard or New	Service Limit
Secondary shaft	Diameter of needle bearing contact area	at 1st gear	37.978–37.993 mm (1.4952–1.4958 in.)	When worn or damaged
		at 2nd gear	33.986–33.999 mm (1.3380–1.3385 in.)	When worn or damaged
	I.D. of 1st gear		44.000–44.016 mm (1.7323–1.7329 in.)	When worn or damaged
	I.D. of 2nd gear		40.000–40.016 mm (1.5748–1.5754 in.)	When worn or damaged
	End play of 1st gear		0.07–0.15 mm (0.003–0.006 in.)	———
	End play of 2nd gear		0.04–0.12 mm (0.002–0.005 in.)	———
	38 x 56.5 mm splined washer thickness	No. 1	6.85 mm (0.270 in.)	When worn or damaged
		No. 2	6.90 mm (0.272 in.)	When worn or damaged
		No. 3	6.95 mm (0.274 in.)	When worn or damaged
		No. 4	7.00 mm (0.276 in.)	When worn or damaged
		No. 5	7.05 mm (0.278 in.)	When worn or damaged
		No. 6	7.10 mm (0.280 in.)	When worn or damaged
	37 x 55 mm thrust shim thickness	No. 1	4.90 mm (0.193 in.)	When worn or damaged
		No. 2	4.95 mm (0.195 in.)	When worn or damaged
		No. 3	5.00 mm (0.197 in.)	When worn or damaged
		No. 4	5.05 mm (0.199 in.)	When worn or damaged
		No. 5	5.10 mm (0.201 in.)	When worn or damaged
		No. 6	5.15 mm (0.203 in.)	When worn or damaged
		No. 7	5.20 mm (0.205 in.)	When worn or damaged
	Cotter thickness		1.99–2.02 mm (0.078–0.080 in.)	———
	Sealing ring thickness		1.890–1.95 mm (0.074–0.077 in.)	1.800 mm (0.071 in.)
	Width of sealing ring groove		2.025–2.060 mm (0.080–0.081 in.)	2.080 mm (0.082 in.)
	Clutch feed pipe O.D.		7.97–7.98 mm (0.3138–0.3142 in.)	7.95 mm (0.3130 in.)
	Clutch feed pipe bushing I.D.		8.000–8.015 mm (0.3150–0.3156 in.)	8.030 mm (0.3161 in.)
Reverse idler gear	Diameter of needle bearing contact area	at reverse idler gear shaft	14.985–15.000 mm (0.5900–0.5906 in.)	When worn or damaged
	I.D.		20.007–20.020 mm (0.7877–0.7882 in.)	When worn or damaged
	End play		0.20–0.55 mm (0.008–0.022 in.)	———
	I.D. of reverse idler gear shaft holder		14.800–14.824 mm (0.5827–0.5836 in.)	When worn or damaged
	I.D. of transmission housing of reverse idler gear shaft contact area		14.800–14.818 mm (0.5827–0.5834 in.)	———

(cont'd)

Standards and Service Limits

Automatic Transmission and Differential (cont'd)

Item	Measurement	Qualification	Standard or New			
			Wire Diameter	O.D.	Free Length	No. of Coils
Main valve body springs (see page 14-160).	Lock-up control valve spring		0.7 mm (0.028 in.)	6.6 mm (0.260 in.)	42.9 mm (1.689 in.)	14.2
	Lock-up shift valve spring		0.9 mm (0.035 in.)	7.6 mm (0.299 in.)	63.0 mm (2.480 in.)	22.4
	Shift valve E spring		0.7 mm (0.028 in.)	6.6 mm (0.260 in.)	32.2 mm (1.268 in.)	13.4
	Shift valve D spring		0.7 mm (0.028 in.)	6.6 mm (0.260 in.)	35.7 mm (1.406 in.)	17.2
	Shift valve C spring		0.8 mm (0.031 in.)	6.6 mm (0.260 in.)	49.1 mm (1.933 in.)	21.7
	Modulator valve spring		1.6 mm (0.063 in.)	10.4 mm (0.409 in.)	33.5 mm (1.319 in.)	9.8
	Reverse CPC valve spring		0.7 mm (0.028 in.)	6.1 mm (0.240 in.)	17.8 mm (0.701 in.)	7.9
	Servo control valve spring		0.7 mm (0.028 in.)	6.6 mm (0.260 in.)	35.7 mm (1.406 in.)	17.2
	Torque converter check valve spring		1.1 mm (0.043 in.)	8.4 mm (0.331 in.)	38.2 mm (1.504 in.)	14.0
	Cooler check valve spring		0.6 mm (0.024 in.)	5.8 mm (0.228 in.)	14.5 mm (0.571 in.)	6.8
Regulator valve body springs (see page 14-163).	Regulator valve spring B		1.6 mm (0.063 in.)	9.2 mm (0.362 in.)	44.0 mm (1.732 in.)	12.5
	Regulator valve spring A		1.9 mm (0.075 in.)	14.7 mm (0.579 in.)	77.4 mm (3.047 in.)	15.2
	Stator reaction spring		4.5 mm (0.177 in.)	35.4 mm (1.394 in.)	30.3 mm (1.193 in.)	1.92
	Relief valve spring		0.9 mm (0.035 in.)	6.6 mm (0.260 in.)	39.8 mm (1.567 in.)	20.4
	Lock-up timing valve spring		0.65 mm (0.026 in.)	6.6 mm (0.260 in.)	34.8 mm (1.370 in.)	15.6
Servo body springs (see page 14-164).	Shift valve B spring		0.8 mm (0.031 in.)	7.1 mm (0.280 in.)	40.4 mm (1.591 in.)	16.9
	Shift valve A spring		0.8 mm (0.031 in.)	7.1 mm (0.280 in.)	40.4 mm (1.591 in.)	16.9
	CPC valve A spring		0.7 mm (0.028 in.)	6.1 mm (0.240 in.)	17.8 mm (0.701 in.)	7.9
	CPC valve B spring		0.7 mm (0.028 in.)	6.1 mm (0.240 in.)	17.8 mm (0.701 in.)	7.9
	3rd accumulator spring		3.8 mm (0.150 in.)	19.6 mm (0.772 in.)	59.8 mm (2.354 in.)	7.8
	4th accumulator spring		3.8 mm (0.150 in.)	19.6 mm (0.772 in.)	59.8 mm (2.354 in.)	7.8
Accumulator body springs (see page 14-165).	1st accumulator spring B		2.5 mm (0.098 in.)	12.8 mm (0.504 in.)	49.5 mm (1.949 in.)	8.5
	1st accumulator spring A		2.6 mm (0.102 in.)	19.6 mm (0.772 in.)	69.7 mm (2.744 in.)	10.8
	2nd accumulator spring B		2.7 mm (0.106 in.)	14.8 mm (0.583 in.)	51.0 mm (2.008 in.)	9.6
	2nd accumulator spring A		2.6 mm (0.102 in.)	21.6 mm (0.850 in.)	73.2 mm (2.882 in.)	10.0

BACK

Item	Measurement	Qualification	Standard or New	Service Limit
A/T differential carrier	Pinion shaft contact area I.D.		18.010 – 18.028 mm (0.7091 – 0.7098 in.)	———
	Carrier-to-pinion shaft clearance		0.023 – 0.057 mm (0.001 – 0.002 in.)	0.1 mm (0.004 in.)
	Driveshaft shaft contact area I.D.		28.025 – 28.045 mm (1.103 – 1.104 in.)	———
	Carrier-to-driveshaft clearance		0.045 – 0.086 mm (0.002 – 0.003 in.)	0.12 mm (0.005 in.)
	Tapered roller bearing starting torque (preload)	For new bearing	2.7 – 3.9 N·m (28 – 40 kgf·cm, 24 – 35 lbf·in)	Adjust
		For used bearing	2.5 – 3.6 N·m (25 – 37 kgf·cm, 22 – 32 lbf·in)	Adjust
A/T differential pinion gear	Backlash		0.05 – 0.15 mm (0.002 – 0.006 in.)	———
	I.D.		18.042 – 18.066 mm (0.7103 – 0.7113 in.)	———
	Pinion gear-to-pinion shaft clearance		0.055 – 0.095 mm (0.002 – 0.004 in.)	0.12 mm (0.005 in.)

Standards and Service Limits

Steering

Item	Measurement	Qualification	Standard or New	Service Limit
Steering wheel	Rotational play measured at outside edge	With engine running	0 – 10 mm (0 – 0.39 in.)	———
	Starting load measured at outside edge	With engine running	30 N (3.1 kgf, 6.8 lbs)	———
Gearbox	Angle of rack guide screw loosened from locked position		20° Max.	
Pump	Output pressure with shut-off valve closed		7,200 – 7,800 kPa (73 – 80 kgf/cm², 1,040 – 1,140 psi)	
Power steering fluid	Capacity	Use Honda Power Steering Fluid	For fluid change: 0.4 ℓ (0.42 US qt, 0.35 Imp qt)	
			For system overhaul: 1.1 ℓ (1.16 US qt, 0.97 Imp qt)	
Power steering pump belt NOTE: Adjust a *new* belt to the new belt spec, run the engine for 5 minutes, then readjust it to the *used* belt spec.	Deflection with 98 N (10 kgf, 22 lbs) applied mid-way between pulleys		Used belt: 13.0 – 16.0 mm (0.51 – 0.63 in.)	
			New belt: 11.0 – 12.5 mm (0.43 – 0.49 in.)	
	Tension (measured with belt tension gauge)		Used belt: 390 – 540 N (40 – 55 kgf, 88 – 121 lbs)	
			New belt: 740 – 880 N (75 – 90 kgf, 165 – 198 lbs)	

Suspension

Item	Measurement	Qualification	Standard or New	Service Limit
Wheel alignment	Camber	Front	0°00′ ± 1°	
		Rear	– 0°30′ ± 1°	
	Caster	Front	2°48′ ± 1°	
	Total Toe	Front	0 ± 2 mm (0 ± 1/16 in.)	
		Rear	IN 2 ± 2 (1/16 ± 1/16 in.)	
	Front wheel turning angle	Inside wheel	38°32′ ± 2°	
		Outside wheel	31°03′ (Reference)	
Aluminum wheel	Runout	Axial	0 – 0.7 mm (0 – 0.03 in.)	2.0 mm (0.08 in.)
		Radial	0 – 0.7 mm (0 – 0.03 in.)	1.5 mm (0.06 in.)
Steel wheel	Runout	Axial	0 – 1.0 mm (0 – 0.04 in.)	2.0 mm (0.08 in.)
		Radial	0 – 1.0 mm (0 – 0.04 in.)	1.5 mm (0.06 in.)
Wheel bearings	End play	Front	0 – 0.05 mm (0 – 0.002 in.)	
		Rear	0 – 0.05 mm (0 – 0.002 in.)	

BACK

Brakes

Item	Measurement	Qualification	Standard or New	Service Limit
Parking brake lever	Distance travelled when pulled with 196 N (20 kgf, 44 lbs) of force	Disc brake	6–9 clicks	
		Drum brake	4–7 clicks	
Brake pedal	Pedal height (Carpet removed)	M/T	144 mm (5 11/16 in.)	
		A/T	148 mm (5 13/16 in.)	
	Free play		1–5 mm (1/16–3/16 in.)	
Master cylinder	Piston-to-pushrod clearance		0–0.4 mm (0–0.02 in.)	
Brake disc	Thickness	Front	22.9–23.1 mm (0.90–0.91 in.)	21.0 mm (0.83 in.)
		Rear	9.9–10.1 mm (0.39–0.40 in.)	8.0 mm (0.31 in.)
	Runout	Front	———	0.10 mm (0.004 in.)
		Rear	———	0.10 mm (0.004 in.)
	Parallelism	Front and rear	———	0.015 mm (0.0006 in.)
Brake pads	Thickness	Front	10.5–11.5 mm (0.41–0.45 in.)	1.6 mm (0.06 in.)
		Rear	8.9–9.1 mm (0.350–0.358 in.)	1.6 mm (0.06 in.)
Brake drum	I.D.		219.9–220.0 mm (8.657–8.661 in.)	221 mm (8.700 in.)
Brake shoes	Lining thickness		4.5 mm (0.18 in.)	2.0 mm (0.08 in.)

Air Conditioning

Item	Measurement	Qualification	Standard or New
Refrigerant	Type		HFC-134 a (R-134 a)
	Capacity or system		600–650 g (21–23 oz)
Refrigerant oil	Type		DENSO: ND-OIL 8 (P/N 38897-PR7-A01AH or 38899-PR7-A01)
	Capacity of components	Condenser	25 mℓ (5/6 fl oz, 0.9 Imp oz)
		Evaporator	40 mℓ (1 1/3 fl oz, 1.4 Imp oz)
		Each line and hose	10 mℓ (1/3 fl oz, 0.4 Imp oz)
		Receiver	10 mℓ (1/3 fl oz, 0.4 Imp oz)
		Compressor	160 mℓ (5 1/3 fl oz, 5.6 Imp oz)
Compressor (DENSO)	Starter coil resistance	at 68°F (20°C)	3.4–3.8 Ω
	Pulley-to-pressure plate clearance		0.5±0.15 mm (0.02±0.006 in.)
Alternator-compressor belt NOTE: Adjust a *new* belt to the new belt spec., run the engine for 5 minutes, then readjust it to the *used* belt spec.	Deflection with 98 N (10 kgf, 22 lbs) applied mid-way between pulleys		Used belt: 7.0–9.0 mm (0.28–0.35 in.)
			New belt: 4.0–6.0 mm (0.16–0.24 in.)
	Tension (measured with belt tension gauge)		Used belt: 490–590 N (50–60 kgf, 110–130 lbs)
			New belt: 1,030–1,130 N (105–115 kgf, 231–254 lbs)

Design Specifications

Item	Measurement	Qualification	Specification
DIMENSIONS	Overall length	4-door	4,795 mm (188.8 in.)
		2-door	4,745 mm (186.8 in.)
	Overall width		1,785 mm (70.3 in.)
	Overall height	4-door	1,445 mm (56.9 in.)
		2-door	1,395 mm (54.9 in.)
	Wheelbase	4-door	2,715 mm (106.9 in.)
		2-door	2,670 mm (105.1 in.)
	Track	Front	1,555 mm (61.2 in.)
		Rear	1,535 mm (60.4 in.)
	Ground clearance		158 mm (6.2 in.)
	Seating capacity		Five
WEIGHT (U.S.A.)	4-door Sedan: Gross Vehicle Weight Rating (GVWR)	DX (99-00)	3,990 lbs
		DX (01) LX (98-02) EX (98-00)	4,035 lbs
		EX (01-02)	4,080 lbs
	2-door Coupe: Gross Vehicle Weight Rating (GVWR)	LX (98-00)	3,945 lbs
		LX (01-02)	3,990 lbs
		EX (98-02)	4,035 lbs
WEIGHT (CANADA)	4-door sedan: Gross Vehicle Weight Rating (GVWR)	DX (98-00)	1,810 kg
		DX(01) LX(98-02) EX(98-00)	1,830 kg
		EX (01-02)	1,850 kg
	2-door Coupe: Gross Vehicle Weight Rating (GVWR)	LX (98-00)	1,790 kg
		LX (01-02)	1,810 kg
		EX (98-02)	1,830 kg
ENGINE	Type	F23A1 and F23A4 engines	Water-cooled, 4-stroke SOHC VTEC gasoline engine
		F23A5 engine	Water-cooled, 4-stroke SOHC gasoline engine
	Cylinder arrangement		Inline 4-cylinder, transverse
	Bore and stroke		86.0 x 97.0 mm (3.39 x 3.82 in.)
	Displacement		2,254 cm^3 (mℓ) (138 cu in.)
	Compression ratio	F23A1 and F23A4 engines	9.3
		F23A5 engine	8.8
	Valve train	F23A1 and F23A4 engines	Belt driven, SOHC VTEC 4 valves per cylinder
		F23A5 engine	Belt driven, SOHC 4 valves per cylinder
	Lubrication system		Forced, wet sump, with trochoid pump
	Oil pump displacement	at 6,000 engine rpm	53.7 ℓ (56.7 US qt, 47.3 Imp qt)/minute
	Water pump displacement	at 6,000 engine rpm	150 ℓ (159 US qt, 132 Imp qt)/minute
	Fuel required		UNLEADED gasoline with 86 pump octane number or higher
STARTER	Type		Gear reduction
	Normal output	M/T	1.2 kW
		A/T	1.4 kW
	Nominal voltage		12 V
	Hour rating		30 seconds
	Direction of rotation		Clockwise as viewed from gear end
CLUTCH	Clutch	M/T	Single plate dry, diaphragm spring
		A/T	Torque converter
	Clutch friction material surface area	M/T	217 cm^2 (33.6 sq in)

BACK

Item	Measurement	Qualification	Specification
MANUAL TRANSMISSION	Type		Synchronized, 5-speed forward, 1 reverse
	Primary reduction		Direct 1:1
	Gear ratio	1st	3.285
		2nd	1.807
		3rd	1.193
		4th	0.903
		5th	0.685
		Reverse	3.000
	Final reduction	Type	Single helical gear
		Gear ratio	4.062
AUTOMATIC TRANSMISSION	Type		Electronically controlled automatic, 4-speed forward, 1 reverse
	Primary reduction		Direct 1:1
	Gear ratio	1st	2.528
		2nd	1.427
		3rd	0.931
		4th	0.620
		Reverse	1.863
	Final reduction	Type	Single helical gear
		Gear ratio	4.466
STEERING	Type		Power-assisted rack and pinion
	Overall ratio		16.09
	Turns, lock-to-lock		3.11
	Steering wheel diameter		380 mm (15.0 in)
SUSPENSION	Type	Front	Independent double wishbone, coil spring with stabilizer
		Rear	Five-link double wishbone
	Shock absorber	Front and rear	Telescopic, hydraulic, nitrogen gas-filled
WHEEL ALIGNMENT	Camber	Front	0°
		Rear	− 0°30′
	Caster	Front	2°48′
	Total toe	Front	0 mm (0 in.)
		Rear	In 2 mm (1/16 in.)
BRAKES	Type of service brake	Front	Power-assisted self-adjusting ventilated disc
		Rear without ABS	Power-assisted self-adjusting solid drum
		Rear with ABS	Power-assisted self-adjusting solid disc
	Type of parking brake		Mechanical actuating, rear wheels
	Pad friction surface area	Front	49 cm^2 x 2 (7.6 sq in x 2)
		Rear	28 cm^2 x 2 (4.3 sq in x 2)
	Shoe friction surface area	Rear	74 cm^2 x 2 (11.5 sq in x 2)
TIRES	Size of front and rear tires	DX	P195/70 R14 90S
		LX and EX	P195/65 R15 89H
	Size of spare tires		T125/70 D15 95M
AIR CONDITIONING	Cooling capacity		5,240 Kcal/h (20,800 BTU/h)
	Compressor	Type/manufacturer	Swash plate/DENSO
		Number of cylinders	10
		Capacity	177.7 mℓ/rev. (10.84 cu in/rev.)
		Maximum speed	7,600 rpm
		Lubricant capacity	160 mℓ (5 1/3 fl oz)
		Lubricant type	ND-OIL 8 (P/N 38897-PR7-A01AH or 38899-PR7-A01)
	Condenser	Type	Corrugated fin
	Evaporator	Type	Corrugated fin

BACK

Design Specifications

(cont'd)

Item	Measurement	Qualification	Specification
AIR CONDITIONING	Blower	Type	Sirocco fan
		Motor input	230 W/12 V
		Speed control	4-speed
		Maximum capacity	520 m^3/h (18,300 cu ft/h)
	Temperature control		Air-mix type
	Compressor clutch	Type	Dry, single plate, Poly-V belt drive
		Electrical power consumption at 68°F (20°C)	40 W maximum at 12 V
	Refrigerant	Type	HFC-134 a (R-134 a)
		Quantity	600–650 g (21–23 oz)
ELECTRICAL RATINGS	Battery		12 V–52 AH/5 hours
	Starter	DENSO	12 V–1.2 kW
		MITSUBA	12 V–1.4 kW
	Alternator	F23A1 and F23A5 engines	12 V–80 A
		F23A4 engine	12 V–90 A
	Fuses	Under-hood fuse/ relay box	100 A, 50 A, 40 A, 30 A, 20 A, 15 A
		Under-dash driver's fuse/relay box	30 A, 15 A, 10 A, 7.5 A
		Under-dash passenger's fuse/ relay box	30 A, 20 A, 10 A, 7.5 A
	Light bulbs	Headlight high beam	12 V–60 W
		Headlight low beam	12 V–51 W
		Front turn signal/ Front side marker lights	12 V–24 W/2.2 CP (candlepower)(two filaments)
		Front parking lights	12 V–3 CP
		Rear turn signal lights	12 V–21 W
		Brake/Taillights	12 V–21/5 W
		Inner taillight	12 V–3 CP
		High mount brake light	12 V–21 W
		Back-up lights	12 V–21 W
		License plate light	12 V–3 CP
		Ceiling light	12 V–7 W
		Trunk lights	12 V–5 W
		Door courtesy lights	12 V–2 CP
		Vanity mirror lights	12 V–1.1 W
		Glove box light	12 V–3.4 W
		Spotlights	14 V–4 CP
		Gauge lights	14 V–1.4 W, 3.0 W, 3.4 W
		Indicator lights	12 V–LED, 14 V–0.56 W, 0.7 W, 1.4 W
		Panel and pilot lights	14 V–0.56 W, 0.84 W
		Heater control panel lights	14 V–1.12 W, 1.4 W

BACK

Body Specifications

4-door sedan

Unit: mm (in.)

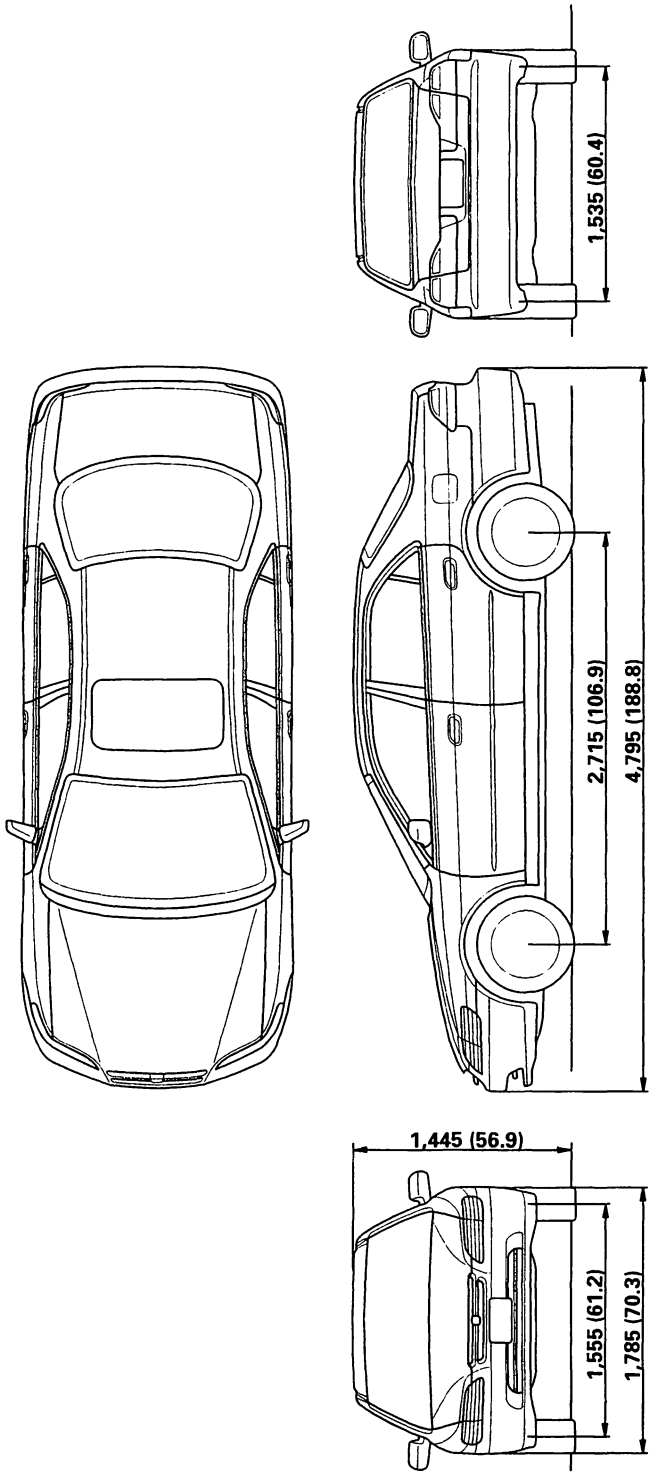

(cont'd)

(cont'd)

2-door coupe

Unit: mm (in.)

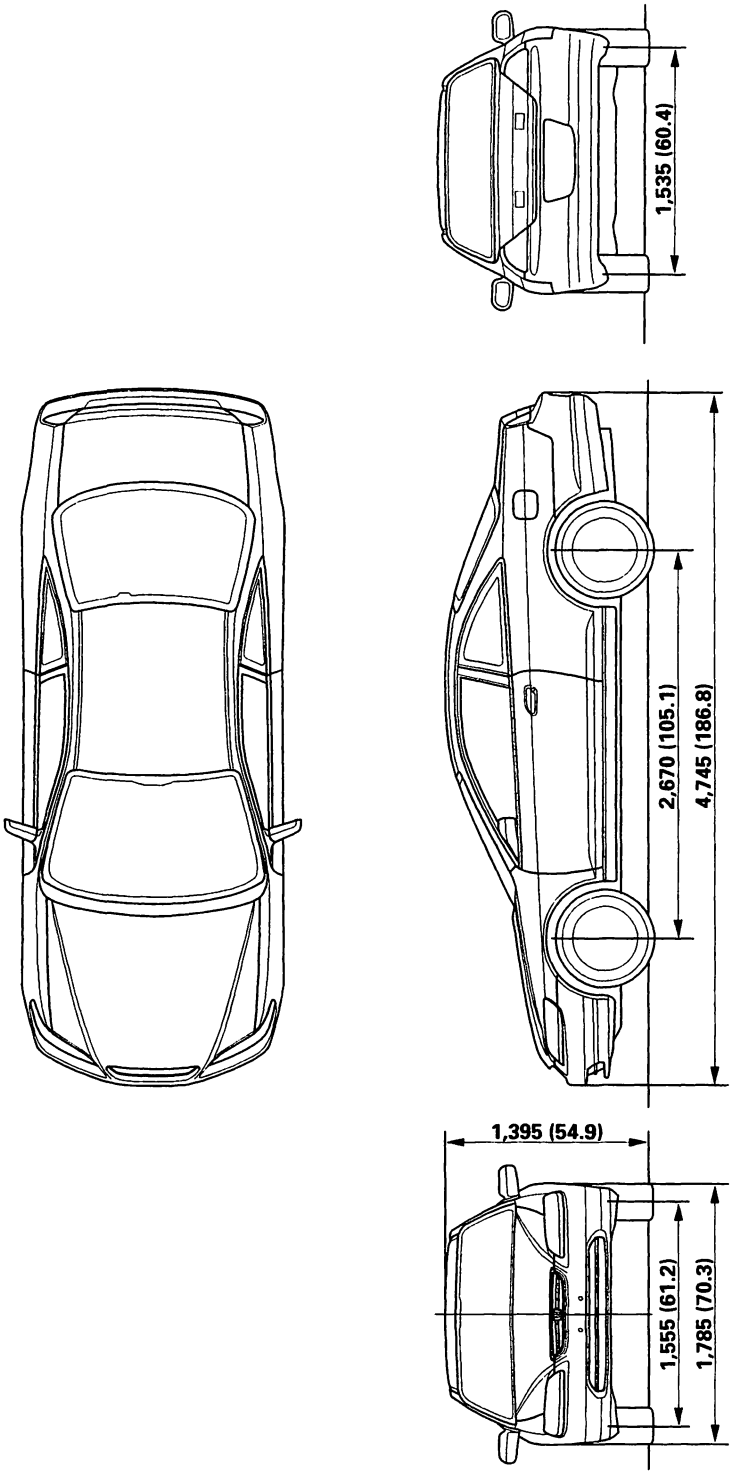

BACK

Maintenance

Lubricants and Fluids **3-2**

Maintenance Schedule for Normal Conditions (1998-2000 Models)
Listed by Distance/Time 3-4

Maintenance Schedule for Severe Conditions (1998-2000 Models)
Listed by Distance/Time 3-6

Maintenance Schedule for Normal and Severe Conditions (1998-2000 Models)
Listed by Maintenance Item 3-8

Maintenance Schedule for Normal Conditions (2001-2002 Models)
Listed by Distance/Time 3-10

Maintenance Schedule for Severe Conditions (2001-2002 Models)
Listed by Distance/Time 3-12

Maintenance Schedule for Normal and Severe Conditions (2001-2002 Models)
Listed by Maintenance Item 3-14

Lubricants and Fluids

For details of lubrication points and type of lubricants to be applied, refer to the illustrated index and various work procedures (such as Assembly/Reassembly, Replacement, Overhaul, Installation, etc.) contained in each section.

NO.	LUBRICATION POINTS		LUBRICANT
1	Engine		Honda Motor oil. API Service Grade: Use SJ "Energy Conserving" grade oil. The oil container may also display the API Certification seal shown below. Make sure it says "For Gasoline Engines." SAE Viscosity: See chart below.
2	Transmission	Manual	Honda Manual Transmission Fluid (MTF)*1
		Automatic Transmission	Honda ATF-Z1 (ATF)*2
3	Brake line (includes ABS line)		Honda DOT 3 Brake Fluid*3
4	Clutch line		Honda DOT 3 Brake Fluid*3
5	Power steering gearbox		Steering grease P/N 08733-B070E
6 7	Release fork (manual transmission) Shift and select cable ends (manual transmission)		Super High Temp Urea Grease (P/N 08798-9002)
8	Throttle cable end (dashboard lower panel hole)		Silicone grease
9 10 11 12 13 14	Throttle cable end (throttle link) Brake master cylinder pushrod Clutch master cylinder pushrod Pedal linkage Battery terminals Fuel fill lid		Multi-purpose grease
15 16 17 18 19	Rear brake shoe linkage Hood hinges and hood latch Trunk hinges and latch Door hinges, upper and lower Door opening detent		Honda White Lithium Grease
20	Caliper piston boot, caliper pins and boots		Silicone grease
21	Brake line joints (front and rear wheelhouse)		Rust preventives
22	Power steering system		Honda Power Steering Fluid*4
23	Air conditioning compressor		Compressor oil: DENSO: ND-OIL 8 (P/N 38897-PR7-A01 AH or 38899-PR7-A01) For refrigerant: HFC-134 a (R-134 a)

API CERTIFICATION SEAL

Recommended Engine Oil
Engine oil viscosity for ambient temperature ranges

For '98—00 models

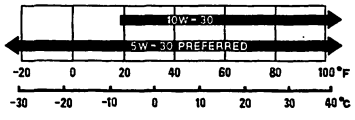

For '01—02 models

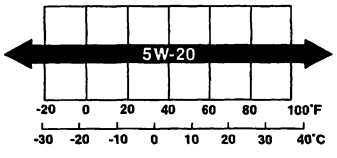

*1: Always use Honda Manual Transmission Fluid (MTF). Using motor oil can cause stiffer shifting because it does not contain the proper additives.
*2: Always use Honda ATF-Z1 (ATF). Using a non-Honda ATF can affect shift quality.
*3: Always use Honda DOT 3 Brake Fluid. Using a non-Honda brake fluid can cause corrosion and decrease the life of the system.
*4: Always use Honda Power Steering Fluid. Using any other type of power steering fluid or automatic transmission fluid can cause increased wear and poor steering in cold weather.

BACK

NOTE:
Lubricate all hinges, latches, and locks once a year.
In corrosive areas, more frequent lubrication is necessary.
We recommend Honda White Lithium Grease.

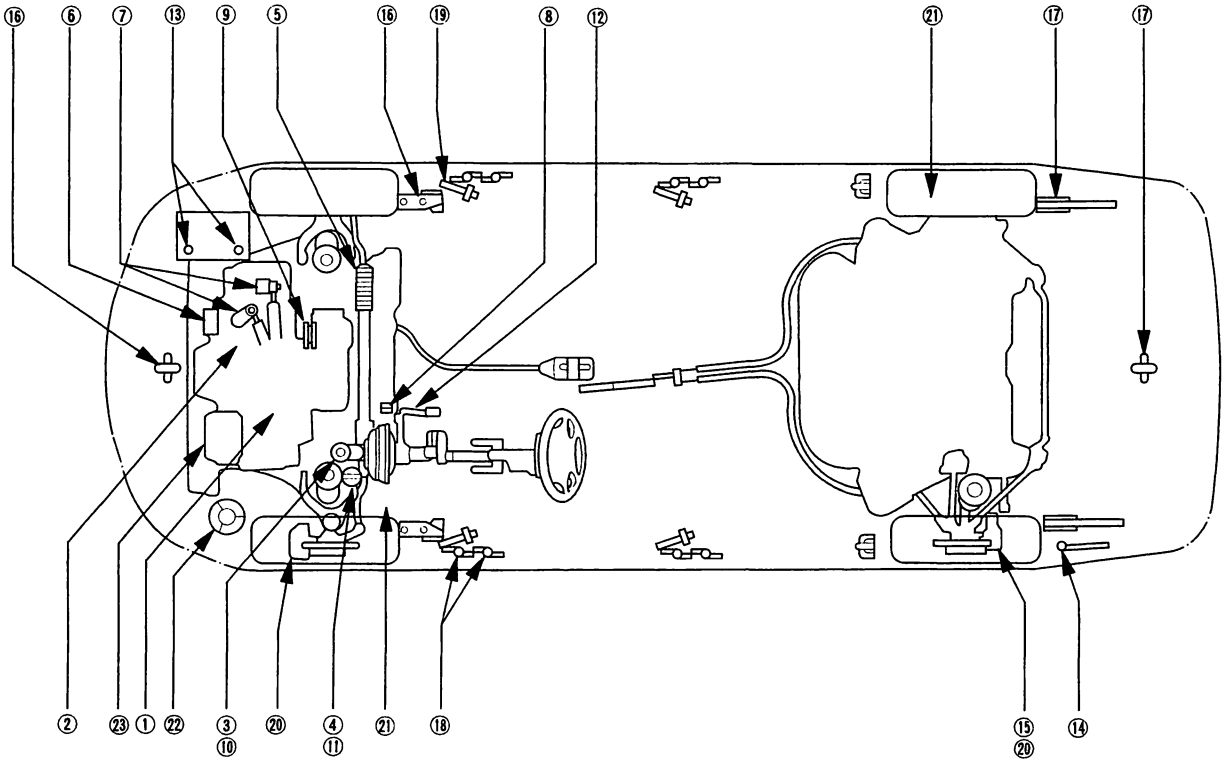

Maintenance Schedule for Normal Conditions (1998-2000 Models)

Listed by Distance/Time

This two-page maintenance schedule outlines the minimum required maintenance. Service at the indicated time or distance, whichever comes first. Use the Maintenance Schedule for Severe Conditions if the vehicle meets any of the qualifiers listed in the severe conditions schedule or if the vehicle is normally driven in Canada.

7,500 mi/ 12,000 km/ — ☐ Do items in A.

15,000 mi/ 24,000 km/ 1 year ☐ Do items in A and B.

22,500 mi/ 36,000 km/— ☐ Do items in A.

30,000 mi/ 48,000 km/ 2 years
- ☐ Replace spark plugs for '98-99 models. Use NGK (ZFR5F-11) or DENSO (KJ16CR-L11). Gap: 1.0 – 1.1 mm (0.039 – 0.043 in.) (see page 4-26).
- ☐ Do: item in A, B and C.

37,500 mi/ 60,000 km/ — ☐ Do items in A.

45,000 mi/ 72,000 km/ 3 years
- ☐ Replace coolant (see page 10-10) Capacity: M/T: 5.5 ℓ (5.8 US qt, 4.8 Imp qt), A/T: 5.4 ℓ (5.7 US qt, 4.8 Imp qt). Use Honda All Season Antifreeze/Coolant Type 2.
- ☐ Replace brake fluid. Use Genuine Honda DOT 3 Brake Fluid. Fill to between marks on reservoir.
- ☐ Do items in A and B.

52,500 mi/ 84,000 km/ — ☐ Do items in A.

60,000 mi/ 96,000 km/4 years
- ☐ Replace spark plugs for '98-99 models. Use NGK (ZFR5F-11) or DENSO (KJ16CR-L11). Gap: 1.0 – 1.1 mm (0.039 – 0.043 in.) (see page 4-26).
- ☐ Do: item in A, B and C.

67,500 mi/108,000 km/ — ☐ Do items in A.

75,000 mi/120,000 km/ 5 years
- ☐ Replace coolant (see page 10-10) Capacity: M/T: 5.5 ℓ (5.8 US qt, 4.8 Imp qt), A/T: 5.4 ℓ (5.7 US qt, 4.8 Imp qt). Use Honda All Season Antifreeze/Coolant Type 2.
- ☐ Do items in A and B.

82,500 mi/132,000 km/— ☐ Do items in A.

90,000 mi/144,000 km/ 6 years
- ☐ Replace spark plugs for '98-99 models. Use NGK (ZFR5F-11) or DENSO (KJ16CR-L11). Gap: 1.0 – 1.1 mm (0.039 – 0.043 in.) (see page 4-26).
- ☐ Replace transmission fluid. M/T: 1.9 ℓ (2.0 US qt, 1.7 Imp qt) Use Honda MTF (see page 13-3). A/T: 2.5 ℓ (2.6 US qt, 2.2 Imp qt) Use Honda ATF-Z1 (see page 14-113).
- ☐ Replace brake fluid. Use Honda DOT 3 Brake Fluid. Fill to between marks on reservoir.
- ☐ Do items in A, B, and C.

97,500 mi/156,000 km/ — ☐ Do items in A.

105,000 mi/168,000 km/ 7 years
- ☐ Inspect valve clearance (cold) (see page 6-14) Intake: 0.24 – 0.28 mm (0.009 – 0.011 in.) Exhaust: 0.28 – 0.32 mm (0.011 – 0.013 in.)
- ☐ Replace spark plugs for '98 – 99 models. Use NGK (ZFR5F-11) or DENSO (KJ16CR-L11). Gap: 1.0 – 1.1 mm (0.039 – 0.043 in.) (see page 4-26).
- ☐ Replace spark plugs for '00 model (see page 4-26). Use NGK (PZFR5F-11) or DENSO (PKJ16CR-L11). Gap: 1.0 – 1.1 mm (0.039 – 0.043 in.)
- ☐ Replace timing belt and balancer belt (Removal: (see page 6-23), Installation: (see page 6-26)) and inspect water pump (see page 10-9).
- ☐ Check idle speed. Should be 700 ± 50 rpm in neutral (Automatic transmission in N or P position) (see page 11-110).
- ☐ Replace coolant (see page 10-10). Capacity: M/T: 5.5 ℓ (5.8 US qt, 4.8 Imp qt), A/T: 5.4 ℓ (5.7 US qt, 4.8 Imp qt). Use Honda All Season Antifreeze/Coolant Type 2.
- ☐ Do items in A and B.

112,500 mi/181,000 km/ — ☐ Do items in A.

120,000 mi/193,000 km/ 8 years
- ☐ Replace spark plugs for '98-99 models. Use NGK (ZFR5F-11) or DENSO (KJR16CR-L11). Gap: 1.0 – 1.1 mm (0.039 – 0.043 in.) (see page 4-26).
- ☐ Do the items in A, B, and C.

BACK

Do the items in parts A, B, and C as required for mileage/time interval listed.

A

- ☐ Replace engine oil (see page 8-5). —Capacity with filter change: 4.3 ℓ (4.5 US qt, 3.8 Imp qt)
- ☐ Rotate tires. Follow the pattern shown in the Owner's Manual —Check tire inflation and condition.

B

- ☐ Replace engine oil filter (see page 8-6).
- ☐ Inspect front and rear brakes (see page 19-10).
  - Check pads and discs for wear (thickness), damage, and cracks.
  - Check calipers for damage, leaks, and tightness of mount bolts.
- ☐ Check parking brake adjustment. Should be fully applied within 6 to 9 clicks (disc brake) or within 4 to 7 clicks (drum brake).
- ☐ Inspect tie rod ends, steering gearbox, and boots (see page 17-8).
  - Check rack grease and steering linkage.
  - Check boots for damage and leaking grease.
  - Check fluid line for damage and leaks.
- ☐ Inspect suspension components.
  - Check bolts for tightness.
  - Check condition of ball joint boots for deterioration and damage.
- ☐ Inspect driveshaft boots. Check boots for cracks and boot bands for tightness (see page 16-3).
- ☐ Inspect brake hoses and lines (including ABS). —Check the master cylinder, proportioning control valve, and ABS modulator for damage and leakage.
- ☐ Check all fluid levels and condition of fluids; check for leaks. If necessary, add ATF (see page 14-113) or MTF (see page 13-3), engine coolant, brake fluid, and windshield washer fluid.
- ☐ Inspect cooling system hoses and connections.
  - Check for damage, leaks, and deterioration.
  - Check for proper fan operation.
- ☐ Inspect exhaust system* . Check catalytic converter heat shield, exhaust pipe, and muffler for damage, leaks, and tightness (see page 9-5).
- ☐ Inspect fuel lines and connections*. Check for loose connections, cracks and deterioration; retighten loose connections and replace damaged parts (see page 11-118).

C

- ☐ Replace air cleaner element.
- ☐ Inspect and adjust drive belts.
  - Look for cracks and damage, then check belt deflection by pushing on it (about 22 lbs) midway between the pulleys.
    - Alternator belt: 10.5—12.5 mm (0.41—0.49 in.) (see page 4-40)
    - P/S pump belt: 13.0—16.0 mm (0.51—0.63 in.) (see page 17-12)
    - A/C compressor belt: 7.0—9.0 mm (0.28—0.35 in) (see page 4-39)
- ☐ Replace the air conditioning filter (see page 21-26).
  - Replace it twice as often (at 15,000 mile interval) if the vehicle is driven mostly in urban areas that have high concentrations of soot in the air from industry and diesel-powered vehicles.
  - Replace it whenever airflow from the climate control system is less than normal.

According to state and federal regulations, failure to do the maintenance items marked with asterisk (*) will not void customer's emissions warranties. However, Honda recommends that all maintenance services be done at the recommended interval to ensure long-term reliability.

Maintenance Schedule for Severe Conditions (1998-2000 Models)

Listed by Distance/Time

Service at the indicated distance or time, whichever comes first. Use this schedule if the vehicle is driven MAINLY in Canada or in any of the following conditions; if only OCCASIONALLY driven in these conditions, use the Normal Conditions schedule (see page 3-4).

Severe Driving Conditions

- Less than 5 miles (8 km) per trip or, in freezing temperatures, less than 10 miles (16 km) per trip
- In extremely; hot weather (over 90°F/32°C)
- Extensive idling or long periods of stop-and-go driving
- Trailer towing
- On muddy, dusty, or de-iced roads
- Driving in mountainous conditions

3,750 mi/ 6,000 km/ —	☐ Replace oil and filter.
7,500 mi/ 12,000 km/6 months	☐ Do items in A.
11,250 mi/ 18,000 km/ —	☐ Replace oil and filter.

15,000 mi/ 24,000 km/ 1 year
- ☐ Clean air cleaner element with low pressure air.
- ☐ Do items in A and B.

18,750 mi/ 30,000 km/ —	☐ Replace oil and filter.
22,500 mi/ 36,000 km/ 1 1/2 years:	☐ Do items in A.
26,250 mi/ 42,000 km/ —	☐ Replace oil and filter

30,000 mi/ 48,000 km/ 2 years:
- ☐ Replace spark plugs for '98-99 models. Use NGK (ZFR5F-11) or DENSO (KJ16CR-L11). Gap: 1.0 – 1.1 mm (0.039 – 0.043 in.) (see page 4-26).
- ☐ Do items A, B, and C.

33,750 mi/ 54,000 km/ —	☐ Replace oil and filter.
37,500 mi/ 60,000 km/2 1/2 years:	☐ Do items in A.
41,250 mi/ 66,000 km/ —	☐ Replace oil and filter.

45,000 mi/ 72,000 km/ 3 years:
- ☐ Clean air cleaner element with low pressure air.
- ☐ Replace coolant (see page 10-10). Use Honda All Season Antifreeze/Coolant Type 2. Capacity: M/T: 5.5 ℓ (5.8 US qt, 4.8 Imp qt), A/T: 5.4 ℓ (5.7 US qt, 4.8 Imp qt).
- ☐ Replace brake fluid (see page 19-7). Use Genuine Honda DOT 3. Fill to between marks on reservoir.
- ☐ Do items in A and B.

48,750 mi/ 78,000 km/ —	☐ Replace oil and filter.
52,500mi/ 84,000 km/3 1/2 years:	☐ Do items in A.
56,250 mi/ 90,000 km/ —	☐ Replace oil and filter.

60,000 mi/ 96,000 km/ 4 years:
- ☐ Replace spark plugs for '98-99 models. Use NGK (ZFR5F-11) or DENSO (KJ16CR-L11). Gap: 1.0 – 1.1 mm (0.039 – 0.043 in.) (see page 4-26).
- ☐ Replace timing belt and balancer belt (Removal: (see page 6-23), Installation: (see page 6-26)) and inspect the water pump for '98-99 models (see page 10-9) if the vehicle is regularly driven in weather over 110°F (43°C) or under –20°F (–29°C); If not, replace the belts at 105,000 miles.
- ☐ Do items in A, B and C.

63,750 mi/102,000 km/ —	☐ Replace oil and filter.
67,500 mi/108,000 km 4 1/2 years:	☐ Do items in A.
71,250 mi/114,000 km —	☐ Replace oil and filter.

75,000mi/120,000 km/5 years:
- ☐ Clean air cleaner element with low pressure air.
- ☐ Replace coolant (see page 10-10). Use Honda All Season Antifreeze/Coolant Type 2. Capacity: M/T: 5.5 ℓ (5.8 US qt, 4.8 Imp qt), A/T: 5.4 ℓ (5.7 US qt, 4.8 Imp qt)
- ☐ Do items in A, and B.

78,750 mi/126,000 km/ —	☐ Replace oil and filter.
82,500 mi/132,000 km/5 1/2 years	☐ Do items in A.
86,250 mi/138,000 km/ —	☐ Replace oil and filter.

90,000 mi/144,000 km/ 6 years:
- ☐ Replace spark plugs for '98-'99 models. Use NGK (ZFR5F-11) or DENSO (KJ16CR-L11). Gap: 1.0 – 1.1 mm (0.039 – 0.043 in.) (see page 4-26).
- ☐ Replace brake fluid (see page 19-7). Use Honda DOT 3 Brake Fluid. Fill to between marks on reservoir.
- ☐ Do items in A, B and C.

93,750 mi/150,000 km/ —	☐ Replace oil and filter.
97,500 mi/156,000 km/6 1/2 years:	☐ Do items in A.
101,250 mi/162,000 km/ —	☐ Replace oil and filter.

BACK

105,000 mi/168,000 km/ 7 years:

- ☐ Clean air cleaner element with low pressure air.
- ☐ Inspect valve clearance (cold) (see page 6-14) Intake: 0.24 – 0.28 mm (0.009 – 0.011 in.) Exhaust: 0.28 – 0.32 mm (0.011 – 0.013 in.)
- ☐ Replace spark plugs for '00 model. Use NGK (PZFR5F-11) or DENSO (PKJ16CR-L11). Gap: 1.0 – 1.1 mm (0.039 – 0.043 in.) (see page 4-26).
- ☐ Replace timing belt and balancer belt (Removal: (see page 6-23), Installation: (see page 6-26)) and inspect the water pump (see page 10-9) only if the belts were not replaced at 60,000 miles.
- ☐ Check idle speed* (see page 11-110).: 700 ± 50 rpm in neutral (Automatic transmission in [N] or [P] position)
- ☐ Replace coolant (see page 10-10). Use Honda All Season Antifreeze/Coolant Type 2. Capacity: M/T: 5.5 ℓ (5.8 US qt, 4.8 Imp qt), A/T: 5.4 ℓ (5.7 US qt, 4.8 Imp qt).
- ☐ Do items in A, B.

108,750 mi/174,000 km/ — ☐ Replace oil and filter.

112,500 mi/180,000 km/ 7 1/2 years: ☐ Do items in A.

116,250 mi/186,000 km/ — ☐ Replace oil and filter.

120,000 mi/192,000 km/ 8 years:

- ☐ Replace spark plugs for '98-'99 models. Use NGK (ZFR5F-11) or DENSO (KJ16CR-L11). Gap: 1.0 – 1.1 mm (0.039 – 0.043 in.) (see page 4-26).
- ☐ Do items A, B, and C.

Do the items in parts A, B, and C as required for mileage/time interval.

A

- ☐ Replace engine oil and filter (see page 8-5). — Capacity with filter change: 4.3 ℓ (4.5 US qt, 3.8 Imp qt)
- ☐ Inspect front and rear brakes, every 6 months if vehicle is driven less than 7,500 mile per year (see page 19-10).
  - Check pads and discs for wear (thickness), damage, and cracks.
  - Check calipers for damage, leaks, and tightness of mount bolts.
- ☐ Rotate tires, if the vehicle has been driven the distance listed. Follow the pattern shown in the Owner's Manual. (Check tire inflation and condition.)
- ☐ Inspect tie rod ends, steering gearbox, and boots (see page 17-8).
  - Check rack grease and steering linkage.
  - Check boots for damage and leaking grease.
  - Check fluid lines for damage and leaks.
- ☐ Inspect suspension components.
  - Check bolts for tightness.
  - Check condition of ball joint boots for deterioration and damage.
- ☐ Inspect driveshaft boots. Check boots for cracks and boot bands for tightness (see page 16-3).

B

- ☐ Check parking brake adjustment. — Should be fully applied within 6 to 9 clicks (disc brake) or within 4 to 7 clicks (drum brake).
- ☐ Lubricate locks, hinges and latches with Honda white lithium grease.
- ☐ Inspect brake hoses and lines (including ABS). Check the master cylinder, proportioning control valve, and ABS modulator for damage and leakage (see page 19-30).
- ☐ Check fluid levels and condition of fluids; check for leaks. If necessary, add ATF (see page 14-113) or MTF (see page 13-3), engine coolant, brake fluid, and windshield washer fluid.
- ☐ Inspect cooling system hoses and connections.
  - Check for damage, leaks, and deterioration.
  - Check for proper fan operation.
- ☐ Inspect exhaust system.* Check catalytic converter heat shield, exhaust pipe, and muffler for damage, leaks, and tightness (see page 9-5).
- ☐ Inspect fuel lines and connections.* Check for loose connections, cracks and deterioration; retighten loose connections and replace damaged parts (see page 11-118).
- ☐ Check all lights. Check function of all interior and exterior lights, and the positions of the headlights (see page 22-95).
- ☐ Inspect the vehicle underbody. Check the paint for damage, scratches, stone chipping, and dents.

C

- ☐ Replace air cleaner element (see page 11-133).
- ☐ Inspect and adjust drive belt. Look for cracks and damage, then check tension by pushing on each belt (about 22 lbs) midway between the pulleys:
  - Alternator belt: 10.5 – 12.5 mm (0.41 – 0.49 in) (see page 4-40).
  - P/S pump belt: 13.0 – 16.0 mm (1/2 – 5/8 in) (see page 17-12).
  - A/C compressor belt: 7.0 – 9.0 mm (0.28 – 0.35 in) (see page 4-39).
- ☐ Replace air conditioning filter, every 15,000 miles if vehicle is driven mostly where air has high concentration of soot from industry and diesel-powered vehicles; also replace it anytime airflow is less than usual (see page 21-26).
- ☐ Replace transmission fluid. Use Genuine Honda MTF or ATF.
  - M/T: 1.9 ℓ (2.0 US qt, 1.7 Imp qt)
  - A/T: 2.5 ℓ (2.6 US qt, 2.2 Imp qt)

According to state and federal regulations, failure to do the maintenance items marked with asterisk (*) will not void customer's emissions warranties. However, Honda recommends that all maintenance services be done at the recommended interval to ensure long-term reliability.

Maintenance Schedule for Normal and Severe Conditions (1998-2000 Models)

Listed by Maintenance Item

Service at the indicated distance or time, whichever comes first.
- If driven in normal conditions, do items with a dot (●).
- If driven in severe conditions (see page 3-6) or normally driven in Canada, do the circle (○) and dot (●) items.

Service at the indicated distance or time, whichever comes first.	miles x 1000	3.75	7.5	11.25	15	18.75	22.5	26.25	30	33.75	37.5
	km x 1000	6	12	18	24	30	36	42	48	54	60
	years	—	1/2	—	1	—	1 1/2	—	2	—	2 1/2
Replace engine oil		Normal Conditions: Every 7,500 miles (12,000km) or 1 year Severe Conditions: Every 3,750 miles (6,000 km) or 6 months									
Replace engine oil filter		Normal Conditions: Every other oil change Severe Conditions: Every oil change									
Clean air cleaner element					○						
Replace air cleaner element									●		
Inspect valve clearance		Adjust only if noisy.									
Replace spark plugs	'98-99 models								●		
	'00 model										
Replace timing belt, balancer belt [NOTE 1], and inspect water pump	'98-99 models										
	'00 model										
Inspect and adjust drive belts									●		
Inspect idle speed*											
Replace engine coolant											
Replace transmission fluid									○		
Inspect front and rear brakes			○		●		○		●		○
Replace brake fluid											
Check parking brake adjustment					●				●		
Replace air conditioning filter [NOTE 2]									●		
Lubricate locks, hinges, and latches					○				○		
Rotate tires (Check tire inflation and condition at least once a month)			●		●		●		●		●
Inspect tie-rod ends, steering gearbox, and boots			○		●		○		●		○
Inspect suspension components			○		●		○		●		○
Inspect driveshaft boots			○		●		○		●		○
Inspect brake hoses and lines (including ABS)					●				●		
Inspect all fluid levels and condition of fluids					●				●		
Inspect cooling system hoses and connections					●				●		
Inspect exhaust system*					●				●		
Inspect fuel lines and connections*					●				●		
Check lights and controls					○				○		
Inspect vehicle under body					○				○		

BACK

41.25	45	48.75	52.5	56.25	60	63.75	67.5	71.25	75	78.75	82.5	86.25	90	93.75	97.5	101.25	105	108.75	112.5	116.25	120
66	72	78	84	90	96	102	108	114	120	126	132	138	144	150	156	162	168	175	181	187	193
—	3	—	3 1/2	—	4	—	4 1/2	—	5	—	5 1/2	—	6	—	6 1/2	—	7	—	7 1/2	—	8
Normal Conditions: Every 7,500 miles (12,000km) or 1 year Severe Conditions: Every 3,750 miles (6,000 km) or 6 months																					
Normal Conditions: Every other oil change Severe Conditions: Every oil change																					
	○								○								○				
					●								●								●
Adjust only if noisy.																	●				
					●								●								●
																	●				
					○												●				○
																	●				
					●								●								●
																	●				
	●								●								●				
					○								●								○
	●		○		●		○		●		○		●		○		●		○		●
	●												●								
	●				●				●				●				●				●
					●								●								●
	○				○				○				○				○				○
	●		●		●		●		●		●		●		●		●		●		●
	●		○		●		○		●		○		●		○		●		○		●
	●		○		●		○		●		○		●		○		●		○		●
	●		○		●		○		●		○		●		○		●		○		●
	●				●				●				●				●				●
	●				●				●				●				●				●
	●				●				●				●				●				●
	●				●				●				●				●				●
	●				●				●				●				●				●
	○				○				○				○				○				○
	○				○				○				○				○				○

NOTE:

1 If the vehicle is regularly driven in very hot or cold weather, over 110°F (43°C) or under −20°F (−29°C), replace this belt every 60,000 miles; If not, replace it at 105,000 miles.

2 Replace the air conditioning filter every 15,000 miles if the vehicle is driven mostly where air has a high concentration of soot from industry and diesel-powered vehicle; also replace it anytime airflow is less than usual.

* According to state and federal regulations, failure to do the maintenance items marked with an asterisk (*) will not void customer's emissions warranties. However, Honda recommends that all maintenance services be done at the recommended interval to ensure long-term reliability.

Maintenance Schedule for Normal Conditions (2001-2002 Models)

Listed by Distance/Time

This two-page maintenance schedule outlines the minimum required maintenance. Service at the indicated time or distance, whichever comes first. Use the Maintenance Schedule for Severe Conditions if the vehicle meets any of the qualifiers listed in the severe conditions schedule or if the vehicle is normally driven in Canada.

7,500 mi/ 12,000 km/ —	☐ Do items in A.
15,000 mi/ 24,000 km/ 1 year	☐ Do items in A and B.
22,500 mi/ 36,000 km/—	☐ Do items in A.
30,000 mi/ 48,000 km/ 2 years	☐ Do item in A, B, and C.
37,500 mi/ 60,000 km/ —	☐ Do items in A.
— / — / 3 years	☐ Do items in D.
45,000 mi/ 72,000 km/ 3 years	☐ Do items in A and B.
52,500 mi/ 84,000 km/ —	☐ Do items in A.
60,000 mi/ 96,000 km/4 years	☐ Do item in A, B, and C.
67,500 mi/108,000 km/ —	☐ Do items in A.
75,000 mi/120,000 km/ 5 years	☐ Do items in A and B.
82,500 mi/132,000 km/—	☐ Do items in A.
— / — / 6 years	☐ Do items in D.
90,000 mi/144,000 km/ 6 years	☐ Do items in A, B, and C.
97,500 mi/156,000 km/ —	☐ Do items in A.

105,000 mi/168,000 km/ 7 years

- ☐ Inspect valve clearance (cold) (see page 6-14) Intake: 0.24 – 0.28 mm (0.009 – 0.011 in.) Exhaust: 0.28 – 0.32 mm (0.011 – 0.013 in.)
- ☐ Replace spark plugs for '01 model (see page 4-26). Use NGK (PZFR5F-11) or DENSO (PKJ16CR-L11). Gap: 1.0 – 1.1 mm (0.039 – 0.043 in.)
- ☐ Replace timing belt and balancer belt (Removal: (see page 6-23), Installation: (see page 6-26)) and inspect water pump (see page 10-9).
- ☐ Check idle speed. Should be 700 ± 50 rpm in neutral (Automatic transmission in N or P position) (see page 11-110).
- ☐ Do items in A and B.

112,500 mi/180,000 km/ —	☐ Do items in A.
120,000 mi/192,000 km/ 8 years	☐ Do items in A, B and C.

120,000 mi/192,000 km/ 6 years

- ☐ Replace manual transmission fluid. Use Honda MTF (see page 13-3). Capacity: 1.9 ℓ (2.0 US qt, 1.7 Imp qt)

120,000 mi/192,000 km/ 6 years, then every 90,000 mi/144,000 km/ 5 years

- ☐ Replace automatic transmission fluid. Use Honda ATF-Z1 (ATF). Capacity: 2.5 ℓ (2.6 US qt, 2.2 Imp qt)

120,000 mi/192,000 km/ 10 years, then every 60,000 mi/96,000 km or 5 years

- ☐ Replace engine coolant (see page 10-10). Use Honda All Season Antifreeze/Coolant Type 2. Capacity: M/T: 5.5 ℓ (5.8 US qt, 4.8 Imp qt), A/T: 5.4 ℓ (5.7 US qt, 4.8 Imp qt).

BACK

Do the items in parts A, B, C and D as required for mileage/time interval listed.

A

- ☐ Replace engine oil (see page 8-5). —Capacity with filter change: 4.3 ℓ (4.5 US qt, 3.8 Imp qt)
- ☐ Rotate tires. Follow the pattern shown in the Owner's Manual —Check tire inflation and condition.

B

- ☐ Replace engine oil filter (see page 8-6).
- ☐ Inspect front and rear brakes (see page 19-10).
  - Check pads and discs for wear (thickness), damage, and cracks.
  - Check calipers for damage, leaks, and tightness of mount bolts.
  - Check brake lining for cracking, glazing, wear, and contamination.
  - Check wheel cylinders for leaks.
- ☐ Check parking brake adjustment. Should be fully applied within 6 to 9 clicks (disc brake) or within 4 to 7 clicks (drum brake).
- ☐ Inspect tie rod ends, steering gearbox, and rack boots for damage and leaking grease and fluid (see page 17-8).
  - Check steering linkage for looseness.
  - Check boots for damage and leaking grease.
- ☐ Inspect suspension components.
  - Check bolts for tightness.
  - Check condition of ball joint boots for deterioration and damage.
- ☐ Inspect driveshaft boots. Check boots for cracks and boot bands for tightness (see page 16-3).
- ☐ Inspect brake hoses and lines (including ABS). —Check the master cylinder, proportioning control valve, and ABS modulator for damage and leakage.
- ☐ Check all fluid levels and condition of fluids; check for leaks. If necessary, add Honda ATF-Z1 (see page 14-113) or MTF (see page 13-3), engine coolant, brake fluid, and windshield washer fluid.
- ☐ Inspect cooling system hoses and connections.
  - Check for damage, leaks, and deterioration.
  - Check for proper fan operation.
- ☐ Inspect exhaust system* . Check catalytic converter heat shield, exhaust pipe, and muffler for damage, leaks, and tightness (see page 9-5).
- ☐ Inspect fuel lines and connections*. Check for loose connections, cracks and deterioration; retighten loose connections and replace damaged parts (see page 11-118).

C

- ☐ Replace air cleaner element.
- ☐ Inspect and adjust drive belts.
  - Look for cracks and damage, then check belt deflection by pushing on it (about 22 lbs) midway between the pulleys.
    - Alternator belt: 10.5—12.5 mm (0.41—0.49 in.) (see page 4-40)
    - P/S pump belt: 13.0—16.0 mm (0.51—0.63 in.) (see page 17-12)
    - A/C compressor belt: 7.0—9.0 mm (0.28—0.35 in) (see page 4-39)
- ☐ Replace the dust and pollen filter (see page 21-26).
  - Replace it twice as often (at 15,000 mile interval) if the vehicle is driven mostly in urban areas that have high concentrations of soot in the air from industry and diesel-powered vehicles.
  - Replace it whenever airflow from the climate control system is less than normal.

D

- ☐ Replace brake fluid every 3 years (Independent of distance), Use Genuine Honda DOT 3 Brake Fluid. Fill to between marks on reservoir. (see page 19-7).

According to state and federal regulations, failure to do the maintenance items marked with asterisk(*) will not void customer's emissions warranties. However, Honda recommends that all maintenance services be done at the recommended interval to ensure long-term reliability.

Maintenance Schedule for Severe Conditions (2001-2002 Models)

Listed by Distance/Time

Service at the indicated distance or time, whichever comes first. Use this schedule if the vehicle is driven MAINLY in Canada or in any of the following conditions; if only OCCASIONALLY driven in these conditions, use the Normal Conditions schedule (see page 3-10).

Severe Driving Conditions

- Less than 5 miles (8 km) per trip or, in freezing temperatures, less than 10 miles (16 km) per trip
- In extremely; hot weather (over 90°F/32°C)
- Extensive idling or long periods of stop-and-go driving
- Trailer towing
- On muddy, dusty, or de-iced roads
- Driving in mountainous conditions

3,750 mi/ 6,000 km/ —	☐ Do items in A.
7,500 mi/ 12,000 km/ —	☐ Do items in A, B.
11,250 mi/ 18,000 km/ —	☐ Do items in A.
15,000 mi/ 24,000 km/ 1 year ☐ Clean air cleaner element with low pressure air. ☐ Do items in A, B and C.	
18,750 mi/ 30,000 km/ —	☐ Do items in A.
22,500 mi/ 36,000 km/ —	☐ Do items in A, B.
26,250 mi/ 42,000 km/ —	☐ Do items in A.
30,000 mi/ 48,000 km/ 2 years	☐ Do items in A, B, C and D .
33,750 mi/ 54,000 km/ —	☐ Do items in A.
37,500 mi/ 60,000 km/ —	☐ Do items in A and B.
41,250 mi/ 66,000 km/ —	☐ Do items in A.
— / — / 3 years	☐ Do items in E.
45,000 mi/ 72,000 km/ 3 years ☐ Clean air cleaner element with low pressure air. ☐ Do items in A, B, and C.	
48,750 mi/ 78,000 km/ —	☐ Do items in A.
52,500mi/ 84,000 km/ —	☐ Do items in A, B.
56,250 mi/ 90,000 km/ —	☐ Do items in A.
60,000 mi/ 96,000 km/ 3 years ☐ Replace manual transmission fluid. Use Honda MTF (see page 13-3). Capacity:1.9 ℓ (2.0 US qt, 1.7 Imp qt)	
60,000 mi/ 96,000 km/ 3 years, then every 30,000 mi/48,000 km/ 2 years ☐ Replace automatic transmission fluid. Use Honda ATF-Z1 (ATF) (see page 14-113). Capacity:2.5 ℓ (2.6 US qt, 2.21 Imp qt)	
60,000 mi/ 96,000 km/ 4 years: ☐ Replace timing belt and balancer belt (Removal: (see page 6-23), Installation: (see page 6-26)) and inspect the water pump (see page 10-9) if the vehicle is regularly driven in weather over 110°F (43°C) or under −20°F (−29°C); If not, replace the belts at 105,000 miles. ☐ Do items in A, B, C and D.	
63,750 mi/102,000 km/ —	☐ Do items in A.
67,500 mi/108,000 km/ —	☐ Do items in A, B.
71,250 mi/114,000 km/ —	☐ Do items in A.
75,000mi/120,000 km/ 5 years ☐ Clean air cleaner element with low pressure air. ☐ Do items in A, B and C.	
78,750 mi/126,000 km/ —	☐ Do items in A.
82,500 mi/132,000 km/ —	☐ Do items in A, B.
86,250 mi/138,000 km/ —	☐ Do items in A.
90,000 mi/144,000 km/ 5 years, then every 30,000 mi/48,000 km/ 2 years ☐ Replace automatic transmission fluid. Use Honda ATF-Z1 (ATF) (see page 14-113).	
— / — / 6 years	☐ Do items in E.
90,000 mi/144,000 km/ 6 years:	☐ Do items in A, B, C, and D.
93,750 mi/150,000 km/ —	☐ Do items in A.
97,500 mi/156,000 km/ —	☐ Do itemsin A, B.
101,250 mi/162,000 km/ —	☐ Do items in A.
105,000 mi/168,000 km/ 7 years: ☐ Clean air cleaner element with low pressure air. ☐ Inspect valve clearance (cold) (see page 6-14) Intake: 0.24−0.28 mm (0.009−0.011 in.) Exhaust: 0.28−0.32 mm (0.011−0.013 in.) ☐ Replace spark plugs for '01 model. Use NGK (PZFR5F-11) or DENSO (PKJ16CR-L11). Gap: 1.0−1.1 mm (0.039−0.043 in.) (see page 4-26). ☐ Replace timing belt and balancer belt (Removal: (see page 6-23), Installation: (see page 6-26)) and inspect the water pump (see page 10-9) only if the belts were not replaced at 60,000 miles. ☐ Check idle speed* (see page 11-110).: 700 ± 50 rpm ☐ Do items in A, B and C.	

BACK

108,750 mi/174,000 km/ —	☐ Do items in A.
112,500 mi/180,000 km/ —	☐ Do items in A, B.
116,250 mi/186,000 km/ —	☐ Do items in A.

120,000 mi/192,000 km/ 8 years:
- ☐ Replace timing belt and balancer belt (Removal: (see page 6-23), Installation: (see page 6-26)) and inspect the water pump (see page 10-9) only if the belts were not replaced at 60,000 miles.
- ☐ Do items A, B, C and D.

120,000 mi/192,000 km/ 10 years, then every 60,000 mi/96,000 km or 5 years
- ☐ Replace engine coolant (see page 10-10). Use Honda All Season Antifreeze/Coolant Type 2.
  - Capacity: M/T: 5.5 ℓ (5.8 US qt, 4.8 Imp qt), A/T: 5.4 ℓ (5.7 US qt, 4.8 Imp qt)

120,000 mi/192,000 km/ 6 years
- ☐ Replace manual transmission fluid. Use Honda MTF (see page 13-3). Capacity: 1.9 ℓ (2.0 US qt, 1.7 Imp qt)

120,000 mi/192,000 km/ 7 years, then every 30,000 mi/48,000 km/ 2 years
- ☐ Replace automatic transmission fluid. Use Honda ATF-Z1 (ATF). Capacity: 2.5 ℓ (2.6 US qt, 2.2 Imp qt)

Do the items in parts A, B, C, D and E as required for mileage/time interval.

A

☐ Replace engine oil and filter (see page 8-5). — Capacity with filter change: 4.3 ℓ (4.5 US qt, 3.8 Imp qt)

B

☐ Inspect front and rear brakes, every 6 months if vehicle is driven less than 7,500 mile per year (see page 19-10).
- Check pads and discs for wear (thickness), damage, and cracks.
- Check calipers for damage, leaks, and tightness of mount bolts.
- Check brake lining for cracking, glazing, wear, and contamination.
- Check wheel cylinders for leaks.

☐ Rotate tires, if the vehicle has been driven the distance listed. Follow the pattern shown in the Owner's Manual. (Check tire inflation and condition.)

☐ Inspect tie-rod ends, steering gearbox, and rack boots for damage and leaking grease and fluids (see page 17-8).
- Check steering linkage for looseness.
- Check boots for damage and leaking grease.
- Check fluid lines for damage and leaks.

☐ Inspect suspension components.
- Check bolts for tightness.
- Check condition of ball joint boots for deterioration and damage.

☐ Inspect driveshaft boots. Check boots for cracks and boot bands for tightness (see page 16-3).

C

☐ Check parking brake adjustment. — Should be fully applied within 6 to 9 clicks (disc brake) or within 4 to 7 clicks (drum brake).

☐ Lubricate door locks and hinges with Honda white lithium grease.

☐ Inspect brake hoses and lines (including ABS). Check the master cylinder, proportioning control valve, and ABS modulator for damage and leakage (see page 19-30).

☐ Check fluid levels and condition of fluids; check for leaks. If necessary, add Honda ATF-Z1 (see page 14-113) or MTF (see page 13-3), engine coolant, brake fluid, and windshield washer fluid.

☐ Inspect cooling system hoses and connections.
- Check for damage, leaks, and deterioration.
- Check for proper fan operation.

☐ Inspect exhaust system.* Check catalytic converter heat shield, exhaust pipe, and muffler for damage, leaks, and tightness (see page 9-5).

☐ Inspect fuel lines and connections.* Check for loose connections, cracks and deterioration; retighten loose connections and replace damaged parts (see page 11-118).

☐ Check all lights. Check function of all interior and exterior lights, and the positions of the headlights (see page 22-95).

☐ Inspect the vehicle underbody. Check the paint for damage, scratches, stone chipping, and dents.

D

☐ Replace air cleaner element (see page 11-133).

☐ Inspect and adjust drive belt. Look for cracks and damage, then check tension by pushing on each belt (about 22 lbs) midway between the pulleys:
- Alternator belt: 10.5 – 12.5 mm (0.41 – 0.49 in) (see page 4-40).
- P/S pump belt: 13.0 – 16.0 mm (1/2 – 5/8 in) (see page 17-12).
- A/C compressor belt: 7.0 – 9.0 mm (0.28 – 0.35 in) (see page 4-39).

☐ Replace dust and pollen filter, every 15,000 miles if vehicle is driven mostly where air has high concentration of soot from industry and diesel-powered vehicles; also replace it anytime airflow is less than usual (see page 21-26).

E

☐ Replace brake fluid every 3 years (Independent of distance), Use Genuine Honda DOT 3. Fill to between marks on reservoir. (see page 19-7).

According to state and federal regulations, failure to do the maintenance items marked with asterisk (*) will not void customer's emissions warranties. However, Honda recommends that all maintenance services be done at the recommended interval to ensure long-term reliability.

Maintenance Schedule for Normal and Severe Conditions (2001-2002 Models)

Listed by Maintenance Item

Service at the indicated distance or time, whichever comes first.
- If driven in normal conditions, do items with a dot (●).
- If driven in severe conditions (see page 3-12) or normally driven in Canada, do the circle (○) and dot (●) items.

Service at the indicated distance or time, whichever comes first.											
	miles x 1000	3.75	7.5	11.25	15	18.75	22.5	26.25	30	33.75	37.5
	km x 1000	6	12	18	24	30	36	42	48	54	60
	years	–	1/2	–	1	–	1 1/2	–	2	–	2 1/2
Replace engine oil		Normal Conditions: Every 7,500 miles (12,000km) or 1 year Severe Conditions: Every 3,750 miles (6,000 km) or 6 months									
Replace engine oil filter		Normal Conditions: Every other oil change Severe Conditions: Every oil change									
Clean air cleaner element					○						
Replace air cleaner element									●		
Inspect valve clearance		Adjust only if noisy.									
Replace spark plugs											
Replace timing belt, balancer belt [NOTE 1], and inspect water pump											
Inspect and adjust drive belts									●		
Inspect idle speed*											
Replace engine coolant		Normal Conditions: At 120,000 miles (192,000 km) or 10 years, then every 60,000 miles (96,000 km) or 5 years Severe Conditions: At 120,000 miles (192,000 km) or 10 years, then every 60,000 miles (96,000 km) or 5 years									
Replace transmission fluid	Manual Transmission	Normal Conditions: Every 120,000 miles (192,000 km) or 6 years Severe Conditions: Every 60,000 miles (96,000 km) or 3 years									
	Automatic Transmission	Normal Conditions: At 120,000 miles (192,000 km) or 6 years, then every 90,000 miles (144,000 km) or 5 years Severe Conditions: At 60,000 miles (96,000 km) or 3 years, then every 30,000 miles (48,000 km) or 2 years									

BACK

41.25	45	48.75	52.5	56.25	60	63.75	67.5	71.25	75	78.75	82.5	86.25	90	93.75	97.5	101.25	105	108.75	112.5	116.25	120
66	72	78	84	90	96	102	108	114	120	126	132	138	144	150	156	162	168	175	181	187	193
—	3	—	3 1/2	—	4	—	4 1/2	—	5	—	5 1/2	—	6	—	6 1/2	—	7	—	7 1/2	—	8
Normal Conditions: Every 7,500 miles (12,000km) or 1 year Severe Conditions: Every 3,750 miles (6,000 km) or 6 months																					
Normal Conditions: Every other oil change Severe Conditions: Every oil change																					
	○								○								○				
					●								●								●
Adjust only if noisy.																	●				
																	●				
					○												●				○
					●								●								●
																	●				
Normal Conditions: At 120,000 miles (192,000 km) or 10 years, then every 60,000 miles (96,000 km) or 5 years Severe Conditions: At 120,000 miles (192,000 km) or 10 years, then every 60,000 miles (96,000 km) or 5 years																					●
Normal Conditions: Every 120,000 miles (192,000 km) or 6 years Severe Conditions: Every 60,000 miles (96,000 km) or 3 years																					
Normal Conditions: At 120,000 miles (192,000 km) or 6 years, then every 90,000 miles (144,000 km) or 5 years Severe Conditions: At 60,000 miles (96,000 km) or 3 years, then every 30,000 miles (48,000 km) or 2 years																					

(cont'd)

BACK

Maintenance Schedule for Normal and Severe Conditions (2001-2002 Models)

Listed by Maintenance Item (cont'd)

Service at the indicated distance or time, whichever comes first.	miles x 1000	3.75	7.5	11.25	15	18.75	22.5	26.25	30	33.75	37.5
	km x 1000	6	12	18	24	30	36	42	48	54	60
	years	–	1/2	–	1	–	1 1/2	–	2	–	2 1/2
Inspect front and rear brakes			○		●		○		●		○
Replace brake fluid		Every 3 years									
Check parking brake adjustment					●				●		
Replace air conditioning filter NOTE 2									●		
Lubricate locks, hinges, and latches					○				○		
Rotate tires (Check tire inflation and condition at least once a month)			●		●		●		●		●
Inspect tie-rod ends, steering gearbox, and boots			○		●		○		●		○
Inspect suspension components			○		●		○		●		○
Inspect driveshaft boots			○		●		○		●		○
Inspect brake hoses and lines (including ABS)					●				●		
Inspect all fluid levels and condition of fluids					●				●		
Inspect cooling system hoses and connections					●				●		
Inspect exhaust system*					●				●		
Inspect fuel lines and connections*					●				●		
Check lights and controls					○				○		
Inspect vehicle underbody					○				○		

BACK

41.25	45	48.75	52.5	56.25	60	63.75	67.5	71.25	75	78.75	82.5	86.25	90	93.75	97.5	101.25	105	108.75	112.5	116.25	120
66	72	78	84	90	96	102	108	114	120	126	132	138	144	150	156	162	168	175	181	187	193
—	3	—	3 1/2	—	4	—	4 1/2	—	5	—	5 1/2	—	6	—	6 1/2	—	7	—	7 1/2	—	8
	●		○		●		○		●		○		●		○		●		○		●
Every 3 years																					
	●				●				●				●				●				●
					●								●								●
	○				○				○				○				○				○
	●		●		●		●		●		●		●		●		●		●		●
	●		○		●		○		●		○		●		○		●		○		●
	●		○		●		○		●		○		●		○		●		○		●
	●		○		●		○		●		○		●		○		●		○		●
	●				●				●				●				●				●
	●				●				●				●				●				●
	●				●				●				●				●				●
	●				●				●				●				●				●
	●				●				●				●				●				●
	○				○				○				○				○				○
	○				○				○				○				○				○

NOTE:

1 If the vehicle is regularly driven in very hot or cold weather, over 110°F (43°C) or under −20°F (−29°C), replace this belt every 60,000 miles; If not, replace it at 105,000 miles.

2 Replace the dust and pollen filter every 15,000 miles if the vehicle is driven mostly where air has a high concentration of soot from industry and diesel-powered vehicle; also replace it anytime airflow is less than usual.

* According to state and federal regulations, failure to do the maintenance items marked with an asterisk (*) will not void customer's emissions warranties. However, Honda recommends that all maintenance services be done at the recommended interval to ensure long-term reliability.

BACK

Engine Electrical

Engine Electrical
Special Tools 4-2

Starting System
Component Location Index 4-3
Circuit Diagram 4-4
Starter Circuit Troubleshooting 4-5
Clutch Interlock Switch Test 4-6
Starter Solenoid Test 4-7
Starter Performance Test 4-8
Starter Replacement 4-9
Starter Overhaul 4-10

Ignition System
Component Location Index 4-17
Circuit Diagram 4-18
Ignition Timing Inspection 4-19
Distributor Replacement 4-19
Distributor Overhaul 4-21
Ignition Control Module (ICM) Input Test 4-23
Ignition Coil Test 4-24
Ignition Wire Inspection and Test 4-25
Spark Plug Inspection 4-26

Charging System
Component Location Index 4-27
Circuit Diagram 4-28
Charging Circuit Troubleshooting 4-29
Alternator Replacement 4-32
Alternator Overhaul 4-33
Alternator-A/C Compressor Belt Inspection and Adjustment 4-39
Alternator Belt Inspection and Adjustment 4-40

Cruise Control
Component Location Index 4-41
Circuit Diagram 4-42
Symptom Troubleshooting Index 4-43
Cruise Control Communication Circuit Troubleshooting (A/T) 4-45
Control Unit Input Test 4-46
Main Switch Test/Replacement 4-48
Set/Resume/Cancel Switch Test/Replacement 4-48
Clutch Pedal Position Switch Test 4-49
Brake Pedal Position Switch Test 4-49
Actuator Solenoid Test 4-50
Actuator Test 4-51
Actuator/Solenoid/Cable Replacement 4-52
Actuator Cable Adjustment 4-54

Engine Mount Control System
Component Location Index 4-55
Circuit Diagram 4-56
Troubleshooting 4-57

Special Tools

Number	Tool Number	Description	Qty
①	A973X-041-XXXXX	Vacuum Pump/Gauge, 0 – 30 in.Hg	1
*②	07JGG-001010A	Belt Tension Gauge	1
③	07746-0010400	Driver Attachment, 52 x 55 mm	1
④	07749-0010000	Driver	1

*Included in the Belt Tension Gauge Set, T/N 07JGG – 001000A

①

②

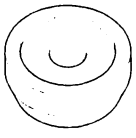

③

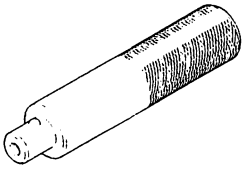

④

BACK

Component Location Index

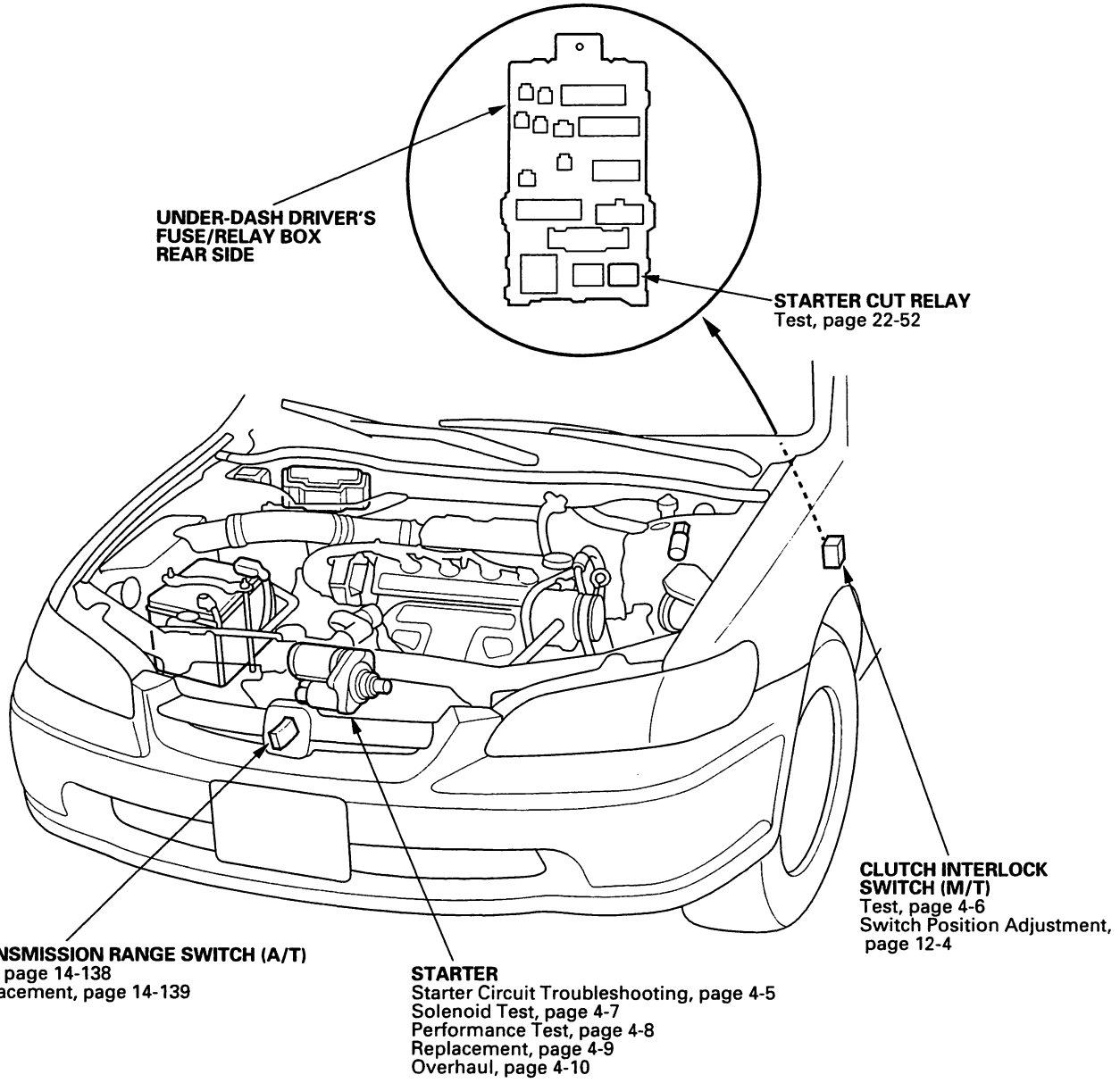

Starting System

Circuit Diagram

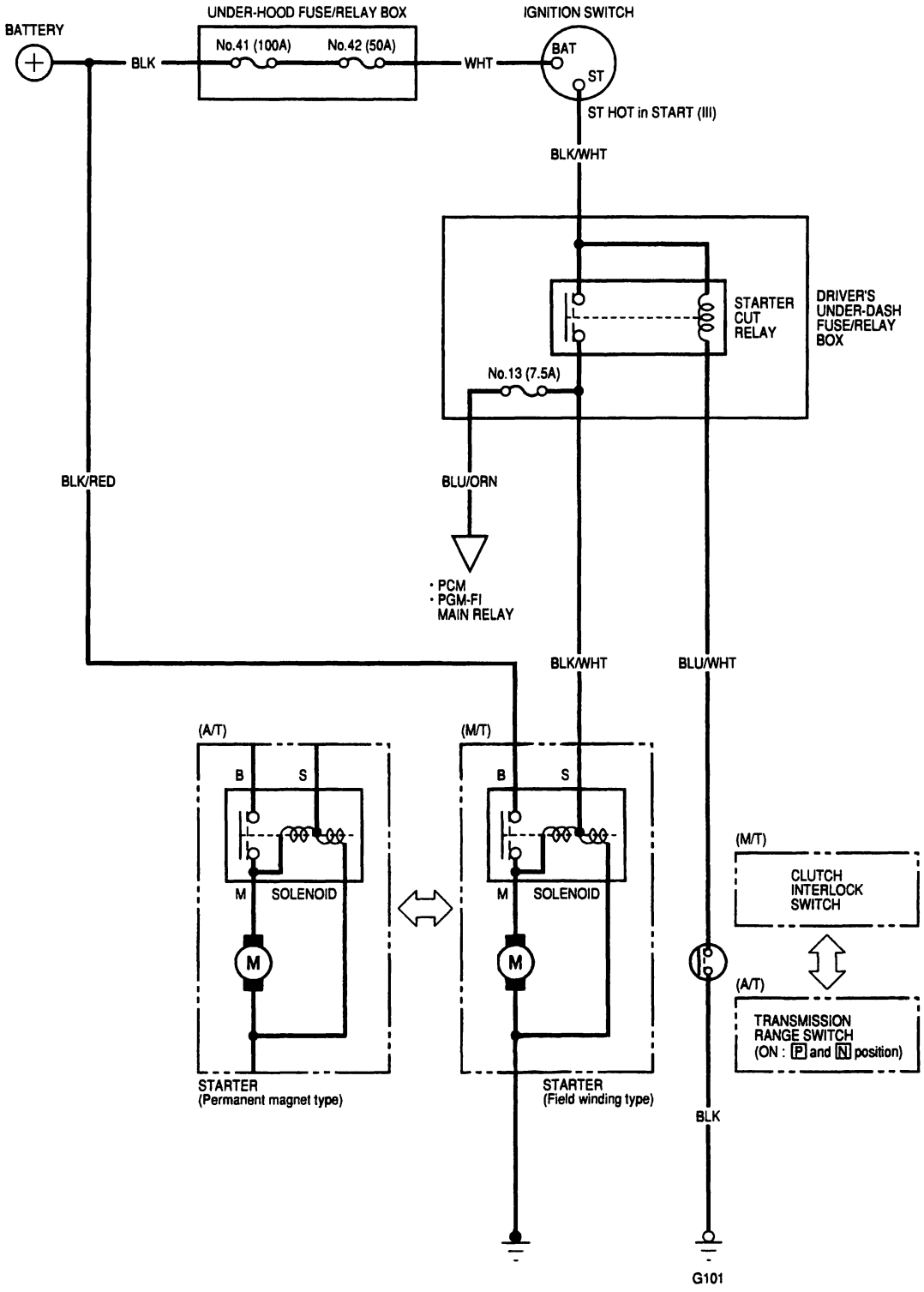

BACK

Starter Circuit Troubleshooting

NOTE:
- Air temperature must be between 59° and 100°F (15° and 38°C) during this procedure.
- After this test, or any subsequent repair, reset the ECM/PCM to clear any codes (see page 11-3).
- The battery must be in good condition and fully charged.

Recommended Procedure:
- Use a starter system tester.
- Connect and operate the equipment in accordance with the manufacturer's instructions.

Alternate Procedure

1. Hook up the following equipment:
   - Ammeter, 0 – 400 A
   - Voltmeter, 0 – 20 V (accurate within 0.1 volt)
   - Tachometer, 0 – 1200 rpm

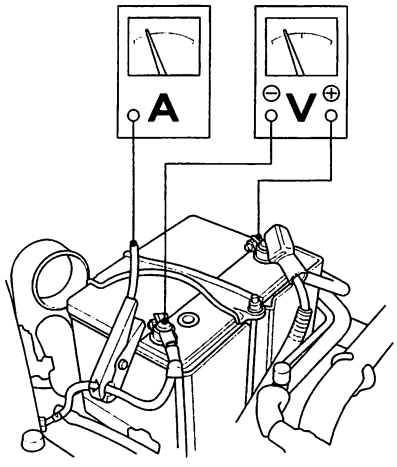

2. Remove the No. 46 (15A) fuse from the under-dash fuse/relay box.

3. With the shift lever in N or P (A/T), or the clutch pedal depressed (M/T), turn the ignition switch to start (III).

   Did the starter crank the engine normally?

   YES – The starting system is OK. ■

   NO – If the starter will not crank the engine at all, go to step 4. If it cranks the engine erratically or too slowly, go to step 7. If it won't disengage from the flywheel or torque converter ring gear when you release the key, check for the following until you find the cause.

   - Solenoid plunger and switch malfunction
   - Dirty drive gear or damaged overrunning clutch

4. Check the battery condition. Check electrical connections at the battery, the negative battery cable to body, engine ground cables, and the starter for looseness and corrosion. Then try starting the engine again.

   Did the starter crank the engine?

   YES – Repairing the loose connection fixed the problem. The starting system is OK. ■

   NO – Go to step 5.

5. Make sure the transmission is in neutral, then disconnect the BLK/WHT wire (A) from the starter solenoid (B). Connect a jumper wire from the battery positive terminal to the solenoid terminal.

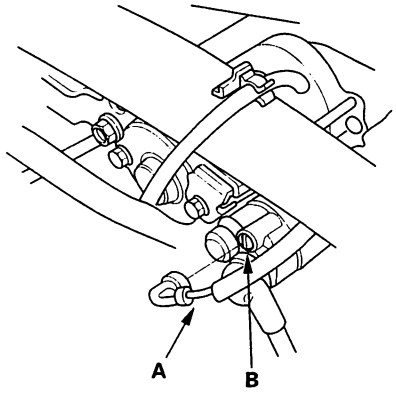

   Did the starter crank the engine?

   YES – Go to step 6.

   NO – Remove the starter and repair or replace as necessary.

6. Check the following items in the order listed until you find the open circuit.

   - Check the BLK/WHT wire and connectors between the driver's under-dash fuse/relay box and the ignition switch, and between the driver's under dash fuse/relay box and the starter.
   - Check the ignition switch (see page 22-56).
   - Check the transmission range switch and connector (A/T) or the clutch interlock switch (see page 4-6) and connector(M/T).
   - Substitute a known-good starter relay.

(cont'd)

Starter Circuit Troubleshooting (cont'd)

7. Check the engine speed while cranking the engine.

   Is the engine speed above 100 rpm?

   YES—Go to step 8.

   NO—Replace the starter, or remove and disassemble the starter, and check for the following until you find the cause.

   - Excessively worn starter brushes
   - Open circuit in commutator brushes
   - Dirty or damaged helical spline or drive gear
   - Faulty drive gear clutch

8. Check the cranking voltage and current draw.

   Is cranking voltage no less than 8.5 volts (with A/T) or 8.0 volts (with M/T), and current draw no more than 380 amps (with A/T) or 280 amps (with M/T)?

   YES—Go to step 9.

   NO—Replace the starter, or remove and disassemble the starter, and check for the following until you find the cause.

   - Open circuit in starter armature commutator segments
   - Starter armature dragging
   - Shorted armature winding
   - Excessive drag in engine

9. Remove the starter and inspect its drive gear and the flywheel or torque converter ring gear for damage. Replace any damaged parts.■

Clutch Interlock Switch Test

1. Disconnect the clutch interlock switch 2P connector.

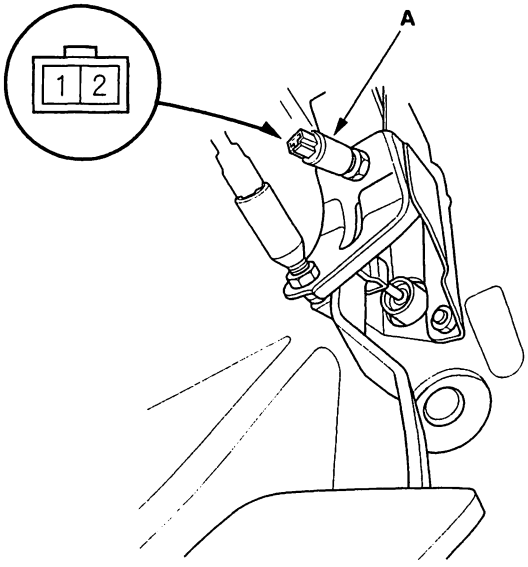

2. Remove the clutch interlock switch (A).

3. Check for continuity between the terminals according to the table.

Terminal / Clutch Interlock Switch	1	2
PRESSED	○———	———○
RELEASED		

4. If necessary, replace the switch or adjust the clutch padal height (see page 12-4).

BACK

Starter Solenoid Test

1. Check the hold-in coil for continuity between the S terminal and the armature housing (ground). There should be continuity.

   - If there is continuity, go to step 2.
   - If there is no continuity, replace the solenoid.

   M/T:

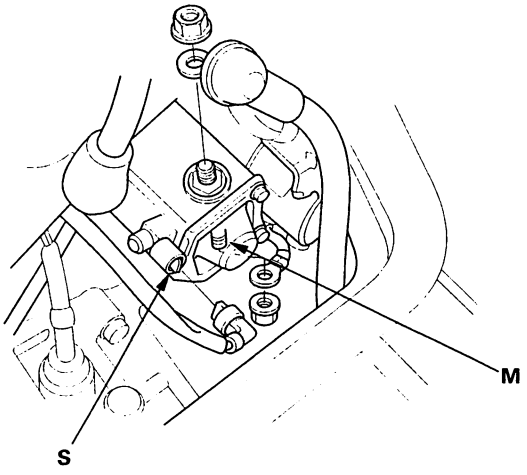

   A/T:

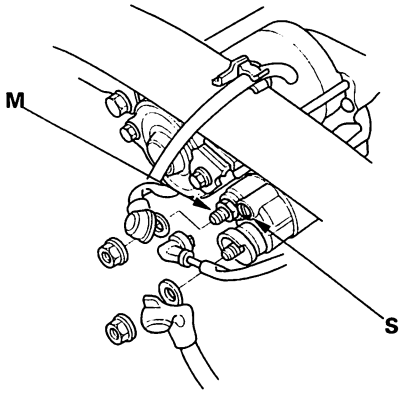

2. Check the pull-in coil for continuity between the S terminal and M terminal. There should be continuity.

   - If there is continuity, the solenoid is OK.
   - If there is no continuity, replace the solenoid.

Starter Performance Test

1. Disconnect the wires from the S terminal and the M terminal.

2. Make the connections as described below using as heavy a wire as possible (preferably equivalent to the wire used for the vehicle). To avoid damaging the starter, never leave the battery connected for more than 10 seconds.

3. Connect the battery as shown. Be sure to disconnect the starter motor wire from the solenoid. If the starter pinion moves out, it is working properly.

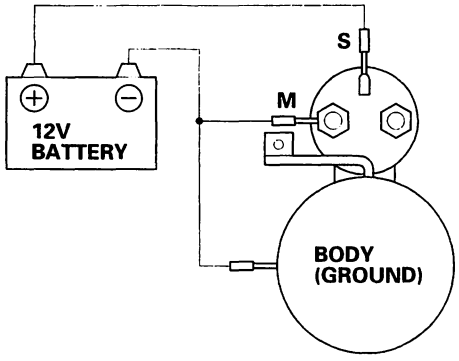

4. Disconnect the battery from the M terminal. If the pinion does not retract, the hold-in coil of the solenoid is working properly.

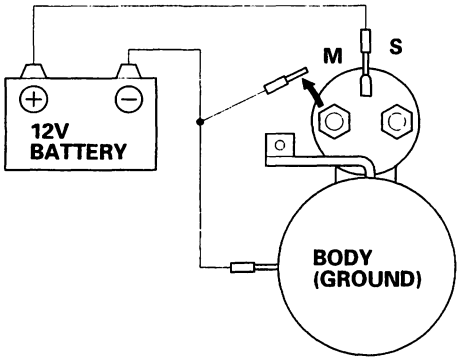

5. Disconnect the battery from the starter body. If the pinion retracts immediately, it is working properly.

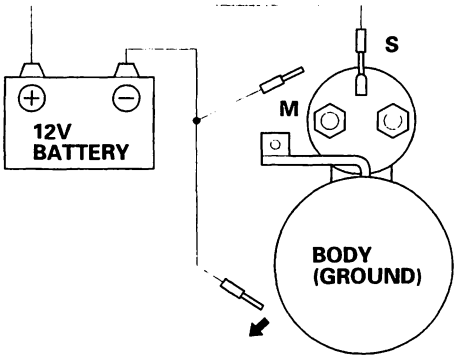

6. Clamp the starter firmly in a vise.

7. Connect the starter to the battery as described in the diagram below, and confirm that the motor starts and keeps rotating.

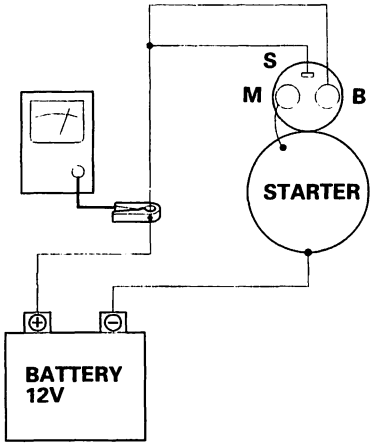

8. If the electric current and motor speed meet the specifications when the battery voltage is at 11.5 V, the starter is working properly.

Specifications:

Maker	Electric current	Motor speed
DENSO	90 A or less	3,000 rpm or more
MITSUBA	80 A or less	2,600 rpm or more

BACK

Starter Replacement

1. Make sure you have the anti-theft code for the radio, then write down the frequencies for the radio's preset buttons.

2. Disconnect the battery negative cable, then disconnect the positive cable.

3. Remove the engine wire harness and radiator lower hose from the bracket on the starter motor.

4. Disconnect the starter cable (A) from the B terminal on the solenoid, then disconnect the BLK/WHT wire (B) from the S terminal.

M/T:

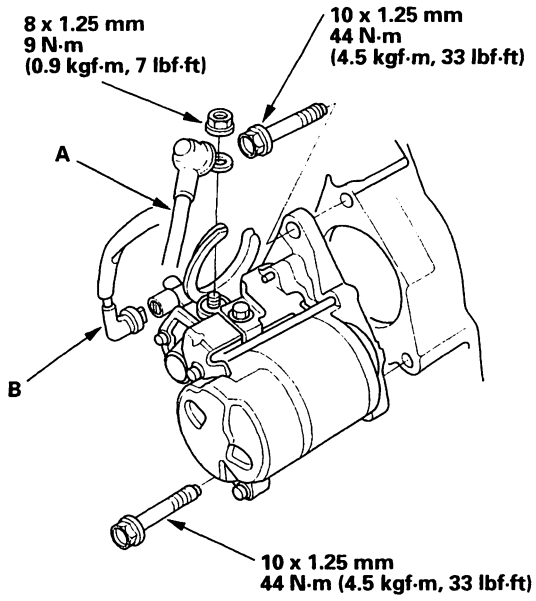

A/T:

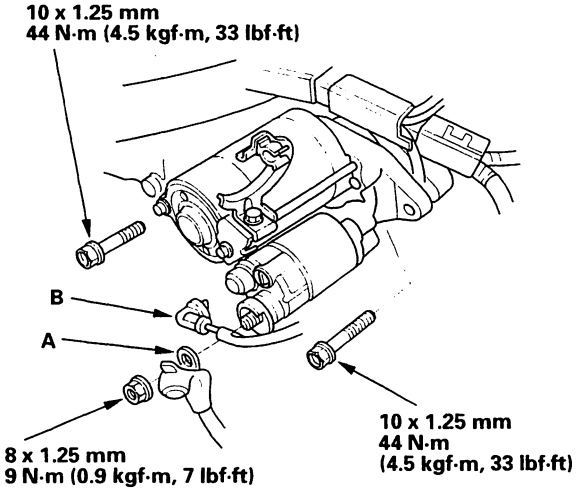

5. Remove the two bolts holding the starter, then remove the starter.

6. Install the stater in the reverse order of removal. Make sure the crimped side of the ring terminal (A) is facing out.

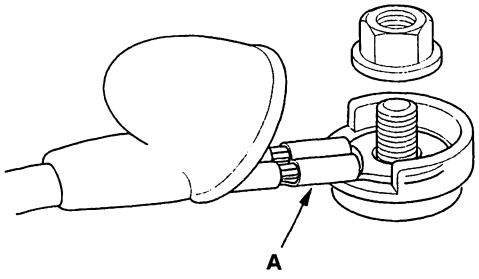

7. Connect the battery positive cable and negative cable to the battery.

8. Enter the anti-theft code for the radio, then enter the customer's radio station presets.

9. Retest starter performance.

Starter Overhaul

Disassembly/Reassembly - M/T

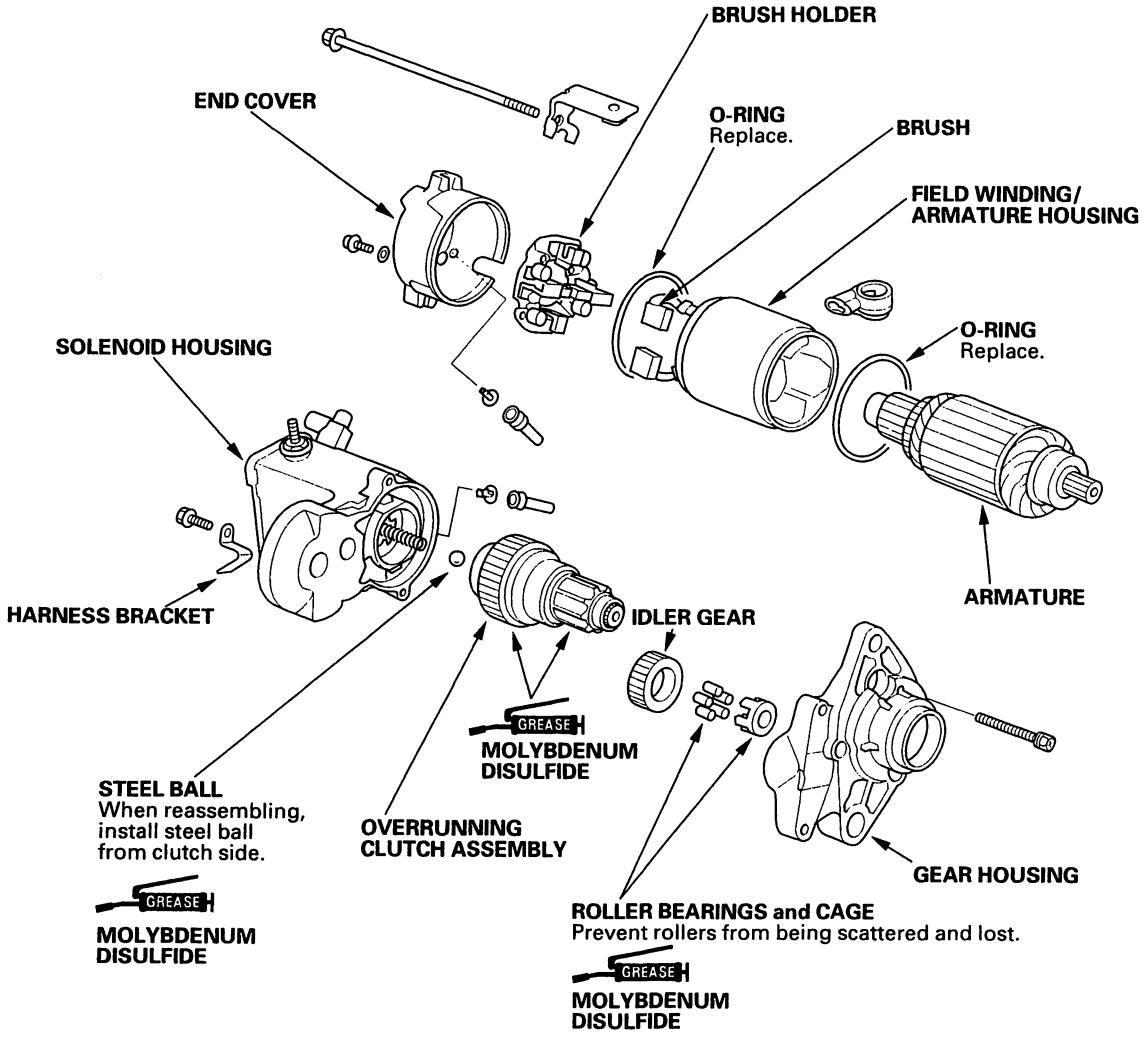

BACK

Disassembly/Reassembly - A/T

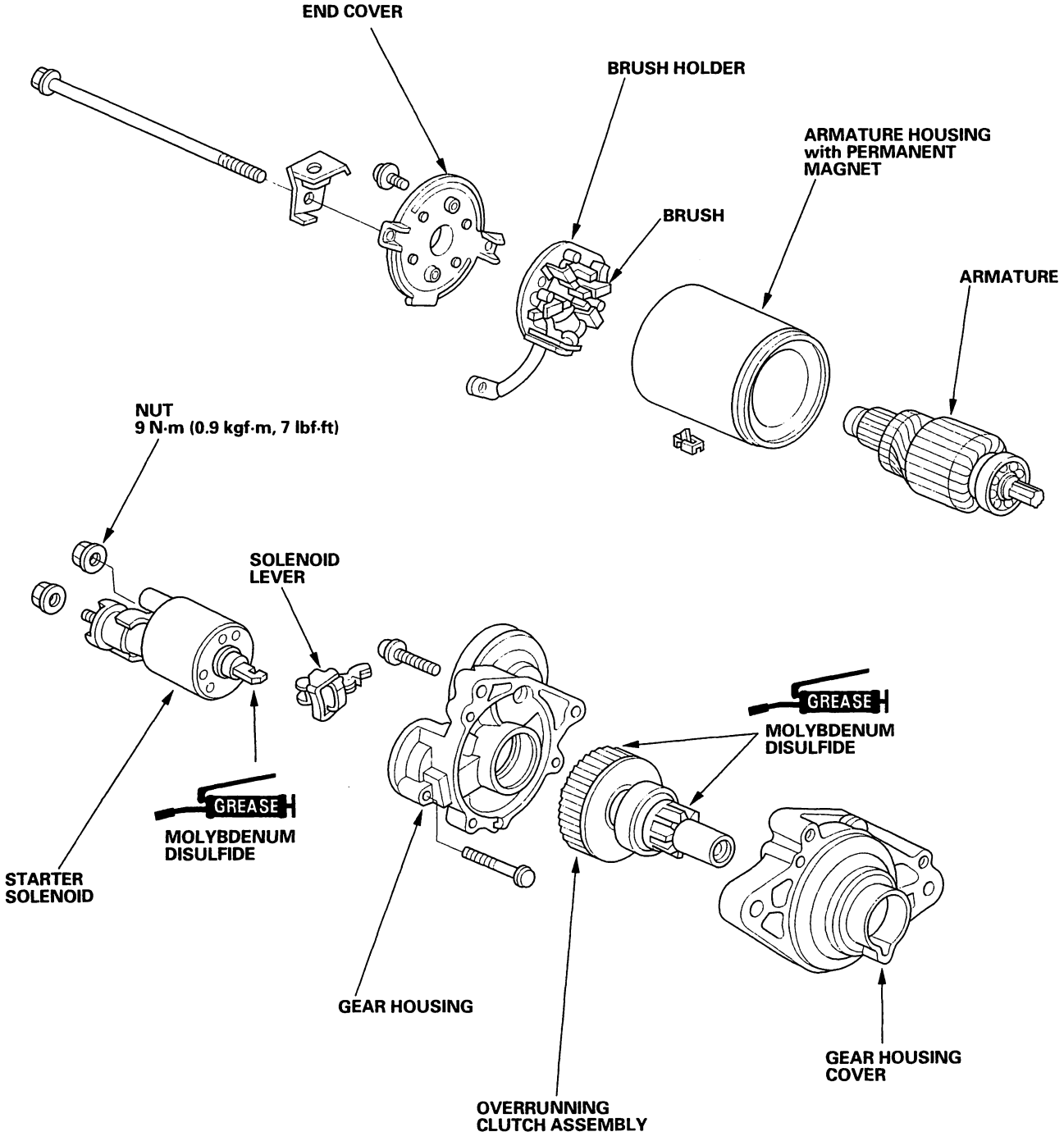

(cont'd)

Starter Overhaul (cont'd)

Armature Inspection and Test

1. Remove the starter (see page 4-9).
2. Disassemble the starter as shown at the beginning of this procedure.
3. Inspect the armature for wear or damage from contact with the permanent magnet. If there is wear or damage, replace the armature.

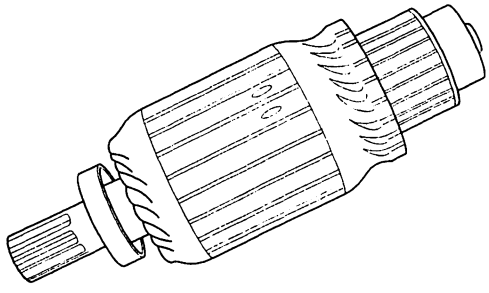

4. Check the commutator (A) surface. If the surface is dirty or burnt, resurface with emery cloth or a lathe within the following specifications, or recondition with # 500 or # 600 sandpaper (B).

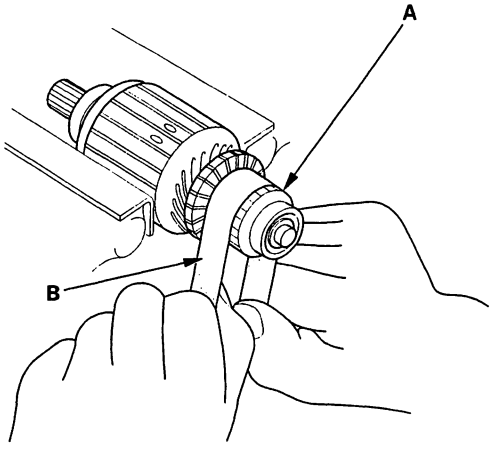

5. Check the commutator diameter. If the diameter is below the service limit, replace the armature.

Commutator Diameter
Standard (New):
M/T: 29.9–30.0 mm (1.177–1.181 in.)
A/T: 28.0 mm–28.1 mm (1.102–1.106 in.)
Service Limit:
M/T: 29.0 mm (1.142 in.)
A/T: 27.5 mm (1.083 in.)

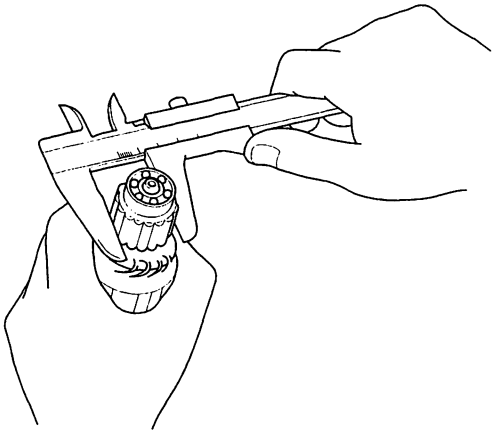

6. Measure the commutator (A) runout.
   - If the commutator runout is within the service limit, check the commutator for carbon dust or brass chips between the segments.
   - If the commutator runout is not within the service limit, replace the armature.

Commutator Runout
Standard (New): 0.02 mm (0.001 in.) max.
Service Limit: 0.05 mm (0.002 in.)

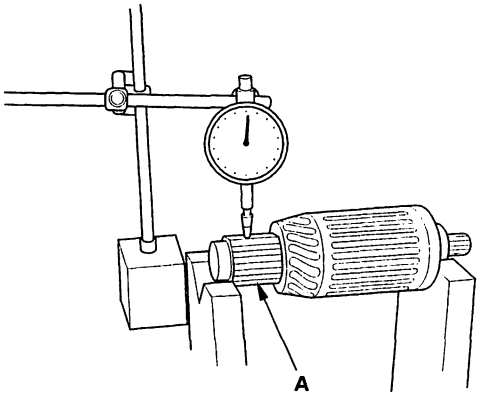

BACK

7. Check the mica depth (A). If the mica is too high (B), undercut the mica with a hacksaw blade to the proper depth. Cut away all the mica (C) between the commutator segments. The undercut should not be too shallow, too narrow, or V-shaped (D).

Commutator Mica Depth
Standard (New):
M/T: 0.5–0.8 mm (0.020–0.031 in.)
A/T: 0.4–0.5 mm (0.016–0.020 in.)
Service Limit:
M/T: 0.2 mm (0.008 in.)
A/T: 0.15 mm (0.006 in.)

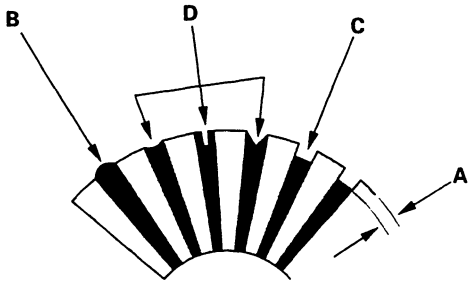

8. Check for continuity between the segments of the commutator. If an open circuit exists between any segments, replace the armature.

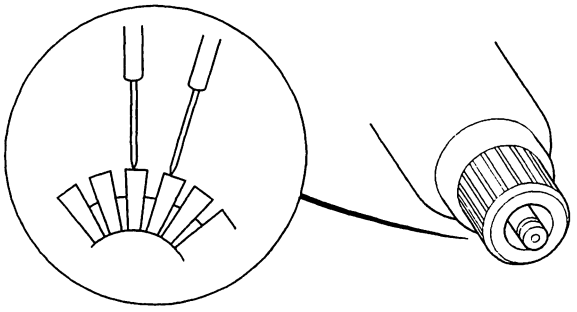

9. Place the armature (A) on an armature tester (B). Hold a hacksaw blade (C) on the armature core. If the blade is attracted to the core or vibrates while the core is turned, the armature is shorted. Replace the armature.

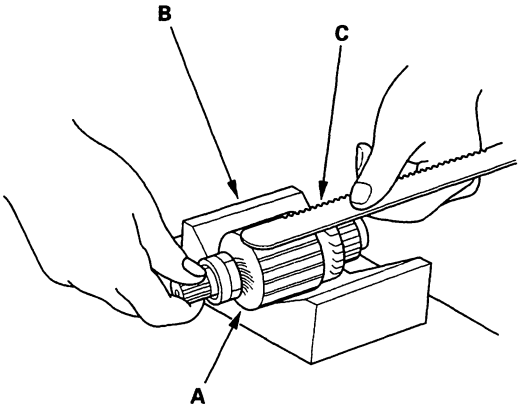

10. Check with an ohmmeter that no continuity exists between the commutator (A) and armature coil core (B), and between the commutator and armature shaft (C). If continuity exists, replace the armature.

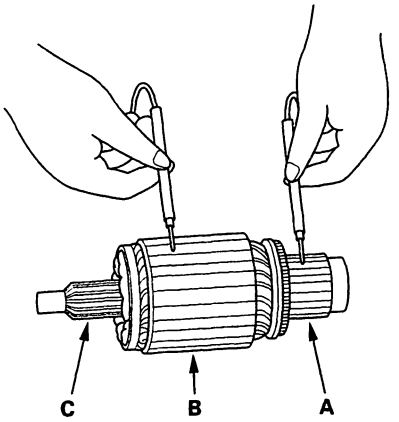

(cont'd)

Starter Overhaul (cont'd)

Starter Brush Inspection

11. Measure the brush length. If it is not within the service limit, replace the armature housing assembly (M/T), or the brush holder assembly (A/T).

    Brush Length
    Standard (New):
    M/T: 15.0–15.5 mm (0.59–0.61 in.)
    A/T: 15.8–16.2 mm (0.62–0.64 in.)
    Service Limit:
    M/T: 10.0 mm (0.39 in.)
    A/T: 11.0 mm (0.43 in.)

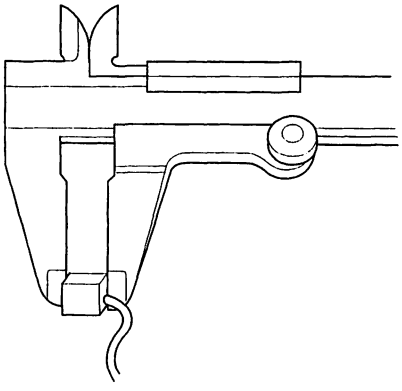

Starter Field Winding Test (M/T)

12. Check for continuity between the brushes (A). If there is no continuity, replace the armature housing (B).

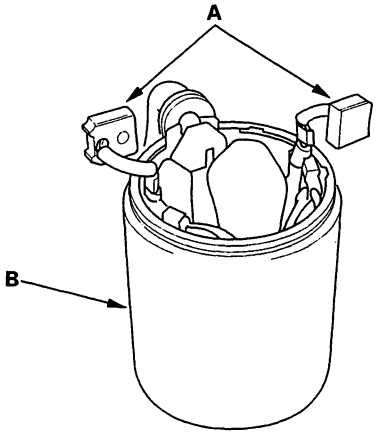

13. Check for continuity between each brush (A) and the armature housing (B). If there is continuity, replace the armature housing.

Starter Brush Holder Test

14. Check that there is no continuity between the (+) brush holder (A) and (–) brush holder (B). If there is no continuity, replace the brush holder assembly.

M/T:

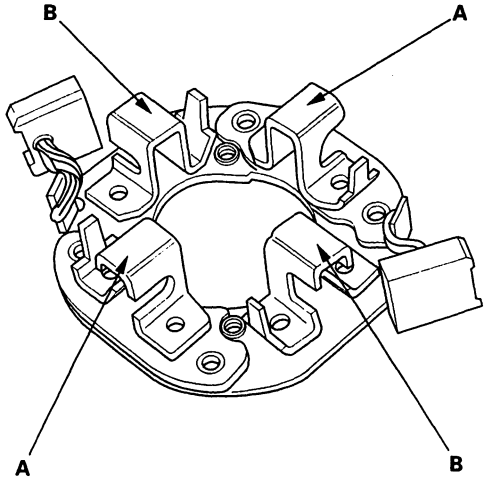

A/T:

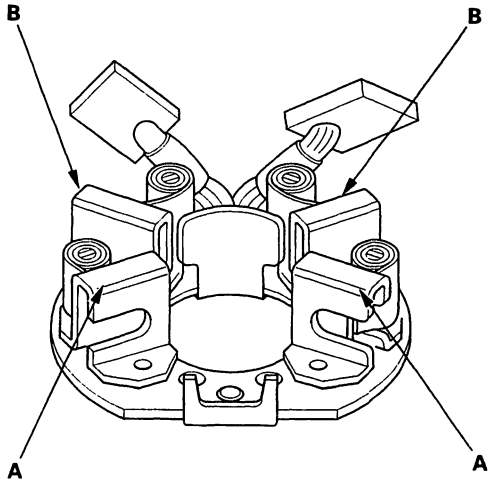

BACK

15. Insert the brush (A) into the brush holder, and bring the brush into contact with the commutator, then attach a spring scale (B) to the spring (C). Measure the spring tension at the moment the spring lifts off the brush. If the spring tension is not within specification, replace the spring.

Spring Tension:
M/T: 13.7 – 19.6 N (1.4 – 2.0 kgf, 3.07 – 4.41 lbf)
A/T: 15.7 – 17.7 N (1.6 – 1.8 kgf, 3.53 – 3.97 lbf)

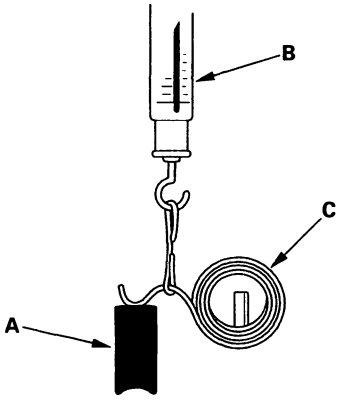

16. Pry back each brush spring with a screwdriver, then position the brush about halfway out of its holder, and release the spring to hold it there.

NOTE: To seat new brushes, slip a strip of # 500 or # 600 sandpaper, with the grit side up, between the commutator and each brush, and smoothly rotate the armature. The contact surface of the brushes will be sanded to the same contour as the commutator.

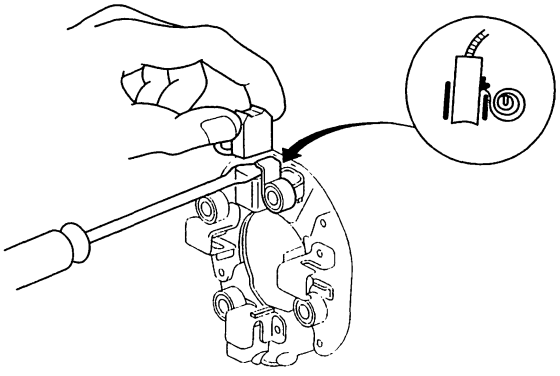

17. Install the armature in the housing, and install the brush holder. Next, pry back each brush spring again, and push the brush down until it seats against the commutator, then release the spring against the end of the brush.

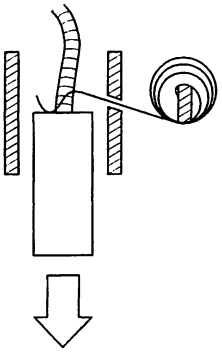

18. Install the starter end cover (A) to retain the brush holder (B).

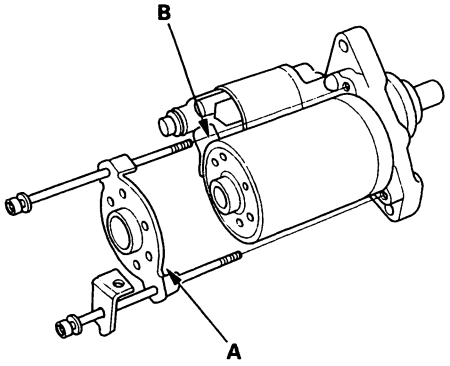

(cont'd)

Starter Overhaul (cont'd)

Solenoid Plunger Inspection (M/T)

19. Check the contact points (A) and the point contacting face (B) of the starter solenoid plunger (C) for burning, pitting or any other defects. If surfaces are rough, recondition them with a strip of #500 or #600 sandpaper.

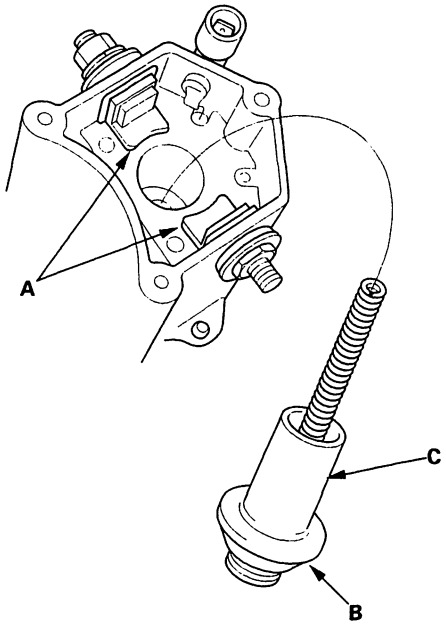

Overrunning Clutch Inspection

20. Slide the overrunning clutch along the shaft. Replace it if it does not slide smoothly.

21. Rotate the overrunning clutch (A) both ways. Does it lock in one direction and rotate smoothly in reverse ? If it does not lock in either direction or it locks in both directions, replace it.

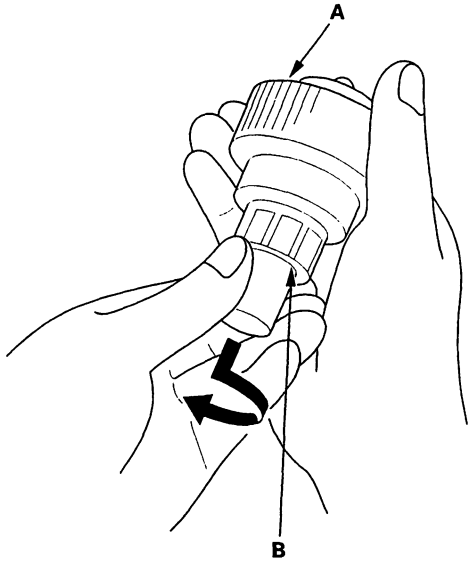

22. If the starter drive gear (B) is worn or damaged, replace the overrunning clutch assembly; the gear is not available separately.

    Check the condition of the flywheel or torque converter ring gear if the starter drive gear teeth are damaged.

23. Reassemble the starter in reverse order of disassembly.

BACK

Component Location Index

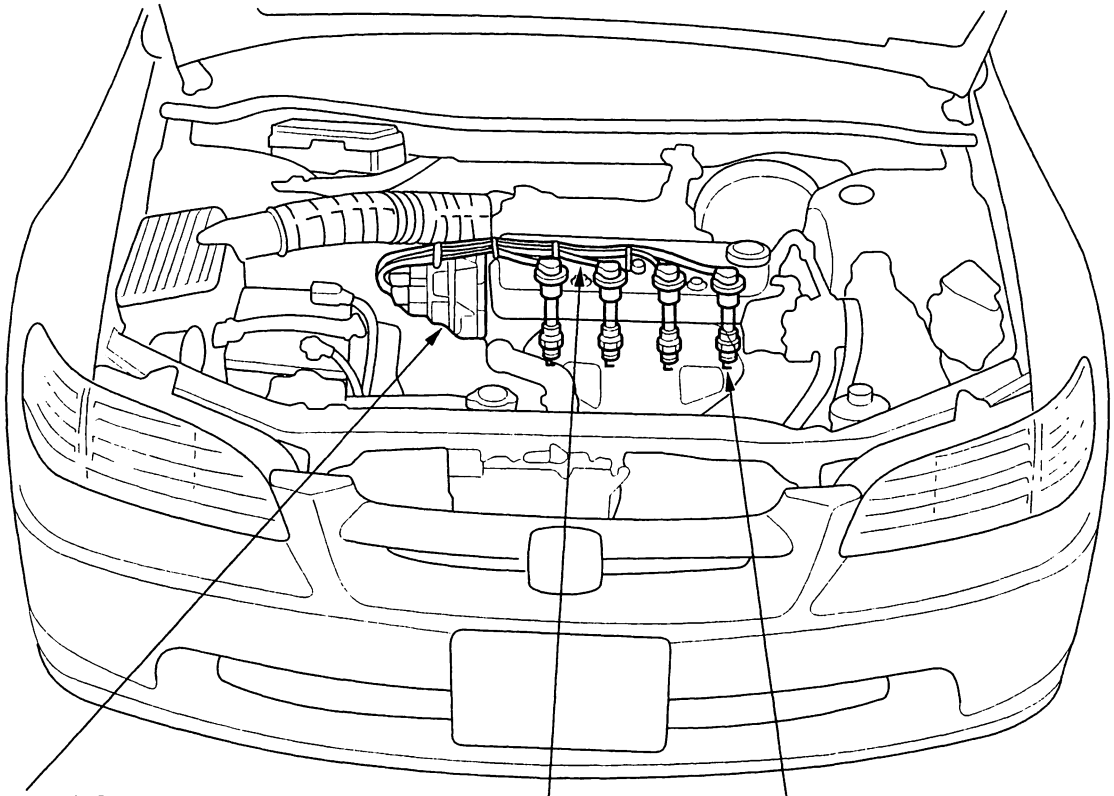

DISTRIBUTOR
Replacement, page 4-19
Overhaul, page 4-21
Ignition Control Module (ICM)
Input Test, page 4-23
Ignition Coil Test, page 4-24
Ignition Timing Inspection, page 4-19

IGNITION WIRES
Inspection and Test, page 4-25

SPARK PLUG
Inspection, page 4-26

Circuit Diagram

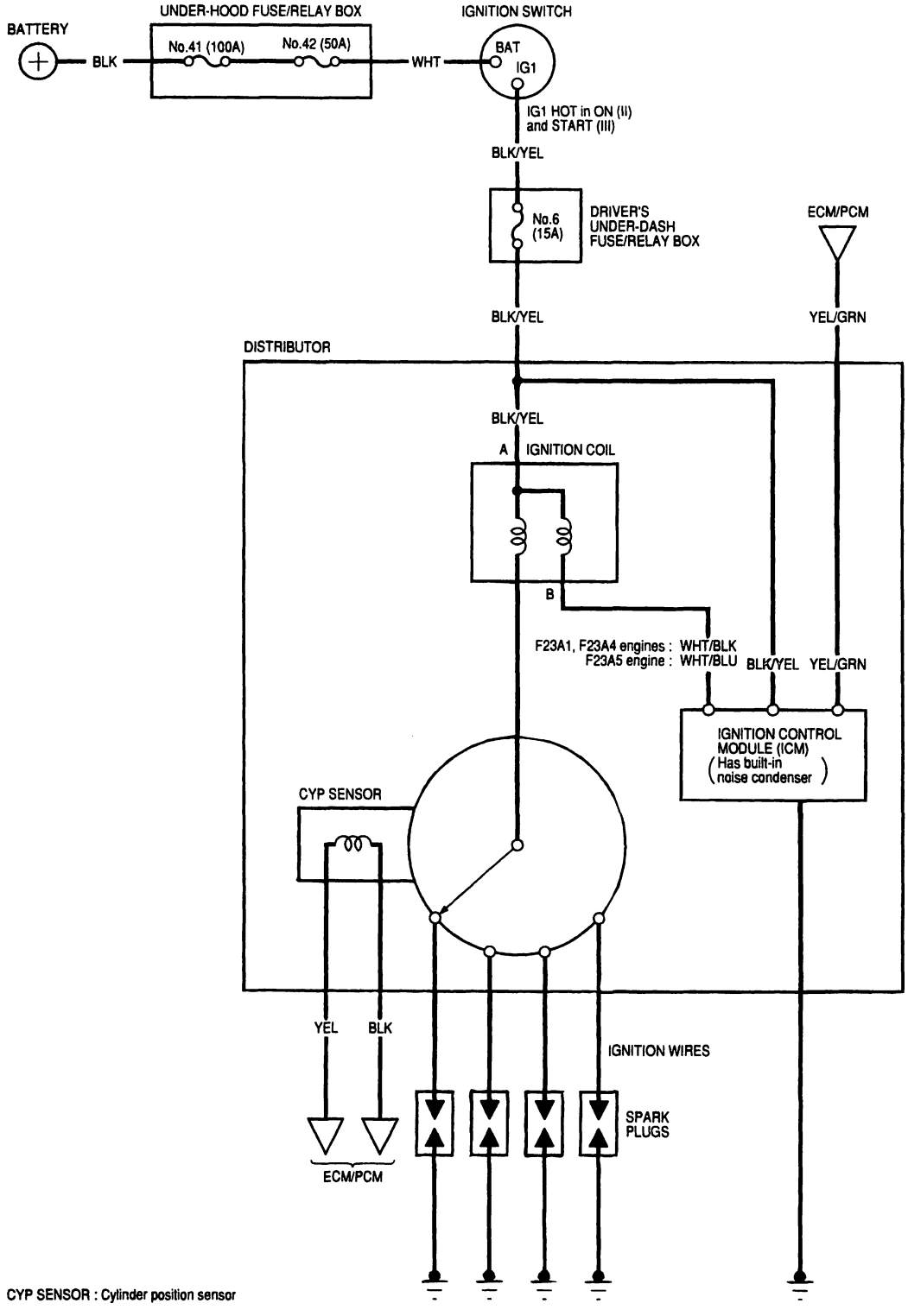

CYP SENSOR : Cylinder position sensor

BACK

Ignition Timing Inspection

1. Check the idle speed, and adjust it if necessary (see page 11-110).

2. Connect the Honda PGM tester to the Data Link Connector (DLC), and follow the tester's prompts in the"SCS" menu (see the Honda PGM Tester Operator's Manual).

3. Start the engine. Hold the engine at 3,000 rpm with no load (A/T in N or P, M/T in neutral) until the radiator fan comes on, then let it idle.

4. Connect the timing light to the No. 1 ignition wire, then point the light toward the pointers (A) on the timing belt cover.Check the ignition timing in no load conditions: headlights, blower fan, rear window defogger, and air conditioner are not operating.

   Ignition Timing:
   M/T: 12° ± 2° BTDC (RED mark (B)) during idling in neutral
   A/T: 12° ± 2° BTDC (RED mark (B)) during idling in P or N

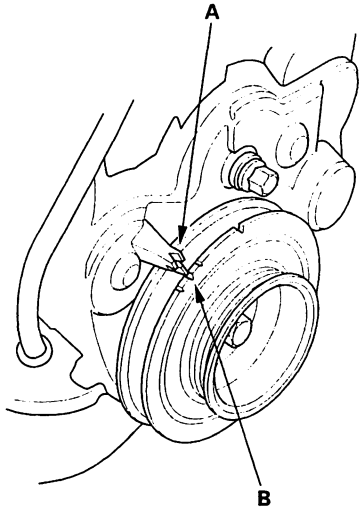

5. If the ignition timing is incorrect, replace the ECM/PCM. (Ignition timing is not adjustable.)

6. Disconnect the Honda PGM Tester and the timing light.

Distributor Replacement

Removal

1. Disconnect the connector(A) from the distributor.

   F23A1, F23A4 engines:

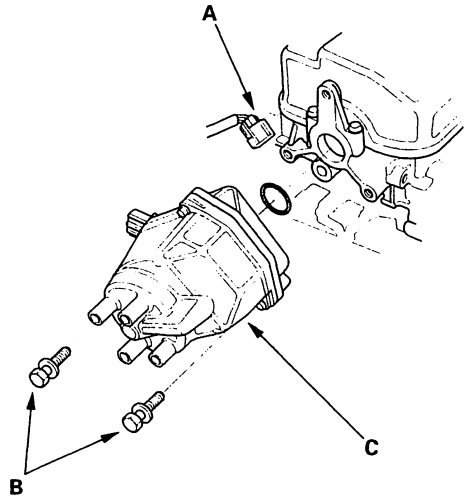

   F23A5 engine:

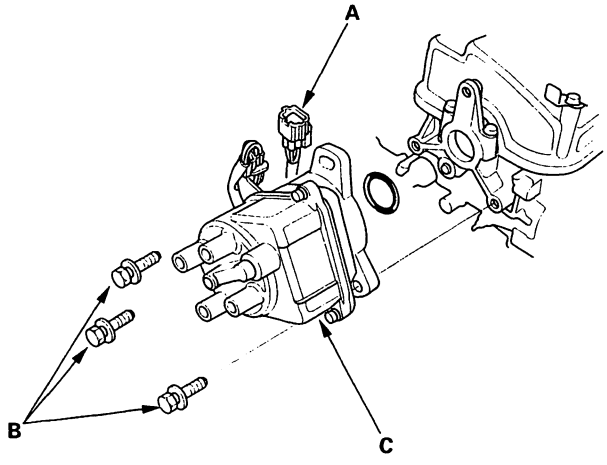

2. Disconnect the ignition wires from the distributor cap.

3. Remove the distributor mounting bolts (B) then remove the distributor (C) from the cylinder head.

(cont'd)

Distributor Replacement (cont'd)

Installation

1. Bring the No.1 piston to compression stroke TDC.
2. Coat a new O-ring (A) with engine oil, then install it.

F23A1, F23A4 engines:

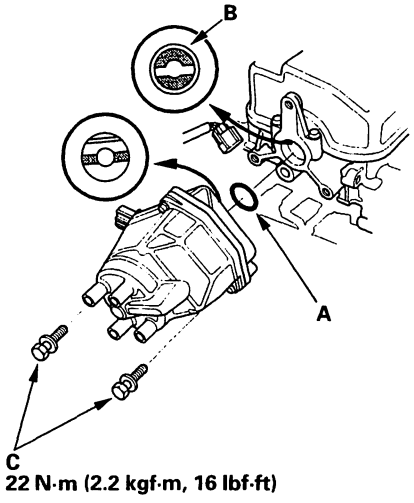

F23A5 engine:

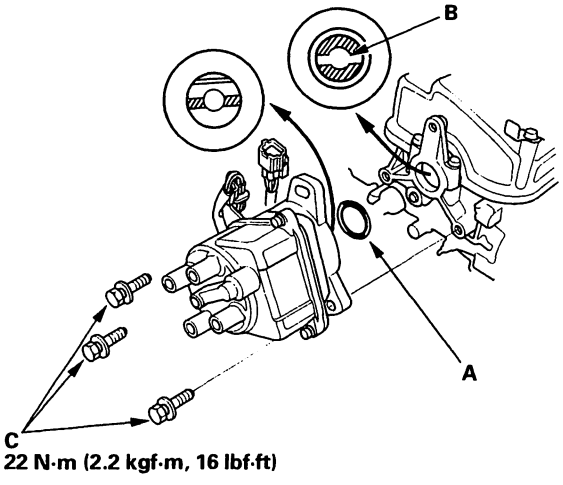

3. Slip the distributor into position.

   NOTE: The lugs on the end of the distributor and their mating grooves in the camshaft end (B) are both offset to eliminate the possibility of installing the distributor 180° out of time.

4. Install the mounting bolts (C), and tighten them.
5. Connect the ignition wires to the distributor cap as shown.

F23A1, F23A4 engines:

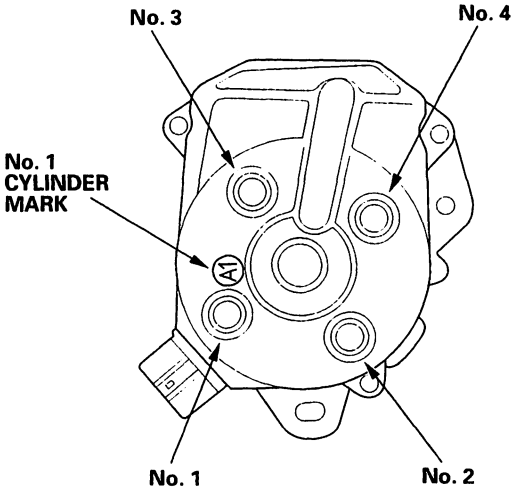

F23A5 engine:

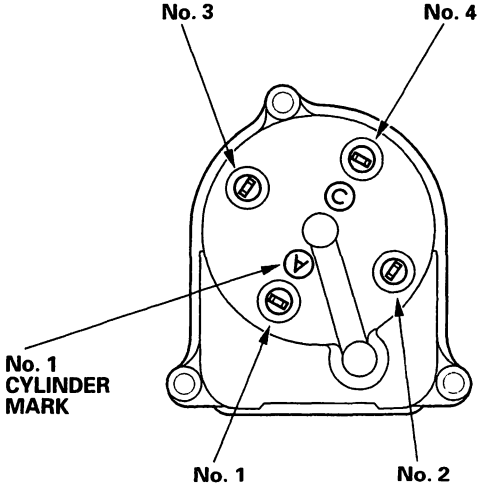

6. Connect the connector to the distributor.
7. Check the ignition timing (see page 4-19).

BACK

Distributor Overhaul - F23A1, F23A4 Engines

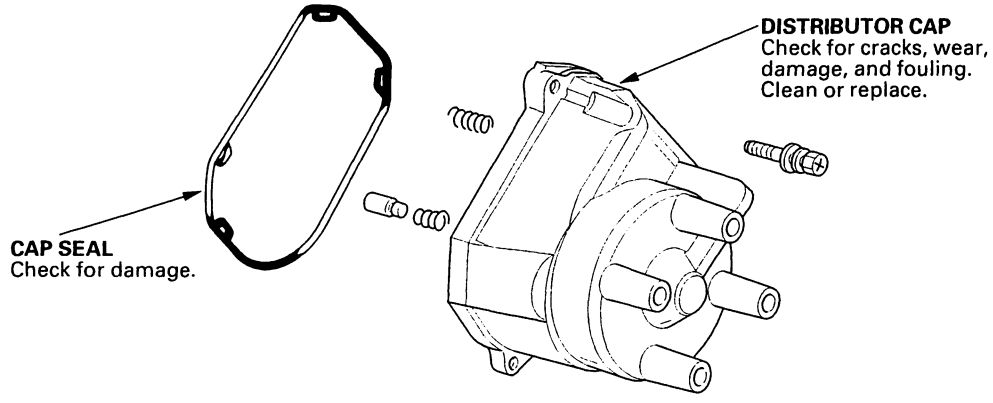

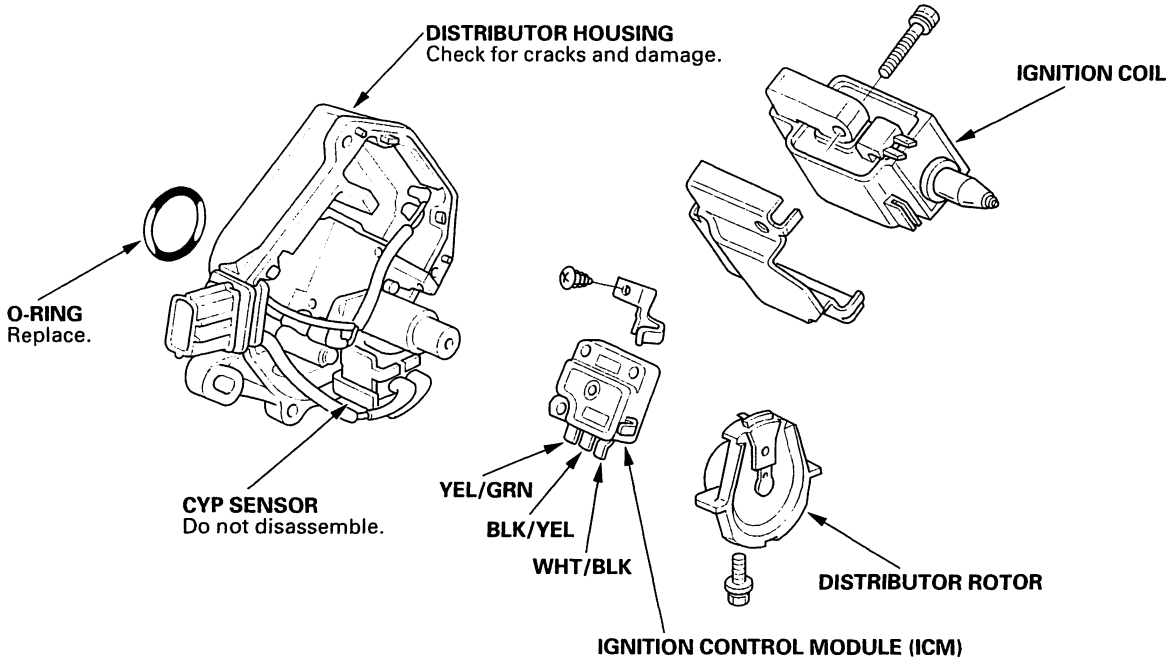

Distributor Overhaul - F23A5 Engine

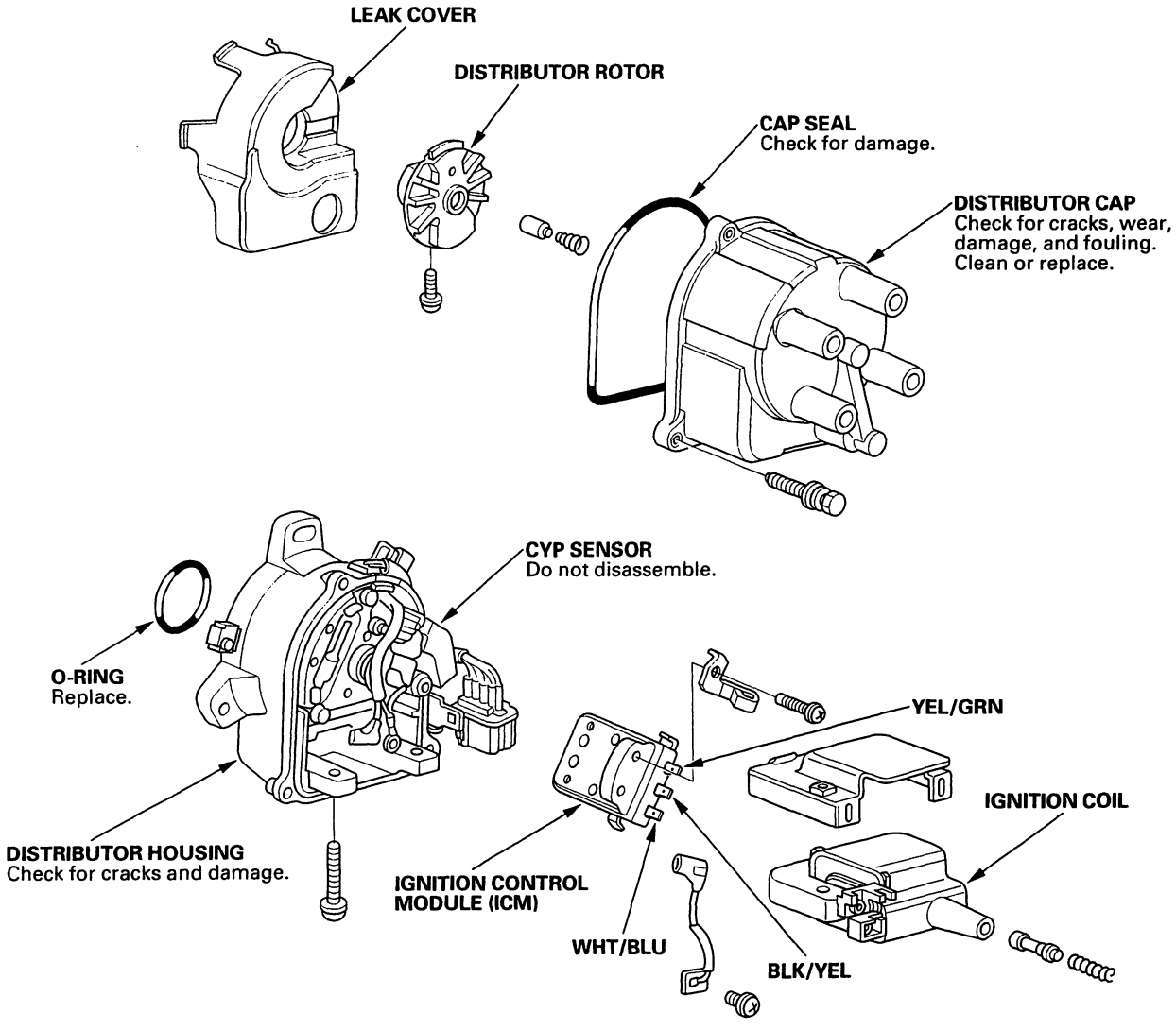

BACK

Ignition Control Module (ICM) Input Test

NOTE:
- If the Malfunction Indicator Lamp (MIL) comes on, refer to the Fuel and Emission System (see page 11-3).
- Perform an input test for the Ignition Control Module (ICM) after finishing the fundamental tests for the ignition system and the fuel and emissions systems.
- The tachometer should operate normally if the ICM is OK.

1. Remove the distributor cap, the distributor rotor, and the leak cover.

2. Disconnect the wires from the ICM (A).

F23A1, F23A4 engines:

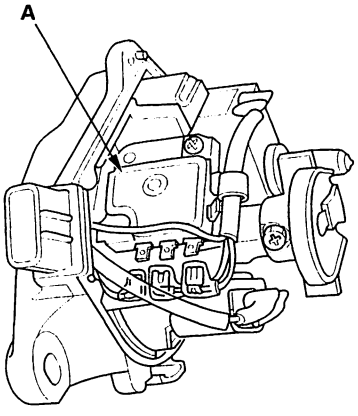

F23A5 engine:

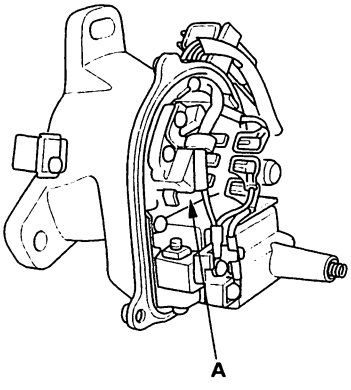

3. Turn the ignition switch ON (II). Check for voltage between the BLK/YEL wire and body ground. There should be battery voltage.

   - If there is no battery voltage, check the BLK/YEL wire between the ignition switch and the ICM.
   - If there is battery voltage, go to step 4.

4. Turn the ignition switch ON (II). Check for voltage between the WHT/BLK (WHT/BLU for the F23A5 engine) wire and body ground. There should be battery voltage.

   - If there is no battery voltage, check:
     - ignition coil.
     - WHT/BLK (WHT/BLU for the F23A5 engine) wire between the ICM and ignition coil.
   - If there is battery voltage, go to step 5.

5. Disconnect the Engine Control Module (ECM)/ Powertrain Control Module (PCM) connector B (25 P), and check for continuity on the YEL/GRN wire between the ICM and ECM/PCM connector terminal B13. There should be continuity.

6. Check for continuity on the YEL/GRN wire to body ground. There should be no continuity.

7. If all the tests are normal, replace the ICM and reconnect the ECM/PCM connector B (25P).

Ignition Coil Test

1. Turn the ignition switch OFF, and remove the distributor cap.

2. Disconnect the BLK/YEL and WHT/BLK (WHT/BLU for the F23A5 engine) wires from terminals A (+) and B (−) respectively.

F23A1, F23A4 engines:

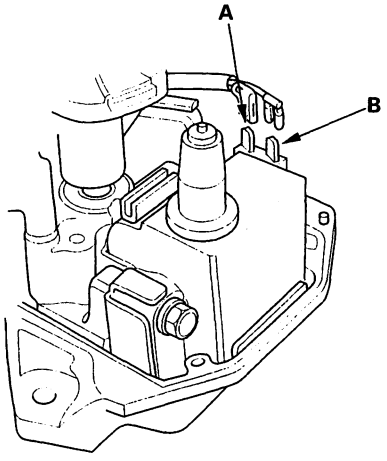

F23A5 engine:

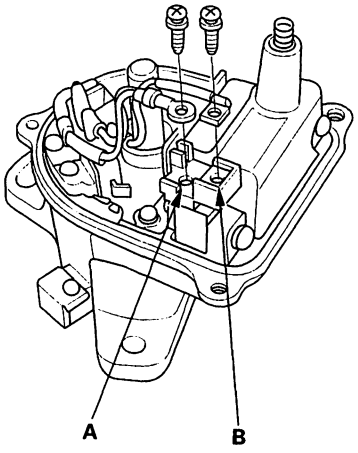

3. Using an ohmmeter, measure resistance between the terminals. Replace the coil if the resistance is not within specifications.

NOTE: Resistance will vary with the coil temperature; specifications are at 68°F (20°C).

Primary Winding Resistance
(Between the A and B terminals):

F23A1, F23A4 engines:	**0.45−0.55 Ω**
F23A5 engine:	**0.63−0.77 Ω**

Secondary Winding Resistance
(Between the A and Secondary Winding terminals)

F23A1, F23A4 engines:	**16.8−25.2 kΩ**
F23A5 engine:	**12.8−19.2 kΩ**

BACK

Ignition Wire Inspection and Test

1. Carefully remove the ignition wires by pulling on the rubber boots. Do not bend the wires; you might break them inside.

2. Check the condition of the ignition wire terminals. If any terminal is corroded, clean it, and if it is broken or distorted, replace the ignition wire.

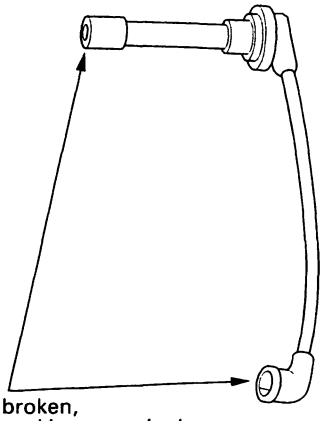

Check for broken, corroded, and bent terminals.

3. Connect ohmmeter probes, and measure resistance while flexing and moving the wire. Do not bend the wires, you might break them inside.

   Ignition Wire Resistance:
   25 kΩ max. at 68°F (20°C)

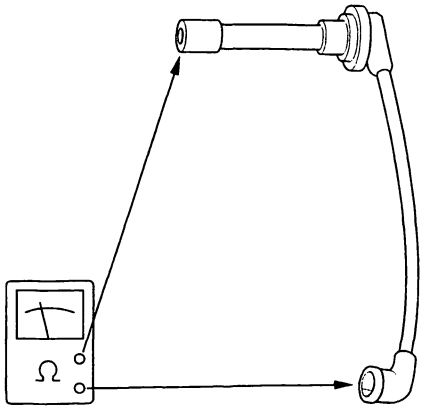

4. If resistance exceeds 25 kΩ, replace the ignition wire.

Spark Plug Inspection

1. Inspect the electrodes and ceramic insulator.

   Burned or worn electrodes may be caused by:
   - Advanced ignition timing
   - Loose spark plug
   - Plug heat range too hot
   - Insufficient cooling

   Fouled plug may be caused by:
   - Retarded ignition timing
   - Oil in combustion chamber
   - Incorrect spark plug gap
   - Plug heat range too cold
   - Excessive idling/low speed running
   - Clogged air cleaner element
   - Deteriorated ignition coil or ignition wires

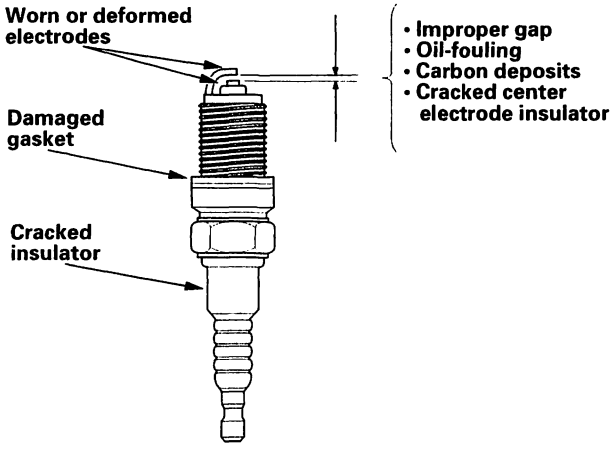

2. Check the electrode gap.

   '98-99 models:
   - Adjust the gap with a suitable gapping tool.

   Electrode Gap
   Standard (New): 1.0 – 1.1 mm (0.039 – 0.043 in.)

   - Replace the plug if the center electrode is rounded (A).

   Spark Plugs
   NGK: ZFR5F-11
   DENSO: KJ16CR-L11

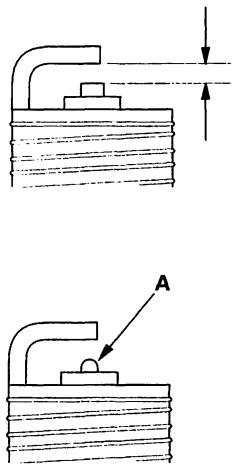

   '00-02 models:
   - Replace the spark plug if the gap is out of specification.

   Electrode Gap
   Standard (New): 1.0 – 1.1 mm (0.039 – 0.043 in.)
   Sercive Limit: 1.3 mm (0.05 in.)
   - Replace the plug if the center electrode is rounded (A).

   Spark Plugs
   NGK: PZFR5F-11
   DENSO: PKJ16CR-L11

3. Apply a small quantity of anti-seize compound to the plug threads, and screw the plugs into the cylinder head finger-tight. Torque them to 18 N·m (1.8 kgf·m, 13 lbf·ft).

BACK

Charging System

Component Location Index

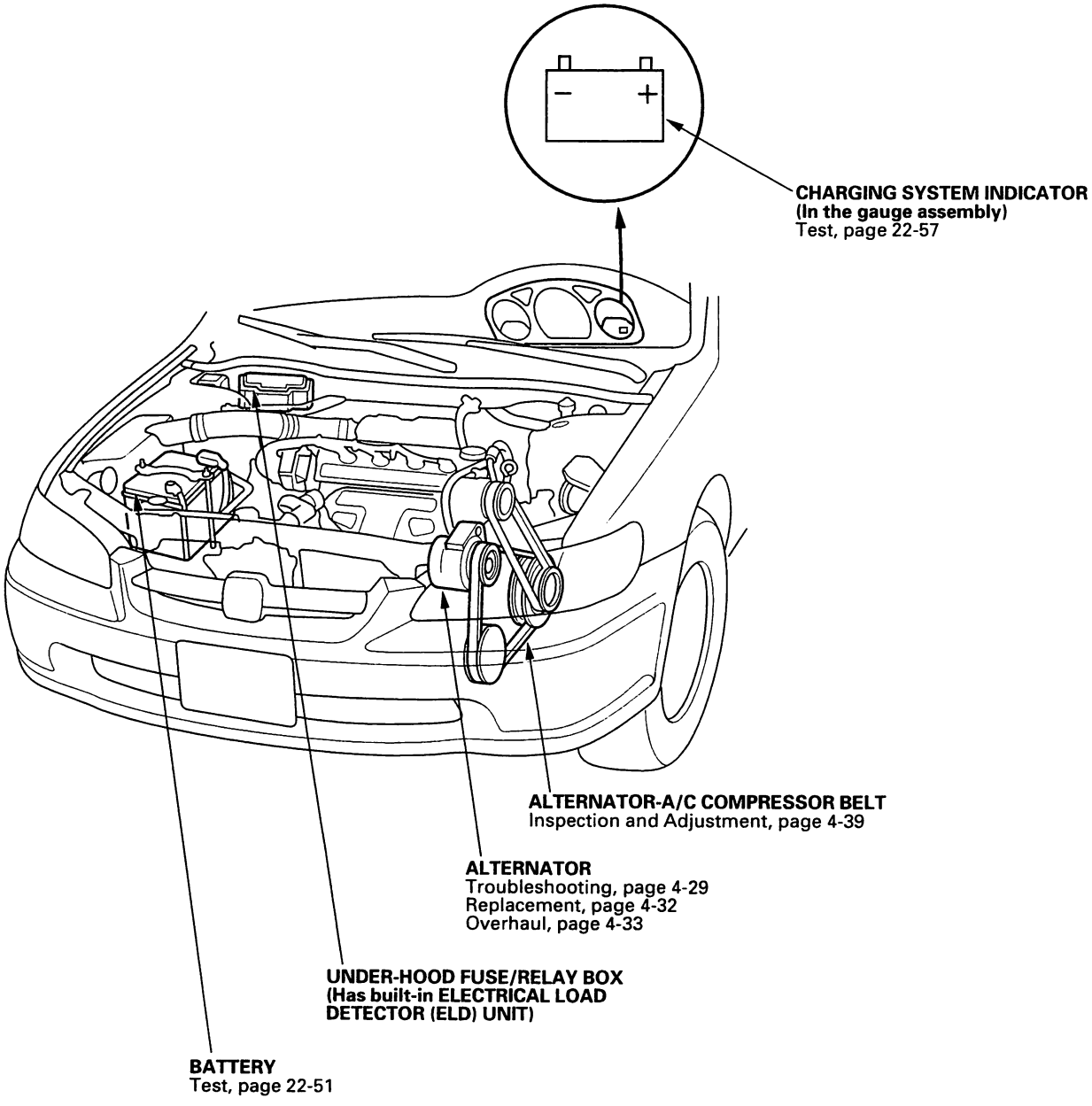

Charging System

Circuit Diagram

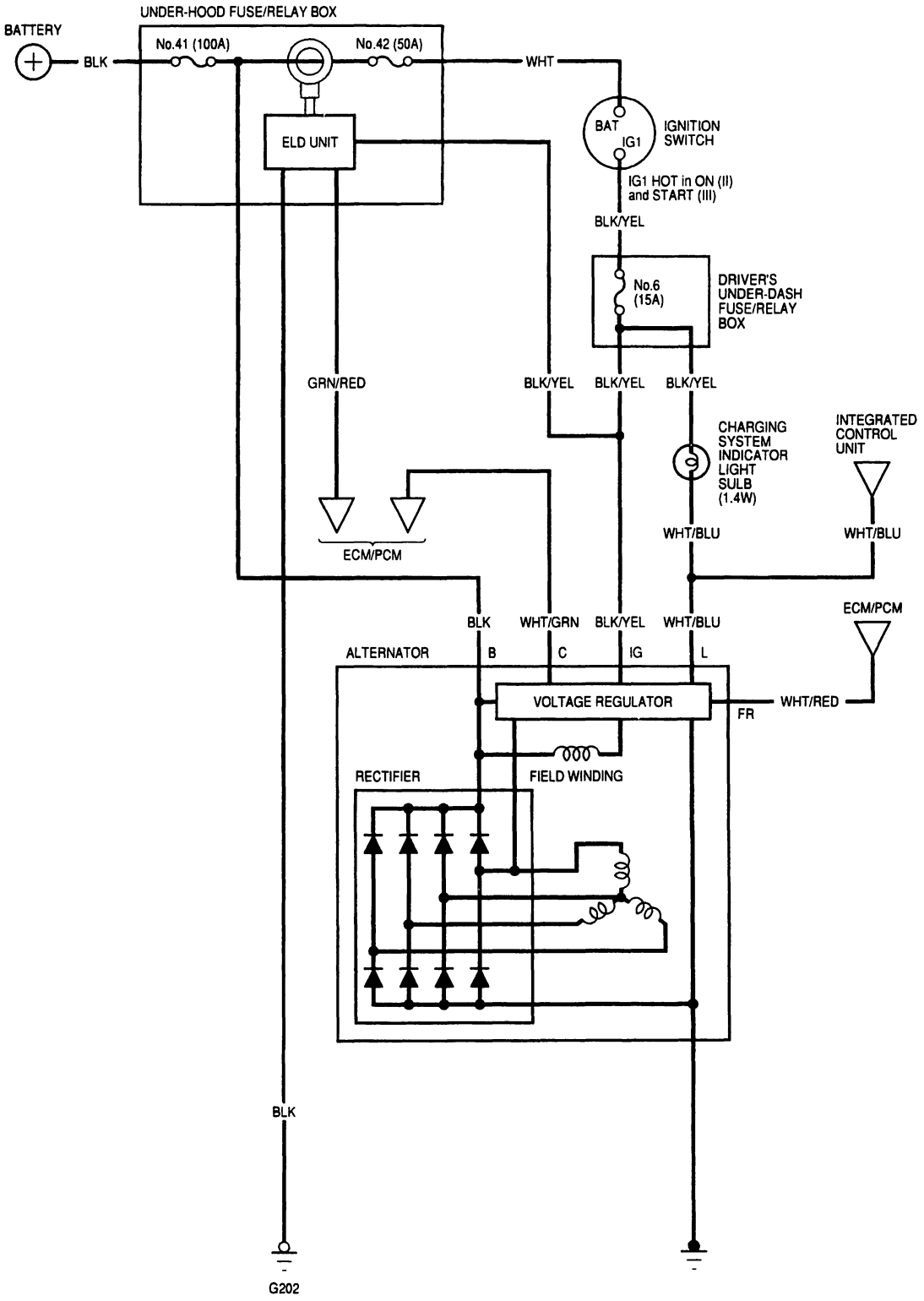

BACK

Charging Circuit Troubleshooting

If the charging system indicator does not come on or does not go off, or the battery is dead or low, test the following items in the order listed below:

Battery (see page 22-57)
Charging system indicator
Alternator/regulator circuit
Alternator control system

Charging System Indicator Test

1. Turn the ignition switch ON (II).

   Does the charging system indicator come on?

   YES – Go to step 2.

   NO – Go to step 6.

2. Start the engine.

   Does the charging system indicator go off?

   YES – Charging system indicator circuit is OK. ■

   NO – Go to step 3.

3. Turn the ignition switch OFF.

4. Disconnect the alternator 4P connector from the alternator.

5. Turn the ignition switch ON (II).

   Does the charging system indicator come on?

   YES – Turn the ignition switch OFF, and repair the short in the WHT/BLU wire. If the WHT/BLU wire is shorted to ground, the voltage regulator in the alternator may be damaged. ■

   NO – Go to step 9.

6. Turn the ignition switch OFF.

7. Disconnect the alternator 4P connector from the alternator.

8. Connect the alternator 4P connector terminal No. 3 to body ground with jumper wire. Turn the ignition switch ON (II).

ALTERNATOR 4P CONNECTOR

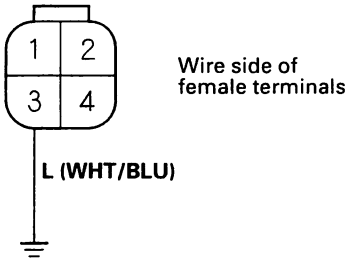

   Does the charging system indicator come on ?

   YES – Go to step 9.

   NO – Turn the ignition switch OFF. Check for a blown No. 6 (15A) fuse and a blown charging system light bulb. If the fuse and bulb are OK, repair the open in the BLK/YEL and WHT/BLU wire to the indicator bulb. ■

9. Measure the voltage at the No. 1 terminal of the alternator 4P connector with the ignition switch ON (II).

ALTERNATOR 4P CONNECTOR

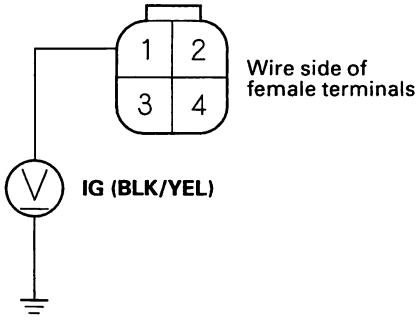

   Is there battery voltage?

   YES – Go to alternator and regulator circuit test. ■

   NO – Repair open in the BLK/YEL wire between the alternator and the under-dash driver's fuse relay box. ■

(cont'd)

Charging Circuit Troubleshooting (cont'd)

Alternator and Regulator Circuit Test

1. Be sure the battery is sufficiently charged and in good condition (see page 22-51).

2. Connect a VAT-40 (or equivalent tester), and turn the selector switch to position 1 (starting).

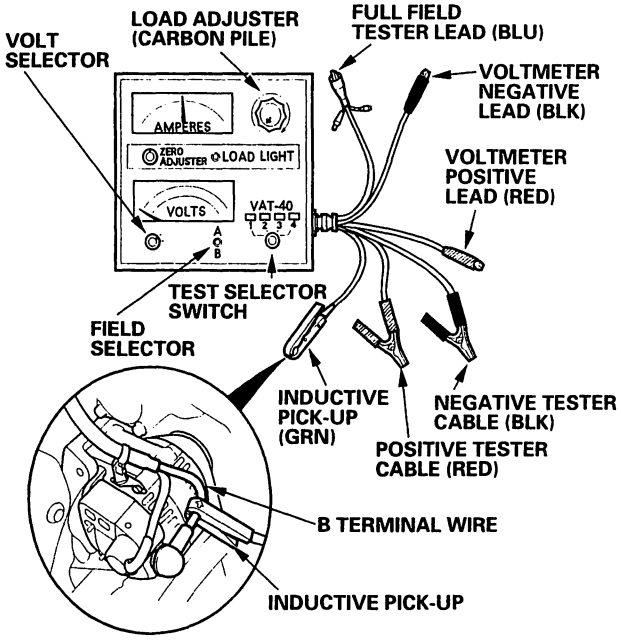

3. Shift to neutral or park, and start the engine. Hold the engine at 3,000 rpm, with no load until the radiator fan comes on, then let it idle.

4. Raise the engine speed to 2,000 rpm, and hold it there.

   Is the voltage over 15.1 V?

   YES – Repair the voltage regulator. ■

   NO – Go to step 5.

5. Release the accelerator pedal, and let the engine idle.

6. Make sure all accessories are turned off. Turn the selector switch to position 2 (charging).

7. Remove the inductive pick-up, and zero the ammeter.

8. Place the inductive pick-up over the B terminal wire of the alternator so that the arrow points away from the alternator.

9. Raise the engine speed to 2,000 rpm, and hold it there.

   Is the voltage less than 13.5 V?

   YES – Repair the alternator components (see page 4-33). ■

   NO – Go to step 10.

10. Apply a load with the VAT-40 until the battery voltage drops to between 12 – 13.5 V.

    Is the amperage 75 A or more?

    YES – The charging system is OK. ■

    NO – Go to step 11.

11. With the engine speed still at 2,000 rpm, full-field the alternator. Attach the probe to the VAT-40 full-field test lead, and insert the probe into the full field access hole at the back of the alternator. Switch the field selector to the "A (Ground)" position momentarily, and check the amperage reading. Because voltage will rise quickly when the alternator is full-fielded, do not allow the voltage to exceed 18 V: it may damage the electrical system.

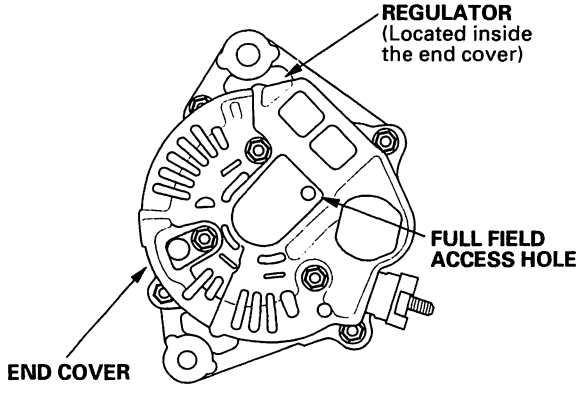

    Is the alternator output 75 A or more?

    YES – Replace the voltage regulator. ■

    NO – Go to alternator control system test. ■

BACK

Alternator Control System Test

1. Check proper operation of the Electrical Load Detector (ELD) by confirming with the Malfunction Indicator Lamp (MIL) is off and there is no DTC for ELD failure (see page 11-3).

2. Disconnect the 4P connector from the alternator.

3. Start the engine and turn the headlights (high beam) ON.

4. Measure voltage between the 4P connector terminal No. 2 and the positive terminal of the battery.

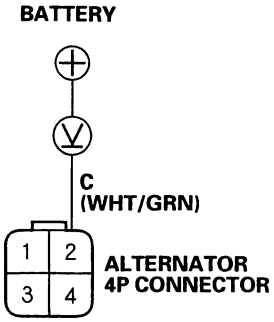

Wire side of female terminals

Is there 1 V or less?

YES—Go to step 8.

NO—Go to step 5.

5. Turn the headlight and ignition switch OFF.

6. Disconnect the Engine Control Module (ECM)/ Powertrain Control Module (PCM) connector C (31 P).

7. Check for continuity between the ECM/PCM connector terminal C2 and body ground.

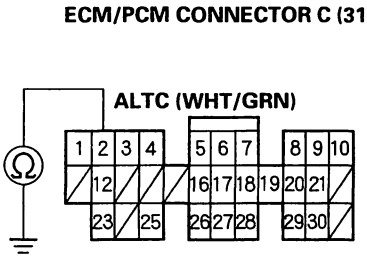

Wire side of female terminals

Is there continuity?

YES—Repair short to ground in the wire between the alternator and ECM/PCM.■

NO—Check that the terminals are firmly seated at the connectors. If OK, substitute a known-good ECM/PCM, and recheck. (see page 11-3). If prescribed voltage is now available, replace the original ECM/PCM.■

8. Turn the headlight and ignition switch OFF.

9. Disconnect the ECM/PCM connector C (31P).

10. Check for continuity between the ECM/PCM connector terminal C2 and alternator 4P connector terminal No. 2.

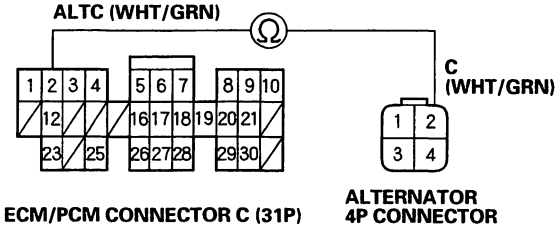

Wire side of female terminals

Is there continuity?

YES—Repair the alternator (see page 4-33).■

NO—Repair open in the wire between the alternator and ECM/PCM.■

BACK

Alternator Replacement

1. Make sure you have the anti-theft code for the radio, then write down the frequencies for the radio's preset buttons.

2. Disconnect the negative battery cable, then disconnect the positive cable.

3. Disconnect the 4P connector (A) and BLK wire (B) from the alternator.

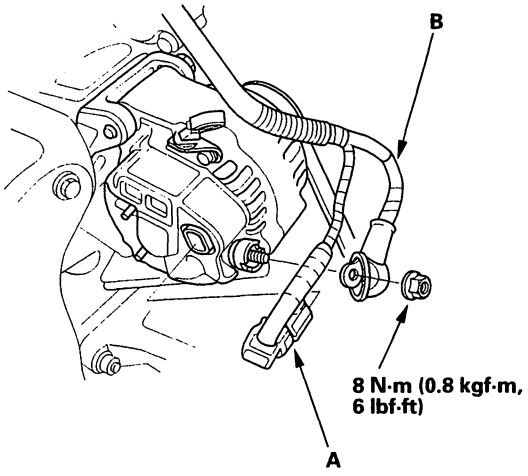

4. Remove the adjusting bolt (A), locknut (B), and mounting bolt (C), then remove the alternator belt and alternator.

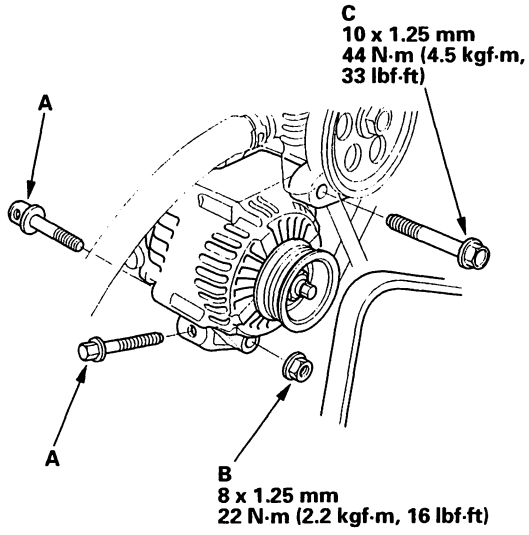

5. Install in the reverse order of removal.

6. Adjust the alternator belt tension (see page 4-40) or the alternator-A/C belt tension (see page 4-39).

7. Enter the anti-theft code for the radio, then enter the customer's radio station presets.

BACK

Alternator Overhaul

Exploded View

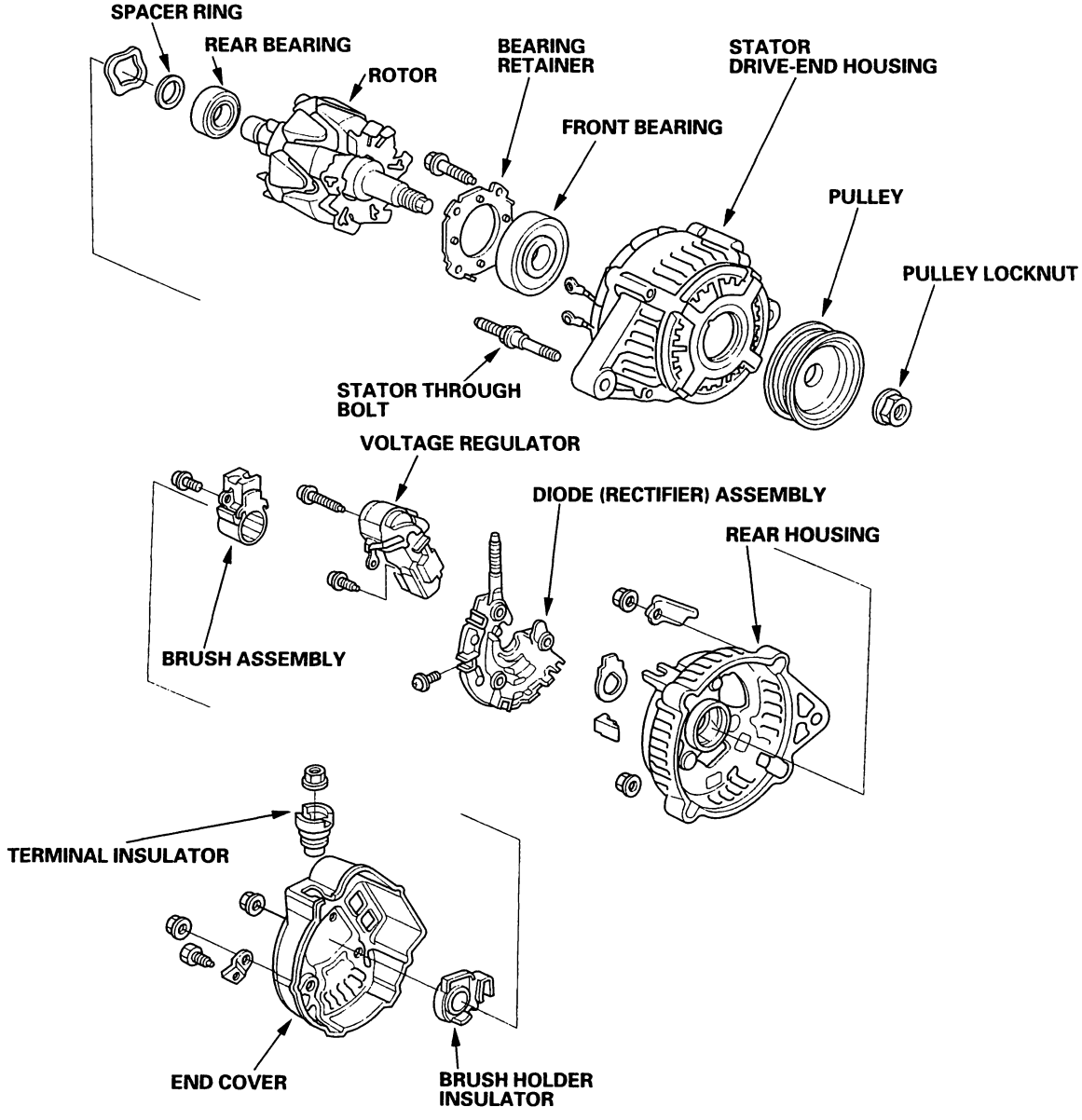

(cont'd)

BACK

Alternator Overhaul (cont'd)

Special Tools Required
- Driver 07749-0010000
- Driver attachment, 52 x 55 mm 07746-0010400

NOTE: Refer to the Exploded View as needed during this procedure.

1. Test the alternator and regulator before you remove them (see step 1 on page 4-30).

2. Remove the alternator (see page 4-32).

3. If the front bearing needs replacing, remove the pulley locknut with a 10 mm wrench (A) and a 22 mm wrench (B). If necessary, use an impact wrench.

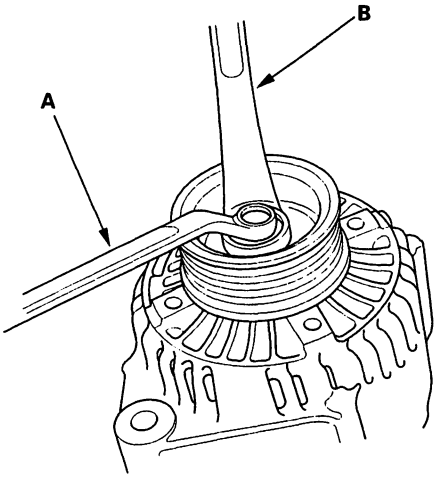

4. Remove the three flange nuts (A) and the screw (B) from the alternator, then remove the plate terminal (C).

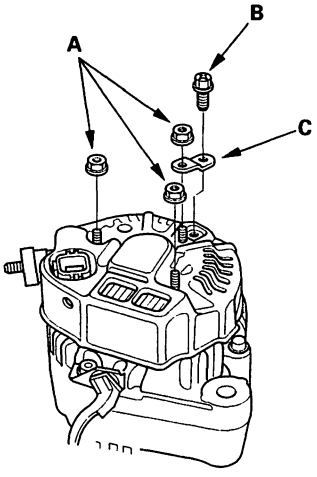

5. Remove the washer nut (A) and insulator (B) from the "B" terminal, then remove the end cover (C) and dust seal (D).

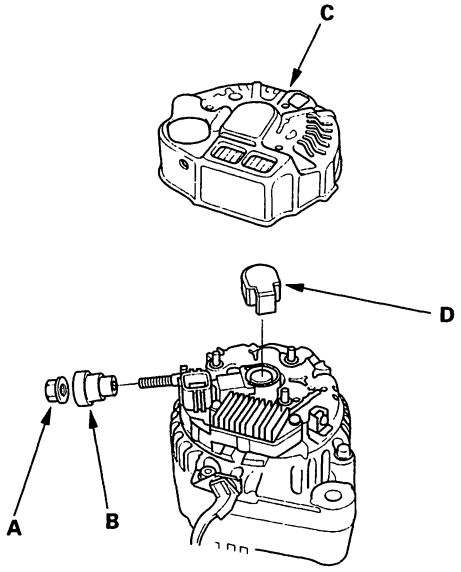

6. Remove the brush holder.

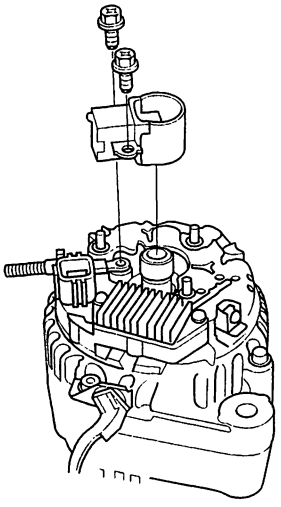

BACK

7. Remove the voltage regulator.

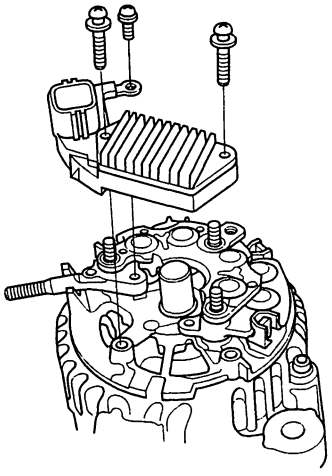

8. Remove the four screws (A), then remove the rectifier (B) and rubber seal (C).

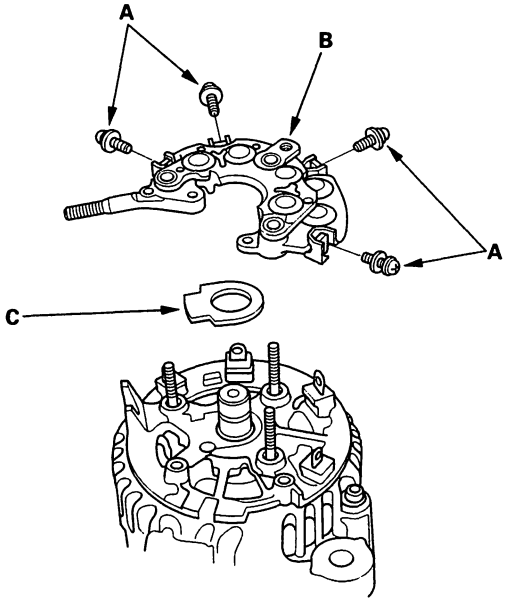

9. Remove the four flange nuts.

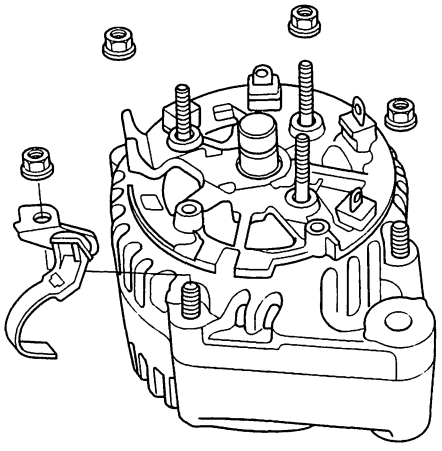

10. Remove the rear housing (A) and washer (B).

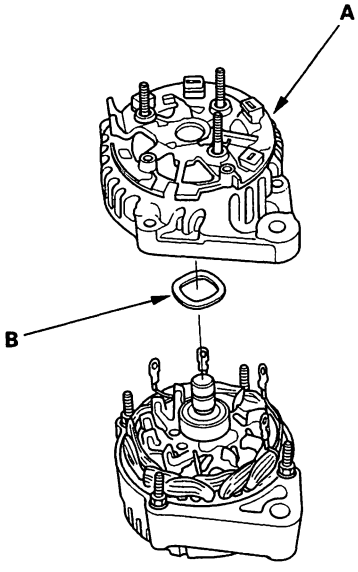

(cont'd)

Alternator Overhaul (cont'd)

11. If you are not replacing the front bearing and/or rear bearing, go to step 18. Remove the rotor from the stator drive end housing.

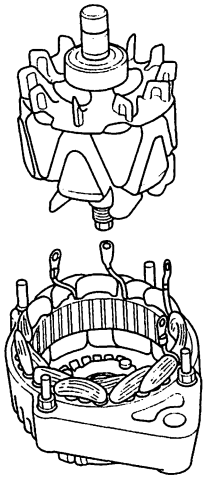

12. Inspect the rotor shaft for galling, and inspect the bearing journal surface in the stator housing for seizure marks.

    - If either the rotor or stator housing is damaged, replace the alternator.
    - If both the rotor and the stator housing are OK, go to step 13.

13. Remove the rear bearing using a puller as shown.

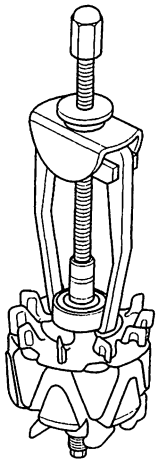

14. With a hammer and commercially available tools shown, install a new rear bearing in the rotor shaft.

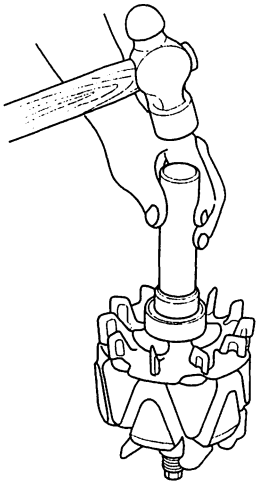

15. Remove the front bearing retainer plate.

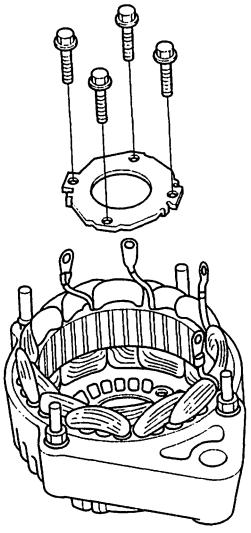

BACK

16. Support the stator housing in a vise, and drive out the front bearing with a brass drift (A) and hammer.

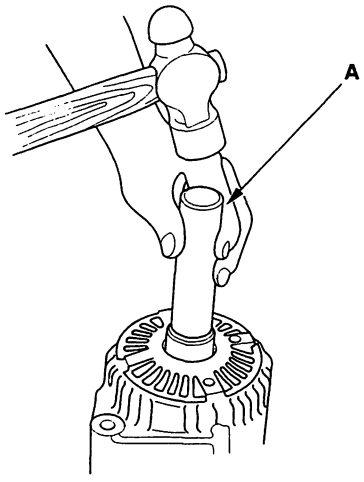

17. With a hammer and the special tools, install a new front bearing in the stator housing.

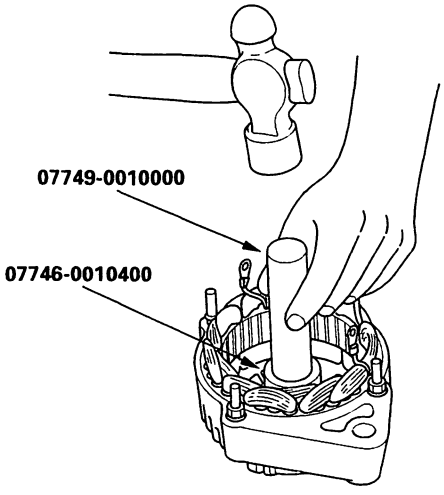

Rectifier Test

18. Check for continuity in each direction, between the B terminal (A) and P terminals (B), and between the E terminal (C) and P terminals (B) of each diode pair. All diodes should have continuity in only one direction. Because the rectifier diodes are designed to allow current to pass in one direction, and the rectifier is made up of eight diodes (four pairs), you must test each diode in both directions for continuity with an ohmmeter that has diode checking capability: a total of 16 checks.

- If any diode failed, replace the rectifier assembly. (Diodes are not available separately.)
- If all the diodes are OK, go to step 19.

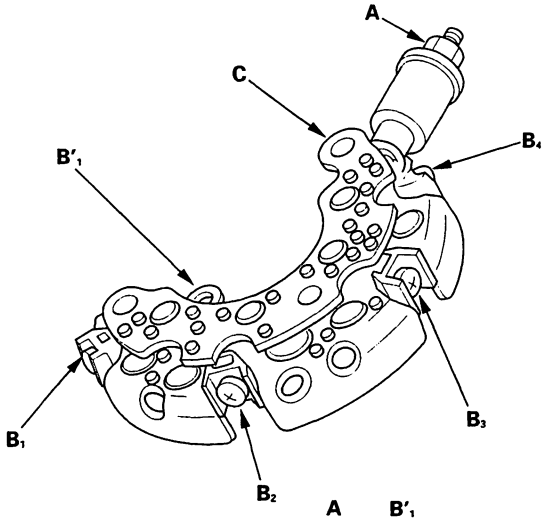

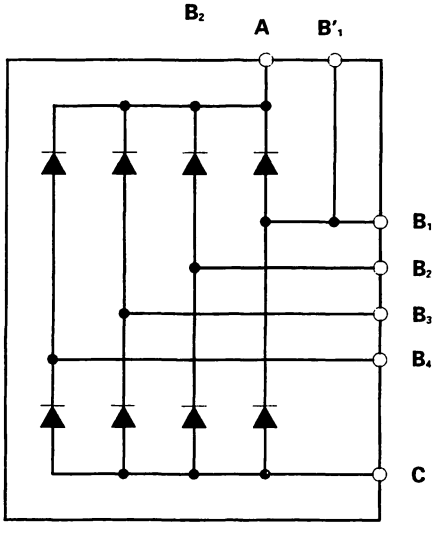

(cont'd)

Alternator Overhaul (cont'd)

Alternator Brush Inspection

19. Measure the length of both brushes (A) with a vernier caliper (B).

    - If either brush is shorter than the service limit, replace the brush assembly.
    - If brush length is OK, go to step 20.

    Alternator Brush Length:
    Standard (New): 10.5 mm (0.41 in.)
    Service Limit: 1.5 mm (0.06 in.)

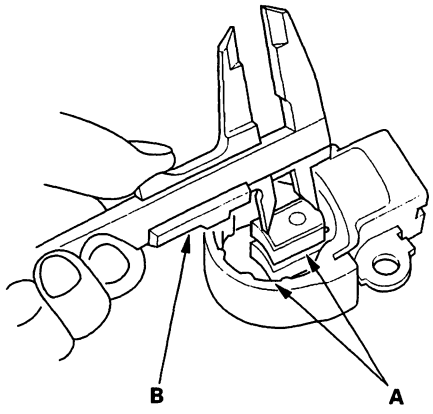

Rotor Slip Ring test

20. Check that there is continuity between the slip rings (A).

    - If there is continuity, go to step 21.
    - If there is no continuity, replace the alternator.

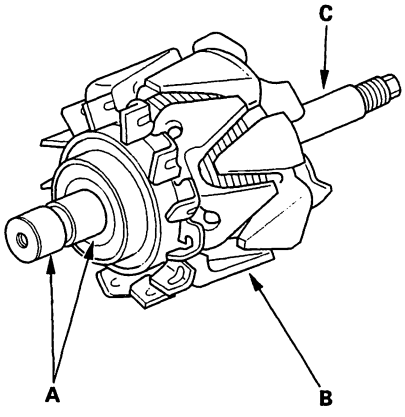

21. Check that there is no continuity between each slip ring (A) and the rotor (B) and the rotor shaft (C).

    - If there is no continuity, go to step 22.
    - If there is continuity, replace the alternator.

Stator Test

22. Check that there is continuity between each pair of leads (A).

    - If there is continuity, go to step 23.
    - If there is no continuity, replace the alternator.

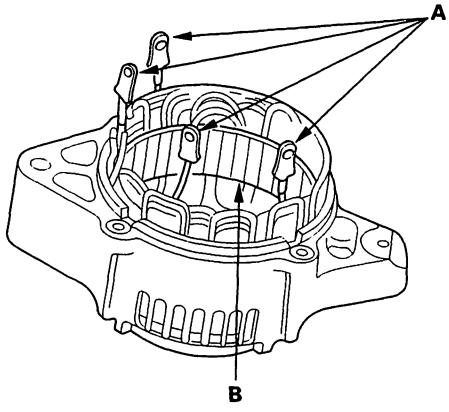

23. Check for no continuity between each lead and the coil core (B).

    - If there is no continuity, go to step 24.
    - If there is continuity, replace the alternator.

24. Reassemble the alternator in reverse order of disassembly, and note these items:

    - Be careful not to get any grease or oil on the slip rings.
    - If you removed the pulley, tighten its locknut to 111 N·m (11.3 kgf·m, 81.7 lbf·ft) when you reinstall it.

25. Reinstall the alternator, and adjust its belt tension (see page 4-39).

BACK

Alternator-A/C Compressor Belt Inspection and Adjustment

Special Tools Required
Belt tension gauge 07JGG-001010A

Belt Tension Gauge Method

Inspection

1. Remove the three bolts from the left end of the splash shield, and pull it back as needed.

2. Attach the belt tension gauge to the belt and measure the tension. Follow the gauge manufacturer's instructions. If the belt is worn or damaged, replace it. If the belt needs adjustment, go to step 3.

   Tension:
   Used Belt: 490–590 N (50–60 kgf, 110–130 lbf)
   New Belt: 1,030–1,130 N (105–115 kgf, 231–254 lbf)

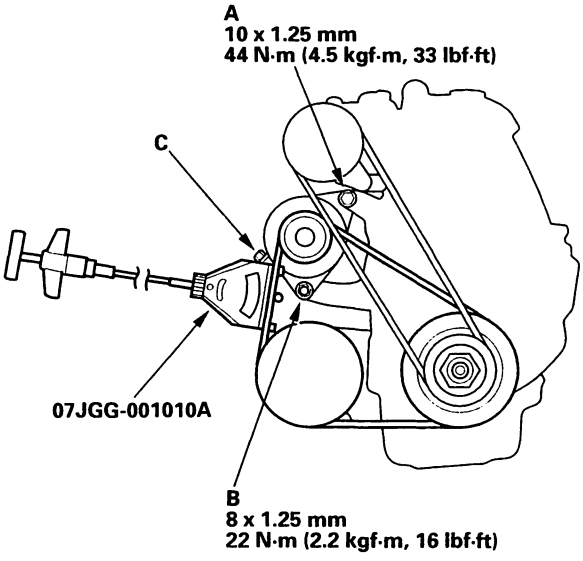

Adjustment

3. Loosen the mounting bolt (A) and locknut (B).

4. Turn the adjusting bolt (C) to obtain the proper belt tension, then retighten the locknut and mounting bolt.

5. Recheck the belt tension.

6. If you installed a new belt, run the engine for 5 minutes, then readjust the belt to the used belt specification.

7. Check the power steering pump belt adjustment (see page 17-12).

Deflection Method

Inspection

1. Apply a force of 98 N (10 kgf, 22 lbf), and measure the deflection at the mid point (A) between the alternator and crankshaft pulley. If the belt is worn or damaged, replace it. If the belt needs adjustment, go to step 2.

   Deflection:
   Used Belt: 7.0–9.0 mm (0.28–0.35 in.)
   New Belt: 4.0–6.0 mm (0.16–0.24 in.)

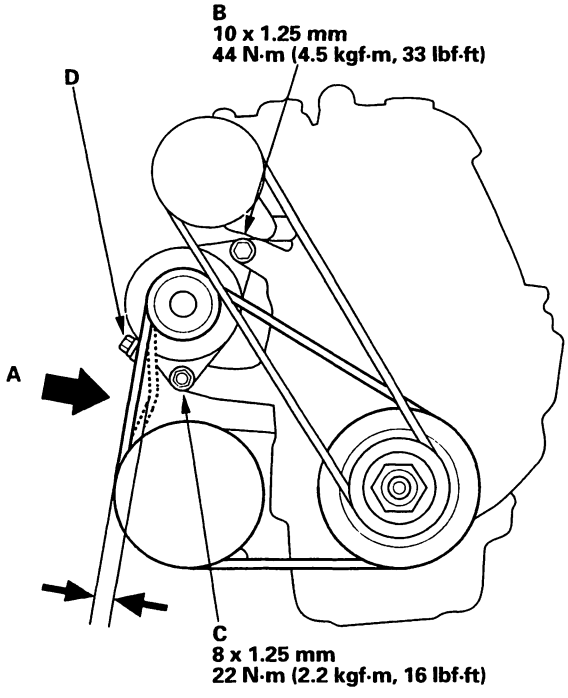

Adjustment

2. Loosen the mounting bolt (B) and locknut (C).

3. Turn the adjusting bolt (D) to obtain the proper belt tension, then retighten the locknut and mounting bolt.

4. Recheck the belt tension.

5. If you installed a new belt, run the engine for 5 minutes, then readjust the belt to the used belt specification.

6. Check the power steering pump belt adjustment (see page 17-12).

Alternator Belt Inspection and Adjustment

Special Tools Required
Belt tension gauge 07JGG-001010A

Belt Tension Gauge Method

Inspection

1. Attach the belt tension gauge to the belt and measure the tension. Follow the gauge manufacturer's instructions. If the belt is worn or damaged, replace it. If the belt needs adjustment, go to step 2.

   Tension:
   Used Belt: 290 – 440 N (30 – 45 kgf, 66 – 99 lbf)
   New Belt: 540 – 740 N (55 – 75 kgf, 120 – 170 lbf)

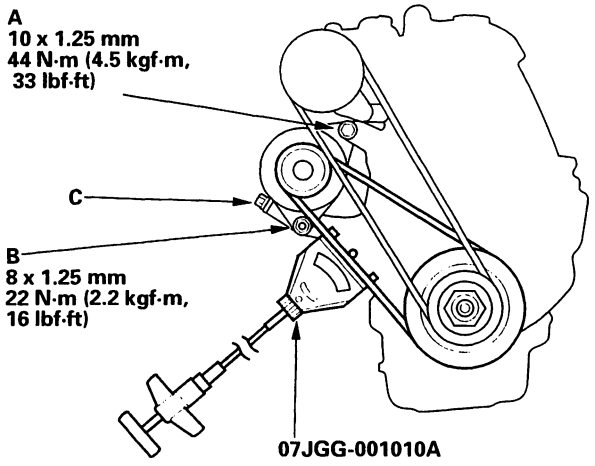

Adjustment

2. Loosen the mounting bolt (A) and locknut (B).
3. Turn the adjusting bolt (C) to obtain the proper belt tension, then retighten the locknut and mounting bolt.
4. Recheck the belt tension.
5. If you installed a new belt, run the engine for 5 minutes, then readjust the belt to the used belt specification.
6. Check the power steering pump belt adjustment (see page 17-12).

Deflection Method

Inspection

1. Apply a force of 98 N (10 kgf, 22 lbf), and measure the deflection at the mid point (A) between the alternator and crankshaft pulley. If the belt is worn or damaged, replace it. If the belt needs adjustment, go to step 2.

   Deflection:
   Used Belt: 10.5 – 12.5 mm (0.41 – 0.49 in.)
   New Belt: 8.0 – 10.0 mm (0.31 – 0.39 in.)

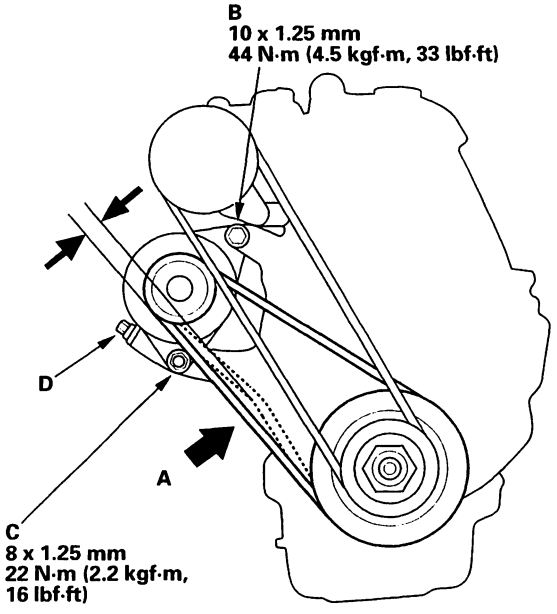

Adjustment

2. Loosen the mounting bolt (B) and locknut (C).
3. Turn the adjusting bolt (D) to obtain the proper belt tension, then retighten the locknut and mounting bolt.
4. Recheck the belt tension.
5. If you installed a new belt, run the engine for 5 minutes, then readjust the belt to the used belt specification.
6. Check the power steering pump belt adjustment (see page 17-12).

BACK

Component Location Index

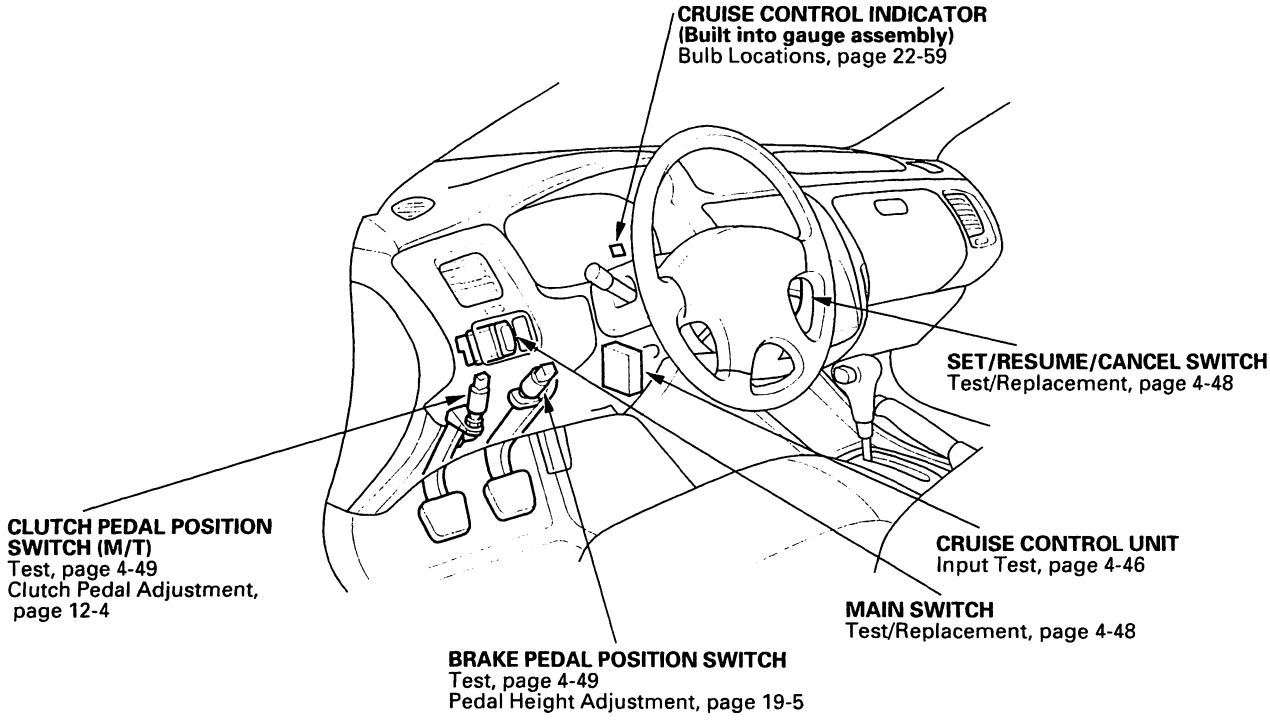

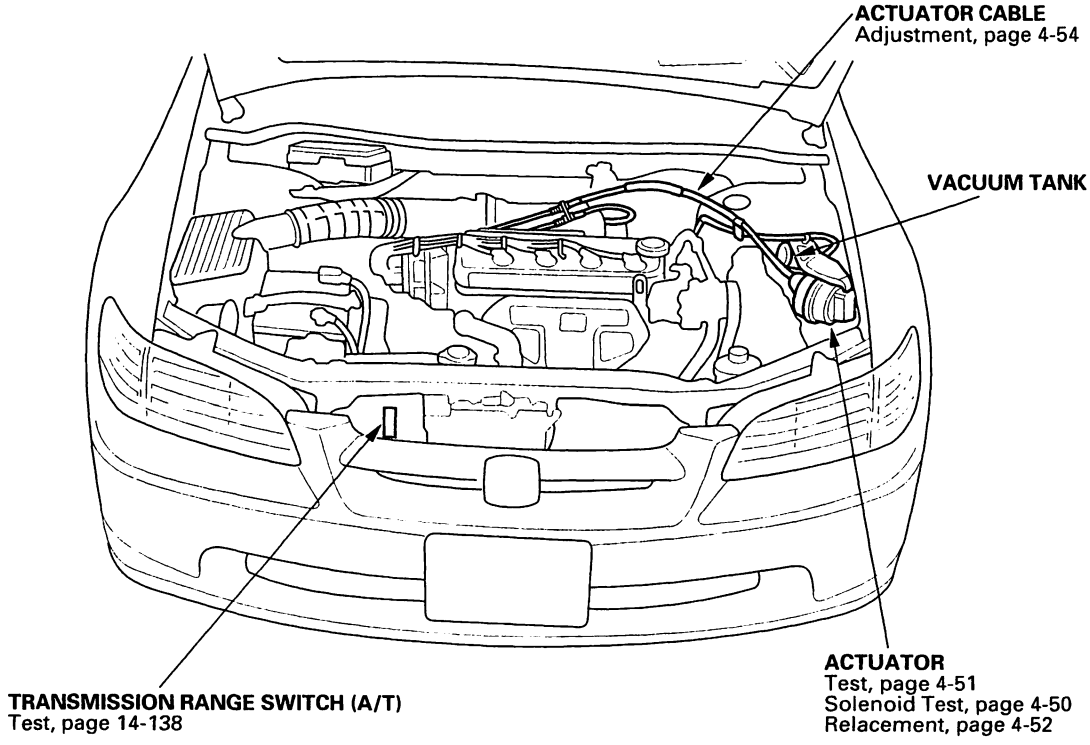

Circuit Diagram

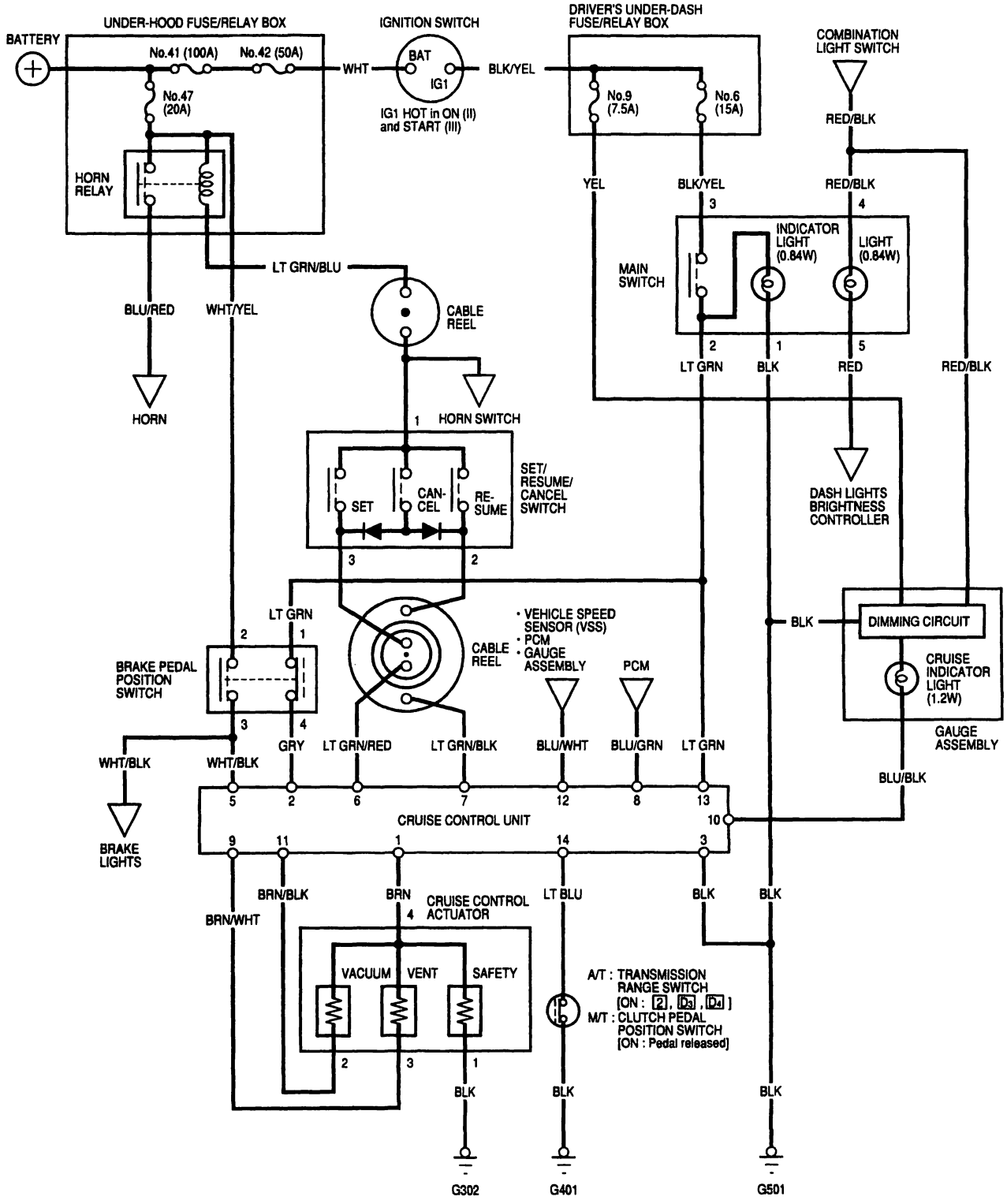

BACK

Symptom Troubleshooting Index

NOTE:
- The numbers in the table show the troubleshooting sequence.
- Before troubleshooting.
  - check the No. 9 (7.5A) and No. 6 (15A) fuses in the driver's under-dash fuse/relay box, and the No. 47 (20A) fuse in the under-hood fuse/relay box.
  - check that the horn sounds.
  - check the tachometer to see if it works properly.

Symptom	Diagnostic procedure	Also check for
Cruise control cannot be set	1. Check main switch (see page 4-48) 2. Check SET/RESUME/CANCEL switch (see page 4-48) 3. Check brake pedal position switch and mounting (see page 4-49) 4. Check clutch pedal position switch and mounting (M/T) (see page 4-49) 5. Check transmission range switch (A/T) (see page 14-138) 6. Check control unit (see page 4-46)	• Poor ground: G302, G401, or G501 • Open circuit, loose or disconnected terminals: LT GRN, LT GRN/RED, GRY, LT BLU, BLU/WHT
Cruise control can be set but indicator light does not go on	Check control unit (see page 4-46)	• Poor ground: G302, G401, or G501 • Open circuit, loose or disconnected terminals: YEL, BLU/BLK
Cruise speed is noticeably higher or lower than what was set	1. Check vehicle speed sensor (VSS) (see page 22-69) 2. Check actuator and vent line for the actuator (see page 4-51) 3. Check control unit (see page 4-46)	
Excessive overshooting or undershooting when trying to set speed	1. Check actuator and vent line for the actuator (see page 4-51) 2. Check vehicle speed sensor (VSS) (see page 22-69) 3. Check control unit (see page 4-46)	
Speed fluctuation on a flat road with cruise control set	1. Check vehicle speed sensor (VSS) (see page 22-69) 2. Check actuator (see page 4-51) 3. Check control unit (see page 4-46)	
Vehicle does not decelerate or accelerate accordingly when SET/RESUME/CANCEL button is pushed	1. Check SET/RESUME/CANCEL switch (see page 4-48) 2. Check control unit (see page 4-46)	Open circuit, loose or disconnected terminals: LT GRN/RED, LT GRN/BLK
Cruise control does not cancel when clutch pedal is pushed (M/T)	1. Check clutch pedal position switch and mounting (see page 4-49) 2. Check control unit (see page 4-46)	Short to ground in the LT BLU wire
Cruise control does not cancel when shift lever is moved to N position (A/T)	1. Check transmission range switch (see page 14-138) 2. Check control unit (see page 4-46)	Short to ground in the LT BLU wire
Set speed is not cancelled when brake pedal is pushed	1. Check brake pedal position switch and mounting (see page 4-49) 2. Check control unit (see page 4-46)	Open circuit, loose or disconnected terminals: WHT/BLK

(cont'd)

Symptom Troubleshooting Index (cont'd)

Symptom	Diagnostic procedure	Also check for
Set speed, does not cancel when main switch is pushed OFF	1. Check main switch (see page 4-48) 2. Check control unit (see page 4-46)	Shorted main switch or short to power in the LT GRN wire.
Set speed,does not cancel when CANCEL button is pushed	1. Check SET/RESUME/CANCEL switch (see page 4-48) 2. Check control unit (see page 4-46)	Open circuit, loose or disconnected terminals: LT GRN/RED, LT GRN/BLK
Set speed will not resume when RESUME button is pushed (with main switch on, when set speed is temporarily cancelled by pressing the brake pedal)	1. Check SET/RESUME/CANCEL switch (see page 4-48) 2. Check control unit (see page 4-46)	Open circuit, loose or disconnected terminals: LT GRN/BLK
The transmission shifts down slower than normal when going up a hill with the cruise control on (A/T)	1. Troubleshoot the cruise control communication circuit (see page 4-45)	Open circuit, loose or disconnected terminals, or short to ground: BLU/GRN

BACK

Cruise Control Communication Circuit Troubleshooting (A/T)

1. Start the engine.

2. Turn on the cruise control main switch, then drive the vehicle to speeds over 25 mph (40 km/h) with the cruise control.

   Does the cruise control operate?

   YES – Go to step 3.

   NO – Check the cruise control unit (see page 4-46) or cruise control actuator. ■

3. Turn the ignition switch OFF.

4. Disconnect Powertrain Control Module (PCM) connector A (32P) and cruise control unit connector.

5. Check for continuity between the PCM connector terminal A5 and body ground.

PCM CONNECTOR A (32P)

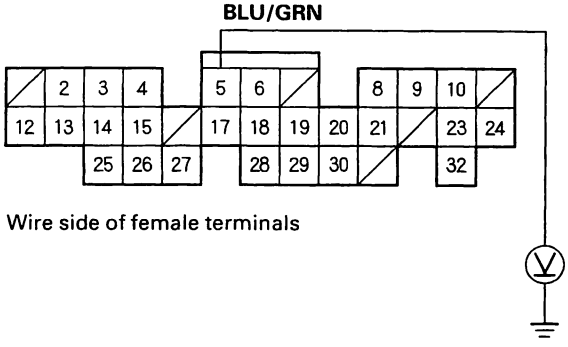

Wire side of female terminals

Is there continuity?

YES – Repair a short in the wire between the PCM connector terminal A5 and the cruise control unit connector terminal No. 8. ■

NO – Go to step 6.

6. Reconnect PCM connector A (32P) and cruise control unit connector.

7. Turn the ignition switch ON (II).

8. Connect a voltmeter between cruise control unit 14P connector terminal No.8 and body ground. Test-drive the vehicle at speeds over 25mph (40km/h) with the cruise control set, and watch the voltmeter.

CRUISE CONTROL UNIT 14P CONNECTOR

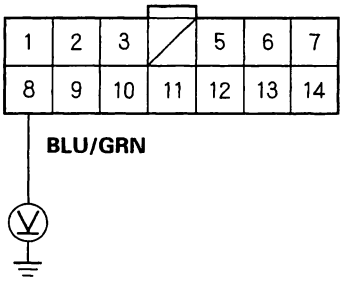

Wire side of female terminals

Is there about 1 V?

YES – Go to step 9.

NO – Replace the cruise control unit. ■

9. Connect a voltmeter between PCM connector terminal A5 and body ground. Drive the vehicle at speeds over 25mph (40km/h) with the cruise control set, and watch the voltmeter.

PCM CONNECTOR A (32P)

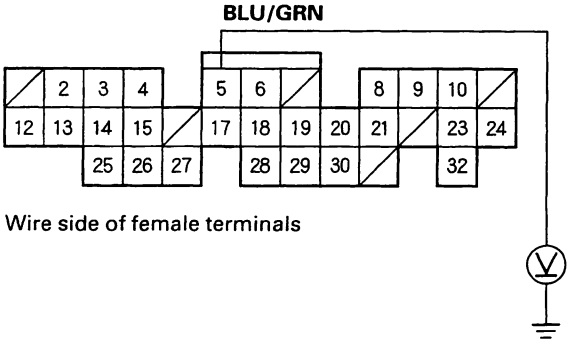

Wire side of female terminals

Is there about 1 V?

YES – Check for loose connections of the BLU/GRN wire between the cruise control unit and the PCM. If necessary replace the PCM and recheck. (see page 11-3). ■

NO – Repair open in the wire between the A5 terminal and the cruise control unit connector terminal No. 8. ■

Control Unit Input Test

SRS components are located in this area. Review the SRS components locations, precautions, and procedures in the SRS section before performing repairs or service (see page 23-28).

1. Remove the driver's dashboard lower cover (see page 20-84).
2. Disconnect the 14P connector from the control unit.
3. Inspect the connector and socket terminals to be sure they are all making good contact.
   - If the terminals are bent, loose or corroded, repair them as necessary, and recheck the system.
   - If the terminals look OK, go to step 4.

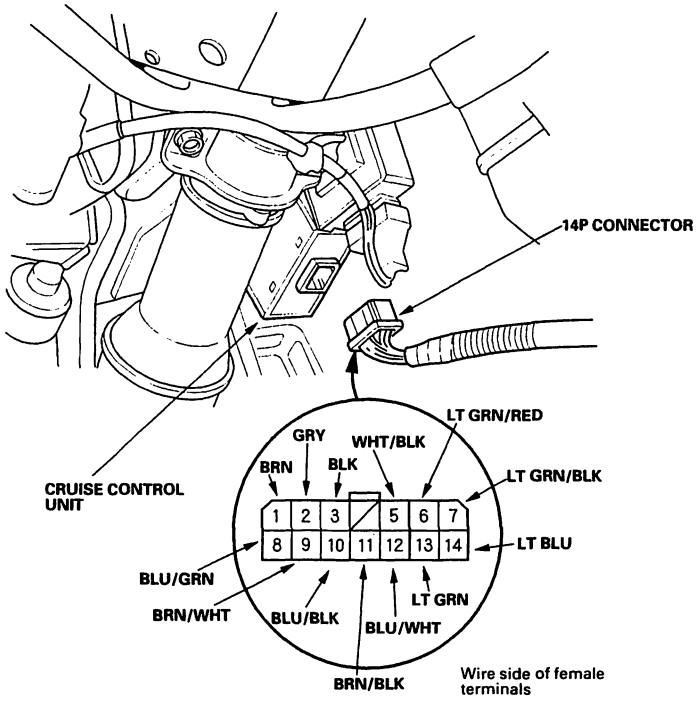

4. With the 14P connector disconnected, make these input tests.

Cavity	Wire	Test condition	Test: Desired result	Possible cause if result is not obtained
9	BRN/WHT	Under all conditions	Check for resistance to ground: There should be 80–120 Ω.	• Faulty actuator solenoid • Poor ground (G401) • An open in the wire • Short to ground
1	BRN	Under all conditions	Check for resistance to ground: There should be 40–60 Ω.	
11	BRN/BLK	Under all conditions	Check for resistance to ground: There should be 70–110 Ω.	
2	GRY	Ignition switch ON (II), main switch ON and brake pedal depressed, then released	Check for voltage to ground: There should be 0 V with the pedal depressed and battery voltage with the pedal released.	• Faulty brake pedal position switch • An open in the wire • Open in cruise control main switch • Blown No. 6 (15A) fuse in the driver's under-dash fuse/relay box
3	BLK	Under all conditions	Check for continuity to ground: There should be continuity.	• Poor ground (G401) • An open in the wire

BACK

Cavity	Wire	Test condition	Test: Desired result	Possible cause if result is not obtained
5	WHT/BLK	Brake pedal depressed, then released	Check for voltage to ground: There should be battery voltage with the pedal depressed, and 0 V with the pedal released.	• Blown No. 47 (20A) fuse in the under-hood fuse/ relay box • Faulty brake pedal position switch • An open in the wire
6	LT GRN/RED	Set button pushed	Check for voltage to ground: There should be battery voltage. When testing terminal No.6, there should be no voltage on terminal No.7.	• Blown No. 47 (20A) fuse in the under-hood fuse/ relay box • Faulty horn relay • Faulty set/resume/cancel switch • Faulty cable reel • An open in the wire
7	LT GRN/BLK	Resume button pushed	Check for voltage to ground: There should be battery voltage. When testing terminal No.7, there should be no voltage on terminal No.6.	
10	BLU/BLK	Ignition switch ON (II)	Attach to ground: Cruise indicator light in the gauge assembly should comes on.	• Blown bulb • Blown No. 9 (7.5A) fuse in the driver's under-dash fuse/relay box • Faulty dimming circuit in the gauge assembly • An open in the wire
12	BLU/WHT	Ignition switch ON (II) and main switch ON; raise the front of the vehicle, and rotate one wheel slowly while holding the other wheel	Check for voltage between the BLU/WHT (+) and BLK (−) terminals: Cycles about 0 V−5 V (2.5 V average).	• Faulty vehicle speed sensor (VSS) (M/T) • An open in the wire • Short to ground
13	LT GRN	Ignition switch ON (II) and main switch ON	Check for voltage to ground: There should be battery voltage.	• Blown No. 6 (15A) fuse in the under-dash driver's fuse/relay box • Faulty main switch • An open in the wire
14	LT BLU	A/T: Shift lever in 2, D3 or D4 M/T: Clutch pedal released	Check for continuity to ground: There should be continuity. NOTE: There should be no continuity when the clutch pedal is depressed or when the sift lever is in other positions.	• Faulty transmission range switch • Faulty or misadjusted clutch pedal position switch • Poor ground (G401) • An open in the wire
8	BLU/GRN	Reconnect the 14P connector to the control unit, then start the engine, main switch ON and drive the vehicle to speed over 25 mph (40 km/h) with the cruise control set	Check for voltage to ground: There should be about. 1 V.	• Loose connection • Faulty cruise control unit. • Short to ground • Faulty PCM

5. If any test indicates a problem, find and correct the cause, then recheck the system. If all the input tests prove OK, the control unit may be faulty; replace it. Substitute a known-good control unit and retest. If the system works properly, replace the control unit.

Main Switch Test/Replacement

1. Carefully pry the switch (A) out of the instrument panel.

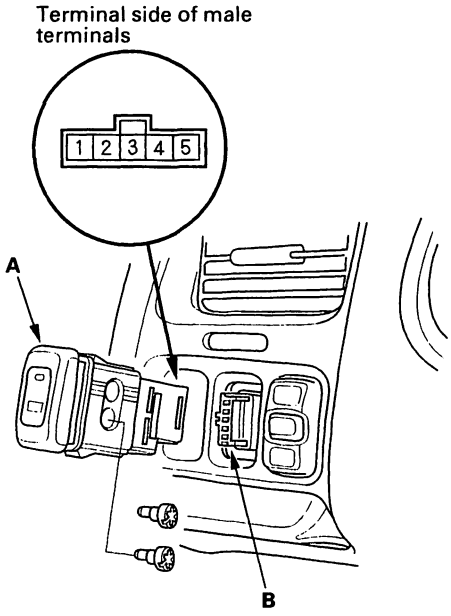

2. Disconnect the 5P connector (B) from the switch.
3. Check for continuity between the terminals in each switch position according to the table.

Position \ Terminal	1		2	3	4		5
OFF	○	⊖	○		○	⊖	○
ON	○	⊖	○	○	○	⊖	○

4. If the continuity is not as specified, replace the switch.

Set/Resume/Cancel Switch Test/ Replacement

1. Remove the two screws (A), then remove the switch (B).

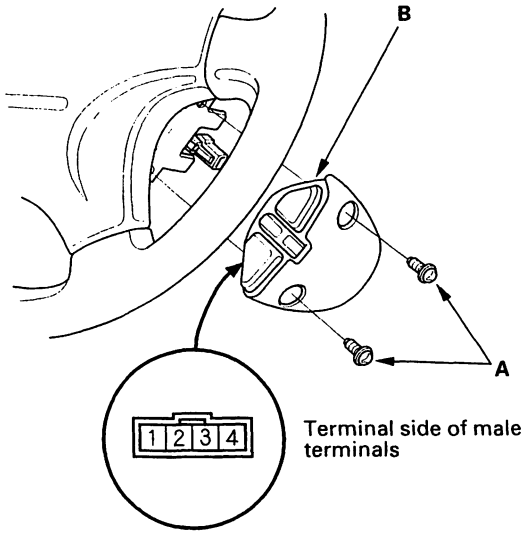

2. Check for continuity between the terminals in switch position according to the table.
   - If there is continuity and it matches the table, but switch failure is occurred on the cruise control unit input test, check and repair the wire harness on the switch circuit.
   - If there is no continuity in one or both positions, replace the switch.

Position \ Terminal	1		2	3
SET (ON)	○			○
RESUME (ON)	○		○	
CANCEL (ON)	○	▶ ▶	○	○

BACK

Clutch Pedal Position Switch Test

1. Disconnect the 3P connector from the clutch pedal position switch.

CLUTCH PEDAL POSITION SWITCH 3P CONNECTOR

Terminal side of male terminals

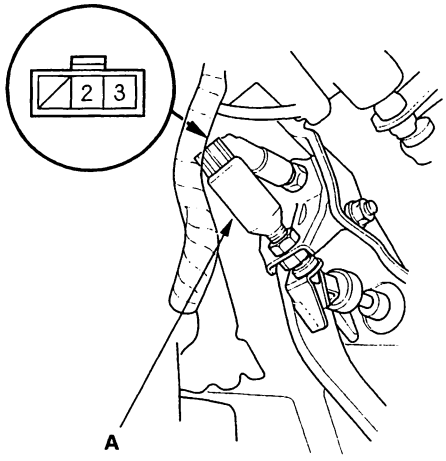

2. Remove the clutch pedal position switch.

3. Check for continuity between the terminals according to the table.

Terminal / Clutch Switch	2	3
PRESSED	○———	———○
RELEASED		

4. If necessary, replace the switch or adjust the pedal height (see page 12-4).

Brake Pedal Position Switch Test

1. Disconnect the 4P connector from the switch (A).

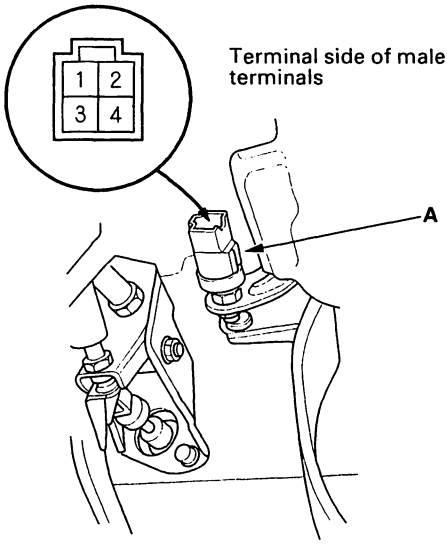

2. Remove the brake pedal position switch.

3. Check for continuity between the terminals according to the table.

Terminal / Brake Switch	1	2	3	4
PRESSED	○———	———	———	———○
RELEASED		○———	———○	

4. If necessary, replace the switch or adjust the pedal height (see page 19-5).

Actuator Solenoid Test

1. Disconnect the 4P connector (A) from the actuator.

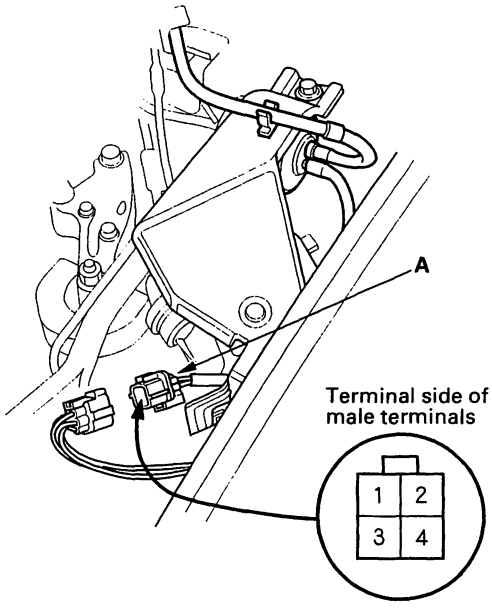

2. Check for resistance between the terminals according to the table.

   NOTE: Resistance will vary slightly with temperature; specified resistance is at 70°F (20°C).

Terminal / Resistance (Ω)	1	2	3	4
VENT SOLENOID 40—60 Ω			o——	——o
VACUUM SOLENOID 30—50 Ω		o——	——	——o
SAFETY SOLENOID 40—60 Ω	o——	——	——	——o

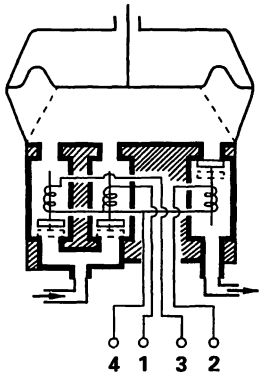

3. If the resistance is not as specified, replace the actuator.

BACK

Actuator Test

Special Tools Required
Vacuum Pump/Gauge, 0-30 in.Hg
A973X-041-XXXXX

1. Disconnect the actuator cable from the actuator rod and disconnect the 4P connector (A).

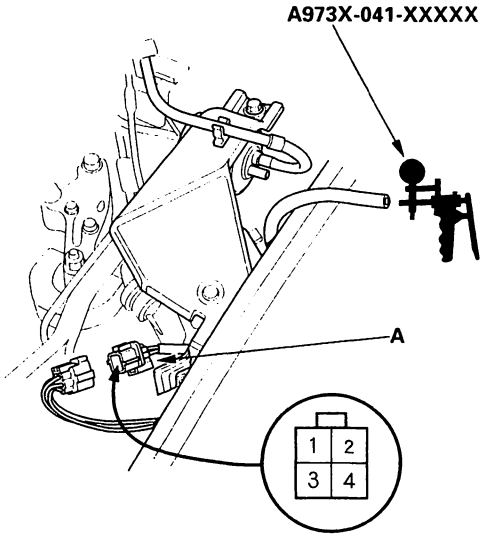

Terminal side of male terminals

2. Connect battery power to the No. 4 terminal and ground the No. 1, No. 2 and No. 3 terminals.

3. Connect a vacuum pump to the vacuum hose. Then apply vacuum to the actuator.

4. The actuator rod (A) should pull in completely. If the rod pulls in only part-way or not at all, check for a leaking vacuum line or defective solenoid.

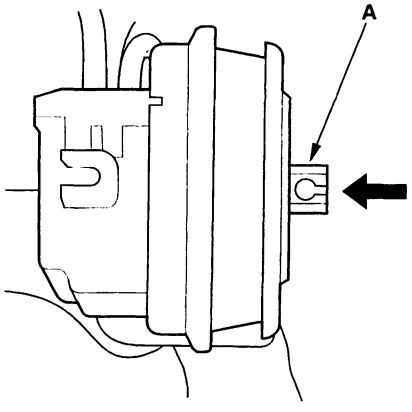

5. With voltage and vacuum still applied, try to pull the actuator rod out by hand. You should not be able to pull it out. If you can, it is defective.

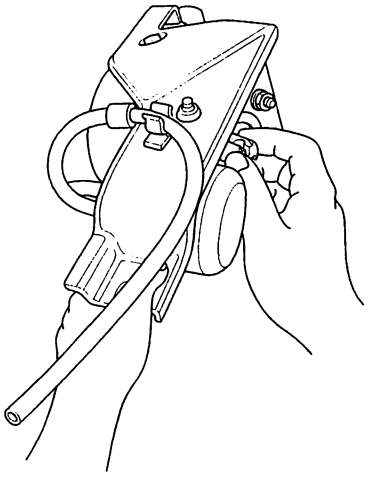

6. Disconnect ground from the No. 3 terminal. The actuator rod should return. If it does not return, but the vent hose and filter are not plugged, the solenoid valve assembly is defective.

7. Repeat steps 2 through 5, and disconnect ground from the No. 1 terminal. The actuator rod should return. If it does not return, but the vent hose and filter are not plugged, the solenoid valve assembly is defective.

8. If you replace the solenoid valve assembly, be sure to use new O-rings on each solenoid.

9. Disconnect power and ground from the 4P connector. Disconnect the vent hose from the actuator. Connect a vacuum pump to the actuator vent hose port, and apply vacuum. The actuator rod should pull in completely. If not, the vacuum valve is stuck open. Replace the actuator.

Actuator/Solenoid/Cable Replacement

Removal/Installation

1. Disconnect the 4P connector (A) from the actuator.

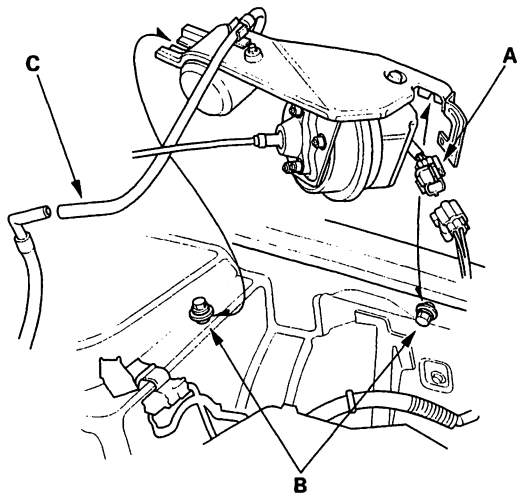

2. Loosen the two mounting bolts (B), and remove the actuator with the bracket.
3. Disconnect the vacuum hose (C).
4. Remove the three nuts (A).

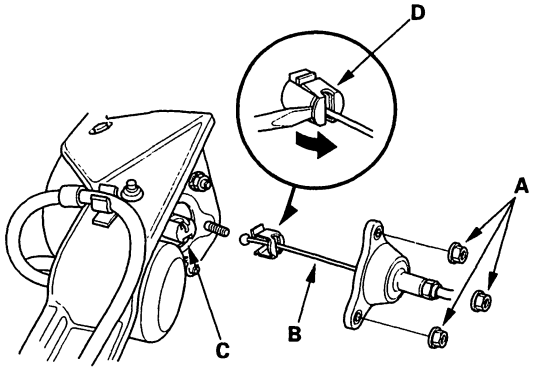

5. Disconnect the actuator cable (B) from the actuator rod (C) by releasing the clip (D) from the rod with a screwdriver.
6. Loosen the locknut (A), then disconnect the actuator cable (B) from the throttle linkage (C).

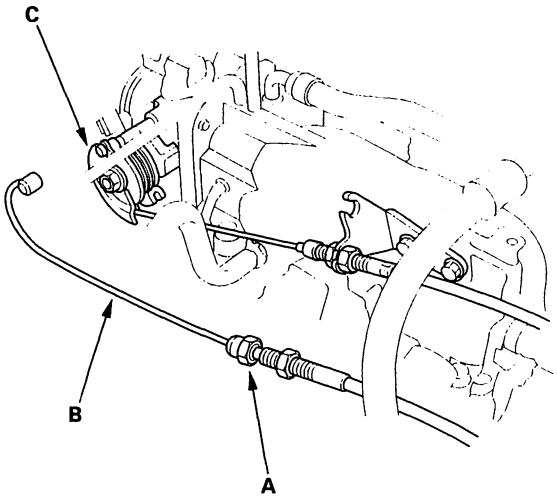

7. Install in the reverse order of removal, and adjust the free play at the throttle linkage after connecting the actuator cable.

BACK

Disassembly/Reassembly

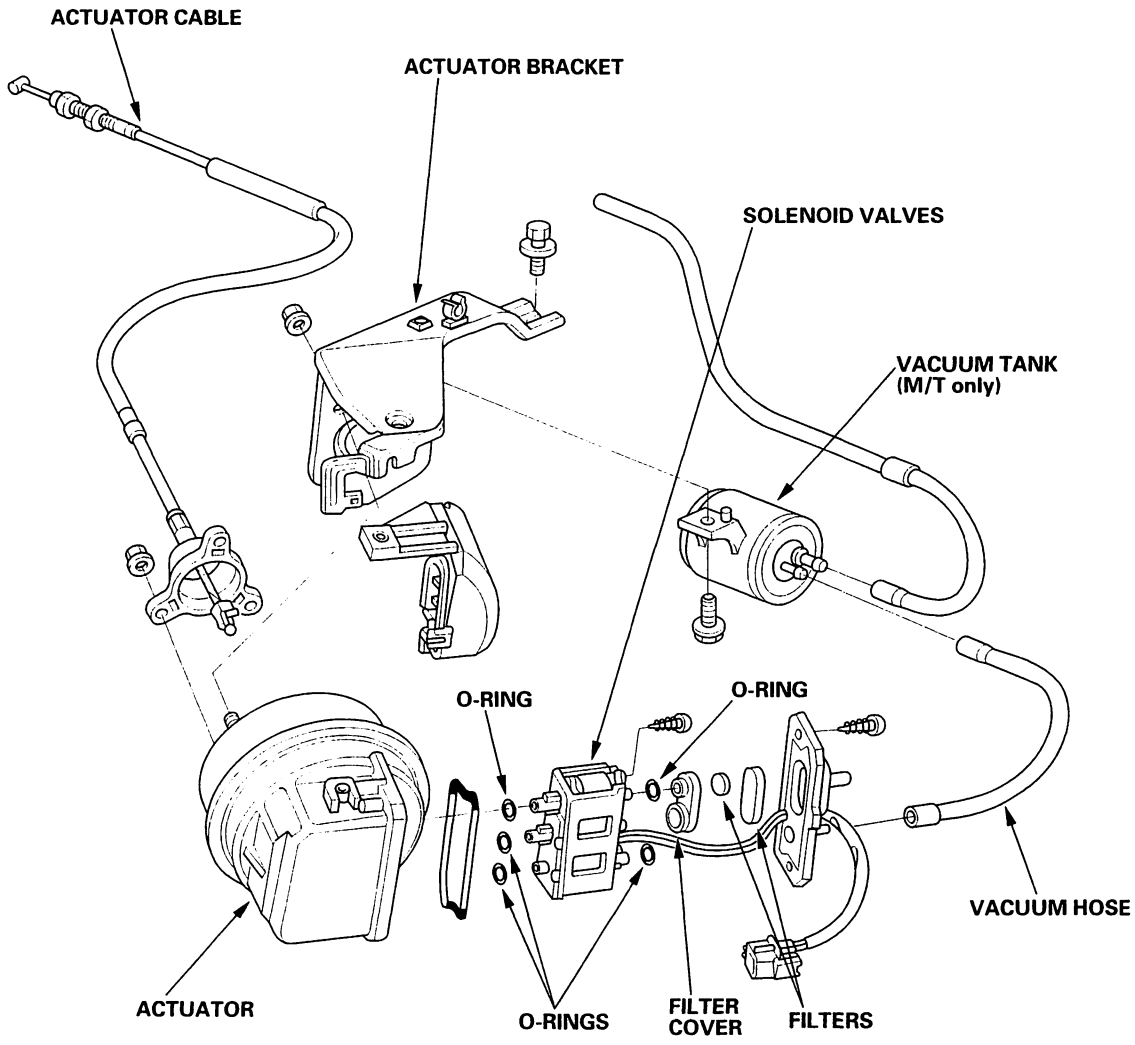

Actuator Cable Adjustment

1. Check that the actuator cable (A) moves smoothly with no binding or sticking.

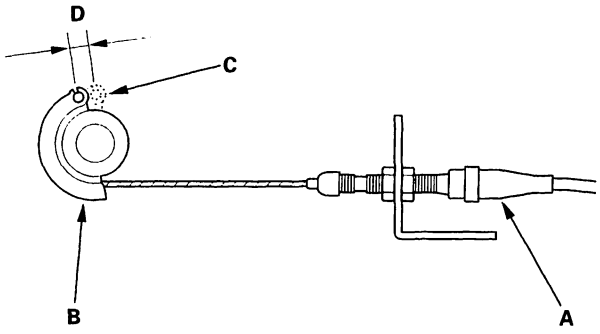

2. Measure the amount of movement of the output linkage (B) until the engine speed starts to increase. At first, the output linkage should be located at the fully closed position (C). The free play (D) should be 3.75±0.5 mm (0.15±0.02 in.).

3. If the free play is not within specs, move the cable to the point where the engine speed starts to increase, and tighten the locknut (A) and adjusting nut (B).

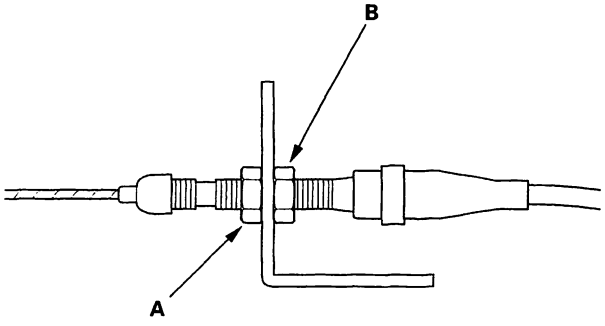

4. Turn the adjusting nut (B) until it is 3.75±0.5 mm (0.15±0.02 in.) away from the bracket (C).

3.75±0.5 mm (0.15±0.02 in.)

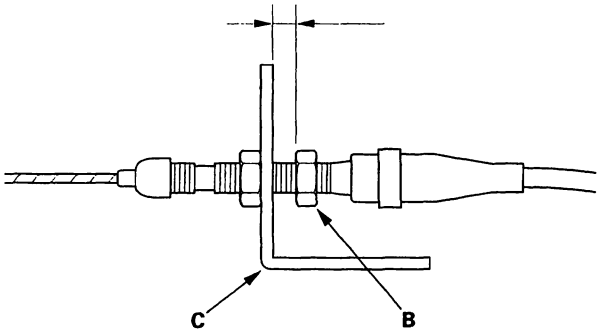

5. Pull the cable so that the adjusting nut (B) touches the bracket, and tighten the locknut (A).

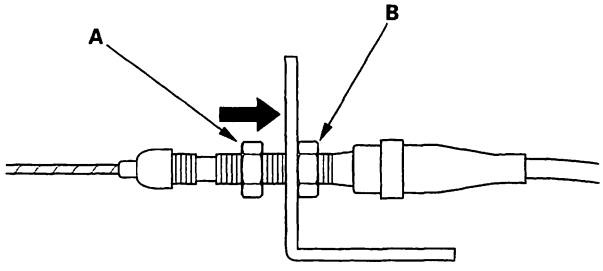

BACK

Engine Mount Control System

Component Location Index

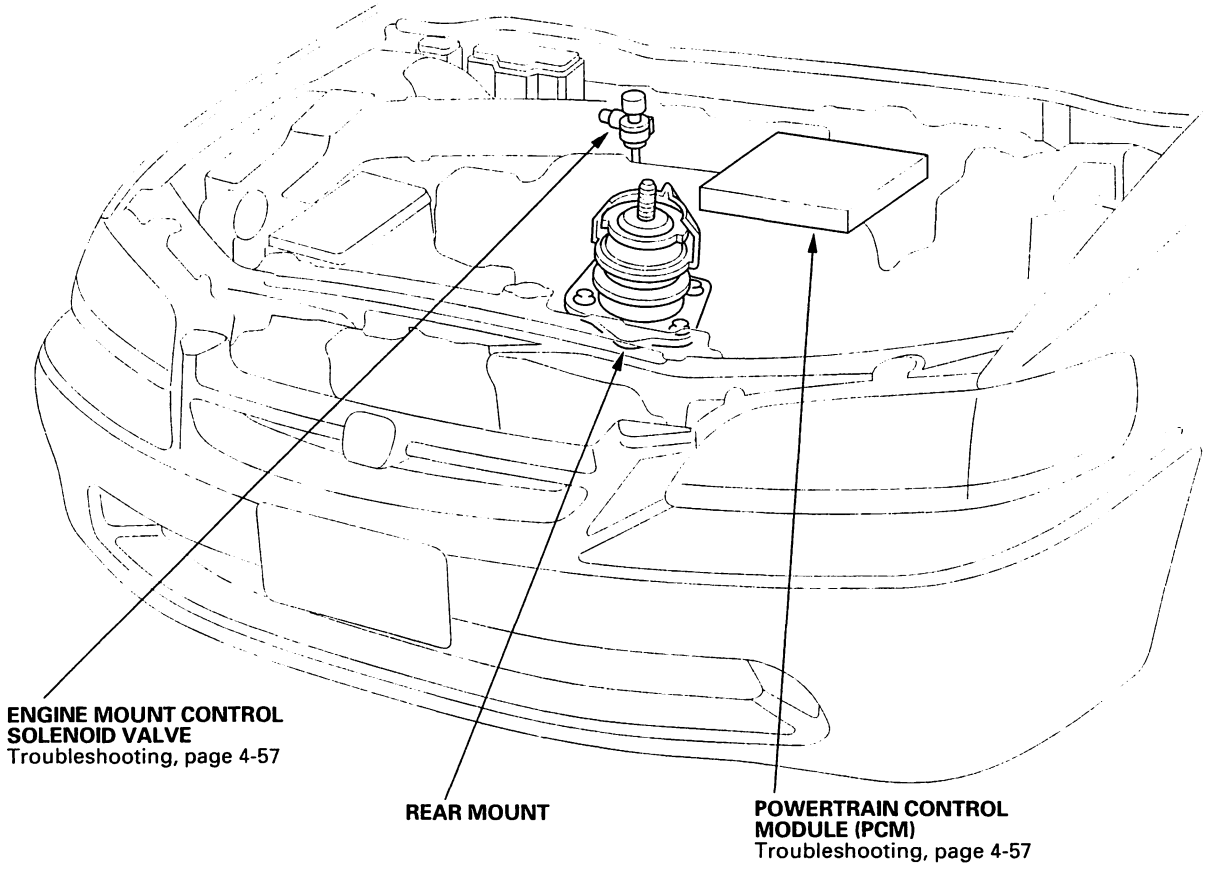

Engine Mount Control System

Circuit Diagram

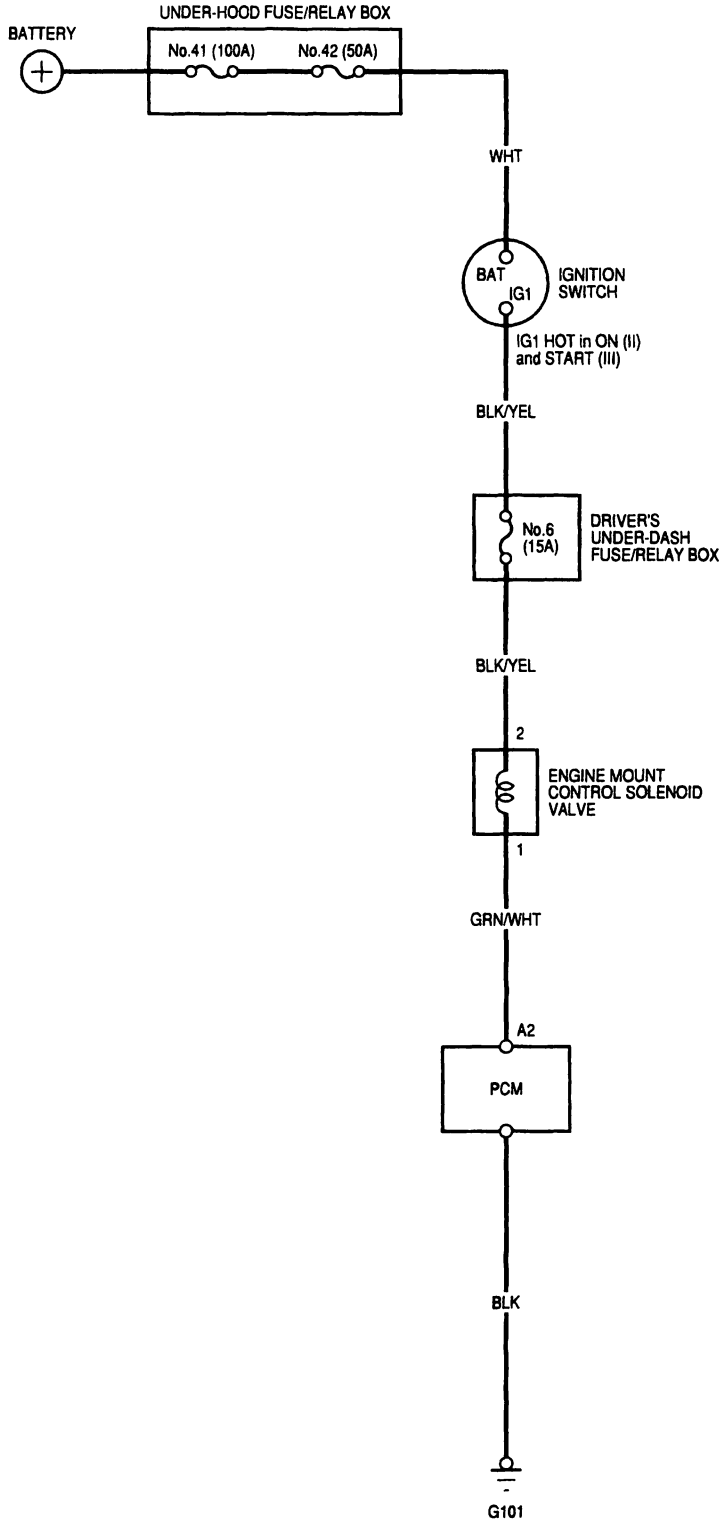

BACK

Troubleshooting

Special Tools Required
Vacuum Pump/Gauge, 0 – 30 in.Hg
A973X-041-XXXXX

NOTE: Check the vacuum hoses and lines for damage and proper connections before troubleshooting.

Follow this procedure if the engine vibrates excessively when idling.

1. Warm up the engine to normal operating temperature (the cooling fan comes on twice).

   Is the idle speed less than 800 rpm?

   YES – Go to step 2.

   NO – Adjust the idle speed (see page 11-110).■

2. Fully depress the brake pedal.

3. With the transmission in gear, have an assistant disconnect and reconnect the 2P connector from the engine mount control solenoid valve.

   Is there a noticeable change in idle smoothness when the 2P connector is disconnected?

   YES – Reconnect the 2P connector to the solenoid valve. The engine mount control system is OK.■

   NO – Go to step 4.

4. Shift to N or P position.

5. Disconnect the 2P connector from the engine mount control solenoid valve.

6. Measure voltage between the No. 2 terminal and body ground.

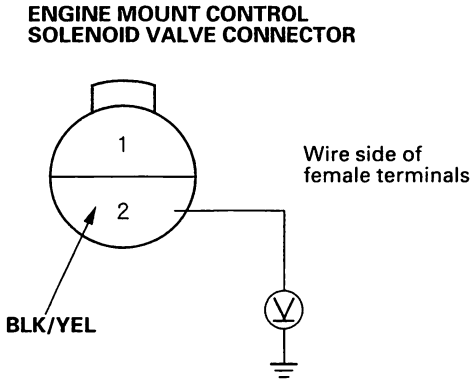

   Is there battery voltage?

   YES – Go to step 7.

   NO – Repair open in BLK/YEL wire between the 2P connector and No. 6 (15 A) fuse in the driver's under-dash fuse/relay box.■

7. Measure voltage between the No. 1 and No. 2 terminals.

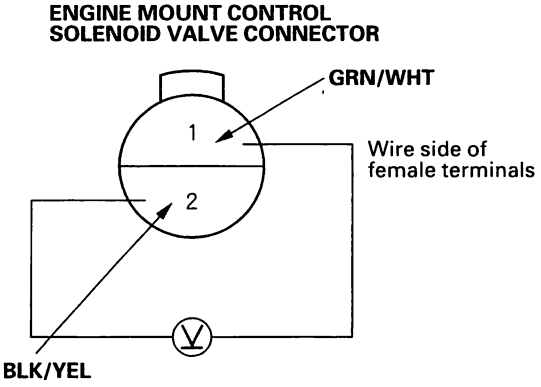

   Is there battery voltage?

   YES – Go to step 8.

   NO – Repair open in GRN/WHT wire between Powertrain Control Module (PCM) (A2) and the 2P connector. If the wire is OK, substitute a known-good Powertrain Control Module (PCM) and recheck (see page 11-3).■

(cont'd)

Troubleshooting (cont'd)

8. Raise the engine speed above 1,000 rpm.

9. Measure voltage between the No. 1 and No. 2 terminals.

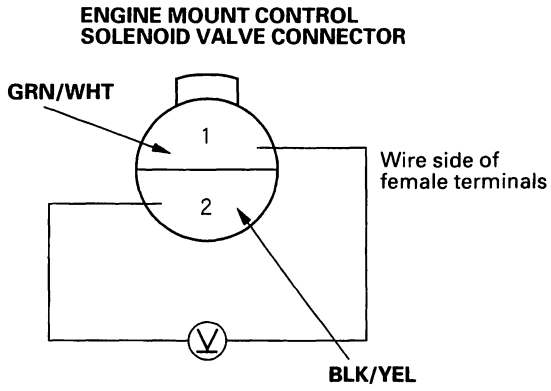

Is there battery voltage?

YES—Repair short to body ground in GRN/WHT wire between PCM (A2) and the 2P connector. If the wire is OK, substitute a known-good PCM and recheck (see page 11-3).■

NO—Go to step 10.

10. Disconnect the upper vacuum hose (A) from the engine mount control solenoid valve (B), and connect a vacuum pump/gauge to the hose. Apply vacuum for 20 seconds.

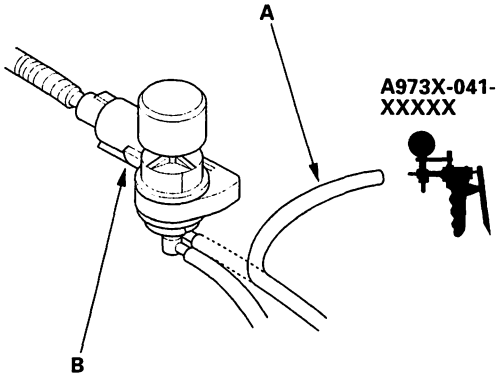

Does the engine mount hold vacuum?

YES—Go to step 11.

NO—Either the vacuum hose or the engine mount has a vacuum leak. Repair as needed.■

11. Release the vacuum, then apply vacuum again.

Is there a noticeable change in idle smoothness with and without vacuum applied?

YES—Go to step 12.

NO—Replace the engine mount.■

12. Disconnect the lower vacuum hose (A) from the engine mount control solenoid valve (B) and connect a vacuum pump/gauge to the hose.

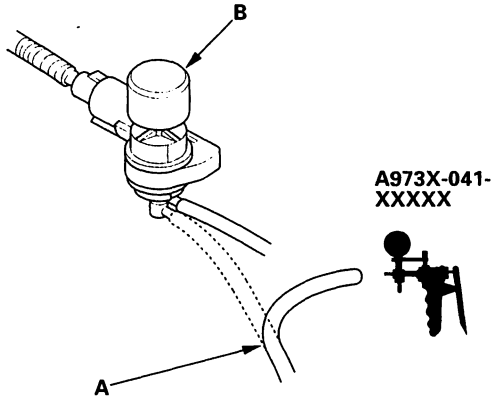

Is there manifold vacuum?

YES—Replace the engine mount control solenoid valve.■

NO—A hose is restricted or pinched or the intake manifold port is plugged. Repair as needed.■

BACK

Engine Mechanical

Engine Assembly
Engine Removal 5-2
Engine Installation 5-10

Cylinder Head **6-1**

Engine Block **7-1**

Engine Lubrication **8-1**

Intake Manifold/Exhaust System **9-1**

Engine Cooling **10-1**

Engine Assembly

Engine Removal

NOTE:
- Use fender covers to avoid damaging painted surfaces.
- To avoid damage, unplug the wiring connectors carefully while holding the connector portion.
- Mark all wiring and hoses to avoid misconnection. Also, be sure that they do not contact other wiring or hoses, or interfere with other parts.

1. Secure the hood in the open position.

2. Make sure you have the anti-theft code for the radio, then write down the frequencies for the radio's preset buttons.

3. Disconnect the battery negative terminal first, then the positive terminal.

4. Remove the intake air duct (A).

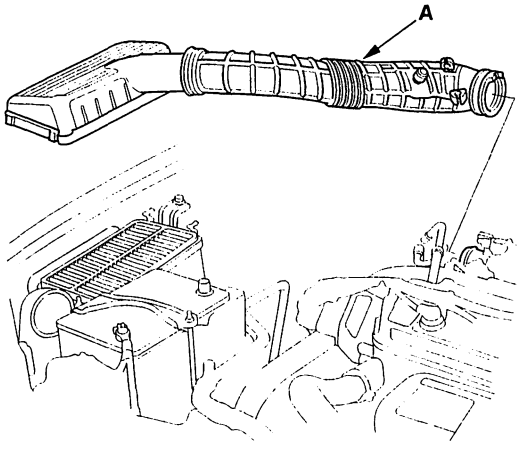

5. Fix the hood in the vertical position by using a support rod (P/N 74145-S84-A00) as shown below.

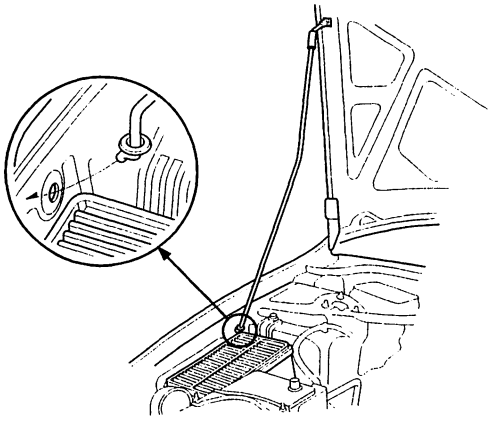

6. Disconnect the battery cables (A) from the under-hood fuse/relay box (B).

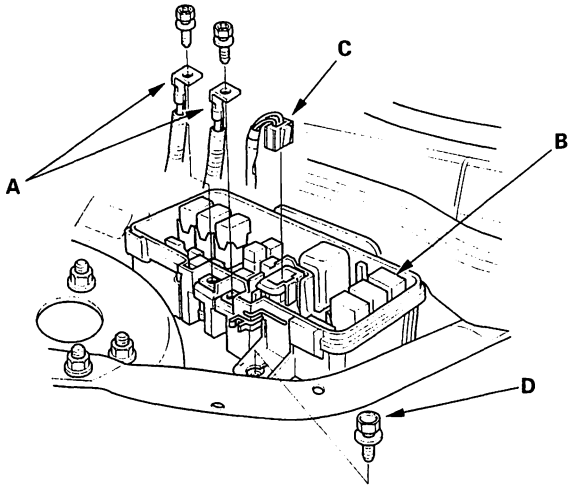

7. Disconnect the connector (C) from the under-hood fuse/relay box (B), and remove the bolt (D).

8. Remove the throttle cable (A) and cruise control cable (B) by loosening the locknuts (C) then slipping the cable ends out of the accelerator linkage. Take care not to bend the cable when removing them.
   Always replace any kinked cables with a new one.

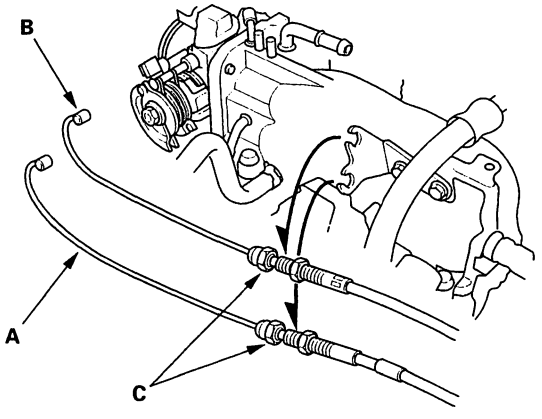

BACK

9. Relieve fuel pressure (see page 11-115).

10. Remove the fuel feed hose (A) and fuel return hose (B).

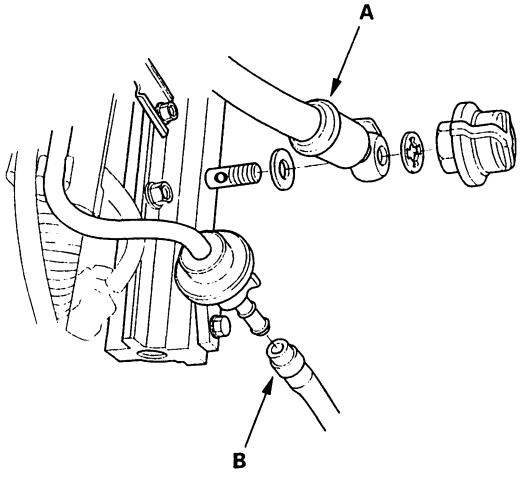

11. Remove the brake booster vacuum hose (A), Evaporative Emission (EVAP) canister hose (B), vacuum hose (C) and P/S hose clamp (D).

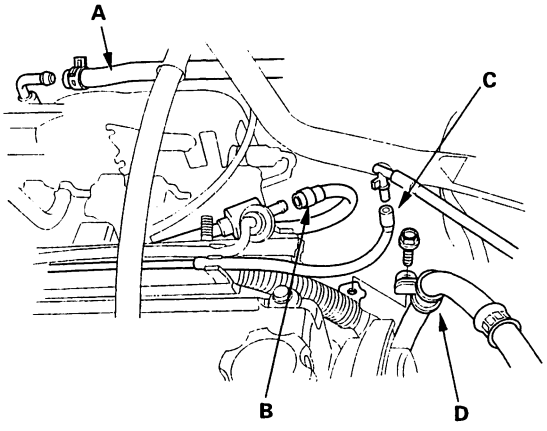

12. Remove the mounting bolts (A), then remove the Power Steering (P/S) pump belt (B) and pump without disconnecting the P/S hoses.

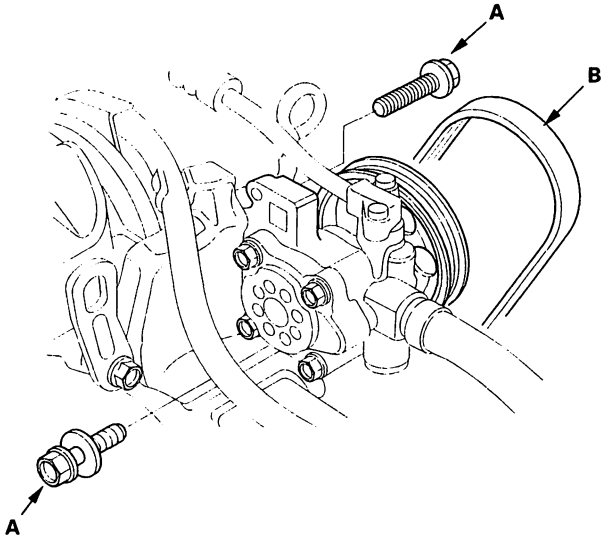

13. Remove the alternator belt.
    - –1 Loosen the alternator mounting bolt (A).
    - –2 Loosen the alternator locknut (B).
    - –3 Loosen the adjusting bolt (C).
    - –4 Remove the alternator belt (D).

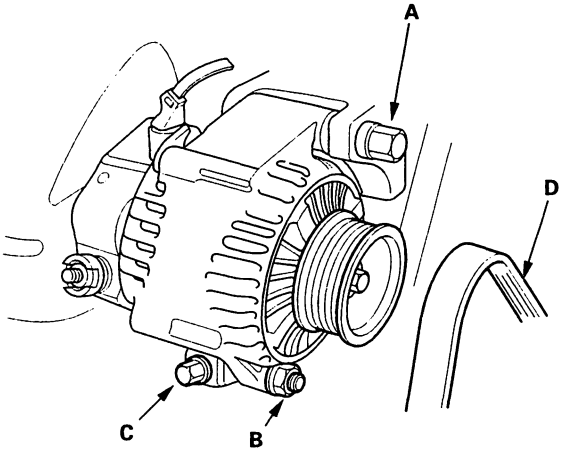

(cont'd)

Engine Removal (cont'd)

14. Disconnect the Engine Control Module (ECM)/ Powertrain Control Module (PCM) connectors from the ECM/PCM.

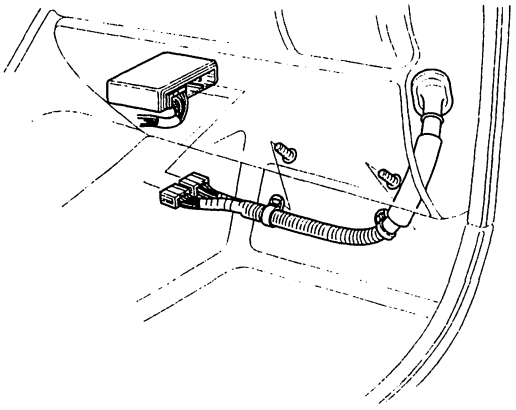

15. Remove the grommet (A), then pull out the ECM/ PCM connectors.

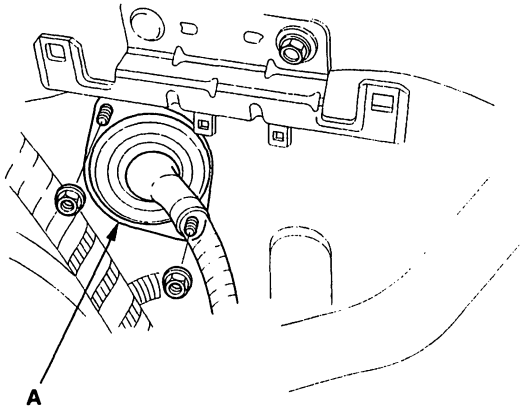

16. Disconnect the engine wire harness connectors on the right side of the engine compartment.

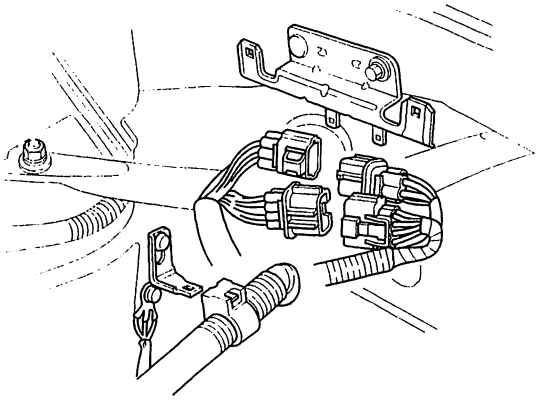

17. Remove the starter cable (A), wire harness clamp (B), ground cable (C) and back-up light switch connectors (D).

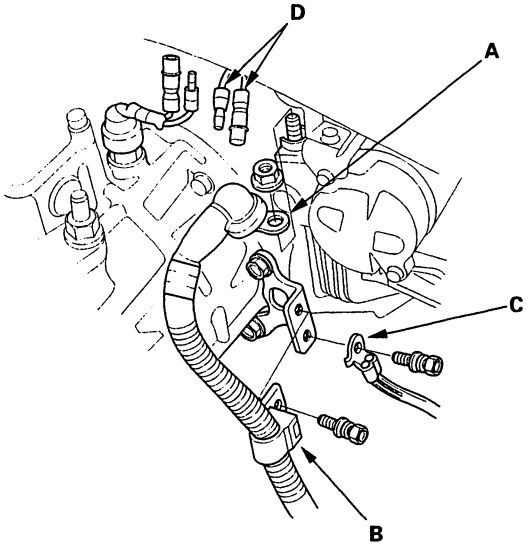

BACK

18. Remove the shift cable (A) and select cable (B). Take care not to bend the cable when removing it. Always replace any kinked cable with a new one (M/T).

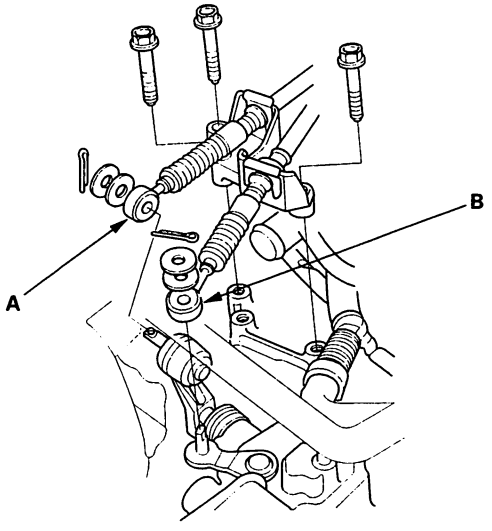

19. Remove the clutch slave cylinder and line/hose assembly (M/T).

NOTE:
- Do not disconnect the line/hose assembly.
- Do not operate the clutch pedal once the slave cylinder has been removed.
- Take care not to bend the line.

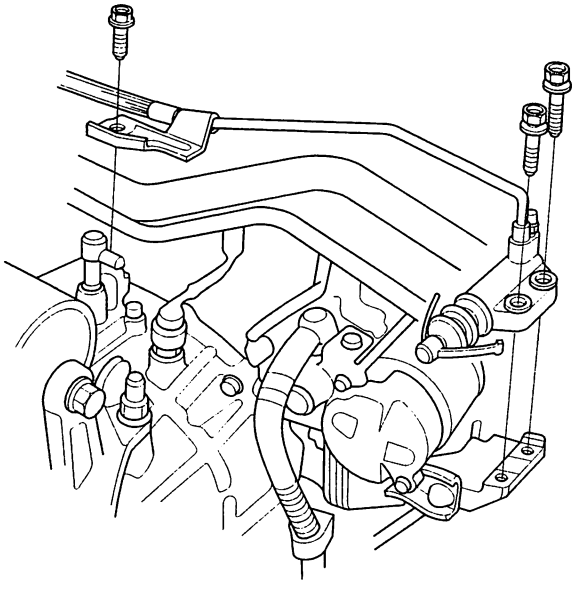

20. Remove the rear engine mount bracket mounting bolt/nut (A).

M/T:

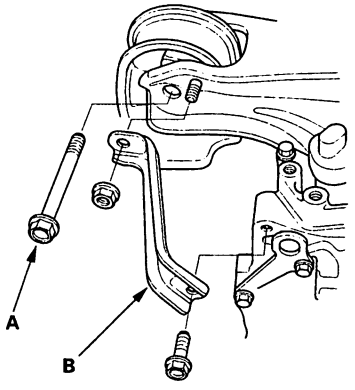

A/T:

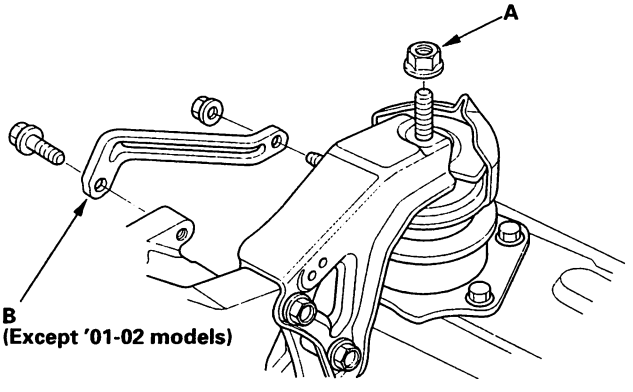

21. Remove the rear stiffener (B) (except '01 model A/T).

22. Remove the front engine mount bracket mounting bolts (A), and loosen the mount bolt (B).

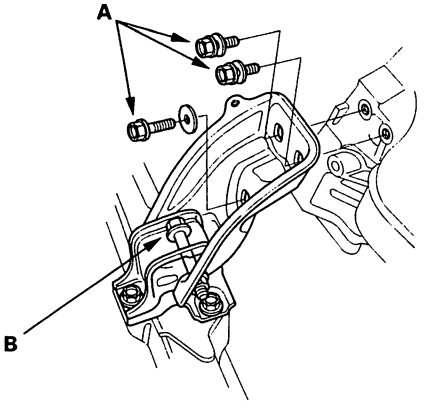

(cont'd)

Engine Removal (cont'd)

23. Remove the radiator cap.

24. Raise the hoist to full height.

25. Remove the front tires/wheels.

26. Remove the splash shield.

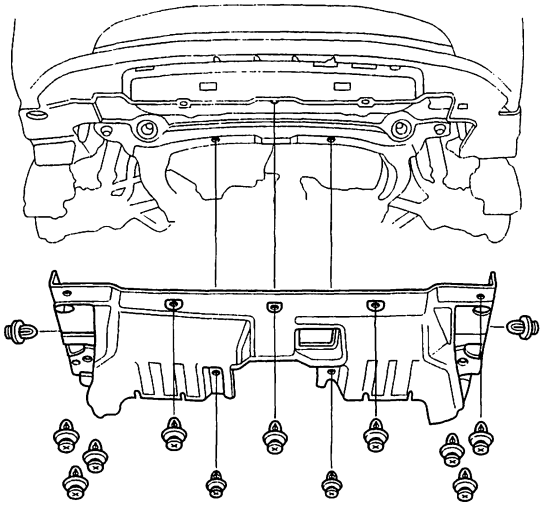

27. Loosen the drain plug in the radiator to drain the engine coolant (see page 10-10).

28. Drain the Manual Transmission Fluid (MTF) (see page 13-3) or Automatic Transmission Fluid (ATF) (see page 14-113). Reinstall the drain plug using a new washer.

29. Drain the engine oil. Reinstall the drain bolt using a new washer (see page 8-5).

30. Lower the hoist, then remove the upper radiator hose (A), lower radiator hose (B) and the heater hoses (C).

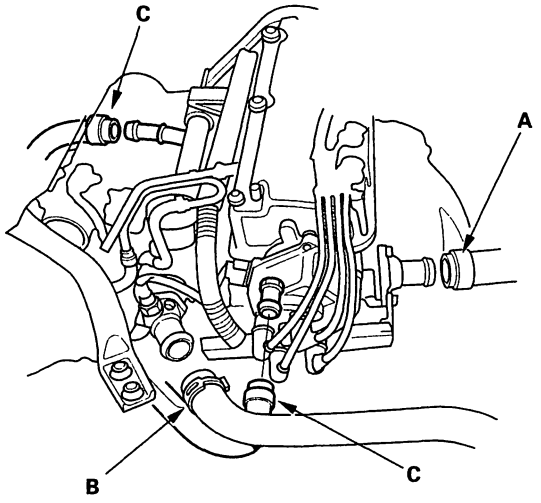

31. Remove the ATF cooler hoses, then plug the ATF cooler hoses and lines.

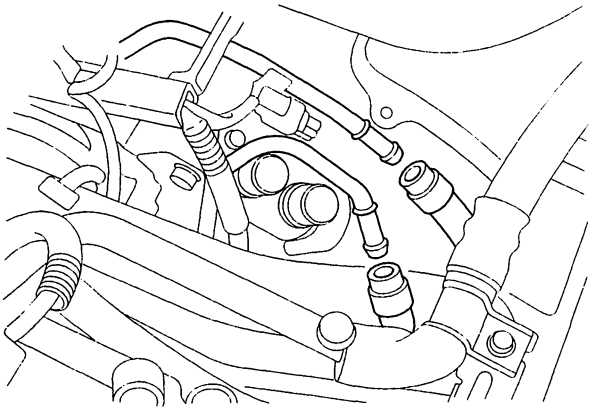

BACK

32. Remove the A/C compressor without disconnecting the A/C hoses.

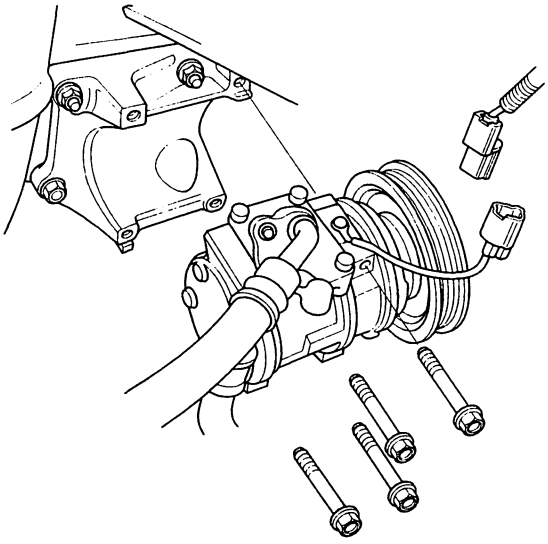

33. Make sure the hoist supports are positioned correctly on the vehicle. Raise the hoist to full height.

34. Remove exhaust pipe A.

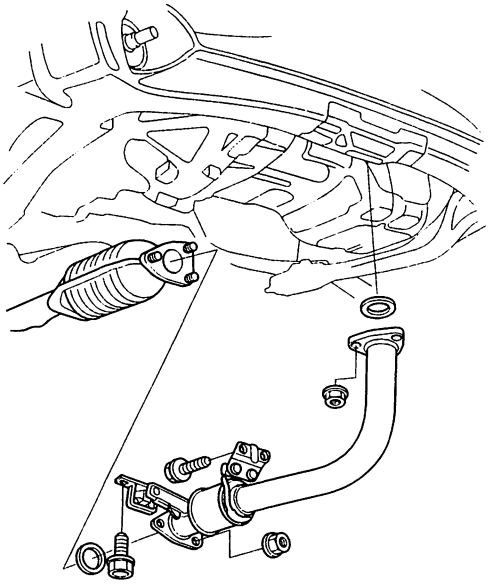

35. Remove the bolts (A) securing the shift cable holder (B), then remove the shift cable cover (C). To prevent damage to the control lever joint, be sure to remove the bolts securing the shift cable holder before removing the bolts securing the shift cable cover (A/T).

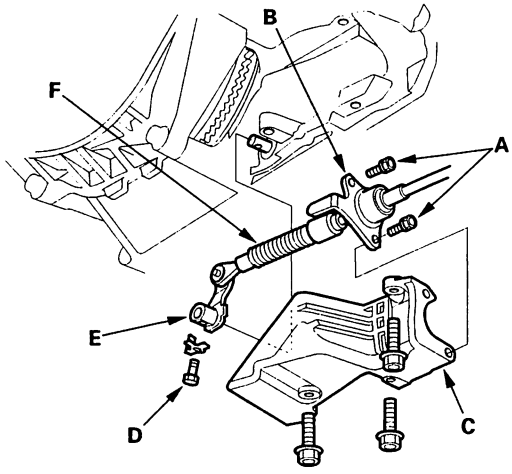

36. Remove the lock bolt (D) securing the control lever (E), then remove the shift cable (F) with the control lever. Take care not to bend the shift cable while removing it (A/T).

37. Remove the damper fork (see page 18-17).

38. Disconnect the suspension lower arm ball joints (see page 18-17).

39. Remove the driveshafts (see page 16-3). Coat all precision finished surfaces with clean engine oil. Tie plastic bags over the driveshaft ends.

(cont'd)

Engine Removal (cont'd)

40. Remove the rear engine mount bracket.

M/T:

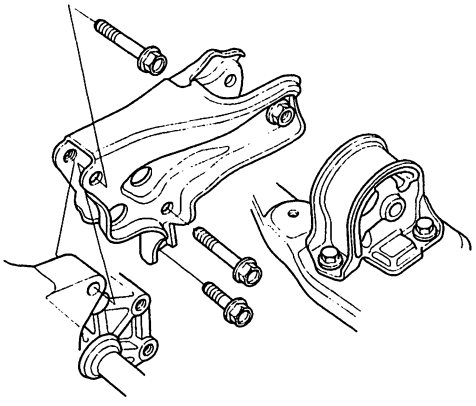

'98-00 models A/T:

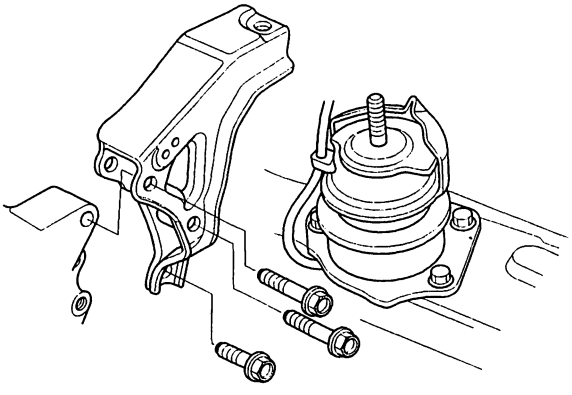

'01-02 models A/T:

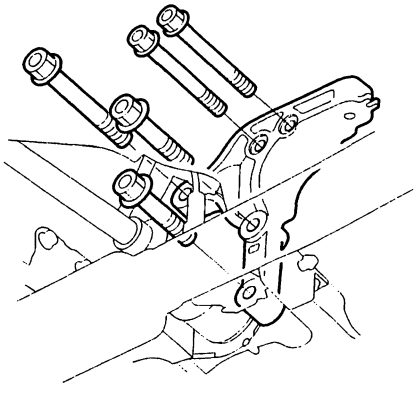

41. Remove the flange bolts securing the radius rods.

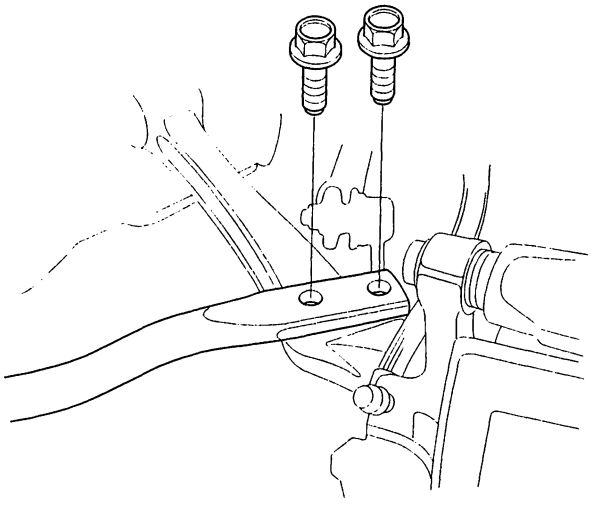

42. Mark the front beam (A) and rear beam (B), then remove the front beam.

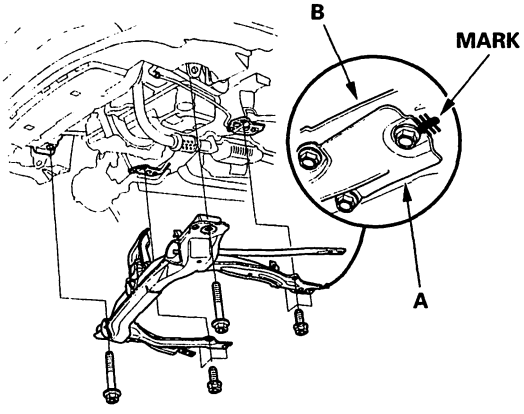

BACK

43. Lower the hoist.

44. Attach the chain hoist to the engine as shown.

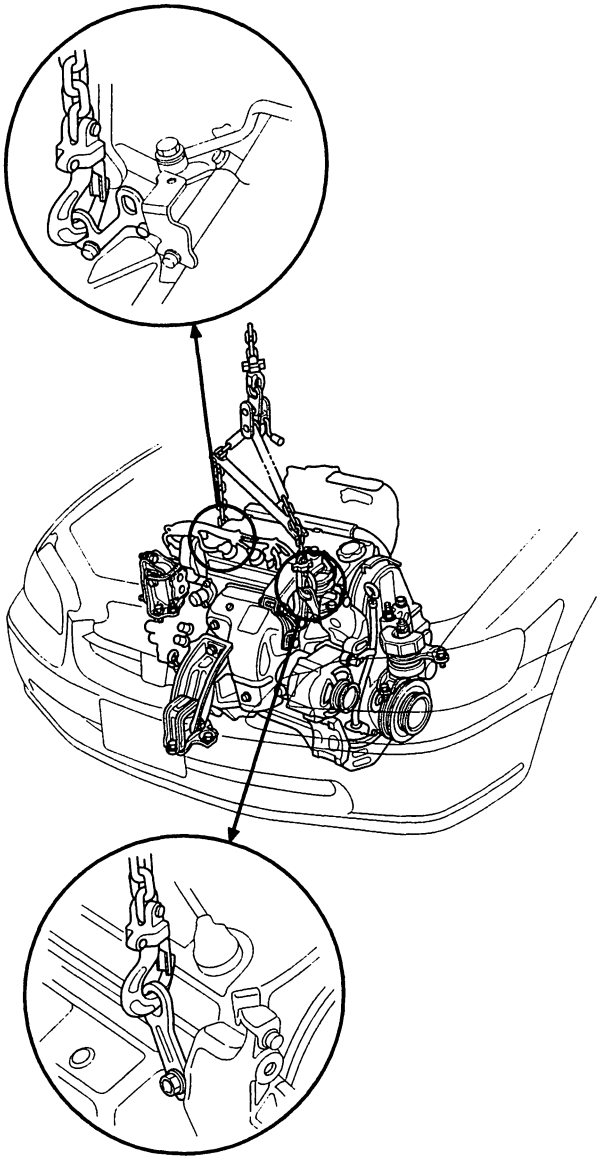

45. Remove the ground cable (A) and the stop (B), then remove the upper bracket (C).

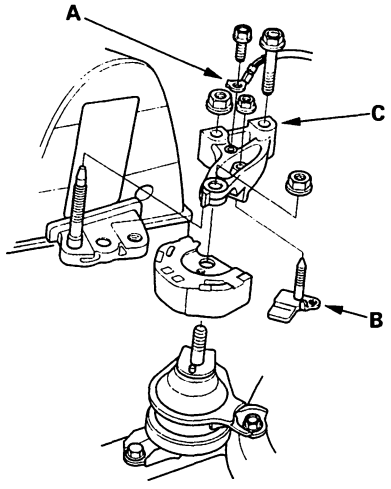

46. Remove the transmission mount bracket.

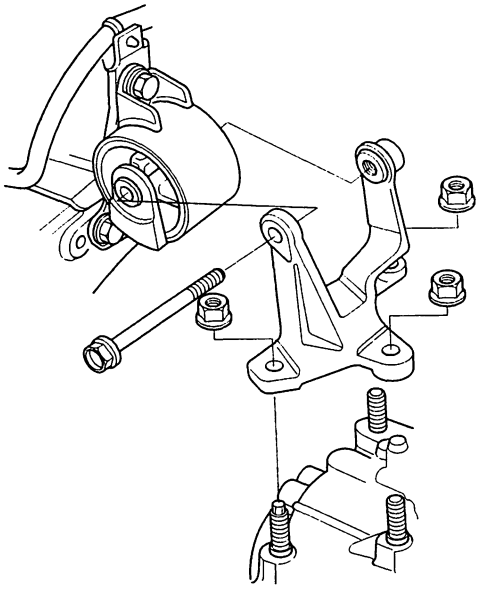

47. Check that the engine/transmission is completely free of vacuum hoses, fuel and coolant hoses, and electrical wiring.

48. Slowly lower the engine about 150 mm (6 in.). Check once again that all hoses and wires are disconnected from the engine/transmission.

49. Lower the engine all the way. Remove the chain hoist from the engine.

50. Remove the engine from under the vehicle.

Engine Installation

1. Install the accessory brackets and tighten their bolts and nuts to the specified torques.

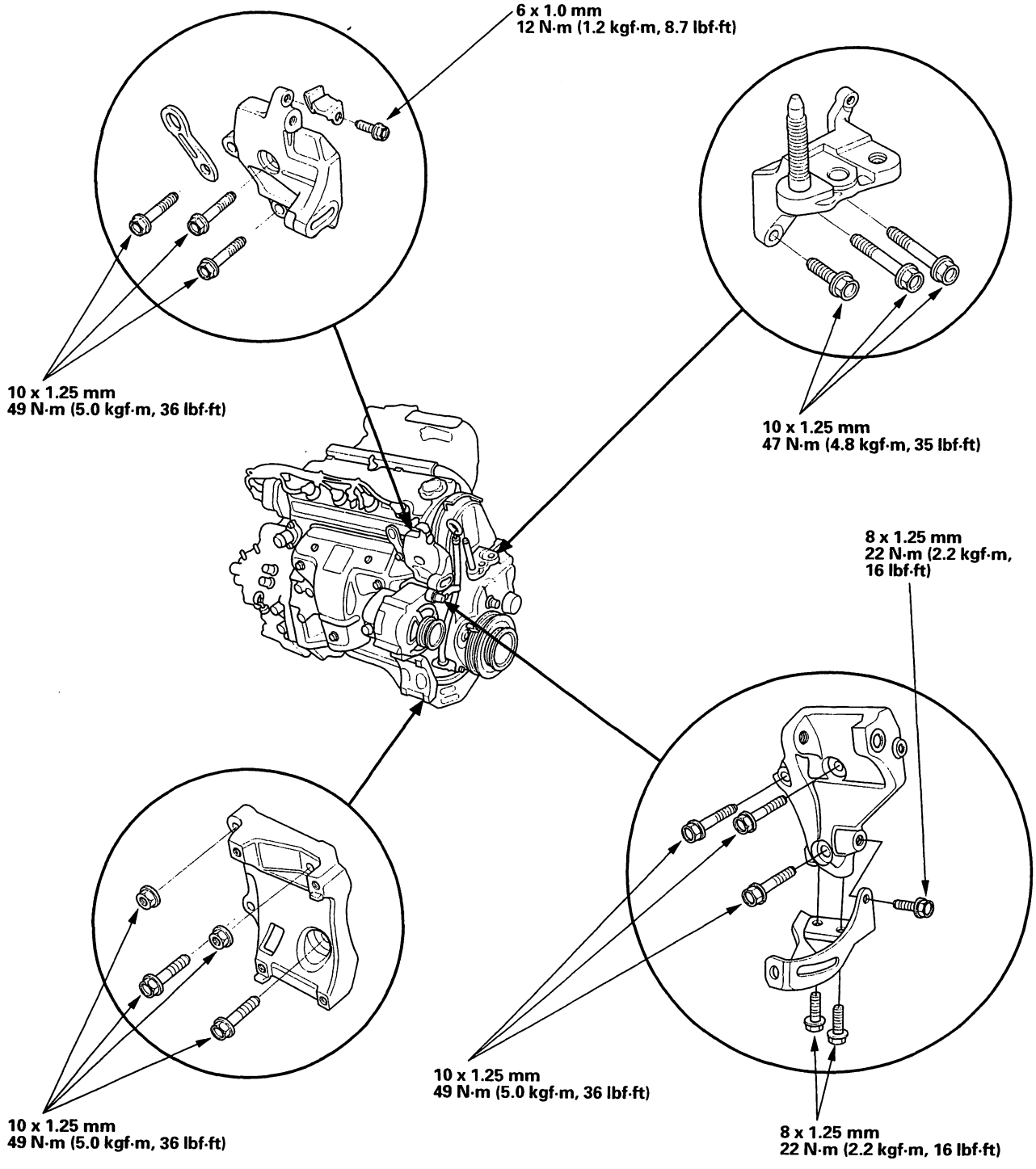

BACK

2. Push the engine under the vehicle. Attach the chain hoist to the engine, then lift the engine into position in the vehicle.

NOTICE

Reinstall the mounting bolts/nuts in the sequence given. Failure to follow this sequence may cause excessive noise and vibration, and reduce bushing life.

3. Install the upper bracket (A), then tighten the bolt and nuts in the numbered sequence shown.

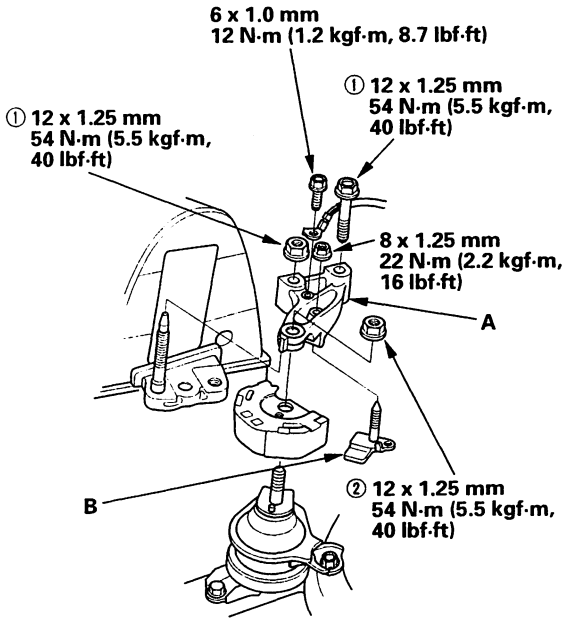

4. Install the stop (B).

5. Install the transmission mount bracket. Tighten the bolt and nuts in the numbered sequence shown.

M/T:

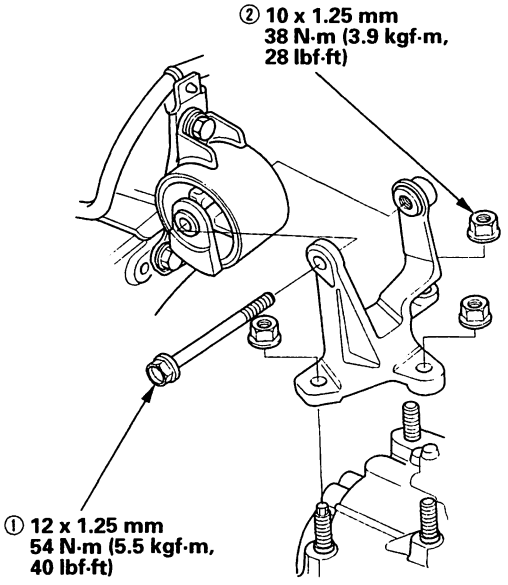

A/T:

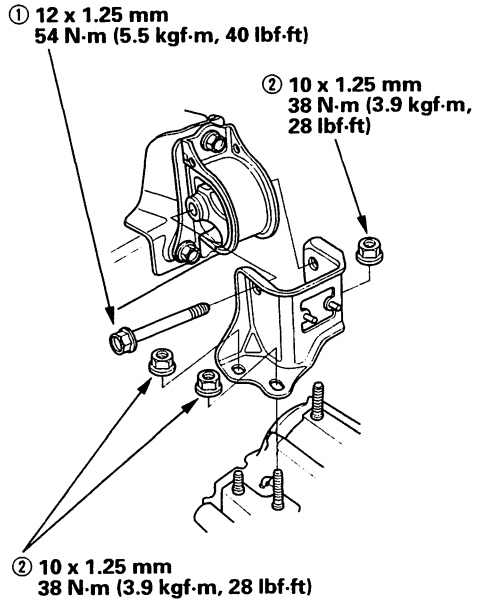

6. Remove the chain hoist from the engine.

7. Raise the hoist to full height.

(cont'd)

Engine Installation (cont'd)

8. Install the front beam. Align the marks on the rear beam (B) and front beam (C) then tighten the bolts.

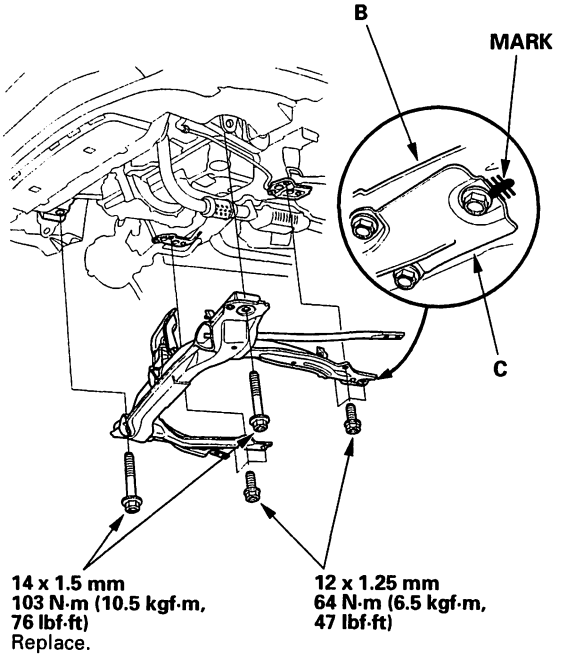

9. Tighten the flange bolts on the radius rods.

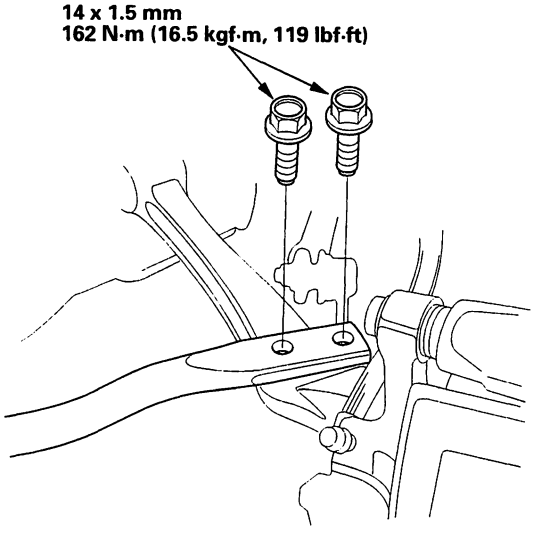

10. Install the rear mount bracket, then tighten the bolts.

M/T:

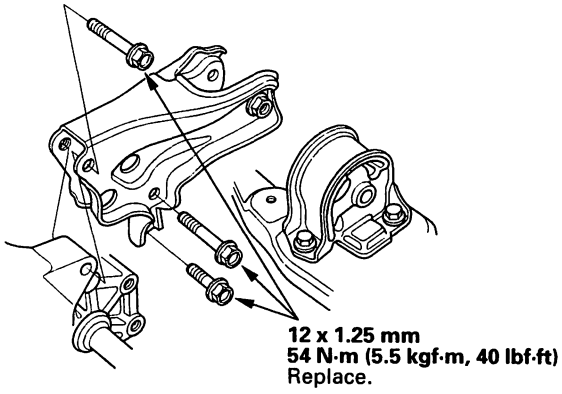

'98-00 models A/T:

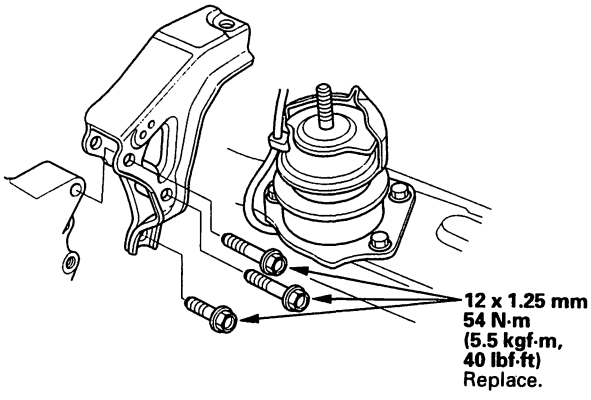

'01-02 models A/T:

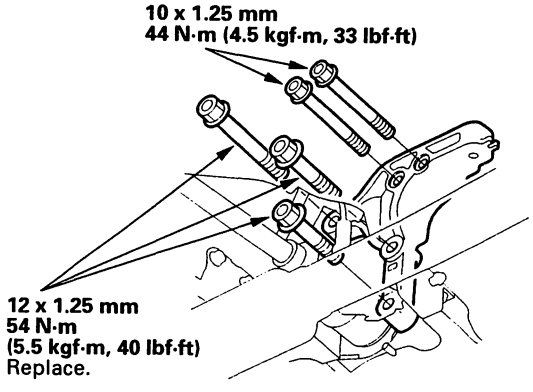

11. Lower the hoist.

BACK

12. Tighten the rear mount mounting bolt/nut (A).

M/T:

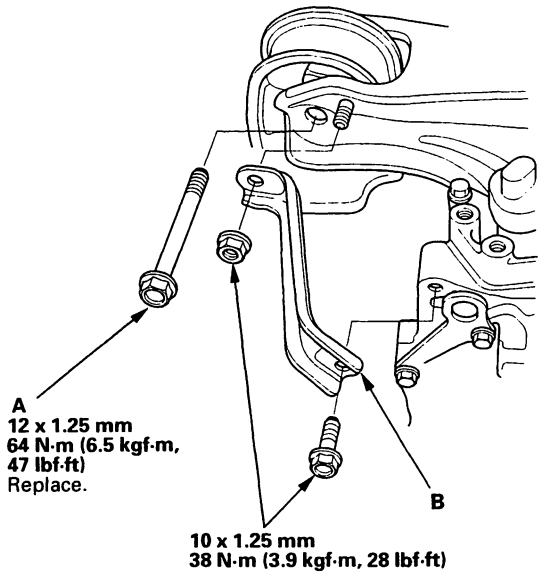

A/T:

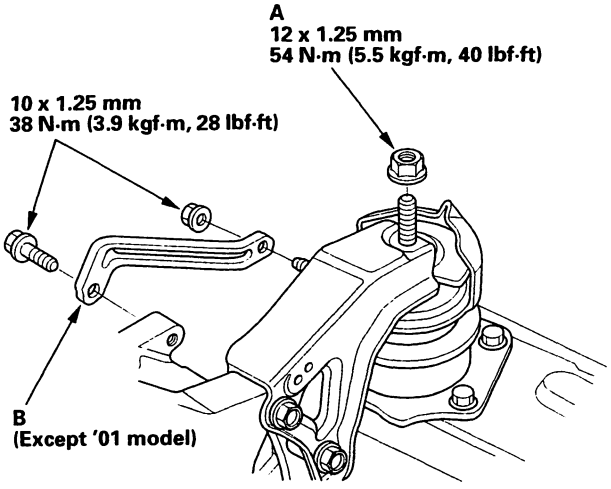

13. Install the rear stiffener (B) (except '01-02 models A/T).

14. Tighten the front mount bracket mounting bolts in the numbered sequence shown.

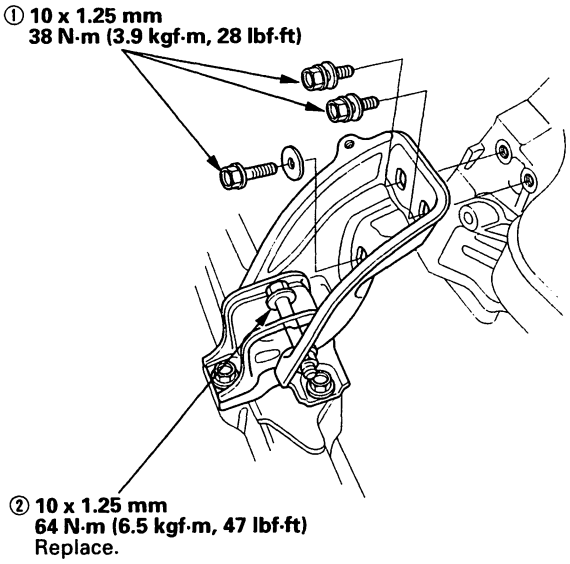

(cont'd)

Engine Installation (cont'd)

15. Raise the hoist to full height.

16. Install a new spring clip on the end of each driveshaft, then install the driveshafts. Make sure each clip "clicks" into place in the differential and intermediate shaft.

17. Connect the suspension lower arm ball joints. Use new cotter pins (see page 18-17).

18. Install the damper fork (see page 18-17).

19. Install the A/C compressor.

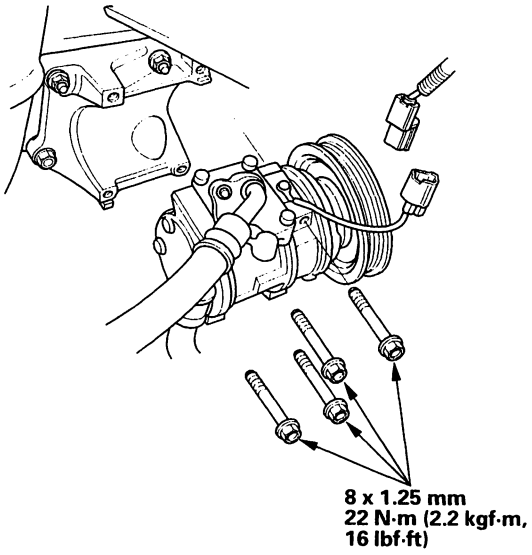

20. Install the exhaust pipe A (A); use new gaskets (B) and new self-locking nuts (C).

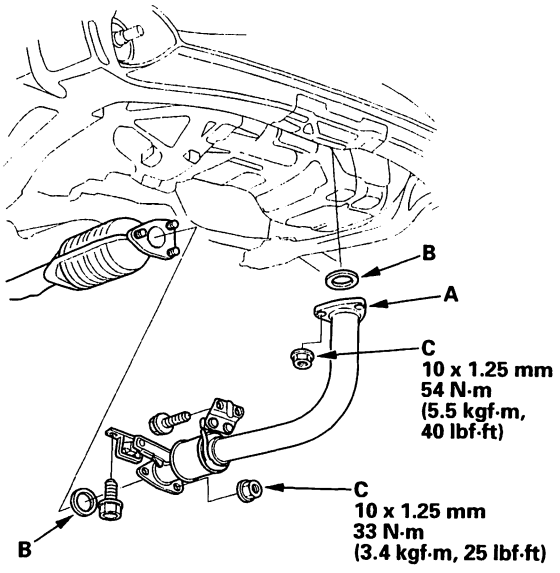

21. Install the control lever (A), with the shift cable (B), on the control shaft. Do not bend the shift cable any more than is necessary to install the control lever (A/T).

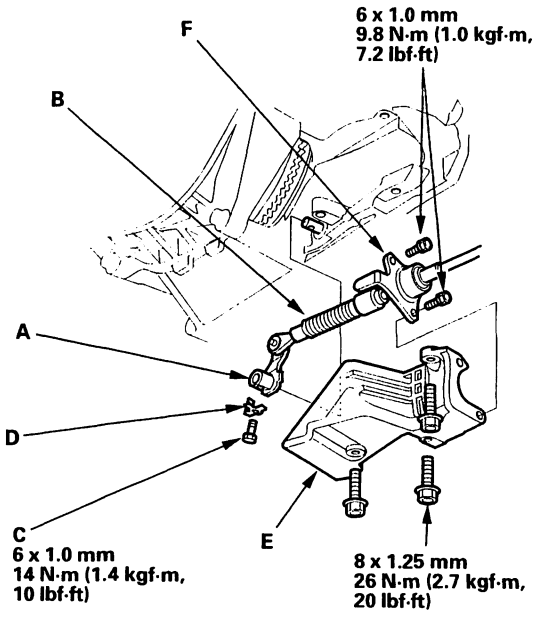

22. Install the lock bolt (C) with a new lock washer (D), then bend the lock tab of the lock washer (A/T).

23. Install the shift cable cover (E), then install the shift cable holder (F) on the shift cable cover (A/T).

24. Connect the upper radiator hose (A), lower radiator hose (B) and heater hoses (C).

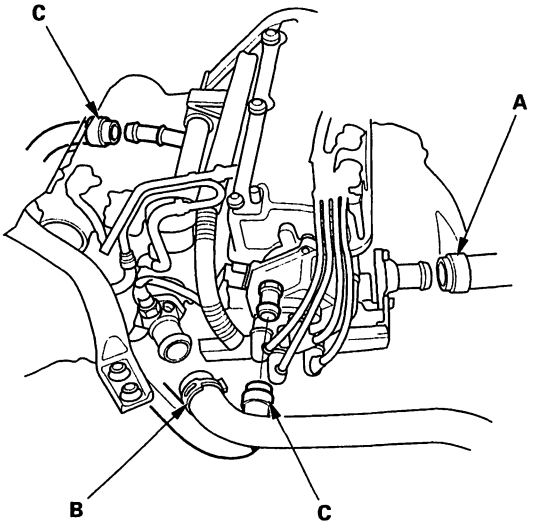

BACK

25. Connect the Automatic Transmission Fluid (ATF) cooler hoses (A/T).

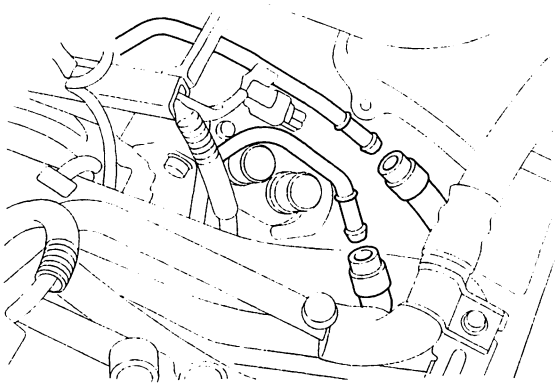

26. Install the splash shield.

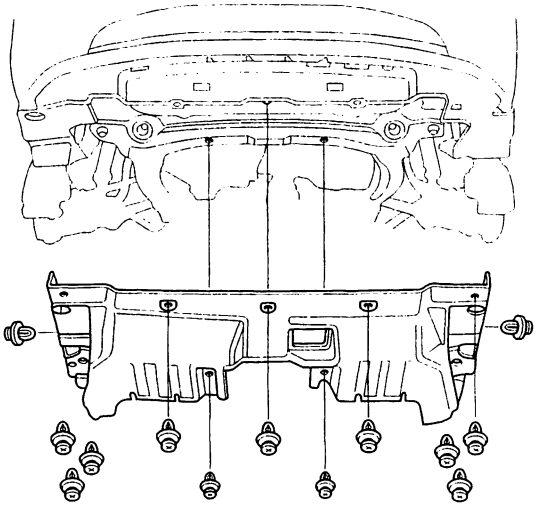

27. Install the front tires/wheels.

28. Lower the hoist.

29. Install the clutch slave cylinder and line/hose assembly. Take care not to bend the line (M/T).

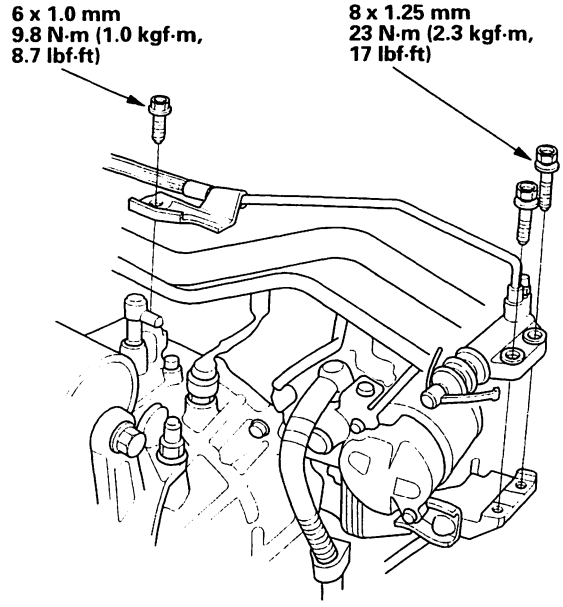

30. Install the shift cable (A) and select cable (B); use new cotter pins (C).

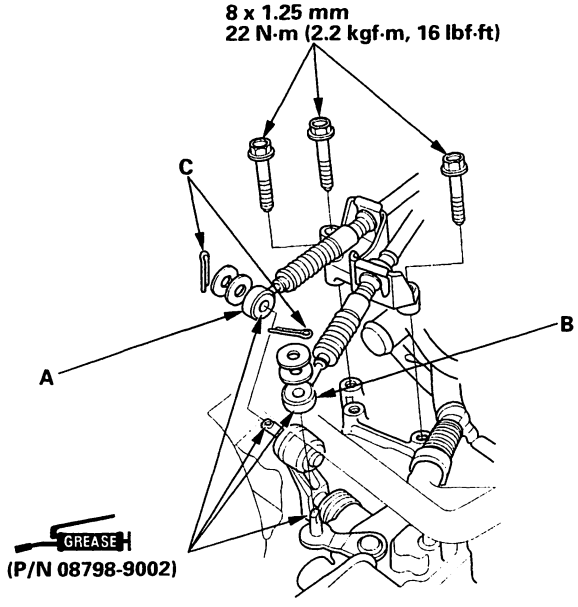

(cont'd)

Engine Installation (cont'd)

31. Loosely install the alternator belt.

32. Loosely install the P/S pump belt and pump.

33. Adjust the alternator belt (see page 4-39) and the Power Steering (P/S) pump belt (see page 17-12).

34. Install the starter cable (A), wire harness clamp (B), ground cable (C) and back-up light switch connectors (D).

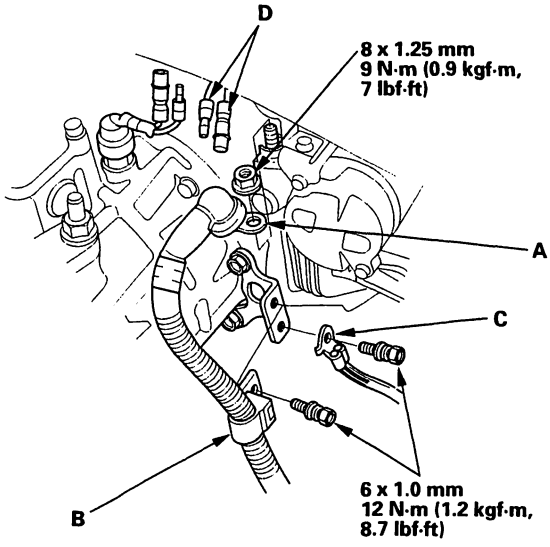

35. Connect the engine wire harness connectors on the right side of the engine compartment.

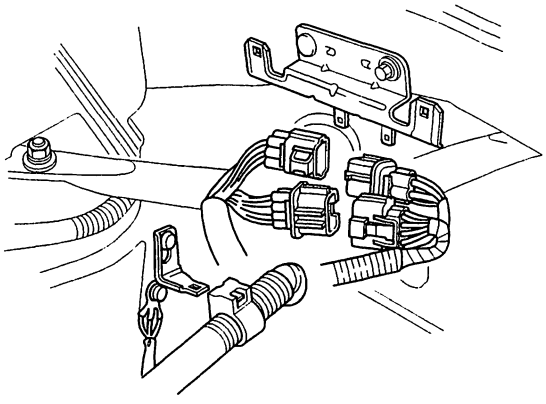

36. Push the ECM/PCM connectors through the bulkhead, then install the grommet (A).

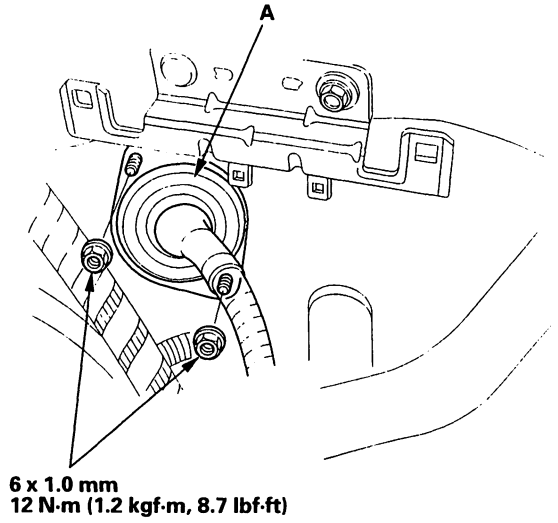

37. Connect the ECM/PCM connectors.

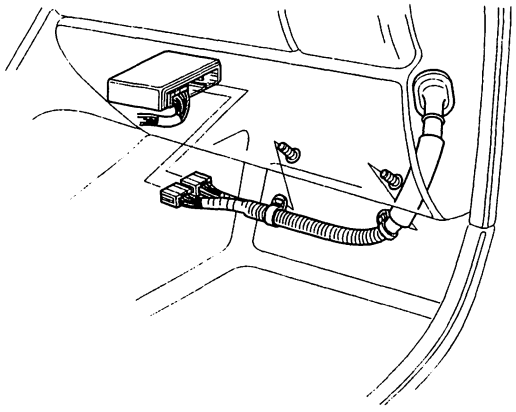

BACK

38. Install the brake booster vacuum hose (A), Evaporative Emission (EVAP) canister hose (B) and vacuum hoses (C).

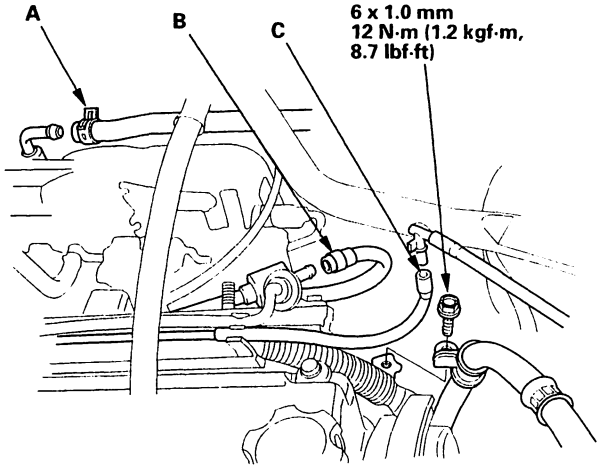

39. Install the fuel feed hose (A) and fuel return hose (B), using new washers (C).

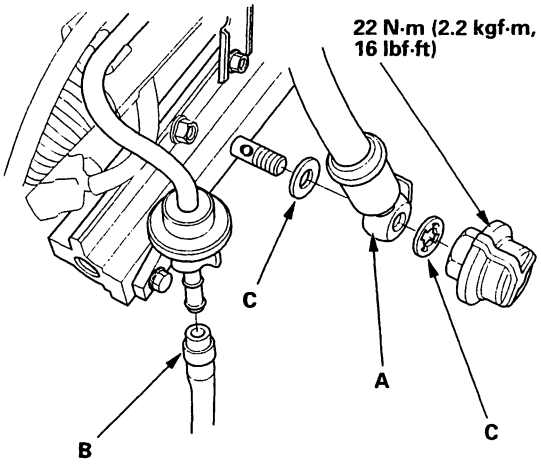

40. Install the cruise control cable, then adjust the cable (see page 4-54).

41. Install the throttle cable, then adjust the cable (see page 11-134).

42. Install the under-hood fuse/relay box (A), then connect the connector (B) and battery cable (C) on the under-hood fuse/relay box.

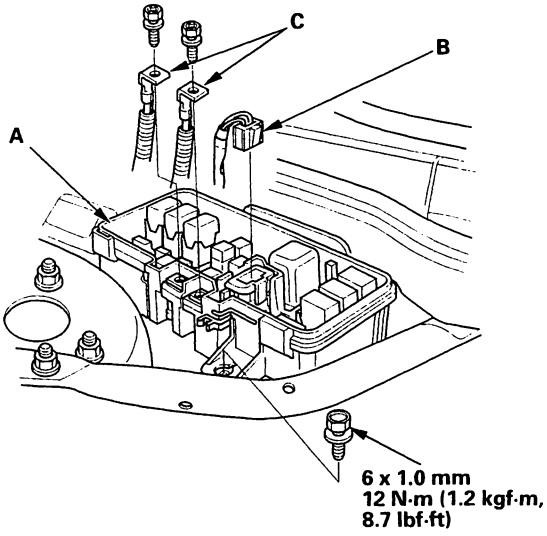

43. Install the intake air duct.

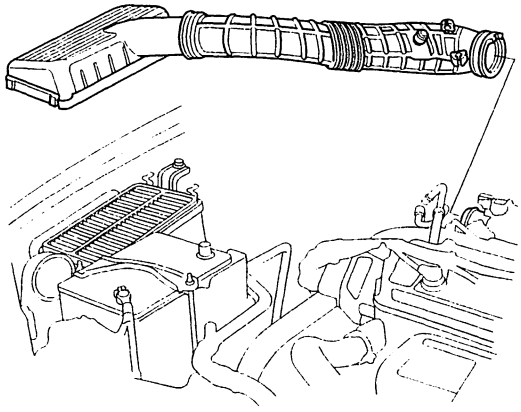

(cont'd)

Engine Installation (cont'd)

44. Clean the battery posts and cable terminals with sandpaper, then assemble them and apply grease to prevent corrosion.

45. Refill the engine with engine oil (see page 8-5).

46. Refill the transmission with MTF (see page 13-3) or ATF (see page 14-113).

47. Refill the radiator with engine coolant, and bleed air from the cooling system with the heater valve open (see page 10-10).

48. Move the shift lever to each gear, and verify that the A/T gear position indicator follows the transmission range switch (A/T).

49. Check that the transmission shifts into gear smoothly (M/T).

50. Inspect for fuel leaks. Turn ON (II) the ignition switch (do not operate the starter) so that the fuel pump runs for approximately 2 seconds and pressurizes the fuel line. Repeat this operation two or three times, then check for fuel leakage at any point in the fuel line.

51. Enter the anti-theft code for the radio, then enter the customer's radio station presets.

BACK

Engine Mechanical

Cylinder Head

Special Tools 6-2
Component Location Index 6-3
DTC Troubleshooting 6-7
VTEC Solenoid Valve Test 6-10
VTEC Rocker Arms Test 6-11
Valve Clearance Adjustment 6-14
Valve Seal Replacement with
Cylinder Head Installed 6-16
Crankshaft Pulley Removal and Installation 6-18
Timing Belt Inspection 6-19
Balancer Belt Inspection 6-20
Timing Belt and Balancer Belt Adjustment 6-22
Timing Belt and Balancer Belt Removal 6-23
Timing Belt and Balancer Belt Installation 6-26
Cylinder Head Removal 6-30
Cylinder Head Inspection for Warpage 6-35
Rocker Arm Assembly Removal 6-35
Rocker Arms shafts Disassembly/Reassembly
-F23A1, F23A4 Engines 6-36
Rocker Arms shafts Disassembly/Reassembly
-F23A5 Engines 6-37
Rocker Arms and shafts Inspection 6-38
Camshaft Inspection 6-40
Valves, Springs, and Valve Seals Removal 6-43
Valve Inspection 6-43
Valve Stem-to-Guide Clearance Inspection 6-43
Valve Guide Replacement 6-44
Valve Seat Reconditioning 6-46
Valves, Springs, and Valve Seals Installation 6-48
Camshaft/Rocker Arms,
Camshaft Seal, and Pulley Installation 6-49
Cylinder Head Installation 6-51
Cylinder Head Cover Installation 6-54
CKP/TDC Sensors Replacement 6-55

BACK

Cylinder Head

Special Tools

Ref.No.	Tool Number	Description	Qty
①	07HAH-PJ7010B	Valve Guide Reamer, 5.5 mm	1
②	07JAA-001020A	Socket, 19 mm	1
③	07JAB-001020A	Holder Handle	1
④	07LAJ-PR3020B	Air Stopper	1
⑤	07MAB-PY3010A	Holder Attachment, 50 mm, Offset	1
⑥	07NAF-PT0010A	Installer Cup	1
⑦	07NAF-PT0020A	Installer Shaft	1
⑧	07NAG-PT0010A	Seal Guide	1
⑨	07NAJ-P07010A	Pressure Gauge Adaptor	1
⑩-1	07406-0020201	A/T Pressure Hose	1
⑩-2	07406-0070300	A/T Low Pressure Gauge W/Panel	1
⑩-3	07MAJ-PY4011A	A/T Pressure Hose, 2,210 mm	1
⑩-4	07MAJ-PY40120	A/T Pressure Hose Adaptor	1
⑪	07742-0010100	Valve Guide Driver, 5.5 mm	1

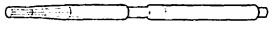

①

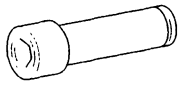

②

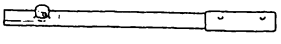

③

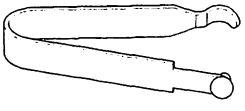

④

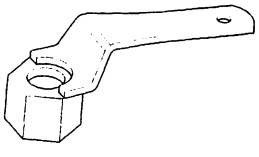

⑤

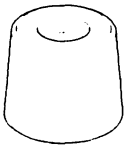

⑥

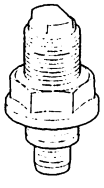

⑦

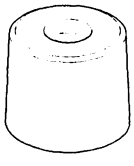

⑧

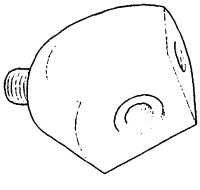

⑨

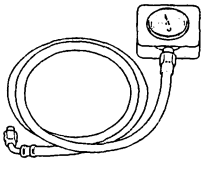

⑩-1, ⑩-2, ⑩-3, ⑩-4

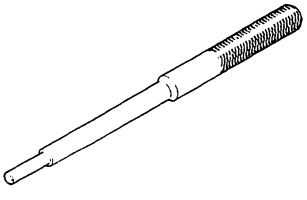

⑪

BACK

Component Location Index

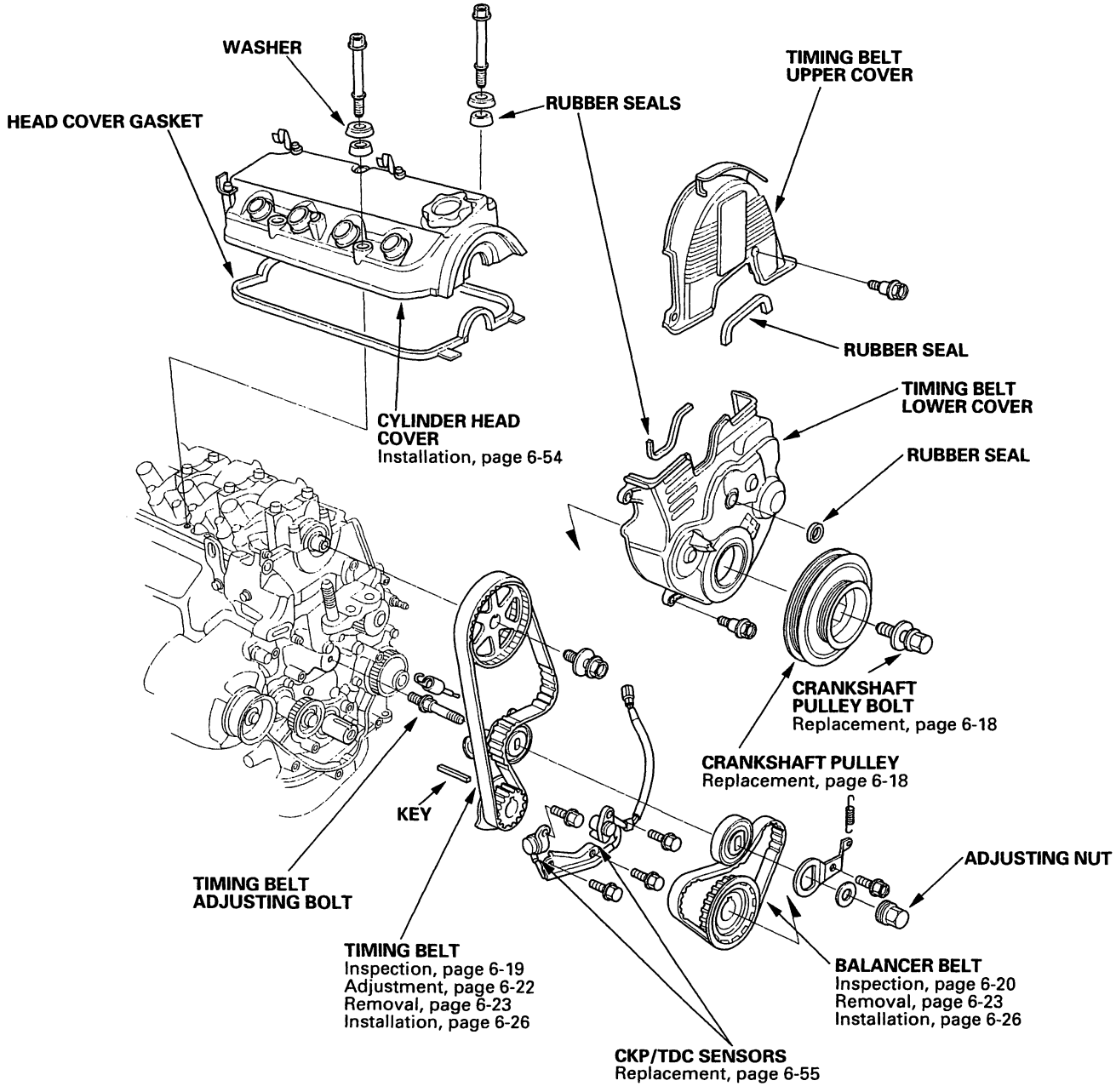

(cont'd)

Component Location Index (cont'd)

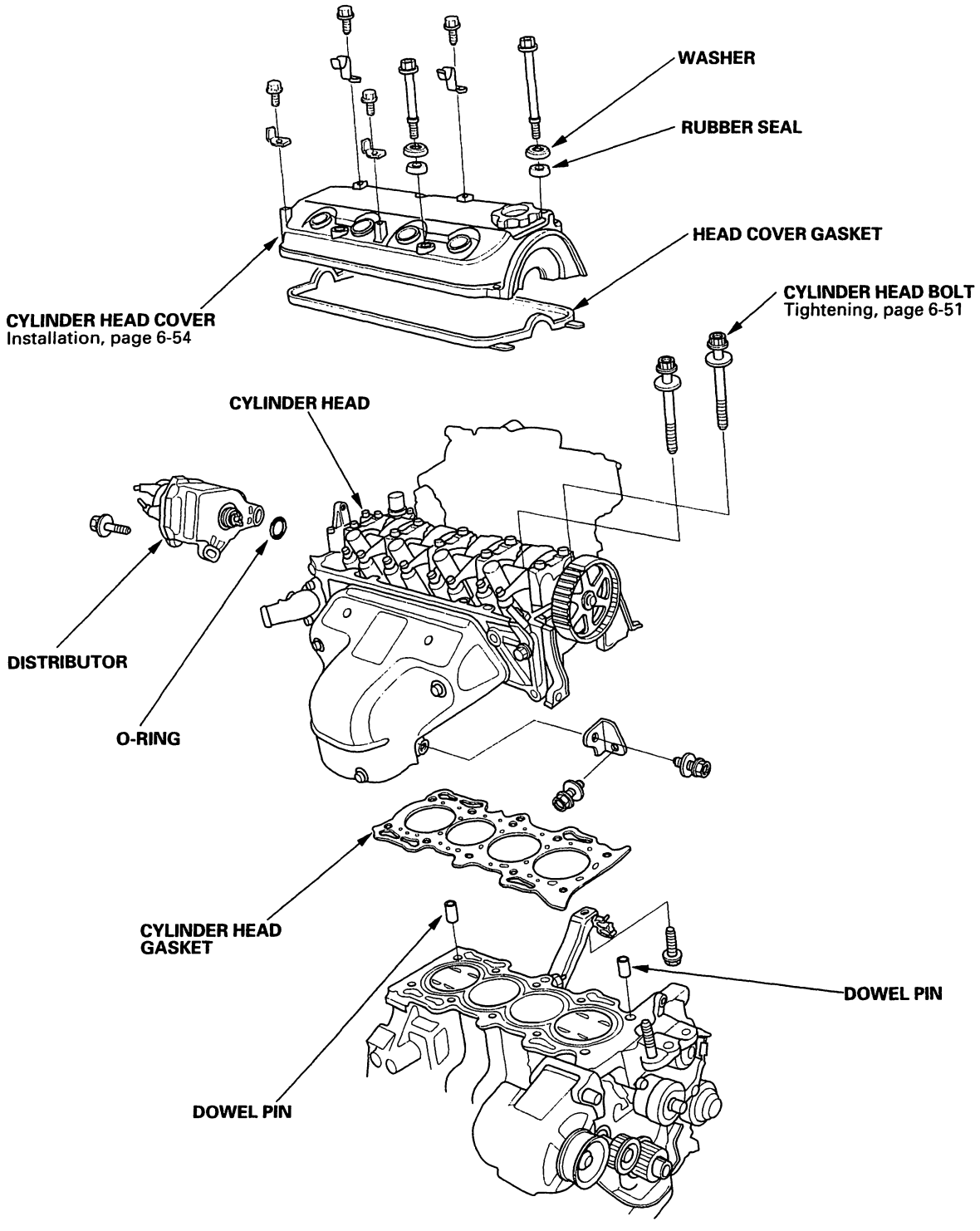

BACK

F23A1/F23A4 engines

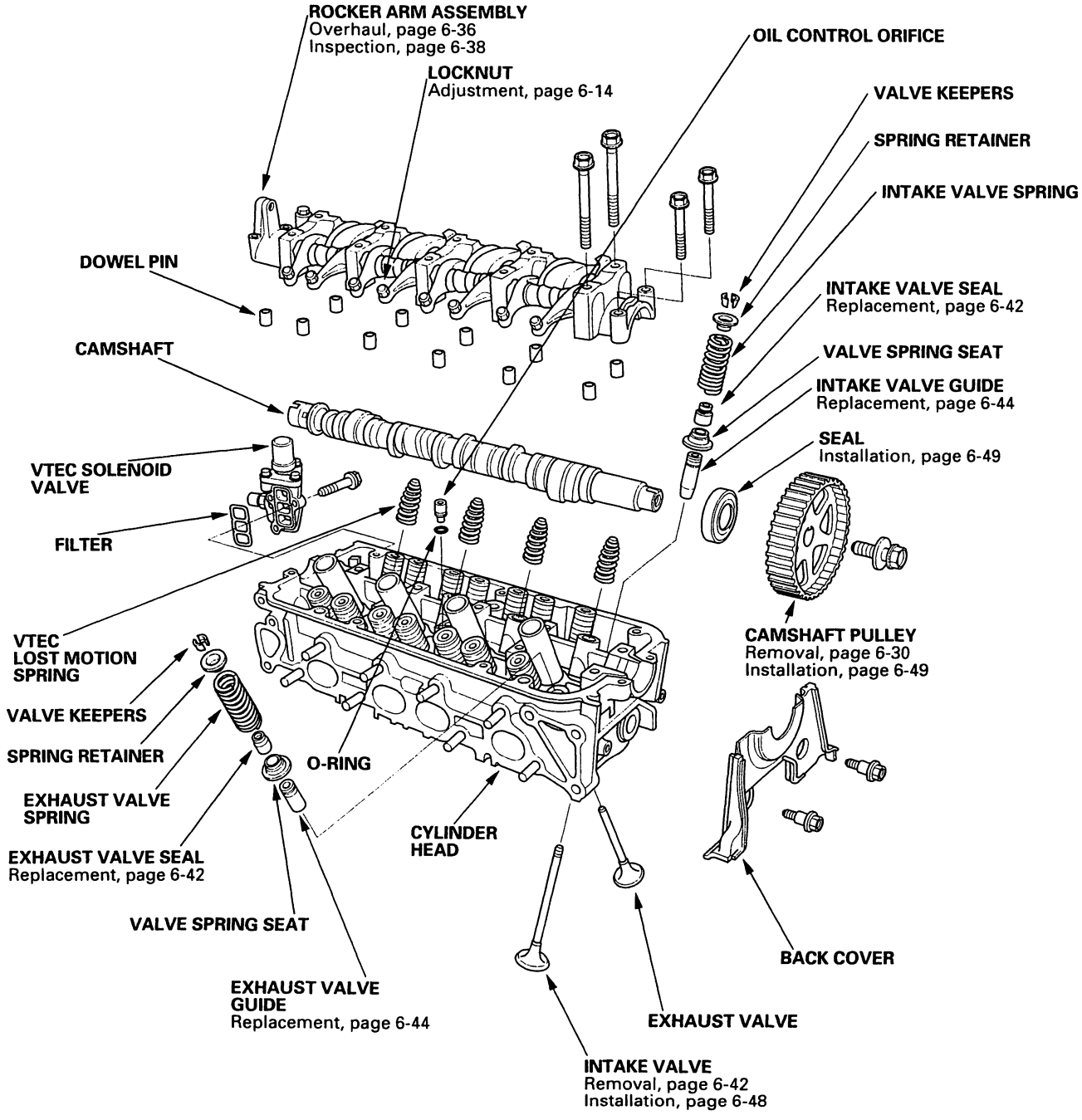

(cont'd)

Component Location Index (cont'd)

F23A5 engine

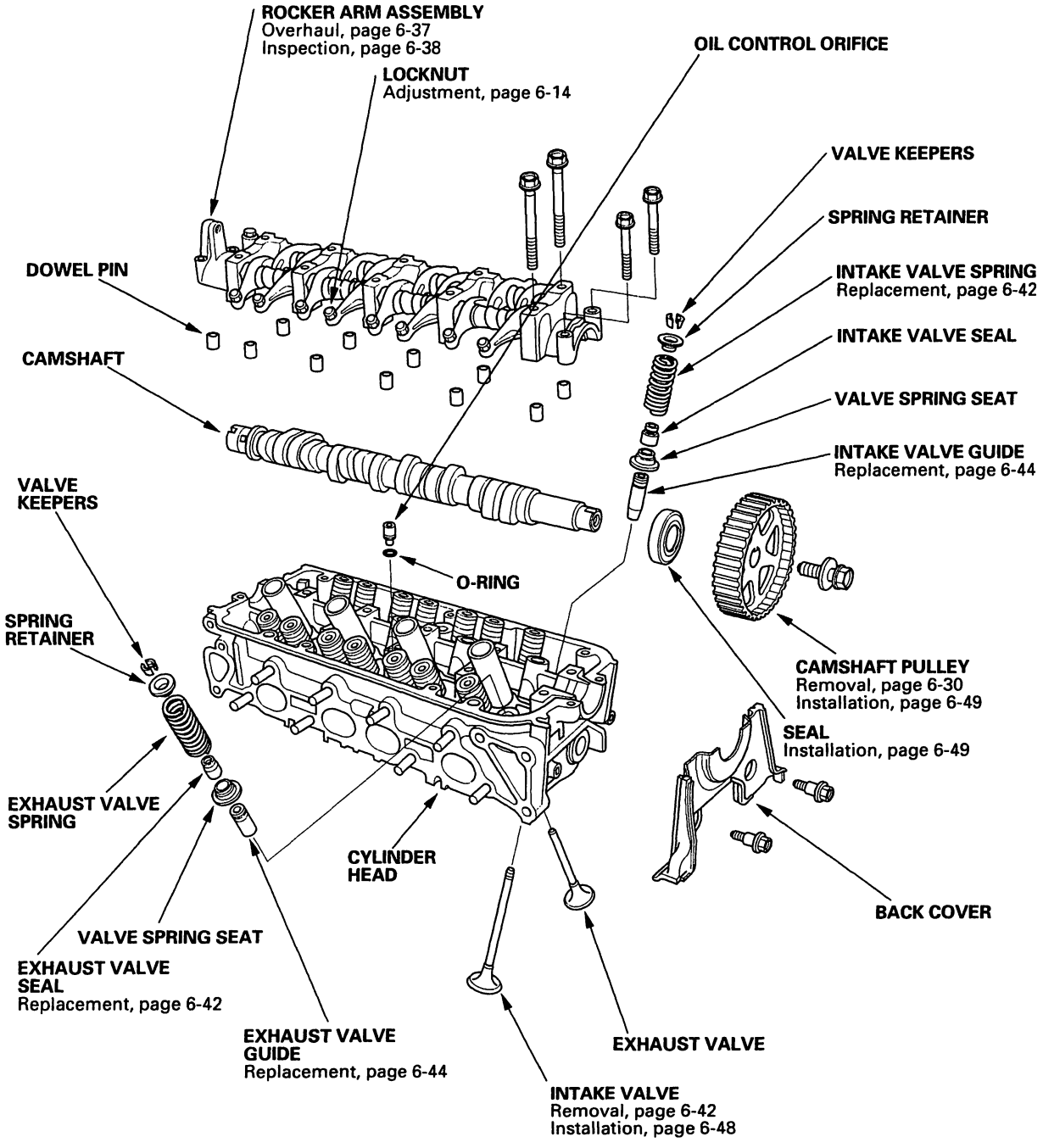

BACK

DTC P1259: A problem in the VTEC Oil Pressure Switch circuit or VTEC Solenoid Valve circuit.

Special Tools Required
- Pressure Gauge Adaptor 07NAJ-P07010A
- A/T Low Pressure Gauge W/Panel 07406-0070300
- A/T Pressure Hose 07406-0020201
- A/T Pressure Hose, 2,210 mm 07MAJ-PY4011A
- A/T Pressure Adaptor 07MAJ-PY40120

1. Do the Engine Control Module (ECM)/Powertrain Control Module (PCM) reset procedure (see page 11-3).

2. Start the engine.

3. Warm up the engine to normal operating temperature (cooling fan comes on).

4. Road test the vehicle:
   Accelerate in 1st gear to an engine speed over 4,000 rpm. Hold that engine speed for at least 2 seconds. If DTC P1259 is not repeated during the first road test, repeat this test two more times.

   Is DTC P1259 indicated?

   YES – Go to step 5.

   NO – Intermittent failure, system is OK at this time. Check for poor connections or loose wires at VTEC solenoid valve and ECM/PCM. ■

5. Turn the ignition switch OFF.

6. Disconnect the VTEC oil pressure switch 2P connector.

7. Check for continuity on the VTEC oil pressure switch between the pressure switch 2P connector terminals No. 1 and No. 2.

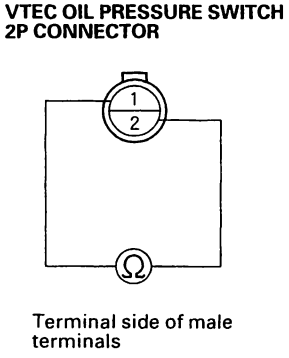

   Is there continuity?

   YES – Go to step 8.

   NO – Replace the VTEC oil pressure switch. ■

8. Turn the ignition switch ON (II).

9. Measure the voltage between the VTEC oil pressure switch harness 2P connector terminal No. 2 and body ground.

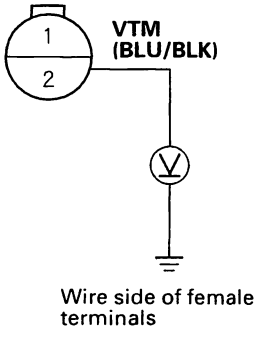

   Is there battery voltage?

   YES – Go to step 10.

   NO – Inspect for an open or short to ground in the wire between the VTEC oil pressure switch and the ECM/PCM (C10). If the wire is OK, substitute a known-good ECM/PCM and recheck. ■

(cont'd)

DTC Troubleshooting (cont'd)

10. Measure voltage across the VTEC oil pressure switch harness 2P connector.

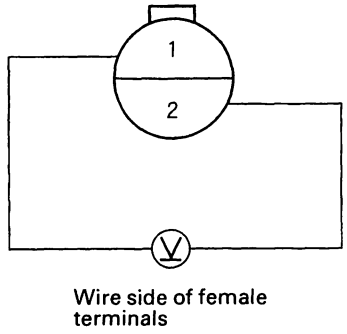

Is there battery voltage?

YES—Go to step 11.

NO—Repair open in the wire between the VTEC oil pressure switch and G101. If the wire is OK, substitute a known-good ECM/PCM and recheck.■

11. Turn the ignition switch OFF.

12. Disconnect the VTEC solenoid valve 1P connector.

13. Check for continuity on the VTEC solenoid valve between the solenoid valve 1P connector terminal and body ground.

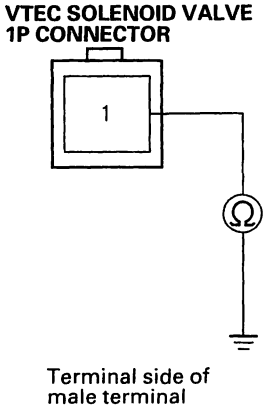

Is there 14–30 Ω ?

YES—Go to step 14.

NO—Replace the VTEC solenoid valve.■

14. Remove the VTEC oil pressure switch (A) and install the special tools as shown, then reinstall the VTEC oil pressure switch.

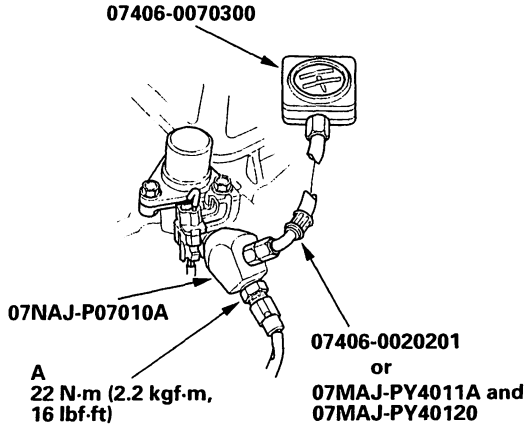

15. Reconnect the VTEC solenoid valve 1P connector and VTEC oil pressure switch 2P connector.

16. Connect a tachometer.

17. Warm up the engine to normal operating temperature (cooling fan comes on).

18. Check oil pressure at engine speeds of 1,000, 2,000 and 4,000 rpm. Keep measuring time as short as possible because the engine is running with no load (less than one minute).

Is pressure below 49 kPa (0.5 kgf/cm², 7 psi)?

YES—Go to step 19.

NO—Inspect the VTEC solenoid valve (see page 6-10).■

19. Turn the ignition switch OFF.

20. Disconnect the VTEC solenoid valve 1P connector.

21. Attach the battery positive terminal to the VTEC solenoid valve terminal.

22. Start the engine and check oil pressure at an engine speed of 3,000 rpm.

Is pressure above 390 kPa (4.0 kgf/cm², 57 psi)?

YES—Go to step 23.

NO—Inspect the VTEC solenoid valve (see page 6-10).■

BACK

23. With the battery positive terminal still connected to the VTEC solenoid valve, measure voltage between C10 and body ground.

ECM/PCM CONNECTOR C (31P)

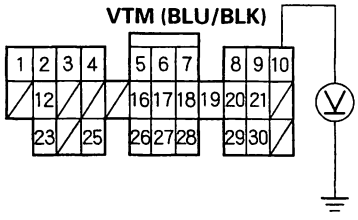

Wire side of female terminals

Is there battery voltage above 4,000 rpm?

YES – Go to step 24.

NO – Replace the VTEC oil pressure switch. ■

24. Turn the ignition switch OFF.

25. Disconnect the battery positive terminal from the VTEC solenoid valve terminal.

26. Check for continuity between the VTEC solenoid valve harness 1P connector terminal and the ECM/PCM connector terminal B12.

VTEC SOLENOID VALVE HARNESS 1P CONNECTOR

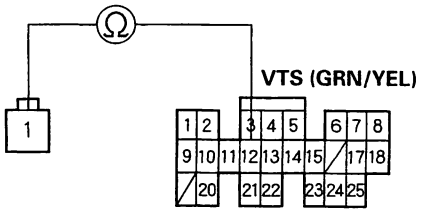

ECM/PCM CONNECTOR B (25 P)

Wire side of female terminals

Is there continuity?

YES – Go to step 27.

NO – Repair open in the wire between the ECM/PCM (B12) and VTEC solenoid valve connector. ■

27. Check for continuity between the VTEC solenoid valve 1P connector terminal and body ground.

VTEC SOLENOID VALVE HARNESS 1P CONNECTOR

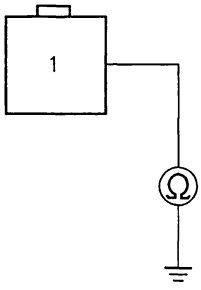

Wire side of female terminal

Is there continuity?

YES – Repair short in the wire between the ECM/PCM (B12) and VTEC solenoid valve connector. ■

NO – Substitute a known-good ECM/PCM and recheck. If symptom/indication goes away, replace the original ECM/PCM. ■

VTEC Solenoid Valve Test

1. Disconnect the 1P connector from the VTEC solenoid valve.

2. Measure resistance between the terminal and body ground.

   Resistance: 14 – 30 Ω

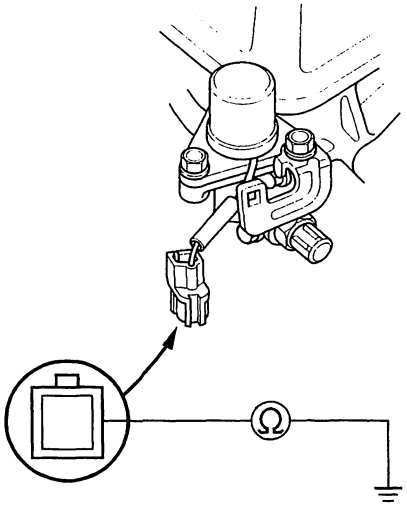

3. If the resistance is within specifications, remove the VTEC solenoid valve assembly (A) from the cylinder head, and check the VTEC solenoid valve filter/O-ring (B) for clogging .
   If there is clogging, replace the engine oil filter and the engine oil.

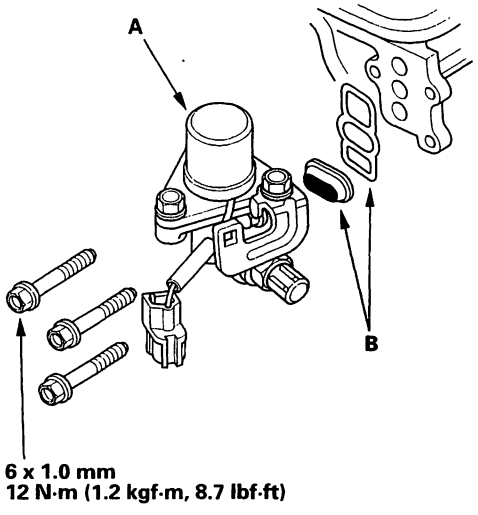

4. If the filter is not clogged, push the VTEC solenoid valve with your finger and check its movement.
   If the VTEC solenoid valve is normal, check the engine oil pressure.

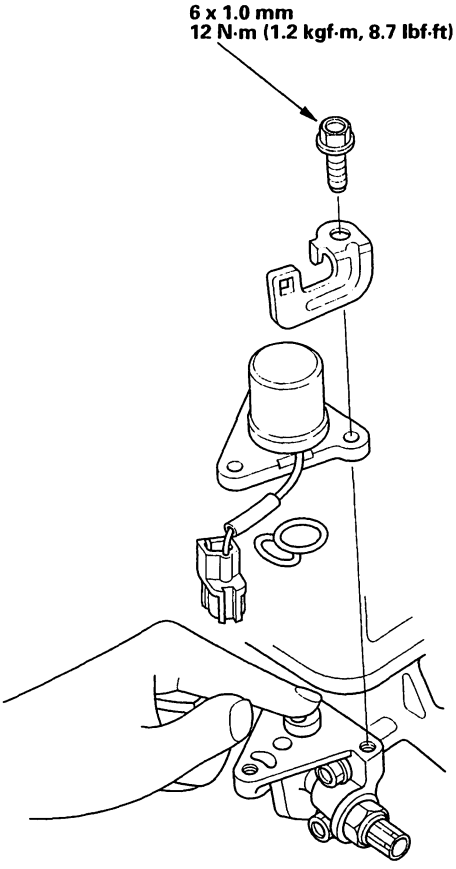

BACK

VTEC Rocker Arm Test

Special Tools Required
Air Stopper 07LAJ-PR3020B

1. Set the No. 1 piston at TDC (see page 6-26).

2. Remove the cylinder head cover.

3. Push on the intake mid rocker arm (A) for the No. 1 cylinder. The mid rocker arm should move independently of the intake primary rocker arm (B) and intake secondary rocker arm (C).

   - If the intake mid rocker arm does not move, remove the mid, primary, and secondary rocker arms as an assembly, and check that the pistons in the mid and primary rocker arms move smoothly. If any rocker arm needs replacing, replace the primary, mid, and secondary rocker arms as an assembly, and test.
   - If the intake mid rocker arm moves freely, go to step 4.

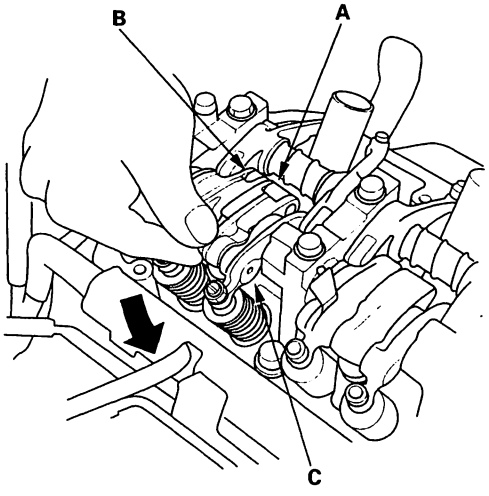

4. Repeat step 3 on the remaining intake mid rocker arms with each piston at TDC. When all the mid rocker arms pass the test, go to step 5.

5. Check that the air pressure on the shop air compressor gauge indicates over 400 kPa (4 kgf/cm^2, 57 psi).

6. Inspect the valve clearance (see page 6-14).

7. Cover the timing belt with a shop towel to protect the belt.

8. Plug the relief hole with the air stopper (A).

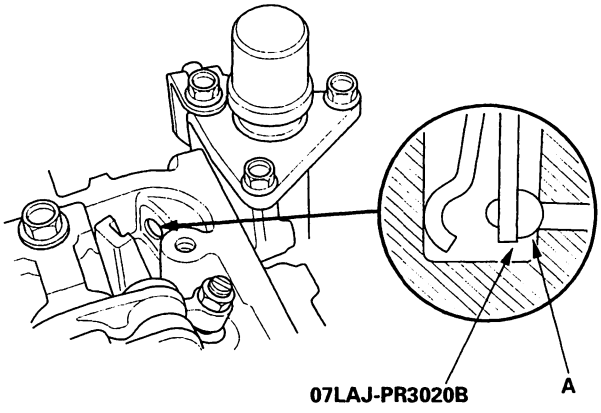

(cont'd)

VTEC Rocker Arm Test (cont'd)

9. Remove the sealing bolt (A) from the inspection hole (B), and connect an air pressure regulator with a 0 – 100psi gauge (C).

   NOTE: Remove any oil from the bolt threads and camshaft holder threads before retightening the sealing bolt.

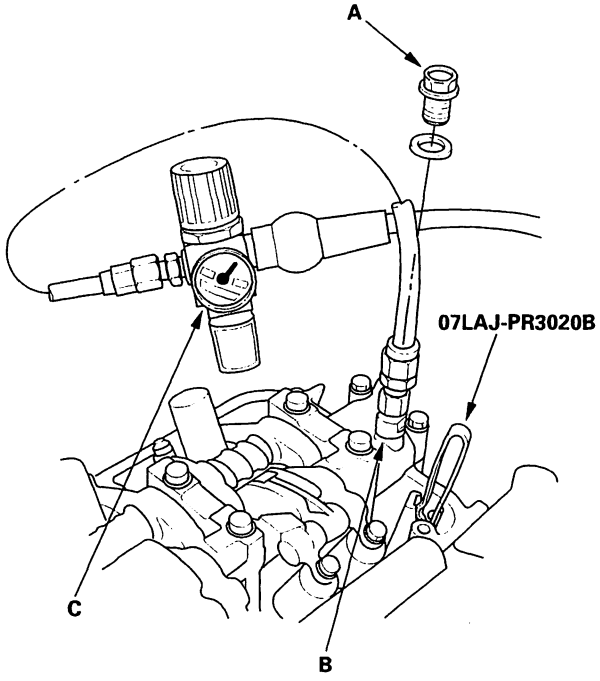

10. Loosen the valve on the regulator, and apply the specified air pressure.

    Specified Air Pressure:
    400 kPa (4 kgf/cm², 57 psi)

11. With the specified air pressure applied and the piston at TDC, push up the timing plate (A) 2 – 3 mm (0.08 – 0.12 in.) at the plate end then release it. The synchronizing piston will pop out and engage the intake mid, primary (B) and secondary (C) rocker arms.
    Visually check the engagement of the synchronizing pistons A (D)/B (E). The synchronizing pistons can be seen in the gap between the mid (F), secondary (C) and primary (B) rocker arms.

    NOTE:
    - With the timing plate (A) engaged in the groove on the timing piston (G), the piston is locked in the pushed out position.
    - Do not apply too much force when pushing up the timing plate.

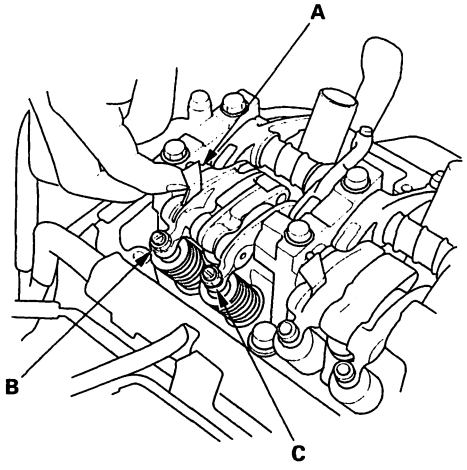

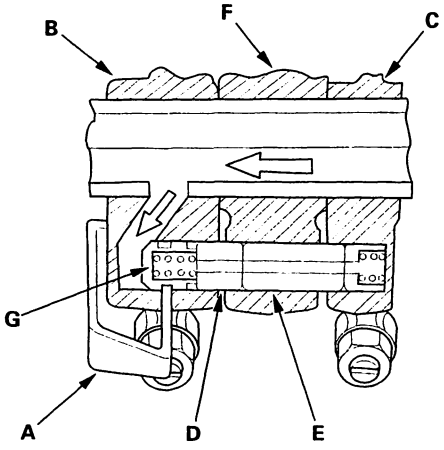

BACK

12. Make sure that the intake primary (A) and secondary (B) rocker arms are mechanically connected by the pistons, and that the mid rocker arm (C) does not move when pushed manually. If any intake mid rocker arm moves independently of the intake primary and secondary rocker arms, replace the rocker arms as a set.

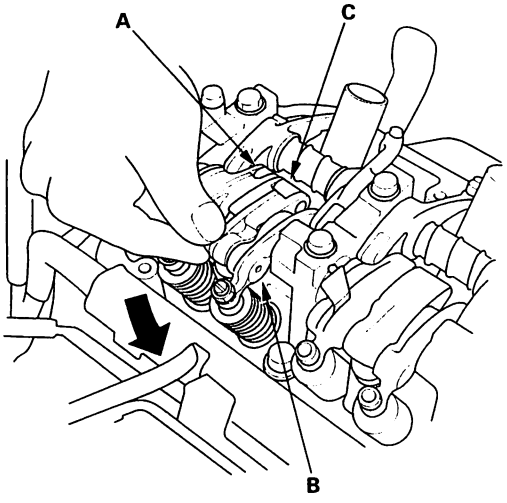

13. Stop applying air pressure. Push up the timing plate (A); the synchronizing pistons (B) will snap back to their original positions.
Visually check the disengagement of the synchronizing pistons A/B. Replace the intake rocker arms as an assembly if either piston does not work correctly.

NOTE: When the timing plate is pushed up, it releases the timing piston (C), letting the return spring move the synchronizing pistons to their original positions.

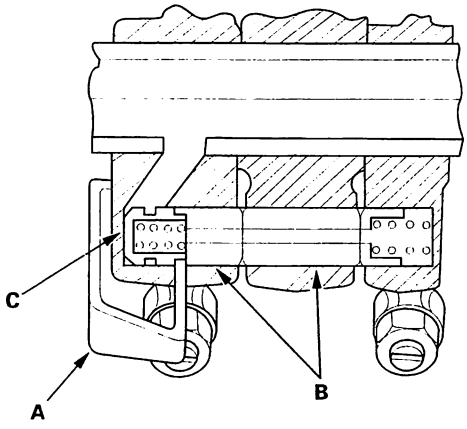

14. Remove the special tools.

15. Check for smooth operation of each lost motion assembly by pushing down on each mid rocker arm. Replace any lost motion assembly that does not move smoothly.

Valve Clearance Adjustment

NOTE: Adjust the valves only when the cylinder head temperature is less than 100°F (38°C).

1. Remove the cylinder head cover.

2. Set the No. 1 piston at TDC. The "UP" mark (A) on the camshaft pulley should be at the top, and the TDC grooves (B) on the pulley should line up with the top edge of the head.

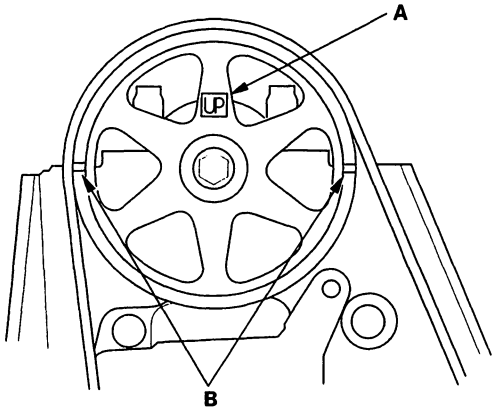

3. Select the correct thickness feeler gauge for the valves you're going to check.

   Intake: 0.26 mm (0.010 in.) ± 0.02 mm (0.0008 in.)
   Exhaust: 0.30 mm (0.012 in.) ± 0.02 mm (0.0008 in.)

Valve Adjusting Screw Locations

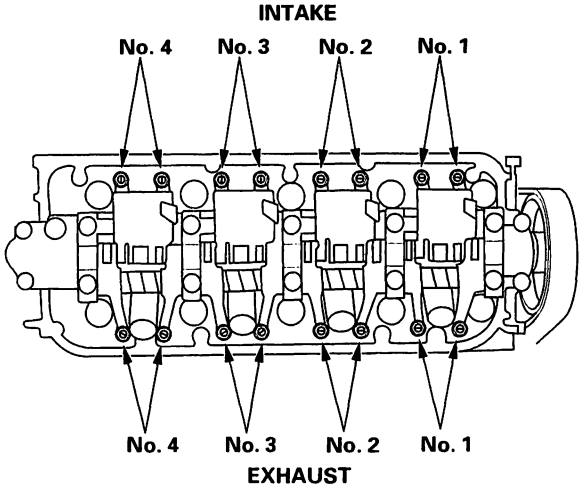

4. Insert the feeler gauge (A) between the adjusting screw (B) and the end of the valve stem and slide it back and forth; you should feel a slight amount of drag.

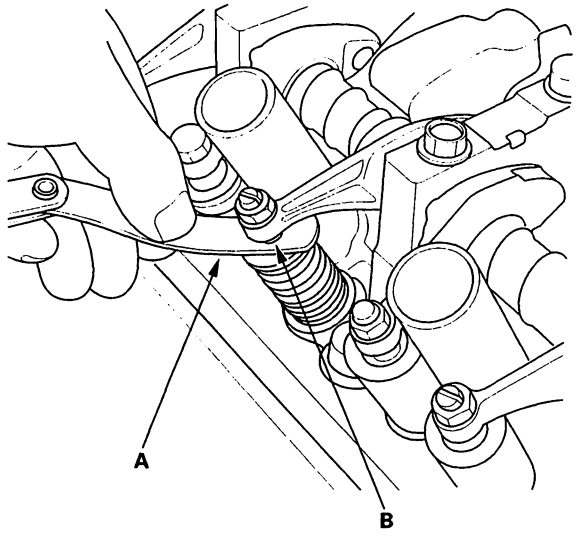

5. If you feel too much or too little drag, loosen the locknut (A), and turn the adjusting screw (B) until the drag on the feeler gauge is correct.

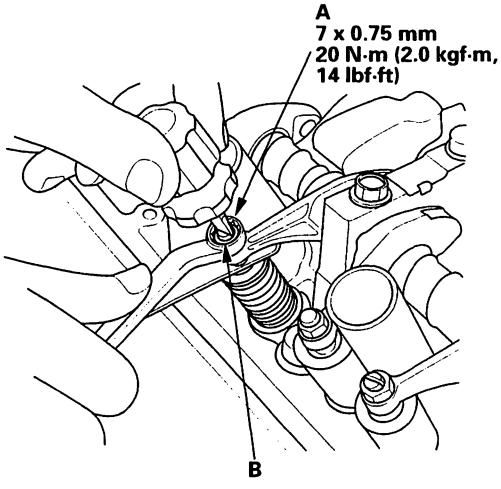

6. Tighten the locknut and recheck the clearance. Repeat the adjustment if necessary.

BACK

7. Rotate the crankshaft 180° counterclockwise (the camshaft pulley turns only 90°). The "UP" mark (A) on the camshaft pulley should be toward the exhaust side of the head.

Number 3 Piston at TDC

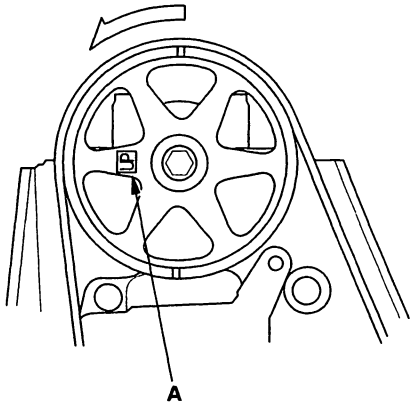

8. Check and, if necessary, adjust the valve clearance on No. 3 cylinder.

9. Rotate the crankshaft pulley 180° counterclockwise to bring No. 4 piston to TDC. Grooves (A) are visible again.

Number 4 Piston at TDC

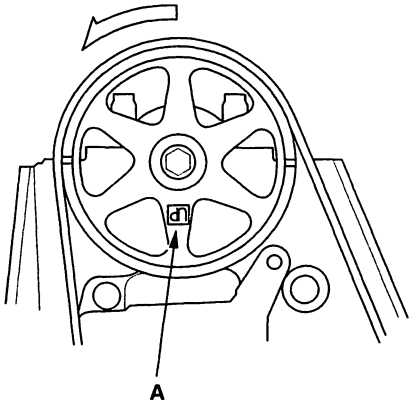

10. Check and, if necessary, adjust the valve clearance on No. 4 cylinder.

11. Rotate the crankshaft 180° counterclockwise to bring No. 2 piston to TDC. The "UP" mark (A) should be on the intake side of the head.

Number 2 Piston at TDC

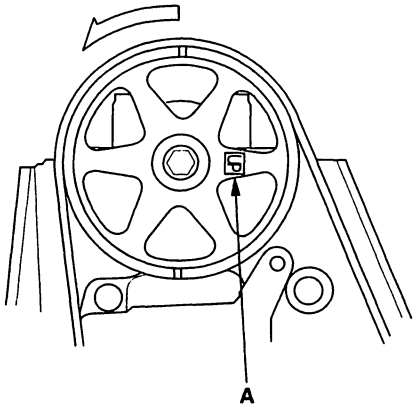

12. Check and, if necessary, adjust the valve clearance on No. 2 cylinder.

13. Install the cylinder head cover (see page 6-54).

Valve Seal Replacement with Cylinder Head Installed

The procedure shown below applies when using the in-car valve spring compressor (Snap-on YA8845 with YA8845 – 2 A 7/8" attachment).

1. Turn the crankshaft so that the No. 1 and No. 4 pistons are at top dead center (TDC).
2. Remove the cylinder head cover.
3. Remove the rocker arm assembly (see page 6-35).
4. Remove the injectors and the wire harness.
5. Using the 8 mm bolts (A) supplied with the tool, mount the two uprights (B) to the cylinder head at the end camshaft holders. The uprights fit over the camshaft as shown.

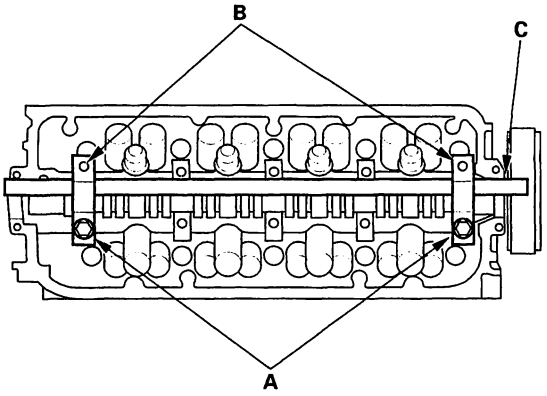

6. Insert the cross shaft (C) through the top hole of the two uprights.

Intake Valve Seals

7. Select the 7/8 in. diameter long compressor attachment, and fasten the attachment to the No. 5 hole of the lever arm with the speed pin supplied.
8. Insert an air adaptor into the spark plug hole. Pump air into the cylinder to keep the valve closed while compressing the springs and removing the valve keepers.
9. Put shop towels over the oil passages (A) to prevent the valve keepers from falling into the cylinder head.

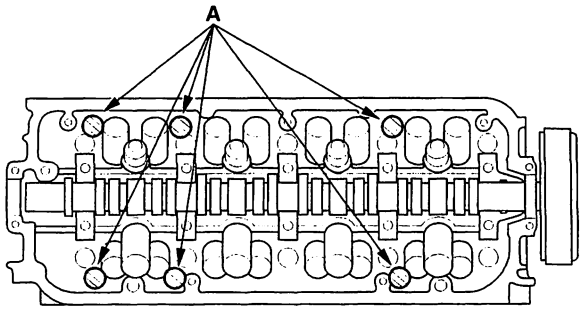

10. Position the lever arm under the cross shaft so the lever is perpendicular to the shaft and the compressor attachment rests on top of the retainer for the spring being compressed. Use the front position slot on the lever as shown.

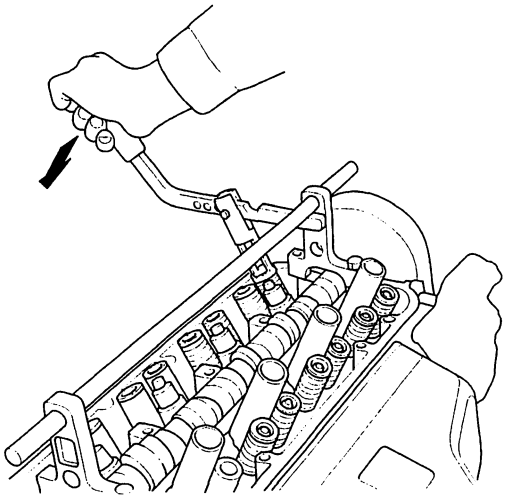

BACK

11. Using a downward motion on the lever arm, compress the valve spring and remove the keepers from the valve stem. Slowly release pressure on the spring.

12. Remove the valve seals (see page 6-42).

13. Install the valve seals (see page 6-48).

14. Install the springs, the retainers and the keepers in reverse order of removal.

Exhaust Valve Seals

15. Select the 7/8 in. diameter short compressor attachment, and fasten the attachment to the No. 4 hole of the lever arm with the speed pin supplied.

16. Put shop towels over the oil passages to prevent the valve keepers from falling into the cylinder head.

17. Position the lever arm under the cross shaft so the lever is perpendicular to the shaft and the compressor attachment rests on top of the retainer for the spring being compressed. Use the front position slot on the lever as shown.

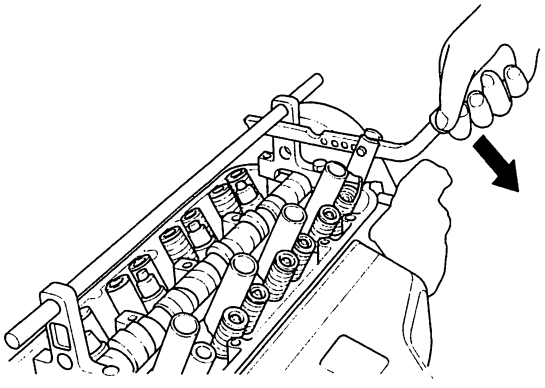

18. Using a downward motion on the lever arm, compress the valve spring and remove the keepers from the valve stem. Slowly release pressure on the spring.

19. Remove the valve seals (see page 6-42).

20. Install the valve seals (see page 6-48).

21. Install the springs, the retainers and the keepers in reverse order of removal.

22. Repeat steps 7 to 21 on the other cylinders.

Crankshaft Pulley Removal and Installation

Special Tools Required
- Holder Handle 07JAB-001020A
- Holder Attachment, 50 mm, Offset 07MAB-PY3010A
- Socket, 19 mm 07JAA-001020A
  or a commercially available 19 mm socket

Removal

1. Hold the pulley with holder handle (A) and holder attachment (B).

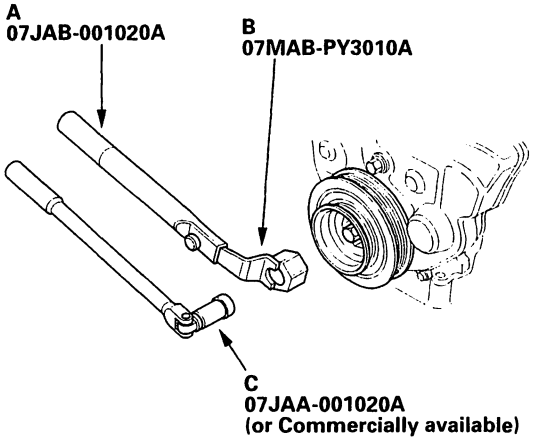

2. Remove the bolt with a heavy duty 19 mm socket (C) and breaker bar.

Installation

1. Clean the pulleys (A), crankshaft (B), bolt (C), and washer (D). Lubricate as shown below.

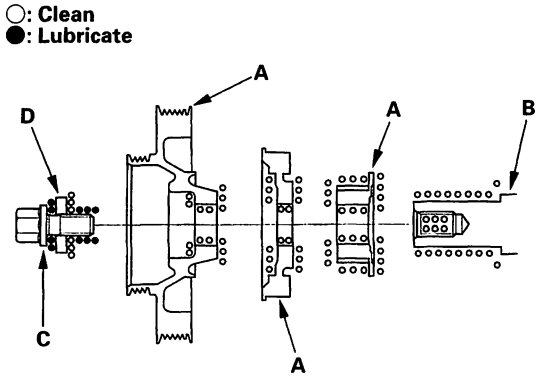

2. Install the crankshaft pulley, and hold with holder handle (A) and holder attachment (B).

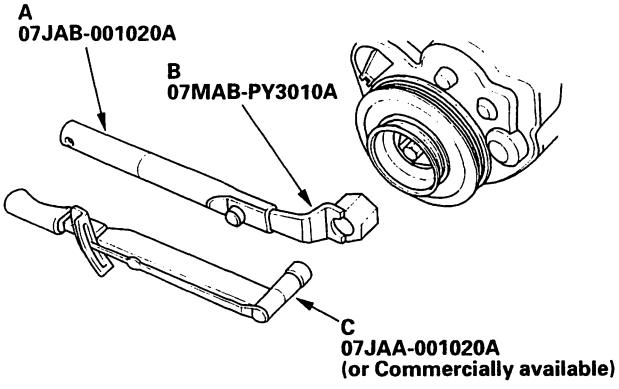

3. Tighten the bolt to 245 N·m (25.0 kgf·m, 181 lb·ft) with a torque wrench and 19 mm socket (C). Do not use an impact wrench.

BACK

Timing Belt Inspection

1. Make sure you have the anti-theft code for the radio, then write down the frequencies for the radio's preset button.

2. Disconnect the battery negative terminal first, then the positive terminal.

3. Disconnect the alternator wire harness.
   –1 Pull up the lock (A), then release the wire harness tie (B).
   –2 Pull back the boot and remove the 6 mm nut (C).
   –3 Disconnect the connector (D) from the alternator.

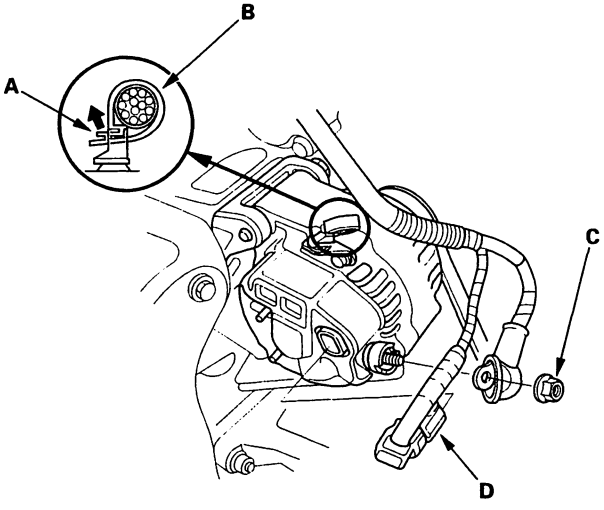

4. Remove the cylinder head cover.

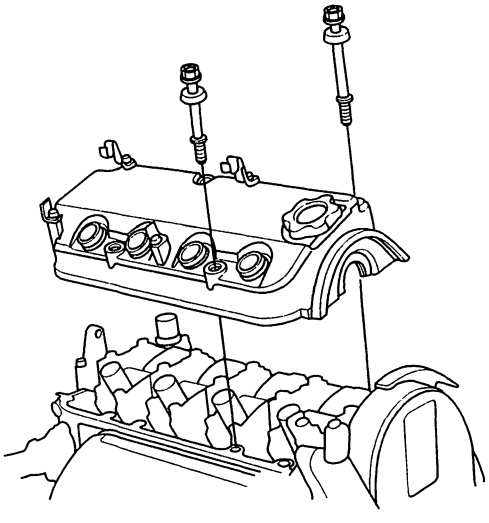

5. Remove the upper cover.

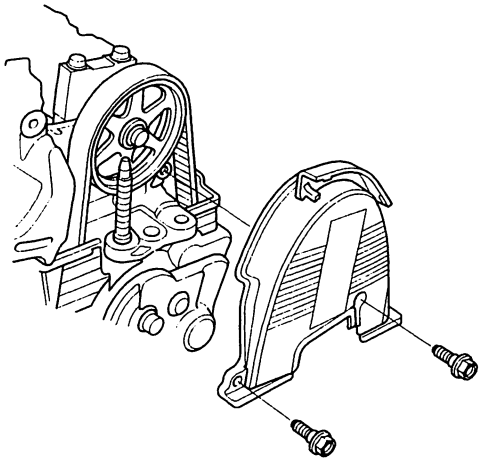

6. Inspect the timing belt for cracks and oil or coolant soaking. Replace the belt if it is oil or coolant soaked. Remove any oil or solvent that gets on the belt.

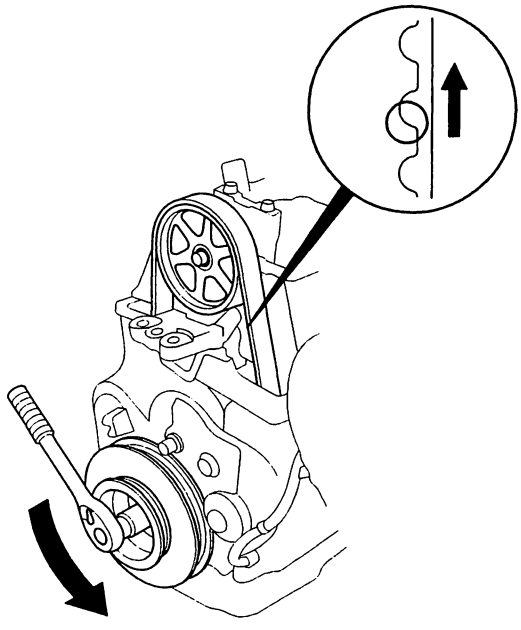

7. After inspecting, retorque the crankshaft pulley bolt to 245 N·m (25.0 kgf·m, 181 lbf·ft).

8. Reinstall all removed parts.

9. Enter the anti-theft code for the radio, then enter the customer's radio station presets.

Balancer Belt Inspection

Special Tools Required
- Holder Handle 07JAB-001020A
- Holder Attachment, 50 mm, Offset 07MAB-PY3010A
- Socket, 19 mm 07JAA-001020A
  or a commercially available 19 mm socket

1. Make sure you have the anti-theft code for the radio, then write down the frequencies for the radio's preset buttons.

2. Disconnect the battery negative terminal first, then the positive terminal.

3. Remove the alternator (see page 4-32).

4. Remove the alternator bracket (see page 5-10).

5. Remove the cylinder head cover.

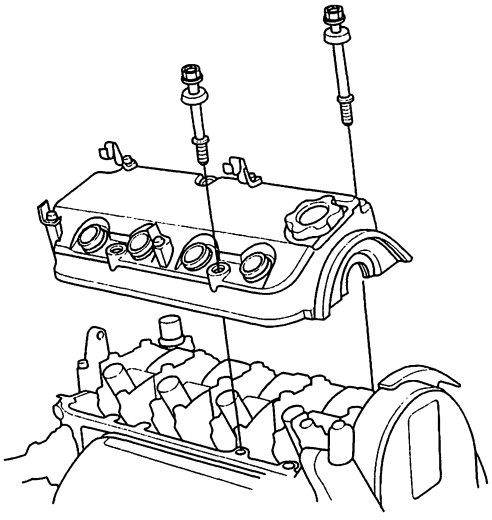

6. Remove the upper cover.

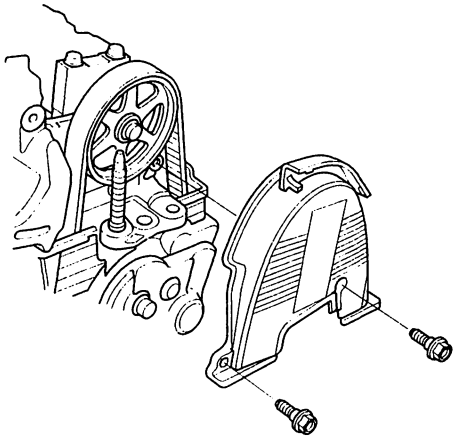

7. Remove the dipstick and tube (A). Discard the O-ring (B).

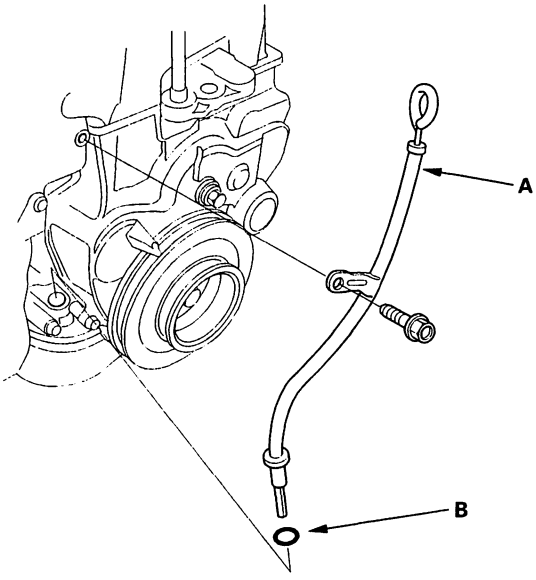

BACK

8. Hold the pulley with holder handle (A) and holder attachment (B).

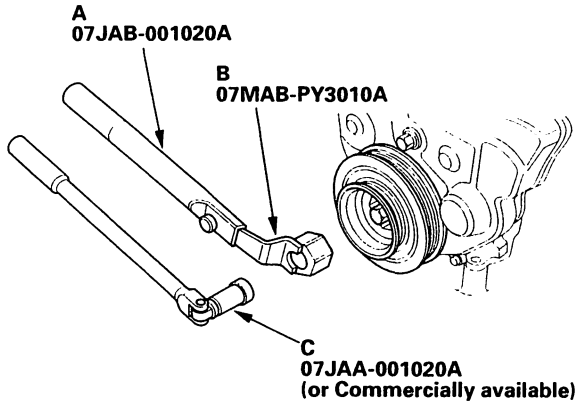

9. Remove the bolt with a heavy duty 19 mm socket (C) and breaker bar.

10. Remove the rubber seal (A) from the adjusting nut, then remove the lower cover.

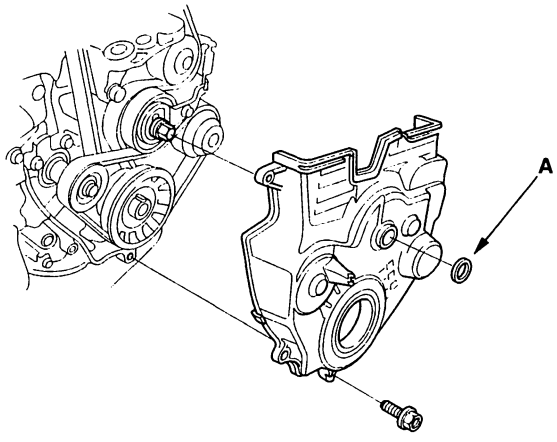

11. Install the crankshaft pulley.

12. Inspect the balancer belt for cracks and oil or coolant soaking. Replace the belt if it is oil or coolant soaked. Remove any oil or solvent that gets on the belt.

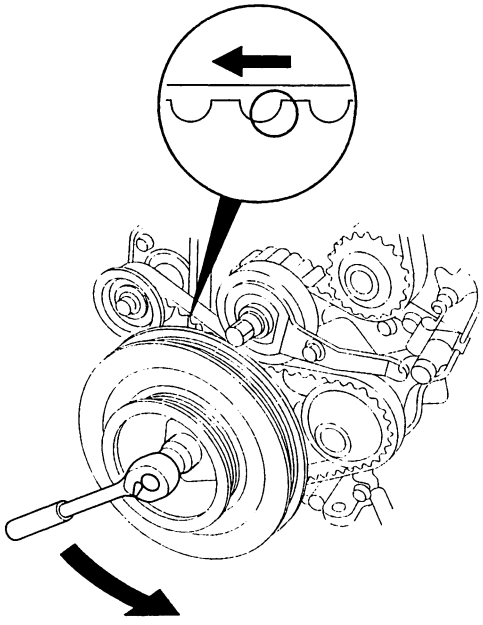

13. Reinstall all removed parts.

14. After inspecting, retorque the crankshaft pulley bolt to 245 N·m (25.0 kgf·m, 181 lbf·ft).

15. Enter the anti-theft code for the radio, then enter the customer's radio station presets.

Timing Belt and Balancer Belt Adjustment

NOTE:
- Always adjust timing belt tension when the engine is cold.
- Always rotate the crankshaft counterclockwise when viewed from the pulley side. Rotating it clockwise may result in improper adjustment of the belt tension.

1. Make sure you have the anti-theft code for the radio, then write down the frequencies for the radio's preset buttons.

2. Disconnect the battery negative terminal first, then the positive terminal.

3. Disconnect the alternator wire harness.
   –1 Pull up the lock (A), then release the wire harness tie (B).
   –2 Pull back the boot and remove the 6 mm nut (C).
   –3 Disconnect the connector (D) from the alternator.

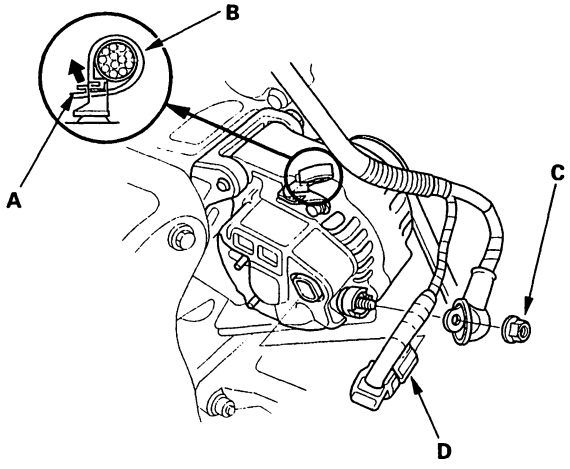

4. Remove the cylinder head cover.

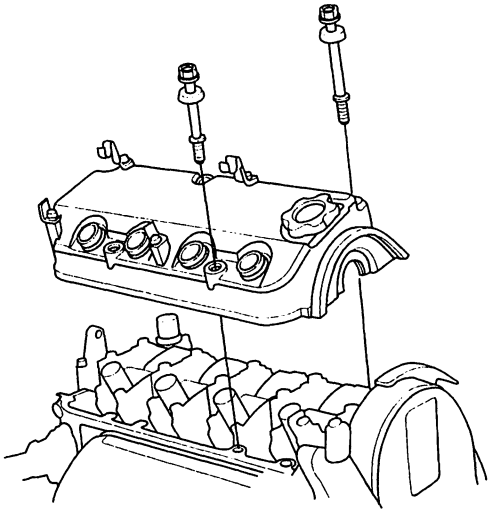

5. Rotate the crankshaft five or six revolutions to set the belt.

6. Set the No. 1 piston at TDC.

7. Loosen the adjusting nut (A) 2/3 – 1 turn.

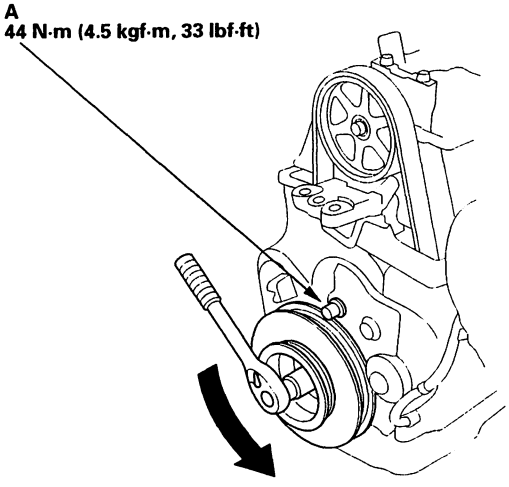

8. Rotate the crankshaft counterclockwise three teeth on the camshaft pulley.

9. Tighten the adjusting nut (A).

10. After adjusting, retorque the crankshaft pulley bolt to 245 N·m (25.0 kgf·m, 181 lbf·ft).

11. Enter the anti-theft code for the radio, then enter the customer's radio station presets.

BACK

Timing Belt and Balancer Belt Removal

Special Tools Required
- Holder Handle 07JAB-001020A
- Holder Attachment, 50 mm, Offset 07MAB-PY3010A
- Socket, 19 mm 07JAA-001020A
  or a commercially available 19 mm socket

1. Make sure you have the anti-theft code for the radio, then write down the frequencies for the radio's preset buttons.

2. Disconnect the battery negative terminal first, then the positive terminal.

3. Turn the crankshaft pulley so its TDC mark (A) lines up with the pointer (B).

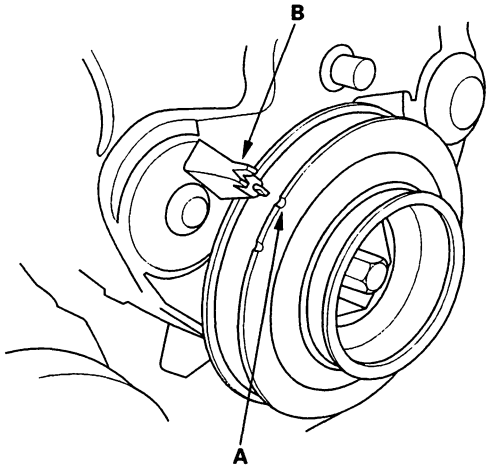

4. Remove the front tires/wheels.

5. Remove the splash shield.

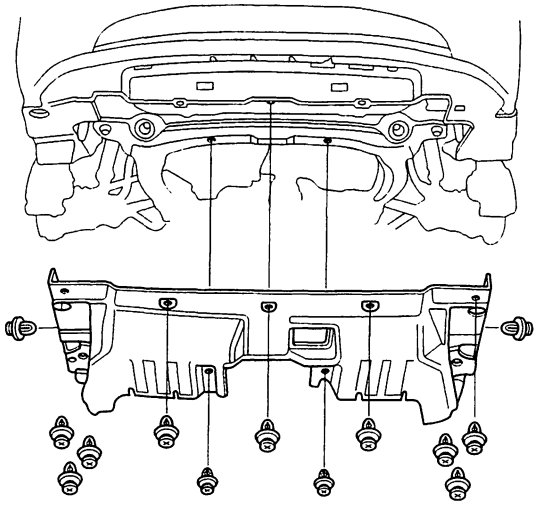

6. Loosen the mounting bolts (A), then remove the P/S belt (B).

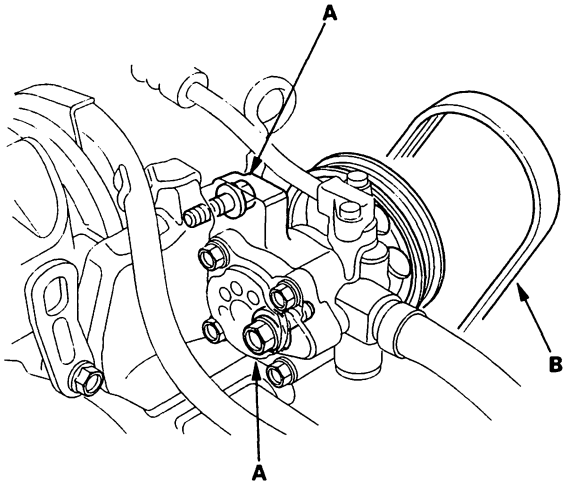

7. Disconnect the alternator wire harness.
   - –1 Pull up the lock (A), then release the wire harness tie (B).
   - –2 Pull back the boot and remove the 6 mm nut (C).
   - –3 Disconnect the connector (D) from the alternator.

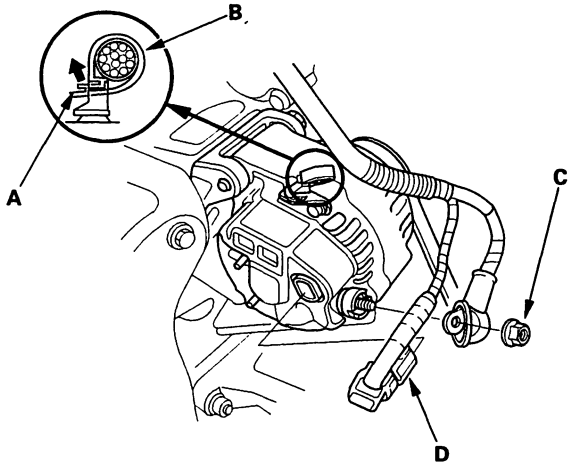

8. Remove the alternator (see page 4-32).

9. Remove the alternator bracket (see page 5-10).

(cont'd)

Timing Belt and Balancer Belt Removal (cont'd)

10. Support the engine with a jack and wood block under the oil pan.

11. Remove the stopper (A) and ground cable (B), then remove the upper bracket (C).

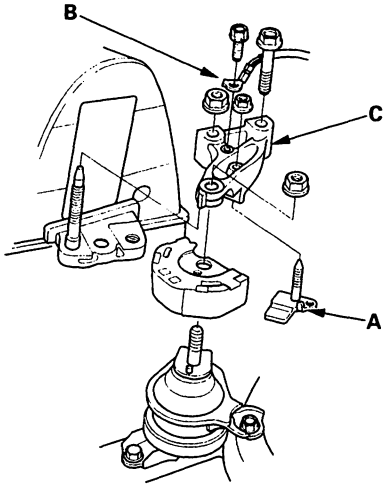

12. Remove the cylinder head cover.

13. Remove the upper cover.

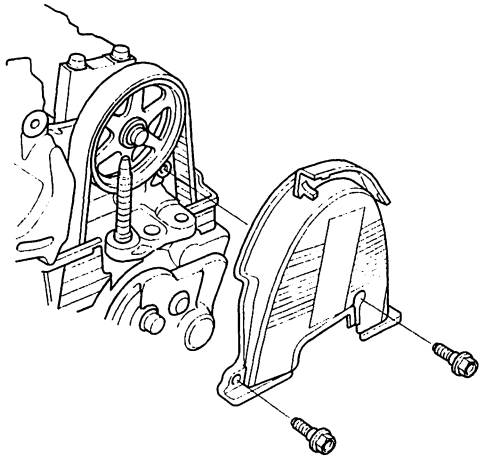

14. Remove the dipstick and tube (A). Discard the O-ring (B).

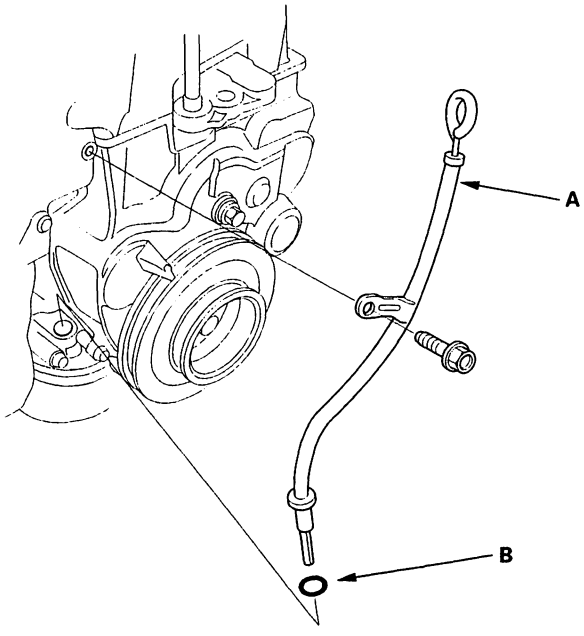

BACK

15. Hold the pulley with holder handle (A) and holder attachment (B).

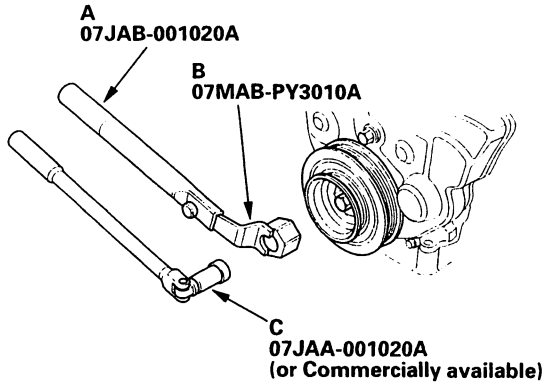

16. Remove the bolt with a heavy duty 19 mm socket (C) and breaker bar.

17. Remove the rubber seal from the adjusting nut, then remove the lower cover.

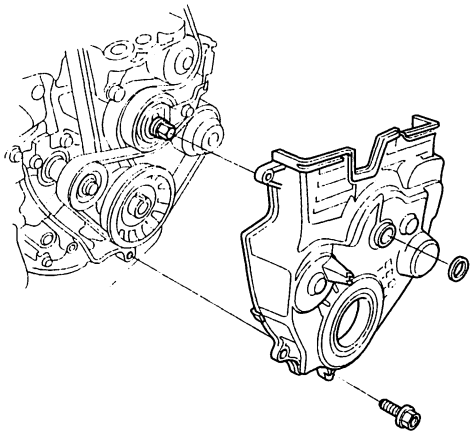

18. If you are removing only the balancer belt, go to step 19. If you are removing both the balancer belt and the timing belt, go to step 20.

19. Release tension from the balancer belt:
    - –1 Install a 6 mm bolt (A)(from the timing cover) through the hole in the end of the timing belt adjuster arm to temporarily lock the arm in place.
    - –2 Loosen the adjusting nut (B) 2/3 – 1 turn.
    - –3 Push the tensioner (C) up to take tension off the balancer belt.
    - –4 Retighten the adjusting nut (B).

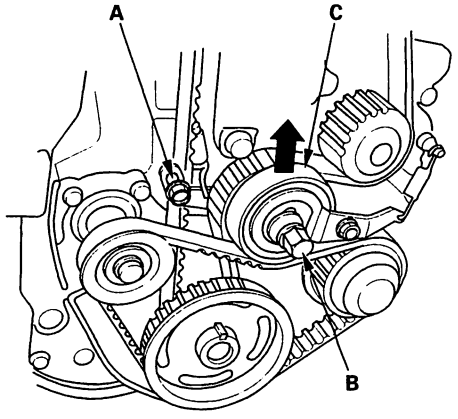

20. Release tension from the balancer belt and the timing belt:
    - –1 Loosen the adjusting nut (A) 2/3 – 1 turn.
    - –2 Push the balancer belt tensioner (B) up to take tension off the balancer belt.
    - –3 Push the timing belt tensioner (C) down to take tension off the timing belt.
    - –4 Retighten the adjusting nut (A).

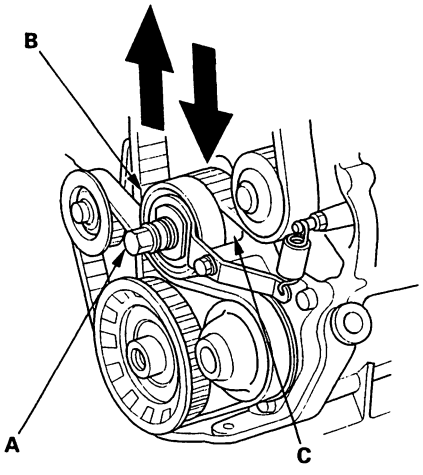

21. Remove the balancer belt.

22. Remove the timing belt.

Timing Belt and Balancer Belt Installation

Special Tools Required
- Holder Handle 07JAB-001020A
- Holder Attachment, 50 mm, Offset 07MAB-PY3010A
- Socket, 19 mm 07JAA-001020A
  or a commercially available 19 mm socket

NOTE:
- If you are installing the timing belt and the balancer belt, go to step 1.
- If you are installing only the balancer belt, go to step 7.

1. Remove and clean the balancer belt drive pulley.
2. Clean the timing belt pulleys, and the upper and lower timing cover.
3. Set the crankshaft to TDC. Align the dimple (A) on the tooth of the timing belt drive pulley with the pointer (B) on the oil pump.

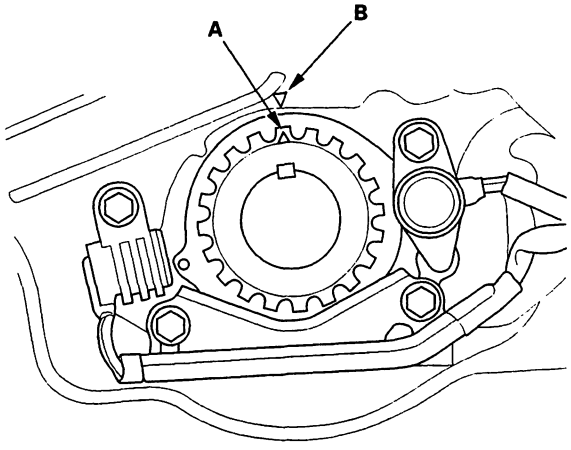

4. Clean the camshaft pulley and set it to TDC.
   –1 The "UP" mark (A) on the camshaft pulley should be at the top.
   –2 Align the TDC grooves (B) on the pulley with the top edge of the head.

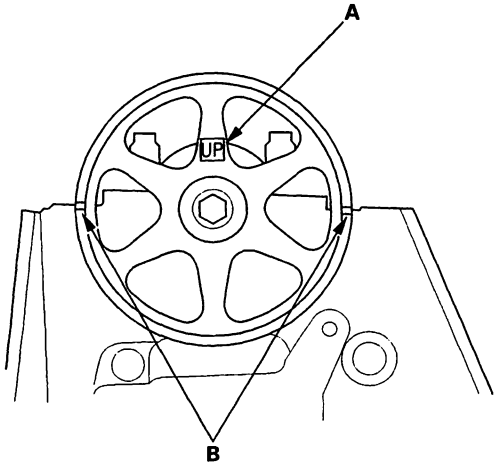

5. Install the timing belt in a counterclockwise sequence, starting with the drive pulley.
   –1 Drive pulley (A).
   –2 Tensioner pulley (B).
   –3 Water pump pulley (C).
   –4 Camshaft pulley (D).

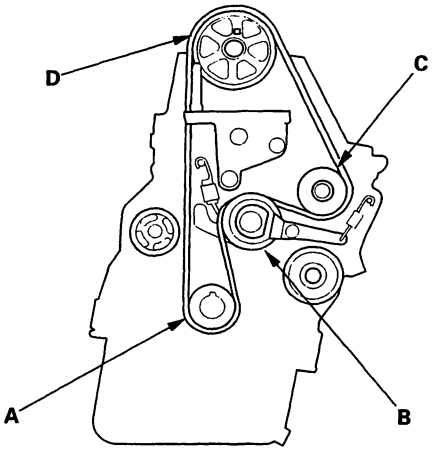

6. Loosen and retighten the adjusting nut to tension the timing belt.

7. Clean any oil off both faces of the balancer belt drive pulley.

8. Check the lower cover rubber seal for cracks and other damage.

   NOTE:
   - If the rubber seal is coming off, apply liquid gasket to the lower cover and reinstall the rubber seal. Wipe off any liquid gasket that is pressed out.
   - When replacing the rubber seal, clean the lower cover groove, cut the repair rubber seal to length, and put the rubber seal into the groove evenly.

9. Install the balancer belt drive pulley and the lower cover.

BACK

10. Temporarly install the crankshaft pulley and bolt.

11. Rotate the crankshaft pulley five or six turns counterclockwise to seat the timing belt on the pulleys.

12. Adjust the belt tension.
    - –1 Loosen the adjusting nut (A) 2/3 – 1 turn.
    - –2 Rotate the crankshaft counterclockwise three teeth on the camshaft pulley (B).
    - –3 Tighten the adjusting nut to 44 N·m (4.5 kgf·m, 33 lbf·ft).

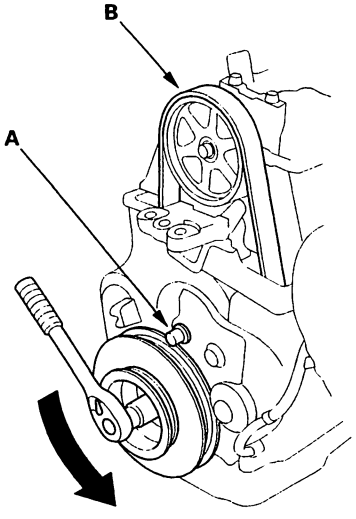

13. Turn the crankshaft pulley so its TDC mark (A) lines up with the pointer (B).

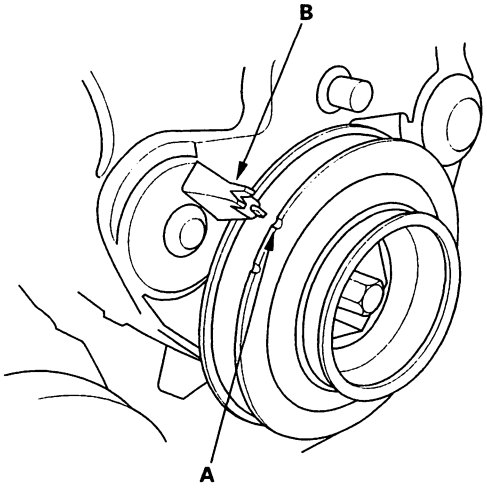

14. Check the camshaft pulley marks.
    - If the camshaft pulley marks are also at TDC, go to step 15.
    - If the camshaft pulley marks are not at TDC, remove the timing belt and repeat steps 3, 4 and 5.

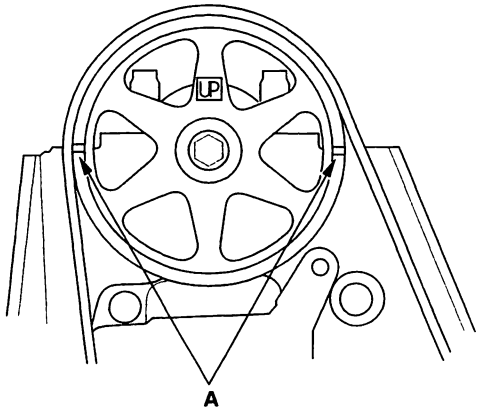

15. Remove the crankshaft pulley and the lower cover.

16. Turn the crankshaft to TDC again.

17. Lock the timing belt adjuster arm in place with one of the 6 mm timing cover bolts.

18. Loosen the adjusting nut 2/3 – 1 turn, and make sure the balancer belt tensioner moves freely. Then push the tensioner up and retighten the adjusting nut.

(cont'd)

Timing Belt and Balancer Belt Installation (cont'd)

19. Align the rear balancer shaft pulley with a 6 x 100 mm bolt (or equivalent).
    - –1 Remove the bolt (A) and washer (B) from the maintenance hole (C).
    - –2 Scribe a line on a 6 x 100 mm bolt, 74 mm (2.9 in) from the end.
    - –3 Insert the bolt in the maintenance hole and into the hole in the balancer shaft (D) up to the line you scribed.

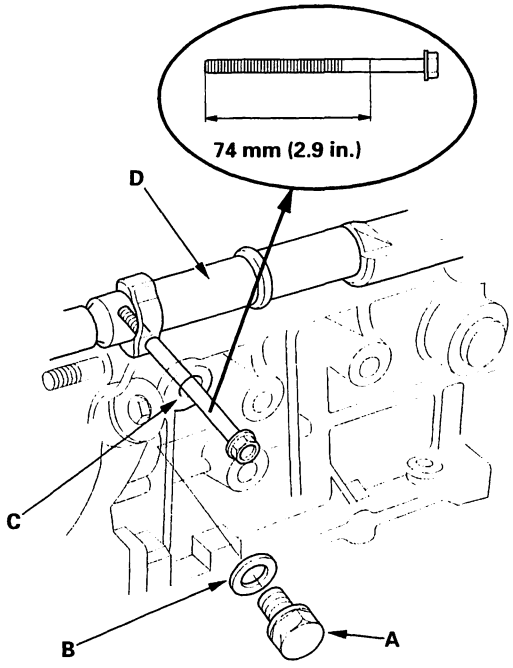

20. Align the groove (A) on the front balancer shaft with the pointer (B) on the oil pump housing as shown.

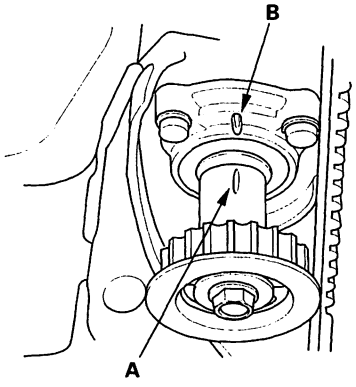

21. Install the balancer belt. Loosen the adjusting nut 2/3 – 1 turn to tension the balancer belt. Retighten the bolt.

22. Remove the 6 x 100 mm bolt from the maintenance hole and reinstall the sealing bolt. Tighten the bolt to 29 N·m (3.0 kgf·m, 22 lb·ft).

23. Adjust the balancer belt.
    - –1 Temporarily reinstall the crankshaft pulley.
    - –2 Loosen the adjusting nut 2/3 – 1 turn.
    - –3 Turn the crankshaft pulley 1 turn counterclockwise, then tighten the adjusting nut.

24. Remove the 6 mm bolt from the timing bolt adjuster arm.

25. Check the lower cover rubber seal for cracks and other damage.

    NOTE:
    - If the seal is coming off, reattach it with liquid gasket. Wipe off any excess liquid gasket.
    - When replacing the seal, clean out the groove in the cover, cut the repair strip to length, and press the new piece into the groove.

26. Remove the crankshaft pulley and reinstall the lower cover.

27. Install the rubber seal around the adjusting nut.

28. Clean the crankshaft pulley bolt and washer.

29. Clean all oil off the inside face (A) of the crankshaft pulley, and apply lubricant to the pulley bolt (B) and washer (C).

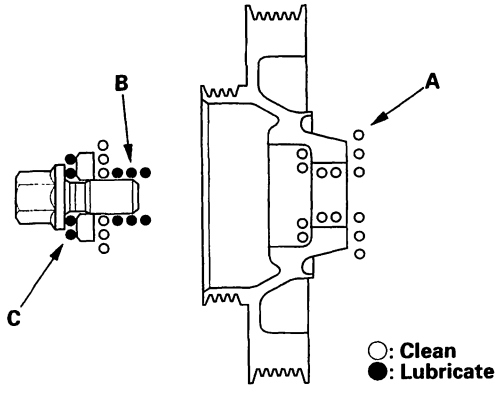

BACK

30. Install the crankshaft pulley, and hold with holder handle (A) and holder attachment (B).

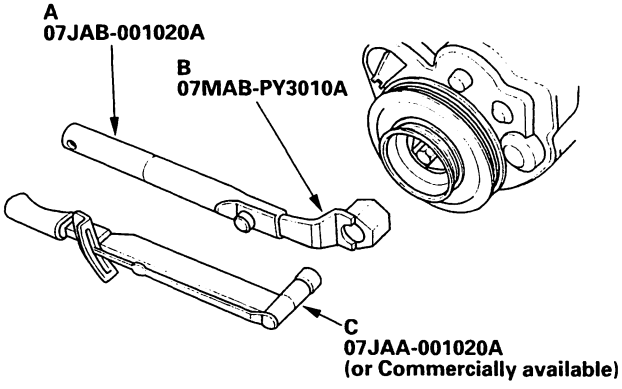

31. Tighten the bolt to 245 N·m (250 kgf·m, 181 lbf·ft) with a torque wrench and 19 mm socket (C). Do not use an impact wrench.

32. Install the dipstick and tube (A) with a new O-ring (B).

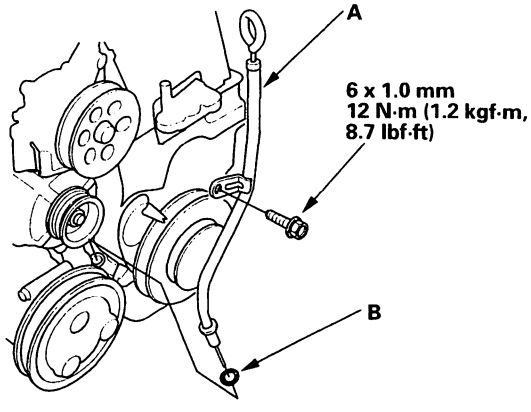

33. Install the upper cover.

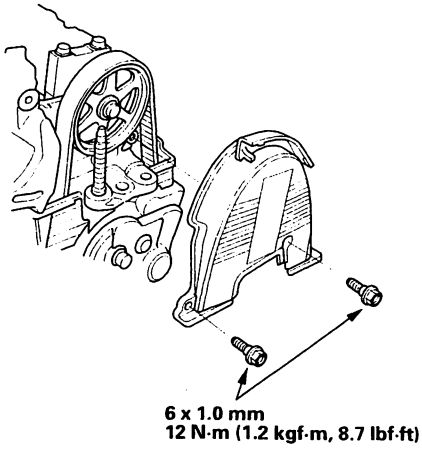

34. Install the cylinder head cover (see page 6-54).

35. Install the alternator bracket (see page 5-10).

36. Install the alternator (see page 4-32).

37. Connect the alternator harness.

38. Install and adjust the power steering pump belt (see page 17-12).

39. Install and adjust the alternator belt (see page 4-40).

40. Install the upper bracket (A), then tighten the bolt and nuts in the numbered sequence shown.

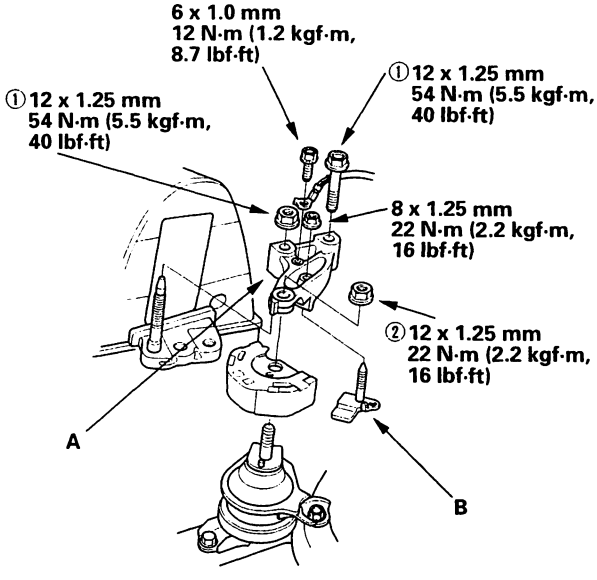

41. Install the stop (B).

42. Install the battery. Clean the battery posts and cable terminals with sandpaper, then assemble them and apply grease to prevent corrosion.

43. Enter the anti-theft code for the radio, then enter the customer's radio station presets.

Cylinder Head Removal

Engine removal is not required for this procedure.

NOTE:
- Use fender covers to avoid damaging painted surfaces.
- To avoid damage, unplug the wiring connectors carefully while holding the connector portion.
- To avoid damaging the cylinder head, wait until the engine coolant temperature drops below 100°F (38°C) before loosening the retaining bolts.
- Mark all wiring and hoses to avoid misconnection. Also, be sure that they do not contact other wiring or hoses, or interfere with other parts.

1. Make sure you have the anti-theft code for the radio, then write down the frequencies for the radio's preset buttons.

2. Disconnect the battery negative terminal.

3. Drain the engine coolant (see page 10-10).

4. Remove the intake air duct.

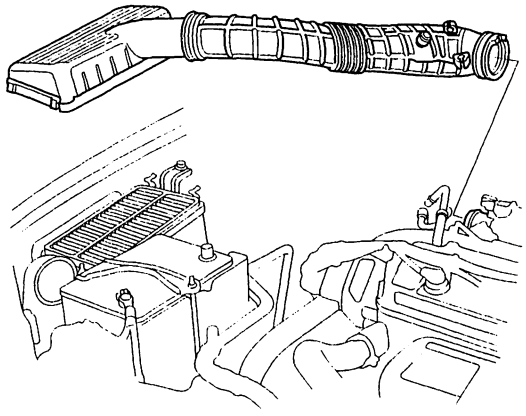

5. Remove the throttle cable (A) and cruise control cable (B) by loosening the locknuts (C), then slipping the cable ends out of the accelerator linkage. Take care not to bend the cable when removing it. Always replace any kinked cable with a new one.

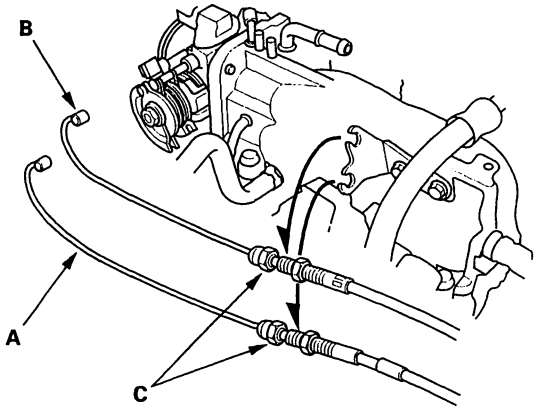

6. Remove the breather hose (A) and Positive Crankcase Ventilation (PCV) hose (B).

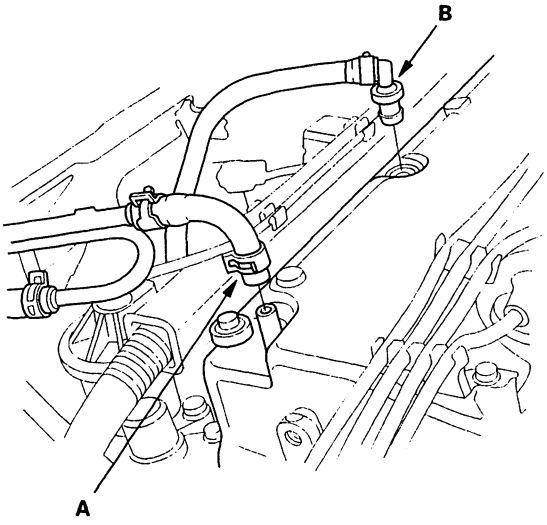

BACK

7. Relieve fuel pressure (see page 11-115).

8. Remove the fuel feed hose (A) and fuel return hose (B).

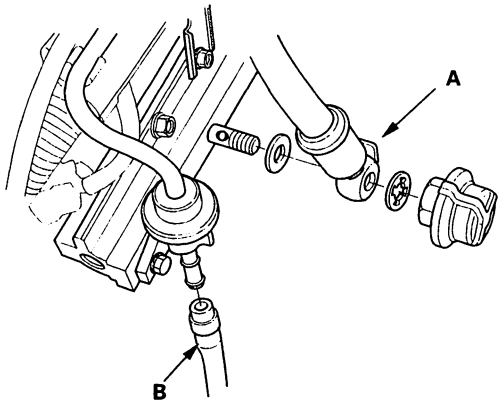

9. Remove the brake booster vacuum hose (A) and vacuum hoses (B).

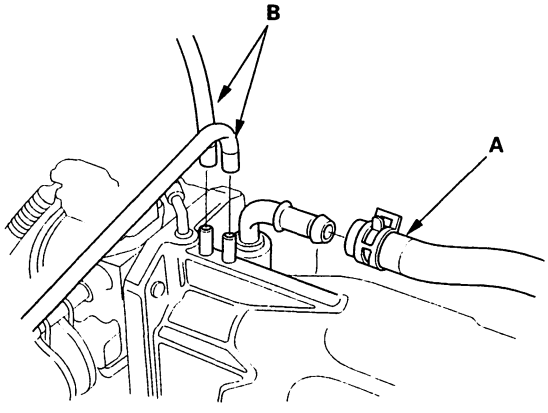

10. Remove the Evaporative Emission (EVAP) canister hose (A), vacuum hose (B) and P/S hose clamp (C).

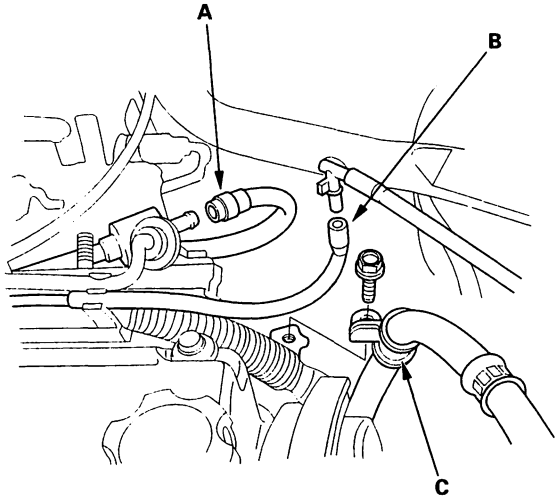

11. Remove the three water bypass hoses (A).

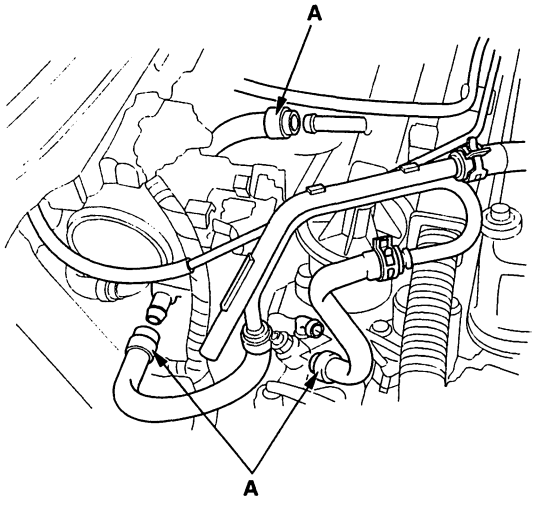

(cont'd)

Cylinder Head Removal (cont'd)

12. Remove the mounting bolts (A), then remove the Power Steering (P/S) pump belt (B) and pump without disconnecting the P/S hoses.

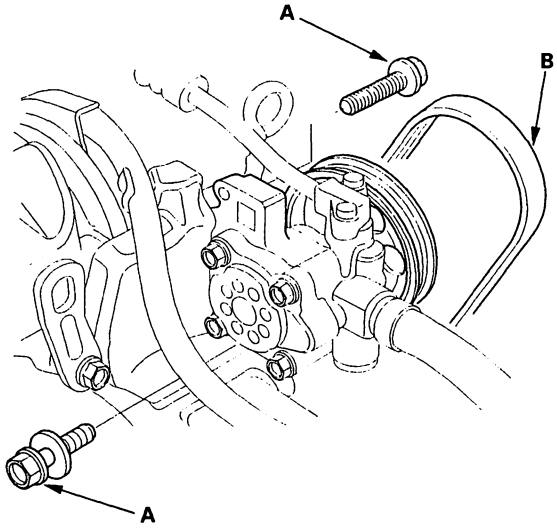

13. Remove the alternator belt.
    - –1 Loosen the alternator mounting bolt (A).
    - –2 Loosen the alternator locknut (B).
    - –3 Loosen the adjusting bolt (C).
    - –4 Remove the alternator belt (D).

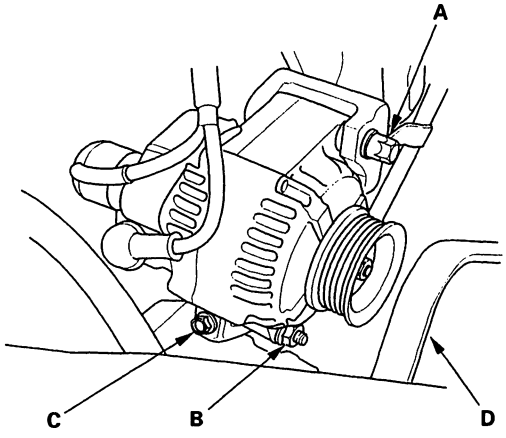

14. Disconnect the alternator wire harness.
    - –1 Pull up the lock (A), then release the wire harness tie (B).
    - –2 Pull back the boot and remove the 6 mm nut (C).
    - –3 Disconnect the connector (D) from the alternator.

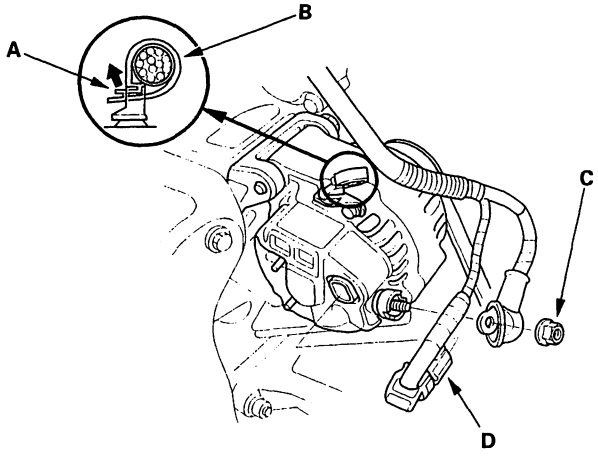

BACK

15. Remove the upper radiator hose (A), lower radiator hose (B) and heater hose (C).

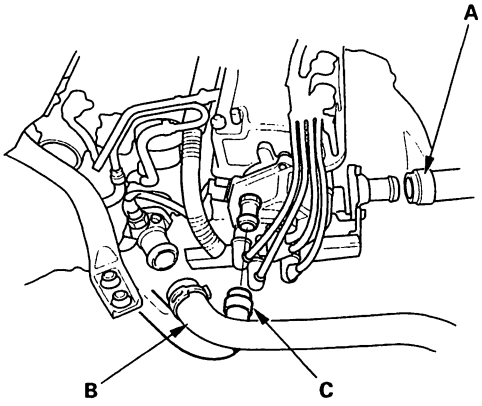

16. Remove the engine wire harness connectors and wire harness clamps from the cylinder head and the intake manifold.

- Four injector connectors
- Intake Air Temperature (IAT) sensor connector
- Idle Air Control (IAC) valve connector
- Throttle Position (TP) sensor connector
- Manifold Absolute Pressure (MAP) sensor connector
- Primary Heated Oxygen Sensor (primary HO2S) connector (F23A1, F23A5 engine)
- Air Fuel Ratio (A/F) sensor connector (F23A4 engine)
- Engine Coolant Temperature (ECT) sensor connector
- Radiator fan switch connector
- Coolant temperature gauge sending unit connector ('98-00 models)
- Exhaust Gas Recirculation (EGR) valve connector
- CKP/TDC sensor connector
- VTEC solenoid valve connector (F23A1/F23A4 engines)
- VTEC oil pressure switch connector (F23A1/F23A4 engines)

17. Remove the spark plug caps and distributor from the cylinder head.

18. Support the engine with a jack and wood block under the oil pan.

19. Remove the stop (A) and ground cable (B), then remove the upper bracket (C).

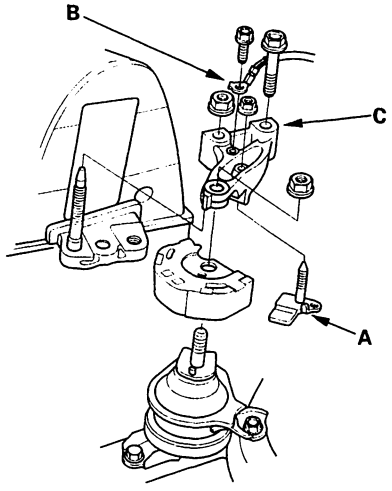

20. Remove the cylinder head cover.

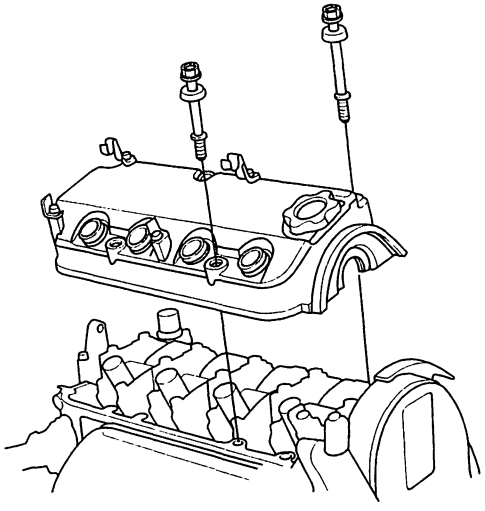

(cont'd)

Cylinder Head Removal (cont'd)

21. Remove the balancer belt and timing belt (see page 6-23).

22. Remove the camshaft pulley (A) and back cover (B).

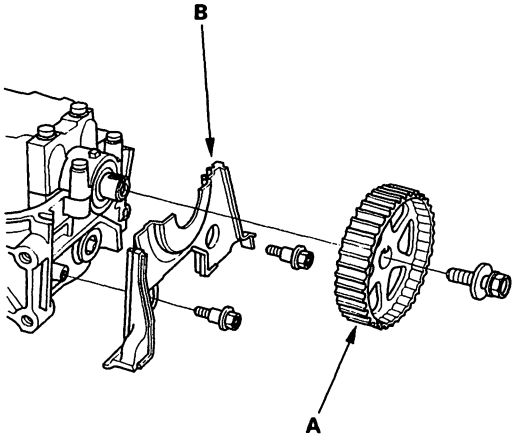

23. Remove the exhaust manifold cover (A), then remove the exhaust manifold (B).

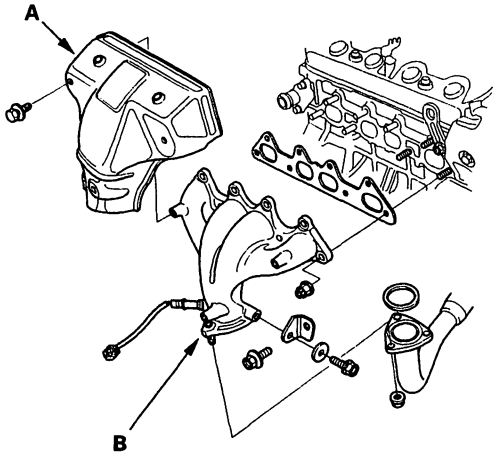

24. Remove the intake manifold.

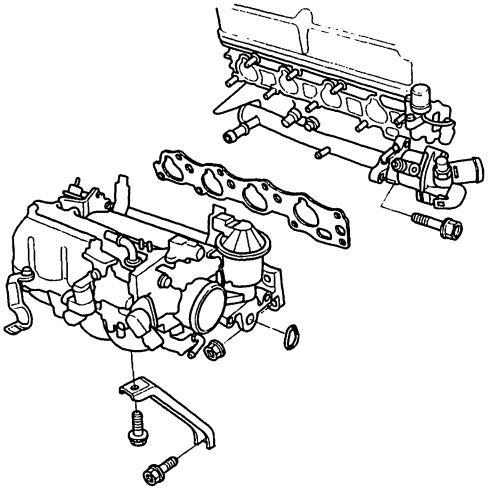

25. Remove the cylinder head bolts. To prevent warpage, unscrew the bolts in sequence 1/3 turn at a time; repeat the sequence until all bolts are loosened.

CYLINDER HEAD BOLT LOOSENING SEQUENCE:

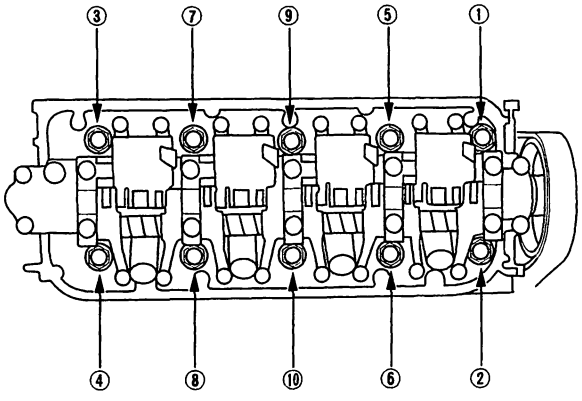

26. Remove the cylinder head.

BACK

Cylinder Head Inspection for Warpage

NOTE: If camshaft-to-holder oil clearances (see page 6-40) are not within specifications, the cylinder head cannot be resurfaced.

If camshaft-to-holder oil clearances are within specifications, check the cylinder head for warpage. Measure along the edges, and three ways across the center.

- If warpage is less than 0.05 mm (0.002 in.) cylinder head resurfacing is not required.
- If warpage is between 0.05 mm (0.002 in.) and 0.2 mm (0.008 in.), resurface cylinder head.
- Maximum resurface limit is 0.2 mm (0.008 in.) based on a height of 100 mm (3.94 in.).

Cylinder Head Height:
Standard (New): 99.95 – 100.05 mm (3.935 – 3.939 in.)

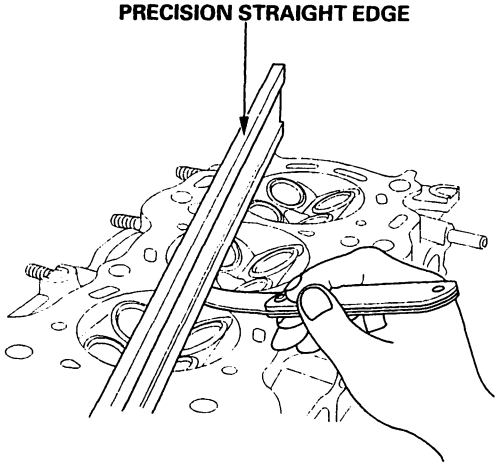

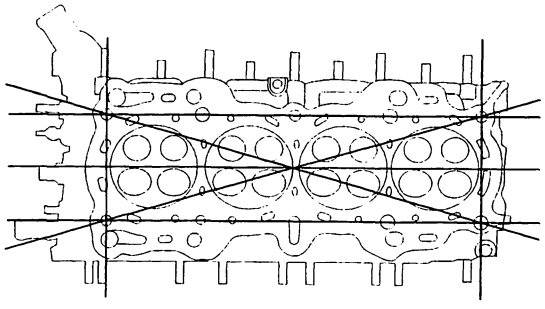

Rocker Arm Assembly Removal

1. Loosen the adjusting screws (A).

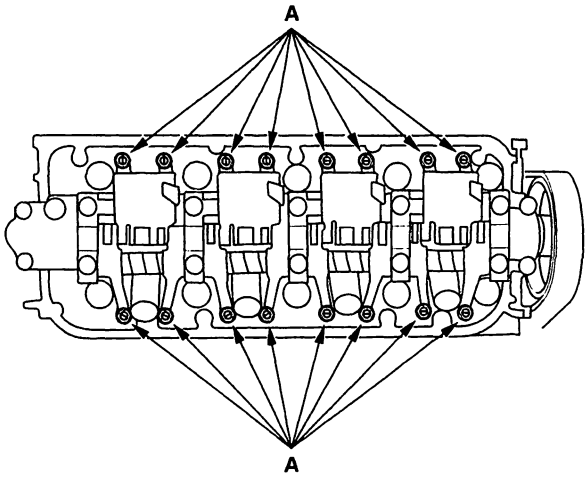

2. Remove the bolts and the rocker arm assembly.
   - –1 Unscrew the camshaft holder bolts 2 turns at a time, in a crisscross pattern, to prevent damaging the valves or rocker arm assembly.
   - –2 When removing the rocker arm assembly, do not remove the camshaft holder bolts. The bolts will keep the camshaft holders, the springs and the rocker arms on the shafts.

CAMSHAFT HOLDER BOLT LOOSENING SEQUENCE:

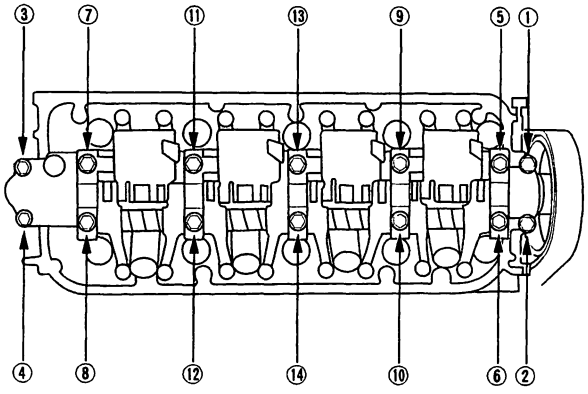

Rocker Arms and Shafts Disassembly/Reassembly - F23A1, F23A4 Engines

NOTE:
- Identify parts as they are removed to ensure reinstallation in original locations.
- Inspect the rocker shafts and rocker arms (see page 6-38).
- The rocker arms must be installed in the same positions if reused.
- When removing or installing the rocker arm assembly, do not remove the camshaft holder bolts. The bolts will keep the holders, springs and rocker arms on the shaft.
- Prior to reassembling, clean all the parts in solvent, dry them, and apply lubricant to any contact points.
- Bundle the rocker arms with rubber bands to keep them together as a set.

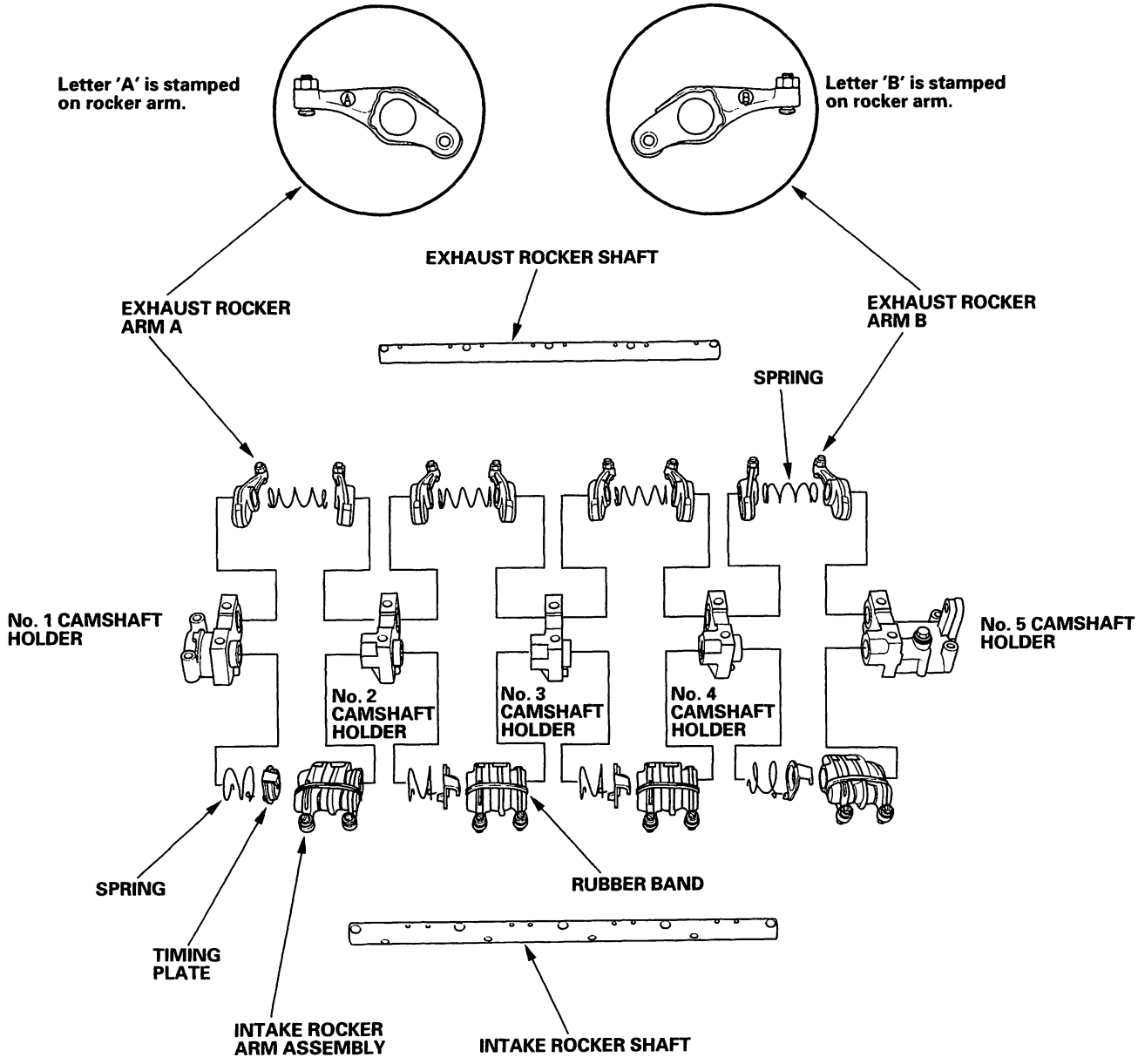

BACK

Rocker Arms and Shafts Disassembly/Reassembly - F23A5 Engine

NOTE:
- Identify parts as they are removed to ensure reinstallation in their original locations.
- Inspect rocker shafts and rocker arms (see page 6-38).
- The rocker arms must be installed in the same positions if reused.
- When removing or installing the rocker arm assembly, do not remove the camshaft holder bolts. The bolts will keep the holders, springs and rocker arms on the shaft.
- Prior to reassembling, clean all the parts in solvent, dry them, and apply lubricant to any contact points.

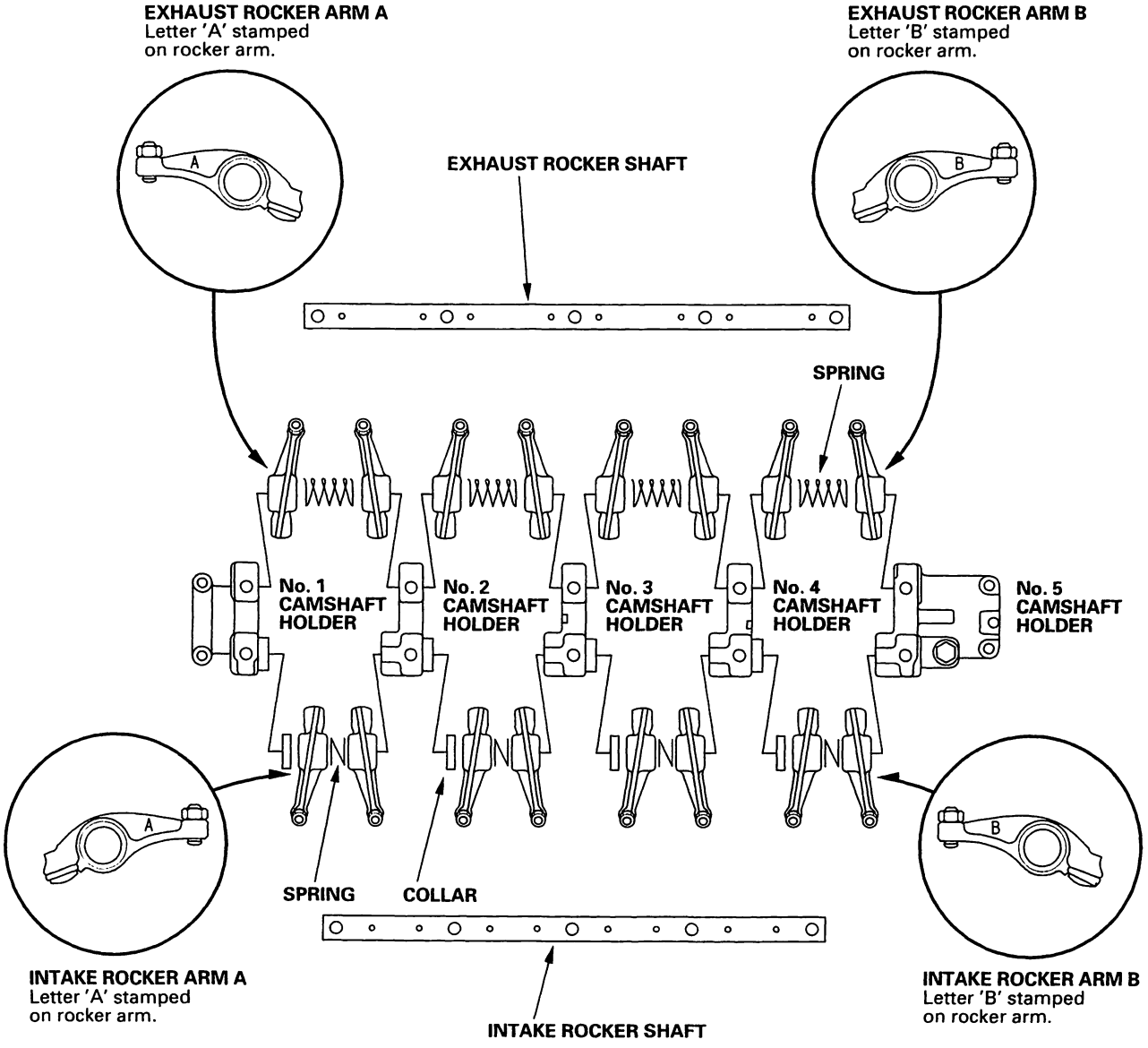

Rocker Arms and Shafts Inspection

1. Measure the diameter of the shaft at the first rocker location.

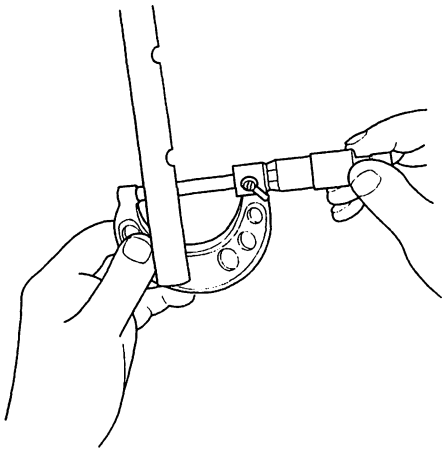

2. Zero the gauge (A) to the shaft diameter.

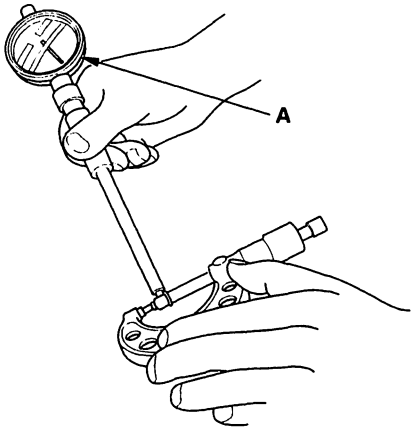

3. Measure the inside diameter of the rocker arm, and check it for an out-of-round condition.

Rocker Arm-to-Shaft Clearance:
Standard (New):

Intake:	**0.026–0.067 mm (0.0010–0.0026 in.)**
Exhaust:	**0.018–0.054 mm (0.0007–0.0021 in.)**
Service Limit:	**0.08 mm (0.003 in.)**

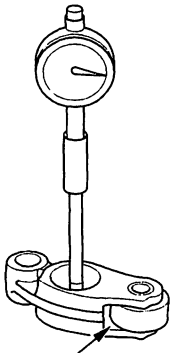

Inspect rocker arm face for wear.

4. Repeat for all rockers and both shafts. If the clearance is over the limit, replace the rocker shaft and all overtolerance rocker arms. If any VTEC intake rocker arm needs replacement, replace all three rocker arms in that set (primary, mid, and secondary).

BACK

5. Inspect the rocker arm piston (A). Push it manually. If it does not move smoothly, replace the rocker arm set.

   NOTE:
   - When reassembling the primary rocker arm (B), carefully apply air pressure to its oil passage.
   - Apply oil to the pistons when reassembling.

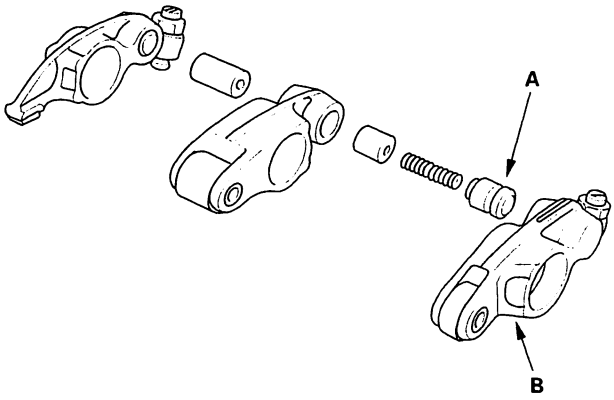

6. Assemble each timing plate (A) and return spring (B) on its camshaft holder as shown.

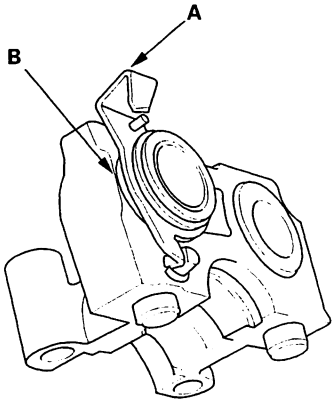

Camshaft Inspection

NOTE:
- Do not rotate the camshaft during inspection.
- Remove the rocker arms and rocker shafts.

1. Put the camshaft and the camshaft holders on the cylinder head, then tighten the bolts to the specified torque.

   Specified torque:
   8 mm bolts: 22 N·m (2.2 kgf·m, 16 lbf·ft)
   6 mm bolts: 12 N·m (1.2 kgf·m, 8.7 lbf·ft)
   6 mm bolts: ⑪, ⑫, ⑬, ⑭

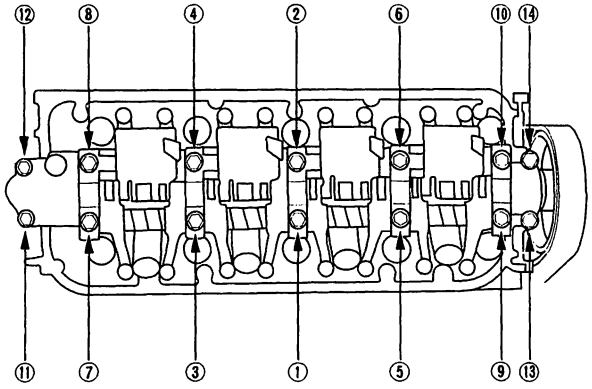

2. Seat the camshaft by pushing it toward the distributor end of the cylinder head.

3. Zero the dial indicator against the end of the distributor drive, then push the camshaft back and forth and read the end play.

   Camshaft End Play:
   Standard (New): 0.05 – 0.15 mm (0.002 – 0.006 in.)
   Service Limit: 0.5 mm (0.02 in.)

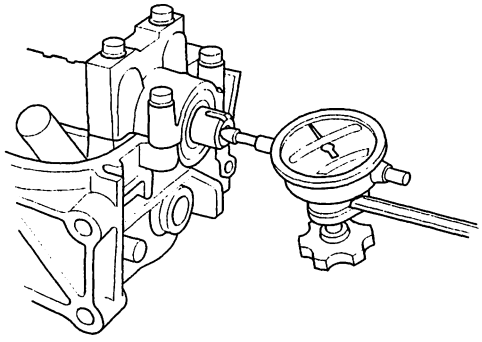

4. Unscrew the camshaft holder bolts two turns at a time, in a crisscross pattern. Then remove the camshaft holders from the cylinder head.

5. Lift the camshaft out of the cylinder head, wipe them clean, then inspect the lift ramps. Replace the camshaft if any lobes are pitted, scored, or excessively worn.

6. Clean the camshaft journal surfaces in the cylinder head, then set the camshaft back in place. Place a plastigage strip across each journal.

7. Install the camshaft holders, then tighten the bolts to the specified torque as shown in step 1.

8. Remove the camshaft holders. Measure the widest portion of plastigage on each journal.
   - If the camshaft-to-holder clearance is within limits, go to step 10.
   - If the camshaft-to-holder clearance is beyond the service limit and the camshaft has been replaced, replace the cylinder head.
   - If the camshaft-to-holder clearance is beyond the service limit and the camshaft has not been replaced, go to step 9.

   Camshaft-to-Holder Oil Clearance:
   Standard (New): 0.050 – 0.089 mm (0.0020 – 0.0035 in.)
   Service Limit: 0.15 mm (0.006 in.)

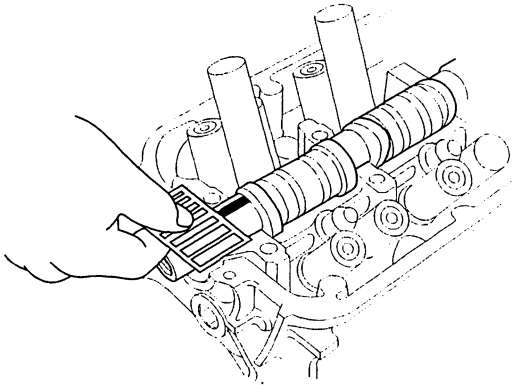

BACK

9. Check the total runout with the camshaft supported on V-blocks.
   - If the total runout of the camshaft is within the service limit, replace the cylinder head.
   - If the total runout is beyond the service limit, replace the camshaft and recheck the camshaft-to-holder oil clearance. If the oil clearance is still out of tolerance, replace the cylinder head.

Camshaft Total Runout:
Standard (New): 0.03 mm (0.001 in.) max.
Service Limit: 0.04 mm (0.002 in.)

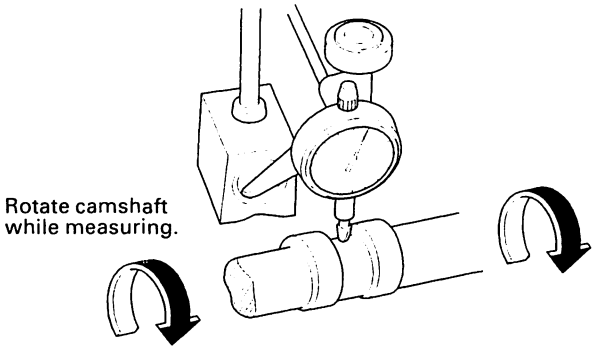

10. Measure cam lobe height.

Cam Lobe Height Standard (New):

		INTAKE	EXHAUST
F23A1/ F23A4 engines	PRI	37.775 mm (1.4872 in.)	38.366 mm (1.5105 in.)
	MID	39.725 mm (1.5640 in.)	
	SEC	34.481 mm (1.3575 in.)	
F23A5 engine		38.339 mm (1.5094 in.)	37.716 mm (1.4849 in.)

PRI: Primary MID: Mid SEC: Secondary
IN: Intake EX: Exhaust T/B: Timing Belt

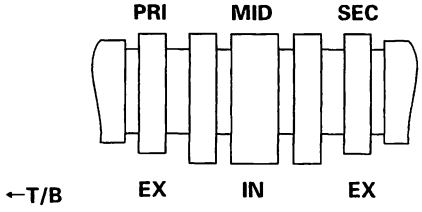

F23A1/F23A4 engines:

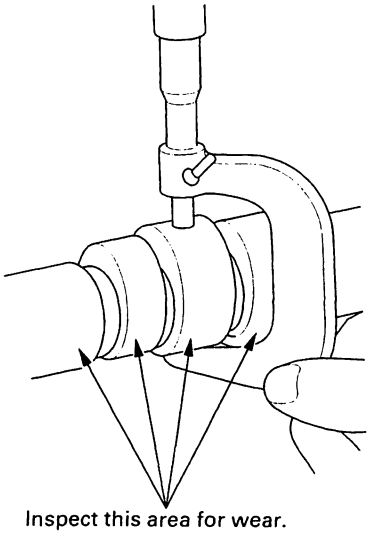

Valves, Springs and Valve Seals Removal

Identify the valves and valve springs as they are removed so that each item can be reinstalled in its original position.

1. Using an appropriate-sized socket (A) and plastic mallet (B), lightly tap the valve retainer to loosen the valve keepers.

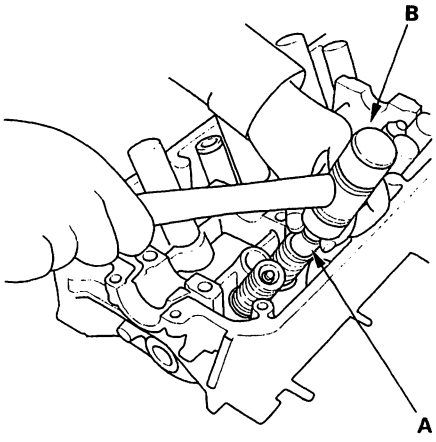

2. Install the spring compressor. Compress the spring and remove the valve keepers.

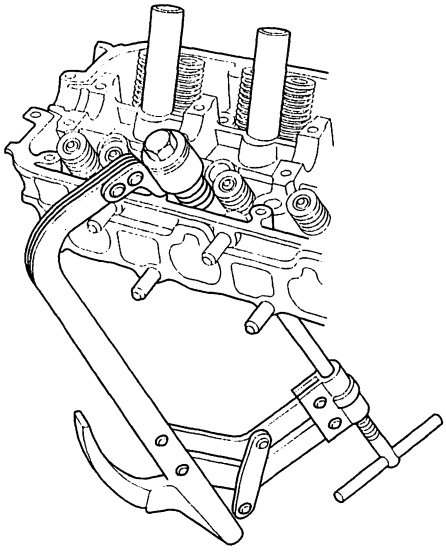

3. Install the valve guide seal remover.

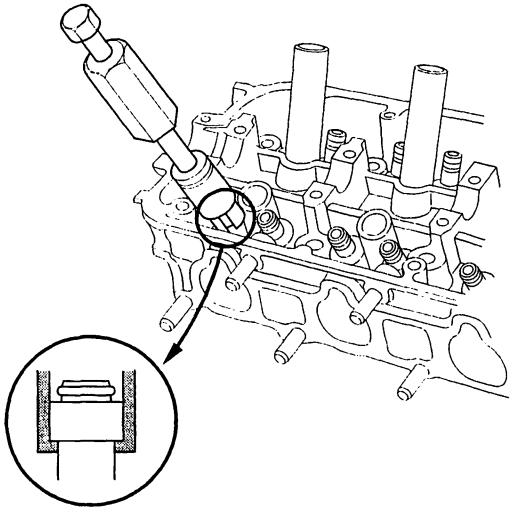

4. Remove the valve seal.

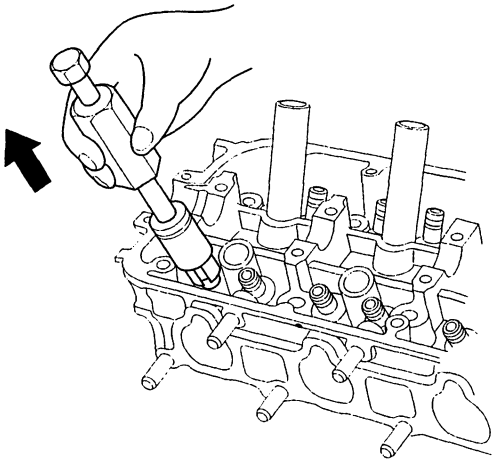

BACK

Valve Inspection

Measure the valve in these areas.

Intake Valve Dimensions

A Standard (New):	**33.85 – 34.15 mm (1.333 – 1.344 in.)**
B Standard (New):	**114.85 – 115.15 mm (4.522 – 4.533 in.)**
C Standard (New):	**5.485 – 5.495 mm (0.2159 – 0.2163 in.)**
C Service Limit:	**5.455 mm (0.2148 in.)**
D Standard (New):	**0.85 – 1.15 mm (0.033 – 0.045 in.)**
D Service Limit:	**0.65 mm (0.026 in.)**

Exhaust Valve Dimensions

A Standard (New):	**28.85 – 29.15 mm (1.136 – 1.148 in.)**
B Standard (New):	**112.85 – 113.15 mm (4.443 – 4.455 in.)**
C Standard (New):	**5.450 – 5.460 mm (0.2146 – 0.2150 in.)**
C Service Limit:	**5.420 mm (0.2134 in.)**
D Standard (New):	**1.05 – 1.35 mm (0.041 – 0.053 in.)**
D Service Limit:	**0.95 mm (0.037 in.)**

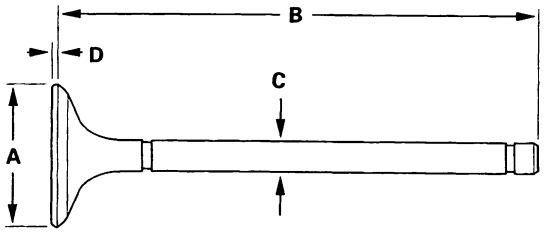

Valve Stem-to-Guide Clearance Inspection

1. Slide the valve out of its guide about 10mm, then measure the guide-to-stem clearance with a dial indicator while rocking the stem in the direction of normal thrust (wobble method).
   - If the measurement exceeds the service limit, recheck it using a new valve.
   - If the measurement is now within the service limit, reassemble using a new valve.
   - If the measurement with a new valve still exceeds the service limit, go to step 2.

   Intake Valve Stem-to-Guide Clearance:
   Standard (New): 0.04 – 0.09 mm (0.002 – 0.004 in.)
   Service Limit: 0.16 mm (0.006 in.)

   Exhaust Valve Stem-to-Guide Clearance:
   Standard (New): 0.11 – 0.16 mm (0.004 – 0.006 in.)
   Service Limit: 0.24 mm (0.009 in.)

2. Subtract the O.D. of the valve stem, measured with a micrometer, from the I.D. of the valve guide, measured with an inside micrometer or ball gauge. Take the measurements in three places along the valve stem and three places inside the valve guide. The difference between the largest guide measurement and the smallest stem measurement should not exceed the service limit.

   Intake Valve Stem-to-Guide Clearance:
   Standard (New): 0.020 – 0.045 mm (0.0008 – 0.0018 in.)
   Service Limit: 0.08 mm (0.003 in.)

   Exhaust Valve Stem-to-Guide Clearance:
   Standard (New): 0.055 – 0.080 mm (0.0022 – 0.0031 in.)
   Service Limit: 0.12 mm (0.005 in.)

Valve Guide Replacement

Special Tools Required
- Valve Guide Driver, 5.5 mm 07742-0010100
- Valve Guide Reamer, 5.5 mm 07HAH-PJ7010B

1. Modify a commercially available air-impact valve guide driver (A) to the dimensions shown. In most cases, the same procedure can be done using the special tool and a conventional hammer.

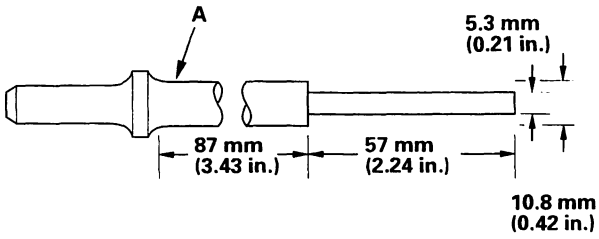

2. Select the proper replacement guides, and chill them in the freezer section of a refrigerator for about an hour.

3. Use a hot plate or oven to evenly heat the cylinder head to 300°F (150°C). Monitor the temperature with a cooking thermometer. Do not get the head hotter than 300°F (150°C); excessive heat may loosen the valve seats.

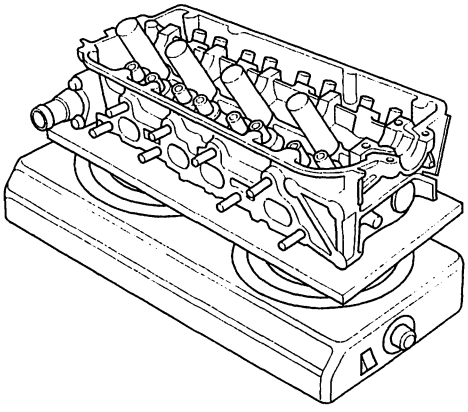

4. Working from the camshaft side, use the driver and an air hammer to drive the guide about 2 mm (0.1 in.) towards the combustion chamber. This will knock off some of the carbon and make removal easier. Hold the air hammer directly in line with the valve guide to prevent damaging the driver.

5. Turn the head over and drive the guide out toward the camshaft side of the head.

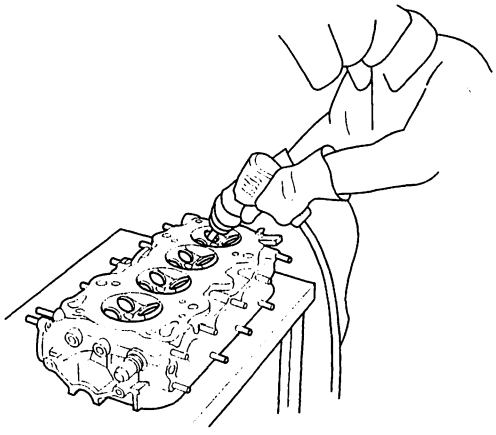

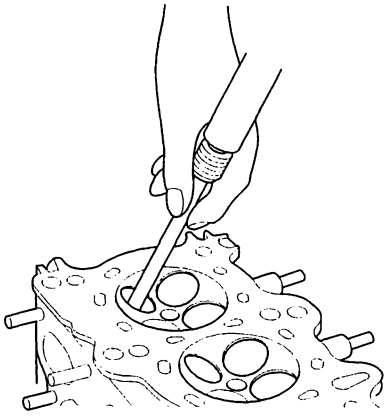

6. If a valve guide won't move, drill it out with a 8 mm (5/16 inch) bit, then try again. Drill guides only in extreme cases; you could damage the cylinder head if the guide breaks.

7. Remove the new guide(s) from the freezer, one at a time, as you need them.

BACK

8. Apply a thin coat of clean engine oil to the outside of the new valve guide. Install the guide from the camshaft side of the head; use the special tool to drive the guide in to the specified installed height (A) of the guide (B). If you have all 16 guides to do, you may have to reheat the head.

Valve Guide Installed Height:
Intake: 21.20 – 22.20 mm (0.835 – 0.874 in.)
Exhaust: 20.63 – 21.63 mm (0.812 – 0.852 in.)

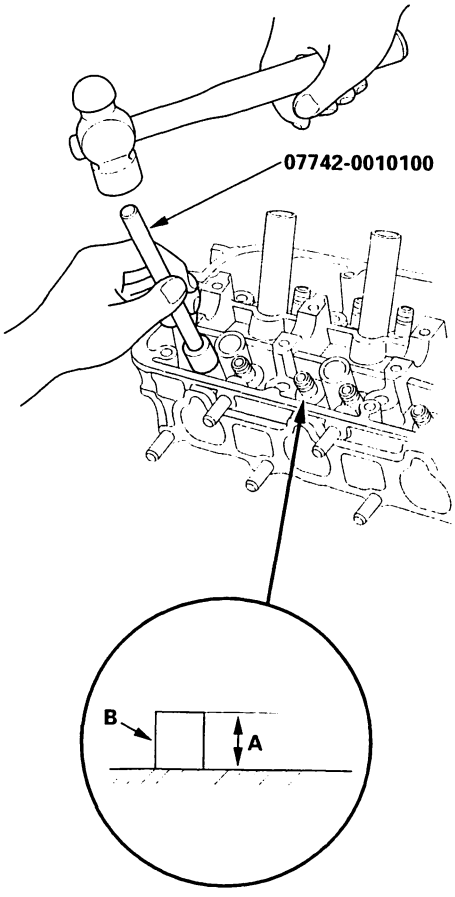

9. Coat both reamer and valve guide with cutting oil.

10. Rotate the reamer clockwise the full length of the valve guide bore.

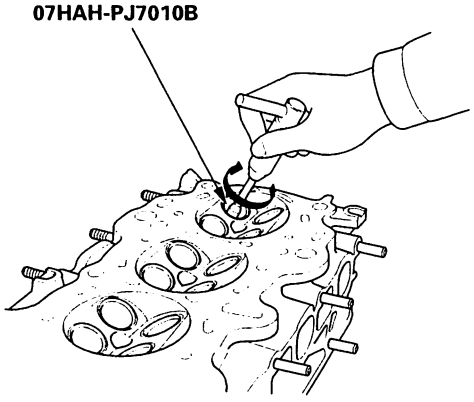

11. Continue to rotate the reamer clockwise while removing it from the bore.

12. Thoroughly wash the guide in detergent and water to remove any cutting residue.

13. Check the clearance with a valve (see page 6-43). Verify that the valve slides in the intake and exhaust valve guides without exerting pressure.

Valve Seat Reconditioning

If the valve guides are worn (see page 6-43), replace them (see page 6-44) before cutting the valve seats.

1. Renew the valve seats in the cylinder head using a valve seat cutter.

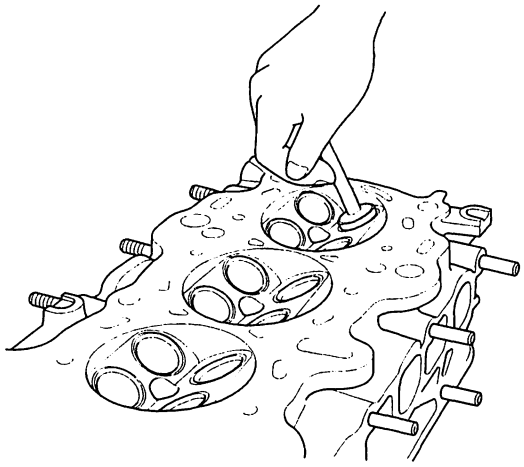

2. Carefully cut a 45° seat, removing only enough material to ensure a smooth and concentric seat.

3. Bevel the upper edge of the seat with a 30° cutter and the lower edge of the seat with a 60° cutter. Check the width of the seat and adjust accordingly.

4. Make one more very light pass with the 45° cutter to remove any possible burrs caused by the other cutters.

   Valve Seat Width:
   Standard (New): 1.25 – 1.55 mm (0.049 – 0.061 in.)
   Service Limit: 2.00 mm (0.079 in.)

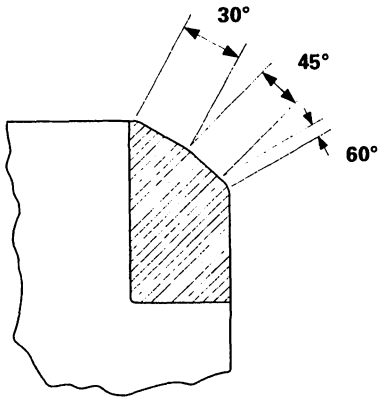

5. After resurfacing the seat, inspect for even valve seating: Apply Prussian Blue compound (A) to the valve face. Insert the valve in its original location in the head, then lift it and snap it closed against the seat several times.

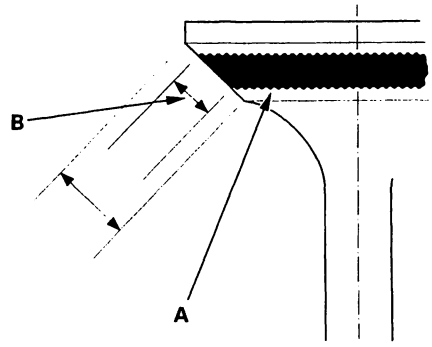

6. The actual valve seating surface (B), as shown by the blue compound, should be centered on the seat.
   - If it is too high (closer to the valve stem), you must make a second cut with the 60° cutter to move it down, then one more cut with the 45° cutter to restore seat width.
   - If it is too low (closer to the valve edge), you must make a second cut with the 30° cutter to move it up, then one more cut with the 45° cutter to restore seat width.

   NOTE: The final cut should always be made with the 45° cutter.

BACK

7. Insert the intake and exhaust valves in the head and measure valve stem installed height (A).

Intake Valve Stem Installed Height:
Standard (New): 46.75 – 47.55 mm (1.841 – 1.872 in.)
Service Limit: 47.80 mm (1.882 in.)

Exhaust Valve Stem Installed Height:
Standard (New): 46.68 – 47.48 mm (1.838 – 1.869 in.)
Service Limit: 47.73 mm (1.879 in.)

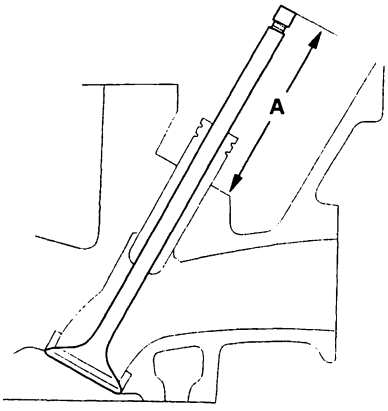

8. If valve stem installed height is over the service limit, replace the valve and recheck. If it is still over the service limit, replace the cylinder head; the valve seat in the head is too deep.

Valves, Springs and Valve Seals Installation

1. Coat the valve stems with engine oil. Install the valves in the valve guides.
2. Check that the valves move up and down smoothly.
3. Install the spring seats on the cylinder head.
4. Install the new valve seals (A) using the valve guide seal installer (B).

   NOTE: Exhaust valve seal (C) has a black spring (D), and intake valve seal (E) has a white spring (F). They are not interchangeable.

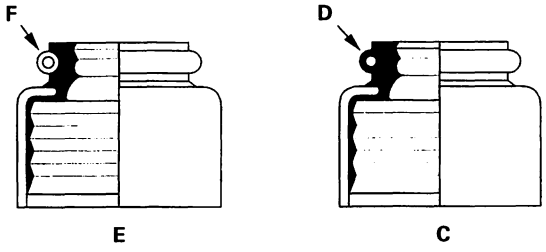

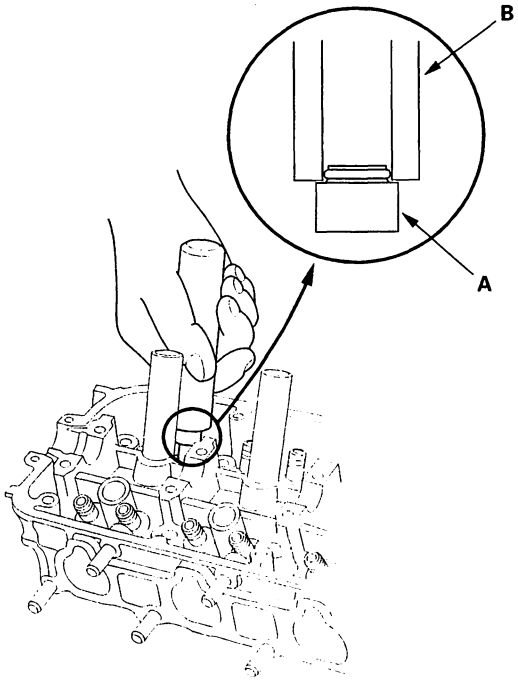

5. Install the valve spring and valve retainer. Place the end of the valve spring with closely wound coils toward the cylinder head.
6. Install the valve spring compressor. Compress the spring and install the valve keepers.

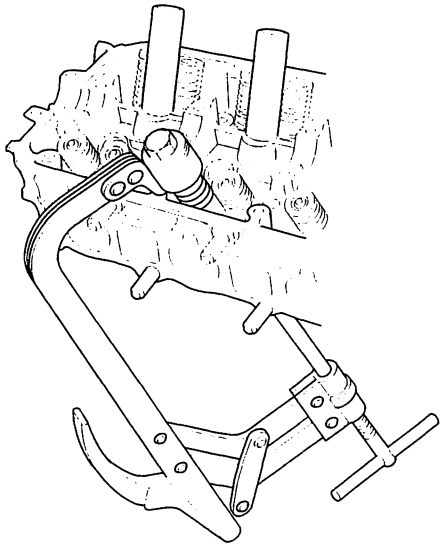

7. Lightly tap the end of each valve stem two or three times with a plastic mallet (A) to ensure proper seating of the valve and valve keepers. Tap the valve stem only along its axis so you do not bend the stem.

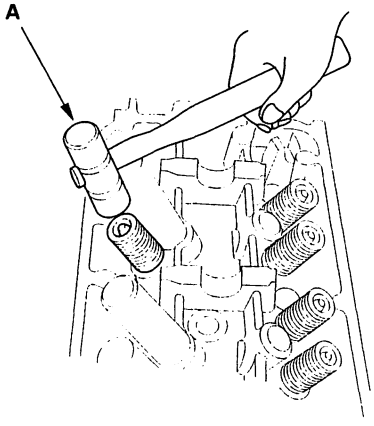

BACK

Camshaft/Rocker Arms, Camshaft Seal, and Pulley Installation

Special Tools Required
- Seal Guide 07NAG-PT0010A
- Installer Cup 07NAF-PT0010A
- Installer Shaft 07NAF-PT0020A

NOTE:
- To prevent the rocker arm assembly from coming apart, leave the camshaft holder bolts in the holes.

1. After wiping down the camshaft and the journals in the cylinder head, lubricate both surfaces and install the camshaft.

2. Clean and install the oil control orifice (A) with a new O-ring (B).

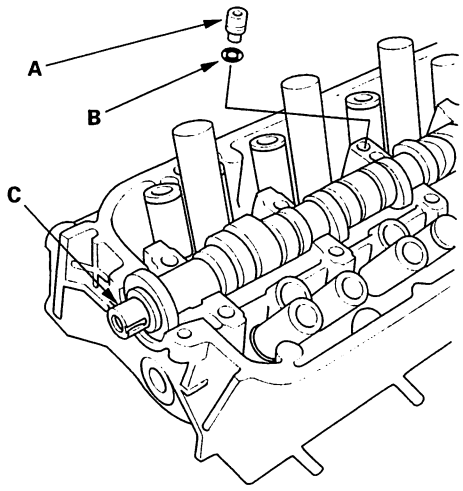

3. Turn the camshaft until its keyway (C) is facing up. (No.1 piston TDC).

4. Loosen all the valve adjusting screws.

5. Apply liquid gasket to the head mating surfaces (the shaded areas) of the No. 1 and No. 5 camshaft holders.

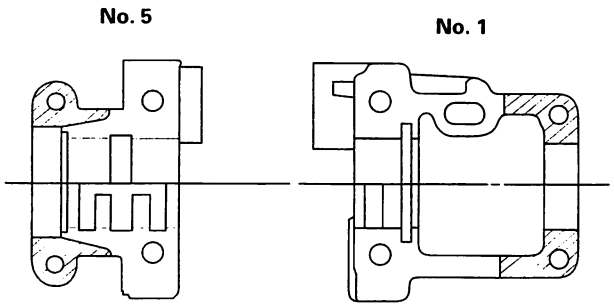

6. Set the rocker arm assembly in place and loosely install the bolts. Make sure that the rocker arms are properly positioned on the valve stems.

7. Install the camshaft oil seal (A) using the special tools as shown.

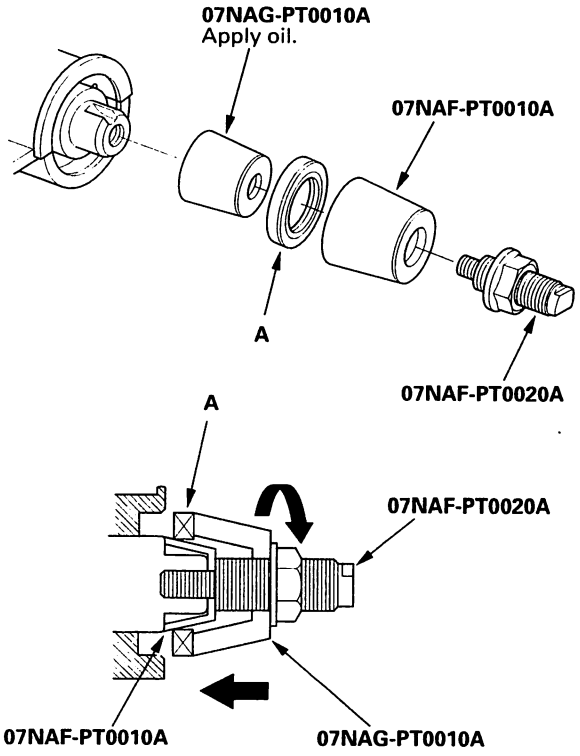

(cont'd)

Camshaft/Rocker Arms, Camshaft Seal, and Pulley Installation (cont'd)

8. Make sure all the rocker arms are aligned with the valves.

9. Tighten each bolt two turns at a time, in the sequence shown below, to ensure that the rockers do not bind on the valves.

   Specified torque:
   8 mm bolts: 22 N·m (2.2 kgf·m, 16 lbf·t)
   6 mm bolts: 12 N·m (1.2 kgf·m, 8.7 lbf·t)
   6 mm bolts: ⑪, ⑫, ⑬, ⑭

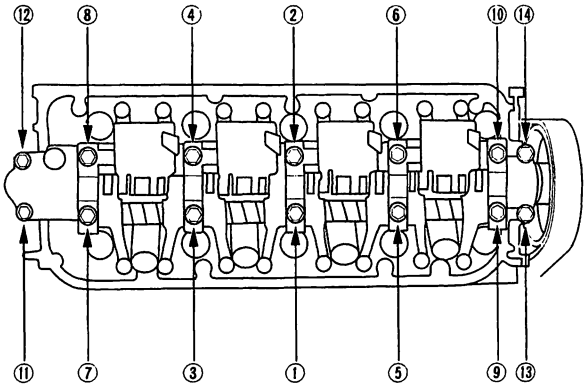

10. Check the back cover rubber seal for cranks and other damage.

    NOTE:
    - If the rubber seal is coming off, reattach it with liquid gasket. Wipe off any excess liquid gasket.
    - When replacing the seal, clean the lower cover groove, cut the repair strip to length, and press the new piece into the groove evenly.
    - After installing the rubber seal, check the joints. Apply liquid gasket if there is any gap or opening.

11. Install the back cover (A).

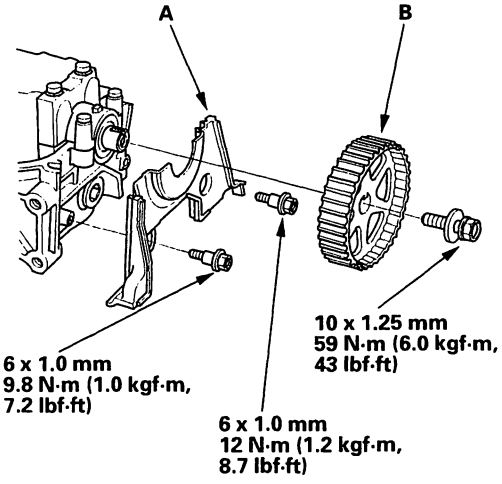

12. Install the camshaft pulley (B) onto the camshaft, then tighten the retaining bolt to the torque shown.

BACK

Cylinder Head Installation

1. Clean the cylinder head and block surfaces.

2. Install the cylinder head gasket (A) and dowel pins (B) on the cylinder block. Always use a new cylinder head gasket.

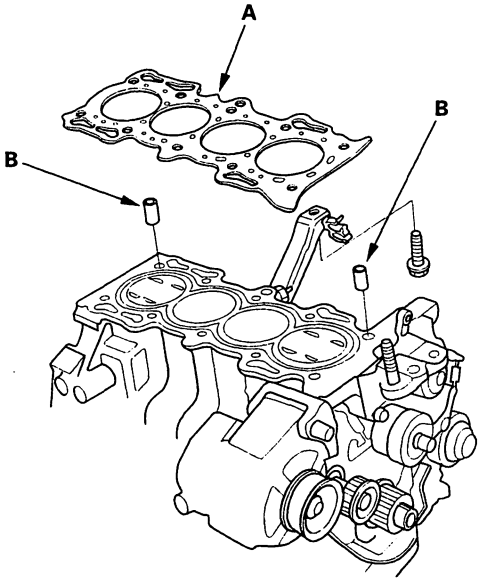

3. Set the timing belt drive pulley to TDC. Align the dimple (A) on the tooth of the timing belt drive pulley with the pointer (B) on the oil pump.

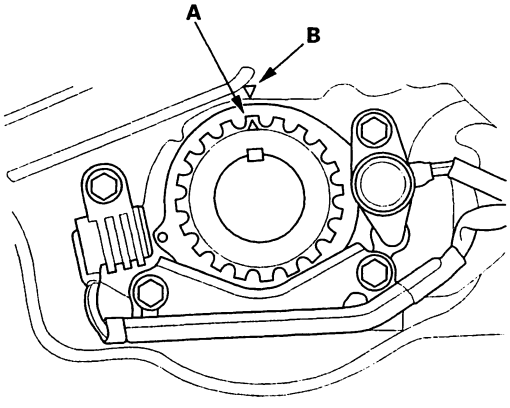

4. Clean the camshaft pulley and set it to TDC.
   –1 The "UP" mark (A) on the camshaft pulley should be at the top.
   –2 Align the TDC grooves (B) on the pulley with the top edge of the head.

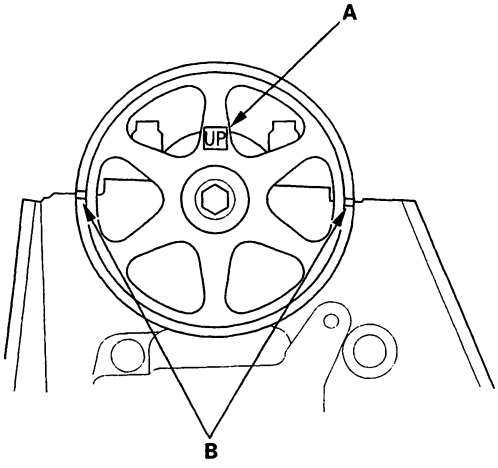

5. Install the cylinder head on the block.

6. Measure the diameter of each cylinder head bolt at point A and point B.

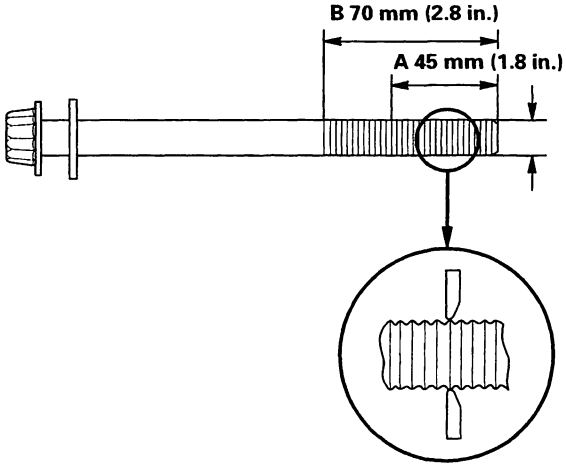

7. If either diameter is less than 11.3 mm (0.44 in.), replace the cylinder head bolt.

8. Apply clean engine oil to the bolt threads and under the bolt heads of all the cylinder head bolts.

(cont'd)

Cylinder Head Installation (cont'd)

9. Tighten the cylinder head bolts. Tighten the cylinder head bolts is sequence to 29 N·m (3.0 kgf·m, 22 lbf·ft). Use a beam-type torque wrench. When using a preset type torque wrench, be sure to tighten slowly and do not overtighten. If a bolt makes any noise while you are torquing it, loosen the bolt and retighten it.
CYLINDER HEAD BOLTS TORQUE SEQUENCE:

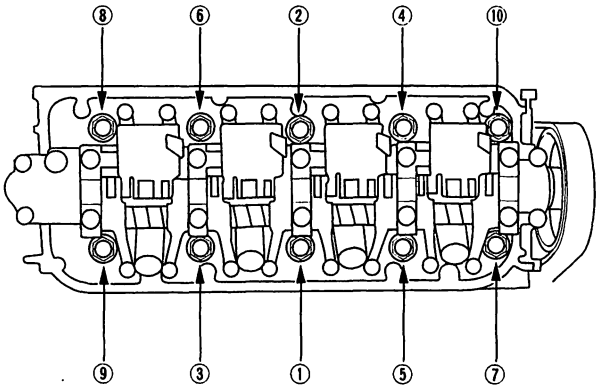

10. Mark the bolt head (A) and the cylinder head (B) as shown.

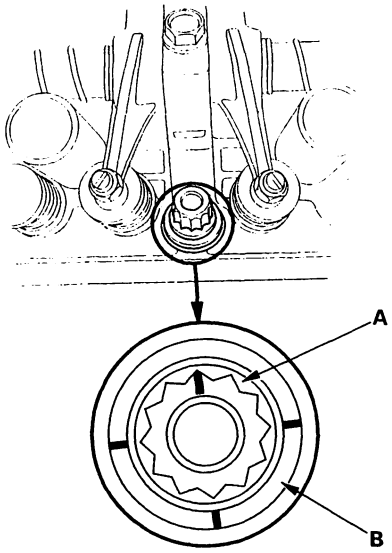

11. Tighten the cylinder head bolts until the mark on the bolt head aligns with the second mark on the cylinder head (turn the bolt 180°).
If you are using a new cylinder head bolt, tighten the bolt to the the third mark (270°).

12. Install the intake manifold (A) and three tighten the nuts in a crisscross pattern in two or three steps, beginning with the inner nuts. Always use a new intake manifold gasket (B) and new O-ring (C).

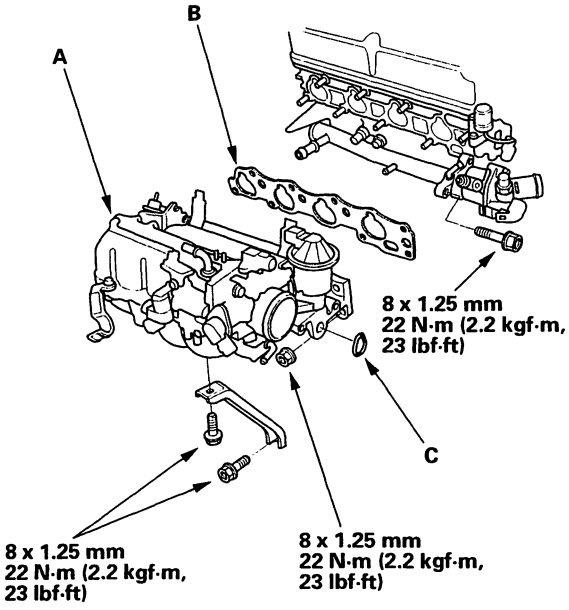

BACK

13. Install the exhaust manifold (A) and tighten the new self-locking nuts (B) in a crisscross pattern in two or three steps, beginning with the inner nuts. Always use a new exhaust manifold gasket (C).

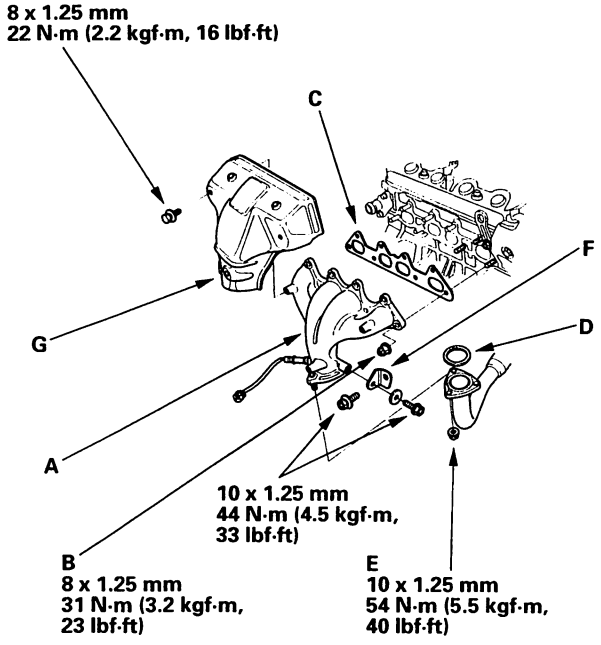

14. Install the exhaust pipe A with a new gasket (D) and new self-locking nuts (E).

15. Install the exhaust manifold bracket (F) and cover (G).

16. Install the timing belt (see page 6-26).

17. Adjust the valve clearance (see page 6-14).

Cylinder Head Cover Installation

1. Thoroughly clean the head cover gasket and the groove.

2. Install the head cover gasket (A) in the groove of the cylinder head cover (B). Seat the head cover gasket in the recesses for the camshaft first, then work it into the groove around the outside edges. Make sure the head cover gasket is seated securely in the corners of the recesses (C) with no gap.

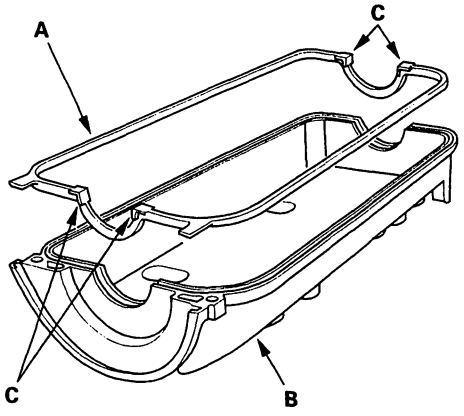

3. Check that the mating surfaces are clean and dry.

4. Apply liquid gasket, part No. 08718-0001 or 08718-0003, to the head cover gasket at the four corners of the recesses (A).

   NOTE: Do not install the parts if 5 minutes or more have elapsed since applying liquid gasket. Instead, reapply liquid gasket after removing old residue.

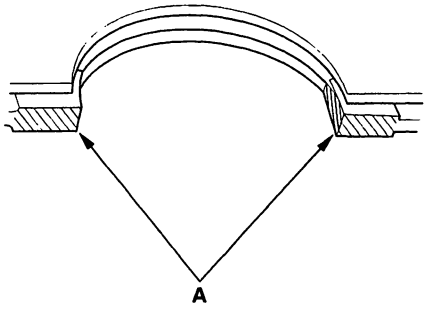

5. Hold the head cover gasket in the groove by placing your fingers on the camshaft holder contacting surfaces (top of the semicircles). Set the spark plug seal (A) on the spark plug tube. Once the cylinder head cover (B) is on the cylinder head, slide the cover slightly back and forth to seat the head cover gasket.

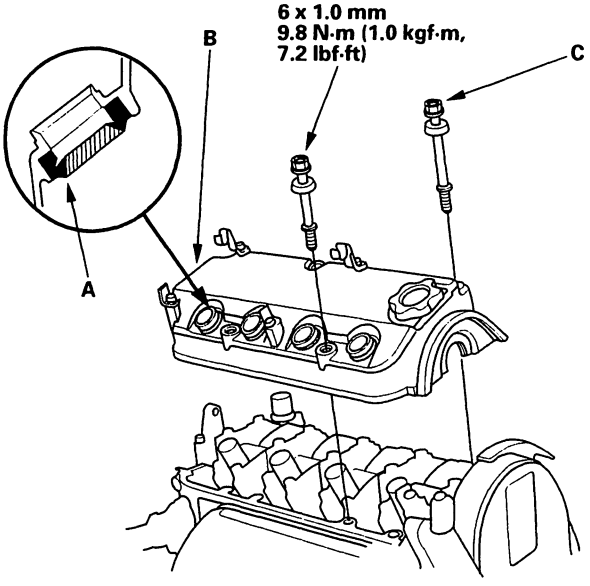

6. Inspect the cover washers (C). Replace any washer that is damaged or deteriorated.

BACK

7. Tighten the bolts in two or three steps. In the final step, tighten all bolts, in sequence, to 9.8 N·m (1.0 kgf·m, 7.2 lbf·ft).

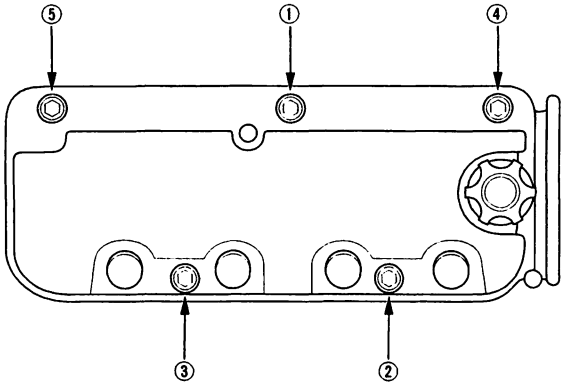

8. Check that all tubes, hoses and connectors are installed correctly.

9. After assembly, wait at least 30 minutes before filling the engine with oil.

10. Enter the anti-theft code for the radio, then enter the customer's radio station presets.

CKP/TDC Sensors Replacement

1. Remove the balancer belt (see page 6-23).

2. Remove the balancer belt drive pulley.

3. Disconnect the CKP/TDC sensors connector (A), then remove the CKP/TDC sensors (B).

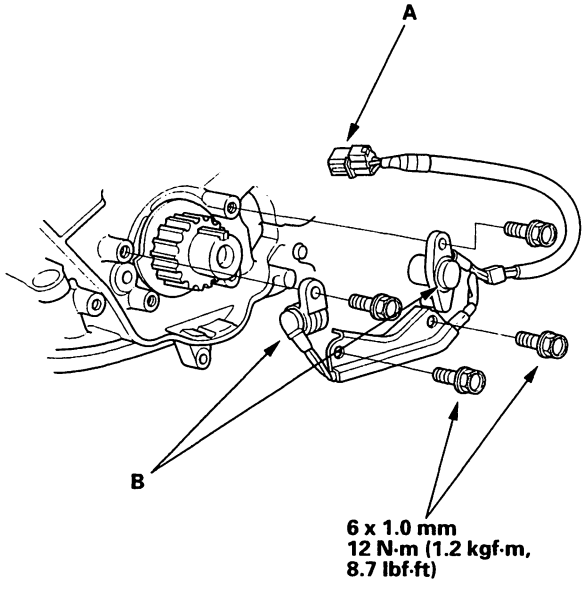

4. Install the CKP/TDC sensors in reverse order of removal.

5. Install the balancer belt (see page 6-26).

BACK

Engine Mechanical

Engine Block

Special Tools 7-2
Component Location Index 7-3
Flywheel Removal and Installation 7-7
Drive Plate Removal and Installation 7-7
Connecting Rod and Crankshaft End Play Inspection 7-8
Crankshaft Main Bearing Replacement 7-9
Connecting Rod Bearing Replacement 7-13
Balancer Shafts Inspection 7-15
Crankshaft, Piston and Balancer Shaft Removal 7-18
Crankshaft Inspection 7-21
Block and Piston Inspection 7-22
Cylinder Honing 7-24
Piston, Pin and Connecting Rod Replacement 7-25
Piston Ring Replacement 7-28
Piston Installation 7-30
Connecting Rod Bolt Inspection 7-31
Crankshaft and Balancer Shafts Installation 7-32
Pulley End Crankshaft Seal Installation-In-car 7-37
Balancer Shaft Seals Installation-in-car 7-37
Transmission End Crankshaft Seal Installation-In-car 7-38

BACK

Special Tools

Ref.No.	Tool Number	Description	Qty
①	07GAF-SE00200	Hub Assembly Guide Attachment	1
②	07LAB-PV00100	Ring Gear Holder	1
③	07LAD-PT3010A	Seal Driver	1
④	07746-0030300	Attachment, 30 mm I.D.	1
⑤	07749-0010000	Driver	1
⑥	07948-SB00101 or 07VAD-P8A010A	Driver Attachment	1

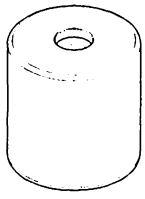

①

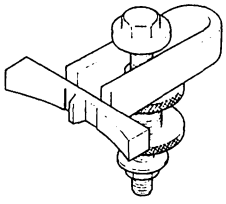

②

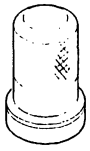

③

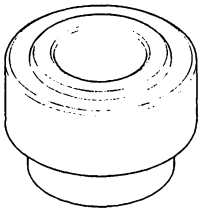

④

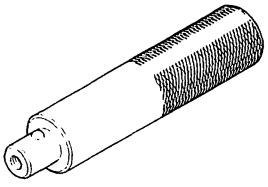

⑤

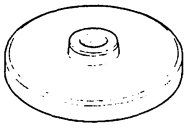

⑥

BACK

Component Location Index

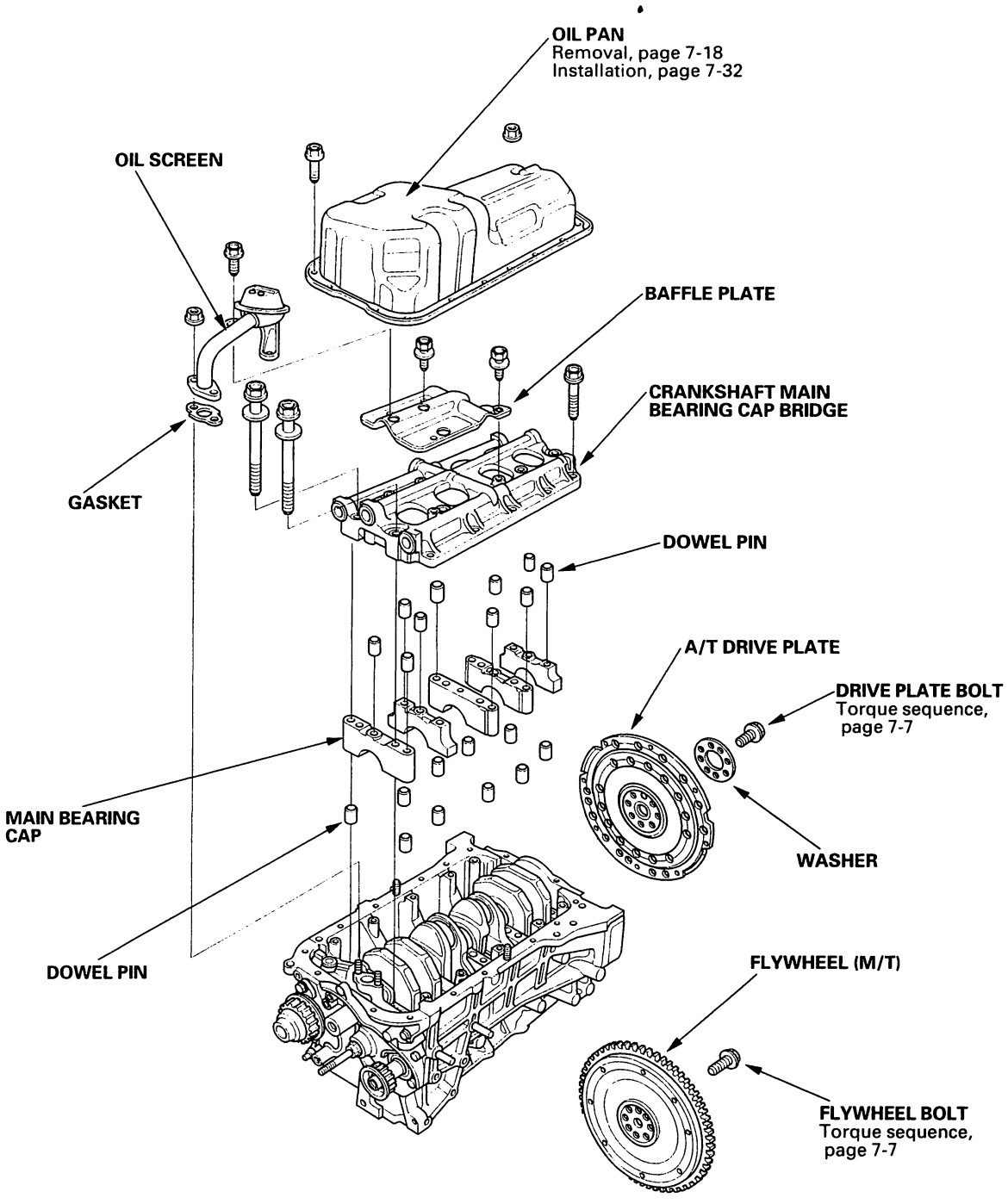

(cont'd)

Component Location Index (cont'd)

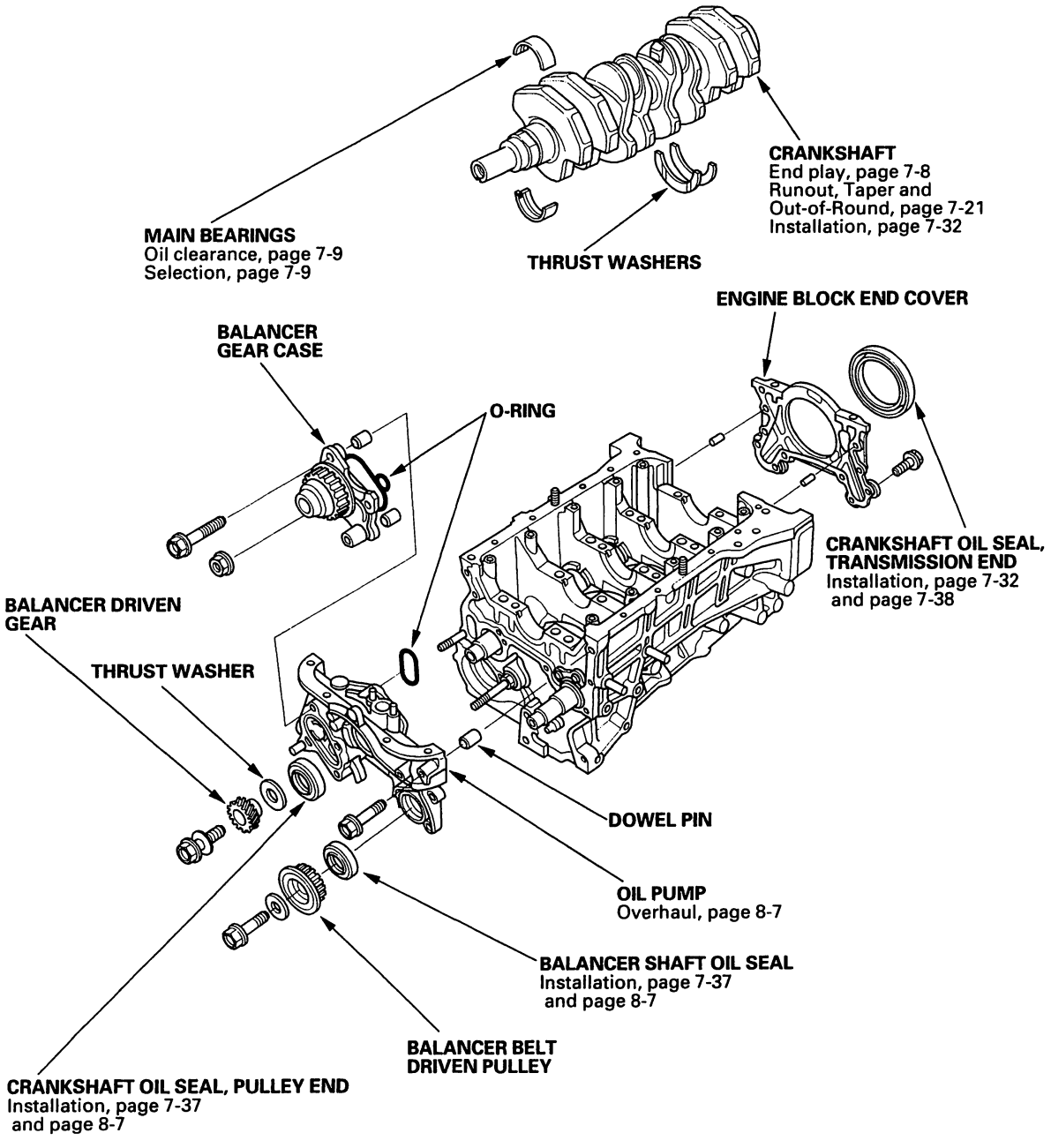

BACK

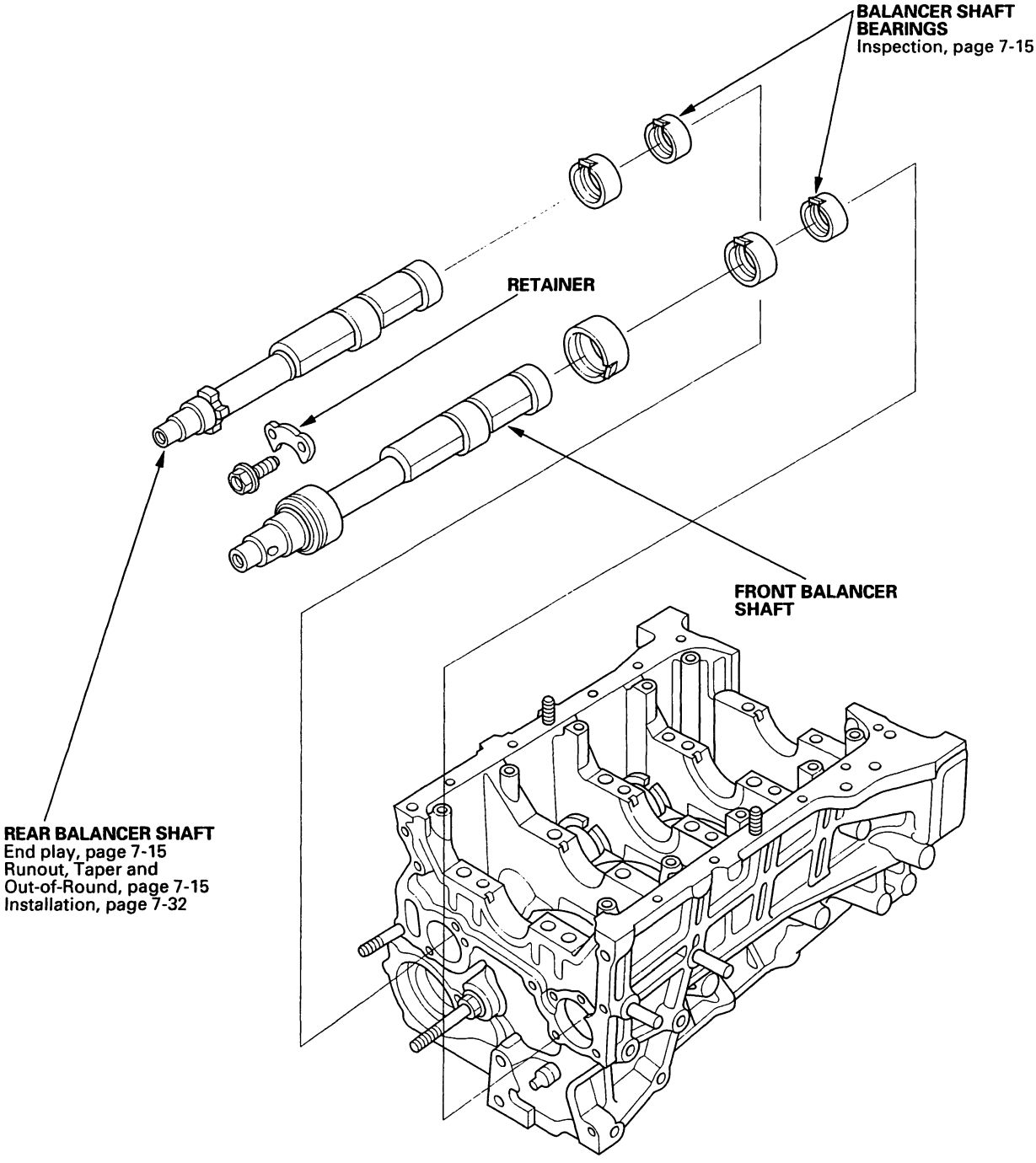
BALANCER SHAFT BEARINGS
Inspection, page 7-15
RETAINER
FRONT BALANCER SHAFT
REAR BALANCER SHAFT
End play, page 7-15
Runout, Taper and Out-of-Round, page 7-15
Installation, page 7-32

(cont'd)

BACK

Component Location Index (cont'd)

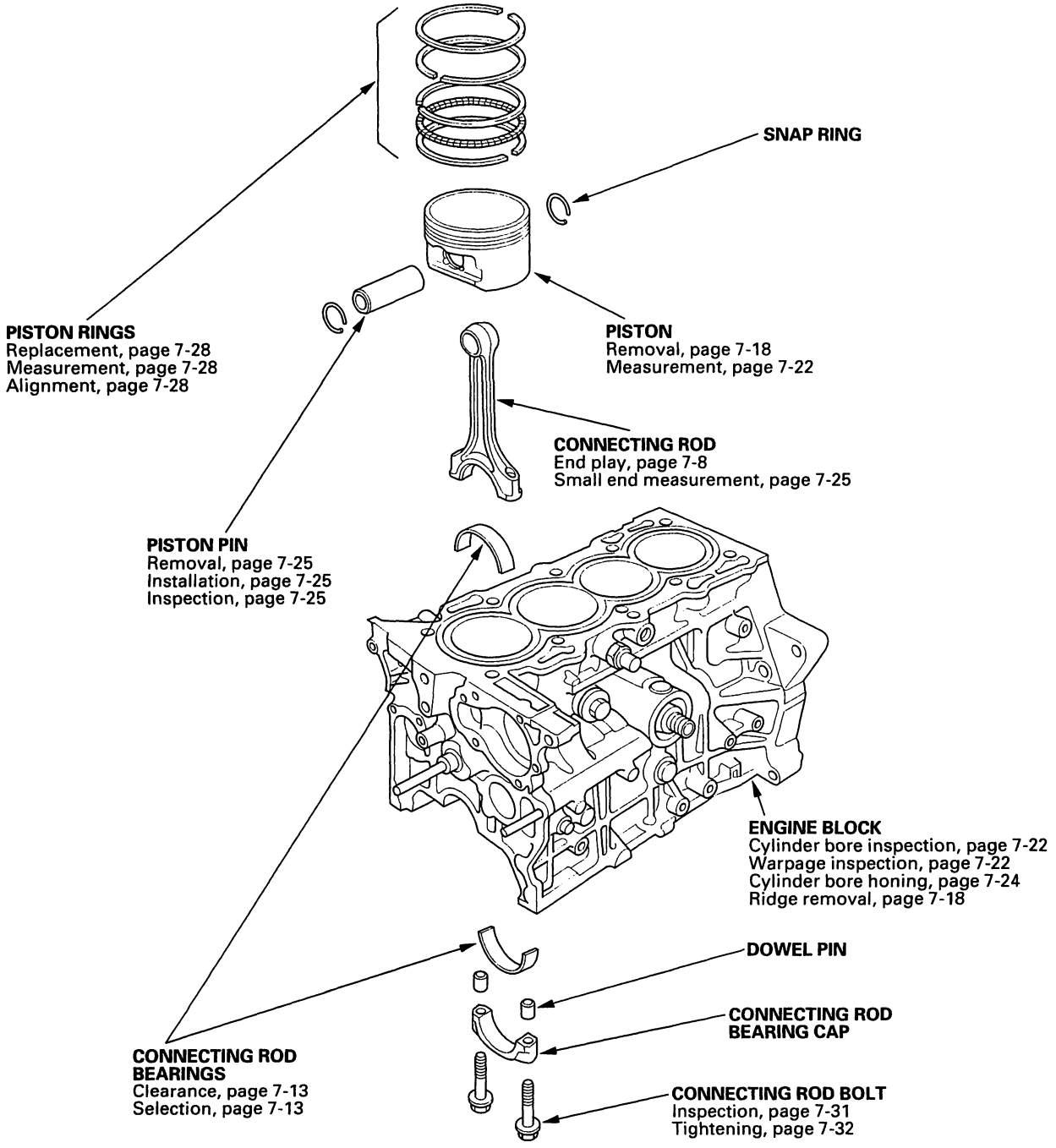

BACK

Flywheel Removal and Installation

Special Tools Required
Ring Gear Holder 07LAB-PV00100

1. Remove the transmission (see page 13-4).
2. Remove the pressure plate and clutch disk.
3. Remove the 8 flywheel bolts, then separate the flywheel from the crankshaft flange. After installation, tighten the bolts in the sequence shown.

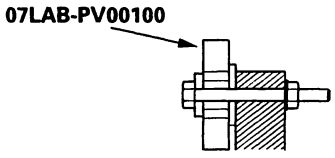

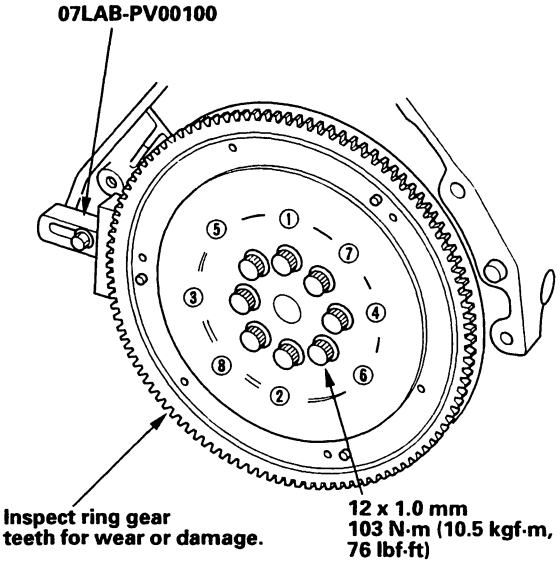

4. Install the transmission (see page 13-10).

Drive Plate Removal and Installation

1. Remove the transmission (see page 14-114).
2. Remove the 8 drive plate bolts, then separate the drive plate from the crankshaft flange. After installation, tighten the bolts in the sequence shown.

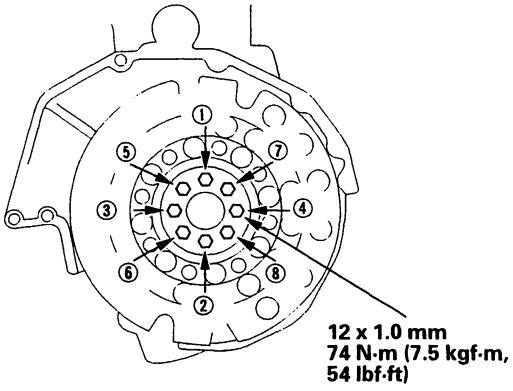

3. Install the transmission (see page 14-119).

Connecting Rod and Crankshaft End Play Inspection

1. Remove the oil pump (see page 8-8).

2. Remove the baffle plate (see step 13 on page 7-19).

3. Measure the connecting rod end play with a feeler gauge between the connecting rod and crankshaft.

   Connecting Rod End Play:
   Standard (New): 0.15–0.30 mm (0.006–0.012 in.)
   Service Limit: 0.40 mm (0.016 in.)

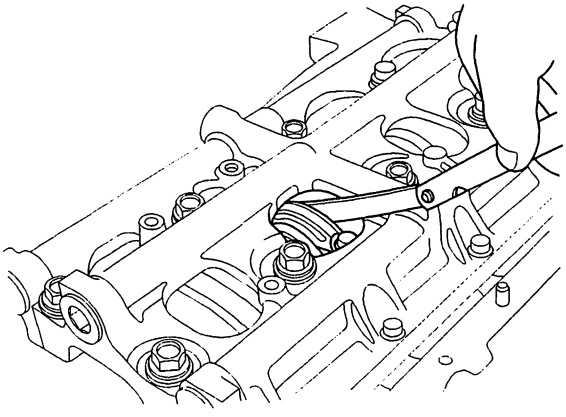

4. If the connecting rod end play is out-of-tolerance, install a new connecting rod, and recheck. If it is still out-of-tolerance; replace the crankshaft (see page 7-18).

5. Push the crankshaft firmly away from the dial indicator, and zero the dial against the end of the crankshaft. Then pull the crankshaft firmly back toward the indicator; the dial reading should not exceed the service limit.

   Crankshaft End Play:
   Standard (New): 0.10–0.35 mm (0.004–0.014 in.)
   Service Limit: 0.45 mm (0.018 in.)

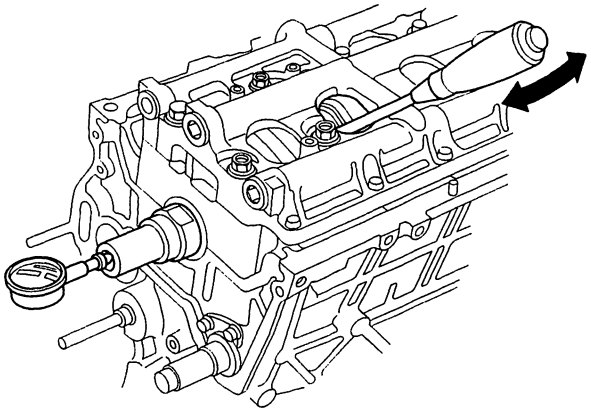

6. If the end play is excessive, replace the thrust washers and recheck. If it is still out-of-tolorance, replace the crankshaft.

BACK

Crankshaft Main Bearing Replacement

Main Bearing Clearance Inspection

1. To check main bearing-to-journal oil clearance, remove the main caps and bearing halves.

2. Clean each main journal and bearing half with a clean shop towel.

3. Place one strip of plastigage across each main journal.

   NOTE: If the engine is still in the car when you bolt the main cap down to check clearance, the weight of the crankshaft and flywheel will flatten the plastigage further than just the torque on the cap bolt and give you an incorrect reading. For an accurate reading, support the crank with a jack under the counterweights, and check only one bearing at a time.

4. Reinstall the bearings and caps, then torque the bolts to 69 N·m (7.0 kgf·m, 51 lbf·ft).

   NOTE: Do not rotate the crankshaft during inspection.

5. Remove the caps and bearings again, and measure the widest part of the plastigage.

   Main Bearing-to-Journal Oil Clearance:
   USA – Produced:
   F23A1 – 1000001~, 2000001~, 3000001~, 4000001~
   F23A4 – 1000001~, 2000001~, 3000001~, 4000001~
   F23A5 – 1000001~, 2000001~, 3000001~, 4000001~
   MEXICO – Produced:
   F23A1 – 3400001~, 4400001~
   F23A4 – 3400001~, 4400001~
   Standard (New):
   No. 1, 2, 4: 0.021 – 0.045 mm (0.0008 – 0.0018 in.)
   No. 3: 0.025 – 0.049 mm (0.0010 – 0.0019 in.)
   No. 5: 0.009 – 0.033 mm (0.0004 – 0.0013 in.)
   Service Limit:
   No. 1, 2, 4: 0.050 mm (0.0020 in.)
   No. 3: 0.055 mm (0.0022 in.)
   No. 5: 0.040 mm (0.0016 in.)

   JAPAN – Produced:
   F23A1-2500001~
   F23A4-2500001~
   Standard (New):
   No. 1, 4: 0.013 – 0.037 mm (0.0005 – 0.0015 in.)
   No. 2: 0.021 – 0.045 mm (0.0008 – 0.0018 in.)
   No. 3: 0.025 – 0.049 mm (0.0010 – 0.0019 in.)
   No. 5: 0.009 – 0.033 mm (0.0004 – 0.0013 in.)
   Service Limit:
   No. 1, 4: 0.045 mm (0.0018 in.)
   No. 2: 0.050 mm (0.0020 in.)
   No. 3: 0.055 mm (0.0022 in.)
   No. 5: 0.040 mm (0.0016 in.)

   JAPAN – Produced:
   F23A1-3500001~, 4500001~
   F23A4-3500001~, 4500001~
   F23A5-3500001~, 4500001~
   Standard (New):
   No. 1, 2: 0.025 – 0.049 mm (0.0010 – 0.0019 in.)
   No. 3: 0.021 – 0.045 mm (0.0008 – 0.0018 in.)
   No. 4: 0.013 – 0.037 mm (0.0005 – 0.0015 in.)
   No. 5: 0.009 – 0.033 mm (0.0004 – 0.0013 in.)
   Service Limit:
   No. 1, 2: 0.055 mm (0.0022 in.)
   No. 3: 0.050 mm (0.0020 in.)
   No. 4: 0.045 mm (0.0018 in.)
   No. 5: 0.040 mm (0.0016 in.)

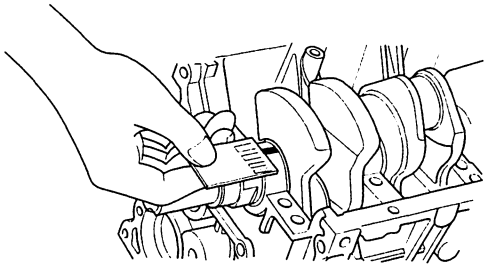

6. If the plastigage measures too wide or too narrow, (remove the engine if it's still in the car), remove the crankshaft, and remove the upper half of the bearing. Install a new, complete bearing with the same color code(s), and recheck the clearance. Do not file, shim, or scrape the bearings or the caps to adjust clearance.

7. If the plastigage shows the clearance is still incorrect, try the next larger or smaller bearing (the color listed above or below that one), and check again. If the proper clearance cannot be obtained by using the appropriate larger or smaller bearings, replace the crankshaft and start over.

(cont'd)

Crankshaft Main Bearing Replacement (cont'd)

Main Bearing Selection

Crankshaft Bore Code Location

1. Numbers or Letters or Bars have been stamped on the end of the block as a code for the size of each of the 5 main journal bores.Write down the crank bore codes.
   If you can't read the codes because of accumulated dirt and dust, do not scrub them with a wire brush or scraper. Clean them only with solvent or detergent.

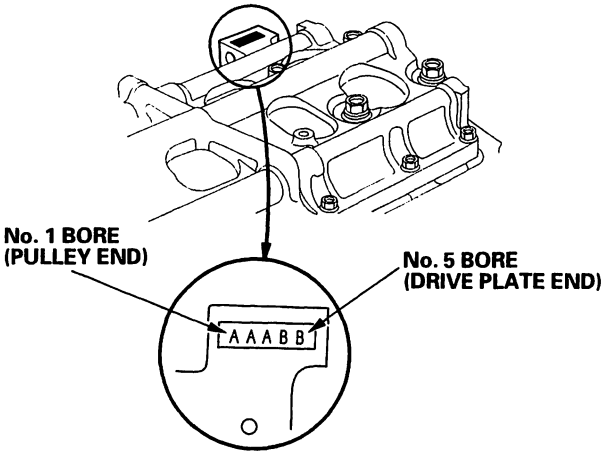

Main Journal Code Locations

2. The Main Journal Codes are stamped in 1 of 2 locations: either on the side of the crankshaft next to the main journals, or on the No. 1 web.

Main Journal Code Locations (Numbers or Bars)

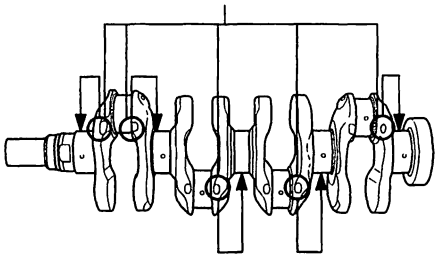

Main Journal Code Locations (Numbers or Bars)

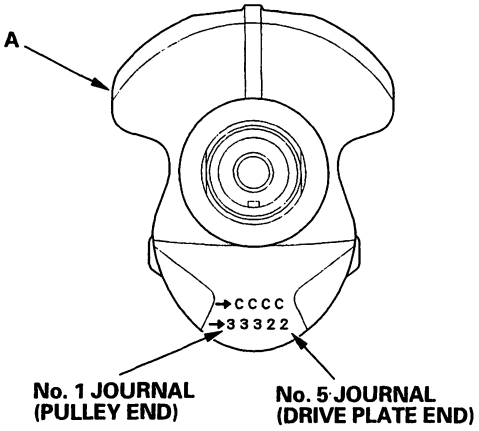

BACK

3. Use the crank bore codes and crank journal codes to select the appropriate replacement bearings from the following table.

NOTE:
- Color code is on the edge of the bearing.
- When using bearing halves of different colors, it does not matter which color is used in the top or bottom.

USA-Produced:
F23A1-1000001~, 2000001~, 3000001~,4000001~
F23A4-1000001~, 2000001~, 3000001~,4000001~
F23A5-1000001~, 2000001~, 3000001~,4000001~

MEXICO-Produced:
F23A1-3400001~,4400001~
F23A4-3400001~,4400001~

Larger crank bore →

Rod Journal code ↓ / Crank bore code → Smaller bearing (Thicker)	1 or A or I	2 or B or II	3 or C or III	4 or D or IIII
1 or I	Red	Red/ Pink	Pink	Yellow
2 or II	Red/ Pink	Pink	Yellow	Yellow/ Green
3 or III	Pink	Yellow	Yellow/ Green	Green
4 or IIII	Yellow	Yellow/ Green	Green	Brown
5 or IIIII	Yellow/ Green	Green	Brown	Brown/ Black
6 or IIIIII	Green	Brown	Brown/ Black	Black

Smaller main journal ↓ / Smaller bearing (Thicker) →

JAPAN-Produced:
F23A1-2500001~
F23A4-2500001~

No. 1, 4 Journals:
Bearing Identification

Color code is on the edge of the bearing.

Larger crank bore →

Smaller main journal ↓ / Smaller bearing (Thicker) →	1 or A or I	2 or B or II	3 or C or III	4 or D or IIII
1 or I	Yellow	Yellow/ Green	Green	Green/ Brown
2 or II	Yellow/ Green	Green	Green/ Brown	Brown
3 or III	Green	Green/ Brown	Brown	Brown/ Black
4 or IIII	Green/ Brown	Brown	Brown/ Black	Black
5 or IIIII	Brown	Brown/ Black	Black	Black/ Blue
6 or IIIIII	Brown/ Black	Black	Black/ Blue	Blue

No. 2, 3, 5 Journals:
Bearing Identification

Color code is on the edge of the bearing.

Larger crank bore →

Smaller main journal ↓ / Smaller bearing (Thicker) →	1 or A or I	2 or B or II	3 or C or III	4 or D or IIII
1 or I	Pink	Pink/ Yellow	Yellow	Yellow/ Green
2 or II	Pink/ Yellow	Yellow	Yellow/ Green	Green
3 or III	Yellow	Yellow/ Green	Green	Green/ Brown
4 or IIII	Yellow/ Green	Green	Green/ Brown	Brown
5 or IIIII	Green	Green/ Brown	Brown	Brown/ Black
6 or IIIIII	Green/ Brown	Brown	Brown/ Black	Black

(cont'd)

Crankshaft Main Bearing Replacement (cont'd)

JAPAN-Produced:
F23A1-3500001~,4500001~
F23A4-3500001~,4500001~
F23A5-3500001~,4500001~

No. 1, 2 Journals:
Bearing Identification → Larger crank bore

Color code is on the edge of the bearing.

Smaller main journal ↓ / Smaller bearing (Thicker) →	1 or A or I	2 or B or II	3 or C or III	4 or D or IIII
1 or I	Pink	Pink	Pink/ Yellow	Yellow
2 or II	Pink	Pink/ Yellow	Yellow	Yellow/ Green
3 or III	Pink/ Yellow	Yellow	Yellow/ Green	Green
4 or IIII	Yellow	Yellow/ Green	Green	Green/ Brown
5 or IIIII	Yellow/ Green	Green	Green/ Brown	Brown
6 or IIIIII	Green	Green/ Brown	Brown	Brown/ Black

No. 3 Journal:
Bearing Identification → Larger crank bore

Color code is on the edge of the bearing.

Smaller main journal ↓ / Smaller bearing (Thicker) →	1 or A or I	2 or B or II	3 or C or III	4 or D or IIII
1 or I	Pink/ Yellow	Yellow	Yellow/ Green	Green
2 or II	Yellow	Yellow/ Green	Green	Green/ Brown
3 or III	Yellow/ Green	Green	Green/ Brown	Brown
4 or IIII	Green	Green/ Brown	Brown	Brown/ Black
5 or IIIII	Green/ Brown	Brown	Brown/ Black	Black
6 or IIIIII	Brown	Brown/ Black	Black	Black/ Blue

No. 4 Journal:
Bearing Identification → Larger crank bore

Color code is on the edge of the bearing.

Smaller main journal ↓ / Smaller bearing (Thicker) →	1 or A or I	2 or B or II	3 or C or III	4 or D or IIII
1 or I	Yellow	Yellow/ Green	Green	Green/ Brown
2 or II	Yellow/ Green	Green	Green/ Brown	Brown
3 or III	Green	Green/ Brown	Brown	Brown/ Black
4 or IIII	Green/ Brown	Brown	Brown/ Black	Black
5 or IIIII	Brown	Brown/ Black	Black	Black/ Blue
6 or IIIIII	Brown/ Black	Black	Black/ Blue	Blue

No. 5 Journal:
Bearing Identification → Larger crank bore

Color code is on the edge of the bearing.

Smaller main journal ↓ / Smaller bearing (Thicker) →	1 or A or I	2 or B or II	3 or C or III	4 or D or IIII
1 or I	Pink	Pink/ Yellow	Yellow	Yellow/ Green
2 or II	Pink/ Yellow	Yellow	Yellow/ Green	Green
3 or III	Yellow	Yellow/ Green	Green	Green/ Brown
4 or IIII	Yellow/ Green	Green	Green/ Brown	Brown
5 or IIIII	Green	Green/ Brown	Brown	Brown/ Black
6 or IIIIII	Green/ Brown	Brown	Brown/ Black	Black

BACK

Connecting Rod Bearing Replacement

Rod Bearing Clearance Inspection

1. Remove the connecting rod cap and bearing half.

2. Clean the crankshaft rod journal and bearing half with a clean shop towel.

3. Place plastigage across the rod journal.

4. Reinstall the bearing half and cap, and torque the bolt (see page 7-32).

   NOTE: Do not rotate the crankshaft during inspection.

5. Remove the rod cap and bearing half and measure the widest part of the plastigage.

   Connecting Rod Bearing-to-Journal Oil Clearance:
   Standard (New): 0.021-0.049 mm (0.0008-0.0019 in.)
   Service Limit: 0.060 mm (0.0024 in.)

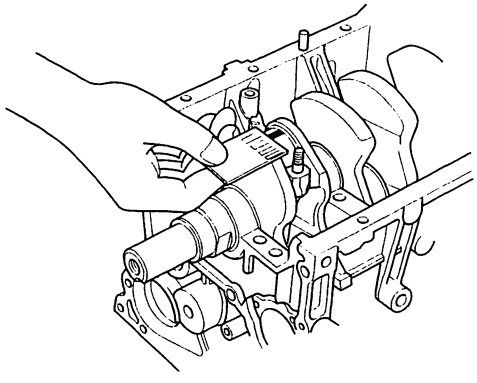

6. If the plastigage measures too wide or too narrow, remove the upper half of the bearing, install a new, complete bearing with the same color code(s), and recheck the clearance. Do not file, shim, or scrape the bearings or the caps to adjust clearance.

7. If the plastigage shows the clearance is still incorrect, try the next larger or smaller bearing (the color listed above or below that one), and check clearance again. If the proper clearance cannot be obtained by using the appropriate larger or smaller bearing, replace the crankshaft and start over.

Rod Bearing Selection

1. Inspect each connecting rod for cracks and heat damage.

Connecting Rod Big End Bore Code Locations

2. Each rod has a tolerance range from 0 to 0.024 mm (0.0009 in), in 0.0006 mm (0.0002 in) increments, depending on the size of its big end bore. It's then stamped with a number or bar (1, 2, 3 or 4/I, II, III, or IIII) indicating the range. You may find any combination of numbers and bars in any engine, (Half the number or bar is stamped on the bearing cap,the other half on the rod.).

   If you can't read the code because of an accumulation of oil and varnish, do not scrub them with a wire brush or scraper. Clean them only with solvent or detergent.

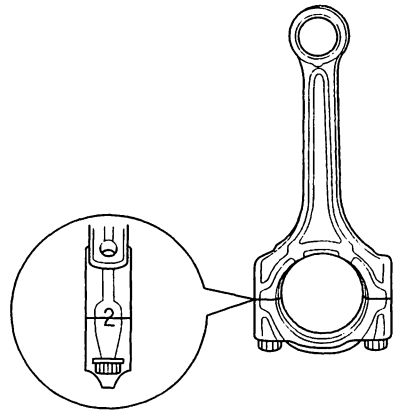

(cont'd)

Connecting Rod Bearing Replacement (cont'd)

Connecting Rod Journal Code Locations

3. The Connecting Rod Journal Codes are stamped in 2 locations: either on the side of the crankshaft next to the rod journals, or on the No. 1 web.

Connecting Rod Journal Code Locations (Letters or Bars)

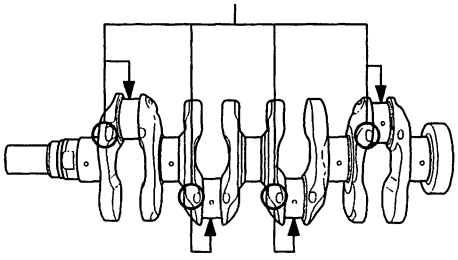

Connecting Rod Journal Code Locations (Letters or Bars)

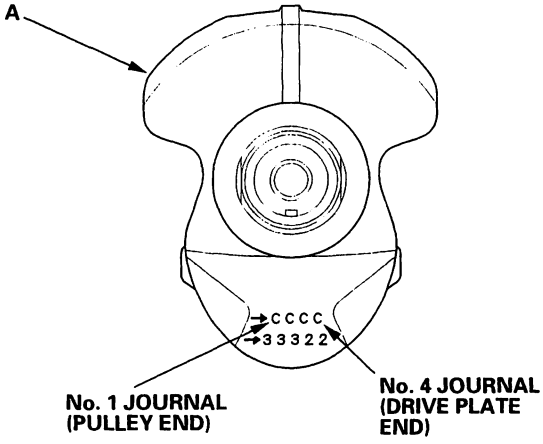

4. Use the big end bore codes and rod journal codes to select appropriate replacement bearings from the following table.

NOTE: Color code is on the edge of the bearing.

Rod Journal code (Smaller rod journal) / Big end bore code (Smaller bearing (Thicker))	1 or I (Larger big end bore)	2 or II	3 or III	4 or IIII
A or I	Red	Pink	Yellow	Green
B or II	Pink	Yellow	Green	Brown
C or III	Yellow	Green	Brown	Black
D or IIII	Green	Brown	Black	Blue

BACK

Balancer Shafts Inspection

NOTE: Inspect the balancer shaft end play before removing the right side cover and the balancer gear case (see page 7-18).

1. Remove the oil pan and the right side cover (see page 7-18).

2. Push the front balancer shaft firmly away from the dial indicator. Zero the dial against the end of the balancer shaft, then pull the shaft firmly back toward the indicator. If end play is excessive, inspect the retainer and thrust surfaces on the shaft.

   NOTE: The thickness of the retainer must not be changed either by grinding or shimming.

   Front Balancer Shaft End Play
   Standard (New): 0.10 – 0.40 mm
   (0.004 – 0.016 in.)

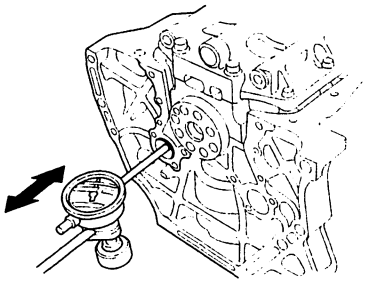

3. Push the rear balancer shaft firmly away from the dial indicator. Zero the dial against the end of the balancer shaft, then pull the shaft firmly back toward the indicator. If end play is excessive, inspect the thrust washer and the thrust surfaces on the driven gear and the oil pump body.

   NOTE: The thickness of the thrust washer must not be changed either by grinding or shimming.

   Rear Balancer Shaft End Play
   Standard (New): 0.04 – 0.15 mm
   (0.002 – 0.006 in.)

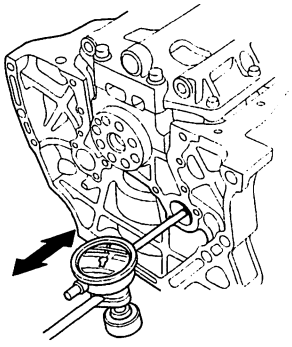

4. Remove the balancer shafts (see page 7-18).

5. Clean the balancer shafts, and Inspect the surface of each balancer shaft journal and bearing.

6. Replace the bearing or balancer shaft if there is wear, damage or discoloration on the surface of the bearing or the balancer shaft journal. A mirror-like surface is normal. When replacing the rear No. 1 bearing, be sure to replace the oil pump housing with a new one.

7. Measure taper at the edges of each journal. The difference between measurements on each journal must not exceed the standard.

   Journal Taper
   Standard (New): 0.005 mm (0.0002 in.)

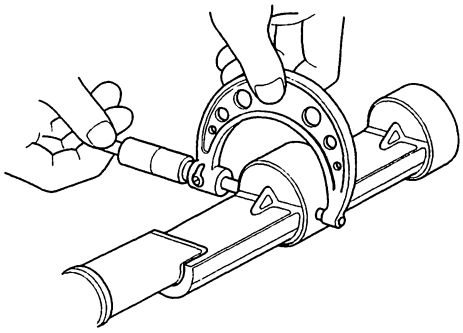

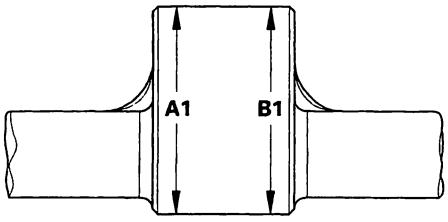

(cont'd)

Balancer Shafts Inspection (cont'd)

8. Measure runout on the No. 2 journal (A) of each balancer shaft to make sure the balancer shafts are not bent.

Balancer Shaft Total Indicated Runout
Standard (New): 0.02 mm (0.001 in.)
Service Limit: 0.03 mm (0.001 in.)

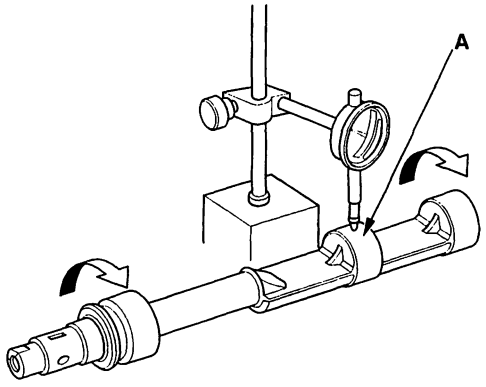

9. Measure the diameters of the journals on the front balancer shaft (A) and the rear balancer shaft (B).

Journal Diameter
Standard (New):
No. 1 journal:
Front (C): 42.722 – 42.734 mm (1.6820 – 1.6824 in.)
Rear (D): 20.938 – 20.950 mm (0.8243 – 0.8248 in.)
No. 2 journals front (E) and rear (F): 38.712 – 38.724 mm (1.5241 – 1.5246 in.)
No. 3 journals front (G) and rear (H): 34.722 – 34.734 mm (1.3670 – 1.3675 in.)

Service Limit:
No. 1 journal:
Front (C): 42.71 mm (1.681 in.)
Rear (D): 20.92 mm (0.824 in.)
No. 2 journals front (E) and rear (F): 38.70 mm (1.524 in.)
No. 3 journals front (G) and rear (H): 34.71 mm (1.367 in.)

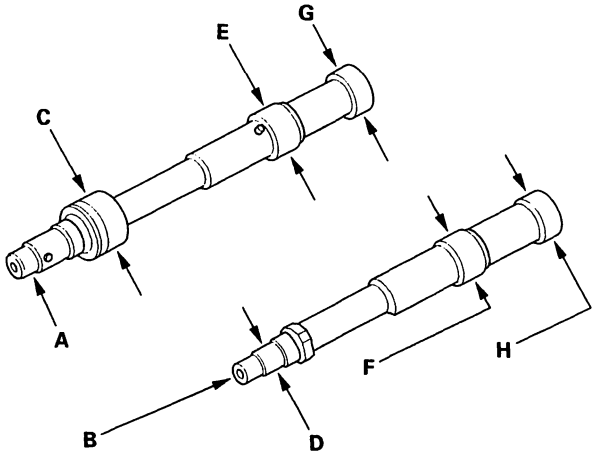

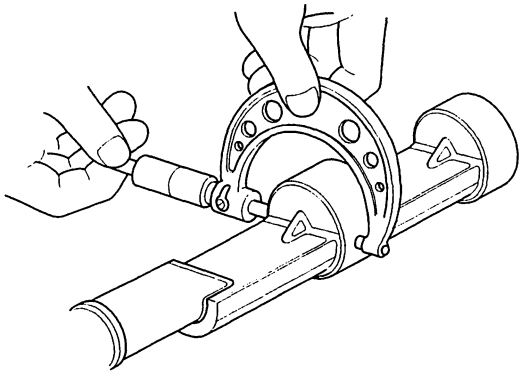

10. Remove the crankshaft, the pistons and the other parts from the block, then clean the balancer shaft journal bearings in the block and the oil pump housing with a clean shop towel.

11. Check the surface of the bearings; if there is wear, damage or dicoloration, replace the bearings or the oil pump housing.

BACK

12. Measure the inner diameters of the bearings for the front balancer shaft (A) and the rear balancer shaft (B).

Bearing Inner Diameter
Standard (New):
No. 1 journal:
Front (C): 42.800 – 42.820 mm (1.6850 – 1.6858 in.)
Rear (D): 21.000 – 21.013 mm (0.8268 – 0.8273 in.)
No. 2 journals front (E) and rear (F): 38.800 – 38.820 mm (1.5276 – 1.5283 in.)
No. 3 journals front (G) and rear (H): 34.800 – 34.820 mm (1.3701 – 1.3709 in.)

Service Limit:
No. 1 journal:
Front (C): 42.83 mm (1.686 in.)
Rear (D): 21.02 mm (0.828 in.)
No. 2 journals front (E) and rear (F): 38.83 mm (1.529 in.)
No. 3 journals front (G) and rear (H): 34.83 mm (1.371 in.)

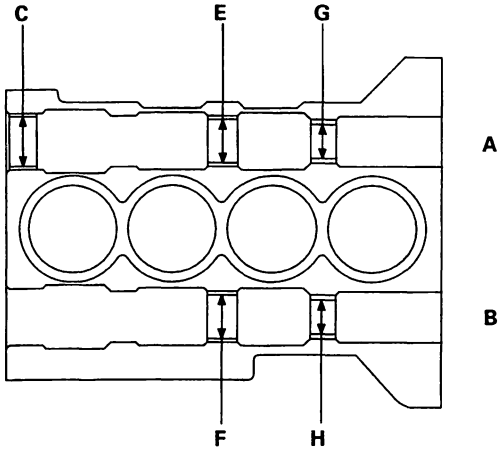

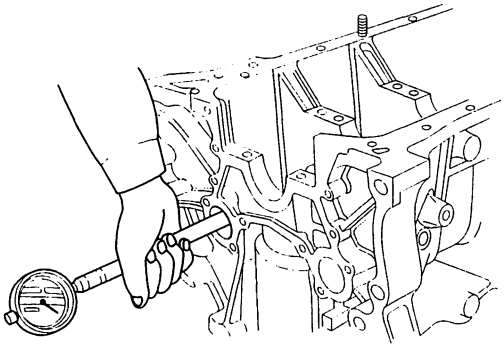

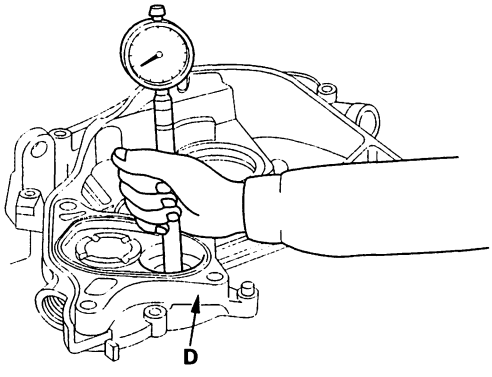

13. Calculate the shaft-to-bearings oil clearances.

BEARING I.D. – JOURNAL O.D.= OIL CLEARANCE

Shaft-to-Bearings Oil Clearances
Standard (New):
No. 1 front journal, No. 3 front and rear journals:
0.066 – 0.098 mm (0.0026 – 0.0039 in.)
No. 2 front and rear journals:
0.076 – 0.108 mm (0.0030 – 0.0043 in.)
No. 1 rear journal:
0.050 – 0.075 mm (0.0020 – 0.0030 in.)

Service Limit:
No. 1 front journal, No. 3 front and rear journals: 0.12 mm (0.005 in.)
No. 2 front and rear journals: 0.13 mm (0.005 in.)
No. 1 rear journal: 0.09 mm (0.004 in.)

BACK

Crankshaft, Piston and Balancer Shaft Removal

1. Remove the engine assembly (see page 5-2).

2. Remove the transmission:
   - Manual transmission (see page 13-4).
   - Automatic transmission (see page 14-114).

3. Remove the bolts securing the oil pan.

4. Drive an oil pan seal cutter between the oil pan and cylinder block.

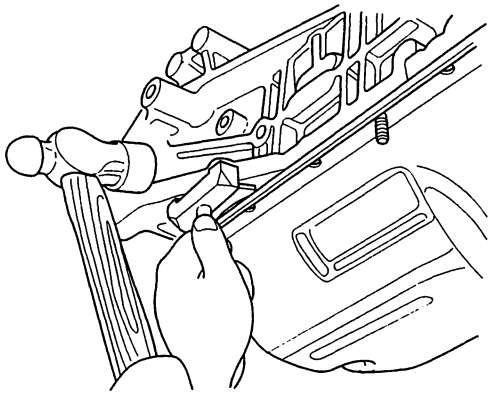

5. Cut the oil pan seal by striking the side of the cutter to slide the cutter along the oil pan. Remove the oil pan.

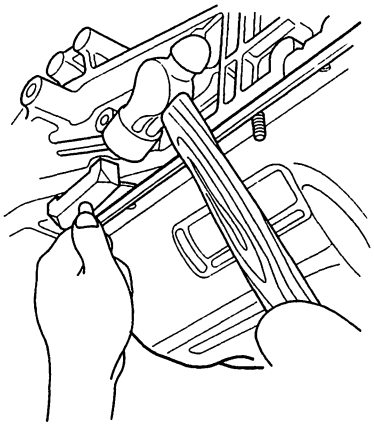

6. Remove the right side cover.

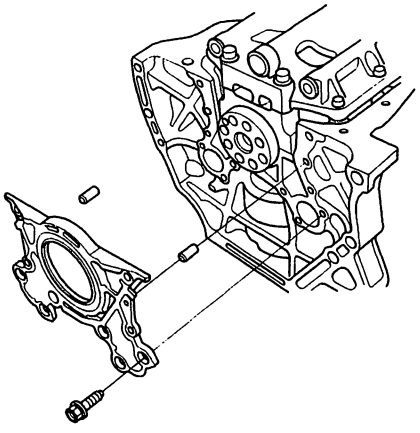

7. Remove the CKP/TDC sensors.

8. Remove the timing belt drive pulley.

9. Remove the balancer gear case.

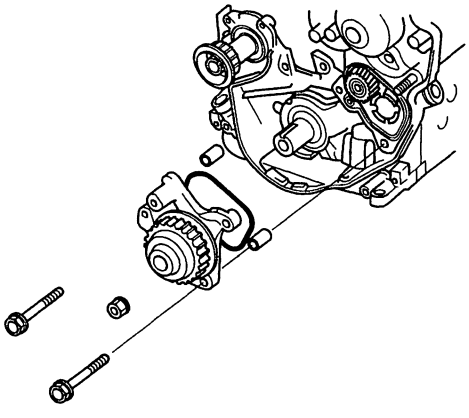

10. Insert a screwdriver (A) in the front balancer shaft maintenance hole (B), and remove the front balancer driven pulley (C).

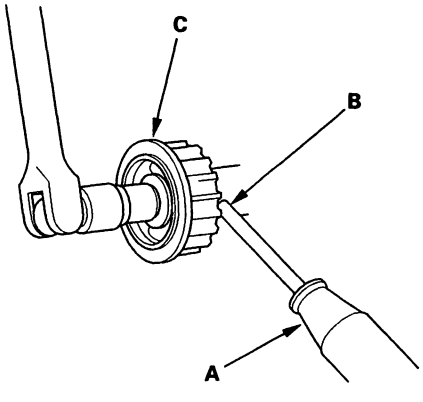

BACK

11. Remove the balancer driven gear.
   -1 Remove the bolt (A) and washer (B) from the maintenance hole (C).
   -2 Scribe a line on a 6 X 100 mm bolt, 74 mm (2.9 in.) from the end.
   -3 Insert the bolt in the maintenance hole and into the hole in the rear balancer shaft (D) up to the line you scribed.
   -4 Remove the bolt and balancer driven gear (E).

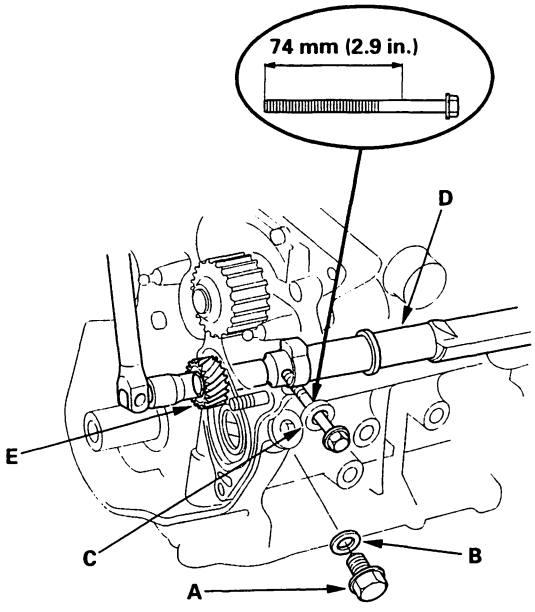

12. Remove the oil screen (A) and the oil pump (B).

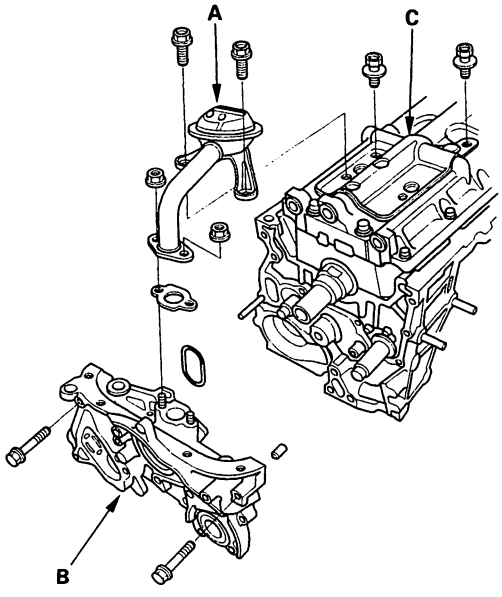

13. Remove the baffle plate (C).

14. Remove the 6 mm bolts. To prevent warpage, unscrew the bolts in sequence 1/3 turn at a time; repeat the sequence until all bolts are loosened.

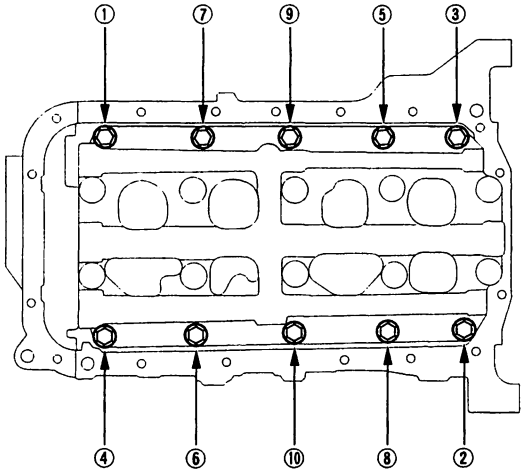

15. Remove the 11 mm bolts. To prevent warpage, unscrew the bolts in sequence 1/3 turn at a time; repeat the sequence until all bolts are loosened.

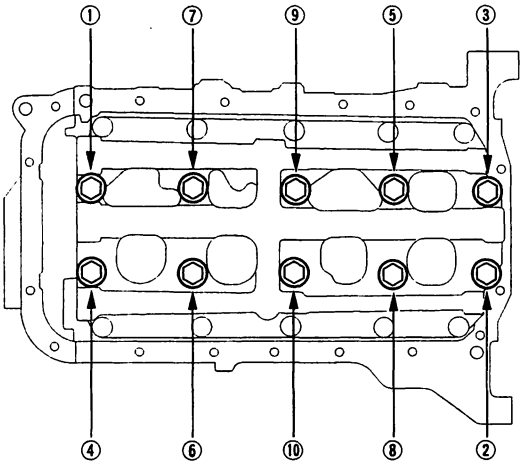

16. Remove the bearing cap bridge.

17. Turn the crankshaft so No. 2 and 3 crankpins are at the top.

18. Remove the rod caps/bearings and main caps/bearings. Keep all caps/bearings in order.

(cont'd)

Crankshaft, Piston and Balancer Shaft Removal (cont'd)

19. Lift the crankshaft (A) out of the engine, being careful not to damage the journals.

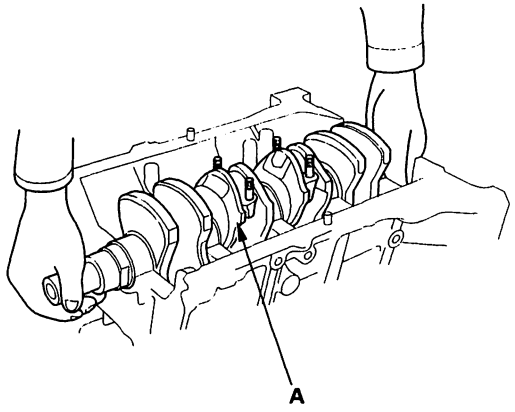

20. Remove the front balancer shaft and the rear balancer shaft.
    - –1 Remove the bolt and the retainer (A).
    - –2 Pull out the front balancer shaft (B).
    - –3 Pull out the rear balancer shaft (C).

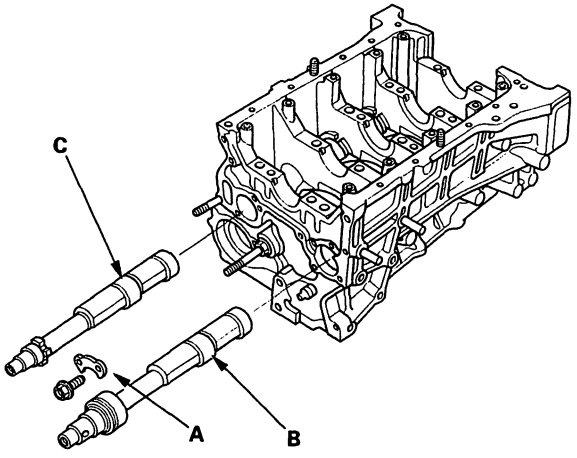

21. Remove the upper bearing halves from the connecting rods, and set them aside with their respective caps.

22. Reinstall the main caps and bearings on the engine in the proper order.

23. If you can feel a ridge of metal or hard carbon around the top of each cylinder, remove it with a ridge reamer (A). Follow the reamer manufacturer's instructions. If the ridge is not removed, it may damage the pistons as they are pushed out.

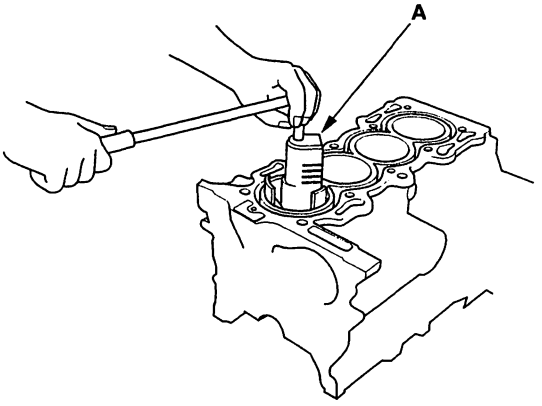

24. Use the wooden handle of a hammer (A) to drive out the pistons (B).

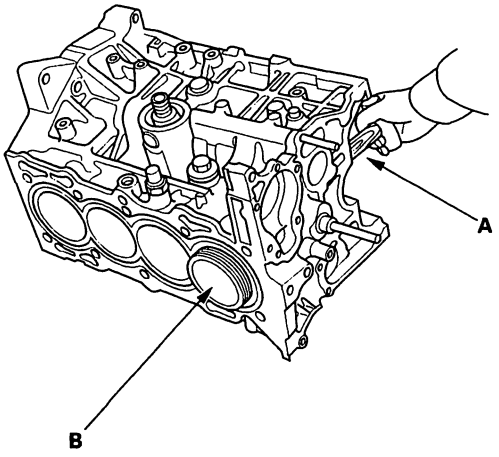

25. Reinstall the connecting rod bearings and caps after removing each piston/connecting rod assembly.

26. To avoid mixup on reassembly, mark each piston/connecting rod assembly with its cylinder number.

    NOTE: The existing number on the connecting rod does not indicate its position in the engine, it indicates the rod bore size.

BACK

Crankshaft Inspection

Straightness

NOTE:
- Clean the crankshaft oil passages with pipe cleaners or a suitable brush.
- Check the keyway and threads.

1. Remove the crankshaft from the engine block (see page 7-18).

2. Clean the crankshaft oil passages with pipe cleaners or a suitable brush.

3. Clean the keyway and thread; repair or replace it if necessary.

4. Support the crankshaft with a V-blocks.

5. Measure runout on all main journals to make sure the crank is not bent. Rotate the crankshaft two complete revolutions. The difference between measurements on each journal must not be more than the service limit.

   Crankshaft Total Indicator Runout:
   Standard (New): 0.03 mm (0.001 in.) max.
   Service Limit: 0.04 mm (0.002 in.)

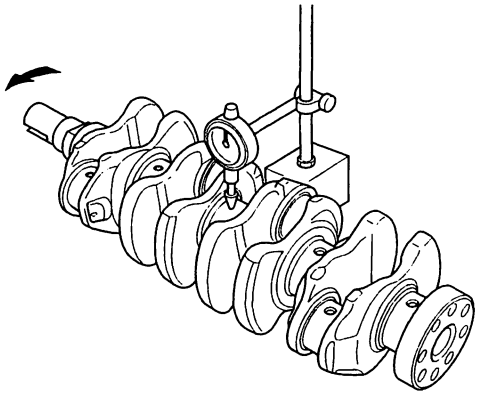

Out-of-Round and Taper

1. Measure out-of-round at the middle of each rod and main journal in two places. The difference between measurements on each journal must not be more than the service limit.

   Journal Out-of-Round:
   Standard (New): 0.005 mm (0.0002 in.) max.
   Service Limit: 0.006 mm (0.0002 in.)

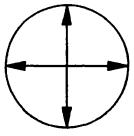

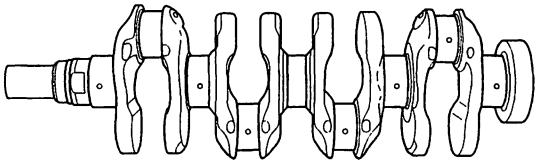

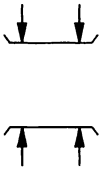

2. Measure taper at the edge of each rod and main journal. The difference between measurements on each journal must not be more than the service limit.

   Journal Taper:
   Standard (New): 0.005 mm (0.0002 in.) max.
   Service Limit: 0.006 mm (0.0002 in.)

Block and Piston Inspection

1. Remove the piston from the engine block (see page 7-18).

2. Check the piston for distortion or cracks.

3. Measure the piston diameter at a point 16 mm (0.6 in) from the bottom of the skirt. There are two standard-size pistons (No Letter or A, and B). The letter is stamped on the top of the piston. Letters are also stamped on the block as cylinder bore sizes.

   Piston Diameter:
   Standard (New):
   No Letter (or A): 85.980 – 85.990 mm (3.3850 – 3.3854 in.)
   B: 85.970 – 85.980 mm (3.3846 – 3.3850 in.)

   Service Limit:
   No Letter (or A): 85.970 mm (3.3846 in.)
   B: 85.960 mm (3.3842 in.)

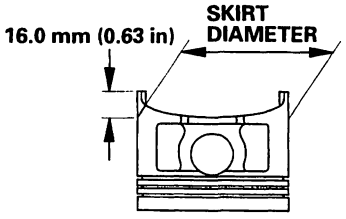

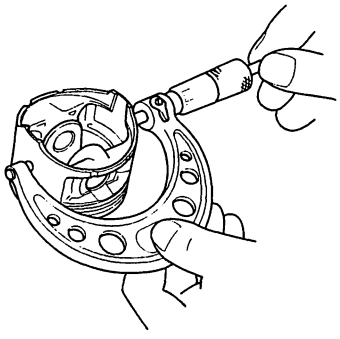

4. Measure wear and taper in direction X and Y at 3 levels in each cylinder as shown. If measurements in any cylinder are beyond the Oversize Bore Service Limit, replace the block. If the block is to be rebored, refer to step 6 after reboring.

   Cylinder Bore Size:
   Standard (New):
   A or I: 86.010 – 86.020 mm (3.3862 – 3.3866 in.)
   B or II: 86.000 – 86.010 mm (3.3858 – 3.3862 in.)
   Service Limit: 86.070 mm (3.3886 in.)

   Oversize:
   0.25: 86.250 – 86.260 mm (3.3957 – 3.3960 in.)

   Reboring limit: 0.25 mm (0.01 in.) max.

   Bore Taper:
   Limit: (Difference between 1st and 3rd measurement) 0.05 mm (0.002 in.)

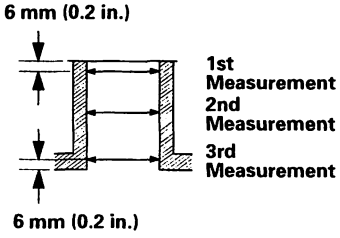

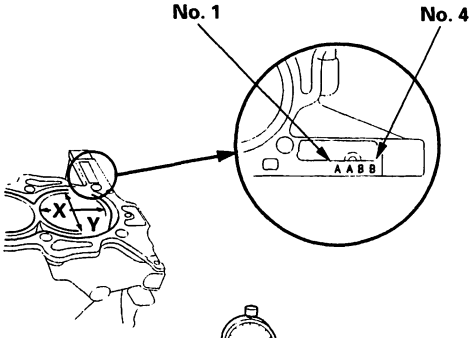

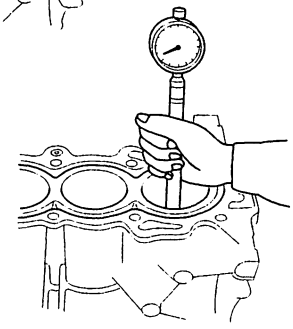

BACK

5. Scored or scratched cylinder bores must be honed.

6. Check the top of the block for warpage. Measure along the edges and across the center as shown.

Engine Block Warpage:
Standard (New): 0.07 mm (0.003 in.) max.
Service Limit: 0.10 mm (0.004 in.)

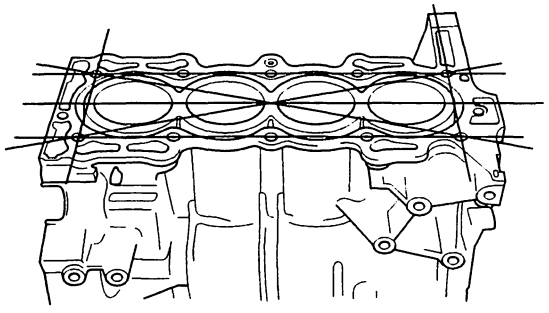

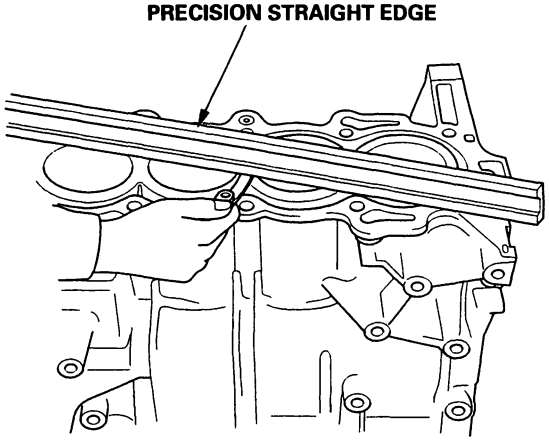

7. Calculate the difference between the cylinder bore diameter and the piston diameter. If the clearance is near or exceeds the service limit, inspect the piston and cylinder block for excessive wear.

Piston-to-Cylinder Clearance:
Standard (New): 0.020 – 0.040 mm
(0.0008 – 0.0016 in.)
Service Limit: 0.05 mm (0.002 in.)

Oversize Piston Diameter:
0.25: 86.230 – 86.240 mm (3.3949 – 3.3953 in.)

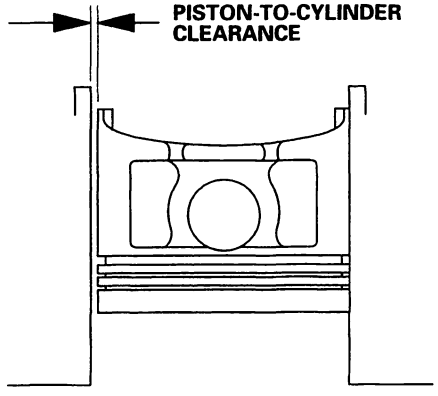

Cylinder Honing

Only a scored or scratched cylinder bore must be honed.

1. Measure the cylinder bores (see page 7-22).
   If the block is to be reused, hone the cylinders and remeasure the bores.

2. Hone the cylinder bores with honing oil and a fine (400 grit) stone in a 60 degree cross-hatch pattern (A). Use only a rigid hone with 400 grit or finer stone such as Sunnen, Ammco, or equivalent. Do not use stones that are worn or broken.

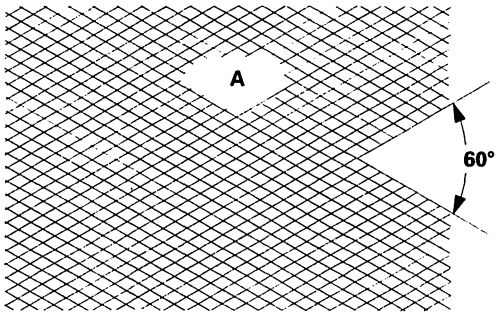

3. When honing is complete, thoroughly clean the engine block of all metal particles. Wash the cylinder bores with hot soapy water, then dry and oil them immediately to prevent rusting. Never use solvent, it will only redistribute the grit on the cylinder walls.

4. If scoring or scratches are still present in the cylinder bores after honing to the service limit, rebore the cylinder block. Some light vertical scoring and scratching is acceptable if it is not deep enough to catch your fingernail and does not run the full length of the bore.

BACK

Piston, Pin and Connecting Rod Replacement

Disassembly

1. Apply engine oil to the piston pin snap rings (A) and turn them in the ring grooves until the end gaps are lined up with the cutouts in the piston pin bores (B).

   NOTE: Take care not to damage the ring grooves.

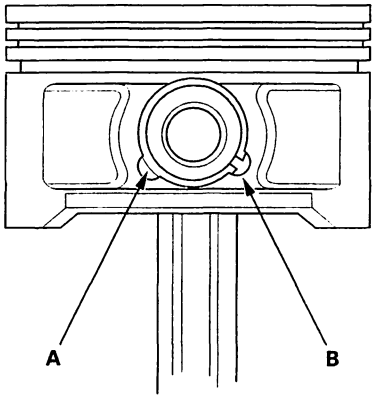

2. Remove both snap rings (A). Start at the cutout in the piston pin bore. Remove the snap rings carefully so they do not go flying or get lost. Wear eye protection.

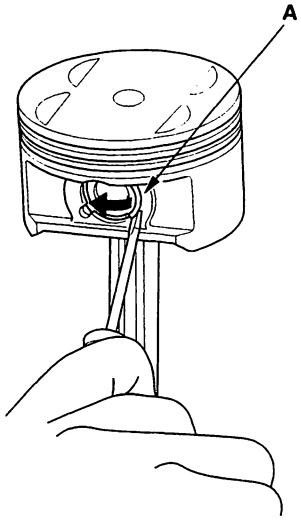

3. Heat the piston and connecting rod assembly to about 158°F (70°C), then remove the piston pin.

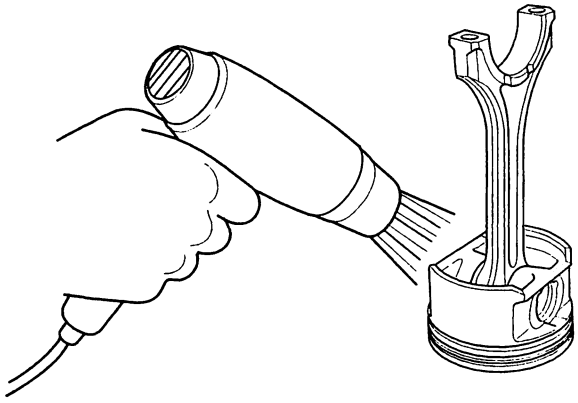

(cont'd)

Piston, Pin and Connecting Rod Replacement (cont'd)

Inspection

NOTE: Inspect the piston, piston pin and connecting rod when they are at room temperature.

1. Measure the diameter of the piston pin.

   Piston Pin Diameter:
   Standard (New): 21.962−21.965 mm (0.8646−0.8648 in.)
   Service Limit: 21.954 mm (0.8643 in.)

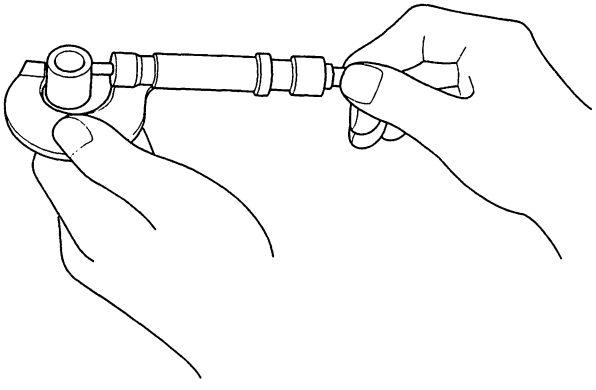

2. Zero the dial indicator to the piston pin diameter.

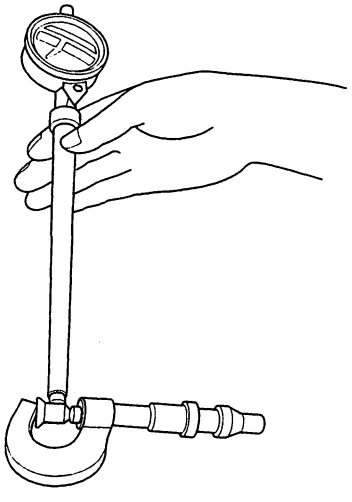

3. Check the difference between the piston pin diameter and piston pin hole diameter in the piston.

   Piston Pin-to-Piston Clearance:
   Standard (New): −0.0050 to +0.0010 mm (−0.00020 to +0.00004 in.)
   Service Limit: 0.004 mm (0.0002 in.)

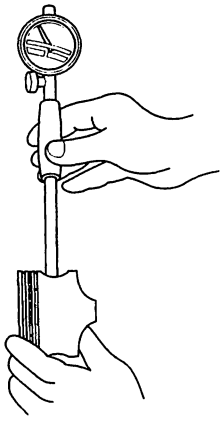

4. Measure the piston pin-to-connecting rod clearance.

   Piston Pin-to-Connecting Rod Clearance:
   Standard (New): 0.005−0.014 mm (0.0002−0.0006 in.)
   Service Limit: 0.019 mm (0.0007 in.)

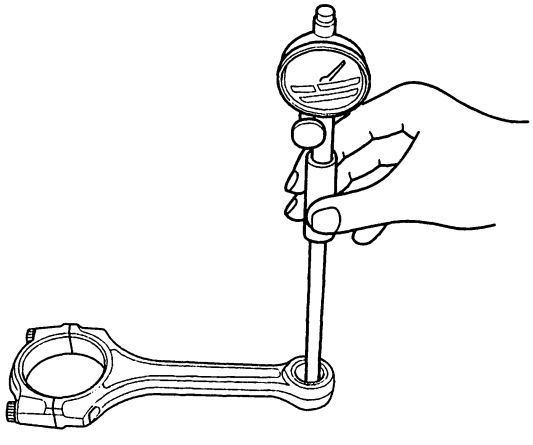

BACK

Reassembly

1. Install a piston pin snap ring (A).

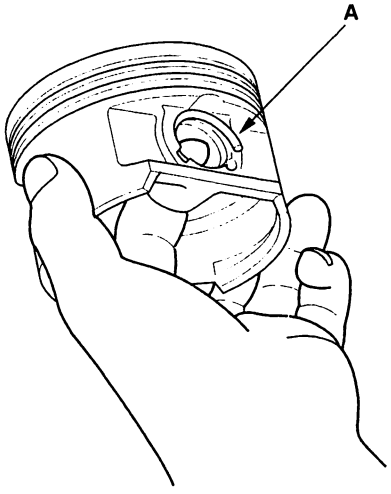

2. Coat the piston pin bore in the piston, the bore in the connecting rod, and the piston pin with engine oil.

3. Heat the piston to about 158°F (70°C).

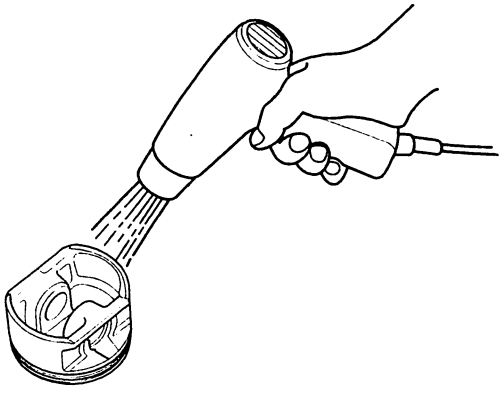

4. Install the piston pin (A). Assemble the piston (B) and connecting rod (C) with the embossed marks (D) on the same side.

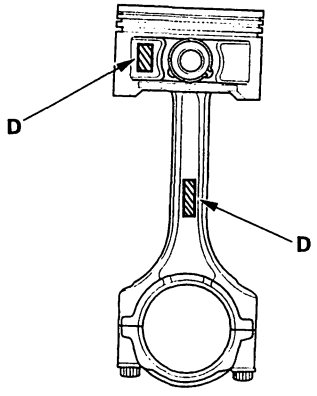

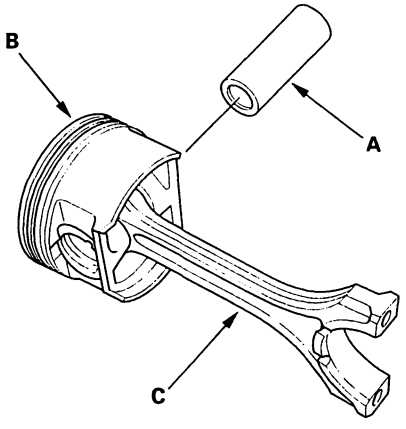

5. Install the remaining snap ring.

Piston Ring Replacement

1. Remove the piston from the cylinder block (see page 7-18).

2. Using a piston, push a new ring (A) into the cylinder bore 15–20 mm (0.6–0.8 in.) from the bottom.

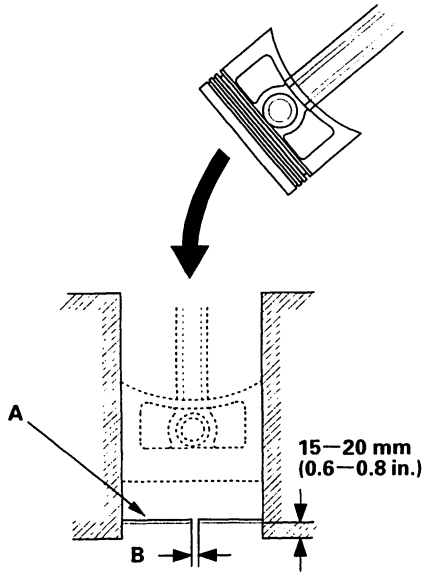

3. Measure the piston ring end-gap (B) with a feeler gauge:
   - If the gap is too small, check to see if you have the proper rings for your engine.
   - If the gap is too large, recheck the cylinder bore diameter against the wear limits (see page 7-22). If the bore is over the service limit, the cylinder block must be rebored.

Piston Ring End-Gap:
Top Ring
Standard (New): 0.20–0.35 mm (0.008–0.014 in.)
Service Limit: 0.60 mm (0.024 in.)

Second Ring
Standard (New): 0.40–0.55 mm (0.016–0.022 in.)
Service Limit: 0.70 mm (0.028 in.)

Oil Ring
Standard (New): 0.20–0.70 mm (0.008–0.028 in.)
Service Limit: 0.80 mm (0.031 in.)

4. Using a ring expander (A), remove the old piston rings (B).

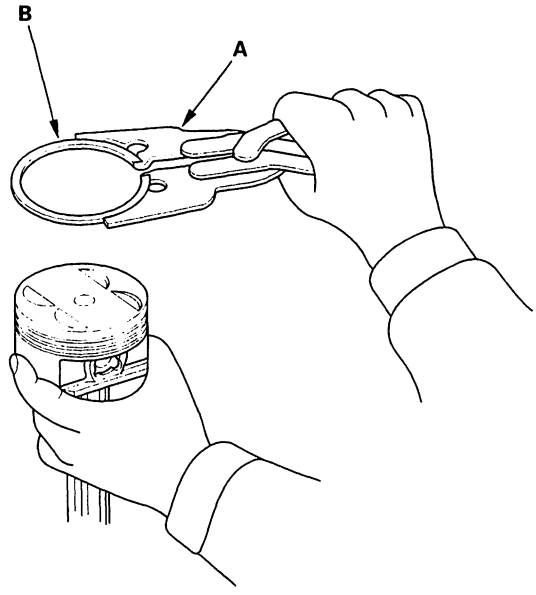

5. Clean all ring grooves thoroughly with a squared-off broken ring or ring groove cleaner with a blade to fit the piston grooves.
   The top and second ring grooves are 1.2 mm (0.05 in.) wide. The oil ring groove is 2.8 mm (0.11 in.) wide.
   File down a blade if necessary.
   Do not use a wire brush to clean the ring grooves, or cut the ring grooves deeper with cleaning tools.

   NOTE: If the piston is to be separated from the connecting rod, do not install new rings yet.

BACK

6. Install the rings as shown. The top ring (A) has a 1B mark and the second ring (B) has a 2B mark. The manufacturing marks (C) must be facing upward.

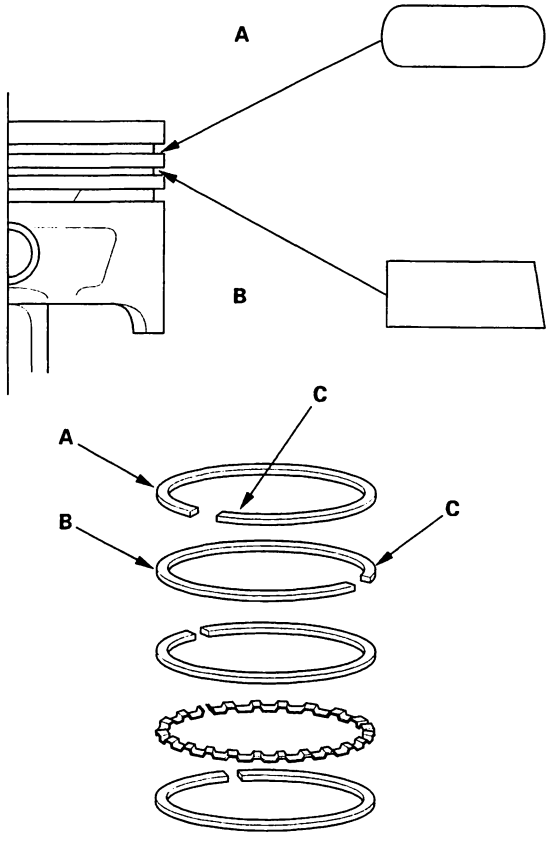

Piston Ring Dimensions:

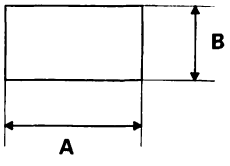

Top Ring (Standard):
A: 3.1 mm (0.12 in.)
B: 1.2 mm (0.05 in.)

Second Ring (Standard):
A: 3.4 mm (0.13 in.)
B: 1.2 mm (0.05 in.)

7. Rotate the rings in their grooves to make sure they do not bind.

8. Position the ring end gaps as shown:

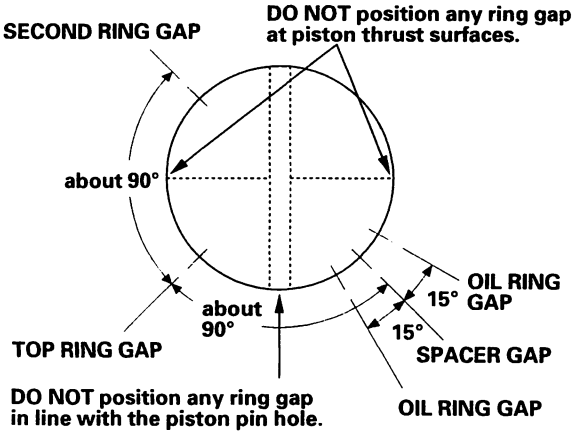

9. After installing a new set of rings, measure the ring-to-groove clearances:

Top Ring Clearance
Standard (New): 0.035–0.060 mm (0.0014–0.0024 in.)
Service Limit: 0.13 mm (0.005 in.)

Second Ring Clearance
Standard (New): 0.030–0.055 mm (0.0012–0.0022 in.)
Service Limit: 0.13 mm (0.005 in.)

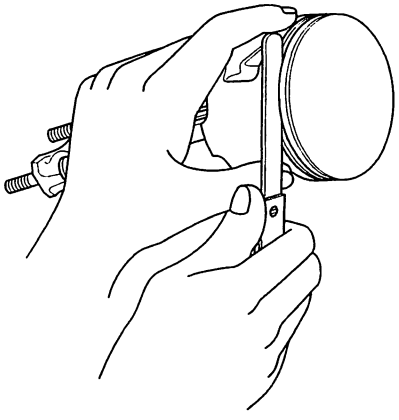

BACK

Piston Installation

If the crankshaft is already installed

1. Set the crankshaft to BDC for each cylinder.

2. Remove the connecting rod caps, then install the ring compressor, and check that the bearing is securely in place.

3. Position the arrow (A) and the mark (B) facing the timing belt side of the engine.

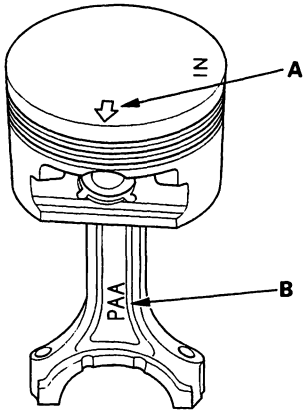

4. Position the piston in the cylinder, and tap it in using the wooden handle of a hammer (A). Maintain downward force on the ring compressor (B) to prevent the rings from expanding before entering the cylinder bore.

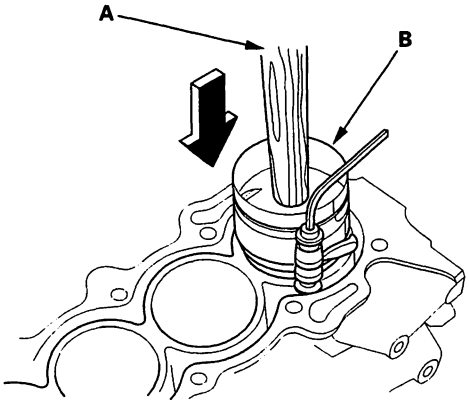

5. Stop after the ring compressor pops free, and check the connecting rod-to-crank journal alignment before pushing the piston into place.

6. Check the connecting rod bearing clearance with plastigage (see page 7-13).

7. Apply engine oil to the bolt threads, then install the rod caps with bearings. Torque the bolts to 20 N·m (2.0 kgf·m, 14 lbf·ft).

8. Mark the connecting rod (A) and bolt head (B) as shown.

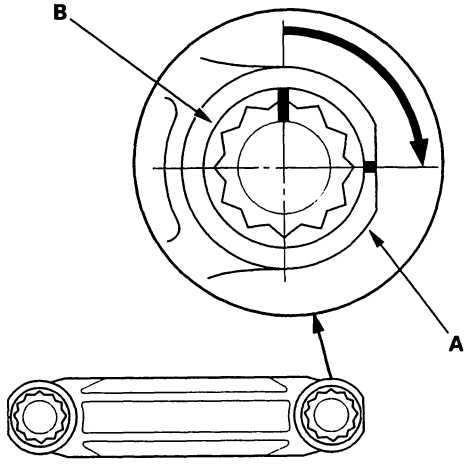

9. Tighten the bolt until the mark on the bolt head lines up with the mark on the connecting rod (turn the bolt 90°).

BACK

If the crankshaft is not installed

1. Remove the connecting rod caps, then install the ring compressor, and check that the bearing is securely in place.

2. Position the arrow (A) and the mark (B) facing the timing belt side of the engine.

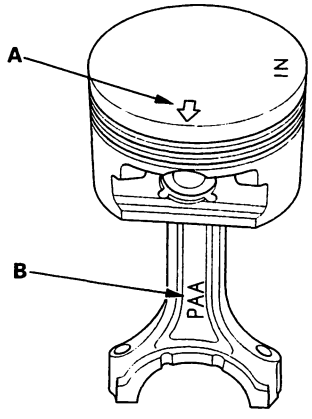

3. Position the piston in the cylinder, and tap it in using the wooden handle of a hammer (A). Maintain downward force on the ring compressor (B) to prevent the rings from expanding before entering the cylinder bore.

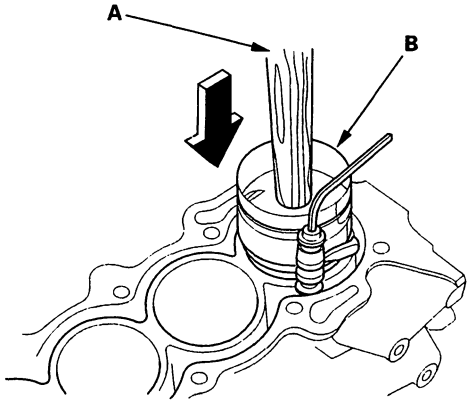

4. Position all pistons at top dead center.

Connecting Rod Bolt Inspection

1. Measure the diameter of each connecting rod bolt at point A and point B.

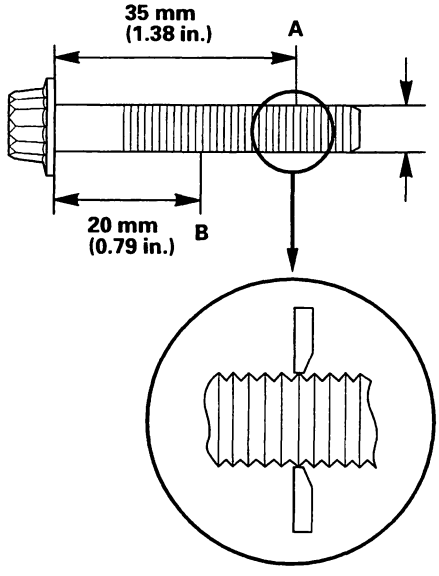

2. Calculate the difference in diameter between point A and point B.

   Point A − Point B = Difference in Diameter

   Difference in Diameter:
   Specification: 0 − 0.1 mm (0 − 0.004 in.)

3. If the difference in diameter is out of tolerance, replace the connecting rod bolt.

BACK

Crankshaft and Balancer Shafts Installation

Special Tools Required
- Driver 07749-0010000
- Driver Attachment 07948-SB00101

1. Check the connecting rod bearing clearance with plastigage (see page 7-9).

2. Check the main bearing clearance with plastigage (see page 7-7).

3. Inspect the connecting rod bolts (see page ■■-■■).

4. Apply a coat of engine oil to the main bearings and rod bearings.

5. Install the bearing halves in the cylinder block and connecting rods.

6. Hold the crankshaft so rod journal No. 2 and rod journal No. 3 are straight up.

7. Install the thrust washers (A) in the No. 4 journal of the cylinder block.

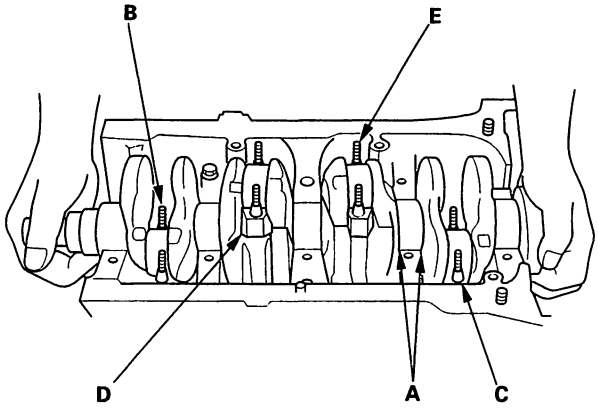

8. Lower the crankshaft into the block, seating the rod journals into connecting rod No. 1 (B) and connecting rod No. 4 (C). Install the connecting rod caps and bolts finger tight.

9. Rotate the crankshaft clockwise, seat the journals into connecting rod No. 2 (D) and connecting rod No. 3 (E). Install the connecting rod caps and bolts finger tight. Install caps so the bearing recess is on the same side as the recess in the rod.

10. Apply engine oil to the bolt threads, then install the rod caps with bearings, and torque the bolts to 20 N·m (2.0 kgf·m, 14 lbf·ft).

11. Mark the connecting rod (A) and bolt head (B) as shown.

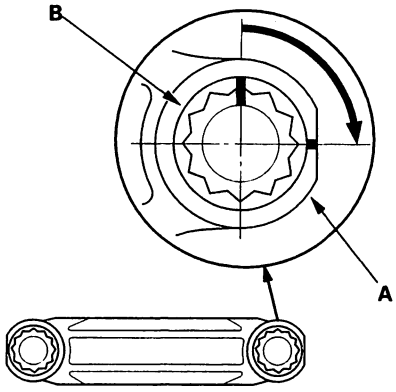

12. Tighten the bolt until the mark on the bolt head lines up with the mark on the connecting rod (turn the bolt 90°).

13. Check main bearing clearance with plastigage (see page 7-9).

14. Install the main bearing caps and bearing cap bridge. Coat the bolt threads with engine oil.

15. Tighten the 11 mm bolts in two steps. In the first step, tighten all bolts in sequence to about 29 N·m (3.0 kgf·m, 22 lbf·ft): in the final step, tighten in the same sequence to 78 N·m (8.0 kgf·m, 58 lbf·ft).

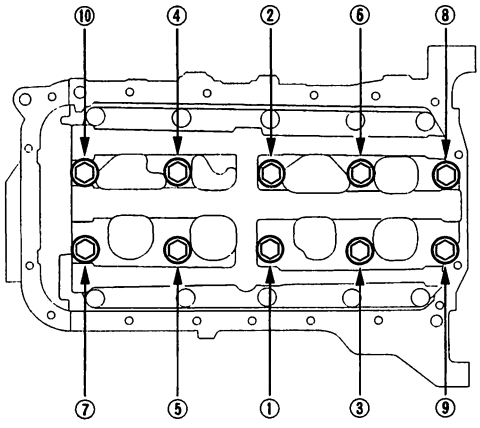

BACK

16. Tighten the 6 mm bolts in sequence to 12 N·m (1.2 kgf·m, 8.7 lbf·ft).

NOTE: Whenever any crankshaft or connecting rod bearing is replaced, it is necessary after reassembly to run the engine at idling speed until it reaches normal operating temperature, then continue to run it for approximately 15 minutes.

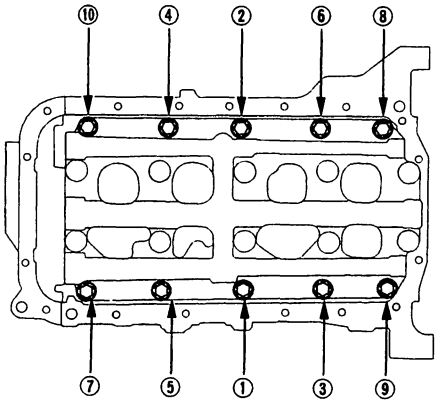

17. Drive the crankshaft oil seal squarely into the right side cover.

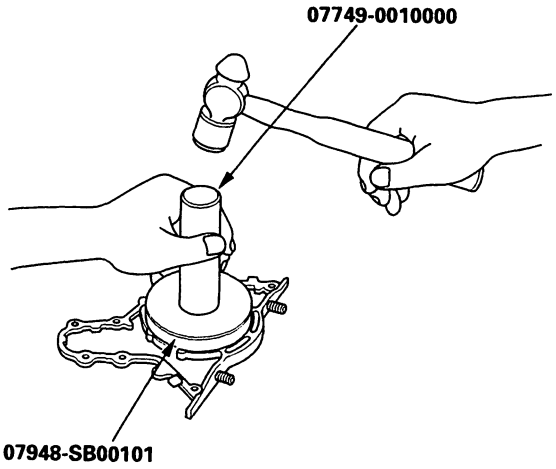

18. Confirm that the clearance is equal all the way around with a feeler gauge.

Clearance: 0.5–0.8 mm (0.02–0.03 in.)

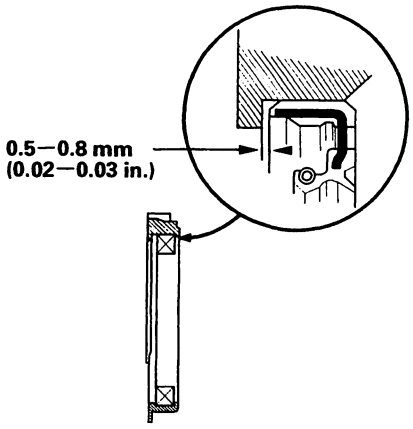

19. Clean and dry the right side cover mating surfaces. Apply a light coat of oil to the crankshaft and to the lip of the seal.

20. Apply liquid gasket, part No. 08718-0001 or 08718-0003, evenly to the block mating surface of the right side cover and to the inner threads of the bolt holes. Install the dowel pins (A) and the right side cover (B) on the cylinder block.

NOTE: Do not install the parts if 5 minutes or more have elapsed since applying the liquid gasket. Instead, reapply liquid gasket after removing the old residue.

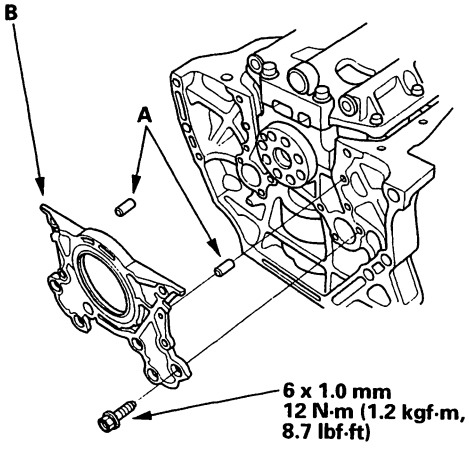

21. After assembly, wait at least 30 minutes before filling the engine with oil.

(cont'd)

Crankshaft and Balancer Shafts Installation (cont'd)

22. Install the rear balancer shaft (A) and the front balancer shaft (B) into the block, then install the retainer (C).

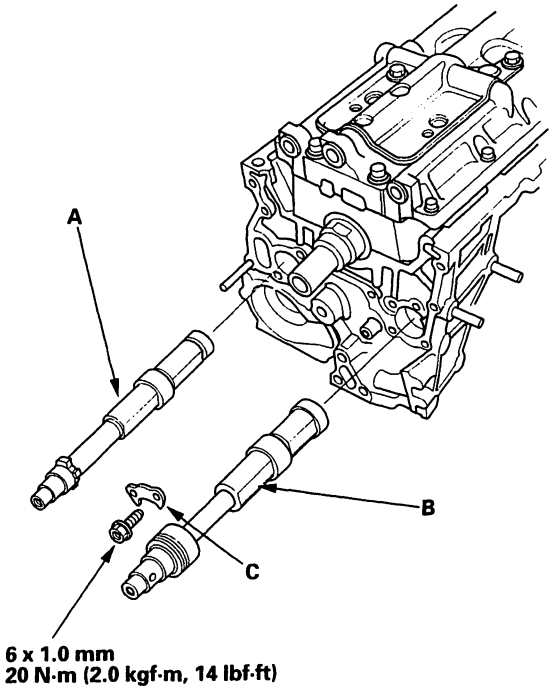

23. Clean and dry the oil pump mating surfaces.

24. Install the oil pump (A).
    - –1 Install a new crankshaft oil seal in the oil pump (see step 17 on page 8-9).
    - –2 Apply liquid gasket part, No. 08718-0001 or 08718-0003, evenly to the block mating surface of the oil pump and to the inner threads of the bolt holes.
    - –3 Grease the lips of the oil seals and apply oil to the new O-ring (B).
    - –4 Install the dowel pins (C), then align the inner rotor with the crankshuft and install the oil pump.
    - –5 Clean the excess grease off the crankshaft and balancer shaft and check the seals for distortion.

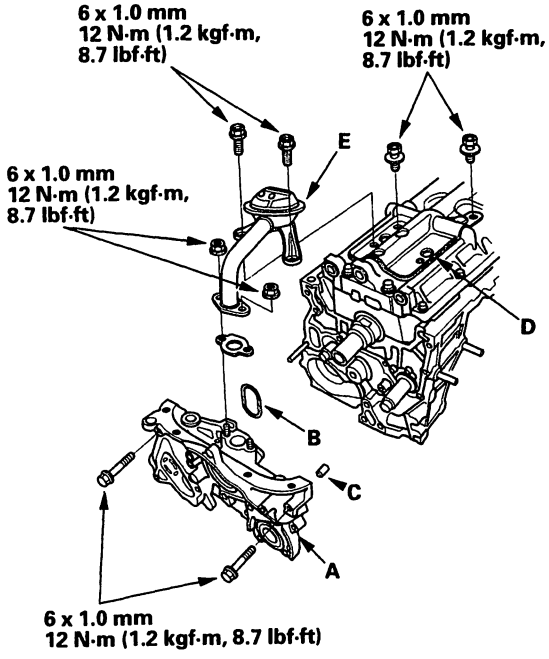

25. Install the baffle plate (D), then install the oil screen (E).

BACK

26. Hold the front balancer shaft with a screwdriver (A), then install the timing balancer belt driven pulley (B).

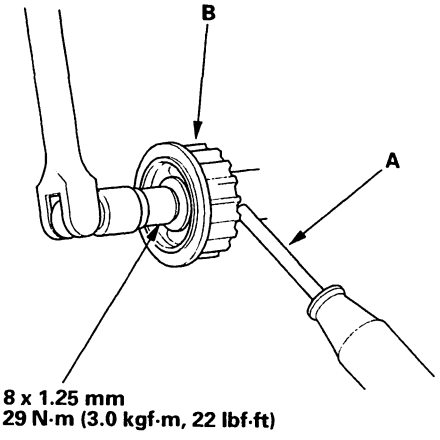

27. Before installing the balancer driven gear (A) and the balancer gear case (B) apply molybdenum disulfide (C) to the thrust surfaces of the balancer gears as shown.

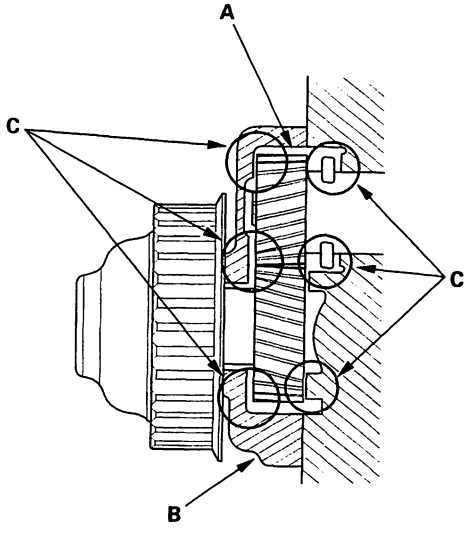

28. Install the balancer driven gear.
   - –1 Remove the bolt (A) and washer (B) from the maintenance hole (C).
   - –2 Scribe a line on a 6 x 100 mm bolt, 74 mm from the end.
   - –3 Insert the bolt in the maintenance hole and into the hole in the rear balancer shaft (D) up to the line you scribed.
   - –4 Install the balancer driven gear (E).

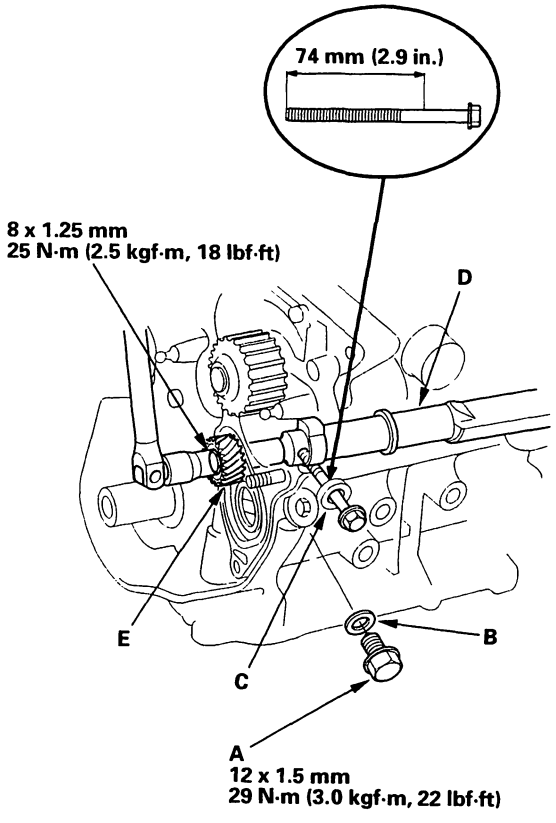

(cont'd)

Crankshaft and Balancer Shafts Installation (cont'd)

29. Install the balancer gear case (A).
    - –1 Apply clean engine oil to the new O-ring (B).
    - –2 Hold the rear balancer shaft with the 6 x 100 mm bolt.
    - –3 Align the notch (C) on the pulley edge with the pointer (D) on the gear case.
    - –4 Install the gear case (A).

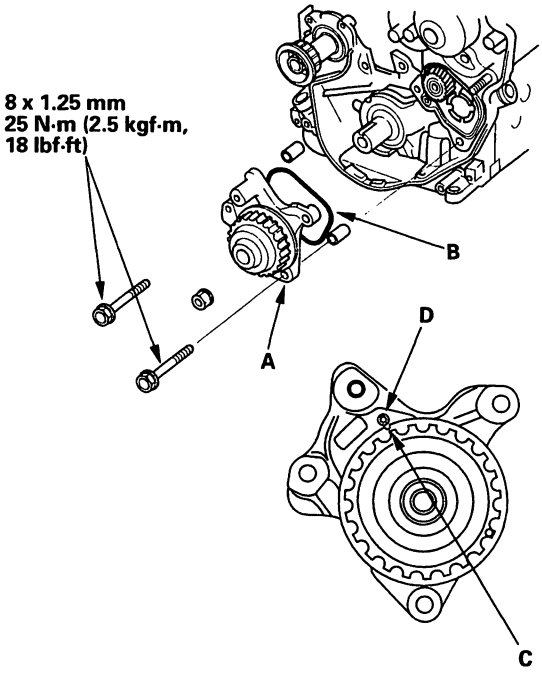

30. After installation, make sure the pulley pointer (A) aligns with the oil pump pointer (B).

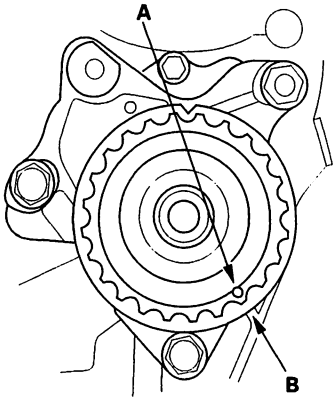

31. Clean and dry the cylinder block mating surfaces.

32. Apply liquid gasket part No. 08718-0009 evenly to the cylinder block mating surface of the oil pan and to the inner threads of the bolt holes, then install the oil pan.

    NOTE:
    - Apply liquid gasket in a 4 mm wide bead.
    - Apply a second bead where the two ends of the first bead meet.
    - Do not install the parts if 5 minutes or more have elapsed since applying liquid gasket. Instead, reapply liquid gasket after removing old residue.

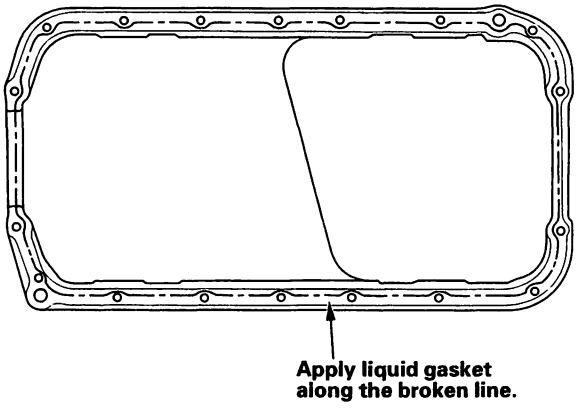

33. Tighten the bolts/nuts in two or three steps. In the final step, tighten all bolts/nuts, in sequence, to 12 N·m (1.2 kgf·m, 8.7 lbf·ft).

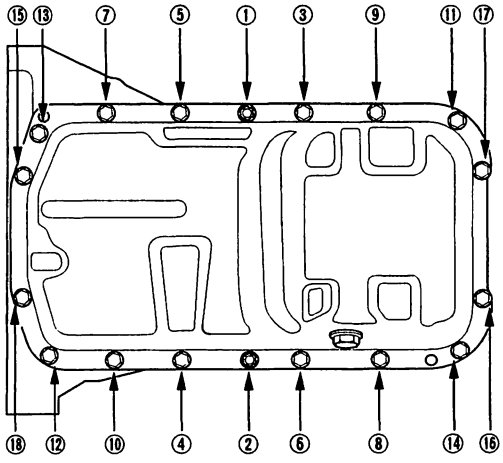

Pulley End Crankshaft Seal Installation - In-car

Special Tools Required
Seal Driver 07LAD-PT3010A

1. Dry the crankshaft oil seal housing.

2. Apply a light coat of grease to the crankshaft and to the lip of the seal.

3. Using the seal driver, drive in the crankshaft oil seal until the driver bottoms against the oil pump. When the seal is in place, clean any excess grease off the crankshaft and check that the oil seal lip is not distorted.

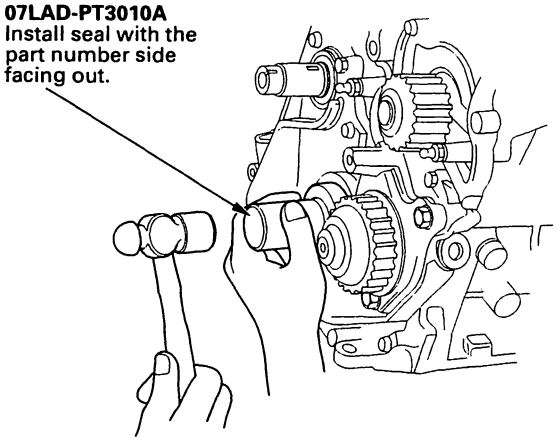

Balancer Shaft Seals Installation - In-car

Special Tools Required
- Hub Assembly Guide Attachment 07GAF-SE00200
- Attachment, 30 mm I.D. 07746-0030300

1. Dry the crankshaft oil seal housing.

2. Apply a light coat of grease to the balancer shaft and to the lip of the seal.

3. Using the special tools, drive in the front balancer shaft oil seal until the driver bottoms against the oil pump. When the seal is in place, clean any excess grease off the balancer shaft, and check that the oil seal lip is not distorted.

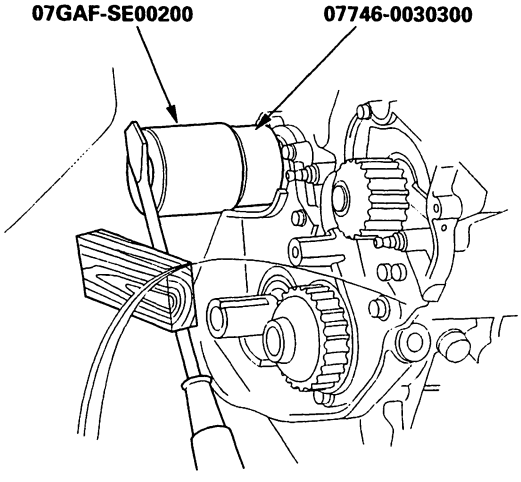

BACK

Transmission End Crankshaft Seal Installation - In-car

Special Tools Required
- Driver 07749-0010000
- Driver Attachment 07948-SB00101 or 07VAD-P8A010A

1. Dry the crankshaft oil seal housing.

2. Apply a light coat of grease to the crankshaft and to the lip of the seal.

3. Using the special tools, drive the crankshaft oil seal into the right side cover to the point where the clearance between the bottom of the crankshaft oil seal and right side cover is 0.5—0.8 mm (0.02—0.03 in.) (see page 7-32). Align the hole in the driver attachment with the pin on the crankshaft.

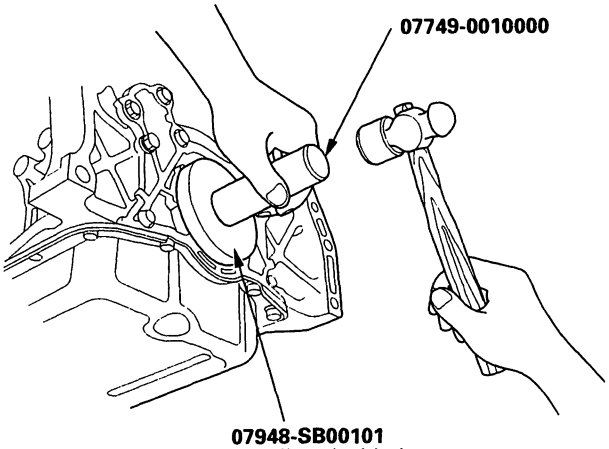

4. Clean any excess grease off the crankshaft, and check that the oil seal lip is not distorted.

BACK

Engine Mechanical

Engine Lubrication

Special Tools 8-2
Component Location Index 8-3
Oil Pressure Switch Test 8-4
Oil Pressure Test 8-4
Engine Oil Replacement 8-5
Engine Oil Filter Replacement 8-6
Oil Pump Overhaul 8-7

BACK

Engine Lubrication

Special Tools

Number	Tool Number	Description	Qty
①	07LAD-PT3010A	Seal Driver	1
②	07746-0010300	Attachment, 42 X 47 mm	1
③	07749-0010000	Driver	1
④	07912-6110001	Oil Filter Wrench	1

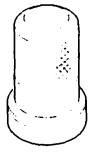

①

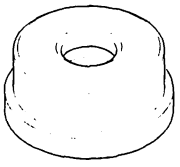

②

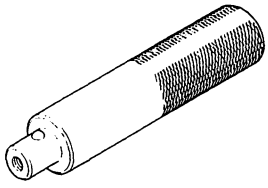

③

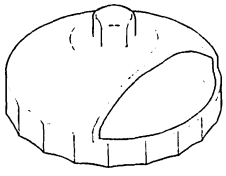

④

BACK

Component Location Index

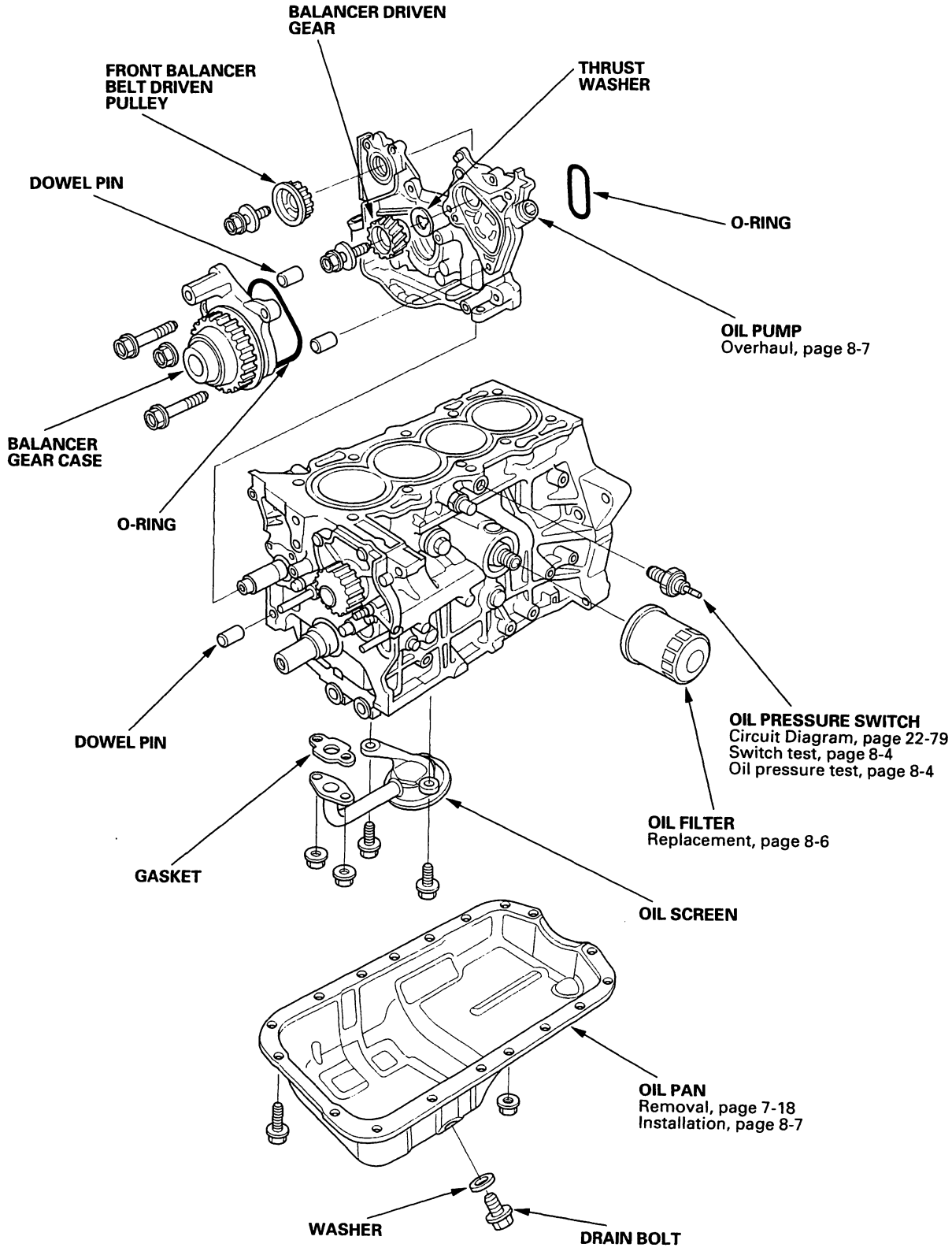

BACK

Oil Pressure Switch Test

1. Remove the YEL/RED wire (A) from the engine oil pressure switch (B).

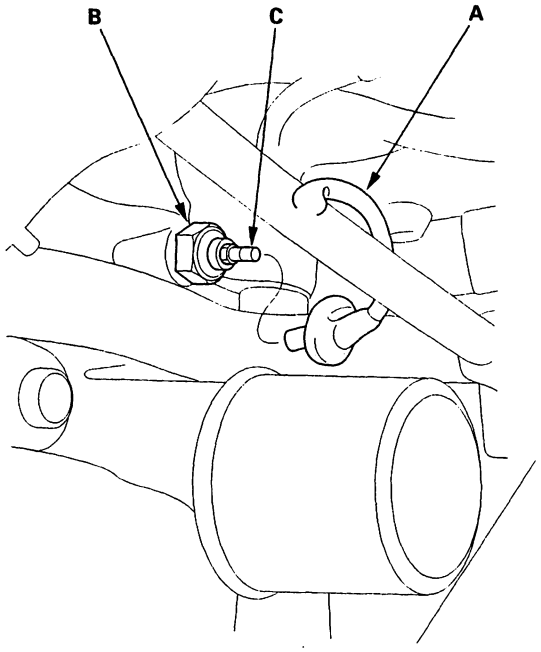

2. Check for continuity between the positive terminal (C) and the engine (ground). There should be continuity with the engine stopped. There should be no continuity with the engine running.

3. If the switch fails to operate, check the engine oil level. If the engine oil level is OK, check the engine oil pressure.

Oil Pressure Test

If the oil pressure warning light stays on with the engine running, check the engine oil level. If the oil level is correct:

1. Connect a tachometer or a Honda PGM Tester.

2. Remove the engine oil pressure switch, and install an oil pressure gauge (A).

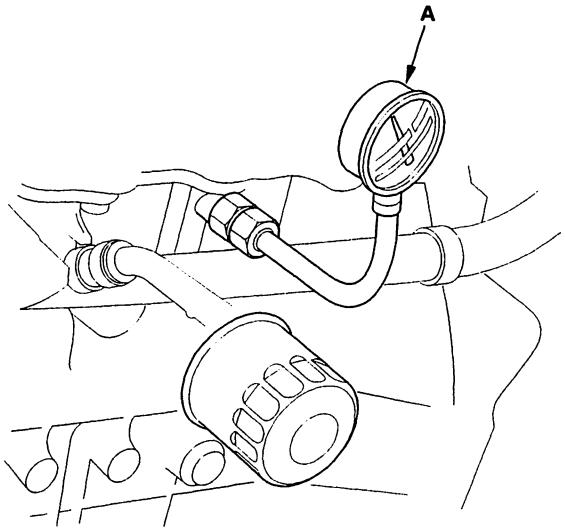

3. Start the engine. Shut it off immediately if the gauge registers no oil pressure. Repair the problem before continuing.

4. Allow the engine to reach operating temperature (fan comes on at least twice). The pressure should be:

   Engine Oil Temperature: 176°F (80°C)
   Engine Oil Pressure:
   At Idle: 70 kPa (0.7 kgf/cm², 10 psi) minimum
   At 3,000 rpm: 340 kPa (3.5 kgf/cm², 50 psi) minimum

5. If oil pressure is NOT within specifications, inspect these items:

   - Check the oil filter for clogging.
   - Check the oil pump (see step 11 on page 8-8).

BACK

Engine Oil Replacement

NOTE: Under normal conditions, the oil filter should be replaced at every other oil change. Under severe conditions, the oil filter should be replaced at each oil change.

Change interval
Every 7,500 miles (12,000 km) or 12 months (Normal conditions)
Every 3,750 miles (6,000 km) or 6 months (Severe conditions).

1. Warm up the engine.

2. Remove the drain bolt (A), and drain the engine oil.

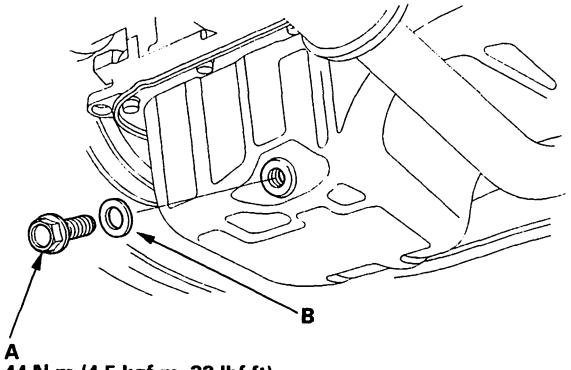

44 N·m (4.5 kgf·m, 33 lbf·ft)
Do not overtighten.

3. Reinstall the drain bolt with a new washer (B).

4. Refill with the recommended oil (see page 3-2).

   Capacity
   4.0 ℓ (4.2 US qt, 3.5 Imp qt) at oil change.
   4.3 ℓ (4.5 US qt, 3.8 Imp qt) at oil change including filter.
   5.6 ℓ (5.9 US qt, 4.9 Imp qt) after engine overhaul.

5. Run the engine for more than three minutes, then check for oil leakage.

BACK

Engine Oil Filter Replacement

Special Tools Required
Oil Filter Wrench 07912-6110001

1. Remove the oil filter with the special oil filter wrench.

2. Inspect the threads (A) and rubber seal (B) on the new filter. Wipe off the seat on the engine block, then apply a light coat of oil to the filter rubber seal. Use only filters with a built-in bypass system.

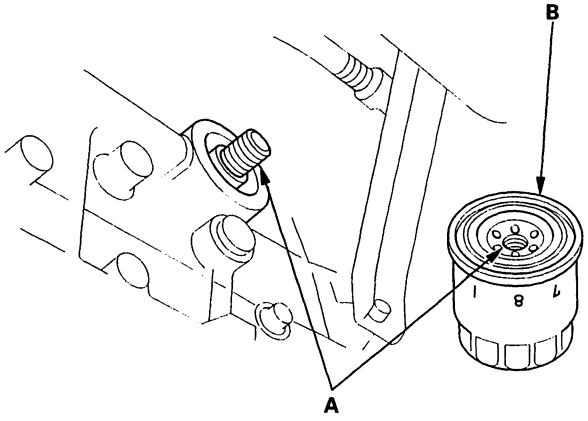

3. Install the oil filter by hand.

4. After the rubber seal seats, tighten the oil filter clockwise with the special tool.

Tighten: **7/8 turn clockwise.**
Tightening torque: **22 N·m (2.2 kgf·m, 16 lbf·ft)**

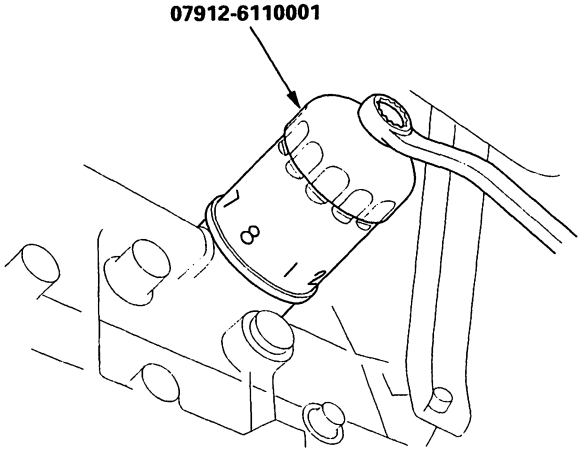

5. If eight numbers (1 to 8) are printed around the outside of the filter, use the following procedure to tighten the filter.
   - Spin the filter on until its seal lightly seats against the block, and note which number is at the bottom.
   - Tighten the filter by turing it clockwise 7 numbers from the one you noted. For example, if number 2 is at the bottom when the seal is seated, tighten the filter until the number 1 comes around the bottom.

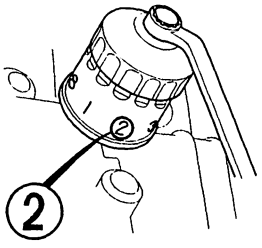

Number when rubber seal is seated.

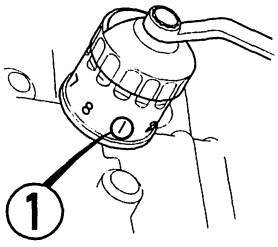

Number after tightening.

Number when rubber seal is seated	1	2	3	4	5	6	7	8
Number after tightening	8	1	2	3	4	5	6	7

6. After installation, fill the engine with oil up to the specified level, run the engine for more than 3 minutes, then check for oil leakage.

BACK

Oil Pump Overhaul

Exploded view

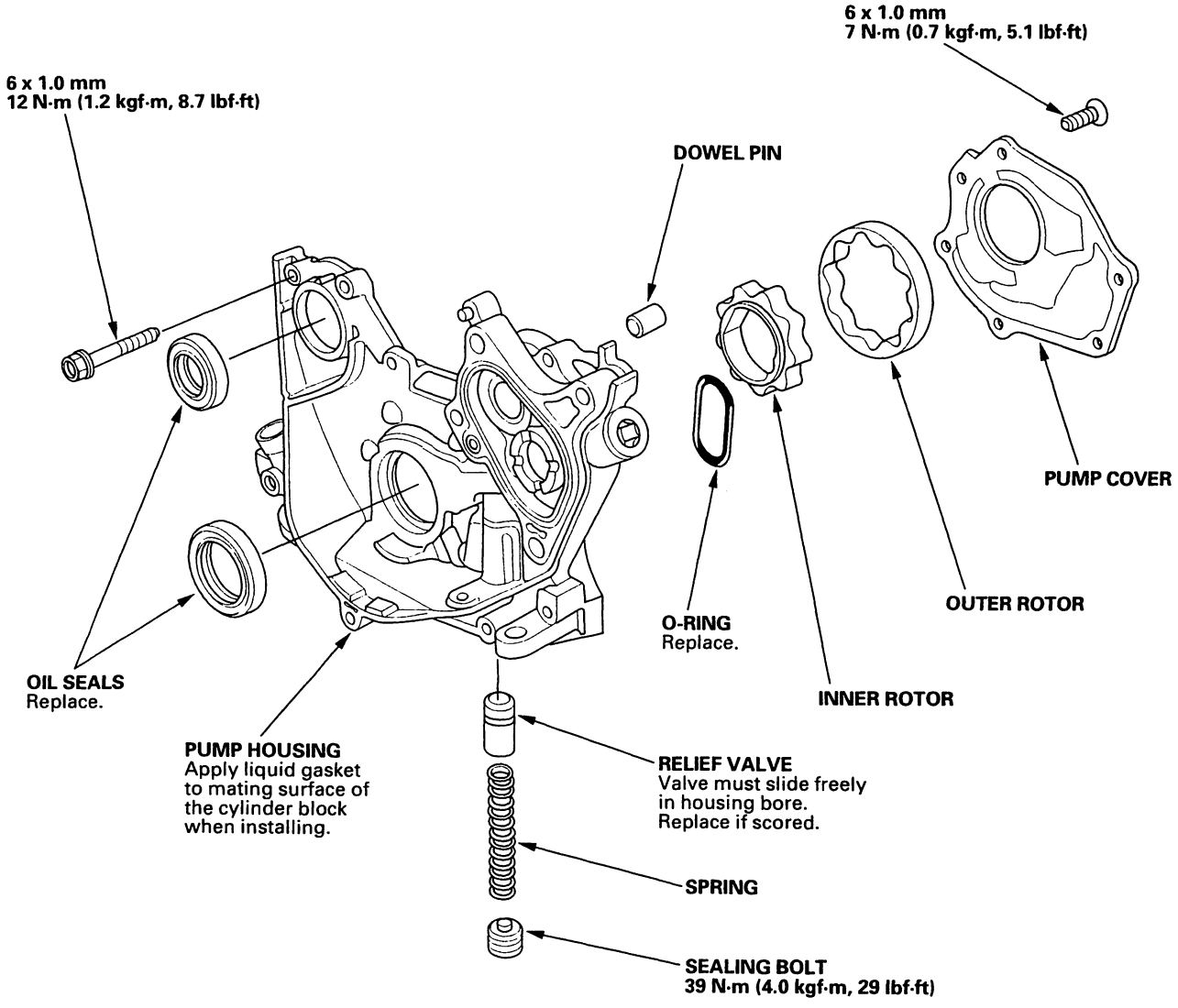

(cont'd)

Oil Pump Overhaul (cont'd)

Special Tools Required
- Seal Driver 07LAD-PT3010A
- Driver 07749-0010000
- Attachment, 42 x 47 mm 07746-0010300

NOTE: Refer to the Exploded View as needed during this procedure.

Removal

1. Drain the engine oil.
2. Remove the timing belt and the balancer belt (see page 6-23).
3. Remove the timing belt tensioner and the balancer belt tensioner.
4. Remove the CKP/TDC sensors, then remove the timing belt drive pulley (see page 6-55).
5. Remove the balancer belt driven pulley (see page 7-18).
6. Remove the balancer gear case and the balancer driven gear (see page 7-18).
7. Separate the oil pan from the cylinder block with an oil pan seal cutter (see page 7-18).
8. Remove the oil pan and the oil screen (A).

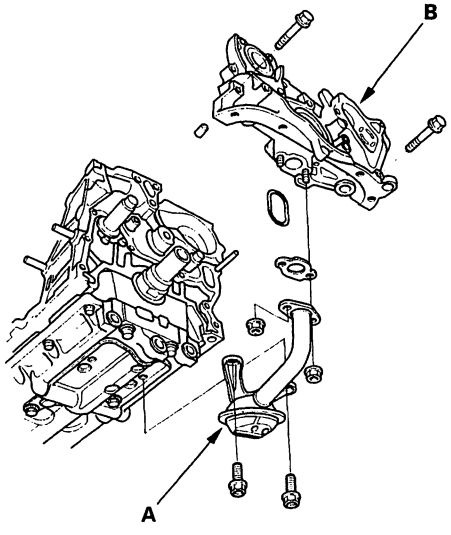

9. Remove the mounting bolts and the oil pump assembly (B).
10. Remove the screws from the pump housing, then separate the housing and cover.

Inspection

11. Check the inner-to-outer rotor radial clearance between the inner rotor (A) and outer rotor (B). If the inner-to-outer rotor clearance exceeds the service limit, replace the inner and outer rotors.

    Inner Rotor-to-Outer Rotor Radial Clearance
    Standard (New): 0.02 – 0.16 mm (0.001 – 0.006 in.)
    Service Limit: 0.20 mm (0.008 in.)

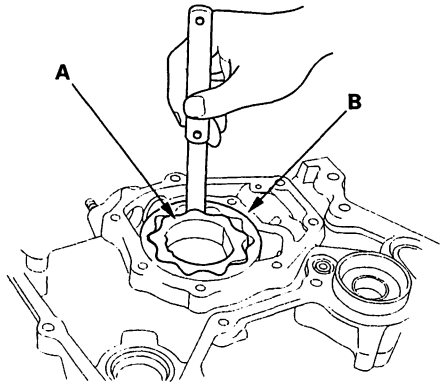

12. Check the housing-to-rotor axial clearance between the rotor (A) and pump housing (B). If the housing-to-rotor axial clearance exceeds the service limit, replace the set of inner and outer rotors and/or the pump housing.

    Housing-to-Rotor Axial Clearance
    Standard (New): 0.02 – 0.07 mm (0.001 – 0.003 in.)
    Service Limit: 0.12 mm (0.005 in.)

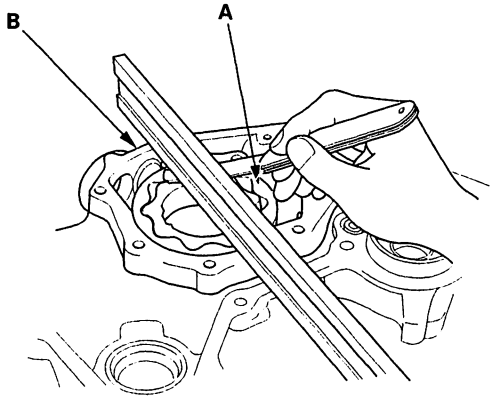

BACK

13. Check the housing-to-outer rotor radial clearance between the outer rotor (A) and pump housing (B). If the housing-to-outer rotor radial clearance exceeds the service limit, replace the set of inner and outer rotors and/or the pump housing.

Housing-to-Outer Rotor Radial Clearance
Standard (New): 0.10–0.19 mm (0.004–0.007 in.)
Service Limit: 0.21 mm (0.008 in.)

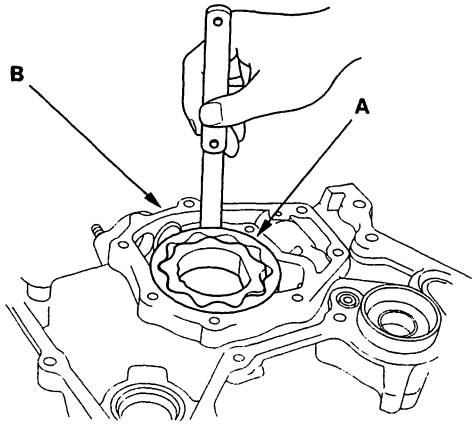

14. Inspect both rotors and the pump housing for scoring or other damage. Replace parts if necessary.

15. Remove the old oil seals from the oil pump.

16. Gently tap in the new oil seals until the special tool bottoms on the pump.

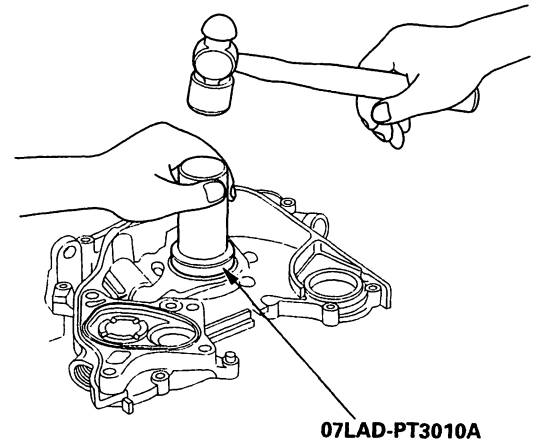

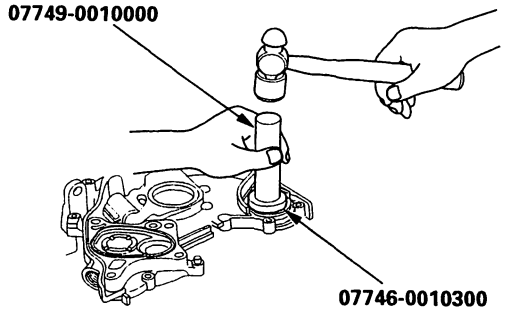

Installation

17. Reassemble the oil pump, applying liquid thread lock to the pump housing screws.

18. Check that the oil pump turns freely.

19. Clean and dry the oil pump mating surface.

(cont'd)

Oil Pump Overhaul (cont'd)

20. Install the oil pump (A).

    –1 Apply liquid gasket, part No. 08718-0001 or 08718-0003, evenly to the block mating surface of the oil pump and to the inner threads of the bolt holes.
    –2 Grease the lips of the oil seals and apply oil to the new O-ring (B).
    –3 Install a dowel pins (C), then align the inner rotor with the crankshaft and install the oil pump.
    –4 Clean the excess grease off the crankshaft and balancer shaft and check the seals for distortion.

    NOTE: Do not install the parts if 5 minutes or more have elapsed since applying liquid gasket. Instead, reapply liquid gasket after removing the old residue.

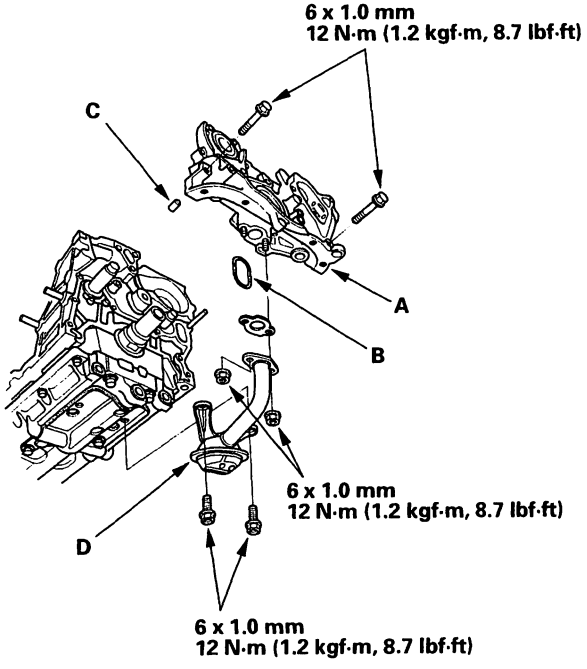

21. After assembly, wait at least 30 minutes before filling the engine with oil.

22. Install the baffle plate (D).

23. Hold the front balancer shaft with a screwdriver (A), then install the timing balancer belt driven pulley (B).

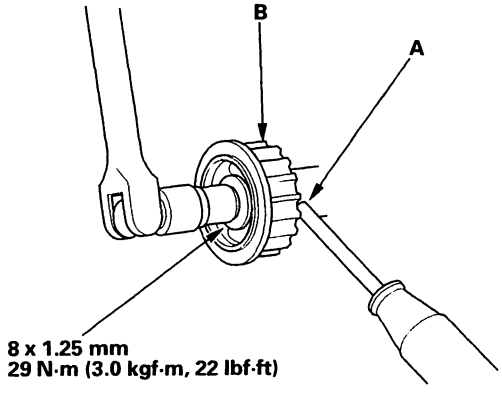

24. Before installing the balancer driven gear (A) and the balancer gear case (B), apply molybdenum disulfide (C) to the thrust surfaces of the balancer gears as shown.

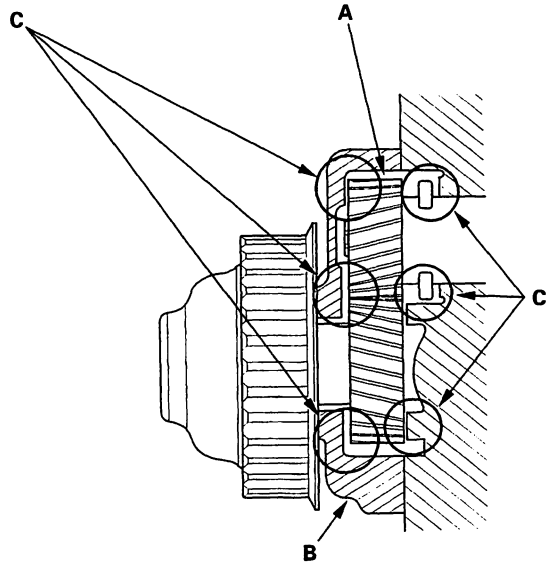

BACK

25. Install the balancer driven gear.
   –1 Remove the bolt (A) and washer (B) from the maintenance hole (C).
   –2 Scribe a line on a 6 x 100 mm bolt, 74 mm from the end.
   –3 Insert the bolt in the maintenance hole and into the hole in the rear balancer shaft (D) up to the line you scribed.
   –4 Install the balancer driven gear (E).

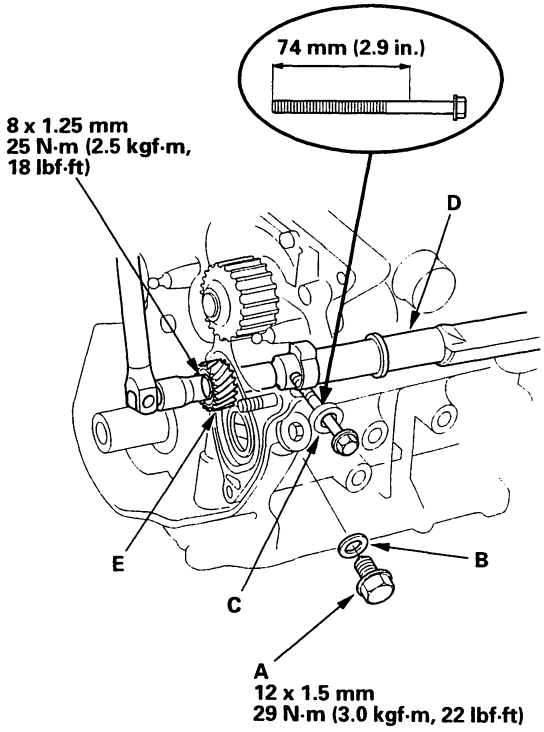

26. Install the balancer gear case (A).
   –1 Apply clean engine oil to the new O-ring (B).
   –2 Hold the rear balancer shaft with the 6 x 100 mm bolt.
   –3 Align the notch (C) on the pulley edge with the pointer (D) on the gear case.
   –4 Install the gear case (A).

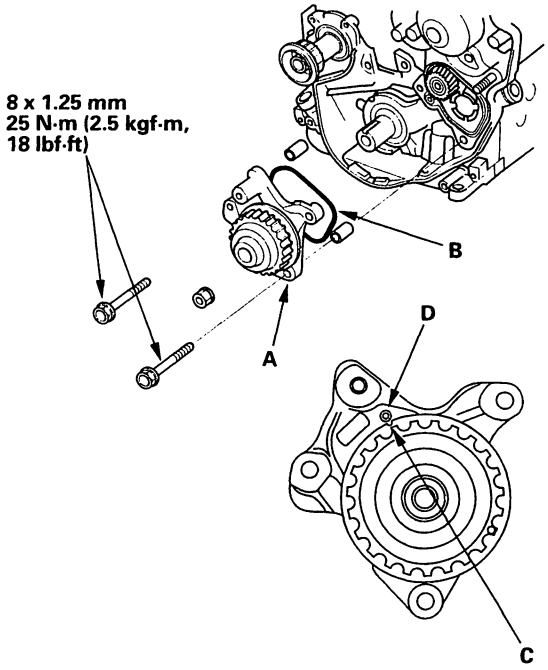

27. After installation, make sure the pulley pointer (A) aligns with the oil pump pointer (B).

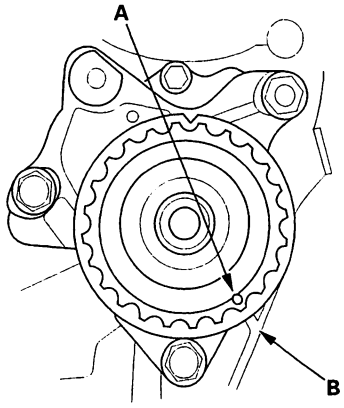

(cont'd)

Oil Pump Overhaul (cont'd)

28. Clean and dry the cylinder block mating surfaces.

29. Apply liquid gasket, part No. 08718-0009, evenly to the cylinder block mating surface of the oil pan and to the inner threads of the bolt holes, then install the oil pan.

    NOTE:
    - Apply a 4 mm wide bead of liquid gasket.
    - Apply a second bead where the two ends of the first bead ends meet.
    - Do not install the parts if 5 minutes or more have elapsed since applying liquid gasket. Instead, reapply liquid gasket after removing old residue.

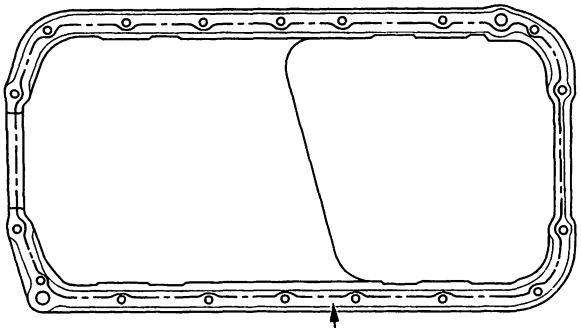

Apply liquid gasket along the broken line.

30. Tighten the bolts/nuts in two or three steps. In the final step, tighten all bolts/nuts, in sequence to 12 N·m (1.2 kgf·m, 8.7 lbf·ft).

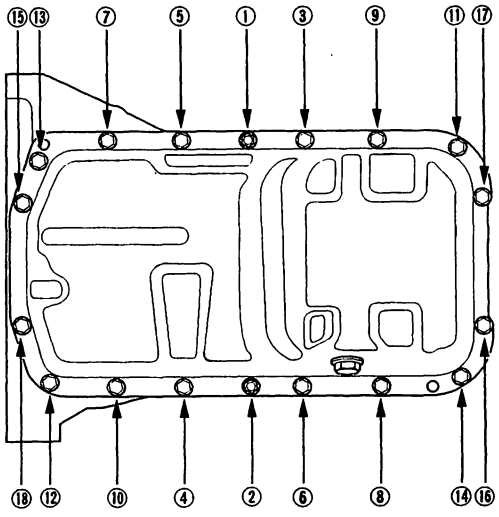

BACK

Engine Mechanical

Intake Manifold and Exhaust System

Intake Manifold Removal and Installation 9-2
Exhaust Manifold Removal and Installation 9-3
Exhaust Pipe and Muffler Replacement 9-5

BACK

Intake Manifold Removal and Installation

NOTE:
- Use new O-rings and gaskets when reassembling.
- Check for folds or scratches on the surface of the gasket.
- Replace with a new gasket if damaged.

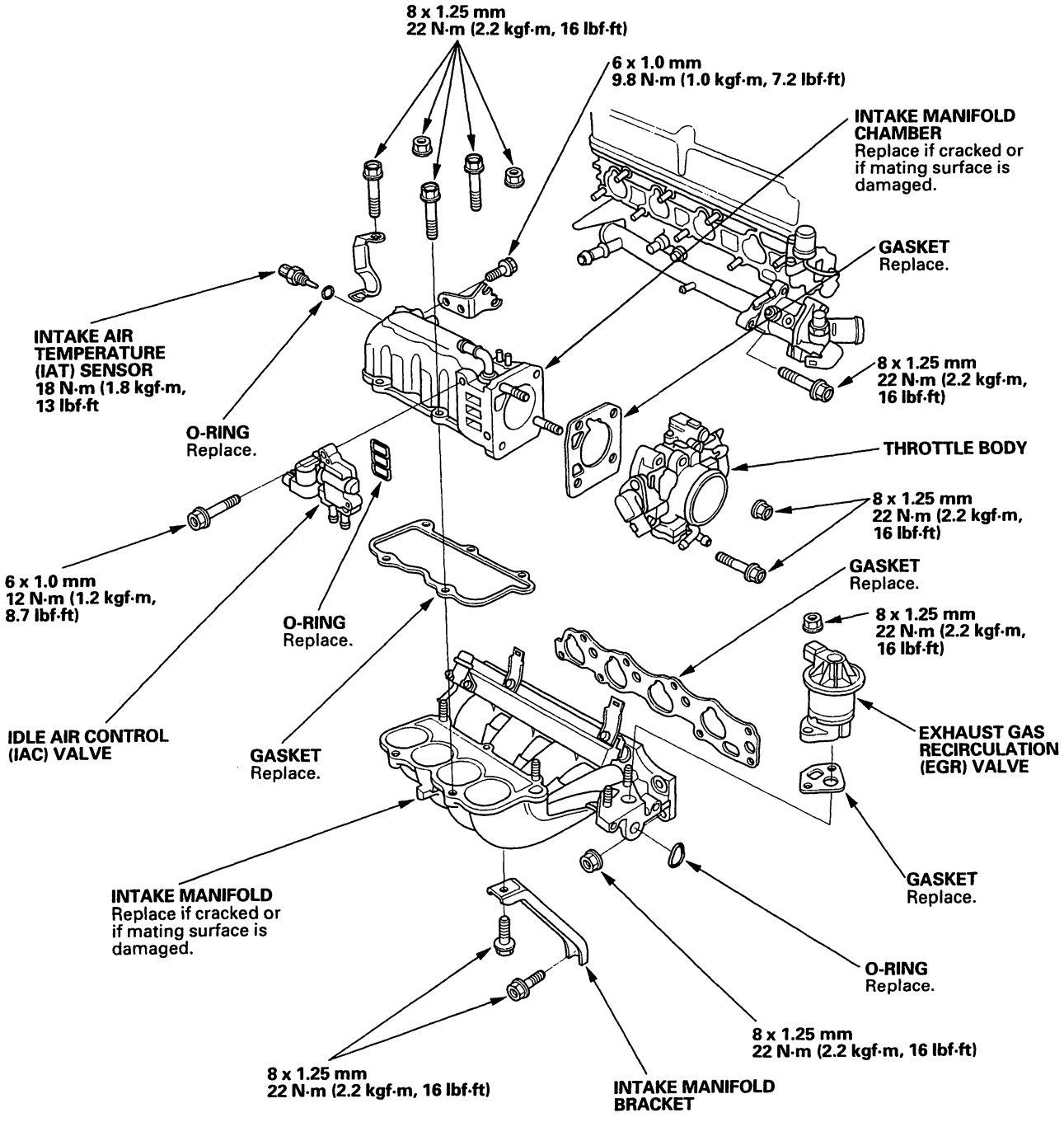

BACK

Exhaust Manifold Removal and Installation

F23A1, F23A5 engines:

NOTE:
- Use new gaskets and self-locking nuts when reassembling.
- Check for folds or scratches on the surface of the gasket.
- Replace with a new gasket if damaged.

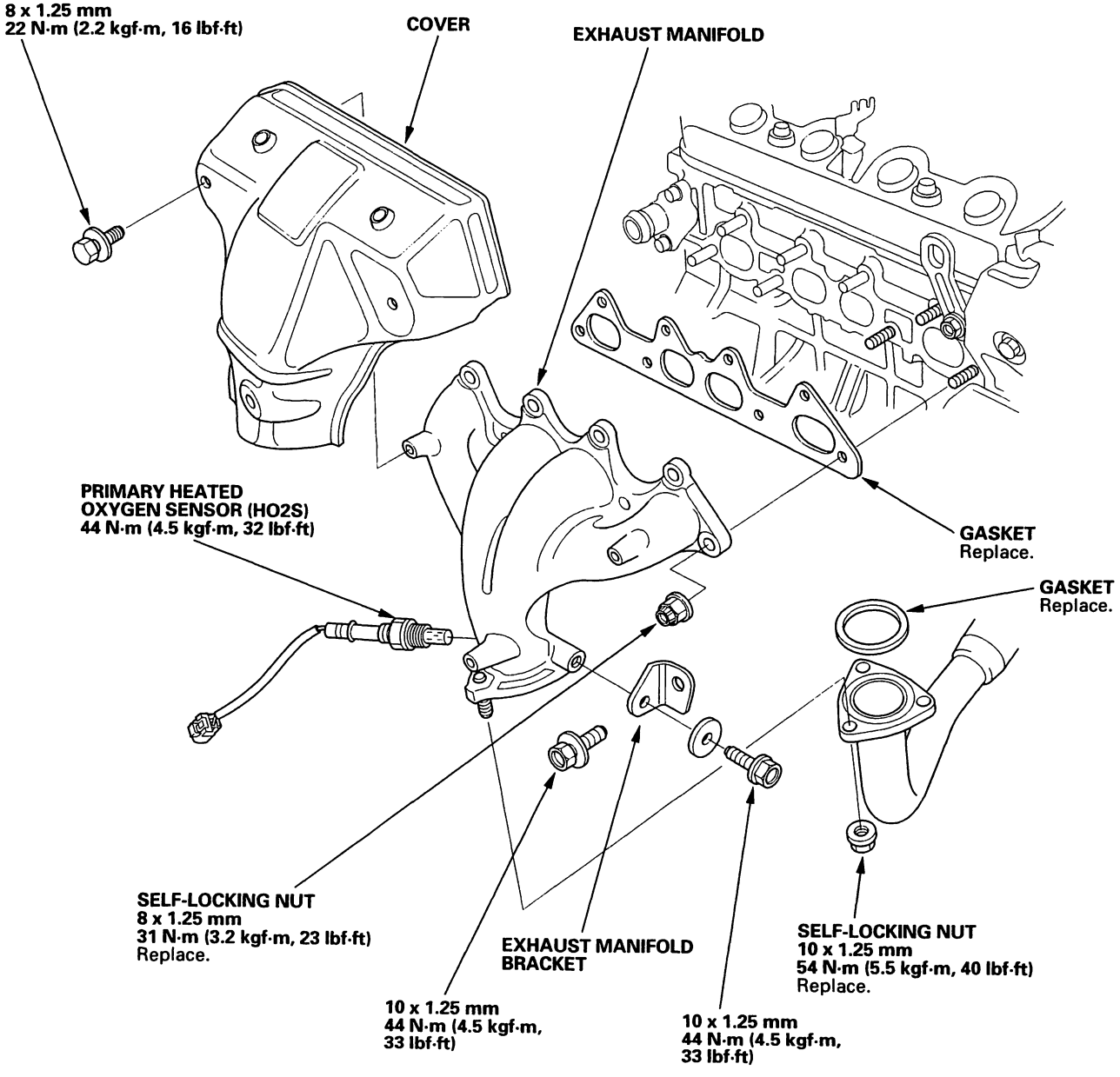

Exhaust Manifold Removal and Installation (cont'd)

F23A4 engine:

NOTE:
- Use new gaskets and self-locking nuts when reassembling.
- Check for folds or scratches on the surface of the gasket.
- Replace with a new gasket if damaged.

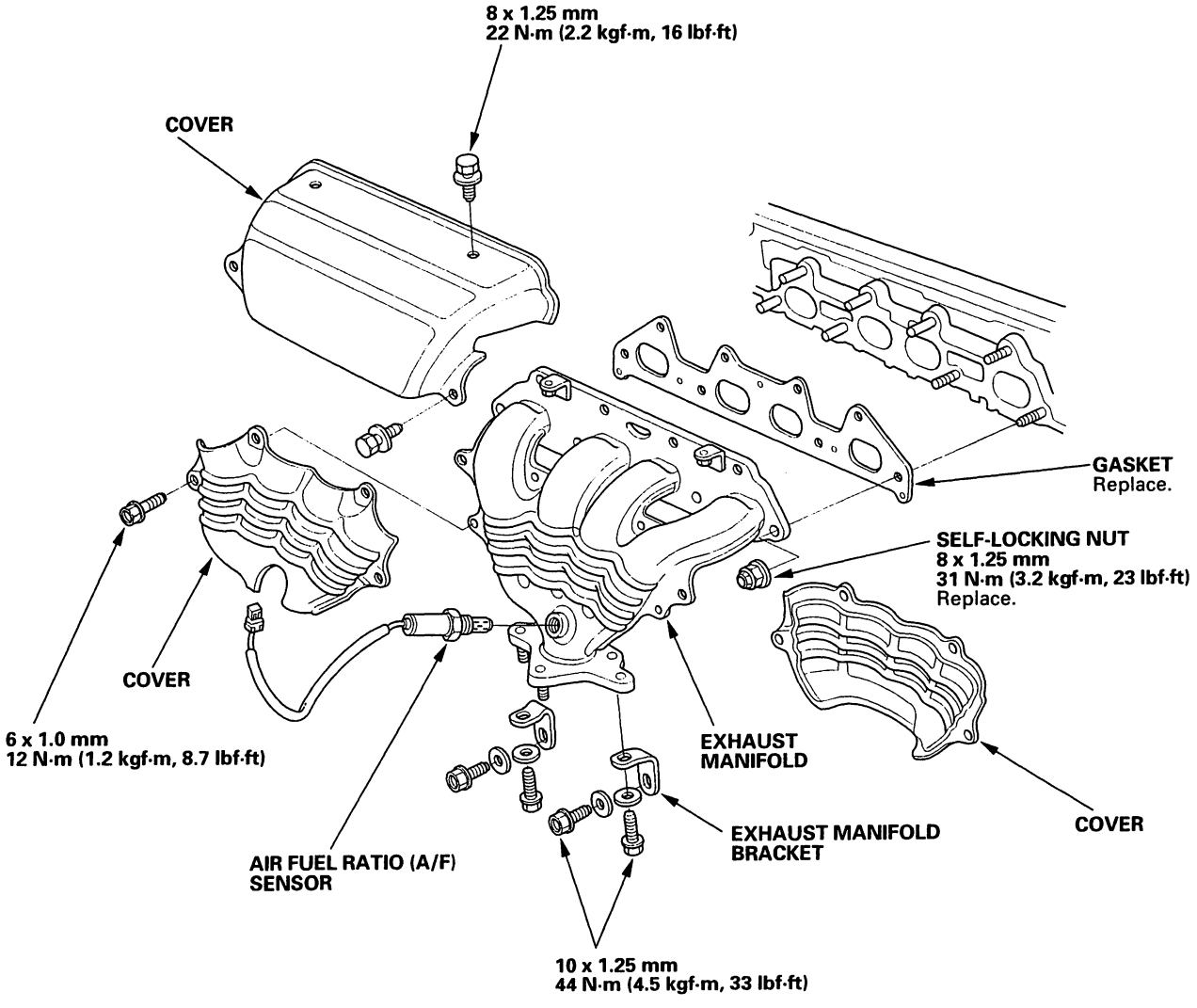

BACK

Exhaust Pipe and Muffler Replacement

Except F23A4 engine SULEV model:

NOTE: Use new gaskets and self-locking nuts when reassembling.

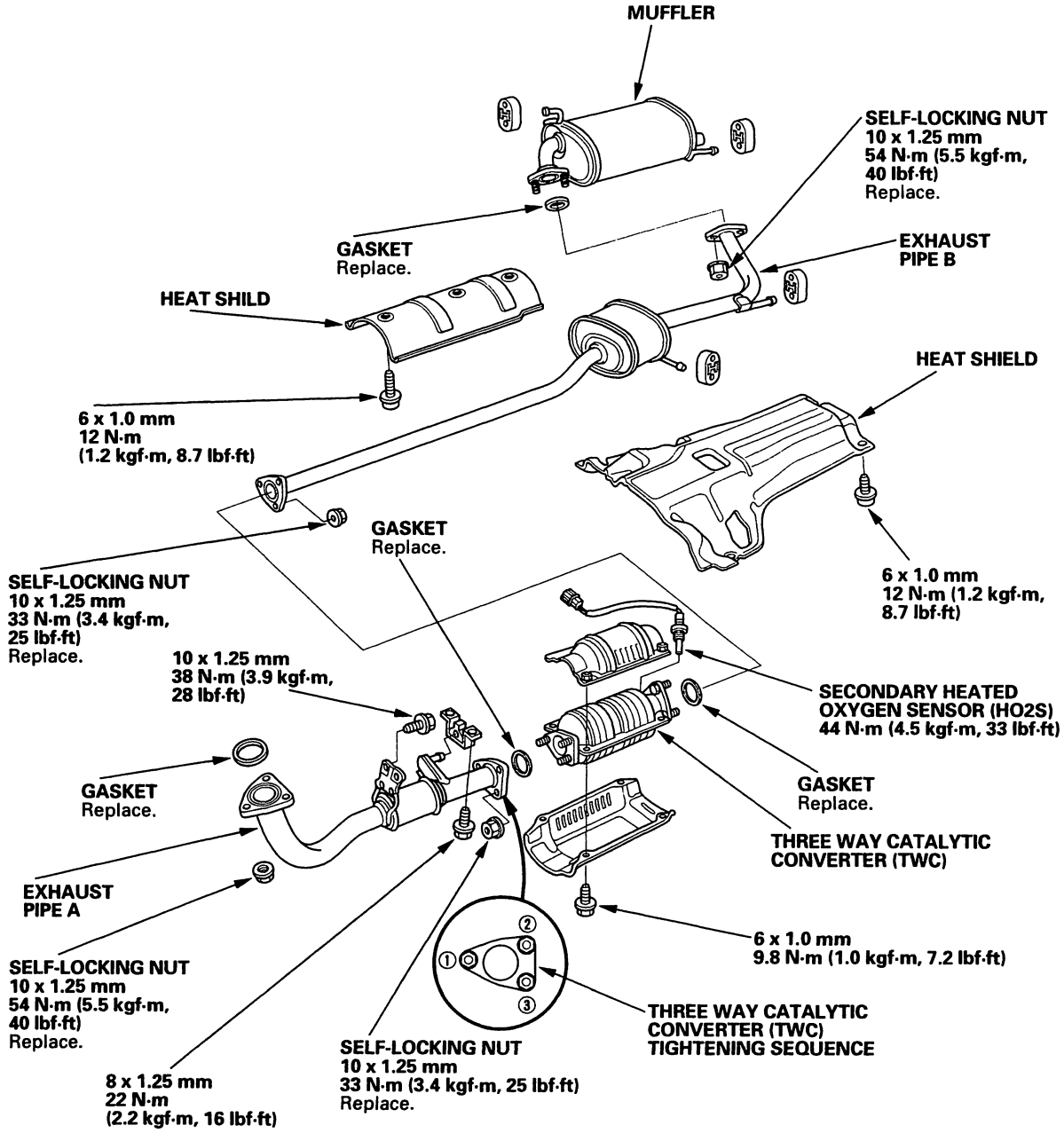

Exhaust Pipe and Muffler Replacement (cont'd)

F23A4 engine SULEV model:

NOTE: Use new gaskets and self-locking nuts when reassembling.

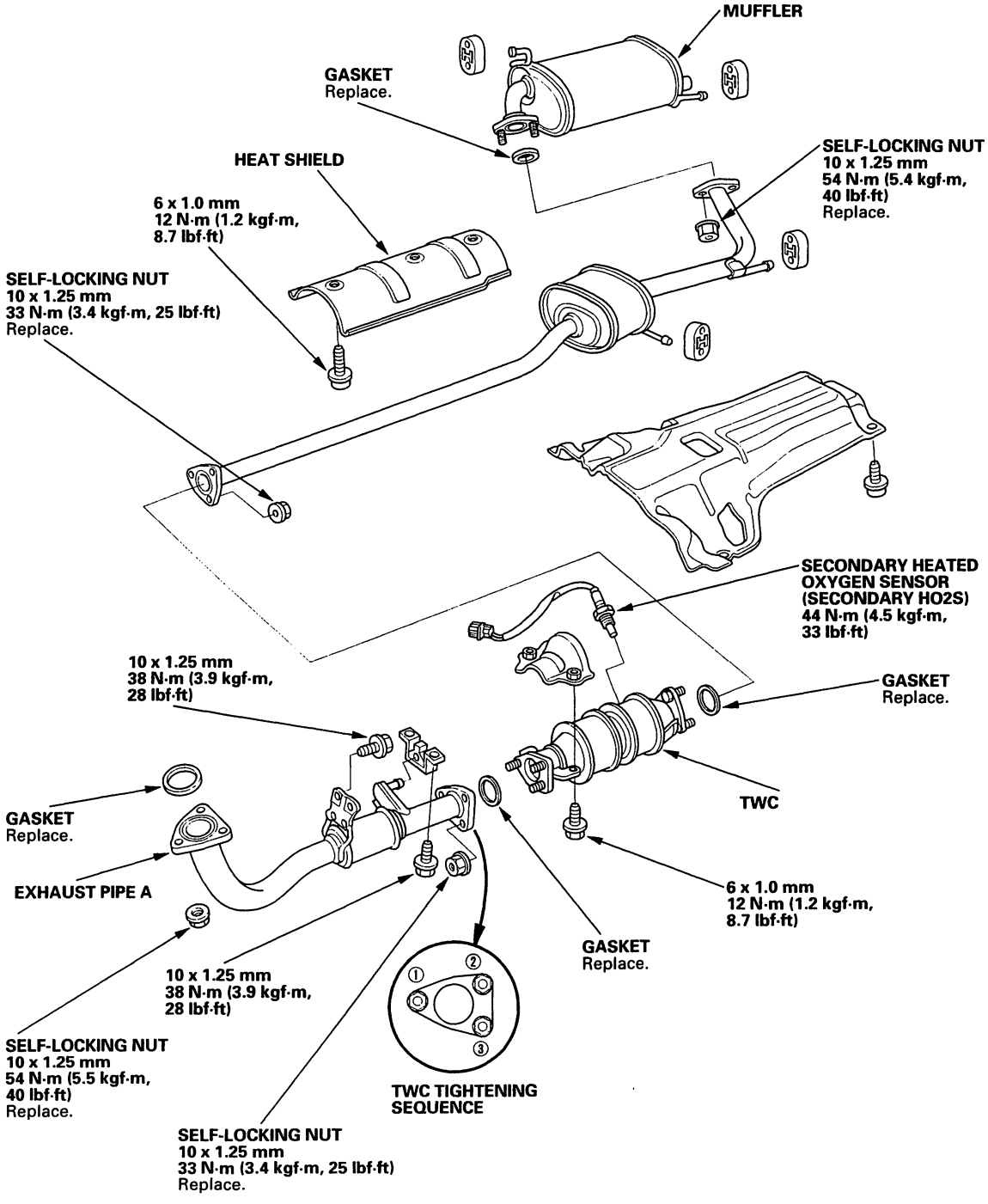

BACK

Engine Cooling

Cooling System

Component Location Index 10-2
Coolant Temperature Gauge Test 10-5
Sending Unit Test 10-7
Radiator Cap Test 10-7
Radiator Test 10-8
Fan Motor Test 10-8
Thermostat Test 10-9
Water Pump Inspection 10-9
Water Pump Replacement 10-10
Coolant Replacement 10-10
Water Outlet Replacement 10-12
Thermostat Replacement 10-13
Radiator and Fan Replacement 10-14

Fan Controls

Component Location Index 10-15
Symptom Troubleshooting Index 10-16
Circuit Diagram With A/C 10-17
Circuit Diagram Without A/C 10-18
Radiator Fan Circuit Troubleshooting 10-19
Radiator Fan Switch Circuit
Troubleshooting (Open) 10-21
Radiator Fan Switch Circuit
Troubleshooting (Short) 10-21
Radiator Fan Switch Test 10-22

BACK

Component Location Index

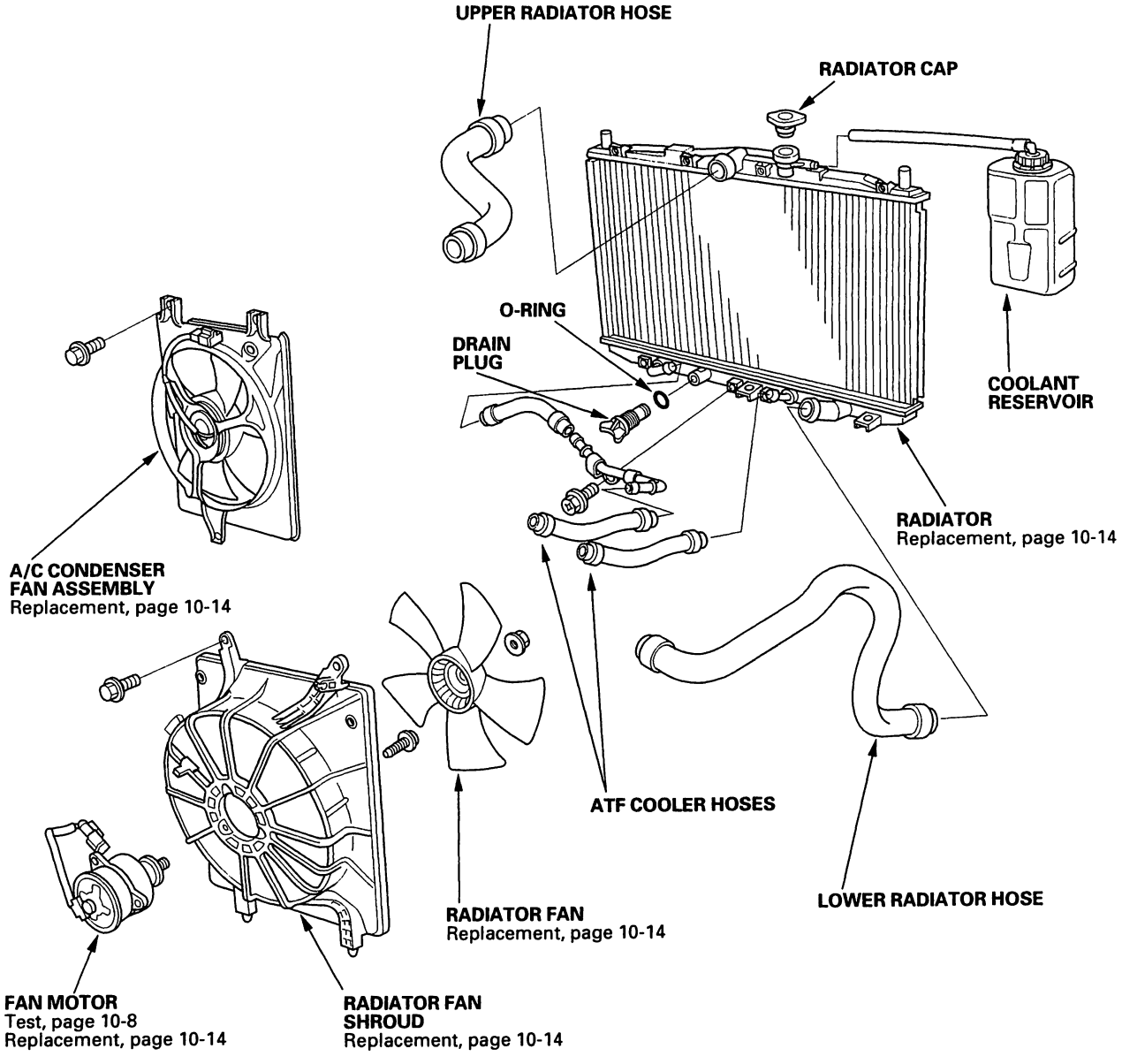

BACK

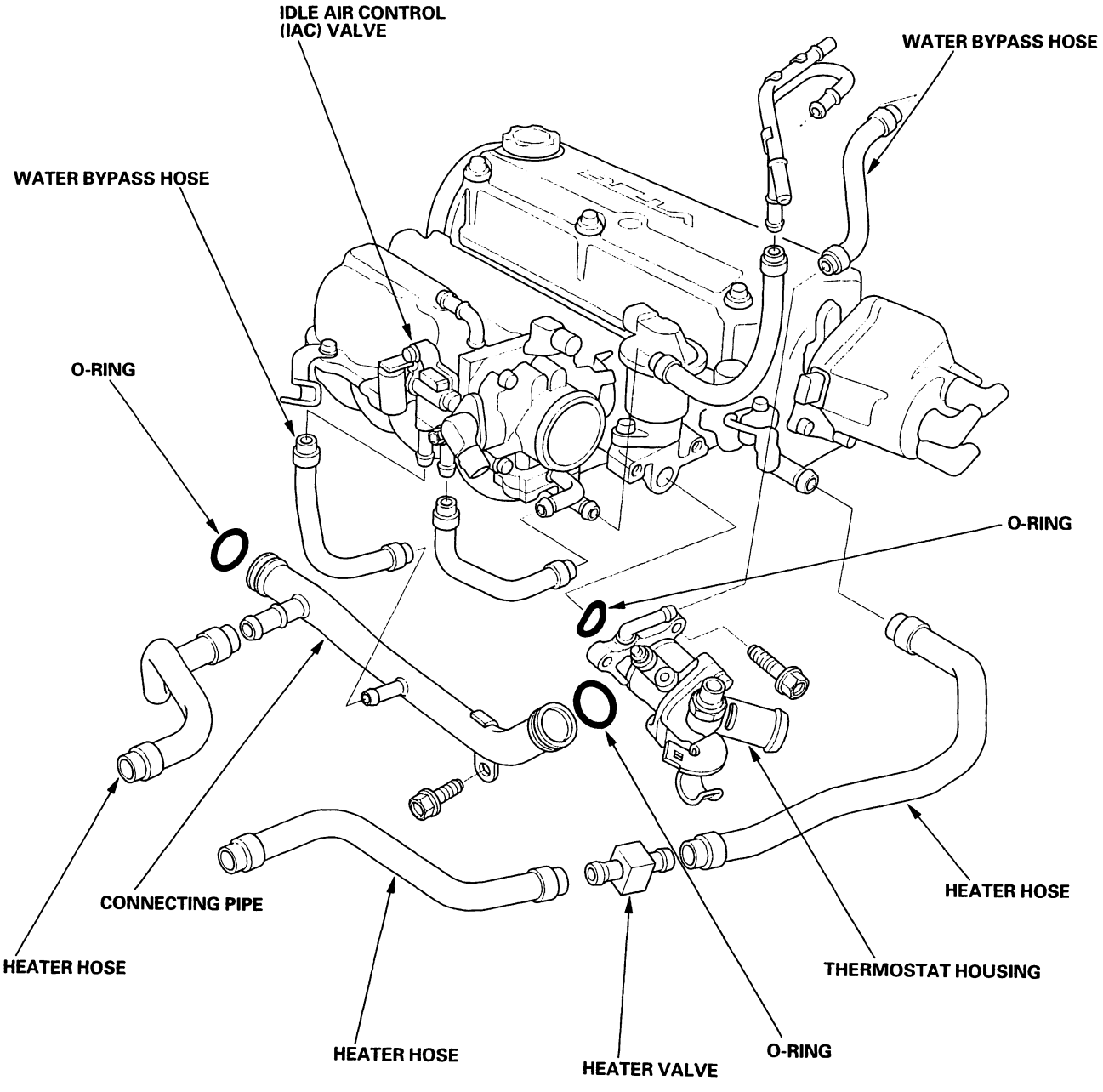
IDLE AIR CONTROL
(IAC) VALVE
WATER BYPASS HOSE
WATER BYPASS HOSE
O-RING
O-RING
CONNECTING PIPE
HEATER HOSE
HEATER HOSE
THERMOSTAT HOUSING
HEATER HOSE
HEATER VALVE
O-RING

(cont'd)

Component Location Index (cont'd)

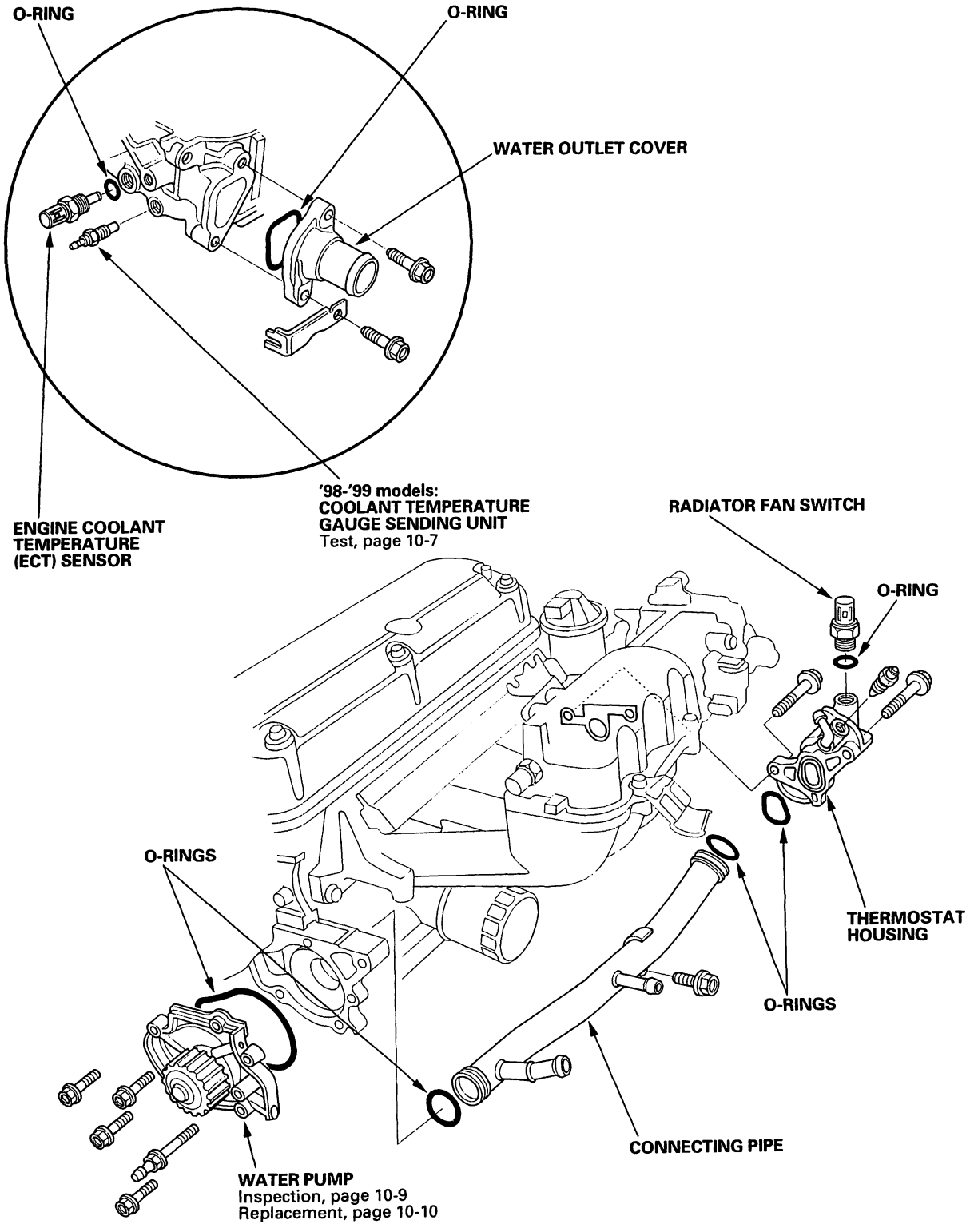

BACK

Coolant Temperature Gauge Test

'98-99 models:

1. Check the No. 9 (7.5 A) fuse in the driver's under-dash fuse/relay box before testing.

2. Make sure the ignition switch is OFF, then disconnect the YEL/GRN wire (A) from the coolant temperature gauge sending unit (B), and ground it with a jumper wire.

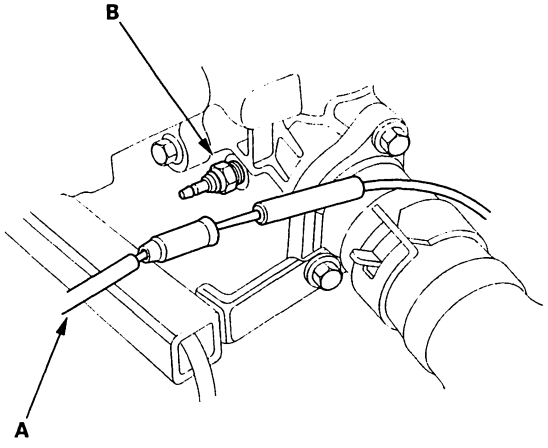

3. Turn the ignition switch ON (II).
   Check that the pointer of the coolant temperature gauge starts moving toward the "H" mark. Turn the ignition switch OFF before the pointer reaches "H" on the gauge dial. Failure to do so may damage the gauge.
   - If the pointer of the gauge does not move at all, check for an open in the YEL/GRN wire.
     If the wires are OK, replace the coolant temperature gauge.
   - If the coolant temperature gauge works, test the coolant temperature sending unit.

'00-02 models:

Coolant Temperature Gauge Needle Does Not Move at All

1. Turn the ignition switch OFF, and connect ECM/PCM connector terminal C24 to body ground with a jumper wire.

ECM/PCM CONNECTOR C (31P)

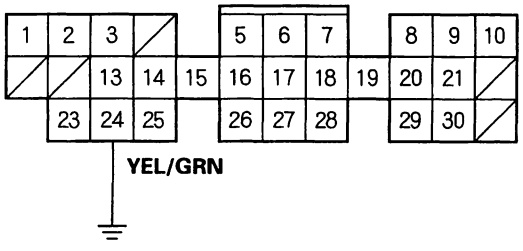

Wire side of female terminals

2. Turn the ignition switch ON (II) .

   After 30 seconds or more, does the temperature gauge needle move to the Hot side ?

   YES—Substitute a known-good ECM/PCM and recheck (see page 11-5).If the symptom/indication goes away, replace the original ECM/PCM.

   NO—Go to step 3.

3. Turn the ignition switch OFF, and disconnect ECM/PCM connector C (31P).

(cont'd)

Coolant Temperature Gauge Test (cont'd)

4. Turn the ignition switch ON (II), and measure voltage between ECM/PCM connector terminal C24 and body ground.

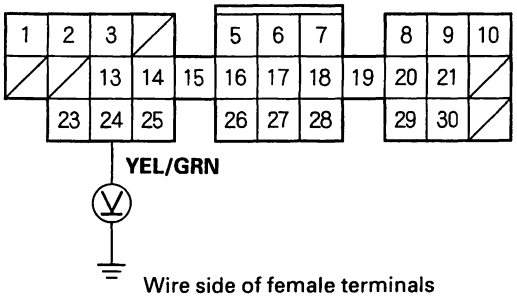

Is there about 5V ?

YES—Replace the fuel and temperature gauge assembly.

NO—Go to step 5.

5. Turn the ignition switch OFF, and check for continuity between ECM/PCM connector terminal C 24 and gauge assembly connector terminal C2.

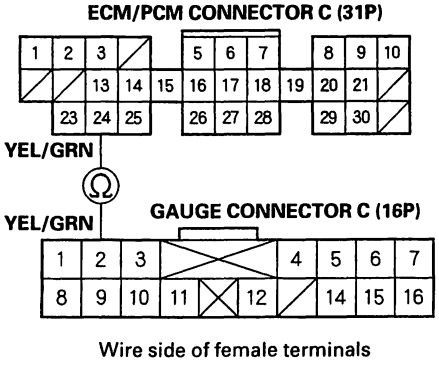

Is there continuity ?

YES—Replace the fuel and temperature gauge assembly.

NO—Repair open in the wire between ECM/PCM connector terminal C24 and gauge connector terminal C2.

Coolant Temperature Gauge Needle Goes Past the Hot Mark

1. Turn the ignition switch OFF, and disconnect ECM/PCM connector C (31P).

2. Turn the ignition switch ON (II) , and watch the coolant temperature gauge.

   Does the temperature gauge needle move at all ? (you may have to watch it for about 30 seconds.)

   YES—Go to step 3.
   NO—Substitute a known-good ECM/PCM and recheck (see page 11-5).If the symptom/indication goes away, replace the original ECM/PCM.

3. Turn the ignition switch OFF, then turn it ON (II) again, and watch the coolant temperature gauge.

   Does the temperature gauge needle immediately go past the Hot mark?

   YES—Replace the fuel and temperature gauge assembly.
   NO—The temperature gauge needle went past the Hot mark after about 30 seconds ormore. Go to step 4.

4. Turn the ignition switch OFF, and disconnect the gauge assembly connector C.

5. Check for continuity between ECM/PCM connector terminal C24 and gauge assembly connector terminal C2.

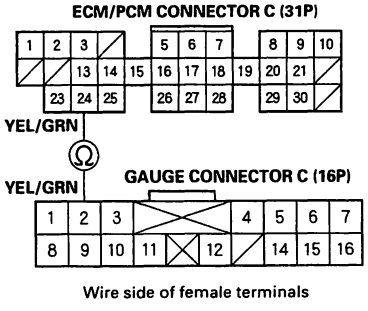

Is there continuity ?

YES—Repair short in the wire between ECM/PCM connector terminal C24 and gauge connector terminal C2.
NO—Replace the fuel and temperature gauge assembly.

BACK

Sending Unit Test

'98-99 models:

1. Disconnect the YEL/GRN wire (A) from the coolant temperature gauge sending unit (B).

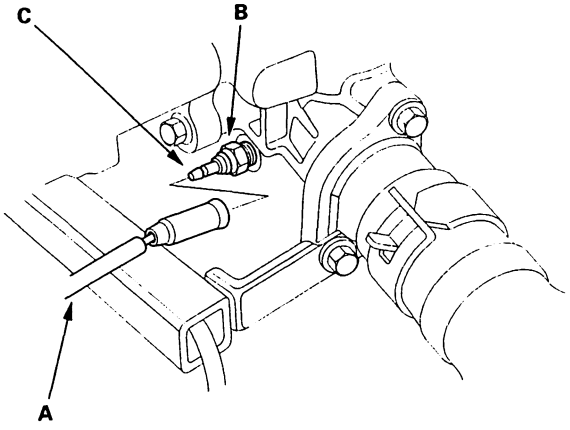

2. Using an ohmmeter, measure the change in resistance between the positive terminal (C) and the engine (ground) with the engine cold and with the engine at operating temperature.

Temperature	133°F (56°C)	185°F (85°C)–212°F (100°C)
Resistance (Ω)	137	46–30

3. If the obtained readings are substantially different from the specifications above, replace the sending unit.

Radiator Cap Test

1. Remove the radiator cap (A), wet its seal with engine coolant, then install it on the pressure tester (B) (commercially available).

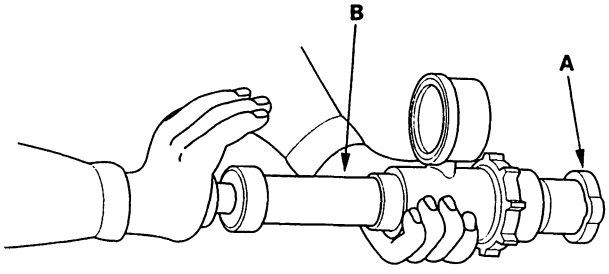

2. Apply a pressure of 93–123 kPa (0.95–1.25 kgf/cm², 14–18 psi).
3. Check for a drop in pressure.
4. If the pressure drops, replace the cap.

Radiator Test

1. Wait until the engine is cool, then carefully remove the radiator cap and fill the radiator with engine coolant to the top of the filler neck.

2. Attach the pressure tester (A)(commercially available) to the radiator and apply a pressure of 93 – 123 kPa (0.95 – 1.25 kgf/cm², 14 – 18 psi).

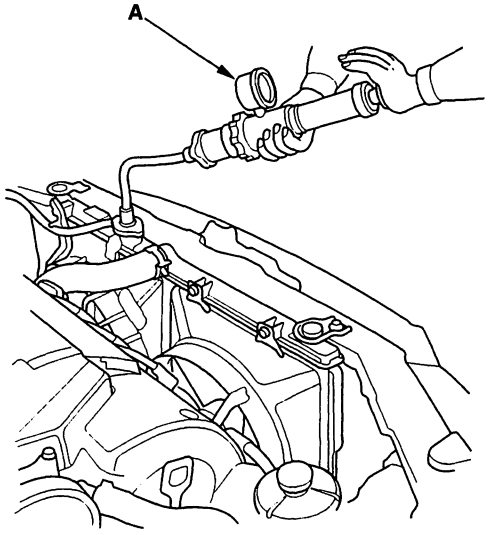

3. Inspect for engine coolant leaks and a drop in pressure.

4. Remove the tester and reinstall the radiator cap.

5. Check for engine oil in the coolant and/or coolant in the engine oil.

Fan Motor Test

1. Disconnect the 2P connectors from the radiator fan motor (A) and condenser fan motor (B).

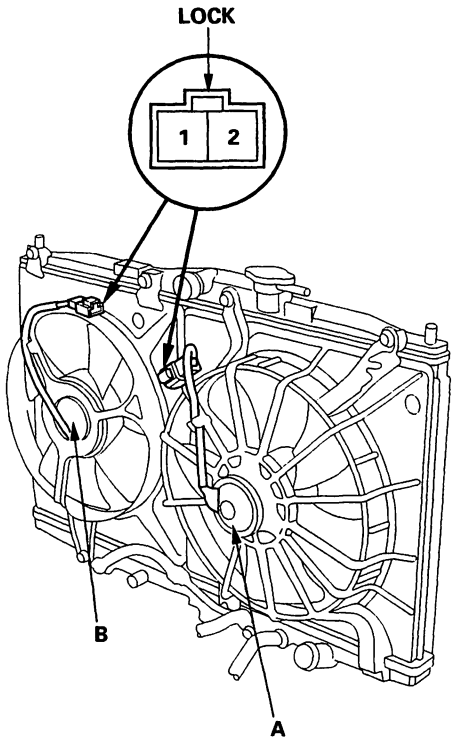

2. Test the motor by connecting battery power to the No. 1 terminal, and ground to the No. 2 terminal.

3. If the motor fails to run or does not run smoothly, replace it.

BACK

Thermostat Test

Replace the thermostat if it is open at room temperature.

To test a closed thermostat:

1. Suspend the thermostat (A) in a container of water. Do not let the thermometer (B) touch the bottom of the hot container.

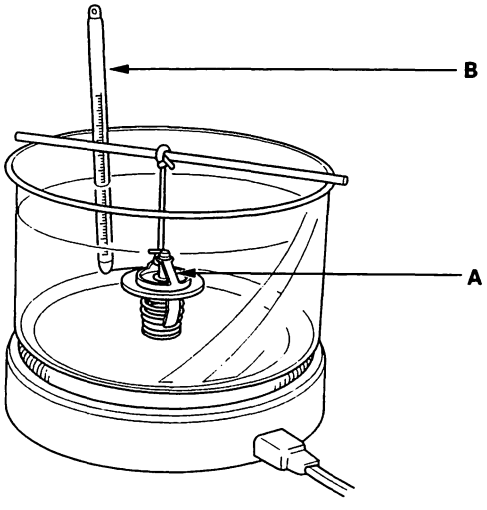

2. Heat the water and check the temperature with the thermometer. Check the temperature at which the thermostat first opens, and at which it is fully open.

3. Measure the lift height of the thermostat when it is fully open.

STANDARD THERMOSTAT

Lift height:	**above 8.0 mm (0.31 in.)**
Starts opening:	**169–176°F (76–80°C)**
Fully open:	**194°F (90°C)**

Water Pump Inspection

1. Remove the timing belt (see page 6-23).

2. Turn the water pump pulley counterclockwise. Check that it turns freely.

3. Check for signs of seal leakage. A small amount of "weeping" from the bleed hole (A) is normal.

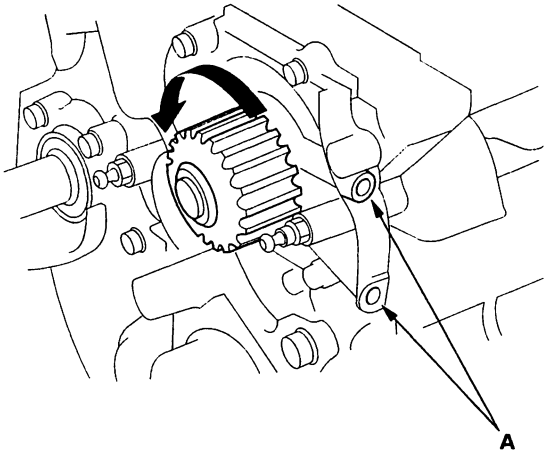

Water Pump Replacement

1. Remove the timing belt (see page 6-23).
2. Remove the camshaft pulley and the back cover (see step 22 on page 6-34).
3. Remove the water pump (A) by removing five bolts.
4. Inspect, repair and clean the O-ring groove and the mating surface on the cylinder block.

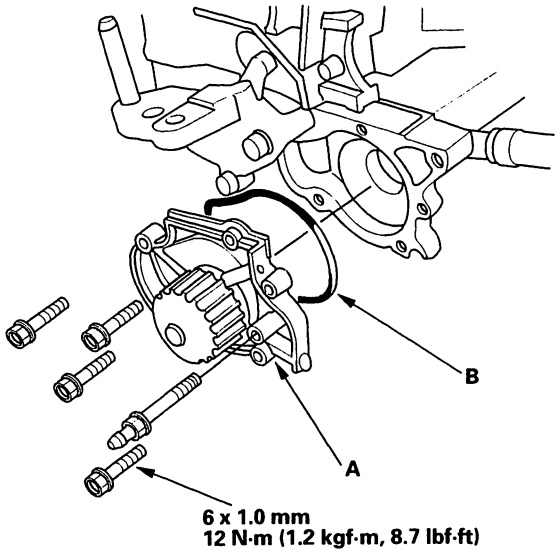

5. Install the water pump, with a new O-ring (B), in the reverse order of removal.
6. Clean the spilled engine coolant.

Coolant Replacement

1. Start the engine. Set the heater temperature control dial to maximum heat, then turn off the engine. Make sure the engine and radiator are cool to the touch.
2. Remove the radiator cap.
3. Loosen the drain plug (A), and drain the coolant.

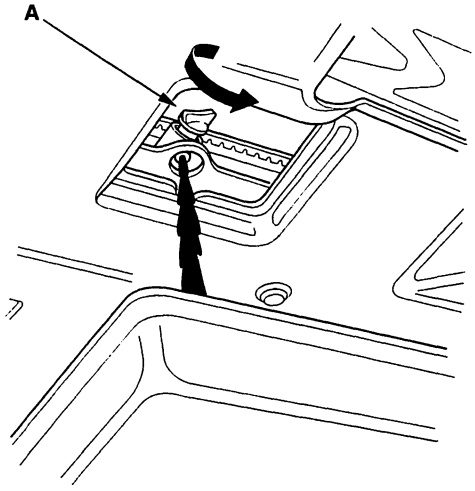

4. Remove the drain bolt (A) from the rear side of the cylinder block.

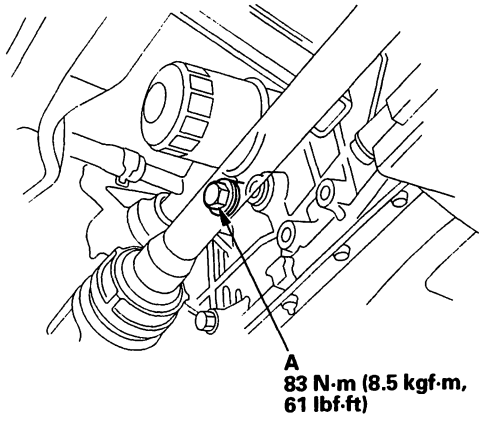

5. After the coolant has drained, apply liquid gasket to the drain bolt threads, then reinstall the bolt with a new washer and tighten it securely.
6. Tighten the radiator drain plug securely.

BACK

7. Remove, drain and reinstall the reservoir. Fill the tank to the MAX mark with Honda All Season Antifreeze/Coolant Type 2.

8. Loosen the air bleed bolt (A) in the thermostat housing, then pour Honda All Season Antifreeze/Coolant Type 2 into the radiator to the bottom of the filler neck. Do not let coolant spill on any electrical parts or the paint. If the any coolant spills, rinse it off immediately.

   NOTE:
   - Always use Honda All Season Antifreeze/Coolant Type 2. Using a non-Honda coolant can result in corrosion, causing the cooling system to malfunction or fail.
   - Honda All Season Antifreeze/Coolant Type 2 is a mixture of 50 % antifreeze and 50 % water Pre-mixing is not required.

   Engine Coolant Refill Capacity [including the reservoir capacity of 0.6 ℓ (0.6 US qt, 0.5 Imp qt)] :
   M/T: 5.5 ℓ (5.8 US qt, 4.8 Imp qt)
   A/T: 5.4 ℓ (5.7 US qt, 4.8 Imp qt)

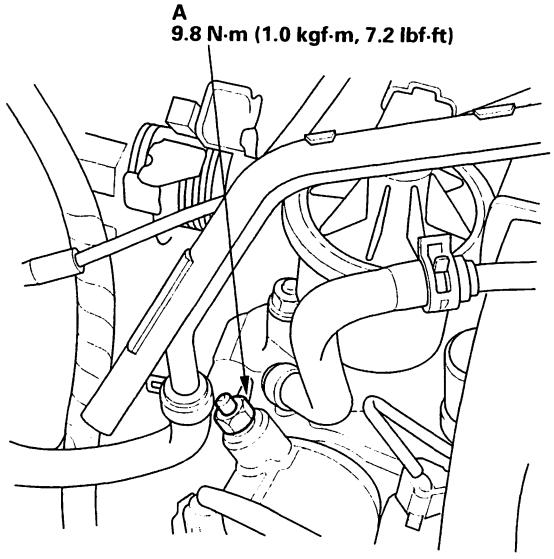

9. Tighten the bleed bolt as soon as coolant starts to run out in a steady stream.

10. With the radiator cap off, start the engine and let it run until warmed up (radiator fan comes on at least twice). Then, if necessary, add more Honda All Season Antifreeze/Coolant Type 2 to bring the level back up to the bottom of the filler neck.

11. Put the radiator cap on tightly, then run the engine again and check for leaks.

Water Outlet Replacement

Install the water outlet (A) with a new O-ring (B).

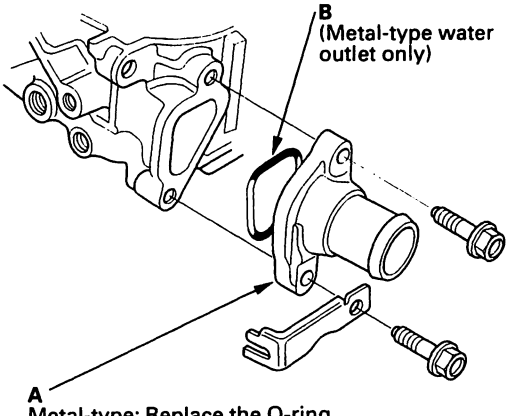

BACK

Thermostat Replacement

NOTE: Use new O-rings when reassembling.

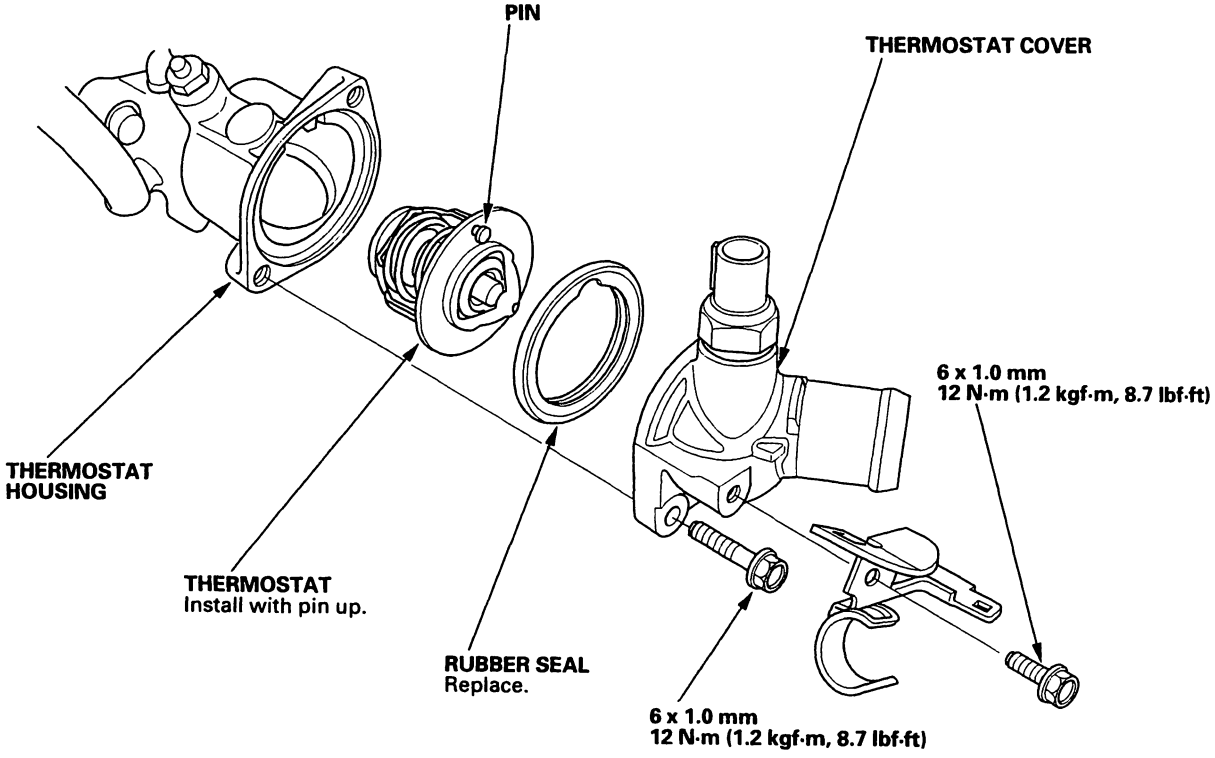

Radiator and Fans Replacement

1. Drain the engine coolant.

2. Remove the upper and lower radiator hoses, and ATF cooler hoses.

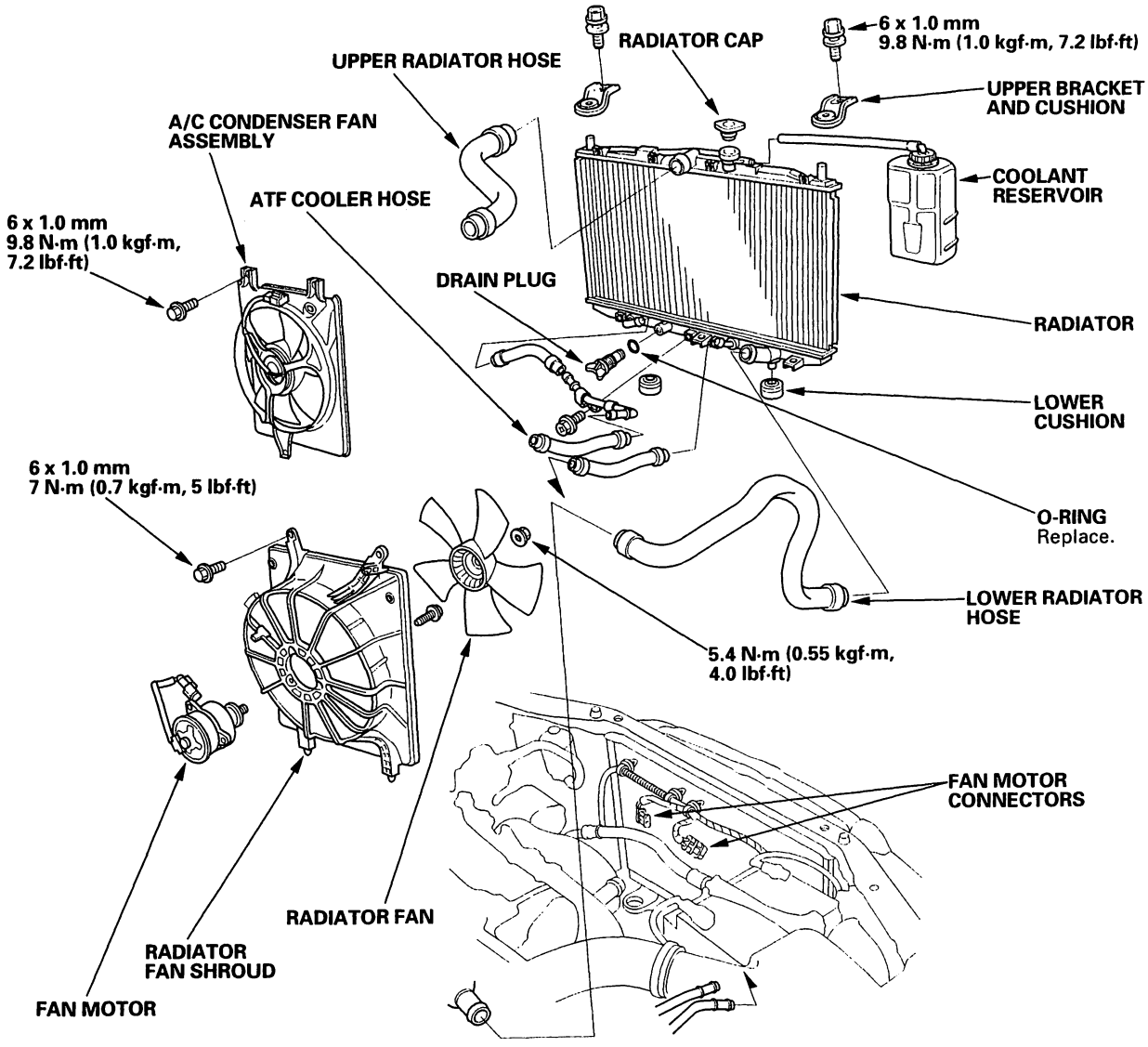

3. Disconnect the fan motor connectors.

4. Remove the radiator upper brackets, then pull up the radiator.

5. Remove the fan shroud assemblies and other parts from the radiator.

6. Install the radiator in the reverse order of removal. Make sure the upper and lower cushions are set securely.

7. Fill the radiator with engine coolant and bleed the air.

BACK

Component Location Index

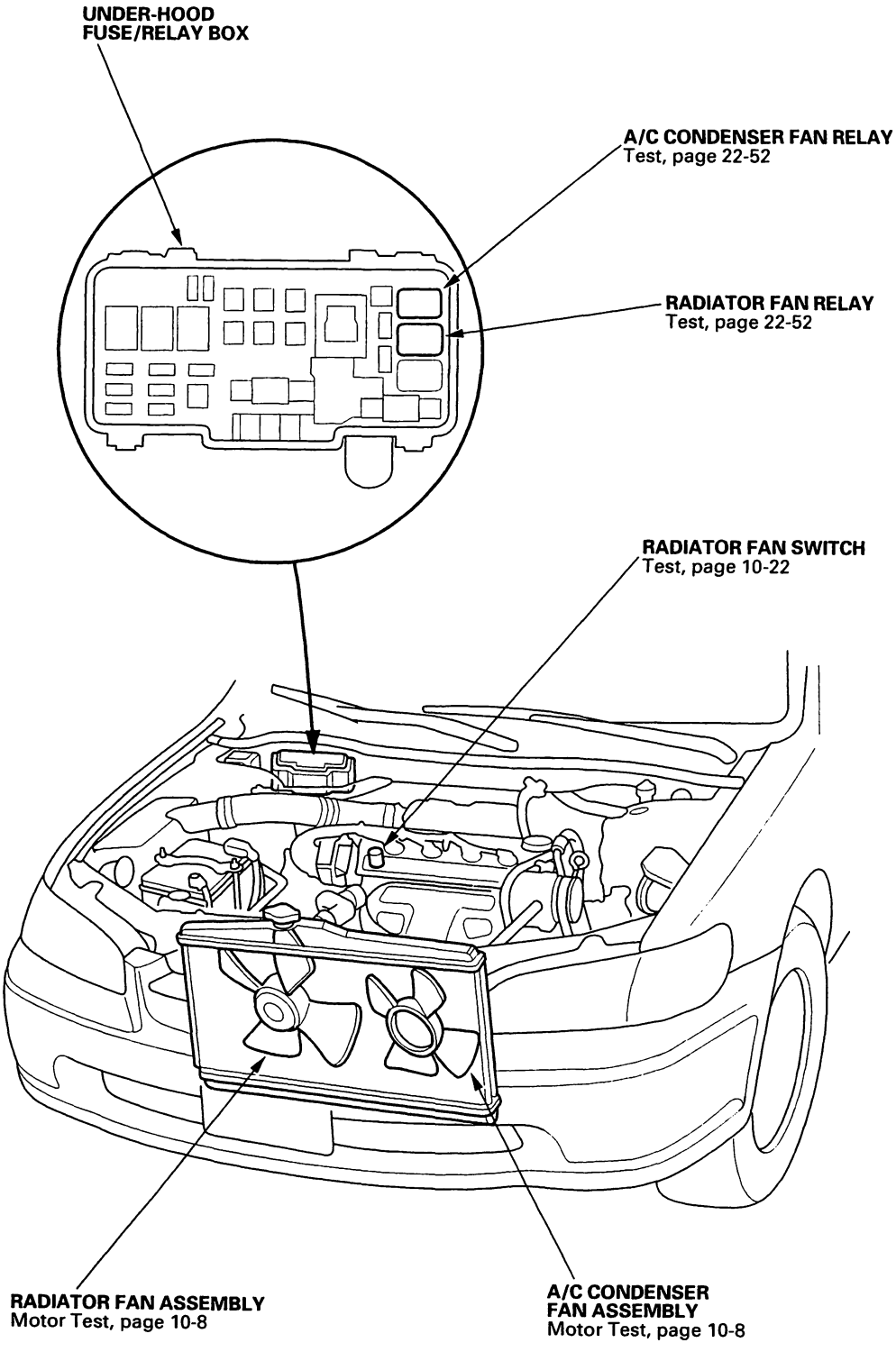

BACK

Fan Controls

Symptom Troubleshooting Index

Before performing any troubleshooting procedures check:
- Fuses
- Grounds
- Cleanliness and tightness of all connectors

SYMPTOM	PROCEDURE
Radiator fan does not run at all	Radiator Fan Circuit Troubleshooting (see page 10-19).
Radiator fan does not run for engine cooling, but it runs with A/C on	Radiator Fan Switch Circuit Troubleshooting (Open) (see page 10-21).
Radiator fan runs with ignition switch ON (II), A/C off, and engine temperature below 199°F (93°C)	Radiator Fan Switch Circuit Troubleshooting (Short) (see page 10-21).

BACK

Circuit Diagram With A/C

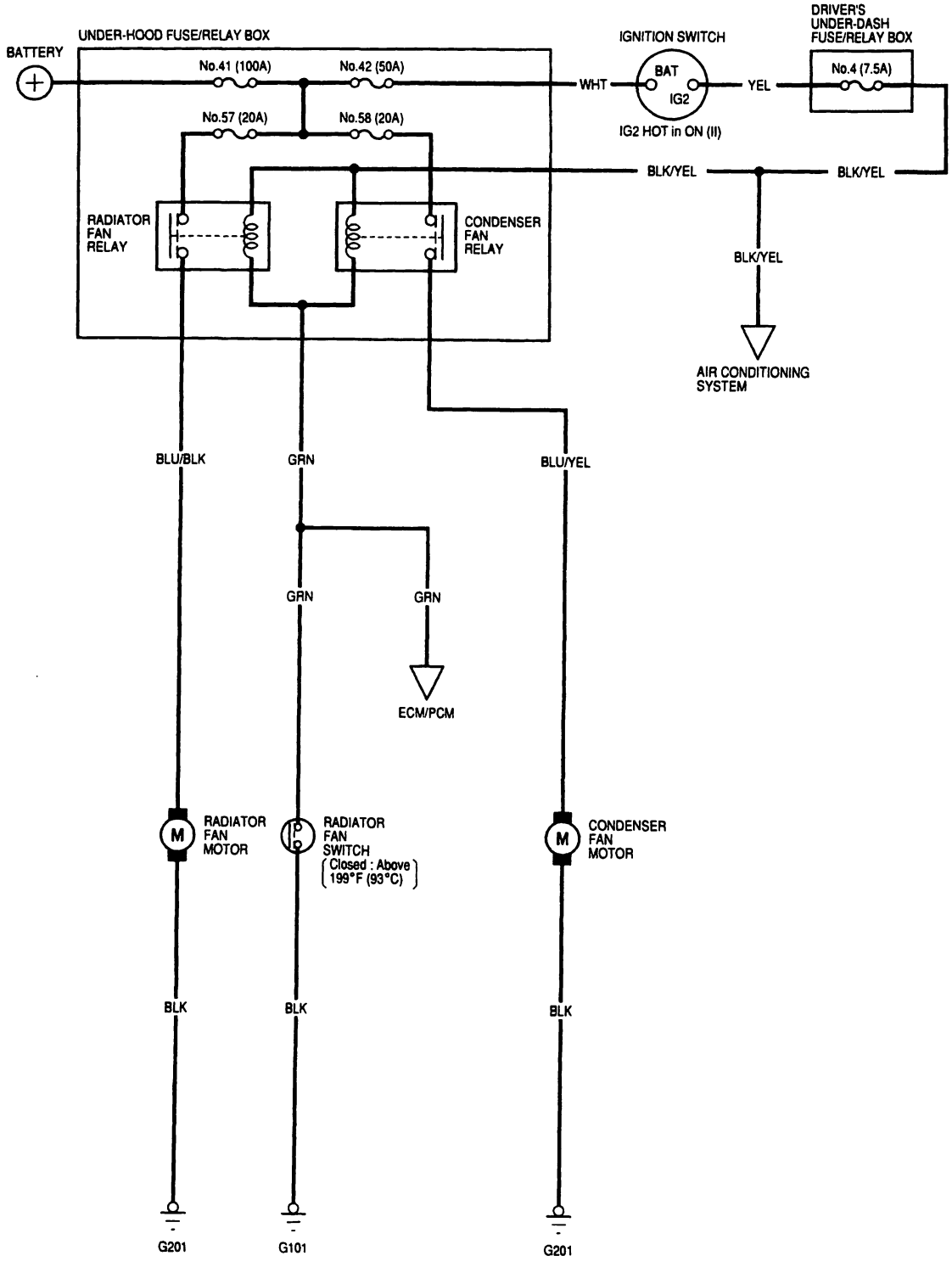

BACK

Circuit Diagram Without A/C

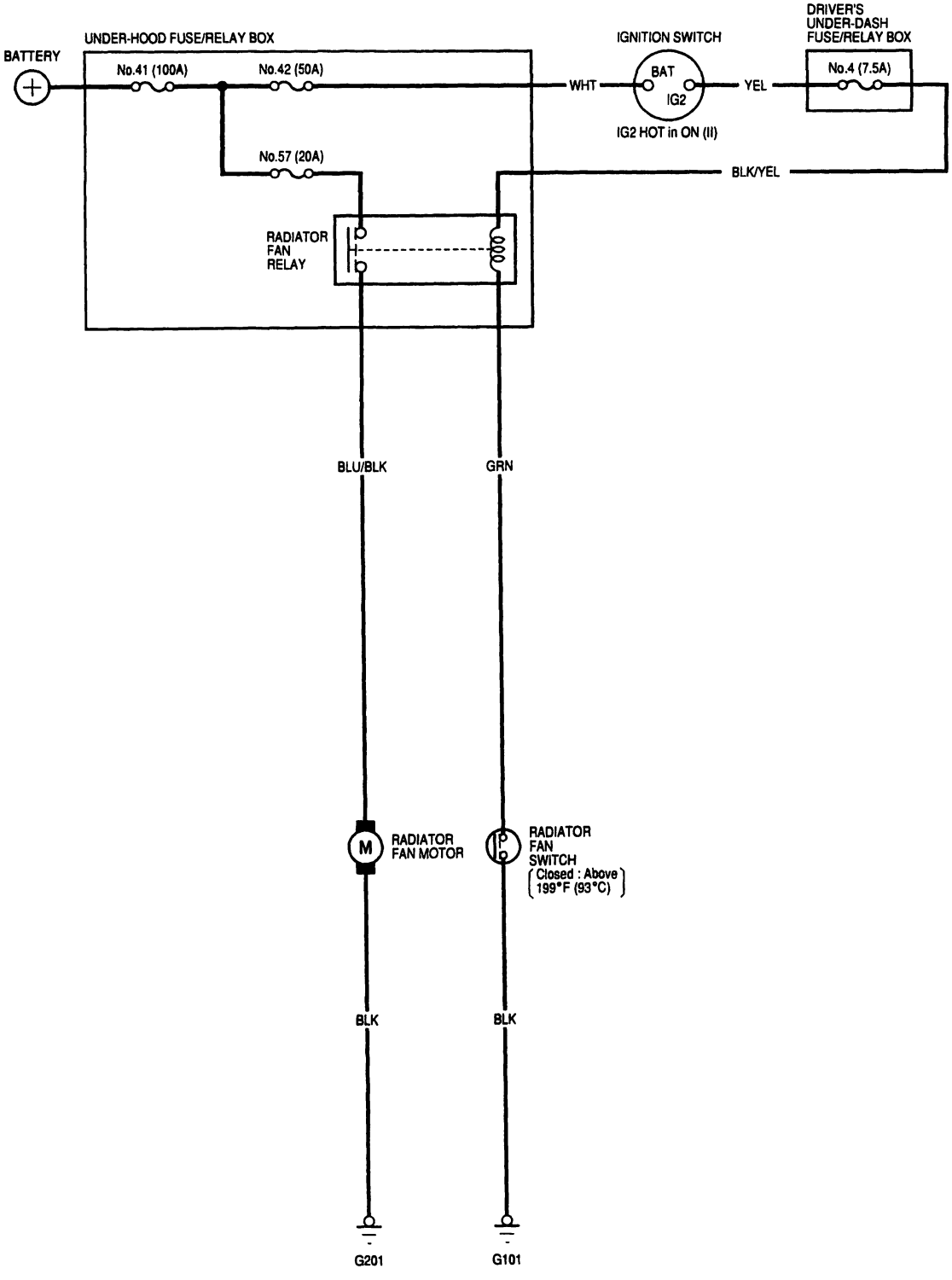

BACK

Radiator Fan Circuit Troubleshooting

1. Check the No. 57 (20A) fuse in the under-hood fuse/relay box, and the No. 4 (7.5A) fuse in the under-dash fuse/relay box.

   Is the fuse (s) OK?

   YES – Go to step 2.

   NO – Replace the fuse (s) and recheck. ■

2. Remove the radiator fan relay from the under-hood fuse/relay box, and test it (see page 22-52).

   Is the relay OK?

   YES – Go to step 3.

   NO – Replace the radiator fan relay. ■

3. Measure the voltage between the No. 1 terminal of the radiator fan relay 4P socket and body ground.

RADIATOR FAN RELAY 4P SOCKET

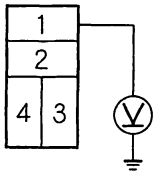

Terminal side of female terminals

Is there battery voltage?

YES – Go to step 4.

NO – Replace the under-hood fuse/relay box. ■

4. Connect the No. 1 and No. 2 terminals of the radiator fan relay 4P socket with a jumper wire.

RADIATOR FAN RELAY 4P SOCKET

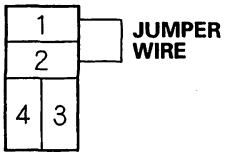

Terminal side of female terminals

Does the radiator fan run?

YES – Go to step 5.

NO – Go to step 6.

5. Disconnect the jumper, and turn the ignition switch ON (II). Check for voltage between the No. 3 terminal of the radiator fan relay 4P socket and body ground.

RADIATOR FAN RELAY 4P SOCKET

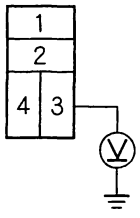

Terminal side of female terminals

Is there battery voltage?

YES – Go to step 9.

NO – Check for an open in the wire between the under-hood fuse/relay box and under-dash fuse/relay box. ■

(cont'd)

Radiator Fan Circuit Troubleshooting (cont'd)

6. Disconnect the radiator fan motor 2P connector.

7. Check for continuity between the No. 2 terminal of the radiator fan relay 4P socket and the No. 2 terminal of the radiator fan motor 2P connector.

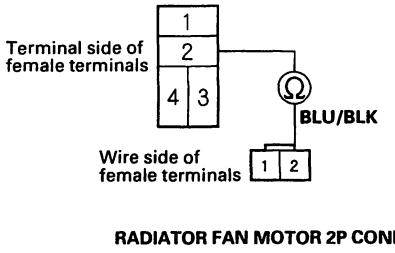

Is there continuity?

YES—Go to step 8.

NO—Repair open in the wire between the under-hood fuse/relay box and the radiator fan motor 2P connector terminal No. 2.■

8. Check for continuity between the No. 1 terminal of the radiator fan motor 2P connector and body ground.

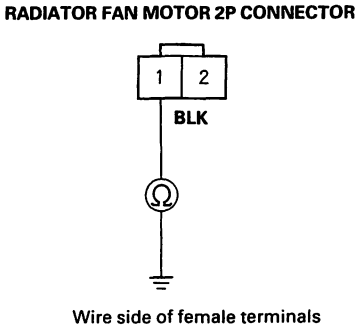

Is there continuity?

YES—Replace the radiator fan motor.■

NO—Check for an open in the wire between radiator fan motor 2P connector terminal No. 1 and body ground. If the wire is OK, check for a poor ground at G201.■

9. Reinstall the radiator fan relay.

10. Disconnect the radiator fan switch 2P connector.

11. Connect the No. 1 and No. 2 terminals, of the radiater fan switch 2P connector with a jumper wire.

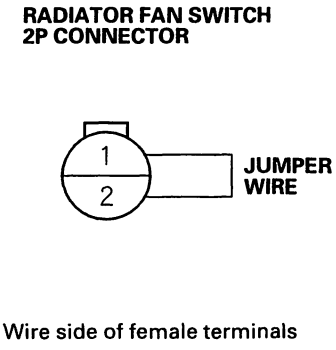

Does the radiator fan run?

YES—Replace the radiator fan switch.■

NO—Go to step 12.

12. Remove the jumper wire, and measure the voltage between the No. 2 terminal of the radiator fan switch connector and body ground.

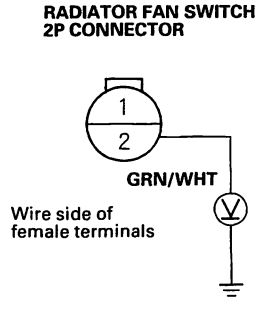

Is there battery voltage?

YES—Check for an open in the wire between radiator fan switch 2P connector terminal No. 1 and body ground. If the wire is OK, check for a poor ground at G302.■

NO—Repair open in the wire between the radiator fan switch terminal No. 2 and the under-hood fuse/relay box.■

BACK

Radiator Fan Switch Circuit Troubleshooting (Open)

1. Disconnect the radiator fan switch 2P connector.

2. Turn the ignition switch ON (II).

3. Measure voltage between the No. 2 terminal of the radiator fan switch 2P connector and body ground.

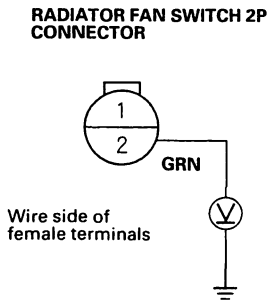

Is there battery voltage?

YES—Go to step 4.

NO—Repair open in the wire between the radiator fan switch 2P connector terminal No. 2 and under-hood fuse/relay box. ■

4. Turn the ignition switch OFF, and check for continuity between the No. 1 terminal of the radiator fan switch 2P connector and body ground.

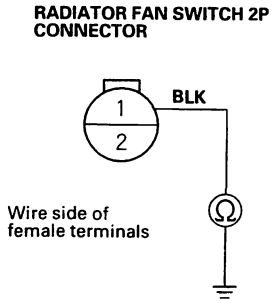

Is there continuity?

YES—Replace the radiator fan switch. ■

NO—Check for an open in the wire between the radiator fan switch 2P connector terminal No. 1 and body ground. If the wire is OK, check for a poor ground at G201. ■

Radiator Fan Switch Circuit Troubleshooting (Short)

1. Remove the radiator fan relay from the under-hood fuse/relay box, and test it (see page 22-52).

   Is the relay OK?

   YES—Go to step 2.

   NO—Replace the radiator fan relay. ■

2. Remove the radiator fan switch, and test it (see page 10-22).

   Is the radiator fan switch OK?

   YES—Go to step 3.

   NO—Replace the radiator fan switch. ■

3. Disconnect ECM/PCM connector B (24P) and the under-hood fuse relay box 14P connector.

4. Check for continuity between the No. 2 terminal of the radiator fan switch 2P connector and body ground.

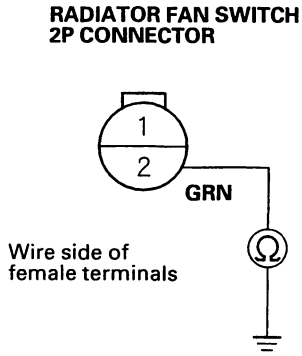

Is there continuity?

YES—Repair short in the wire between the radiator fan switch 2P connector terminal No. 2 and under-hood fuse/relay box. ■

NO—Replace the under-hood fuse/relay box. ■

Radiator Fan Switch Test

NOTE: Bleed air from the cooling system after installing the radiator fan switch (see page 10-10).

1. Remove the radiator fan switch from the thermostat cover (see page 10-2).

2. Suspend the radiator fan switch (A) in a container of water as shown.

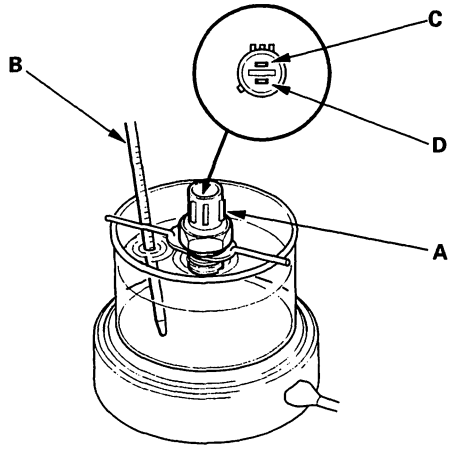

3. Heat the water and check the temperature with a thermometer. Do not let the thermometer (B) touch the bottom of hot container.

4. Measure the continuity between the A terminal (C) and B terminal (D) according to the table.

Operation		Temperature \ Terminal	A	B
SWITCH	ON	196°—203°F (91°—95°C)	○	○
	OFF	5°—15°F (3°—8°C) lower than the temperature when it goes on		

BACK

Fuel and Emissions

Fuel and Emissions Systems
Special Tools 11-2
General Troubleshooting Information 11-3
DTC Troubleshooting Index 11-6
Symptom Troubleshooting 11-9
System Descriptions 11-10
How to Set Readiness Codes .. 11-42

PGM-FI System
Component Location Index 11-45
DTC Troubleshooting 11-47
MIL Circuit Troubleshooting ... 11-91
DLC Circuit Troubleshooting .. 11-95
Injector Replacement 11-97
HO2S and A/F Sensor Replacement 11-99

Idle Control System
Component Location Index 11-100
DTC Troubleshooting 11-101
A/C Signal Circuit Troubleshooting 11-104
Alternator FR Signal Circuit Troubleshooting 11-106
Starter Switch Signal Circuit Troubleshooting 11-107
PSP Switch Signal Circuit Troubleshooting 11-108
Brake Pedal Position Switch Signal Circuit Troubleshooting 11-109
Idle Speed Adjustment 11-110

Fuel Supply System
Component Location Index 11-111
PGM-FI Main Relay Circuit Troubleshooting 11-112
Fuel Pressure Relieving 11-115
Fuel Pressure Test 11-115
Fuel Pump Test 11-117
Fuel Line Inspection 11-118
Fuel Tube/Quick-Connect Fittings Precautions 11-120
Fuel Tube/Quick-Connect Fittings Removal 11-120
Fuel Tube/Quick-Connect Fittings Installation 11-121
Fuel Pressure Regulator Replacement 11-123
Fuel Filter Replacement 11-123
Fuel Pump Replacement 11-124
Fuel Tank Replacement 11-125
Fuel Gauge Test 11-128
Fuel Gauge Sending Unit Test/Replacement 11-129
Low Fuel Indicator Light Test 11-130

Intake Air System
Component Location Index 11-131
Throttle Body Test 11-132
Intake Air Bypass Control Valve Test 11-132
Air Cleaner Element Replacement 11-133
Throttle Cable Adjustment 11-134
Throttle Body Removal/ Installation 11-135
Throttle Body Disassembly/ Reassembly 11-136

Catalytic Converter System
DTC Troubleshooting 11-137

EGR System
DTC Troubleshooting 11-138

PCV System
PCV Valve Inspection and Test 11-143

EVAP System
Component Location Index 11-144
DTC Troubleshooting 11-145
EVAP Two Way Valve Test 11-159
Fuel Tank Vapor Control Valve Test 11-160
Fuel Tank Vapor Control Valve Replacement 11-162

Special Tools

Ref. No.	Tool Number	Description	Qty
①	A973X-041-XXXXX	Vacuum Pump/Gauge, 0 – 30 in. Hg	1
②	07JAZ-001000B	Vacuum/Pressure Gauge, 0 – 4 in. Hg	1
③	07SAZ-001000A	Backprobe Set	2
④	07VAJ-0040100	Fuel Pressure Gauge Attachment	1
⑤	07406-0040001	Fuel Pressure Gauge	1

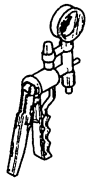

①

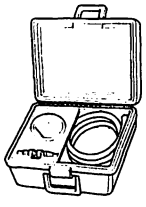

②

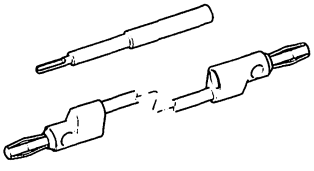

③

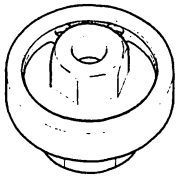

④

⑤

BACK

General Troubleshooting Information

Intermittent Failures

The term "intermittent failure" means a system may have had a failure, but it checks OK now. If the Malfunction Indicator Lamp (MIL) on the dash does not come on, check for poor connections or loose wires at all connectors related to the circuit that you are troubleshooting.

Opens and Shorts

"Open" and "Short" are common electrical terms. An open is a break in a wire or at a connection. A short is an accidental connection of a wire to ground or to another wire. In simple electronics, this usually means something won't work at all. With complex electronics such as ECMs/PCMs, this can sometimes mean something works, but not the way it's supposed to.

How to Use the PGM Tester or a Scan Tool

If the MIL (Malfunction Indicator Lamp) has come on

1. Start the engine and check the MIL.

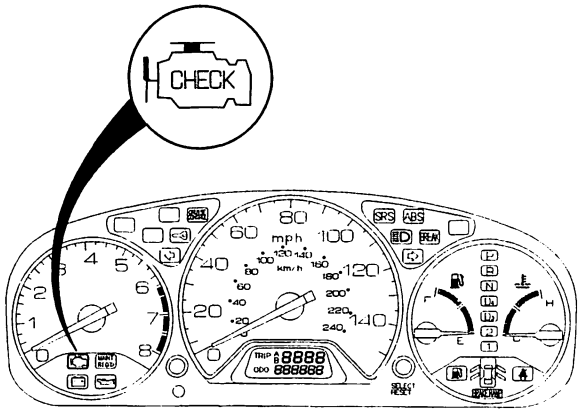

2. If the MIL stays on, connect the Honda PGM Tester (A) or an OBDII scan tool to the Data Link Connector (DLC) (B) located under the driver's side of the dashboard.

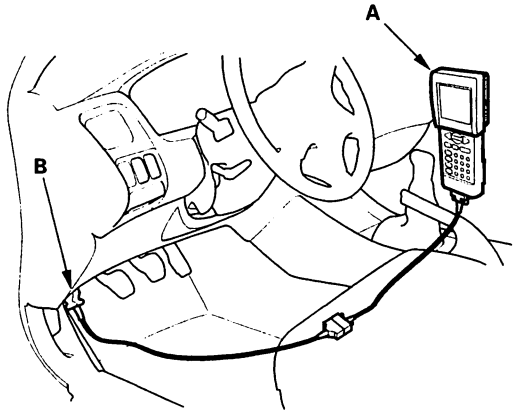

3. Turn the ignition switch ON (II).

4. Check the Diagnostic Trouble Code (DTC) and note it. Then also check the freeze data. Refer to the DTC Troubleshooting Index and begin the appropriate troubleshooting procedure.

   NOTE:
   - Freeze data indicates the engine conditions when the first malfunction, misfire, or fuel trim malfunction was detected.
   - The scan tool and the Honda PGM tester can read the DTC, freeze data, current data, and other Engine Control Module (ECM)/Powertrain Control Module (PCM) data.
   - For specific operations, refer to the user's manual that came with the scan tool or PGM Tester.

If the MIL did not come on
If the MIL did not come on but there is a driveablility problem, refer to the Symptom Troubleshooting index in this section.

If you can't duplicate the DTC
Some of the troubleshooting in this section requires you to reset the ECM/PCM and try to duplicate the DTC. If the problem is intermittent and you can't duplicate the code, do not continue through the procedure. To do so will only result in confusion and, possibly, a needlessly replaced ECM/PCM.

(cont'd)

General Troubleshooting Information (cont'd)

How to Reset the ECM/PCM

You can reset the ECM/PCM in either of two ways:

- Use the OBD II scan tool or Honda PGM Tester to clear the ECM/PCM memory.
  See the OBD II scan tool or Honda PGM Tester user's manuals for specific instructions.
- Turn the ignition switch OFF, and remove the No.13 CLOCK BACKUP fuse (7.5A) (A) from the passenger's under-dash fuse/relay box (B) for 10 seconds.

  NOTE: If the No. 13 CLOCK BACK UP (7.5A) fuse is removed and engine is started, the MIL will come on and the PCM will store DTC P0560 (F23A4 engine).

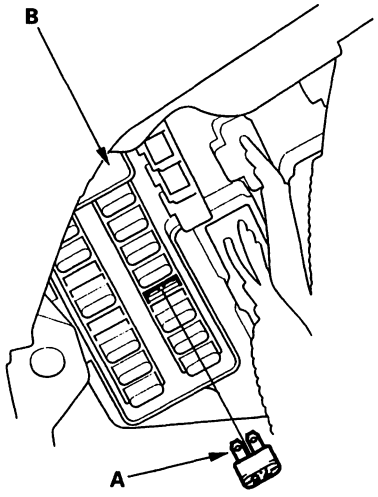

How to End a Troubleshooting Session (required after any troubleshooting)

1. Reset the ECM/PCM as described above.

2. Turn the ignition switch OFF.

3. Disconnect the OBD II scan tool or Honda PGM Tester from the DLC.

   NOTE: The ECM/PCM is part of the immobilizer system. If you replace the ECM/PCM, it will have a different immobilizer code. In order for the engine to start, you must rewrite the immobilizer code with the Honda PGM Tester.

How to Remove the ECM/PCM for Testing

If the inspection for a trouble code requires voltage or resistance checks at the ECM/PCM connectors, remove the ECM/PCM and test it:

1. Pull back the carpet from the passenger's and driver's side of the center console to expose the ECM/PCM.

2. Remove the two bolts (4 cylinder model), or three bolts (V6 model) from the ECM/PCM (A).

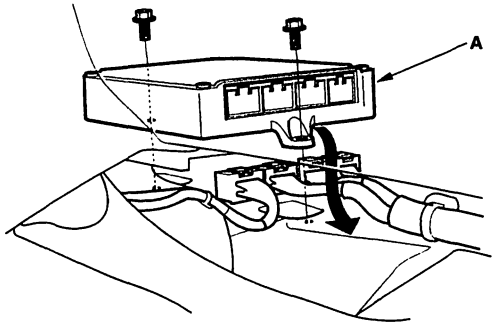

BACK

How to Troubleshoot Circuits at the ECM/PCM

Special Tools Required
- Digital Multimeter KS-AHM-32-003 (1) or a commercially available digital multimeter
- Backprobe Set 07SAZ-001000A (2)

1. Connect the backprobe adapters (A) to the stacking patch cords (B), and connect the cords to a multimeter (C).

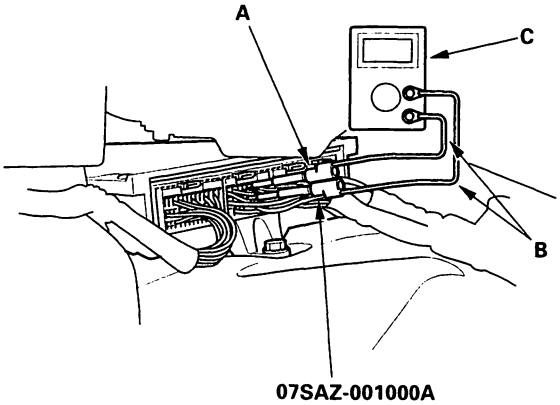

07SAZ-001000A

2. Using the wire insulation as a guide for the contoured tip of the backprobe adapter, gently slide the tip into the connector from the wire side until it touches the end of the wire terminal.

3. If you cannot get to the wire side of the connector or the wire side is sealed (A), disconnect the connector and probe the terminals (B) from the terminal side. Do not force the probe into the connector.

NOTICE
Do not puncture the insulation on a wire. Punctures can cause poor or intermittent electrical connections.

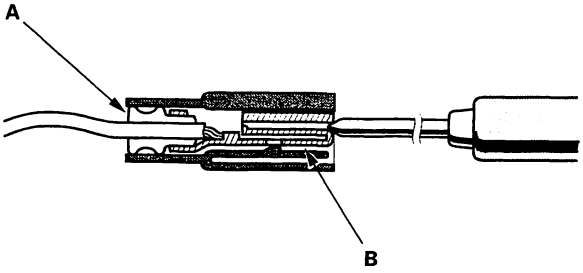

How to substitute the ECM/PCM for testing purposes

Use this procedure if you need a known-good ECM/PCM to test a vehicle. It allows you to swap an ECM/PCM from a "donor" vehicle without having to program it to the test vehicle's ignition key.

1. Cut a temporary ignition key for the test vehicle with a non-immobilizer key blank.

2. Remove the ECM/PCM from the test vehicle.

3. Write the test vehicle's VIN on the ECM/PCM you just removed to avoid confusing it with the donor vehicle's ECM/PCM.

4. Remove the known-good ECM/PCM from the donor vehicle, and install it in the test vehicle.

5. Tape the donor vehicle's ignition key head-to-head to the test vehicle's temporary key (A). The ECM/PCM will recognize the code from the donor vehicle's key (B) and allow you to start the engine with the temporary key.

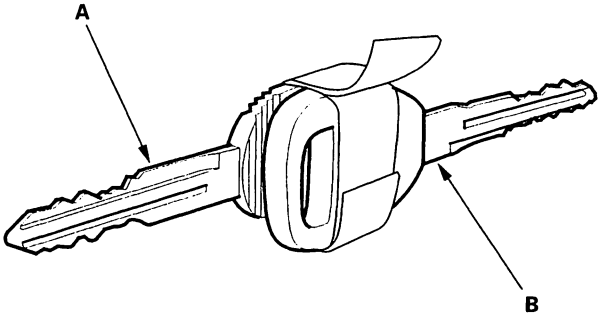

6. After completing your tests, reinstall both ECMs/PCMs, and destroy the temporary key.

DTC Troubleshooting Index

DTC (MIL indication *)	Temporary DTC	Detection Item	Note
P0107 (3)	———	Manifold Absolute Pressure (MAP) Circuit Low Voltage	(see page 11-47)
P0108 (3)	———	Manifold Absolute Pressure (MAP) Circuit High Voltage	(see page 11-48)
P0112 (10)	———	Intake Air Temperature (IAT) Circuit Low Voltage	(see page 11-50)
P0113 (10)	———	Intake Air Temperature (IAT) Circuit High Voltage	(see page 11-51)
P0116 (86)	P0116	Engine Coolant Temperature (ECT) Sensor Circuit Range/Performance Problem	(see page 11-52)
P0117 (6)	———	Engine Coolant Temperature (ECT) Sensor Circuit Low Voltage	(see page 11-52)
P0118 (6)	———	Engine Coolant Temperature (ECT) Sensor Circuit High Voltage	(see page 11-53)
P0122 (7)	———	Throttle Position (TP) Sensor Circuit Low Voltage	(see page 11-54)
P0123 (7)	———	Throttle Position (TP) Sensor Circuit High Voltage	(see page 11-57)
P0128*3,*7 (87)	P0128	Cooling System Malfunction	(see page 11-58)
P0131*5 (1)	P0130	Primary Heated Oxygen Sensor (Primary HO2S) (Sensor 1) Circuit Low Voltage	(see page 11-59)
P0132*5 (1)	P0130	Primary Heated Oxygen Sensor (Primary HO2S) (Sensor 1) Circuit High Voltage	(see page 11-60)
P0133*5 (61)	P0133*5	Primary Heated Oxygen Sensor (Primary HO2S) (Sensor 1) Slow Response	(see page 11-61)
P0135*5 (41)	———	Primary Heated Oxygen Sensor (Primary HO2S) (Sensor 1) Heater Circuit Malfunction	(see page 11-67)
P0137 (63)	P0136	Secondary Heated Oxygen Sensor (Secondary HO2S) (Sensor 2) Circuit Low Voltage	F23A4 SULEV engine: (see page 11-63), Except F23A4 SULEV engine: (see page 11-62)
P0138 (63)	P0136	Secondary Heated Oxygen Sensor (Secondary HO2S) (Sensor 2) Circuit High Voltage	F23A4 SULEV engine: (see page 11-65), Except F23A4 SULEV engine: (see page 11-64)
P0139 (63)	P0136	Secondary Heated Oxygen Sensor (Secondary HO2S) (Sensor 2) Slow Response	(see page 11-66)
P0141 (65)	———	Secondary Heated Oxygen Sensor (Secondary HO2S) (Sensor 2) Heater Circuit Malfunction	(see page 11-67)
P0171 (45)	P0170	Fuel System Too Lean	(see page 11-69)
P0172 (45)	P0170	Fuel System Too Rich	(see page 11-69)
P0300 and some of P0301 (71) P0302 (72) P0303 (73) P0304 (74)	P1399	Random Misfire	(see page 11-70)
P0301 (71) P0302 (72) P0303 (73) P0304 (74)	P1399	No. 1 Cylinder Misfire No. 2 Cylinder Misfire No. 3 Cylinder Misfire No. 4 Cylinder Misfire	(see page 11-71)

*: These DTCs are indicated by a blinking Malfunction Indicator Lamp (MIL) when the SCS service signal line is jumped with the Honda PGM Tester.
**: The D4 indicator light and the MIL may come on simultaneously.
*1: M/T
*2: A/T
*3: F23A4 engine
*4: F23A1 engine
*5: F23A1, F23A5 engine
*6: '00 model
*7: '01-02 models

BACK

DTC (MIL indication *)	Temporary DTC	Detection Item	Note
P0325 (23)	———	Knock Sensor (KS) Circuit Malfunction	(see page 11-72)
P0335 (4)	———	Crankshaft Position (CKP) Sensor Circuit No signal	(see page 11-73)
P0336 (4)	———	Crankshaft Position (CKP) Sensor Intermittent Interruption	(see page 11-73)
P0401 (80)	P0401	Exhaust Gas Recirculation (EGR) Insufficient Flow	(see page 11-138)
P0420 (67)	———	Catalyst System Efficiency Below Threshold	(see page 11-137)
P0451*6 (91)	P0451	Fuel Tank Pressure (FTP) Sensor Range/Performance Problem	(see page 11-145)
P0452 (91)	P0450	Fuel Tank Pressure (FTP) Sensor Circuit Low Voltage	(see page 11-146)
P0453 (91)	P0450	Fuel Tank Pressure (FTP) Sensor Circuit High Voltage	(see page 11-147)
P0500*1 (17)	———	Vehicle Speed Sensor (VSS) Circuit Malfunction	(see page 11-75)
P0505 (14)	P0505	Idle Control System Malfunction	(see page 11-101)
P0560*3 (34)	———	ECM/PCM Back up Circuit Low Voltage	(see page 11-76)
P07xx*2,** (70)	———	Automatic Transaxle	Refer to the Automatic Transmission DTC Troubleshooting Index
P1106 (13)	P1106	Barometric Pressure (BARO) Sensor Range/ Performance Problem	(see page 11-77)
P1107 (13)	———	Barometric Pressure (BARO) Sensor Circuit Low Voltage	(see page 11-77)
P1108 (13)	———	Barometric Pressure (BARO) Sensor Circuit High Voltage	(see page 11-77)
P1121 (7)	P1121	Throttle Position (TP) Sensor Lower Than Expected	(see page 11-56)
P1122 (7)	P1122	Throttle Position (TP) Sensor Higher Than Expected	(see page 11-56)
P1128 (5)	P1128	Manifold Absolute Pressure (MAP) Sensor Lower Than Expected	(see page 11-49)
P1129 (5)	P1129	Manifold Absolute Pressure (MAP) Sensor Higher Than Expected	(see page 11-49)
P1149*8 (61)	P1149*3	Air Fuel Ratio (A/F) Sensor (Sensor 1) Range/ Performance Problem	(see page 11-78)
P1162*3 (48)	———	Air Fuel Ratio (A/F) Sensor (Sensor 1) Circuit Malfunction	(see page 11-79)
P1163*3 (61)	P1163*3	Air Fuel Ratio (A/F) Sensor (Sensor 1) Slow Response	(see page 11-61)
P1164*3 (61)	P1164*3	Air Fuel Ratio (A/F) Sensor (Sensor 1) Range/ Performance Problem	(see page 11-80)
P1165*8 (61)	P1165*3	Air Fuel Ratio (A/F) Sensor (Sensor 1) Range/ Performance Problem	(see page 11-78)
P1166*3 (41)	———	Air Fuel Ratio (A/F) Sensor (Sensor 1) Heater Circuit Malfunction	(see page 11-81)
P1167*3 (41)	———	Air Fuel Ratio (A/F) Sensor (Sensor 1) Heater System Malfunction	(see page 11-83)

*: These DTCs are indicated by a blinking Malfunction Indicator Lamp (MIL) when the SCS service signal line is jumped with the Honda PGM Tester.
**: The D4 indicator light and the MIL may come on simultaneously.
*1: M/T
*2: A/T
*3: F23A4 engine
*4: F23A1 engine
*5: F23A1, F23A5 engine
*6: '00 model
*7: '01-02 models
*8: F23A4 ULEV engine

(cont'd)

DTC Troubleshooting Index (cont'd)

DTC (MIL indication *)	Temporary DTC	Detection Item	Note
P1259*3,*4 (22)	———	VTEC System Malfunction	(see page 6-7)
P1297 (20)	———	Electrical Load Detector (ELD) Circuit Low Voltage	(see page 11-84)
P1298 (20)	———	Electrical Load Detector (ELD) Circuit High Voltage	(see page 11-85)
P1359 (8)	———	Crankshaft Position (CKP)/Top Dead Center (TDC) Sensor Circuit Malfunction	(see page 11-87)
P1361 (8)	———	Top Dead Center (TDC) Sensor Intermittent Interruption	(see page 11-73)
P1362 (8)	———	Top Dead Center (TDC) Sensor No Signal	(see page 11-73)
P1381 (9)	———	Cylinder Position (CYP) Sensor Intermittent Interruption	(see page 11-88)
P1382 (9)	———	Cylinder Position (CYP) Sensor No Signal	(see page 11-88)
P1456 (90)	P1456	Evaporative Emission (EVAP) Control System Leakage (Fuel Tank System)	(see page 11-149)
P1457 (90)	P1457	Evaporative Emission (EVAP) Control System Leakage (EVAP Canister System)	(see page 11-152)
P1486*6 (87)	P1486	Cooling System Malfunction	(see page 11-58)
P1491 (12)	P1491	Exhaust Gas Recirculation (EGR) Valve Insufficient Lift	(see page 11-138)
P1498 (12)	———	Exhaust Gas Recirculation (EGR) Valve Position Sensor Circuit High Voltage	(see page 11-142)
P1519 (14)	———	Idle Air Control (IAC) Valve Circuit Malfunction	(see page 11-102)
P1607 (—)	———	Engine Control Module (ECM)/Powertrain Control Module (PCM) Internal Circuit Malfunction	(see page 11-90)
P17xx*2,** (70)	———	Automatic Transaxle	Refer to the Automatic Transmission DTC Troubleshooting Index

*: These DTCs are indicated by a blinking Malfunction Indicator Lamp (MIL) when the SCS service signal line is jumped with the Honda PGM Tester.
**: The D4 indicator light and the MIL may come on simultaneously.
*1: M/T
*2: A/T
*3: F23A4 engine
*4: F23A1 engine
*5: F23A1, F23A5 engine
*6: '00 model
*7: '01-02 models

BACK

Symptom Troubleshooting Index

These symptoms DO NOT trigger Diagnostic Trouble Codes (DTCs) and cause the Malfunction Indicator Lamp (MIL) to come on. If the MIL is reported on, check for DTCs. If the vehicle has one of these symptoms, do the diagnostic procedure for it, in the sequence listed, until you find the cause.

Symptom	Diagnostic procedure	Also check for
Engine will not start (MIL works OK, no DTCs set)	1. Test the battery (see page 22-51) 2. Test the starter (see page 4-5) 3. Test the fuel pump (see page 11-117) 4. Test the ignition wires (see page 4-25) 5. Test the ignition coil (see page 4-24) 6. Check the ICM (ignition control module) inputs (see page 4-23) 7. Troubleshoot the PGM-FI main relay circuit (see page 11-112)	• Low compression • No ignition spark • Intake air leaks • Locked up engine • Slipped/ broken timing belt • Contaminated fuel
Engine will not start (MIL comes on and stays on, or never comes on at all, no DTCs set)	Troubleshoot the MIL circuit (see page 11-91)	
Engine will not start (immobilizer indicator light comes on)	Troubleshoot the immobilizer system (see page 22-204)	
Hard starting (MIL works OK, no DTCs set)	1. Test the battery (see page 22-51) 2. Check the fuel pressure (see page 11-115) 3. Test the ignition wires (see page 4-25) 4. Test the ignition coil (see page 4-24) 5. Check the ICM (ignition control module) inputs (see page 4-24)	• Low compression • Intake air leaks • Contaminated fuel • Weak ignition spark
Cold fast idle too low (MIL works OK, no DTCs set)	Check/adjust the idle speed (see page 11-110)	
Cold fast idle too high (MIL works OK, no DTCs set)	1. Check/adjust the idle speed (see page 11-110) 2. Inspect/adjust the throttle cable (see page 11-134) 3. Inspect and test the throttle body (see page 11-132)	
Idle speed fluctuates (MIL works OK, no DTCs set)	1. Check/adjust the idle speed (see page 11-110) 2. Inspect/adjust the throttle cable (see page 11-134) 3. Inspect and test the throttle body (see page 11-132)	Intake air leaks
Low power (MIL works OK, no DTCs set)	1. Check the fuel pressure (see page 11-115) 2. Inspect and test the throttle body (see page 11-132) 3. Inspect/adjust the throttle cable (see page 11-134)	Low compression
Engine stalls (MIL works OK, no DTCs set)	1. Check the fuel pressure (see page 11-115) 2. Test the ignition wires (see page 4-25) 3. Check/adjust the idle speed (see page 11-110) 4. Troubleshoot the brake pedal position switch signal circuit (see page 11-109)	• Intake air leaks • Faulty harness and sensor connections
Difficult to refuel (MIL works OK, no DTCs set)	1. Test the fuel tank vapor control valve (see page 11-160) 2. Inspect the fuel tank vapor control signal tube between the fuel pipe and the fuel tank vapor control valve 3. Inspect the fuel tank vapor vent tube between the EVAP canister and the fuel tank vapor control valve 4. Check the EVAP canister (see page 11-138)	Malfunctioning gas station filling nozzle
Fuel overflows during refueling (No DTCs set)	Replace the fuel tank vapor control valve (see page 11-162)	Malfunctioning gas station filling nozzle

System Descriptions

Electronic Control System

The functions of the fuel and emission control systems are managed by the engine control module (ECM) on vehicles with manual transmissions or the powertrain control module (PCM) on vehicles with automatic transmissions.

Fail-safe Function
When an abnormality occurs in the signal from a sensor, the ECM/PCM ignores that signal and assumes a pre-programmed value for that sensor that allows the engine to continue to run.

Back-up Function
When an abnormality occurs in the ECM/PCM, the injectors are controlled by a back-up circuit independent of the system in order to permit minimal driving.

Self-diagnosis
When an abnormality occurs in the signal from a sensor, the ECM/PCM supplies ground for the Malfunction Indicator Lamp (MIL) and stores the Diagnostic Trouble Code (DTC) in erasable memory. When the ignition is first turned on, the ECM/PCM supplies ground to the MIL for 2 seconds ('98-01 models) or 15 to 20 seconds ('02 models) to check the MIL bulb condition.

Two Driving Cycle Detection Method
To prevent false indications, the "two driving cycle detection method" is used for some self-diagnostic functions. When an abnormality occurs, the ECM/PCM stores it in its memory. When the same abnormality recurs after the ignition switch is turned OFF and ON (II) again, the ECM/PCM turns on the MIL.

BACK

ECM/PCM Data

You can retrieve data from the ECM/PCM by connecting the OBD II scan tool or the Honda PGM Tester to the data link connector (DLC). The items listed in the table below conform to SAE recommended practice. The Honda PGM Tester also reads data beyond that recommended by SAE to help you find the causes of intermittent problems.

NOTE:
- The "operating values" listed are approximate and may vary depending on the environment and the individual vehicle.
- Unless noted otherwise, "at idle speed" means idling with the engine completely warmed up, A/T in park or neutral, M/T in neutral position, and the A/C and all accessories turned off.

Data	Description	Operating Value	Freeze Data
Diagnostic Trouble Code (DTC)	If the ECM/PCM detects a problem, it will store it as a code consisting of one letter and four numbers. Depending on the problem, as SAE-defined code (P0xxx) or a Honda-defined code (P1xxx) will be output to the tester.	If no problem is detected, there is no output.	YES
Engine Speed	The ECM/PCM computes engine speed from the signals sent from the Crankshaft Position sensor. This data is used for determining the time and amount of fuel injection.	Nearly the same as tachometer indication At idle speed: 700±50 rpm	YES
Vehicle Speed	The ECM/PCM converts pulse signals from the Vehicle Speed Sensor (VSS) (M/T) or countershaft speed sensor (A/T) into speed data.	Nearly the same as speedometer indication	YES
Manifold Absolute Pressure (MAP)	The absolute pressure caused in the intake manifold by engine load and speed.	With engine stopped: Nearly the same as atmospheric pressure. At idle speed: about 21 −41 kPa (160−310 mmHg, 6.3−12.2 inHg), 0.7−1.3 V	YES
Engine Coolant Temperature (ECT)	The ECT sensor converts coolant temperature into voltage and signals the ECM/PCM. The sensor is a thermistor with internal resistance that changes with coolant temperature. The ECM/PCM uses the voltage signals from the ECT sensor to determine the amount of injected fuel.	With cold engine: Same as ambient temperature and IAT With engine warmed up: about 158−212°F (70−100°C) 0.5 to 0.7 Volts	YES
Heated Oxygen Sensor (HO2S) (Primary, Sensor 1) (Secondary, Sensor 2)	The Heated Oxygen Sensor detects the oxygen content in the exhaust gas and sends voltage signals to the ECM/PCM. Based on these signals, the ECM/PCM controls the air/fuel ratio. When the oxygen content is high (that is, when the ratio is leaner than the stoichiometric ratio), the voltage signal is lower. When the oxygen content is low (that is, when the ratio is richer than the stoichiometric ratio), the voltage signal is higher.	0.0−1.25 V At idle speed: about 0.1−0.9 V	YES (Primary, Sensor 1 only)
Air Fuel Ratio (A/F) Sensor, (Sensor 1) (F23A4 engine)	The A/F sensor detects the oxygen content in the exhaust gas and sends voltage signals to the ECM/PCM. Based on these signals, the ECM/PCM controls the air/fuel ratio. When the oxygen content is high (that is, when the ratio is leaner than the stoichiometric ratio), the voltage signal is lower. When the oxygen content is low (that is, when the ratio is richer than the stoichiometric ratio), the voltage signal is higher. The A/F sensor signals are electrical current that are indicated as voltage on the scan tool.	0.0−1.25 V At idle speed: about 0.1−0.9 V	NO

(cont'd)

System Descriptions (cont'd)

ECM/PCM Data (cont'd)

Data	Description	Operating Value	Freeze Data
Fuel System Status	Loop status is indicated as "open" or "closed". Closed: Based on the HO2S and/or A/F Sensor output, the ECM/PCM determines the air/fuel ratio and controls the amount of injected fuel. Open: ignoring HO2S or A/F Sensor output, the ECM/PCM refers to signals from the Throttle Position (TP), Manifold Absolute Pressure (MAP), Intake Air Temperature (IAT), Barometric Pressure (BARO), and Engine Coolant Temperature (ECT) sensors to control the amount of injected fuel.	At idle speed: closed	YES
Short Term Fuel Trim	The air/fuel ratio correction coefficient for correcting the amount of injected fuel when the Fuel System Status is "closed". When the ratio is leaner than the stoichiometric ratio, the ECM/PCM increases short term fuel trim gradually, and the amount of injected fuel increases. The air/fuel ratio gradually gets richer, causing a lower oxygen content in the exhast gas. Consequently, the short term fuel trim is lowered, and the ECM/PCM reduces the amount of injected fuel. This cycle keeps the air/fuel ratio close to the stoichiometric ratio when in closed loop status.	1.00±0.20	YES
Long Term Fuel Trim	Long term fuel trim is computed from short term fuel trim and indicates changes occuring in the fuel supply system over a long period. If long term fuel trim is higher than 1.00, the amount of injected fuel must be increased. If it is lower than 1.00, the amount of injected fuel must be reduced.	1.00±0.20	YES
Intake Air Temperature (IAT)	The IAT sensor converts intake air temperature into voltage and signals the ECM/PCM. When intake air temperature is low, the internal resistance of the sensor increases, and the voltage signal is higher.	With cold engine: Same as ambient temperature and ECT	YES
Throttle Position	Based on the accelerator pedal position, the opening angle of the throttle valve is indicated.	At idle speed: approx. 10%	YES
Ignition Timing	Ignition timing is the ignition advance angle set by the ECM/PCM. The ECM/PCM matches ignition timing to the driving conditions.	At idle speed: 12°±2° BTDC with the SCS service signal line is jumped with the Honda PGM Tester	NO
Calculated Load Value (CLV)	CLV is the engine load calculated from the MAP data.	At idle speed: 21−41% At 2,500 rpm with no load: 13−26%	YES

BACK

ECM/PCM Electrical Connections

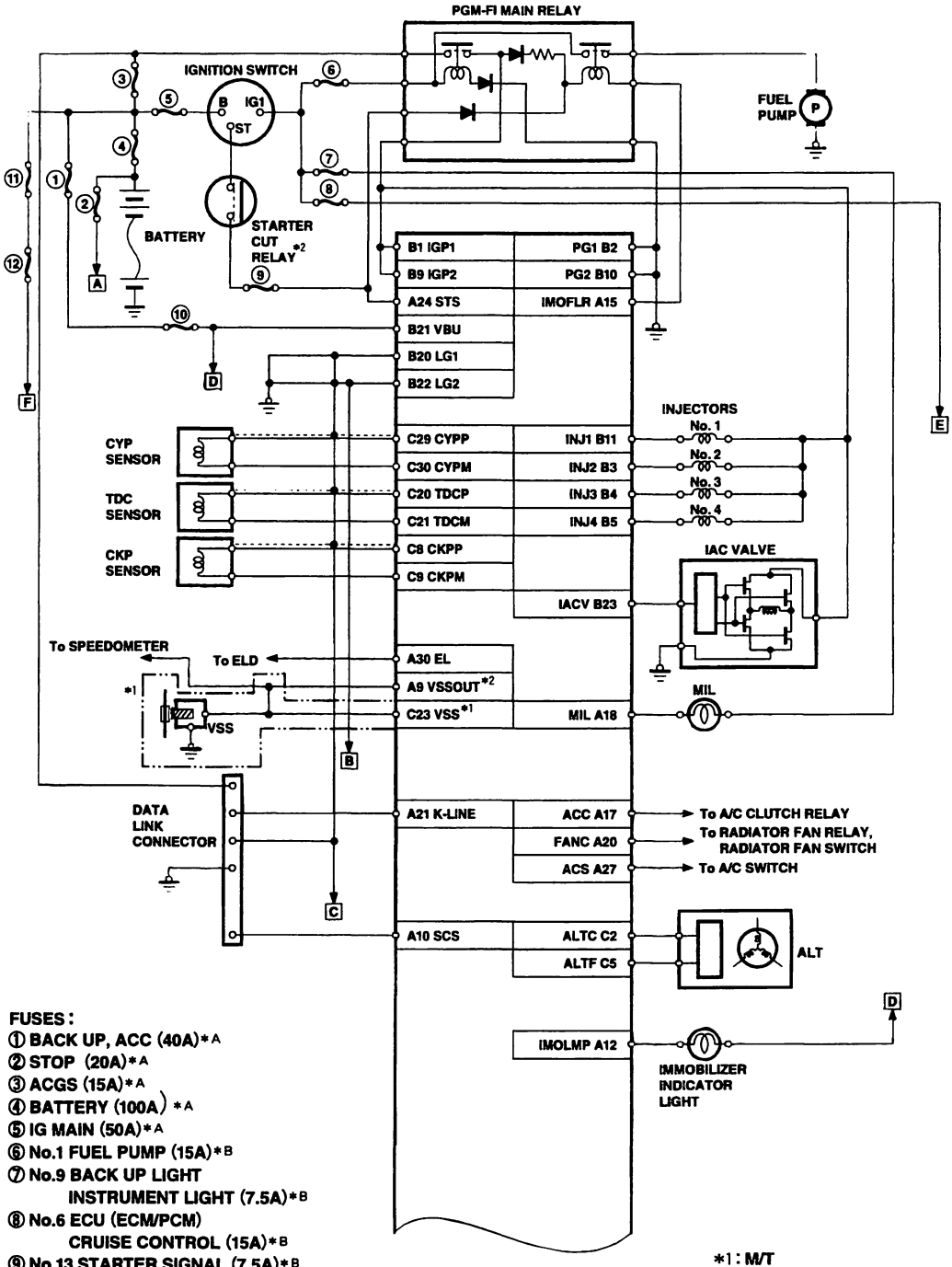

FUSES:

① BACK UP, ACC (40A)*A
② STOP (20A)*A
③ ACGS (15A)*A
④ BATTERY (100A) *A
⑤ IG MAIN (50A)*A
⑥ No.1 FUEL PUMP (15A)*B
⑦ No.9 BACK UP LIGHT
INSTRUMENT LIGHT (7.5A)*B
⑧ No.6 ECU (ECM/PCM)
CRUISE CONTROL (15A)*B
⑨ No.13 STARTER SIGNAL (7.5A)*B
⑩ No.13 CLOCK BACKUP (7.5A)*C
⑪ POWER SEAT (40A)*A
⑫ No.6 LAF HEATER (20A)*C

*A: in the under-hood fuse/relay box
*B: in the under-dash driver's fuse/relay box
*C: in the under-dash passenger's fuse/relay box

*1: M/T
*2: A/T
*3: F23A4 engine
*4: F23A1, F23A4 engine
*5: F23A1, F23A5 engine
*6: '00—02 models

(cont'd)

System Descriptions (cont'd)

ECM/PCM Electrical Connections (cont'd)

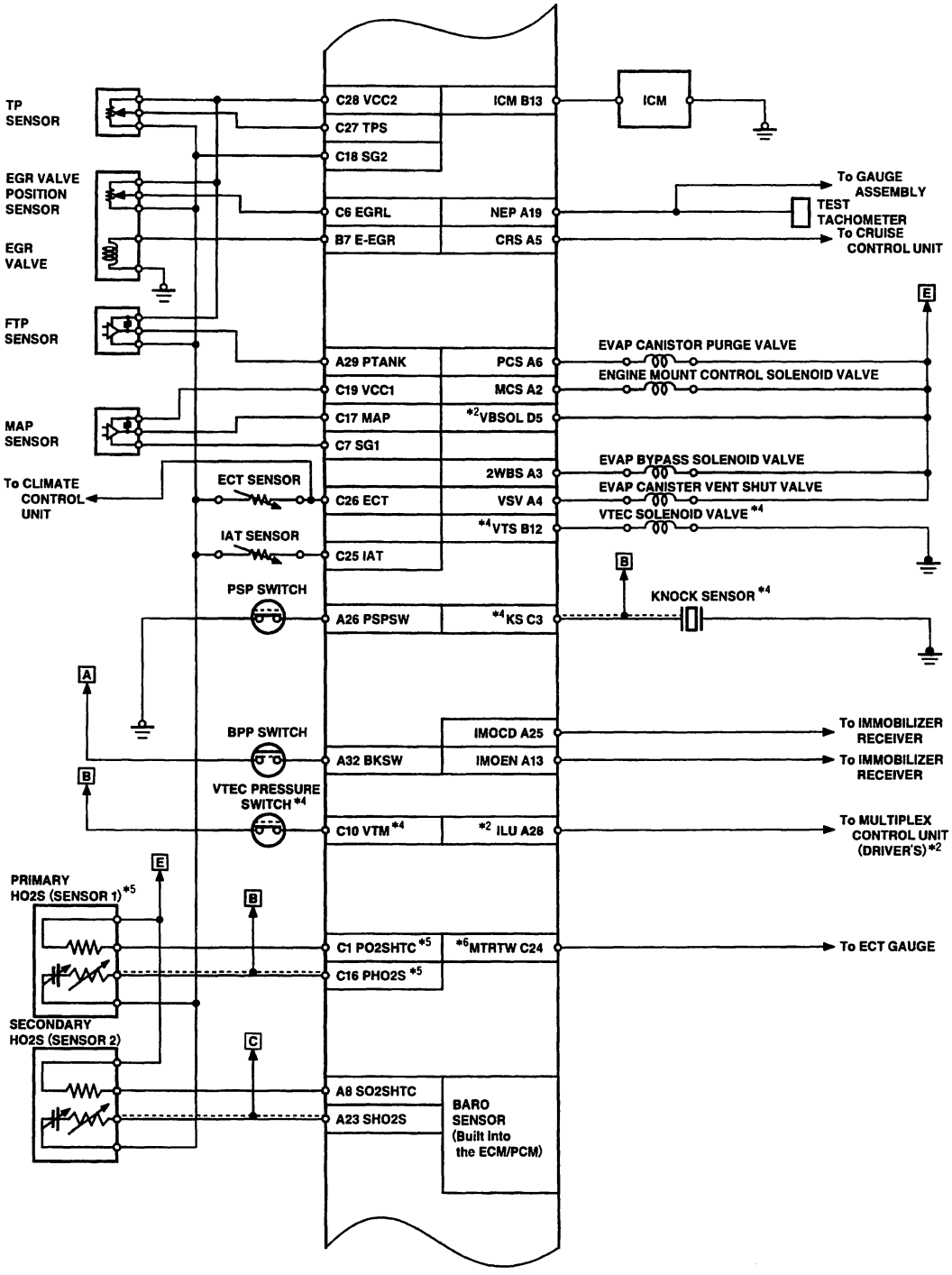

BACK

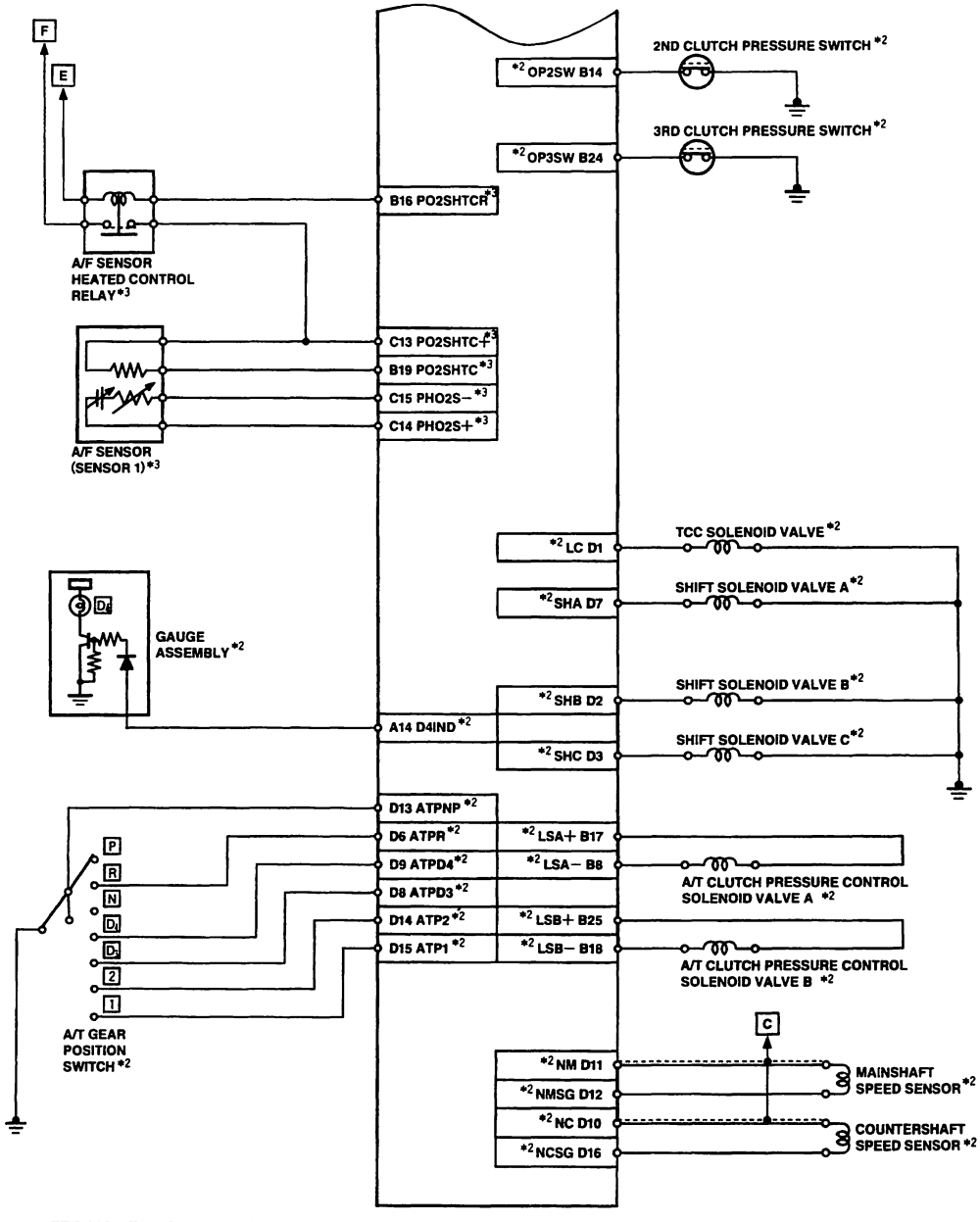

TERMINAL LOCATIONS

(cont'd)

System Descriptions (cont'd)

ECM/PCM Inputs and Outputs at Connector A (32P)

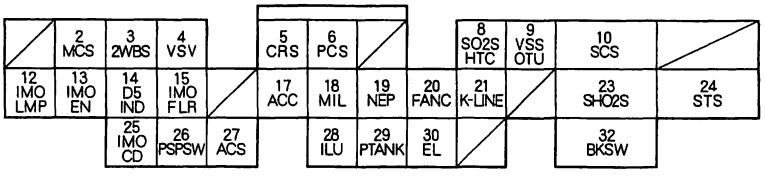

Wire side of female terminals

NOTE: Standard battery voltage is 12 V.

Terminal number	Wire color	Terminal name	Description	Signal
2	GRN/WHT	MCS (ENGINE MOUNT CONTROL SOLENOID VALVE)	Drives engine mount control solenoid valve.	At idle: 0 V Above idle: battery voltage
3	BLU	2WBS (EVAP BYPASS SOLENOID VALVE)	Drives EVAP bypass solenoid valve.	With ignition switch ON (II): battery voltage
4	LT GRN/ WHT	VSV (EVAP CANISTER VENT SHUT VALVE)	Drives EVAP canister vent shut valve.	With ignition switch ON (II): battery voltage
5	BLU/GRN	CRS (CRUISE CONTROL SIGNAL)	Detects cruise control signal.	With ignition switch ON (II): pulses
6	RED/YEL	PCS (CANISTER PURGE VALVE)	Drives EVAP canister purge valve.	With engine running, engine coolant, below 167°F (75°C): battery voltage With engine running, engine coolant, above 167°F (75°C): duty controlled
8	BLK/WHT	SO2SHTC (SECONDARY HEATED OXYGEN SENSOR HEATER CONTROL)	Drives secondary heated oxygen sensor heater.	With ignition switch ON (II): battery voltage With fully warmed up engine running: duty controlled
9*2	BLU/WHT	VSSOUT (VEHICLE SPEED SENSOR OUTPUT SIGNAL)	Sends vehicle speed sensor signal.	Depending on vehicle speed: pulses
10	BRN	SCS (SERVICE CHECK SIGNAL)	Detects service check connector signal (the signal causing a DTC indication).	With the service check signal shorted with the PGM Tester: 0 V With the service check signal opened: about 5 V or battery voltage
12	PNK	IMOLMP (IMMOBILIZER INDICATOR LIGHT)	Drives immobilizer indicator light.	With immobilizer indicator light turned ON: 0 V With immobilizer indicator light turned OFF: battery voltage
13	BLU	IMOEN (IMMOBILIZER ENABLE SIGNAL)	Sends immobilizer enable signal.	
14*2	GRN/BLK	D4IND (D4 INDICATOR)	Drives D4 indicator light.	With D4 indicator light turned ON: 0 V With D4 indicator light turned OFF: battery voltage
15	GRN/YEL	IMO FLR (IMMOBILIZER FUEL PUMP RELAY)	Drives fuel pump relay.	0 V for two seconds after turning ignition switch ON (II), then battery voltage
17	RED	ACC (A/C CLUTCH RELAY)	Drives A/C clutch relay.	With compressor ON: 0 V With compressor OFF: battery voltage
18	GRN/ORN	MIL (MALFUNCTION INDICATOR LIGHT)	Drives MIL.	With MIL turned ON: 0 V With MIL turned OFF: battery voltage
19	BLU	NEP (ENGINE SPEED PULSE)	Outputs engine speed pulse.	With engine running: pulses
20	GRN	FANC (RADIATOR FAN CONTROL)	Drives radiator fan relay.	With radiator fan running: 0 V With radiator fan stopped: battery voltage

*1: M/T
*2: A/T
*3: F23A4 engine
*4: F23A1, F23A4 engine

BACK

ECM/PCM Inputs and Outputs at Connector A (32P)

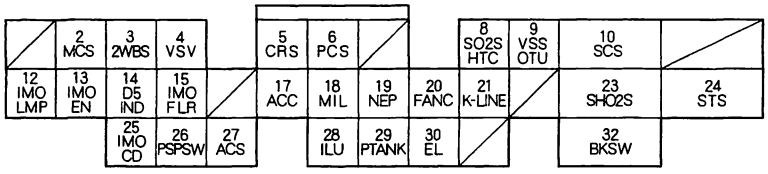

Wire side of female terminals

NOTE: Standard battery voltage is 12 V.

Terminal number	Wire color	Terminal name	Description	Signal
21	GRY	K-LINE	Sends and receives scan tool signal.	With ignition switch ON (II): battery voltage
23	WHT/RED	SHO2S (SECONDARY HEATED OXYGEN SENSOR, SENSOR 2)	Detects secondary heated oxygen sensor (sensor 2) signal.	With throttle fully opened from idle and fully warmed up engine: above 0.6 V With throttle quickly closed: below 0.4 V
24	BLU/ORN	STS (STARTER SWITCH SIGNAL)	Detects starter switch signal.	With starter switch ON (III): battery voltage With starter switch OFF: 0 V
25	RED	IMOCD (IMMOBILIZER CODE)	Detects immobilizer signal.	
26	GRN	PSPSW (P/S PRESSURE SWITCH SIGNAL)	Detects PSP switch signal.	At idle with steering wheel in straight ahead position: 0 V At idle with steering wheel at full lock: battery voltage
27	BLU/RED	ACS (A/C SWITCH SIGNAL)	Detects A/C switch signal.	With A/C switch ON: 0 V With A/C switch OFF: about 5 V
28*2	WHT/RED	ILU (INTERLOCK CONTROL UNIT)	Drives interlock control unit.	With ignition switch ON (II) and brake pedal pressed: battery voltage
29	LT GRN	PTANK (FUEL TANK PRESSURE (FTP) SENSOR)	Detects FTP sensor signal.	With ignition switch ON (II) and fuel fill cap: opened: about 2.5 V
30	GRN/RED	EL (ELD)	Detects ELD signal.	With parking lights turned on at idle: about 2.5–3.5 V With low beam headlights turned on at idle: about 1.5–2.5 V
32	WHT/BLK	BKSW (BRAKE PEDAL POSITION SWITCH)	Detects brake pedal position switch signal.	With brake pedal released: 0 V With brake pedal pressed: battery voltage

*1: M/T
*2: A/T
*3: F23A4 engine
*4: F23A1, F23A4 engine

(cont'd)

BACK

System Descriptions (cont'd)

ECM/PCM Inputs and Outputs at Connector B (25P)

1 IGP1	2 PG1		3 INJ2	4 INJ3	5 INJ4			7 E-EGR	8 LSA−
9 IGP2	10 PG2	11 INJ1	12 VTS	13 ICM	14 OP 2SW		16 PO2S HTCR	17 LSA+	18 LSB−
19 PO2S HTC	20 LG1		21 VBU	22 LG2		23 IACV	24 OP 3SW	25 LSB+	

Wire side of female terminals

NOTE: Standard battery voltage is 12 V.

Terminal number	Wire color	Terminal name	Description	Signal
1	YEL/BLK	IGP1 (POWER SOURCE)	Power source for the PCM control circuit.	With ignition switch ON (II): battery voltage With ignition switch OFF: 0 V
2	BLK	PG1 (POWER GROUND)	Ground for the ECM/PCM control circuit.	Less than 1.0 V at all times
3	RED	INJ2 (No. 2 INJECTOR)	Drives No. 2 injector.	With ignition switch ON (II): battery voltage With engine running: duty controlled
4	BLU	INJ3 (No. 3 INJECTOR)	Drives No. 3 injector.	
5	YEL	INJ4 (No. 4 INJECTOR)	Drives No. 4 injector.	
7	PNK	E-EGR	Drives EGR valve.	With EGR operation during driving with fully warmed up engine: duty controlled With EGR not operating: 0 V
8*2	WHT	LSA-(A/T CLUTCH PRESSURE CONTROL SOLENOID VALVE A-SIDE)	A/T clutch pressure control solenoid valve A power supply negative electrode	With ignition switch ON (II): duty controlled
9	YEL/BLK	IGP2 (POWER SOURCE)	Power source for the PCM control circuit.	With ignition switch ON (II): battery voltage With ignition switch OFF: 0 V
10	BLK	PG2 (POWER GROUND)	Ground for the ECM/PCM control circuit.	Less than 1.0 V at all times
11	BRN	INJ1 (No.1 INJECTOR)	Drives No.1 injector.	With ignition switch ON (II): battery voltage With engine running: duty controlled
12*4	GRN/YEL	VTS (VTEC SOLENOID VALVE)	Drives VTEC solenoid valve.	With engine at low rpm: 0 V With engine at high rpm: battery voltage
13	YEL/GRN	ICM (IGNITION CONTROL MODULE)	Sends ignition pulse.	With ignition switch ON (II): battery voltage With engine running: pulses
14*2	BLU/BLK	OP2SW (2ND OIL PRESSURE SWITCH)	Detects 2nd oil pressure switch.	With ignition switch ON (II): about 5 V
16*3	GRN/RED	PO2SHTCR (AIR FUEL RATIO SENSOR HEATER CONTROL RELAY)	Drives air fuel ratio sensor heater relay.	With ignition switch ON (II): 0 V
17*2	RED	LSA + (A/T CLUTCH PRESSURE CONTROL SOLENOID VALVE A + SIDE)	A/T clutch pressure control solenoid valve A power supply positive electrode	With ignition switch ON (II): duty controlled
18*2	GRN	LSB - (A/T CLUTCH PRESSURE CONTROL SOLENOID VALVE B−SIDE)	A/T clutch pressure control solenoid valve B power supply negative electrode	With ignition switch ON (II): duty controlled
19*3	BLK/WHT	PO2SHTC (AIR FUEL RATIO SENSOR HEATER CONTROL)	Drives air fuel ratio sensor heater.	With ignition switch ON (II): battery voltage With fully warmed up engine running: 0 V
20	BRN/BLK	LG1 (LOGIC GROUND)	Ground for the ECM/PCM control circuit.	Less than 1.0 V at all times
21	WHT/YEL	VBU (VOLTAGE BACK UP)	Power source for the ECM/PCM control circuit. Power source for the DTC memory.	Battery voltage at all times
22	BRN/BLK	LG2 (LOGIC GROUND)	Ground for the ECM/PCM control circuit.	Less than 1.0 V at all times
23	BLK/BLU	IACV (IDLE AIR CONTROL VALVE)	Drives IAC valve.	With engine running: duty controlled
24*2	BLU/WHT	OP3SW (3RD OIL PRESSURE SWITCH)	Detects 3rd oil pressure switch.	With ignition switch ON (II): about 5 V
25*2	ORN	LSB + (A/T CLUTCH PRESSURE CONTROL SOLENOID VALVE B + SIDE)	A/T clutch pressure control solenoid valve B power supply positive electrode	With ignition switch ON (II): duty controlled

*1: M/T
*2: A/T
*3: F23A4 engine
*4: F23A1, F23A4 engine

BACK

ECM/PCM Inputs and Outputs at connector C (31P)

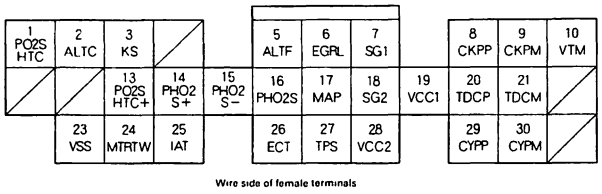

NOTE: Standard battery voltage is 12 V.

Terminal number	Wire color	Terminal name	Description	Signal
1*5	BLK/WHT	PO2SHTC (PRIMARY HEATED OXYGEN SENSOR HEATER CONTROL)	Drives primary heated oxygen sensor heater.	With ignition switch ON (II): battery voltage With fully warmed up engine running: duty controlled
2	WHT/GRN	ALTC (ALTERNATOR CONTROL)	Sends alternator control signal.	With fully warmed up engine running: battery voltage During driving with small electrical load: 0 V
3*4	RED/BLU	KS (KNOCK SENSOR)	Detects KS signal.	With engine knocking: pulses
5	WHT/RED	ALTF (ALTERNATOR FR SIGNAL)	Detects alternator FR signal.	With fully warmed up engine running: 0 V-battery voltage (depending on electrical load)
6	WHT/BLK	EGRL (EXHAUST GAS RECIRCULATION (EGR) VALVE POSITION SENSOR)	Detects EGR valve position sensor signal.	At idle: about 1.2 V
7	GRN/WHT	SG1 (SENSOR GROUND)	Ground for MAP sensor.	Less than 1.0 V at all times
8	BLU	CKPP (CKP SENSOR P SIDE)	Detects CKP sensor.	With engine running: pulses
9	WHT	CKPM (CKP SENSOR M SIDE)	Ground for CKP sensor.	
10*4	BLU/BLK	VTM (VTEC PRESSURE SWITCH SIGNAL)	Detects VTEC pressure switch signal.	With engine at low engine speed: 0 V With engine at high engine speed (vehicle running): battery voltage
13*3	WHT	PO2SHTC+ (AIR FUEL RATIO (A/F) SENSOR HEATER CONTROL + SIDE)	Detects A/F sensor heater voltage.	With ignition switch ON (II): battery voltage
14*3	RED	PHO2S+ (AIR FUEL RATIO (A/F) SENSOR, SENSOR 1+ SIDE)	Detects A/F sensor (sensor 1) signal.	
15*3	BLU	PHO2S− (AIR FUEL RATIO (A/F) SENSOR, SENSOR 1− SIDE)	Detects A/F sensor (sensor 1) signal.	
16*5	WHT	PHO2S (PRIMARY HEATED OXYGEN SENSOR, SENSOR 1)	Detects primary heated oxygen sensor (sensor 1) signal.	With throttle fully opened from idle with fully, warmed up engine: above 0.6 V With throttle quickly closed: below 0.4 V
17	RED/GRN	MAP (MANIFOLD ABSOLUTE PRESSURE SENSOR)	Detects MAP sensor signal.	With ignition switch ON (II): about 3 V At idle: about 1.0 V (depending on engine speed)
18	GRN/BLK	SG2 (SENSOR GROUND)	Sensor ground.	Less than 1.0 V at all times.
19	YEL/RED	VCC1 (SENSOR VOLTAGE)	Power source to MAP sensor.	With ignition switch ON (II): about 5 V With ignition switch OFF: 0 V
20	GRN	TDCP (TDC SENSOR P SIDE)	Detects TDC sensor.	With engine running: pulses
21	RED	TDCM (TDC SENSOR M SIDE)	Ground for TDC sensor.	
23*1	BLU/WHT	VSS (VEHICLE SPEED SENSOR)	Detects VSS signal.	With ignition switch ON (II) and front wheel rotating: cycles 0 V−5 V
24*6	YEL/GRN	MTRTW	Sends engine coolant temperature signal.	With ignition switch ON (II): pules
25	RED/YEL	IAT (INTAKE AIR TEMPERATURE SENSOR)	Detects IAT sensor signal.	With ignition switch ON (II): about 0.1−4.8 V (depending on intake air temperature)
26	RED/WHT	ECT (ENGINE COOLANT TEMPERATURE SENSOR)	Detects ECT sensor signal.	With ignition switch ON (II): about 0.1−4.8 V (depending on engine coolant temperature)
27	RED/BLK	TPS (THROTTLE POSITION SENSOR)	Detects TP sensor signal.	With throttle fully open: about 4.8 V With throttle fully closed: about 0.5 V
28	YEL/BLU	VCC2 (SENSOR VOLTAGE)	Provides sensor voltage.	With ignition switch ON (II): about 5 V With ignition switch OFF: 0 V
29	YEL	CYPP (CYP SENSOR P SIDE)	Detects CYP sensor.	With engine running: pulses
30	BLK	CTPM (CYP SENSOR M SIDE)	Ground for CYP sensor.	

*1: M/T
*2: A/T
*3: F23A4 engine
*4: F23A1, F23A4 engine
*5: F23A1, F23A5 engine
*6: '00-02 models

(cont'd)

System Descriptions (cont'd)

ECM/PCM Inputs and Outputs at Connector D (16P)

1 LC		2 SHB	3 SHC			5 VBSOL
6 AT PR	7 SHA	8 ATPD3	9 ATPD4	10 N C	11 NM	12 NMSG
13 ATPNP	14 ATP2	15 ATP1		16 NCSG		

Wire side of female terminals

NOTE: Standard battery voltage is 12 V.

Terminal number	Wire color	Terminal name	Description	Signal
1*2	YEL	LC (TORQUE CONVERTER CLUTCH (TCC) PRESSURE CONTROL SOLENOID VALVE)	Drives TCC pressure control solenoid valve.	With lock-up ON: battery voltage With lock-up OFF: 0 V
2*2	GRN/WHT	SHB (SHIFT SOLENOID VALVE B)	Drives shift solenoid valve B.	With engine running in 1st, 2nd gears: battery voltage With engine running in 3rd, 4th gears: about 0 V
3*2	GRN	SHC (SHIFT SOLENOID VALVE C)	Drives shift solenoid valve C.	With engine running in 1st and 3rd gears: battery voltage With engine running in 2nd and 4th gears: about 0 V
5*2	BLK/YEL	VBSOL (BATTERY VOLTAGE FOR SOLENOID VALVE)	Power source of solenoid valve.	With ignition switch ON (II): battery voltage
6*2	WHT	ATPR (AT GEAR POSITION SWITCH)	Detects A/T gear position switch signal.	In R position: 0 v In any other position: battery voltage
7*2	BLU/YEL	SHA (SHIFT SOLENOID VALVE A)	Drives shift solenoid valve A.	With engine running in 2nd, 3rd gears: battery voltage With engine running in 1st, 4th gears: about 0 V
8*2	PNK	ATPD3 (AT GEAR POSITION SWITCH)	Detects A/T gear position switch signal.	In D3 position: 0 V In any other position: battery voltage
9*2	YEL	ATPD4 (AT GEAR POSITION SWITCH)	Detects A/T gear position switch signal.	In D4 position: 0 V In any other position: about 5V or battery voltage
10*2	BLU	NC (COUNTERSHAFT SPEED SENSOR)	Detects countershaft speed sensor signals.	With ignition switch ON (II) and front wheels rotating: pulses
11*2	RED	NM (MAINSHAFT SPEED SENSOR)	Detects mainshaft speed sensor signals.	With engine running: pulses
12*2	WHT	NMSG (MAINSHAFT SPEED SENSOR GROUND)	Ground for mainshaft speed sensor.	
13*2	BLU/WHT	ATPNP (AT GEAR POSITION SWITCH)	Detects A/T gear position switch signal.	In Park or Neutral: 0 V In any other position: battery voltage
14*2	BLU	ATP2 (AT GEAR POSITION SWITCH)	Detects A/T gear position switch signal.	In 2nd position: 0 V In any other position: battery voltage
15*2	BRN	ATP1 (AT GEAR POSITION SWITCH)	Detects A/T gear position switch signal.	In 1st position: 0 V In any other position: battery voltage
16*2	GRN	NCSG (COUNTERSHAFT SPEED SENSOR GROUND)	Ground for countershaft speed sensor.	

*1: M/T
*2: A/T
*3: F23A4 engine
*4: F23A1, F23A4 engine

BACK

Vacuum Hose Routing: '98-00 models

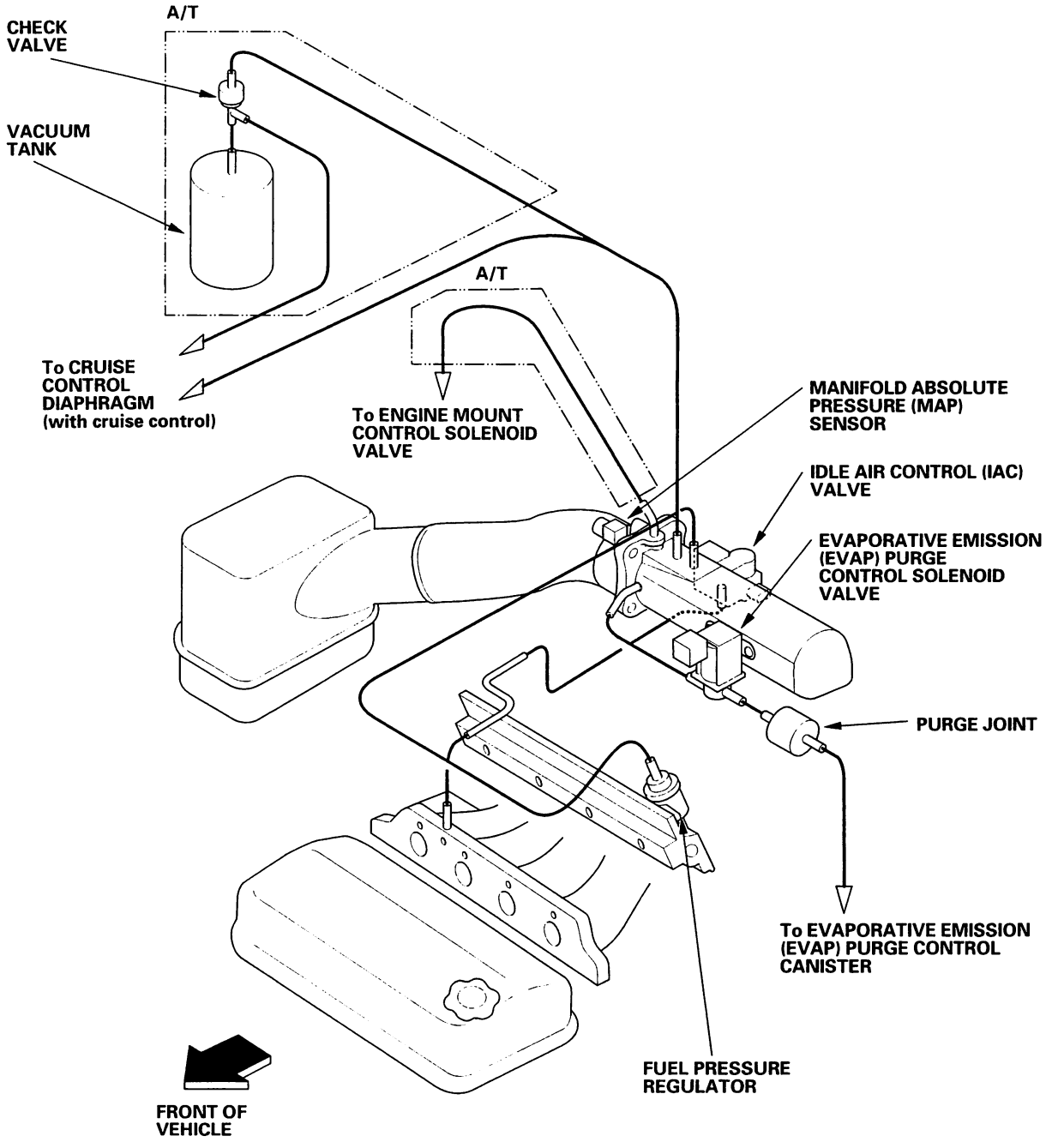

(cont'd)

System Descriptions (cont'd)

Vacuum Hose Routing: '01-02 models

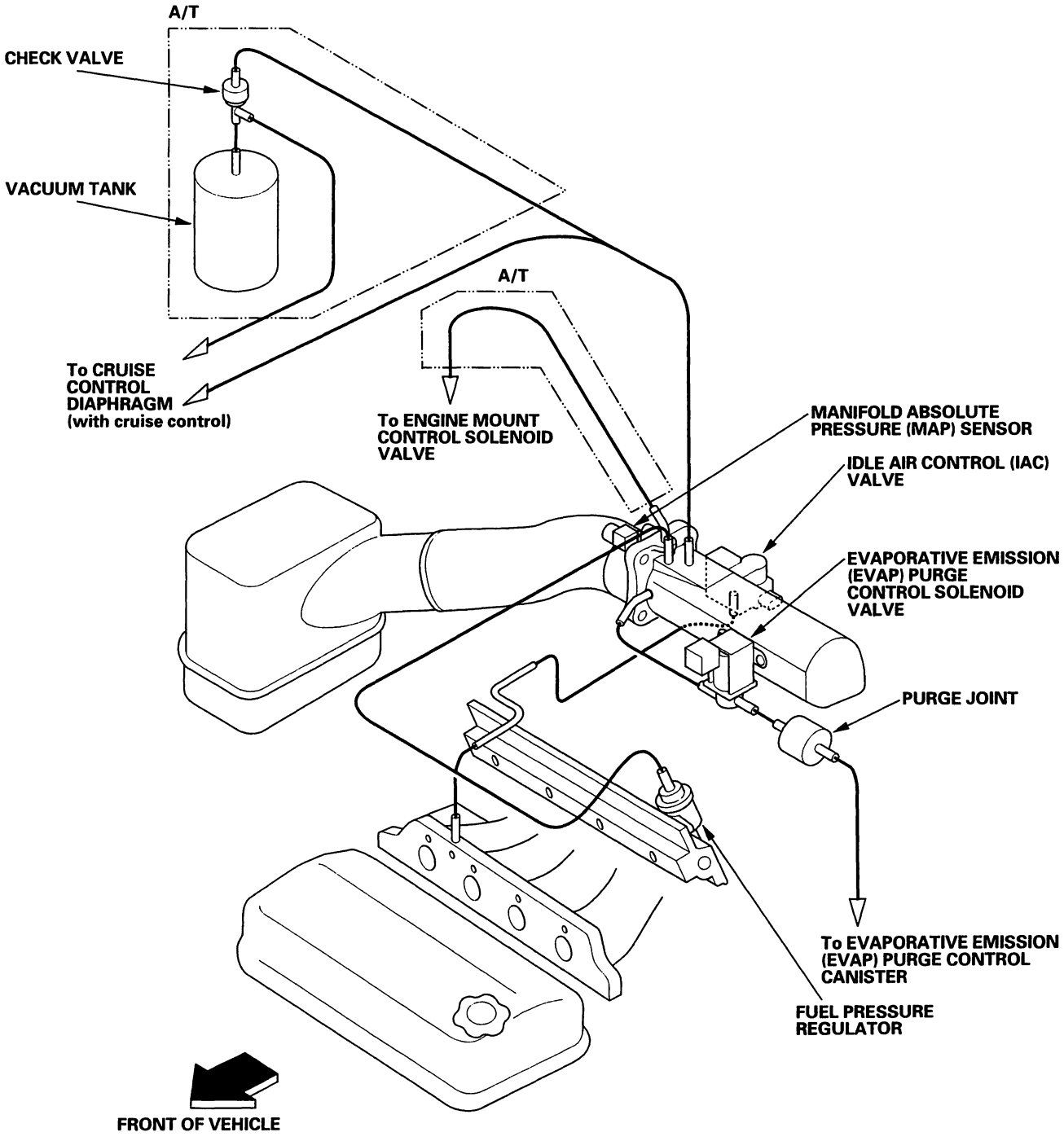

BACK

Vacuum Distribution

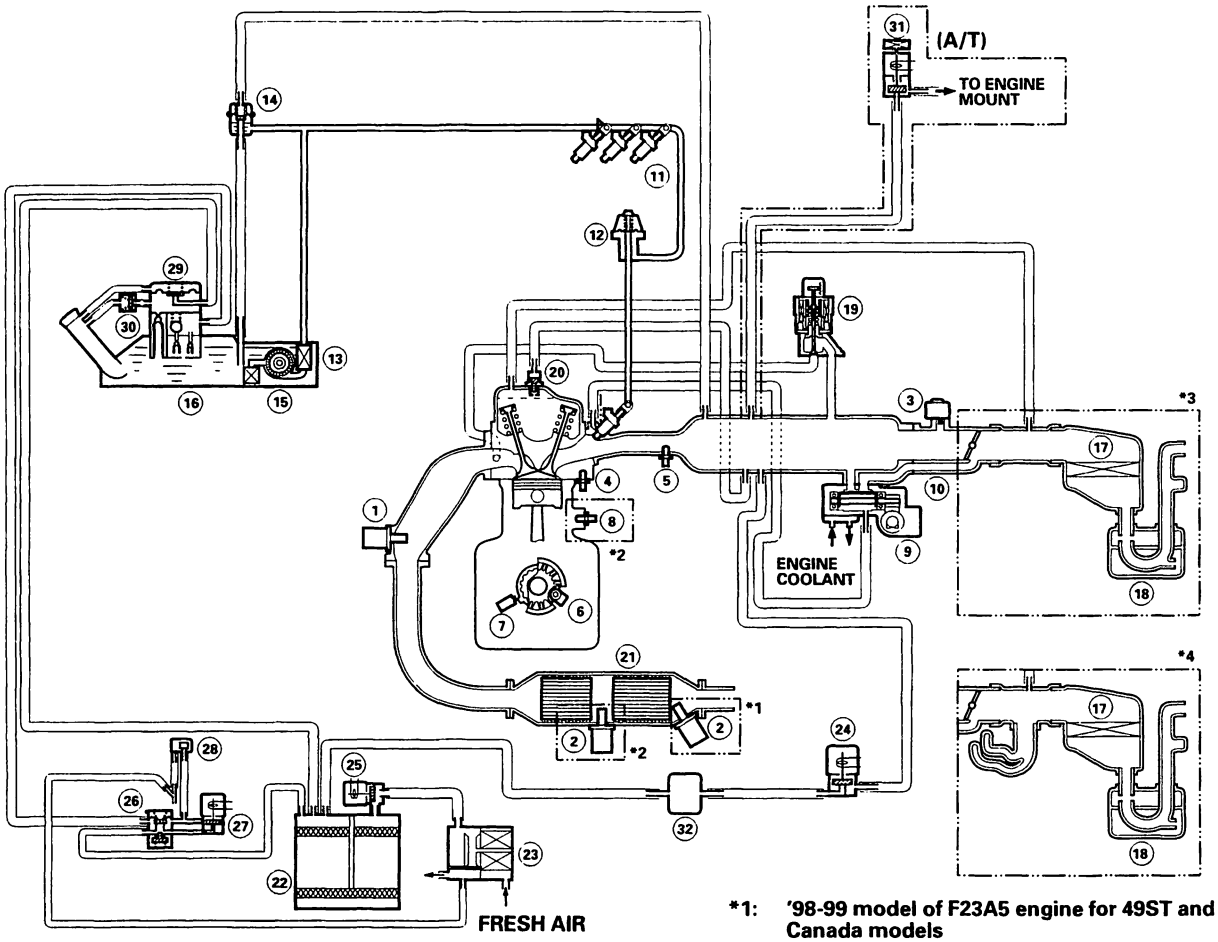

*1: '98-99 model of F23A5 engine for 49ST and Canada models
*2: F23A4, F23A1 engine
*3: '98-01 models
*4: '02 model

① AIR FUEL (A/F) SENSOR OR PRIMARY HEATED OXYGEN SENSOR (PRIMARY HO2S) (SENSOR 1)
② SECONDARY HEATED OXYGEN SENSOR (SECONDARY HO2S) (SENSOR 2)
③ MANIFOLD ABSOLUTE PRESSURE (MAP) SENSOR
④ ENGINE COOLANT TEMPERATURE (ECT) SENSOR
⑤ INTAKE AIR TEMPERATURE (IAT) SENSOR
⑥ CRANKSHAFT POSITION (CKP) SENSOR
⑦ TOP DEAD CENTER (TDC) SENSOR
⑧ KNOCK SENSOR (KS)
⑨ IDLE AIR CONTROL (IAC) VALVE
⑩ THROTTLE BODY
⑪ INJECTOR
⑫ FUEL PULSATION DAMPER
⑬ FUEL FILTER
⑭ FUEL PRESSURE REGULATOR
⑮ FUEL PUMP
⑯ FUEL TANK
⑰ AIR CLEANER
⑱ RESONATOR
⑲ EXHAUST GAS RECIRCULATION (EGR) VALVE and POSITION SENSOR
⑳ POSITIVE CRANKCASE VENTILATION (PCV) VALVE
㉑ THREE WAY CATALYTIC CONVERTER
㉒ EVAPORATIVE EMISSION (EVAP) CANISTER
㉓ EVAPORATIVE EMISSION (EVAP) CANISTER FILTER
㉔ EVAPORATIVE EMISSION (EVAP) CANISTER PURGE VALVE
㉕ EVAPORATIVE EMISSION (EVAP) CANISTER VENT SHUT VALVE
㉖ EVAPORATIVE EMISSION (EVAP) TWO WAY VALVE
㉗ EVAPORATIVE EMISSION (EVAP) BYPASS SOLENOID VALVE
㉘ FUEL TANK PRESSURE (FTP) SENSOR
㉙ FUEL TANK VAPOR CONTROL VALVE
㉚ FUEL TANK VAPOR RECIRCULATION VALVE
㉛ ENGINE MOUNT CONTROL SOLENOID VALVE
㉜ PURGE JOINT

(cont'd)

System Descriptions (cont'd)

PGM-FI System

The Programmed Fuel Injection (PGM-FI) system is a sequential multiport fuel injection system.

Air conditioning (A/C) Switch
The A/C (air conditioning) switch signals the ECM/PCM whenever there is a demand for cooling.

A/C Compressor Clutch Relay
When the ECM/PCM receives a demand for cooling from the A/C system, it delays the compressor from being energized, and enriches the mixture to assure smooth transition to the A/C mode.

Air Fuel Ratio (A/F) Sensor (F23A4 engine)
The A/F Sensor operates over a wide air/fuel range. The A/F Sensor is installed in the exhaust manifold.

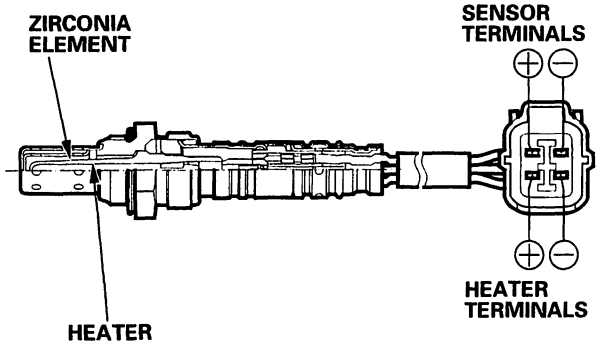

Alternator Control
The alternator signals the ECM/PCM during charging. The ECM/PCM then controls the voltage generated at the alternator according to the electrical load determined by the ELD (Electrical Load Detector) and driving mode. This reduces engine load to improve fuel economy.

Barometric Pressure (BARO) Sensor
The barometric pressure sensor is inside the ECM/PCM. It converts atmospheric pressure into a voltage signal that modifies the basic duration of the fuel injection discharge.

Crankshaft Position (CKP) and Top Dead Center (TDC) Sensors
The CKP sensor determines fuel injection timing and ignition timing for each cylinder, and also detects engine speed. The TDC sensor determines ignition timing at start-up and when crankshaft position signal is abnormal.

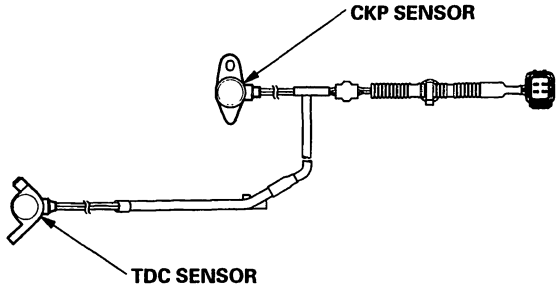

Cylinder Position (CYP) Sensor
The CYP sensor inside the distributor detects the position of the No. 1 cylinder as a reference for sequential fuel injection to each cylinder.

F23A1, F23A4 engine:

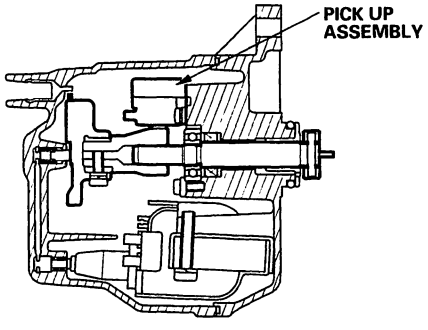

F23A5 engine:

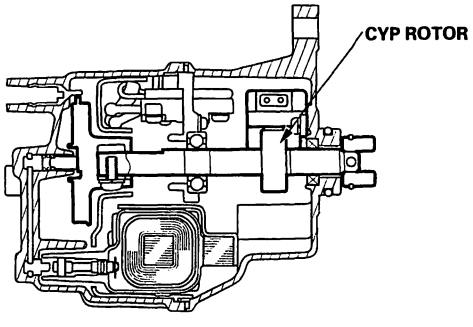

BACK

Engine Coolant Temperature (ECT) Sensor
The ECT sensor is a temperature dependent resistor (thermistor). The resistance of the thermistor decreases as the Engine Coolant temperature increases.

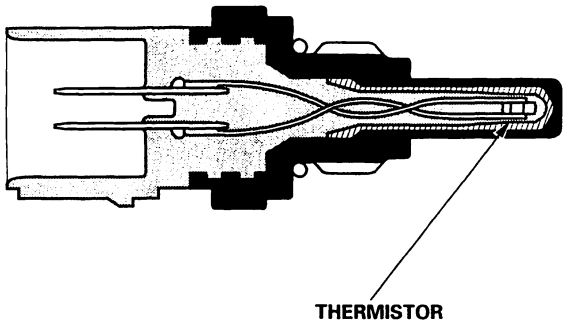

Intake Air Temperature (IAT) Sensor
The IAT sensor is a temperature dependent resistor (thermistor). The resistance of the thermistor decreases as the intake air temperature increases.

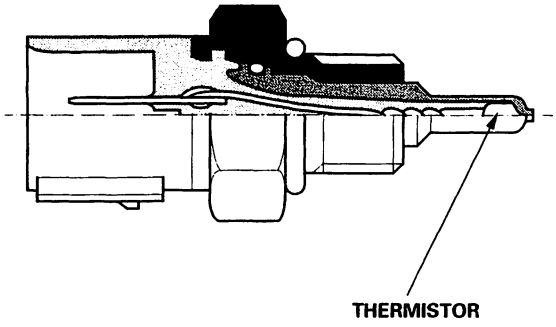

Ignition Timing Control
The ECM/PCM contains the memory for basic ignition timing at various engine speeds and manifold air flow rates. It also adjusts the timing according to engine coolant temperature. The ECM/PCM detects misfiring by using the CKP sensor to monitor fluctuations in crankshaft speed. It will then set DTCs depending on how much misfiring occurs.

Injector Timing and Duration
The ECM/PCM contains the memory for basic discharge duration at various engine speeds and manifold pressures. The basic discharge duration, after being read out from the memory, is further modified by signals sent from various sensors to obtain the final discharge duration.
By monitoring Long Term Fuel Trim, the ECM/PCM detect long term malfunctions in the fuel system and set a Diagnostic Trouble Code (DTC) if the malfunction occurs during two consecutive trips.

Knock Sensor (F23A1, F23A4 engine)
The knock control system adjusts the ignition timing for the octane rating of the gasoline used.

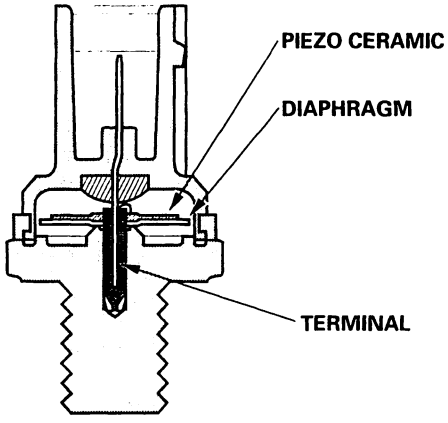

Manifold Absolute Pressure (MAP) Sensor
The MAP sensor converts manifold absolute pressure into electrical signals to the ECM/PCM.

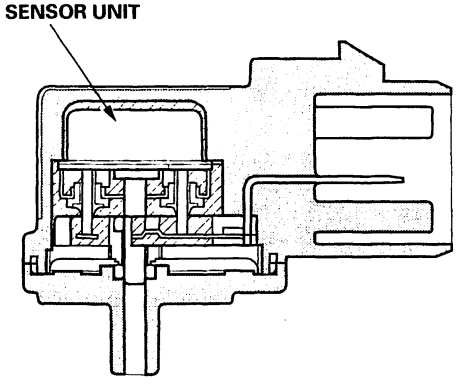

Malfunction Indicator Lamp (MIL) Indication (In relation to Readiness Codes)-F23A4 engine
The vehicle has certain "readiness codes" that are part of the on-board diagnostics for the emissions systems. If the vehicle's battery has been disconnected or gone dead, if the DTCs have been cleared, or if the ECM/PCM has been reset, these codes are reset. In some states, part of the emissions testing is to make sure these codes are set to complete. If all of them are not set to complete, the vehicle may fail the test.

To check if the readiness codes are set, turn the ignition switch ON (II), but do not start the engine. The MIL will come on for 15—20 seconds. If it then goes off, the readiness codes are set. If it blinks several times, one or more readiness codes are not set to complete. To set each code, drive the vehicle or run the engine as described in the procedures to set them in this section (see page 11-42).

(cont'd)

System Descriptions (cont'd)

Primary Heated Oxygen sensor (Primary HO2S)
The primary HO2S detects the oxygen content in the exhaust gas and sends signals to the ECM/PCM which varies the duration of fuel injection accordingly. To stabilize its output, the sensor has an internal heater. The primary HO2S is installed in the exhaust manifold. By controlling the air fuel ratio with primary HO2S and secondary HO2S, the deterioration of the primary HO2S can be evaluated by its feedback period. When the feedback period exceeds a certain value during stable driving conditions, the sensor is considered deteriorated and the ECM/PCM sets a DTC.

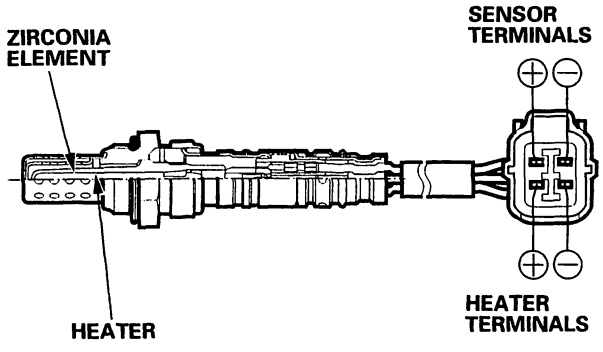

Secondary Heated Oxygen sensor (Secondary HO2S)
The secondary HO2S detects the oxygen content in the exhaust gas downstream of the Three Way Catalytic Converter (TWC) and sends signals to the ECM/PCM which varies the duration of fuel injection accordingly. To stabilize its output, the sensor has an internal heater. The secondary HO2S is installed in the TWC.

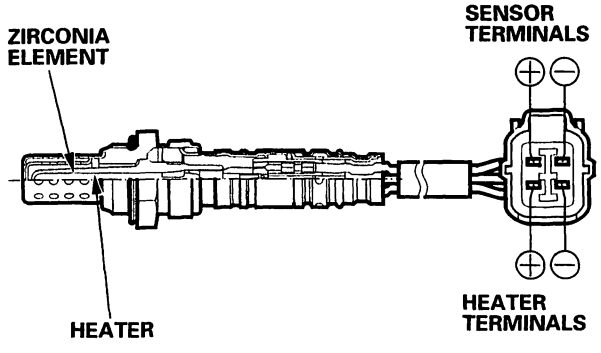

Throttle Position (TP) Sensor
The TP sensor is a potentiometer connected to the throttle valve shaft. As the throttle position changes, the sensor varies the signal voltage to the ECM/PCM. The TP sensor is not replaceable apart from the throttle body.

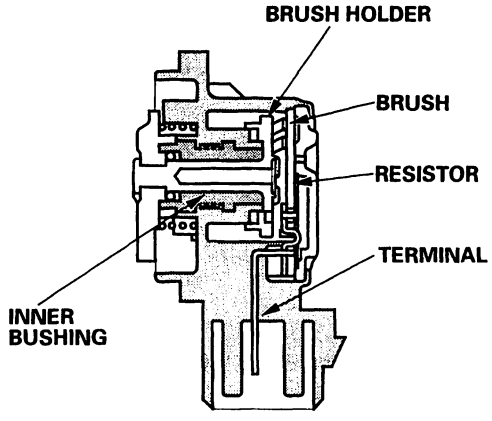

Vehicle Speed Sensor (VSS) (M/T)
The speed sensor is driven by the differential. It generates a pulsed signal from an input of 5 volts. The number of pulses per minute increases/decreases with the speed of the vehicle.

BACK

Intake Air System

Refer to the System Diagram to see the functional layout of the system.

Throttle Body
The throttle body is a single-barrel side draft type. The lower portion of the throttle valve is heated by engine coolant from the cylinder head. The idle adjusting screw, which increases/decreases bypass air, is located on the top of the throttle body.

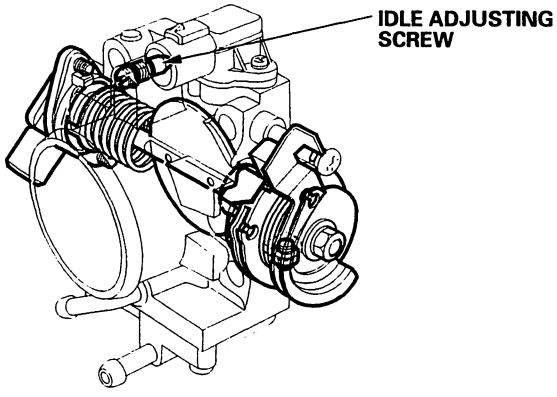

Idle Control System

When the engine is cold, the A/C compressor is on, the transmission is in gear, the brake pedal is pressed, the P/S load is high, or the alternator is charging, the ECM/PCM controls current to the IAC valve to maintain the correct idle speed. Refer to the System Diagram to see the functional layout of the system.

Idle Air Control (IAC) Valve
To maintain the proper idle speed, the IAC valve changes the amount of air bypassing the throttle body in response to an electrical signal from the ECM/PCM.

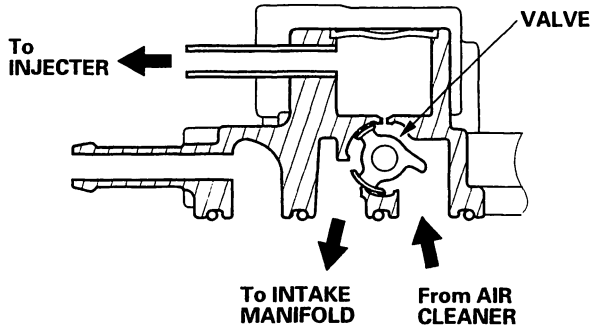

Power Steering Pressure (PSP) Switch
The PSP switch signals the ECM/PCM when the power steering load is high.

Starter (Ignition) Switch
The starter switch signals the ECM/PCM when the engine is cranking.

Brake Pedal Position Switch
The brake pedal position switch signals the ECM/PCM when the brake pedal is pressed.

(cont'd)

System Descriptions (cont'd)

Fuel Supply System

Fuel Pump Control
When the ignition is turned on, the ECM/PCM grounds the PGM-FI main relay which feeds current to the fuel pump for 2 seconds to pressurize the fuel system. With the engine running, the ECM/PCM grounds the PGM-FI main relay and feeds current to the fuel pump. When the engine is not running and the ignition is on, the ECM/PCM cuts ground to the PGM-FI main relay which cuts current to the fuel pump.

Fuel Cut-off Control
During deceleration with the throttle valve closed, current to the fuel injectors is cut off to improve fuel economy at speeds over 1,100 rpm.
Fuel cut-off action also occurs when engine speed exceeds 6,500 rpm, regardless of the position of the throttle valve, to protect the engine from over-revving. On A/T models, when the vehicle is stopped, the PCM cuts the fuel at engine speeds over 5,000 rpm.

PGM-FI Main Relay
The PGM-FI relay contains two separate relays. One is energized whenever the ignition is on which supplies battery voltage to the ECM/PCM, power to the fuel injectors, and power for the second relay. The second relay is energized to supply power to the fuel pump for two seconds when the ignition is switched ON (II), and when the engine is running.

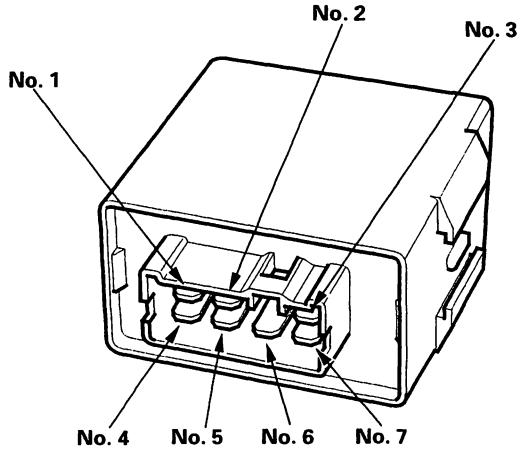

Exhaust Gas Recirculation (EGR) System

Refer to the System Diagram to see the functional layout of the system.

EGR Valve
The EGR valve is designed to lower peak combustion temperatures and reduce oxides of nitrogen emissions (NOx) by recirculating exhaust gas through the intake manifold and into the combustion chambers.

Positive Crankcase Ventilation (PCV) System

The PCV valve prevents blow-by gasses from escaping into the atmosphere by venting them into the intake manifold.

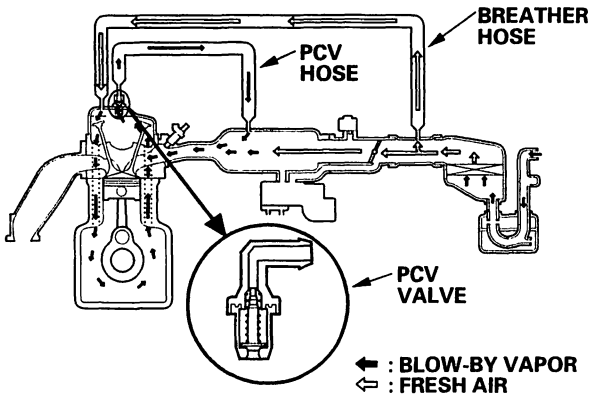

BACK

Evaporative Emission (EVAP) Control System

Refer to the System Diagram to see the functional layout of the system.

EVAP Canister
The EVAP canister temporarily stores fuel vapor from the fuel tank until it can be purged back into the engine and burned.

EVAP Canister Parge Valve
When the engine coolant temperature is below 167°F (75°C), the ECM/PCM turns off the EVAP canister purge valve which cuts vacuum to the EVAP canister.

Fuel Tank Pressure (FTP) Sensor
The FTP sensor converts fuel tank absolute pressure into an electrical input to the ECM/PCM.

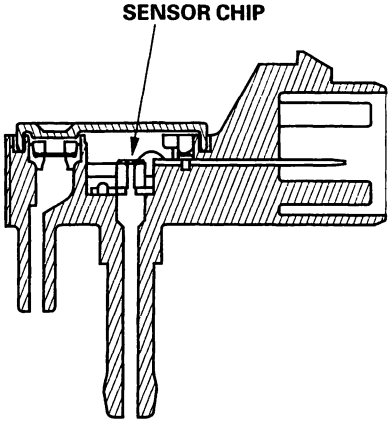

Catalytic Converter System

Three Way Catalytic Converter (TWC)
The TWC converts hydrocarbons (HC), carbon monoxide (CO), and oxides of nitrogen (NOx) in the exhaust gas to carbon dioxide (CO2), dinitrogen (N2), and water vapor.

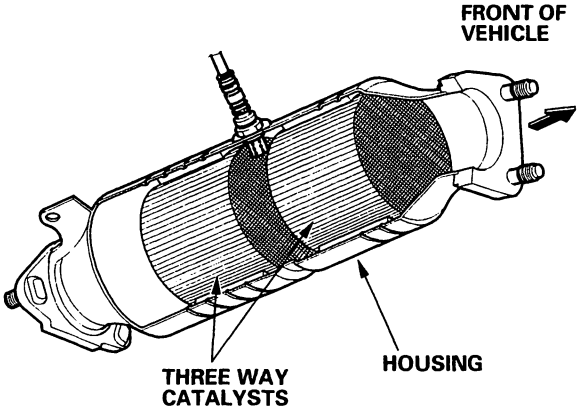

(cont'd)

System Descriptions (cont'd)

Intake Air System Diagram

This system supplies air for engine needs. A resonator in the air intake duct provides additional silencing as air is drawn into the system.

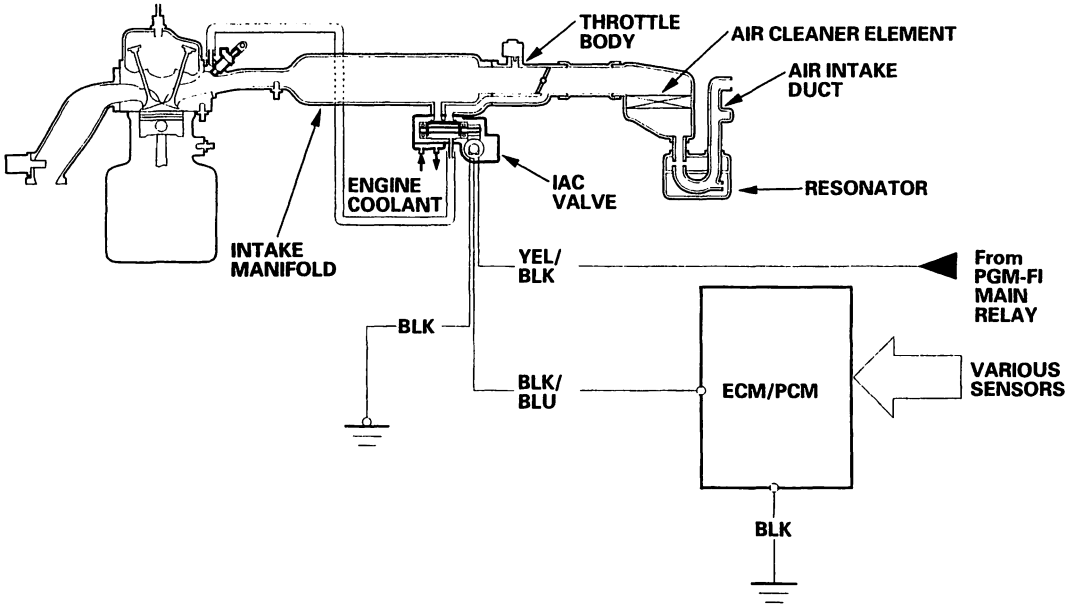

Idle Control System Diagram

The idle speed of the engine is controlled by the Idle Air Control (IAC) valve:

- After the engine starts, the IAC valve opens for a certain time. The amount of air is increased to raise the idle speed by about 150—300 rpm.
- When the engine coolant temperature is low, the IAC valve is opened to obtain the proper fast idle speed. The amount of bypassed air is thus controlled in relation to engine coolant temperature.

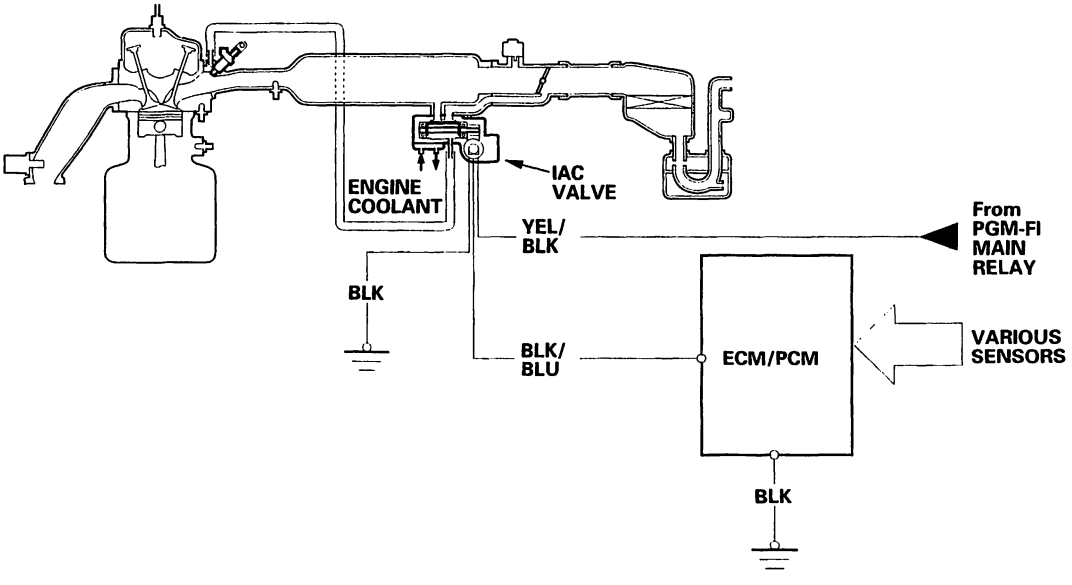

BACK

Exhaust Gas Recirculation (EGR) System Diagram

The EGR system reduces oxides of nitrogen (NOx) emissions by recirculating exhaust gas through the EGR valve and the intake manifold into the combustion chambers. The ECM/PCM memory includes the ideal EGR valve lift for varying operating conditions.

The EGR valve position sensor detects the amount of EGR valve lift and sends it to the ECM/PCM. The ECM/PCM then compares it with the ideal lift in its memory (based on signals sent from other sensors). If there is any difference between the two, the ECM/PCM controls current to the EGR valve.

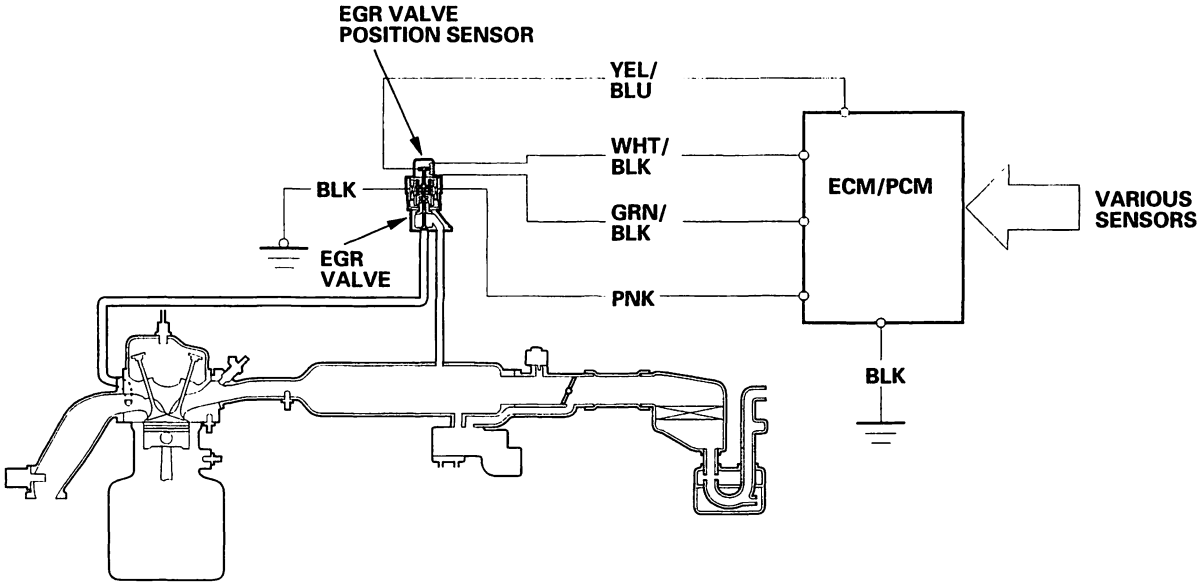

(cont'd)

BACK

System Descriptions (cont'd)

Evaporative Emission (EVAP) Control Diagram

The EVAP controls minimize the amount of fuel vapor escaping to the atmosphere. Vapor from the fuel tank is temporarily stored in the EVAP canister until it can be purged from the canister into the engine and burned.

- The EVAP canister is purged by drawing fresh air through it and into a port on the intake manifold. The purging vacuum is controlled by the EVAP canister purge valve, which is open whenever engine coolant temperature is above 167°F (75°C).
- When vapor pressure in the fuel tank is higher than the set value of the EVAP two way valve, the valve opens and regulates the flow of fuel vapor to the EVAP control canister.
- During refueling, the fuel tank vapor control valve opens with the pressure in the fuel tank, and feeds the fuel vapor to the EVAP canister.

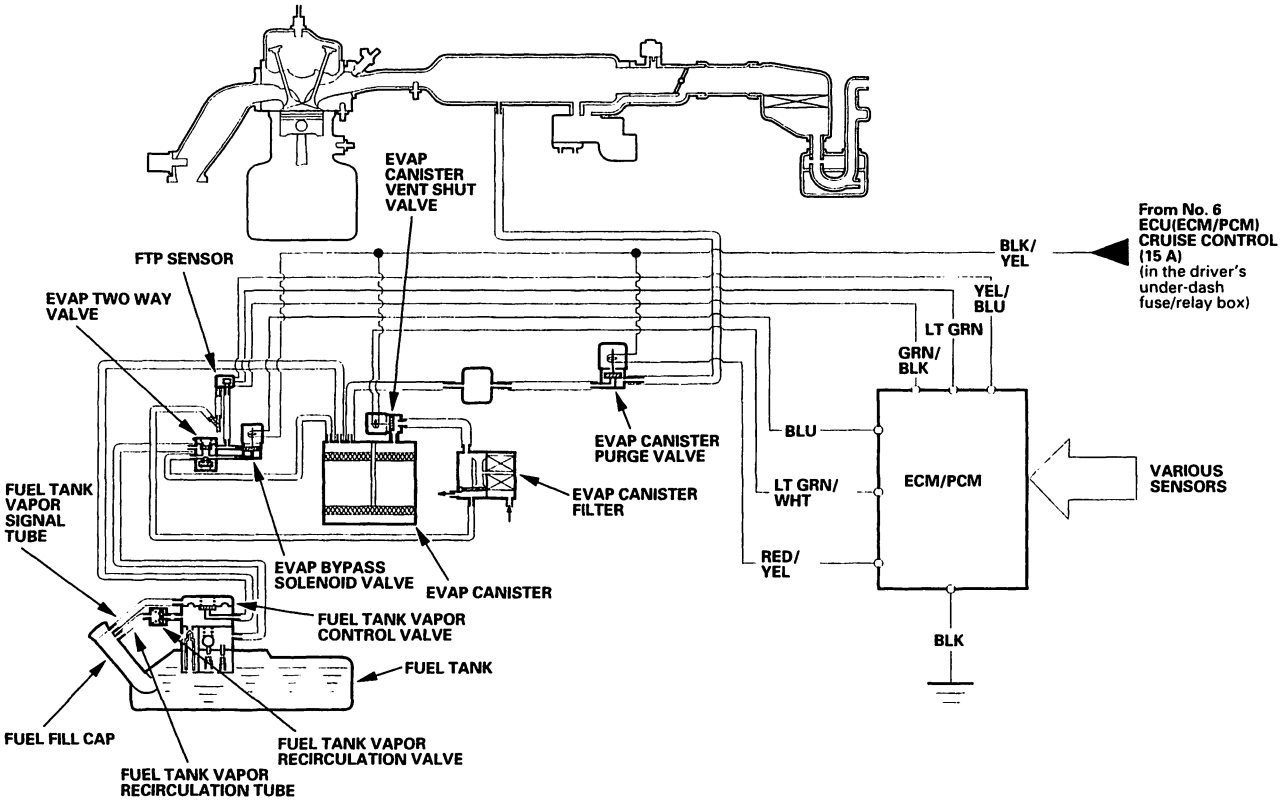

BACK

Circuit Diagram

ECM/PCM Circuit Diagram

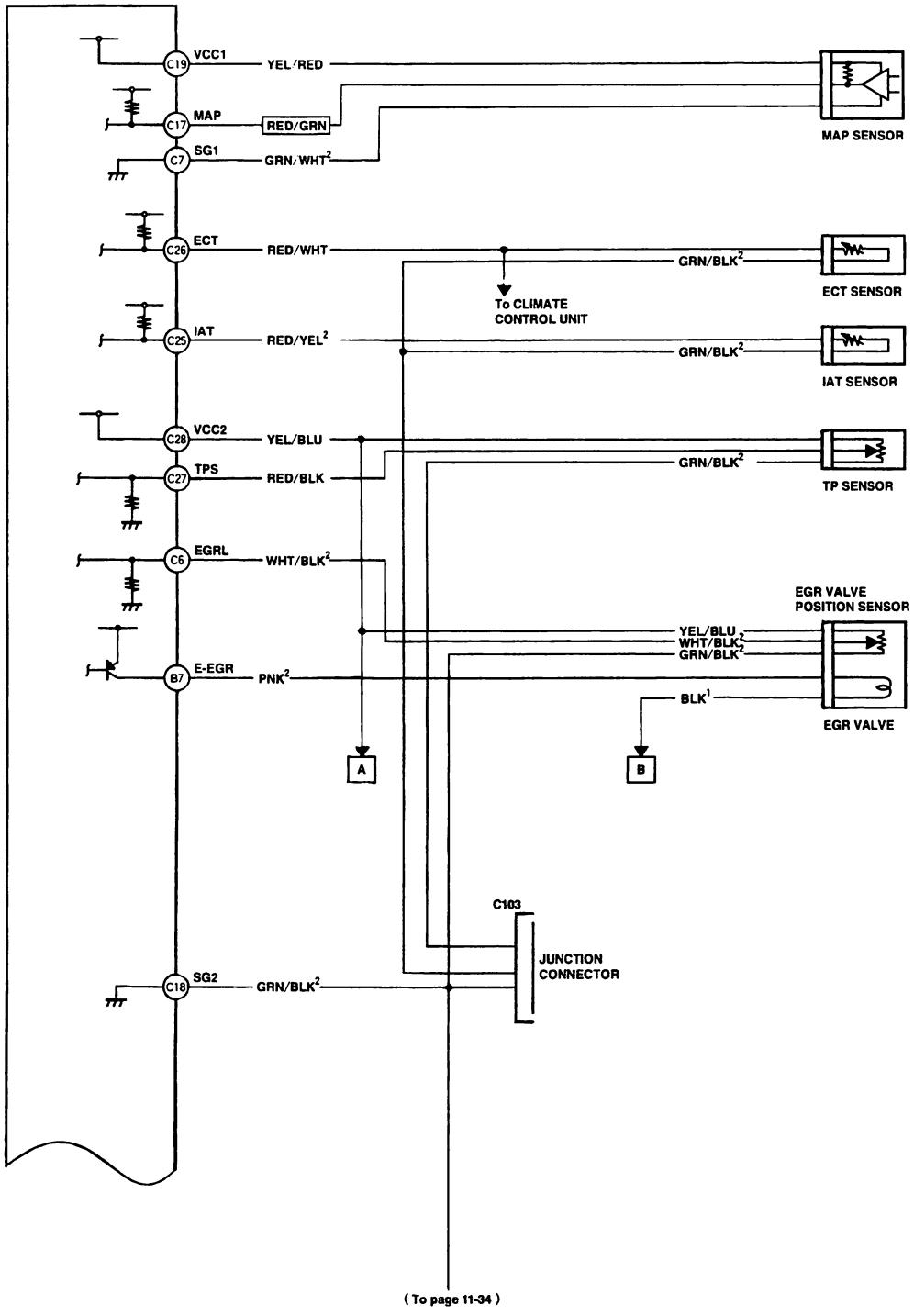

(To page 11-34)

(cont'd)

Circuit Diagram (cont'd)

ECM/PCM Circuit Diagram (cont'd)

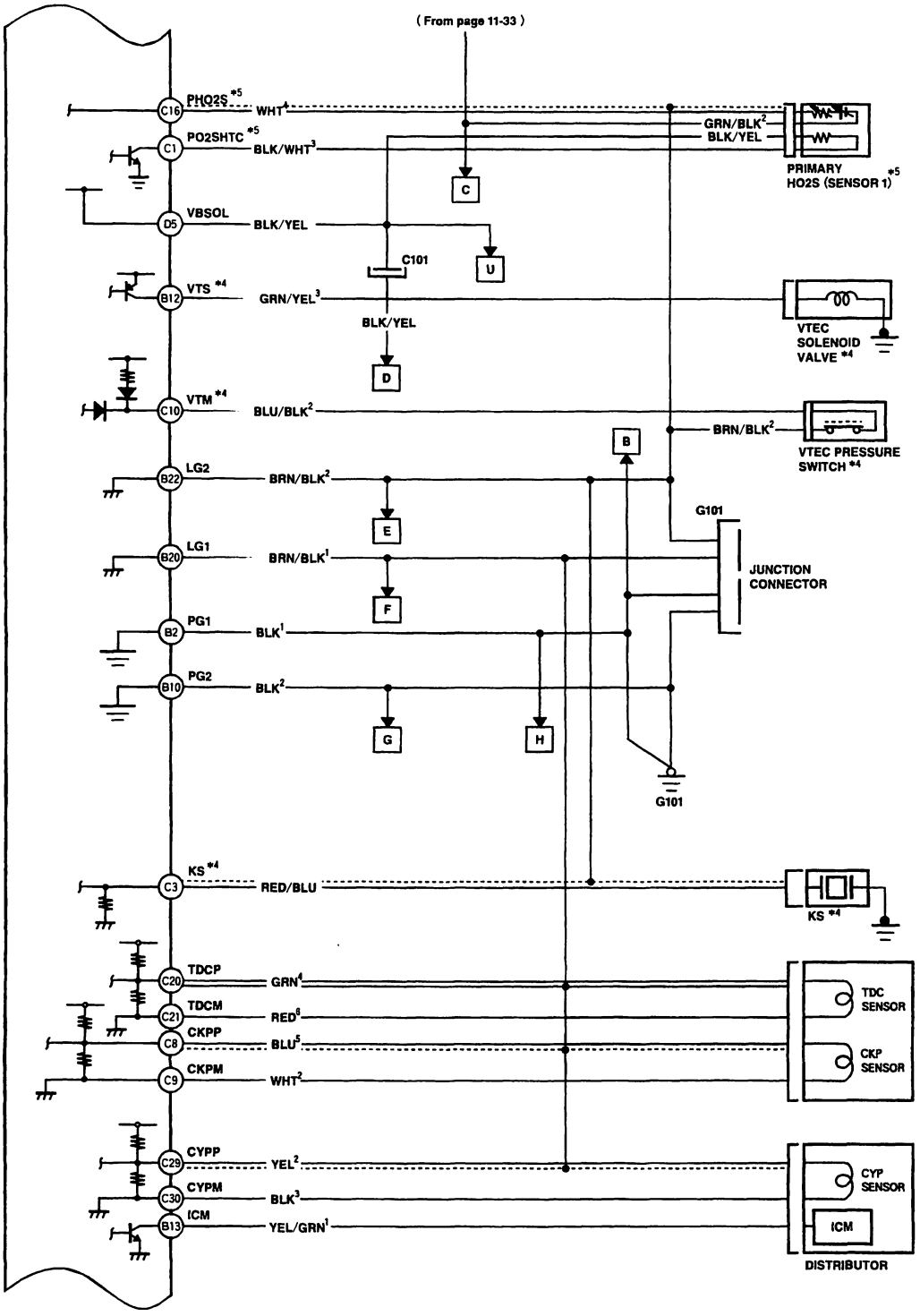

*4 : F23A1, F23A4 engine
*5 : F23A1, F23A5 engine

BACK

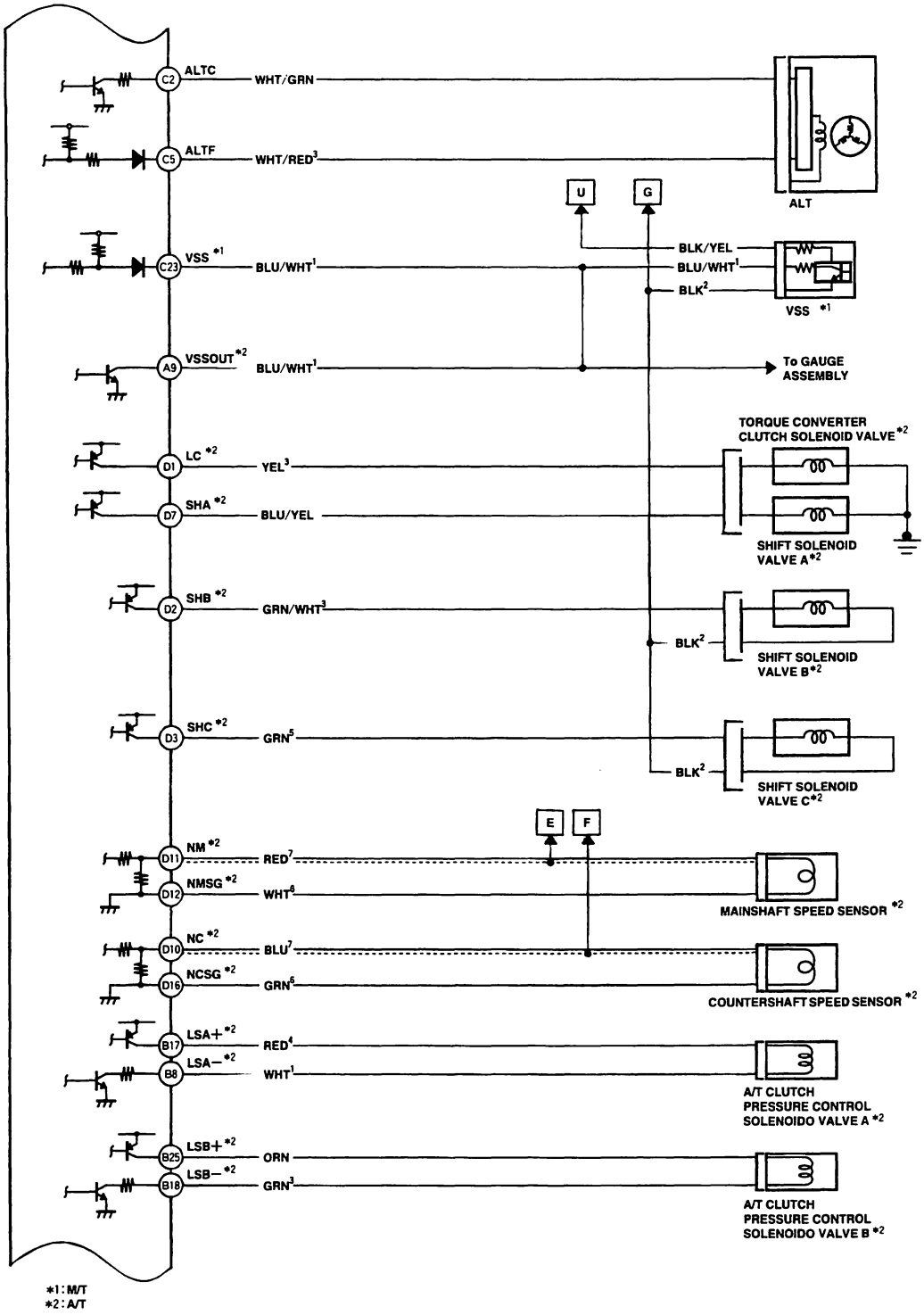
ALTC
C2
WHT/GRN
ALTF
C5
WHT/RED3
ALT
U
G
VSS *1
C23
BLU/WHT1
BLK/YEL
BLU/WHT1
BLK2
VSS *1
VSSOUT*2
A9
BLU/WHT1
To GAUGE ASSEMBLY
TORQUE CONVERTER CLUTCH SOLENOID VALVE*2
LC *2
D1
YEL3
SHA *2
D7
BLU/YEL
SHIFT SOLENOID VALVE A*2
SHB *2
D2
GRN/WHT3
BLK2
SHIFT SOLENOID VALVE B*2
SHC *2
D3
GRN5
BLK2
SHIFT SOLENOID VALVE C*2
E
F
NM *2
D11
RED7
NMSG *2
D12
WHT6
MAINSHAFT SPEED SENSOR *2
NC *2
D10
BLU7
NCSG *2
D16
GRN6
COUNTERSHAFT SPEED SENSOR *2
LSA+*2
B17
RED4
LSA−*2
B8
WHT1
A/T CLUTCH PRESSURE CONTROL SOLENOIDO VALVE A *2
LSB+*2
B25
ORN
LSB−*2
B18
GRN3
A/T CLUTCH PRESSURE CONTROL SOLENOIDO VALVE B *2
*1: M/T
*2: A/T

(cont'd)

BACK

Circuit Diagram (cont'd)

ECM/PCM Circuit Diagram (cont'd)

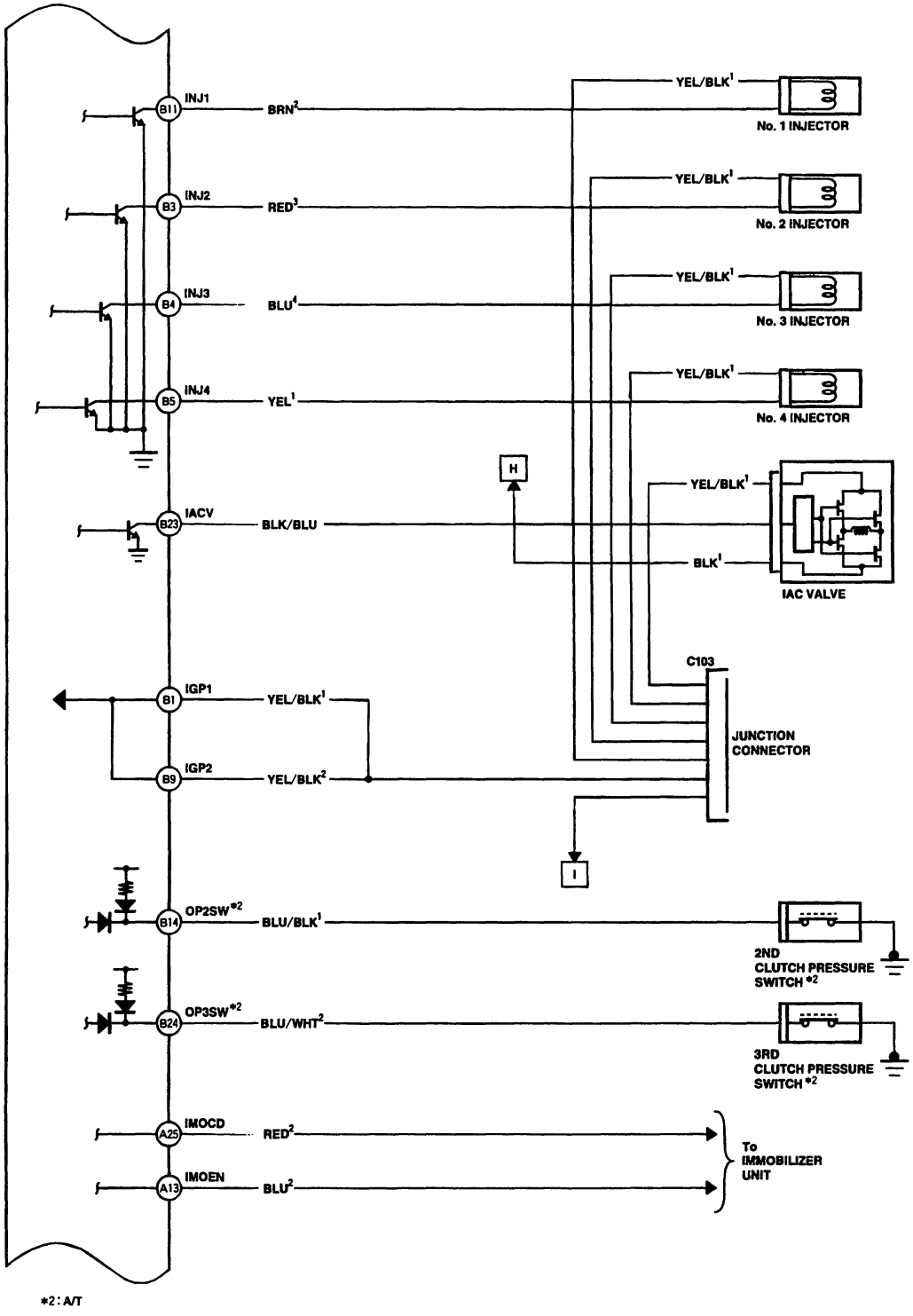

*2: A/T

BACK

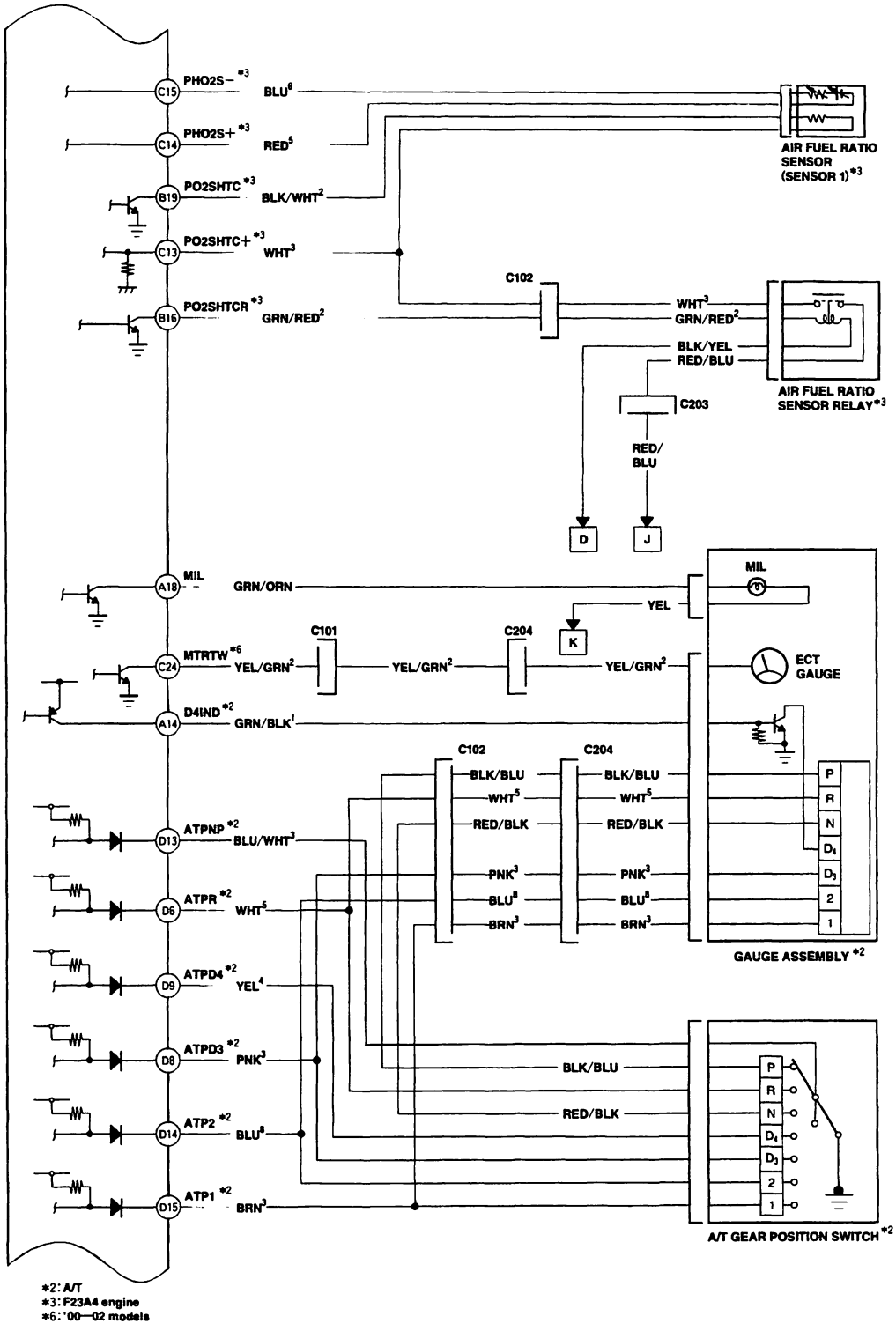

*2: A/T
*3: F23A4 engine
*6: '00—02 models

(cont'd)

BACK

Circuit Diagram (cont'd)

ECM/PCM Circuit Diagram (cont'd)

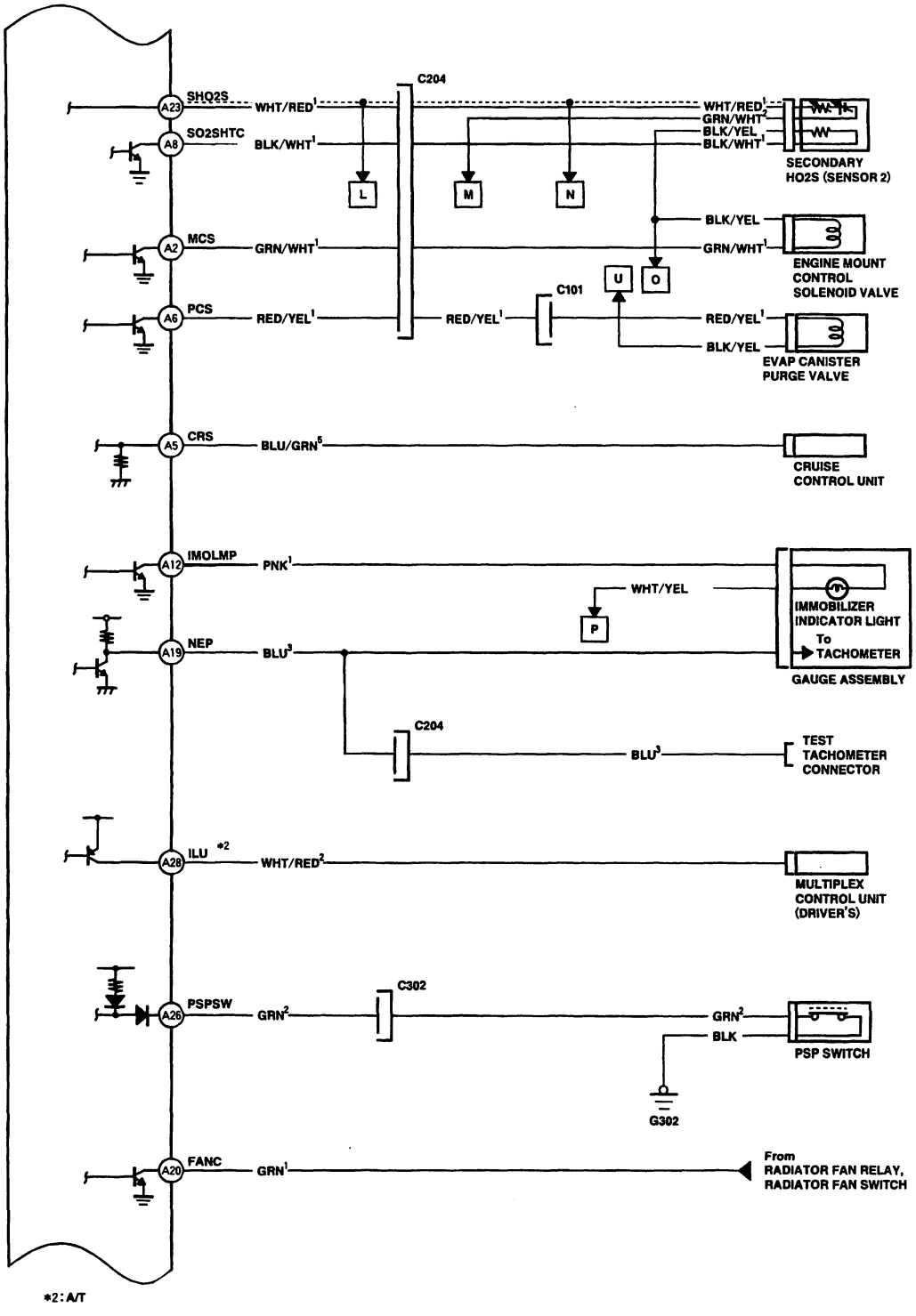

*2: A/T

BACK

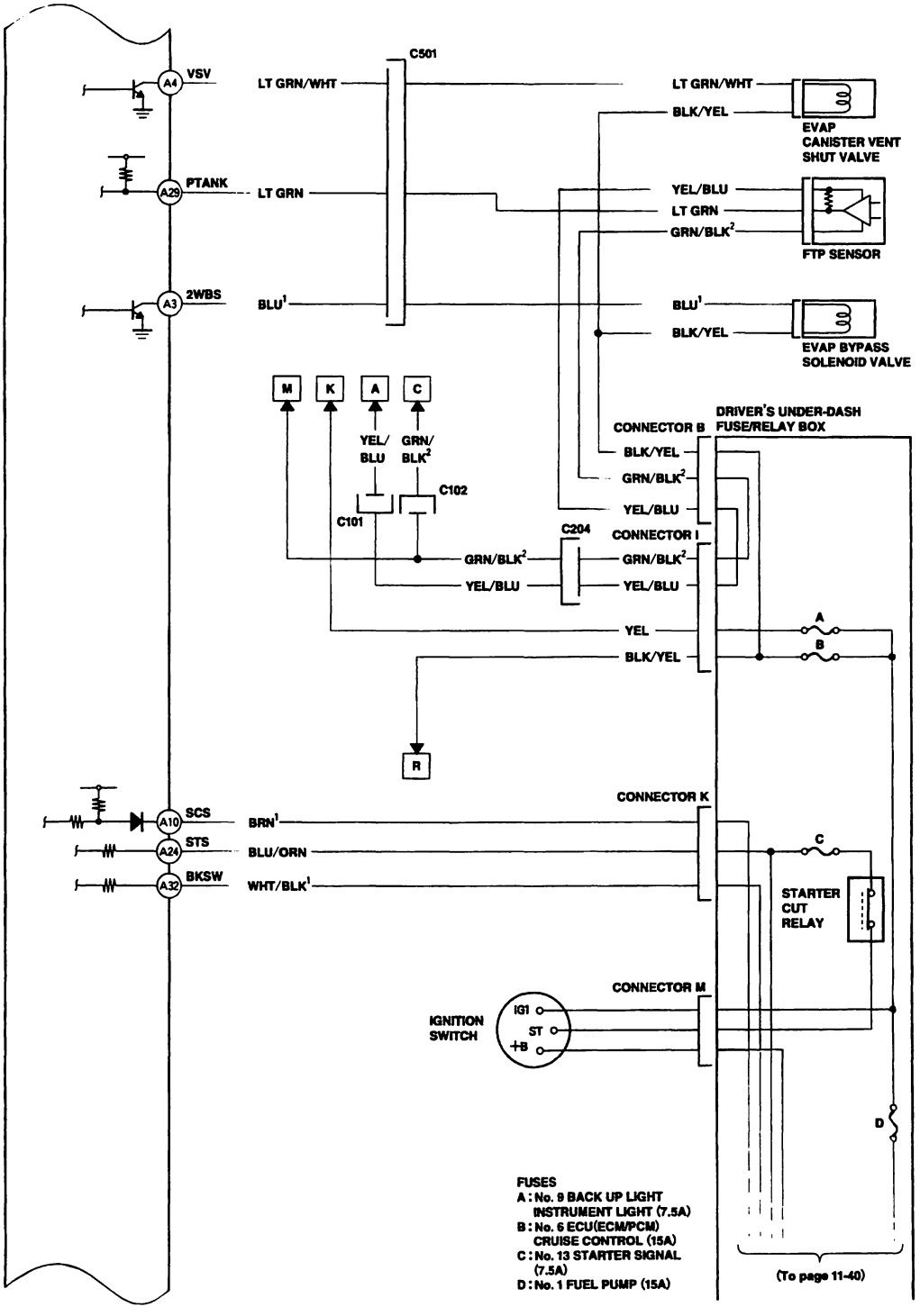
VSV
A4
PTANK
A29
2WBS
A3
C501
LT GRN/WHT
LT GRN
BLU[1]
LT GRN/WHT
BLK/YEL
EVAP
CANISTER VENT
SHUT VALVE
YEL/BLU
LT GRN
GRN/BLK[2]
FTP SENSOR
BLU[1]
BLK/YEL
EVAP BYPASS
SOLENOID VALVE
M
K
A
C
YEL/
BLU
GRN/
BLK[2]
C102
C101
C204
DRIVER'S UNDER-DASH
FUSE/RELAY BOX
CONNECTOR B
BLK/YEL
GRN/BLK[2]
YEL/BLU
CONNECTOR I
GRN/BLK[2]
YEL/BLU
GRN/BLK[2]
YEL/BLU
YEL
BLK/YEL
A
B
R
CONNECTOR K
SCS
A10
STS
A24
BKSW
A32
BRN[1]
BLU/ORN
WHT/BLK[1]
C
STARTER
CUT
RELAY
CONNECTOR M
IGNITION
SWITCH
IG1
ST
+B
D
FUSES
A : No. 9 BACK UP LIGHT
INSTRUMENT LIGHT (7.5A)
B : No. 6 ECU(ECM/PCM)
CRUISE CONTROL (15A)
C : No. 13 STARTER SIGNAL
(7.5A)
D : No. 1 FUEL PUMP (15A)
(To page 11-40)

(cont'd)

Circuit Diagram (cont'd)

ECM/PCM Circuit Diagram (cont'd)

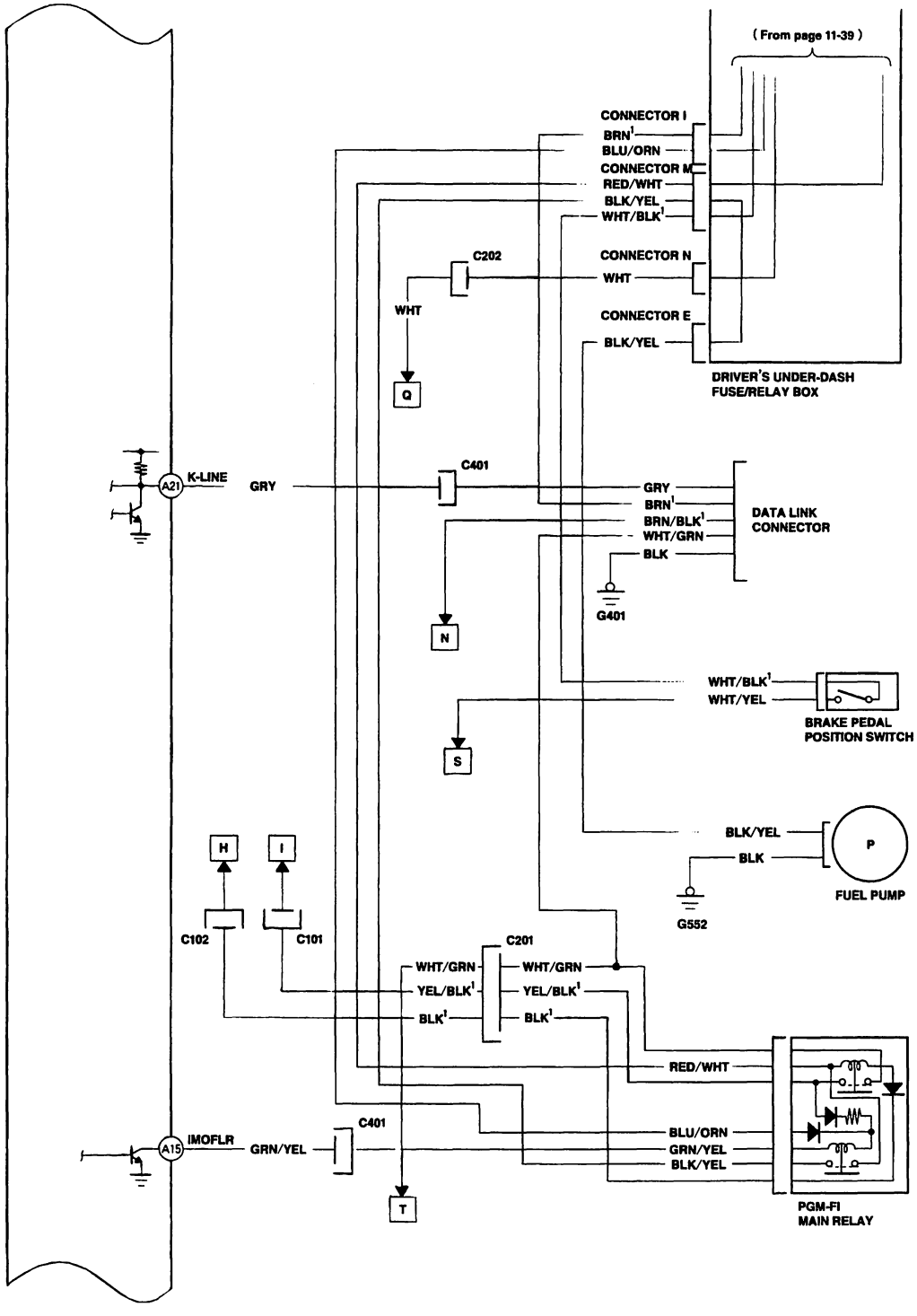

BACK

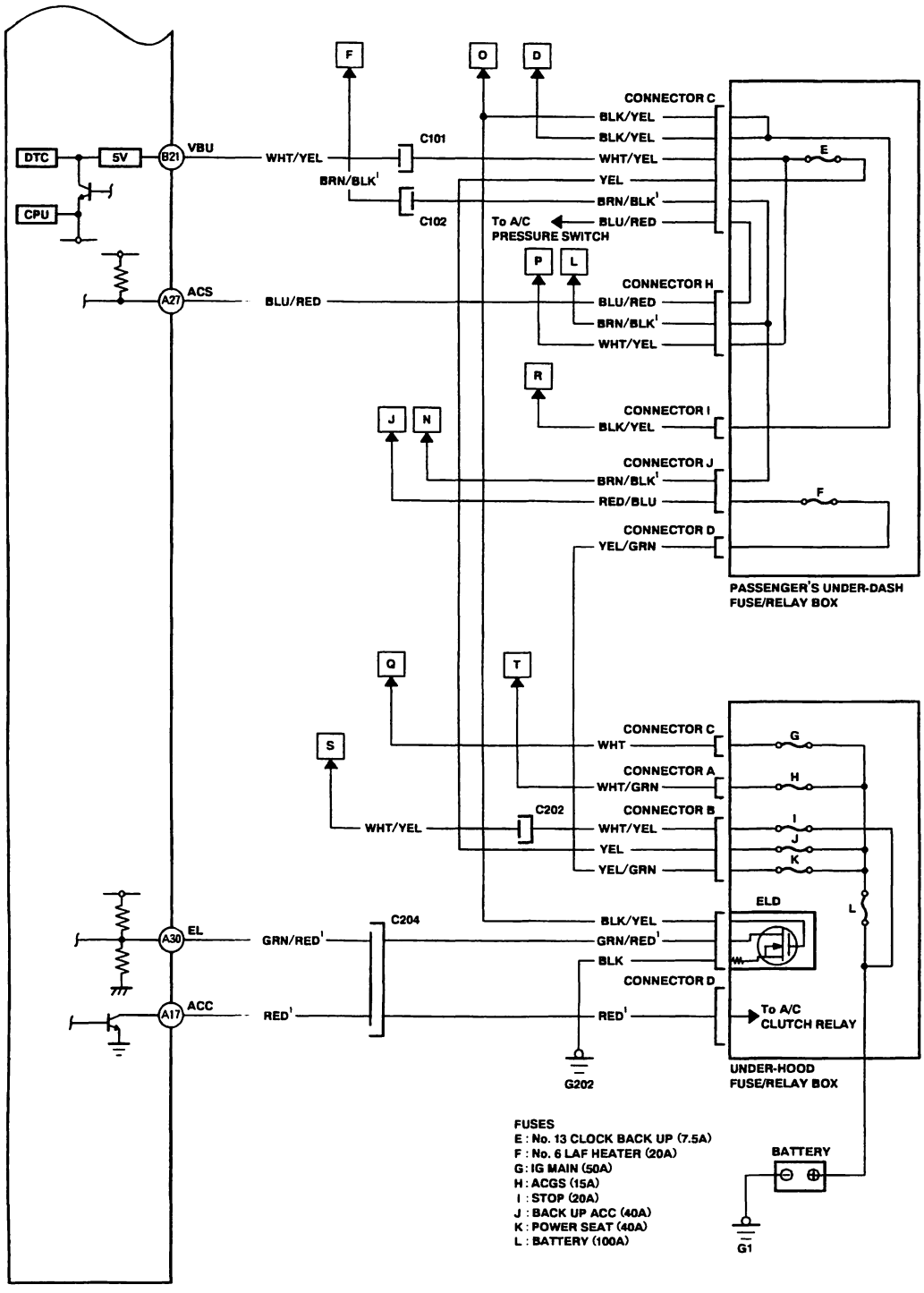
DTC
5V
CPU
B21
VBU
WHT/YEL
BRN/BLK'
C101
C102
F
O
D
CONNECTOR C
BLK/YEL
BLK/YEL
WHT/YEL
YEL
BRN/BLK'
BLU/RED
To A/C
PRESSURE SWITCH
E
A27
ACS
BLU/RED
P
L
CONNECTOR H
BLU/RED
BRN/BLK'
WHT/YEL
R
CONNECTOR I
BLK/YEL
J
N
CONNECTOR J
BRN/BLK'
RED/BLU
F
CONNECTOR D
YEL/GRN
PASSENGER'S UNDER-DASH
FUSE/RELAY BOX
Q
T
S
CONNECTOR C
WHT
G
CONNECTOR A
WHT/GRN
H
C202
CONNECTOR B
WHT/YEL
WHT/YEL
YEL
YEL/GRN
I
J
K
ELD
L
A30
EL
GRN/RED'
C204
BLK/YEL
GRN/RED'
BLK
CONNECTOR D
A17
ACC
RED'
RED'
To A/C
CLUTCH RELAY
G202
UNDER-HOOD
FUSE/RELAY BOX
FUSES
E : No. 13 CLOCK BACK UP (7.5A)
F : No. 6 LAF HEATER (20A)
G : IG MAIN (50A)
H : ACGS (15A)
I : STOP (20A)
J : BACK UP ACC (40A)
K : POWER SEAT (40A)
L : BATTERY (100A)
BATTERY
G1

How to Set Readiness Codes

Malfunction Indicator Lamp (MIL) indication (In relation to Readiness Codes)-F23A4 engine

The vehicle has certain "readiness codes" that are part of the on-board diagnostics for the emissions systems. If the vehicle's battery has been disconnected or gone dead if the DTCs have been cleared, or if the ECM/PCM has been reset, these codes are reset. In some states, part of the emissions testing is to make sure these codes are set to complete. If all of them are not set to complete, the vehicle may fail the test.

To check if the readiness codes are set, turn the ignititon switch ON (II), but do not start the engine. The MIL will come on for 15—20 seconds. If it then goes off, the readiness codes are set. If it blinks several times, one or more readiness codes are not set to complete. To set each code, drive the vehicle or run the engine as described in the following procedures.

Air Fuel Ratio (A/F) Sensor Monitor Code

NOTE:
- Do not turn the ignition switch OFF.
- When the battery negative cable is disconnected, all readiness codes are cleared.

Required condition:
Ambient temperature between 20—95°F (—7—35°C).

1. Connect the scan tool to the Data Link Connector (DLC).
2. Start the engine. Hold it at 3,000 rpm with no load (in Park or neutral) until the radiator fan comes on.
3. Let the engine idle for 5 seconds.
4. Drive at a steady speed between 50—62 mph (80—100 km/h) with the transmission in D4 position for about 2 minutes.
5. With the A/T in D4 position or M/T in 5th gear, decelerate from 62 mph (100 km/h) by completely releasing the throttle for at least 5 seconds. If the engine is stopped during this procedure, repeat steps 4 and 5.
6. Check for the readiness code with the scan tool.

BACK

Catalytic Converter Monitor Code

NOTE:
- Do not turn the ignition switch OFF.
- When the battery negative cable is disconnected, all readiness codes are cleared.
- When the ECM/PCM is cleared with the OBD II scan tool or Honda PGM Tester, all readiness codes are cleared.

Required condition:
Ambient temperture between 20–95°F (–7–35°C).

1. Connect the scan tool to the Data Link Connector.
2. Start the engine. Hold it at 3,000 rpm with no load (in Park or neutral) until the radiator fan comes on.
3. Drive for about 10 minutes, without stopping, on a highway. Your speed can vary.
4. With the A/T in D4 position or M/T in 5th gear, drive at a steady speed between 50–60 mph (80–100 km/h) for 30 seconds.
5. Repeat step 4 three times. Between each repetition, close the throttle completely for 1–2 seconds. If the engine is stopped during this part of the procedure, repeat steps 3, 4, and 5.
6. Check for the readiness code with the scan tool.

EGR Monitor Code

NOTE:
- Do not turn the ignition switch OFF.
- When the battery negative cable is disconnected, all readiness codes are cleared.

1. Connect the scan tool to the Data Link Connector.
2. Start the engine, and hold it at 3,000 rpm with no load (in Park or neutral) until the radiator fan comes on.
3. Drive at a steady speed with the transmission in D4 position between 50–62 mph (80–100 km/h) for more than 10 seconds.
4. With the A/T in D4 position or M/T in 5th gear, decelerate from 62 mph (100 km/h) by completely releasing the throttle for at least 5 seconds. If the engine is stopped during this procedure, repeat steps 3 and 4.
5. Check for the readiness code with the scan tool.

(cont'd)

How to Set Readiness Codes (cont'd)

EVAP Leak Monitor Code

NOTE:
- When the battery negative cable is disconnected, all readiness codes are cleared.
- When the ECM/PCM is cleared with the OBD II scan tool or Honda PGM Tester, all readiness codes are cleared.
- If the engine is stopped between step 6 and 16, do the entire procedure again.

1. Make sure the gasoline level is 60–90 percent of fuel tank capacity (not full).
2. Turn the ignition switch OFF.
3. Let the vehicle sit more than 8 hours.
4. Make sure the outside temperature is 20–95°F (–7–35°C).
5. Connect the scan tool to the Data Link Connector.
6. Start the engine, and drive for about 15 minutes.
7. Keep the vehicle at a steady speed between 50–70 mph (80–114 km/h), without moving the accelerator pedal, for about 1 minute.
8. Stop the vehicle (do not stop engine).
9. Repeat step 7 and 8 two more times.
10. Check for the readiness code with the scan tool. If the readiness code does not set, go to step 11.
11. When ambient temperature is less than 32°F (0°C), hold the engine at 3,000 rpm with no load (in Park or neutral) until the radiator fan comes on.
12. Remove the fuel fill cap, then reinstall it.
13. Drive for about 20 minutes on a highway.
14. Keep the vehicle at a steady speed between 50–70 mph (80–114 km/h) without moving the accelerator pedal, for about 1 minute.
15. Stop the vehicle (do not stop the engine).
16. Repeat steps 14 and 15 two more times.
17. Check for the readiness code with the scan tool.

HO2S Monitor Code

NOTE:
- Do not turn the ignition switch OFF.
- When the battery negative cable is disconnected, all readiness codes are cleared.

Required condition:
Ambient temperature between 20–95°F (–7–35°C).

1. Connect the scan tool to the Data Link Connector.
2. Start the engine, and hold it at 3,000 rpm with no load (in Park or neutral) until the radiator fan comes on.
3. Let the engine idle for 5 seconds.
4. Drive at a steady speed between 50–62 mph (80–100 km/h) for about 2 minutes.
5. With the A/T in D4 position or M/T in 5th gear, decelerate from 62 mph (100 km/h) by completely releasing the throttle for at least 5 seconds. If the engine is stopped during this procedure, repeat steps 4 and 5.
6. Check for the readiness code with the scan tool.

HO2S Heater Monitor Code

NOTE: When the battery negative cable is disconnected, all readiness codes are cleared.

1. Connect the scan tool to the Data Link Connector.
2. Start the engine, and let it idle for 10 minutes.
3. Check for the readiness code with the scan tool.

BACK

Component Location Index

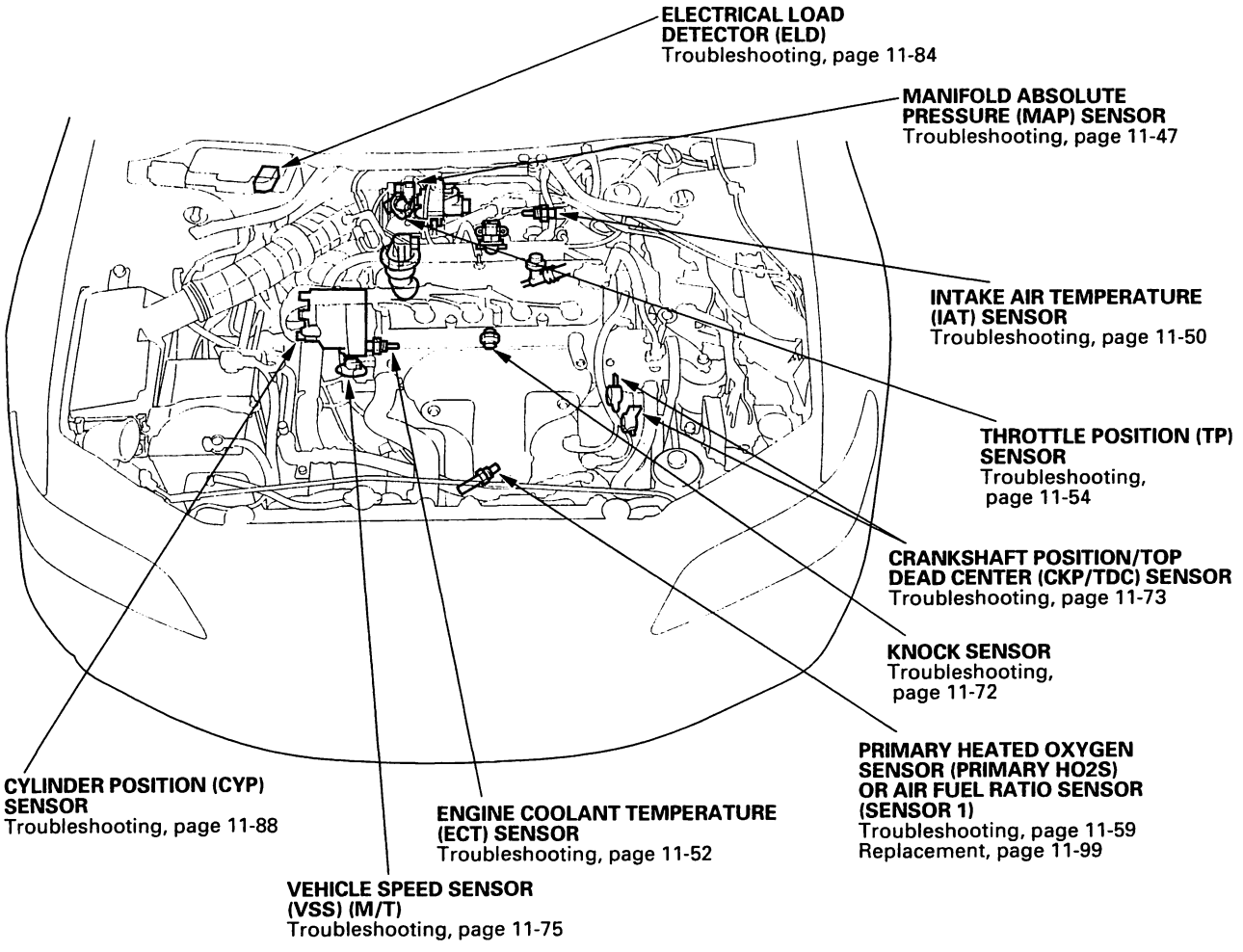

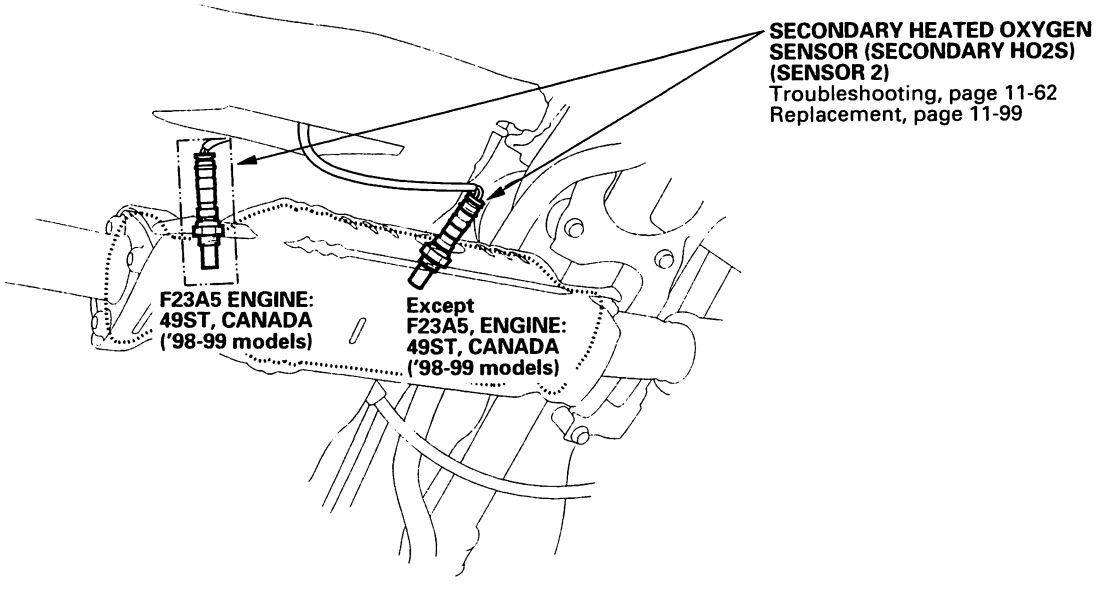

(cont'd)

Component Location Index (cont'd)

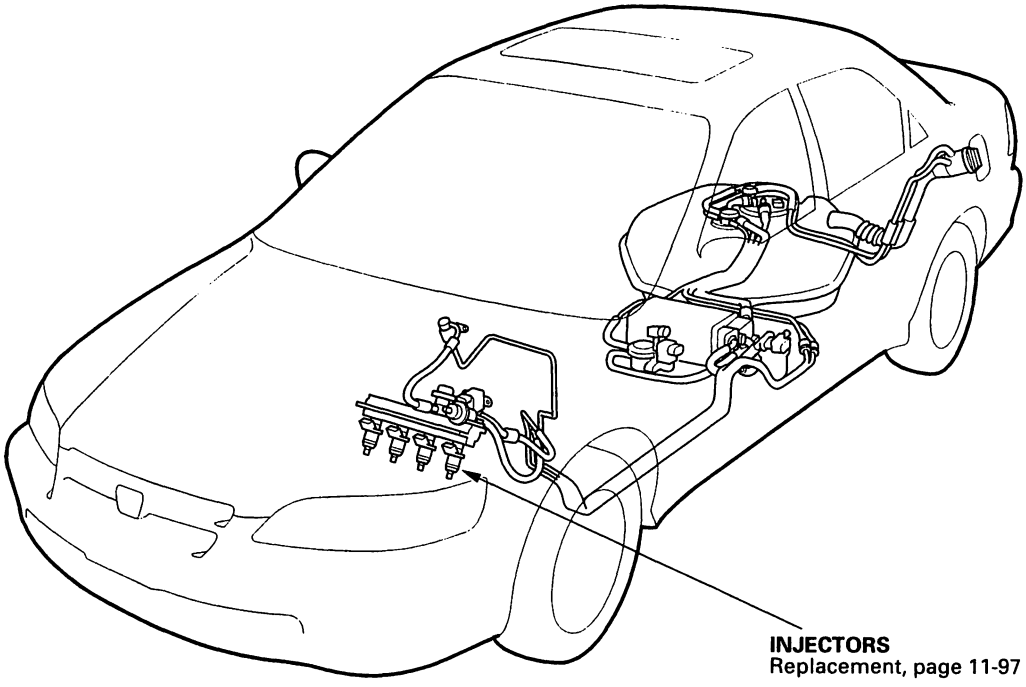

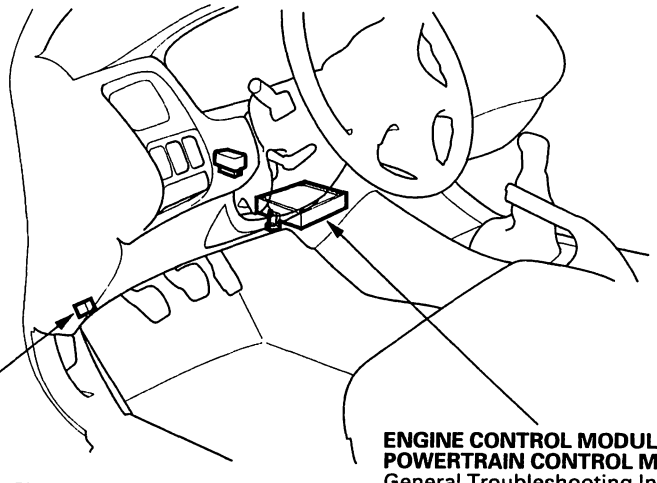

BACK

DTC P0107: MAP Sensor Circuit Low Voltage

1. Turn the ignition switch ON (II).

2. Check the MAP with the scan tool.

   Is approx. 101 kPa (760 mmHg, 30 in.Hg) or 2.9 V indicated?

   YES—Intermittent failure, system is OK at this time. Check for poor connections or loose wires at the MAP sensor and the ECM/PCM. ■

   NO—Go to step 3.

3. Turn the ignition switch OFF.

4. Disconnect the MAP sensor connector.

5. Turn the ignition switch ON (II).

6. Measure voltage between MAP sensor connector terminals No. 1 and No. 2.

MAP SENSOR 3P CONNECTOR

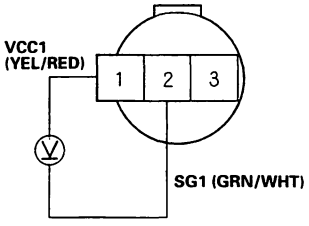

Wire side of female terminals

   Is there approx. 5 V?

   YES—Go to step 8.

   NO—Go to step 7.

7. Measure voltage between ECM/PCM connector terminals C19 and C7.

ECM/PCM CONNECTOR C (31P)

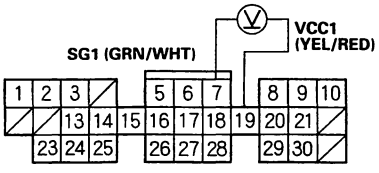

Wire side of female terminals

   Is there approx. 5 V?

   YES—Repair open in the wire between the ECM/PCM (C19) and the MAP sensor. ■

   NO—Substitute a known-good ECM/PCM and recheck (see page 11-3). If normal MAP readings are indicated, replace the original ECM/PCM. ■

8. Check the MAP with the scan tool.

   Is approx. 2 kPa (15 mmHg, 0.6 in.Hg) or less, or 0 V indicated?

   YES—Go to step 9.

   NO—Replace the MAP sensor. ■

9. Turn the ignition switch OFF.

10. Disconnect ECM/PCM connector C (31P).

11. Check for continuity between MAP sensor connector terminal No. 3 and body ground.

MAP SENSOR 3P CONNECTOR

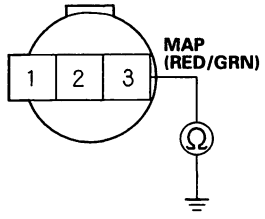

Wire side of female terminals

   Is there continuity?

   YES—Repair short in the wire between the ECM/PCM (C17) and the MAP sensor. ■

   NO—Substitute a known-good ECM/PCM and recheck (see page 11-5). If normal MAP readings are indicated, replace the original ECM/PCM. ■

DTC Troubleshooting (cont'd)

DTC P0108: MAP Sensor Circuit High Voltage

1. Start the engine. Hold the engine at 3,000 rpm with no load (in park or neutral) until the radiator fan comes on, then let it idle.

2. Check the MAP with the scan tool.

   Is approx. 101 kPa (780 mmHg, 30 in.Hg) or higher or approx. 2.9 V indicated?

   YES—Go to step 3.

   NO—Intermittent failure, system is OK at this time. Check for poor connections or loose wires at the MAP sensor and the ECM/PCM.■

3. Turn the ignition switch OFF.

4. Disconnect the MAP sensor connector.

5. Install a jumper wire between MAP sensor 3P connector terminals No. 2 and No. 3.

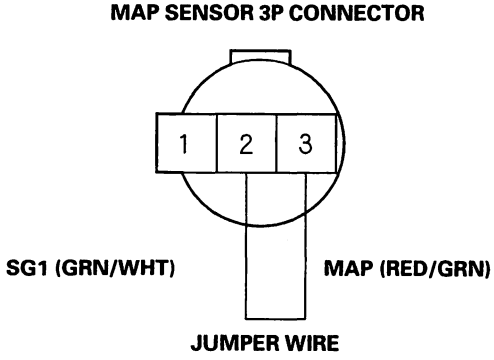

6. Turn the ignition switch ON (II).

7. Check the MAP with the scan tool.

   Is approx. 159 kPa (1,190 mmHg, 47in.Hg) or higher or 4.49 V or higher indicated?

   YES—Go to step 8.

   NO—Replace the MAP sensor.■

8. Remove the jumper wire.

9. Measure voltage between MAP sensor 3P connector terminals No. 1 and No. 2.

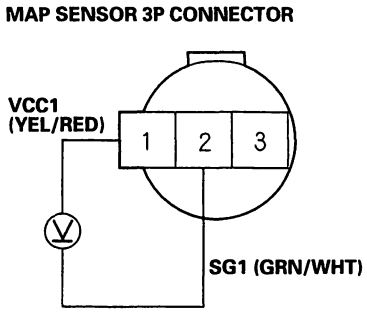

   Is there approx. 5 V?

   YES—Go to step 10.

   NO—Repair open in the wire between the ECM/PCM (C7) and the MAP sensor.■

10. Turn the ignition switch OFF.

11. Install a jumper wire on ECM/PCM connector terminals between C7 and C17.

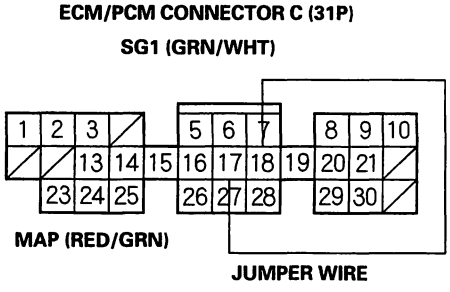

12. Turn the ignition switch ON (II).

13. Check the MAP with the scan tool.

    Is approx. 159 kPa (1,190 mmHg, 47 in.Hg) or higher or 4.49 V or higher indicated?

    YES—Substitute a known-good ECM/PCM and recheck (see page 11-5). If normal MAP readings are indicated, replace the original ECM/PCM.■

    NO—Repair open in the wire between the ECM/PCM (C17) and the MAP sensor.■

BACK

DTC P1128: MAP Sensor Signal Lower Than Expected

1. Turn the ignition switch ON (II).

2. Check the MAP with the scan tool.

   Is 54.1 kPa (406 mmHg, 16.0 in.Hg) or higher indicated?

   YES—Intermittent failure, system is OK at this time.■

   NO—Replace the MAP sensor.■

DTC P1129: MAP Sensor Signal Higher Than Expected

1. Start the engine. Hold the engine at 3,000 rpm with no load (in Park or neutral) until the radiator fan comes on, then let it idle.

2. Check the MAP with the scan tool.

   Is 43.3 kPa (325 mmHg, 12.8 in.Hg) or less indicated?

   YES—Intermittent failure, system is OK at this time.■

   NO—Replace the MAP sensor.■

DTC Troubleshooting (cont'd)

DTC P0112: IAT Sensor Circuit Low Voltage

1. Turn the ignition switch ON (II).
2. Check the IAT with the scan tool.

   Is 302°F (150°C) or higher (or H-Limit in Honda mode of PGM Tester), or 0 V indicated?

   YES—Go to step 3.

   NO—Go to step 8.
3. Disconnect the IAT sensor connector.
4. Check the IAT with the scan tool.

   Is 302°F(150°C) or higher (or H-Limit in Honda mode of PGM Tester), or 0 V indicated?

   YES—Go to step 5.

   NO—Replace the IAT sensor.■
5. Turn the ignition switch OFF.
6. Disconnect ECM/PCM connector C (31P).
7. Check for continuity between IAT sensor 2P connector terminal No. 2 and body ground.

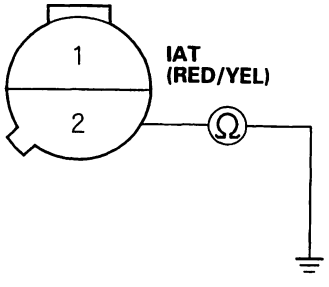

Wire side of female terminals

   Is there continuity?

   YES—Repair short in the wire between the ECM/PCM (C25) and the IAT sensor.■

   NO—Substitute a known-good ECM/PCM and recheck (see page 11-5). If normal IAT readings are indicated, replace the original ECM/PCM. ■
8. Check the temperature reading on the scan tool. Be aware that if the engine is warm, the reading will be higher than ambient temperature. If the engine is cold, the IAT and ECT will have the same value.

   Is the correct ambient temperature indicated?

   YES—Intermittent failure, system is OK at this time. Check for poor connections or loose wires at the IAT sensor and the ECM/PCM.■

   NO—Replace the IAT sensor.■

BACK

DTC P0113: IAT Sensor Circuit High Voltage

1. Turn the ignition switch ON (II).

2. Check the IAT with the scan tool.

   Is −4°F (−20°C) or less (or L-Limit in Honda mode of PGM Tester), or 5 V indicated?

   YES—Go to step 3.

   NO—Intermitent failure, system is OK at this time. Check for poor connections or loose wires at the IAT sensor and the ECM/PCM.■

3. Disconnect the IAT sensor connector.

4. Connect IAT sensor 2P connector terminals No. 1 and No. 2 with a jumper wire.

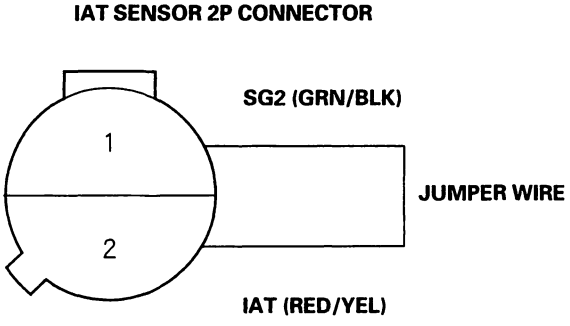

Wire side of female terminals

5. Check the IAT with the scan tool.

   Is −4°F (−20°C) or less (or L-Limit in Honda mode of PGM Tester), or 5 V indicated?

   YES—Go to step 6.

   NO—Replace the IAT sensor.■

6. Turn the ignition switch OFF.

7. Connect ECM/PCM connector terminals C18 and C25 with a jumper wire.

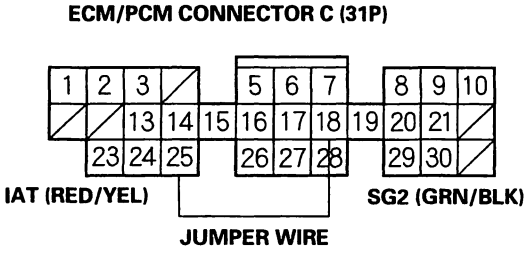

Wire side of female terminals

8. Turn the ignition switch ON (II).

9. Check the IAT with the scan tool.

   Is −4°F (−20°C) or less (or L-Limit in Honda mode of PGM Tester), or 5 V indicated?

   YES—Substitute a known-good ECM/PCM and recheck (see page 11-5). If normal voltage is indicated, replace the original ECM/PCM.■

   NO—Repair open in the wire between the ECM/PCM (C18, C25) and the IAT sensor.■

DTC Troubleshooting (cont'd)

DTC P0116: ECT Sensor Range/Performance Problem

NOTE: If DTC P0117 and/or P0118 are stored at the same time as DTC P0116, troubleshoot those DTCs first, then recheck for DTC P0116.

1. Start the engine. Hold the engine at 3,000 rpm with no load (in Park or neutral) until the radiator fan comes on, then let it idle.

2. Check the ECT with the scan tool.

   Is 176–200°F (80–93°C) or 0.4–0.7 V indicated?

   YES—Intermittent failure, system is OK at this time. Check the thermostat and the cooling system.■

   NO—Check the thermostat and the cooling system. If they are OK, replace the ECT sensor.■

DTC P0117: ECT Sensor Circuit Low Voltage

1. Turn the ignition switch ON (II).

2. Check the ECT with the scan tool.

   Is 302°F (150°C) or higher (or H-Limit in Honda mode of PGM Tester), or 0 V indicated?

   YES—Go to step 3.

   NO—Intermittent failure, system is OK at this time. Check for poor connections or loose wires at the ECT sensor and the ECM/PCM.■

3. Disconnect the ECT sensor connector.

4. Check the ECT with the scan tool.

   Is 302°F (150°C) or higher (or H-Limit in Honda mode of PGM Tester), or 0 V indicated?

   YES—Go to step 5.

   NO—Replace the ECT sensor.■

5. Turn the ignition switch OFF.

6. Disconnect ECM/PCM connector C (31P).

7. Check for continuity between ECT sensor 2P connector terminal No. 2 and body ground.

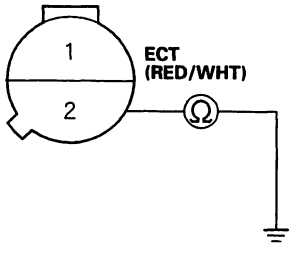

Wire side of female terminals

   Is there continuity?

   YES—Repair short in the wire between the ECM/PCM (C26) and the ECT sensor.■

   NO—Substitute a known-good ECM/PCM and recheck (see page 11-5). If normal ECT readings are indicated, replace the original ECM/PCM.■

BACK

DTC P0118: ECT Sensor Circuit High Voltage

1. Turn the ignition switch ON (II).

2. Check the ECT with the scan tool.

   Is −4°F (−20°C) or less (or L-Limit in Honda mode of PGM Tester), or 5 V indicated?

   YES—Go to step 3.

   NO—Intermittent failure, system is OK at this time. Check for poor connections or loose wires at the ECT sensor and the ECM/PCM.■

3. Disconnect the ECT sensor connector.

4. Connect ECT sensor 2P connector terminals No. 1 and No. 2 with a jumper wire.

ECT SENSOR 2P CONNECTOR

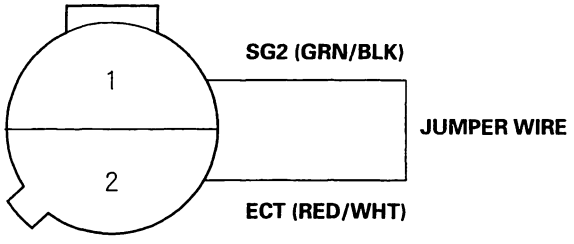

Wire side of female terminals

5. Check the ECT with the scan tool.

   Is −4°F (−20°C) or less (or L-Limit in Honda mode of PGM Tester), or 5 V indicated?

   YES—Go to step 6.

   NO—Replace the ECT sensor.■

6. Turn the ignition switch OFF.

7. Connect ECM/PCM connector terminals C18 and C26 with a jumper wire.

ECM/PCM CONNECTOR C (31P)

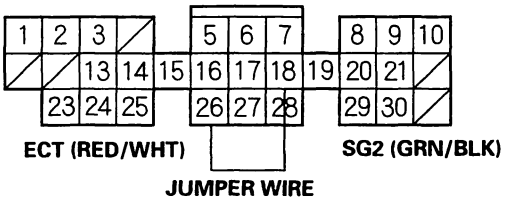

Wire side of female terminals

8. Turn the ignition switch ON (II).

9. Check the ECT with the scan tool.

   Is −4°F (−20°C) or less (or L-Limit in Honda mode of PGM Tester), or 5 V indicated?

   YES—Substitute a known-good ECM/PCM and recheck (see page 11-5). If normal voltage is indicated, replace the original ECM/PCM.■

   NO—Repair open in the wire between the ECM/PCM (C18, C26) and the ECT sensor.■

DTC Troubleshooting (cont'd)

DTC P0122: TP Sensor Circuit Low Voltage

1. Start the engine. Hold the engine at 3,000 rpm with no load (in Park or neutral) until the radiator fan comes on, then turn the ignition switch OFF.

2. Turn the ignition switch ON (II).

3. Check the throttle position with the scan tool.

   Is there approx. 10% or 0.5 V when the throttle is fully closed and approx. 90% or 4.5 V when the throttle is fully opened?

   YES—Intermittent failure, system is OK at this time. Check for poor connections or loose wires at the TP sensor and at the ECM/PCM.■

   NO—Go to step 4.

4. Turn the ignition switch OFF.

5. Disconnect the TP sensor connector.

6. Turn the ignition switch ON (II).

7. Measure voltage between TP sensor 3P connector terminals No. 1 and No. 3.

TP SENSOR 3P CONNECTOR

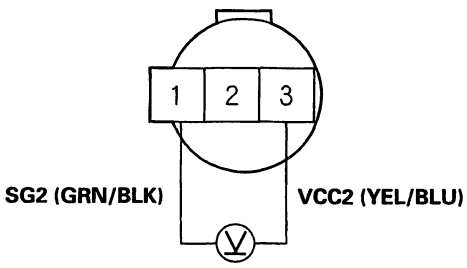

Wire side of female terminals

Is there approx. 5 V?

YES—Go to step 8.

NO—Go to step 15.

8. Turn the ignition switch OFF.

9. At the sensor side, measure resistance between TP sensor 3P connector terminals No. 1 and No. 2 with the throttle fully closed.

TP SENSOR 3P CONNECTOR

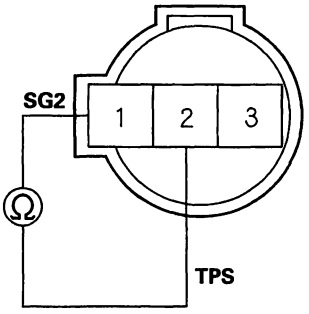

Terminal side of male terminals

Is there approx. 0.5—0.9 kΩ ?

YES—Go to step 10.

NO—Replace the throttle body (The TP sensor is not available separately.).■

10. Measure resistance between TP sensor 3P connector terminals No. 2 and No. 3 with the throttle fully closed.

TP SENSOR 3P CONNECTOR

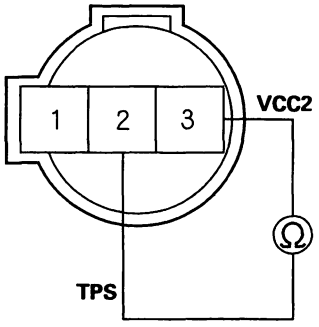

Terminal side of male terminals

Is there approx. 4.5kΩ ?

YES—Go to step 11.

NO—Replace the throttle body (The TP sensor is not available separately.).■

11. Disconnect ECM/PCM connector (31P).

BACK

12. At the wire harness side, check for continuity between TP sensor 3P connector terminal No. 2 and body ground.

TP SENSOR 3P CONNECTOR

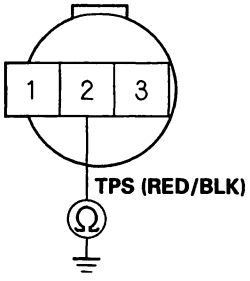

Wire side of female terminals

Is there continuity?

YES—Repair short in the wire between the ECM/PCM (C27) and the TP sensor.■

NO—Go to step 13.

13. Connect ECM/PCM connector terminal C27 and body ground with a jumper wire.

ECM/PCM CONNECTOR C (31P)

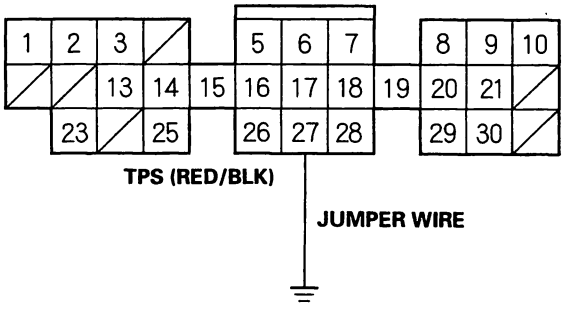

Wire side of female terminals

14. At the wire harness side, check for continuity between TP sensor 3P connector terminal No. 2 and body ground.

TP SENSOR 3P CONNECTOR

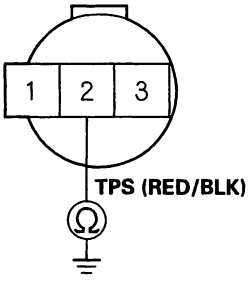

Wire side of female terminals

Is there continuity?

YES—Substitute a known-good ECM/PCM and recheck (see page 11-5). If the prescribed voltage is now available, replace the original ECM/PCM.■

NO—Repair open in the wire between the ECM/PCM (C27) and the TP sensor.■

15. Measure voltage between ECM/PCM connector terminals C18 and C28.

ECM/PCM CONNECTOR C (31P)

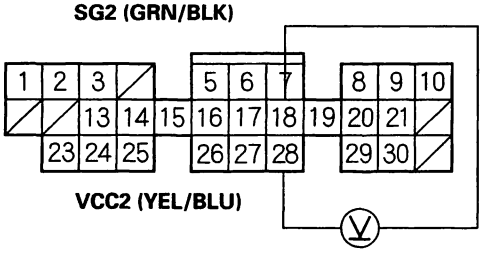

Wire side of female terminals

Is there approx. 5V?

YES—Repair open in the wire between the ECM/PCM (C28) and the TP sensor.■

NO—Substitute a known-good ECM/PCM and recheck (see page 11-5). If the prescribed voltage is now available, replace the original ECM/PCM.■

DTC Troubleshooting (cont'd)

DTC P1122: TP Sensor Signal Higher Than Expected

1. Turn the ignition switch ON (II).
2. Check the throttle position with the scan tool.

   Is 16.5% (F23A1, F23A4 engine) or 15.3% (F23A5 engine) or less indicated when the throttle is fully closed?

   YES—Intermittent failure, system is OK at this time.■

   NO—Replace the throttle body (The TP sensor is not available separately.).■

DTC P1121: TP Sensor Signal Lower Than Expected

1. Turn the ignition switch ON (II).
2. Check the throttle position with the scan tool.

   Is 14.1% (F23A1, F23A4 engine) or 13.3% (F23A5 engine) or higher indicated when the throttle is fully opened?

   YES—Intermittent failure, system is OK at this time.■

   NO—Replace the throttle body (The TP sensor is not available separately.).■

BACK

DTC P0123: TP Sensor Circuit High Voltage

1. Start the engine. Hold the engine at 3,000 rpm with no load (in Park or neutral) until the radiator fan comes on, then turn the ignition switch OFF.

2. Turn the ignition switch ON (II).

3. Check the throttle position with the scan tool.

   Is there approx. 10% or 0.5 V when the throttle is fully closed and approx. 90% or 4.5 V when the throttle is fully opened?

   YES—Intermittent failure, system is OK at this time. Check for poor connections or loose wires at the TP sensor and at the ECM/PCM. ■

   NO—Go to step 4.

4. Turn the ignition switch OFF.

5. Disconnect the TP sensor connector.

6. Turn the ignition switch ON (II).

7. At the wire harness side, measure voltage between TP sensor 3P connector terminals No. 1 and No. 3.

TP SENSOR 3P CONNECTOR

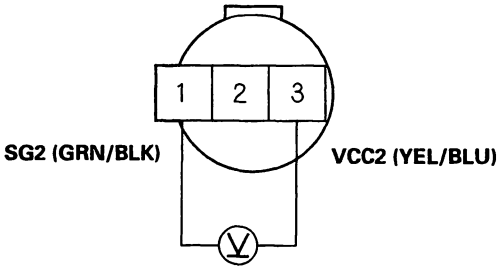

Wire side of female terminals

Is there approx. 5 V?

YES—Replace the throttle body (The TP sensor is not available separately). ■

NO—Go to step 8.

8. Measure voltage between ECM/PCM connector terminals C18 and C28.

ECM/PCM CONNECTOR C (31P)

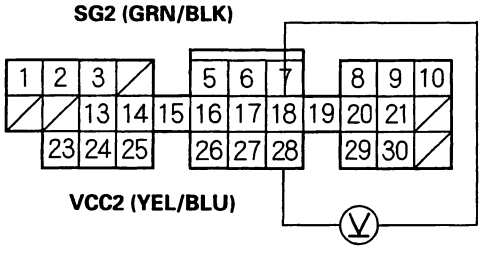

Wire side of female terminals

Is there approx. 5 V?

YES—Repair open in the wire between the ECM/PCM (C18) and the TP sensor. ■

NO—Substitute a known-good ECM/PCM and recheck (see page 11-5). If the prescribed voltage is now available, replace the original ECM/PCM. ■

DTC Troubleshooting (cont'd)

DTC P0128/P1486: Cooling System Malfunction

NOTE: If the DTCs listed below are stored at the same time as DTC P0128/P1486, troubleshoot those DTCs first, then recheck for P0128/P1486.

P0107, P0108, P1128, P1129: MAP Sensor
P1106, P1107, P1108: Barometric Pressure Circuit
P1253, P1257, P1258, P1259: VTEC System (F23A1, F23A5 engine)
P0401: EGR Flow Insufficient
P1491: EGR Valve Lift Insufficient
P1498: EGR Valve Position Sensor High Voltage
P0116, P0117, P0118: Engine Coolant Temperature Circuit
P0112, P0113: Intake Air Temperature Circuit
P0500: Vehicle Speed Sensor
P0335, P0336, P1359: Crankshaft Position Sensor
P0300, P1399: Random Misfire
P0301, P0302, P0303, P0304: Cylinder 1, 2, 3, or 4 Misfire Detected.
P0505: Idle Control System Malfunction
P1519: Idle Air Control Valve

DTC P0128/P1486 can set occasionally when the hood is opened.

1. Check the engine coolant level.

   Is the engine coolant level low?

   YES—Refill the engine coolant. If necessary, check the cooling system.■

   NO—Go to step 2.

2. Turn the ignition switch ON (II), and make sure the A/C is off.

3. Check the radiator fan.

   Does the radiator fan keep running?

   YES—Check the radiator fan circuit with A/C model (see page 10-19) or without A/C model (see page 10-21), radiator fan switch circuit (see page 10-23), and the radiator fan switch (see page 10-22).
   If the circuits and the switch are OK, substitute a known-good ECM/PCM and recheck (see page 11-5).
   If the symptom/indication goes away, replace the original ECM/PCM.■

   NO—Test the thermostat (see page 10-9).■

BACK

DTC P0131: Primary HO2S (Sensor 1) Circuit Low Voltage

1. Reset the ECM/PCM (see page 11-4).

2. Start the engine. Hold the engine at 3,000 rpm with no load (in Park or neutral) until the radiator fan comes on.

3. Check the Primary HO2S (Sensor 1) output voltage with the scan tool during acceleration using wide open throttle.

   Does the voltage stay at 0.5 V or less?

   YES—Go to step 4.

   NO—Intermittent failure, system is OK at this time. Check for poor connections or loose wires at the Primary HO2S (Sensor 1) and at the ECM/PCM. ■

4. Check the fuel pressure (see page 11-115).

   Is it normal?

   YES—Go to step 5.

   NO—Repair the fuel supply system. ■

5. Turn the ignition switch OFF.

6. Disconnect the Primary HO2S (Sensor 1) 4P connector.

7. Start the engine and let it idle.

8. Check the Primary HO2S (Sensor 1) output voltage with the scan tool.

   Does the voltage stay at 0.5 V or less?

   YES—Go to step 9.

   NO—Replace the Primary HO2S (Sensor 1). ■

9. Turn the ignition switch OFF.

10. Disconnect ECM/PCM connector C (31P).

11. Check for continuity between Primary HO2S (Sensor 1) 4P connector terminal No. 2 and body ground.

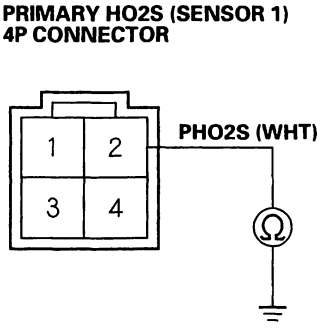

Terminal side of male terminals

Is there continuity?

YES—Repair short in the wire between the ECM/PCM (C16) and the Primary HO2S (Sensor 1). ■

NO—Substitute a known-good ECM/PCM and recheck (see page 11-5). If the symptom/indication goes away, replace the original ECM/PCM. ■

DTC Troubleshooting (cont'd)

DTC P0132: Primary HO2S (Sensor 1) Circuit High Voltage

1. Reset the ECM/PCM (see page 11-4).
2. Start the engine. Hold the engine at 3,000 rpm with no load (in Park or neutral) until the radiator fan comes on.
3. Check the Primary HO2S (Sensor 1) output voltage with the scan tool.

   Does the voltage stay at 0.9 V or more?

   YES—Go to step 4.

   NO—Intermittent failure, system is OK at this time. Check for poor connections or loose wires at the Primary HO2S (Sensor 1) and at the ECM/PCM.■
4. Turn the ignition switch OFF.
5. Disconnect the Primary HO2S (Sensor 1) 4P connector.
6. Connect Primary HO2S (Sensor 1) 4P connector terminals No. 1 and No. 2 with a jumper wire.

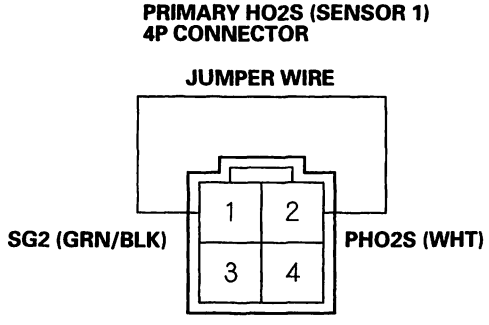

Terminal side of male terminals

7. Turn the ignition switch ON (II).
8. Check the Primary HO2S (Sensor 1) output voltage with the scan tool.

   Is there 0.9 V or more?

   YES—Go to step 9.

   NO—Replace the Primary HO2S (Sensor 1).■
9. Turn the ignition switch OFF.
10. Connect ECM/PCM connector terminals C16 and C18 with a jumper wire.

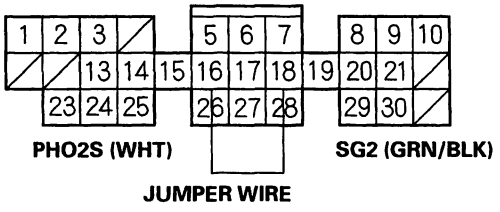

Wire side of female terminals

11. Turn the ignition switch ON (II).
12. Check the Primary HO2S (Sensor 1) output voltage with the scan tool.

    Is there 0.9 V or more?

    YES—Substitute a known-good ECM/PCM and recheck (see page 11-5). If the symptom/indication goes away replace the original ECM/PCM.■

    NO—Repair open in the wire between the ECM/PCM (C16) and the Primary HO2S (Sensor 1).■

BACK

DTC P0133: Primary HO2S (Sensor 1) Slow Response

DTC P1163: A/F Sensor (Sensor 1) Slow Response

NOTE:
- If DTC P0131, P0132 and/or P0135 are stored at the same time as DTC P0133, troubleshoot those DTCs first, then recheck for DTC P0133.
- If DTC P1162 is stored at the same time as DTC P1163, troubleshoot DTC P1162 first, then recheck for DTC P1163.

1. Reset the ECM/PCM (see page 11-4).

2. Start the engine. Hold the engine at 3,000 rpm with no load (in Park or neutral) until the radiator fan comes on.

3. Test-drive under following conditions.

   - 55 mph (89km/n) steady speed
   - A/T in D4 position (M/T in 5th gear)
   - Until readiness code or Temporary DTC P0133 and/or P1163 (F23A4 engine) comes on

4. Check for a Temporary DTC with the scan tool.

   Is Temporary DTC P0133 and/or P1163 indicated?

   YES—Replace the Primary HO2S (Sensor 1).■

   NO—Intermittent failure, system is OK at this time. Check for poor connections or loose wires at C101 (located under the under-hood fuse/relay box), the Primary HO2S (Sensor 1) and the ECM/PCM.■

DTC Troubleshooting (cont'd)

DTC P0137: Secondary HO2S (Sensor 2) Circuit Low Voltage-Except F23A4 SULEV Engine

1. Reset the ECM/PCM (see page 11-4).

2. Start the engine. Hold the engine at 3,000 rpm with no load (in Park or neutral) until the radiator fan comes on.

3. Check the Secondary HO2S (Sensor 2) output voltage at 3,000 rpm with the scan tool.

   Does the voltage stay at 0.3 V or less?

   YES—Go to step 4.

   NO—Intermittent failure, system is OK at this time. Check for poor connections or loose wires at C204 (located under the right side of the dash), C102 (located under the under-hood fuse/relay box), the Secondary HO2S (Sensor 2), and the ECM/PCM. ■

4. Turn the ignition switch OFF.

5. Disconnect the Secondary HO2S (Sensor 2) 4P connector.

6. Start the engine.

7. Check the Secondary HO2S (Sensor 2) output voltage with the scan tool.

   Does the voltage stay at 0.3 V or less?

   YES—Go to step 8.

   NO—Replace the Secondary HO2S (Sensor 2). ■

8. Turn the ignition switch OFF.

9. Disconnect ECM/PCM connector A (32P).

10. Check for continuity between Secondary HO2S (Sensor 2) 4P connector terminal No. 2 and body ground.

SECONDARY HO2S (SENSOR 2) 4P CONNECTOR

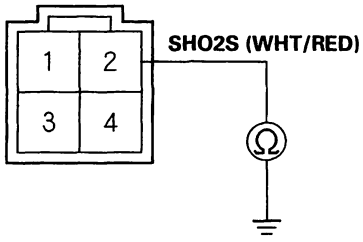

Terminal side of male terminals

Is there continuity?

YES—Repair short in the wire between the ECM/PCM (A23) and the Secondary HO2S (Sensor 2). ■

NO—Substitute a known-good ECM/PCM and recheck (see page 11-5). If the symptom/indication goes away, replace the original ECM/PCM. ■

BACK

DTC P0137: Secondary HO2S (Sensor 2) Circuit Low Voltage-F23A4 SULEV engine

1. Reset the PCM (see page 11-4).

2. Start the engine. Hold the engine at 3,000 rpm with no load (in Park or neutral) until the radiator fan comes on.

3. Check the Secondary HO2S (Sensor 2) output voltage with the scan tool during acceleration using wide open throttle.

   Does the voltage stay at 0.6 V or more?

   YES—Intermittent failure, system is OK at this time. Check for poor connections or loose wires at C204 (located under the right side of the dash), C102 (located under the under-hood fuse/relay box), the Secondary HO2S (Sensor 2), and the PCM. ■

   NO—Go to step 4.

4. Turn the ignition switch OFF.

5. Disconnect the Secondary HO2S (Sensor 2) 4P connector.

6. Start the engine.

7. Check the Secondary HO2S (Sensor 2) output voltage with the scan tool.

   Does the voltage stay at 0.3 V or less?

   YES—Go to step 8.

   NO—Replace the Secondary HO2S (Sensor 2). ■

8. Turn the ignition switch OFF.

9. Disconnect PCM connector A (32P).

10. Check for continuity between Secondary HO2S (Sensor 2) 4P connector terminal No. 2 and body ground.

SECONDARY HO2S (SENSOR 2) 4P CONNECTOR

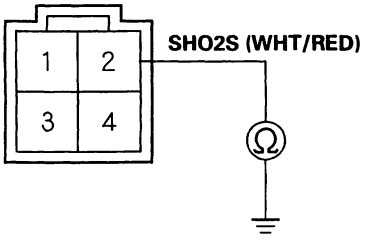

Terminal side of male terminals

Is there continuity?

YES—Repair short in the wire between the PCM (A23) and the Secondary HO2S (Sensor 2). ■

NO—Substitute a known-good PCM and recheck (see page 11-5). If the symptom/indication goes away, replace the original PCM. ■

DTC Troubleshooting (cont'd)

DTC P0138: Secondary HO2S (Sensor 2) Circuit High Voltage-Except F23A4 SULEV engine

1. Reset the ECM/PCM (see page 11-4).

2. Start the engine. Hold the engine at 3,000 rpm with no load (in Park or neutral) until the radiator fan comes on.

3. Check the Secondary HO2S (Sensor 2) output voltage at 3,000 rpm with the scan tool.

   Does the voltage stay at 0.6 V or more?

   YES—Go to step 4.

   NO—Intermittent failure, system is OK at this time. Check for poor connections or loose wires at C204 (located under the right side of the dash), C102 (located under the under-hood fuse/relay box), the Secondary HO2S (Sensor 2), and the ECM/PCM. ■

4. Turn the ignition switch OFF.

5. Disconnect the Secondary HO2S (Sensor 2) 4P connector.

6. Connect Secondary HO2S (Sensor 2) 4P connector terminals No. 1 and No. 2 with a jumper wire.

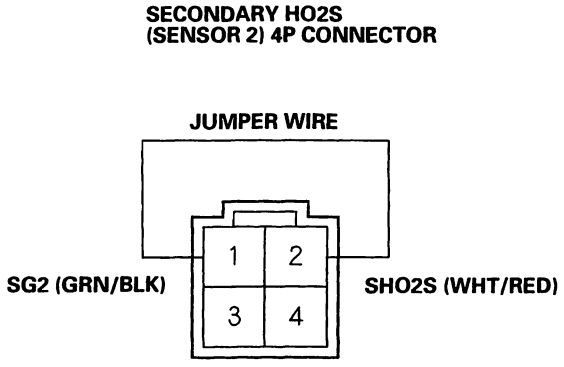

Terminal side of male terminals

7. Turn the ignition switch ON (II).

8. Check the Secondary HO2S (Sensor 2) output voltage with the scan tool.

   Is there 0.6 V or more?

   YES—Go to step 9.

   NO—Replace the Secondary HO2S (Sensor 2). ■

9. Turn the ignition switch OFF.

10. Connect ECM/PCM connector terminals A23 and C18 with a jumper wire.

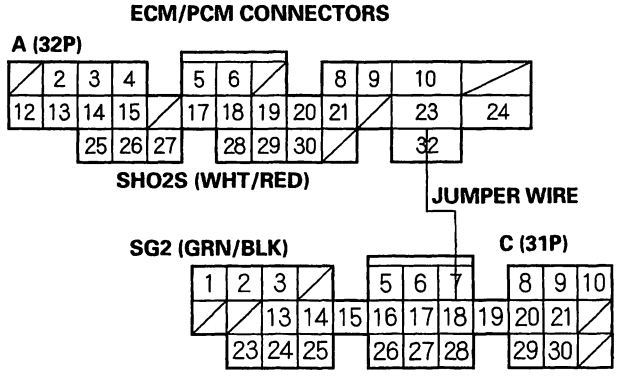

Wire side of female terminals

11. Turn the ignition switch ON (II).

12. Check the Secondary HO2S (Sensor 2) output voltage with the scan tool.

    Is there 0.6 V or more?

    YES—Substitute a known-good ECM/PCM and recheck (see page 11-5). If the symptom/ndication goes away, replace the original ECM/PCM. ■

    NO—Repair open in the wire between the ECM/PCM (A23) and the Secondary HO2S (Sensor 2). ■

BACK

DTC P0138: Secondary HO2S (Sensor 2) Circuit High Voltage-F23A4 SULEV Engine

1. Reset the PCM (see page 11-4).

2. Start the engine. Hold the engine at 3,000 rpm with no load (in Park or neutral) until the radiator fan comes on.

3. Accelerate using wide open throttle. Then decelerate for at least 3 seconds with the throttle completely closed.

4. Check the Secondary HO2S (Sensor 2) output voltage with the scan tool.

   Does the voltage stay at 0.9 V or more?

   YES—Go to step 5.

   NO—Intermittent failure, system is OK at this time. Check for poor connections or loose wires at C204 (located under the right side of the dash), C102 (located under the under-hood fuse/relay box), the Secondary HO2S (Sensor 2) and the PCM.■

5. Turn the ignition switch OFF.

6. Disconnect the Secondary HO2S (Sensor 2) 4P connector.

7. Connect Secondary HO2S (Sensor 2) 4P connector terminals No. 1 and No. 2 with a jumper wire.

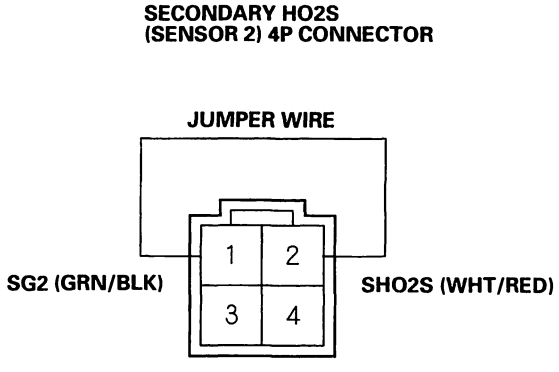

Terminal side of male terminals

8. Turn the ignition switch ON (II).

9. Check the Secondary HO2S (Sensor 2) output voltage with the scan tool.

   Is there 0.9 V or more?

   YES—Go to step 10.

   NO—Replace the Secondary HO2S (Sensor 2).■

10. Turn the ignition switch OFF.

11. Connect PCM connector terminals A23 and C18 with a jumper wire.

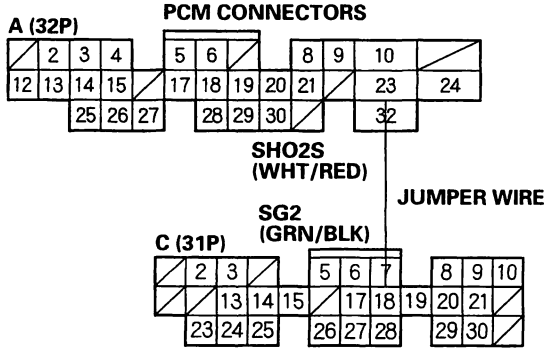

Wire side of female terminals

12. Turn the ignition switch ON (II).

13. Check the Secondary HO2S (Sensor 2) output voltage with the scan tool.

    Is there 0.9 V or more?

    YES—Substitute a known-good PCM and recheck (see page 11-5). If the symptom/indication goes away, replace the original PCM.■

    NO—Repair open in the wire between the PCM (A23) and the Secondary HO2S (Sensor 2).■

DTC Troubleshooting (cont'd)

DTC P0139: Secondary HO2S (Sensor 2) Slow Response-Except F23A4 SULEV Engine

1. Reset the ECM/PCM (see page 11-4).

2. Start the engine. Hold the engine at 3,000 rpm with no load (in Park or neutral) until the radiator fan comes on.

3. Check the Secondary HO2S (Sensor 2) output voltage at 3,000 rpm with the scan tool.

   Does the voltage stay within 0.3–0.6 V for 2 minutes?

   YES—Replace the Secondary HO2S (Sensor 2). ■

   NO—Intermittent failure, system is OK at this time. Check for poor connections or loose wires at C204 (located under the right side of the dash), C102 (located under the under-hood fuse/relay box), the Secondary HO2S (Sensor 2), and the ECM/PCM. ■

DTC P0139: Secondary HO2S (Sensor 2) Slow Response-F23A4 SULEV engine

1. Reset the PCM (see page 11-4).

2. Start the engine. Hold the engine at 3,000 rpm with no load (in Park or neutral) until the radiator fan comes on.

3. Accelerate using wide open throttle. Then decelerate for at least 3 seconds with the throttle completely closed.

4. Check the Secondary HO2S (Sensor 2) output voltage with the scan tool.

   Does the voltage stay at 0.3 V or more?

   YES—Replace the Secondary HO2S (Sensor 2). ■

   NO—Intermittent failure, system is OK at this time. Check for poor connections or loose wires at C204 (located under the right side of the dash), C102 (located under the under-hood fuse/relay box), the Secondary HO2S (Sensor 2), and the PCM. ■

BACK

DTC P0135: Primary HO2S (Sensor 1) Heater Circuit Malfunction

DTC P0141: Secondary HO2S (Sensor 2) Heater Circuit Malfunction

NOTE: Information marked with an asterisk (*) applies to DTC P0141.

1. Reset the ECM/PCM (see page 11-4).
2. Start the engine.

   Is DTC P0135 or P0141 indicated?

   YES – Go to step 3.

   NO – Intermittent failure, system is OK at this time. Check for poor connections or loose wires at C204 (located under the right side of the dash), C101, C102 (located at the left side of the engine compartment), the Primary HO2S (Sensor 1), the Secondary HO2S (Sensor 2), and the ECM/PCM. ■

3. Check the No. 6 ECU (ECM/PCM) CRUISE CONTROL (15A) fuse in the driver's under-dash fuse/relay box.

   Is the fuse OK?

   YES – Go to step 4.

   NO – Replace the fuse and retest.

4. Turn the ignition switch OFF.
5. Disconnect the HO2S (Primary or Secondary *) (Sensor 1 or Sensor 2 *) 4P connector.
6. At the HO2S side, measure resistance between HO2S 4P connector terminals No. 3 and No. 4.

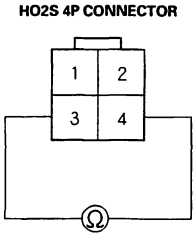

Wire side of female terminals

Is there 10– 40 Ω (F23A4 SULEV engine: 2.0– 20.0 Ω)?

YES – Go to step 7.

NO – Replace the Primary HO2S (Sensor 1) or Secondary HO2S (Sensor 2) * . ■

7. Check for continuity between body ground and HO2S 4P connector terminals No. 3 and No. 4 individually.

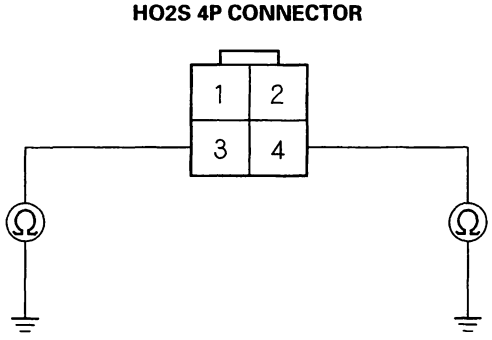

Wire side of female terminals

Is there continuity?

YES – Replace the HO2S (Primary or Secondary *) (Sensor 1 or Sensor 2 *). ■

NO – Go to step 8.

8. Turn the ignition switch ON (II).

9. Measure voltage between HO2S 4P connector terminals, No. 3 and No. 4.

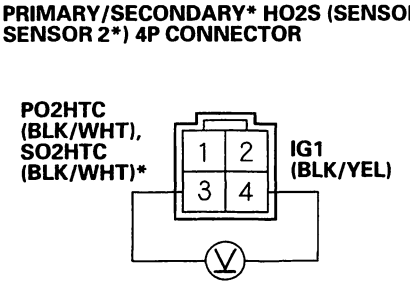

Terminal side of male terminals

Is there battery voltage?

YES – Go to step 10.

NO – Go to step 13.

(cont'd)

DTC Troubleshooting (cont'd)

10. Turn the ignition switch OFF.

11. Disconnect ECM/PCM connector C (31P) (ECM/PCM connector A, 32P) * .

12. Check for continuity between ECM/PCM connector terminal C1 (A8) * and body ground.

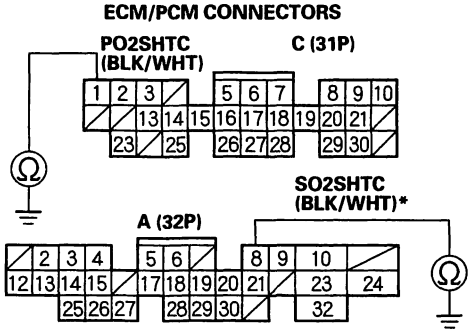

Wire side of female terminals

Is there continuity?

YES—Repair short in the wire between the ECM/PCM (C1, A8 *) and the HO2S (Primary or Secondary *) (Sensor 1, Sensor 2 *).■

NO—Substitute a known-good ECM/PCM and recheck (see page 11-5). If the symptom/indication goes away, replace the original ECM/PCM.■

13. Measure voltage between HO2S terminal No. 4 and body ground.

PRIMARY/SECONDARY* HO2S (SENSOR 1/ SENSOR 2*) 4P CONNECTOR

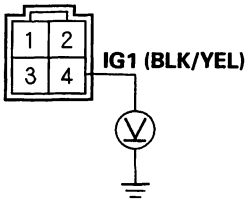

Terminal side of male terminals

Is there battery voltage?

YES—Go to step 14.

NO—Repair open in the wire between the No. 6 ECU (ECM/PCM) CRUISE CONTROL (15A) fuse and the HO2S.■

14. Turn the ignition switch OFF.

15. Reconnect the HO2S 4P connector.

16. Disconnect ECM/PCM connector C (31P) (ECM/PCM connector A, 32P) * .

17. Turn the ignition switch ON (II).

18. Measure voltage between ECM/PCM connector terminals B2 and C1 (A8) * .

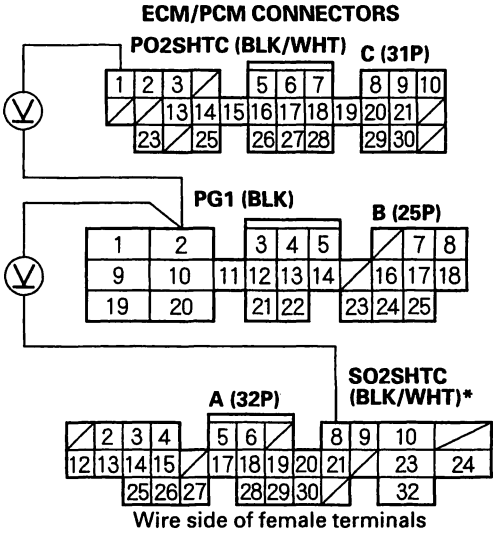

Wire side of female terminals

Is there 0.1 V or less?

YES—Repair open in the wire between the ECM/PCM (C1, A8 *) and the HO2S (Primary or Secondary *) (Sensor 1, Sensor 2 *).■

NO—Substitute a known-good ECM/PCM and recheck (see page 11-5). If the symptom/indication goes away, replace the original ECM/PCM.■

BACK

DTC P0171: Fuel System Too Lean

DTC P0172: Fuel System Too Rich

NOTE: If some of the DTCs listed below are stored at the same time as DTC P0171 and/or P0172, troubleshoot those DTCs first, then recheck for P0171 and/or P0172.

P0106, P0107, P0108, P1128, P1129: MAP Sensor
P0135: Primary HO2S (Sensor 1) Heater
P0137, P0138: Secondary HO2S (Sensor 2)
P0141: Secondary HO2S (Sensor 2) Heater
P0401: EGR Flow Insufficient
P1259: VTEC System (F23A1, F23A4 engine)
P1491: EGR Valve Lift Insufficient
P1498: EGR Valve Lift Sensor High Voltage

1. Check the fuel pressure (see page 11-115).

   Is fuel pressure OK?

   YES—Go to step 2.

   NO—Check these items:

   - If the pressure is too high. Check the fuel pressure regulator and the fuel return line. ■
   - If the pressure is too low. Check the fuel pump, the fuel feed line, the fuel filter, and the fuel pressure regulator. ■

2. Start the engine. Hold the engine at 3,000 rpm with no load (in Park or neutral) until the radiator fan comes on.

3. Check the Primary HO2S or Air Fuel Ratio (A/F) Sensor (Sensor 1) output with the scan tool.

   Does it stay at less than 0.3 V or more than 0.6 V?

   YES—Replace the Primary HO2S or Air Fuel Ratio (A/F) Sensor (Sensor 1). ■

   NO—Go to step 4.

4. With a vacuum pump, apply vacuum to the EVAP canister purge valve from the intake manifold side.

   Does it hold vacuum?

   YES—Check the valve clearances and adjust if necessary. If the valve clearances are OK, replace the injectors. ■

   NO—Replace the EVAP canister purge valve. ■

DTC Troubleshooting (cont'd)

DTC P0300: Random Misfire
and Any Combination of the Following:

DTC P0301: No. 1 Cylinder Misfire

DTC P0302: No. 2 Cylinder Misfire

DTC P0303: No. 3 Cylinder Misfire

DTC P0304: No. 4 Cylinder Misfire

NOTE:
- If the misfiring is frequent enough to trigger detection of increased emissions during two consecutive driving cycles, the MIL will come on, and DTC P0300 (and some combination of P0301 through P0304) will be stored.
- If the misfiring is frequent enough to damage the catalyst, the MIL will blink whenever the misfiring occurs, and DTC P0300 (and some combination of P0301 through P0304) will be stored. When the misfiring stops, the MIL will remain on.

1. Troubleshoot the following DTCs first, if any of them were stored along with the random misfire DTC(s):
   P0107, P0108, P1128, P1129: MAP Sensor
   P0171, P0172: Fuel metering
   P0401, P1491, P1498: EGR system
   P0505: Idle control system
   P1259: VTEC System (F23A1, F23A4 engine)
   P1361, P1362: TDC sensor
   P1381, P1382: CYP sensor
   P1519: IAC valve

2. Test-drive the vehicle to verify the symptom.

3. Find the symptom in the chart below, and do the related procedures and checks, in the order listed, until you find the cause.

Symptom	Procedure	Also check for:
Random misfire only at low RPM and under load	1. Check fuel pressure (see page 11-115). 2. Inspect the ignition distributor housing.	• Low compression • Low quality fuel • Correct EGR valve function
Random misfire only during acceleration	1. Inspect and test ignition wires (see page 4-25). 2. Inspect the ignition distributor housing. 3. Check fuel pressure (see page 11-115). 4. Test the ignition coil (see page 4-24). 5. Test the ignition control module (see page 4-23).	Malfunction in the VTEC system (F23A1, F23A4 engine) (see page 6-7)
Random misfire at high RPM and load, or under random conditions	1. Check fuel pressure (see page 11-115). 2. Inspect and test ignition wires (see page 4-25). 3. Inspect the ignition distributor housing. 4. Test the ignition coil (see page 4-24). 5. Test the ignition control module (see page 4-23).	Correct valve clearance (see page 6-14)

BACK

DTC P0301: No. 1 Cylinder Misfire

DTC P0302: No. 2 Cylinder Misfire

DTC P0303: No. 3 Cylinder Misfire

DTC P0304: No. 4 Cylinder Misfire

NOTE: If some of the DTCs listed below are stored at the some time as a misfire DTC, troubleshoot those DTCs first, then recheck for the misfire DTC.

P0131, P0132: Primary HO2S
P0171, P0172: Fuel Supply System
P0401: EGR System
P1359, P1361, P1362: TDC Sensor
P1381, P1382: CYP Sensor

1. Start the engine, listen for a clicking sound from the injector in the problem cylinder.

   Does it click?

   YES—Go to step 2.

   NO—Go to step 11.

2. After checking and recording the freeze data, do the ECM/PCM Reset Procedure. If there is no freeze data of misfiring, just clear the DTC.

3. Exchange the spark plug from the problem cylinder with one from another cylinder.

4. Test-drive the vehicle several times in the range of the freeze data or under various conditions if there was no freeze data.

5. Check for a DTC or Temporary DTC with the scan tool.

   Is DTC P0301, P0302, P0303, P0304, or Temporary DTC P1399 indicated?

   YES—Go to step 6.

   NO—Intermittent misfire due to spark plug fouling, etc. (no misfire at this time).■

6. Determine which cylinder(s) had the misfire.

   Does the misfire occur in the cylinder where the spark plug was exchanged?

   YES—Replace the faulty spark plug.■

   NO—Go to step 7.

7. Exchange the injector from the problem cylinder with one from another cylinder.

8. Let the engine idle for 2 minutes.

9. Test-drive the vehicle several times in the range of the freeze data or under various conditions if there was no freeze data.

   Is DTC P0301, P0302, P0303, P0304, or Temporary DTC P1399 indicated?

   YES—Go to step 10.

   NO—Intermittent misfire due to bad contact in the injector connector (no misfire at this time).■

10. Determine which cylinder(s) had the misfire.

    Does the misfire occur in the cylinder where the injector was exchanged?

    YES—Replace the faulty injector.■

    NO—Check the engine compression, and perform a cylinder leak down test.■

11. Check for an open or short in the harness between the ECM/PCM and the injector.

    Are the wires OK?

    YES—Go to step 12.

    NO—Repair open or short in the wire.■

12. Install a known-good injector, and recheck.

    Does the injector click?

    YES—Replace the injector.■

    NO—Substitute a known-good ECM/PCM and recheck (see page 11-5). If the symptom/indication goes away, replace the original ECM/PCM.■

DTC Troubleshooting (cont'd)

DTC P0325: KS Circuit Malfunction

1. Reset the ECM/PCM (see page 11-4).

2. Start the engine. Hold the engine at 3,000 rpm with no load (in Park or neutral) until the radiator fan comes on, then let it idle.

3. Hold the engine at 3,000 – 4,000 rpm for at least 60 seconds.

   Is DTC P0325 indicated?

   YES – Go to step 4.

   NO – Intermittent failure, system is OK at this time. Check for poor connections or loose wires at the knock sensor and at the ECM/PCM.

4. Turn the ignition switch OFF.

5. Disconnect the knock sensor connector.

6. Check for continuity between ECM/PCM connector terminal C3 and body ground.

ECM/PCM CONNECTOR C (31P)

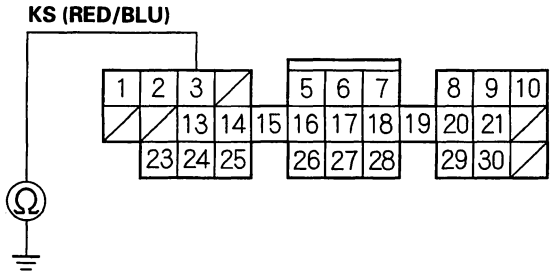

Wire side of female terminals

Is there continuity?

YES – Repair short in the wire between the ECM/PCM (C3) and the knock sensor. ■

NO – Go to step 7.

7. Connect knock sensor connector terminal No. 1 to body ground with a jumper wire.

KNOCK SENSOR 1P CONNECTOR

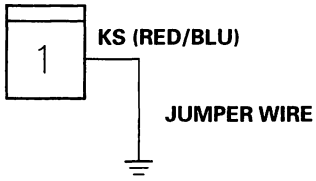

Wire side of female terminals

8. Check for continuity between ECM/PCM connector terminal C3 and body ground.

ECM/PCM CONNECTOR C (31P)

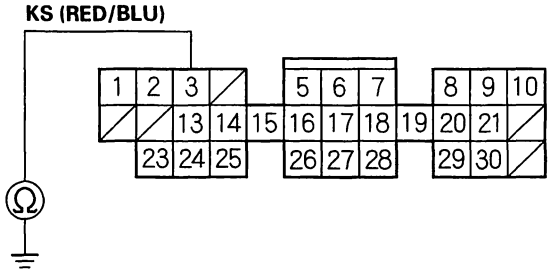

Wire side of female terminals

Is there continuity ?

YES – Go to step 9.

NO – Repair open in the wire between the ECM/PCM (C3) and the knock sensor. ■

9. Substitute a known-good knock sensor and recheck.

   Is DTC P0325 indicated?

   YES – Substitute a known-good ECM/PCM and recheck (see page 11-5). If the symptom/indication goes away, replace the original ECM/PCM. ■

   NO – Replace the original knock sensor (see page 7-24). ■

BACK

DTC P0335: CKP Sensor No signal

DTC P0336: CKP Sensor Intermittent Interruption

DTC P1361: TDC 1 Sensor Intermittent Interruption

DTC P1362: TDC 1 Sensor No Signal

1. Check for DTC P1359. If it is stored along with any of the DTCs listed above, troubleshoot it first, then troubleshoot the other DTCs.

2. Reset the ECM/PCM (see page 11-4).

3. Start the engine.

   Is DTC P0335, P0336, P1361, or P1362 indicated?

   YES—Go to step 4.

   NO—Intermittent failure, system is OK at this time. Check for poor connections or loose wires at the CKP/TDC sensor and at the ECM/PCM.■

4. Turn the ignition switch OFF.

5. Disconnect the CKP/DTC sensor 4P connector, and measure resistance between its terminals at the locations shown for the DTC(s) you retrieved.

P1361 or P1362

CKP/TDC SENSOR 4P CONNECTOR

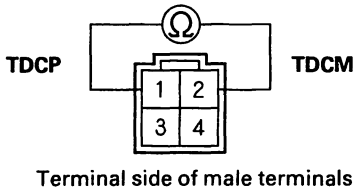

Terminal side of male terminals

P0335 or P0336

CKP/TDC SENSOR 4P CONNECTOR

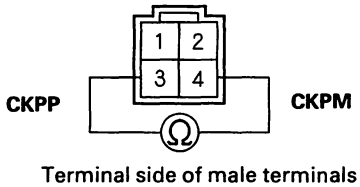

Terminal side of male terminals

Is there 1,850—2,450 Ω ?

YES—Go to step 6.

NO—Replace the CKP/TDC sensor (see page 6-55■

6. Check for continuity from body ground to each terminal indicated for the DTC(s) you retrieved.

P1361 or P1362

CKP/TDC SENSOR 4P CONNECTOR

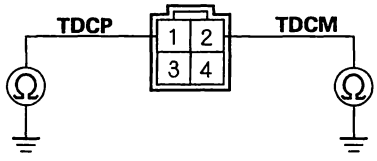

Terminal side of male terminals

P0335 or P0336

CKP/TDC SENSOR 4P CONNECTOR

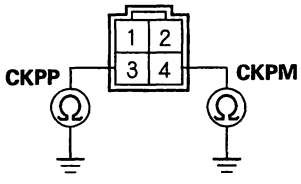

Terminal side of male terminals

Is there continuity?

YES—Replace the CKP/TDC sensor (see page 6-55).■

NO—Go to step 7.

7. Reconnect the CKP/TDC sensor 4P connector.

(cont'd)

DTC Troubleshooting (cont'd)

8. Disconnect ECM/PCM connector C (31P), and measure resistance between the terminals indicated for the DTC(s) you retrieved.

P0335 or P0336

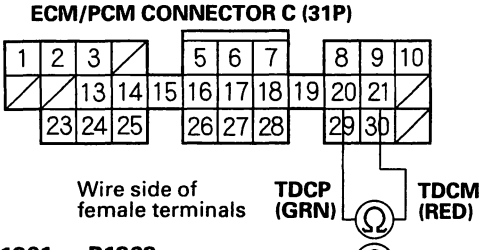

P1361 or P1362

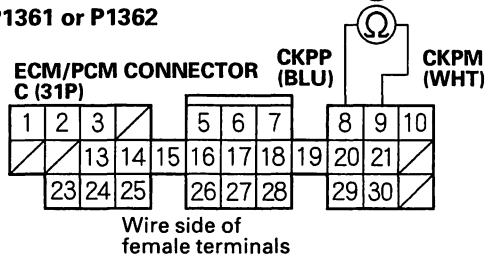

Is there 1,850–2,450 Ω ?

YES—Go to step 9.

NO—Repair open in the faulty sensor wire(s).■

9. Check for continuity between the ECM/PCM connector terminal(s) to body ground as indicated for the DTC(s) you retrieved.

P1361 or P1362

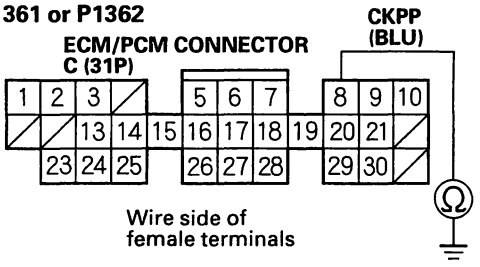

P0335 or P0336

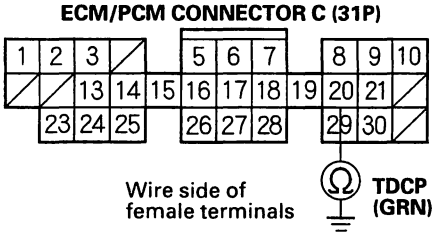

Is there continuity?

YES—Repair short in the faulty sensor wire(s).■

NO—Substitute a known-good ECM/PCM and recheck (see page 11-5). If the symptom/indication goes away, replace the original ECM/PCM.■

BACK

DTC P0500: VSS Circuit Malfunction

1. Test-drive the vehicle.

2. Check the vehicle speed sensor reading with the scan tool.

   Is the correct speed indicated?

   YES—Intermittent failure, system is OK at this time. Check for poor connections or loose wires at the VSS and at the ECM.■

   NO—Go to step 3.

3. Turn the ignition switch OFF.

4. Block the rear wheels and set the parking brake.

5. Raise the front of the vehicle, and make sure it is securely supported.

6. Turn the ignition switch ON (II).

7. Block the right front wheel, and slowly rotate the left front wheel.

8. Measure voltage between ECM connector terminals B20 and C23.

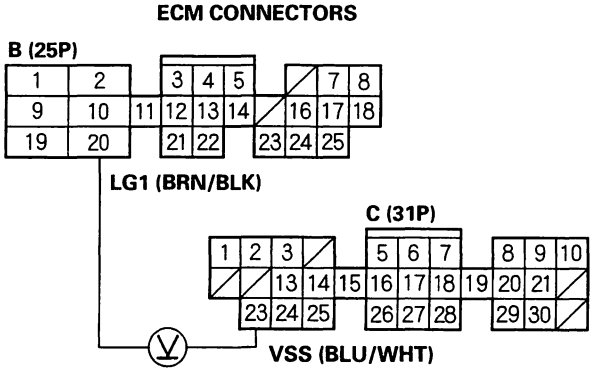

Wire side of female terminals

   Does the voltage pulse between 0 V and 5 V?

   YES—Substitute a known-good ECM and recheck (see page 11-5). If the symptom/indication goes away, replace the original ECM.■

   NO—Go to step 9.

9. Turn the ignition switch OFF.

10. Disconnect ECM connector C (31P).

11. Turn the ignition switch ON (II).

12. Block the right front wheel, and slowly rotate the left front wheel.

13. Measure voltage between ECM connector terminals B20 and C23.

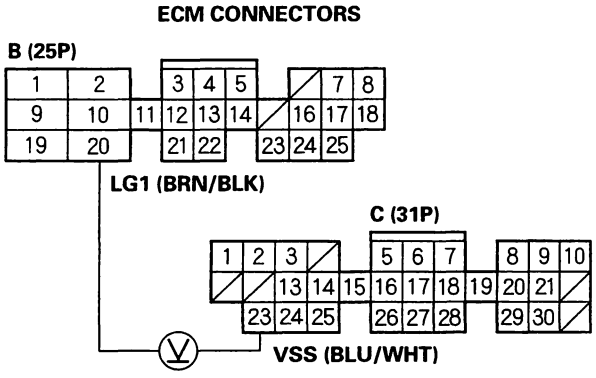

Wire side of female terminals

   Does the voltage pulse between 0 V and 5 V?

   YES—Substitute a known-good ECM and recheck (see page 11-5). If the symptom/indication goes away, replace the original ECM.■

   NO—Check these items:

   - A short or an open in the wire between the ECM (C23) and the VSS.
   - If the wire is OK, test the VSS (see page 22-69).

DTC Troubleshooting (cont'd)

DTC P0560: ECM/PCM Back up Circuit Low Voltage

NOTE: If the No. 13 CLOCK BACK UP (7.5A) fuse in the passenger's under-dash fuse/relay box is removed and the engine is started, the MIL will come on and the ECM /PCM will store DTC P0560.

1. Reset the ECM/PCM (see page 11-4).

2. Start the engine.

   Is DTC P0560 indicated?

   YES—Go to step 3.

   NO—Intermittent failure, system is OK at this time. Check for poor connections or loose wires at the No. 13 CLOCK BACK UP (7.5A) fuse in the passenger's under-dash fuse/relay box and ECM/PCM. ■

3. Turn the ignition switch OFF.

4. Inspect the No. 13 CLOCK BACK UP (7.5A) fuse in the passenger's under-dash fuse/relay box. ■

   Is the fuse OK?

   YES—Go to step 5.

   NO—Check for these problems.

   - Repair short in the wire between the ECM/PCM (B21) and No. 13 CLOCK BACK UP (7.5A) fuse in the passenger's under-dash fuse/relay box. ■
   - Repair short in the wire in the back up circuit (see page 22-46). ■

5. Measure voltage between ECM/PCM connector terminal B21 and body ground.

ECM/PCM CONNECTOR B (25P)

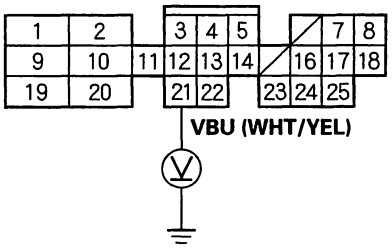

Wire side of female terminals

Is there battery voltage?

YES—Substitute a known-good ECM/PCM and recheck (see page 11-5). If the symptom/indication goes away, replace the original ECM/PCM. ■

NO—Repair open in the wire between the ECM/PCM (B21) and the No. 13 CLOCK BACK UP (7.5A) fuse in the passenger's under-dash fuse/relay box. ■

BACK

DTC P1106: BARO Sensor Range/Perfomance Problem

1. Reset the ECM/PCM (see page 11-4).

2. Start the engine. Hold the engine at 3,000 rpm with no load (in Park or neutral) until the radiator fan comes on, then let it idle.

3. Test-drive with the A/T in 2nd position, or the M/T in 4th gear.

4. Accelerate for 5 seconds using wide open throttle.

5. Check for a Temporary DTC with the scan tool.

   Is Temporary DTC P1106 indicated?

   YES—Substitute a known-good ECM/PCM and recheck (see page 11-5). If the symptom/indication goes away, replace the original ECM/PCM.■

   NO—Intermittent failure, system is OK at this time.■

DTC P1107: BARO Sensor Circuit Low Voltage

DTC P1108: BARO Sensor Circuit High Voltage

1. Reset the ECM/PCM (see page 11-4).

2. Turn the ignition switch ON (II).

   Is DTC P1107 or P1108 indicated?

   YES—Substitute a known-good ECM/PCM and recheck (see page 11-5). If the symptom/indication goes away, replace the original ECM/PCM.

   NO—Intermittent failure, system is OK at this time.■

DTC Troubleshooting (cont'd)

DTC P1149: A/F Sensor (Sensor 1) Range/ Performance Problem

DTC P1165: A/F Sensor (Sensor 1) Range/ Performance Problem

NOTE: If some of the DTCs listed below are stored at the same time as DTC P1149 or P1165, troubleshoot those DTCs first, then troubleshoot DTC P1149 or P1165.

P0137, P0138: Secondary HO2S (Sensor 2)
P0141: Secondary HO2S (sensor 2) Heater

1. Reset the ECM/PCM (see page 11-4).

2. Start the engine. Hold the engine at 3,000 rpm with no load (in Park or neutral) until the radiator fan comes on.

3. Test-drive under following conditions.

   - 55 mph (89 km/h) steady speed
   - A/T in D4 position (M/T in 5th gear)
   - Until the readiness code or Temporary DTC P1149 (P1165) comes on

   Is Temporary DTC P1149 (P1165) indicated?

   YES—Replace the Primary HO2S (Sensor 1). ■

   NO—Intermittent failure, system is OK at this time. Check for poor connections or loose wires at C102 (located under the under-hood fuse/relay box), the primary HO2S relay, the primary HO2S (Sensor 1), and the ECM/PCM. ■

4. Check for a Temporary DTC with the scan tool.

BACK

DTC P1162: A/F Sensor (Sensor 1) Circuit Malfuncion

1. Reset the ECM/PCM (see page 11-4).

2. Start the engine, and wait at least 2 minutes.

   Is DTC P1162 indicated?

   YES—Go to step 3.

   NO—Intermittent failure, system is OK at this time. Check for poor connections or loose wires at the A/F Sensor (Sensor 1) and at the ECM/PCM.■

3. Turn the ignition switch OFF.

4. Start the engine.

5. Measure voltage between ECM/PCM connector terminals C14 and B20, and between C15 and B20.

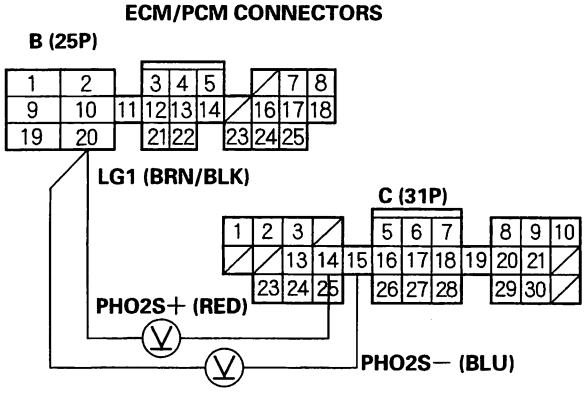

Wire side of female terminals

   Is there 2.5—3.0 V?

   YES—Go to step 6.

   NO—Go to step 10.

6. Turn the ignition switch OFF.

7. Disconnect the A/F Sensor 4P connector and ECM/PCM connector C (31P).

8. Connect ECM/PCM connector terminals C14 and C15 to body ground with a jumper wire.

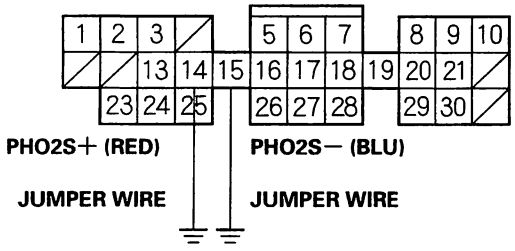

Wire side of female terminals

9. Check for continuity between A/F Sensor (Sensor 1) 4P connector terminal No. 1, No. 2, and body ground individually.

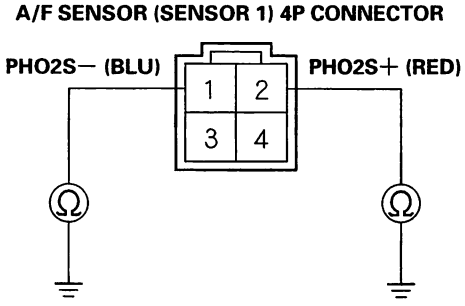

Terminal side of male terminals

   Is there continuity?

   YES—Replace the A/F Sensor (Sensor 1) (see page 11-99).■

   NO—Repair open in the wire between the A/F Sensor (Sensor 1) and the ECM/PCM (C14 or C15).■

(cont'd)

DTC Troubleshooting (cont'd)

10. Turn the ignition switch OFF.

11. Disconnect the A/F Sensor 4P connector and ECM/PCM connector C (31P).

12. Check for continuity between body ground and A/F Sensor (Sensor 1) 4P connector terminals No. 2 and No. 1.

A/F SENSOR (SENSOR 1) 4P CONNECTOR

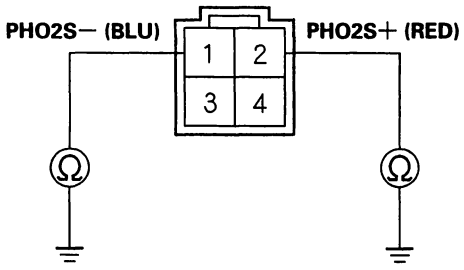

Terminal side of male terminals

Is there continuity?

YES—Repair short in the wire between the A/F Sensor (Sensor 1) and the ECM/PCM (C14 or C15).■

NO—Replace the A/F Sensor (Sensor 1) (see page 11-99).■

DTC P1164: A/F Sensor (Sensor 1) Range/Performance Problem

1. Reset the ECM/PCM (see page 11-4).

2. Start the engine. Hold the engine at 3,000 rpm with no load (in Park or neutral) until the radiator fan comes on.

3. Check for a Temporary DTC with the scan tool.

   Is Temporary DTC P1164 indicated?

   YES—Replace the A/F Sensor (Sensor 1) (see page 11-99).■

   NO—Go to step 4.

4. Test-drive in D3 position. Starting at 1,600 rpm, accelerate using wide open throttle for at least 5 seconds. Then decelerate for at least 5 seconds with the throttle completely closed until the readiness code or Temporary DTC P1164 comes on.

   Is Temporary DTC P1164 indicated?

   YES—Replace the A/F Sensor (Sensor 1) (see page 11-99).■

   NO—Intermittent failure, system is OK at this time. Check for poor connections or loose wires at C102 (located under the under-hood fuse/relay box), the A/F Sensor relay, the A/F Sensor (Sensor 1) and the ECM/PCM.■

BACK

DTC P1166: A/F Sensor (Sensor 1) Heater Circuit Malfunction

1. Reset the ECM/PCM (see page 11-4).

2. Start the engine.

   Is DTC P1166 indicated?

   YES—Go to step 3.

   NO—Intermittent failure, system is OK at this time. Check for poor connections or loose wires at C102 (located under the under-hood fuse/relay box), A/F Sensor relay, the A/F Sensor (Sensor 1) and the ECM/PCM.■

3. Check the following fuses:

   - POWER SEAT (20A) fuse in the under-hood fuse/relay box.
   - No. 4 ECU (ECM/PCM) CRUISE CONTROL (15A) fuse in the driver's under-dash fuse/relay box.
   - No. 6 LAF HEATER (20A) in the passenger's under-dash fuse/relay box.

   Are any of the fuses blown?

   YES—Repair short in the wire between the A/F Sensor relay and the fuses.■

   NO—Go to step 4.

4. Measure voltage between ECM/PCM connector terminals B19 and B20, 30 seconds after the ignition switch is turned ON (II).

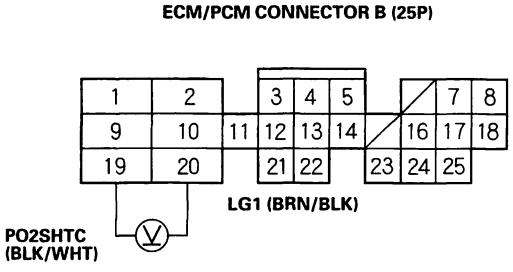

Wire side of female terminals

Is there battery voltage?

YES—Substitute a known-good ECM/PCM and recheck (see page 11-5). If the symptom/indication goes away, replace the original ECM/PCM.■

NO—Go to step 5.

5. Measure voltage between ECM/PCM connector terminals C13 and B20.

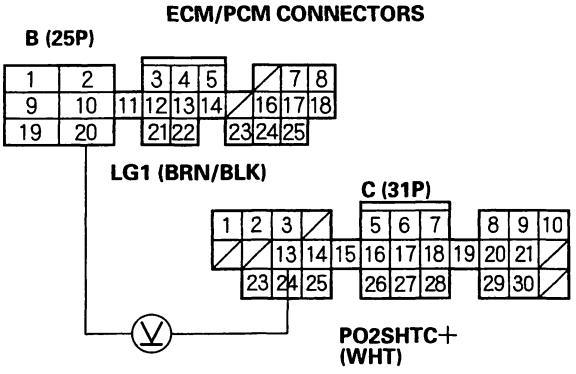

Wire side of female terminals

Is there battery voltage?

YES—Go to step 6.

NO—Go to step 10.

6. Turn the ignition switch OFF.

7. Disconnect ECM/PCM connector B (25P).

8. Turn the ignition switch ON (II).

9. Connect ECM/PCM connector terminal B16 to body ground with a jumper wire, then measure voltage between ECM/PCM connector terminals B19 and B20.

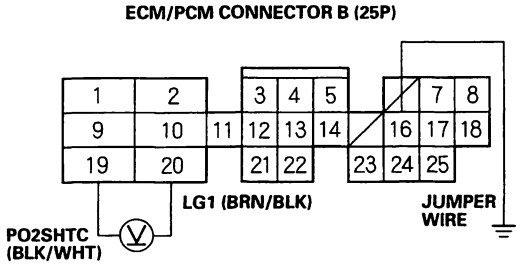

Wire side of female terminals

Is there battery voltage?

YES—Substitute a known-good ECM/PCM and recheck (see page 11-5). If the symptom/indication goes away, replace the original ECM/PCM.■

NO—Repair open or short in the wire between A/F Sensor (Sensor 1) and ECM/PCM (B19).■

(cont'd)

DTC Troubleshooting (cont'd)

10. Turn the ignition switch OFF.

11. Disconnect ECM/PCM connector B (25P) and the A/F Sensor (Sensor 1) 4P connector.

12. Check for continuity between A/F Sensor (Sensor 1) 4P connector terminal No. 3 and body ground.

A/F SENSOR (SENSOR 1) 4P CONNECTOR

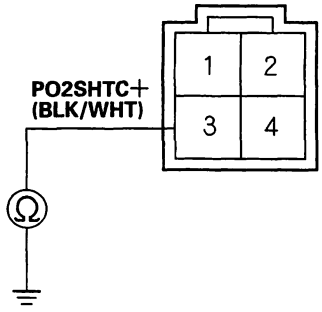

Terminal side of male terminals

Is there continuity?

YES—Repair short in the wire between the A/F Sensor (Sensor 1) and ECM/PCM (B19). ■

NO—Go to step 13.

13. Turn the ignition switch ON (II).

14. Measure voltage between ECM/PCM connector terminals B16 and B20

ECM/PCM CONNECTOR B (25P)

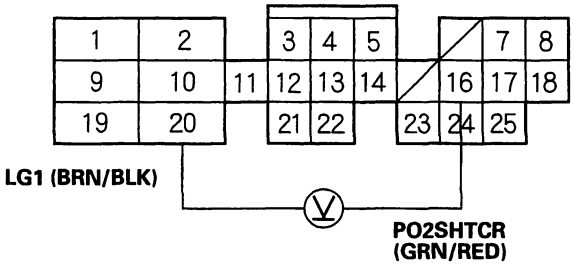

Wire side of female terminals

Is there battery voltage?

YES—Repair open in the wire between the ECM/PCM (C13) and the A/F Sensor (Sensor 1) or Secondary HO2S (Sensor 2). ■

NO—Go to step 15.

15. Check for continuity in the wires between A/F Sensor and the fuses.

Is there continuity?

YES—The wires are OK. Replace the A/F Sensor relay. ■

NO—Repair open in the wire between the A/F Sensor relay and the fuses. ■

BACK

DTC P1167: A/F Sensor (Sensor 1) Heater System Malfunction

NOTE: If DTC P1162 is stored at the same time as DTC P1167, troubleshoot DTC P1162 first, then troubleshoot DTC P1167.

1. Reset the ECM/PCM (see page 11-4).

2. Start the engine. Wait for at least 80 seconds.

   Is DTC P01167 indicated?

   YES—Go to step 3.

   NO—Intermittent failure, system is OK at this time. Check for poor connections or loose wires at C102 (located under the under-hood fuse/relay box), the A/F Sensor relay, the A/F Sensor (Sensor 1), and the ECM/PCM. ■

3. Disconnect the A/F Sensor 4P connector, and ECM/PCM connector C (31P).

4. Connect ECM/PCM connector terminals C14 and C15 to body ground with a jumper wire.

ECM/PCM CONNECTOR C (31P)

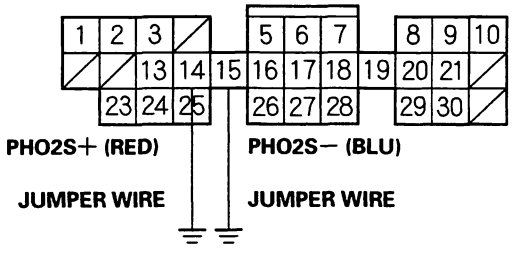

Wire side of female terminals

5. Check for continuity between A/F Sensor (Sensor 1) 4P connector terminal No. 1, No. 2, and body ground individually.

A/F SENSOR (SENSOR 1) 4P CONNECTOR

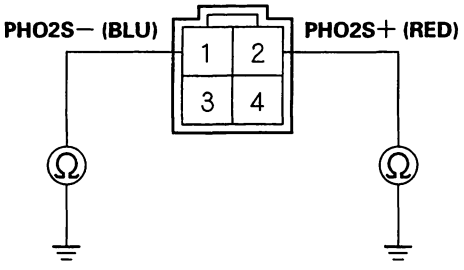

Terminal side of male terminals

Is there continuity?

YES—Replace the A/F Sensor (Sensor 1) (see page 11-99). ■

NO—Repair open or short in the wire between the A/F Sensor (Sensor 1) and the ECM/PCM (C14 or C15). ■

DTC Troubleshooting (cont'd)

DTC P1297: ELD Circuit Low Voltage

1. Reset the ECM/PCM (see page 11-4).
2. Start the engine.
3. Turn on the headlights.

   Is DTC P1297 indicated?

   YES—Go to step 4.

   NO—Intermittent failure, system is OK at this time. Check for poor connections or loose wires at C204 (located under the right side of dash), the ELD, and the ECM/PCM.■

4. Turn the ignition switch and the headlights OFF.
5. Disconnect the ELD 3P connector.
6. Turn the ignition switch ON (II).
7. Measure voltage between body ground and ELD 3P connector terminal No. 3.

ELD 3P CONNECTOR

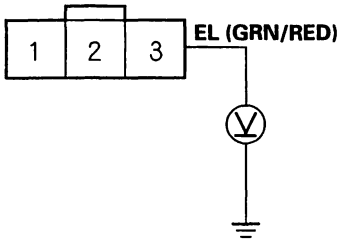

Wire side of female terminals

Is there approx. 5 V?

YES—Replace the ELD.■

NO—Go to step 8.

8. Turn the ignition switch OFF.
9. Disconnect ECM/PCM connector A (32P).
10. Check for continuity between body ground and ECM/PCM connector terminal A30.

ECM/PCM CONNECTOR A (32P)

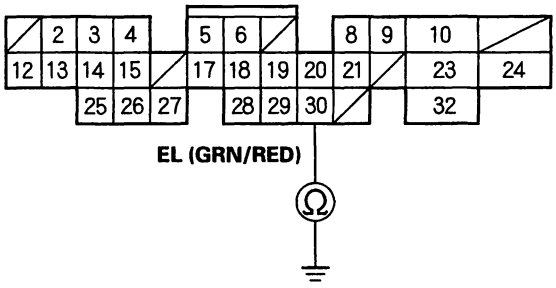

Wire side of female terminals

Is there continuity?

YES—Repair short in the wire between the ECM/PCM (A30) and the ELD.■

NO—Substitute a known-good ECM/PCM and recheck (see page 11-5). If the symptom/indication goes away, replace the original ECM/PCM.■

BACK

DTC P1298: ELD Circuit High Voltage

1. Reset the ECM/PCM (see page 11-4).

2. Start the engine.

3. Turn on the headlights.

   Is DTC P1298 indicated?

   YES – Go to step 4.

   NO – Intermittent failure, system is OK at this time. Check for poor connections or loose wires at C204 (located under the right side of dash), the ELD, and the ECM/PCM. ■

4. Turn the ignition switch and headlights OFF.

5. Disconnect the ELD 3P connector.

6. Turn the ignition switch ON (II).

7. Measure voltage between body ground and ELD 3P connector terminal No. 1.

ELD 3P CONNECTOR

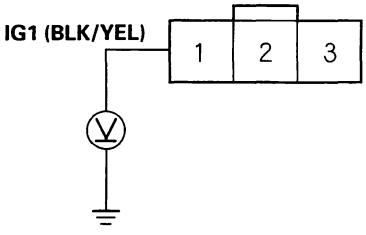

Wire side of female terminals

Is there battery voltage?

YES – Go to step 8.

NO – Repair open in the wire between the No. 6 ECU (PCM) CRUISE CONTROL (15A) fuse and the ELD. ■

8. Turn the ignition switch OFF.

9. Connect ELD 3P connector terminal No. 3 to body ground with a jumper wire.

ELD 3P CONNECTOR

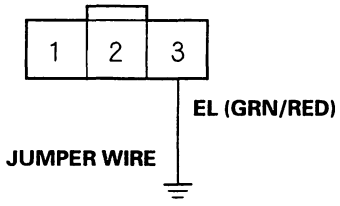

Wire side of female terminals

10. Disconnect ECM/PCM connector A (32P).

11. Check for continuity between ECM/PCM connector terminal A30 and body ground.

ECM/PCM CONNECTOR A (32P)

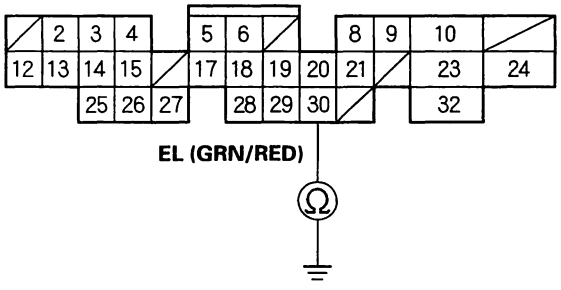

Wire side of female terminals

Is there continuity?

YES – Go to step 12.

NO – Repair open in the wire between the ECM (A30) and the ELD. ■

(cont'd)

DTC Troubleshooting (cont'd)

12. Check for continuity between ELD 3P connector terminal No. 2 and body ground.

ELD 3P CONNECTOR

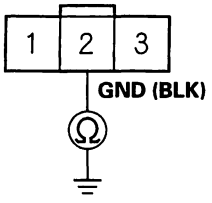

Wire side of female terminals

Is there continuity?

YES—Go to step 13.

NO—Repair open in the wire between ELD connector terminal No. 2 and G202.■

13. Reconnect the ELD 3P connector.

14. Start the engine and let it idle.

15. While measuring voltage between ECM/PCM connector terminals A30 and B20, turn the headlights on (low).

ECM/PCM CONNECTORS

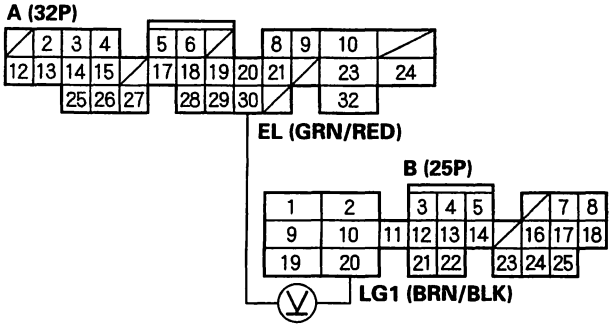

Wire side of female terminals

Does the voltage drop?

YES—Substitute a known-good ECM/PCM and recheck (see page 11-5). If the symptom/indication goes away, replace the original ECM/PCM.■

NO—Replace the ELD.■

BACK

DTC P1359: CKP/TDC Sensor Circuit Malfunction

1. Reset the ECM/PCM (see page 11-4).

2. Start the engine.

   Is DTC P1359 indicated?

   YES—Go to step 3.

   NO—Intermittent failure, system is OK at this time. Check for poor connections or loose wires at the CKP/TDC sensor and the ECM/PCM.■

3. Check for poor connections or loose wires between the CKP/TDC sensor and the ECM/PCM.

   Are the connections OK?

   YES—Substitute a known-good ECM/PCM and recheck (see page 11-5). If the symptom/indication goes away, replace the original ECM/PCM.■

   NO—Repair as necessary.■

DTC Troubleshooting (cont'd)

DTC P1381: CYP Sensor Intermittent Interruption

DTC P1382: CYP Sensor No Signal

1. Reset the ECM/PCM (see page 11-4).

2. Start the engine.

   Is DTC P1381, and/or P1382 indicated?

   YES—Go to step 3.

   NO—Intermittent failure, system is OK at this time. Check for poor connections or loose wires at the distributor and the ECM/PCM. ■

3. Check for poor connections at the ignition (spark plug) wires.

   Are the wires OK?

   YES—Go to step 4.

   NO—Correct as necessary. ■

4. Check the condition of the ignition wires (see page 4-25).

   Are the wires OK?

   YES—Go to step 5.

   NO—Replace the ignition wires. ■

5. Turn the ignition switch OFF.

6. Disconnect the distributor 4P connector.

7. For the F23A1 or F23A4 engine, measure resistance between distributor 4P connector terminals No. 3 and No. 4. For the F23A5 engine, measure resistance between the distributor 4P connector terminals No. 2 and No. 4.

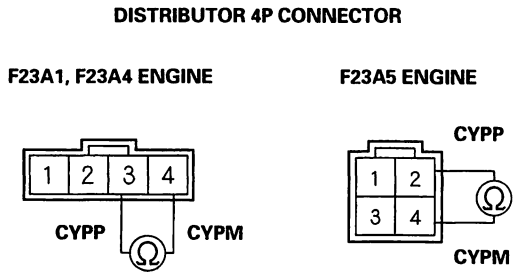

Terminal side of male terminals

   Is there 800—1,500 Ω ?

   YES—Go to step 8.

   NO—Replace the ignition distributor housing. ■

8. For the F23A1 or F23A4 engine, check for continuity between body ground and the distributor connector terminals No. 3 and No. 4 individually. For the F23A5 engine, check for continuity between body ground and the distributor connector terminals No. 2 and No. 4 individually.

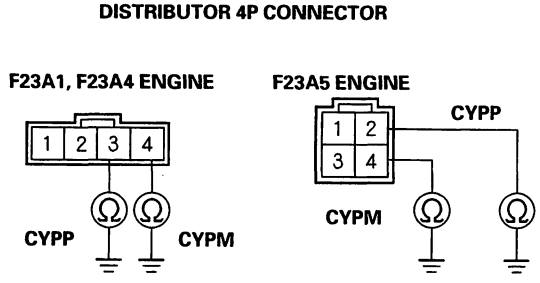

Terminal side of male terminals

   Is there continuity?

   YES—Replace the ignition distributor housing. ■

   NO—Go to step 9.

9. Reconnect the distributor 4P connector.

10. Disconnect ECM/PCM connector C (31P).

BACK

11. Measure resistance between ECM/PCM connector terminals C29 and C30.

ECM/PCM CONNECTOR C (31P)

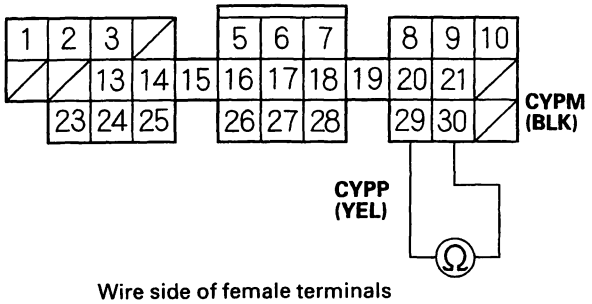

Wire side of female terminals

Is there 800– 1,500 Ω ?

YES—Go to step 12.

NO—Repair open in the wire between the ECM/PCM (C29, C30) and the distributor.■

12. Check for continuity between body ground and ECM/PCM connector terminal C29.

ECM/PCM CONNECTOR C (31P)

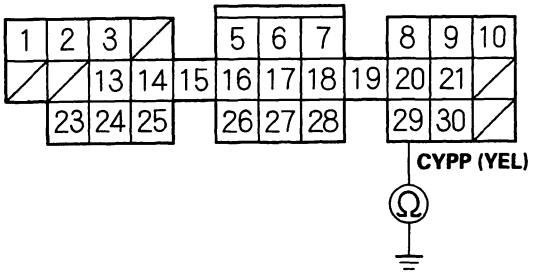

Wire side of female terminals

Is there continuity?

YES—Repair short in the wire between the ECM/PCM (C29) and the distributor.■

NO—Substitute a known-good ECM/PCM and recheck (see page 11-5). If the symptom/indication goes away, replace the original ECM/PCM.■

DTC Troubleshooting (cont'd)

DTC P1607: ECM/PCM Internal Circuit Malfunction

1. Reset the ECM/PCM (see page 11-4).
2. Turn the ignition switch ON (II).
3. Wait 30 seconds.

   Is DTC P1607 indicated?

   YES—Substitute a known-good ECM/PCM and recheck (see page 11-5). If the symptom/indication goes away, replace the original ECM/PCM.■

   NO—Go to step 4.
4. Turn the ignition switch OFF.
5. Turn the ignition switch ON (II).
6. Wait 10 seconds.

   Is DTC P1607 indicated?

   YES—Substitute a known-good ECM/PCM and recheck (see page 11-5). If the symptom/indication goes away, replace the original ECM/PCM.■

   NO—Intermittent failure, system is OK at this time.■

BACK

MIL Circuit Troubleshooting

1. Connect an OBD II scan tool/Honda PGM Tester (see page 11-3).

2. Turn the ignition switch ON (II), and read the OBD II scan tool/Honda PGM Tester.

   Does the OBD II scan tool/Honda PGM Tester communicate with the ECM/PCM?

   YES—Go to step 3.

   NO—Go to troubleshooting "DLC Circuit Troubleshooting" (see page 11-95).

3. Check the OBD II scan tool/Honda PGM Tester for DTCs.

   Are any DTCs indicated?

   YES—Go to the DTC Troubleshooting index.

   NO—Go to step 4.

4. Turn the ignition switch OFF.

5. Turn the ignition switch ON (II), and watch the Malfunction Indicator Lamp (MIL).

   Does the MIL come on and stay on for more than 20 seconds after turning the ignition switch ON (II)?

   YES—If the MIL always come on and stays on, go to step 16. But if the MIL sometimes works normally, first check for these problems.

   - An intermittent short in the wire between the ECM/PCM (A10) and the Data Link Connector (DLC).
   - An intermittent open in the wire between the ECM/PCM (A21) and the DLC.
   - An intermittent short in the wire between the ECM/PCM (A18) and the gauge assembly.

   NO—If the MIL is always off, go to step 6. But if the MIL sometimes works normally, first check for these problems.

   - A loose No. 9 BACK UP LIGHT, INSTRUMENT LIGHT (7.5A) fuse in the driver's under-dash fuse/relay box.
   - A loose ACG S (15A) fuse in the under-hood fuse/relay box.
   - A loose No. 1 FUEL PUMP (15A) fuse in the driver's under-dash fuse/relay box.
   - A poor connection at ECM/PCM terminal A18.
   - An intermittent open in the GRN/ORN wire between the ECM/PCM (A18) and the gauge assembly.
   - An intermittent short in the wire between the ECM/PCM (C19) and the MAP sensor.
   - An intermittent short in the wire between the ECM/PCM (C28) and the TP sensor, EGR valve position sensor, or Fuel Tank Pressure (FTP) Sensor.

6. Check the low oil pressure light.

   Is the low oil pressure light on?

   YES—Go to step 7.

   NO—Check for these problems.

   - A blown No. 9 BACK UP LIGHT, INSTRUMENT LIGHT (7.5A) fuse in the driver's under-dash fuse/relay box.
   - A short or open in the wire between the No. 9 BACK UP LIGHT, INSTRUMENT LIGHT (7.5A) fuse and the gauge assembly.

(cont'd)

MIL Circuit Troubleshooting (cont'd)

7. Try to start the engine.

   Does the engine start?

   YES—Go to step 8.

   NO—Go to step 10.

8. Turn the ignition switch OFF, and connect ECM/PCM connector terminal A18 to body ground with a jumper wire.

ECM/PCM CONNECTOR A (32P)

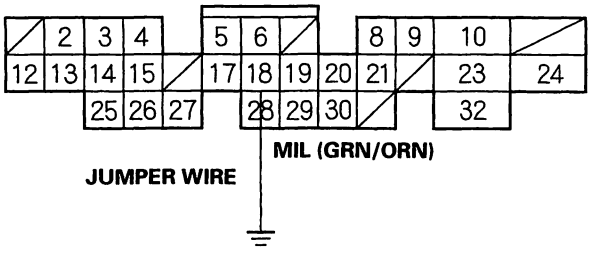

Wire side of female terminals

9. Turn the ignition switch ON (II).

   Is the MIL on?

   YES—Substitute a known-good ECM/PCM and recheck (see page 11-5). If the symptom/indication goes away, replace the original ECM/PCM.■

   NO—Check for an open in the wires between the ECM/PCM (A18) and the gauge assembly. Also check for a blown MIL bulb.■

10. Turn the ignition switch OFF, then disconnect ECM/PCM connector C (31P), and check for continuity between body ground and ECM/PCM connector terminals C19 and C28 individually.

ECM/PCM CONNECTOR C (31P)

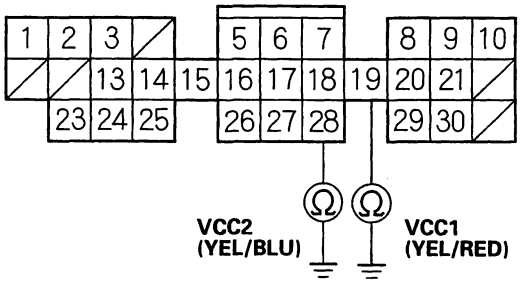

Wire side of female terminals

   Is there continuity?

   YES—Go to step 11.

   NO—Go to step 12.

11. Disconnect the 3P connector from each of these sensors, one at a time, and check for continuity between body ground and ECM/PCM connector terminal C19 and C28 individually.

   - MAP Sensor
   - EGR valve position sensor
   - FTP sensor
   - TP sensor

   Is there continuity?

   YES—Repair the short to body ground in the wire between the ECM/PCM (C19) and the MAP sensor, or the ECM/PCM (C28) and the TP sensor, EGR valve position sensor, or FTP sensor. ■

   NO—Replace the sensor that made continuity to body ground go away when disconnected.■

12. Disconnect the injectors and IAC valve connectors.

BACK

13. Turn the ignition switch ON (II), and measure voltage between body ground and ECM/PCM connector terminals B1 and B9 individually.

ECM/PCM CONNECTOR B (25P)

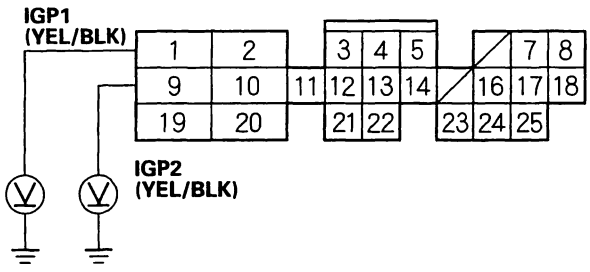

Wire side of female terminals

Is there battery voltage?

YES—Go to step 14.

NO—Check for these problems:

- An open in the wire(s) between the PGM-FI main relay and ECM/PCM connector terminals B1 and B9.
- Poor connections at the PGM-FI main relay.
- A faulty PGM-FI main relay (see page 11-112). If necessary, repair or replace the relay. ■

14. Reconnect the connectors to the sensors, then reconnect ECM/PCM connector C (31P).

15. Turn the ignition switch ON (II), and measure voltage between body ground and ECM/PCM connector terminals B2, B10, B20, and B22 individually.

ECM/PCM CONNECTOR B (25P)

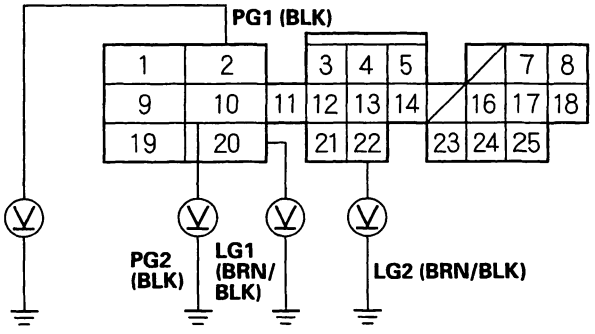

Wire side of female terminals

Is there less than 1.0 V?

YES—Substitute a known-good ECM/PCM and recheck (see page 11-5). If the symptom/indication goes away, replace the original ECM/PCM. ■

NO—Repair the open in the wire(s) that had more than 1.0 V between G101 and the ECM/PCM (B2, B10, B20, B22). ■

(cont'd)

MIL Circuit Troubleshooting (cont'd)

16. Turn the ignition switch OFF, then turn it back ON (II), and measure voltage between ECM/PCM connector terminal A10 and body ground.

ECM/PCM CONNECTOR A (32P)

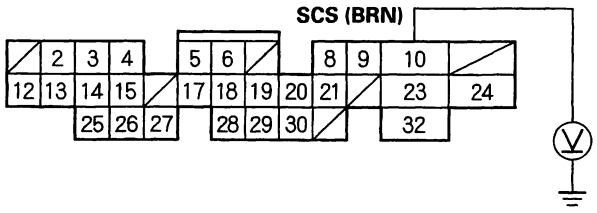

Wire side of female terminals

Is there about 5 V?

YES — Go to step 17.

NO — Repair short in the wire between the DLC and the ECM/PCM (A10). ■

17. Turn the ignition switch OFF, disconnect ECM/PCM connector A (32P), then turn the ignition switch ON (II).

Does the MIL stay on?

YES — Repair short in the wire between the gauge assembly and the ECM/PCM (A18). ■

NO — Substitute a known-good ECM/PCM and recheck (see page 11-5). If the symptom/indication goes away, replace the original ECM/PCM. ■

BACK

DLC Circuit Troubleshooting

If the ECM/PCM does not communicate with the OBD II scan tool, Honda PGM Tester, or I/M test equipment, do this troubleshooting procedure.

1. Measure voltage between DLC terminal No. 16 and body ground.

DATA LINK CONNECTOR (DLC)

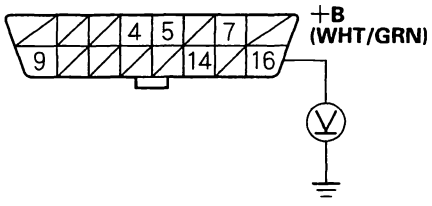

Terminal side of female terminals

Is there battery voltage?

YES—Go to step 2.

NO—Repair open in the wire between DLC terminal No. 16 and the ACGS (15A) fuse in the under-hood fuse/relay box.■

2. Measure voltage between DLC terminals No. 4 and No. 16.

DATA LINK CONNECTOR (DLC)

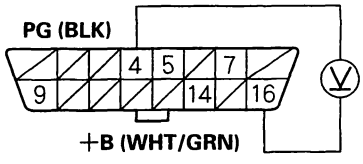

Terminal side of female terminals

Is there battery voltage?

YES—Go to step 3.

NO—Repair open in the wire between DLC terminal No. 4 and body ground (G401).■

3. Measure voltage between DLC terminals No. 5 and No. 16.

DATA LINK CONNECTOR (DLC)

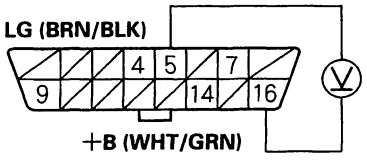

Terminal side of female terminals

Is there battery voltage?

YES—Go to step 4.

NO—Repair open in the wire between DLC terminal No. 5 and body ground (G101).■

4. Turn the ignition switch ON (II).

5. Measure voltage between DLC terminals No. 5 and No. 7.

DATA LINK CONNECTOR (DLC)

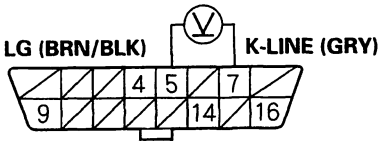

Terminal side of female terminals

Is there 8.5 V or more?

YES—Go to step 10.

NO—Go to step 6.

6. Turn the ignition switch OFF.

(cont'd)

DLC Circuit Troubleshooting (cont'd)

7. Disconnect ECM/PCM connector A (32P). Make sure the OBD II scan tool or Honda PGM Tester is disconnected from the DLC.

8. Check for continuity between DLC terminal No. 7 and body ground.

DATA LINK CONNECTOR (DLC)

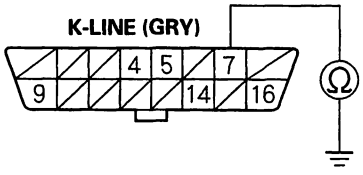

Terminal side of female terminals

Is there continuity?

YES—Repair short to ground in the wire between DLC terminal No. 7 and the ECM/PCM (A21). After repairing the wire, check the DTC with the OBD II scan tool/Honda PGM Tester and go to the DTC Troubleshooting index.■

NO—Go to step 9.

9. Check for continuity between DLC terminal No. 7 and ECM/PCM terminal A21.

ECM/PCM CONNECTOR A (32P)

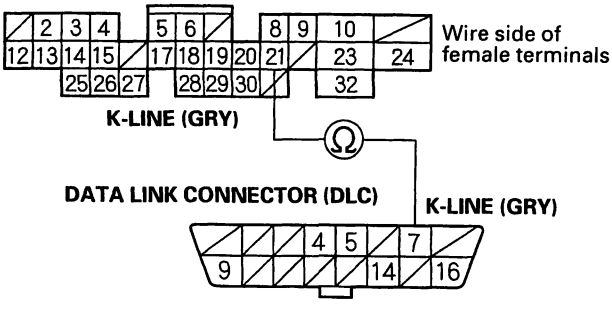

Terminal side of female terminals

Is there continuity?

YES—Substitute a known-good ECM/PCM and recheck (see page 11-5). If the symptom/indication goes away, replace the original ECM/PCM.■

NO—Repair open in the wire between DLC terminal No. 7 and the ECM/PCM (A21). After repairing the wire, check the DTC with the OBD II scan tool/Honda PGM Tester and go to the DTC Troubleshooting index.■

10. Turn the ignition switch OFF.

11. Disconnect ECM/PCM connector A (32P). Make sure the OBD II scan tool or Honda PGM Tester is disconnected from the DLC.

12. Turn the ignition switch ON (II).

13. Measure voltage between DLC terminals No. 5 and No. 7.

DATA LINK CONNECTOR (DLC)

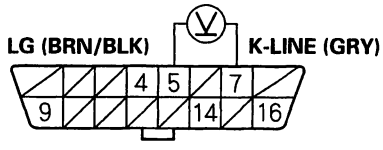

Terminal side of female terminals

Is there 0 V?

YES—Substitute a known-good ECM/PCM and recheck (see page 11-5). If the symptom/indication goes away, replace the original ECM/PCM.■

NO—Repair short to power in the wire between the DLC terminal No. 7 and the ECM/PCM (A21). After repairing the wire, check the DTC with the OBD II scan tool/Honda PGM Tester and go to the DTC Troubleshooting index.■

BACK

Injector Replacement

1. Relieve fuel pressure (see page 11-115).

2. Disconnect the connectors from the injectors (A), the EGR valve (B), and the EVAP canister purge valve (C).

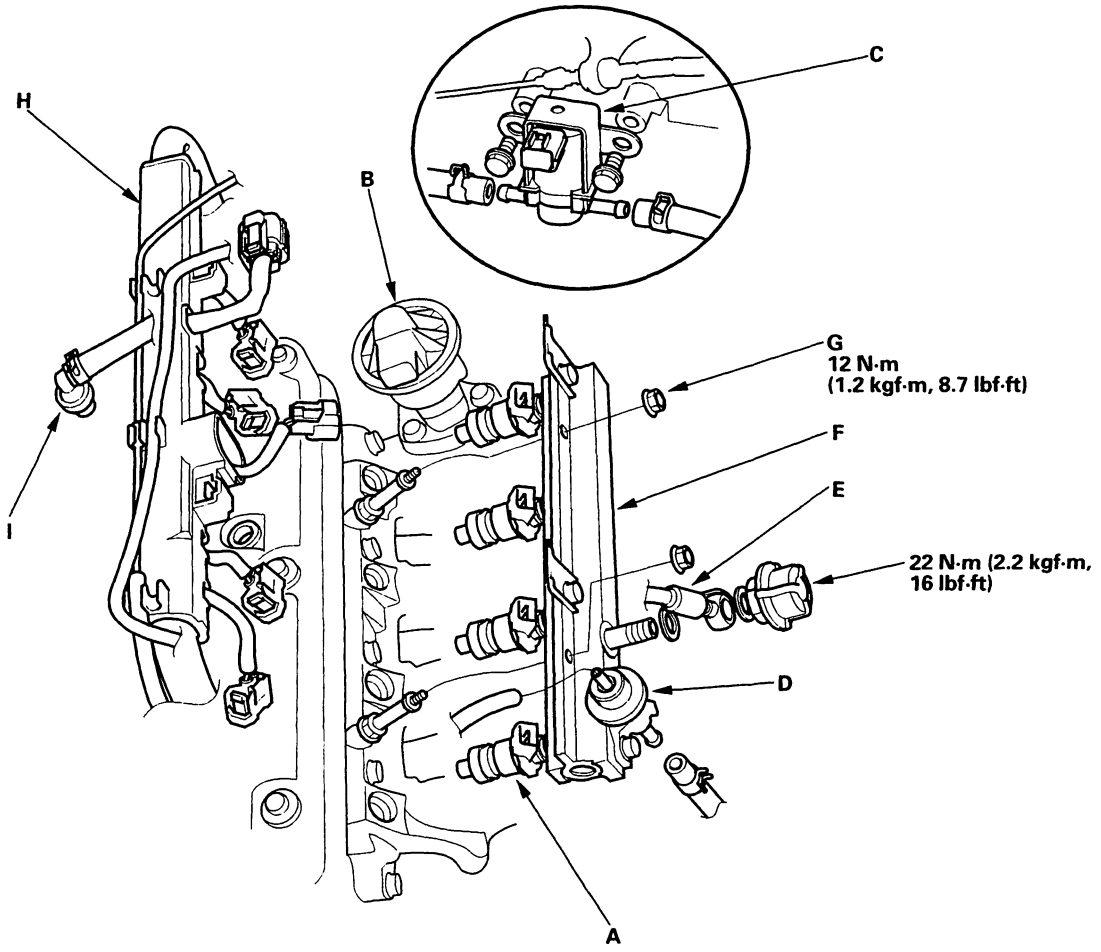

3. Disconnect the vacuum hoses and fuel return hose from the fuel pressure regulator (D) and EVAP canister purge valve. Place a rag or shop towel over the hoses before disconnecting them.

4. Disconnect the fuel hose (E) from the fuel rail (F).

5. Remove the retainer nuts (G) from the fuel rail and harness holder (H).

6. Remove the EVAP canister purge valve, and disconnect the PCV valve (I).

7. Disconnect the fuel rail.

8. Remove the injectors from the fuel rail.

(cont'd)

Injector Replacement (cont'd)

9. Slide new cushion rings (A) onto the injectors (B).

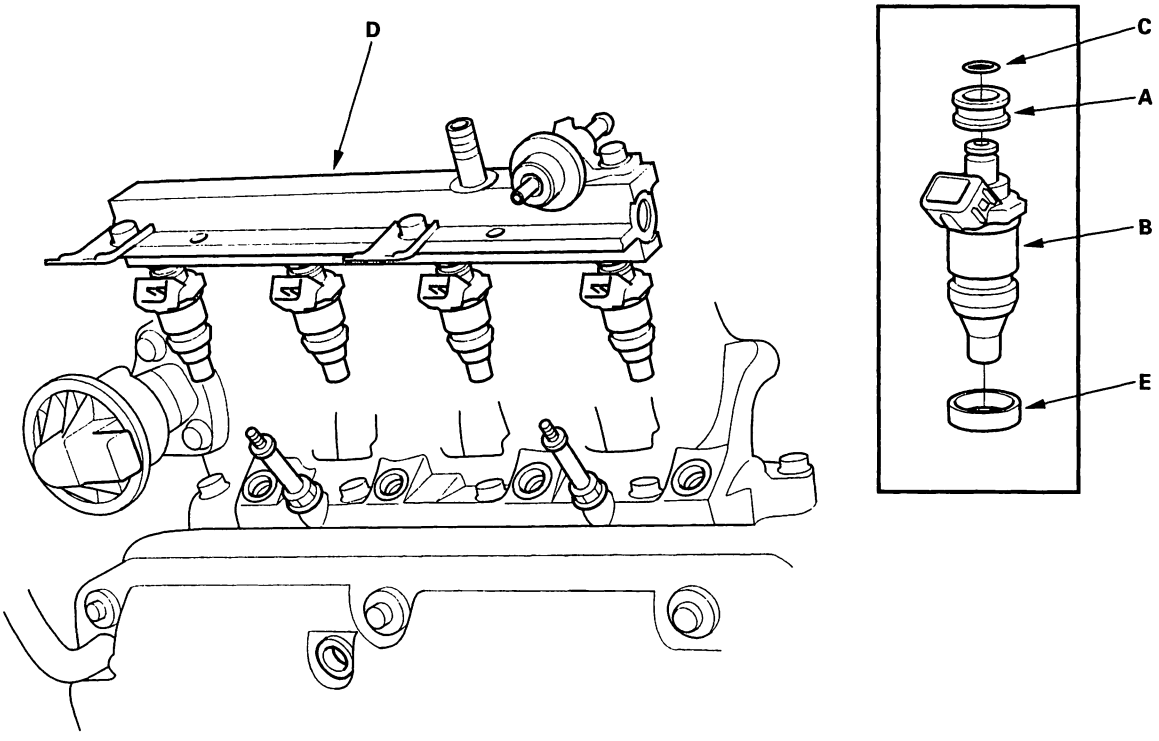

10. Coat new O-rings (C) with clean engine oil, and put them on the injectors.
11. Insert the injectors into the fuel rail (D).
12. Coat new seal rings (E) with clean engine oil, and press them into the intake manifold.
13. Install the injectors into the intake manifold.
14. Install and tighten the retainer nuts.
15. Connect the fuel hose to the fuel rail with new washers.
16. Connect the vacuum hoses and fuel return hose to the fuel pressure regulator and EVAP canister purge valve.
17. Install the connectors on the injectors, EGR valve, and EVAP canister purge valve.
18. Install the EVAP canister purge valve and PCV valve.
19. Turn the ignition switch ON (II), but do not operate the starter. After the fuel pump runs for approximately 2 seconds, the fuel pressure in the fuel line rises. Repeat this 2 or 3 times, then check for fuel leakage.

BACK

Primary HO2S and A/F Sensor Replacement

Special Tools Required

O2 sensor wrench SNAP-ON YA8875 or SP Tools 93750 or equivalent, commercially available

1. Disconnect the primary HO2S or A/F Sensor 4P connector, then remove the primary HO2S or A/F Sensor (A).

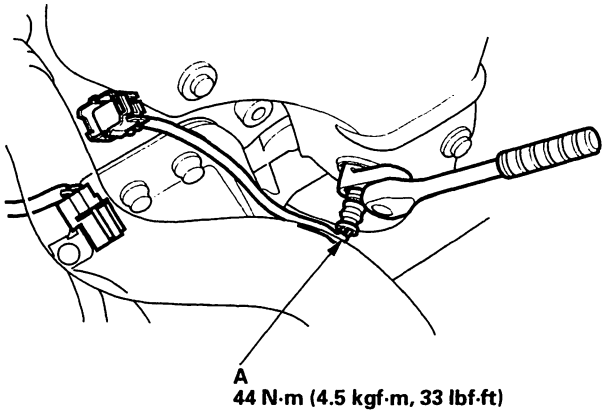

2. Install the primary HO2S or A/F Sensor in the reverse order of removal.

Secondary HO2S Replacement

Special Tools Required

O2 sensor wrench SNAP-ON YA8875 or SP Tools 93750 or equivalent, commercially available

1. Disconnect the secondary HO2S 4P connector, then remove the secondary HO2S (A).

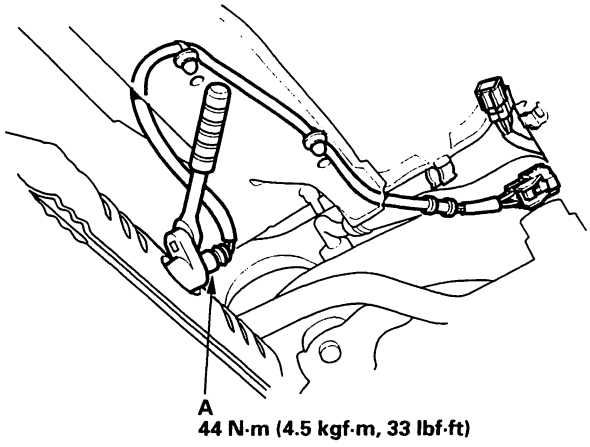

2. Install the secondary HO2S in the reverse order of removal.

Component Location Index

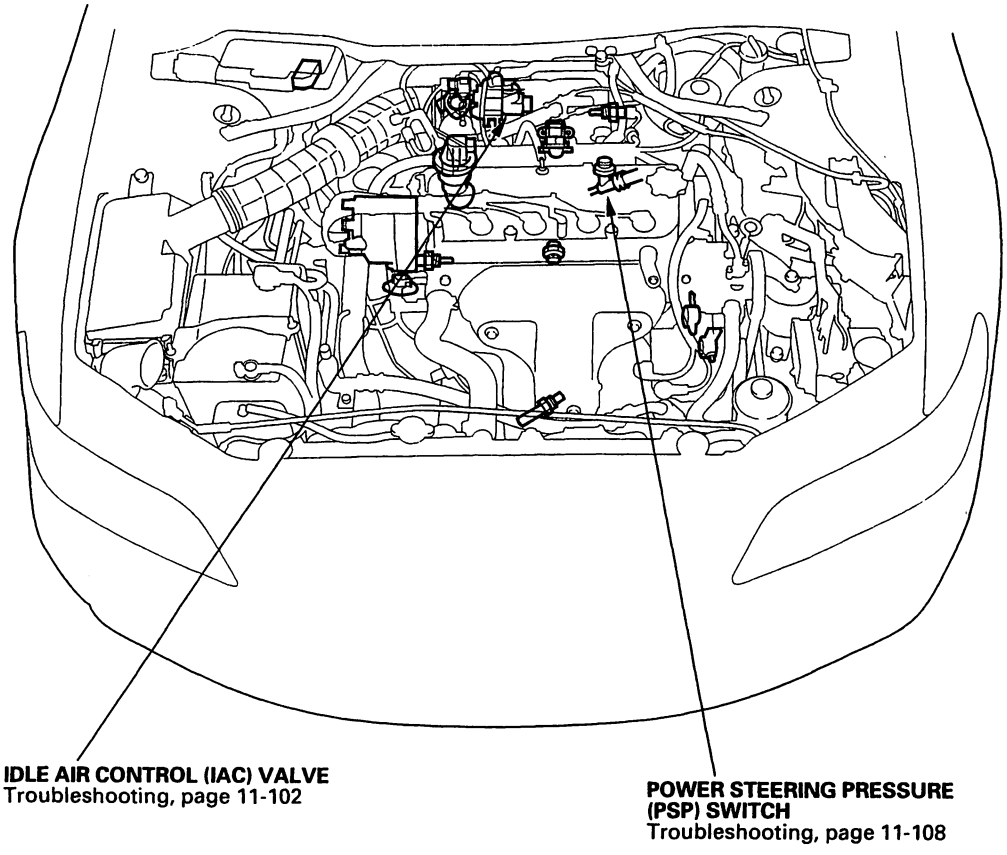

BACK

DTC Troubleshooting

DTC P0505: Idle Control System Malfunction

NOTE: If DTC P1519 is stored at the same time as DTC P0505, troubleshoot DTC P1519 first, then recheck for DTC P0505.

1. Start the engine. Hold the engine at 3,000 rpm with no load (in Park or neutral) until the radiator fan comes on, then let it idle.

2. Check the engine speed at idle under no-load conditions: headlights, blower fan, rear defogger, radiator fan, and air conditioner off.

   Is it 700±50 rpm?

   YES—Intermittent failure, system is OK at this time.■

   NO—If the idle speed is less than 650 rpm, go to step 3; if it's 750 rpm or higher, go to step 4.

3. Disconnect the 3P connector from the IAC valve.

   Does the engine speed increase or fluctuate?

   YES—Adjust the (base) idle speed (see page 11-110). If it's impossible, clean the ports in the throttle body.■

   NO—Replace the IAC valve.■

4. Turn the ignition switch OFF.

5. Remove the intake air duct from the throttle body.

6. Start the engine and let it idle.

7. Put your finger on the lower port (A) in the throttle body.

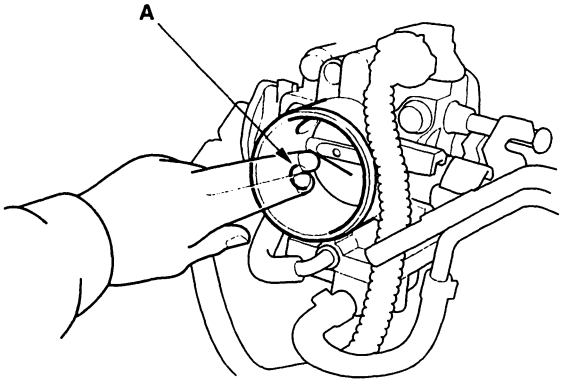

   Does the engine speed drop?

   YES—Adjust the idle speed (see page 11-110). If it's impossible, replace the IAC valve.■

   NO—Check for vacuum leaks, make sure the throttle valve is completely closed, and repair as necessary.■

DTC Troubleshooting (cont'd)

DTC P1519: IAC Valve Circuit Malfunction

1. Reset the ECM/PCM (see page 11-4).
2. Turn the ignition switch ON (II).

   Is DTC P1519 indicated?

   YES—Go to step 3.

   NO—Intermittent failure, system is OK at this time. Check for poor connections or loose wires at the IAC valve and the ECM/PCM.■

3. Turn the ignition switch OFF.
4. Disconnect the IAC valve 3P connector.
5. Turn the ignition switch ON (II).
6. At the wire harness, measure voltage between IAC valve 3P connector terminal No. 2 and body ground.

IAC VALVE 3P CONNECTOR

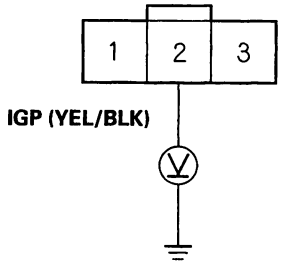

Wire side of female terminals

Is there battery voltage?

YES—Go to step 7.

NO—Repair open in the wire between the IAC valve and the PGM-FI main relay.■

7. Turn the ignition switch OFF.
8. Check for continuity between body ground and IAC valve 3P connector terminal No. 1.

IAC VALVE 3P CONNECTOR

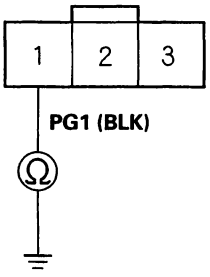

Wire side of female terminals

Is there continuity?

YES—Go to step 9.

NO—Repair open in the wire between the IAC valve and G101.■

9. Disconnect ECM/PCM connector B (25P).
10. Check for continuity between body ground and ECM/PCM connector terminal B23.

ECM/PCM CONNECTOR B (25P)

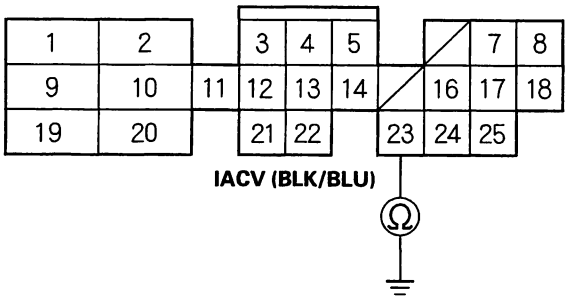

Wire side of female terminals

Is there continuity?

YES—Repair short in the wire between the IAC valve and the ECM/PCM (B23).■

NO—Go to step 11.

BACK

11. Connect IAC valve 3P connector terminal No. 3 to body ground with a jumper wire.

IAC VALVE 3P CONNECTOR

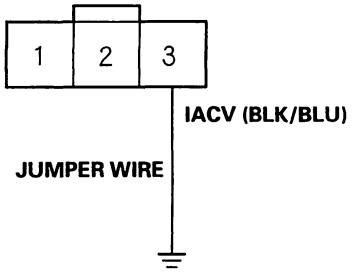

Wire side of female terminals

12. Check for continuity between ECM/PCM connector terminal B23 and body ground.

ECM/PCM CONNECTOR B (25P)

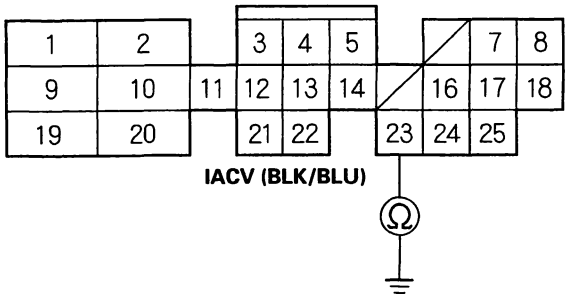

Wire side of female terminals

Is there continuity?

YES—Go to step 13.

NO—Repair open in the wire between the IAC valve and the ECM/PCM (B23).■

13. Reconnect the IAC valve 3P connector.

14. Turn the ignition switch ON (II).

15. Measure voltage between body ground and ECM/PCM connector terminal B23.

ECM/PCM CONNECTOR B (25P)

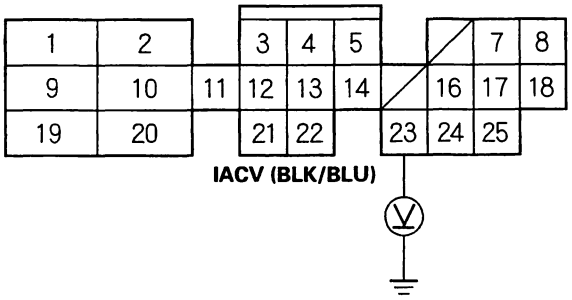

Wire side of female terminals

Is there battery voltage?

YES—Substitute a known-good ECM/PCM and recheck (see page 11-5). If the symptom/indication goes away, replace the original ECM/PCM.■

NO—Replace the IAC valve.■

A/C Signal Circuit Troubleshooting

1. Turn the ignition switch OFF.
2. Disconnect the A/C pressure switch connector.
3. Turn the ignition switch ON (II).
4. Measure voltage between ECM/PCM connector terminals A27 and B20.

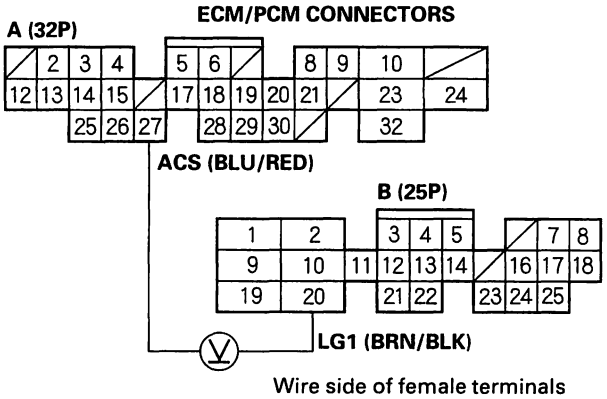

Wire side of female terminals

Is there approx. 5V?

YES – Go to step 5.

NO – Go to step 12.

5. Turn the ignition switch OFF.
6. Reconnect the A/C pressure switch connector.
7. Turn the ignition switch ON (II).
8. Momentarily connect ECM/PCM connector terminals A17 and B20 with a jumper wire several times.

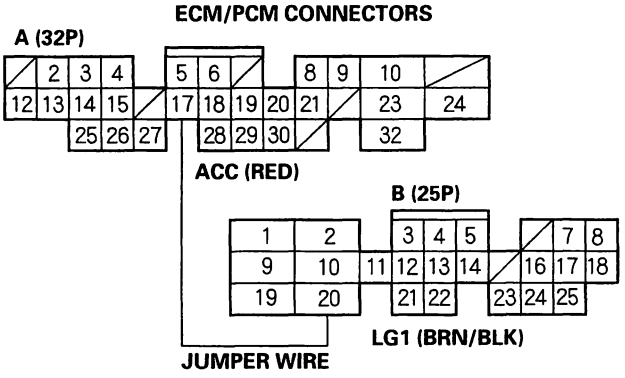

Wire side of female terminals

Is there a clicking noise from the A/C compressor clutch?

YES – Go to step 9.

NO – Go to step 15.

9. Start the engine.
10. Turn the blower switch ON.
11. Turn the A/C switch ON.

Does the A/C operate?

YES – The air conditioning signal is OK. ■

NO – Go to step 16.

12. Turn the ignition switch OFF.
13. Disconnect ECM/PCM connector A (32P)

BACK

14. Check for continuity between body ground and ECM/PCM connector terminal A27.

ECM/PCM CONNECTOR A (32P)

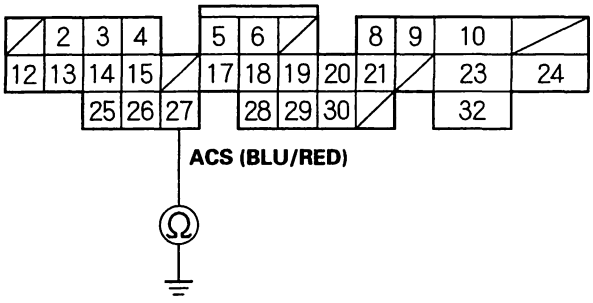

Wire side of female terminals

Is there continuity?

YES—Repair short in the wire between the ECM/PCM (A27) and the A/C pressure switch.■

NO—Substitute a known-good ECM/PCM and recheck (see page 11-5). If the prescribed voltage is now available, replace the original ECM/PCM. If not, check the A/C system for other symptoms.■

15. Momentarily connect under-hood fuse/relay box 16 P connector terminal No. 11 to body ground with a jumper wire several times.

NOTE: The under-hood fuse/relay box 16P connector is on the bottom of the fuse box. When you unbolt and invert the fuse box, leave the upper cover on to prevent short circuits.

UNDER-HOOD FUSE/RELAY BOX CONNECTOR D (16P)

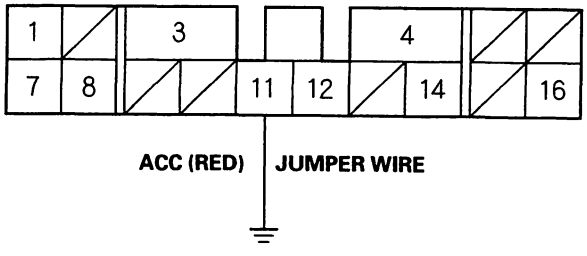

Wire side of female terminals

Is there a clicking noise from the A/C compressor clutch?

YES—Repair open in the wire between the ECM/PCM (A17) and the A/C clutch relay.■

NO—Check the A/C system for other symptoms.■

16. Measure voltage between ECM/PCM connector terminals A27 and B20.

ECM/PCM CONNECTORS

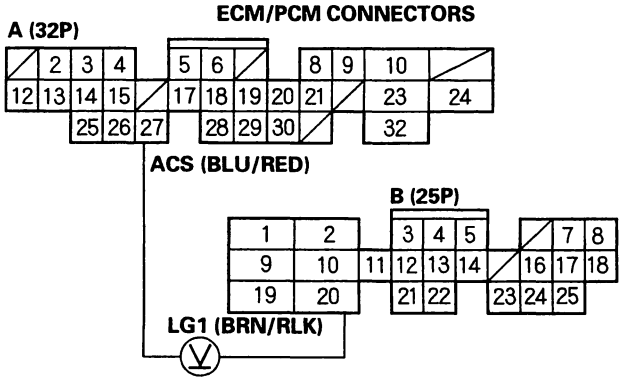

Wire side of female terminals

Is there less than 1.0 V?

YES—Substitute a known-good ECM/PCM and recheck (see page 11-5). If the symptom/indication goes away, replace the original ECM/PCM. If not, inspect the air conditioning system.■

NO—Repair open in the wire between the ECM/PCM (A27) and the A/C pressure switch.■

Alternator FR Signal Circuit Troubleshooting

1. Disconnect the 4P connector from the alternator.
2. Turn the ignition switch ON (II).
3. Measure voltage between ECM/PCM connector terminals B20 and C5.

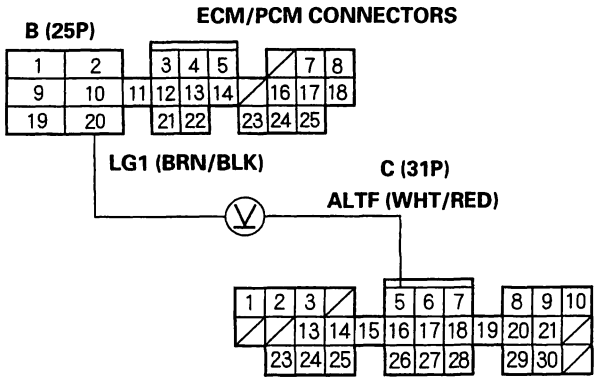

Wire side of female terminals

Is there approx. 5V?

YES—Go to step 4.

NO—Go to step 14.

4. Turn the ignition switch OFF.
5. Reconnect the alternator 4P connector.
6. Start the engine. Hold the engine at 3,000 rpm with no load (in Park or neutral) until the radiator fan comes on, then let it idle.
7. Measure voltage between ECM/PCM connector terminals B20 and C5.

Does the voltage decrease when the headlights and rear window defogger are turned on?

YES—The ALT FR signal is OK.■

NO—Go to step 8.

8. Turn the ignition switch OFF.
9. Disconnect the negative cable from the battery.
10. Disconnect ECM/PCM connector C (31P).
11. Disconnect the ALT 4P connector.
12. Connect the alternator 4P connector terminal No. 4 to body ground with a jumper wire.

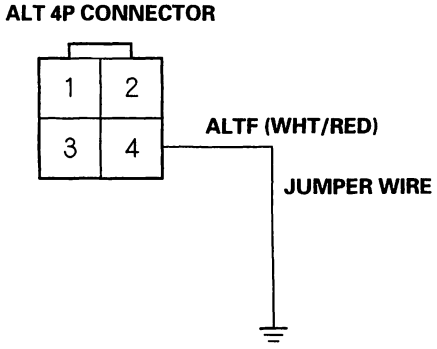

Wire side of female terminals

13. Check for continuity between body ground and ECM/PCM connector terminal C5.

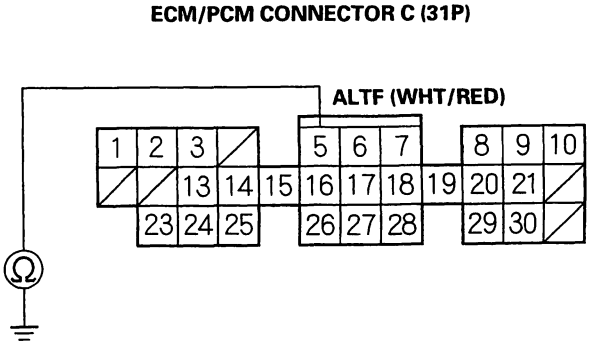

Wire side of female terminals

Is there continuity?

YES—Troubleshoot the charging circuit (see page 4-29).■

NO—Repair open in the wire between the ECM/PCM (C5) and the alternator.■

14. Turn the ignition switch OFF.
15. Disconnect the negative cable from the battery.
16. Disconnect ECM/PCM connector C (31P).

BACK

17. Check for continuity between body ground and ECM/PCM connector terminal C5.

ECM/PCM CONNECTOR C (31P)

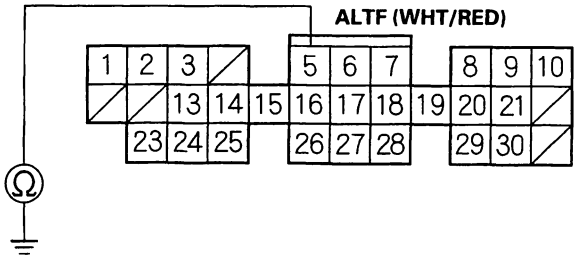

Wire side of female terminals

Is there continuity?

YES—Repair short in the wire between the ECM/PCM (C5) and the alternator. ■

NO—Substitute a known-good ECM/PCM and recheck (see page 11-5). If the prescribed voltage is now available, replace the original ECM/PCM. ■

Starter Switch Signal Circuit Troubleshooting

NOTE:
- M/T: Clutch pedal be pressed
- A/T: Transmission in Park or neutral

1. Measure voltage between ECM/PCM connector terminals A24 and B20 with the ignition switch in the start position (III).

ECM/PCM CONNECTORS

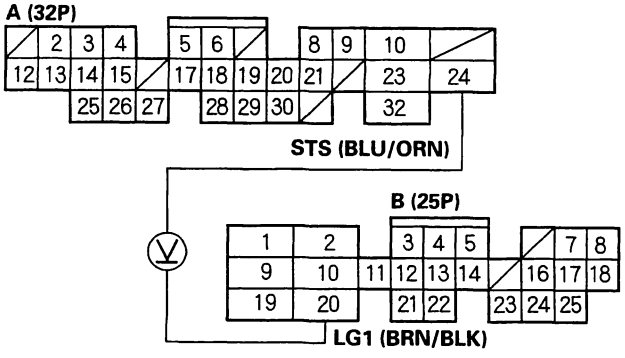

Wire side of female terminals

Is there battery voltage?

YES—The starter switch signal is OK. ■

NO—Go to step 2.

2. Inspect the No. 13 STARTER SIGNAL (7.5 A) fuse in the driver's under-dash fuse/relay box.

Is the fuse OK ?

YES—Repair open in the wire between the ECM/PCM (A24) and the No. 13 STARTER SIGNAL (7.5 A) fuse. ■

NO—Repair short in the wire between the ECM/PCM (A24) and the No. 13 STARTER SIGNAL (7.5 A) fuse or the PGM-FI main relay. Replace the No. 13 STARTER SIGNAL (7.5 A) fuse. ■

PSP Switch Signal Circuit Troubleshooting

1. Turn the ignition switch ON (II).
2. Measure voltage between ECM/PCM connector terminals A26 and B20.

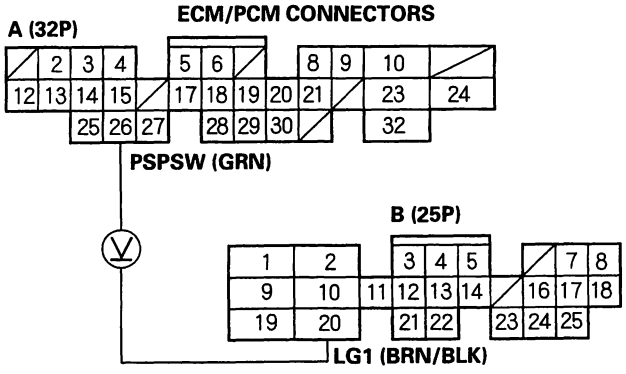

Wire side of female terminals

Is there less than 1.0 V?

YES—Go to step 3.

NO—Go to step 6.

3. Start the engine.
4. Turn the steering wheel to full lock position.
5. Measure voltage between ECM/PCM connector terminals A26 and B20.

Is there battery voltage?

YES—The PSP switch signal is OK.■

NO—Go to step 11.

6. Turn the ignition switch OFF.
7. Disconnect the PSP switch 2P connector.
8. Turn the ignition switch ON (II).
9. At the harness side, connect PSP switch 2P connector terminals No. 1 and No. 2 with a jumper wire.

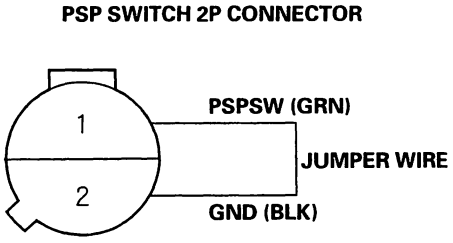

Wire side of female terminals

10. Measure voltage between ECM/PCM connector terminals A26 and B20.

Is there less than 1.0 V?

YES—Replace the PSP switch.■

NO—Check for an open in the wire between the ECM/PCM (A26) and the PSP switch, or an open in wire between the PSP switch and G302.■

11. Turn the ignition switch OFF.
12. Disconnect the PSP switch 2P connector.
13. Turn the ignition switch ON (II).

BACK

14. Measure voltage between ECM/PCM connector terminals A26 and B20.

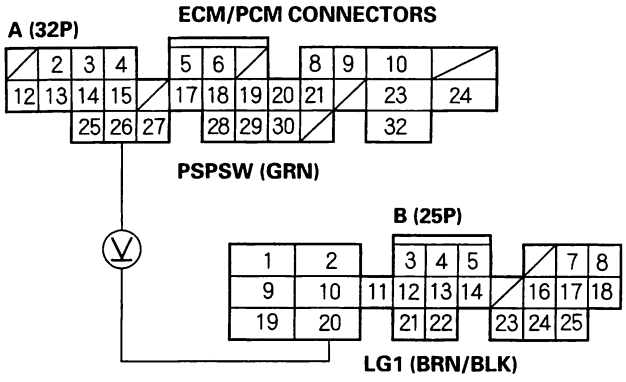

Wire side of female terminals

Is there battery voltage?

YES – Replace the PSP switch. ■

NO – Go to step 15.

15. Turn the ignition switch OFF.

16. Disconnect ECM/PCM connector A (32P).

17. Check for continuity between body ground and ECM/PCM connector terminal A26.

ECM/PCM CONNECTOR A (32P)

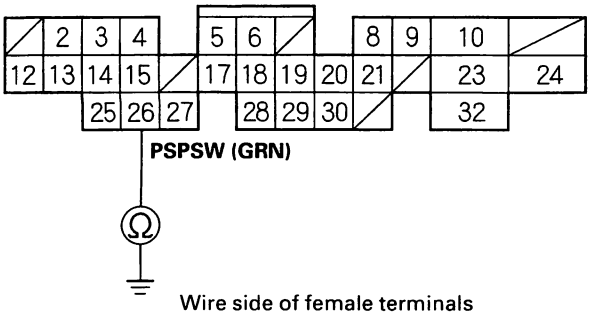

Wire side of female terminals

Is there continuity?

YES – Repair short in the wire between the ECM/PCM (A26) and the PSP switch. ■

NO – Substitute a known-good ECM/PCM and recheck (see page 11-5). If the prescribed voltage is now available, replace the original ECM/PCM. ■

Brake Pedal Position Switch Signal Circuit Troubleshooting

1. Check the brake lights.

Are the brake lights on without pressing the brake pedal?

YES – Inspect the brake pedal position switch (see page 19-5). ■

NO – Go to step 2.

2. Press the brake pedal.

Do the brake lights come on?

YES – Go to step 3.

NO – Go to step 4.

3. Measure voltage between ECM/PCM connector terminals A32 and B20 with the brake pedal pressed.

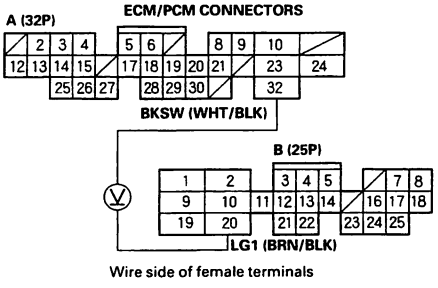

Wire side of female terminals

Is there battery voltage?

YES – The brake pedal position switch signal is OK. ■

NO – Repair open in the wire between the ECM/PCM (A32) and the brake pedal position switch. ■

4. Inspect the STOP (20A) fuse in the under-hood fuse/relay box.

Is the fuse OK?

YES – Repair open in the wire between the brake pedal position switch and the STOP (20 A) fuse. Inspect the brake pedal position switch (see page 19-5). ■

NO – Repair short in the wire between the ECM/PCM (A32) and the STOP (20 A) fuse. Replace the STOP (20 A) fuse. ■

Idle Speed Adjustment

Adjust idle speed using the Honda PGM Tester procedure, if possible. If not, use the following procedure.

NOTE:
- Leave the IAC valve connected.
- Before setting the idle speed, check these items:
  - The MIL has not been reported on.
  - Ignition timing
  - Spark plugs
  - Air cleaner
  - PCV system
- On Canadian models, pull the parking brake lever up. Start the engine, then check that the headlights are off.

1. Disconnect the EVAP canister purge valve 2P connector.

2. Connect a tachometer, or connect the Honda PGM Tester (A) or an OBD II scan tool to the Data Link Connector (DLC) (B) located under the driver's side of the dashboard.

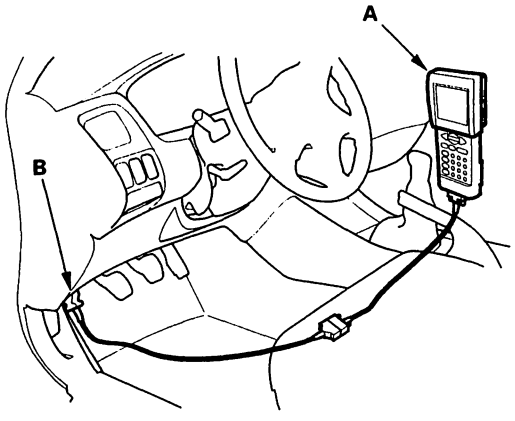

3. Start the engine. Hold the engine at 3,000 rpm with no load (in Park or neutral) until the radiator fan comes on, then let it idle.

4. Check the idle speed with no-load conditions: headlights, blower fan, rear defogger, radiator fan, and air conditioner off.

Idle speed should be:

M/T	700±50 rpm
A/T	700±50 rpm (in Park or neutral)

5. Adjust the idle speed, if necessary, by turning the idle adjusting screw (A) 1/4-turn clockwise or counterclockwise.

   NOTE: Do not turn the idle adjusting screw more than 1/4-turn without checking the idle speed.

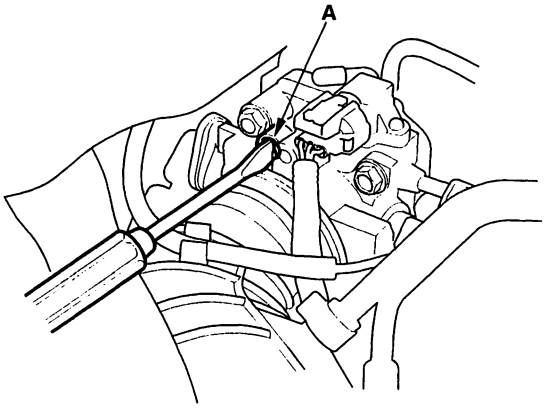

6. After turning the idle adjusting screw 1/4-turn, check the idle speed again. If it is out of spec, turn the idle adjusting screw 1/4-turn again.

7. Let the engine idle for 1 minute with the heater fan switch on HI and the air conditioner on, then check the idle speed.

Idle speed should be:

M/T	770±50 rpm
A/T	770±50 rpm (in Park or neutral)

NOTE:
- Do not turn the idle adjusting screw when the air conditioner is on.
- If the idle speed is not within specification, see Symptom Troubleshooting *Index*.

8. Reconnect the EVAP canister purge valve 2P connector.

BACK

Component Location Index

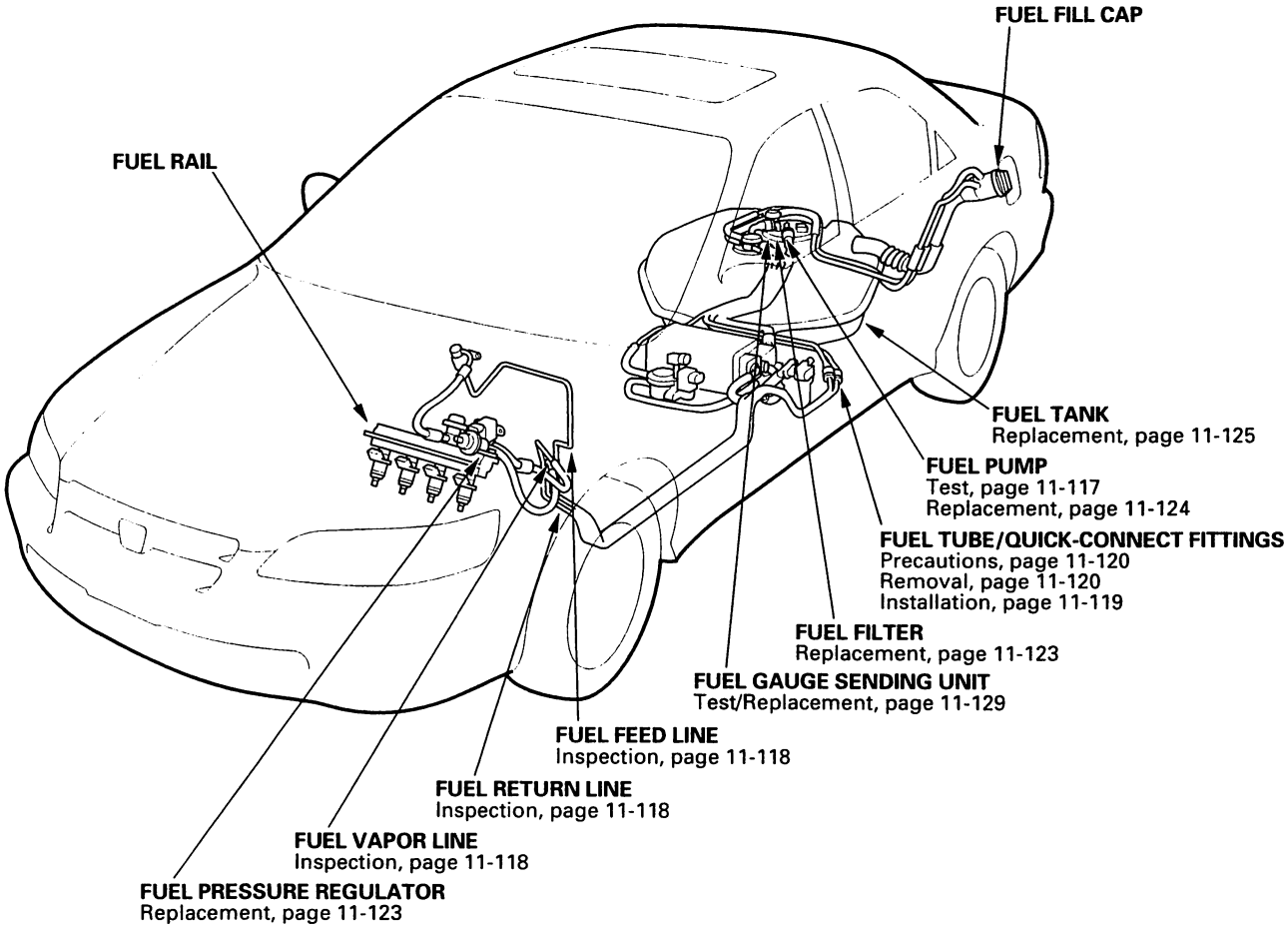

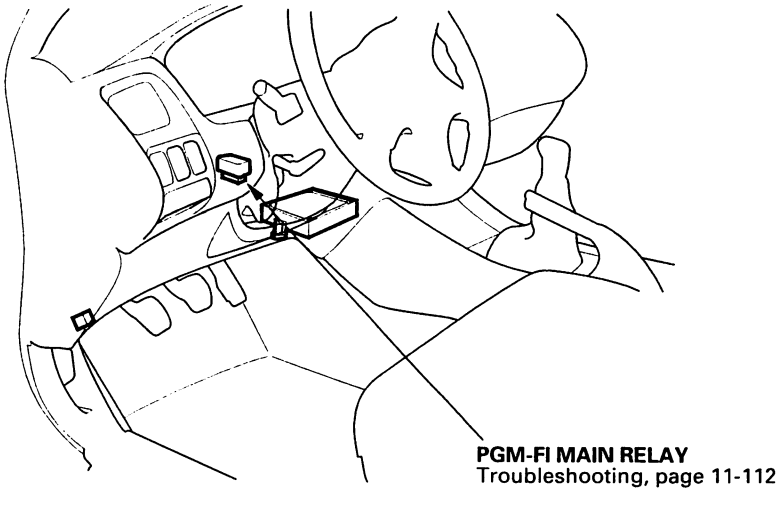

PGM-FI Main Relay Circuit Troubleshooting

1. Turn the ignition switch OFF, then disconnect the PGM-FI main relay 7P connector.

2. Check for continuity between body ground and PGM-FI main relay 7P connector terminal No. 3.

PGM-FI MAIN RELAY 7P CONNECTOR

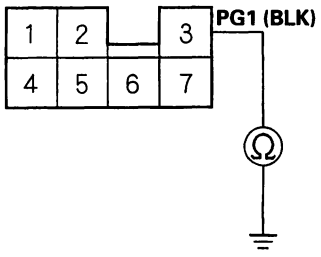

Wire side of female terminals

Is there continuity?

YES—Go to step 3.

NO—Repair open in the wire between the PGM-FI main relay and G101.■

3. Measure voltage between body ground and PGM-FI main relay 7P connector terminal No. 7.

PGM-FI MAIN RELAY 7P CONNECTOR

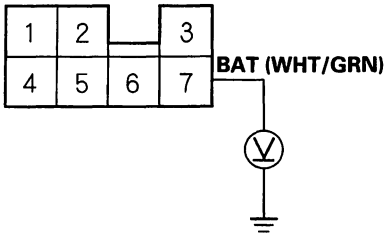

Wire side of female terminals

Is there battery voltage?

YES—Go to step 5.

NO—Go to step 4.

4. Check for a blown ACG S (15A) fuse in the under-hood fuse/relay box.

Is the fuse blown?

YES—Repair the short in the wire between the PGM-FI main relay and the ACG S (15A) fuse.■

NO—Repair the open in the wire between the PGM-FI main relay and the ACG S (15A) fuse.■

5. Turn the ignition switch ON (II), and measure voltage between body ground and PGM-FI main relay 7P connector terminal No. 5.

PGM-FI MAIN RELAY 7P CONNECTOR

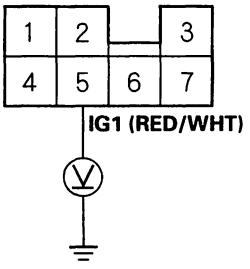

Wire side of female terminals

Is there battery voltage?

YES—Go to step 7.

NO—Go to step 6.

6. Check for a blown No. 1 FUEL PUMP (15A) fuse in the driver's under-dash fuse/relay box.

Is the fuse blown?

YES—Repair the short in the wire between the PGM-FI main relay and the No. 1 FUEL PUMP (15A) fuse.■

NO—Repair the open in the wire between the PGM-FI main relay and the No. 1 FUEL PUMP (15A) fuse.■

BACK

7. Push the clutch pedal in, or shift to Park, then turn the ignition switch to the START (III) position, and measure voltage between body ground and PGM-FI main relay 7P connector terminal No. 2.

PGM-FI MAIN RELAY 7P CONNECTOR

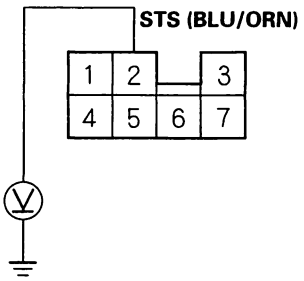

Wire side of female terminals

Is there battery voltage?

YES—Go to step 9.

NO—Go to step 8.

8. Check for a blown No. 13 STARTER SIGNAL (7.5A) fuse in the driver's under-dash fuse/relay box.

Is the fuse blown?

YES—Repair the short in the wire between the PGM-FI main relay and the No. 13 STARTER SIGNAL (7.5A) fuse.■

NO—Repair the open in the wire between the PGM-FI main relay and the No. 13 STARTER SIGNAL (7.5A).■

9. Turn the ignition switch OFF, and disconnect ECM/PCM connector A (32P).

10. Check for continuity between PGM-FI main relay 7P connector terminal No. 1 and ECM/PCM connector terminal A15.

PGM-FI MAIN RELAY 7P CONNECTOR

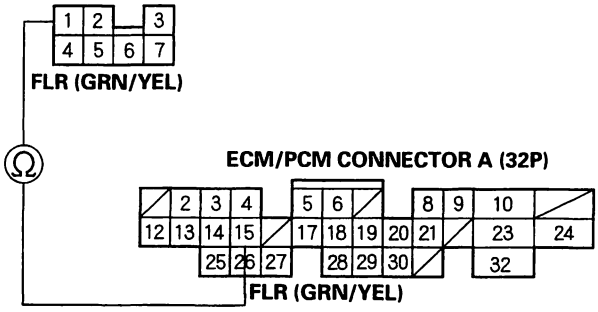

Wire side of female terminals

Is there continuity?

YES—Go to step 11.

NO—Repair open in the wire between the PGM-FI main relay and the ECM/PCM (A15).■

11. Reconnect ECM/PCM connector A (32P) and the PGM-FI main relay 7P connector.

12. Turn the ignition switch ON (II), and measure voltage between ECM/PCM connector terminals B1 and B20, and between B9 and B20.

ECM/PCM CONNECTOR B (25P)

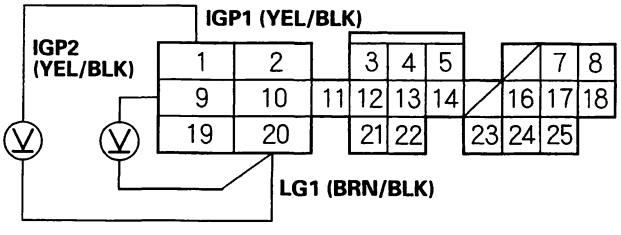

Wire side of female terminals

Is there battery voltage?

YES—Go to step 13.

NO—Check for an open in the wires between the PGM-FI main relay and the ECM/PCM (B1, B9). If the wires are OK, replace the PGM-FI main relay.■

(cont'd)

PGM-FI Main Relay Circuit Troubleshooting (cont'd)

13. Turn the ignition switch OFF, then ON (II) again, and measure voltage between the ECM/PCM connector terminals A15 and B2 within the first 2 seconds after the ignition switch is turned ON (II).

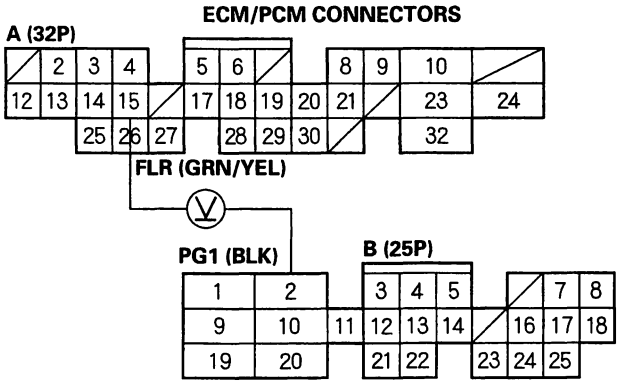

Wire side of female terminals

Is there 1.0 V or less?

YES—The PGM-FI main relay may be faulty. Go to step 14.

NO—Substitute a known-good ECM/PCM and recheck (see page 11-5). If the prescribed voltage is now available, replace the original ECM/PCM. ■

14. Remove the PGM-FI main relay.

15. Connect battery power to the PGM-FI main relay 7P connector terminal No. 2, and connect ground to the PGM-FI main relay 7P connector terminal No. 1. Then check for continuity between the PGM-FI main relay 7P connector terminals No. 5 and No. 4.

NOTE: Use the terminal numbers shown. Ignore the terminal numbers molded into the relay.

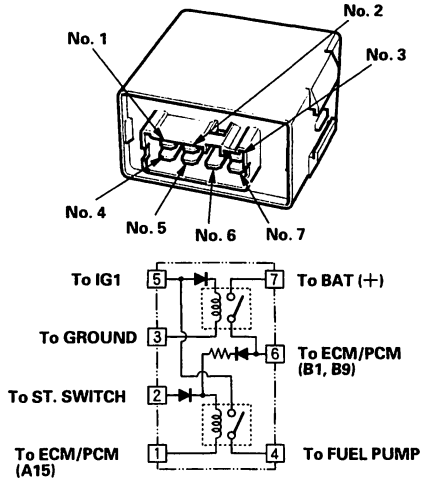

Is there continuity?

YES—Go to step 16.

NO—Replace the PGM-FI main relay and retest. ■

16. Connect battery power to the PGM-FI main relay 7P connector terminal No. 5, and connect ground to the PGM-FI main relay 7P connector terminal No. 3. Then check for continuity between the PGM-FI main relay 7P connector terminals No. 7 and No. 6.

Is there continuity?

YES—Go to step 17.

NO—Replace the PGM-FI main relay and retest. ■

17. Connect battery power to the PGM-FI main relay 7P connector terminal No. 6, and connect ground to the PGM-FI main relay 7P connector terminal No. 1. Then check for continuity between the PGM-FI main relay 7P connector terminals No. 5 and No. 4.

Is there continuity?

YES—The PGM-FI main relay is OK. ■

NO—Replace the PGM-FI main relay and retest. ■

BACK

Fuel Pressure Relieving

Before disconnecting fuel lines or hoses, release pressure from the system by loosening the fuel pulsation damper on top of the fuel rail.

1. Make sure you have the anti-theft code for the radio, then write down the frequencies for the radio's preset buttons.

2. Disconnect the negative cable from the battery.

3. Remove the fuel fill cap.

4. Use a wrench on the fuel pulsation damper (A) at the fuel rail.

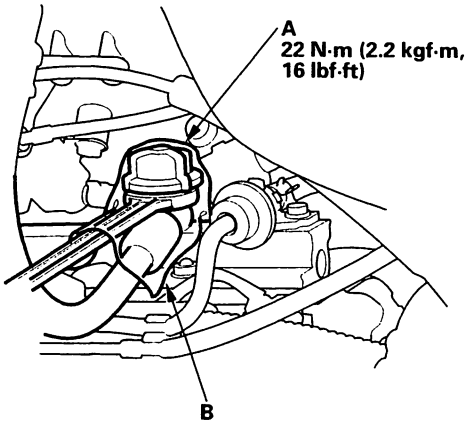

5. Place a rag or shop towel (B) over the fuel pulsation damper.

6. Slowly loosen the fuel pulsation damper one complete turn.

   NOTE: Replace all washers whenever the fuel pulsation damper is loosened or removed.

Fuel Pressure Test

Special Tools Required
- Fuel pressure gauge 07406-0040001
- Fuel pressure gauge attachment 07VAJ-0040100

1. Relieve the fuel pressure.

2. Use a wrench to remove the fuel pulsation damper from its fitting, then attach the fuel pressure gauge attachment.

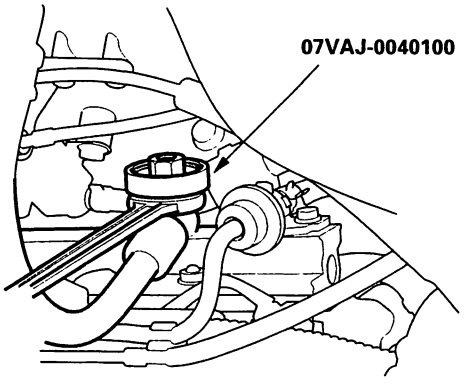

3. Attach the fuel pressure gauge.

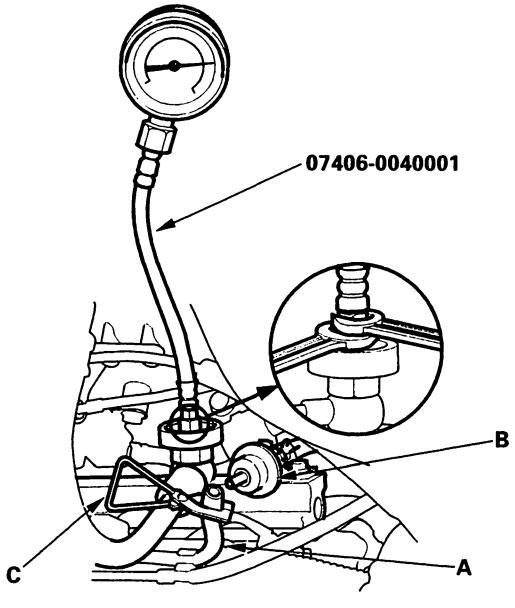

4. Disconnect the vacuum hose (A) from the fuel pressure regulator (B) and pinch it closed with a clamp (C).

(cont'd)

Fuel Pressure Test (cont'd)

5. Start the engine and let it idle.

   - If the engine starts, go to step 7.
   - If the engine does not start, go to step 6.

6. Check to see if the fuel pump is running: remove the fuel fill cap and listen to the fuel fill port while an assistant turns the ignition switch ON (II). You should hear the pump run for about 2 seconds when the ignition is turned ON (II).

   - If the fuel pump runs, go to step 7.
   - If the fuel pump does not run, test it (see page 11-117).

7. Read the pressure gauge (with the fuel pressure regulator vacuum hose disconnected and clamped). The pressure should be 320—370 kPa (3.3—3.8 kgf/cm^2, 47—54 psi).

   - If the pressure is OK and engine is running, go to step 8. If the engine is not running, repair the cause, then continue this test.
   - If the pressure is out of spec, go to step 9.

8. With the engine running, unpinch and reconnect the vacuum hose, and read the gauge again. The pressure should be 260—310 kPa (2.7—3.2 kgf/cm^2, 38—46 psi).

   - If the fuel pressure is OK, the test is complete.
   - If the pressure is out of spec, go to step 9.

9. Disconnect the vacuum hose from the pressure regulator again while you watch the pressure gauge. The pressure should rise when you disconnect the hose.

   - If the pressure did not rise, replace the fuel pressure regulator (see page 11-123).
   - If the pressure rose, but all your readings were lower than specified, check for a clogged fuel filter and for leaks in the fuel lines.
   - If the pressure rose, but all your readings were higher than specified, check for a pinched or clogged fuel return hose or line.

10. Reconnect the vacuum hose, remove the pressure gauge, and reinstall the fuel pulsation damper with a new washer. Tighten the fuel pulsation damper to 22 N·m (2.2kgf·m, 16 lbf·ft).

    NOTE: Disassemble and clean the fuel pressure gauge attachment thoroughly after use.

BACK

Fuel Pump Test

If you suspect a problem with the fuel pump, check that the fuel pump actually runs; when it is ON, you will hear some noise if you listen to the fuel fill port with the fuel fill cap removed. The fuel pump should run for 2 seconds when the ignition switch is first turned on. If the fuel pump does not make noise, check as follows:

1. Remove the trunk floor (see page 20-78).
2. Remove the access panel from the floor.
3. Turn the ignition switch OFF, then disconnect the fuel pump 5P connector.
4. Connect the PGM-FI main relay 7P connector terminals No. 4 and No. 5 with a jumper wire.

PGM-FI MAIN RELAY 7P CONNECTOR

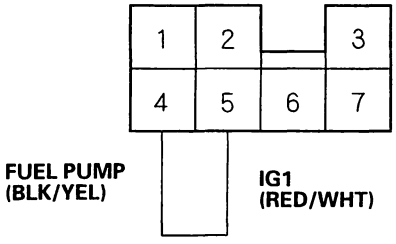

JUMPER WIRE

Wire side of female terminals

5. Turn the ignition switch ON (II).
6. Check that battery voltage is available between the fuel pump 5P connector terminal No. 5 and body ground when the ignition switch is turned ON (II).
   - If battery voltage is available, check the fuel pump ground. If the ground is OK, replace the fuel pump (see page 11-124).
   - If there is no voltage, check the wire harness (see page 11-112).

FUEL PUMP 5P CONNECTOR

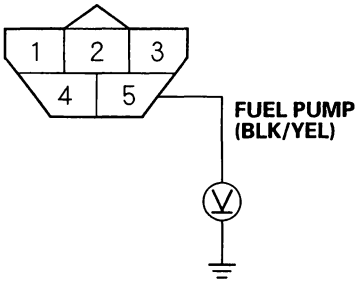

Wire side of female terminals

Fuel Line Inspection

Check the fuel system lines, hoses, and fuel filter for damage, leaks, or deterioration. Replace any damaged parts.

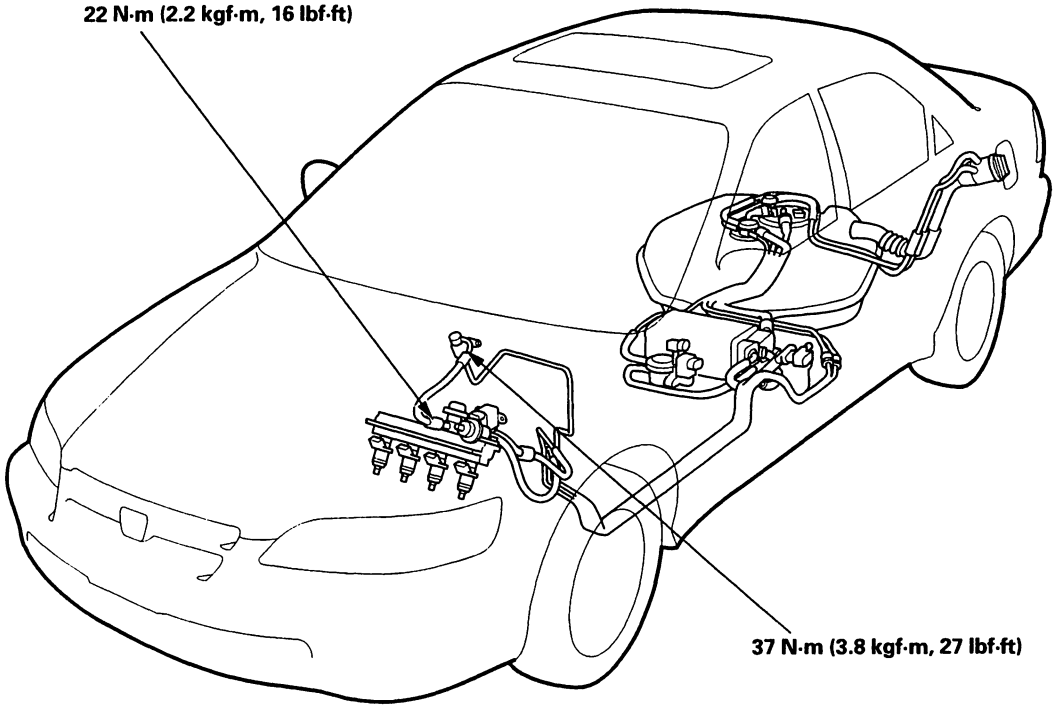

BACK

Check all hose clamps, and retighten them if necessary.
▲: Do not disconnect the hose from the line at these points.

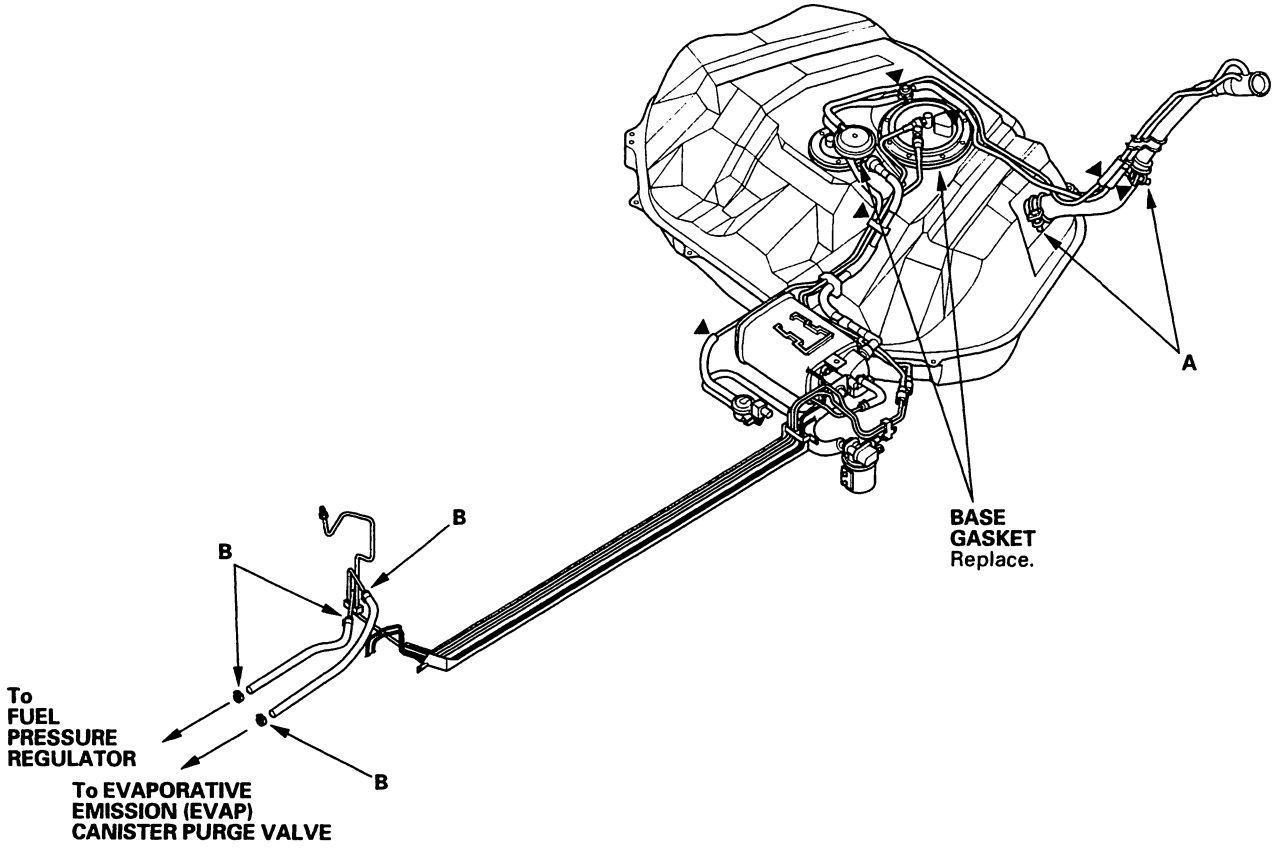

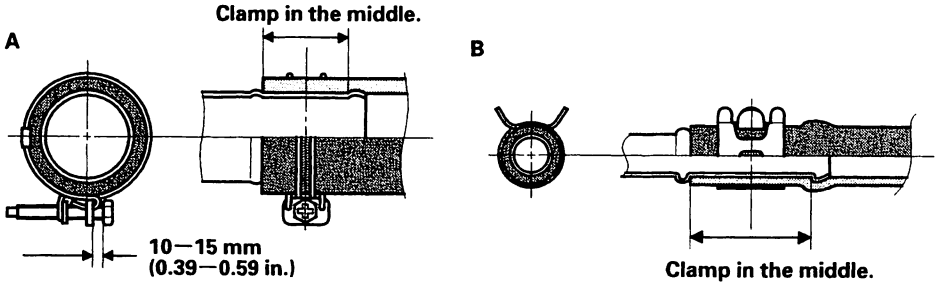

Fuel Tube/Quick-Connect Fittings Precaution

The fuel tube/quick-connect fittings assembly connects the in-tank fuel pump to the fuel feed line and the fuel return line. When removing or installing the fuel pump and fuel tank, it is necessary to disconnect or connect the quick-connect fittings. Pay attention to following:

- The fuel tubes (A) and quick-connect fittings (B) are not heat-resistant; be careful not to damage them during welding or other heat-generating procedures.
- The fuel tubes and quick-connect fittings are not acid-proof; do not touch them with a shop towel that was used for wiping battery electrolyte. Replace them if they came into contact with electrolyte or something similar.
- When connecting or disconnecting the fuel tubes and quick-connect fittings, be careful not to bend or twist them excessively. Replace them if they are damaged.

A disconnected quick-connect fitting can be reconnected, but the retainer on the mating line cannot be reused once it has been removed from the line. Replace the retainer when
- replacing the fuel pump.
- replacing the fuel filter.
- replacing the fuel feed line.
- replacing the fuel return line.
- it has been removed from the line.
- it is damaged.

MANUFACTURER	TUBE COLOR	RETAINER COLOR	TUBE
SANOH	BLACK	WHITE	FEED TUBE (BOTH SIDES)
TOKAI SANOH	BLACK	YELLOW	RETURN TUBE (BOTH SIDES)

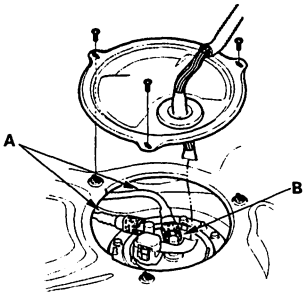

Fuel Tube/Quick-Connect Fittings Removal

1. Disconnect the battery negative cable.
2. Remove the fuel fill cap.
3. Relieve fuel pressure (see page 11-115).
4. Check the fuel quick-connect fittings for dirt, and clean them if necessary.
5. Hold the connector (A) with one hand, and squeeze the retainer tabs (B) with the other hand to release the tabs from the locking pawls (C). Pull the connector off.

   NOTE:
   - Be careful not to damage the line (D) or other parts.
     Do not use tools.
   - If the connector does not move, keep the retainer tabs pressed down, and alternately pull and push the connector until it comes off easily.
   - Do not remove the retainer from the line; once removed, the retainer must be replaced with a new one.

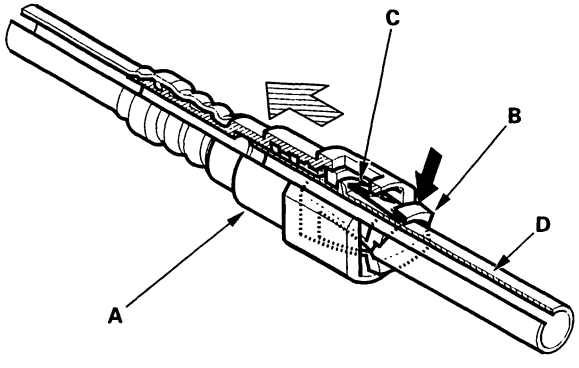

BACK

6. Check the contact area (A) of the line (B) for dirt and damage.
   - If the surface is dirty, clean it.
   - If the surface is rusty or damaged, replace the fuel pump, fuel filter, fuel feed line and fuel return line.

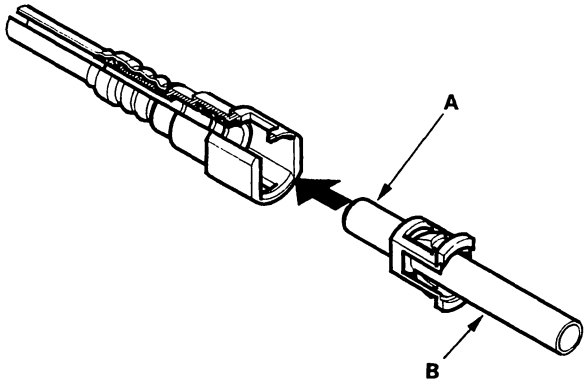

7. To prevent damage and keep foreign matter out, cover the disconnected connector and line end with plastic bags (A).

   NOTE:
   - The retainer cannot be reused once it has been removed from the line.
     Replace the retainer when
     - replacing the fuel pump.
     - replacing the fuel filter.
     - replacing the fuel feed line.
     - replacing the fuel return line.
     - it has been removed from the line.
     - it is damaged.

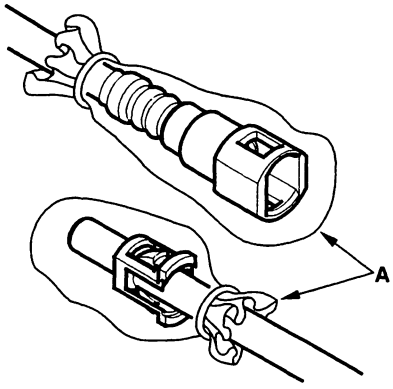

Fuel Tube/Quick-Connect Fittings Installation

1. Check the contact area (A) of the line (B) for dirt or damage, and clean it if necessary.

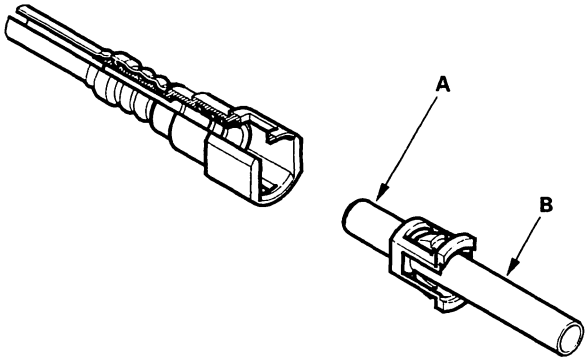

2. Insert a new retainer (A) into the connector (B) if the retainer is damaged, or after
   - replacing the fuel pump.
   - replacing the fuel filter.
   - replacing the fuel feed line.
   - replacing the fuel return line.
   - removing the retainer from the line.

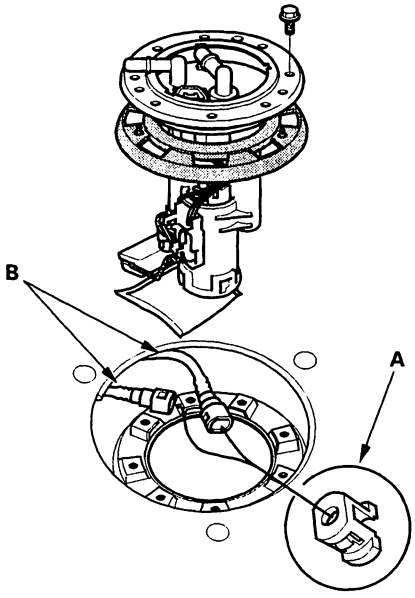

(cont'd)

Fuel Tube/Quick-Connect Fittings Installation (cont'd)

3. Before connecting a new fuel tube/quick-connect fitting assembly (A), remove the old retainer from the mating line.

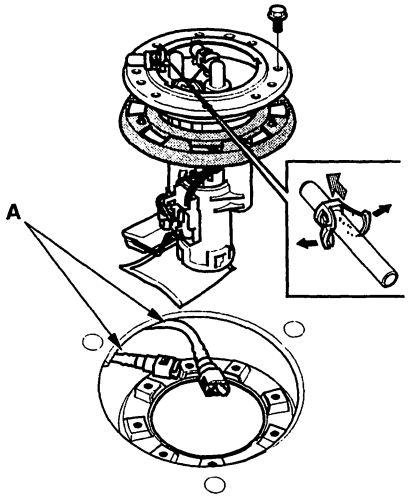

4. Align the quick-connect fittings with the line (A), and align the retainer (B) locking pawls with the connector (C) grooves. Then press the quick-connect fittings onto the line until both retainer pawls lock with a clicking sound.

   NOTE: If it is hard to connect, put a small amount of new engine oil on the line end.

Connection with new retainer:

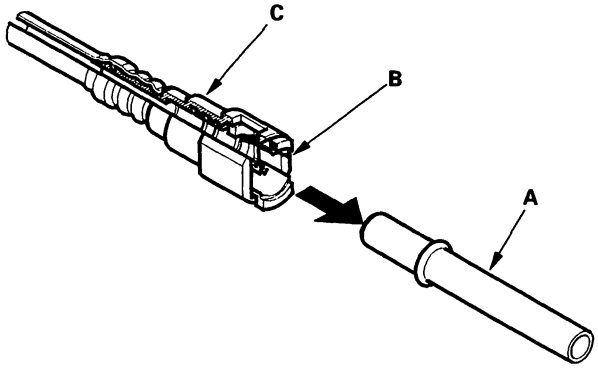

Reconnection to existing retainer:

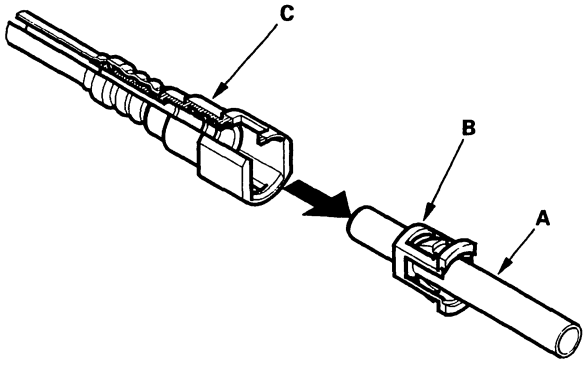

5. Make sure the connection is secure and that the pawls are firmly locked into place; check visually and by pulling the connector.

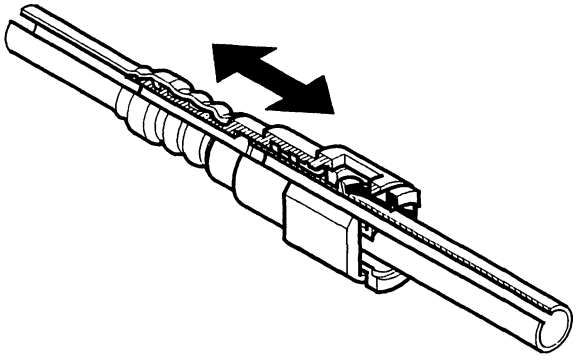

6. Reconnect the battery negative cable, and turn the ignition switch ON (II). The fuel pump will run for about two seconds, and fuel pressure will rise. Repeat 2 or 3 times, and check that there is no leakage in the fuel supply system.

Fuel Pressure Regulator Replacement

1. Place a shop towel under the fuel pressure regulator, then relieve fuel pressure (see page 11-115).

2. Disconnect the vacuum hose and fuel return hose.

3. Remove two 6 mm retainer bolts (A) and the fuel pressure regulator (B).

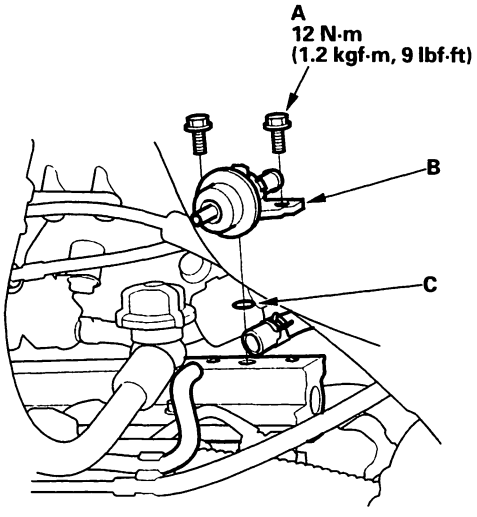

4. Apply clean engine oil to a new O-ring (C), and carefully install it into its proper position.

5. Install the fuel pressure regulator and the 6 mm retainer bolts.

6. Reconnect the vacuum hose and fuel return hose.

7. Turn the ignition switch ON (II), but do not operate the starter. After the fuel pump runs for approximately 2 seconds, the fuel pressure in the fuel line rises. Repeat this 2 or 3 times, then check for fuel leakage.

Fuel Filter Replacement

After making sure that the fuel pump and the fuel pressure regulator are OK, replace the fuel filter whenever fuel pressure drops below the specified value (320 – 370 kPa, 3.3 – 3.8 kgf/cm², 47 – 54 psi with the fuel pressure regulator vacuum hose disconnected and pinched).

1. Remove the fuel tank unit (see page 11-124).

2. Remove the fuel filter (A).

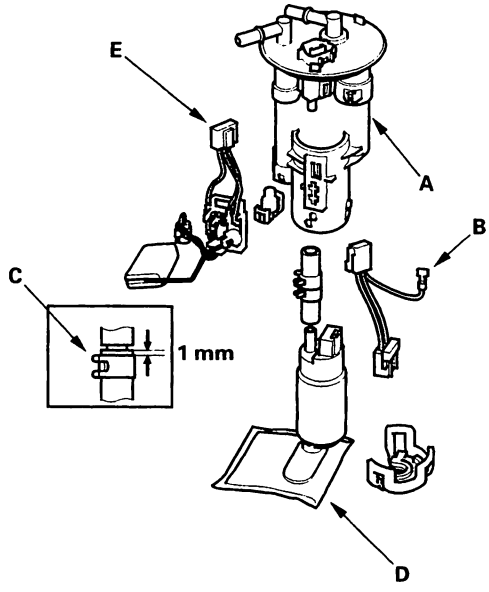

3. Install the parts in the reverse order of removal with a new base gasket, then check these items:

   - When connecting the wire harness, make sure the connection is secure and the terminal (B) is firmly locked into place.
   - Check that the tab of the clamp (C) does not interfere with the wire harness.
   - Do not push the lower part of the suction filter (D).
   - When installing the fuel gauge sending unit (E), make sure the connection is secure and the connector is firmly locked into place. Be careful not to bend or twist it excessively.

Fuel Pump Replacement

1. Remove the trunk floor (see page 20-78).
2. Remove the access panel from the floor.
3. Turn the ignition switch OFF, then disconnect the fuel pump 5P connector.
4. Remove the fuel cap.
5. Relieve the fuel pressure (see page 11-115).
6. Disconnect the quick-connect fittings from the fuel pump.
7. Remove the bolts (A), and the fuel tank unit (B).

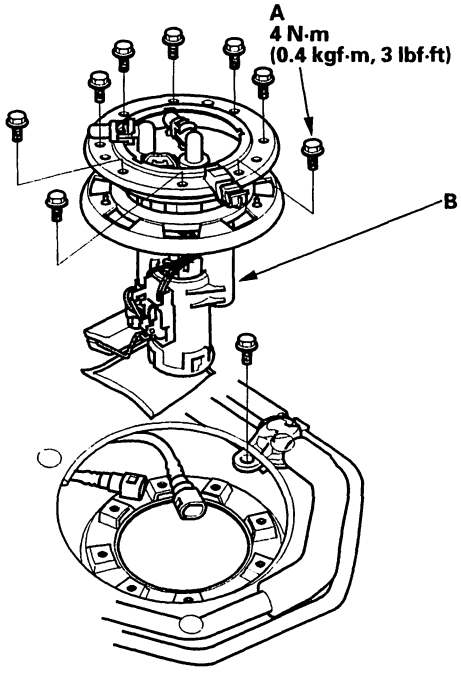

8. Remove the bracket (A), the fuel filter (B), the fuel gauge sending unit (C), the hose (D), and the wire harness (E).

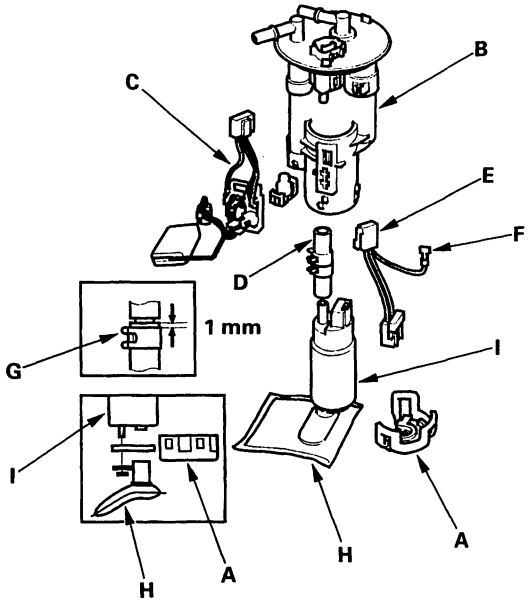

9. When connecting the fuel pump, make sure the connection is secure and the suction filter (H) is firmly connected to the fuel pump (I).
10. Install the parts in the reverse order of removal with a new base gasket, then check these items:
    - When connecting the wire harness, make sure the connection is secure and the terminal (F) is firmly locked into the place.
    - Check that the tab of the clamp (G) does not interfere with the wire harness.
    - Do not push the lower part of the suction filter.
    - When installing the fuel gauge sending unit, make sure the connection is secure and the connector is firmly locked into place. Be careful not to bend or twist it excessively.

BACK

Fuel Tank Replacement

Removal

1. Relieve the fuel pressure (see page 11-115).

2. Remove the fuel fill cap.

3. Drain the fuel tank: Remove the fuel tank unit (see page 11-124). Using a hand pump, hose, and container suitable for gasoline, draw the fuel from the fuel tank.

4. Remove the trunk floor and the access panel (A) from the floor. Disconnect the fuel tank 5P connector (B).

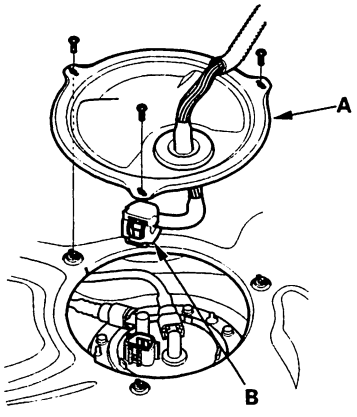

5. Loosen the rear wheel nuts slightly, then raise the vehicle and make sure it is securely supported. Remove the rear wheels.

6. Release the parking brake.

7. Remove the catalytic converter (see page 9-5).

8. Remove the fuel line cover (A). Disconnect the fuel fill neck tube (B), the fuel tank vapor recirculation tube (C) and the fuel tank vapor control signal tube (D) from the fuel fill lines (E).

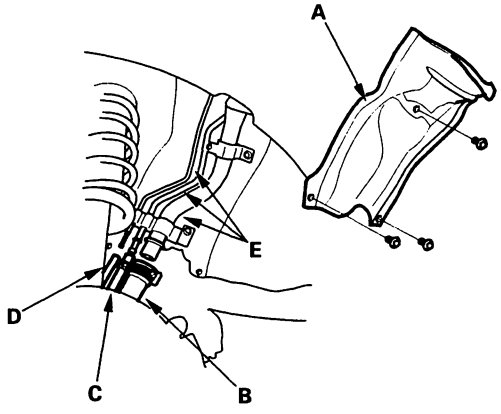

9. Disconnect the fuel tank vapor vent tube (A) and the quick-connect fittings (B). Disconnect the hose (C). Remove the hose from the line holder (D). Disconnect the hose (E) from the EVAP two way valve (F). Remove the line holder (G).

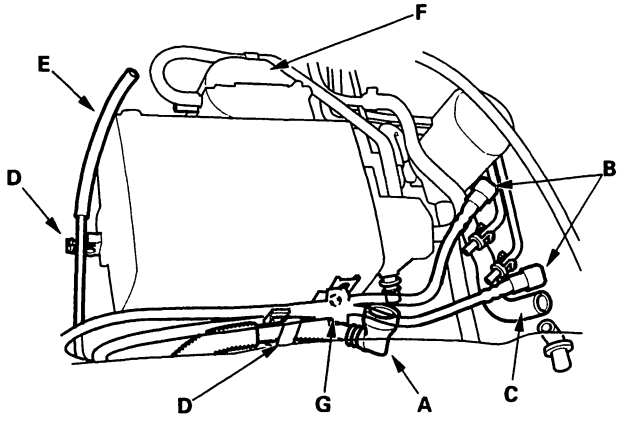

(cont'd)

Fuel Tank Replacement (cont'd)

10. If the vehicle has ABS, disconnect the wheel sensor 2P connectors (A); if not, go to step 11.

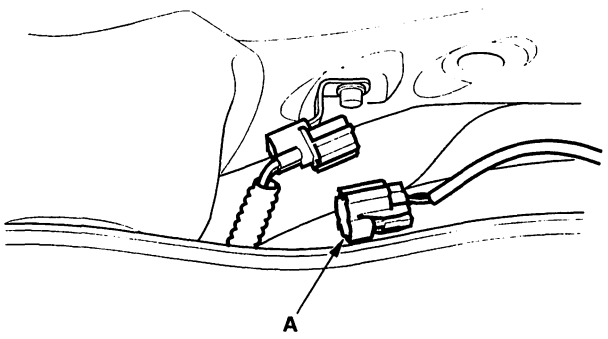

11. Remove the stabilizer bar (A), the heat shield (B) and the parking brake cable bracket (C).

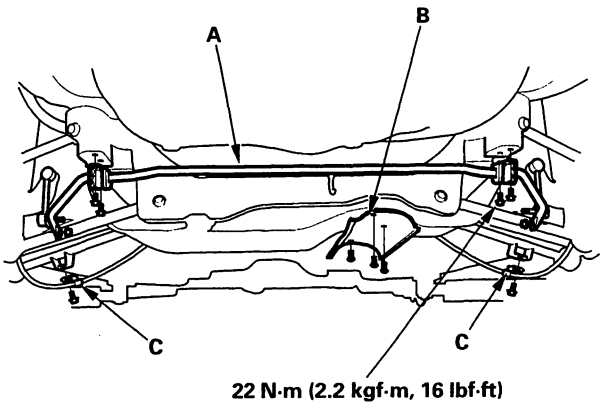

12. If the vehicle has rear drum brakes, go to step 14. If it has rear disc brakes, remove the clip (A) and parking brake cable (B), two caliper bolts (C), caliper body (D), and brake hose bracket (E).

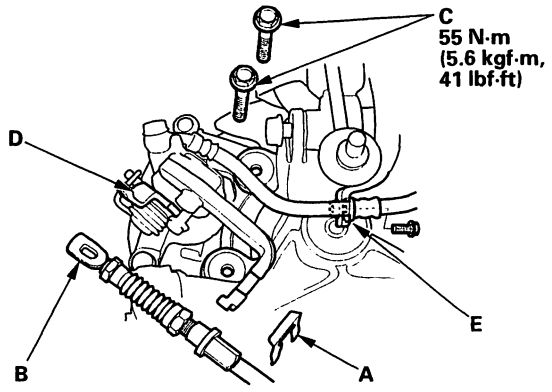

13. Hook the caliper body (A) on to the damper spring (B). Go to step 16.

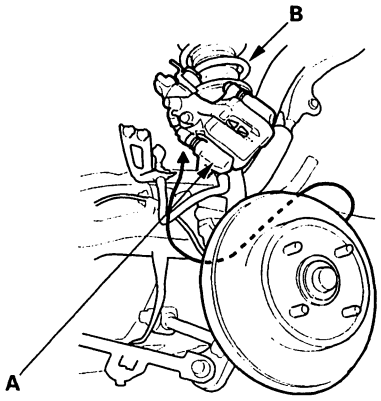

14. Disconnect the brake line (A) from the wheel cylinder (B).

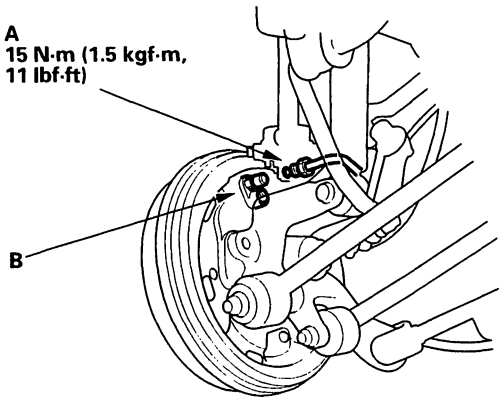

15. Remove the brake drum and brake shoes. Remove the two mounting bolts for the parking brake cable from the backing plate, then remove the parking brake cable using a 12 mm offset wrench.

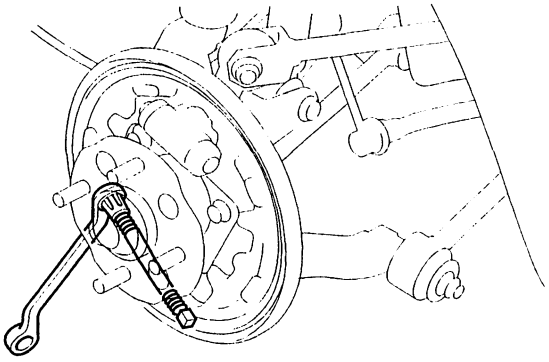

BACK

16. Remove the flange bolt (A).

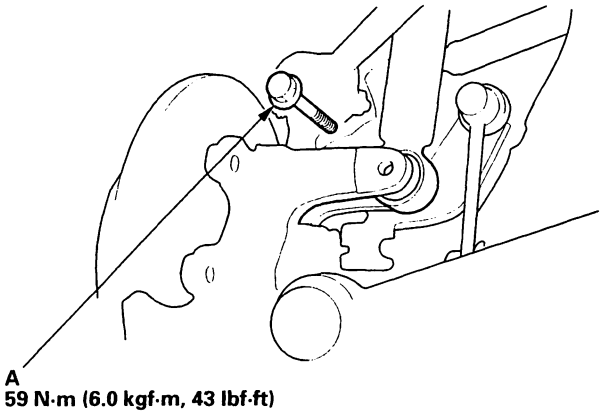

17. Place a jack or support under the rear suspension sub frame. Remove the mounting bolts (A) (4 cylinder: four bolts; shown, V6:12 bolts; not shown). Remove the rear suspension sub frame.

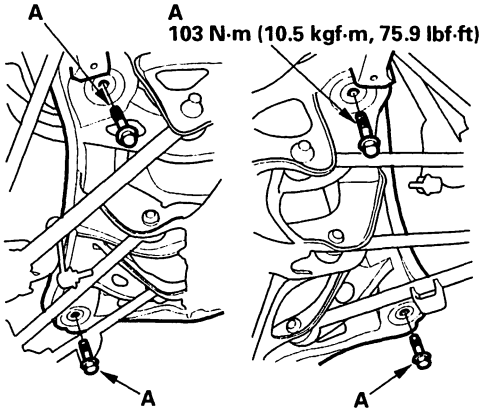

18. Remove the bolts (A) and the fuel tank straps (B).

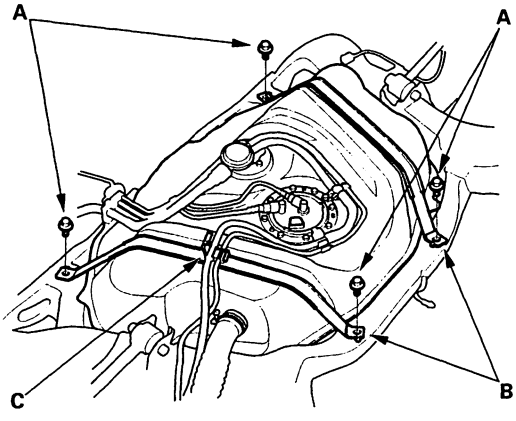

19. Remove the lines from the fuel line holder (C).

20. Lift the fuel tank out of the sub frame.

Installation

1. Install the fuel tank straps (A), and tighten the bolts (B). Install the lines to the fuel line holder (C).

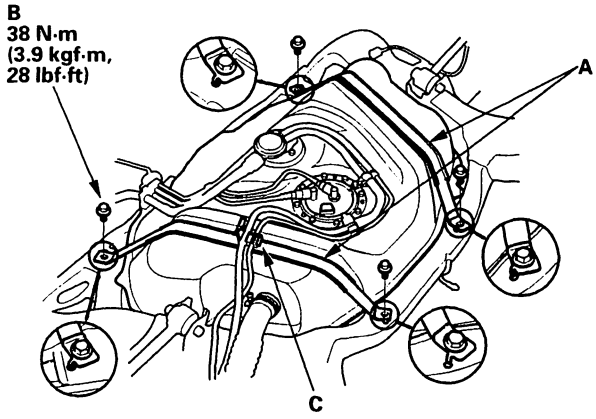

2. Place the jack, or support, under the rear suspension sub frame. Install the rear suspension sub frame, aligning the pins (A) with the holes in the rear suspension sub frame.

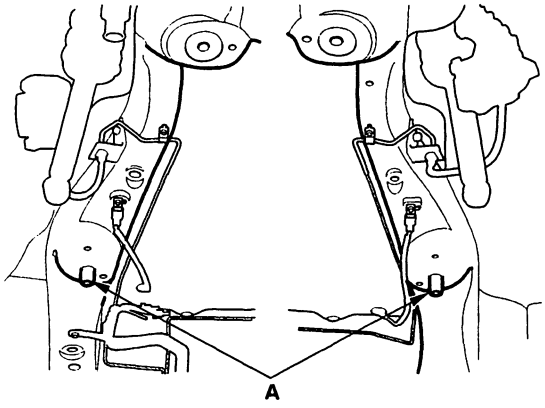

3. Install the remaining parts in the reverse order of removal.

4. If equipped with drum brakes, bleed the brake system after installing the brake hose (see page 19-7). If not, go to step 5.

5. After installation, adjust the wheel alignment (see page 18-5).

Fuel Gauge Test

NOTE: For the fuel gauge system circuit diagram, refer to the Gauges Circuit Diagram (see page 22-60).

1. Check the No. 9 BACK UP LIGHT INSTRUMENT LIGHT (7.5 A) fuse in the driver's under-dash fuse/relay box before testing.
2. Turn the ignition switch OFF.
3. Remove the spare tire lid.
4. Remove the access panel from the floor.
5. Disconnect the fuel pump 5P connector.
6. Measure voltage between fuel pump 5P connector terminals No. 1 and No. 2 with the ignition switch ON (II). There should be between 5 and 8 V.
   - If the voltage is OK, go to step 6.
   - If the voltage is not as specified, check for:
     - an open in the YEL/BLU or BLK wire.
     - poor ground (G552).

FUEL PUMP 5P CONNECTOR

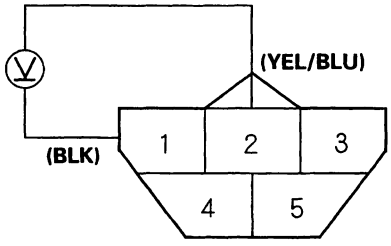

Wire side of female terminals

7. Turn the ignition switch OFF.
8. Connect fuel pump 5P connector terminals No. 1 and No. 2 with a jumper wire, then turn the ignition switch ON (II).

FUEL PUMP 5P CONNECTOR

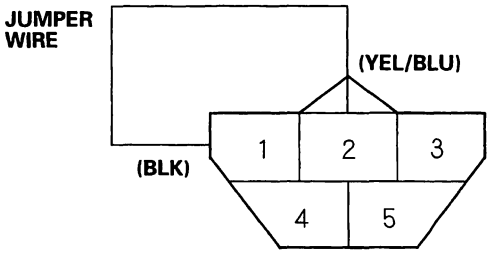

Wire side of female terminals

9. Check that the pointer of the fuel gauge starts moving toward the "F" mark.
   - If the pointer of the fuel gauge does not move at all, replace the gauge.
   - If the pointer moves, the gauge is OK; inspect the fuel gauge sending unit (see page 11-129).

   NOTE:
   - Turn the ignition switch OFF before the pointer reaches "F" on the gauge dial. Failure to do so may damage the fuel gauge.
   - The fuel gauge is a bobbin (cross-coil) type, so the fuel level is continuously indicated even when the ignition switch is OFF. The pointer moves more slowly than that of a bimetal type.

BACK

Fuel Gauge Sending Unit Test/Replacement

1. Remove the spare tire lid.
2. Remove the access panel from the floor.
3. Turn the ignition switch OFF, then disconnect the fuel pump 5P connector.
4. Remove the fuel fill cap.
5. Relieve the fuel pressure (see page 11-115).
6. Disconnect the quick-connect fittings from the fuel pump.
7. Remove the bolts (A) and the fuel tank unit (B).

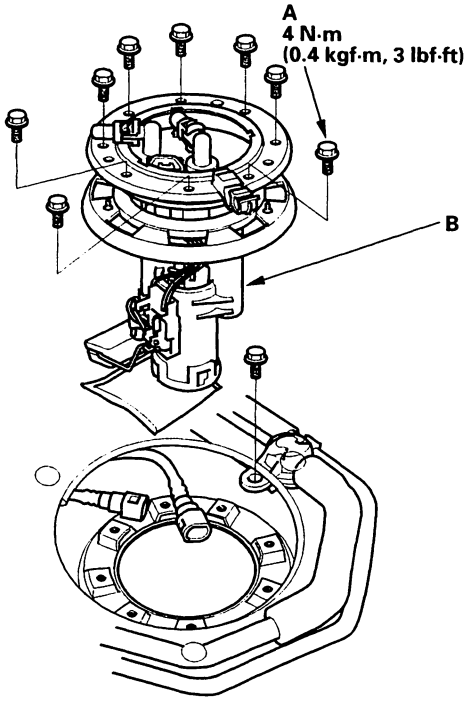

8. Measure the resistance between the No. 1 and No. 2 terminals with the float at E (EMPTY), 1/2 (HALF FULL), and F (FULL) positions.
   If you do not get the following readings, replace the fuel gauge sending unit (A).

Float Position	E	1/2	F
Resistance (Ω)	105 – 107	29.5 – 35.5	3 – 5

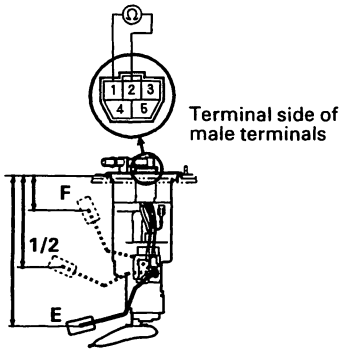

9. Install the parts in the reverse order of removal with a new base gasket and new quick connect fittings, then check these items:
   - When connecting the wire harness, make sure the connection is secure and the terminal (B) is firmly locked into place.
   - Check that the tab of the clamp (C) does not interfere with the wire harness.
   - Do not fold over the lower part of the mesh filter (D).
   - When installing the fuel gauge sending unit (A), make sure the connection is secure and the connector is firmly locked into place. Be careful not to bend or twist it excessively.

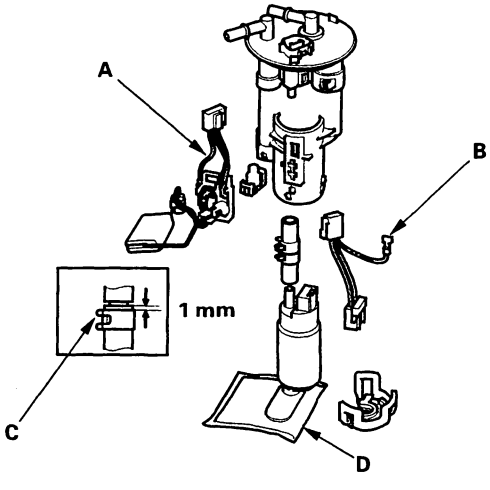

Low Fuel Indicator Light Test

NOTE: For the low fuel indicator circuit diagram, see page 22-60.

1. Check the No. 9 BACK UP LIGHT INSTRUMENT LIGHT (7.5 A) fuse in the driver's under-dash fuse/relay box before testing.

2. Park the vehicle on level ground.

3. Drain the fuel tank: Remove the fuel return line from the fuel pressure regulator, and attach a suitable hose to the regulator fitting. Place the other end of the hose in a container suitable for gasoline. Start the engine, and run it until the tank is empty (the engine stalls).

4. Add less than 8.5 ℓ (2.2 U.S. Gal, 1.8Imp. Gal) of fuel, and turn the ignition switch ON (II). The low fuel indicator light should come on within 4 minutes.

   - If the light comes on within 4 minutes, go to step 9.
   - If the light does not come on within 4 minutes, go to step 5.

5. Remove the spare tire lid.

6. Remove the access panel from the floor.

7. Turn the ignition switch OFF, then disconnect the fuel pump 5P connector.

8. Connect the fuel pump 5P connector terminals No. 1 and No. 3 with a jumper wire.

   - If the light comes on, replace the fuel gauge sending unit (see page 11-129).
   - If the light does not come on, check for:

     – an open in the LT GRN/RED wire between the fuel gauge sending unit and the fuel gauge assembly.
     – a blown bulb.
     – a poor ground (G552).

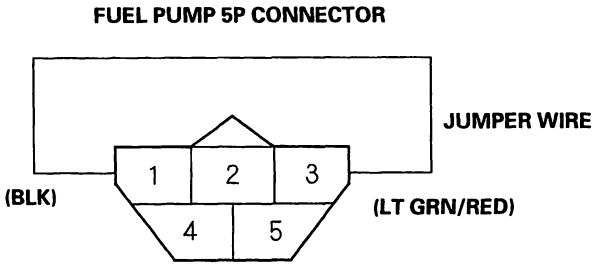

Wire side of female terminals

9. Add 4 ℓ of fuel (1.1 U.S. Gal, 0.9 Imp. Gal). The light should go off within 4 minutes.

BACK

Component Location Index

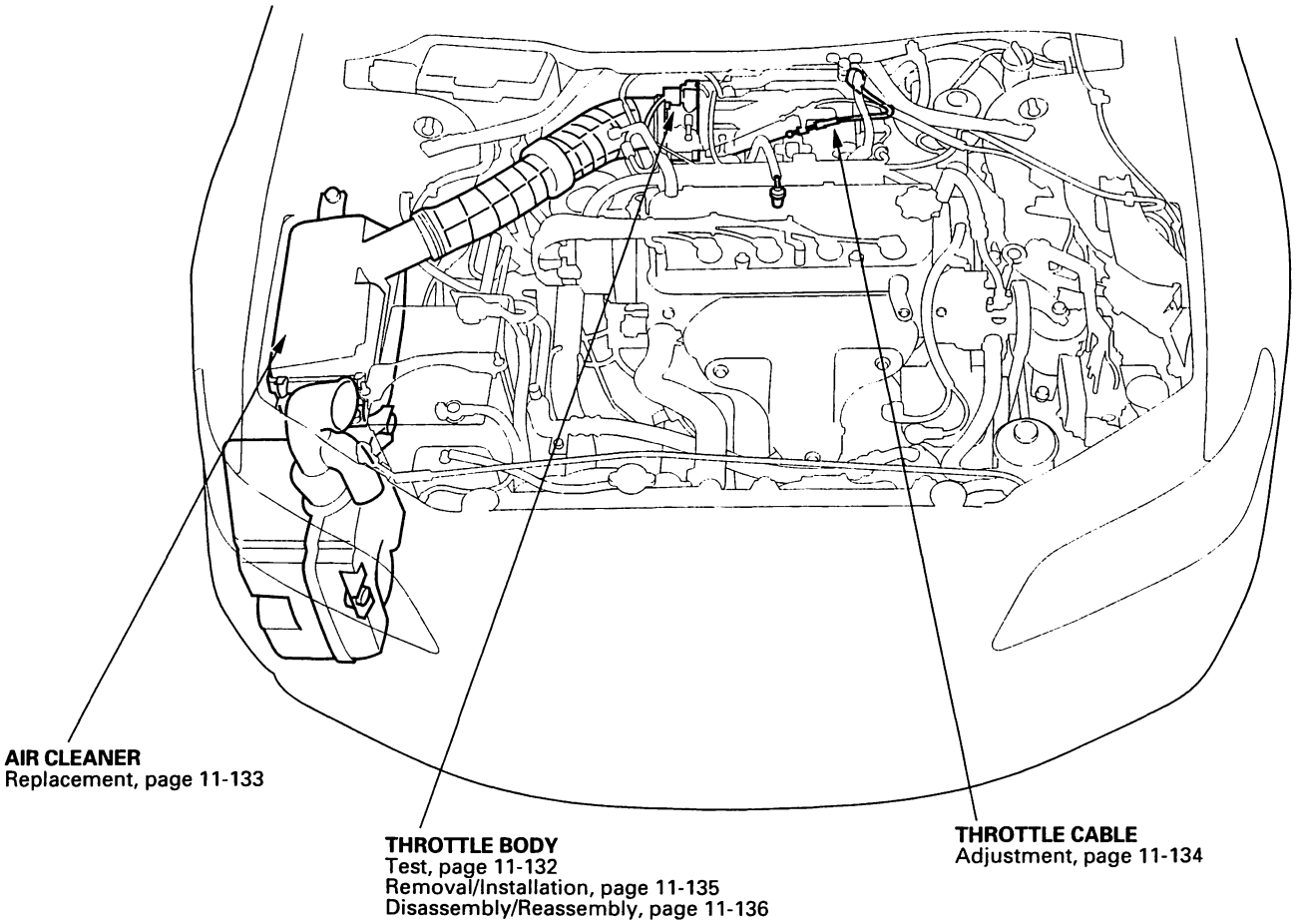

BACK

Throttle Body Test

NOTE:
- Do not adjust the throttle stop screw. It is preset at the factory.
- If the Malfunction Indicator Lamp has been reported on, check for Diagnostic Trouble Codes (DTCs) (see page 11-3).

1. With the engine off, check the throttle cable operation.The cable should move without binding or sticking.
   - If the cable is OK, go to step 2.
   - If the cable binds or sticks, check it and its routing. If it's faulty, reroute it or replace it and adjust it (see page 11-134), then go to step 2.
2. Operate the throttle lever by hand to see if the throttle valve and/or shaft are too loose or too tight.
   - If there is excessive play in the throttle valve shaft, or any binding in the throttle valve at the fully closed position, replace the throttle body.
   - If the throttle valve and shaft are OK, go to step 3.
3. Connect a scan tool to the Data Link Connector.
4. Turn the ignition switch ON (II).
5. Check the throttle position with the scan tool. There should be approx. 10% when the throttle is fully closed and approx. 90% when the throttle is fully opened.
   - If the throttle position is correct, the throttle body is OK.
   - If the throttle position is not correct, replace the throttle body.

Intake Air Bypass Control Valve Test

1. Hold the engine at 3,000 rpm with no load (in Park or neutral) until the radiator fan comes on, then let it idle.
2. Disconnect the air assist hose (A) from the IAC valve (B) then connect it to a vacuum pump/gauge (C).

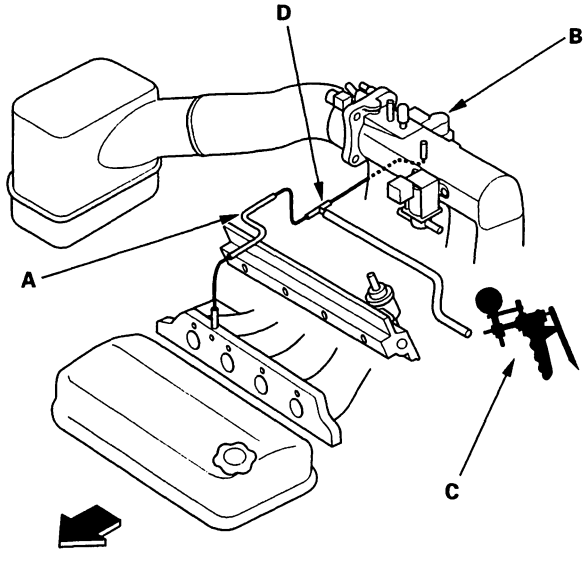

3. Start the engine, then let it idle.
4. Check the vacuum.

   Is there any vacuum

   YES—Go to step 5.

   NO—Repair the air assist hose.■
5. Disconnect the air assist hose from the vacuum pump/gauge, then connect the air assist hose, the IAC valve and the vacuum pump/gauge by using a three-way joint (D).
6. Disconnect the IAC valve 3P connector.
7. Check the vacuum.

   Is there vacuum above 40 kPa (300 mmHg, 12 in. Hg)?

   YES—Replace the IAC valve.■

   NO—The intake air bypass control system is OK.■

BACK

Air Cleaner Element Replacement

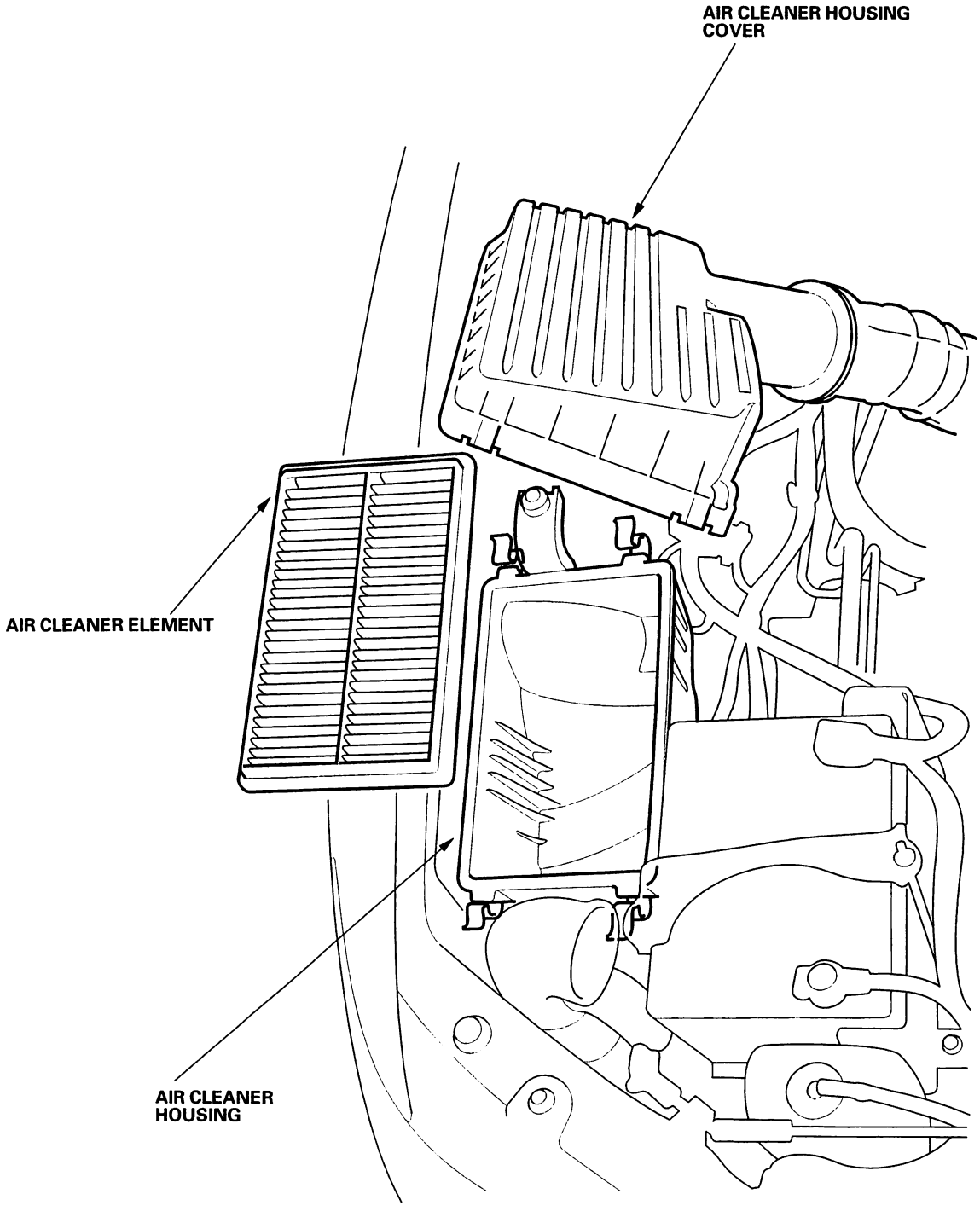

Throttle Cable Adjustment

1. Push the throttle link (A) toward the throttle lever (B) until there is no clearance.

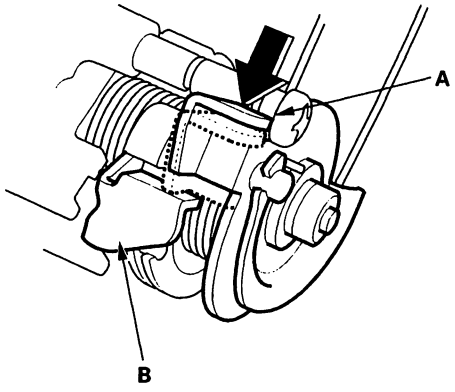

2. Check cable free play at the throttle linkage. Cable deflection (A) should be 10 – 12 mm (3/8 – 1/2 in.).

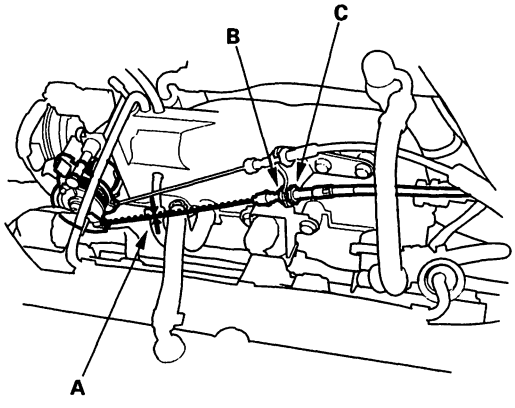

3. If deflection (A) is not within spec (10 – 12 mm, 3/8 – 1/2 in.), loosen the locknut (B), turn the adjusting nut (C) until the deflection is as specified, then retighten the locknut.

4. With the cable properly adjusted, check the throttle valve to be sure it opens fully when you push the accelerator pedal to the floor. Also check the throttle valve to be sure it returns to the idle position whenever you release the accelerator pedal.

BACK

Throttle Body Removal/Installation

NOTE:
- Do not adjust the throttle stop screw.
- After reassembly, adjust the cruise control cable (see page 4-54) and the throttle cable (see page 11-134).
- The TP sensor is not removable.

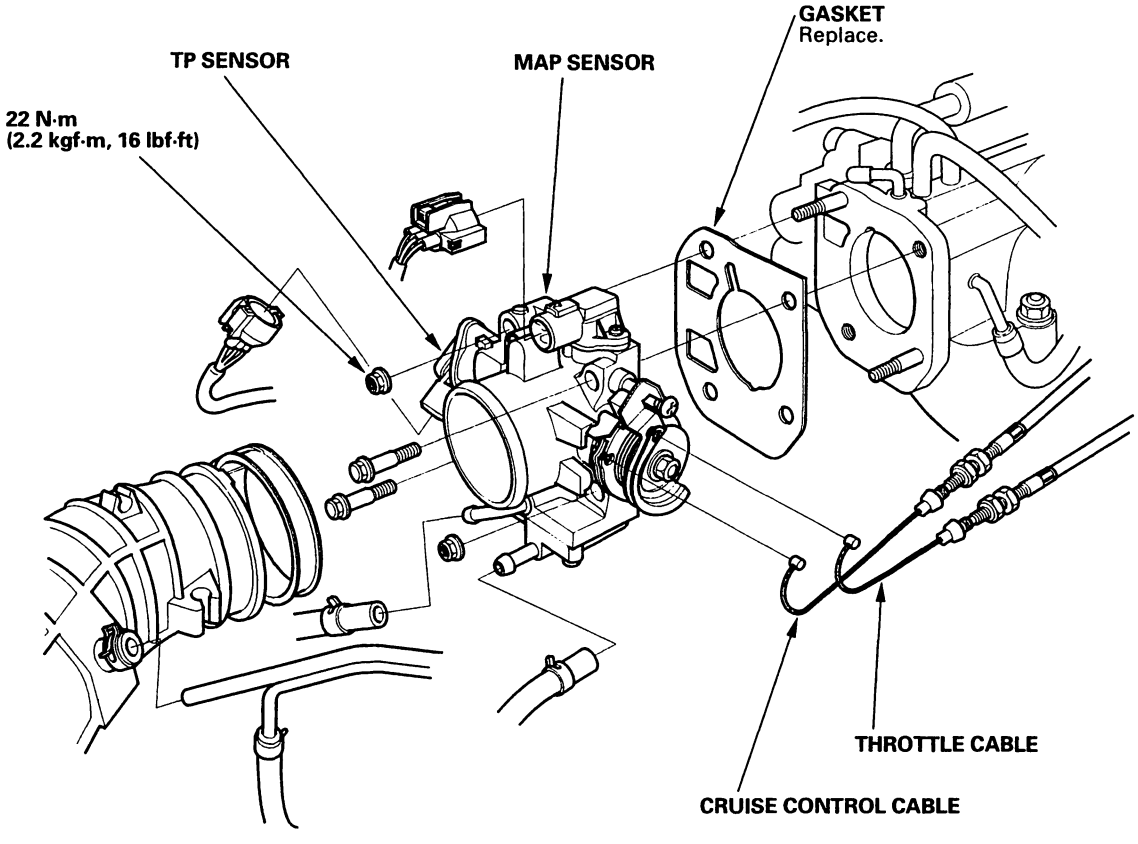

Throttle Body Disassembly/Reassembly

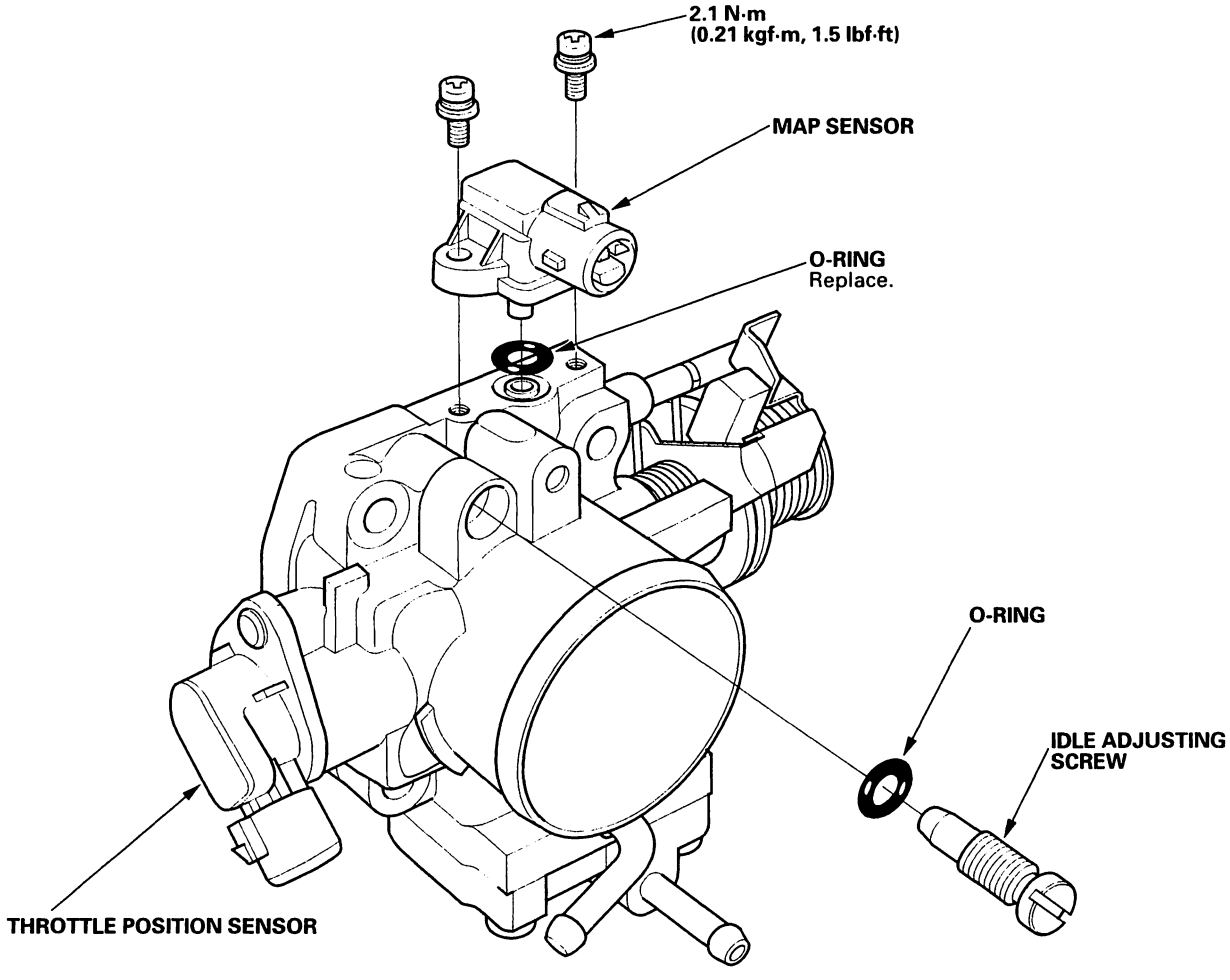

BACK

DTC Troubleshooting

DTC P0420: Catalyst System Efficiency Below Threshold

NOTE: If some of the DTCs listed below are stored at the same time as DTC P0420, troubleshoot those DTCs first, then recheck for DTC P0420.

P0137, P0138: Secondary HO2S (Sensor 2)
P0141: Secondary HO2S (Sensor 2) Heater

1. Reset the ECM/PCM (see page 11-4).

2. Start the engine. Hold the engine at 3,000 rpm with no load (in Park or neutral) until the radiator fan comes on.

3. Except F23A4 SULEV engine: Test-drive at 40–55 mph (64–88 km/h) for approx. 2 minutes. Then decelerate for at least 3 seconds with the throttle completely closed. Then reduce the vehicle speed to 35 mph (56 km/h), and try to hold it until the scan tool indicates FAIL or PASS as the TWC test result.

   F23A4 SULEV engine: Test-drive at 50–55 mph (80–88 km/h) for approx. 2 minutes. Then decelerate for at least 4 seconds with the throttle completely closed. Then accelerate to 55 mph (88 km/h), and try to hold it until the scan tool indicates FAIL or PASS as the TWC test result.

   Is the test result FAIL?

   YES—Check the three way catalytic converter (TWC). If necessary, replace the TWC.■

   NO—Intermittent failure, system is OK at this time.■

DTC Troubleshooting

DTC P0401: EGR Insufficient Flow

1. Reset the ECM/PCM (see page 11-4).

2. Test-drive under the following conditions. Then check for a Temporary DTC with the scan tool.

   - Without any electrical load.
   - Decelerate from 55 mph (88 km/h) for at least 5 seconds.

   Is Temporary DTC P0401 indicated?

   YES—Clean the intake manifold EGR port with carburetor cleaner. Clean the passage inside the EGR valve with carburetor cleaner, or replace the EGR valve.■

   NO—Intermittent failure, go to step 3.

3. Turn the ignition switch OFF.

4. Disconnect the EGR valve 6P connector.

5. Connect the battery positive terminal to EGR valve connector terminal No. 4.

EGR VALVE 6P CONNECTOR

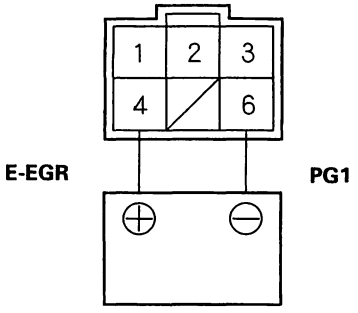

Terminal side of male terminals

6. Start the engine and let it idle, then connect the battery negative terminal to EGR valve 6P connector terminal No. 6.

   Did the engine stall or run rough?

   YES—Intermittent failure, system is OK at this time.■

   NO—Clean the intake manifold EGR port with carburetor cleaner. Clean the passage inside the EGR valve with carburetor cleaner, or replace the EGR valve.■

DTC P1491: EGR Valve Insufficient Lift

1. Reset the ECM/PCM (see page 11-4).

2. Start the engine. Hold the engine at 3,000 rpm with no load (in Park or neutral) until the radiator fan comes on.

3. Check for a Temporary DTC with the scan tool.

4. Test-drive the vehicle for approx. 10 minutes. Try to keep the engine speed in the 1,700—2,500 rpm range.

   Is Temporary DTC P1491 indicated?

   YES—Go to step 5.

   NO—Intermittent failure, system is OK at this time. Check for poor connections or loose wires at the EGR valve and the ECM/PCM.■

5. Turn the ignition switch OFF.

6. Disconnect the EGR valve 6P connector.

7. Start the engine and let it idle.

8. Measure voltage between EGR valve 6P connector terminals No. 4 and No. 6.

EGR VALVE 6P CONNECTOR

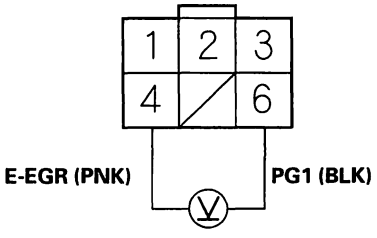

Wire side of female terminals

Is there battery voltage?

YES—Substitute a known-good ECM/PCM and recheck (see page 11-5). If the symptom/indication goes away, replace the original ECM/PCM.■

NO—Go to step 9.

BACK

9. Turn the ignition switch OFF.

10. Turn the ignition switch ON (II).

11. Measure voltage between EGR valve 6P connector terminals No. 2 and No. 3.

EGR VALVE 6P CONNECTOR

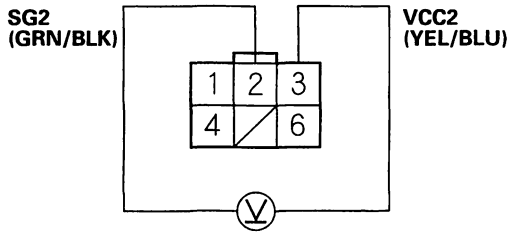

Wire side of female terminals

Is there approx. 5 V?

YES – Go to step 13.

NO – Go to step 12.

12. Measure voltage between ECM/PCM connector terminals C18 and C28.

ECM/PCM CONNECTOR C (31P)

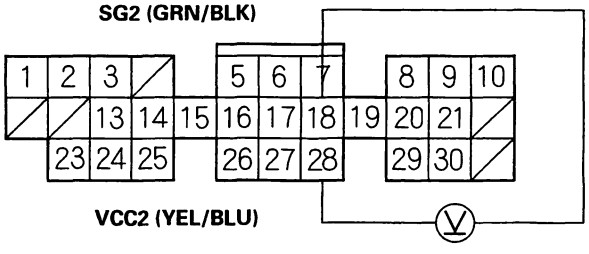

Wire side of female terminals

Is there approx. 5 V?

YES – Repair open in the wire between the EGR valve and the ECM/PCM (C18, C28). ■

NO – Substitute a known-good ECM/PCM and recheck (see page 11-5). If the symptom/indication goes away, replace the original ECM/PCM. ■

13. Turn the ignition switch OFF.

14. At the sensor side, measure resistance between EGR valve 6P connector terminals No. 1 and No. 2.

EGR VALVE 6P CONNECTOR

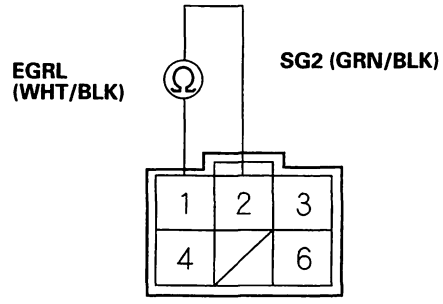

Terminal side of male terminals

Is the resistance 100 kΩ or more?

YES – Replace the EGR valve. ■

NO – Go to step 15.

15. Measure resistance between EGR valve 6P connector terminals No. 1 and No. 3.

EGR VALVE 6P CONNECTOR

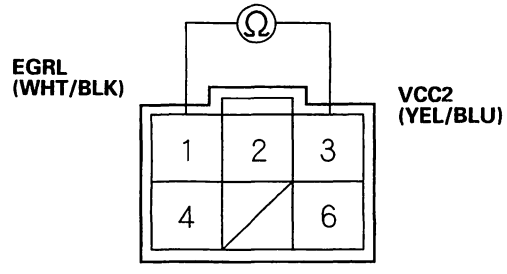

Terminal side of male terminals

Is there 100 kΩ or more?

YES – Replace the EGR valve. ■

NO – Go to step 16.

16. Reconnect the EGR valve connector.

17. Turn the ignition switch ON (II).

(cont'd)

DTC Troubleshooting (cont'd)

18. Measure voltage between ECM/PCM connector terminals C6 and C18.

ECM/PCM CONNECTOR C (31P)

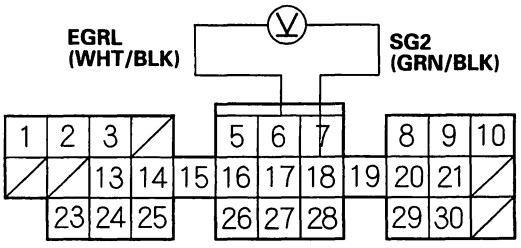

Wire side of female terminals

Is there approx. 1.2 V?

YES – Go to step 19.

NO – Repair short in the wire between the EGR valve and the PCM (C8). ■

19. Turn the ignition switch OFF.

20. Connect EGR valve 6P connector terminal No. 1 to body ground with a jumper wire.

EGR VALVE 6P CONNECTOR

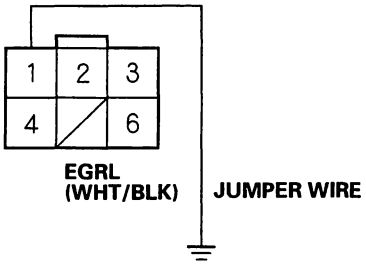

Wire side of female terminals

21. Check for continuity between ECM/PCM connector terminal C6 and body ground.

ECM/PCM CONNECTOR C (31P)

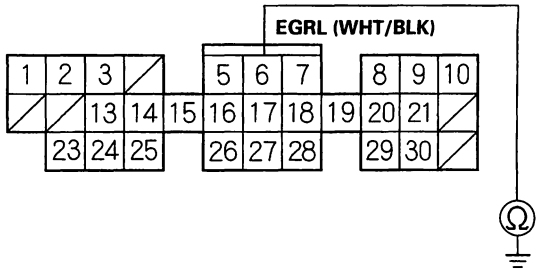

Wire side of female terminals

Is there continuity?

YES – Go to step 22.

NO – Repair open in the wire between the EGR valve and the ECM/PCM (C6). ■

22. Disconnect the EGR valve 6P connector.

23. Connect the battery positive terminal to EGR valve 6P connector terminal No. 4 with a jumper wire.

EGR VALVE 6P CONNECTOR

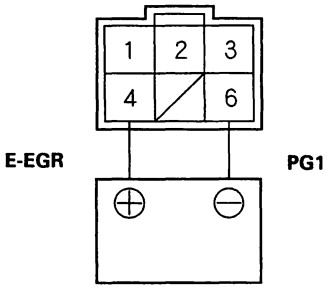

Terminal side of male terminals

24. Start the engine and let it idle, then connect the battery negative terminal to EGR valve 6P connector terminal No. 6 with a jumper wire.

Does the engine stall or run rough?

YES – Go to step 25.

NO – Replace the EGR valve. ■

25. Turn the ignition switch OFF.

26. Disconnect ECM/PCM connector B (25P).

BACK

27. Turn the ignition switch OFF.

28. Connect EGR valve 6P connector terminal No. 4 to body ground with a jumper wire.

EGR VALVE 6P CONNECTOR

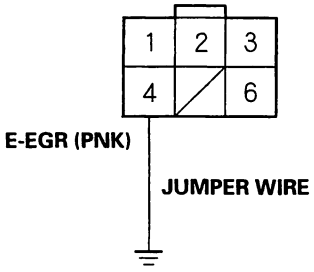

Wire side of female terminals

29. Check for continuity between ECM/PCM connector terminal B7 and body ground.

ECM/PCM CONNECTOR B (25P)

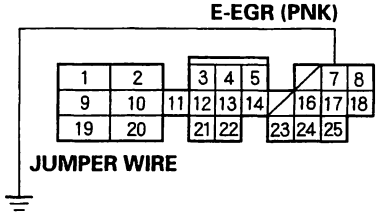

Wire side of female terminals

Is there continuity?

YES—Go to step 30.

NO—Repair open in the wire between the EGR valve and the ECM/PCM (B7).■

30. Check for continuity between ECM/PCM connector terminal B7 and body ground.

ECM/PCM CONNECTOR B (25P)

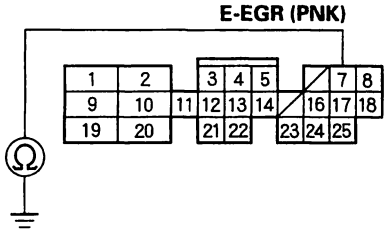

Wire side of female terminals

Is there continuity?

YES—Repair short in the wire between the EGR valve and the ECM/PCM (B7).■

NO—Go to step 31.

31. Check for continuity between EGR valve 6P connector terminal No. 6 and body ground.

EGR VALVE 6P CONNECTOR

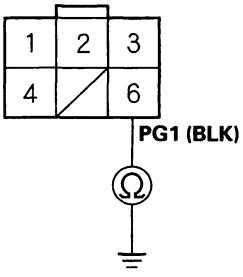

Wire side of female terminals

Is there continuity?

YES—Substitute a known-good ECM/PCM and recheck (see page 11-5). If the symptom/indication goes away, replace the original ECM/PCM.■

NO—Repair open in the wire between the EGR valve and G101.■

DTC Troubleshooting (cont'd)

DTC P1498: EGR Valve Position Sensor Circuit High Voltage

1. Reset the ECM/PCM (see page 11-4).
2. Start the engine.

   Is DTC P1498 indicated?

   YES—Go to step 3.

   NO—Intermittent failure, system is OK at this time. Check for poor connections or loose wires at the EGR valve and the ECM/PCM.■

3. Turn the ignition switch OFF.
4. Disconnect the EGR valve 6P connector.
5. Turn the ignition switch ON (II).
6. Measure voltage between EGR valve 6P connector terminals No. 2 and No. 3.

EGR VALVE 6P CONNECTOR

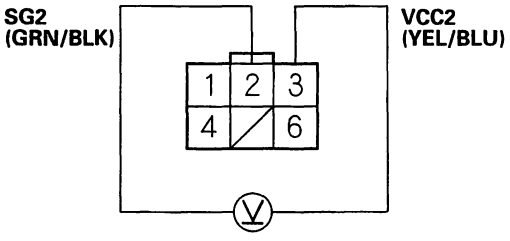

Wire side of female terminals

Is there approx. 5 V?

YES—Replace the EGR valve.■

NO—Go to step 7.

7. Measure voltage between ECM/PCM connector terminals C18 and C28.

ECM/PCM CONNECTOR C (31P)

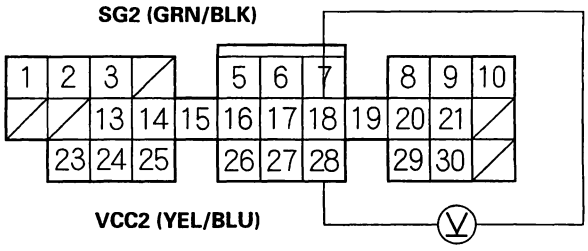

Wire side of female terminals

Is there approx. 5 V?

YES—Repair open in the wire between the EGR valve and the ECM/PCM (C18).■

NO—Substitute a known-good ECM/PCM and recheck (see page 11-5). If the symptom/indication goes away, replace the original ECM/PCM.■

BACK

PCV Valve Inspection and Test

1. Check the PCV valve (A), hoses (B), and connections for leaks or restrictions.

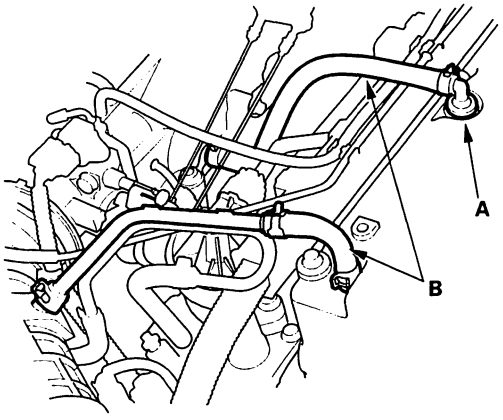

2. At idle, make sure there is a clicking sound from the PCV valve when the hose between the PCV valve and intake manifold is lightly pinched (A) with your fingers or pliers.
   If there is no clicking sound, check the PCV valve grommet for cracks or damage. If the grommet is OK, replace the PCV valve and recheck.

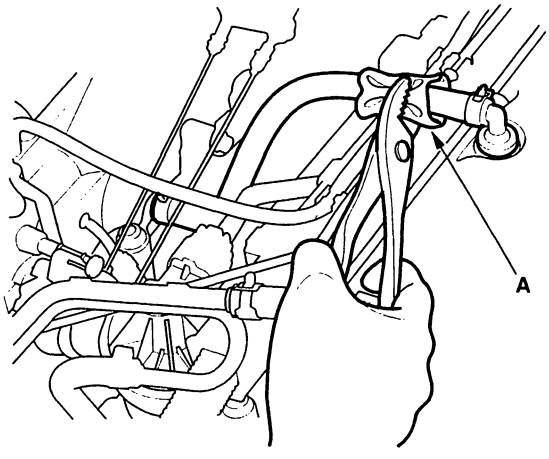

Component Location Index

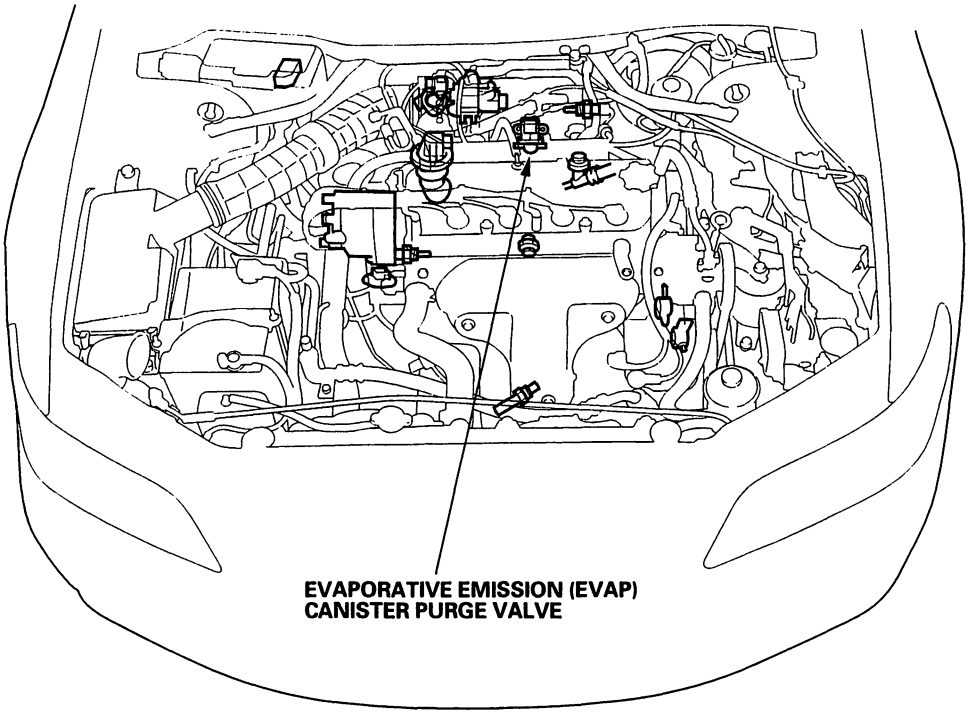

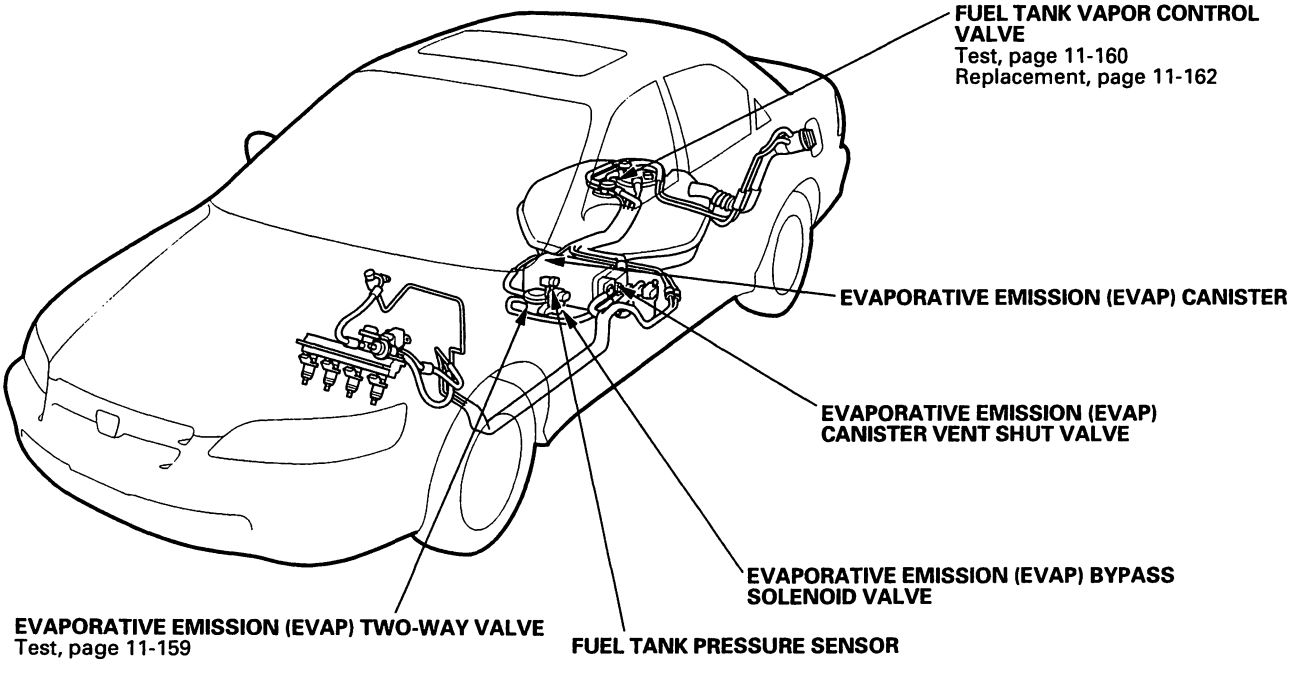

BACK

DTC P0451: FTP Sensor Range/Performance Problem

Special Tools Required
Vacuum Pump/Gauge, 0 – 30 in. Hg A973X-041-XXXXX

1. Remove the fuel fill cap.
2. Turn the ignition switch ON (II).
3. Monitor FTP sensor voltage with the Honda PGM Tester, or measure voltage between ECM/PCM connector terminals A29 and C18.

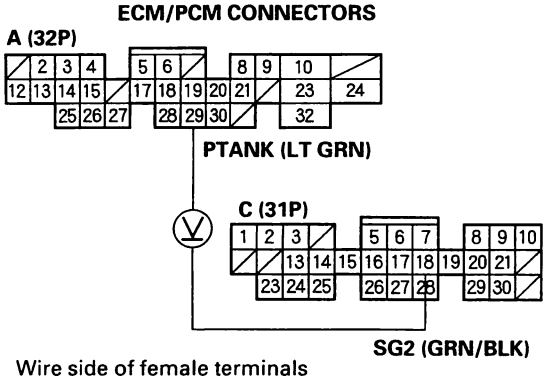

Is there approx. 2.5 V?

YES – Go to step 4.

NO – Replace the FTP sensor. ■

4. Turn the ignition switch OFF.
5. Open the fuel vent assembly cover (A) in front of the EVAP canister.

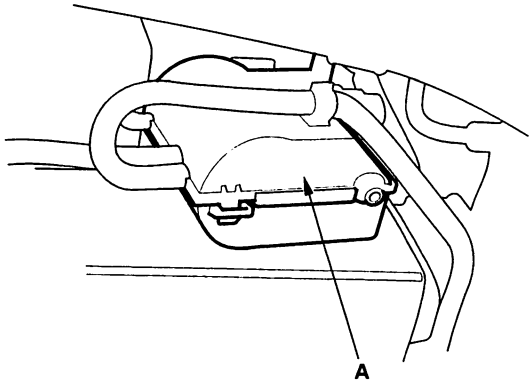

6. Disconnect the hose between the EVAP two way valve and the FTP sensor at the EVAP two way valve end.
7. Connect a vacuum pump to the open end of that hose.

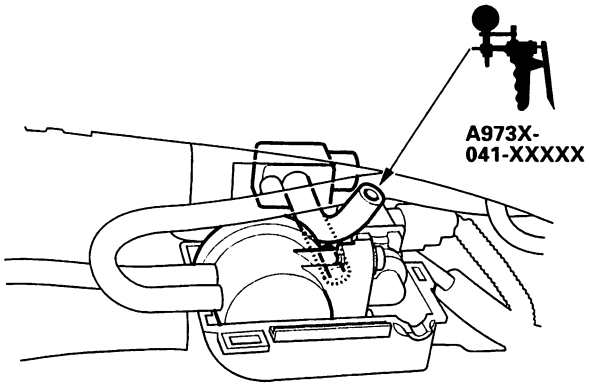

8. Turn the ignition switch ON (II).
9. Monitor FTP sensor voltage with the Honda PGM Tester, or measure voltage between PCM connector terminals A29 and C18, and carefully squeeze the vacuum pump slowly.

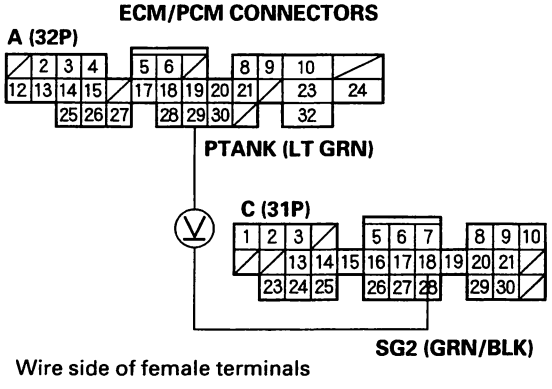

10. The voltage should smoothly drop from approx. 2.5 V down to approx. 1.5 V. STOP applying vacuum when the voltage drops to approx. 1.5 V or damage to the FTP sensor may occur.

Does the voltage drop to approx. 1.5 V and hold?

YES – Check for misrouted, leaking, or broken FTP sensor vacuum lines. If the vacuum lines are OK, substitute a known-good ECM/PCM and recheck (see page 11-5). If the symptom/indication goes away, replace the original ECM/PCM. ■

NO – Replace the FTP sensor. ■

DTC Troubleshooting (cont'd)

DTC P0452: FTP Sensor Circuit Low Voltage

1. Check the vacuum lines of the FTP sensor for misrouting, leakage, breakage, or clogging.

   Are the vacuum lines OK?

   YES—Go to step 2.

   NO—Repair or replace vacuum lines as necessary.■

2. Reset the ECM/PCM (see page 11-4).

3. Remove the fuel fill cap.

4. Turn the ignition switch ON (II).

5. Monitor FTP sensor voltage with the Honda PGM Tester, or measure voltage between body ground and ECM/PCM connector terminal A29.

ECM/PCM CONNECTOR A (32P)

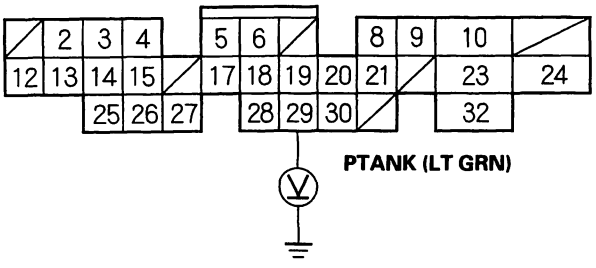

Wire side of female terminals

Is there approx. 2.5 V?

YES—Intermittent failure, system is OK at this time. Check for poor connections or loose wires at the FTP sensor and the ECM/PCM.■

NO—Go to step 6.

6. Turn the ignition switch OFF.

7. Reinstall the fuel fill cap.

8. Disconnect the FTP sensor 3P connector.

9. Turn the ignition switch ON (II).

10. Measure voltage between FTP sensor 3P connector terminals No. 1 and No. 2.

FUEL TANK PRESSURE SENSOR 3P CONNECTOR

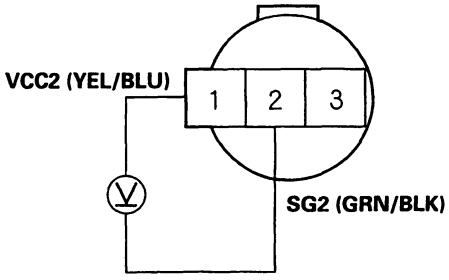

Wire side of female terminals

Is there approx. 5 V?

YES—Go to step 11.

NO—Repair open in the wire between the FTP sensor and the ECM/PCM (C28).■

BACK

11. Measure voltage between FTP sensor 3P connector terminals No. 2 and No. 3.

FTP SENSOR 3P CONNECTOR

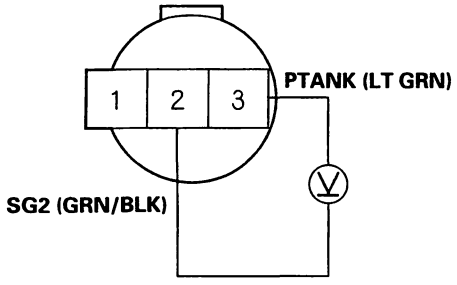

Wire side of female terminals

Is there approx. 5 V?

YES—Replace the FTP sensor.■

NO—Go to step 12.

12. Turn the ignition switch OFF.

13. Disconnect ECM/PCM connector A (32P).

14. Check for continuity between FTP sensor 3P connector terminal No. 3 and body ground.

FTP SENSOR 3P CONNECTOR

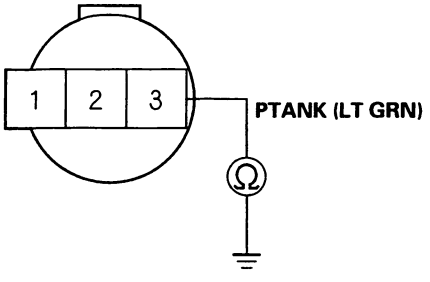

Wire side of female terminals

Is there continuity?

YES—Repair short in the wire between the FTP sensor and the ECM/PCM (A29).■

NO—Substitute a known-good ECM/PCM and recheck (see page 11-5). If the symptom/indication goes away, replace the original ECM/PCM.■

DTC P0453: FTP Sensor Circuit High Voltage

1. Check the vacuum lines of the FTP sensor for misrouting, leakage, breakage, or clogging.

   Are the vacuum lines OK?

   YES—Go to step 2.

   NO—Repair or replace vacuum lines as necessary.■

2. Reset the ECM/PCM (see page 11-4).

3. Remove the fuel fill cap.

4. Turn the ignition switch ON (II).

5. Monitor FTP sensor voltage with the Honda PGM Tester, or measure voltage between body ground and ECM/PCM connector terminal A29.

ECM/PCM CONNECTOR A (32P)

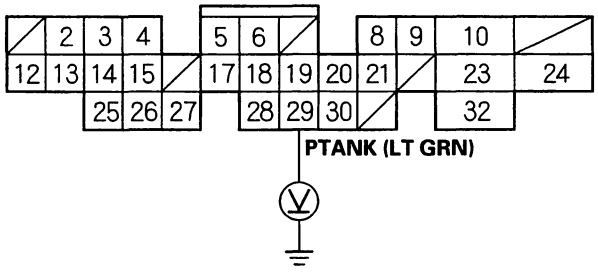

Wire side of female terminals

Is there approx. 2.5 V?

YES—Intermittent failure, system is OK at this time. Check for poor connections or loose wires at the FTP sensor and the ECM/PCM.■

NO—Go to step 6.

(cont'd)

DTC Troubleshooting (cont'd)

6. Turn the ignition switch OFF.
7. Reinstall the fuel fill cap.
8. Disconnect the FTP sensor 3P connector.
9. Turn the ignition switch ON (II).
10. Measure voltage between FTP sensor 3P connector terminals No. 1 and No. 2.

FTP SENSOR 3P CONNECTOR

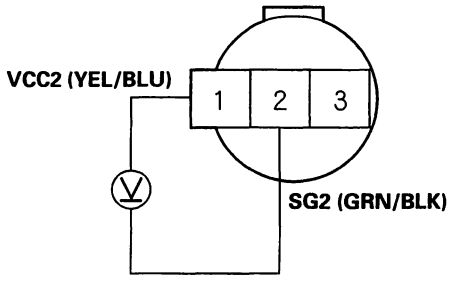

Wire side of female terminals

Is there approx. 5 V?

YES—Go to step 11.

NO—Repair open in the wire between the FTP sensor and the ECM/PCM (C28).■

11. Measure voltage between FTP sensor 3P connector terminals No. 2 and No. 3.

FTP SENSOR 3P CONNECTOR

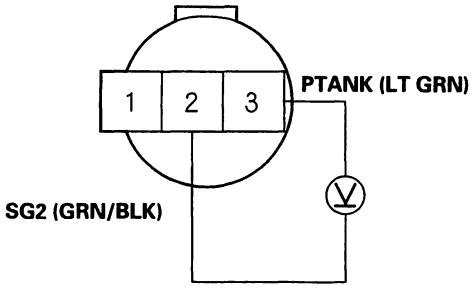

Wire side of female terminals

Is there approx. 5 V?

YES—Replace the FTP sensor.■

NO—Go to step 12.

12. Measure voltage between ECM/PCM connector terminals A29 and C18.

ECM/PCM CONNECTORS

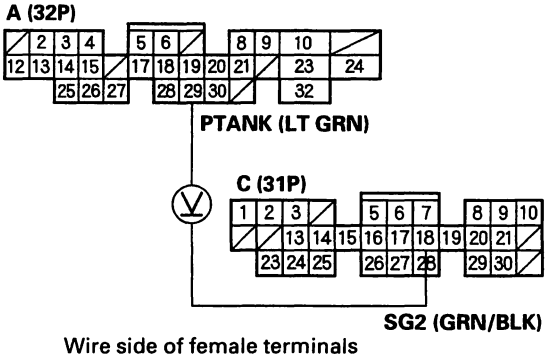

Wire side of female terminals

Is there approx. 5 V?

YES—Repair open in the wire between the FTP sensor and ECM/PCM (A29).■

NO—Substitute a known-good ECM/PCM and recheck (see page 11-5). If the system/indication goes away, replace the original ECM/PCM.

BACK

DTC P1456: EVAP Control System Leakage (Fuel Tank System)

NOTICE

The fuel system is designed to allow specified maximum vacuum and pressure conditions. Do not deviate from the vacuum and pressure tests as indicated in these procedures. Excessive pressure/vacuum would damage the EVAP components or cause eventual fuel tank failure

Special Tools Required

Vacuum Pump/Gauge, 0 – 30 in. Hg A973X-041-XXXXX

This is a two-trip code; once cleared, it cannot be reproduced in one trip. Also, certain specific driving and ambient conditions must occur before the ECM/PCM will complete the system checks. Additional test drives may still not meet the specific conditions needed to reproduce the code.

Follow these troubleshooting procedures carefully to ensure the integrity of the system and to confirm the cause of the problem or code.

NOTE: Fresh fuel has a higher volatility that will create greater pressure/vacuum. The optimum condition for testing is fresh fuel and less than a full tank of fuel. If possible, to assist in leak detection, add one gallon of fresh fuel to the tank (as long as it will not fill the tank), just before starting these procedures.

Fuel fill cap check

1. Check the fuel fill cap. It must be a gray or black OEM cap and be tightened at least 3 "clicks" to properly seal the system.

   Is the correct fuel fill cap installed and properly tightened?

   YES – Go to step 2.

   NO – Replace or tighten the cap. ■

2. Check the fuel fill cap seal.

   Is the fuel fill cap seal missing or damaged?

   YES – Replace the fuel fill cap (gray or black colored cap). ■

   NO – The fuel fill cap is OK. Go to step 3.

EVAP Bypass Solenoid Valve Test

3. Disconnect the vacuum hose from the EVAP two-way valve (A), and connect a vacuum pump to the hose.

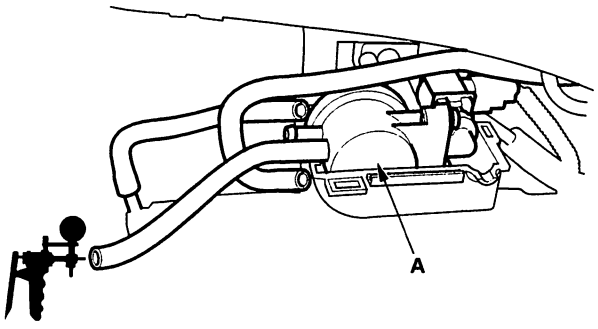

A973X-041-XXXXX

4. With the Honda PGM Tester in the EVAP test mode, turn on the bypass solenoid, or connect ECM connector terminal A3 to body ground with a jumper wire.

ECM/PCM CONNECTOR A (32P)

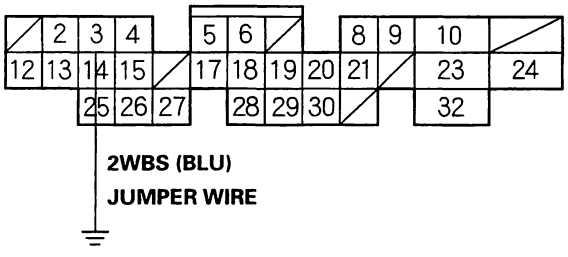

Wire side of female terminals

(cont'd)

DTC Troubleshooting (cont'd)

5. Turn the ignition switch ON (II).

6. Apply vacuum to the hose.

   Does the valve hold vacuum?

   YES—Go to step 7.

   NO—The EVAP bypass solenoid valve/EVAP two-way valve is OK. Go to step 12.

7. Turn the ignition switch OFF.

8. Disconnect the EVAP bypass solenoid valve 2P connector.

9. Check for continuity between EVAP bypass solenoid valve 2P connector terminal No. 2 and body ground.

EVAP BYPASS SOLENOID VALVE 2P CONNECTOR

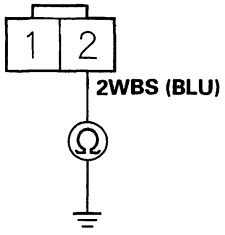

Wire side of female terminals

Is there continuity?

YES—Go to step 10.

NO—Repair open in wire between the EVAP bypass solenoid valve and ECM/PCM (A3).■

10. Turn the ignition switch ON (II)

11. Measure voltage between EVAP bypass solenoid valve 2P connector terminal No. 1 and body ground.

EVAP BYPASS SOLENOID VALVE 2P CONNECTOR

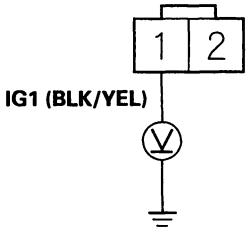

Wire side of female terminals

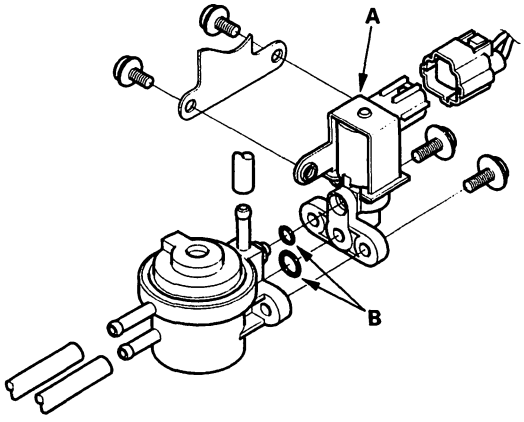

Is there battery voltage?

YES—Replace the EVAP bypass solenoid valve (A) and the O-rings (B).■

NO—Repair open in the wire between the EVAP bypass solenoid valve and No. 6 ECU (ECM/PCM) CRUISE CONTROL (15A) fuse.■

BACK

12. Plug the upper port (A) of the EVAP two-way valve.

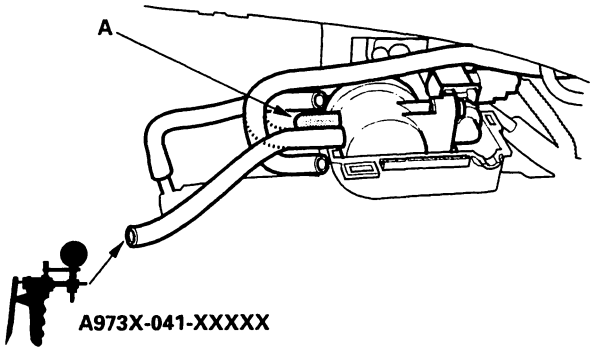

13. While monitoring the FTP sensor voltage with the Honda PGM Tester, or measuring the voltage between PCM connector terminals A29 and C18, slowly pump vacuum until the voltage drops to approximately 1.5 volts.

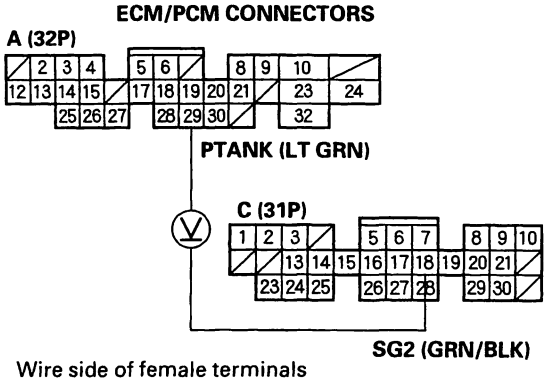

Does the voltage drop to 1.5 V and hold for at least 20 seconds?

YES—The EVAP bypass solenoid valve/EVAP two-way valve is OK. Go to step 22.

NO—Repair leakage from the EVAP bypass solenoid valve, EVAP two-way valve, FTP sensor, or O-rings. ■

Vacuum Hoses and Connections Test

14. Perform the fuel tank vapor control valve test (see page 11-160).

Is the fuel tank vapor control valve normal?

YES—Go to step 15.

NO—Replace the fuel tank vapor control valve. ■

15. Tighten the fuel cap 3 "clicks", then monitor fuel tank pressure readings with the Honda PGM Tester.

16. Start the engine. Let the engine idle for 5 minutes.

17. Check the FTP sensor reading.

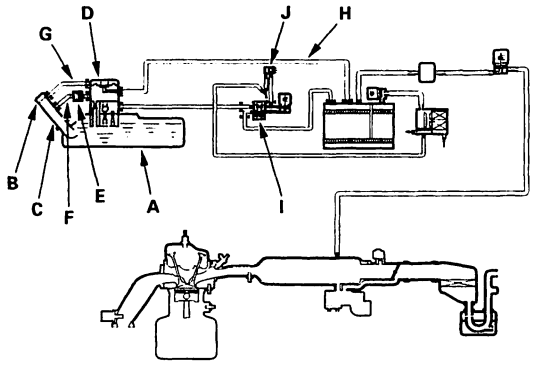

Is the reading above 0.53 kPa (0.16 in. Hg 4 mm Hg) pressure, or approx 3V ?

YES—Substitute a known-good ECM/PCM and retest (see page 11-5). If the symptom/indication goes away, replace the original ECM/PCM. ■

NO—Check the following parts for leaks:

- Fuel tank (A)
- Fuel fill cap (B)
- Fuel fill pipe (C)
- Fuel tank vapor control valve (D)
- Fuel tank vapor recirculation valve (E)
- Fuel tank vapor recirculation tube (F)
- Fuel tank vapor signal tube (G)
- Fuel tank vapor vent tube (H)
- EVAP two-way valve (I)
- FTP sensor (J)

– Repair or replace any leaking parts. ■

DTC Troubleshooting (cont'd)

DTC P1457: EVAP Control System Leakage (EVAP Canister System)

NOTICE

The fuel system is designed to allow specified maximum vacuum and pressure conditions. Do not deviate from the vacuum and pressure tests as indicated in these procedures. Excessive pressure/vacuum would damage the EVAP components or cause eventual fuel tank system failure.

Special Tools Required

Vacuum pump/gauge, 0 - 30 in.Hg A973X-041-XXXXX

This is a two-trip code; Once cleared, it cannot be reproduced in one trip. Also certain specific driving and ambient conditions must occur before the ECM/PCM will complete the system checks. Additional test drives may still not meet the specific conditions needed to reproduce the code.

Follow these troubleshooting procedures carefully to ensure the integrity of the system and to comfirm the cause of the problem or code.

NOTE: Fresh fuel has a higher volatility that will create greater pressure/vacuum. The optimum condition for testing is fresh fuel, and there must be less than a full tank of fuel. If possible, to assist in leak detection, add one gallon of fresh fuel to the tank (as long as it will not fill the tank), just before starting these procedures.

EVAP Canister Purge Valve Test

1. Disconnect the vacuum hose from the EVAP canister purge valve (A), and connect the vacuum pump to the hose.

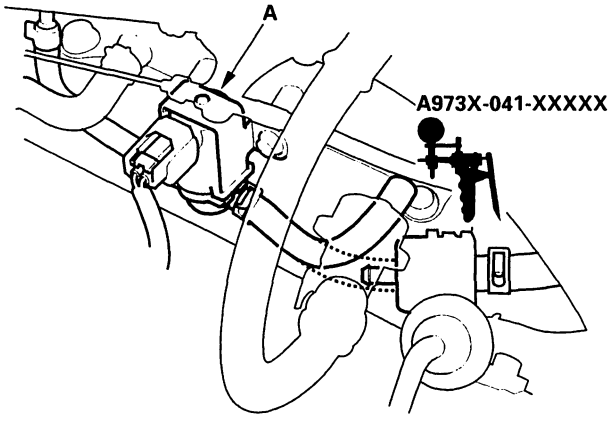

2. Turn the EVAP canister purge valve on with the Honda PGM Tester, then connect ECM/PCM connector terminal A6 to body ground with a jumper wire.

ECM/PCM CONNECTOR A (32P)

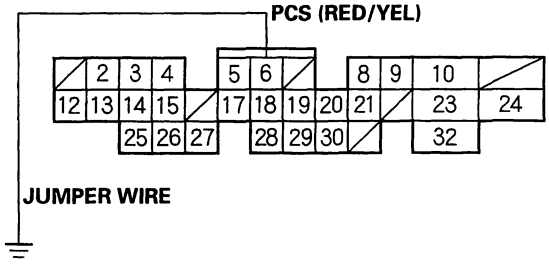

Wire side of female terminals

3. Turn the ignition switch ON (II).

BACK

4. Apply vacuum to the hose.

   Does the valve hold vacuum?

   YES—Go to step 5.

   NO—The EVAP canister purge valve is OK. Go to step 10.

5. Turn the ignition switch OFF.

6. Disconnect the EVAP canister purge valve 2P connector.

7. Check for continuity between EVAP canister purge valve 2P connector terminal No. 2 and body ground.

EVAP CANISTER PURGE VALVE 2P CONNECTOR

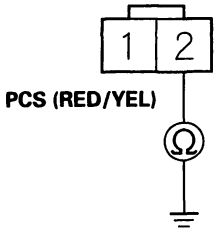

Wire side of female terminals

   Is there continuity?

   YES—Go to step 8.

   NO—Repair open in the wire between the EVAP canister purge valve and ECM/PCM (A6).■

8. Turn the ignition switch ON (II).

9. Measure voltage between EVAP canister purge valve 2P connector terminal No. 1 and body ground.

EVAP CANISTER PURGE VALVE 2P CONNECTOR

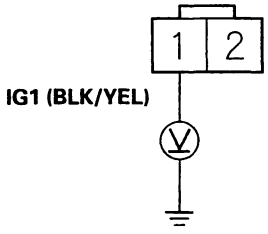

Wire side of female terminals

   Is there battery voltage?

   YES—Replace the EVAP canister purge valve.■

   NO—Repair open in the wire between the EVAP canister purge valve and No. 6 ECU (ECM/PCM) CRUISE CONTROL (15A) fuse.■

(cont'd)

DTC Troubleshooting (cont'd)

EVAP Bypass Solenoid Valve Test

10. Disconnect the vacuum hose from the EVAP two-way valve (A), and connect a vacuum pump to the hose.

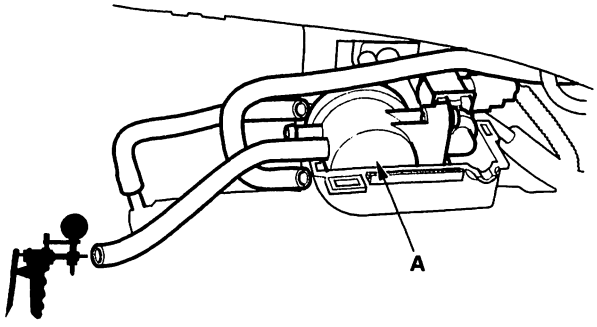

A973X-041-XXXXX

11. Turn the ignition switch ON (II).

12. Apply vacuum to the hose.

    Does the valve hold vacuum?

    YES—The EVAP bypass solenoid valve/EVAP two-way valve is OK. Go to step 18.

    NO—Go to step 13.

13. Turn the ignition switch OFF.

14. Disconnect the EVAP bypass solenoid valve 2P connector.

15. Check for continuity between EVAP bypass solenoid valve 2P connector terminal No. 2 and body ground.

EVAP BYPASS SOLENOID VALVE 2P CONNECTOR

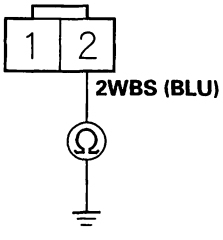

Wire side of female terminals

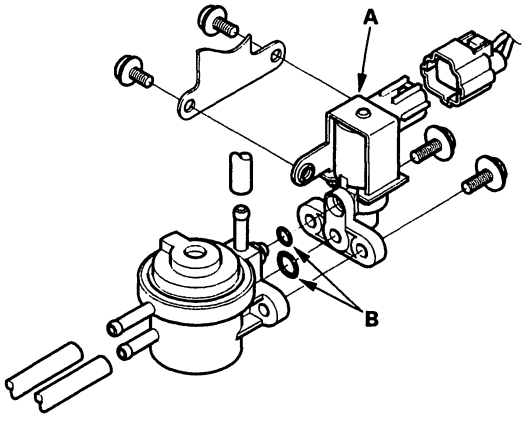

Is there continuity?

YES—Go to step 16.

NO—Replace the EVAP bypass solenoid valve (A) and O-rings (B). ■

16. Disconnect ECM/PCM connector A (32P).

17. Check for continuity between EVAP bypass solenoid valve 2P connector terminal No. 2 and body ground.

EVAP BYPASS SOLENOID VALVE 2P CONNECTOR

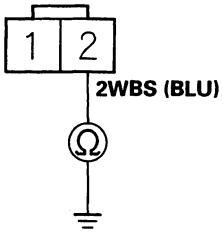

Wire side of female terminals

Is there continuity?

YES—Repair short in the wire between the EVAP bypass solenoid valve and ECM/PCM (A3). ■

NO—Substitute a known-good ECM/PCM and recheck (see page 11-5). If the symptom/indication goes away, replace the original ECM/PCM. ■

BACK

EVAP Canister Vent Shut Valve Test

18. Disconnect the vacuum hose from the EVAP canister filter (A), and connect a vacuum pump to the hose.

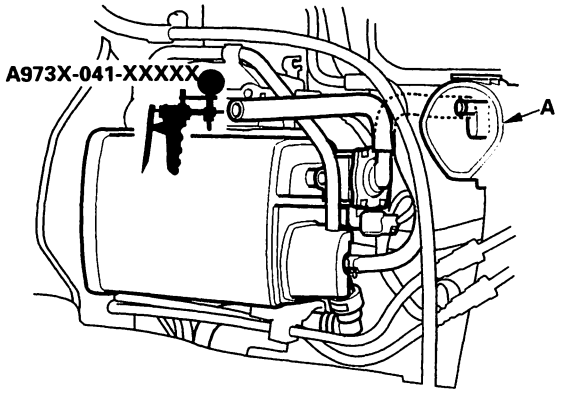

19. With the Honda PGM Tester in the EVAP test mode, turn on the bypass solenoid, or connect ECM/PCM connector terminal A4 to body ground with a jumper wire.

ECM/PCM CONNECTOR A (32P)

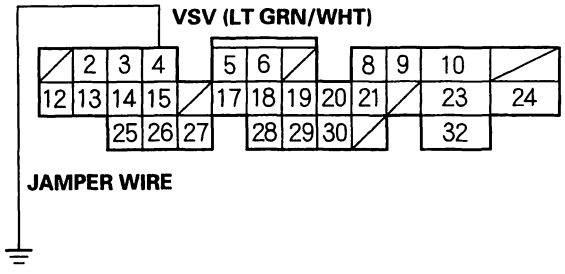

Wire side of female terminals

20. Turn the ignition switch ON (II)

21. Apply vacuum to the hose.

Does the valve hold vacuum?

YES—The EVAP canister vent shut valve is OK. Go to step 27.

NO—Go to step 22.

22. Turn the ignition switch OFF.

23. Disconnect the EVAP canister vent shut valve 2P connector.

24. Check for continuity between EVAP canister vent shut valve 2P connector terminal No. 2 and body ground.

EVAP CANISTER VENT SHUT VALVE 2P CONNECTOR

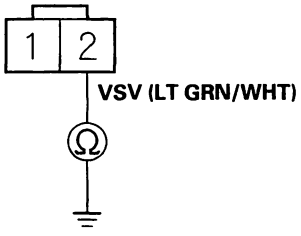

Wire side of female terminals

Is there continuity?

YES—Go to step 25.

NO—Repair open in the wire between the EVAP canister vent shut valve and ECM/PCM (A4). ■

(cont'd)

DTC Troubleshooting (cont'd)

25. Turn the ignition switch ON (II).

26. Measure voltage between EVAP canister vent shut valve 2P connector terminal No. 1 and body ground.

EVAP CANISTER VENT SHUT VALVE 2P CONNECTOR

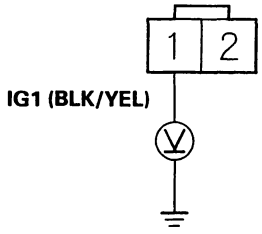

Wire side of female terminals

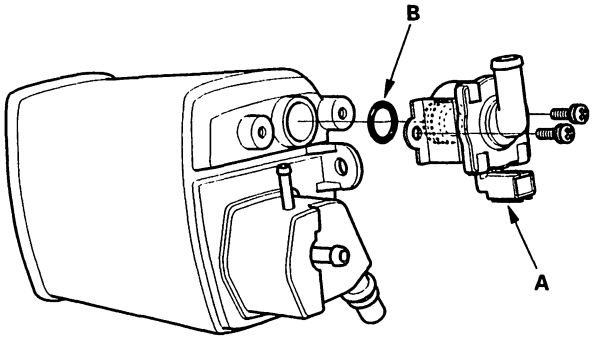

Is there battery voltage?

YES—Replace the EVAP canister vent shut valve (A) and O-ring (B).■

NO—Repair open in the wire between the EVAP canister vent shut valve and No. 6 ECU (ECM/PCM) CRUISE CONTROL (15A) fuse.■

Canister System Leak Test

27. Turn the ignition switch OFF.

28. Connect two three-way tee fittings (A) into the hose from the EVAP canister to the EVAP two-way valve. Connect the FTP sensor to one of the tee fittings and the vacuum pump to the other.

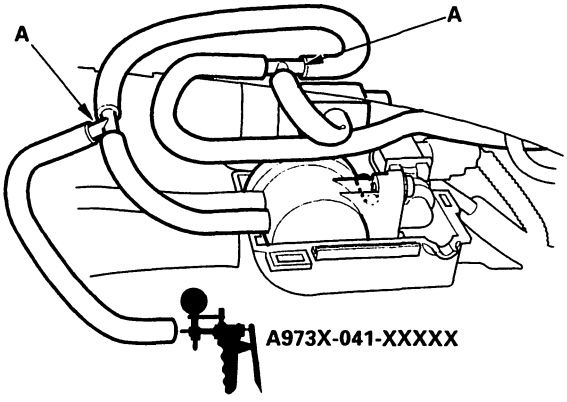

29. Remove the vent hose from the EVAP canister vent shut valve (A) and plug the port (B) to seal the fresh air vent for the EVAP canister.

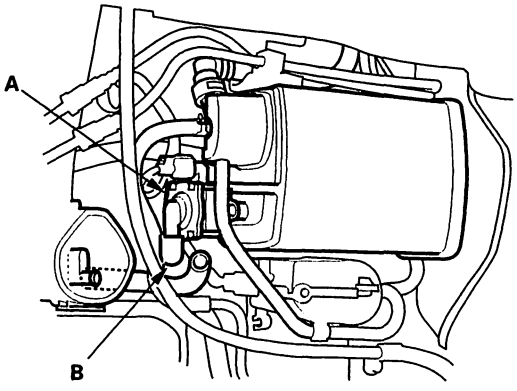

30. Turn the ignition switch ON (II).

BACK

31. While monitoring the Fuel Tank Pressure sensor voltage with the Honda PGM Tester, or measuring voltage between ECM/PCM connector terminals A 29 and C18, slowly pump the vacuum pump.

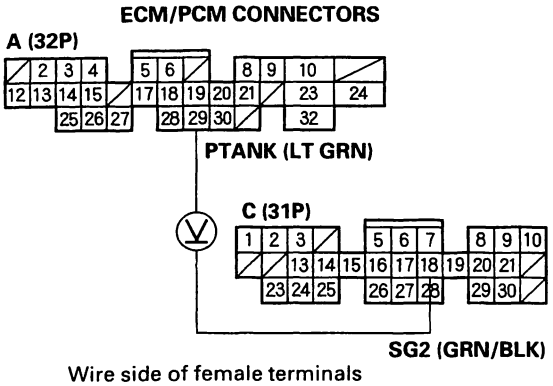

Wire side of female terminals

32. Continue to pump until the voltage drops to about 1.5 V. Make sure your vacuum pump has no leak.

33. Monitor the voltage for 20 seconds.

Does the voltage drop to about 1.5 V and hold for at least 20 seconds?

YES—Inspect the EVAP canister vent shut valve line and connections. ■

NO—Go to step 34.

34. Turn the ignition switch OFF.

35. Disconnect the quick-connect fitting (A) from the EVAP canister, and cap the canister port (B).

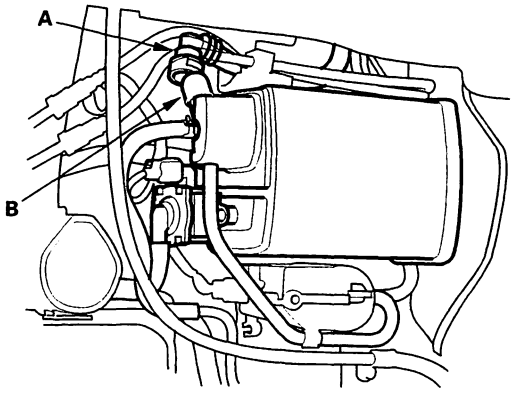

36. Turn the ignition switch ON (II).

37. While monitoring FTP sensor voltage with the Honda PGM Tester, or measuring voltage between ECM/PCM connector terminals A29 and C18, slowly pump the vacuum pump.

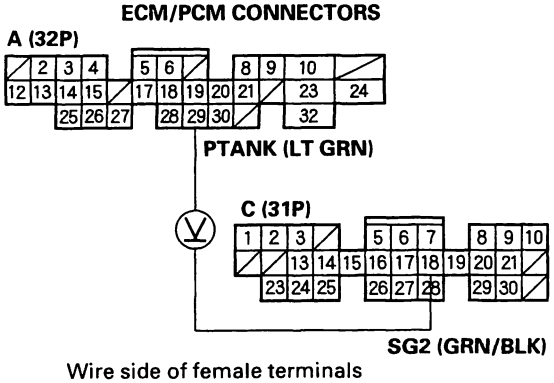

Wire side of female terminals

38. Continue to pump vacuum until the voltage drops to about 1.5 V.

39. Check the voltage for 20 seconds.

Does the voltage drop to about 1.5 V and hold for least 20 seconds?

YES—Inspect the fuel tank vapor line and connections for vacuum leaks. ■

NO—Go to step 40.

(cont'd)

DTC Troubleshooting (cont'd)

40. Turn the ignition switch OFF.

41. Disconnect the purge line hose (A) from the canister at the metal line and cap the canister port (B).

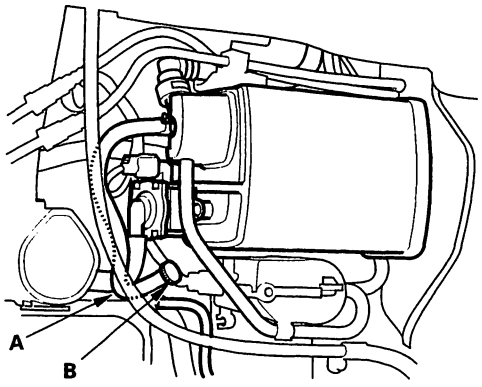

42. Turn the ignition switch ON (II).

43. While monitoring FTP sensor voltage with the Honda PGM Tester, or measuring voltage between ECM/PCM connector terminals A29 and C18, slowly pump the vacuum pump.

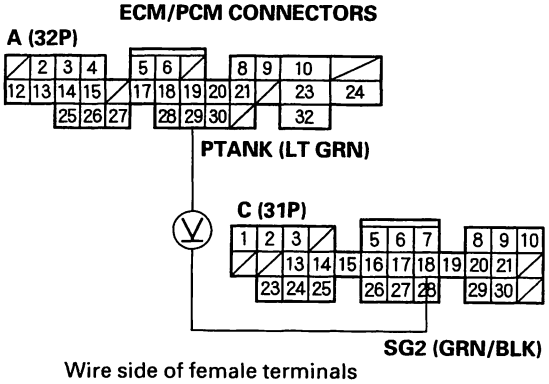

Wire side of female terminals

44. Continue to pump until the voltage drops to about 1.5 V. Make sure the engine coolant temperature is still above 95°F (35°C) and your vacuum pump has no leak.

45. Monitor the voltage for 20 seconds.

Does the voltage drop to about 1.5 V and hold for at least 20 seconds?

YES – Inspect the EVAP canister purge valve line and connections for vacuum leaks. If they are OK, do the EVAP two-way valve test, and fuel tank vapor control valve test (see page 11-160). ■

NO – Replace the EVAP canister. ■

BACK

EVAP Two Way Valve Test

Special Tools Required
- Vacuum pump/gauge, 0 – 30 in.Hg A973X-041-XXXXX
- Vacuum/pressure gauge, 0 – 4 in.Hg 07JAZ-001000B

1. Remove the fuel fill cap.

2. Disconnect the vapor line from the EVAP two-way valve (A), and connect the line to a T-fitting (B) from the vacuum gauge and the vacuum pump as shown.

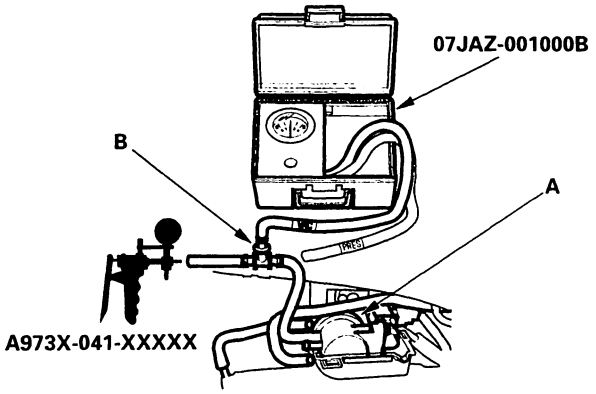

3. Apply vacuum slowly and continuously while watching the gauge. The vacuum should stabilize momentarily at 0.8 - 2.1 kPa (6 - 16 mmHg, 0.2 - 0.6 in.Hg). If the vacuum stabilizes (valve opens) below 0.8 kPa (6 mmHg, 0.2 in.Hg) or above 2.1 kPa (16 mmHg, 0.6 in.Hg), install a new valve and retest.

4. Move the vacuum pump hose from the vacuum fitting to the pressure fitting, and move the vacuum gauge hose from the vacuum side to the pressure side (A) as shown.

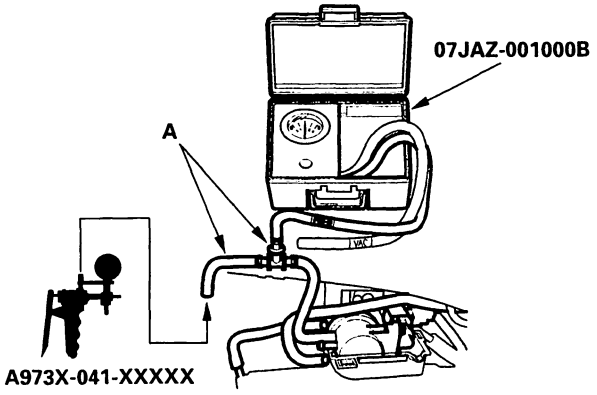

5. Slowly pressurize the vapor line while watching the gauge. The pressure should stabilize momentarily above 1.0 kPa (8 mmHg, 0.3 in.Hg).

   - If the pressure momentarily stabilizes (valve opens) above 1.0 kPa (8 mmHg, 0.3in.Hg), the valve is OK.
   - If the pressure stabilizes below 1.0 kPa (8 mmHg, 0.3 in.Hg), install a new valve and retest.

Fuel Tank Vapor Control Valve Test

Special Tools Required
Vacuum pump/gauge, 0—30 in.Hg A973X-041-XXXXX

Float Test

1. Make sure the fuel tank is less than half full.
2. Remove the fuel fill cap to relieve the fuel tank pressure, then reinstall the cap.
3. Remove the left rear inner fender. Disconnect the fuel tank vapor recirculation tube (A), and connect a vacuum pump to the vapor recirculation tube.

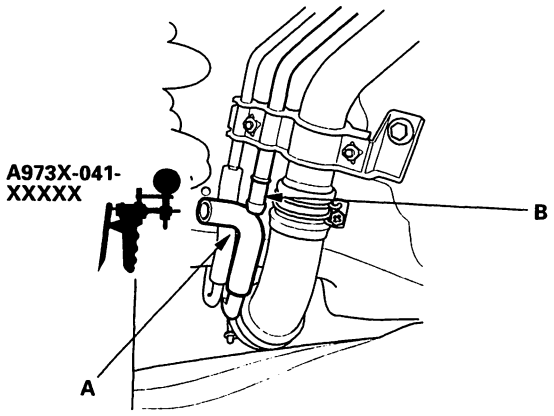

4. Plug the line (B).
5. Apply vacuum to the fuel tank vapor recirculation tube (A).
   - If the vacuum holds, replace the fuel tank vapor control valve (see page 11-162).
   - If the vacuum does not hold, the float is OK. Go to step 1 of the valve test.

Valve Test

1. Make sure the fuel tank is less than half full.
2. Remove the fuel fill cap.
3. Remove the left rear inner fender. Disconnect the fuel tank vapor signal tube (A).

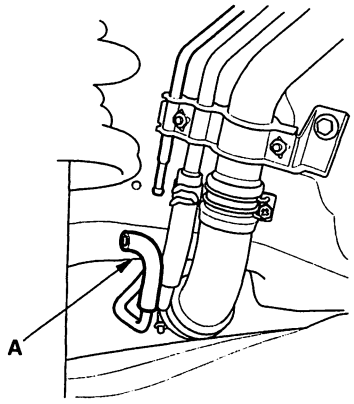

4. Disconnect the vacuum hose (A) from the EVAP canister (B), and then plug the ports with plugs (C).

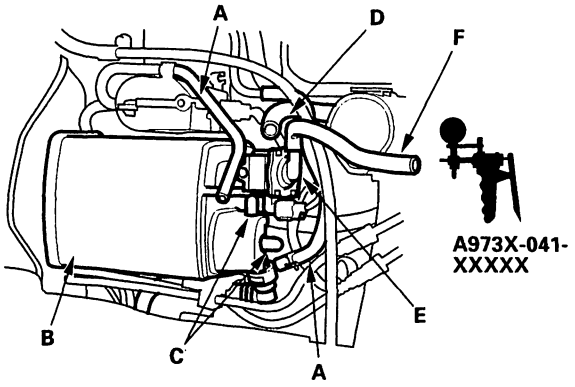

5. Disconnect the vacuum hose (D) from the EVAP canister vent shut valve (E), and connect a hose (F) and a vacuum pump to the EVAP canister vent shut valve.
6. Pump the vacuum pump 80 times.
   - If the vacuum holds, go to step 7.
   - If the vacuum does not hold, go to step 10.

BACK

7. Connect a second vacuum pump to the fuel tank vapor signal tube (A).

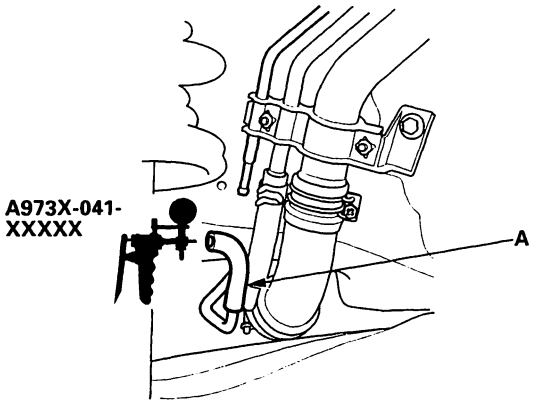

8. Apply vacuum to the fuel tank vapor signal tube, then check the vacuum on the pump in step 6.

   - If the vacuum holds, replace the fuel tank vapor control valve (see page 11-162).
   - If the vacuum is released, the EVAP canister vent shut valve is OK. Go to step 10.

9. Fill the fuel tank with fuel, then check for fuel in the two way valve and fuel tank vapor recirculation hose (B).

   NOTE: At either location, tiny droplets of fuel are normal.

   - If fuel runs out of the hoses at either location, replace the fuel tank vapor control valve.
   - If fuel does not run out of the hoses at either location, the fuel tank vapor control system is normal.

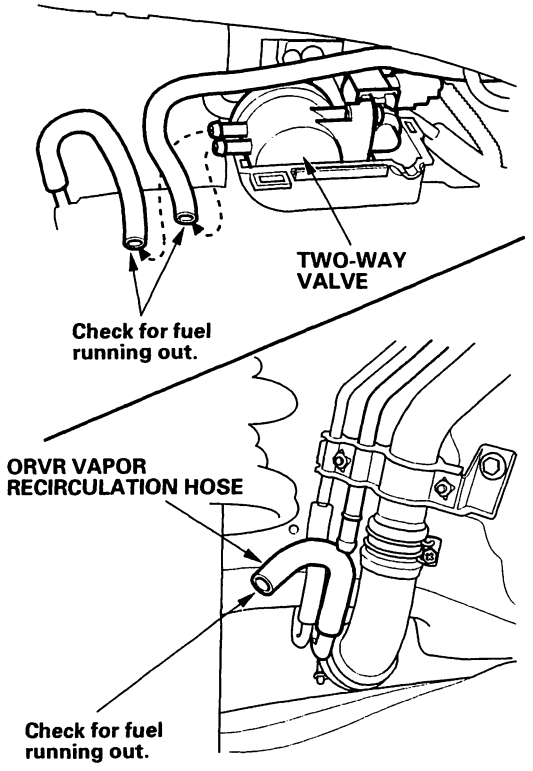

10. Disconnect the fuel tank vapor hose quick disconnect from the EVAP canister, then plug the port on the canister. Reapply vacuum (80 pumps).

    - If the vacuum holds, replace the fuel tank vapor vent shut valve (see page 11-162).
    - If the vacuum does not hold,inspect the EVAP canister vent shut valve O-ring. If the O-ring is OK, replace the EVAP canister and repeat step 4.

Fuel Tank Vapor Control Valve Replacement

1. Remove the fuel tank (see page 11-125).
2. Remove the fuel tank vapor control valve (A) from the fuel tank (B).

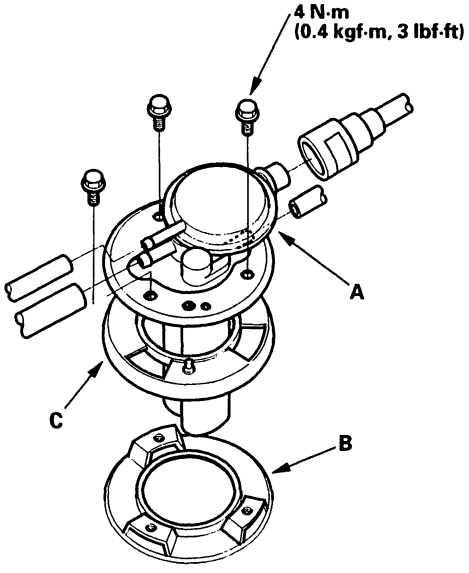

3. Replace the base gasket (C).
4. Install the fuel tank vapor control valve (A).
5. Install the fuel tank (see page 11-125).

BACK

Transaxle

Clutch

Special Tools 12-2
Component Location Index 12-3
Clutch Pedal and Clutch Switch Adjustment 12-4
Clutch Master Cylinder Replacement 12-5
Slave Cylinder Replacement 12-6
Clutch Replacement 12-7

Manual Transmission 13-1

M/T Differential 13-53

Automatic Transmission 14-1

A/T Differential 14-198

Driveline/Axle 16-1

Clutch

Special Tools

Ref. No.	Tool Number	Description	Qty
①	07JAF-PM7011A	Clutch Alignment Disc	1
②	07LAB-PV00100 or 07924-PD20003	Ring Gear Holder	1
③	07LAF-PT00110	Clutch Alignment Shaft	1
④	07936-3710100	Remover Handle	1

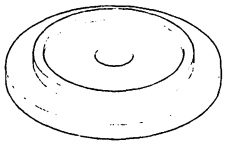

①

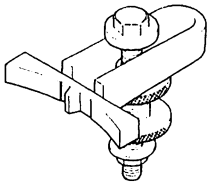

②

③

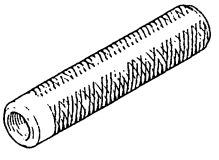

④

BACK

Component Location Index

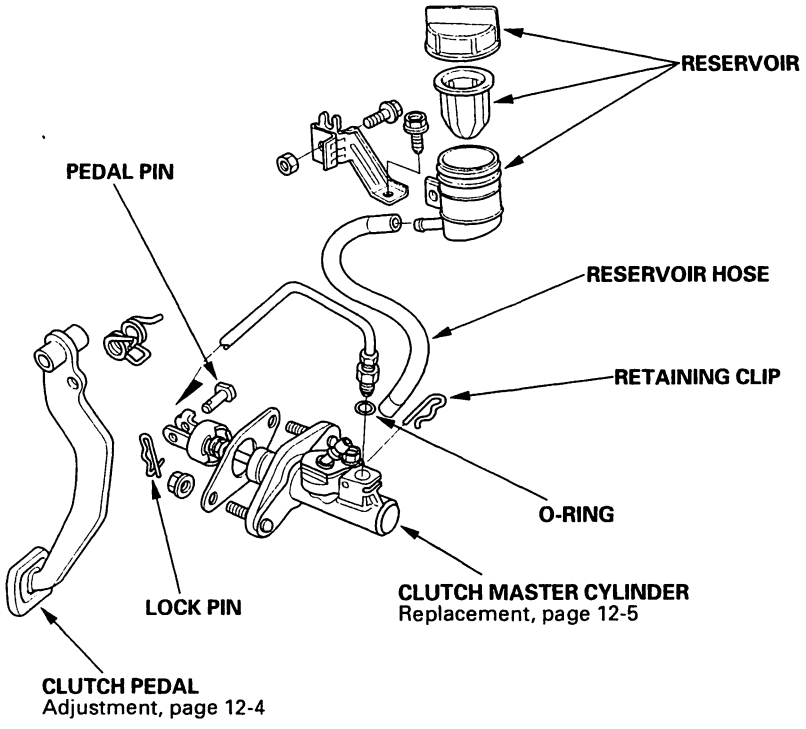

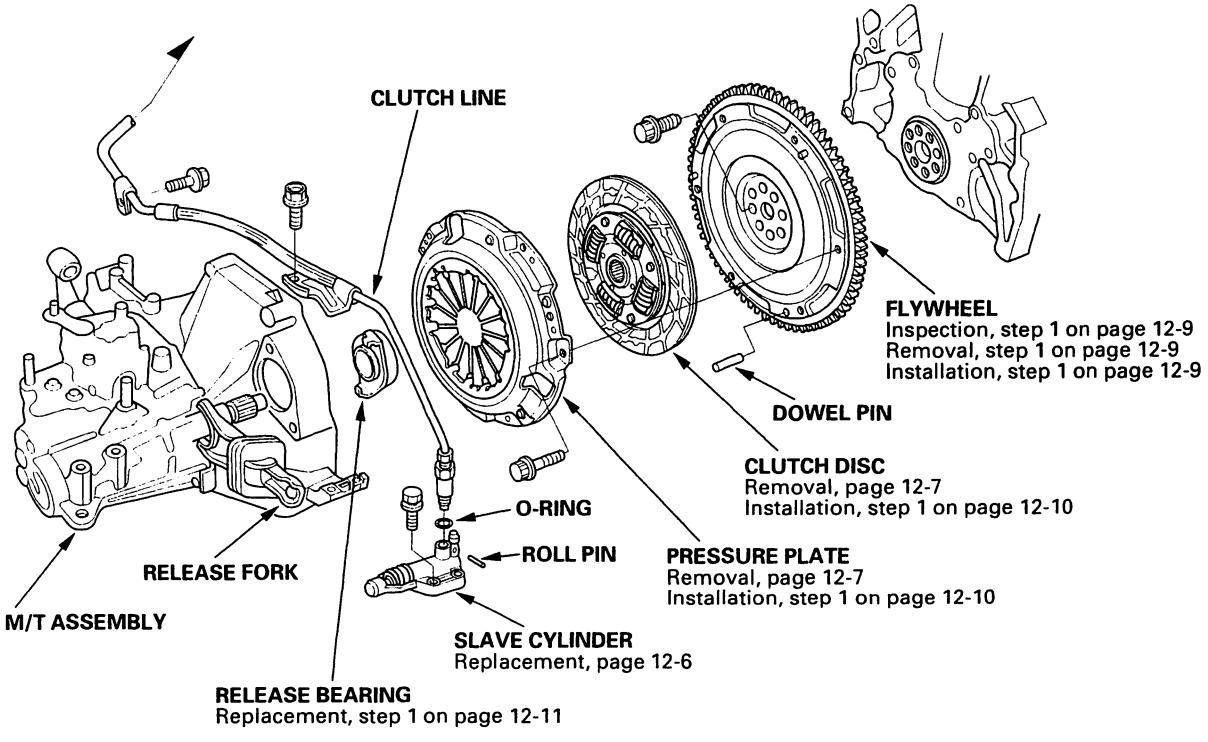

Clutch Pedal and Clutch Pedal Position Switch Adjustment

NOTE:
- To check the clutch switch (see page 4-49).
- The clutch is self-adjusting to compensate for wear.
- If there is no clearance between the master cylinder piston and push rod, the release bearing is held against the diaphragm spring, which can result in clutch slippage or other clutch problems.

1. Loosen locknut (A), and back off the clutch switch (B)(or adjusting bolt) until it no longer touches the clutch pedal (C).

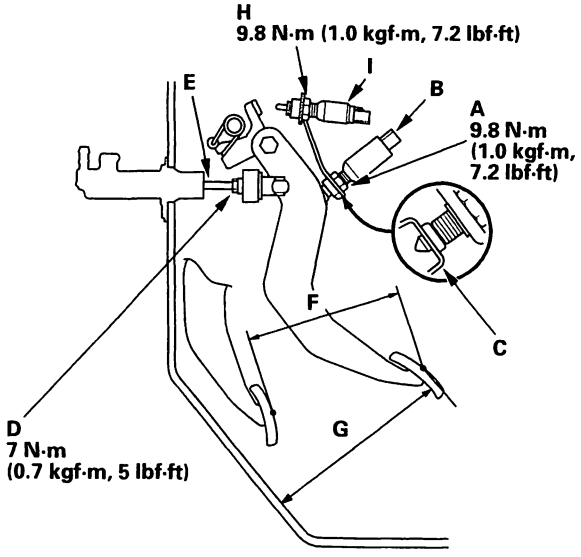

2. Loosen locknut (D), and turn the push rod (E) in or out to get the specified stroke (F) and height (G) at the clutch pedal.

   Clutch Pedal Stroke: 141 – 151 mm (5.6 – 5.9 in.)
   Clutch Pedal Height: 190 mm (7.5 in.)

3. Tighten locknut (D).

4. Turn the clutch switch (B) in until it contacts the clutch pedal (C).

5. Turn the clutch switch (B) in an additional 3/4 to 1 turn.

6. Tighten locknut (A).

7. Loosen locknut (H) and the clutch interlock switch (I).

8. Press the clutch pedal to the floor.

9. Release the clutch pedal 15 – 20 mm (0.59 – 0.79 in.) from the fully pressed position, and hold it there. Adjust the position of the clutch interlock switch (I) so that the engine will start with the clutch pedal in this position.

10. Tighten locknut (H).

BACK

Clutch Master Cylinder Replacement

NOTE: Do not spill brake fluid on the vehicle; it may damage the paint; if brake fluid does contact the paint, wash it off immediately with water.

1. Remove the brake fluid from the clutch master cylinder reservoir (A) with a syringe.

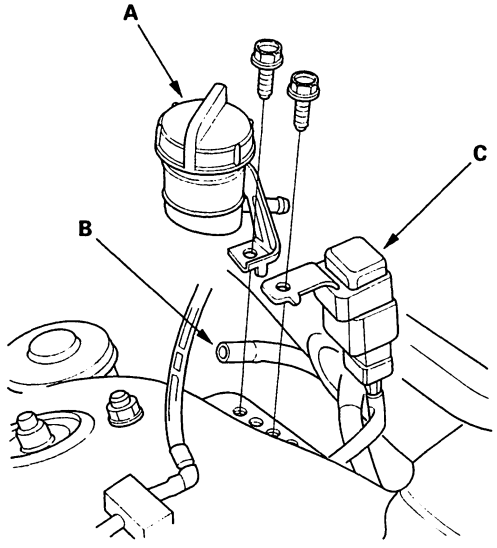

2. Disconnect the reservoir hose (B) from the clutch master cylinder reservoir. Plug the end of the reservoir hose with a shop towel to prevent brake fluid from coming out.

3. Remove the clutch master cylinder reservoir.

4. Remove the power relay (C).

5. Pry out the lock pin (A), and pull the pedal pin (B) out of the yoke. Remove the nuts (C).

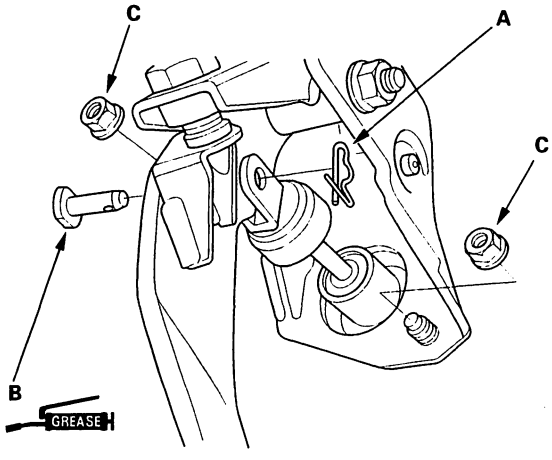

6. Remove the retaining clip (A). Disconnect the clutch line (B), and remove the O-ring (C). Plug the end of the clutch line with a shop towel to prevent brake fluid from coming out.

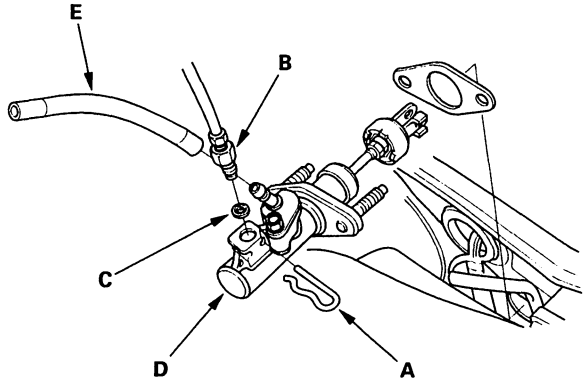

7. Remove the clutch master cylinder (D), then remove the reservoir hose (E) from the clutch master cylinder (D).

8. Install the clutch master cylinder in the reverse order of removal. Install the new O-ring. Tighten the master cylinder mounting nuts to 13 N·m (1.3 kgf·m, 9.4 lbf·ft).

9. Bleed the clutch hydraulic system (see step 5 on page 12-6).

Slave Cylinder Replacement

NOTE: Do not spill brake fluid on the vehicle; it may damage the paint; if brake fluid does contact the paint, wash it off immediately with water.

1. Remove the mounting bolts (A), the slave cylinder (B), and clutch line mounting bolt (C).

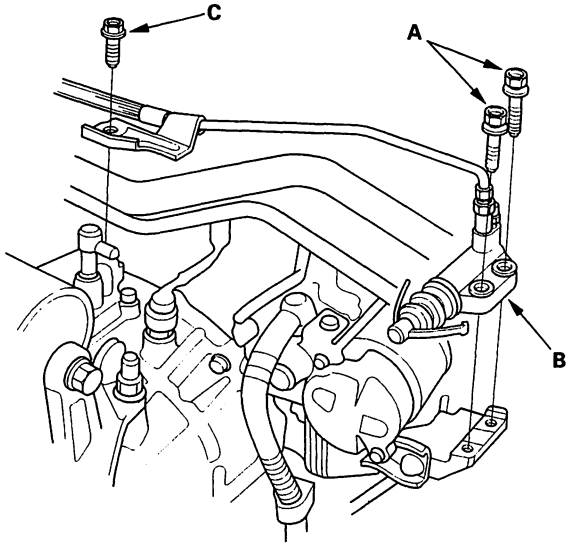

2. Remove the roll pin.

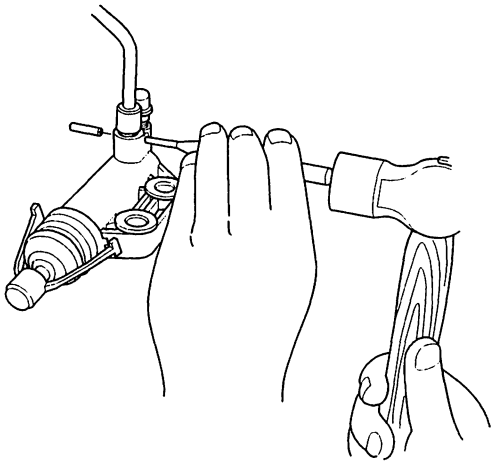

3. Remove the slave cylinder (A) and O-ring (B). Plug the end of the clutch line with a shop towel to prevent brake fluid from coming out.

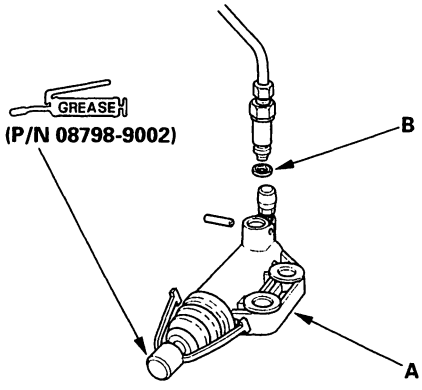

4. Install the slave cylinder in the reverse order of removal. Install the new O-ring. Apply Super High Temp Urea Grease (P/N 08798-9002) to the push rod of the slave cylinder. Tighten the slave cylinder mounting bolts to 23 N·m (2.3 kgf·m, 17 lbf·ft).

5. Bleed the clutch hydraulic system. Tighten the bleeder screw to 8 N·m (0.8 kgf·m, 6 lbf·ft).

   NOTE: Be careful not to damage the slave cylinder by overtightening the bleeder screw.

   - Attach a hose to the bleeder screw (A), and suspend the hose in a container of brake fluid.
   - Make sure there is an adequate supply of fluid at the clutch master cylinder, then slowly pump the clutch pedal until no more bubbles appear at the bleeder hose.
   - Refill the clutch master cylinder with fluid when done.
   - Always use only Genuine Honda DOT 3 brake fluid.

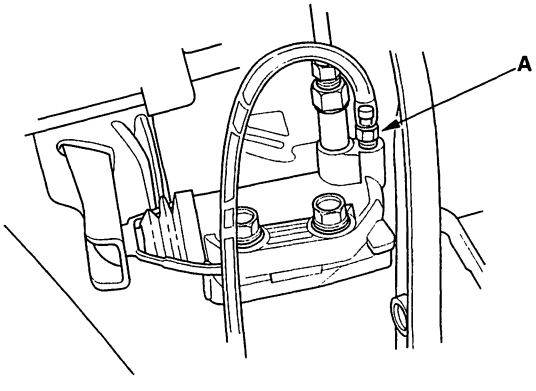

BACK

Clutch Replacement

Special Tools Required
- Clutch alignment shaft 07LAF-PT00110
- Clutch alignment disc 07JAF-PM7011A
- Remover handle 07936-3710100
- Ring gear holder 07LAB-PV00100 or 07924-PD20003

Pressure Plate and Clutch Disc Removal

1. Assemble the special tools as shown. Assemble the Clutch Alignment Disc with side marked "A" facing the diaphragm spring.

2. Check the diaphragm spring fingers for height using the special tools and a feeler gauge (A). If the height is more than the service limit, replace the pressure plate.

   Standard (New): 0.6 mm (0.02 in.) max.
   Service Limit: 0.8 mm (0.03 in.)

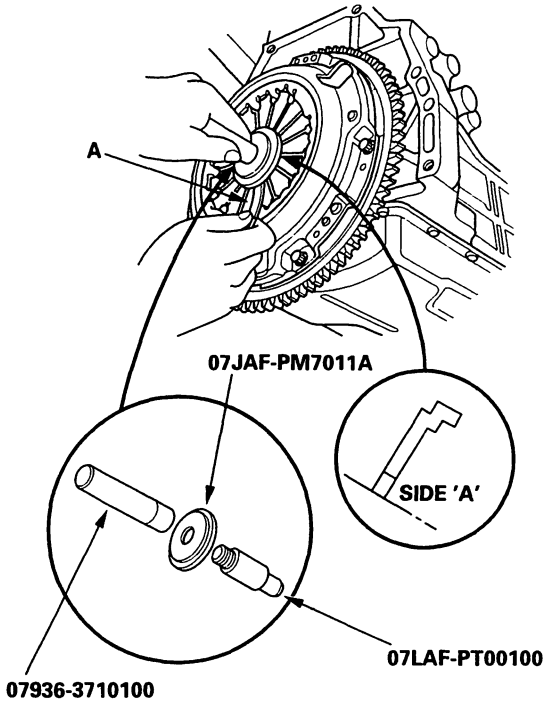

3. Install the special tools.

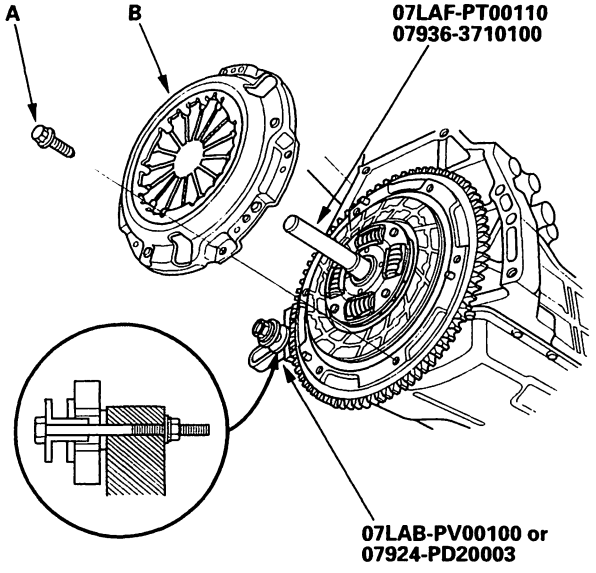

4. To prevent warping, unscrew the pressure plate mounting bolts (A) in a crisscross pattern in several steps, then remove the pressure plate (B).

5. Inspect the pressure plate (A) surface for wear, cracks, and burning.

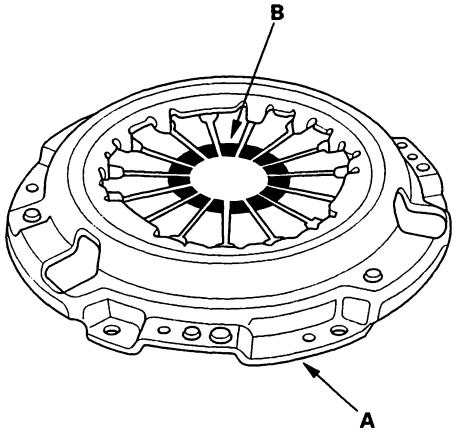

6. Inspect the fingers of the diaphragm spring (B) for wear at the release bearing contact area.

(cont'd)

Clutch Replacement (cont'd)

7. Inspect for warpage using a straight edge (A) and feeler gauge (B). Measure across the pressure plate (C). If the warpage is more than the service limit, replace the pressure plate.

Standard (New): **0.03 mm (0.001 in.) max.**
Service Limit: **0.15 mm (0.006 in.)**

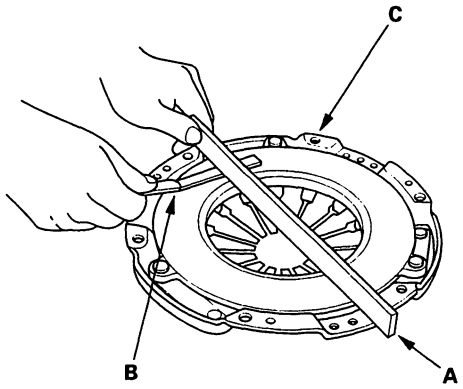

8. Remove the clutch disc and special tools.

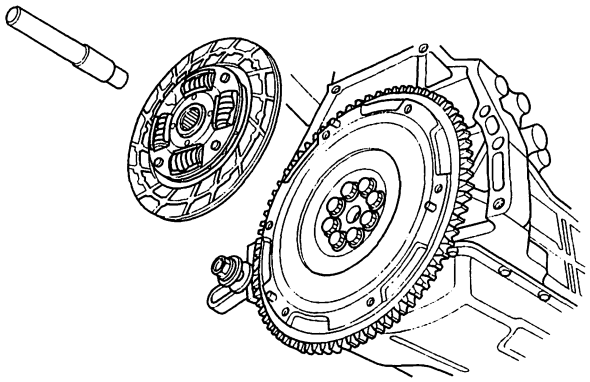

9. Inspect the lining of the clutch disc for signs of slipping or oil. If the clutch disc is burned black or oil soaked, replace it.

10. Measure the clutch disc thickness. If the thickness is less than the service limit, replace the clutch disc.

Standard (New): **8.4–9.0 mm (0.33–0.35 in.) max.**
Service Limit: **6.0 mm (0.24 in.)**

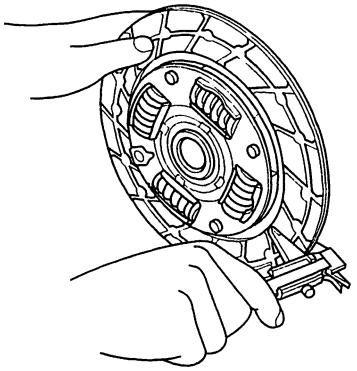

11. Measure the rivet depth from the clutch disc lining surface (A) to the rivets (B) on both sides. If the rivet depth is less than the service limit, replace the clutch disk.

Standard (New): **1.65–2.25 mm (0.065–0.089 in.) max.**
Service Limit: **0.8 mm (0.03 in.)**

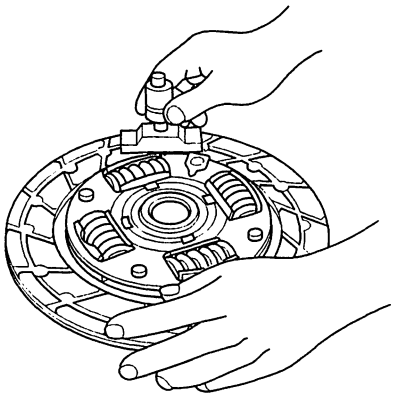

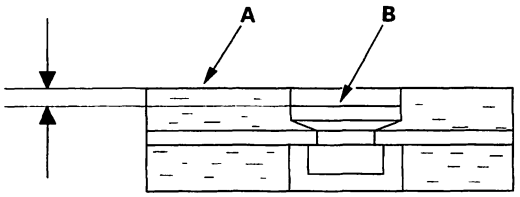

BACK

Flywheel Inspection

1. Inspect the ring gear teeth for wear and damage.

2. Inspect the clutch disc mating surface on the flywheel for wear, cracks and burning.

3. Measure the flywheel (A) runout using a dial indicator (B) through at least two full turns with the engine installed. Push against the flywheel each time you turn it to take up the crankshaft thrust washer clearance. If the runout is more than the service limit, replace the flywheel and recheck the runout.

   Standard (New): 0.05 mm (0.002 in.) max.
   Service Limit: 0.15 mm (0.006 in.)

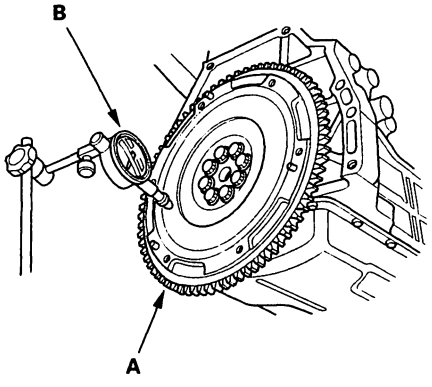

Flywheel Removal

1. Install the special tool.

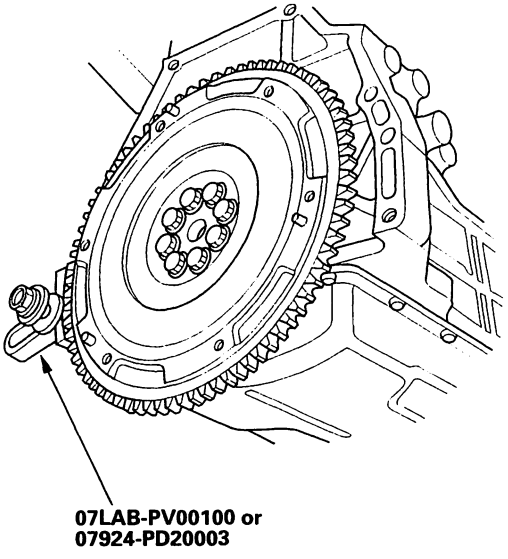

2. Remove the flywheel mounting bolts in a crisscross pattern in several steps, then remove the flywheel.

Flywheel Installation

1. Align the hole in the flywheel with the crankshaft dowel pin, and install the flywheel. Install the mounting bolts finger-tight.

2. Install the special tool, then torque the flywheel mounting bolts in a crisscross pattern in several steps.

   FLYWHEEL MOUNTING BOLT TORQUE:
   103 N·m (10.5 kgf·m, 76 lbf·ft)

(cont'd)

Clutch Replacement (cont'd)

Clutch Disc and Pressure Plate Installation

1. Install the ring gear holder.

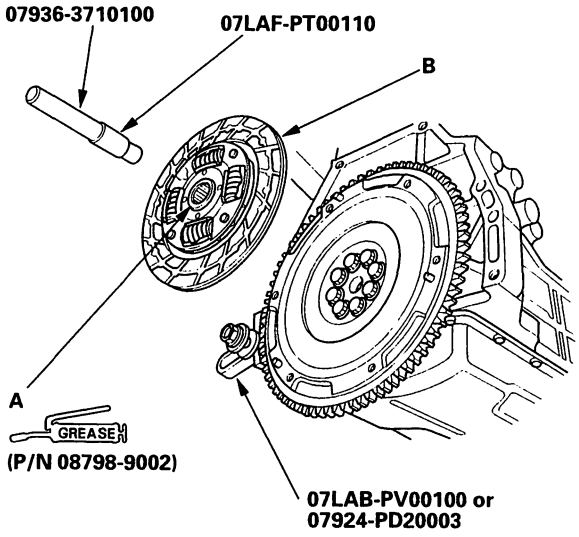

2. Apply Super High Temp Urea Grease (P/N 08798-9002) to the splines (A) of the clutch disc (B), then install the clutch disc using the special tools.

3. Install the pressure plate (A) and the mounting bolts (B) finger-tight.

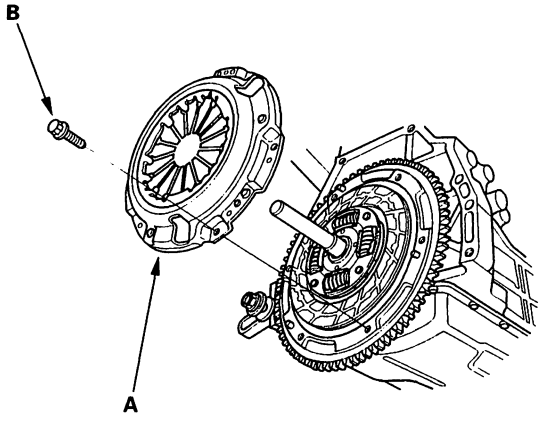

4. Torque the mounting bolts in a crisscross pattern. Tighten the bolts in several steps to prevent warping the diaphragm spring.

PRESSURE PLATE MOUNTING BOLT TORQUE:
25 N·m (2.6 kgf·m, 19 lbf·ft)

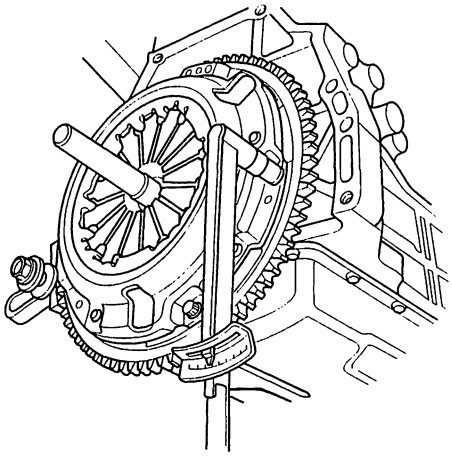

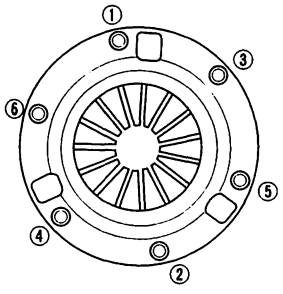

5. Remove the special tools.

6. Make sure the diaphragm spring fingers are all the same height.

BACK

Release Bearing Replacement

1. Remove the release fork boot (A) from the clutch housing (B).

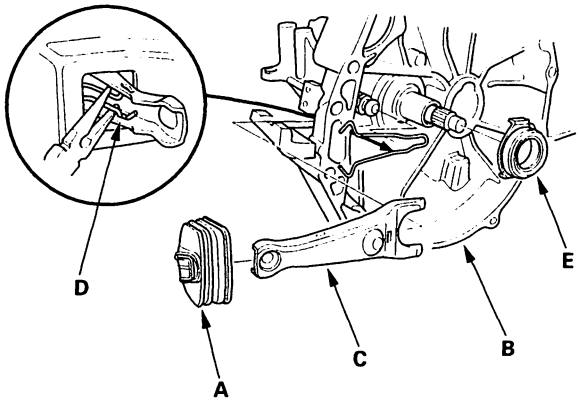

2. Remove the release fork (C) from the clutch housing (B) by squeezing the release fork set spring (D) with pliers. Remove the release bearing (E).

3. Check the release bearing for play by spinning it by hand. If there is excessive play, replace the release bearing with a new one.

   NOTE: The release bearing is packed with grease. Do not wash it in solvent.

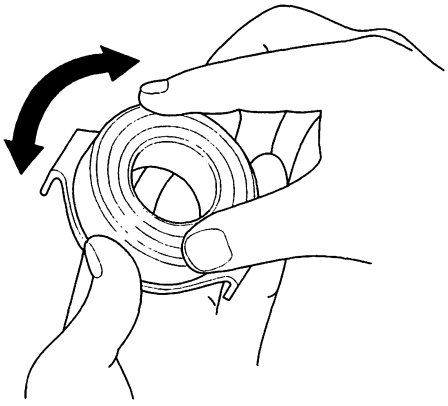

4. Apply Super High Temp Urea Grease (P/N 08798-9002) to the release fork (A), the release fork bolt (B), the release bearing (C), and the release bearing guide (D) in the shaded areas.

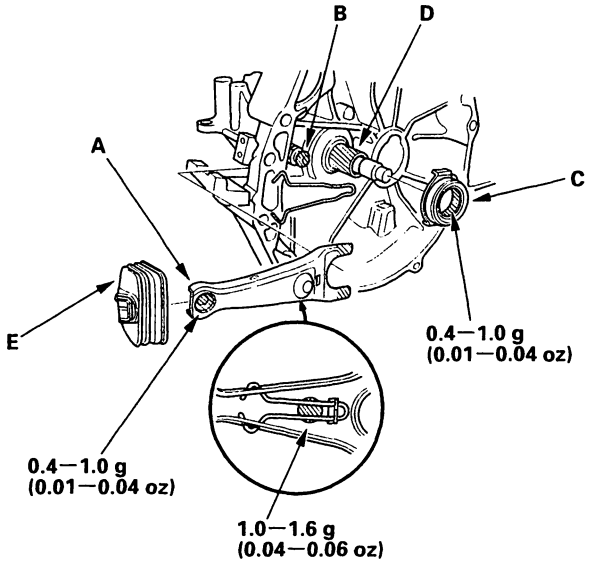

5. With the release fork slid between the release bearing pawls, install the release bearing on the mainshaft while inserting the release fork through the hole in the clutch housing.

6. Align the detent of the release fork (A) with the release fork bolt (B), then press the release fork over the release fork bolt (B) squarely.

7. Install the release fork boot (E), make sure the boot seals around the release fork and clutch housing.

8. Move the release fork (A) right and left to make sure that it fits properly against the release bearing (B), and that the release bearing slides smoothly.

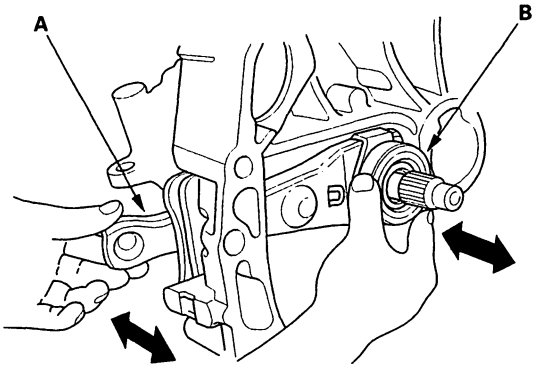

BACK

Transaxle

Manual Transmission

Special Tools 13-2
Transmission Fluid Inspection and Replacement 13-3
Back-up Light Switch Test 13-3
Transmission Removal 13-4
Transmission Installation 13-10
Shift Arm Replacement 13-18
Transmission Disassembly 13-21
Reverse Shift Fork Clearance Inspection 13-25
Mainshaft Assembly Clearance Inspection 13-26
Mainshaft Disassembly 13-28
Mainshaft Inspection 13-29
Mainshaft Reassembly 13-30
Countershaft Assembly Clearance Inspection 13-32
Countershaft Disassembly 13-34
Countershaft Inspection 13-35
Countershaft Reassembly 13-36
Shift Forks Clearance Inspection 13-39
Shift Forks Disassembly/ Reassembly 13-40
Synchro Sleeve and Hub Inspection and Reassembly 13-41
Synchro Ring and Gear Inspection 13-41
Countershaft Bearing Replacement 13-43
Mainshaft Bearing and Oil Seal Replacement 13-44
Mainshaft Thrust Clearance Adjustment 13-45
Transmission Reassembly 13-48
Gearshift Mechanism Replacement 13-52

M/T Differential

Component Location 13-53
Backlash Inspection 13-54
Final Driven Gear/Carrier Replacement 13-54
Carrier Bearings Replacement ... 13-55
Oil Seal Replacement 13-55
Carrier Bearing Outer Race Replacement and Preload Adjustment 13-57

BACK

Special Tools

Ref.No.	Tool Number	Description	Qty
①	07GAD-PG40100	Driver Attachment	1
**②	07GAJ-PG20110	Mainshaft Holder	1
**③	07GAJ-PG20130	Mainshaft Base	1
④	07HAD-SF10100	Driver Attachment	1
⑤	07HAJ-PK40201	Preload Inspection Tool	1
⑥	07JAD-PH80101	Oil Seal Driver Attachment	1
⑦	07JAD-PH80400	Pilot, 28 x 30 mm	1
⑧	07LAD-PW50601	Bearing Attachment	1
*⑨	07736-A01000B	Adjustable Bearing Puller, 25—40 mm	1
⑩	07746-0010300	Attachment, 42 x 47 mm	1
⑪	07746-0010400	Attachment, 52 x 55 mm	1
⑫	07746-0010500	Attachment, 62 x 68 mm	1
⑬	07746-0030100	Driver, 40 mm I.D.	1
⑭	07746-0030400	Attachment, 35 mm I.D.	1
⑮	07749-0010000	Driver	1
⑯	07947-6890100	Oil Seal Driver	1

* Must be used with commercially available 3/8"- 16 Slide Hammer.
** Part of Mainshaft Inspection Tool Set, 07GAJ-PG2010A.

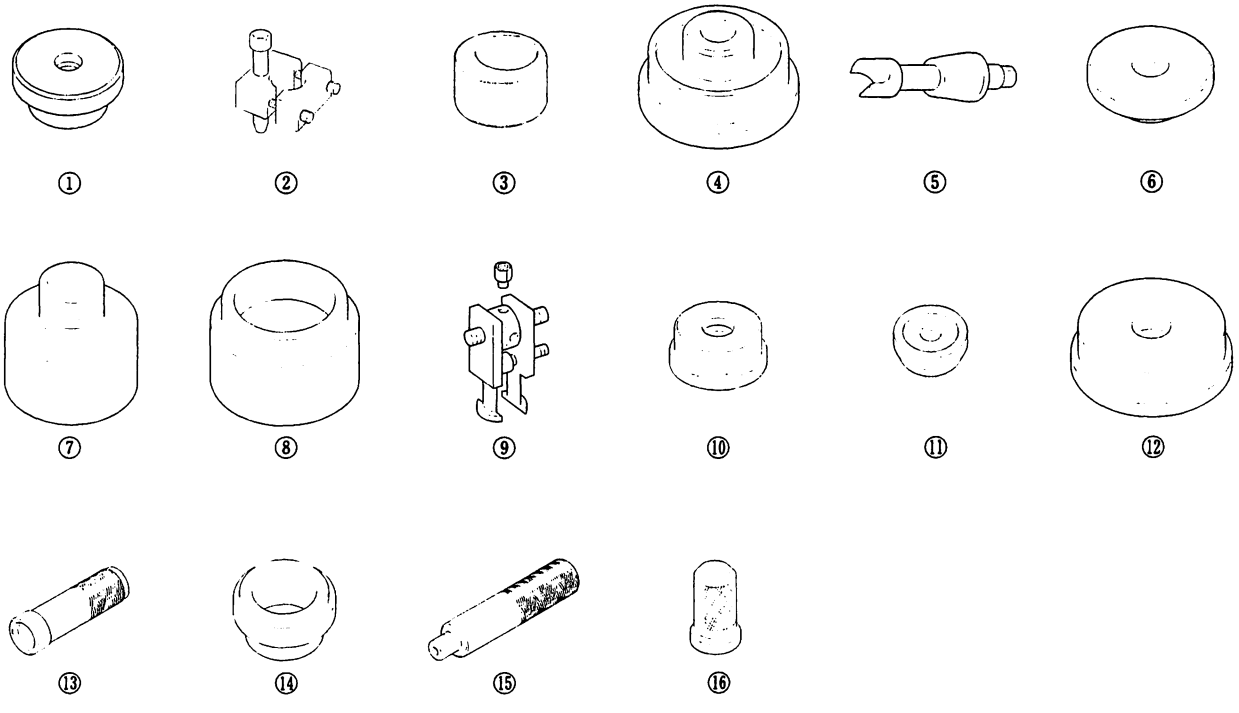

BACK

Transmission Fluid Inspection and Replacement

1. Park the vehicle on level ground, and turn the engine OFF.

2. Remove the oil filler plug (A) and washer (B), check the condition of the fluid, and make sure the fluid at the proper level (C).

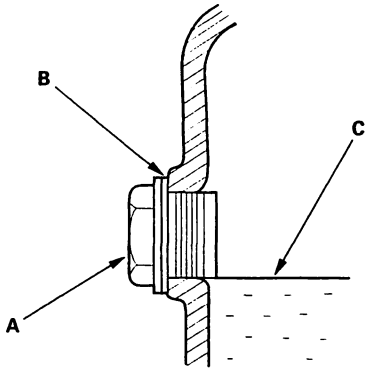

3. If the transmission fluid is dirty, remove the drain plug (D) and drain the fluid. Cover the front and rear beams with a shop towel (E) to catch any spilled fluid.

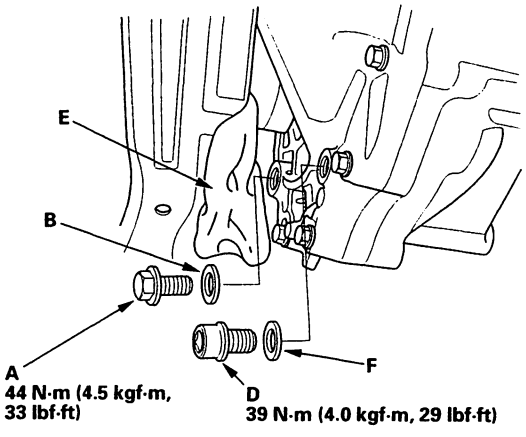

4. Reinstall the drain plug (D) with a new washer (F), and refill the transmission fluid to the proper level.

   Oil Capacity
   1.9 ℓ (2.0 US qt, 1.7 Imp qt) at fluid change
   2.0 ℓ (2.1 US qt, 1.8 Imp qt) at overhaul

   Always use Genuine Honda Manual Transmission Fluid (MTF). Using motor oil can cause stiffer shifting because it does not contain the proper additives.

5. Reinstall the oil filler plug with a new washer (B).

Back-Up Light Switch Test

1. Disconnect the back-up light switch (A) connectors.

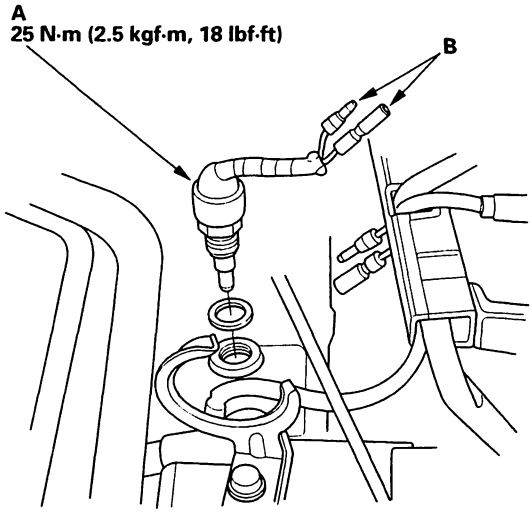

2. Check for continuity between the terminals (B). There should be continuity when the shift lever into reverse.

3. If necessary, replace the switch.

Transmission Removal

Special Tools Required
Engine hanger, A and Reds AART1256 or equivalent, commercially available

NOTE: Use fender covers to avoid damaging painted surfaces.

1. Disconnect the negative (−) cable first, then the positive (+) cable from the battery. Remove the battery.

2. Remove the intake air duct (A) and air cleaner housing (B).

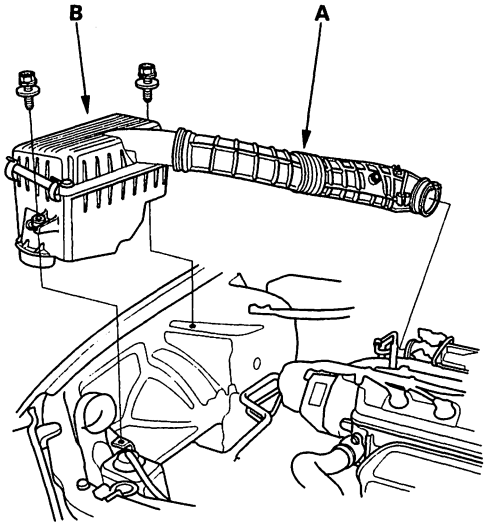

3. Remove the battery tray.

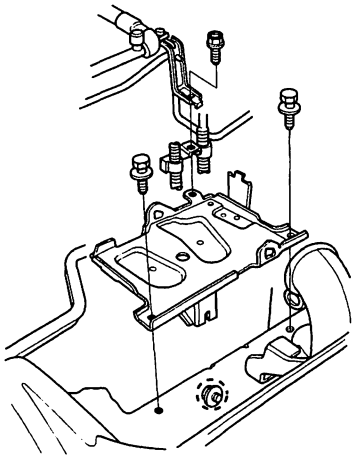

4. Remove the engine wire harness clamp.

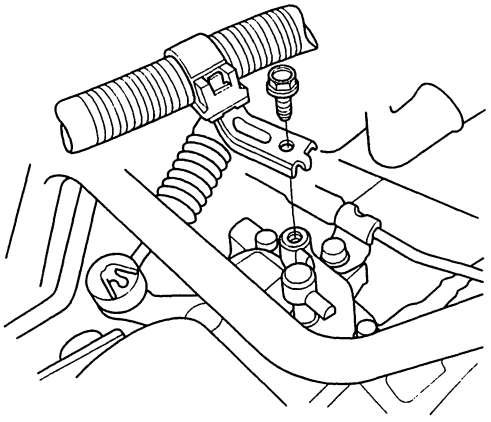

5. Carefully remove the slave cylinder (A) and clutch line clamp (B) so as not to bend the clutch line. Do not operate the clutch pedal once the slave cylinder has been removed.

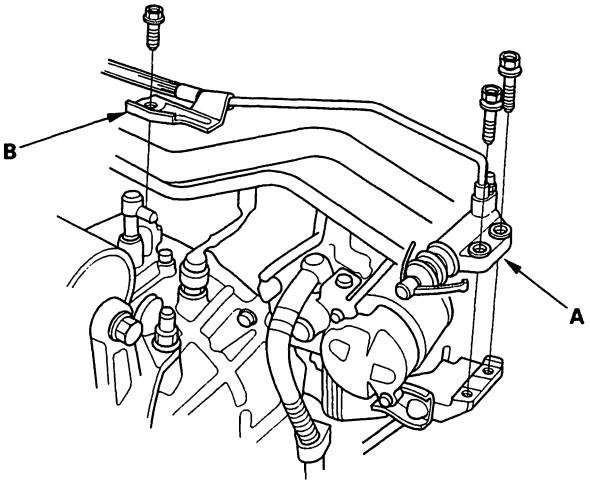

BACK

6. Disconnect the starter cables (A), then remove the starter motor (B).

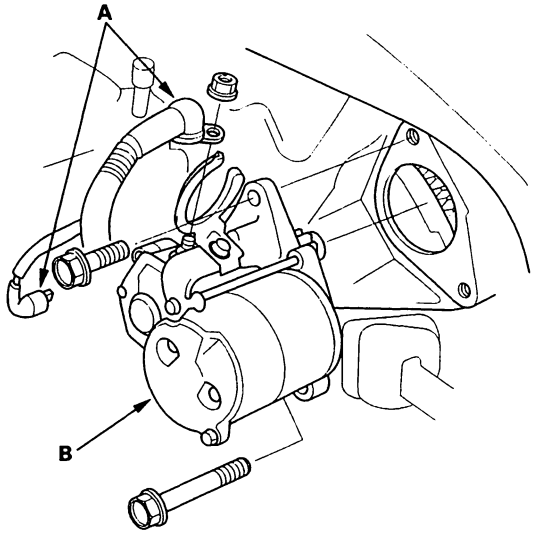

7. Disconnect the back-up light switch connectors (A).

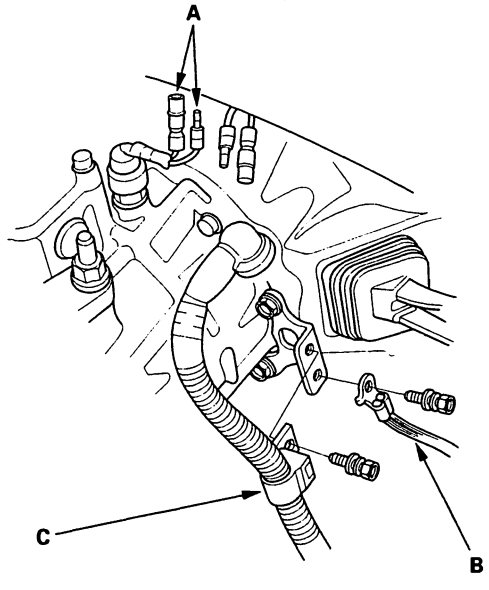

8. Remove the transmission ground cable (B) and starter cable clamp (C).

9. First remove the cable bracket (A), then disconnect the cables (B) from the top of the transmission housing. Carefully remove both cables and the bracket together so as not to bend the cables.

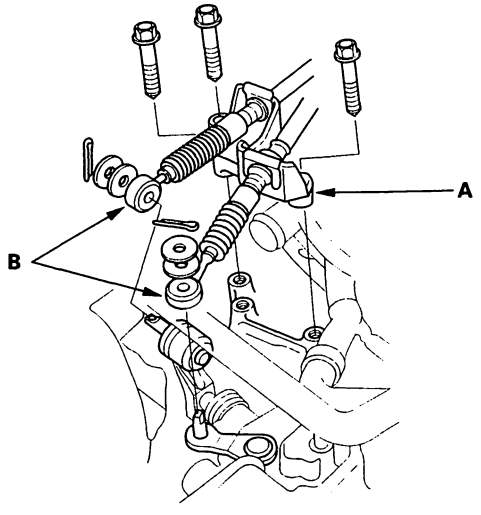

10. Disconnect the vehicle speed sensor (VSS) connector.

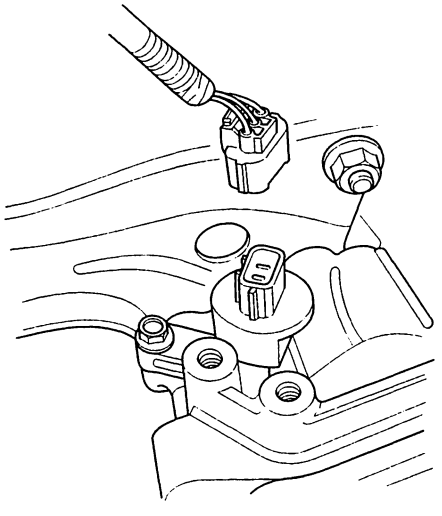

(cont'd)

Transmission Removal (cont'd)

11. Remove the rear engine mount bracket brace.

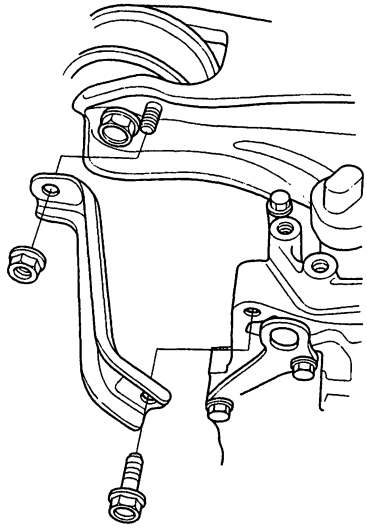

12. Remove the engine wire harness (A) and two upper transmission mounting bolts (B).

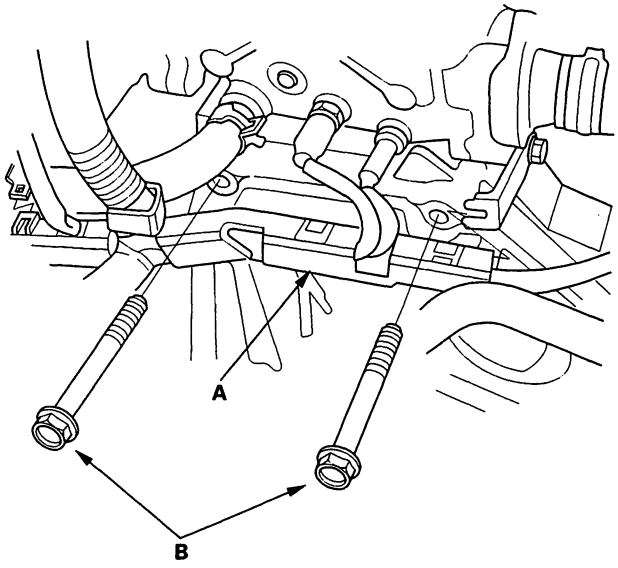

13. Remove the front engine mount bracket 3 mounting bolts.

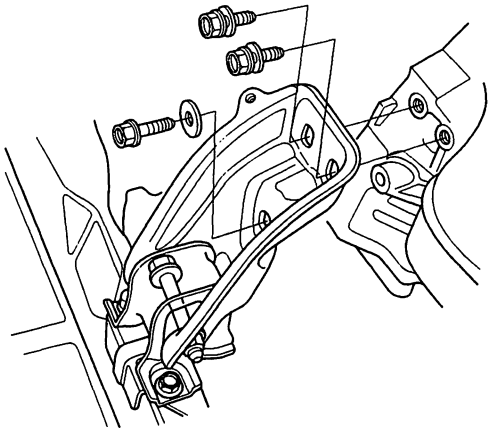

14. Raise vehicle and make sure it is securely supported.

15. Drain transmission fluid with a shop towel covering the front and rear beams to catch any spilled fluid (see page 13-3).

16. Remove the splash shield.

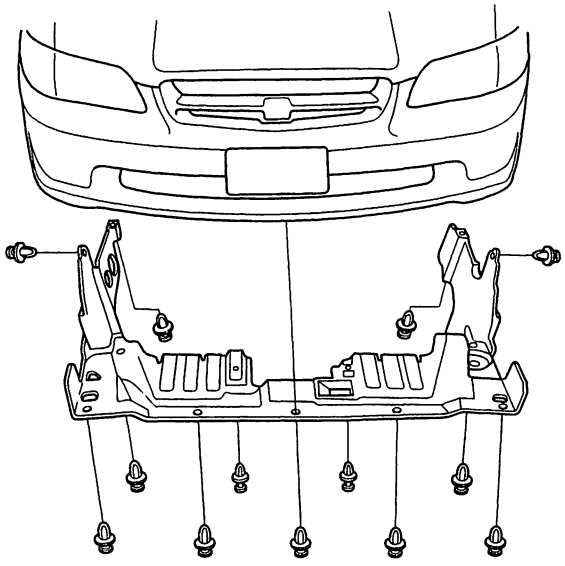

BACK

17. Remove the cotter pins (A), and loosen the castle nuts (B), then separate the ball joints and lower arms (C) on both sides (see step 3 on page 18-17).

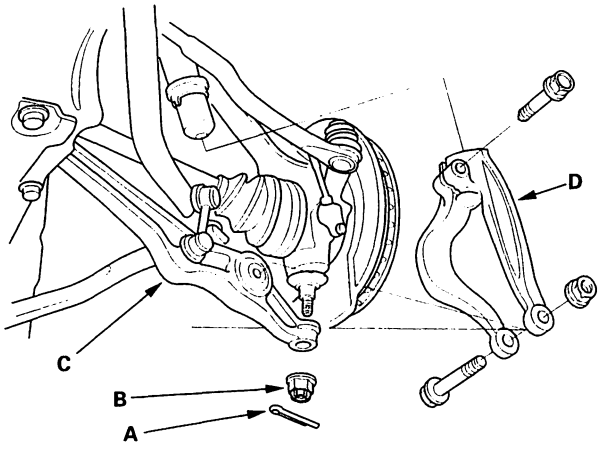

18. Remove the both damper forks (D).

19. Pull the driveshafts out of the intermediate shaft and differential (see page 16-3). Coat all the precision finished surfaces with clean engine oil grease. Tie bags over the driveshaft ends.

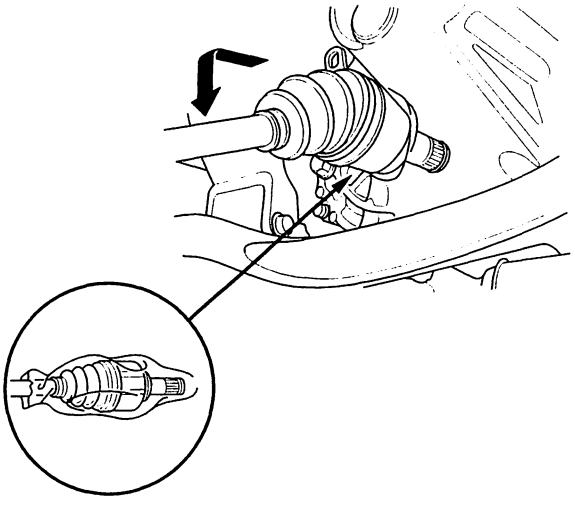

20. Remove the intermediate shaft. Coat all the precision finished surfaces with clean engine oil grease. Tie bags over the shaft end.

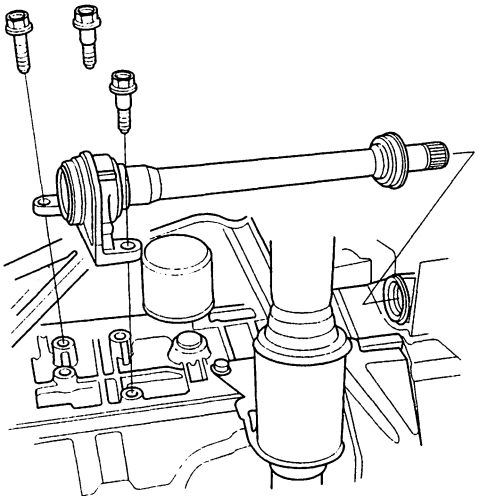

21. Remove the engine stiffener.

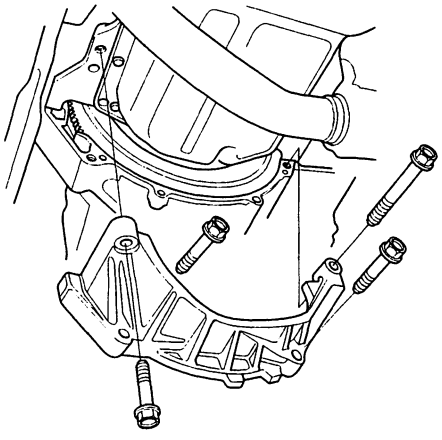

(cont'd)

Transmission Removal (cont'd)

22. Remove the radius rod mounting bolts from the lower arm (A).

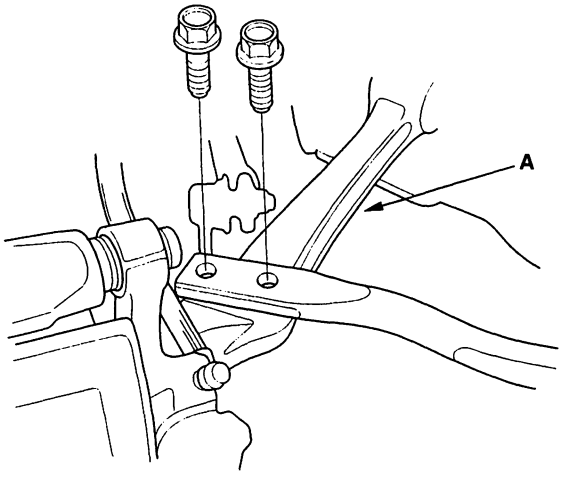

23. Remove the power steering cooler line (A) from the front beam (B).

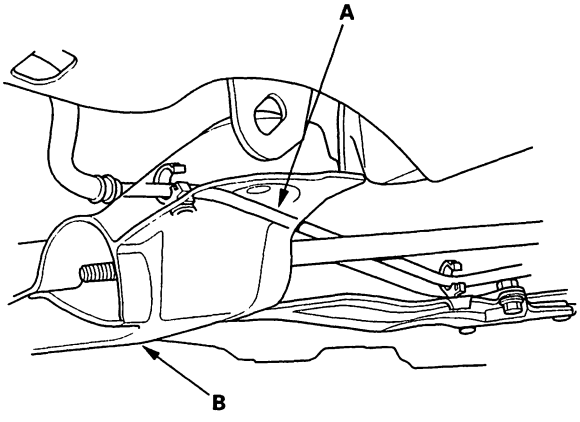

24. Make reference marks (A) on the rear beam (B) and front beam (C), then remove the front beam.

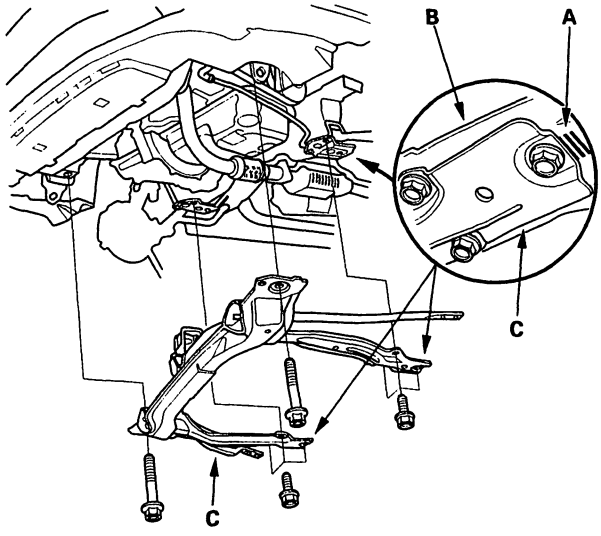

25. Lift and support the engine/transmission assembly with an engine hanger (P/N AAR-T-1256, available through the American Honda Tool and Equipment Program, or equivalent).

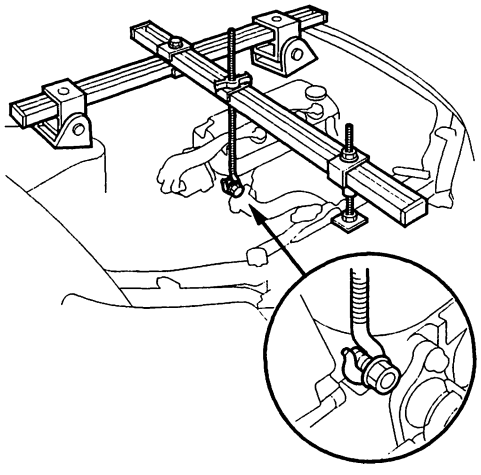

26. Place a floor jack under the transmission, and raise the transmission just enough to take weight off of the mounts.

BACK

27. Remove the transmission mount bracket (A) and transmission mount (B).

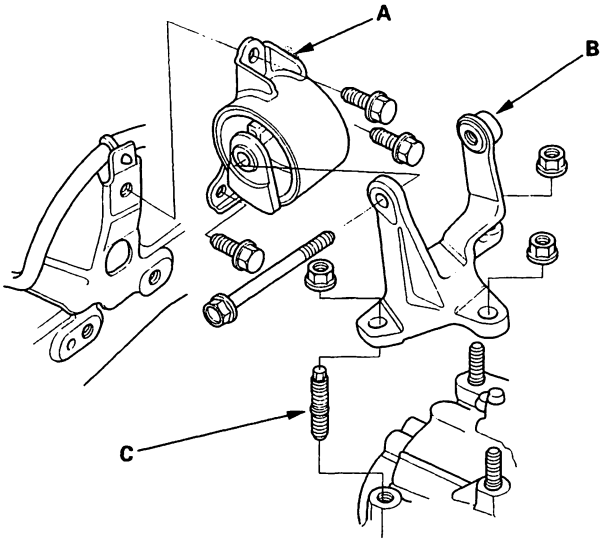

28. Remove the transmission mount stud bolt (C) on the transmission housing.

29. Remove the intake manifold bracket.

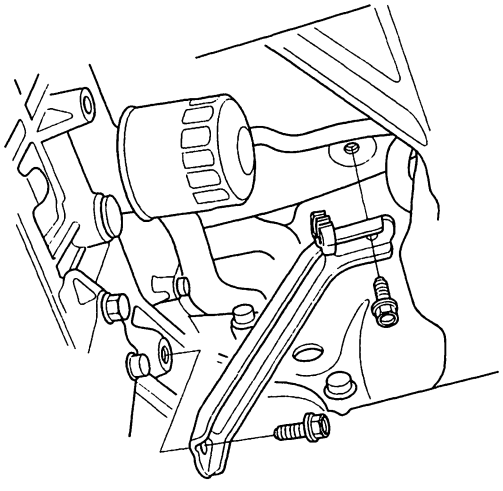

30. Remove the two rear engine mount bracket (A) mounting bolts (B).

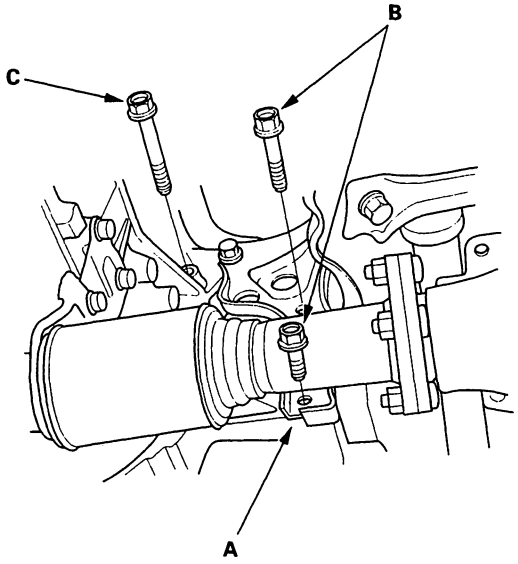

31. Remove the rear side transmission mounting bolt (C).

32. Remove the front side transmission mounting bolt.

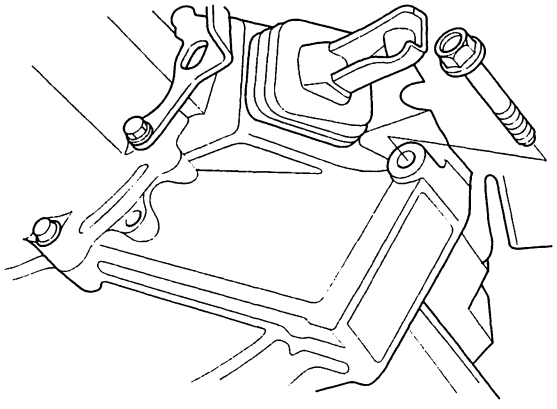

(cont'd)

Transmission Removal (cont'd)

33. Pull the transmission away from the engine until it clears the mainshaft, then lower it on the transmission jack. Take care not to bend the clutch line.

34. Remove the slave cylinder bracket from the transmission.

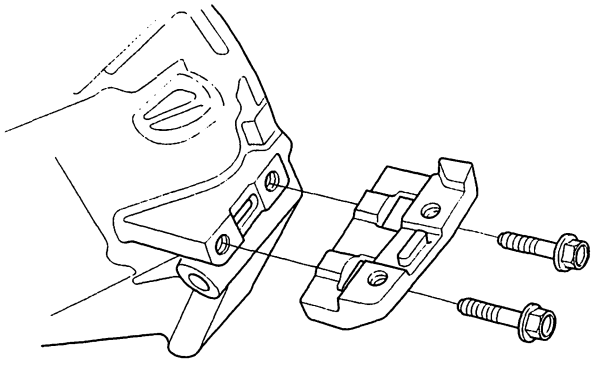

35. Remove the boot (A), the release fork (B), and the release bearing (C) from the transmission (D).

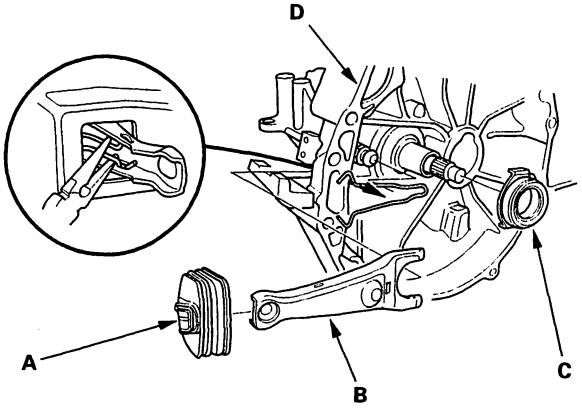

Transmission Installation

1. Check that the dowel pins are installed in the clutch housing.

2. Install the slave cylinder bracket on the transmission assembly.

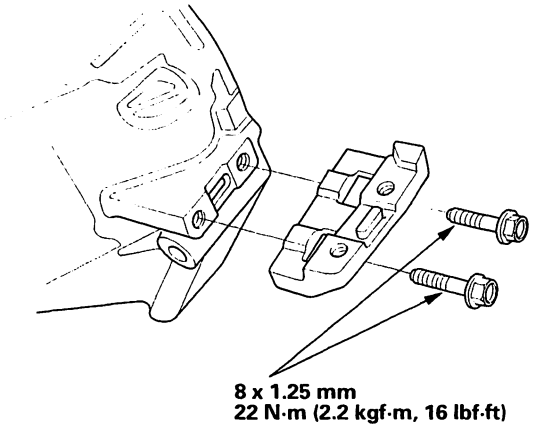

3. Apply Super High Temp Urea Grease (P/N 08798-9002) to the release fork (A), the release fork bolt (B), the release bearing (C), and the release bearing guide (D) in the shaded areas.

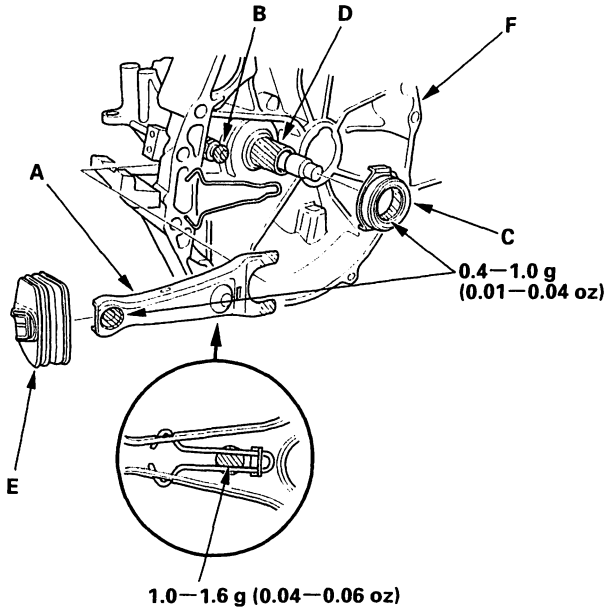

4. Install the release bearing (C), release fork (A), and boot (E) on the transmission (F).

BACK

5. Place the transmission on the transmission jack, and raise it to the engine level.

6. Install the front side transmission mounting bolt.

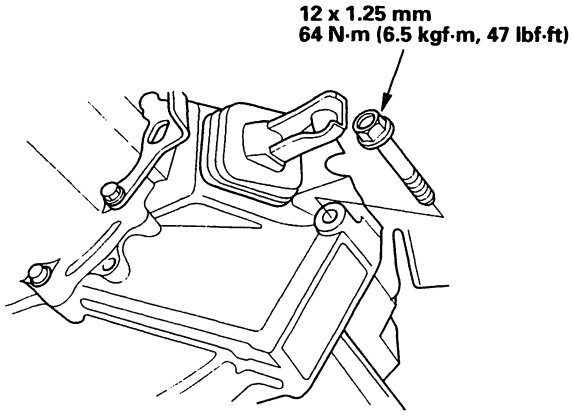

7. Install the rear side transmission mounting bolt (A).

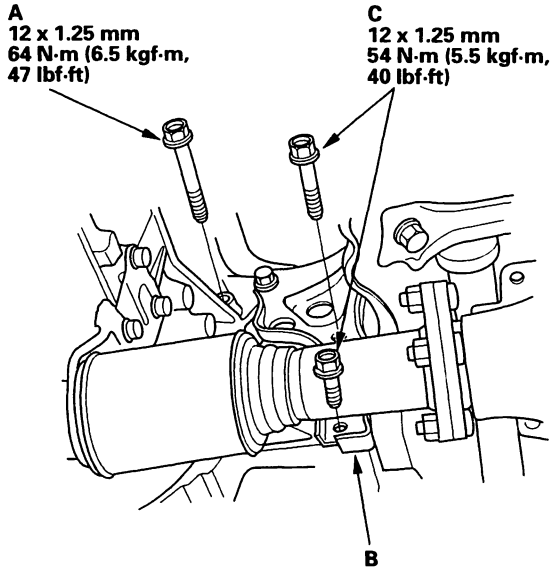

8. Install the 2 rear engine mount bracket (B) new mounting bolts (C).

9. Install the transmission mount stud bolt (A) on the transmission housing.

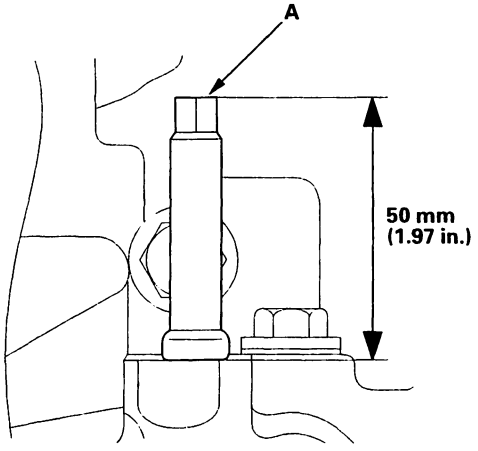

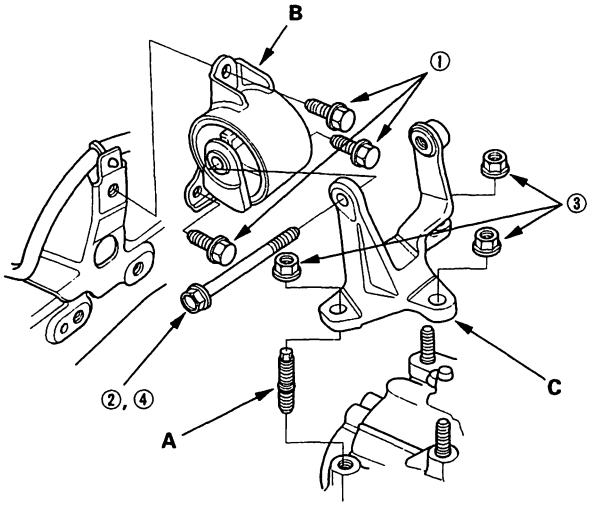

10. Raise the transmission, install the transmission mount (B) and transmission mount bracket (C).

- Torque mounting bolts and nut in the sequence shown.
- Make sure the bushings are not twisted or offset.

① 12 x 1.25 mm 64 N·m (6.5 kgf·m, 47 lbf·ft)
② Temporary tightening
③ 10 x 1.25 mm 38 N·m (3.9 kgf·m, 28 lbf·ft)
④ 12 x 1.25 mm 54 N·m (5.5 kgf·m, 40 lbf·ft)

(cont'd)

Transmission Installation (cont'd)

11. Remove the engine/transmission hanger.

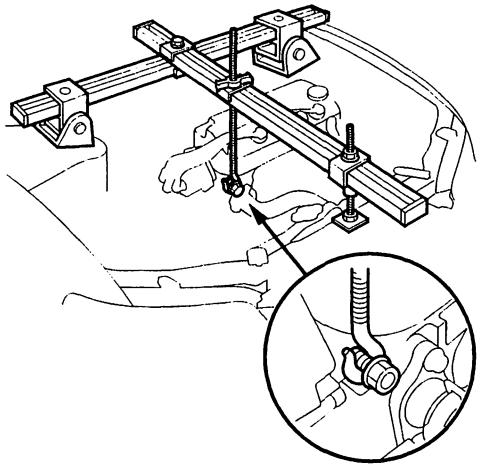

12. Install the front beam (A) in its original position by aligning the marks (B) you made in the removal procedure.

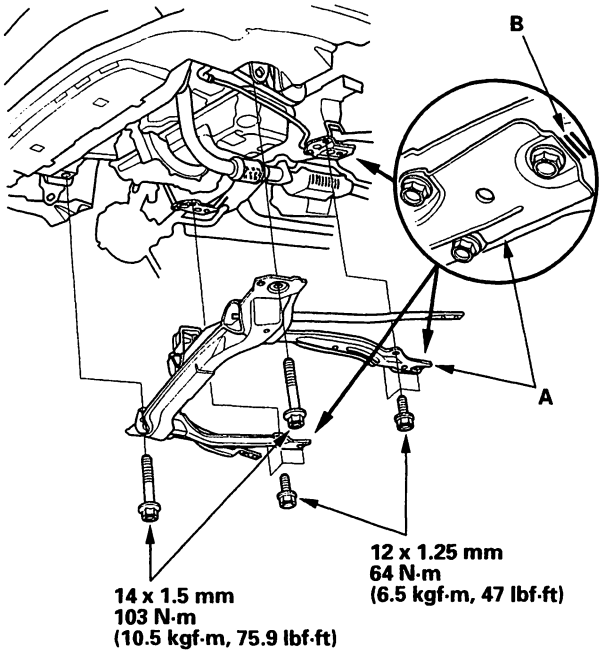

13. Install the power steering cooler line (A) in the line clamps (B).

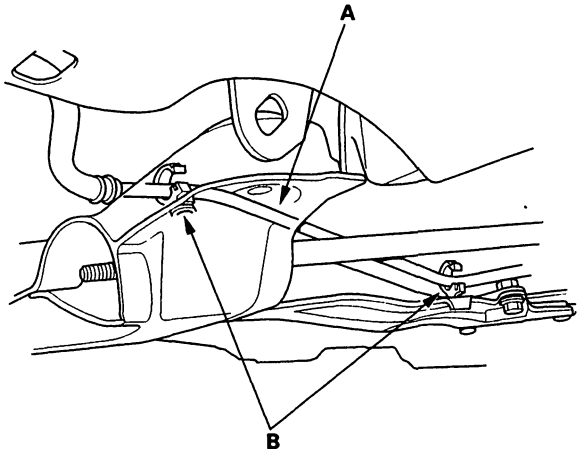

14. Install both radius rods (A) with new mounting bolts on the lower arm (B).

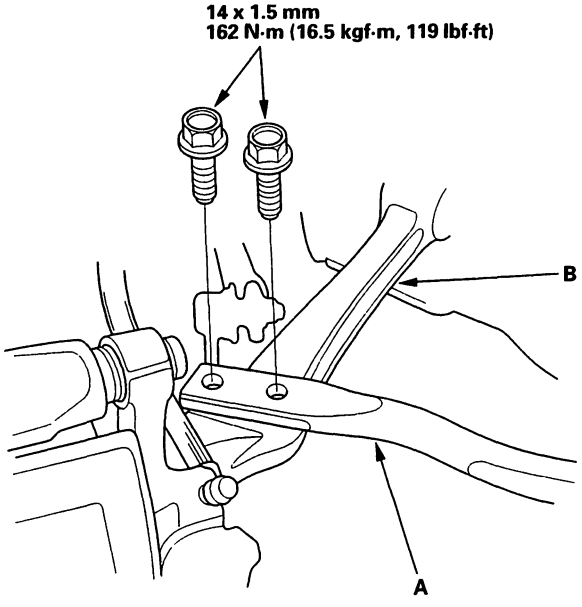

BACK

15. Install the engine stiffener.

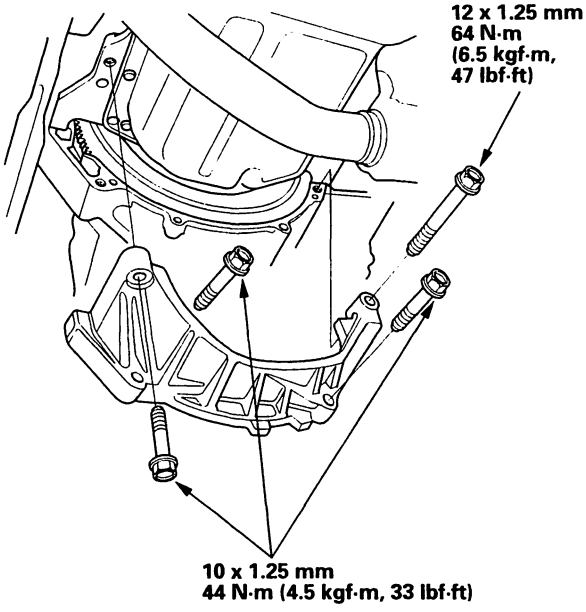

16. Install the intake manifold bracket.

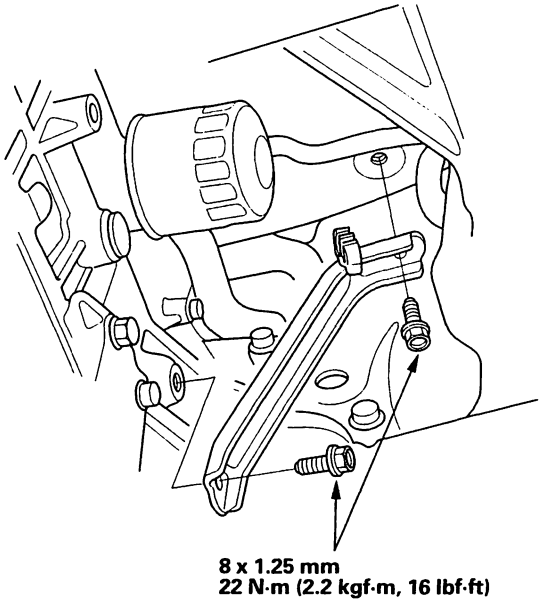

17. Install the intermediate shaft (see page 16-26).

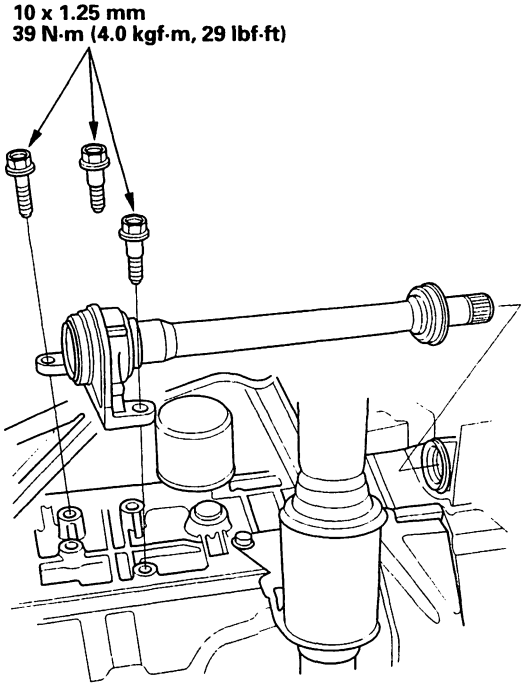

18. Install the driveshafts with new set rings (see page 16-20).

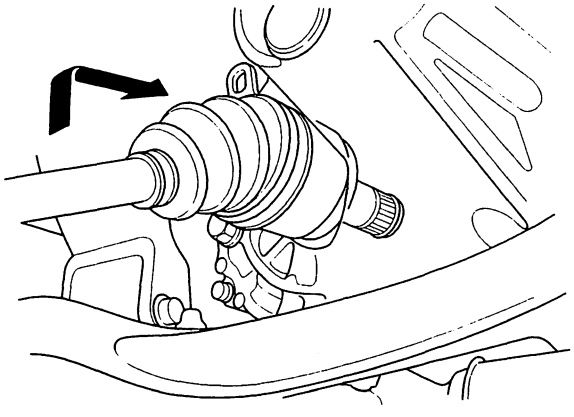

(cont'd)

Transmission Installation (cont'd)

19. Install the damper forks (A) with new locknuts (B).

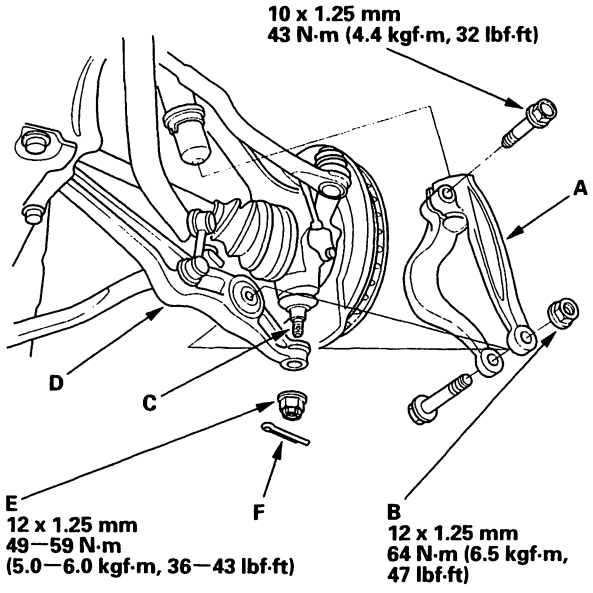

20. Install the ball joints (C) onto the lower arms (D), and install the castle nuts (E) and cotter pins (F).

21. Install the splash shield.

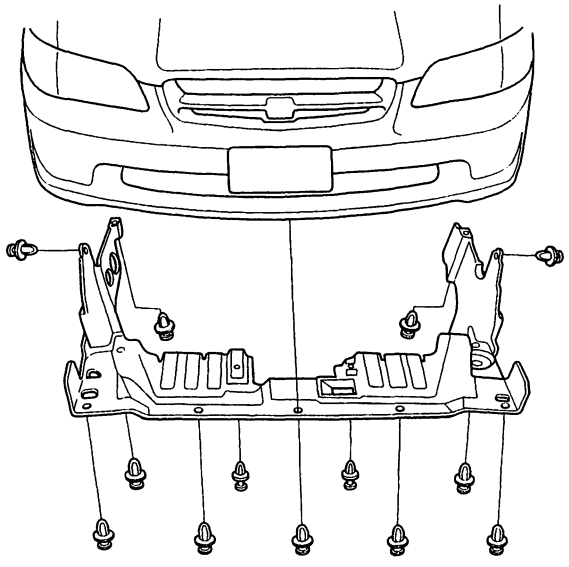

22. Install the washer (A) and the front engine mount bracket mounting bolts (B).

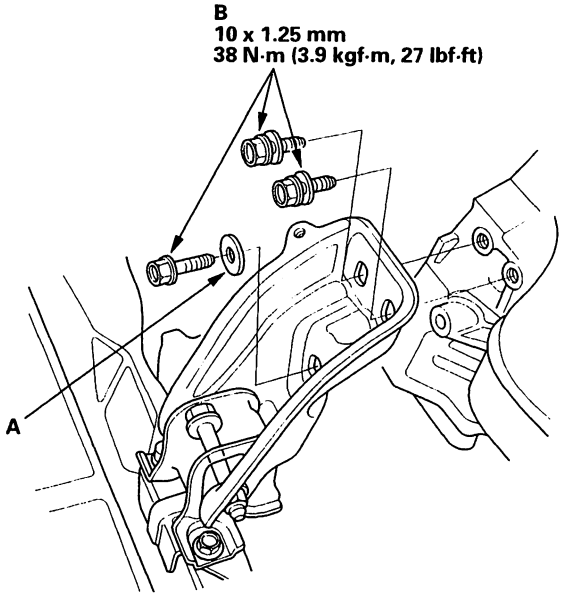

23. Install the engine wire harness (A) and two upper transmission mounting bolts (B).

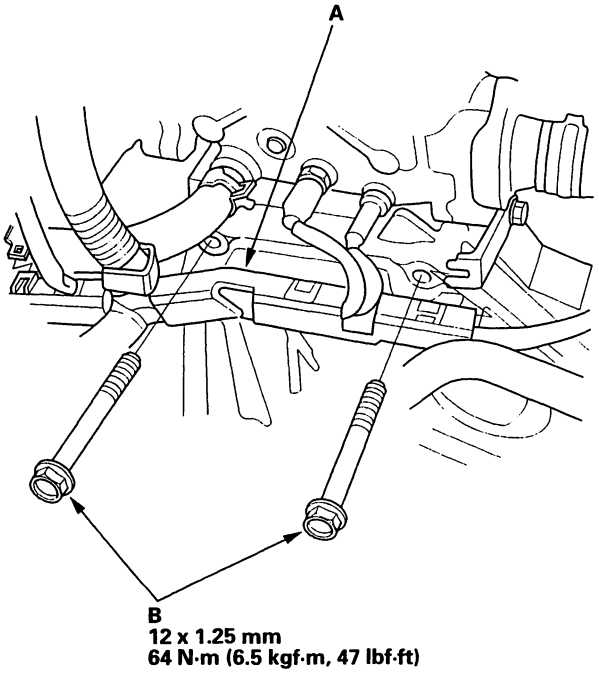

BACK

24. Install the rear engine mount bracket brace.

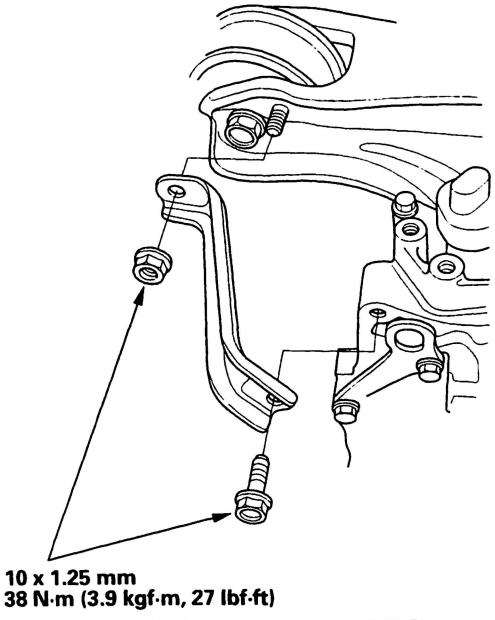

25. Connect the vehicle speed sensor (VSS) connector.

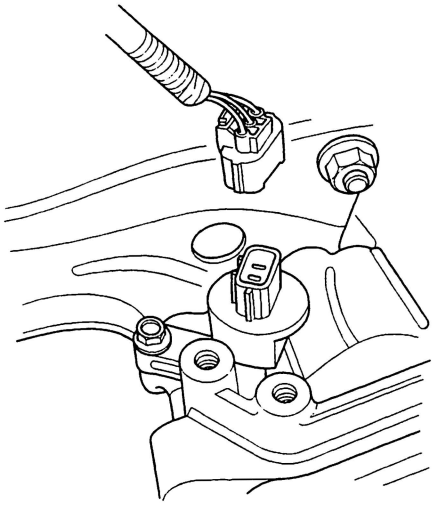

26. Install the cable bracket (A) and cables (B). Turn the shift lever boot (C) so the hole is facing down.

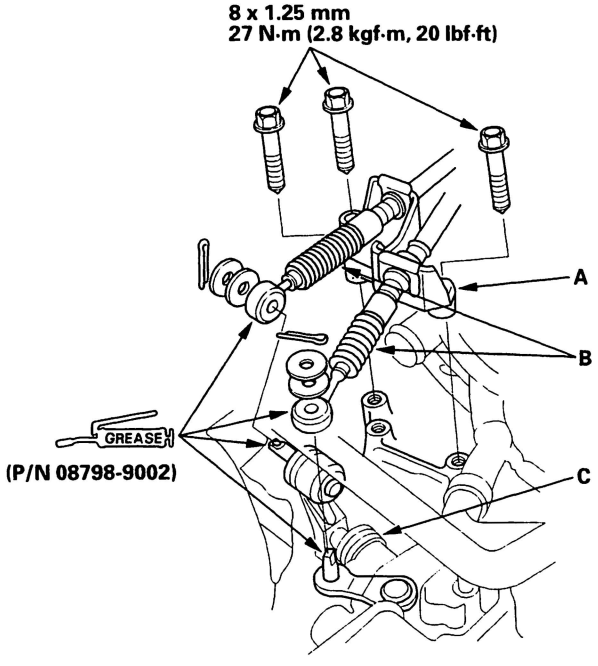

27. Install the transmission ground cable (A) and starter cable clamp (B).

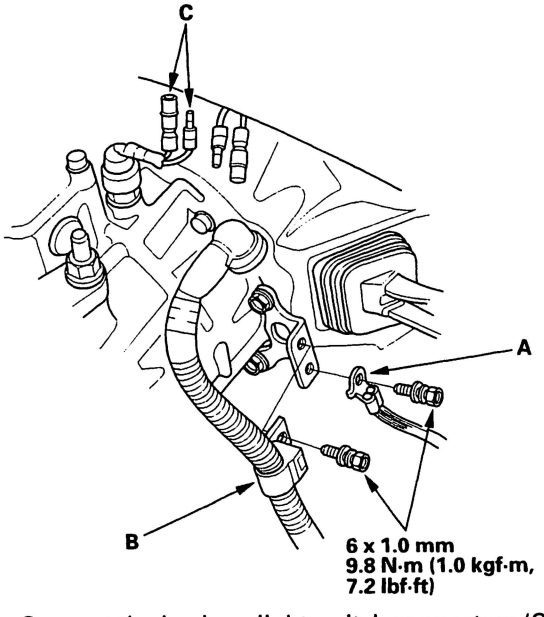

28. Connect the back-up light switch connectors (C).

(cont'd)

Transmission Installation (cont'd)

29. Install the starter motor (A), then connect the starter cables (B). Make sure that the crimped side of the ring terminal is facing out.

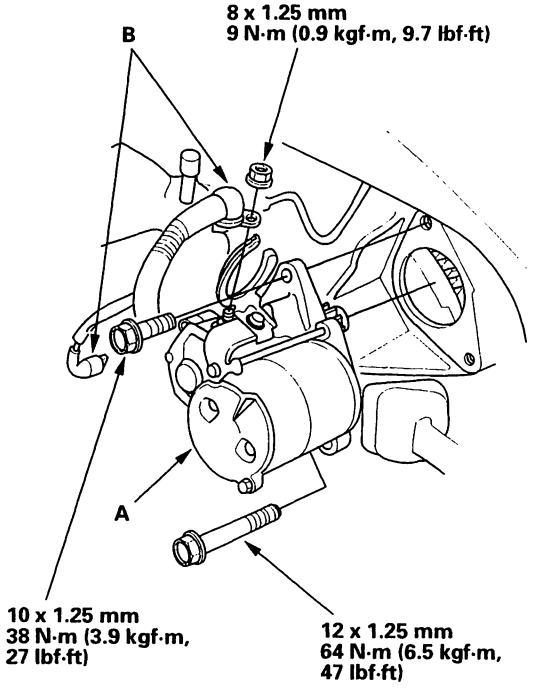

30. Apply Super High Temp Urea Grease (P/N 08798-9002) to the end of the slave cylinder rod. Install the slave cylinder (A) and clutch line clamp (B). Take care not to bend the clutch line.

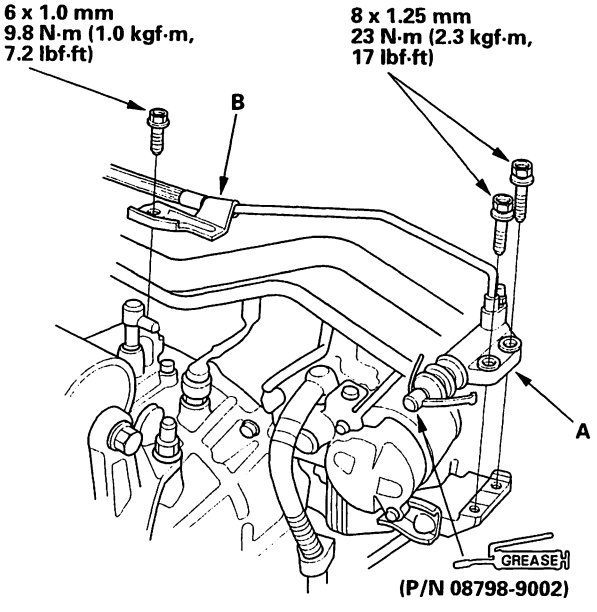

31. Install the engine wire harness clamp.

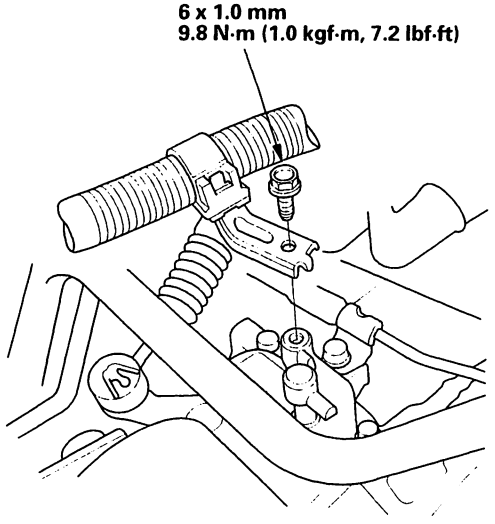

32. Install the battery bracket.

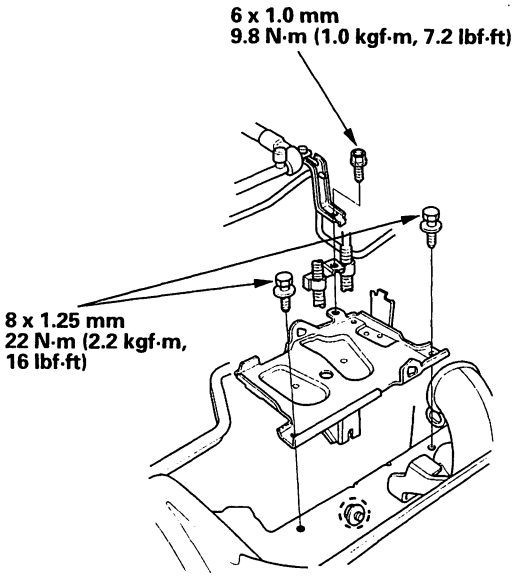

BACK

33. Install the intake air duct (A) and air cleaner housing (B).

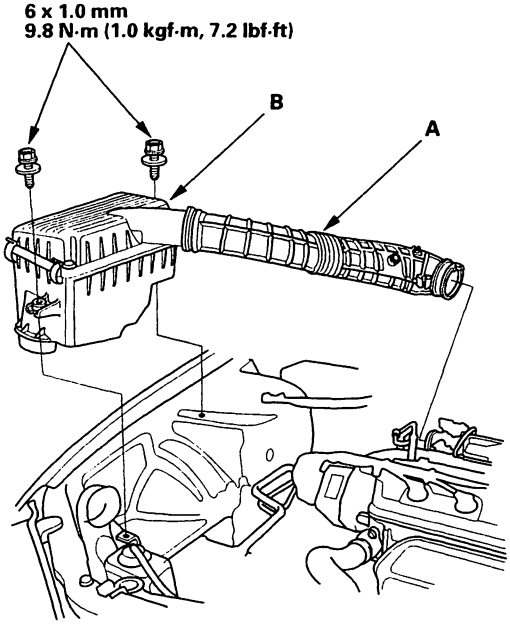

34. Turn the breather cap so that the "F" mark points toward the front of the vehicle.

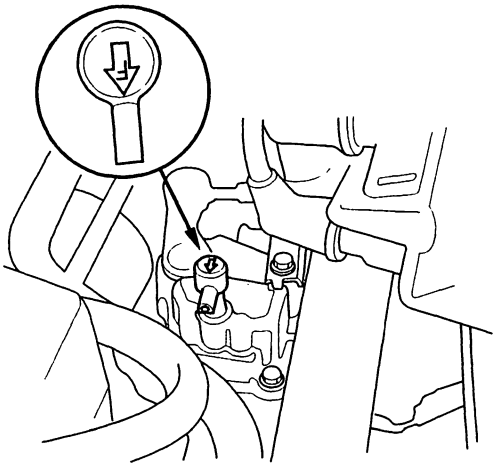

35. Install the battery. Connect the positive (+) cable first, then the negative (−) cable to the battery.

36. Refill the transmission fluid (see page 13-3).

37. Test drive the vehicle.

38. Check the clutch operation.

39. Check the transmission for noise and smooth operation.

40. Check the front wheel alignment (see page 18-5).

41. Loosen the three mounting bolts on the front engine mount bracket, then retorque them to 38 N·m (3.9 kgf·m, 27 lb·ft).Make sure the bushings are not twisted or offset.

42. Enter the anti-theft code for the radio, then enter the customer's radio station presets.

BACK

Shift Arm Replacement

Exploded View

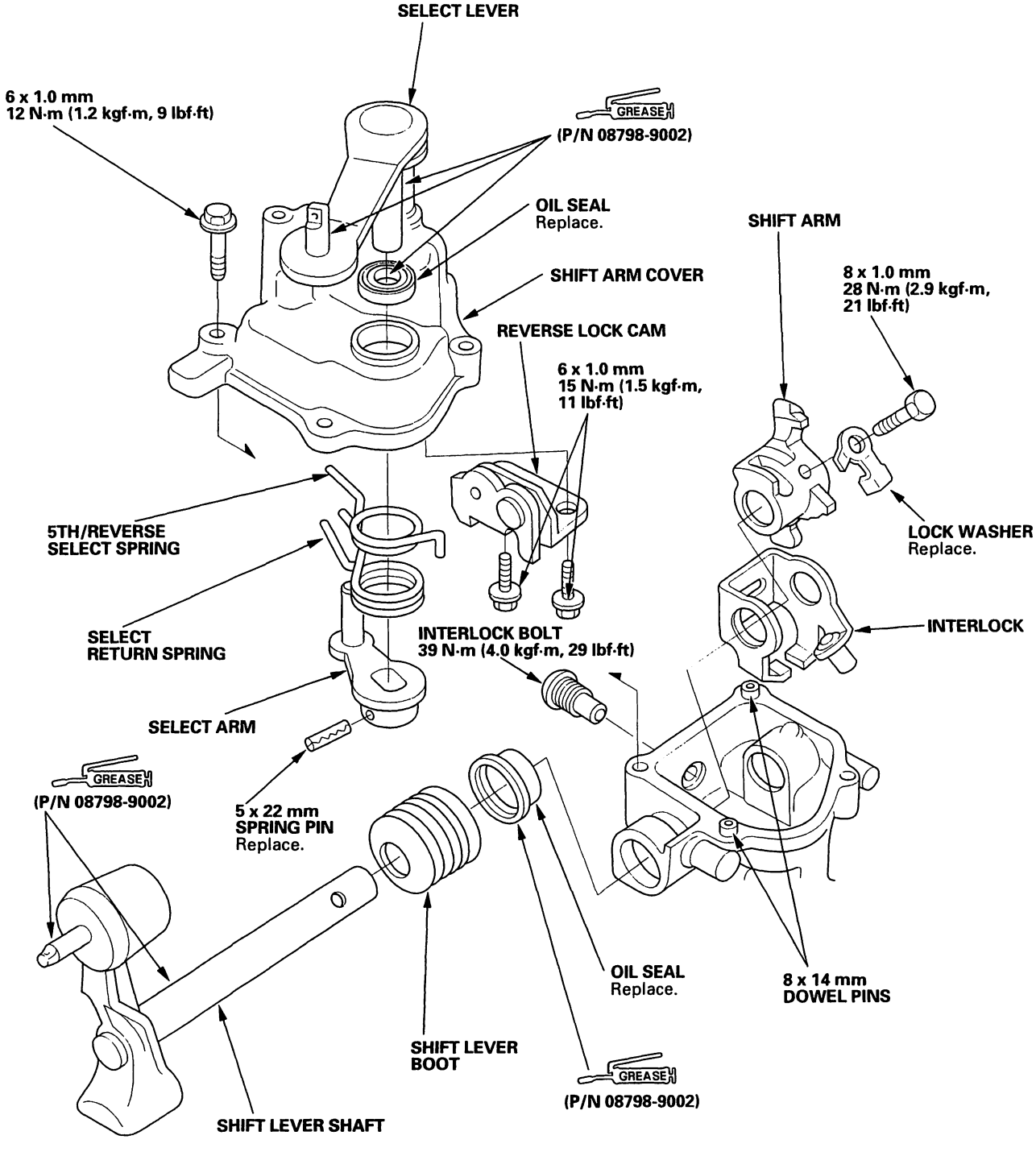

BACK

NOTE: The shift arm cover can be removed and installed with the transmission in the vehicle.

1. With the transmission installed, remove the shift arm cover assembly (A).

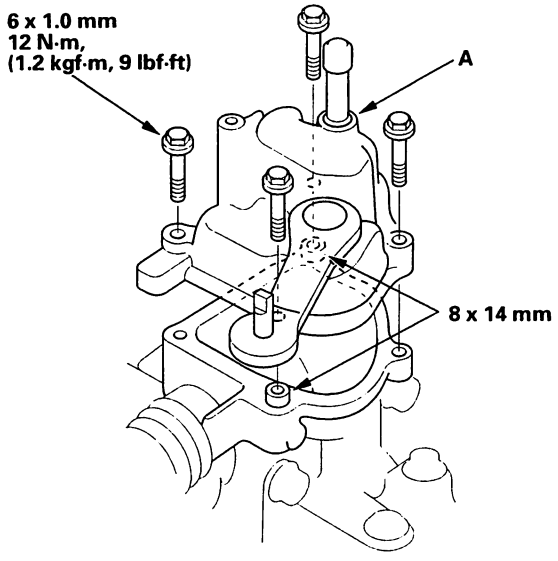

2. Remove the spring pin (A), then remove the select lever (B), select arm (C) and springs (D).

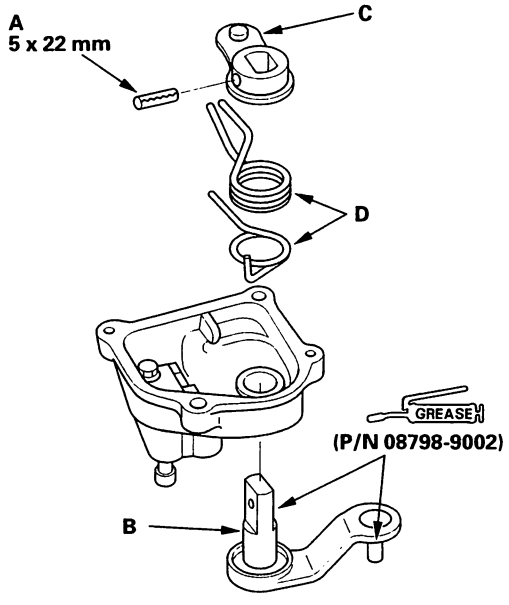

3. Remove the reverse lock cam (A) from the shift arm cover (B).

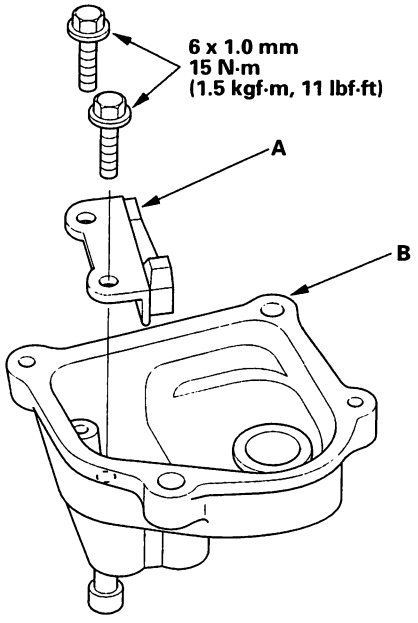

4. Remove the oil seal (A) from the shift arm cover (B).

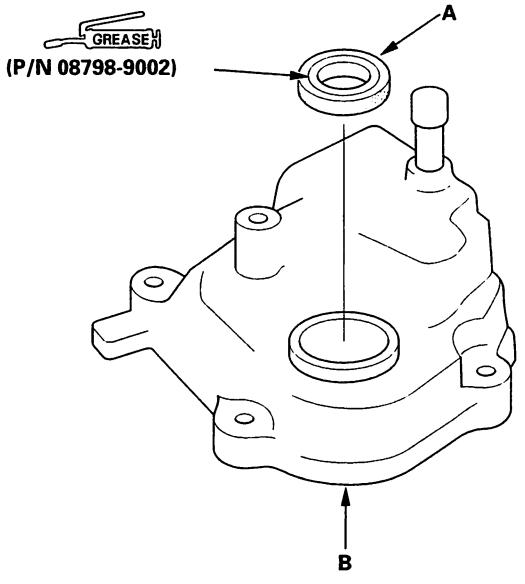

(cont'd)

Shift Arm Replacement (cont'd)

5. Bend the tab of the lock washer (A), then remove the bolt (B).

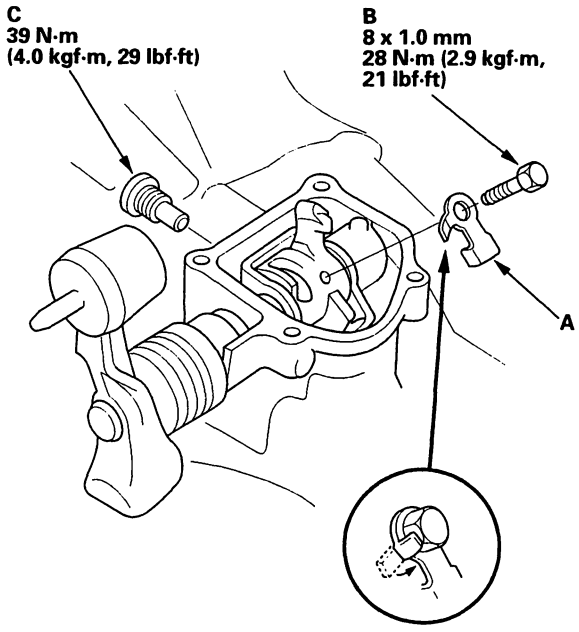

6. Remove the interlock bolt (C).

7. Remove the shift lever shaft (A), shift arm (B), and interlock (C).

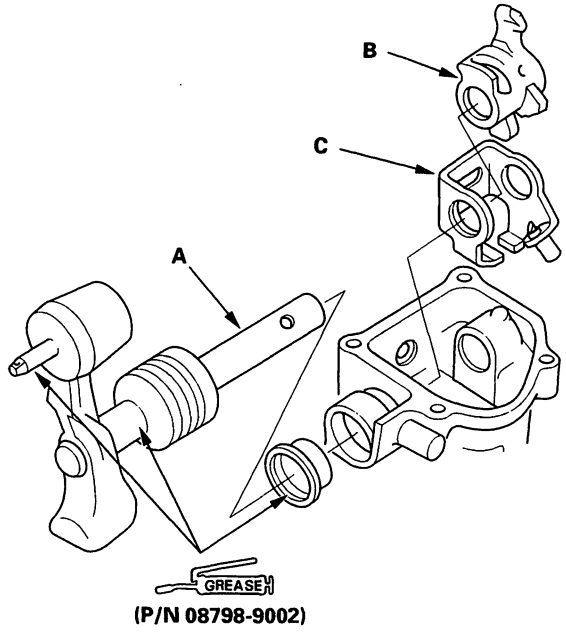

8. Install the shift arm assembly in the reverse order of removal, and note these items.

- During reassembly, grease all sliding parts.
- Use only Super High Temp Urea Grease (P/N 08798-9002).
- Apply liquid gasket (P/N 08718-0001) to the interlock bolt threads before reassembly.
- Turn the shift lever boot so the hole is facing down.
- Use liquid gasket (P/N 08718-0001).
- Remove the dirty oil from the sealing surface.
- Seal the entire circumference of the bolt holes to prevent oil leakage.
- If 20 minutes have passed after applying liquid gasket, reapply it and assemble the housings. Allow it to cure at least 20 minutes after assembly before filling the transmission with oil.

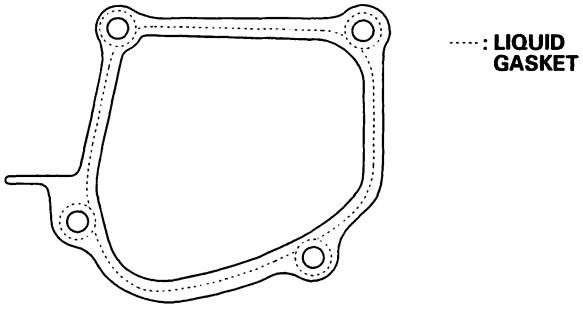

BACK

Transmission Disassembly

Exploded View – Gears, Shafts and Clutch Housing

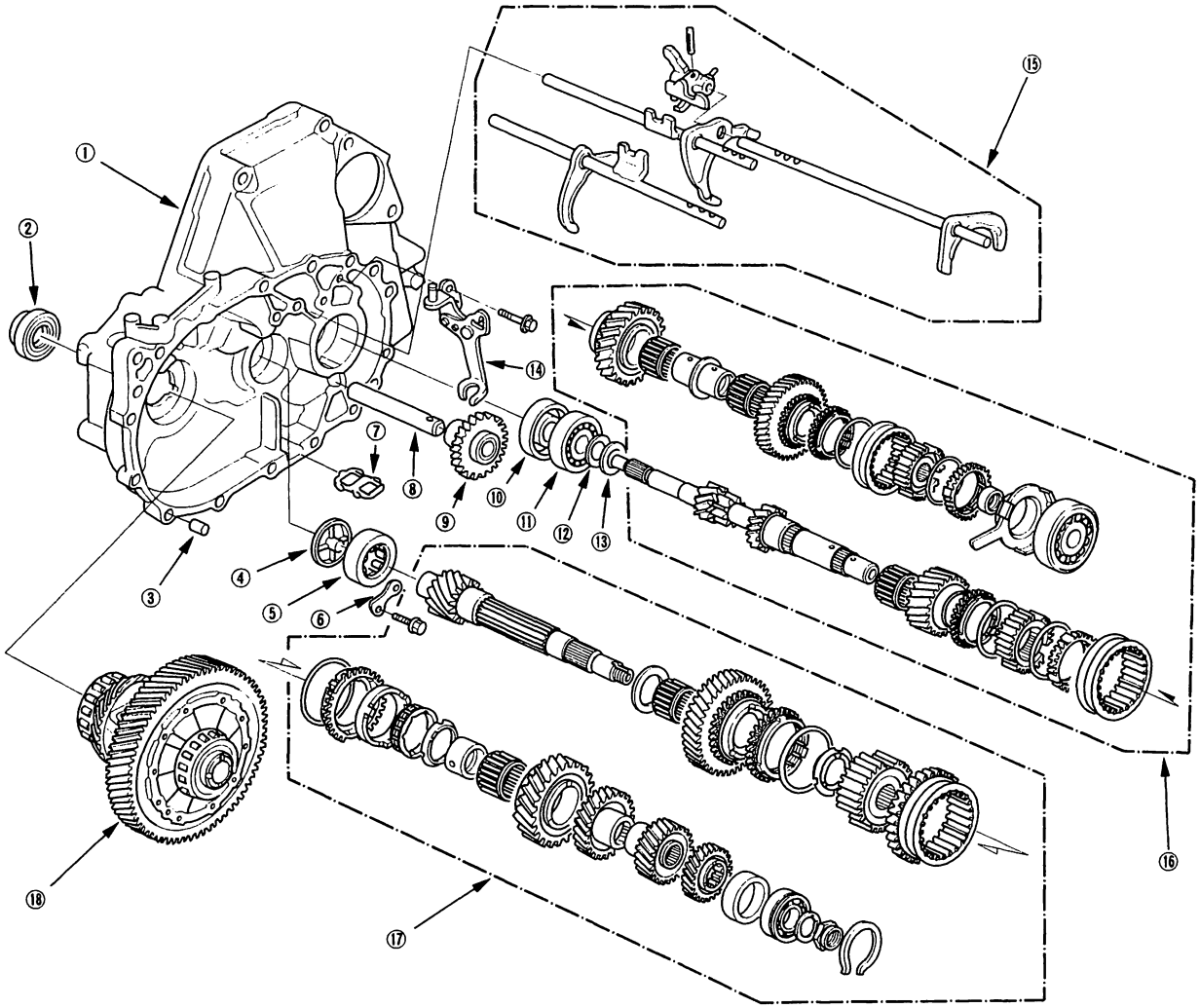

① CLUTCH HOUSING
② OIL SEAL
③ 14 x 20 mm DOWEL PIN
④ OIL GUIDE PLATE
⑤ NEEDLE BEARING
⑥ RETAINING PLATE
⑦ MAGNET
⑧ REVERSE IDLER GEAR SHAFT
⑨ REVERSE IDLER GEAR
⑩ OIL SEAL
⑪ BALL BEARING
⑫ SPRING WASHER
⑬ WASHER
⑭ REVERSE SHIFT FORK
⑮ SHIFT FORK ASSEMBLY
⑯ MAINSHAFT ASSEMBLY
⑰ COUNTERSHAFT ASSEMBLY
⑱ DIFFERENTIAL ASSEMBLY

(cont'd)

BACK

Transmission Disassembly (cont'd)

Exploded View—Transmission Housing

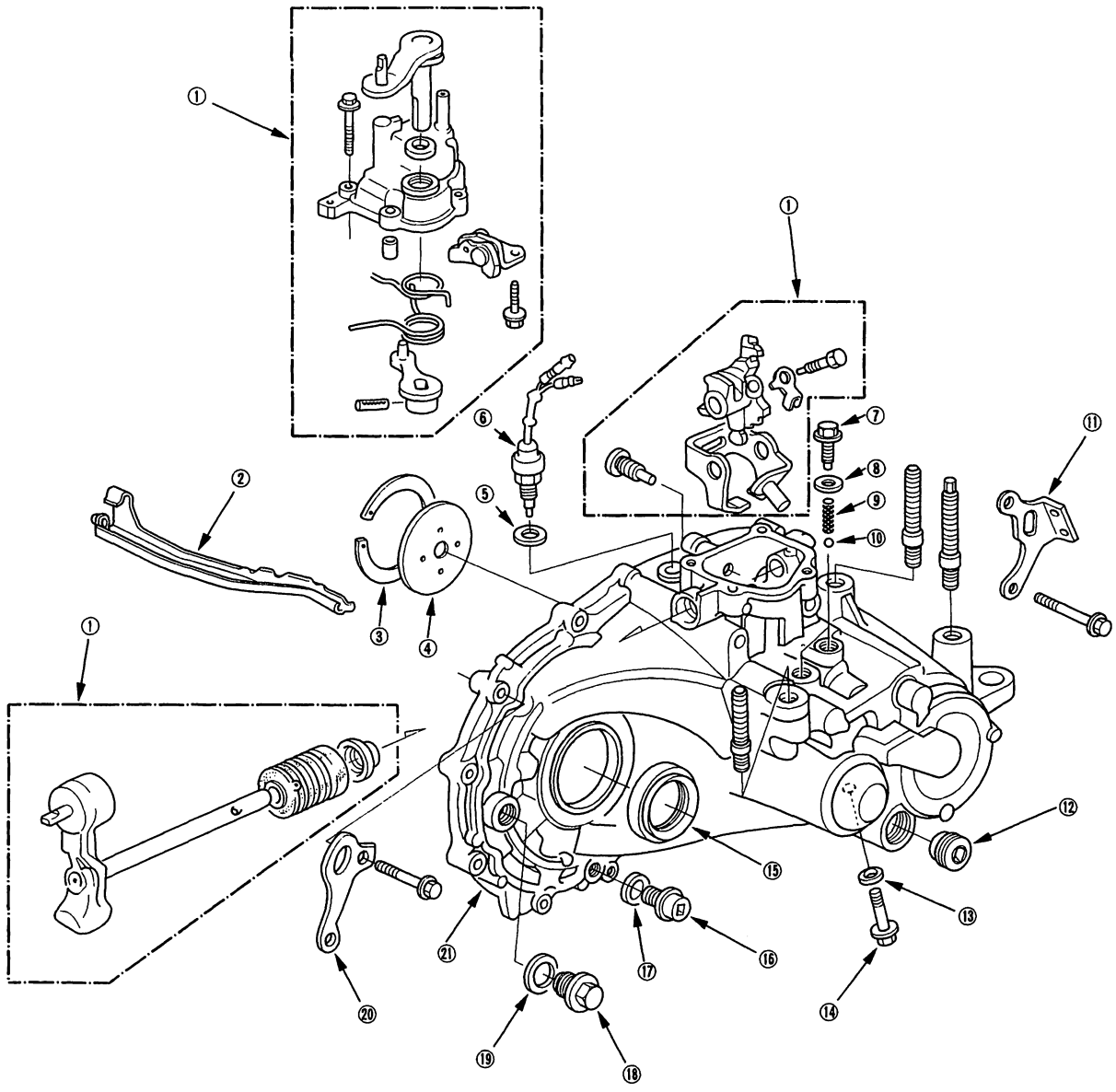

① SHIFT ARM ASSEMBLY
② OIL GUTTER PLATE
③ 78 mm SHIM
④ OIL GUIDE PLATE
⑤ WASHER
Replace.
⑥ BACK-UP LIGHT SWITCH
⑦ SET SCREW
⑧ WASHER
Replace.
⑨ SPRING L. 26 mm (1.02 in.)
⑩ STEEL BALL O.D. 5/16 in.
⑪ FRONT TRANSMISSION HANGER
⑫ 32 mm SEALING BOLT
⑬ WASHER
Replace.
⑭ REVERSE IDLER GEAR SHAFT BOLT
⑮ OIL SEAL
⑯ DRAIN PLUG
⑰ WASHER
Replace.
⑱ OIL FILLER PLUG
⑲ WASHER
Replace.
⑳ REAR TRANSMISSION HANGER
㉑ TRANSMISSION HOUSING

BACK

Note the following during disassembly:

- If the transmission housing or clutch housing are replaced, the bearing preload must be adjusted.
- Place the clutch housing on two pieces of wood thick enough to keep the mainshaft from hitting the workbench.

1. Remove the shift arm cover assembly (see page 13-18).

2. Remove the reverse idler gear shaft bolt (A).

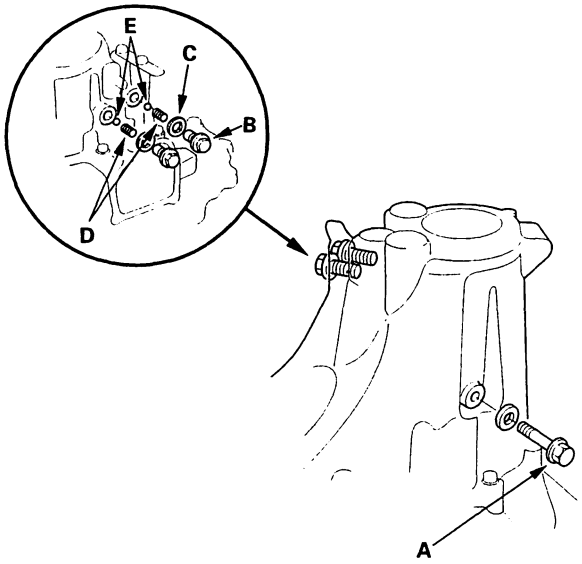

3. Remove the setting screws (B), then remove the washers (C), springs (D), and steel balls (E).

4. Remove the back-up light switch (A).

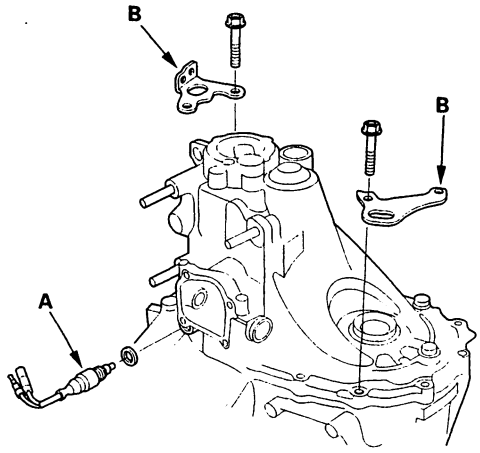

5. Remove the bolts and transmission hangers (B) in a crisscross pattern in several steps.

6. Remove the 32 mm sealing bolt (A).

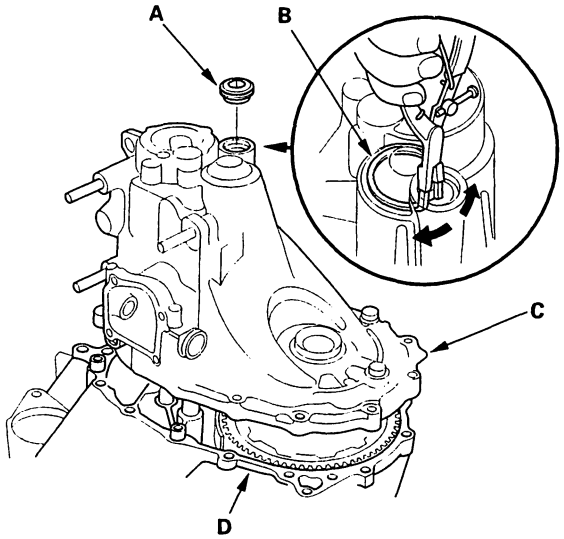

7. Expand the snap ring (B) on the countershaft ball bearing, and remove it from the groove using a pair of snap ring pliers.

8. Separate the transmission housing (C) from the clutch housing (D), and wipe it clean of the sealant.

9. Remove the 78 mm shim (A) and oil guide plate (B), then remove the oil gutter plate (C).

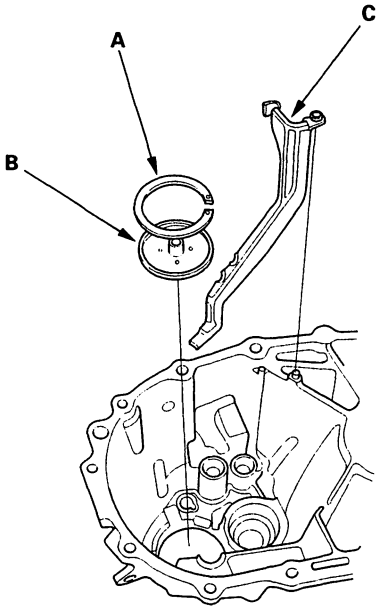

(cont'd)

Transmission Disassembly (cont'd)

10. Remove the reverse shift fork (A). Be careful not to lose the steel ball (B).

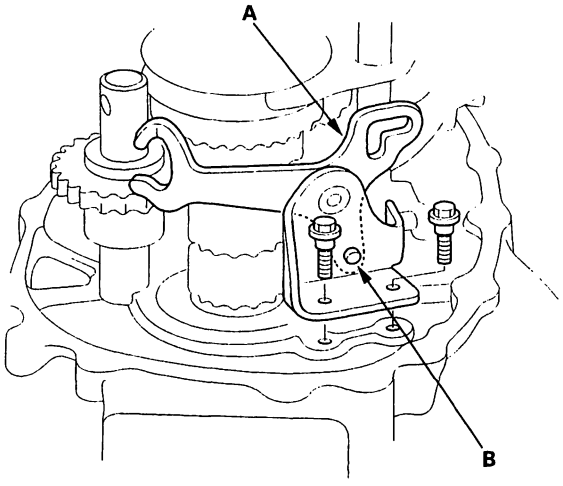

11. Remove the reverse idler gear shaft (A) and the reverse idler gear (B).

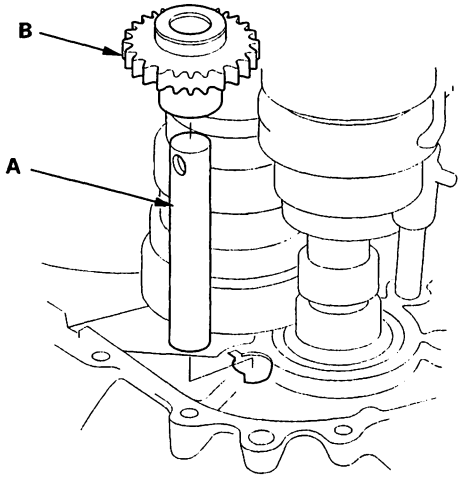

12. Tape the mainshaft splines, then remove the mainshaft assembly (A) and countershaft assembly (B) with the shift forks (C) from the clutch housing (D).

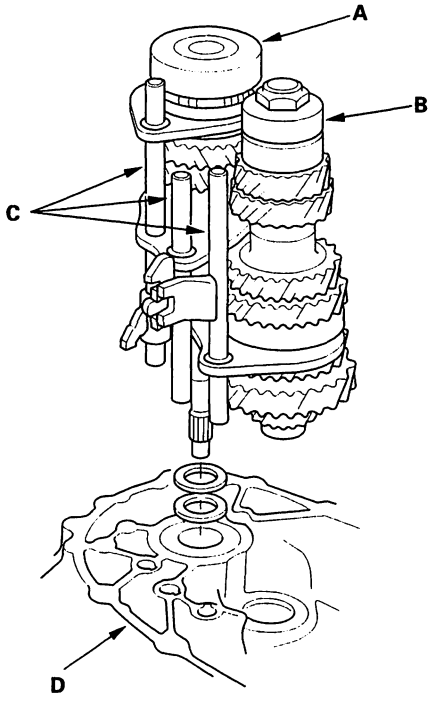

13. Remove the differential assembly.

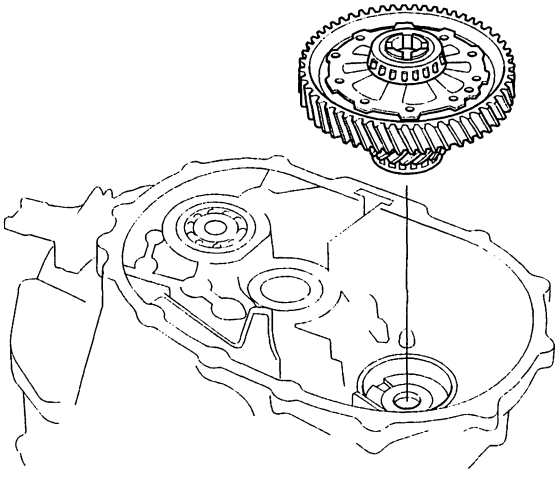

BACK

Reverse Shift Fork Clearance Inspection

1. Measure the clearances between the reverse shift fork (A) and 5th/reverse shift piece pin (B).

   - If the clearance are more than the service limit, go to step 2.
   - If the clearance are within the service limits, go to step 3.

   Standard: ①: **0.05 – 0.35 mm (0.002 – 0.014 in.)**
   ②: **0.4 – 0.8 mm (0.02 – 0.03 in.)**
   Service Limit: ①: **0.5 mm (0.02 in.)**
   ②: **1.0 mm (0.04 in.)**

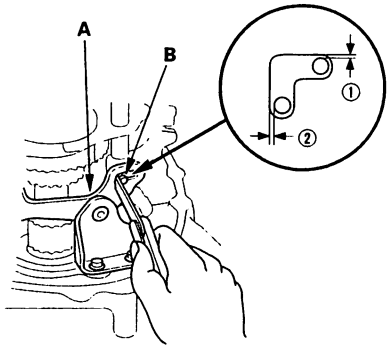

2. Measure the widths of the groove in the reverse shift fork (A).

   - If the widths of the grooves are not within the standard, replace the reverse shift fork with a new one.
   - If the widths of the grooves are within the standard, replace the 5th/reverse shift piece with a new one.

   Standard: ①: **7.05 – 7.25 mm (0.278 – 0.285 in.)**
   ②: **7.4 – 7.7 mm (0.29 – 0.30 in.)**

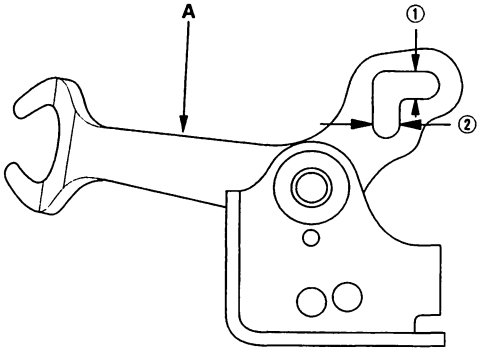

3. Measure the clearance between the reverse idler gear (A) and reverse shift fork (B). If the clearance is more than the service limit, go to step 4.

   Standard: **0.5 – 1.1 mm (0.02 – 0.04 in.)**
   Service Limit: **1.8 mm (0.07 in.)**

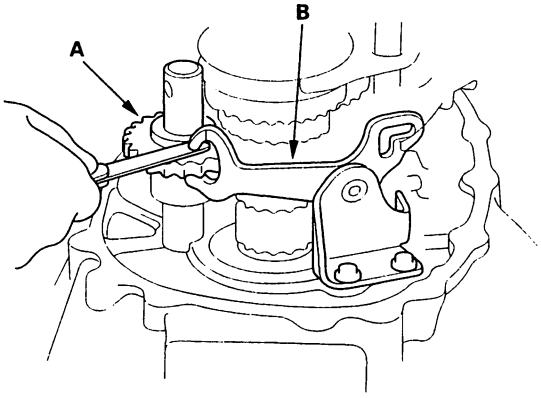

4. Measure the width of the reverse shift fork (A).

   - If the width is not within the standard, replace the reverse shift fork with a new one.
   - If the width is within the standard, replace the reverse idler gear with a new one.

   Standard: 13.0 – 13.3 mm (0.51 – 0.52 in.)

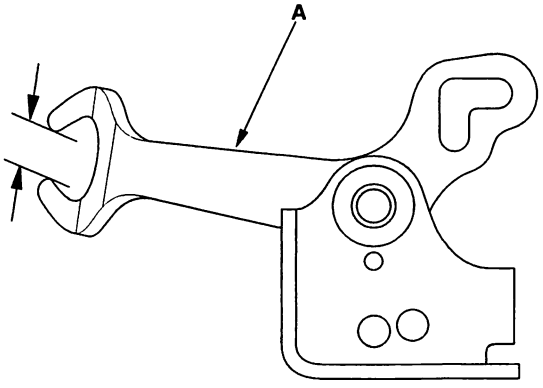

Mainshaft Assembly Clearance Inspection

NOTE: If replacement is required, always replace the synchro sleeve and hub as a set.

1. Support the bearing inner race with a socket (A), and push down on the mainshaft (B).

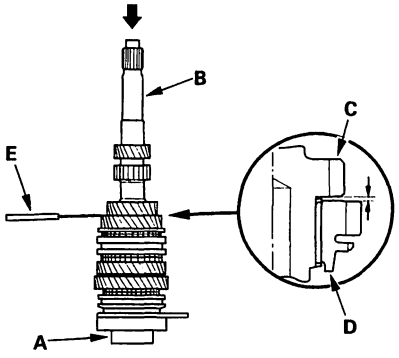

2. Measure the clearance between 2nd (C) and 3rd (D) gears with a feeler gauge (E).

   - If the clearance is more than the service limit, go to step 3.
   - If the clearance is within the service limit, go to step 4.

Standard:	**0.06 – 0.21 mm (0.002 – 0.008 in.)**
Service Limit:	**0.3 mm (0.01 in.)**

3. Measure the thickness of 3rd gear (A).

   - If the thickness of 3rd gear is less than the service limit, replace 3rd gear with a new one.
   - If the thickness of 3rd gear is within the service limit, replace the 3rd/4th synchro hub with a new one.

Standard:	**32.42 – 32.47 mm (1.276 – 1.278 in.)**
Service Limit:	**32.3 mm (1.27 in.)**

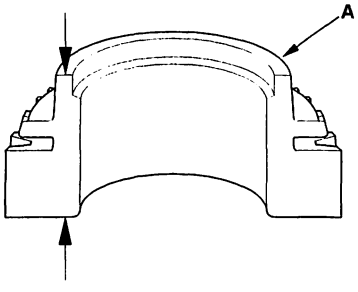

4. Measure the clearance between 4th gear (A) and the spacer collar (B) with a dial indicator (C). If the clearance is more than the service limit, go to step 5.

Standard:	**0.06 – 0.21 mm (0.002 – 0.008 in.)**
Service Limit:	**0.3 mm (0.01 in.)**

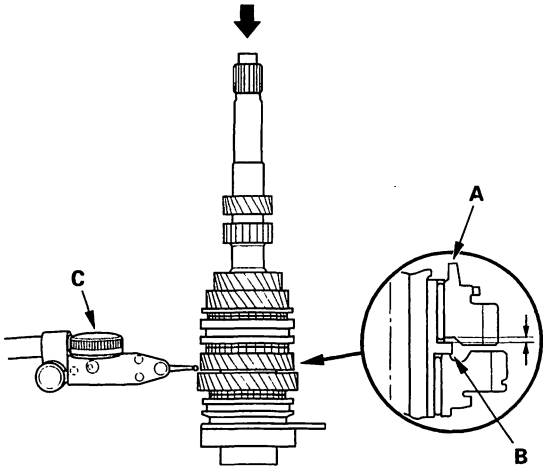

5. Measure distance ① on the spacer collar.

   - If distance ① is less than the service limit, replace the spacer collar with a new one.
   - If distance ① is within the service limit, go to step 6.

Standard:	**26.03 – 26.08 mm (1.025 – 1.027 in.)**
Service Limit:	**26.01 mm (1.024 in.)**

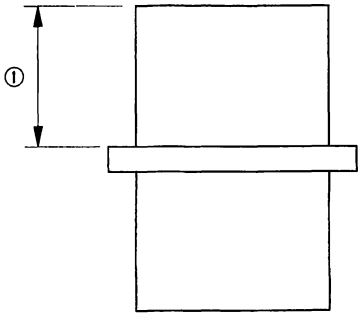

BACK

6. Measure the thickness of 4th gear.

- If the thickness of 4th gear is less than the service limit, replace 4th gear with a new one.
- If the thickness of 4th gear is within the service limit, replace the 3rd/4th synchro hub with a new one.

Standard: **30.92 – 30.97 mm (1.217 – 1.219 in.)**
Service Limit: **30.8 mm (1.21 in.)**

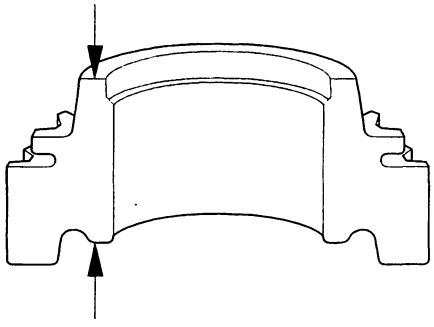

7. Measure the clearance between the spacer collar (A) and 5th gear (B) with a dial indicator (C). If the clearance is more than the service limit, go to step 8.

Standard: **0.06 – 0.21 mm (0.002 – 0.008 in.)**
Service Limit: **0.3 mm (0.01 in.)**

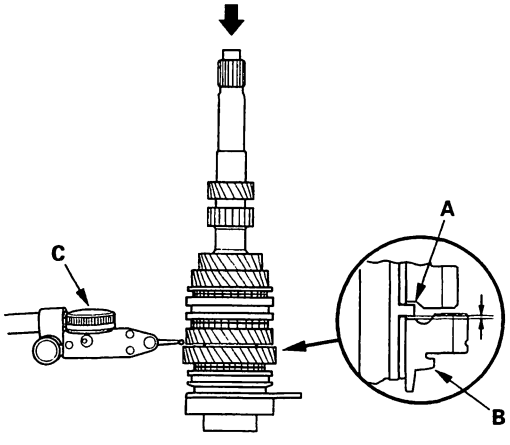

8. Measure distance ② on the spacer collar.

- If distance ② is less than the service limit, replace the spacer collar with a new one.
- If distance ② is within the service limit, go to step 9.

Standard: **26.03 – 26.08 mm (1.025 – 1.027 in.)**
Service Limit: **26.01 mm (1.024 in.)**

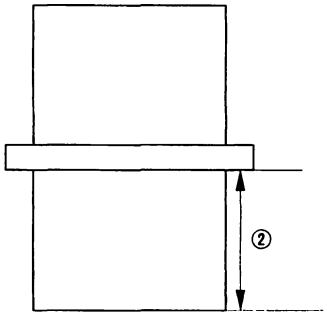

9. Measure the thickness of 5th gear.

- If the thickness of 5th gear is less than the service limit, replace 5th gear with a new one.
- If the thickness of 5th gear is within the service limit, replace the 5th synchro hub with a new one.

Standard: **30.92 – 30.97 mm (1.217 – 1.219 in.)**
Service Limit: **30.8 mm (1.21 in.)**

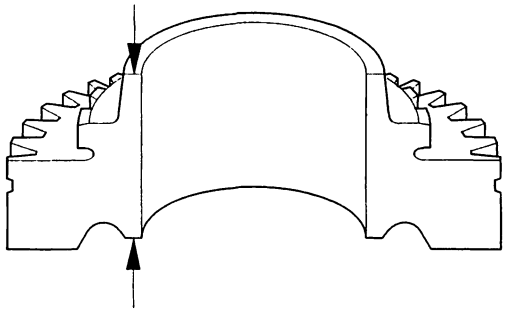

Mainshaft Disassembly

1. Remove the angular ball bearing (A) and the tapered cone ring (B) using a commercially available bearing separator (C) and a commercially available bearing puller (D). Be sure the bearing separator is under the tapered cone ring.

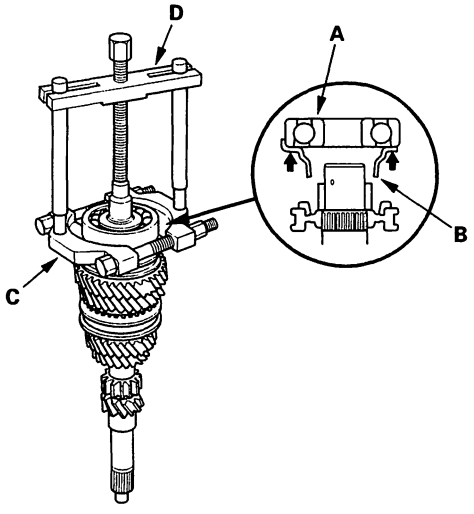

2. Support 5th gear (A) on steel blocks , and press the mainshaft out of the 5th synchro hub (B). Use of a jaw-type puller can cause damage to the gear teeth.

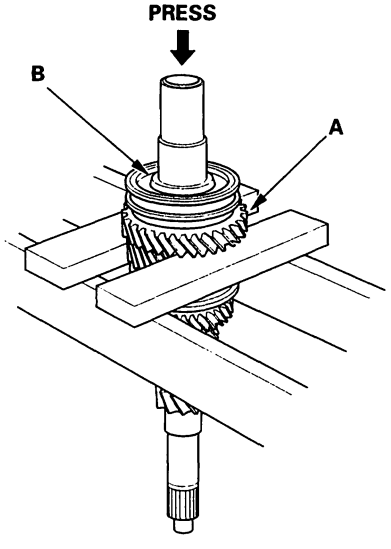

3. Support the 3rd gear (A) on steel blocks , and press the mainshaft out of the 3rd/4th synchro hub (B). Use of a jaw-type puller can cause damage to the gear teeth.

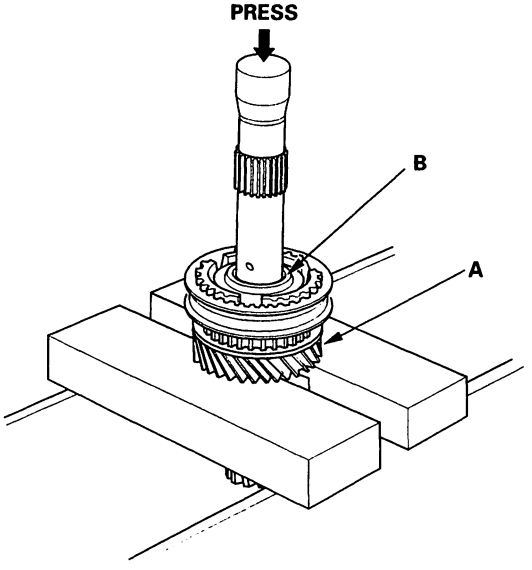

BACK

Mainshaft Inspection

1. Inspect the gear surface and bearing surface for wear and damage, then measure the mainshaft at points A, B, and C. If any part of the mainshaft is less than the service limit, replace it with a new one.

   Standard:
   A (Ball bearing surface): 27.987 – 28.000 mm (1.1018 – 1.1024 in.)
   B (Needle bearing surface): 37.984 – 38.000 mm (1.4954 – 1.4961 in.)
   C (Ball bearing surface): 27.977 – 27.990 mm (1.1015 – 1.1020 in.)
   Service Limit: A: 27.940 mm (1.1000 in.)
   B: 37.930 mm (1.4933 in.)
   C: 27.940 mm (1.1000 in.)

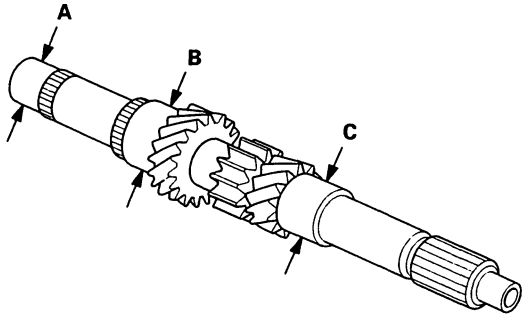

2. Inspect the runout by supporting both ends of the mainshaft. Rotate the mainshaft two complete revolutions when measuring the runout. If the runout is more than the service limit, replace the mainshaft with a new one.

   Standard: 0.02 mm (0.001 in.) max.
   Service Limit: 0.05 mm (0.002 in.)

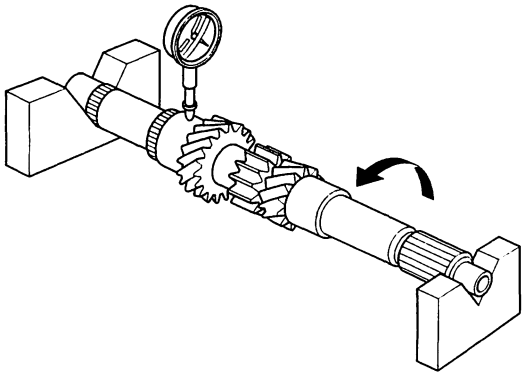

Mainshaft Reassembly

Exploded View

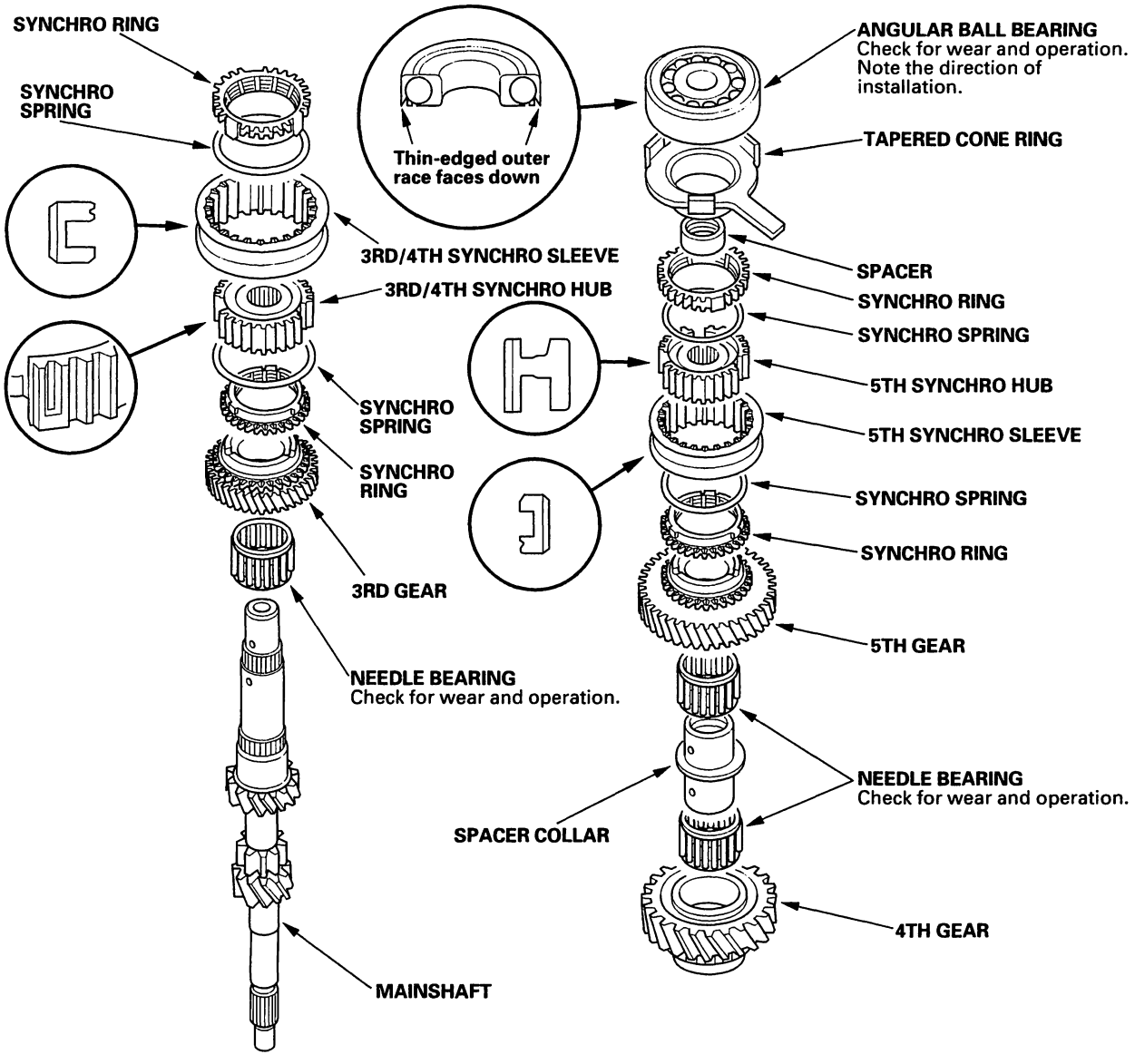

BACK

Special Tools Required
- Driver, 40 mm I.D. 07746-0030100
- Attachment, 35 mm I.D. 07746-0030400
- Driver 07749-0010000
- Attachment, 42 x 47 mm 07746-0010300

NOTE: Refer to the Exploded View, as needed during this procedure.

1. Clean all the parts in solevent, dry them, and apply lubricant to all contact surfaces except the 3rd/4th, and 5th synchro hubs.

2. Install 3rd gear, its bearing, and the 3rd gear synchro ring and synchro spring on the shaft.

3. Support 2nd gear (A) on steel blocks, then install the 3rd/4th synchro hub (B) using the special tools and a press (C). Note the direction of installation for the 3rd/4th synchro hub. After installing, check the operation of the 3rd/4th synchro hub set.

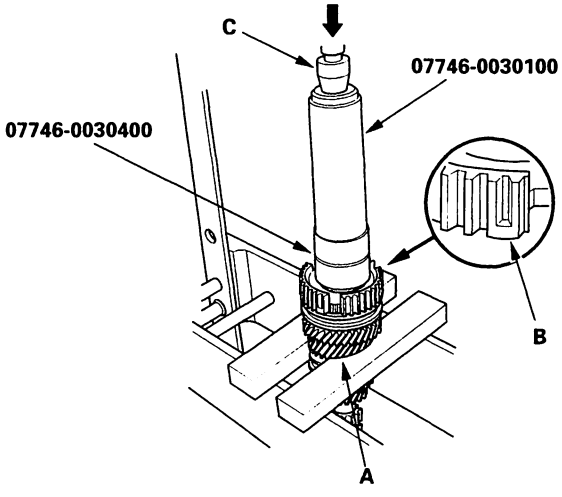

4. Install the 4th gear synchro spring and ring, 4th gear and its bearing, the spacer ring, and 5th gear and its bearing on the shaft.

5. Install the 5th synchro hub (A) using the special tools and a press (B).

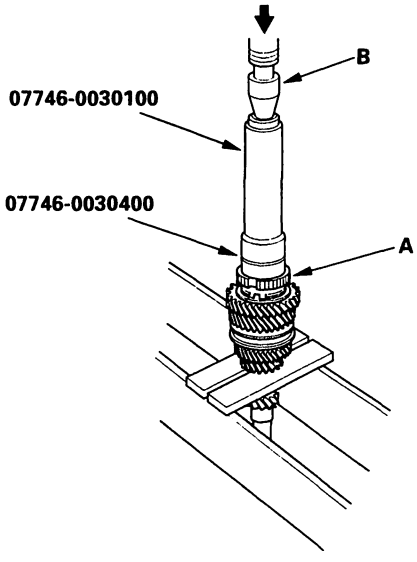

6. Install the spacer and tapered cone ring.

7. Install the angular ball bearing (A) with the thin-edged outer race facing down. Use the special tools and a press (B).

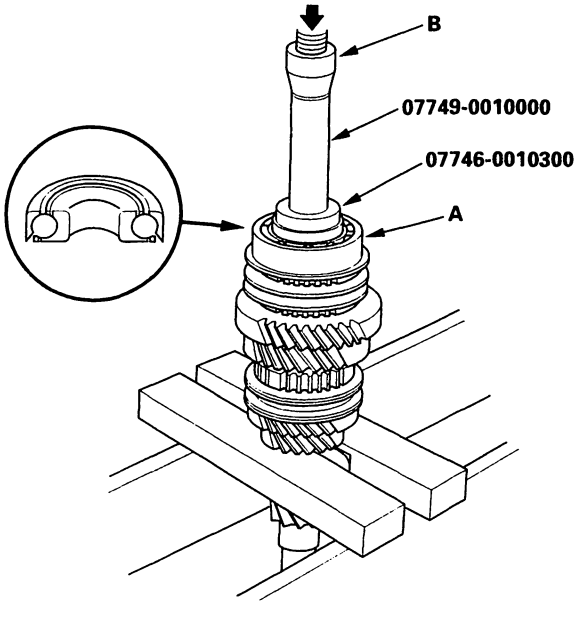

Countershaft Assembly Clearance Inspection

1. Measure the clearance between the 1st gear (A) and the thrust washer (B) with a feeler gauge (C). If the clearance is more than the service limit, go to step 2.

   Standard: 0.06 – 0.23 mm (0.002 – 0.009 in.)
   Service Limit: 0.23 mm (0.009 in.)

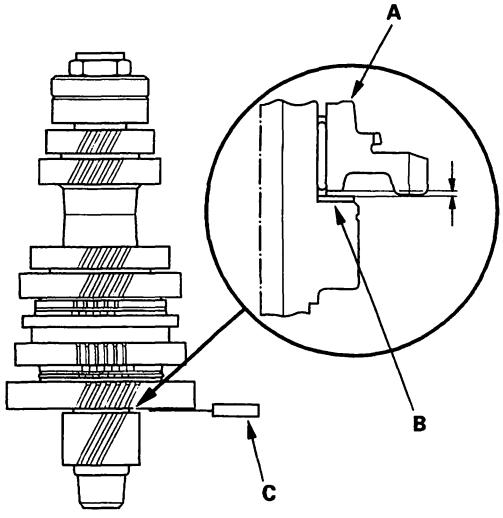

2. Measure the thickness of the thrust washer.

   - If the thickness is less than the standard, replace the thrust washer with a new one.
   - If the thickness is within the standard, go to step 3.

   Standard: 1.95 – 1.97 mm (0.077 – 0.078 in.)

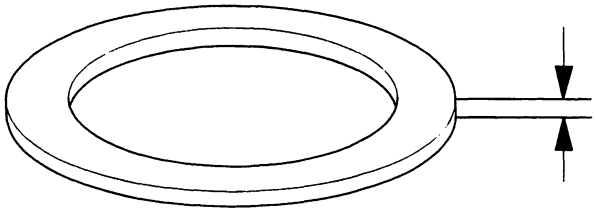

3. Measure the thickness of the 1st gear.

   - If the thickness of 1st gear is less than the standard, replace 1st gear with a new one.
   - If the thickness of 1st gear is within the standard, replace the 1st/2nd synchro hub with a new one.

   Standard: 32.95 – 33.00 mm (1.297 – 1.299 in.)

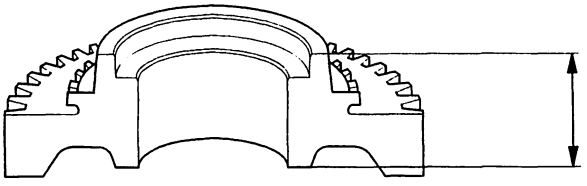

BACK

4. Measure the clearance between the 2nd gear (A) and 3rd gear (B) with a feeler gauge (C). If the clearance is more than the service limit, go to step 5.

Standard: 0.10 – 0.15 mm (0.004 – 0.006 in.)
Service Limit: 0.18 mm (0.007 in.)

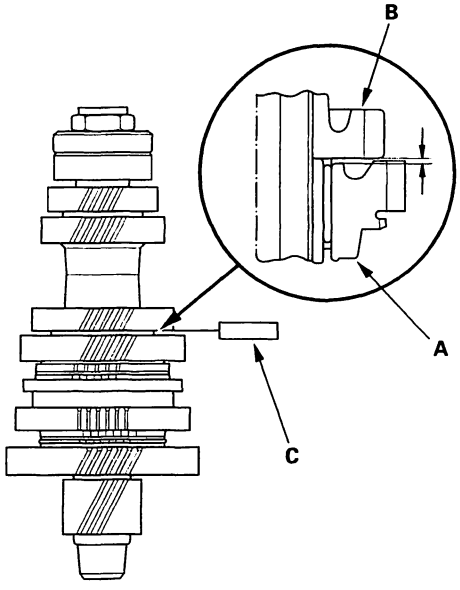

5. Measure the thickness of the spacer.

- If the thickness is less than the standard, replace the spacer with a new one.
- If the thickness is within the standard, go to step 6.

Standard: 29.07 – 29.09 mm (1.144 – 1.145 in.)

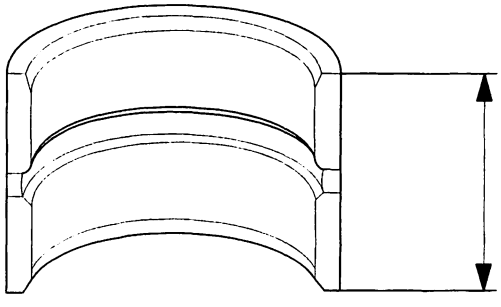

6. Measure the thickness of the 2nd gear.

- If the thickness of 2nd gear is less than the standard, replace 2nd gear with new one.
- If the thickness of 1st gear is within the standard, replace the 1st/2nd synchro hub with a new one.

Standard: 28.92 – 28.97 mm (1.139 – 1.141 in.)

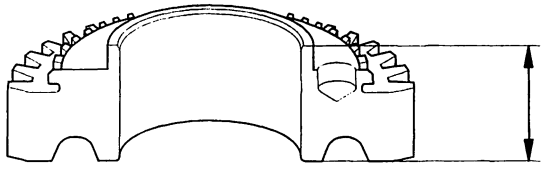

BACK

Countershaft Disassembly

1. Securely clamp the countershaft assembly in a bench vise with wood blocks.

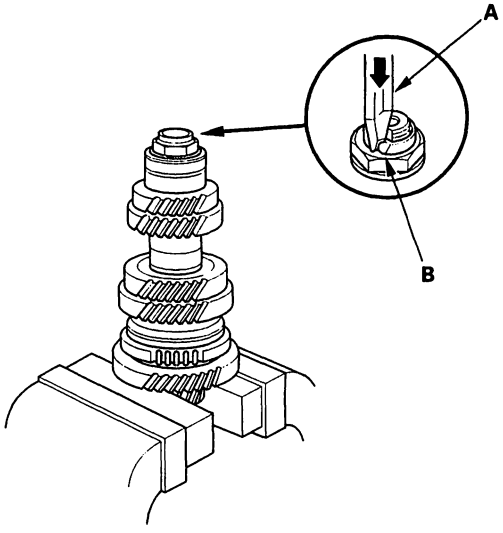

2. Use a chisel (A) to raise the locknut tab (B) from the groove in the countershaft.

3. Remove the locknut (A) and the spring washer (B).

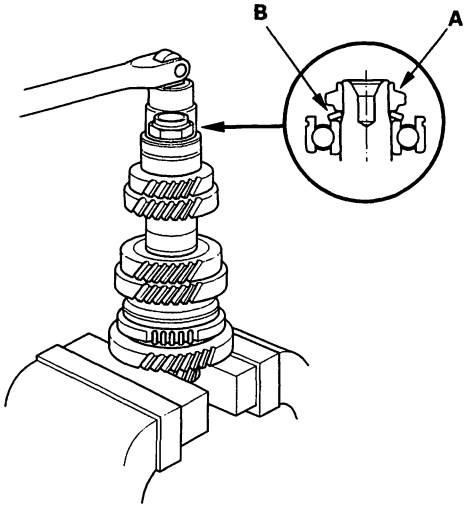

4. Support 4th gear (A) on steel blocks (B), then use a press (C) and an attachment (D) to press the countershaft (E) out of the ball bearing (F).

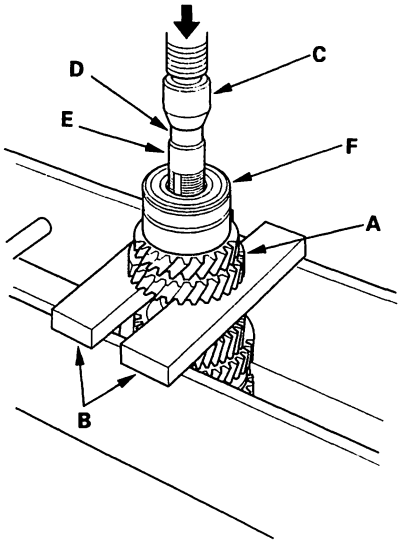

5. Remove the friction damper (A) from the spacer (B) using a press (C) and a socket (D) as shown.

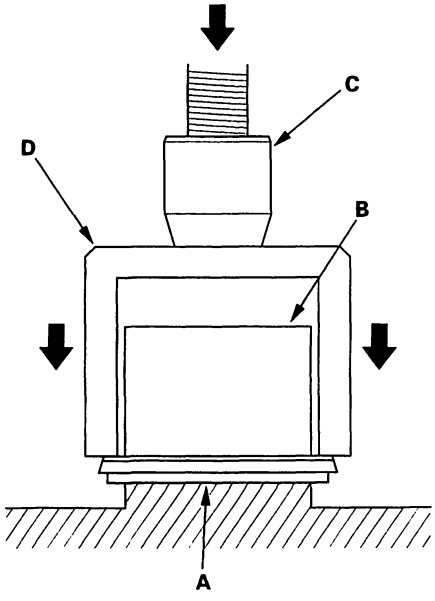

BACK

Countershaft Inspection

1. Inspect the gear surface and bearing surface for wear and damage, then measure the countershaft at points A, B, and C. If any part of the countershaft is less than the service limit, replace it with a new one.

Standard:	**A:**	**38.000 – 38.015 mm (1.4961 – 1.4967 in.)**
	B:	**39.984 – 40.000 mm (1.5742 – 1.5748 in.)**
	C:	**24.987 – 25.000 mm (0.9837 – 0.9843 in.)**
Service Limit:	**A:**	**37.950 mm (1.4941 in.)**
	B:	**39.930 mm (1.5720 in.)**
	C:	**24.940 mm (0.9819 in.)**

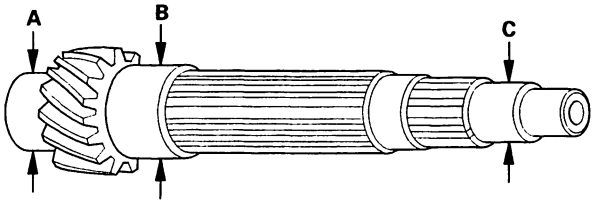

2. Inspect the runout by supporting both ends of the countershaft. Rotate the countershaft two complete revolutions when measuring the runout. If the runout exceeds the service limit, replace the countershaft with a new one.

Standard:	**0.02 mm (0.001 in.) max.**
Service Limit:	**0.05 mm (0.002 in.)**

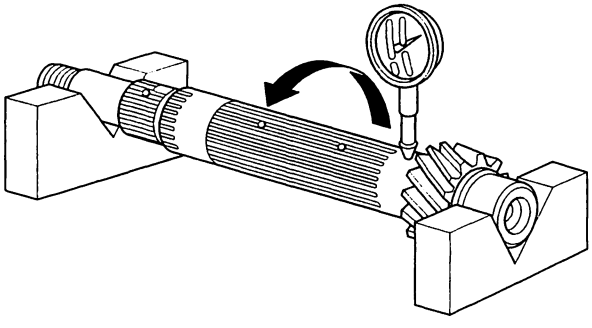

BACK

Countershaft Reassembly

Exploded View

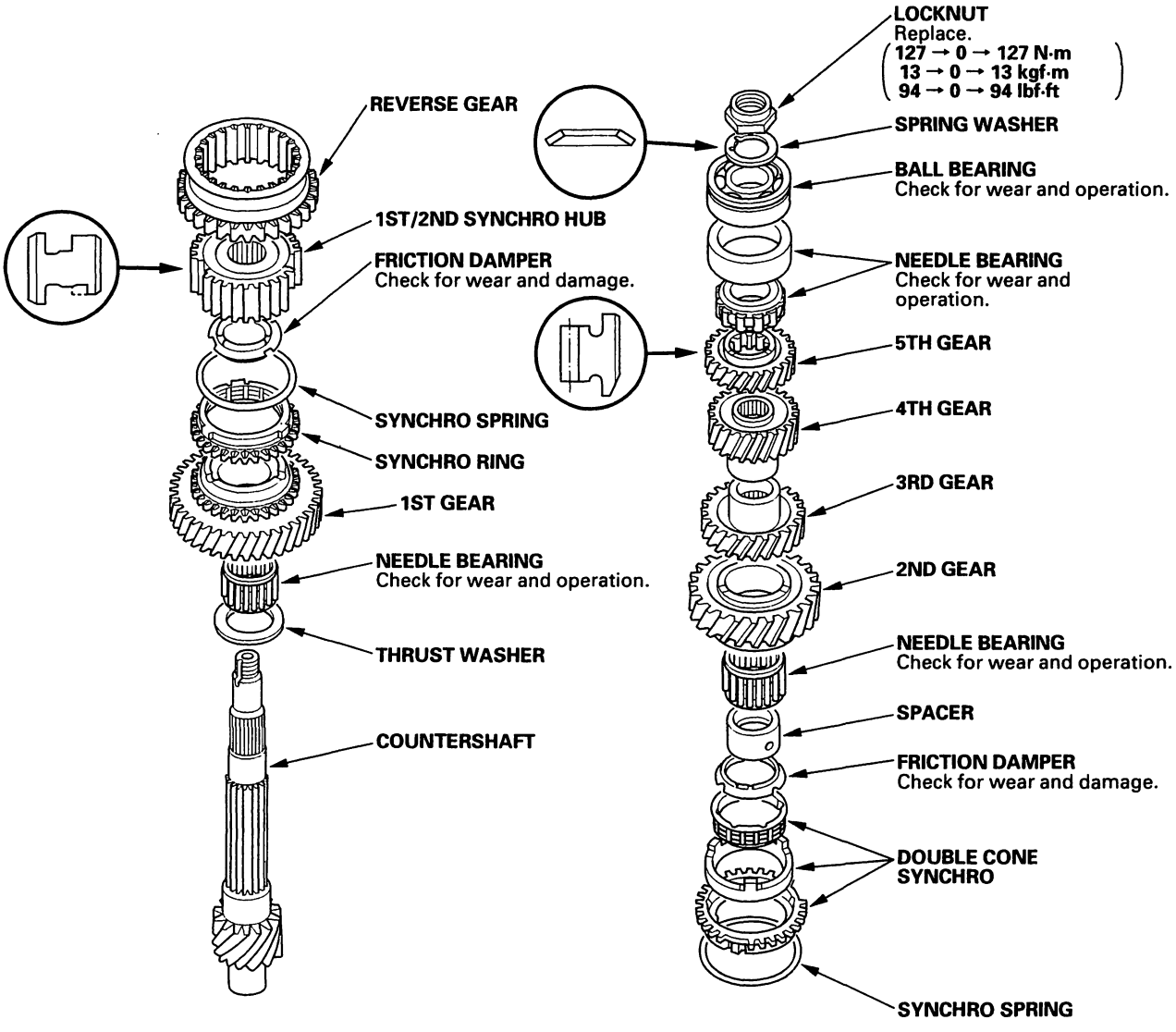

BACK

Special Tools Required
- Driver 07749-0010000
- Attachment, 42 x 47 mm 07746-0010300
- Seal driver 07947-6890100

NOTE: Refer to the Exploded View as needed during this procedure.

1. Clean all the parts in solvent, dry them, and apply lubricant to all contact surfaces.

2. Install the thrust washer (A) and the needle bearing (B) onto the countershaft (C). Assemble the friction damper (D) and 1st gear (E) together and install them on the countershaft, then install the synchro ring (F) and the synchro spring (G).

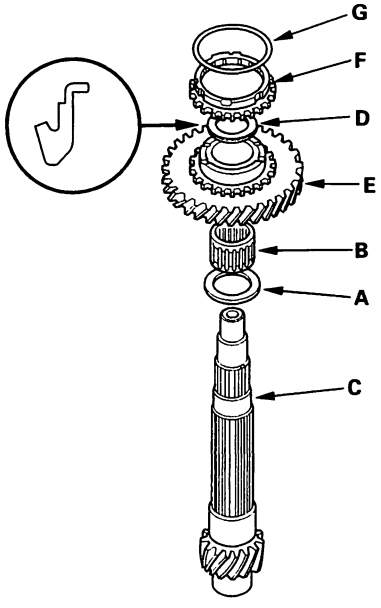

3. Install the 1st/2nd synchro hub (A) by aligning the fingers on the friction damper (B) with 1st/2nd synchro hub grooves.

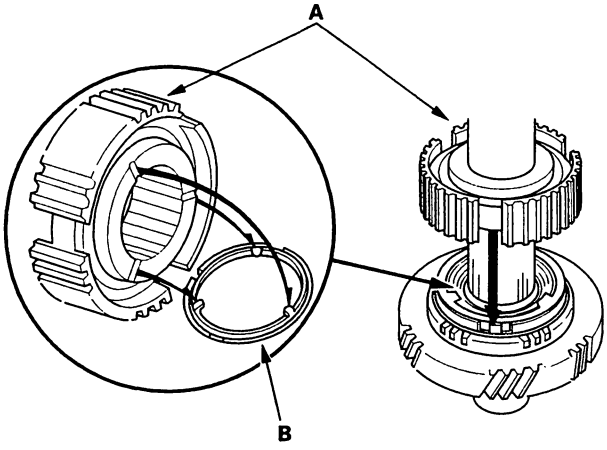

4. Install reverse gear, 2nd gear synchro spring, and the double cone synchro assembly.

5. Install the friction damper (A) on the spacer (B) using the special tools and a press.

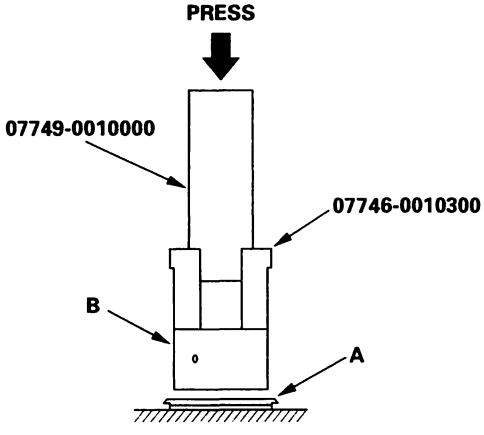

(cont'd)

Countershaft Reassembly (cont'd)

6. Install the friction damper and spacer, and the 2nd gear bearing.

7. Install 2nd gear (A) by aligning the synchro cone fingers (B) with 2nd gear grooves (C).

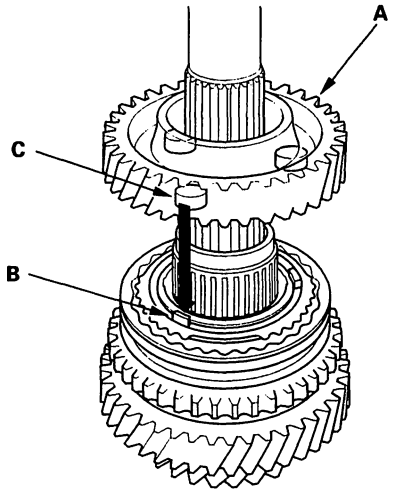

8. Install 3rd gear, 4th gear, and 5th gear.

9. Install the needle bearing (A) and the ball bearing (B) using the special tool and a press (C).

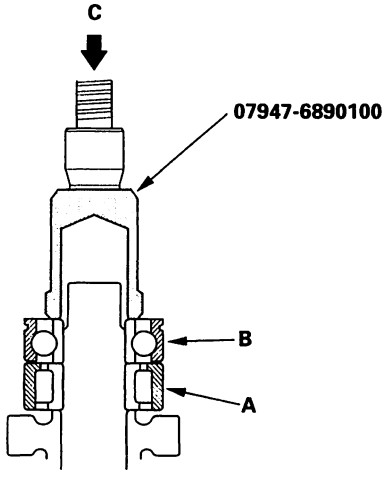

10. Install the spring washer (A),and loosely install the new locknut (B).

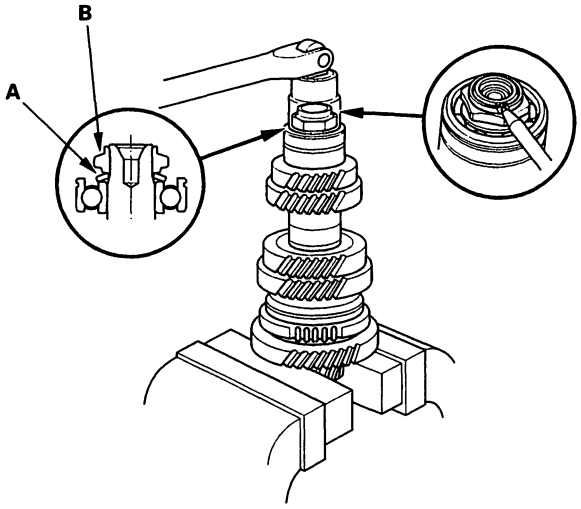

11. Securely clamp the countershaft assembly in a bench vise with wood blocks.

12. Torque the new locknut to 127 N·m (13kg·m, 94lb·ft), then loosen it and torque it again to the same value. Stake the locknut tab into the groove.

BACK

Shift Forks Clearance Inspection

NOTE: The synchro sleeve and synchro hub should be replaced as a set.

1. Measure the clearance between each shift fork (A) and its matching synchro sleeve (B). If the clearance exceeds the service limit, go to step 2.

   Standard: 0.35 – 0.65 mm (0.014 – 0.026 in.)
   Service Limit: 1.00 mm (0.039 in.)

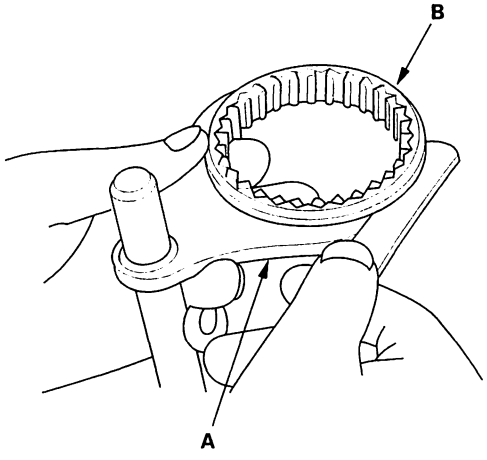

2. Measure the thickness of the shift fork (A) fingers.

   - If the thickness of the shift fork finger is less than the standard, replace the shift fork with a new one.
   - If the thickness of the shift fork finger is within the standard, replace the synchro sleeve with a new one.

   Standard: 6.2 – 6.4 mm (0.24 – 0.25 in.)

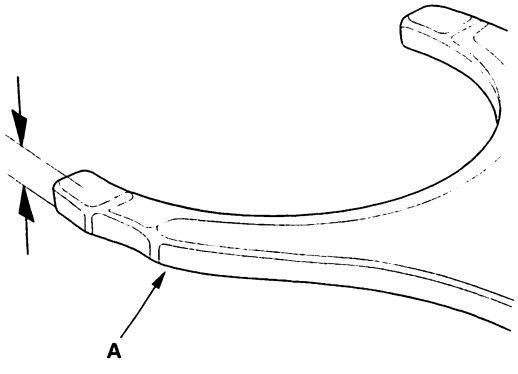

3. Measure the clearance between the shift fork (A) and the shift arm (B). If the clearance exceeds the service limit, go to step 4.

   Standard: 0.2 – 0.5 mm (0.008 – 0.020 in.)
   Service Limit: 0.6 mm (0.024 in.)

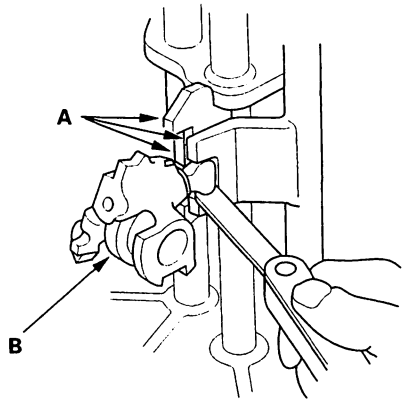

4. Measure the width of the shift arm (A).

   - If the width of the shift arm is less than the standard, replace the shift arm with a new one.
   - If the width of the shift arm is within the standard, replace the shift fork or shift piece with a new one.

   Standard: 12.9 – 13.0 mm (0.508 – 0.512 in.)

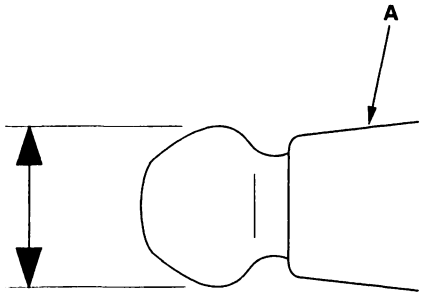

BACK

Shift Forks Disassembly/Reassembly

Prior to reassembling, clean all the parts in solvent, dry them, and apply lubricant to any contact parts.

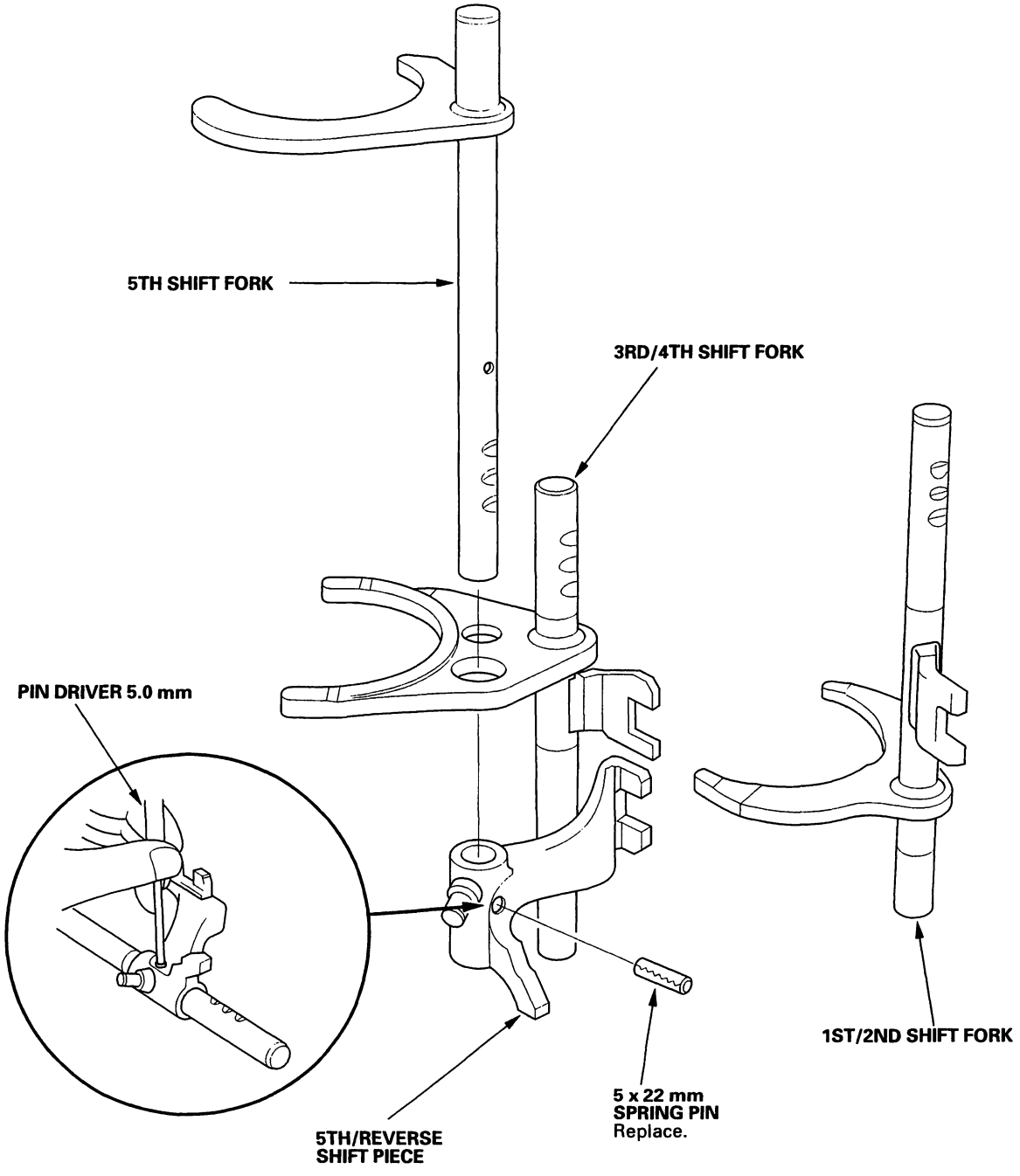

BACK

Synchro Sleeve and Hub Inspection and Reassembly

1. Inspect gear teeth on all synchro hubs and synchro sleeves for rounded off corners, which indicate wear.

2. Install each synchro hub (A) in its mating synchro sleeve (B), and check for freedom of movement. Be sure to match the three sets of longer teeth (C) (120 degrees apart) on the synchro sleeve with the three sets of deeper grooves (D) in the synchro hub. Do not install the synchro sleeve with its longer teeth in the 1st/2nd synchro hub slots (E) because it will damage the spring ring.

   NOTE: If replacement is required, always replace the synchro sleeve and synchro hub as a set.

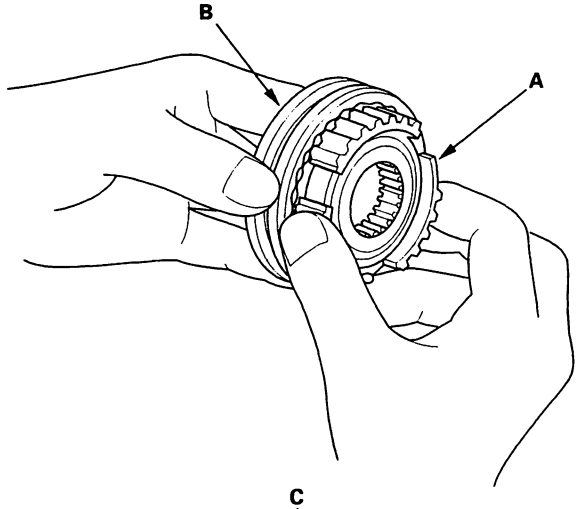

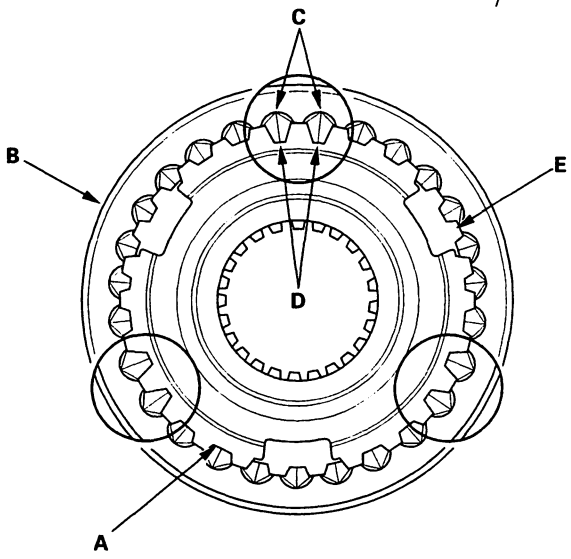

Synchro Ring and Gear Inspection

1. Inspect the inside of the synchro ring (A) for wear.

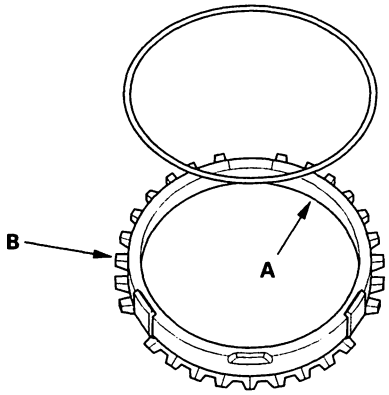

2. Inspect the synchro ring teeth (B) for wear (rounded off).

3. Inspect the synchro sleeve teeth (C) and matching teeth on the gear for wear (rounded off).

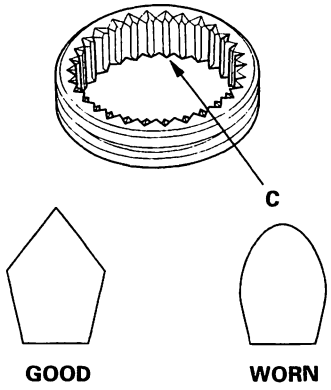

(cont'd)

Synchro Ring and Gear Inspection (cont'd)

4. Inspect the gear hub thrust surface (D) for wear.

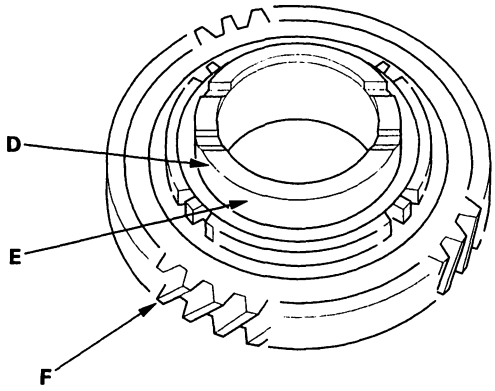

5. Inspect the cone surface (E) for wear and roughness.

6. Inspect the teeth on all gears (F) for uneven wear, scoring, galling, and cracks.

7. Coat the cone surface of the gear (E) with oil, and place the synchro ring on it. Rotate the synchro ring, making sure that it does not slip.

8. Measure the clearance between the synchro ring (A) and gear (B) all the way around. Hold the synchro ring against the gear evenly while measuring the clearance. If the clearance is less than the service limit, replace the synchro ring and synchro cone.

Synchro Ring-to-Gear Clearance
Standard: 0.85 – 1.10 mm (0.033 – 0.043 in.)
Service Limit: 0.4 mm (0.016 in.)

Double Cone Synchro-to-Gear Clearance
Standard:
①:Outer Synchro Ring (A) to Synchro Cone (C) 0.5 – 1.0 mm (0.02 – 0.04 in.)
②:Synchro Cone (C) to Gear (B) 0.5 – 1.0 mm (0.02 – 0.04 in.)
③:Outer Synchro Ring (A) to Gear (B) 0.95 – 1.68 mm (0.037 – 0.066 in.)
Service Limit:
①:0.3 mm (0.01 in.)
②:0.3 mm (0.01 in.)
③:0.6 mm (0.02 in.)

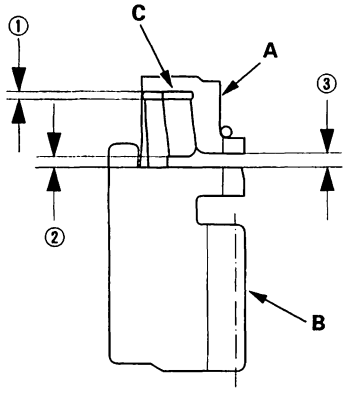

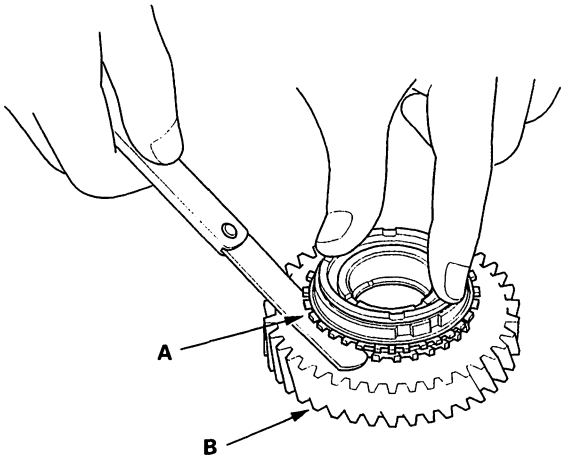

BACK

Countershaft Bearing Replacement

Special Tools Required
- Adjustable bearing puller, 25 – 40 mm 07736-A01000B
- Driver 07749-0010000
- Attachment, 62 x 68 mm 07746-0010500

1. Remove the retaining plate (A) from the clutch housing (B).

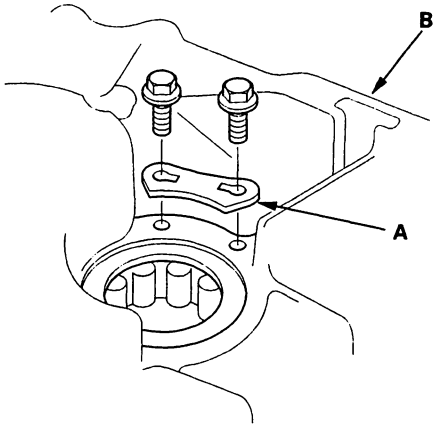

2. Remove the needle bearing (A) using the special tool, then remove the oil guide plate (B).

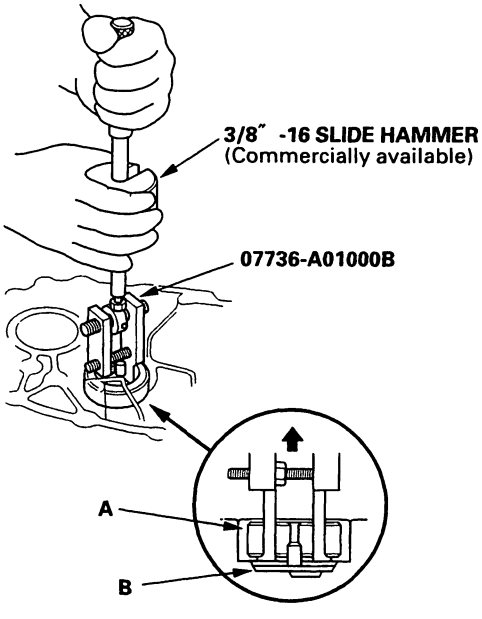

3. Position the oil guide plate (A) and new needle bearing (B) in the bore of the clutch housing (C).

   NOTE: Position the needle bearing with the oil holes (D) facing up.

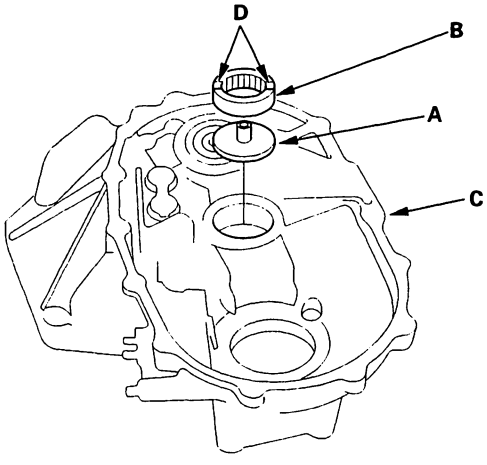

4. Install the needle bearing (A) using the special tools.

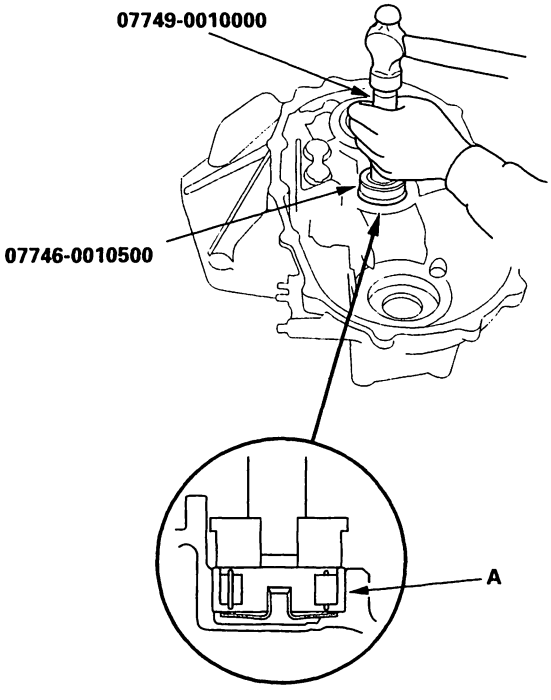

(cont'd)

Countershaft Bearing Replacement (cont'd)

5. Install the retaining plate (A) with new bolts (B) and stake the bolt heads into the groove in the retaining plate.

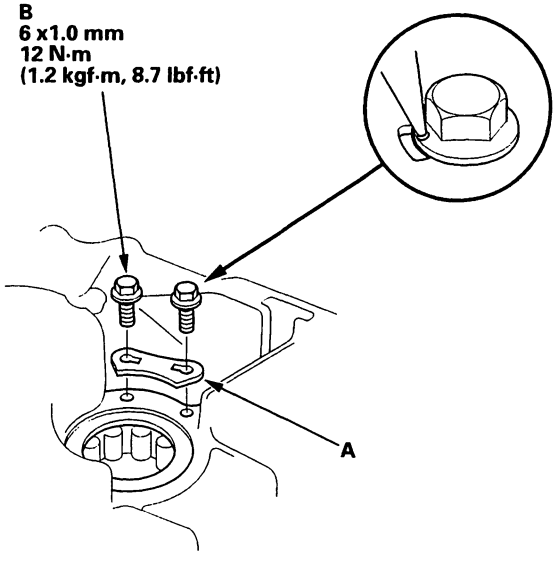

Mainshaft Bearing and Oil Seal Replacement

Special Tools Required
- Adjustable bearing puller, 25—40 mm 07736-A01000B
- Driver 07749-0010000
- Attachment, 42 x 47 mm 07746-0010300
- Attachment, 62 x 68 mm 07746-0010500

1. Remove the differential assembly.

2. Remove the ball bearing (A) from the clutch housing (B) using the special tool.

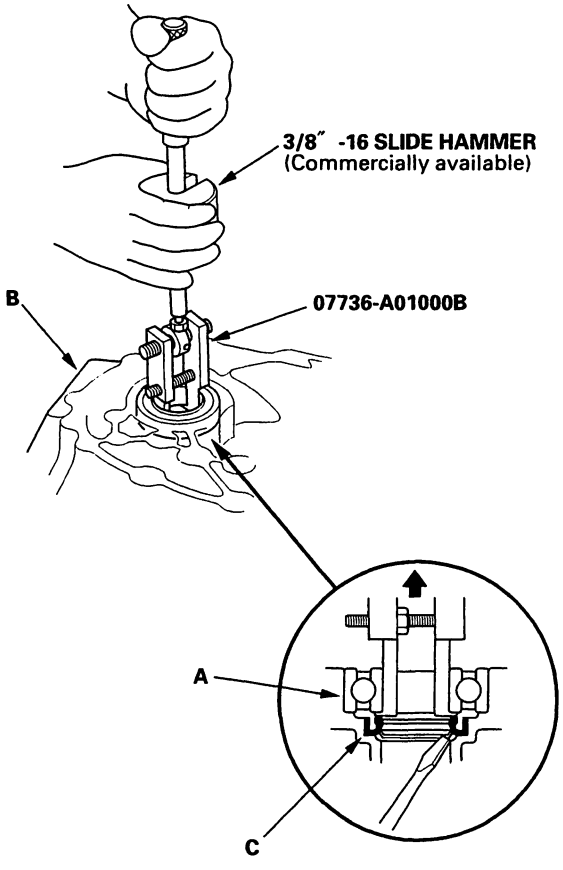

3. Remove the oil seal (C) from the clutch side.

BACK

4. Drive the new oil seal (A) in from the transmission side using the special tools.

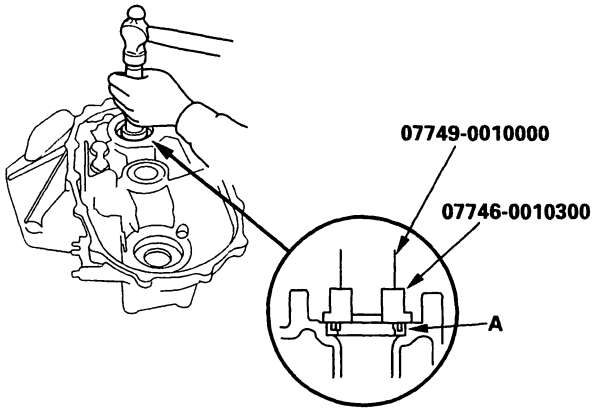

5. Drive the new ball bearing (A) in from the transmission side using the special tools.

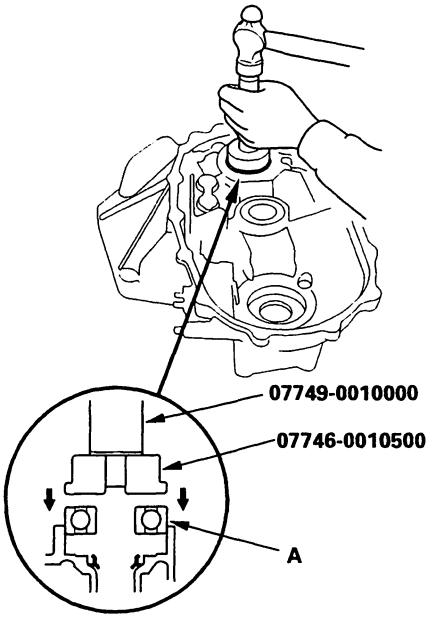

Mainshaft Thrust Clearance Adjustment

Special Tools Required
- Mainshaft base 07GAJ-PG20130
- Mainshaft holder 07GAJ-PG20110

1. Remove the 78 mm shim (A) and oil guide plate (B) from the transmission housing (C).

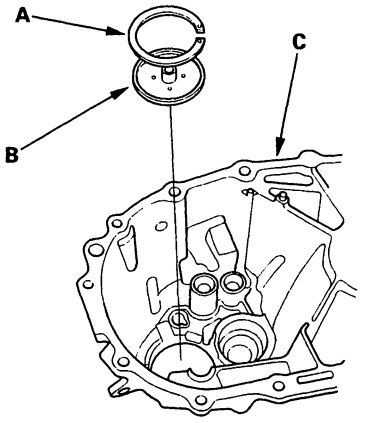

2. Install the 3rd/4th synchro hub (A), the spacer collar (B), the 5th synchro hub (C), the spacer (D), and ball bearing (E) on the mainshaft (F), then install the assembled mainshaft in the transmission housing (G).

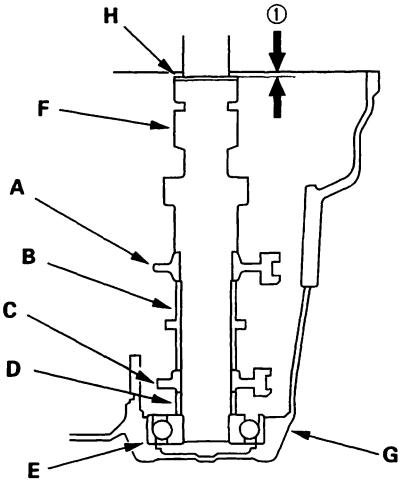

3. Install the washer (H) on the mainshaft.

4. Measure distance ① between the end of the transmission housing and washer with a straight edge and vernier caliper. Measure at three locations and average the reading.

(cont'd)

Mainshaft Thrust Clearance Adjustment (cont'd)

5. Measure distance ② between the end of the clutch housing (A) and bearing inner race (B) with a straight edge and depth gauge. Measure at three locations and average the readings.

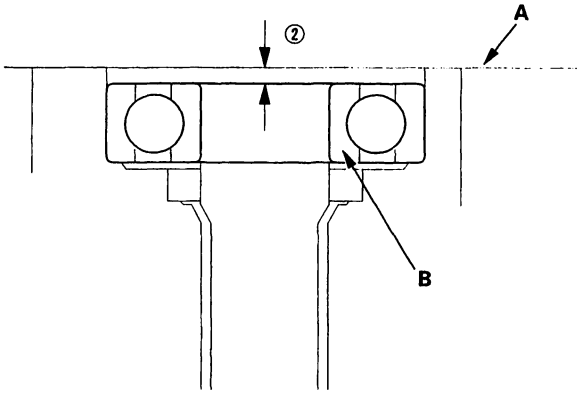

Shim Selection Formula:

6. Select the proper 78 mm shim from the chart. Follow the example below, and use the measurements you made in steps 4 and 5:

- Add distance ② (step 5) to distance ① (step 4).
- From this number, subtract 0.93 (which is the midpoint of the flex range of the clutch housing bearing spring washer).
- Take this number and compare it to the available shim sizes in the chart.
- Try the 1.68 mm (0.0661 in) shim.

(For example)

①: 2.39	2.61
+②: 0.22	−0.93
= 2.61	= 1.68

78 mm SHIM

	Part Number	Thickness
A	23941-P16-000	1.20 mm (0.0472 in.)
B	23942-P16-000	1.23 mm (0.0484 in.)
C	23943-P16-000	1.26 mm (0.0496 in.)
D	23944-P16-000	1.29 mm (0.0508 in.)
E	23945-P16-000	1.32 mm (0.0520 in.)
F	23946-P16-000	1.35 mm (0.0531 in.)
G	23947-P16-000	1.38 mm (0.0543 in.)
H	23948-P16-000	1.41 mm (0.0555 in.)
I	23949-P16-000	1.44 mm (0.0567 in.)
J	23950-P16-000	1.47 mm (0.0579 in.)
K	23951-P16-000	1.50 mm (0.0591 in.)
L	23952-P16-000	1.53 mm (0.0602 in.)
M	23953-P16-000	1.56 mm (0.0614 in.)
N	23954-P16-000	1.59 mm (0.0626 in.)
O	23955-P16-000	1.62 mm (0.0638 in.)
P	23956-P16-000	1.65 mm (0.0650 in.)
Q	23957-P16-000	1.68 mm (0.0661 in.)
R	23958-P16-000	1.71 mm (0.0673 in.)
S	23959-P16-000	1.74 mm (0.0685 in.)
T	23960-P16-000	1.77 mm (0.0697 in.)
U	23961-P16-000	1.80 mm (0.0709 in.)
V	23962-P16-000	1.83 mm (0.0720 in.)
W	23963-P16-000	1.86 mm (0.0732 in.)
X	23964-P16-000	1.89 mm (0.0744 in.)
Y	23965-P16-000	1.92 mm (0.0756 in.)
Z	23966-P16-000	1.95 mm (0.0768 in.)
AA	23967-P16-000	1.98 mm (0.0780 in.)
AB	23968-P16-000	2.01 mm (0.0791 in.)
AC	23969-P16-000	2.04 mm (0.0803 in.)
AD	23970-P16-000	2.07 mm (0.0815 in.)
AE	23971-P16-000	2.10 mm (0.0827 in.)
AF	23972-P16-000	2.13 mm (0.0839 in.)
AG	23973-P16-000	2.16 mm (0.0850 in.)
AH	23974-P16-000	2.19 mm (0.0862 in.)
AI	23975-P16-000	2.22 mm (0.0874 in.)
AJ	23976-P16-000	2.25 mm (0.0886 in.)
AK	23977-P16-000	2.28 mm (0.0898 in.)
AL	23978-P16-000	2.31 mm (0.0909 in.)
AM	23979-P16-000	2.34 mm (0.0921 in.)
AN	23980-P16-000	2.37 mm (0.0933 in.)

BACK

7. Install the 78 mm shim (A) selected and oil guide plate (B) in the transmission housing (C).

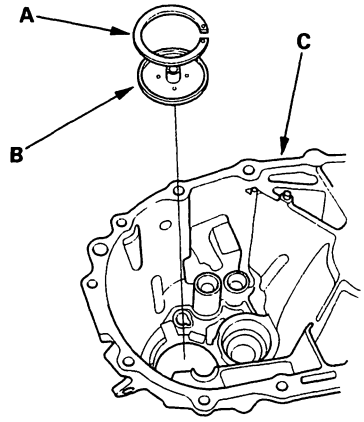

8. Throughly clean the spring washer (A) and washer (B) before installing them on the ball bearing. Note the installation direction of the spring washer.

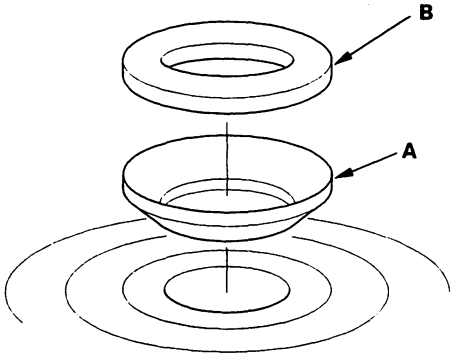

9. Install the mainshaft in the clutch housing.

10. Place the transmission housing over the mainshaft and onto the clutch housing.

11. Tighten the clutch and transmission housings with several 8 mm and 10 mm bolts.

    NOTE: It is not necessary to use sealing agent between the housings.

12. Tap the mainshaft with a plastic hammer.

13. Slide the special tool (A) over the mainshaft (B).

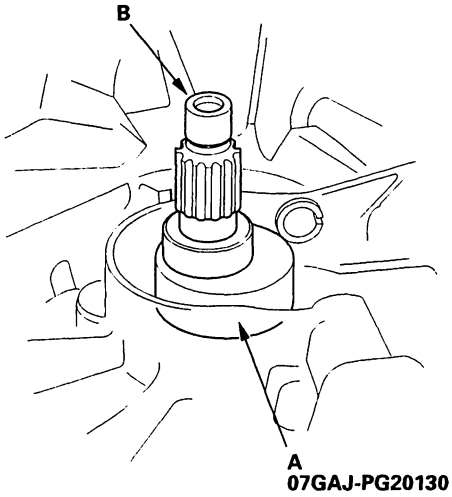

14. Attach the special tool to the mainshaft as follows:

    - Back-out the mainshaft holder bolt (A) and loosen the two hex bolts (B).
    - Fit the holder over the mainshaft so its lip is towards the transmission.
    - Align the mainshaft holder's lip around the groove at the inside of the mainshaft splines, then tighten the hex bolts.

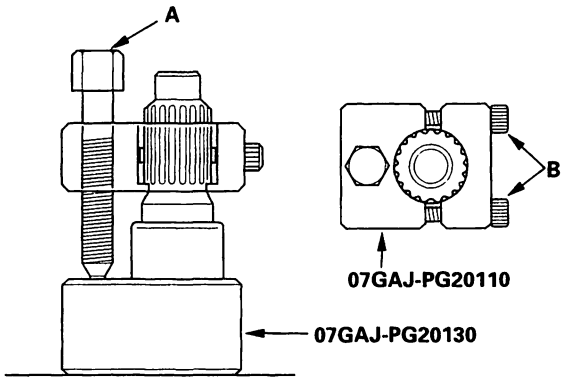

15. Seat the mainshaft fully by tapping its end with a plastic hammer.

16. Thread the mainshaft holder bolt in until it just contacts the wide surface of the mainshaft base.

(cont'd)

Mainshaft Thrust Clearance Adjustment (cont'd)

17. Zero a dial gauge (A) on the end of the mainshaft.

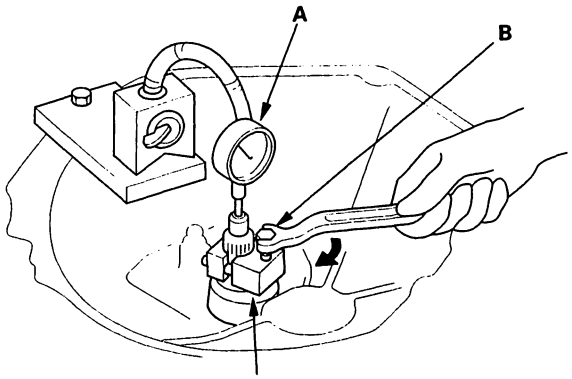

07GAJ-PG20110

18. Turn the mainshaft holder bolt (B) clockwise; stop turning when the dial gauge (A) has reached its maximum movement. The reading on the dial gauge is the amount of mainshaft end play.

    Do not turn the mainshaft holder bolt more than 60 degrees after the needle of the dial gauge stops moving, this may damage the transmission.

19. If the reading is within the standard, the clearance is correct. If the reading is not within the standard, recheck the shim thickness.

    Standard: 0.10–0.16 mm (0.004–0.006 in.)

Transmission Reassembly

1. Install the differential assembly in the clutch housing.

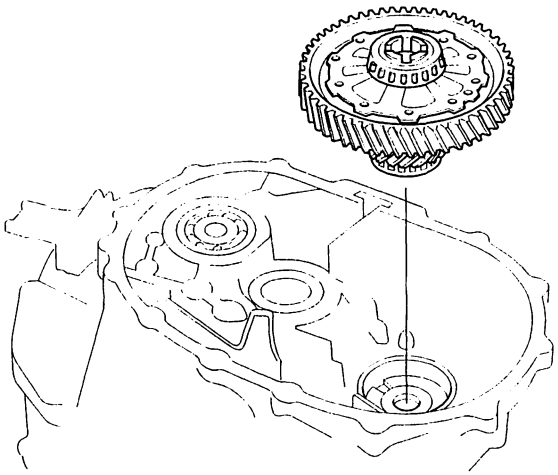

2. Install the spring washer (A) and washer (B) over the ball bearing (C).
   Note the installation direction of the spring washer (A).

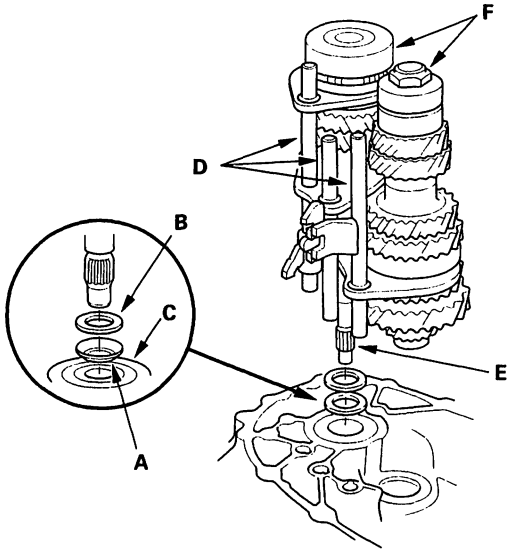

3. Tape the splines of the mainshaft (E) with vinyl tape to protect the seal.
   Insert the mainshaft and countershaft (F) into the shift forks (D), and install them as an assembly.

BACK

4. Install the reverse idler gear (A) and reverse idler gear shaft (B) in the clutch housing (C).

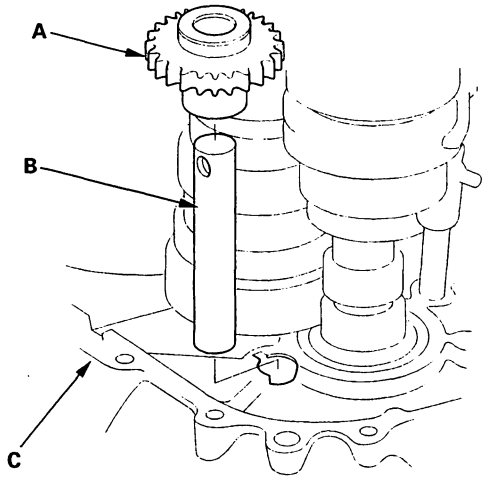

5. Install the reverse shift fork (A) in the clutch housing (B) with the 5th/reverse shift piece pin positioned in the slot of the reverse shift fork. Make sure the steel ball (C) is in the proper position.

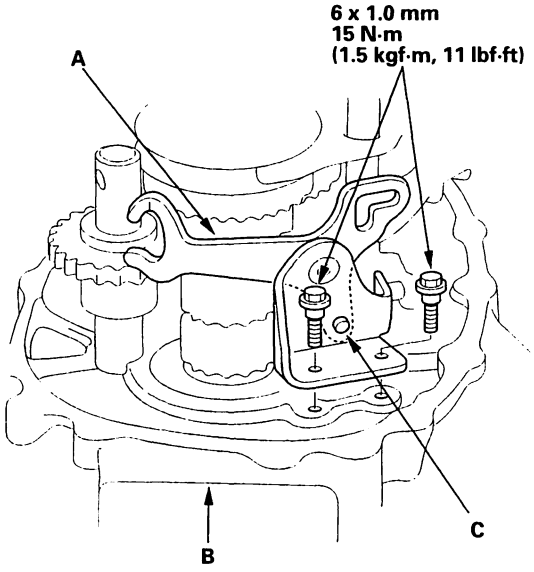

6. Install the oil gutter plate in the transmission housing.

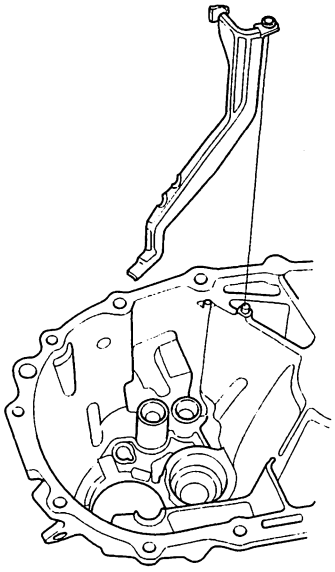

7. Select the proper size 78 mm shim (A) according to the measurements made during the Mainshaft Thrust Clearance Adjustment (see page 13-45). Install the oil guide plate (B) and 78 mm shim into the transmission housing (C).

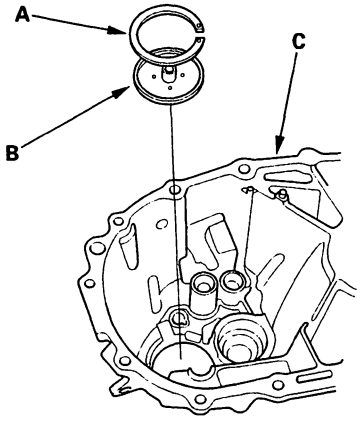

(cont'd)

Transmission Reassembly (cont'd)

8. Remove the dirt and oil from the transmission housing sealing surface. Apply liquid gasket (P/N 08718-0001) to the sealing surface. Be sure to seal the entire circumference of the bolt holes to prevent oil leakage.

   NOTE: If 20 minutes have passed after applying liquid gasket, reapply it and assemble the housings. Allow it to cure at least 20 minutes after assembly before filling the transmission with oil.

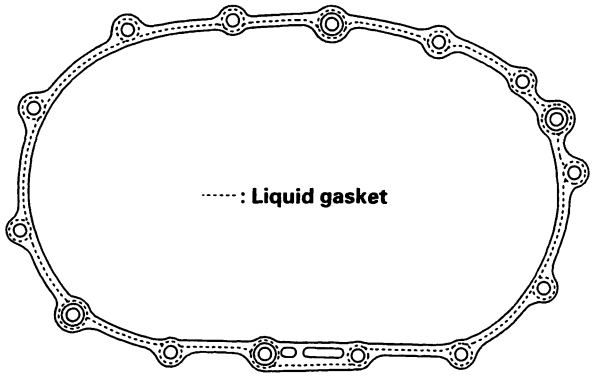

9. Install the 14 x 20 mm dowel pins.

10. Set the tapered cone ring (A) as shown. Place the transmission housing over the clutch housing, being careful to line up the shafts.

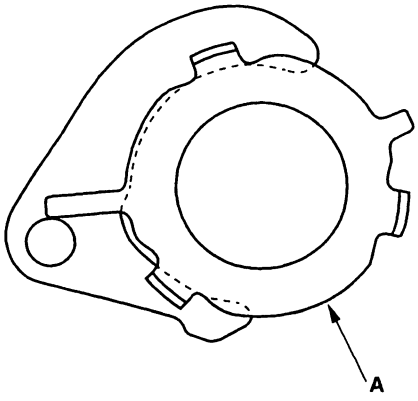

11. Lower the transmission housing the rest of the way as you expand the snap ring (A). Release the snap ring so it seats in the groove of the countershaft bearing.

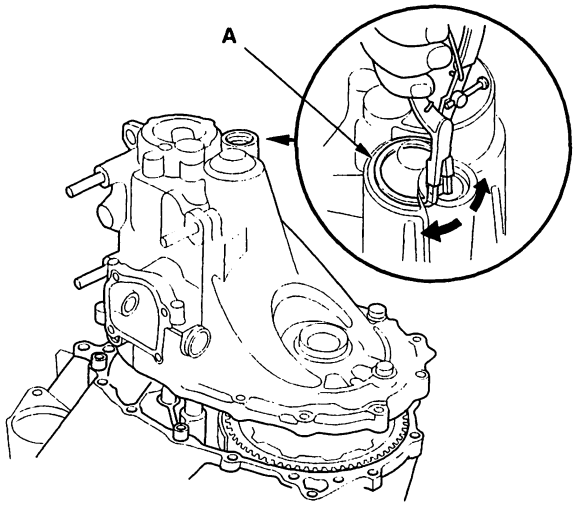

12. Check that the snap ring (A) is securely seated in the groove of the countershaft bearing.

    Dimension ① as installed: 3.6 – 6.3 mm (0.14 – 0.25 in.)

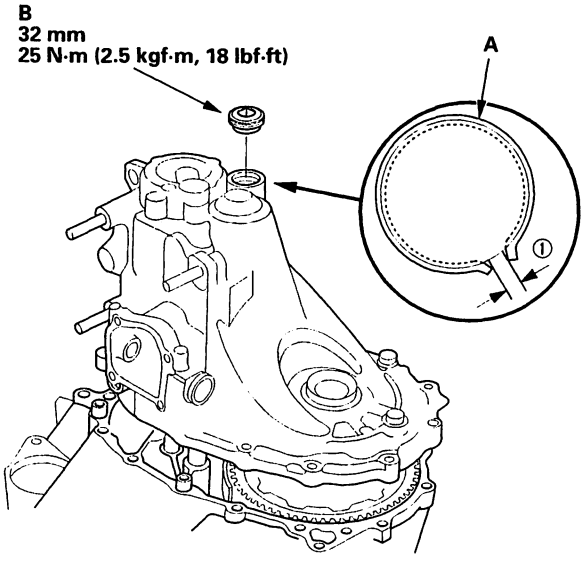

13. Apply liquid gasket (P/N 08718-0001) to the threads of the 32 mm sealing bolt (B), and install it on the transmission housing.

BACK

14. Install the front transmission hanger (A) and the rear transmission hanger (B), then tighten the bolts in a crisscross pattern in several steps.

8 x 1.25 mm bolts: 27 N·m (2.8 kgf·m, 20 lbf·ft)
10 x 1.25 mm bolts: 47 N·m (4.8 kgf·m, 35 lbf·ft)

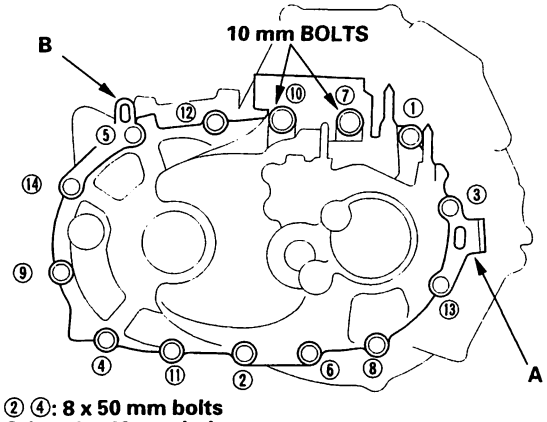

② ④: 8 x 50 mm bolts
Other: 8 x 40 mm bolts

15. Install the 5/16 in steel balls (A), 26 mm (1.02 in.) length springs (B), washers (C) and setting screws (D).

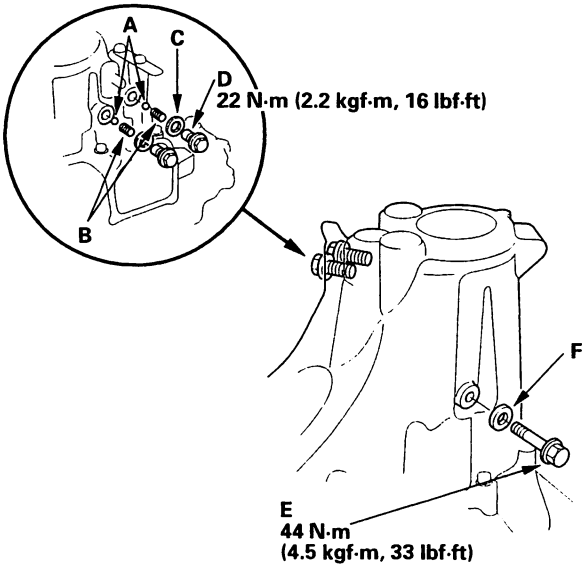

16. Install the reverse idler gear shaft bolt (E) with a new washer (F).

17. Install the shift arm cover assembly (see page 13-18).

18. Shift the transmission through all the gears before installing it.

Gearshift Mechanism Replacement

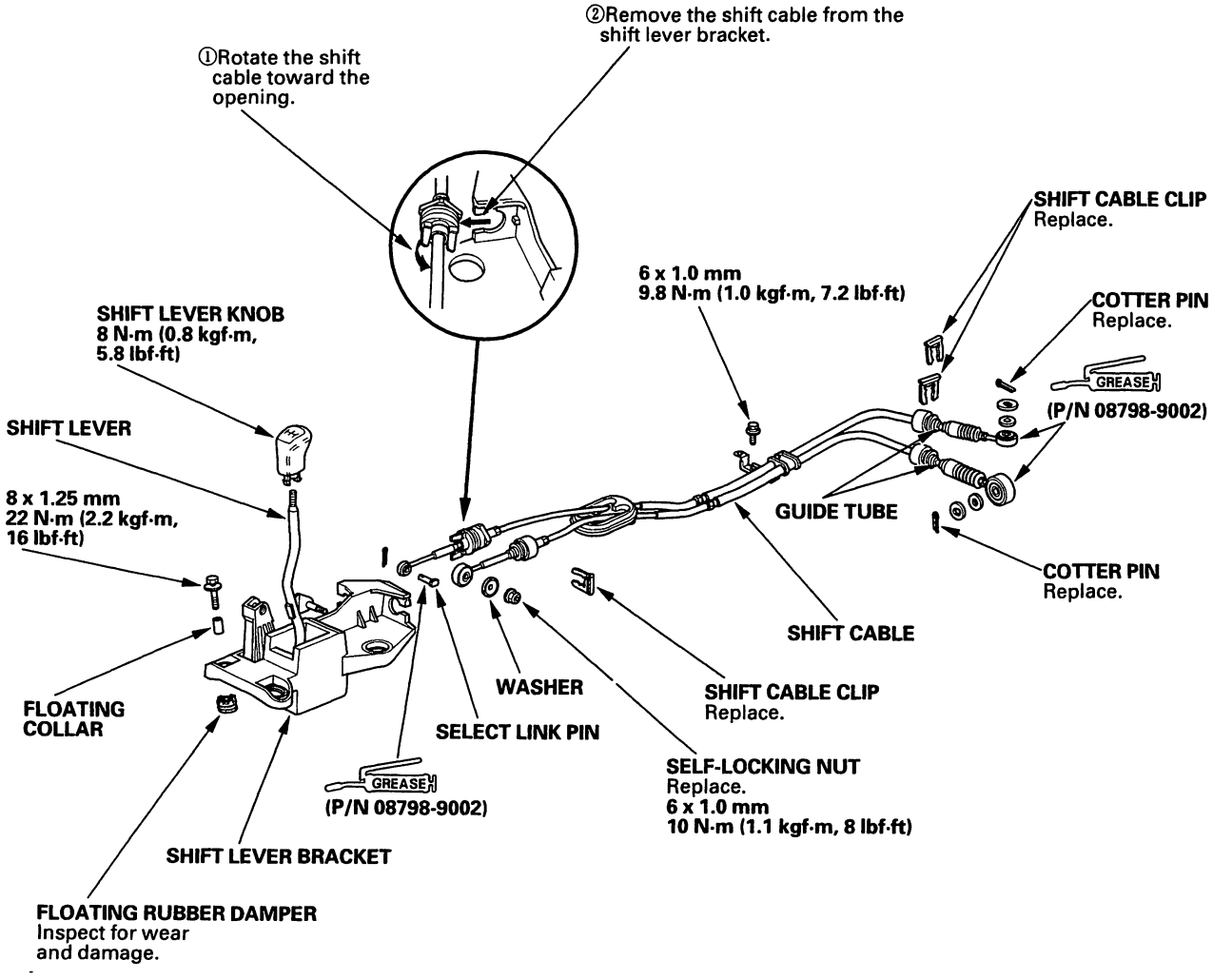

BACK

Component Location Index

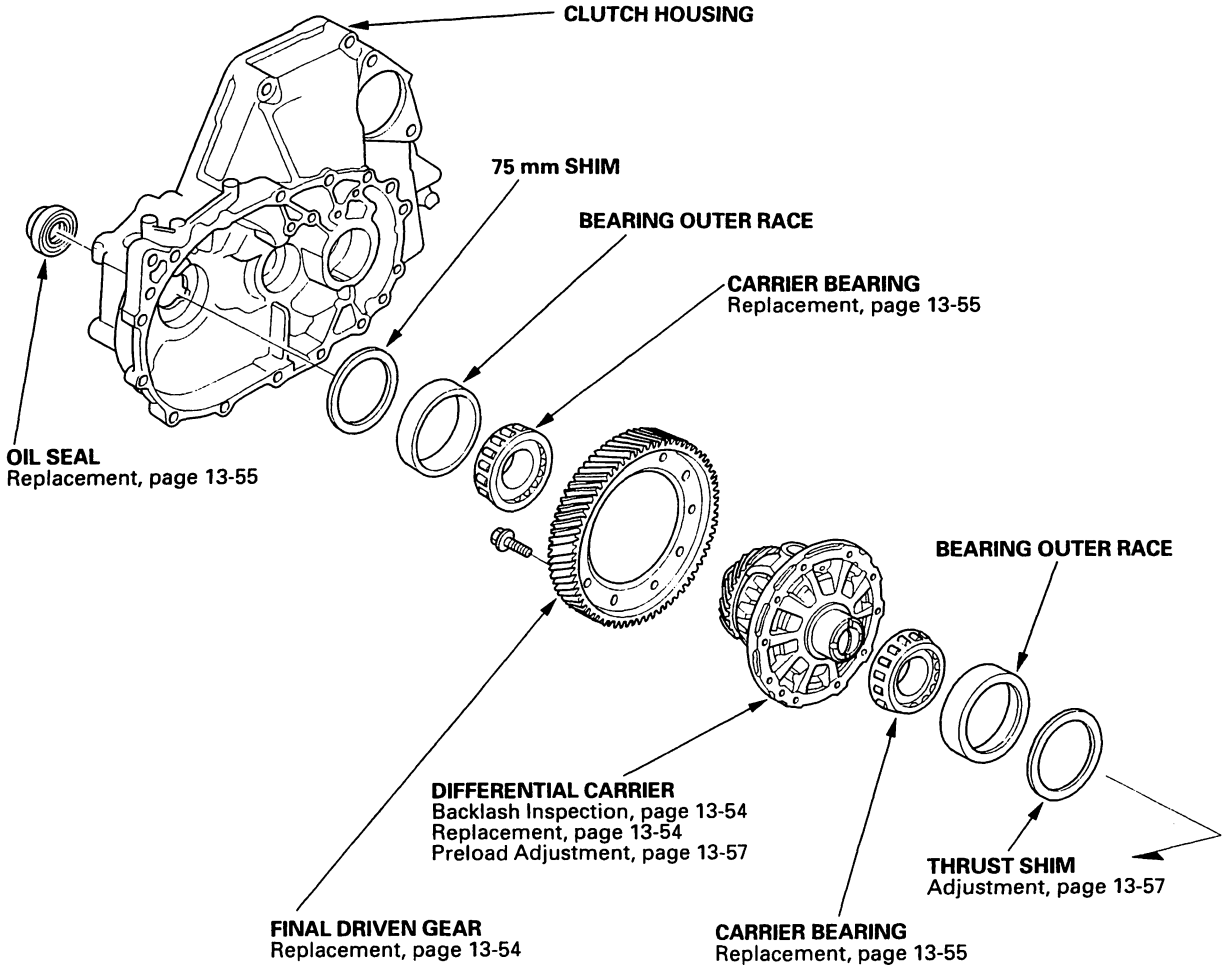

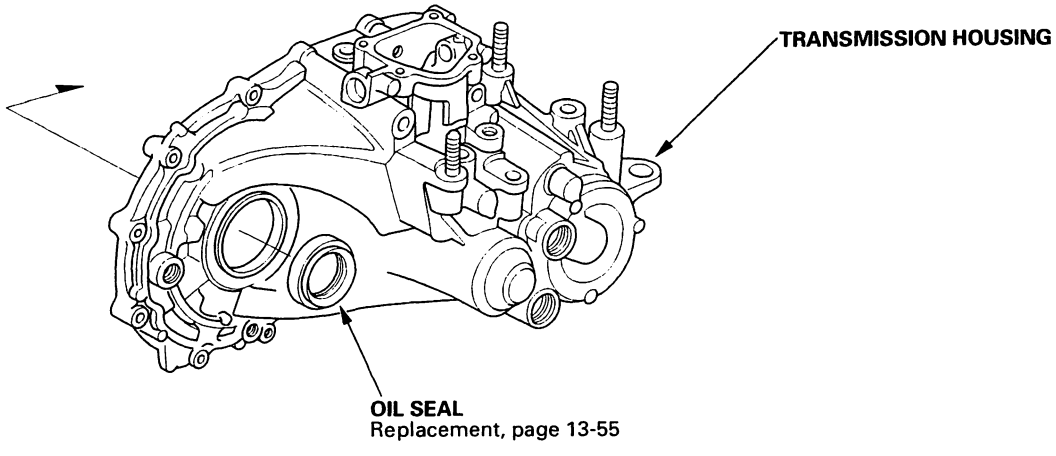

BACK

Backlash Inspection

1. Place the differential assembly on V-blocks (A), and install both axles.

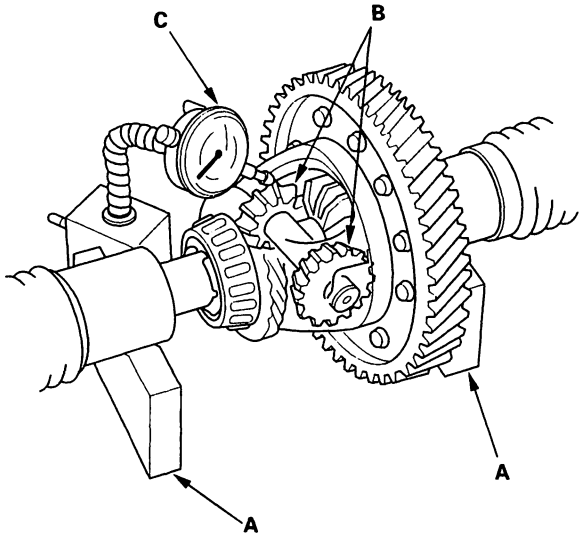

2. Measure the backlash of both pinion gears (B) with a dial indicator (C). If the backlash is not within the standard, replace the differential carrier.

   Standard (New): 0.05–0.15 mm (0.002–0.006 in.)

Final Driven Gear/Carrier Replacement

1. Remove the bolts (left-hand threads) in a crisscross pattern in several steps, then remove the final driven gear from the differential carrier.

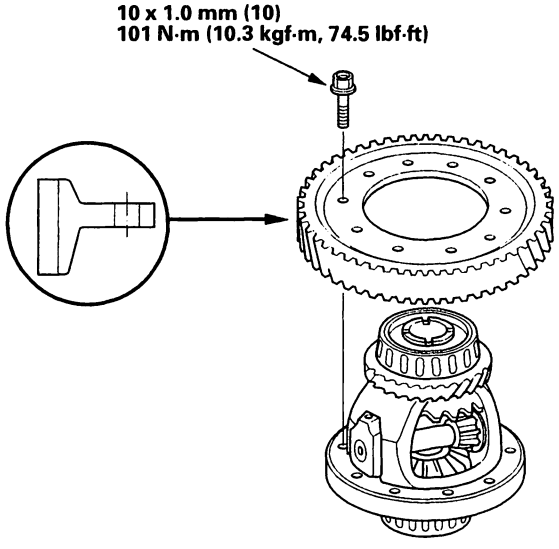

2. Install the final driven gear with the chamfer on the inside diameter facing the carrier. Tighten the bolts in a crisscross pattern in several steps.

3. Adjust the carrier bearing preload (see page 13-57).

BACK

Carrier Bearings Replacement

Special Tool Required
Bearing attachment 07LAD-PW50601

1. Check the carrier bearings for wear and rough rotation. If they rotate smoothly and their rollers show no signs of wear, the beaings are OK.

2. Remove the carrier bearing (A) with a commercially-available bearing puller (B) and bearing separator (C).

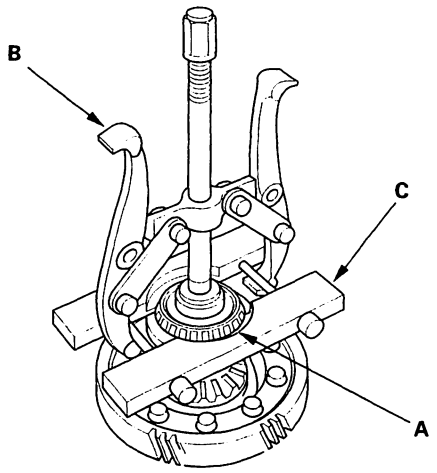

3. Install the new bearings (A) with the special tool and a press. Press each bearing on until it bottoms. There should be no clearance between the bearings and the carrier.

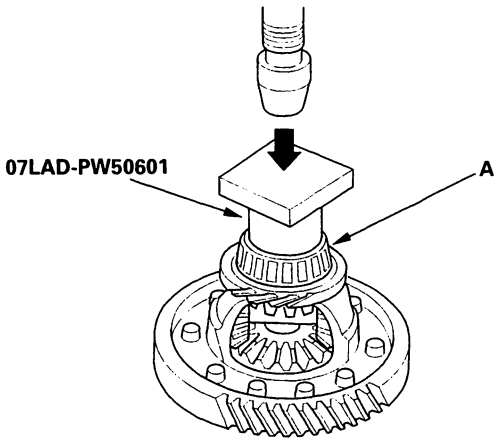

4. Inspect the bearing preload (see page 13-57).

Oil Seal Replacement

Special Tools Required
- Driver 07749-0010000
- Driver attachment 07GAD-PG40100
- Pilot, 28 x 30 mm 07JAD-PH80400
- Driver attachment 07JAD-PH80101

1. Remove the differential assembly.

2. Remove the oil seal (A) from the transmission housing (B).

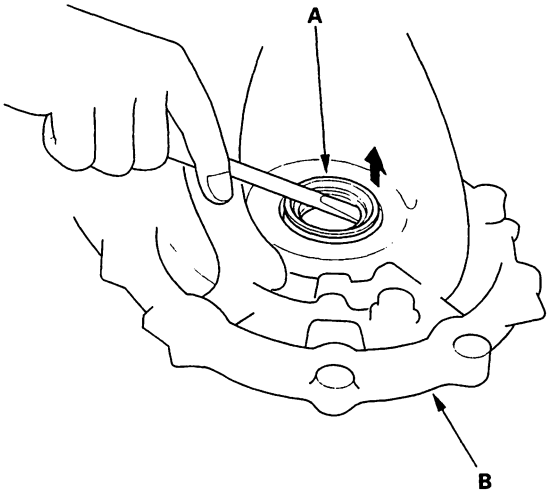

3. Remove the oil seal (A) from the clutch housing (B).

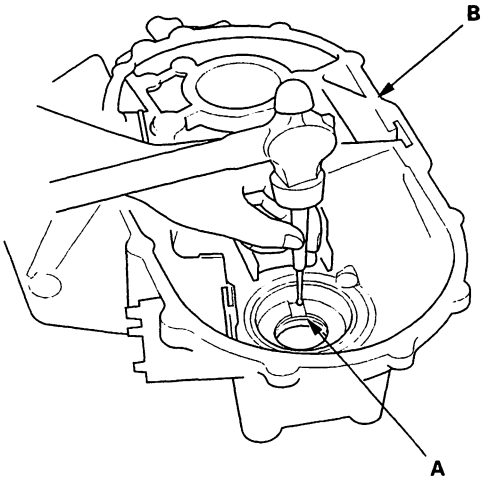

(cont'd)

Oil Seal Replacement (cont'd)

4. Install the new oil seal (A) in the transmission housing (B) with the special tools.

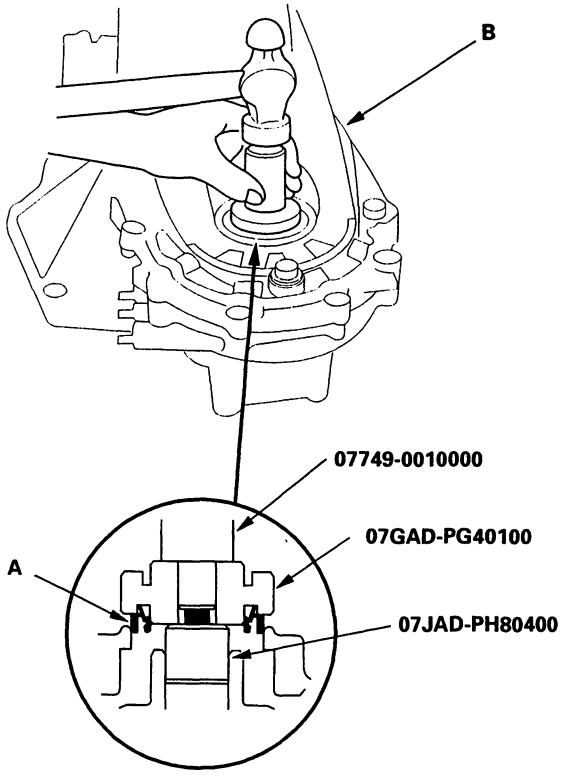

5. Install the new oil seal (A) in the clutch housing (B) with the special tools.

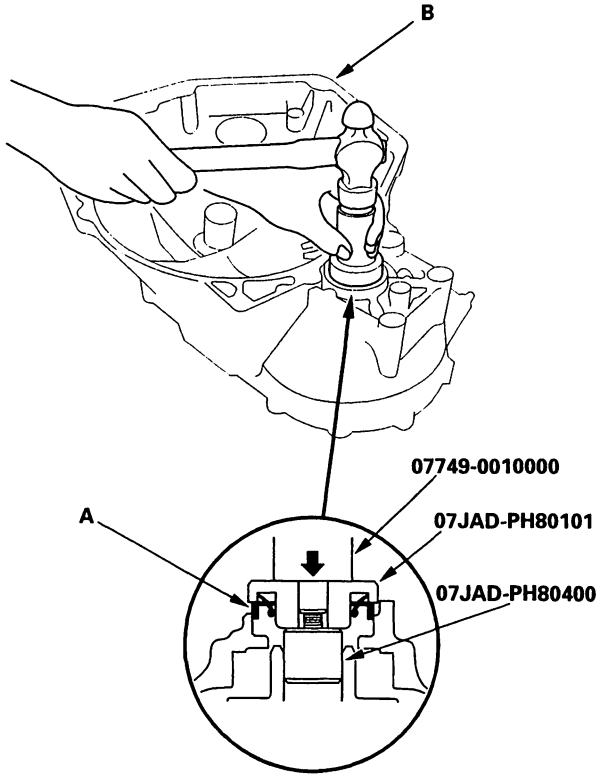

BACK

Carrier Bearing Outer Race Replacement and Preload Adjustment

Special Tools Required
- Driver 07749-0010000
- Attachment, 52 x 55 mm 07746-0010400
- Attachment, 62 x 68 mm 07746-0010500
- Attachment, 72 x 75 mm 07746-0010600

If any of the items listed below were replaced, the carrier bearing preload must be adjusted.

- Transmission housing
- Clutch housing
- Differential carrier
- Carrier bearing and outer race

1. Remove the oil seals from the transmission housing and clutch housing (see page 13-55).

Thrust Shim Replacemnet (Transmission Housing)

2. Drive the bearing outer race (A) and thrust shim (B) out of the transmission housing (C). Do not reuse the thrust shim. If you replaced the carrier bearing on the transmission housing side of the carrier, discard the outer race.

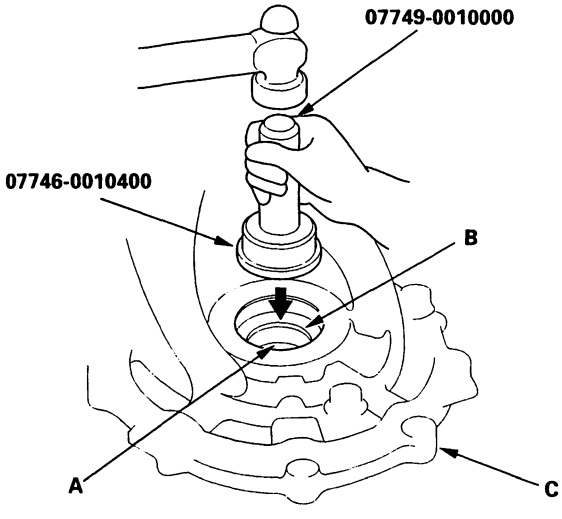

3. If you replaced the carrier bearing on the clutch housing side of the carrier, remove and discard the beaing outer race, Heat up the clutch housing to about 212°F (100°C) with a heat gun (A), then remove the outer race (B) and the 75 mm shim(C). Do not heat the housing in excess of 212°F (100°C).

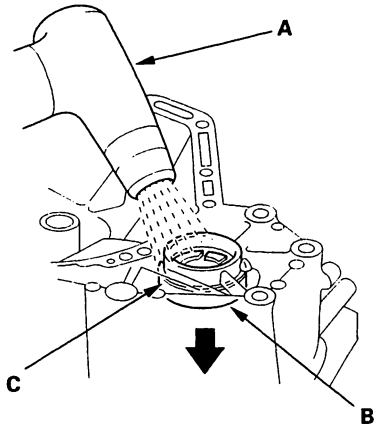

4. Select a new thrust shim that's the same size as the one you removed, and use the special tools to install it (A) and the bearing outer race (B) in the transmission housing. (Use a new race if you replaced the bearing.) There should be no space between the race, shim, and housing.

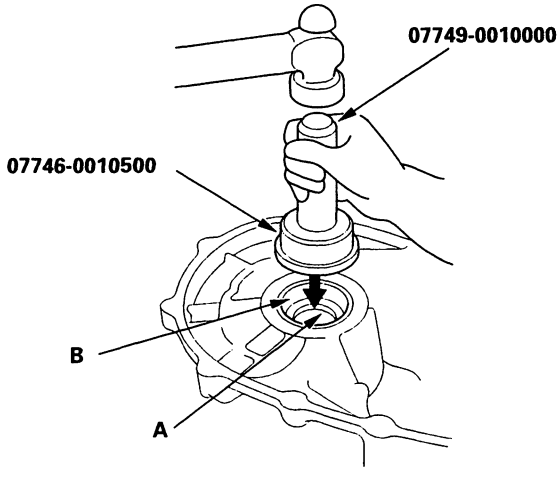

(cont'd)

Carrier Bearing Outer Race Replacement and Preload Adjustment (cont'd)

5. If you removed the bearing outer race from the clutch housing, use the specail tools to install a new one (A) along with the 75 mm shim (B). There should be no space between the race, shim, and housing.

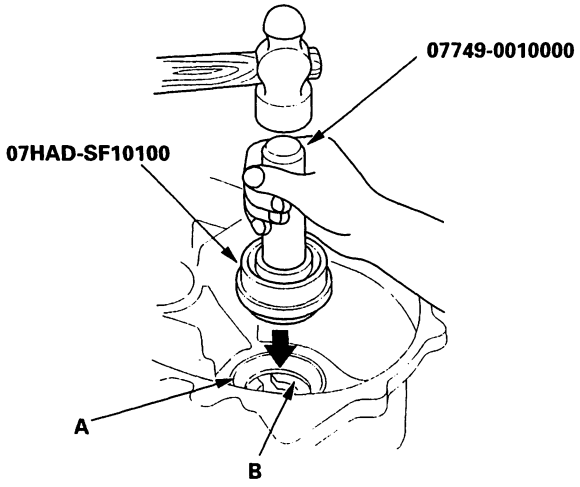

6. With the mainshaft and countershaft removed, install the differential assembly, bolt the transmission and clutch housing together, and torque the 10 mm bolts to 47 N·m (4.8 kgf·m, 35 lbf·ft) and the 8 mm bolts to 27 N·m (2.8 kgf·m, 20 lbf·ft).

7. Rotate the differential assembly in both directions to seat the tapered roller bearings.

8. At normal room temperature, measure the starting torque of the differential assembly by rotating it in both directions with the special tool and a torque wrench (A).

STANDARD: 1.4 – 2.5 N·m (14 – 26 kgf·cm, 12 – 23 lbf·in.)

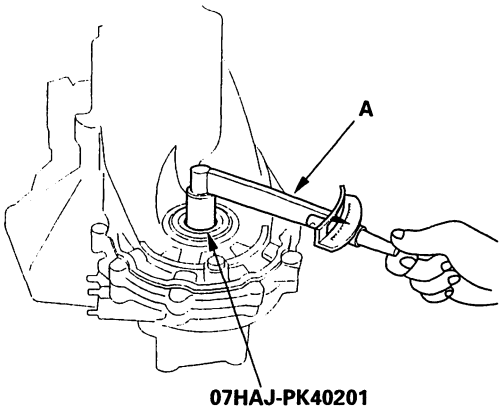

9. If the carrier bearing preload is not within the standard, select a thrust shim that will provide the correct preload:

   - Compare the bearing preload you got on the first try with the specified preload of 1.4 - 2.5 N·m (14 - 26 kgf·cm, 12 - 23 lbf·in).
   - If the preload you measure was less than specified, subtract it from the specified preload.
   - If the preload you measure was more than specified, subtract it from the specified preload.

   For example, with a 2.17 mm (0.0854 in.) thrust shim:

① specified	2.5 N·m (26 kgf·cm, 23 lbf·in.)
– you got less	0.6 N·m (6 kgf·cm, 5 lbf·in.)
	1.9 N·m (20 kgf·cm, 18 lbf·in.) less

② you got more	3.3 N·m (34 kgf·cm, 30 lbf·in.)
– specified	2.5 N·m (26 kgf·cm, 23 lbf·in.)
	0.8 N·m (8 kgf·cm, 7 lbf·in.) more

   NOTE: Each shim size up or down from standard makes about 0.3 – 0.4 N·m (3 – 4 kgf·cm, 2.6 – 3.5 lbf·in.) difference in preload.

   In example ①, your preload was 1.9 N·m (20 kgf·cm, 18 lbf·in.) less than standard, so you need a thrust shim five sizes thicker than standard (try the 2.32 mm (0.0913 in.) thrust shim, and recheck).

BACK

In example ②, your preload was 0.8 N·m (8 kgf·cm, 7 lbf·in.) more than standard, so you need a thrust shim two sizes thinner (try the 2.11 mm (0.0831 in.) thrust shim, and recheck).

THRUST SHIM

	Part Number	Thickness
A	41381-PX5-000	1.90 mm (0.0748 in.)
B	41382-PX5-000	1.93 mm (0.0760 in.)
C	41383-PX5-000	1.96 mm (0.0772 in.)
D	41384-PX5-000	1.99 mm (0.0783 in.)
E	41385-PX5-000	2.02 mm (0.0795 in.)
F	41386-PX5-000	2.05 mm (0.0807 in.)
G	41387-PX5-000	2.08 mm (0.0819 in.)
H	41388-PX5-000	2.11 mm (0.0831 in.)
I	41389-PX5-000	2.14 mm (0.0843 in.)
J	41390-PX5-000	2.17 mm (0.0854 in.)
K	41391-PX5-000	2.20 mm (0.0866 in.)
L	41392-PX5-000	2.23 mm (0.0878 in.)
M	41393-PX5-000	2.26 mm (0.0890 in.)
N	41394-PX5-000	2.29 mm (0.0902 in.)
O	41395-PX5-000	2.32 mm (0.0913 in.)
P	41396-PX5-000	2.35 mm (0.0925 in.)
Q	41397-PX5-000	2.38 mm (0.0937 in.)
R	41398-PX5-000	2.41 mm (0.0949 in.)
S	41399-PX5-000	2.44 mm (0.0961 in.)
T	41400-PX5-000	2.47 mm (0.0972 in.)
AA	41873-P16-000	1.66 mm (0.0654 in.)
AB	41874-P16-000	1.69 mm (0.0665 in.)
AC	41875-P16-000	1.72 mm (0.0677 in.)
AD	41876-P16-000	1.75 mm (0.0689 in.)
AE	41877-P16-000	1.78 mm (0.0701 in.)
AF	41878-P16-000	1.81 mm (0.0713 in.)
AG	41879-P16-000	1.84 mm (0.0724 in.)
AH	41880-P16-000	1.87 mm (0.0736 in.)

10. Once the carrier bearing preload is correct, install new oil seals in the differential (see page 13-55).

11. Reinstall the transmission.

BACK

Automatic Transmission

Automatic Transmission
Special Tools 14-2
General Troubleshooting Information 14-3
DTC Troubleshooting Index 14-7
Symptom Troubleshooting Index 14-8
System Description 14-18
DTC Troubleshooting 14-64
D4 Indicator Circuit Troubleshooting 14-93
Interlock System Troubleshooting
Shift Lock System Circuit 14-96
Key Interlock System Circuit 14-99
Road Test 14-101
Stall Speed Test 14-103
Pressure Tests 14-104
Torque Converter Clutch Solenoid Valve Test 14-106
Torque Converter Clutch Solenoid Valve Replacement 14-106
Shift Solenoid Valves B and C Test 14-107
Shift Solenoid Valves B and C Replacement 14-107
A/T Clutch Pressure Control Solenoid Valves A and B Test 14-108
A/T Clutch Pressure Control Solenoid Valves A and B Replacement 14-109
Speed Sensor Replacement 14-109
2nd Clutch Pressure Switch ('98-00 Models) Replacement 14-110
2nd Clutch Pressure Switch ('01-02 Models) Replacement 14-111
3rd Clutch Pressure Switch Replacement 14-112
ATF Level Check 14-113
ATF Replacement 14-113
Transmission Removal 14-114
Transmission Installation 14-119
ATF Cooler Flushing 14-125
ATF Cooler Hoses Replacement 14-126
Shift Lever Removal 14-127
Shift Lever Installation 14-128
Shift Lever Disassembly/Reassembly 14-130
Shift Cable Replacement 14-131
Shift Cable Adjustment 14-134

A/T Gear Position Indicator
Component Location Index 14-136
Circuit Diagram 14-137
Transmission Range Switch Test 14-138
Transmission Range Switch Replacement 14-139
Indicator Input Test 14-141
Indicator Bulb Replacement 14-142

A/T Interlock System
Component Location Index 14-143
Circuit Diagram 14-144
Control Unit Input Test 14-145
Key Interlock Solenoid/Switch Test 14-147
Shift Lock Solenoid Test 14-147
Shift Lock Solenoid Replacement 14-148
Park Pin Switch Test 14-148

Transmission End Cover
End Cover and Idler Gears Removal 14-149
Park Lever Stop Inspection and Adjustment 14-152
End Cover and Idler Gears Installation 14-194

Transmission Housing
Housing and Shaft Assemblies Removal 14-153
Bearing Replacement 14-155
Shaft Assemblies and Housing Installation 14-192

Valve Body
Valve Bodies and ATF Strainer Removal 14-156
Valve Body Repair 14-158
Valve Body Valve Installation 14-159
Main Valve Body Disassembly, Inspection, and Reassembly 14-160
ATF Pump Inspection 14-162
Regulator Valve Body Disassembly, Inspection, and Reassembly 14-163
Servo Body Disassembly, Inspection, and Reassembly 14-164
Accumulator Body Disassembly, Inspection, and Reassembly 14-165
Valve Bodies and ATF Strainer Installation 14-189

Torque Converter Housing
Mainshaft Bearing/Oil Seal Replacement 14-166
Countershaft Bearing Replacement 14-167
Secondary Shaft Bearing Replacement 14-167

Shafts and Clutches
Mainshaft Disassembly, Inspection, and Reassembly 14-168
3rd/4th Clutch Clearance Inspection 14-169
Mainshaft Sealing Rings Replacement 14-170
Countershaft Disassembly, Inspection, and Reassembly 14-171
Countershaft Reverse Selector Hub, 3rd Gear, and 1st Gear Replacement 14-172
Countershaft Bearing Hub/Bearing Replacement 14-174
Secondary Shaft Disassembly, Inspection, and Reassembly 14-175
Secondary Shaft Clearance Inspection 14-176
Secondary Shaft Idler Gear Bearing Replacement 14-178
Clutch Disassembly 14-179
Clutch Inspection 14-182
Clutch Reassembly 14-184

A/T Differential
Component Location Index 14-200
Backlash Inspection 14-201
Final Driven Gear/Carrier Replacement 14-201
Carrier Bearing Replacement 14-202
Oil Seal Replacement 14-203
Carrier Bearing Outer Race Replacement 14-204
Carrier Bearing Preload Inspection 14-205

BACK

Special Tools

Ref.No.	Tool Number	Description	Qty
①	07GAB-PF50101 or 07GAB-PF50100	Mainshaft Holder	1
②	07GAD-PG40101 or 07GAD-PG40100	Seal Driver Attachment	1
③	07GAD-SD40101	Attachment, 78 x 90 mm	1
④	07GAE-PG40200 or 07GAE-PG4020A	Clutch Spring Compressor Bolt Assembly	1
*⑤	07HAC-PK40102	Housing Puller	1
⑥	07HAD-SF10100	Driver Attachment	1
⑦	07HAJ-PK40201	Preload Inspection Tool	1
⑧	07JAD-PH80101	Driver Attachment	1
⑨	07JAD-PH80400	Pilot, 28 x 30 mm	1
⑩	07LAD-PW50601	Attachment, 40 x 50 mm	1
**⑪	07LAE-PX40100	Clutch Spring Compressor Attachment	2
⑫	07MAJ-PY4011A	A/T Pressure Hose, 2,210 mm	4
⑬	07MAJ-PY40120	A/T Pressure Hose Adapter	4
⑭	07SAZ-001000A	Backprobe Set	2
⑮	07ZAE-PRP0100	Clutch Compressor Attachment	1
⑯	07406-0020400	A/T Oil Pressure Gauge Set w/Panel	1
***⑰	07736-A01000B or 07736-A01000A	Adjustable Bearing Puller, 25－40 mm	1
⑱	07746-0010300	Attachment, 42 x 47 mm	1
⑲	07746-0010500	Attachment, 62 x 68 mm	1
⑳	07746-0010600	Attachment, 72 x 75 mm	1
㉑	07746-0030100	Driver 40 mm I.D.	1
㉒	07749-0010000	Driver	1
㉓	07947-6340500	Driver Attachment	1
㉔	07949-3710001	Driver	1

* If the top arm is too short, replace it with 07SAC-P0Z01001.
** 07HAE-PL50101 may be used to substitute one of these tools.
*** Must be used with commercially available 3/8"-16 slide hammer.

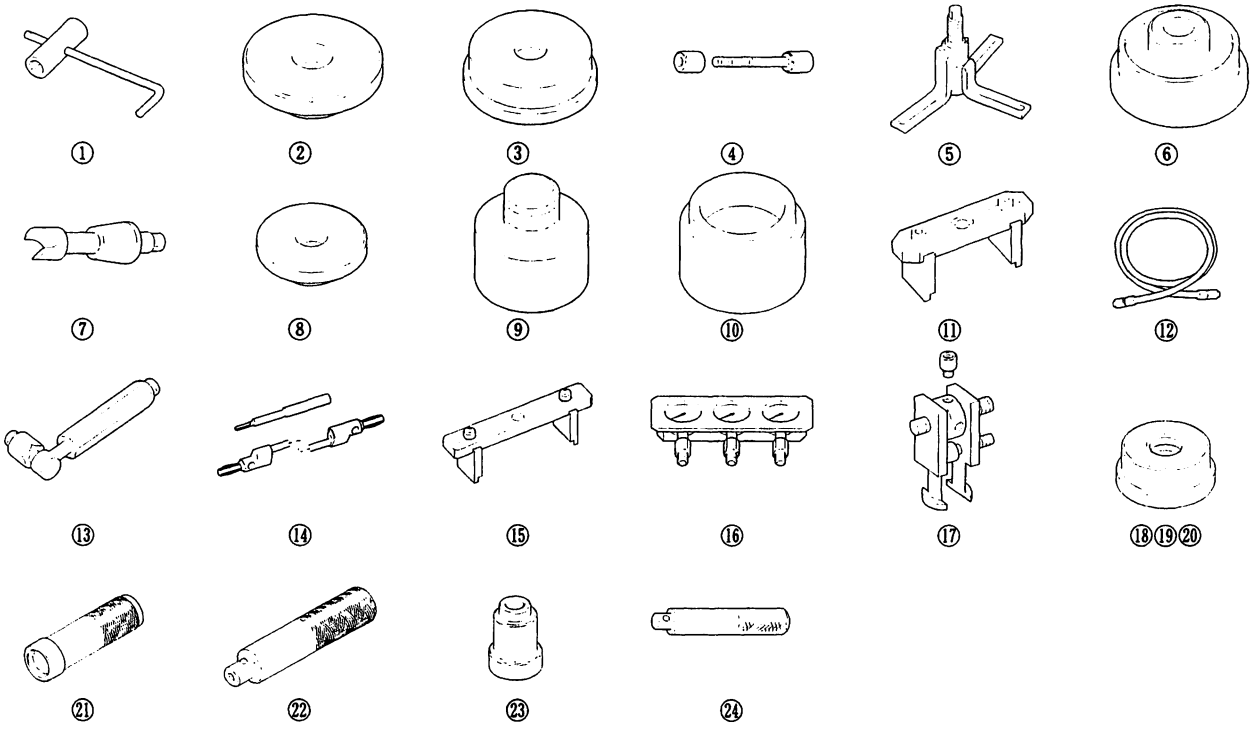

BACK

General Troubleshooting Information

How to Check for DTCs with the PGM Tester/Scan Tool

When the PCM senses an abnormality in the input or output systems, the D4 indicator in the gauge assembly will blink. When the 16P Data Link Connector (DLC) (located next to the driver's side kick panel) is connected to the OBD II Scan Tool or Honda PGM Tester as shown, the scan tool or tester will indicate the Diagnostic Trouble Code (DTC) when the ignition switch is turned ON (II).

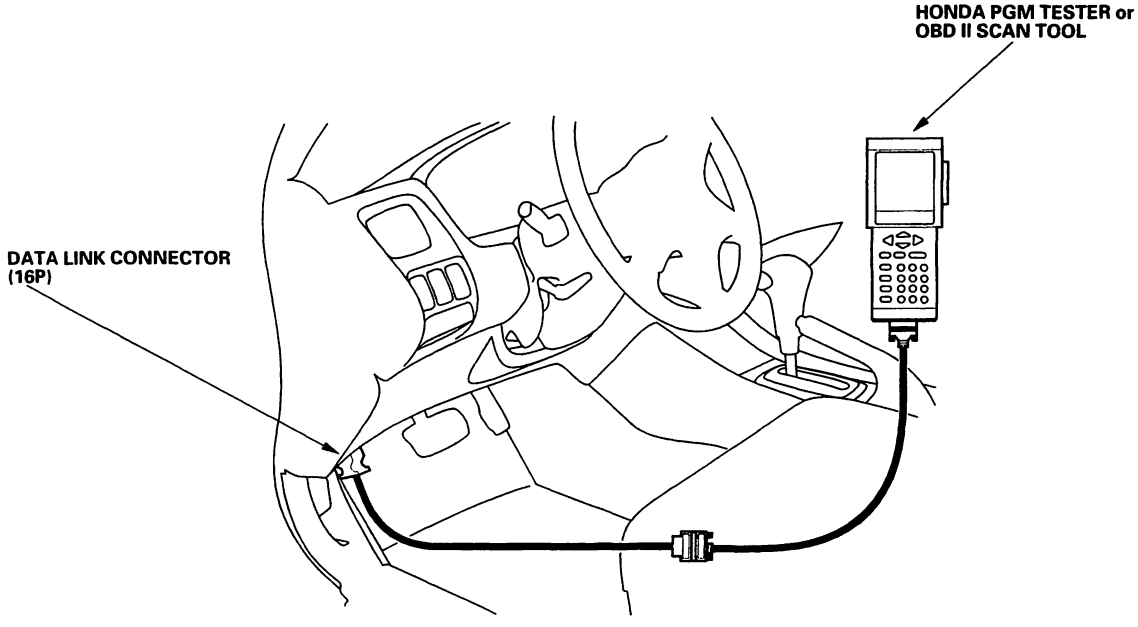

If the D4 indicator or the MIL has been reported on, or if a driveability problem is suspected, follow this procedure:

1. Connect the OBD II Scan Tool (conforming to SAE J1978) or Honda PGM Tester to the 16P DLC. (See the OBD II Scan Tool or Honda PGM Tester user's manual for specific instructions. If you are using the Honda PGM Tester, make sure it is set to the SAE DTC type.)

2. Turn the ignition switch ON (II), and observe the DTC on the screen.

3. Record all fuel and emission DTCs, A/T DTCs, and freeze data.

4. If there is a fuel and emissions DTC, first check the fuel and emissions system as indicated by the DTC (except for DTC P0700). DTC P0700 means there is one or more A/T DTC, and no problems were detected in the fuel and emissions circuit of the PCM.

5. Get the anti-theft code for the radio, then write down the radio station presets.

6. Reset the memory with the PGM Tester or by removing the BACK UP fuse in the passenger's under-dash fuse/relay box for more than 10 seconds.

7. Drive the vehicle for several minutes under the same conditions as those indicated by the freeze data, and then recheck for DTCs. If the A/T DTC returns, go to the DTC Troubleshooting Index on page 14-7. If the DTC does not return, there was an intermittent problem within the circuit. Make sure all pins and terminals in the circuit are tight, and then go to step 8.

8. Enter the anti-theft code for the radio, reset the radio preset stations, and set the clock.

(cont'd)

General Troubleshooting Information (cont'd)

How to Check for DTCs

When the PCM senses an abnormality in the input or output systems, the D4 indicator in the gauge assembly will usually blink and/or the Malfunction Indicator Lamp (MIL) may come on. When the Data Link Connector (DLC) (located next to the driver's side kick panel) is connected to the Honda PGM Tester, the D4 indicator will blink the Diagnostic Trouble Code (DTC) when the ignition switch is turned ON (II).
When the D4 indicator has been reported on, connect the Honda PGM Tester to the DLC. Turn the ignition switch ON (II), select Honda Systems, and then the SCS mode, then observe the D4 indicator.

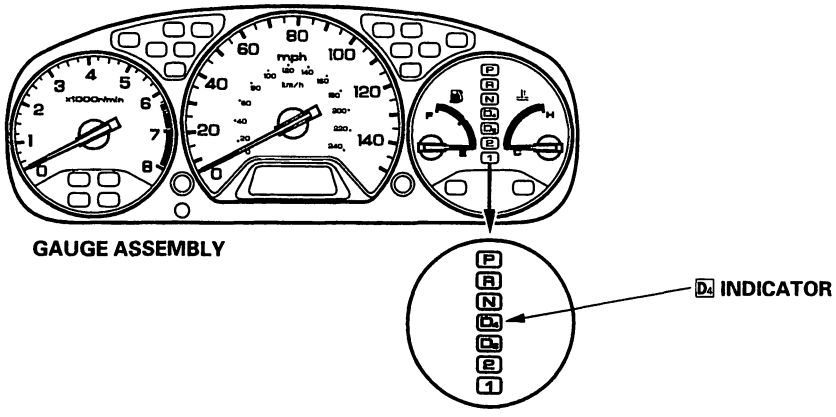

Codes 1 through 9 are indicated by individual short blinks. Codes 10 and above are indicated by a series of long and short blinks. One long blink equals 10 short blinks. Add the long and short blinks together to determine the code. After determining the code, refer to the DTC Troubleshooting Index.

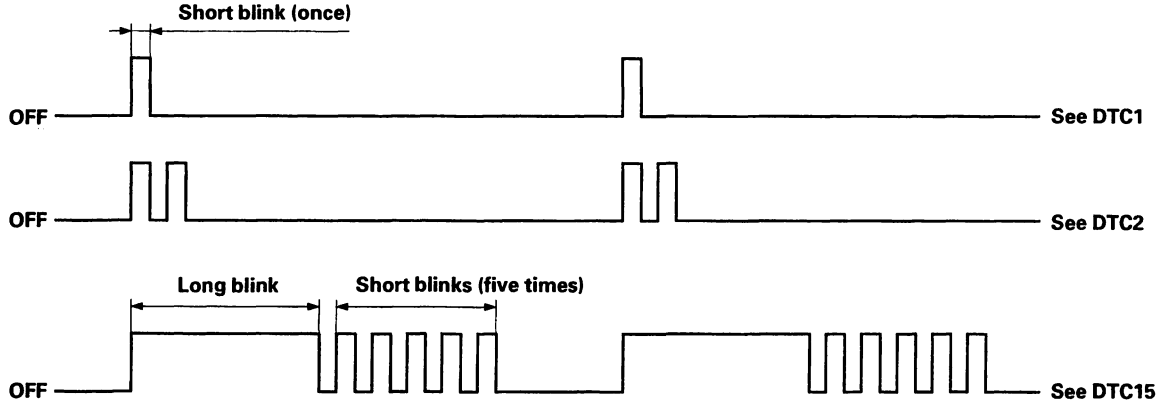

If the D4 indicator or the MIL has been reported on, or if a driveability problem, follow this procedure:

1. Record all fuel/emissions DTCs, A/T DTCs, and freeze data.
2. If there is a fuel and emissions DTC, first check the fuel and emissions system as indicated by the DTC (except for DTC P0700), DTC P0700 means there is one or more A/T DTC, and no problems were detected in the fuel and emissions circuit of the PCM.
3. Get the customer's radio anti-theft code, and write down the numbers of the radio station presets.
4. Reset the memory by removing the BACK UP fuse in the passenger's under-dash fuse/relay box for more than 10 seconds.
5. Drive the vehicle for several minutes under the same conditions as those indicated by the freeze data, and then recheck for DTCs. If the DTC returns, refer to the DTC Troubleshooting Index. If the DTC does no return, there was an intermittent problem within the circuit. Make sure all pins and terminals in the circuit are tight, then go to step 6.
6. Enter the radio code, reset the preset stations, and reset the clock.

How to Troubleshoot Circuits at the PCM

Special Tools Required
Backprobe set 07SAZ-001000A (two required)

SRS components are located in this area. Review the SRS components locations, precautions, and procedures in the SRS section before performing repairs or service (see page 23-28).

1. Pull back the carpet from the passenger's side of the center console to expose the PCM.

2. Inspect the circuit on the PCM, according to the DTC troubleshooting, with the special tools and a digital multimeter.

3. Connect the backprobe adapters (A) to the stacking patch cords (B), and connect the cords to a multimeter (C). Using the wire insulation as a guide for the contoured tip of the backprobe adapter, gently slide the tip into the connector from the wire side until it comes in contact with the terminal end of the wire.

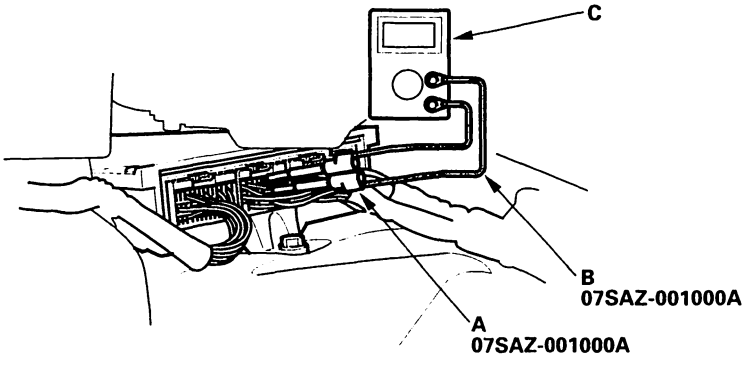

(cont'd)

General Troubleshooting Information (cont'd)

How to Reset the PCM

1. Make sure you have the anti-theft code for the radio, then write down the radio station presets.
2. Turn the ignition switch OFF.
3. Use one of these methods to reset the PCM memory:
   - Use the OBD II Scan Tool or the Honda PGM Tester.
   - Remove the BACK UP fuse (7.5 A)(A) from the passenger's under-dash fuse/relay box (B) for 10 seconds.

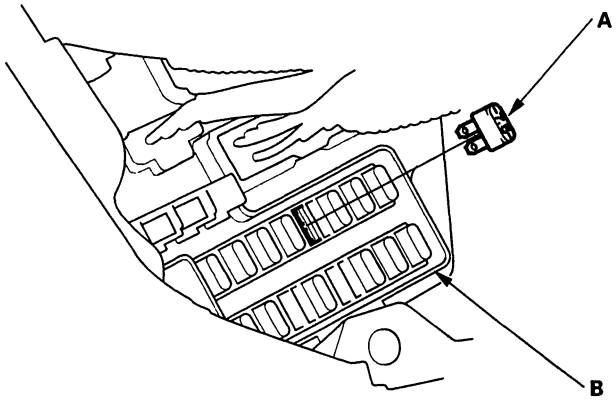

How to End a Troubleshooting Session

This procedure must be done after any troubleshooting.

1. Turn the ignition switch OFF.
2. Disconnect the OBD II Scan Tool or Honda PGM Tester from the DLC.
3. Reset the PCM.
4. Turn the ignition switch ON (II).
5. Enter the radio code, reset the preset stations, and set the clock.
6. To verify that the problem is repaired, test-drive the vihicle for several minuites at speeds over 30 mph (48km/h).

BACK

DTC Troubleshooting Index

NOTE: Record all freeze data before you troubleshoot.

DTC*	D4 Indicator	MIL	Detection Item	Page
P0715 (15)	Blinks	ON	Mainshaft speed sensor	(see page 14-76)
P0720 (9)	Blinks	ON	Countershaft speed sensor	(see page 14-75)
P0730 (41)	OFF	ON	Shift control system	(see page 14-89)
P0740 (40)	OFF	ON	Lock-up control system	(see page 14-88)
P0753 (7)	Blinks	ON	Shift solenoid valve A	(see page 14-71)
P0758 (8)	Blinks	ON	Shift solenoid valve B	(see page 14-73)
P0763 (22)	Blinks	ON	Shift solenoid valve C	(see page 14-80)
P0780 (45)	Blinks	ON	Mechanical problem in hydraulic system	(see page 14-90)
P1705 (5)	Blinks	ON	Transmission range switch (short to ground)	(see page 14-66)
P1706 (6)	OFF	ON	Transmission range switch (open)	(see page 14-69)
P1738 (25)	OFF	OFF	2nd clutch pressure switch	(see page 14-84)
P1739 (26)	OFF	OFF	3rd clutch pressure switch	(see page 14-86)
P1750 (46)	Blinks	ON	Mechanical problem in hydraulic system	(see page 14-91)
P1751 (47)	Blinks	ON	Mechanical problem in hydraulic system	(see page 14-92)
P1753 (1)	Blinks	ON	Torque converter clutch solenoid valve	(see page 14-64)
P1768 (16)	Blinks	ON	A/T clutch pressure control solenoid valve A	(see page 14-78)
P1773 (23)	Blinks	ON	A/T clutch pressure control solenoid valve B	(see page 14-82)

The DTC in the parentheses is the flash code the D4 indicator indicates when the Data Link Connector (DLC) is connected to the Honda PGM Tester.
NOTE: Codes P0780 (45), P1750 (46), and P1751 (47) are applied to the '00-02 models.

Symptom Troubleshooting Index

These symptoms DO NOT trigger Diagnostic Trouble Codes (DTCs) or cause the D4 indicator to blink. If the Malfunction Indicator Lamp (MIL) was reported ON or the D4 indicator has been blinking, check for DTCs. But if the vehicle has one of the symptoms in the following chart, check the probable cause(s) for it, in the sequence listed, until you find the problem.

Symptom	Probable cause(s)	Notes
When you turn the ignition switch ON (II), the D4 indicator comes on and stays on or never comes on at all	A problem in the D4 indicator circuit	Check the D4 indicator circuit (see page 14-93).
Shift lever cannot be moved from P position while you're pushing on the brake pedal	A problem in shift lock system of interlock system.	Check interlock system—shift lock system circuit (see page 14-96).
Ignition key cannot be moved from ACC (I) position to LOCK (0) position while you're pushing the ignition key with the shift lever in P position	A problem in key interlock system of interlock system	Check interlock system—key interlock system circuit (see page 14-99).

BACK

Symptom	Probable cause(s)	Notes
Engine runs, but vehicle does not move in any gear	1. Low ATF level 2. Shift cable broken or out of adjustment 3. Joint in shift cable and transmission or body worn 4. ATF pump worn or binding 5. Regulator valve stuck or spring worn 6. ATF strainer clogged 7. Mainshaft worn or damaged 8. Final gears worn or damaged 9. Transmission-to-engine assembly error 10. Axle disengaged	• Check ATF level and check ATF cooler lines for leakage and loose connections. If necessary, flush ATF cooler lines. • Check for a loose shift cable at the shift lever and the transmission control shaft. • Improper alignment of ATF pump and torque converter housing may cause ATF pump seizure. The symptoms are mostly an rpm-related ticking noise or a high pitched squeak. • Measure line pressure. • If the strainer is clogged, find the damaged components that caused debris. • Inspect the differential pinion gear for wear. If the differential pinion gears are worn, replace the differential assembly, replace the ATF strainer, thoroughly clean the transmission, and flush the torque converter, cooler, and lines. • Be careful not to damage the torque converter housing when replacing the main ball bearing. You may also damage the ATF pump when you torque down the main valve body. This will result in ATF pump seizure if not detected. Use the proper tools. • Install the main seal flush with the torque converter housing. If you push it into the torque converter housing until it bottoms out, it will block the fluid return passage and result in damage.
Vehicle moves in 2 and R, but not in D4, D3, or 1 position	1. 1st accumulator defective 2. 1st gears worn or damaged 3. 1st clutch defective	• Inspect 1st clutch pressure. • Inspect the secondary shaft and 1st/2nd clutch assembly for wear and damage. • Inspect the clutch piston and O-rings. Check the spring retainer for wear and damage. Inspect the clutch end plate-to-top disc clearance. If the clearance is out of tolerance, inspect the clutch discs and plates for wear and damage. If the discs and plates are worn or damaged, replace them as a set. If they are OK, adjust the clutch end plate clearance.

(cont'd)

Symptom Troubleshooting Index (cont'd)

Symptom	Probable cause(s)	Notes
Vehicle moves in D4, D3, 1, R, but not in 2 position	1. Shift solenoid valve A defective 2. Shift valve A defective 3. 2nd accumulator defective 4. 2nd gears worn or damaged 5. 2nd clutch defective	• Check the 2 indicator indication, and check for loose connectors. Inspect the O-rings, and check the shift solenoid valve for seizure. • Inspect the secondary shaft and 1st/2nd clutch assembly for wear and damage. • Inspect the clutch piston and O-rings. Check the spring retainer for wear and damage. Inspect the clutch end plate-to-top disc clearance. If the clearance is out of tolerance, inspect the clutch discs and plates for wear and damage. If the discs and plates are worn or damaged, replace them as a set. If they are OK, adjust the clutch end plate clearance.
Vehicle moves in D4, D3, 2, 1, but not in R position	1. Shift fork shaft stuck 2. Modulator valve defective 3. Reverse CPC valve defective 4. 4th accumulator defective 5. 4th clutch defective 6. Reverse gears worn or damaged	• Measure line pressure and 4th clutch pressure. • Check for a missing shift fork bolt on the shift fork shaft. • If the ATF strainer is clogged with particles of steel or aluminum, inspect the ATF pump. If the ATF pump is OK, and no cause for the contamination is found, replace the torque converter. • Inspect the reverse selector gear teeth chamfers, and inspect engagement teeth chamfers of the countershaft 4th gear and reverse gear. Replace the reverse gears and the reverse selector if they are worn or damaged. If the transmission makes clicking, grinding, or whirring noises, also replace the mainshaft 4th gear, reverse idler gear, and countershaft 4th gear. • If the 4th clutch feed pipe guide in the end cover is scored by the mainshaft, inspect the ball bearing for excessive movement in the transmission housing. If the ball bearing is OK, replace the end cover as it is dented. The O-ring under the guide is probably worn. • Replace the mainshaft if the bushing for the 3rd and 4th clutch feed pipes are loose or damaged. If the 4th clutch feed pipe is damaged or out of round, replace the end cover. • Inspect the clutch piston, clutch piston check valve, and O-rings. Check the spring retainer for wear and damage. Inspect the clutch end plate-to-top disc clearance. If the clearance is out of tolerance, inspect the clutch discs and plates for wear and damage. If the discs and plates are worn or damaged, replace them as a set. If they are OK, adjust the clearance with the clutch end plate.

BACK

Symptom	Probable cause(s)	Notes
Poor acceleration; flares on starting off in D4 and D3 positions: Stall speed high in D4, D3, 2, and 1 positions	1. Low ATF level 2. Shift cable broken or out of adjustment 3. ATF pump worn or binding 4. Regulator valve stuck or spring worn 5. ATF strainer clogged 6. Torque converter check valve defective	• Check ATF level and check ATF cooler lines for leakage and loose connections. If necessary, flush ATF cooler lines. • Check for a loose shift cable at the shift lever and the transmission control shaft. • Check line pressure. • Improper alignment of ATF pump and torque converter housing may cause ATF pump seizure. The symptoms are mostly an rpm-ticking noise or a high pitched squeak. • Be careful not to damage the torque converter housing when replacing the main ball bearing. You may also damage the ATF pump when you torque down the main valve body. This will result in ATF pump seizure if not detected. Use the proper tools.
Poor acceleration; flares on starting off in D4 and D3 positions: Stall speed high in D4, D3,and 1 positions	1. Shift cable broken or out of adjustment 2. 1st clutch defective	• Check for a loose shift cable at the shift lever and the transmission control shaft. • Check 1st clutch pressure. • Inspect the clutch piston and O-rings. Check the spring retainer for wear and damage. Inspect the clutch end plate-to-top disc clearance. If the clearance is out of tolerance, inspect the clutch discs and plates for wear and damage. If the discs and plates are worn or damaged, replace them as a set. If they are OK, adjust the clutch end plate clearance.
Poor acceleration; flares on starting off in 2 position: Stall speed high in 2 position	1. Shift cable broken or out of adjustment 2. 2nd clutch defective	• Check for a loose shift cable at the shift lever and the transmission control shaft. • Check 2nd clutch pressure. • Inspect the clutch piston and O-rings. Check the spring retainer for wear and damage. Inspect the clutch end plate-to-top disc clearance. If the clearance is out of tolerance, inspect the clutch discs and plates for wear and damage. If the discs and plates are worn or damaged, replace them as a set. If they are OK, adjust the clutch end plate clearance.
Poor acceleration; flares on starting off in R position: Stall speed is in specification in D4, D3, 2, and 1 positions, but high in R position	4th clutch defective	• Check 4th clutch pressure. • Inspect the clutch piston, clutch piston check valve, and O-rings. Check the spring retainer for wear and damage. Inspect the clutch end plate-to-top disc clearance. If the clearance is out of tolerance, inspect the clutch discs and plates for wear and damage. If the discs and plates are worn or damaged, replace them as a set. If they are OK, adjust the clutch end plate clearance.

(cont'd)

Symptom Troubleshooting Index (cont'd)

Symptom	Probable cause(s)	Notes
Poor acceleration; Stall speed low	1. Torque converter clutch solenoid valve defective 2. Torque converter one-way clutch defective 3. Engine output low 4. Lock-up clutch piston defective 5. Lock-up shift valve defective 6. Restricted cooler	Check ATF cooling system for restriction.
Engine idle vibration	1. Low ATF level 2. Torque converter clutch solenoid valve defective 3. Drive plate defective or transmission misassembled 4. Engine output low 5. Lock-up clutch piston defective 6. ATF pump worn or binding 7. Lock-up shift valve defective 8. Restricted cooler	• Set idle rpm in gear to the specified idle speed. If still no good, adjust the engine mounts as outlined in the engine section of this service manual. • Check ATF level and check ATF cooler lines for leakage and loose connections. If necessary, flush ATF cooler lines. • Check ATF cooling system for restriction.
Vehicle moves in [N] position	1. Excessive ATF 2. Foreign material in separator plate orifice 3. 1st clutch defective 4. 2nd clutch defective 5. 3rd clutch defective 6. 4th clutch defective 7. Clutch clearance incorrect 8. Needle bearing seized up, worn or damaged 9. Thrust washer seized up, worn, or damaged	• Check ATF level and check ATF cooler lines for leakage and loose connections. If necessary, flush ATF cooler lines. • Inspect the clutch piston, clutch piston check valve, and O-rings. Check the spring retainer for wear and damage. Inspect the clutch end plate-to-top disc clearance. If the clearance is out of tolerance, inspect the clutch discs and plates for wear and damage. If the discs and plates are worn or damaged, replace them as a set. If they are OK, adjust the clutch end plate clearance. • Check for clutch pressure in neutral.

BACK

Symptom	Probable cause(s)	Notes
Late shift from N position to D4 and D3 positions	1. Shift solenoid valve C defective 2. A/T clutch pressure control solenoid valves A and B defective 3. Shift cable broken or out of adjustment 4. Joint in shift cable and transmission or body worn 5. Shift fork shaft stuck 6. CPC valve A stuck 7. Foreign material in separator plate orifice 8. Shift valve C defective 9. Servo control valve defective 10. 1st accumulator defective 11. 1st check ball stuck 12. 1st clutch defective	• Check the D4 indicator indication, and check for loose connectors. Inspect the O-ring, and check the shift solenoid valve for seizure. • Inspect the A/T clutch pressure control solenoid valve body gasket and ATF feed pipes for wear and damage. If the A/T clutch pressure control solenoid valve is stuck, inspect the CPC valves. • Check for a loose shift cable at the shift lever and the transmission control shaft. • If the ATF strainer is clogged with particles of steel or aluminum, inspect the ATF pump. If the ATF pump is OK, and no cause for the contamination is found, replace the torque converter. • Check 1st clutch pressure. • Inspect the clutch piston, clutch piston check valve, and O-rings. Check the spring retainer for wear and damage. Inspect the clutch end plate-to-top disc clearance. If the clearance is out of tolerance, inspect the clutch discs and plates for wear and damage. If the discs and plates are worn or damaged, replace them as a set. If they are OK, adjust the clutch end plate clearance.
Late shift from N position to R position	1. Shift solenoid valve C defective 2. A/T clutch pressure control solenoid valves A and B defective 3. Shift cable broken or out of adjustment 4. Joint in shift cable and transmission or body worn 5. Shift fork shaft stuck 6. Foreign material in separator plate orifice 7. Reverse CPC valve defective 8. 4th accumulator defective 9. 4th clutch defective	• Check the D4 indicator indication, and check for loose connectors. Inspect the O-ring, and check the shift solenoid valve for seizure. • Inspect the A/T clutch pressure control solenoid valve body gasket and ATF feed pipes for wear and damage. If the A/T clutch pressure control solenoid valve is stuck, inspect the CPC valves. • Check for a loose shift cable at the shift lever and the transmission control shaft. • If the ATF strainer is clogged with particles of steel or aluminum, inspect the ATF pump. If the ATF pump is OK, and no cause for the contamination is found, replace the torque converter. • Check 4th clutch pressure. • Inspect the clutch piston, clutch piston check valve, and O-rings. Check the spring retainer for wear and damage. Inspect the clutch end plate-to-top disc clearance. If the clearance is out of tolerance, inspect the clutch discs and plates for wear and damage. If the discs and plates are worn and damaged, replace them as a set. If they are OK, adjust the clutch end plate clearance.

(cont'd)

Symptom Troubleshooting Index (cont'd)

Symptom	Probable cause(s)	Notes
No shift	Modulator valve defective	Measure line pressure.
Erratic shifting gears: Fails to shift in D4 position; does not upshift to 4th	1. Shift solenoid valve A defective 2. Mainshaft speed sensor defective 3. Countershaft speed sensor defective 4. Shift valve A defective 5. Shift valve D defective	• Inspect the O-ring, and check the shift solenoid valve for seizure. • Check the D4 indicator indication, and check for loose connectors. Inspect the transmission range switch. If the transmission range switch is faulty, replace it. If the transmission range switch is out of adjustment, adjust it and the shift cable.
Erratic shifting gears: Fails to shift in D4 and D3 positions; does not upshift to 3rd and 4th	1. Shift solenoid valve B defective 2. Shift fork shaft stuck 3. Shift valve B defective 4. Servo control valve defective	• Check the D4 indicator indication, and check for loose connectors. Inspect the O-ring, and check the shift solenoid valve for seizure. • Check for a missing shift fork bolt on the shift fork shaft.
Erratic shifting gears: Fails to shift in D4, D3 and 1 positions; starts off in 3rd	1. Shift solenoid valve B defective 2. Shift valve B defective 3. Shift valve E defective	Check the D4 indicator indication, and check for loose connectors. Inspect the O-ring, and check the shift solenoid valve for seizure.
Excessive shock, or flares on all upshifts and downshifts	1. A/T clutch pressure control solenoid valves A and B defective 2. CPC valve A defective 3. CPC valve B defective 4. Foreign material in separator plate orifice	• Check the D4 indicator indication, and check for loose connectors. Inspect the A/T clutch pressure control solenoid valve body gasket and ATF feed pipes for wear and damage. If the A/T clutch pressure control solenoid valve is stuck, inspect the CPC valves. • If the ATF strainer is clogged with particles of steel or aluminum, inspect the ATF pump. If the ATF pump is OK, and no cause for the contamination is found, replace the torque converter.
Excessive shock or flares on 1-2 upshift or 2-1 downshift	1. Shift solenoid valve C defective 2. 2nd clutch pressure switch defective 3. Foreign material in separator plate orifice 4. Shift valve C defective 5. 1st accumulator defective 6. 2nd accumulator defective 7. 1st check ball stuck 8. 2nd check ball stuck 9. 1st clutch defective 10. 2nd clutch defective	• Check the D4 indicator indication, and check for loose connectors. Inspect the O-rings, and check the shift solenoid valve for seizure. Check that the outlet is not clogged inside of the 2nd clutch pressure switch connector. • Check 1st and 2nd clutch pressures. • Inspect the clutch piston and O-rings. Check the spring retainer for wear and damage. Inspect the clutch end plate-to-top disc clearance. If the clearance is out of tolerance, inspect the clutch discs and plates for wear and damage. If the discs and plates are worn or damaged, replace them as a set. If they are OK, adjust the clutch end plate clearance.

BACK

Symptom	Probable cause(s)	Notes
Excessive shock, or flares on 2-3 upshift or 3-2 downshift	1. Shift solenoid valve C defective 2. 3rd clutch pressure switch defective 3. Foreign material in separator plate orifice 4. Shift valve C defective 5. 2nd accumulator defective 6. 3rd accumulator defective 7. 2nd check ball stuck 8. 2nd clutch defective 9. 3rd clutch defective	• Check the D4 indicator indication, and check for loose connectors. Inspect the O-rings, and check the shift solenoid valve for seizure. Check that the outlet is not clogged inside of the 3rd clutch pressure switch connector. • Check 2nd and 3rd clutch pressures. • Inspect the clutch piston, clutch piston check valve, and O-rings. Check the spring retainer for wear and damage. Inspect the clutch end plate-to-top disc clearance. If the clearance is out of tolerance, inspect the clutch discs and plates for wear and damage. If the discs and plates are worn or damaged, replace them as a set. If they are OK, adjust the clutch end plate clearance.
Excessive shock, or flares on 3-4 upshift or 4-3 downshift	1. Shift solenoid valve C defective 2. Foreign material in separator plate orifice 3. Shift valve C defective 4. 3rd accumulator defective 5. 4th accumulator defective 6. 3rd clutch defective 7. 4th clutch defective	• Check the D4 indicator indication, and check for loose connectors. Inspect the O-rings, and check the shift solenoid valve for seizure. • Check 3rd and 4th clutch pressures. • If the ATF strainer is clogged with particles of steel or aluminum, inspect the ATF pump. If the ATF pump is OK, and no cause for the contamination is found, replace the torque converter, and check the stall speed. • Inspect the clutch piston, clutch piston check valve, and O-rings. Check the spring retainer for wear and damage. Inspect the clutch end plate-to-top disc clearance. If the clearance is out of tolerance, inspect the clutch discs and plates for wear and damage. If the discs and plates are worn or damaged, replace them as a set. If they are OK, adjust the clutch end plate clearance.
Noise from transmission in all shift lever positions	1. ATF pump worn or binding 2. Torque converter housing or transmission housing bearing worn or damaged	• Improper alignment of ATF pump and torque converter housing may cause ATF pump seizure. The symptoms are mostly an rpm-ticking noise or a high pitched squeak. • Inspect the contact of the countershaft and secondary shaft with the bearings. Check the ATF guide plates for damage and wear. Inspect the 1st clutch feed pipe for damage and out of round. If the 1st clutch feed pipe is damaged or out of round, replace it. Replace the secondary shaft if the bushing for the 1st clutch feed pipe is damaged or out of round.
Vehicle does not accelerate more than 31 mph (50 km/h)	Torque converter one-way clutch defective	Replace torque converter.

(cont'd)

Symptom Troubleshooting Index (cont'd)

Symptom	Probable cause(s)	Notes
Vibration in all shift lever positions	Drive plate defective or transmission misassembled	• Set idle rpm in gear to the specified idle speed. If still no good, adjust the engine mounts as outlined in the engine section of the service manual. • Check the stall speed.
Shift lever does not operate smoothly	1. A/T gear position switch defective or out of adjustment 2. Shift cable broken or out of adjustment 3. Joint in shift cable and transmission or body worn	• Check the D4 indicator indication, and check for loose connectors. Inspect the transmission range switch. If the transmission range switch is faulty, replace it. If the transmission range switch is out of adjustment, adjust it and the shift cable. • Check for a loose shift cable at the shift lever and the transmission control shaft.
Transmission does not shift into P position	1. Shift cable broken or out of adjustment 2. Joint in shift cable and transmission or body worn 3. Park mechanism defective	• Check for a loose shift cable at the shift lever and the transmission control shaft. • Check the park pawl spring installation and the park lever spring installation. If installation is incorrect, install the spring correctly. Make sure that the park lever stop is not installed upside down. Check the distance between the park pawl and the park lever roller pin. If the distance is out of tolerance, adjust the distance with the park lever stop.
Lock-up clutch does not disengage	1. Torque converter clutch solenoid valve defective 2. A/T clutch pressure control solenoid valves A and B defective 3. Lock-up clutch piston defective 4. Lock-up shift valve defective 5. Lock-up control valve defective 6. Lock-up timing valve defective 7. Restricted cooler	• Check the D4 indicator indication, and check for loose connectors. Inspect the A/T clutch pressure control solenoid valve body gasket and ATF feed pipes for wear and damage. If the A/T clutch pressure control solenoid valve is stuck, inspect the CPC valves. • Check ATF cooling system for restriction.

BACK

Symptom	Probable cause(s)	Notes
Lock-up clutch does not operate smoothly	1. Torque converter clutch solenoid valve defective 2. A/T clutch pressure control solenoid valves A and B defective 3. Lock-up clutch piston defective 4. Torque converter check valve defective 5. Lock-up shift valve defective 6. Lock-up control valve defective 7. Lock-up timing valve defective	• Check the D4 indicator indication, and check for loose connectors. Inspect the A/T clutch pressure control solenoid valve body gasket and ATF feed pipes for wear and damage. If the A/T clutch pressure control solenoid valve is stuck, inspect the CPC valves. • Center all engine mounts.
Lock-up clutch does not engage	1. Torque converter clutch solenoid valve defective 2. A/T clutch pressure control solenoid valves A and B defective 3. Mainshaft speed sensor defective 4. Countershatft speed sensor defective 5. Lock-up clutch piston defective 6. Torque converter check valve defective 7. Lock-up shift valve defective 8. Lock-up control valve defective	Check the D4 indicator indication, and check for loose connectors. Inspect the A/T clutch pressure control solenoid valve body gasket and ATF feed pipes for wear and damage. If the A/T clutch pressure control solenoid valve is stuck, inspect the CPC valves.
A/T gear position indicator does not indicate shift lever positions	1. Transmission range switch defective or out of adjustment 2. Shift cable broken or out of adjustment 3. Joint in shift cable and transmission or body worn	• Check the D4 indicator indication, and check for loose connectors. Inspect the transmission range switch. If the transmission range switch is faulty, replace it. If the transmission range switch is out of adjustment, adjust it and the shift cable. • Check for a loose shift cable at the shift lever and the transmission control shaft.
Speedometer does not operate	Countershaft speed sensor defective .	Check the D4 indicator indication, and check for loose connectors.

System Description

General Operation

The automatic transmission is a combination of a 3-element torque converter and triple-shaft electronically controlled automatic transmission which provides 4 speeds forward and 1 reverse. The entire unit is positioned in line with the engine.

Torque Converter, Gears, and Clutches
The torque converter consists of a pump, turbine, and stator assembly in a single unit. They are connected to the engine crankshaft so they turn together as a unit as the engine turns. Around the outside of the torque converter is a ring gear which meshes with the starter pinion when the engine is being started. The entire torque converter assembly serves as a flywheel while transmitting power to the transmission mainshaft. The transmission has three parallel shafts: the mainshaft, the countershaft, and the secondary shaft. The mainshaft is in line with the engine crankshaft. The mainshaft includes the 3rd and 4th clutches, and gears for 3rd, 4th, reverse, and idler (reverse gear is integral with 4th the gear). The countershaft includes the final drive, 1st, 3rd, 4th, reverse, 2nd, park, and idler gears (the final drive gear is integral with the countershaft). The secondary shaft includes the 1st and 2nd clutches, and gears for 1st, 2nd, and idler. The countershaft 4th gear and the countershaft reverse gear can be locked to the countershaft at its center, providing 4th gear or reverse, depending on which way the selector moved. The gears on the mainshaft and the secondary shaft are in constant mesh with those on the countershaft. When certain combinations of gears in the transmission are engaged by the clutches, power is transmitted from the mainshaft and the secondary shaft to the countershaft to provide D4, D3, 2, 1 and R positions.

Electronic Control
The electronic control system consists of the Powertrain Control Module (PCM), sensors, and six solenoid valves. Shifting and lock-up are electronically controlled for comfortable driving under all conditions. The PCM is located below the dashboard, under the front lower panel behind the center console.

Hydraulic Control
The valve bodies include the main valve body, the regulator valve body, the servo body, and the accumulator body. They are bolted to the torque converter housing. The main valve body contains the manual valve, the modulator valve, the shift valve C, the shift valve D, the shift valve E, the servo control valve, the torque converter check valve, the reverse CPC valve, the lock-up shift valve, the lock-up control valve, the cooler check valve, and the ATF pump gears. The regulator valve body contains the regulator valve, the lock-up timing valve, and the relief valve. The servo body contains the servo valve, the shift valve A, the shift valve B, the CPC valves A and B, and the 3rd and 4th accumulators. The accumulator body contains the 1st and 2nd accumulators, and the lubrication check valve. Fluid from the regulator passes through the manual valve to the various control valves. The 1st, 3rd, and 4th clutches receive fluid from their respective feed pipes, and the 2nd clutch receives fluid from the internal hydraulic circuit.

Shift Control Mechanism
The PCM controls shift solenoid valves A, B, and C, and A/T clutch pressure control solenoid valves A and B, while receiving input signal from various sensors located throughout the vehicle. The shift solenoid valves shift the positions of the shift valves to switch the port leading hydraulic pressure to the clutch. The A/T clutch pressure control solenoid valves A and B control the CPC valves A and B, to shift smoothly between lower gear and higher gear. This pressurizes a line to one of the clutches, engaging the clutch and its corresponding gear.

Lock-up Mechanism
In D4 position (3rd and 4th), and D3 position (3rd), pressurized fluid is drained from the back of the torque converter through a fluid passage, causing the lock-up piston to be held against the torque converter cover. As this takes place, the mainshaft rotates at the same speed as the engine crankshaft. Together with hydraulic control, the PCM optimizes the timing of the lock-up mechanism. When the torque converter clutch solenoid valve activates, modulator pressure changes to switch lock-up on and off. The lock-up control valve and the lock-up timing valve control the range of lock-up according to A/T clutch pressure control solenoid valves A and B. The torque converter clutch solenoid valve is mounted on the torque converter housing, and A/T clutch pressure control solenoid valves A and B are mounted on the transmission housing. They are all controlled by the PCM.

BACK

Gear Selection
The shift lever has seven positions: P PARK, R REVERSE, N NEUTRAL, D4 1st through 4th gear ranges, D3 1st through 3rd gear ranges, 2 2nd gear, and 1 1st gear.

Position	Description
P PARK	Front wheels locked; park pawl engaged with the park gear on the countershaft. All clutches released.
R REVERSE	Reverse; reverse selector engaged with countershaft reverse gear and 4th clutch engaged.
N NEUTRAL	All clutches released.
D4 DRIVE (1st through 4th)	General driving; starts off in 1st, shifts automatically to 2nd, 3rd, then 4th, depending on vehicle speed and throttle position. Downshift through 3rd, 2nd, and 1st on deceleration to stop. The lock-up mechanism operates in 3rd and 4th gears.
D3 DRIVE (1st through 3rd)	For rapid acceleration at highway speeds and general driving; up-hill and down-hill driving; starts off in 1st, shifts automatically to 2nd, then 3rd, depending on vehicle speed and throttle position. Downshifts through 2nd to 1st on deceleration to stop. The lock-up mechanism operates in 3rd gear.
2 SECOND	Driving in 2nd gear; stays in 2nd gear, does not shift up and down. For engine braking or better traction starting off on loose or slippery surface.
1 FIRST	Driving in 1st gear, stays in 1st gear, does not shift up. For engine braking.

Starting is possible only in P and N positions through the use of a slide-type, neutral-safety switch.

Automatic Transaxle (A/T) Gear Position Indicator
The A/T gear position indicator in the instrument panel shows what gear has been selected without looking down at the console.

(cont'd)

System Description (cont'd)

Clutches

The four-speed automatic transmission uses hydraulically-actuated cluches to engage or disengage the transmission gears. When hydraulic pressure is introduced into the clutch drum, the clutch piston moves. This presses the friction discs and steel plates together, locking them so they don't slip. Power is then transmitted through the engaged clutch pack to its hub-mounted gear. Likewise, when the hydraulic pressure is bled from the clutch pack, the piston releases the friction discs and the steel plates, and they are free to slide past each other. This allows the gear to spin independently on its shaft, transmitting no power.

1st Clutch
The 1st clutch engages/disengages 1st gear, and is located at the middle of the secondary shaft. The 1st clutch is joined back-to-back to the 2nd clutch. The 1st clutch is supplied hydraulic pressure by its ATF feed pipe within the secondary shaft.

2nd Clutch
The 2nd clutch engages/disengages 2nd gear, and is located at the middle of the secondary shaft. The 2nd clutch is joined back-to-back to the 1st clutch. The 2nd clutch is supplied hydraulic pressure through the secondary shaft by a circuit connected to the internal hydraulic circuit.

3rd Clutch
The 3rd clutch engages/disengages 3rd gear, and is located at the middle of the mainshaft. The 3rd clutch is joined back-to-back to the 4th clutch. The 3rd clutch is supplied hydraulic pressure by its ATF feed pipe within the mainshaft.

4th Clutch
The 4th clutch engages/disengages 4th gear, as well as reverse gear, and is located at the middle of the mainshaft. The 4th clutch is joined back-to-back to the 3rd clutch. The 4th clutch is supplied hydraulic pressure by its ATF feed pipe within the mainshaft.

BACK

Transmission Cutaway View

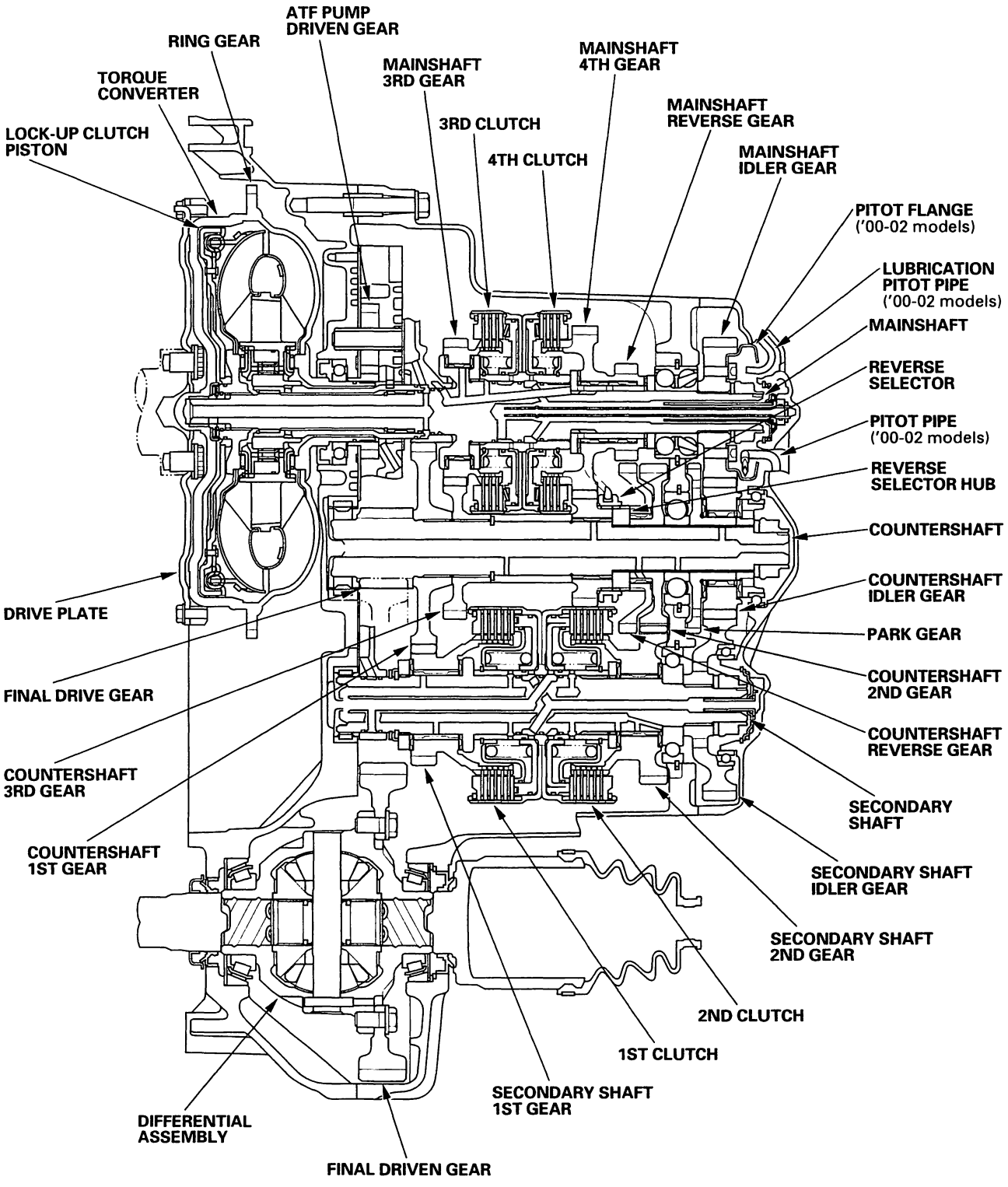

(cont'd)

System Description (cont'd)

Power Flow

POSITION		PART							
		TORQUE CONVERTER	1ST GEAR 1ST CLUTCH	2ND GEAR 2ND CLUTCH	3RD GEAR 3RD CLUTCH	4TH		REVERSE GEAR	PARK GEAR
						GEAR	CLUTCH		
P		○	×	×	×	×	×	×	○
R		○	×	×	×	×	○	○	×
N		○	×	×	×	×	×	×	×
D4	1ST	○	○	×	×	×	×	×	×
	2ND	○	×	○	×	×	×	×	×
	3RD	○	×	×	○	×	×	×	×
	4TH	○	×	×	×	○	○	×	×
D3	1ST	○	○	×	×	×	×	×	×
	2ND	○	×	○	×	×	×	×	×
	3RD	○	×	×	○	×	×	×	×
2		○	×	○	×	×	×	×	×
1		○	○	×	×	×	×	×	×

○: Operates
×: Doesn't operate

Gear Operation

Gears on the mainshaft:
- The 3rd gear is engaged/disengaged with the mainshaft by the 3rd clutch.
- The 4th gear is engaged/disengaged with the mainshaft by the 4th clutch.
- The reverse gear is engaged/disengaged with the mainshaft by the 4th clutch.
- The idler gear is splined with the mainshaft and rotates with the mainshaft.

Gears on the countershaft:
- The final drive gear is integral with the countershaft.
- The 1st gear, 3rd gear, 2nd gear, and park gear are splined with the countershaft and rotate with the countershaft.
- The 4th gear and reverse gear rotate freely from the countershaft. The reverse selector engages the 4th gear or the reverse gear with the reverse selector hub. The reverse selector hub is splined with the countershaft so that the 4th gear or reverse gear engage with the countershaft.
- The idler gear rotates freely from the countershaft.

Gears on the secondary shaft:
- The 1st gear is engaged/disengaged with the secondary shaft by the 1st clutch.
- The 2nd gear is engaged/disengaged with the secondary shaft by the 2nd clutch.
- The idler gear is splined with the secondary shaft and rotates with the secondary shaft.

BACK

P Position
Hydraulic pressure is not applied to the clutches. Power is not transmitted to the countershaft. The countershaft is locked by the park pawl interlocking the park gear.

N Position
Engine power transmitted from the torque converter drives the mainshaft idler gear, the countershaft idler gear, and the secondary shaft idler gear, but hydraulic pressure is not applied to the clutches. Power is not transmitted to the countershaft. The countershaft 4th gear is engaged with the reverse selector hub and the countershaft by the reverse selector, when the shift lever is shifted in N position from D4 position. The countershaft reverse gear is engaged when shifted from R position.

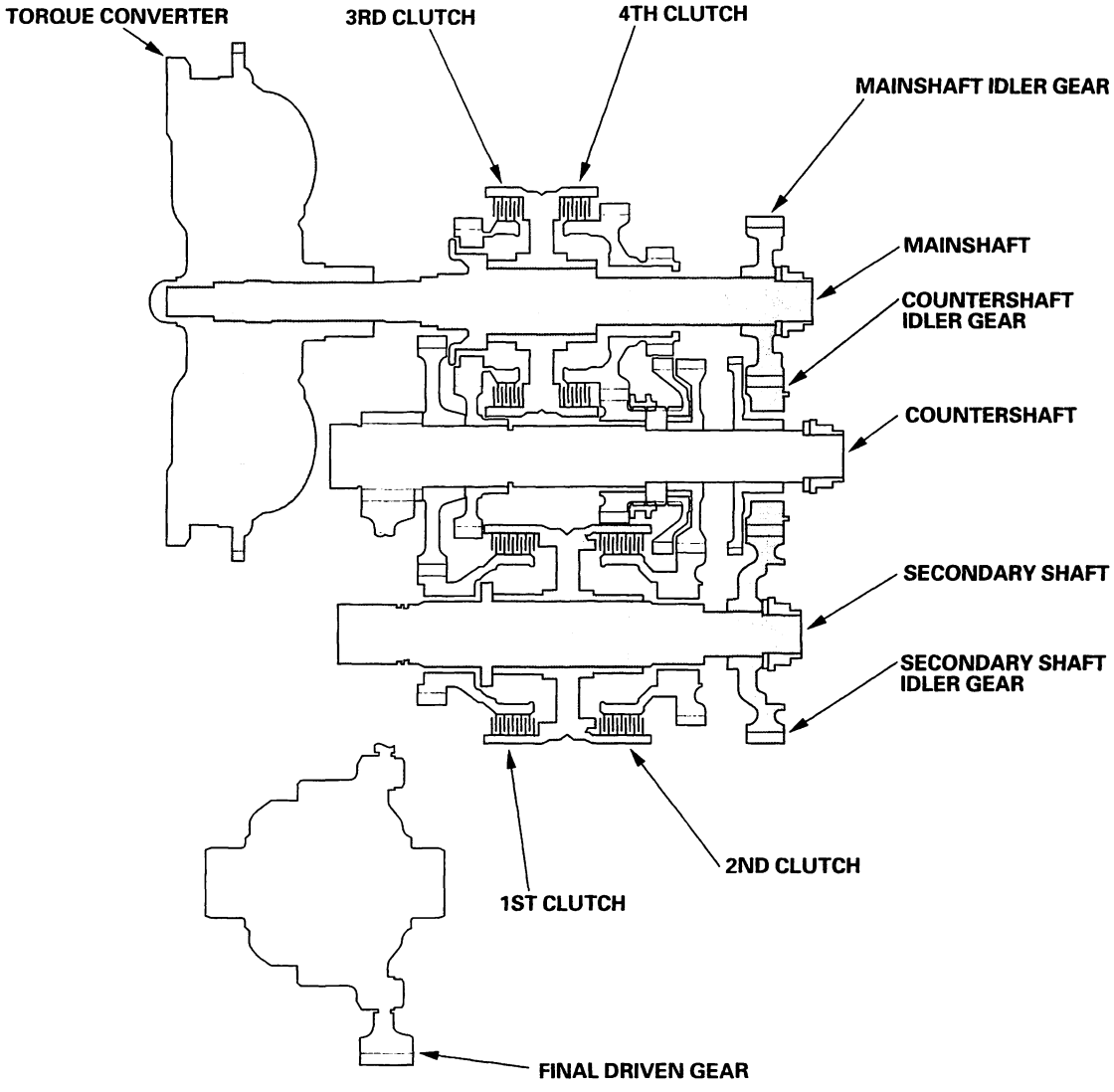

(cont'd)

System Description (cont'd)

Power Flow (cont'd)

In D4 or D3 position, the optimum gear is automatically selected from the 1st, 2nd, 3rd, and 4th gears, according to conditions such as the balance between the throttle opening (engine loading) and vehicle speed.

D4 or D3 Position in 1st gear and 1 Position

- Hydraulic pressure is applied to the 1st clutch, then the 1st clutch engages the secondary shaft 1st gear with the secondary shaft.
- The mainshaft idler gear drives the secondary shaft via the countershaft idler gear and secondary shaft idler gear.
- The secondary shaft 1st gear drives the countershaft 1st gear and the countershaft.
- Power is transmitted to the final drive gear, which in turn drives the final driven gear.

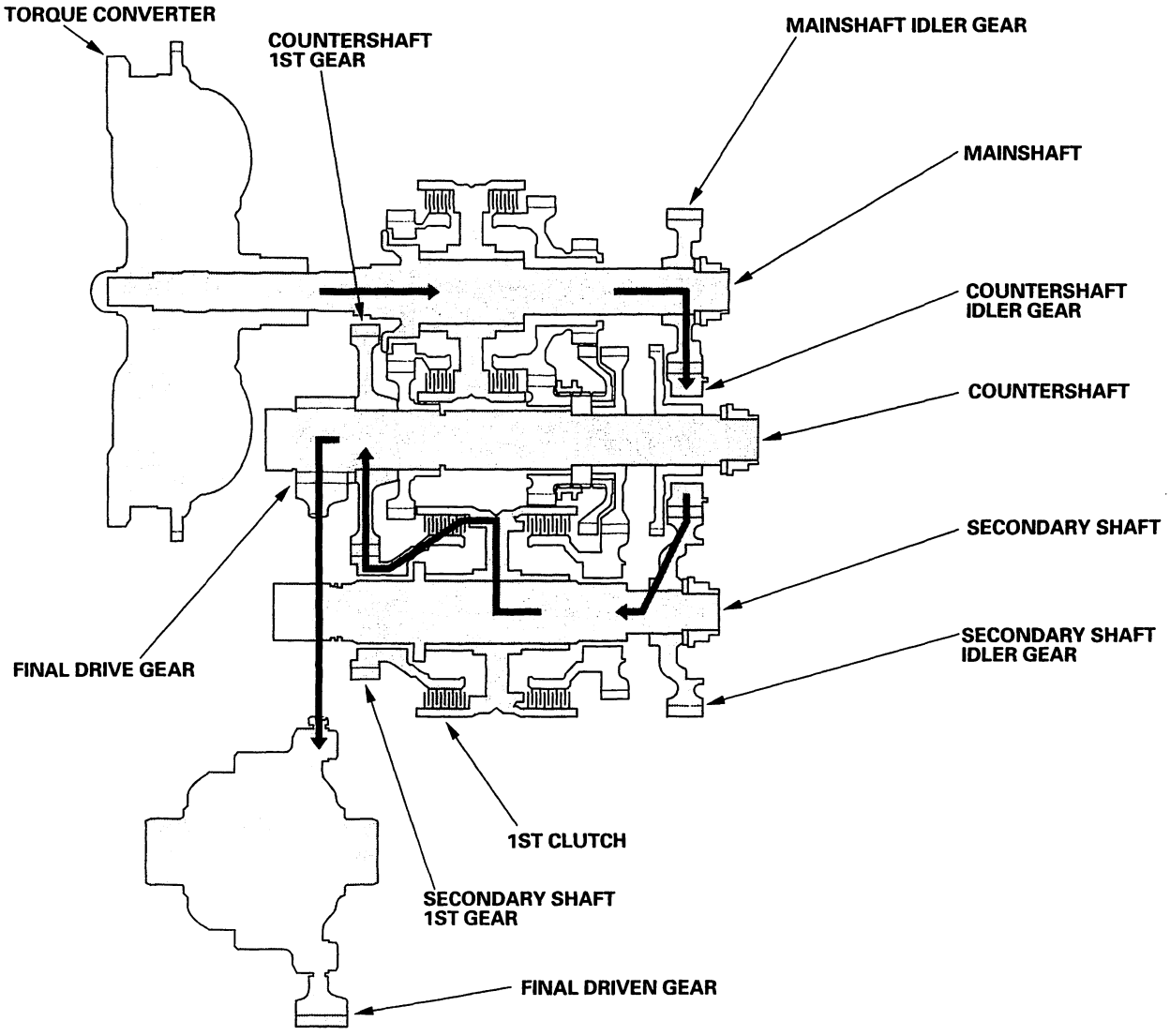

BACK

D4 or D3 Position in 2nd gear and 2 Position

- Hydraulic pressure is applied to the 2nd clutch, then the 2nd clutch engages the secondary shaft 2nd gear with the secondary shaft.
- The mainshaft idler gear drives the secondary shaft via the countershaft idler gear and secondary shaft idler gear.
- The secondary shaft 2nd gear drives the countershaft 2nd gear and the countershaft.
- Power is transmitted to the final drive gear, which in turn drives the final driven gear.

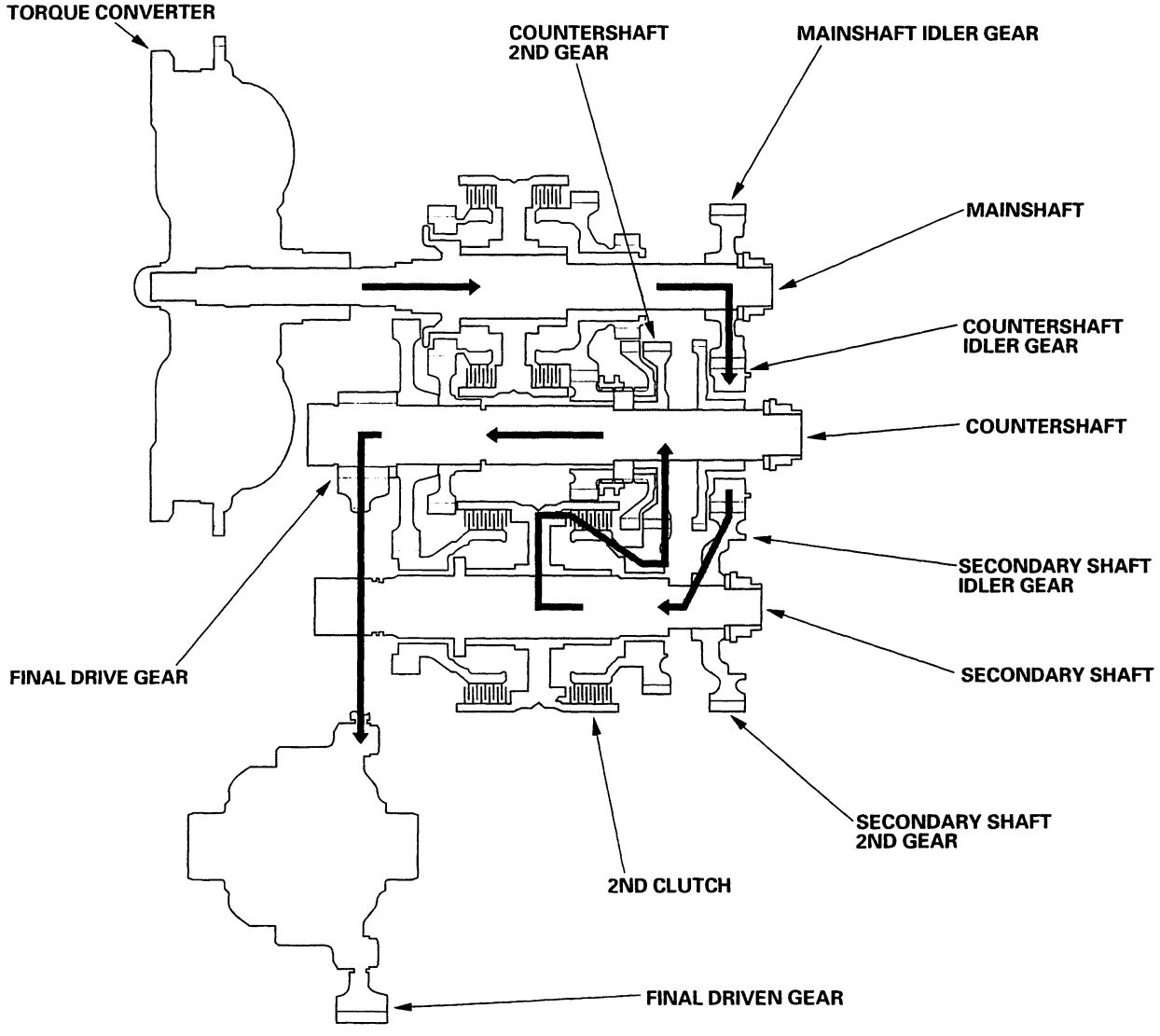

(cont'd)

System Description (cont'd)

Power Flow (cont'd)

D4 or D3 Position in 3rd gear

- Hydraulic pressure is applied to the 3rd clutch, then the 3rd clutch engages the mainshaft 3rd gear with the mainshaft.
- The mainshaft 3rd gear drives the countershaft 3rd gear and the countershaft.
- Power is transmitted to the final drive gear, which in turn drives the final driven gear.

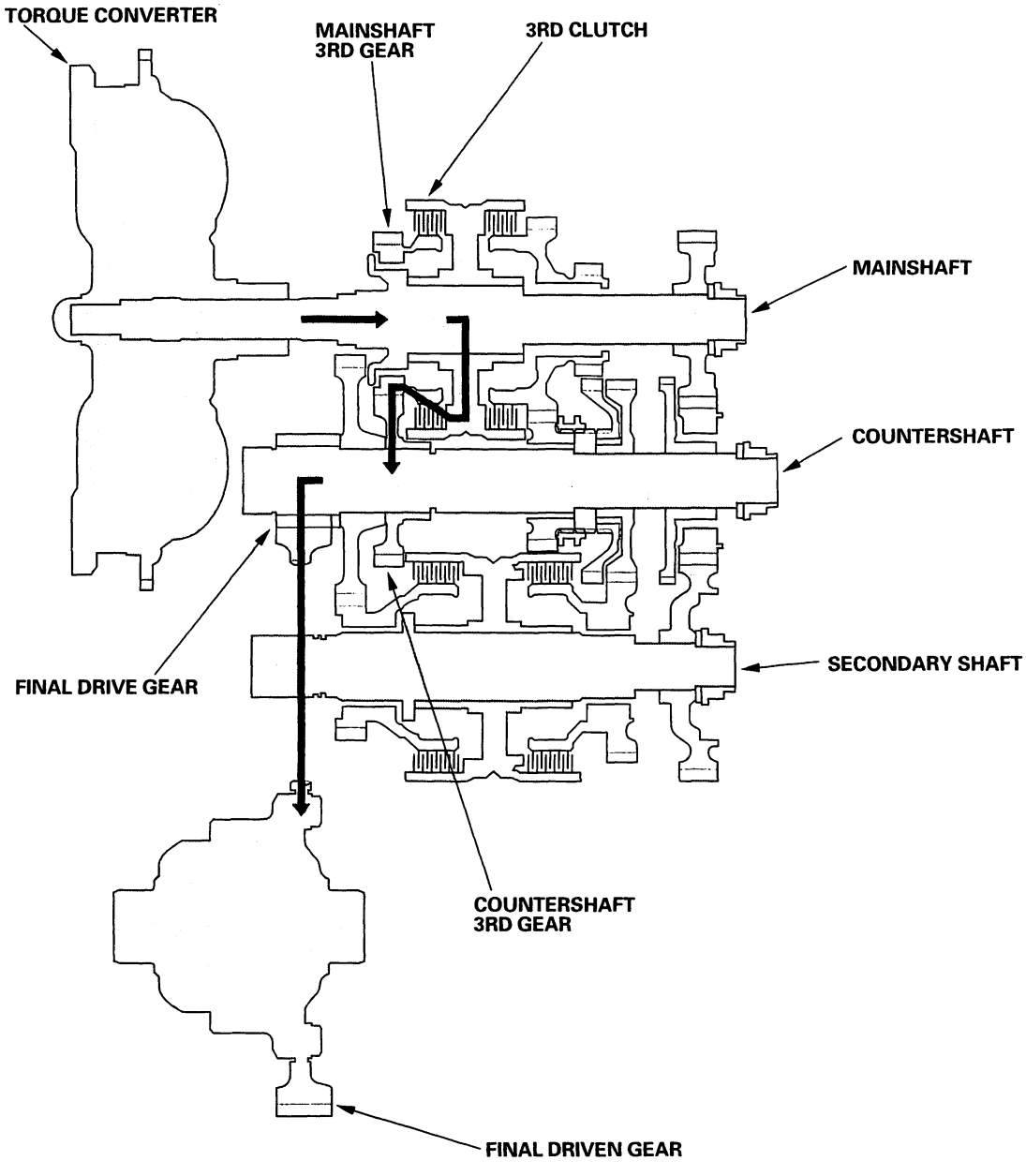

BACK

D4 Position in 4th gear

- Hydraulic pressure is applied to the servo valve to engage the reverse selector with the countershaft 4th gear while the shift lever is in the forward range (D4, D3, 2 and 1 position).
- Hydraulic pressure is also applied to the 4th clutch, then the 4th clutch engages the mainshaft 4th gear with the mainshaft.
- The mainshaft 4th gear drives the countershaft 4th gear, which drives the reverse selector hub and the countershaft.
- Power is transmitted to the final drive gear, which in turn drives the final driven gear.

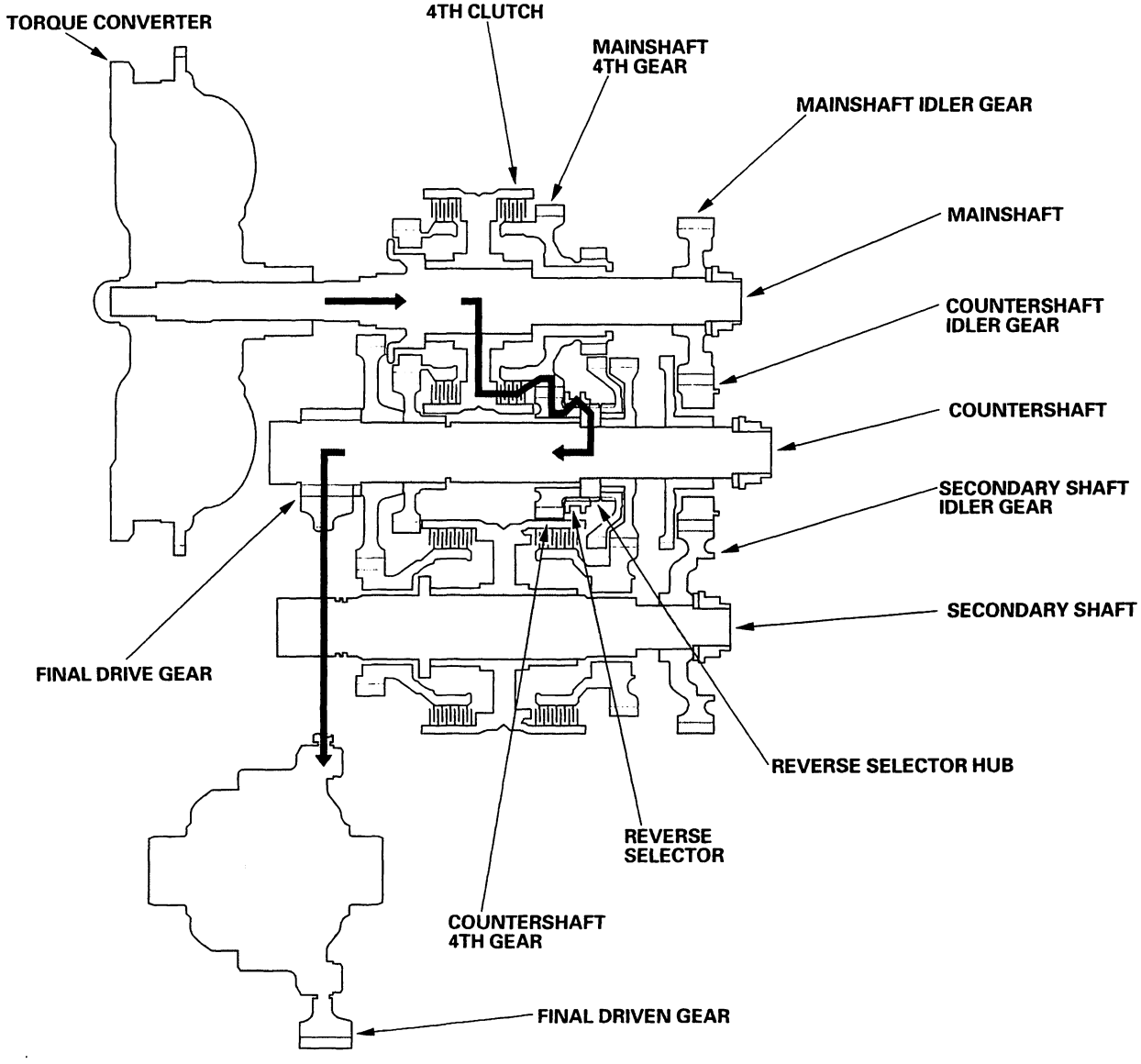

(cont'd)

System Description (cont'd)

Power Flow (cont'd)

Ⓡ Position

- Hydraulic pressure is applied to the servo valve to engage the reverse selector with the countershaft reverse gear while the shift lever is in the Ⓡ position.
- Hydraulic pressure is also applied to the 4th clutch, then the 4th clutch engages the mainshaft reverse gear with the mainshaft.
- The mainshaft reverse gear drives the countershaft reverse gear via the reverse idler gear.
- The rotation direction of the countershaft reverse gear is changed via the reverse idler gear.
- The countershaft reverse gear drives the countershaft via the reverse selector, which drives the reverse selector hub.
- Power is transmitted to the final drive gear, which in turn drives the final driven gear.

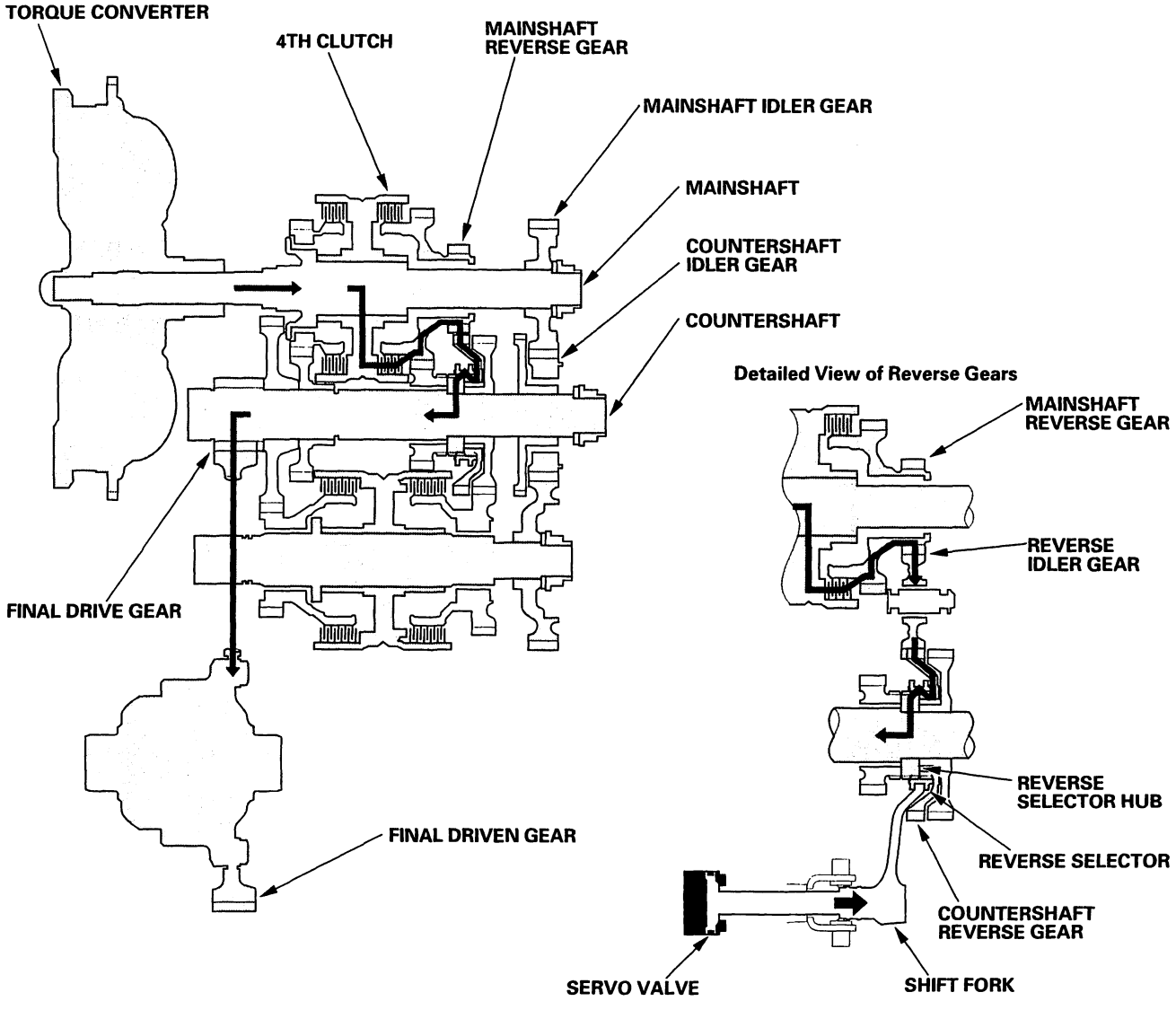

BACK

Electronic Control System

Functional Diagram

The electronic control system consists of the Powertrain Control Module (PCM), sensors, and six solenoid valves. Shifting and lock-up are electronically controlled for comfortable driving under all conditions. The PCM is located below the dashboard, under the front lower panel behind the center console.

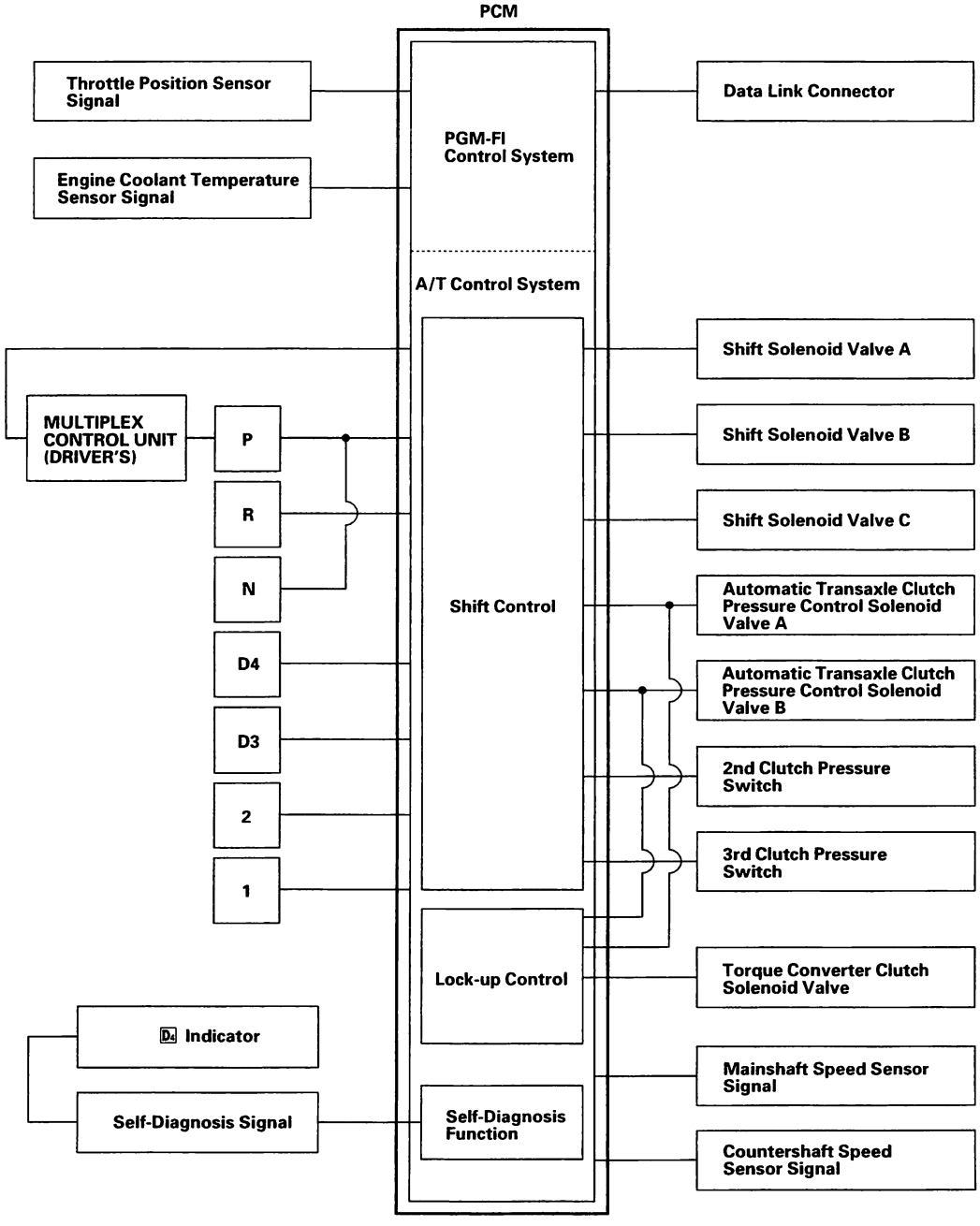

(cont'd)

System Description (cont'd)

Electronic Control System (cont'd)

Electronic Controls Location

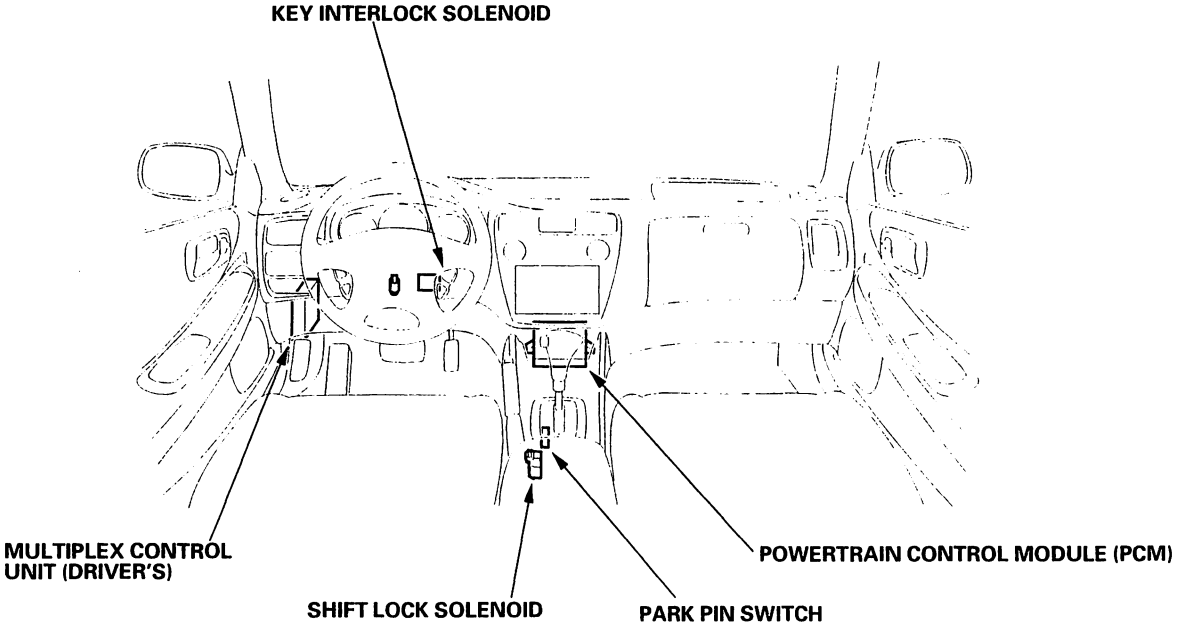

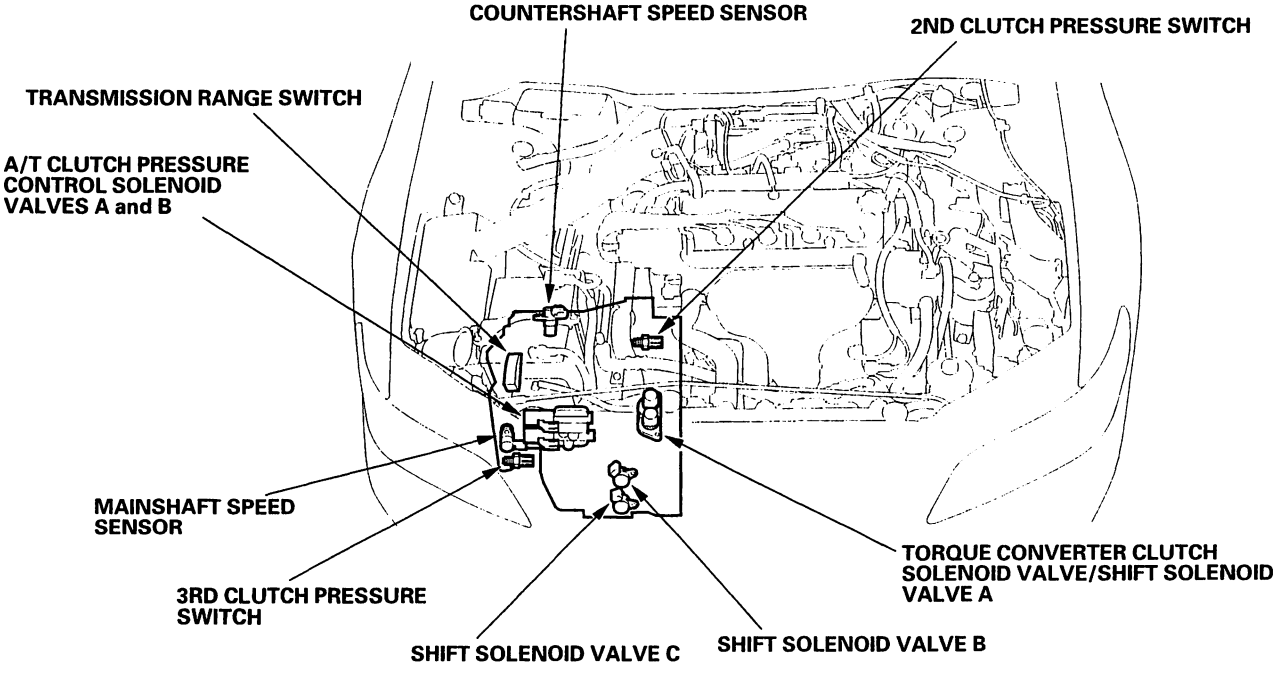

BACK

Shift Control

Shifting is related to engine torque through the A/T clutch pressure control solenoids, which are controlled by the PCM. The PCM instantly determines which gear should be selected by various signals sent from sensors, and actuates the shift solenoid valves A, B, and C to control shifting. Also, a Grade Logic Control System has been adopted to control shifting in D4 and D3 positions while the vehicle is ascending or descending a slope, or reducing speed.
The combination of driving signals to shift solenoid valves A, B, and C are shown in the table below.

Position	Gear position	Shift solenoid valves		
		A	B	C
D4, D3	Shifting from N position	ON	ON	ON
	Stays in 1st	OFF	ON	ON
	Shifting gears between 1st and 2nd	ON	ON	ON
	Stays in 2nd	ON	ON	OFF
	Shifting gears between 2nd and 3rd	ON	OFF	OFF
	Stays in 3rd	ON	OFF	ON
D4	Shifting gears between 3rd and 4th	OFF	OFF	ON
	Stays in 4th	OFF	OFF	OFF
2	2nd	ON	ON	OFF
1	1st	OFF	ON	ON
R	Shifting from P and N position	OFF	ON	ON
	Stays in reverse	OFF	ON	OFF
	Reverse inhibit	OFF	ON	ON
P	Park	OFF	ON	OFF
N	Neutral	OFF	ON	OFF

NOTE: For a description of the reverse inhibit mode, refer to page 14-56.

Lock-up Control

The torque converter clutch solenoid valve controls modulator pressure to switch the lock-up shift valve and lock-up ON and OFF. The PCM controls the torque converter clutch solenoid valve and the A/T clutch pressure control solenoid valves A and B. When the torque converter clutch solenoid valve is turned ON, the condition of lock-up starts. The A/T clutch pressure control solenoid valves A and B regulate A/T clutch pressure control solenoid pressure, and apply pressure to the lock-up control valve and the lock-up timing valve. The lock-up control mechanism operates in 3rd, and 4th gear in D4 and in 3rd gear in D3 positions.

(cont'd)

System Description (cont'd)

Electronic Control System (cont'd)

Grade Logic Control System

How it works:
The PCM compares actual driving conditions with memorized driving conditions, based on the input from the countershaft speed sensor, the throttle position sensor, the engine coolant temperature sensor, the brake pedal position switch signal, and the shift lever position signal, to control shifting while the vehicle is ascending or descending a slope, or reducing speed.

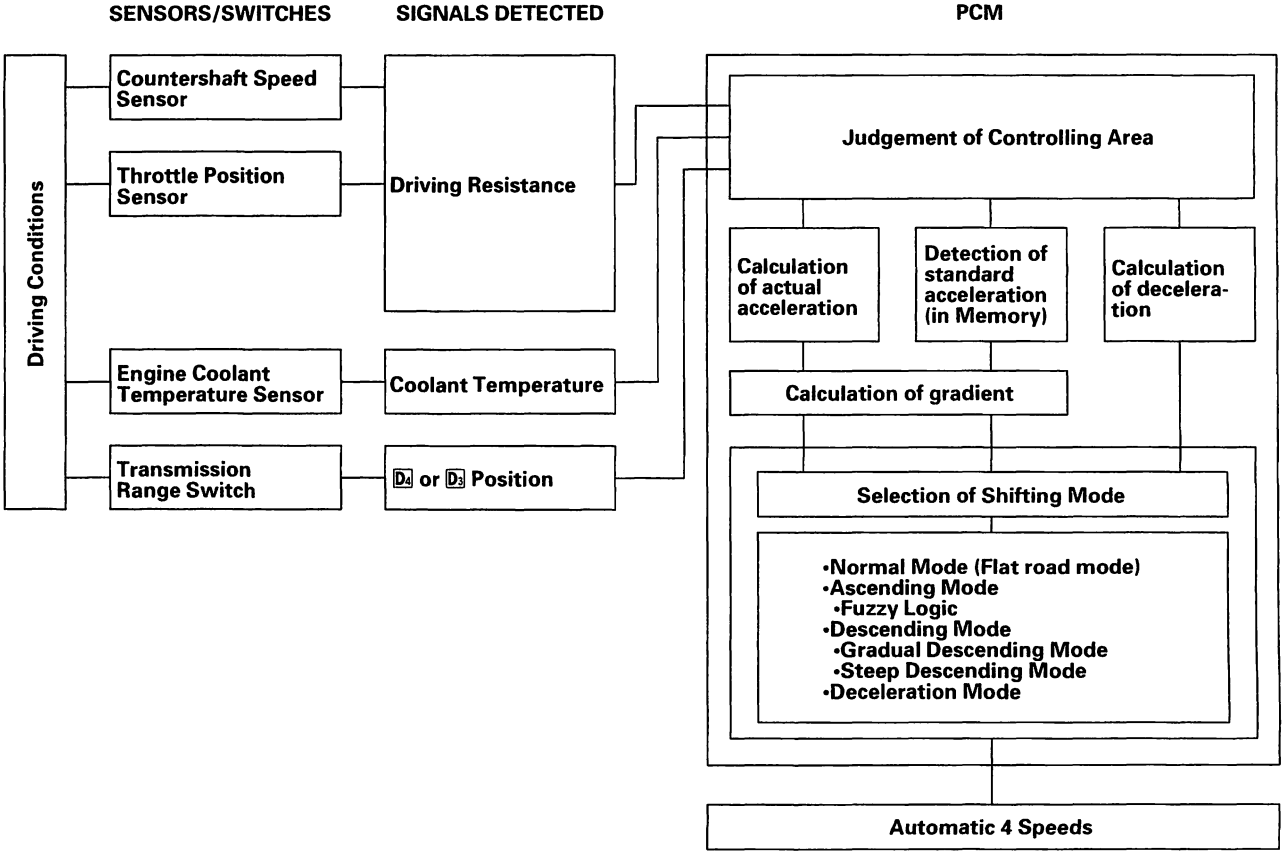

BACK

Ascending Control
When the PCM determines that the vehicle is climbing a hill in D4 and D3 positions, the system extends the engagement area of 2nd gear and 3rd gear to prevent the transmission from frequently shifting between 2nd and 3rd gears, and between 3rd and 4th gears, so the vehicle can run smooth and have more power when needed.

NOTE:
- Shift schedules stored in the PCM between 2nd and 3rd gears, and between 3rd and 4th gears, enable the PCM's fuzzy logic to automatically select the most suitable gear according to the magnitude of a gradient.
- Fuzzy logic is a form of artificial intelligence that lets computers respond to changing conditions much like a human mind would.

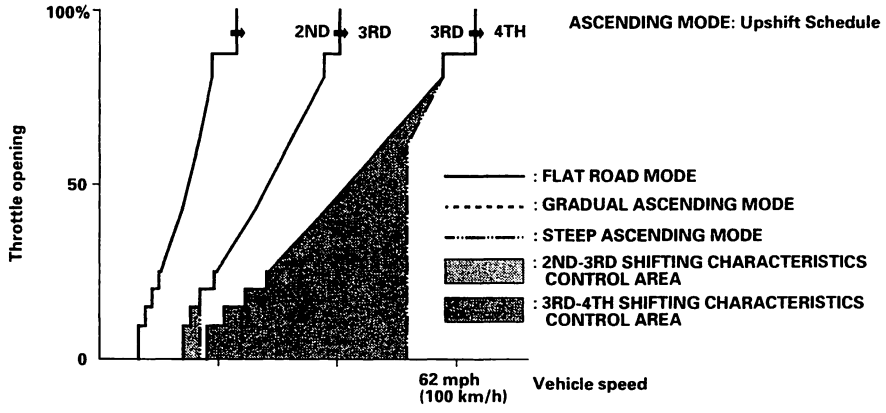

Descending Control
When the PCM determines that the vehicle is going down a hill in D4 and D3 positions, the shift-up speed from 3rd to 4th gear and from 2nd to 3rd (when the throttle is closed) becomes faster than the set speed for flat road driving to widen the 3rd gear and 2nd gear driving areas. This, in combination with engine braking from the deceleration lock-up, achieves smooth driving when the vehicle is descending. There are two descending modes with different 3rd gear driving areas and 2nd gear driving areas according to the magnitude of a gradient stored in the PCM. When the vehicle is in 4th gear, and you are decelerating when you are applying the brakes on a steep hill, the transmission will downshift to 3rd gear. When you accelerate, the transmission will then return to higher gear.

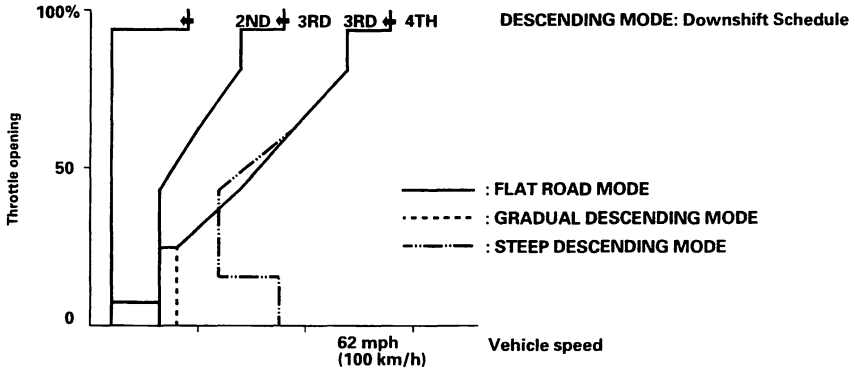

Deceleration Control
When the vehicle goes around a corner and needs to decelerate first and then accelerate, the PCM sets the data for deceleration control to reduce the number of times the transmission shifts. When the vehicle is decelerating from speeds above 27 mph (43 km/h), the PCM shifts the transmission from 4th to 2nd earlier than normal to cope with upcoming acceleration.

(cont'd)

System Description (cont'd)

Electronic Control System (cont'd)

PCM Electrical Connections

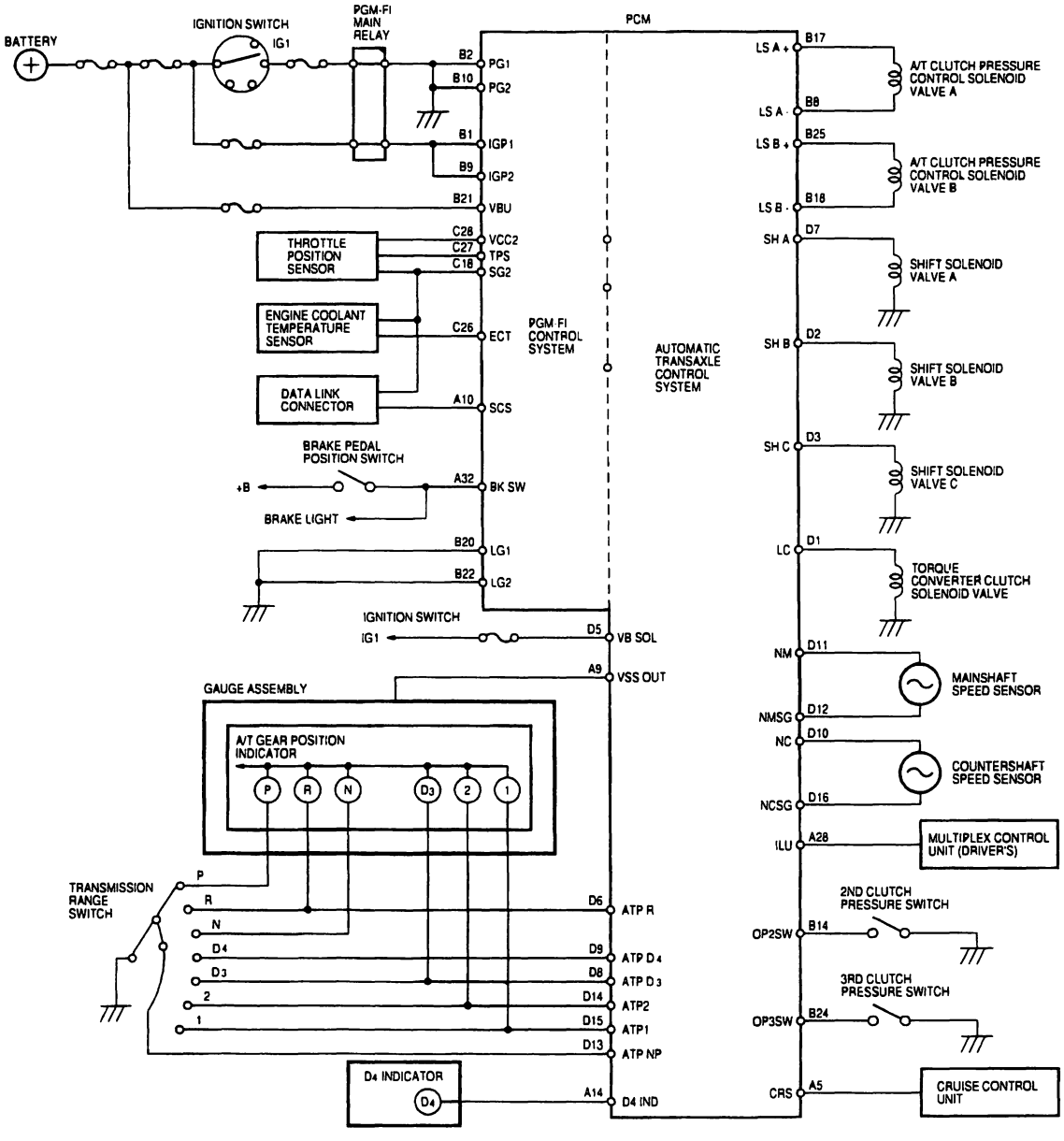

PCM Connector Terminal Locations

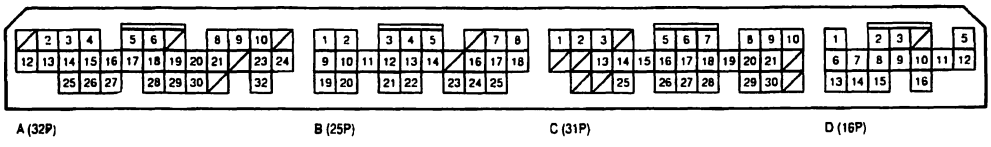

BACK

PCM Inputs and Outputs

The PCM terminal voltage and measuring conditions are shown for the connector terminals related to the A/T control system. The other PCM terminal voltage and measuring conditions are described in section 11.

PCM Connector Terminal Locations

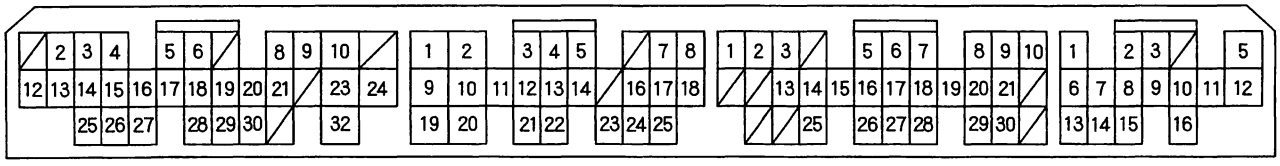

PCM CONNECTOR A (32P)

Terminal Number	Wire	Signal	Description	Measuring Conditions/Terminal Voltage
A5	BLU/GRN	CRS	Downshift signal input from cruise control unit	When cruise control is used: Pulsing signal
A9	BLU/WHT	VSSOUT	Vehicle speed signal detected from countershaft speed sensor	Depending on vehicle speed: Pulsing signal
A10	BRN	SCS	Timing and adjustment service check signal	With ignition switch ON (II) and data link connector open: 5 V With ignition switch ON (II) and data link connector connected with Honda PGM tester: 0 V
A14	GRN/BLK	D4IND	D4 indicator control	When ignition switch is first turned ON (II): Battery voltage for two seconds In D4 position: Battery voltage
A28	WHT/RED	ILU	Interlock control	When ignition switch ON (II), brake pedal pressed, and accelerator pedal released: Battery voltage
A32	WHT/BLK	BKSW	Brake pedal position switch signal output	Brake pedal pressed: Battery voltage Brake pedal released: 0 V

(cont'd)

System Description (cont'd)

Electronic Control System (cont'd)

PCM Inputs and Outputs

PCM Connector Terminal Locations

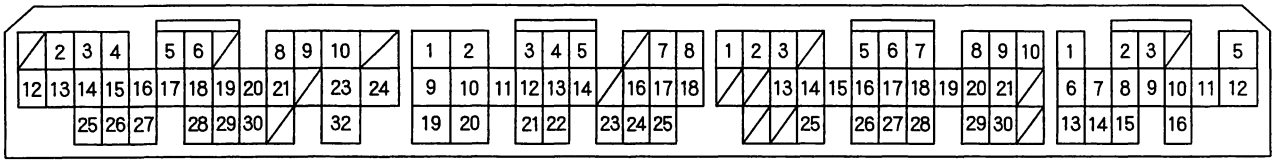

PCM CONNECTOR B (25P)

Terminal Number	Wire	Signal	Description	Measuring Conditions/Terminal Voltage
B1	YEL/BLK	IGP1	Power supply circuit from main relay	With ignition switch ON (II): Battery voltage With ignition switch OFF: 0 V
B2	BLK	PG1	Ground (G101)	
B8	WHT	LS A−	A/T clutch pressure control solenoid valve A power supply negative electrode	
B9	YEL/BLK	IGP2	Power supply circuit from main relay	With ignition switch ON (II): Battery voltage With ignition switch OFF: 0 V
B10	BLK	PG2	Ground (G101)	
B14	BLU/BLK	OP2SW	A/T 2nd clutch pressure switch signal input	With ignition switch ON (II): Battery voltage (No 2nd clutch pressure)
B17	RED	LS A+	A/T clutch pressure control solenoid valve A power supply positive electrode	With ignition switch ON (II): Pulsing signal
B18	GRN	LS B−	A/T clutch pressure control solenoid valve B power supply negative electrode	
B20	BRN/BLK	LG1	Ground (G101)	
B21	WHT/YEL	VBU	Back-up power supply (Fuse No. 13 in passenger's under-dash fuse/relay box)	Always battery voltage
B22	BRN/BLK	LG2	Ground (G101)	
B24	BLU/WHT	OP3SW	A/T 3rd clutch pressure switch signal input	With ignition switch ON (II): Battery voltage (No 3rd clutch pressure)
B25	ORN	LS B+	A/T clutch pressure control solenoid valve B power supply positive electrode	With ignition switch ON (II): Pulsing signal

BACK

PCM CONNECTOR D (16P)

Terminal Number	Wire	Signal	Description	Measuring Conditions/Terminal Voltage
D1	YEL	LC	Torque converter clutch solenoid valve control	During lock-up condition: Battery voltage During no lock-up condition: 0 V
D2	GRN/WHT	SH B	Shift solenoid valve B control	Battery voltage in following positions: • 1 and 2 positions. • D4, and D3 positions in 1st and 2nd gear • P, R, and N positions 0 V in following positions: • D4, and D3 positions in 3rd gear • D4 position in 4th gear
D3	GRN	SH C	Shift solenoid valve C control	Battery voltage in following positions: • 1 position • D4, and D3 positions in 1st and 3rd gear 0 V in following positions: • 2 position • D4, and D3 positions in 2nd gear • D4 position in 4th gear • P, R, and N positions
D4	———	———	Not used	
D5	BLK/YEL	VBSOL	Power supply for solenoid valves (Fuse No. 6 in driver's under-dash fuse/relay box)	With ignition switch ON (II): Battery voltage With ignition switch OFF: 0 V
D6	WHT	ATP R	Transmission range switch R position input	In R position: 0 V In other than R position: Battery voltage
D7	BLU/YEL	SH A	Shift solenoid valve A control	Battery voltage in following positions: • 2 position • D4, and D3 positions in 2nd and 3rd gear 0 V in following positions: • 1 position • D4, and D3 positions in 1st gear • D4 position in 4th gear • P, R, and N positions

(cont'd)

System Description (cont'd)

Electronic Control System (cont'd)

PCM Inputs and Outputs

PCM Connector Terminal Locations

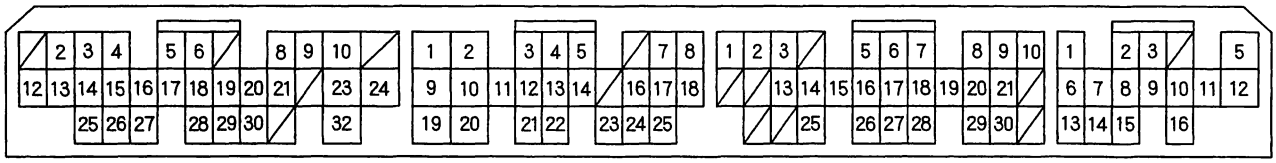

PCM CONNECTOR D (16P)

Terminal Number	Wire	Signal	Description	Measuring Conditions/Terminal Voltage
D8	PNK	ATPD3	Transmission range switch D3 position input	In D3 position: 0 V In other than D3 position: Battery voltage
D9	YEL	ATPD4	Transmission range switch D4 position input	In D4 position: 0 V In other than D4 position: Battery voltage
D10	BLU	NC	Countershaft speed sensor input	Depending on vehicle speed: Pulsing signal When vehicle is stopped: Approx. 0 V
D11	RED	NM	Mainshaft speed sensor input	Depending on vehicle speed: Pulsing signal When engine is stopped: Approx. 0 V
D12	WHT	NMSG	Mainshaft speed sensor ground	
D13	BLU/WHT	ATPNP	Transmission range switch P and N positions input	In P and N positions: 0 V In other than P and N positions: Battery voltage
D14	BLU	ATP 2	Transmission range switch 2 position input	In 2 position: 0 V In other than 2 position: Battery voltage
D15	BRN	ATP 1	Transmission range switch 1 position input	In 1 position: 0 V In other than 1 position: Battery voltage
D16	GRN	NCSG	Countershaft speed sensor ground	

BACK

Hydraulic Controls

The valve body includes the main valve body, the regulator valve body, the servo body, and the accumulator body. The ATF pump is driven by splines on the right end of the torque converter which is attached to the engine. Fluid flows through the regulator valve to maintain specified pressure, through the main valve body, to the manual valve, directing pressure to each of the clutches. The shift solenoid valves B and C are mounted on the outside of the torque converter housing. The shift solenoid valve A and the torque converter clutch solenoid valve are mounted on the torque converter housing as an assembly. The A/T clutch pressure control solenoid valves A and B are mounted on the transmission housing.

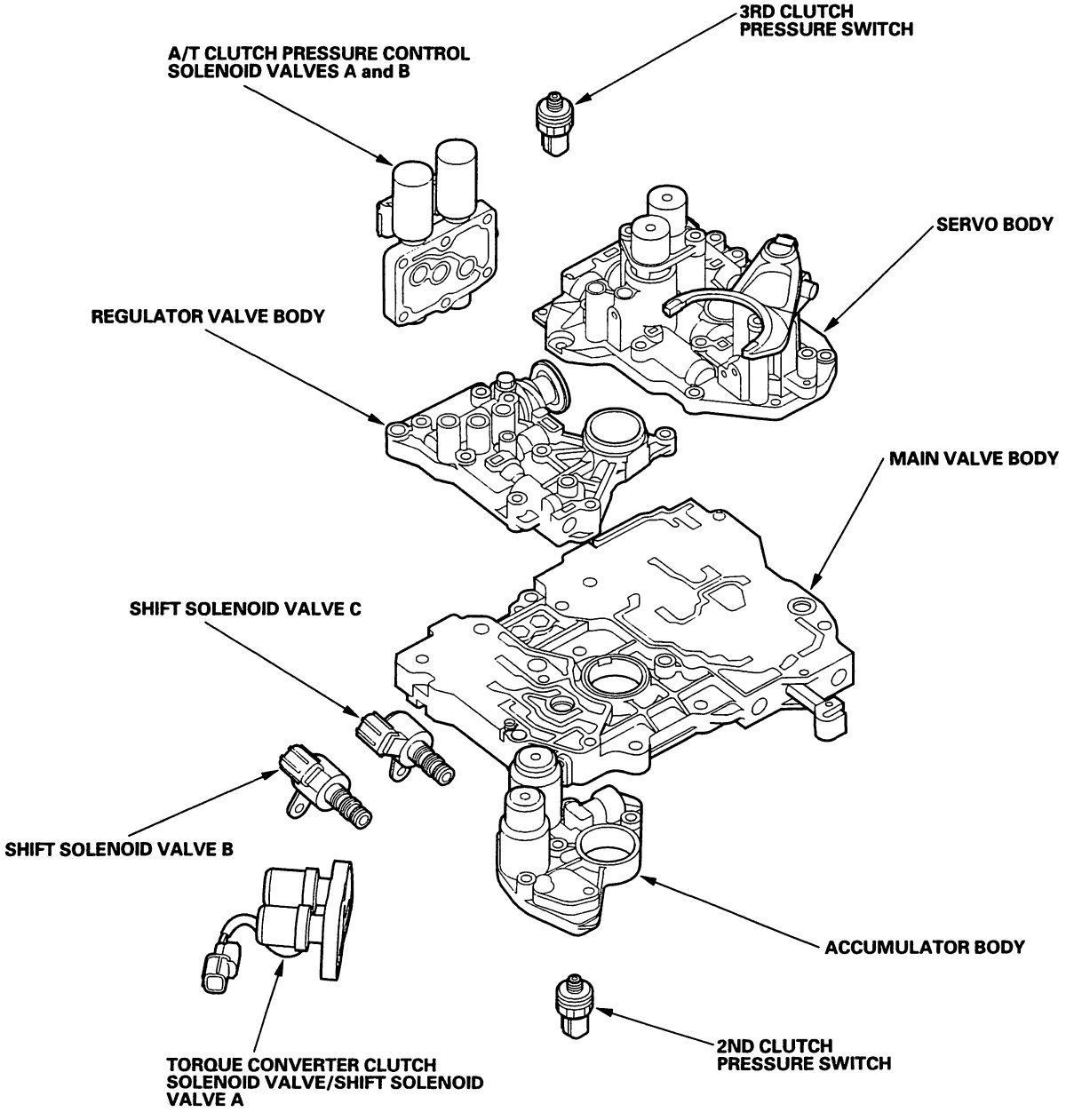

(cont'd)

System Description (cont'd)

Hydraulic Controls (cont'd)

Main Valve Body

The main valve body contains the manual valve, the modulator valve, the shift valve C, the shift valve D, the shift valve E, the servo control valve, the torque converter check valve, the reverse CPC valve, the lock-up shift valve, the lock-up control valve, the cooler check valve, and the ATF pump gears. The primary function of the main valve body is to switch fluid pressure on and off and to control hydraulic pressure going to the hydraulic control system.

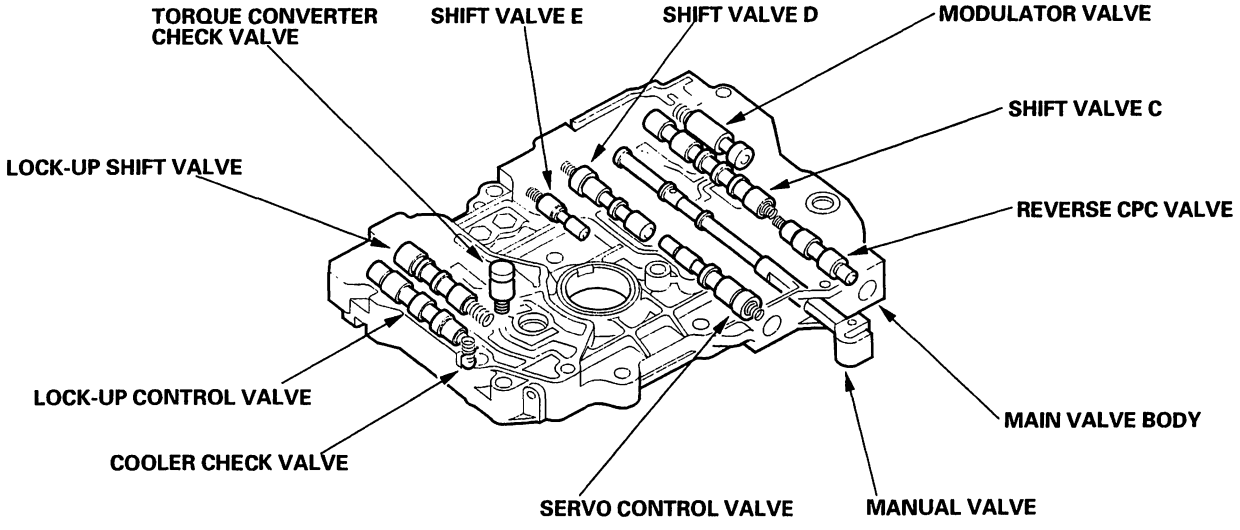

Regulator Valve Body

The regulator valve body is located on the main valve body. The regulator valve body contains the regulator valve, the lock-up timing valve, and the relief valve.

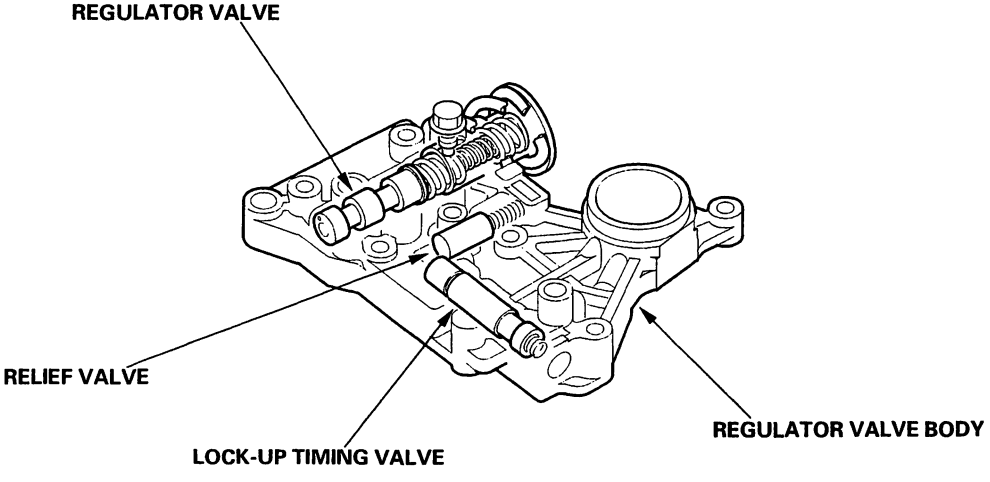

BACK

Regulator Valve
The regulator valve maintains a constant hydraulic pressure from the ATF pump to the hydraulic control system, while also furnishing fluid to the lubricating system and torque converter. The fluid from the ATF pump flows through B and B'. Fluid entering from B flows through the valve orifice to the A cavity. This pressure of the A cavity pushes the regulator valve to the right side, and this movement of the regulator valve uncovers the fluid port to the torque converter and the relief valve. The fluid flows out to the torque converter and the relief valve, and the regulator valve moves to the left side. According to the level of the hydraulic pressure through B, the position of the regulator valve changes, and the amount of fluid from B' through torque converter also changes. This operation is continued, maintaining the line pressure.

NOTE: When used, "left" or "right" indicates direction on the illustration below.

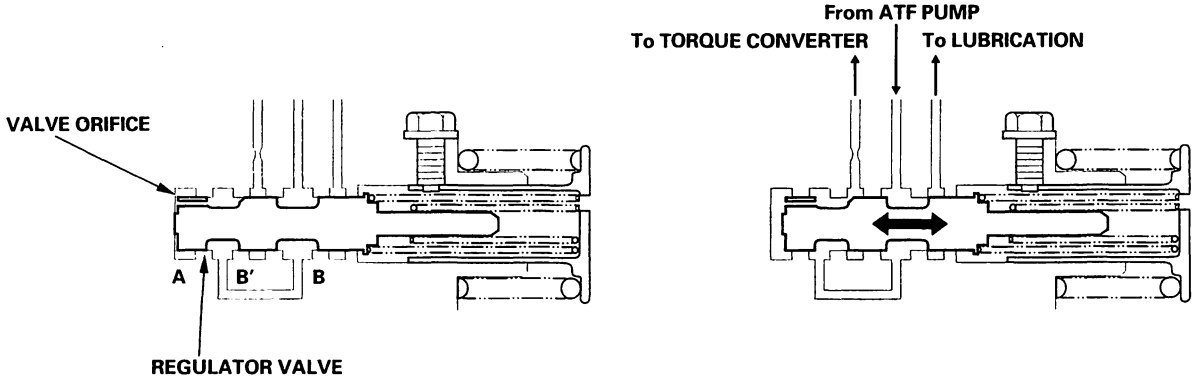

Increases in hydraulic pressure according to torque are performed by the regulator valve using stator torque reaction. The stator shaft is splined with the stator in the torque converter, and its arm end contacts the regulator spring cap. When the vehicle is accelerating or climbing (Torque Converter Range), stator torque reaction acts on the stator shaft, and the stator arm pushes the regulator spring cap in the direction of the arrow in proportion to the reaction. The stator reaction spring compresses, and the regulator valve moves to increase the line pressure which is regulated by the regulator valve. The line pressure reaches its maximum when the stator torque reaction reaches its maximum.

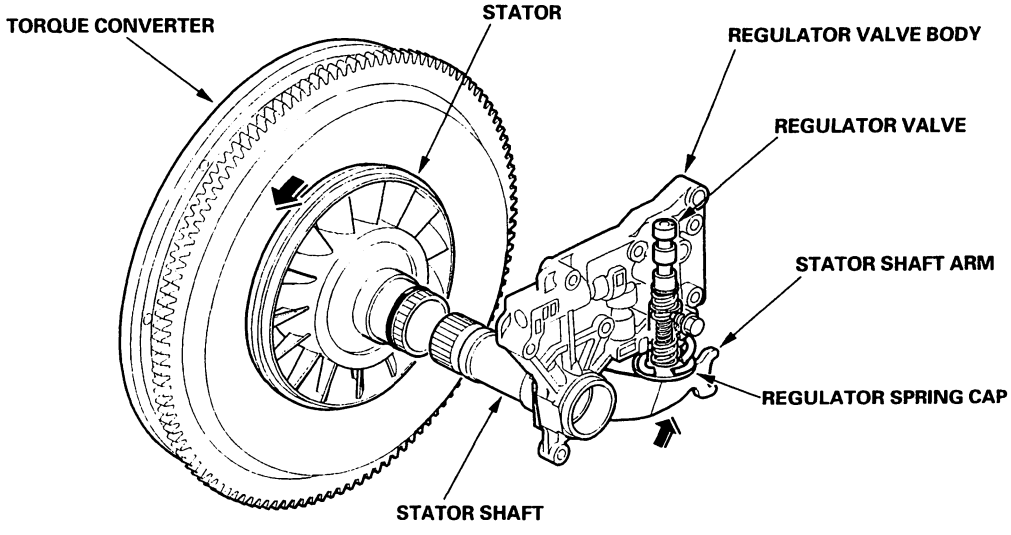

(cont'd)

System Description (cont'd)

Hydraulic Controls (cont'd)

Servo Body
The servo body is on the main valve body. It contains the servo valve, the shift valve A, the shift valve B, the CPC valves A and B, and the 3rd and 4th accumulators.

Accumulator Body
The accumulator body is on the torque converter housing, next to the main valve body. It contains the 1st and 2nd accumulators and the lubrication check valve.

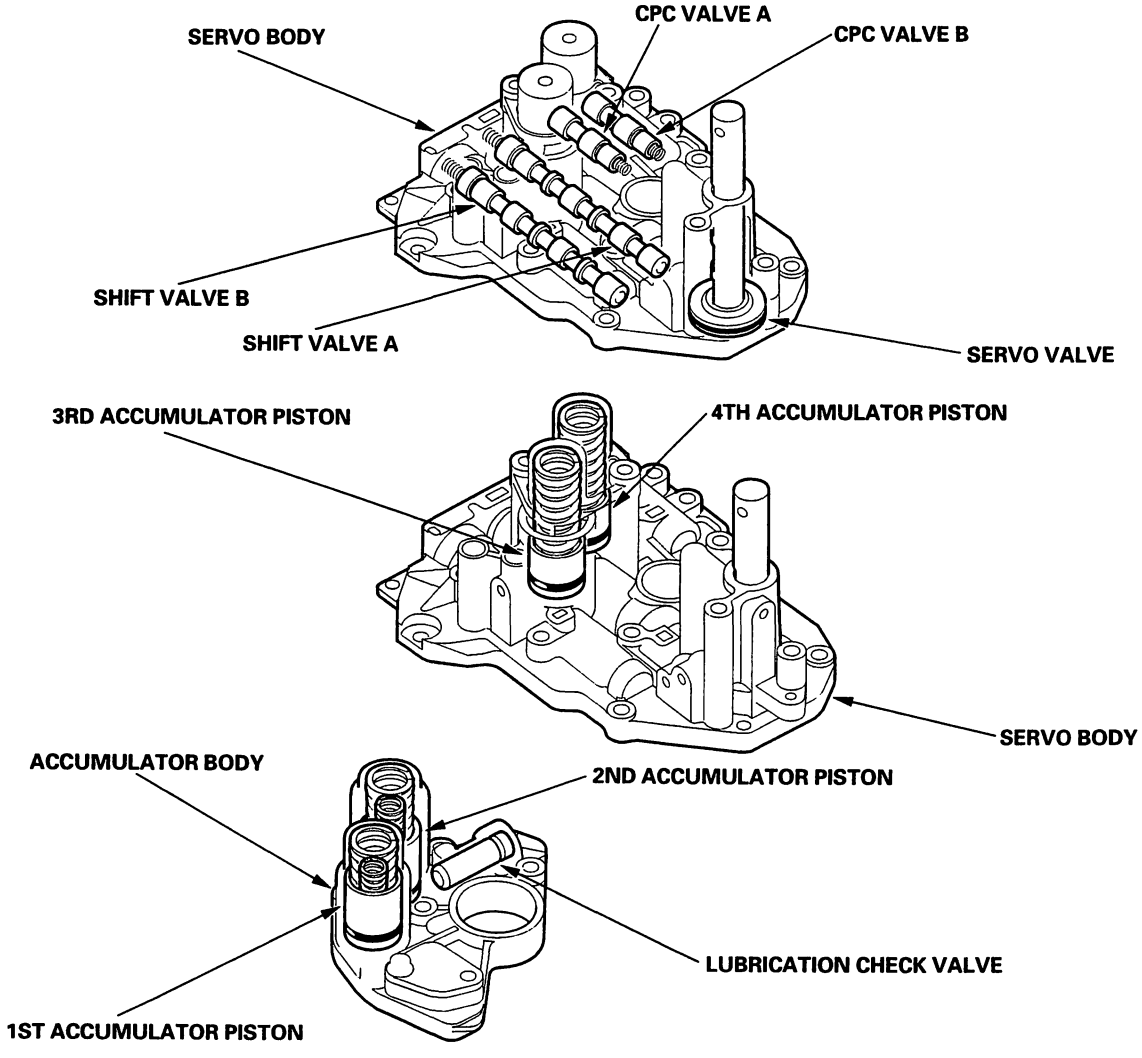

BACK

Hydraulic Flow

As the engine turns, the ATF pump starts to operate. Automatic transmission fluid (ATF) is drawn through the ATF strainer (filter) and discharged into the hydraulic circuit. Then, ATF flowing from the ATF pump becomes line pressure that's regulated by the regulator valve. Torque converter pressure from the regulator valve enters the torque converter through the lock-up shift valve, and it is discharged from the torque converter. The torque converter check valve prevents torque converter pressure from rising.
The PCM controls the shift solenoid valves ON and OFF, and the shift solenoid valves apply shift solenoid pressure to the shift valves. Applying shift solenoid pressure to the shift valves moves the position of the shift valve, and switches the port of hydraulic pressure. The PCM also controls A/T clutch pressure control solenoid valves A and B. The A/T clutch pressure control solenoid valves regulate A/T clutch pressure control solenoid pressure and apply A/T clutch pressure control solenoid pressure to CPC valves A and B.
When shifting between upper gear and lower gear, the clutch is engaged by pressure from the CPC pressure mode. The PCM controls one of the shift solenoid valves to move the position of the shift valve. This movement switches the port of the CPC and line pressure. Line pressure is then applied to the clutch, and CPC pressure is intercepted. Engaging the clutch with line pressure happens when shifting is completed.

Hydraulic pressure at the ports is as follows:

PORT NO.	DESCRIPTION OF PRESSURE	PORT NO.	DESCRIPTION OF PRESSURE	PORT NO.	DESCRIPTION OF PRESSURE
1	LINE	5H	CPC B or LINE	57	LS B
3	LINE	5J	CPC B or LINE	58	LS A or LS B
3'	LINE	5K	CPC B or LINE	90	TORQUE CONVERTER
3''	LINE	5K'	CPC B or LINE	90'	TORQUE CONVERTER
4	LINE	6	MODULATE	91	TORQUE CONVERTER
4'	LINE	SA	SH A	91'	TORQUE CONVERTER
4''	LINE	SB	SH B	92	TORQUE CONVERTER
4A	CPC A	SC	SH C	93	ATF COOLER
4B	CPC B	LA	LC	94	TORQUE CONVERTER
5A	CPC A	9	LINE	95	LUBRICATION
5D	CPC B	10	1ST CLUTCH	95'	LUBRICATION
5B	CPC A or LINE	20	2ND CLUTCH	96	TORQUE CONVERTER
5E	CPC A or LINE	25	LINE	97	TORQUE CONVERTER
5F	CPC A or LINE	30	3RD CLUTCH	99	SUCTION
5F'	CPC A or LINE	40	4TH CLUTCH	X	DRAIN
5C	CPC B or LINE	41	4TH CLUTCH	HX	HIGH POSITION DRAIN
5G	CPC B or LINE	56	LSA	AX	AIR DRAIN

NOTE:
- CPC: Clutch Pressure Control pressure
- SH: Shift Control Solenoid pressure
- LS: A/T Clutch Pressure Control Solenoid pressure
- LC: Torque Converter Clutch Solenoid pressure

(cont'd)

System Description (cont'd)

Hydraulic Flow (cont'd)

N Position

The PCM controls the shift solenoid valves. The conditions of the shift solenoid valve and positions of the shift valve are as follows:
- Shift solenoid valve A is turned OFF, and the shift valve A is moved to the left side.
- Shift solenoid valve B is turned ON, and the shift valve B remains in the right side.
- Shift solenoid valve C is turned OFF, and the shift valve C remains in the left side.

Line pressure (1) passes through the manual valve and stops at the shift valve D. Line pressure (1) also flows to the modulator valve, and becomes modulator pressure (6). Modulator pressure (6) flows to the shift solenoid valves and the A/T clutch pressure control solenoid valves. Under this condition, hydraulic pressure is not applied to the clutches.

NOTE:
- When used, "left" or "right" indicates direction on the hydraulic circuit.
- Hydraulic circuit shows the '98-99 models; the '00-02 models are similar.

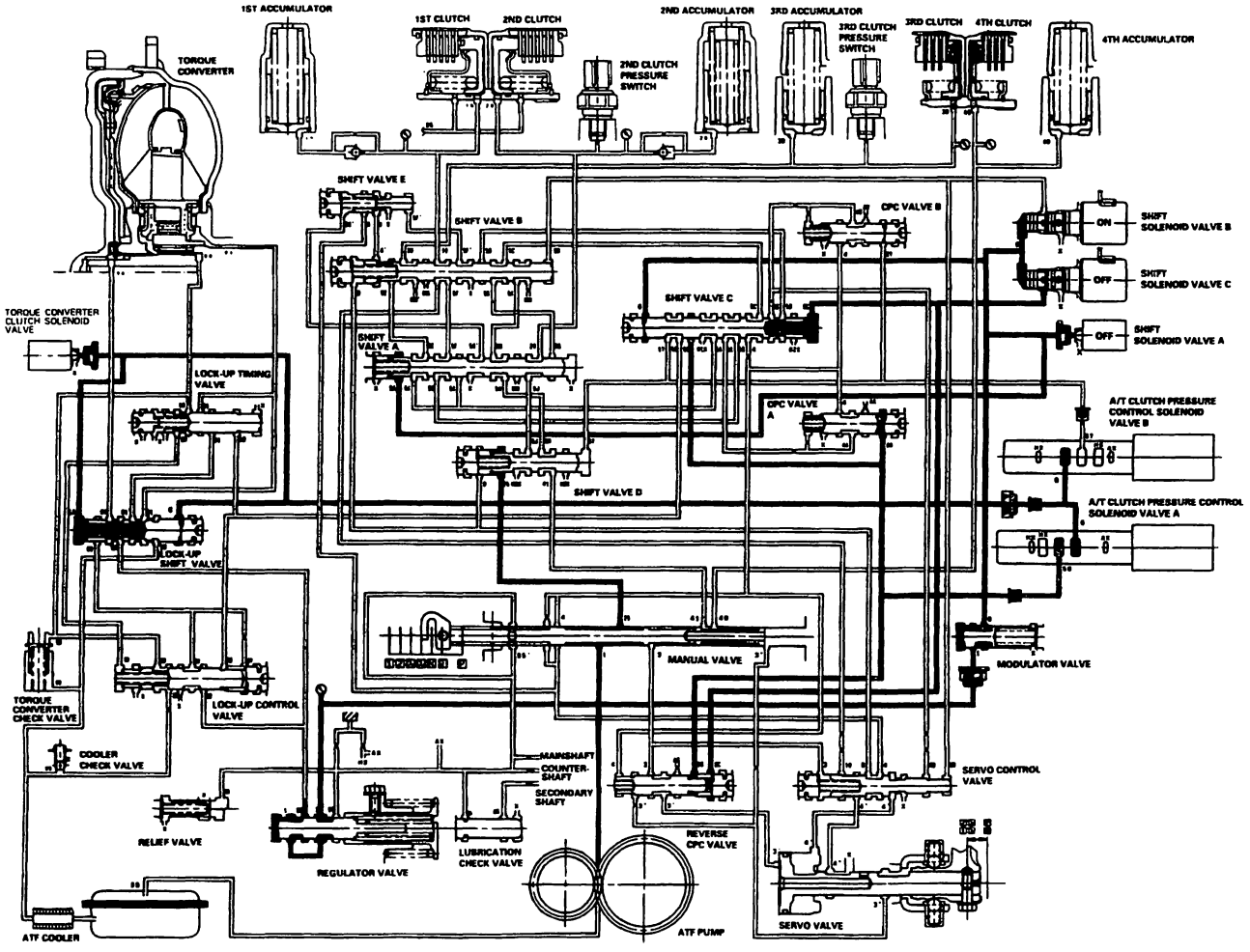

BACK

D4 Position: 1st gear shifting from N position

The PCM turns shift solenoid valves A and C ON when shifting to D4 position from N. Shift solenoid valve B remains ON. Shift solenoid valve C is turned ON, and SH C pressure (SC) in the right side of shift valve C is released, then shift valve C is moved to the right side. Shift solenoid valve A is turned ON, and SH A pressure (SA) in the left side of shift valve A is released, then shift valve A is moved to the right side. The A/T clutch pressure control solenoid valve A regulates LS A pressure (56), and applies it to the CPC valve A. Line pressure (1) becomes line pressure (4) at the manual valve, and flows to the shift valve C and the CPC valve A. Line pressure (4A) becomes CPC A pressure (4A) and passes through the shift valve C, A and B, then CPC A pressure (4A) becomes 1st clutch pressure (10) at shift valve B. 1st clutch pressure (10) is applied to the 1st clutch, then the 1st clutch is engaged with pressure of the CPC pressure mode. Line pressure (4) passes through shift valve A and B, and stops at shift valve B.

NOTE:
- When used, "left" or "right" indicates direction on the hydraulic circuit.
- Hydraulic circuit shows the '98-99 models; the '00-02 models are similar.

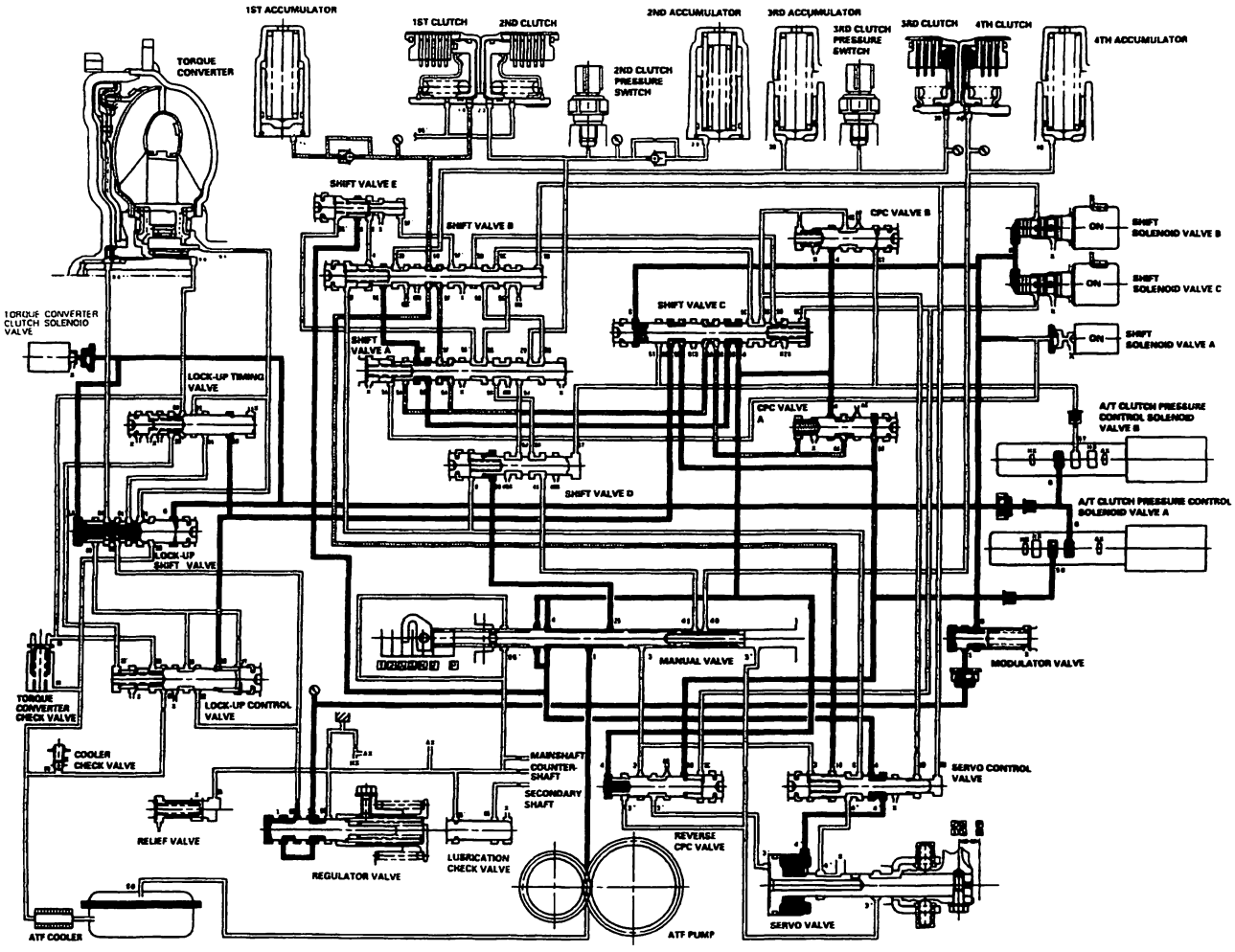

(cont'd)

System Description (cont'd)

Hydraulic Flow (cont'd)

D4 Position: Driving in 1st gear

The PCM turns shift solenoid valve A OFF, but shift solenoid valves B and C remain ON. SH A pressure (SA) is applied to the left side of shift valve A, then shift valve A is moved to the left side. This movement switches the port of line pressure and CPC pressure on shift valve A. The 1st clutch pressure is changed to line pressure mode, and the 1st clutch is engaged securely. The CPC A pressure (5E) stops at shift valve B.

NOTE:
- When used, "left" or "right" indicates direction on the hydraulic circuit.
- Hydraulic circuit shows the '98-99 models; the '00-02 models are similar.

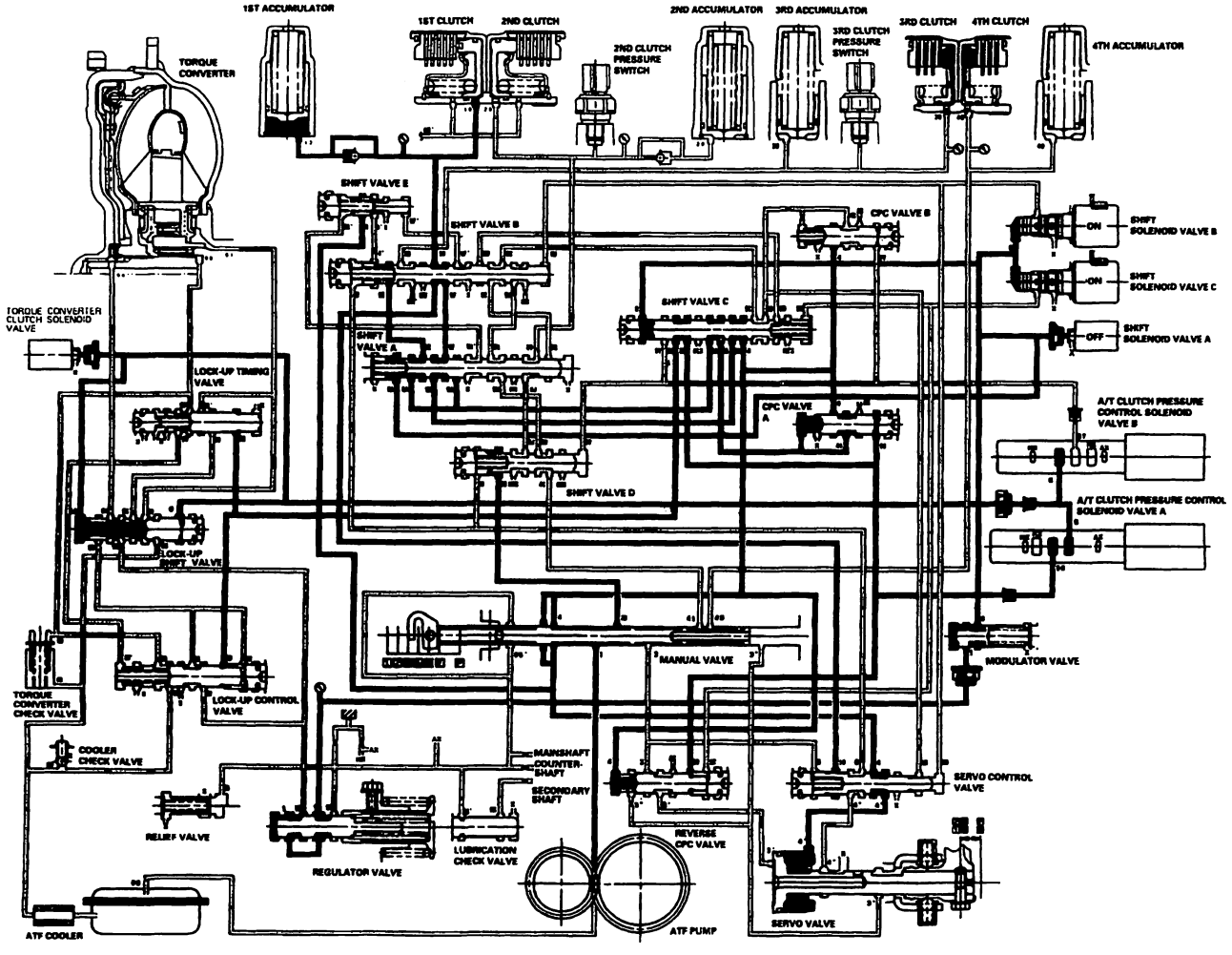

BACK

D4 Position: Shifting between 1st gear and 2nd gear

As the speed of the vehicle reaches the prescribed value, the PCM turns shift solenoid valve A OFF. Shift solenoid valves B and C remain ON. Then shift solenoid valve A is turned ON, and SH A pressure (SA) in the left side of the shift valve A is released. Shift valve A is moved to the right side to switch the port of line pressure and CPC pressure. The PCM also controls the A/T clutch pressure control solenoid valves. The A/T clutch pressure control solenoid valves A and B apply their pressure to the CPC valves A and B. Line pressure (4) becomes CPC B pressure (4B) at the CPC valve B, and CPC B pressure passes through shift valves C, B, and A, to become 2nd clutch pressure. The 1st and 2nd clutches are engaged with the CPC pressure mode.

NOTE:
- When used, "left" or "right" indicates direction on the hydraulic circuit.
- Hydraulic circuit shows the '98-99 models; the '00-02 models are similar.

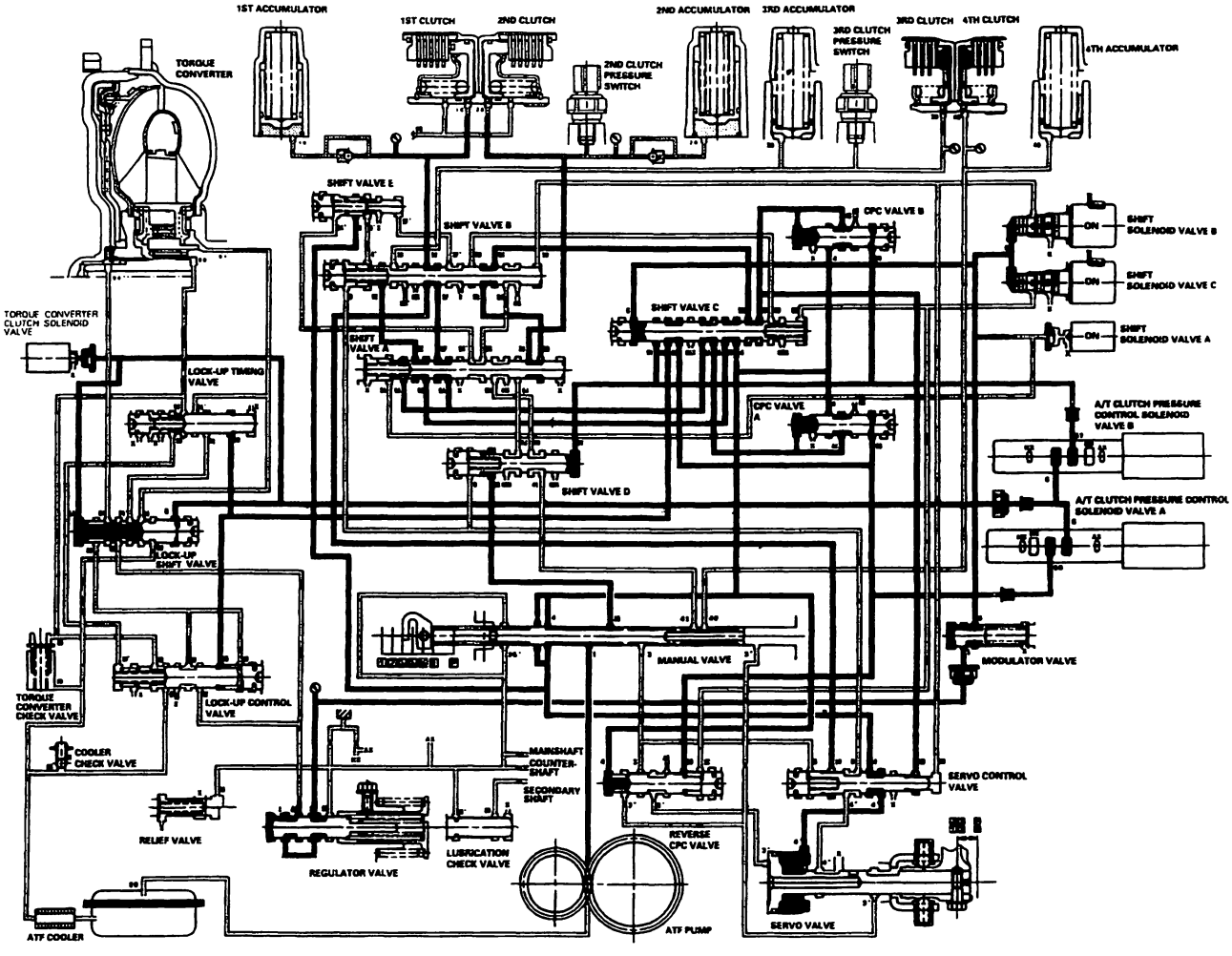

(cont'd)

System Description (cont'd)

Hydraulic Flow (cont'd)

D4 Position: Driving in 2nd gear

The PCM turns shift solenoid valve C OFF, and controls A/T clutch pressure control solenoid valve A to release LS A pressure (56). The shift solenoid valves A and B remain ON. Releasing LS A pressure in the CPC valve A releases CPC A pressure in the 1st clutch pressure circuit. Shift solenoid valve C is turned OFF, and SH C pressure (SC) is applied to the right side of it. Then shift valve C is moved to the left side to switch the port of line pressure and CPC pressure. The 2nd clutch pressure is changed to line pressure mode, and the 2nd clutch is engaged securely. The CPC B pressure (5D) stops at shift valve B.

NOTE:
- When used, "left" or "right" indicates direction on the hydraulic circuit.
- Hydraulic circuit shows the '98-99 models; the '00-02 models are similar.

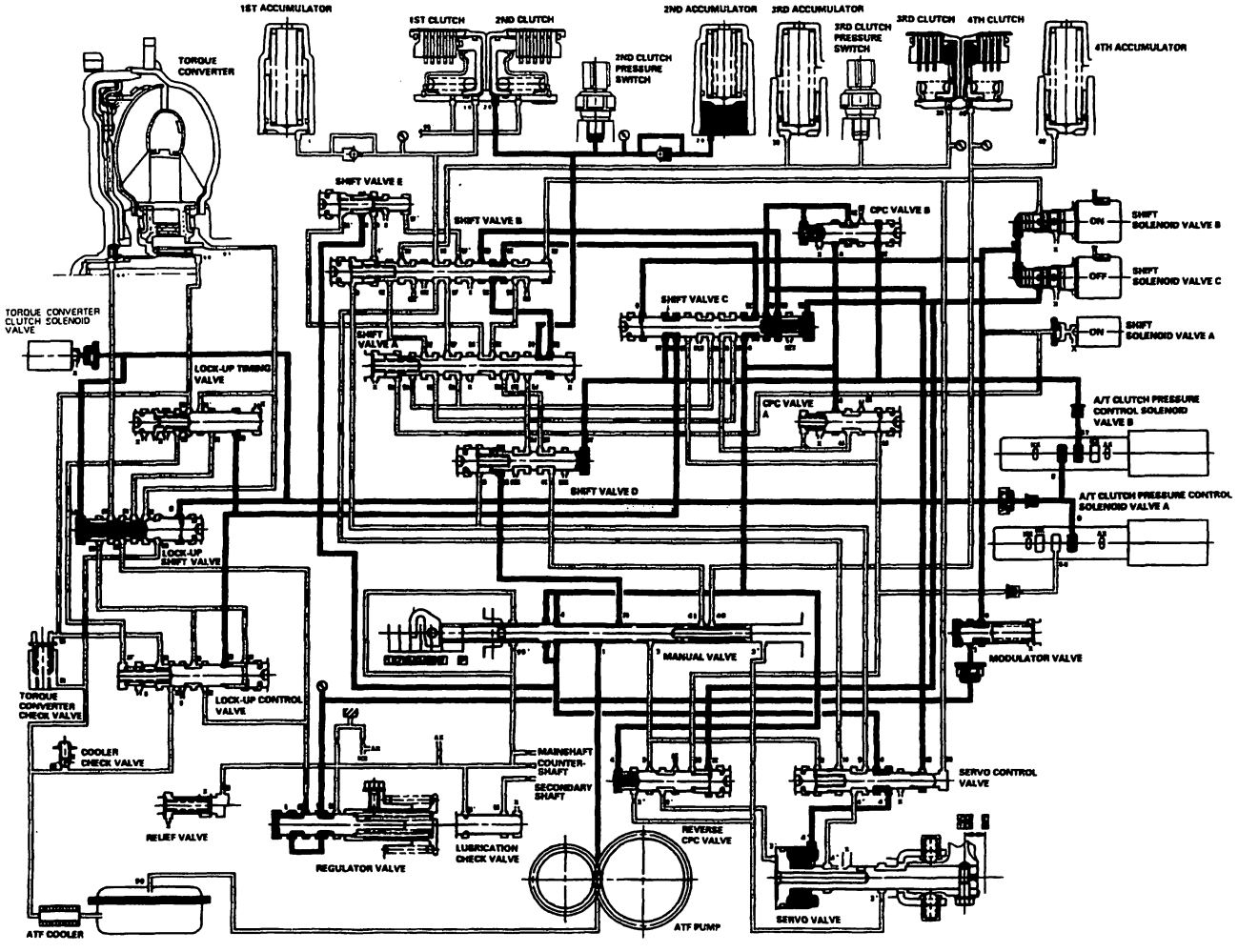

BACK

D4 Position: Shifting between 2nd gear and 3rd gear

As the speed of the vehicle reaches the prescribed value, the PCM turns shift solenoid valve B OFF. The PCM also controls A/T clutch pressure control solenoid valve A to apply LS A pressure (56) to the CPC valve A. Shift solenoid valve A remains ON, and C remains OFF. Shift soleniod valve B is turned OFF, and SH B pressure (SB) is applied to the right side of shift valve B. Then shift valve B is moved to the left side to switch the port of line pressure and CPC pressure. Line pressure (4) becomes CPC A pressure (4A) at the CPC valve A. The CPC A pressure (4A) becomes 3rd clutch pressure (30) at shift valve B, and flows to the 3rd clutch. The 2nd clutch pressure is changed to CPC pressure mode by switching the position of shift valve B.

NOTE:
- When used, "left" or "right" indicates direction on the hydraulic circuit.
- Hydraulic circuit shows the '98-99 models; the '00-02 models are similar.

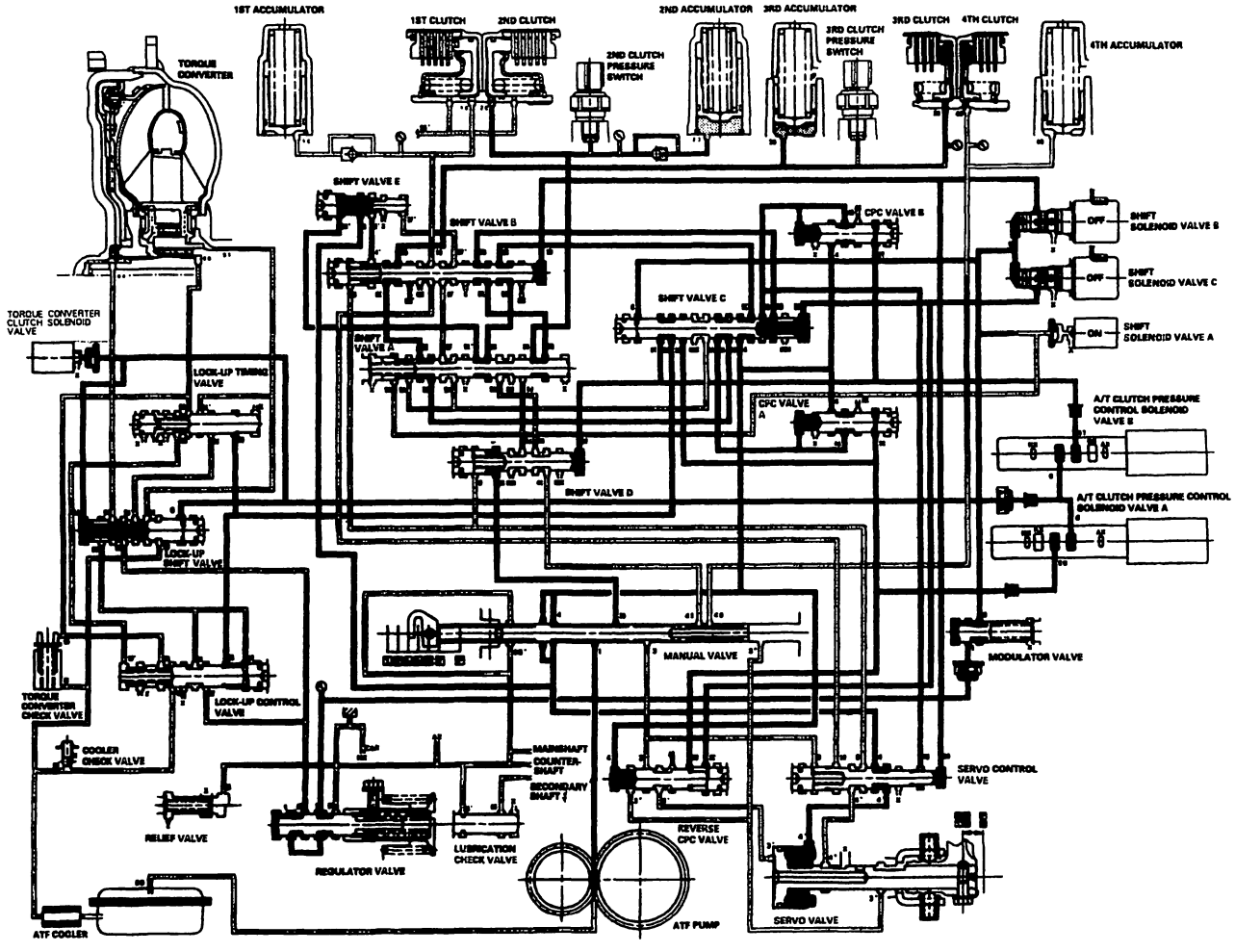

(cont'd)

System Description (cont'd)

Hydraulic Flow (cont'd)

D4 Position: Driving in 3rd gear

The PCM turns shift solenoid valve C ON, and controls A/T clutch pressure control solenoid valve B to release LS B pressure (57). Shift solenoid valve A remains ON, and B remains OFF. Releasing LS B pressure in the CPC valve B releases CPC B pressure in the 2nd clutch pressure circuit. Shift solenoid valve C is turned ON, and SH C pressure (SC) in the right side of shift valve C is released. Then shift valve C is moved to the right side to switch the port of line pressure and CPC pressure. 3rd clutch pressure is changed to line pressure mode, and the 3rd clutch is engaged securely. The CPC A pressure (4A) stops at shift valve E.

NOTE:
- When used, "left" or "right" indicates direction on the hydraulic circuit.
- Hydraulic circuit shows the '98-99 models; the '00-02 models are similar.

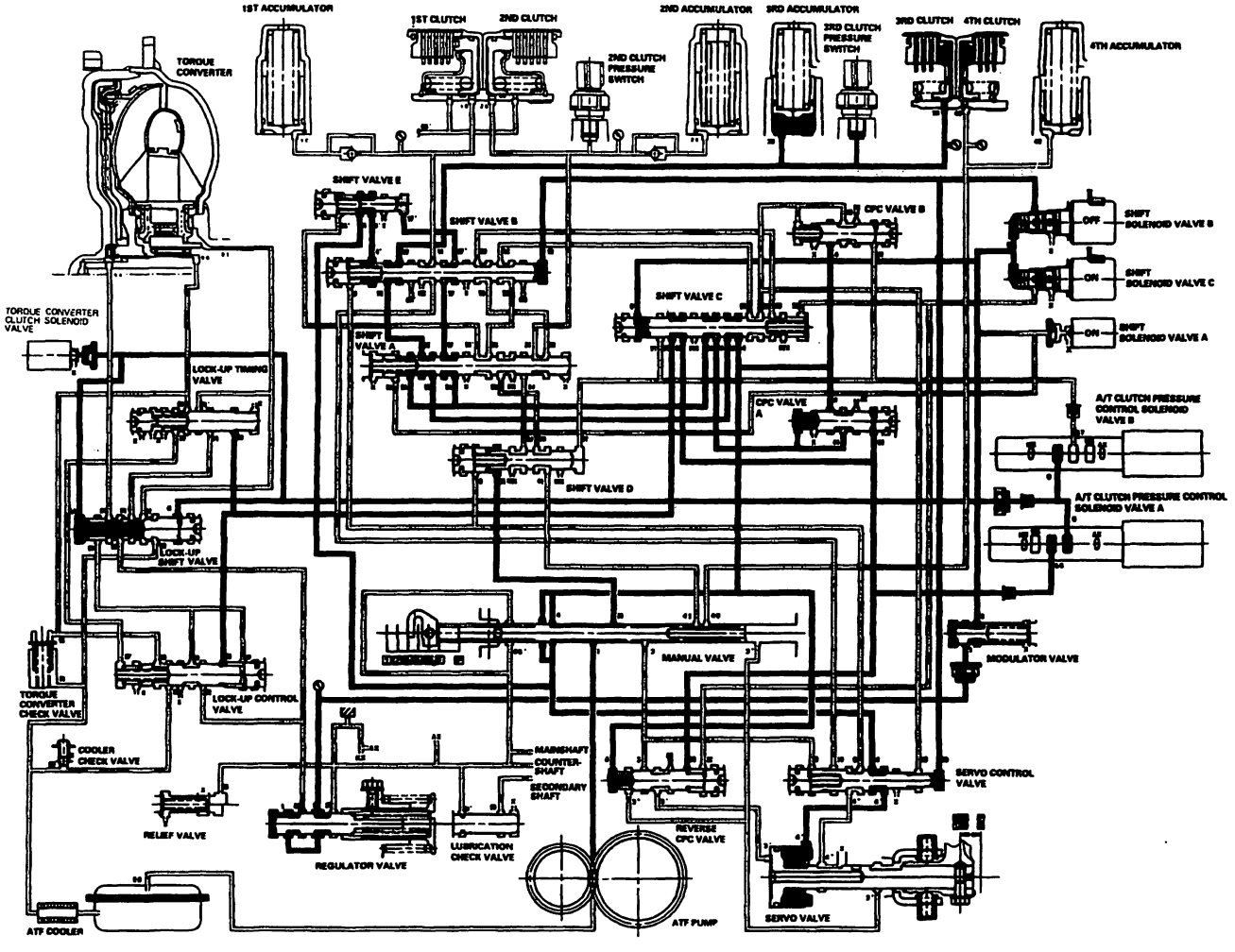

BACK

D4 Position: Shifting between 3rd gear and 4th gear

As the speed of the vehicle reaches the prescribed value, the PCM turns shift solenoid valve A OFF. The PCM also controls A/T clutch pressure control solenoid valve B to apply LS B pressure (57) to CPC valve B. Shift solenoid valve B remains OFF, and C remains ON. Shift solenoid valve A is turned OFF, and SH A pressure (SA) is applied to the left side of shift valve A. Then shift valve A is moved to the left side to switch the port of line pressure and CPC pressure. Line pressure (4) becomes CPC B pressure (4B) at CPC valve B. The CPC B pressure (4B) becomes 4th clutch pressure (41) at shift valve D, and flows to the 4th clutch via the manual valve. The 3rd clutch pressure is changed to CPC pressure mode by switching the position of shift valve A.

NOTE:
- When used, "left" or "right" indicates direction on the hydraulic circuit.
- Hydraulic circuit shows the '98-99 models; the '00-02 models are similar.

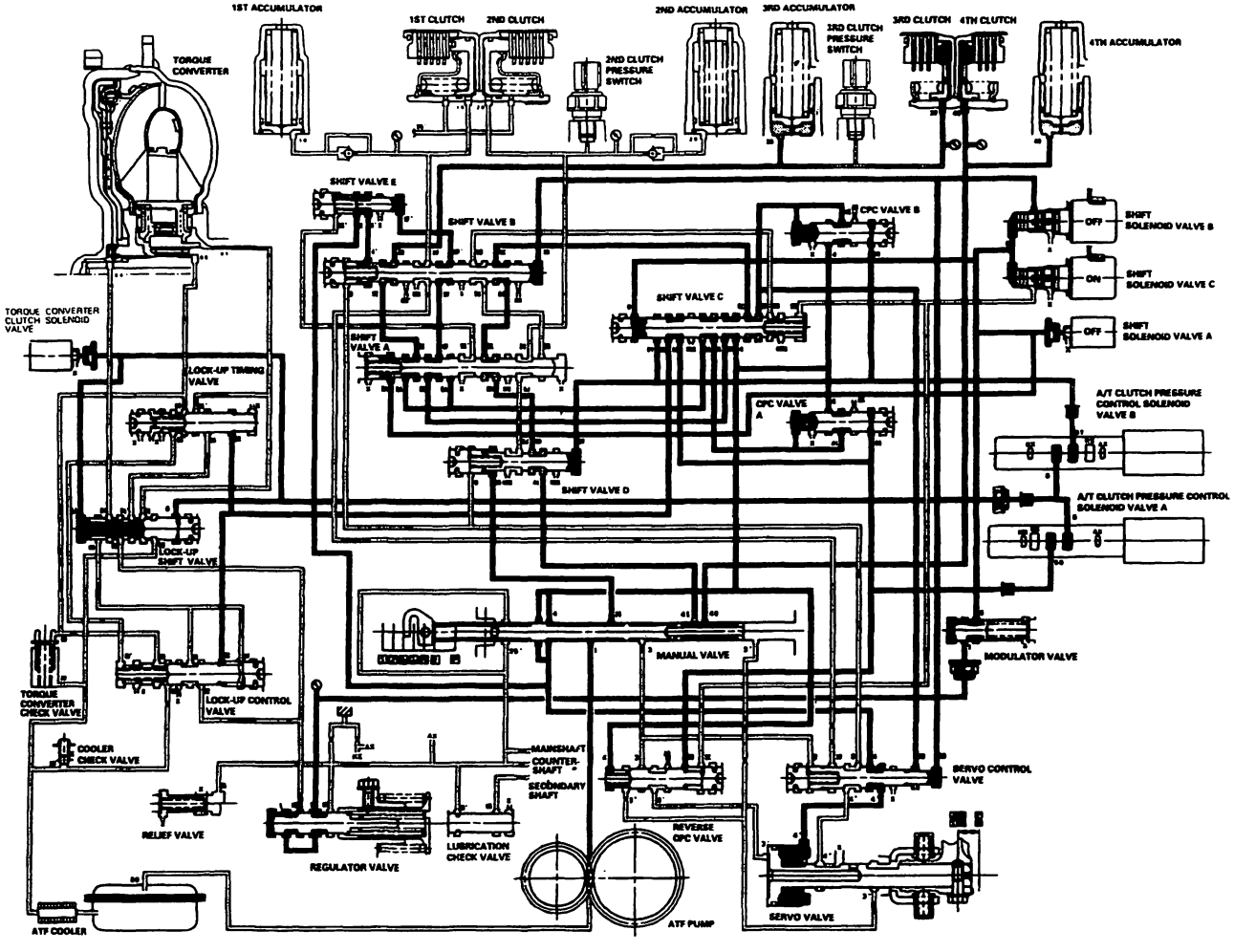

(cont'd)

System Description (cont'd)

Hydraulic Flow (cont'd)

D4 Position: Driving in 4th gear

The PCM turns shift solenoid valve C OFF, and controls A/T clutch pressure control solenoid valve A to release LS A pressure (56). Shift solenoid valves A and B remain OFF. Releasing LS A pressure (56) releases CPC A pressure in the 3rd clutch pressure circuit. Shift solenoid valve C is turned OFF, and SH C pressure (SC) is applied to the right side of shift valve C. Then shift valve C is moved to the left side to switch the port of line pressure and CPC pressure. The CPC B pressure (5B) changes to line pressure (5B) at shift valve C, and flows to the 4th clutch via shift valve C, shift valve B, shift valve D, and the manual valve. The 4th clutch pressure is changed to line pressure mode by switching the position of shift valve A, and shift valve C. The 4th clutch is engaged securely. The CPC B pressure (5D) stops at shift valve A.

NOTE:
- When used, "left" or "right" indicates direction on the hydraulic circuit.
- Hydraulic circuit shows the '98-99 models; the '00-02 models are similar.

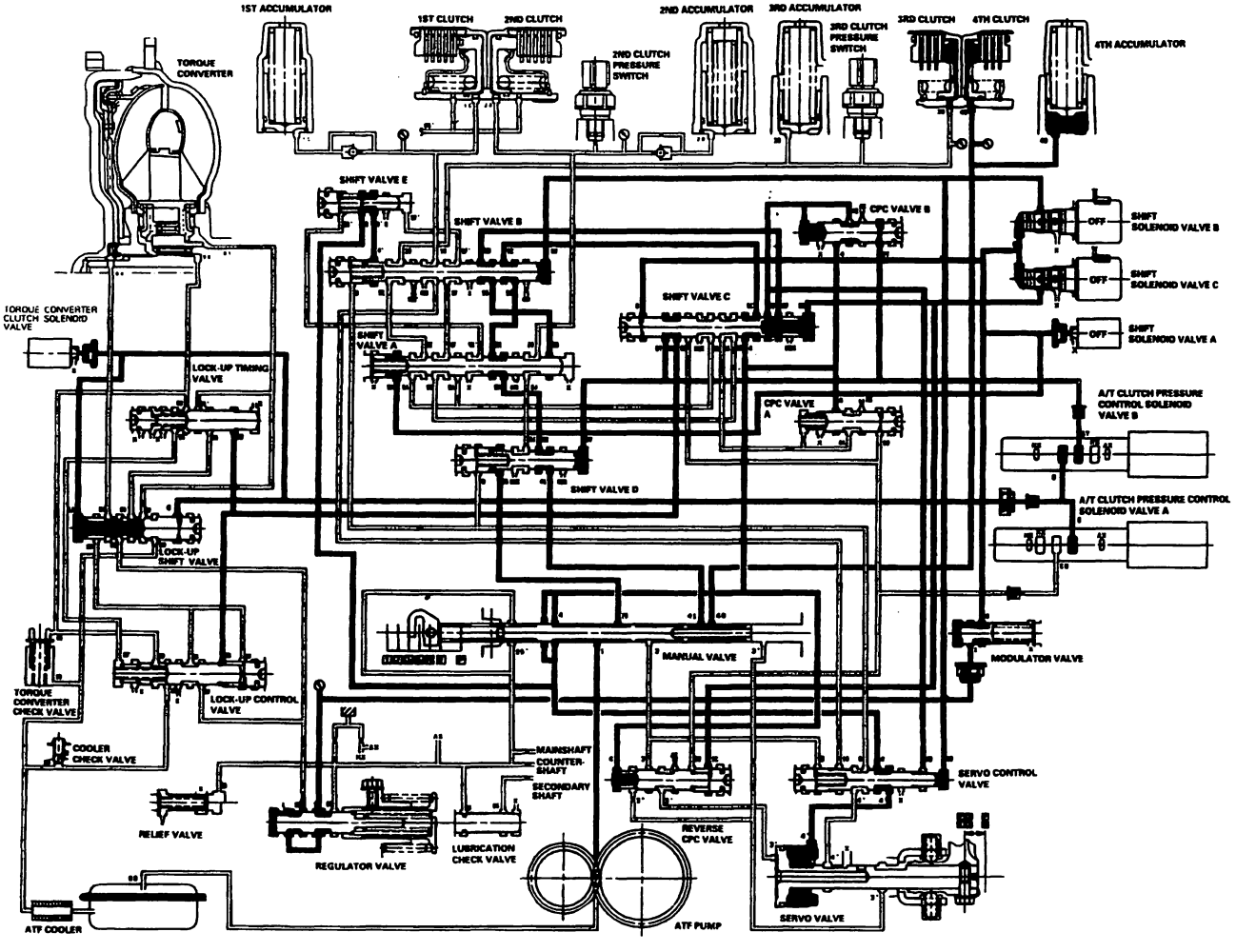

BACK

2 Position

The PCM controls the shift solenoid valves and the A/T clutch pressure control solenoid valves. The conditions of the shift solenoid valves and the positions of the shift valves are as follows:

- Shift solenoid valve A is turned ON, and shift valve A is in the right side.
- Shift solenoid valve B is turned ON, and shift valve B is in the right side.
- Shift solenoid valve C is turned OFF, and shift valve C is moved to the left side.

The PCM also controls A/T clutch pressure control solenoid valve B to apply LS B pressure (57) to CPC valve B. Line pressure (4) from the manual valve becomes line pressure (5C) at shift valve C. Line pressure (5C) flows to shift valve A via shift valve B, and becomes 2nd clutch pressure (20). The 2nd clutch pressure is applied to the 2nd clutch, and 2nd clutch is engaged securely.

NOTE:

- When used, "left" or "right" indicates direction on the hydraulic circuit.
- Hydraulic circuit shows the '98-99 models; the '00-02 models are similar.

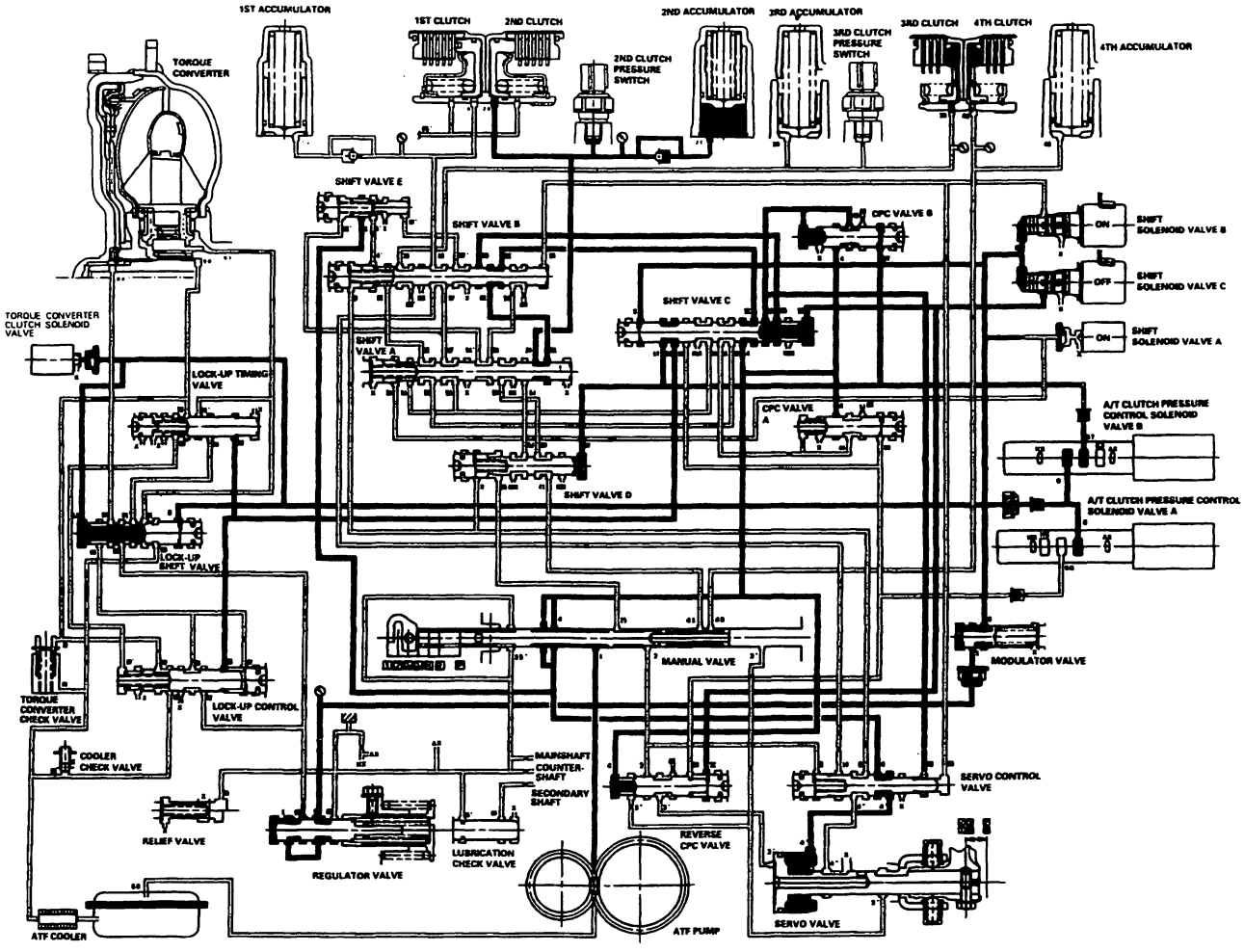

(cont'd)

System Description (cont'd)

Hydraulic Flow (cont'd)

1 Position

The PCM controls the shift solenoid valves and the A/T clutch pressure control solenoid valves. The conditions of the shift solenoid valves and the positions of the shift valves are as follows:
- Shift solenoid valve A is turned OFF, and shift valve A is moved to the left side.
- Shift solenoid valve B is turned ON, and shift valve B is in the right side.
- Shift solenoid valve C is turned ON, and shift valve C is in the right side.

Line pressure (4) becomes line pressure (5B) at shift valve C. Line pressure (5C) flows to shift valve B via shift valve A, and becomes 1st clutch pressure (10). 1st clutch pressure (10) is applied to the 1st clutch, and 1st clutch is engaged securely.

NOTE:
- When used, "left" or "right" indicates direction on the hydraulic circuit.
- Hydraulic circuit shows the '98-99 models; the '00-02 models are similar.

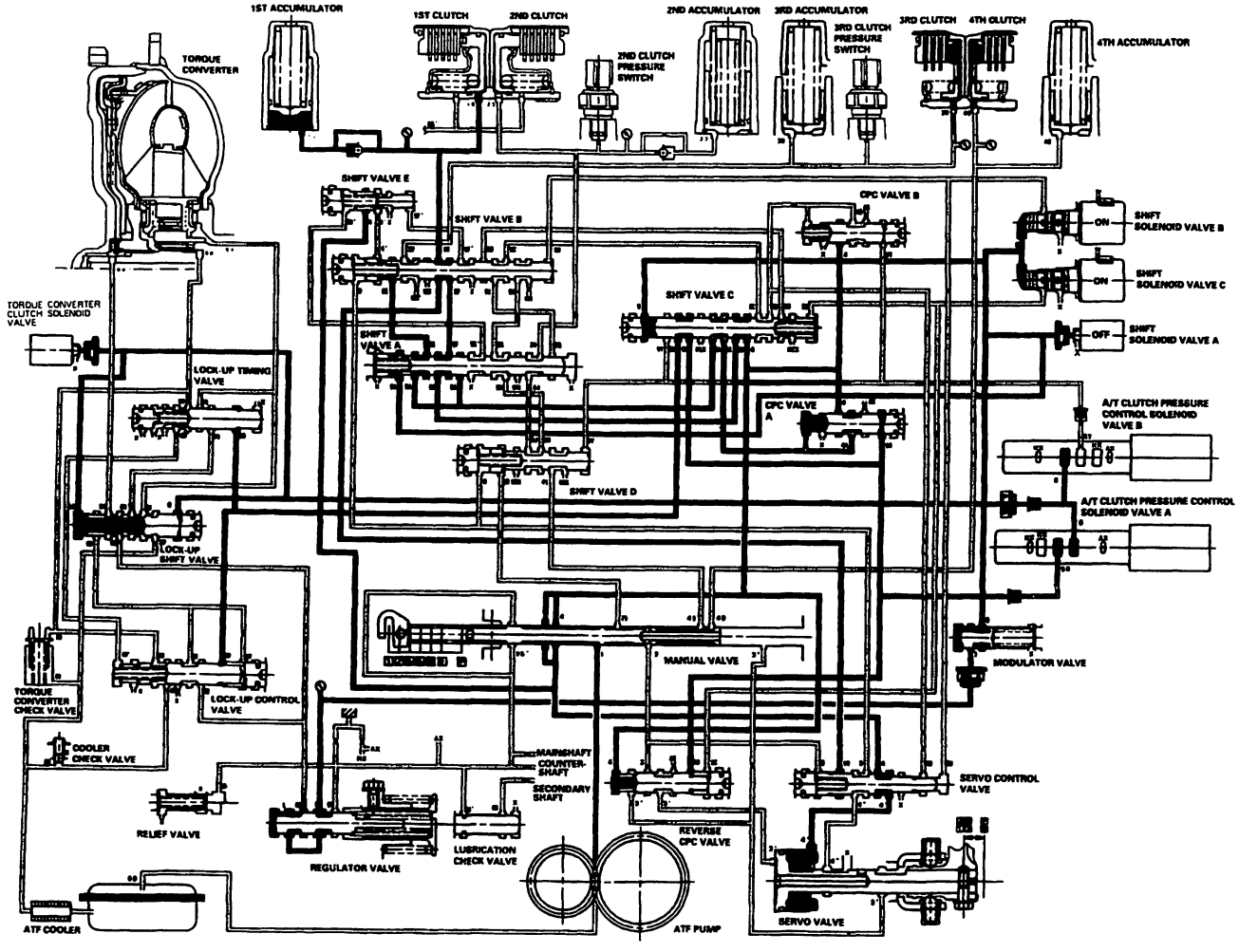

BACK

R Position: Shifting to R position from P or N position.

Line pressure (1) becomes line pressure (3) at the manual valve, and flows to the reverse CPC valve. Line pressure (3) is regulated by the reverse CPC valve and becomes line pressure (3'). Line pressure (3') pushes the servo valve to the reverse position, passes through the servo valve, and flows to the manual valve. Line pressure (3') becomes 4th clutch pressure (40). The 4th clutch pressure (40) is applied to the 4th clutch, and 4th clutch is engaged with the reverse CPC pressure mode.

NOTE:
- When used, "left" or "right" indicates direction on the hydraulic circuit.
- Hydraulic circuit shows the '98-99 models; the '00-02 models are similar.

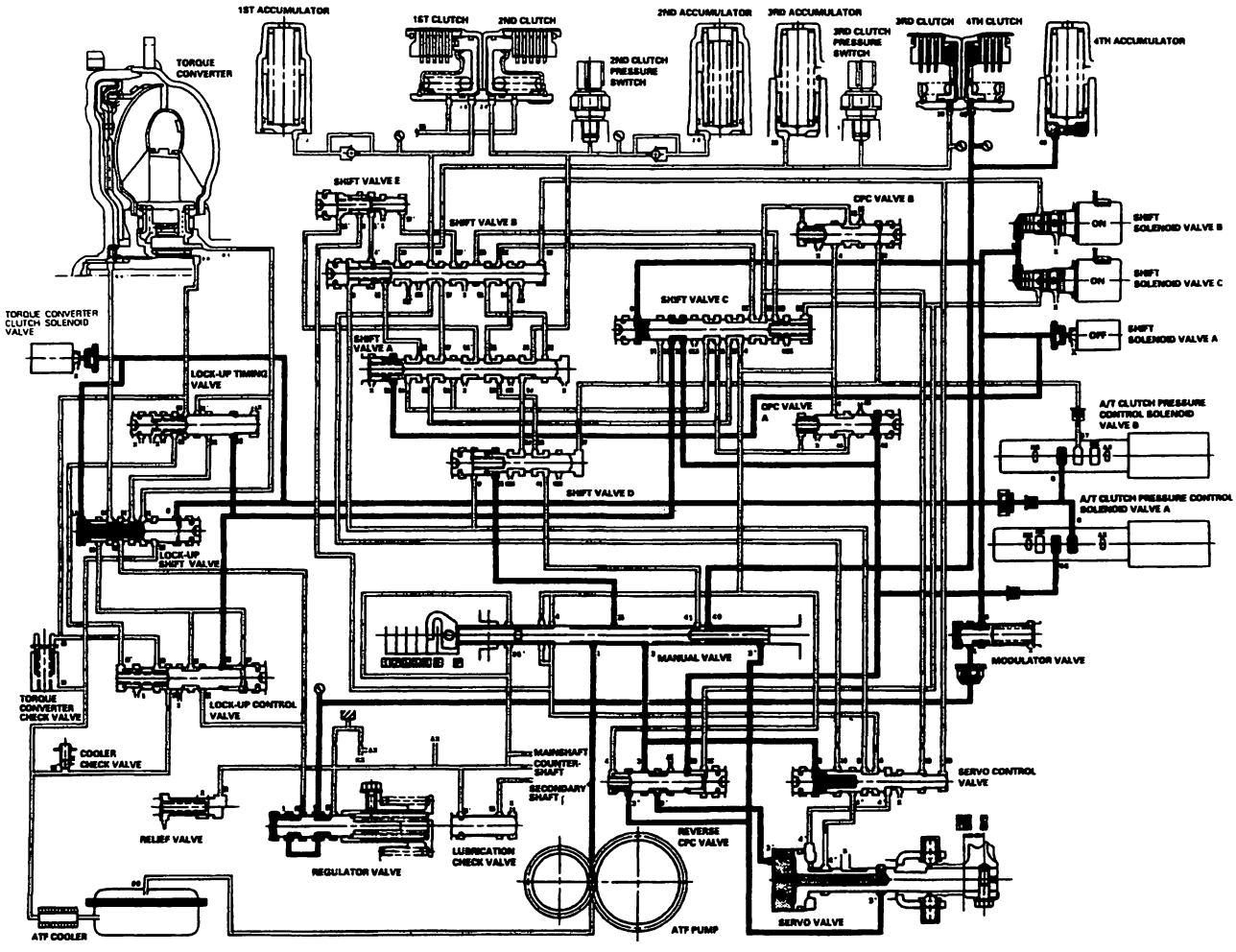

(cont'd)

System Description (cont'd)

Hydraulic Flow (cont'd)

Ⓡ Position: Driving in reverse gear

The PCM turns shift solenoid valve C OFF. Shift solenoid valve A remains OFF, and B remains ON. Shift solenoid valve C is turned OFF, and SH C pressure (SC) is applied to the right side of the reverse CPC valve. Then the reverse CPC valve moves to the left side, creating full line pressure. Line pressure to the 4th clutch is the same as in Ⓡ position, and 4th clutch pressure increases. The 4th clutch is engaged with line pressure mode.

Reverse Inhibitor Control

When the Ⓡ position is selected while the vehicle is moving forward at speed over 6 mph (10 km/h), the PCM outputs the 1st speed signal to turn the shift solenoid valve C ON; shift solenoid valve A remains OFF, and shift solenoid valve B remains ON. The reverse CPC valve is moved to right side and cover the port so stop the line pressure (3') to the servo valve. The line pressure (3') is not applied to the servo valve, and the 4th clutch pressure (40) is not applied to the 4th clutch, as result, power is not transmitted to the reverse position.

NOTE:
- When used, "left" or "right" indicates direction on the hydraulic circuit.
- Hydraulic circuit shows the '98-99 models; the '00-02 models are similar.

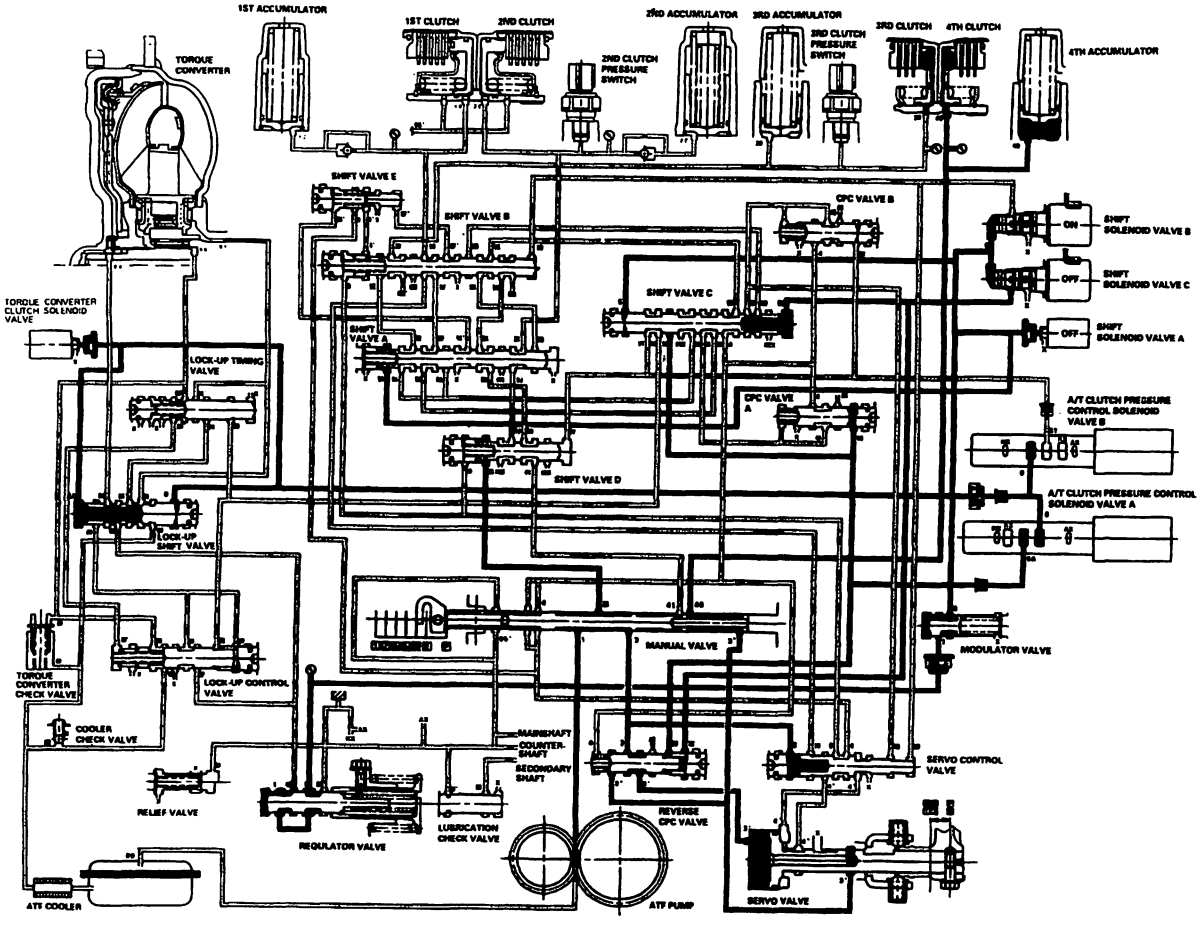

BACK

P Position

Shift solenoid valve C is turned OFF by the PCM, and SH C pressure (SC) is applied to the right side of the reverse CPC valve. Then the reverse CPC valve is moved to the left side to uncover the port leading line pressure (3) to the servo valve. Line pressure (3') passes through the servo valve and flows to the manual valve. Line pressure (3') is intercepted at the manual valve, and is not applied to the clutches.

NOTE:
- When used, "left" or "right" indicates direction on the hydraulic circuit.
- Hydraulic circuit shows the '98-99 models; the '00-02 models are similar.

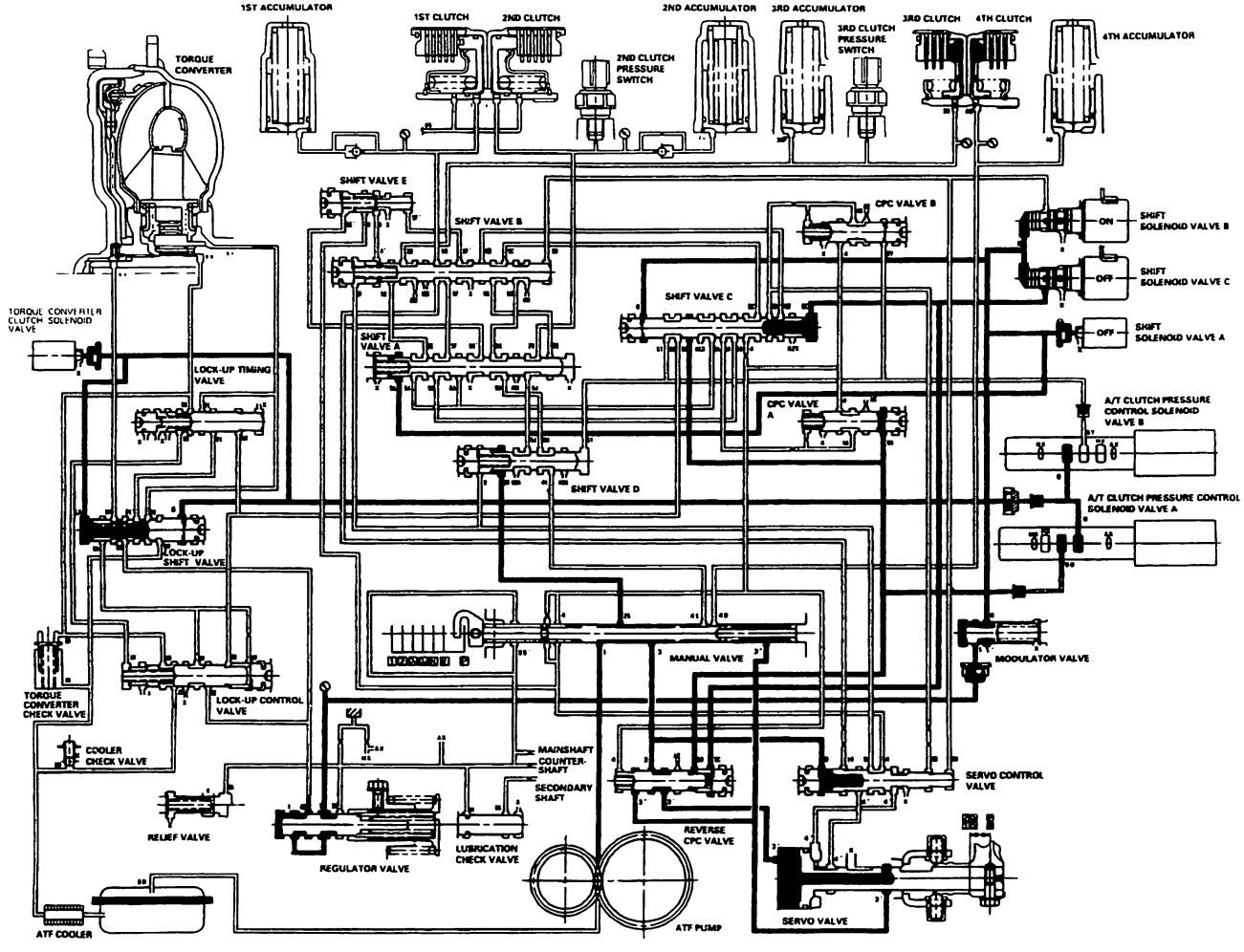

(cont'd)

System Description (cont'd)

Lock-up System

In D4 position (3rd and 4th), and D3 position (3rd), pressurized fluid is drained from the back of the torque converter through a fluid passage, causing the lock-up piston to be held against the torque converter cover. As this takes place, the mainshaft rotates at the same speed as the engine crankshaft. Together with hydraulic control, the PCM optimizes the timing of the lock-up mechanism. When the torque converter clutch solenoid valve (lock-up control solenoid valve) activates, modulator pressure changes to switch lock-up ON and OFF. The lock-up control valve and the lock-up timing valve control the range of lock-up according to A/T clutch pressure control solenoid valves A and B. The torque converter clutch solenoid valve is mounted on the torque converter housing, and A/T clutch pressure control solenoid valves A and B are mounted on the transmission housing. They are controlled by the PCM.

General Operation

1. Operation (clutch on)
   With the lock-up clutch on, fluid in the chamber between the torque converter cover and the lock-up piston is drained off, and the converter fluid exerts pressure through the piston against the torque converter cover. As a result, the converter turbine is locked to the converter cover. The effect is to bypass the converter, placing the vehicle in direct drive.

Power flow

The power flows by way of:

Engine
↓
Drive plate
↓
Torque converter cover
↓
Lock-up piston
↓
Damper spring
↓
Turbine
↓
Mainshaft

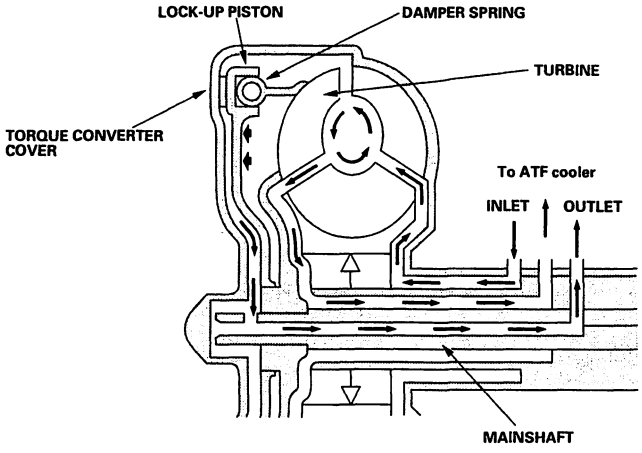

2. Operation (clutch off)
   With the lock-up clutch off, fluid flows in the reverse of CLUTCH ON. As a result, the lock-up piston moves away from the converter cover, and torque converter lock-up is released.

Power flow

Engine
↓
Drive plate
↓
Torque converter cover
↓
Pump
↓
Turbine
↓
Mainshaft

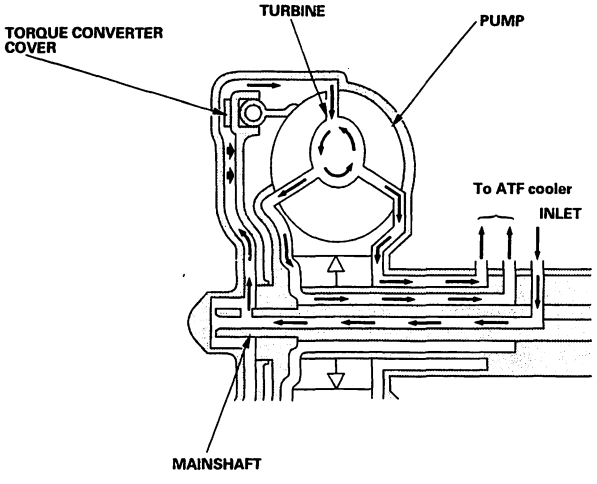

BACK

No Lock-up

The torque converter clutch solenoid valve is turned OFF by the PCM.
The lock-up shift valve receives LC pressure (LA) on the left side, and modulator pressure (6) on the right side. The lock-up shift valve is in the right side to uncover the port leading torque converter pressure (92) to the left side of the torque converter. Torque converter pressure (92) becomes torque converter pressure (94), and enters into the left side of the torque converter (to disengage the lock-up clutch). The lock-up clutch is OFF.

NOTE:
- When used, "left" or "right" indicates direction on the hydraulic circuit.
- Hydraulic circuit shows the '98-99 models; the '00-02 models are similar.

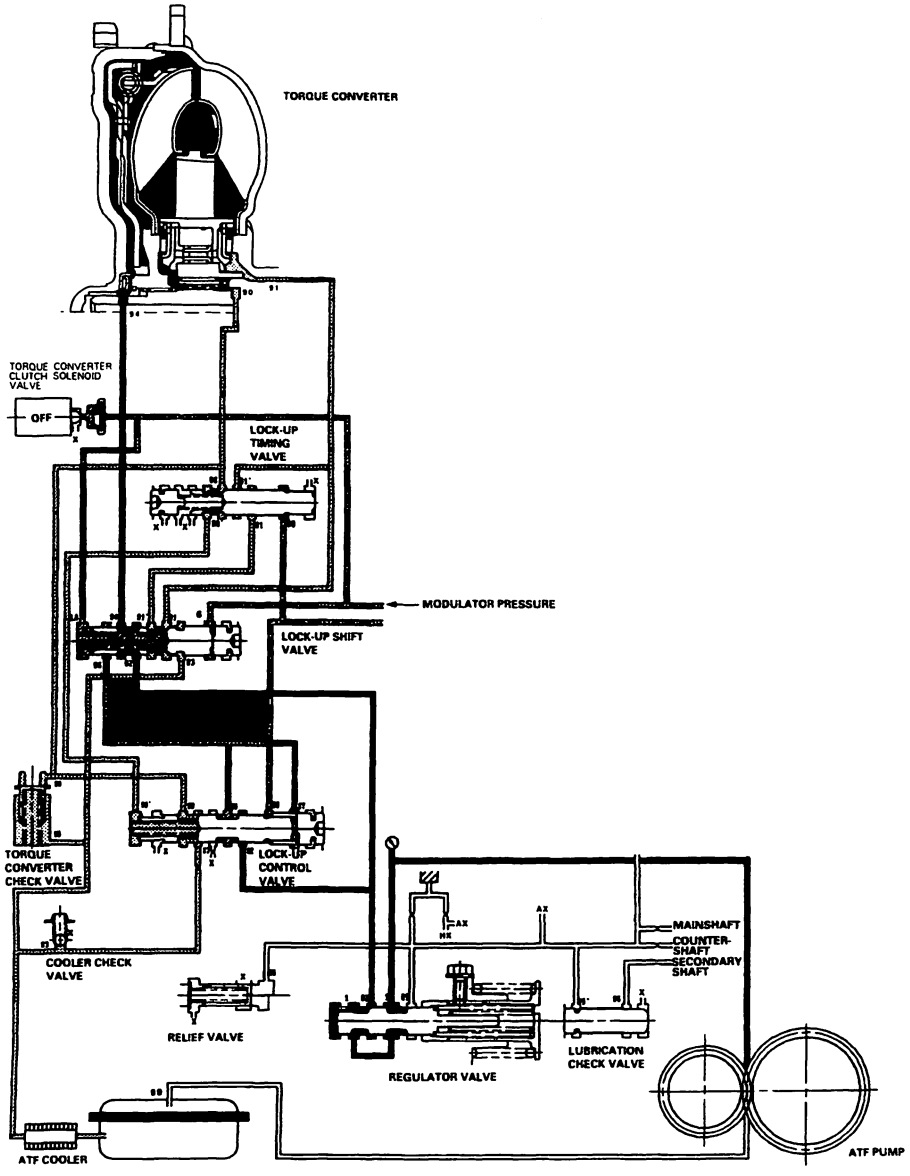

(cont'd)

System Description (cont'd)

Lock-up System (cont'd)

Partial Lock-up

As the speed of the vehicle reaches the prescribed value, the torque converter clutch solenoid valve is turned ON by the PCM to release LC pressure (LA) in the left side of the lock-up shift valve. The lock-up shift valve is moved to the left side to switch the port leading torque converter pressure to the left side and right side of the torque converter. Torque converter pressure (92) flows to the right side of the torque converter to engage the lock-up clutch. The PCM also controls A/T clutch pressure control solenoid valves A and B, and LS A or LS B pressure is applied to the lock-up control valve and the lock-up timing valve. The position of the lock-up control valve depends on torque converter pressure and LS A or LS B pressure. When LS A or LS B pressure (58) is lower, torque converter pressure (91) from the lock-up timing valve is lower. The lock-up clutch is engaged partially. LS A or LS B (58) increases, and the lock-up timing valve is moved to the left side to uncover the port leading torque converter pressure to high. The lock-up clutch is then engaged securely. Under this condition, the lock-up clutch is engaged by pressure from the right side of the torque converter; this condition is partial lock-up.

NOTE:
- When used, "left" or "right" indicates direction on the hydraulic circuit.
- Hydraulic circuit shows the '98-99 models; the '00-02 models are similar.

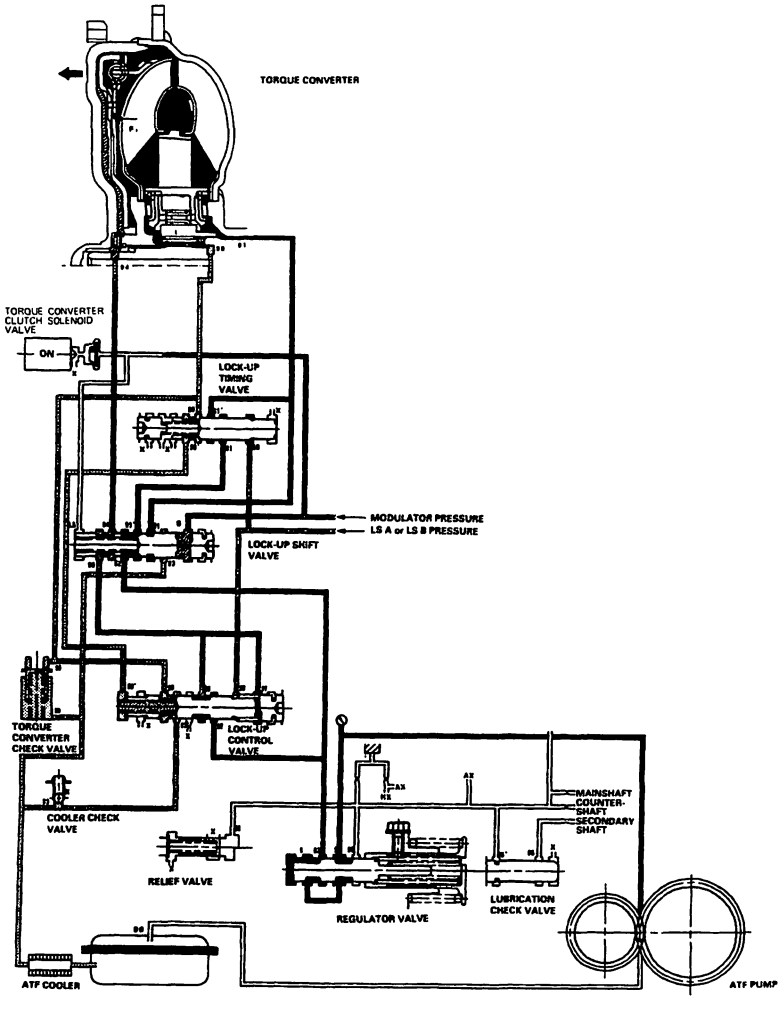

BACK

Full Lock-up

When the vehicle speed further increases, the PCM controls A/T clutch pressure control solenoid valves A and B to increase LS A or LS B pressure (58). The LS A or LS B pressure (58) is applied to the lock-up control valve and the lock-up timing valve, and moves them to the left side. Under this condition, torque converter back pressure is released fully, causing the lock-up clutch to be fully engaged.

NOTE:
- When used, "left" or "right" indicates direction on the hydraulic circuit.
- Hydraulic circuit shows the '98-99 models; the '00-02 models are similar.

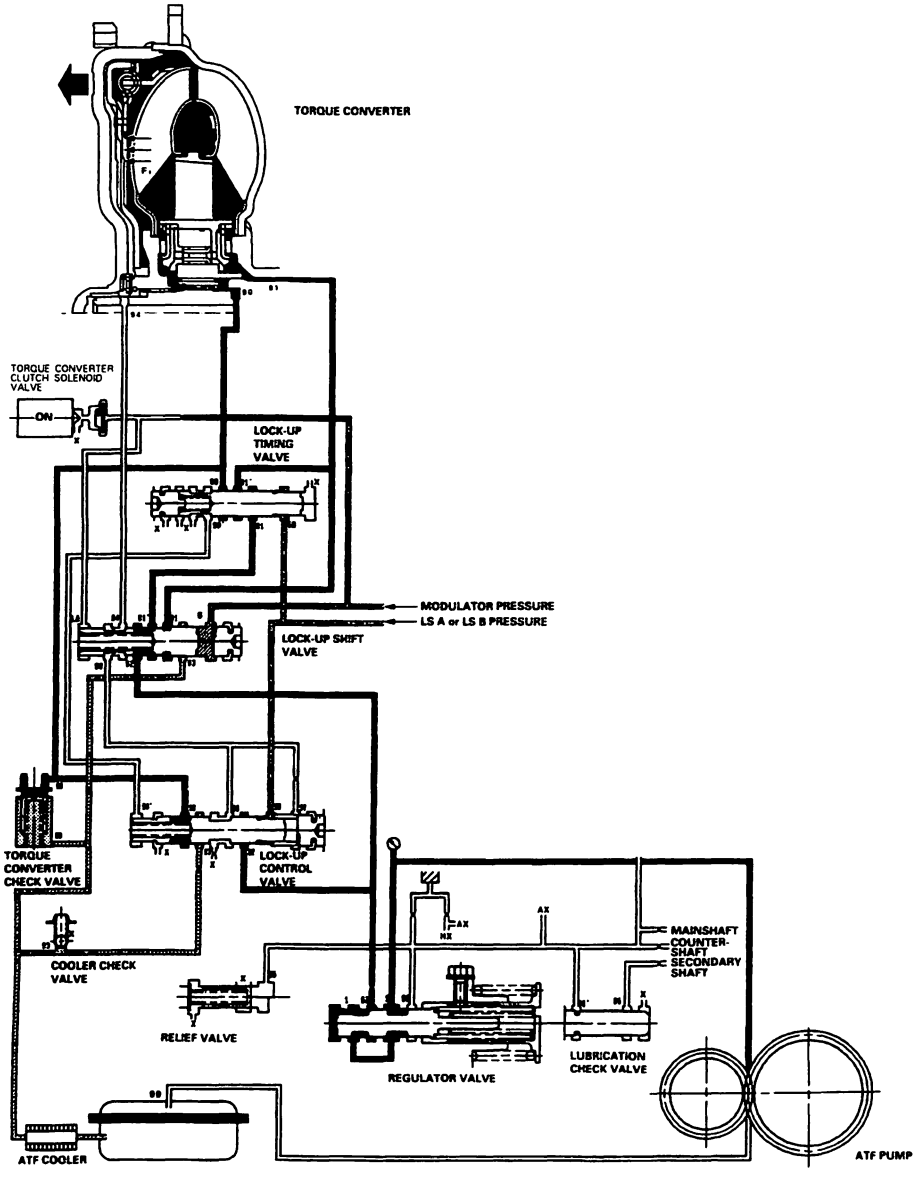

(cont'd)

System Description (cont'd)

Circuit Diagram

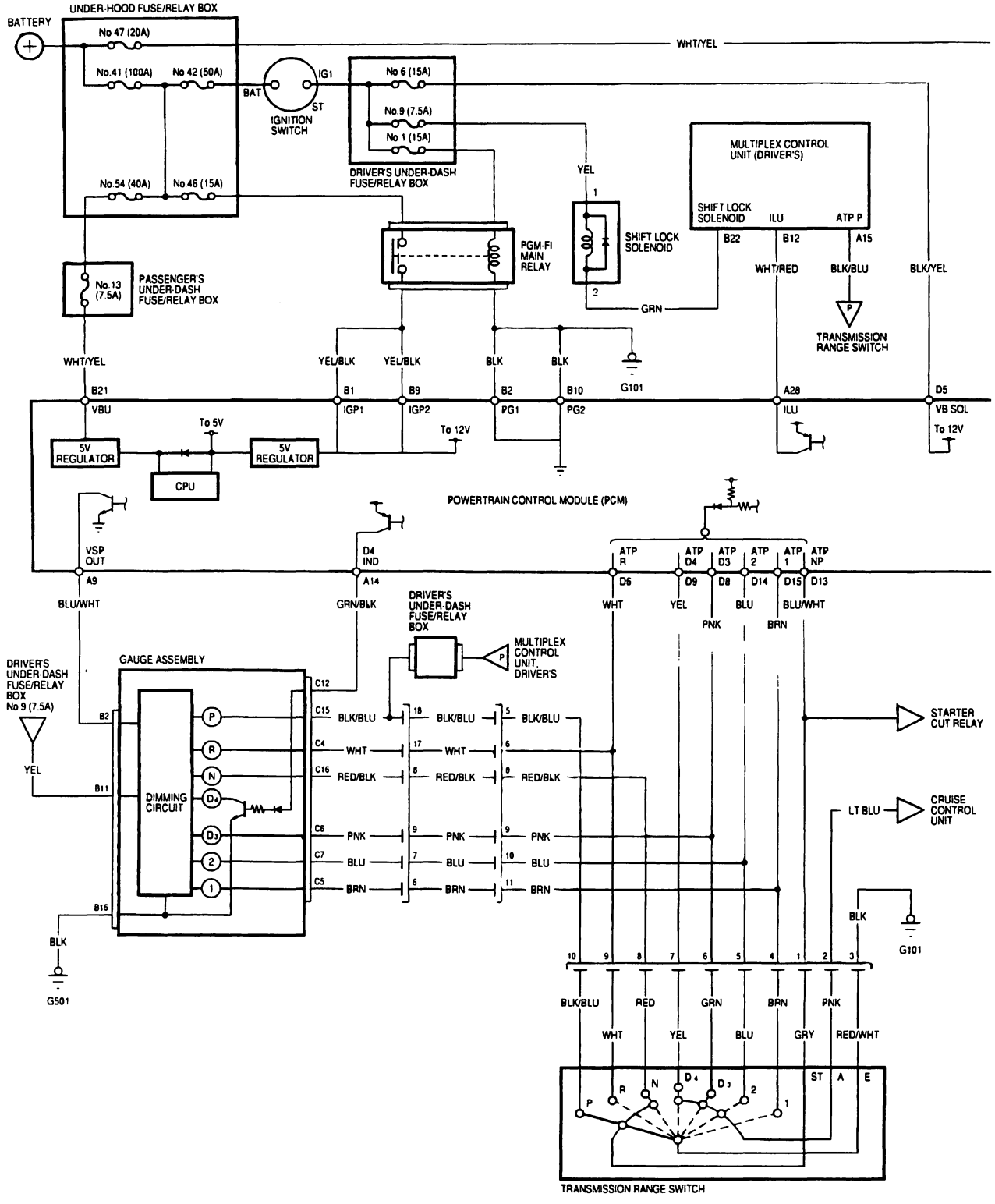

BACK

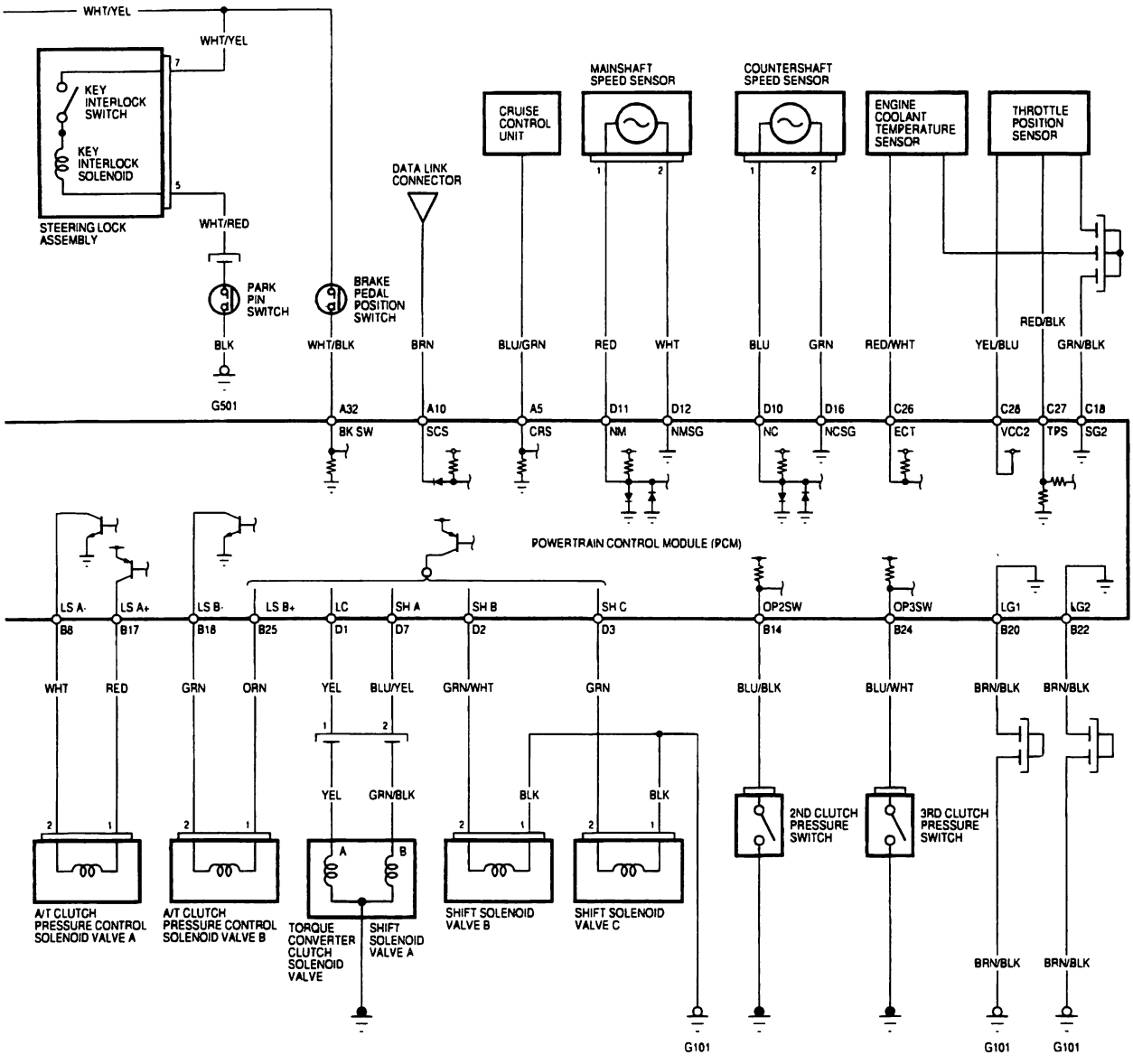

PCM Connector Terminal Locations

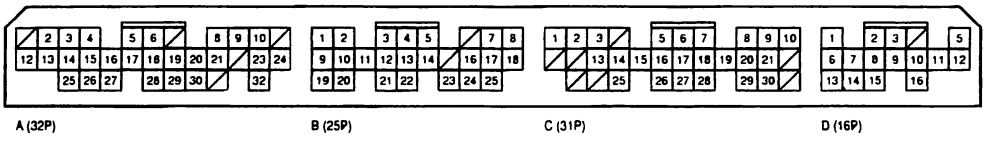

BACK

DTC Troubleshooting

DTC P1753: Problem in Torque Converter Clutch Solenoid Valve Circuit

NOTE: Record all freeze data before you troubleshoot.

1. Turn the ignition switch OFF.
2. Disconnect PCM connector B (25P) and D (16P).
3. Turn the ignition switch ON (II).
4. Measure the voltage between the D1 and B20 or B22 terminals.

PCM CONNECTORS

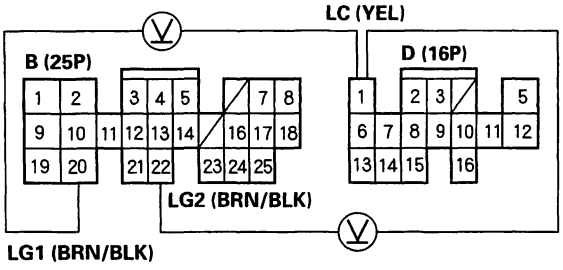

Wire side of female terminals

Is there voltage?

YES – Repair short to power in the wire between the D1 terminal and the torque converter clutch solenoid valve. ■

NO – Go to step 5.

5. Turn the ignition switch OFF.
6. Measure the resistance between the D1 and B20 or B22 terminals.

PCM CONNECTORS

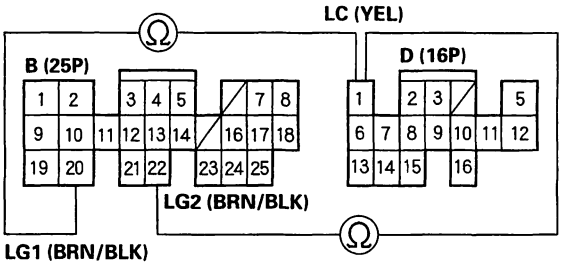

Wire side of female terminals

Is the resistance 12 – 25 Ω ?

YES – Go to step 11.

NO – Go to step 7.

7. Check for continuity between the B20 and B22 terminals and body ground.

PCM CONNECTOR B (25P)

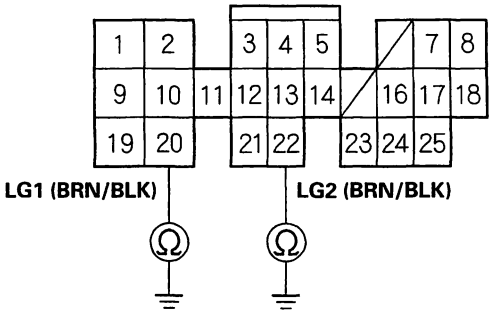

Wire side of female terminals

Is there continuity?

YES – Go to step 8.

NO – Repair open in the wires between the B20 and B22 terminals and ground (G101). ■

BACK

8. Disconnect the torque converter clutch solenoid valve/shift solenoid valve A 2P connector.

9. Check for continuity between the D1 and B20 or B22 terminals.

PCM CONNECTORS

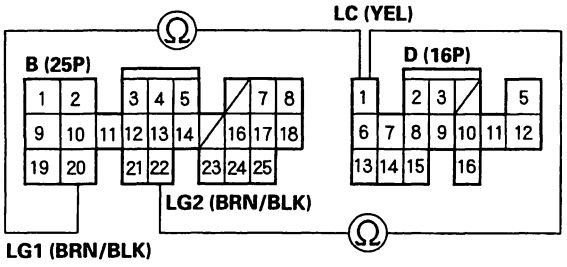

Wire side of female terminals

Is there continuity?

YES—Repair short to ground in the wire between the D1 terminal and the torque converter clutch solenoid valve.■

NO—Go to step 10.

10. Measure the resistance between the No.1 terminal of the torque converter clutch solenoid valve/shift solenoid valve A connector and body ground.

TORQUE CONVERTER CLUTCH SOLENOID VALVE SHIFT SOLENOID VALVE A CONNECTOR (2P)

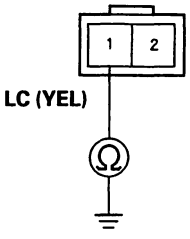

Terminal side of male terminals

Is the resistance 12—25Ω ?

YES—Check for open in the wire between the D1 terminal and the torque converter clutch solenoid valve.■

NO—Replace the torque converter clutch solenoid valve/shift solenoid valve A.■

11. Turn the ignition switch ON (II).

12. Measure the voltage between the D5 and B20 or B22 terminals.

PCM CONNECTORS

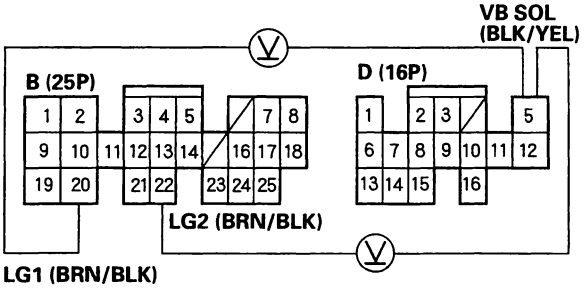

Wire side of female terminals

Is there battery voltage?

YES—Check for loose terminal fit in the PCM connectors. If necessary, substitute a known-good PCM and recheck.■

NO—Check for blown No. 6 (15A) fuse in the driver's under-dash fuse/relay box. If the fuse is OK, repair open in the wire between the D5 terminal and the driver's under-dash fuse/relay box.■

DTC Troubleshooting (cont'd)

DTC P1705: Short in Transmission Range Switch Circuit

NOTE: Record all freeze data before you troubleshoot.

1. Turn the ignition switch ON (II).

2. Observe the A/T gear position indicator, and shift each position separately.

   Do any indicators stay on when the shift lever is not in that position?

   YES—Go to step 3.

   NO—The system is OK at this time. Check the wire harness for damage.■

3. Disconnect the transmission range switch connector.

   Do all gear position indicators go out?

   YES—Replace the transmission range switch.■

   NO—Go to step 4.

4. Turn the ignition switch OFF, and connect the transmission range switch connector.

5. Turn the ignition switch ON (II).

6. Shift to all positions other than [R].

7. Measure the voltage between the D6 and B20 or B22 terminals.

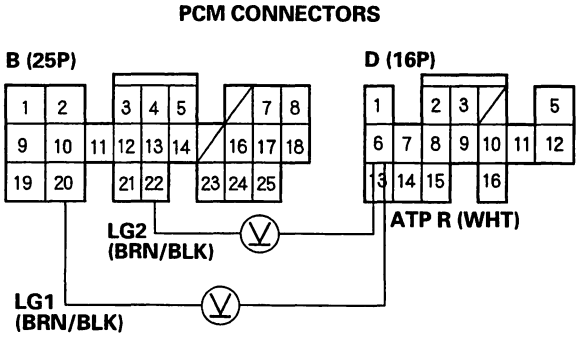

Wire side of female terminals

   Is there battery voltage?

   YES—Go to step 8.

   NO—Check for short in the wire between the D6 terminal and the transmission range switch or A/T gear position indicator, and check for an open in the wires between the B20 and B22 terminals and body ground (G101). If wires are OK, check for loose terminal fit in the PCM connectors. If necessary, substitute a known-good PCM and recheck.■

8. Shift to all positions other than [P] or [N].

9. Measure the voltage between the D13 and B20 or B22 terminals.

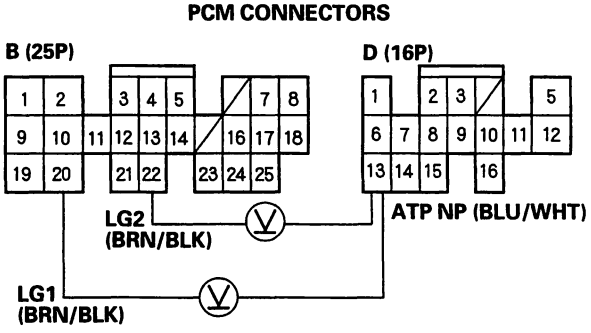

Wire side of female terminals

   Is there about 5 V?

   YES—Go to step 10.

   NO—Check for short in the wire between the D13 terminal and the transmission range switch, and in the [P] and [N] position signal wires between the A/T gear position indicator and the transmission range switch. If wires are OK, check for loose terminal fit in the PCM connectors. If necessary, substitute a known-good PCM and recheck.■

BACK

10. Shift to all positions other than D4.

11. Measure the voltage between the D9 and B20 or B22 terminals.

PCM CONNECTORS

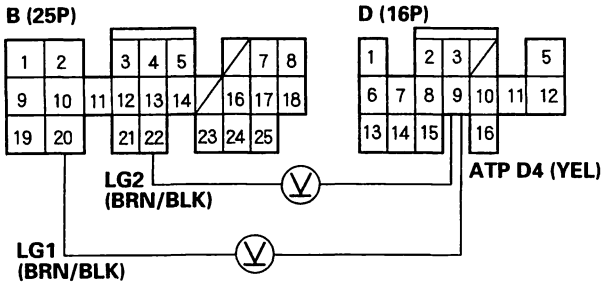

Wire side of female terminals

Is there about 5 V?

YES—Go to step 12.

NO—Check for short in the wire between the D9 terminal and the transmission range switch. If wire is OK, check for loose terminal fit in the PCM connectors. If necessary, substitute a known-good PCM and recheck.■

12. Shift to all positions other than D3.

13. Measure the voltage between the D8 and B20 or B22 terminals.

PCM CONNECTORS

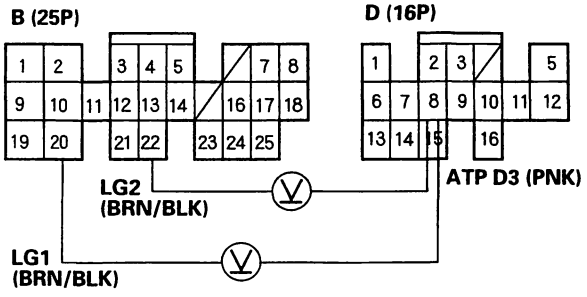

Wire side of female terminals

Is there battery voltage?

YES—Go to step 14.

NO—Check for short in the wire between the D8 terminal and the transmission range switch or A/T gear position indicator. If wires are OK, check for loose terminal fit in the PCM connectors. If necessary, substitute a known-good PCM and recheck.■

(cont'd)

DTC Troubleshooting (cont'd)

14. Shift to all positions other than [2].

15. Measure the voltage between the D14 and B20 or B22 terminals.

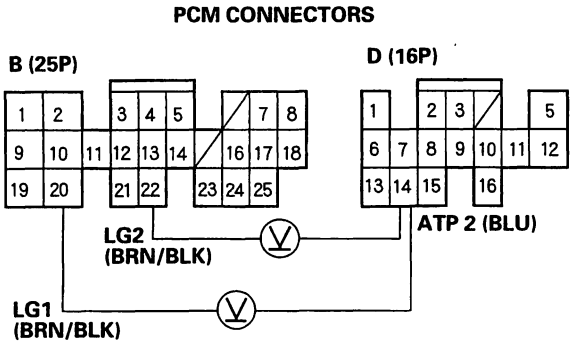

Wire side of female terminals

Is there battery voltage?

YES—Go to step 16.

NO—Check for short in the wire between the D14 terminal and the transmission range switch or A/T gear position indicator. If wires are OK, check for loose terminal fit in the PCM connectors. If necessary, substitute a known-good PCM and recheck.■

16. Shift to all positions other than [1].

17. Measure the voltage between the D15 and B20 or B22 terminals.

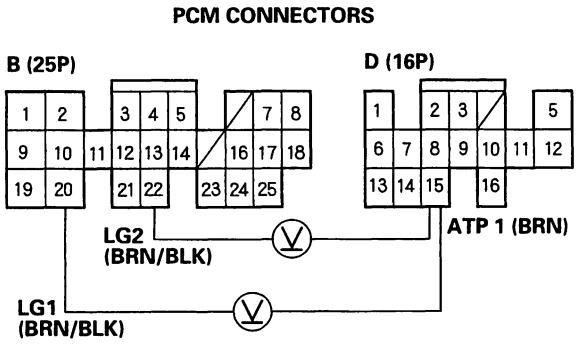

Wire side of female terminals

Is there battery voltage?

YES—Check for loose terminal fit in the PCM connectors. If necessary, substitute a known-good PCM and recheck.■

NO—Check for short in the wire between the D15 terminal and the transmission range switch or A/T gear position indicator. If wires are OK, check for loose terminal fit in the PCM connectors. If necessary, substitute a known-good PCM and recheck.■

BACK

DTC P1706: Open in Transmission Range Switch Circuit (no gear position inputs)

NOTE: Record all freeze data before you troubleshoot.

1. Test the transmission range switch (see page 14-138).

   Is the switch OK?

   YES—Go to step 2.

   NO—Replace the transmission range switch.■

2. Turn the ignition switch OFF.

3. Check for continuity between the B20 and B22 terminals and body ground.

PCM CONNECTOR B (25P)

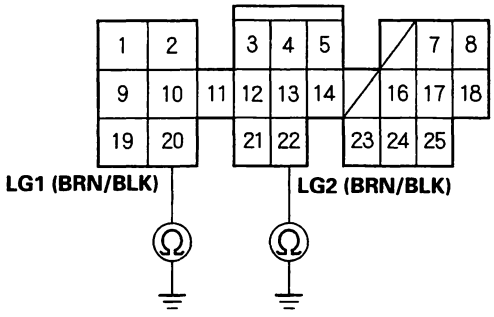

Wire side of female terminals

Is there continuity?

YES—Go to step 4.

NO—Repair open in the wires between the B20 and B22 terminals and ground (G101), or repair poor ground (G101).■

4. Turn the ignition switch ON (II).

5. Shift to D4 position.

6. Measure the voltage between the D9 and B20 or B22 terminals.

PCM CONNECTORS

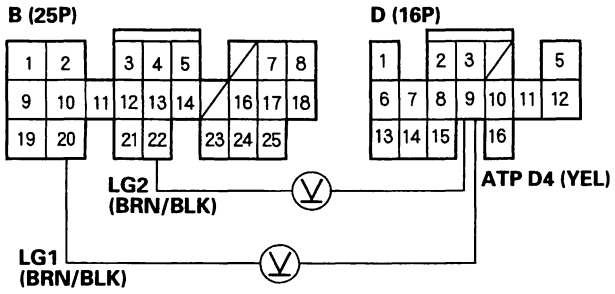

Wire side of female terminals

Is there voltage?

YES—Repair open in the wire between the D9 terminal and the transmission range switch.■

NO—Go to step 7.

7. Shift to R position.

8. Measure the voltage between the D6 and B20 or B22 terminals.

PCM CONNECTORS

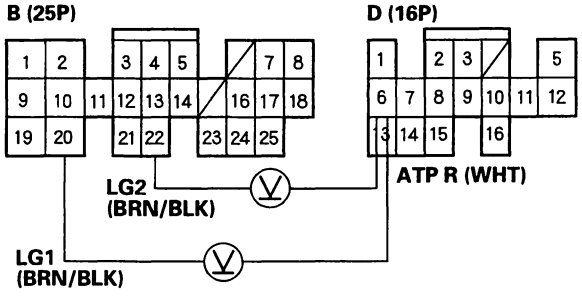

Wire side of female terminals

Is there voltage?

YES—Repair open in the wire between the D6 terminal and the transmission range switch.■

NO—Go to step 9.

(cont'd)

DTC Troubleshooting (cont'd)

9. Shift to [P] or [N] position.

10. Measure the voltage between the D13 and B20 or B22 terminals.

PCM CONNECTORS

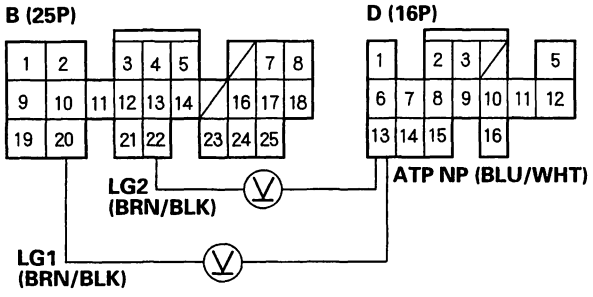

Wire side of female terminals

Is there voltage?

YES—Repair open in the wire between the D13 terminal and the transmission range switch.■

NO—Go to step 11.

11. Shift to [D3] position.

12. Measure the voltage between the D8 and B20 or B22 terminals.

PCM CONNECTORS

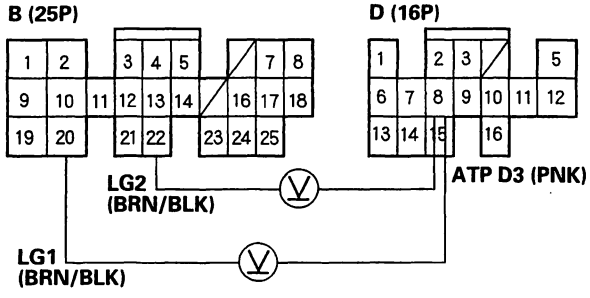

Wire side of female terminals

Is there voltage?

YES—Repair open in the wire between the D8 terminal and the transmission range switch.■

NO—Go to step 13.

13. Shift to [2] position.

14. Measure the voltage between the D14 and B20 or B22 terminals.

PCM CONNECTORS

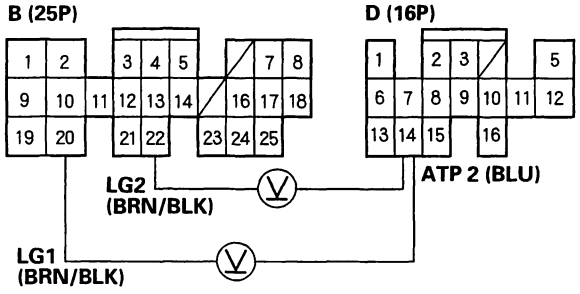

Wire side of female terminals

Is there voltage?

YES—Repair open in the wire between the D14 terminal and the transmission range switch.■

NO—Go to step 15.

15. Shift to [1] position.

16. Measure the voltage between the D15 and B20 or B22 terminals.

PCM CONNECTORS

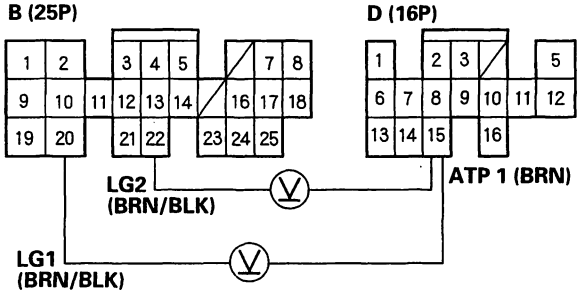

Wire side of female terminals

Is there voltage?

YES—Repair open in the wire between the D15 terminal and the transmission range switch.■

NO—Check for loose terminal fit in the PCM connectors. If necessary, subsitute a known-good PCM and recheck.■

BACK

DTC P0753: Problem in Shift Solenoid Valve A Circuit

NOTE: Record all freeze data before you troubleshoot.

1. Turn the ignition switch OFF.
2. Disconnect PCM connectors B (25P) and D (16P).
3. Turn the ignition switch ON (II).
4. Measure the voltage between the D7 and B20 or B22 terminals.

PCM CONNECTORS

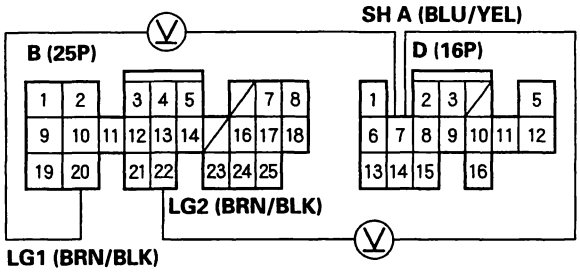

Wire side of female terminals

Is there voltage?

YES—Repair short to power in the wire between the D7 terminal and the shift solenoid valve A.■

NO—Go to step 5.

5. Turn the ignition switch OFF.
6. Measure the resistance between the D7 and B20 or B22 terminals.

PCM CONNECTORS

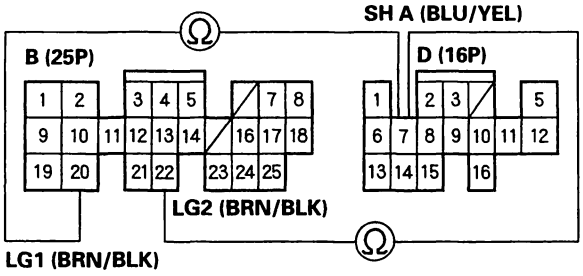

Wire side of female terminals

Is the resistance 12—25 Ω ?

YES—Go to step 11.

NO—Go to step 7.

7. Check for continuity between the B20 and B22 terminals and body ground.

PCM CONNECTOR B (25P)

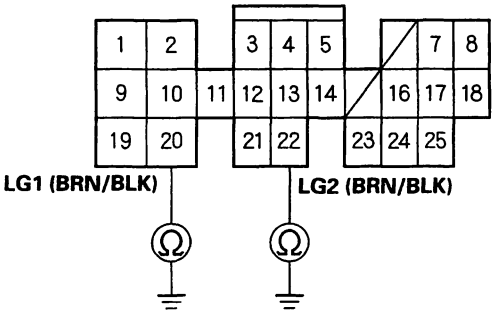

Wire side of female terminals

Is there continuity?

YES—Go to step 8.

NO—Repair open in the wires between the B20 and B22 terminals and ground (G101).■

(cont'd)

DTC Troubleshooting (cont'd)

8. Disconnect the torque converter clutch solenoid valve/shift solenoid valve A 2P connector.

9. Check for continuity between the D7 and B20 or B22 terminals.

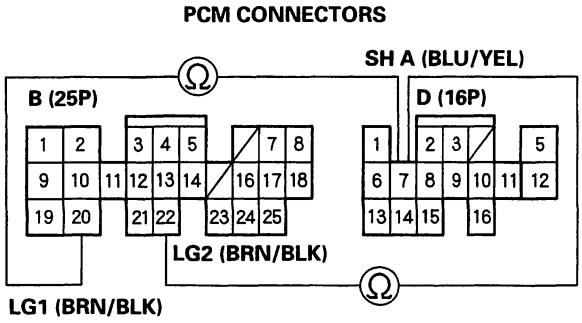

Wire side of female terminals

Is there continuity?

YES—Repair short to ground in the wire between the D7 terminal and shift solenoid valve A.■

NO—Go to step 10.

10. Measure the resistance between the No.2 terminal of the torque converter clutch solenoid valve/shift solenoid valve A connector and body ground.

TORQUE CONVERTER CLUTCH SOLENOID VALVE/ SHIFT SOLENOID VALVE A CONNECTOR (2P)

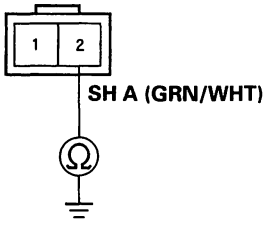

Terminal side of male terminals

Is the resistance 12—25 Ω ?

YES—Check for open in the wire between the D7 terminal and shift solenoid valve A.■

NO—Replace the torque converter clutch solenoid valve/shift solenoid valve A.■

11. Turn the ignition switch ON (II).

12. Measure the voltage between the D5 and B20 or B22 terminals.

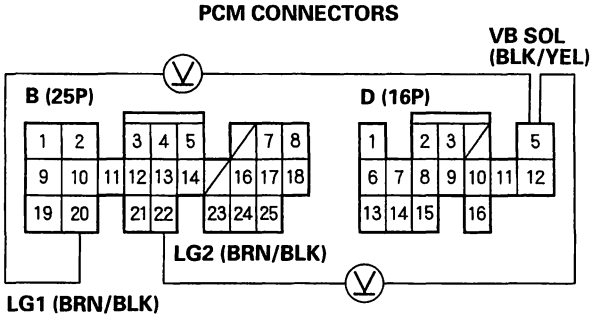

Wire side of female terminals

Is there battery voltage?

YES—Check for loose terminal fit in the PCM connectors. If necessary, substitute a known-good PCM and recheck.■

NO—Check for blown No. 6 (15A) fuse in the driver's under-dash fuse/relay box. If the fuse is OK, repair open in the wire between the D5 terminal and the driver's under-dash fuse/relay box.■

BACK

DTC P0758: Problem in Shift Solenoid Valve B Circuit

NOTE: Record all freeze data before you troubleshoot.

1. Turn the ignition switch OFF.
2. Disconnect PCM connectors B (25P) and D (16P).
3. Turn the ignition switch ON (II).
4. Measure the voltage between the D2 and B20 or B22 terminals.

PCM CONNECTORS

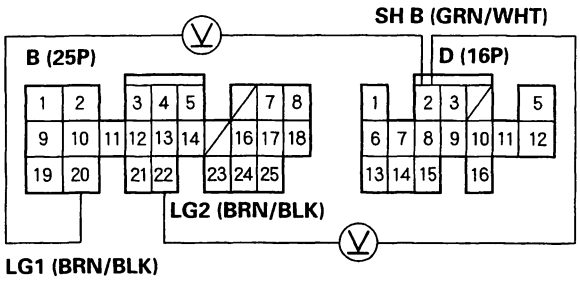

Wire side of female terminals

Is there voltage?

YES – Repair short to power in the wire between the D2 terminal and the shift solenoid valve B. ■

NO – Go to step 5.

5. Turn the ignition switch OFF.
6. Measure the resistance between the D2 and B20 or B22 terminals.

PCM CONNECTORS

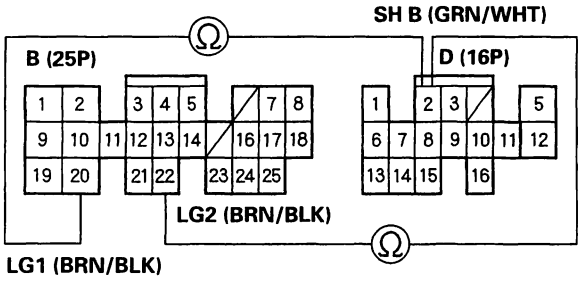

Wire side of female terminals

Is the resistance 12 – 25 Ω ?

YES – Go to step 11.

NO – Go to step 7.

7. Check for continuity between the B20 and B22 terminals and body ground.

PCM CONNECTOR B (25P)

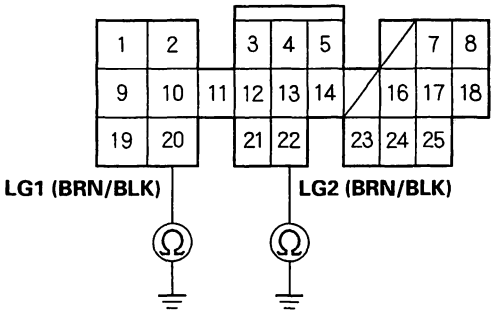

Wire side of female terminals

Is there continuity?

YES – Go to step 8.

NO – Repair open in the wires between the B20 and B22 terminals and ground (G101). ■

(cont'd)

DTC Troubleshooting (cont'd)

8. Disconnect the shift solenoid valve B 2P connector.

9. Check for continuity between the D2 and B20 or B22 terminals.

PCM CONNECTORS

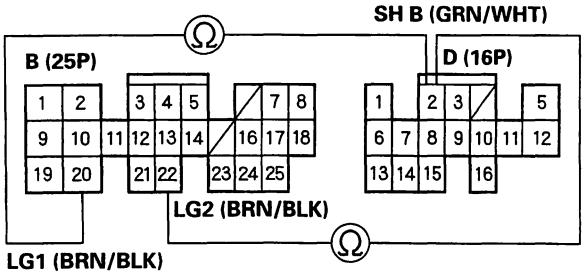

Wire side of female terminals

Is there continuity?

YES—Repair short to ground in the wire between the D2 terminal and the shift solenoid valve B.■

NO—Go to step 10.

10. Measure shift control solenoid valve B resistance at the solenoid valve connector.

SHIFT SOLENOID VALVE B CONNECTOR

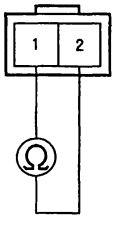

Terminal side of male terminals

Is the resistance 12—25 Ω ?

YES—Check for open in the wires between the D2 terminal and the shift solenoid valve B and between the No. 1 terminal of the shift solenoid valve B connector and ground (G101).■

NO—Replace the shift solenoid valve B.■

11. Turn the ignition switch ON (II).

12. Measure the voltage between the D5 and B20 terminals.

PCM CONNECTORS

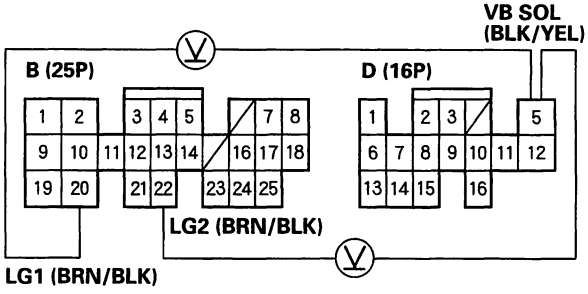

Wire side of female terminals

Is there battery voltage?

YES—Check for loose terminal fit in the PCM connectors. If necessary, substitute a known-good PCM and recheck.■

NO—Check for blown No. 6 (15A) fuse in the driver's under-dash fuse/relay box. If the fuse is OK, repair open in the wire between the D5 terminal and the driver's under-dash fuse/relay box.■

BACK

DTC P0720: Problem in Countershaft Speed Sensor Circuit

NOTE: Record all freeze data before you troubleshoot.

1. Check the countershaft speed sensor installation.

   Is the countershaft speed sensor installed properly?

   YES—Go to step 2.

   NO—Reinstall and recheck.■

2. Disconnect the countershaft speed sensor 2P connector.

3. Measure countershaft speed sensor resistance at the sensor connector.

COUNTERSHAFT SPEED SENSOR CONNECTOR

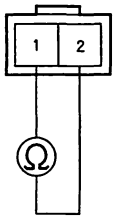

Terminal side of male terminals

Is the resistance 400—600 Ω ?

YES—Go to step 4.

NO—Replace the countershaft speed sensor.■

4. Disconnect PCM connector D (16P).

5. Check for continuity between body ground and the D10 terminal and D16 terminal individually.

PCM CONNECTOR D (16P)

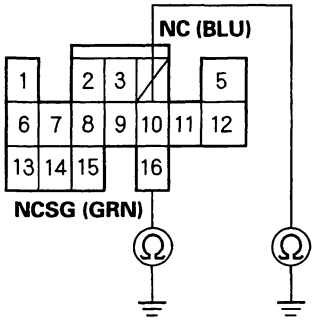

Wire side of female terminals

Is there continuity?

YES—Repair short in the wires between the D10 and D16 terminals and the countershaft speed sensor.■

NO—Go to step 6.

6. Connect the countershaft speed sensor connector.

7. Measure the resistance between the D10 and D16 terminals.

PCM CONNECTOR D (16P)

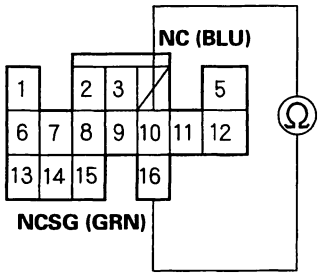

Wire side of female terminals

Is the resistance 400—600 Ω ?

YES—Check for loose terminal fit in the PCM connectors. If necessary, substitute a known-good PCM and recheck.■

NO—Repair loose terminal or open in the wires between the D10 and D16 terminals and the countershaft speed sensor.■

DTC Troubleshooting (cont'd)

DTC P0715: Problem in Mainshaft Speed Sensor Circuit

NOTE:
- Record all freeze data before you troubleshoot.
- Code P0715 (15) on the PCM doesn't always mean there's an electrical problem in the mainshaft or countershaft speed sensor circuit; code P0715 (15) may also indicate a mechanical problem in the transmission. Any problem causing irregular countershaft to mainshaft speed difference can cause this code.

1. Check the mainshaft and countershaft speed sensor installation.

   Are the mainshaft and countershaft speed sensors installed properly?

   YES—Go to step 2.

   NO—Reinstall and recheck.■

2. Disconnect the mainshaft speed sensor 2P connector.

3. Measure mainshaft speed sensor resistance at the sensor connector.

MAINSHAFT SPEED SENSOR CONNECTOR

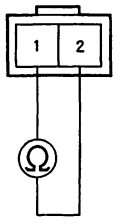

Terminal side of male terminals

Is the resistance 400—600 Ω ?

YES—Go to step 4.

NO—Replace the mainshaft speed sensor.■

4. Disconnect PCM connector D (16P).

5. Check for continuity between body ground and the D11 terminal and D12 terminal individually.

PCM CONNECTOR D (16P)

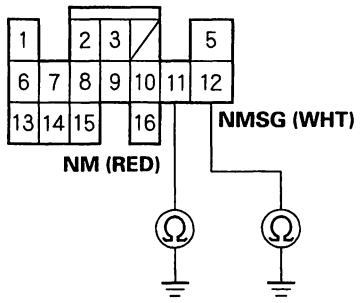

Wire side of female terminals

Is there continuity?

YES—Repair short in the wires between the D11 and D12 terminals and the mainshaft speed sensor.■

NO—Go to step 6.

6. Connect the mainshaft speed sensor connector.

7. Measure the resistance between the D11 and D12 terminals.

PCM CONNECTOR D (16P)

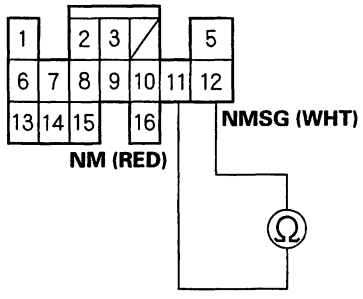

Wire side of female terminals

Is the resistance 400—600 Ω ?

YES—Run the Electrical Troubleshooting Flowchart for code P0720 (code 9). Check for loose terminal fit in the PCM connectors. If necessary, substitute a known-good PCM and recheck.■

NO—Go to step 8.

BACK

8. Disconnect the mainshaft speed sensor 2P connector.

9. Check for continuity between the D11 terminal and the No. 1 terminal of the mainshaft speed sensor connector.

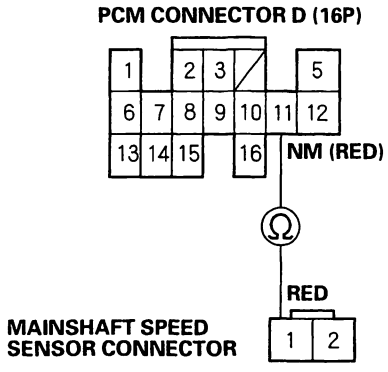

Wire side of female terminals

Is there continuity?

YES—Go to step 10.

NO—Repair open in the wire between the D11 terminal and the mainshaft speed sensor. ■

10. Check for continuity between the D12 terminal and the No. 2 terminal of the mainshaft speed sensor connector.

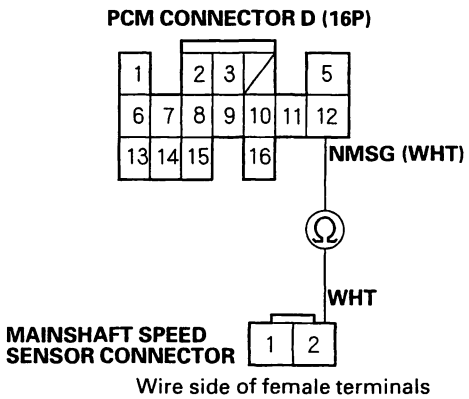

Wire side of female terminals

Is there continuity?

YES—Check for loose terminal fit in the PCM connectors. If necessary, substitute a known-good PCM and recheck. ■

NO—Repair open in the wire between the D12 terminal and the mainshaft speed sensor. ■

DTC Troubleshooting (cont'd)

DTC P1768: Problem in A/T Clutch Pressure Control Solenoid Valve A Circuit

NOTE: Record all freeze data before you troubleshoot.

1. Disconnect the A/T clutch pressure control solenoid valve A 2P connector.

2. Measure A/T clutch pressure control solenoid resistance at the solenoid valve connector.

A/T CLUTCH PRESSURE CONTROL SOLENOID VALVE A CONNECTOR

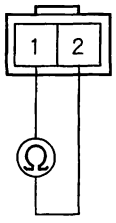

Terminal side of male terminals

Is the resistance about 5 Ω ?

YES—Go to step 3.

NO—Replace the A/T clutch pressure control solenoid valve A.■

3. Disconnect the B (25P) connector from the PCM.

4. Check for continuity between body ground and the B8 terminal and the B17 terminal individually.

PCM CONNECTOR B (25P)

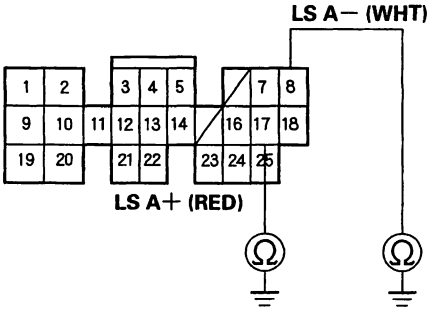

Wire side of female terminals

Is there continuity?

YES—Repair short to ground in the wires between the B8 and B17 terminals and A/T clutch pressure control solenoid valve A.■

NO—Go to step 5.

5. Connect the A/T clutch pressure control solenoid valve A connector.

6. Measure the resistance between the B8 and B17 terminals.

PCM CONNECTOR B (25P)

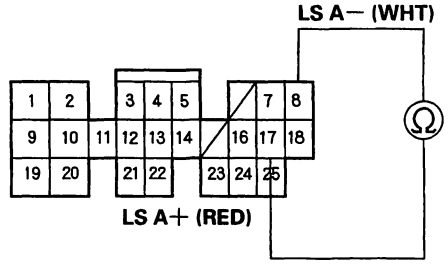

Wire side of female terminals

Is the resistance about 5 Ω ?

YES—Go to step 7.

NO—Repair loose terminal or open in the wires between the B8 and B17 terminals and A/T clutch pressure control solenoid valve A.■

BACK

7. Disconnect PCM connector D (16P).

8. Turn the ignition switch ON (II).

9. Measure the voltage between the D5 and B20 or B22 terminals.

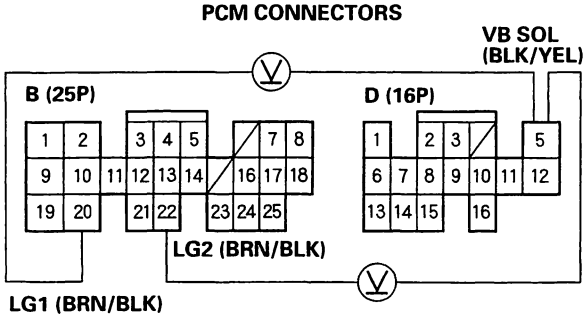

Wire side of female terminals

Is there battery voltage?

YES – Go to step 10.

NO – Check for blown No. 6 (15A) fuse in the driver's under-dash fuse/relay box. If the fuse is OK, repair open in the wire between the D5 terminal and the driver's under-dash fuse/relay box. ■

10. Turn the ignition switch OFF.

11. Check for continuity between the B20 and B22 terminals and body ground.

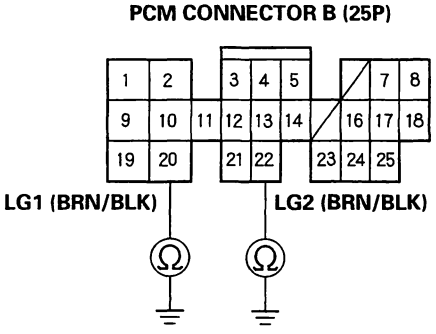

Wire side of female terminals

Is there continuity?

YES – Check for loose terminal fit in the PCM connectors. If necessary, substitute a known-good PCM and recheck. ■

NO – Repair open in the wire between the B2, B10, B20 and B22 terminals and ground (G101). Repair poor ground (G101). ■

DTC Troubleshooting (cont'd)

DTC P0763: Problem in Shift Solenoid Valve C Circuit

NOTE: Record all freeze data before you troubleshoot.

1. Turn the ignition switch OFF.
2. Disconnect PCM connectors B (25P) and D (16P).
3. Turn the ignition switch ON (II).
4. Measure the voltage between the D3 and B20 or B22 terminals.

PCM CONNECTORS

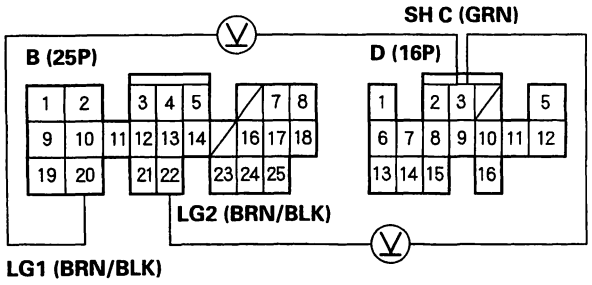

Wire side of female terminals

Is there voltage?

YES – Repair short to power in the wire between the D3 terminal and the shift solenoid valve C. ■

NO – Go to step 5.

5. Turn the ignition switch OFF.
6. Measure the resistance between the D3 and B20 or B22 terminals.

PCM CONNECTORS

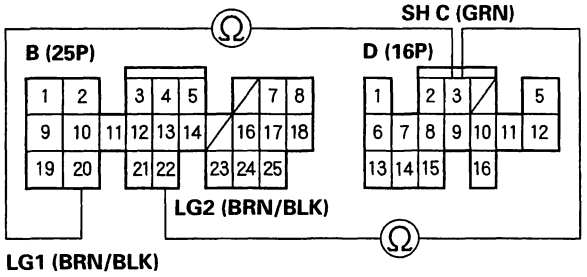

Wire side of female terminals

Is the resistance 12 – 25 Ω ?

YES – Go to step 11.

NO – Go to step 7.

7. Check for continuity between the B20 and B22 terminals and body ground.

PCM CONNECTOR B (25P)

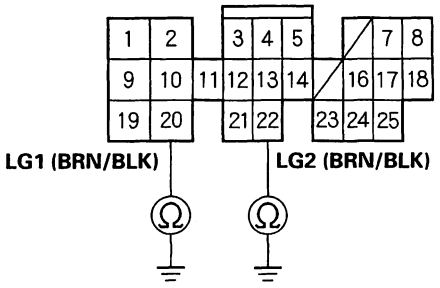

Wire side of female terminals

Is there continuity?

YES – Go to step 8.

NO – Repair open in the wires between the B20 and B22 terminals and ground (G101). ■

BACK

8. Disconnect the shift solenoid valve C 2P connector.

9. Check for continuity between the D3 and B20 or B22 terminals.

PCM CONNECTORS

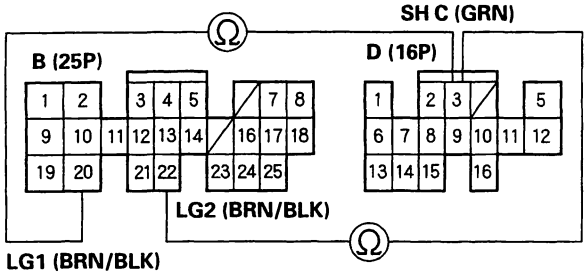

Wire side of female terminals

Is there continuity?

YES—Repair short to ground in the wire between the D3 terminal and the shift solenoid valve C.■

NO—Go to step 10.

10. Measure shift solenoid valve C resistance at the solenoid valve connector.

SHIFT SOLENOID VALVE C CONNECTOR

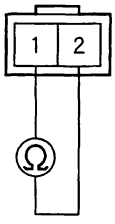

Terminal side of male terminals

Is the resistance 12—25 Ω ?

YES—Check for open in the wires between the D3 terminal and the shift solenoid valve C and between the No. 1 terminal of the shift solenoid valve C connector and ground (G101).■

NO—Replace shift solenoid valve C.■

11. Turn the ignition switch ON (II).

12. Measure the voltage between the D5 and B20 or B22 terminals.

PCM CONNECTORS

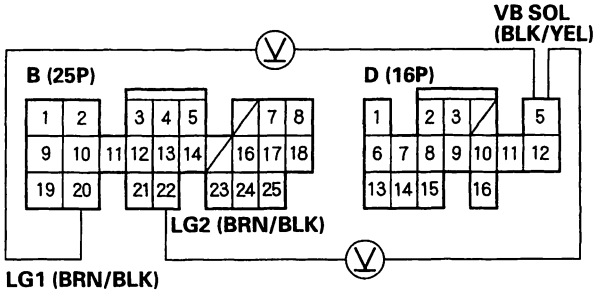

Wire side of female terminals

Is there battery voltage?

YES—Check for loose terminal fit in the PCM connectors. If necessary, substitute a known-good PCM and recheck.■

NO—Check for blown No. 6 (15A) fuse in the driver's under-dash fuse/relay box. If the fuse is OK, repair open in the wire between the D5 terminal and the driver's under-dash fuse/relay box.■

DTC Troubleshooting (cont'd)

DTC P1773: Problem in A/T Clutch Pressure Control Solenoid Valve B Circuit

NOTE: Record all freeze data before you troubleshoot.

1. Disconnect the A/T clutch pressure control solenoid valve B 2P connector.

2. Measure A/T clutch pressure control solenoid resistance at the solenoid valve connector.

A/T CLUTCH PRESSURE CONTROL SOLENOID VALVE B CONNECTOR

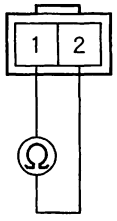

Terminal side of male terminals

Is the resistance about 5 Ω ?

YES—Go to step 3.

NO—Replace the A/T clutch pressure control solenoid valve B.■

3. Disconnect the PCM connector B (25P).

4. Check for continuity between body ground and the B18 terminal and the B25 terminal individually.

PCM CONNECTOR B (25P)

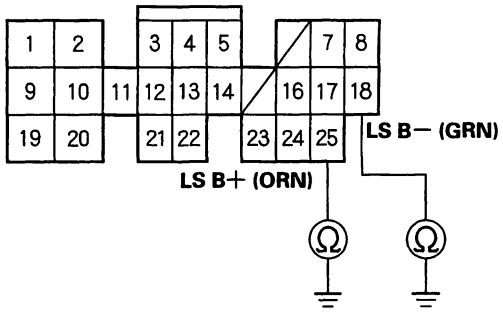

Wire side of female terminals

Is there continuity?

YES—Repair short to ground in the wires between the B18 and B25 terminals and A/T clutch pressure control solenoid valve B.■

NO—Go to step 5.

5. Connect the A/T clutch pressure control solenoid valve B 2P connector.

6. Measure the resistance between the B18 and B25 terminals.

PCM CONNECTOR B (25P)

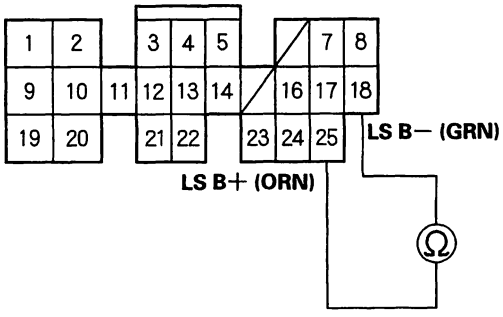

Wire side of female terminals

Is the resistance about 5 Ω ?

YES—Go to step 7.

NO—Repair loose terminal or open in the wires between the B18 and B25 terminals and A/T clutch pressure control solenoid valve B.■

BACK

7. Disconnect PCM connector D (16P).

8. Turn the ignition switch ON (II).

9. Measure the voltage between the D5 and B20 or B22 terminals.

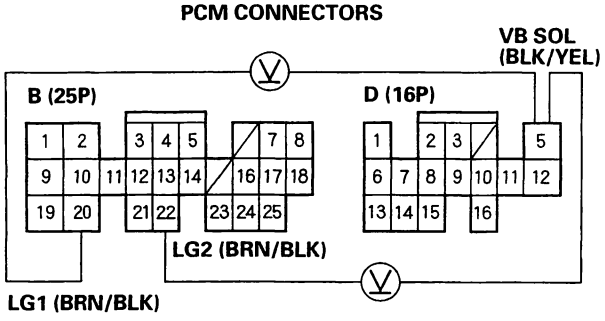

Wire side of female terminals

Is there battery voltage?

YES – Go to step 10.

NO – Check for blown No. 6 (15A) fuse in the driver's under-dash fuse/relay box. If the fuse is OK, repair open in the wire between the D5 terminal and the driver's under-dash fuse/relay box. ■

10. Turn the ignition switch OFF.

11. Check for continuity between the B20 and B22 terminals and body ground.

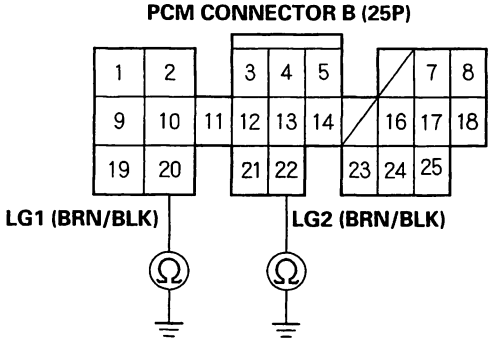

Wire side of female terminals

Is there continuity?

YES – Check for loose terminal fit in the PCM connectors. If necessary, substitute a known-good PCM and recheck. ■

NO – Repair open in the wire between the B2, B10, B20 and B22 terminals and ground (G101). Repair poor ground (G101). ■

DTC Troubleshooting (cont'd)

DTC P1738: Problem in 2nd Clutch Pressure Switch Circuit

NOTE: Record all freeze data before you troubleshoot.

1. Turn the ignition switch ON (II).
2. Measure the voltage between the B14 and B20 or B22 terminals.

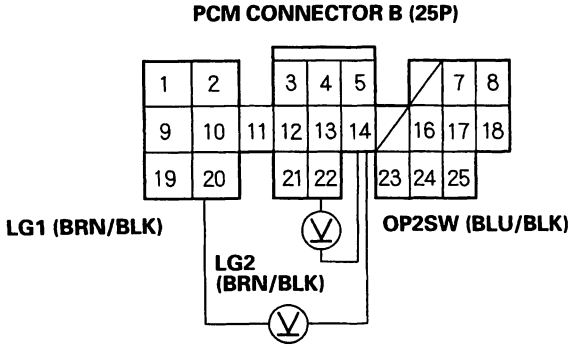

Wire side of female terminals

Is there about battery voltage?

YES—Go to step 7.

NO—Go to step 3.

3. Turn the ignition switch OFF.
4. Disconnect PCM connector B (25P).
5. Disconnect the 2nd clutch pressure switch connector.
6. Check for continuity between the B14 terminal and body ground.

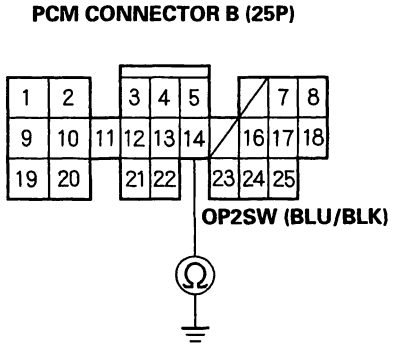

Wire side of female terminals

Is there continuity?

YES—Repair short to ground in the wire between the B14 terminal and the 2nd clutch pressure switch. ■

NO—Check for loose terminal fit in the PCM connectors. If necessary, substitute a known-good PCM and recheck. ■

BACK

7. Raise the front of the vehicle, and make sure it is securely supported.

8. Set the parking brake, and block rear wheels securely.

9. Start the engine, then shift to [2] position and drive for more than five seconds.

10. Measure the voltage between the B14 and B20 or B22 terminals.

PCM CONNECTOR B (25P)

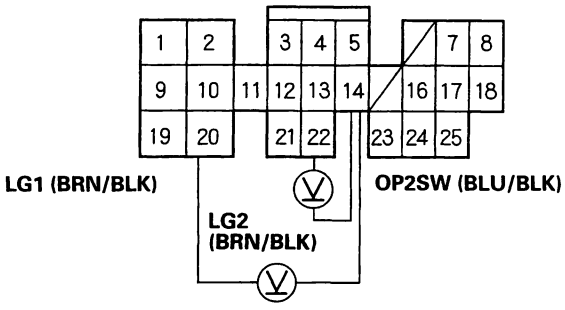

Wire side of female terminals

Is there about 0 V?

YES – Check for loose terminal fit in the PCM connectors. If necessary, substitute a known-good PCM and recheck. ■

NO – Go to step 11.

11. Turn the ignition switch OFF.

12. Disconnect the 2nd clutch pressure switch connector.

13. Turn the ignition switch ON (II).

14. Measure the voltage between the 2nd clutch pressure switch connector terminal and body ground.

2ND CLUTCH PRESSURE SWITCH CONNECTOR

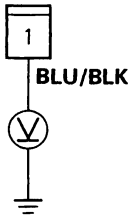

Wire side of female terminal

Is there battery voltage?

YES – Go to step 15.

NO – Repair open in the wire between the 2nd clutch pressure switch and the PCM. ■

15. Measure the resistance between the 2nd clutch pressure switch connector terminal and body ground.

2ND CLUTCH PRESSURE SWITCH CONNECTOR

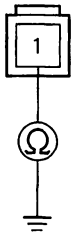

Terminal side of male terminal

Is the resistance 10 MΩ or more?

YES – Check for loose terminal fit in the PCM connectors. If necessary, substitute a known-good PCM and recheck. ■

NO – Replace the 2nd clutch pressure switch. ■

DTC Troubleshooting (cont'd)

DTC P1739: Problem in 3rd Clutch Pressure Switch Circuit

NOTE: Record all freeze data before you troubleshoot.

1. Turn the ignition switch ON (II).
2. Measure the voltage between the B24 and B20 or B22 terminals.

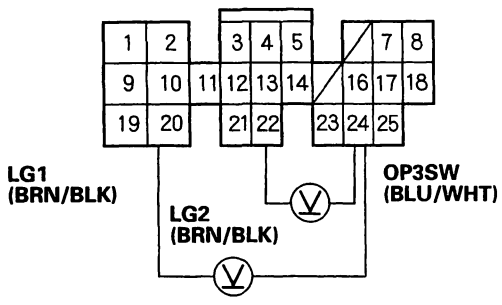

Wire side of female terminals

Is there battery voltage?

YES—Go to step 7.

NO—Go to step 3.

3. Turn the ignition switch OFF.
4. Disconnect PCM connector B (25P).
5. Disconnect the 3rd clutch pressure switch connector.
6. Check for continuity between the B24 terminal and body ground.

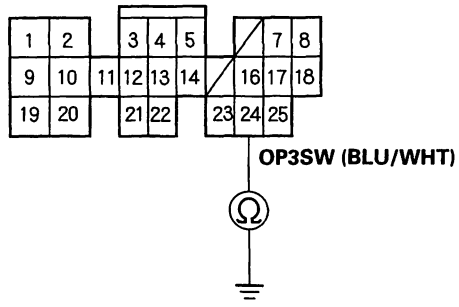

Wire side of female terminals

Is there continuity?

YES—Repair short to ground in the wire between the B24 terminal and the 3rd clutch pressure switch. ■

NO—Check for loose terminal fit in the PCM connectors. If necessary, substitute a known-good PCM and recheck. ■

BACK

7. Raise the front of the vehicle, and make sure it is securely supported.

8. Set the parking brake, and block rear wheels securely.

9. Start the engine, then shift to D3 position and drive in 3rd gear for more than five seconds.

10. Measure the voltage between the B24 and B20 or B22 terminals.

PCM CONNECTOR B (25P)

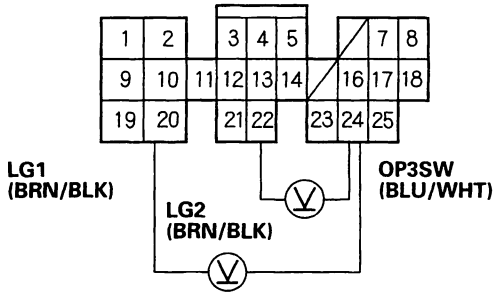

Wire side of female terminals

Is there about 0 V?

YES – Check for loose terminal fit in the PCM connectors. If necessary, substitute a known-good PCM and recheck. ■

NO – Go to step 11.

11. Turn the ignition switch OFF.

12. Disconnect the 3rd clutch pressure switch connector.

13. Turn the ignition switch ON (II).

14. Measure the voltage between the 3rd clutch pressure switch connector terminal and body ground.

3RD CLUTCH PRESSURE SWITCH CONNECTOR

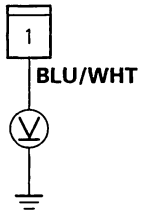

Wire side of female terminal

Is there battery voltage?

YES – Go to step 15.

NO – Repair open in the wire between the 3rd clutch pressure switch and the PCM. ■

15. Measure the resistance between the 3rd clutch pressure switch connector terminal and body ground.

3RD CLUTCH PRESSURE SWITCH CONNECTOR

Terminal side of male terminal

Is the resistance 10 MΩ or more?

YES – Check for loose terminal fit in the PCM connectors. If necessary, substitute a known-good PCM and recheck. ■

NO – Replace the 3rd clutch pressure switch. ■

DTC Troubleshooting (cont'd)

DTC P0740: Problem in Lock-up Control System

NOTE:
- Record all freeze data before you troubleshoot.
- Keep replacement solenoid valves on hand:
  - Torque converter clutch solenoid valve/shift solenoid valve A
  - A/T clutch pressure control solenoid valves A and B

1. Check whether the OBD II scan tool indicates another code.

   Does the OBD II scan tool indicate another code?

   YES—Perform the Troubleshooting Flowchart for the indicated Code(s). Recheck for code P0740 after troubleshooting.■

   NO—Go to step 2.

   NOTE: Do not continue with this troubleshooting until the causes of any other DTCs have been corrected.

2. Measure the line pressure.

   Is the line pressure within the service limit?

   YES—Go to step 3.

   NO—Repair the hydraulic system as necessary (see page 14-104).■

3. Replace the torque converter clutch solenoid valve/shift solenoid valve A (see page 14-106).

4. Replace the A/T clutch pressure control solenoid valves A and B (see page 14-109).

5. Turn the ignition switch OFF and reset the PCM memory by removing the BACK UP fuse in the passenger's under-dash fuse/relay box for more than 10 seconds.

6. Using the scan tool, check to be sure that the engine coolant temperature is in 176°F (80°C) and above.

7. Drive the vehicle at 55 mph (88 km/h) constantly for more than one minute.

8. Recheck for code P0740.

   Does the OBD II scan tool indicate code P0740?

   YES—Replace the transmission and torque converter.■

   NO—The system is OK at this time.■

BACK

DTC P0730: Problem in Shift Control System

NOTE:
- Record all freeze data before you troubleshoot.
- Keep replacement solenoid valves on hand:
  - Torque converter clutch solenoid valve/shift solenoid valve A
  - Shift solenoid valves B and C
  - A/T clutch pressure control solenoid valves A and B

1. Check whether the OBD II scan tool indicates another code.

   Does the OBD II scan tool indicate another code?

   YES – Perform the Troubleshooting Flowchart for the indicated Code(s). Recheck for code P0730 after troubleshooting. ■

   NO – Go to step 2.

   NOTE: Do not continue with the troubleshooting until the causes of any other DTCs have been corrected.

2. Measure the 1st, 2nd, 3rd, and 4th clutch pressure (see page 14-104).

   Is each clutch pressure within the service limit?

   YES – Go to step 3.

   NO – Repair the hydraulic system as necessary. ■

3. Replace the torque converter clutch solenoid valve/shift solenoid valve A (see page 14-106).

4. Replace the shift solenoid valve B and shift solenoid valve C (see page 14-107).

5. Replace the A/T clutch pressure control solenoid valves A and B (see page 14-109).

6. Turn the ignition switch OFF and reset the PCM memory by removing the BACK UP fuse in the passenger's under-dash fuse/relay box for more than 10 seconds.

7. Drive the vehicle at a speed over 12 mph (20 km/h) in 1st, 2nd, 3rd, 4th gear in D4 position for more than 30 seconds.

8. Recheck for code P0730.

   Does the OBD II scan tool indicate code P0730?

   YES – Replace the transmission. ■

   NO – The system is OK at this time. ■

DTC Troubleshooting (cont'd)

DTC P0780: Mechanical Problem in Hydraulic Control System for Shift Solenoid Valve A and A/T Clutch Pressure Control Solenoid Valves A and B, or Problem in Hydraulic Control System

NOTE:
- Record all freeze data before you troubleshoot.
- Keep replacement solenoid valves on hand:
  - Torque converter clutch solenoid valve/shift solenoid valve A
  - A/T clutch pressure control solenoid valves A and B

1. Check whether the OBD II scan tool indicates another code.

   Does the OBD II scan tool indicate another code?

   YES—Perform the Troubleshooting Flowchart for the indicated Code(s). Recheck for code P0780 after troubleshooting.■

   NO—Go to step 2.

2. Turn the ignition switch OFF.

3. Replace the torque converter clutch solenoid valve/shift solenoid valve A (see page 14-106), and the A/T clutch pressure control solenoid valves A and B (see page 14-109).

4. Reset the PCM memory by removing the BACK UP fuse in the passenger's under-dash fuse relay box for more than 10 seconds.

5. Drive the vehicle for several minutes in 1st, 2nd, 3rd, and 4th gears in D4 position.

6. Recheck for code P0780.

   Does the OBD II scan tool indicate code P0780?

   YES—Replace the transmission assembly.■

   NO—The problem has been corrected.■

BACK

DTC P1750: Mechanical Problem in Hydraulic Control System for A/T Clutch Pressure Control Solenoid Valves A and B, or Problem in Hydraulic Control System

NOTE: Record all freeze data before you troubleshoot.

1. Check whether the OBD II scan tool indicates another code.

   Does the OBD II scan tool indicate another code?

   YES—Perform the Troubleshooting Flowchart for the indicated Code(s). Recheck for code P1750 after troubleshooting. ■

   NO—Go to step 2.

2. Turn the ignition switch OFF.

3. Replace the A/T clutch pressure control solenoid valves A and B (see page 14-109).

4. Reset the PCM memory by removing the BACK UP fuse in the passenger's under-dash fuse relay box for more than 10 seconds.

5. Drive the vehicle for several minutes in 1st, 2nd, 3rd, and 4th gears in D4 position.

6. Recheck for code P1750.

   Does the OBD II scan tool indicate code P1750?

   YES—Replace the transmission. ■

   NO—The problem has been corrected. ■

DTC Troubleshooting (cont'd)

DTC P1751: Mechanical Problem in Hydraulic Control System for Shift Solenoid Valve B and A/T Clutch Pressure Control Solenoid Valves A and B, or Problem in Hydraulic Control System

NOTE:
- Record all freeze data before you troubleshoot.
- Keep replacement solenoid valves on hand:
  - Shift solenoid valve B
  - A/T clutch pressure control solenoid valves A and B

1. Check whether the OBD II scan tool indicates another code.

   Does the OBD II scan tool indicate another code?

   YES—Perform the Troubleshooting Flowchart for the indicated Code(s). Recheck for code P1751 after troubleshooting.■

   NO—Go to step 2.

2. Turn the ignition switch OFF.

3. Replace the shift solenoid valve B (see page 14-107), and the A/T clutch pressure control solenoid valves A and B (see page 14-109).

4. Drive the vehicle for several minutes in 1st, 2nd, 3rd, and 4th gears in D4 position.

5. Recheck for code P1751.

   Does the OBD II scan tool indicate code P1751?

   YES—Replace the transmission.■

   NO—The problem has been corrected.■

BACK

D4 Indicator Circuit Troubleshooting

1. Turn the ignition switch ON (II), and watch the D4 indicator light.

   Does the D4 indicator come on and stay on?

   YES – Go to step 2.

   NO – If the light comes on for about two seconds and then goes off. It's OK, if it doesn't come on at all, go to step 11.

2. Turn the ignition switch OFF.

3. Disconnect PCM connector A (32P).

4. Turn the ignition switch ON (II).

5. Measure the voltage between the A14 terminal and body ground.

PCM CONNECTOR A (32P)

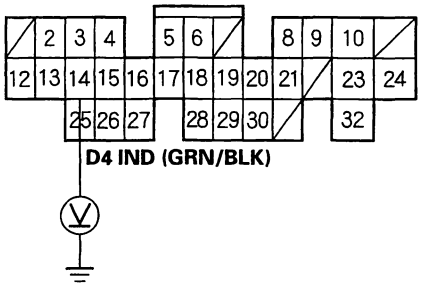

Wire side of female terminals

Is there voltage?

YES – Repair short to power in the wire between the A14 terminal and the gauge assembly. ■

NO – Go to step 6.

6. Turn the ignition switch OFF.

7. Reconnect PCM connector A (32P).

8. Turn the ignition switch ON (II).

9. Shift to any positions other than D4.

10. Measure the voltage between the D9 terminal and body ground.

PCM CONNECTOR D (16P)

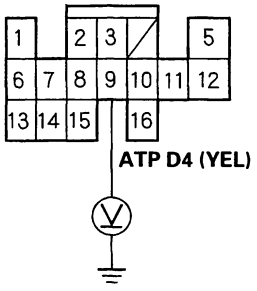

Wire side of female terminals

Is there about 5 V?

YES – Faulty the PCM or the gauge assembly. ■

NO – Check for short to ground in the wire between the D9 terminal and the transmission range switch. If wire is OK, check the transmission range switch. ■

11. Make sure the Honda PGM Tester is not connected to the DLC.

12. Shift to D4 position.

    Does the D4 indicator come on?

    YES – Check for loose terminal fit in the PCM connectors and recheck the D4 indicator several times. If the problem is intermittent, substitute a known-good PCM and recheck. If the light then works OK every time, replace the original PCM. ■

    NO – Go to step 13.

(cont'd)

D4 Indicator Light Circuit Troubleshooting (cont'd)

13. Turn the ignition switch OFF.

14. Disconnect PCM connector B (25P).

15. Check for continuity between body ground and B20 and B22 terminals.

PCM CONNECTOR B (25P)

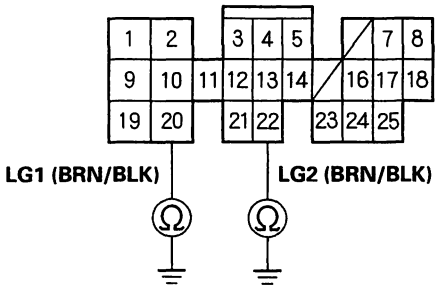

Wire side of female terminals

Is there continuity between ground and each terminal?

YES—Go to step 16.

NO—Repair open in the wire(s) between the B20 or B22 terminal and ground (G101).■

16. Turn the ignition switch ON (II).

17. Measure the voltage between terminals B1 and B 22, and between terminals B9 and B20.

PCM CONNECTOR B (25P)

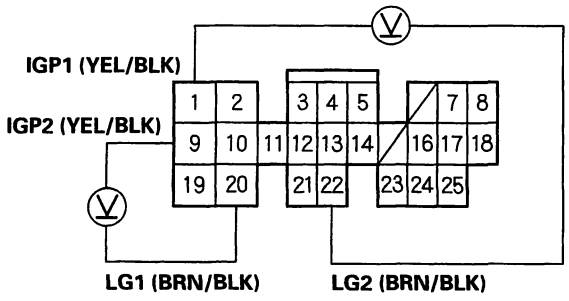

Wire side of female terminals

Is there battery voltage?

YES—Go to step 18.

NO—Repair open or short in the wire between the B1 or B9 terminal and the PGM-FI main relay and from fuse No. 46 in the under-hood fuse/relay box to the PGM-FI main relay.■

18. Turn the ignition switch OFF.

19. Reconnect PCM connector B (25P).

20. Connect the digital multimeter between the A14 and B20 or B22 terminals.

21. Turn the ignition switch ON (II).

PCM CONNECTORS

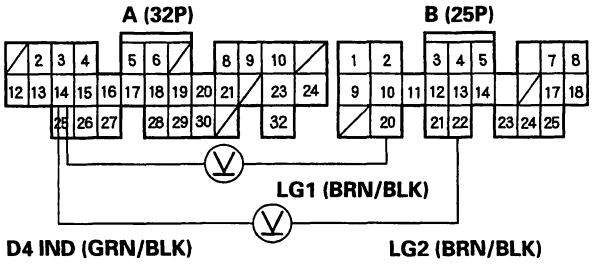

Wire side of female terminals

Is there voltage for at least 2 seconds?

YES—Check for open in the wire between the A14 terminal and the gauge assembly. If wire is OK, check for a faulty D4 indicator bulb or a faulty printed circuit board in the gauge assembly. ■

NO—Go to step 22.

BACK

22. Turn the ignition switch OFF.

23. Disconnect PCM connector A (32P).

24. Check for continuity between the A14 terminal and No.12 terminal of the gauge assembly C (16P) connector.

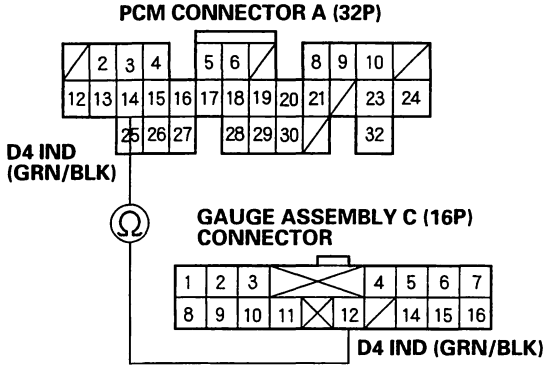

Wire side of female terminals

Is there continuity?

YES—Check for loose terminal fit in the PCM connectors. Check the transmission range switch. If necessary, substitute a known-good PCM and recheck.■

NO—Repair open in the wire between the A14 terminal and the gauge assembly.■

Interlock System - Shift Lock System Circuit Troubleshooting

1. Press the brake pedal.

   Are the brake lights ON?

   YES—Go to step 2.

   NO—Repair faulty brake light circuit (see page 22-91).■

2. Turn the ignition switch ON (II), and shift to [P] position.

3. Press the brake pedal, and release the accelerator pedal.

4. Measure the voltage between the A28 terminal and body ground.

PCM CONNECTOR A (32P)

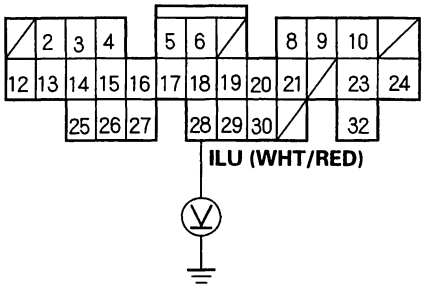

Wire side of female terminals

Is there battery voltage?

YES—Go to step 5.

NO—Go to step 8.

5. Measure the voltage between the B12 terminal of the multiplex control unit, driver's B (22P) connector and body ground with the throttle released and the brake pedal pressed.

MULTIPLEX CONTROL UNIT, DRIVER'S B (22P) CONNECTOR

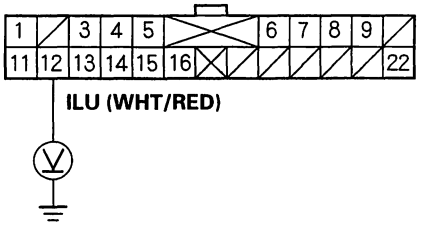

Wire side of female terminals

Is there battery voltage?

YES—Go to step 6.

NO—Repair open in the wire between the A28 terminal of the PCM and B12 terminal of the driver's multiplex control unit.■

6. Measure the voltage between the B22 terminal of the multiplex control unit, driver's B (22P) connector and body ground.

MULTIPLEX CONTROL UNIT, DRIVER'S B (22P) CONNECTOR

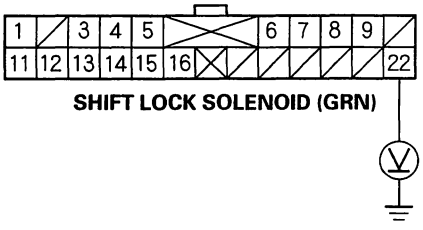

Wire side of female terminals

Is there battery voltage?

YES—Go to step 7.

NO—Repair open in the wire between the B22 terminal of the driver's multiplex control unit and the driver's under-dash fuse No. 9 (via the shift lock solenoid).■

BACK

7. Turn the ignition switch ON (II), and move the shift lever to [P] position.

   Dose the [P] indicator in the gauge assembly illuminate?

   YES—Check for loose terminal fit to the driver's multiplex control unit B12 and B22 terminal wires. If necessary, substitute a known-good driver's multiplex control unit.■

   NO—Repair open in the [P] position switch circuit from the driver's under-dash fuse/relay box K10 (BLK/BLU) wire to ground (G101).■

8. Turn the ignition switch OFF.

9. Disconnect PCM connectors A (32P) and B (25P).

10. Measure the voltage between the A32 and B20 or B22 terminals while pressing the brake pedal.

PCM CONNECTORS

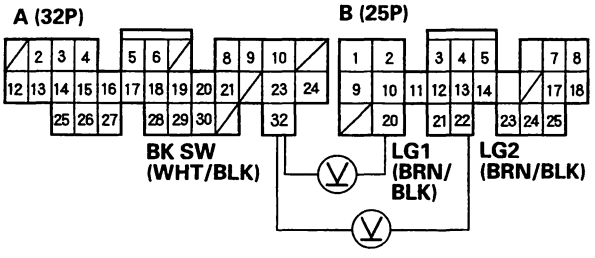

Wire side of female terminals

Is there battery voltage?

YES—Go to step 11.

NO—Repair open in the wire between the A32 terminal and the brake pedal position switch.■

(cont'd)

Interlock System - Shift Lock System Circuit Troubleshooting (cont'd)

11. Reconnect PCM connectors A (32P) and B (25P).

12. Turn the ignition switch ON (II).

13. Measure the voltage between the C27 and B20 or B22 terminals.

PCM CONNECTORS

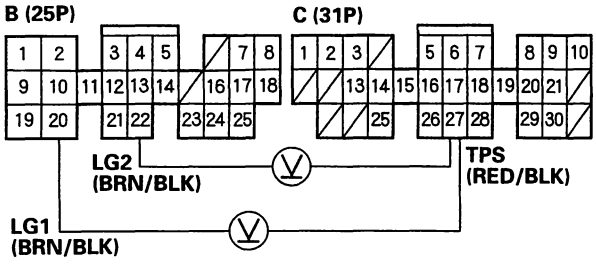

Wire side of female terminals

Is there about 0.5 V (throttle fully closed)?

YES—Check for loose terminal fit in the PCM connectors. If necessary, substitute a known-good PCM and recheck.■

NO—Go to step 14.

14. Turn the ignition switch OFF.

15. Disconnect the throttle position sensor connector.

16. Check for continuity between the No. 1 terminal of the throttle position sensor and the B20 or B22 terminal of the PCM.

PCM CONNECTOR B (25P)

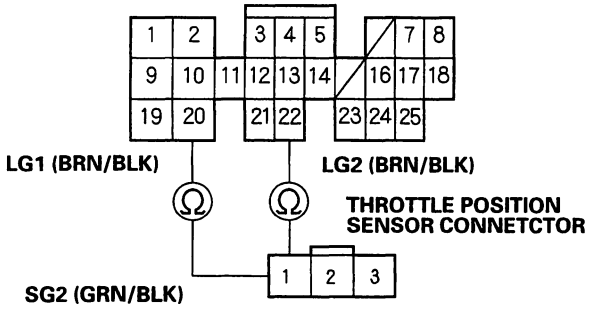

Wire side of female terminals

Is there continuity?

YES—Repair throttle position sensor installation.■

NO—Go to step 17.

17. Check for continuity between the C18 and B20 or B22 terminals.

PCM CONNECTORS

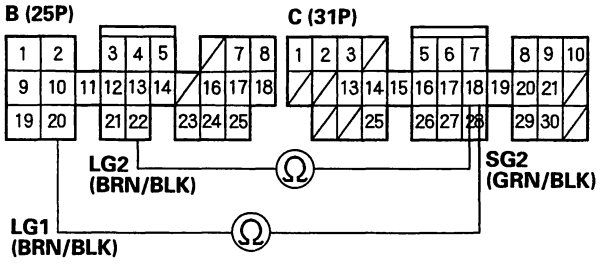

Wire side of female terminals

Is there continuity?

YES—Repair open in the wire between the C18 terminal and the throttle position sensor.■

NO—Check for loose terminal fit in the PCM connectors. If necessary, substitute a known-good PCM and recheck.■

BACK

Interlock System - Key Interlock System Circuit Troubleshooting

1. Check the A/T shift cable adjustment (see page 14-134).

2. Disconnect the key switch 7P connector from the steering lock assembly.

3. Connect the No. 7 terminal of the key switch connector to the battery positive terminal, and connect the No. 5 terminal to the battery negative terminal.

KEY SWITCH CONNECTOR (7P)

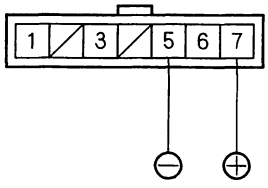

Terminal side of male terminals

4. Turn the ignition switch to ACC (I), then push the ignition key.

5. Check the key interlock solenoid operation. A clicking sound should be heard while pushing the ignition key, and no sound should be heard when r eleasing the key.

   Does the key interlock solenoid operate properly?

   YES—Go to step 6.

   NO—Faulty key interlock solenoid/switch. Replace the ignition key cylinder/steering lock assembly.■

   NOTE: Do not re-key the new ignition switch. Re-key the other lock cylinders to match the new switch.

6. Measure the voltage between the No. 7 terminal and body ground.

KEY SWITCH CONNECTOR (7P)

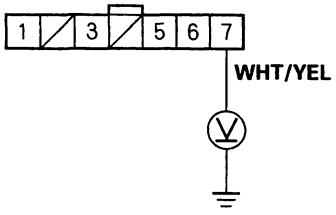

Wire side of female terminals

Is there battery voltage?

YES—Go to step 7.

NO—Check for blown No. 47 (20 A) fuse in the under-hood fuse/relay box. If the fuse is OK, repair open or short in the wire between the No. 7 terminal of the key switch connector and under-hood fuse/relay box.■

7. Disconnect the park pin switch 4P connector on the front side of the shift lever.

8. With the shift lever in Park, check for continuity between the No. 3 and No. 4 terminals of the park pin switch 4P connector.

PARK PIN SWITCH 4P CONNECTOR

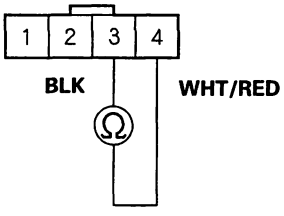

Wire side of female terminals

Is there continuity?

YES—Go to step 9.

NO—Repair open in the wires between the park pin switch and the 4P connector. If wires are OK, replace the park pin switch.■

(cont'd)

Interlock System - Key Interlock System Circuit Troubleshooting (cont'd)

9. Check for continuity between the No. 4 terminal of the park pin switch 4P connector and the No. 5 terminal of the key switch connector.

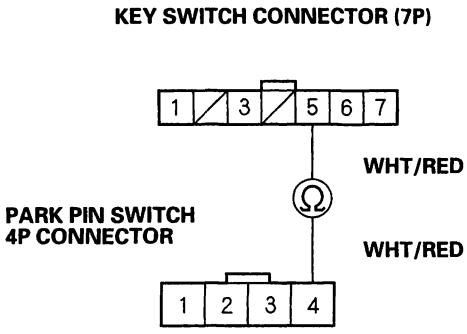

Wire side of female terminals

Is there continuity?

YES—Go to step 10.

NO—Repair open in the wire between No. 4 terminal of the park pin switch 4P connector and the No. 5 terminal of the key switch connector.■

10. Check for continuity between the No. 3 terminal of the 4P connector and body ground.

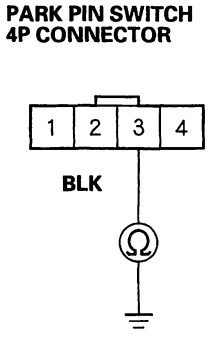

Wire side of female terminals

Is there continuity?

YES—Check for loose key switch connector and park pin switch connector. If necessary, substitute a known-good steering lock assembly.■

NO—Repair open in the wire between No. 3 terminal of the 4P connector and ground (G101).■

BACK

Road Test

Special Tools Required
Backprobe set 07SAZ-001000A (Two required)

1. Warm up the engine to normal operating temperature (the radiator fan comes on).

2. Apply the parking brake, and block rear wheels. Start the engine, then shift to D4 position while pressing the brake pedal. While fully pressing the brake pedal press the accelerator pedal, and release it suddenly. The engine should not stall.

3. Repeat the same test in D3 position.

4. Connect the Honda PGM Tester (A), and go to the PGM-FI Data List; then go to step 7. If you don't have a PGM Tester, go to step 5.

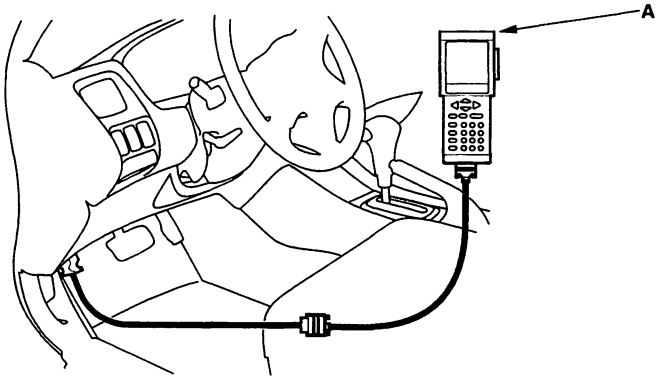

5. Pull back the carpet from the passenger's side of the center console to expose the PCM (A).

6. Connect the digital multimeter (B) and the special tools (C) to check voltage between the C27(+) terminal and B20 (−) or B22(−)terminal of the PCM.

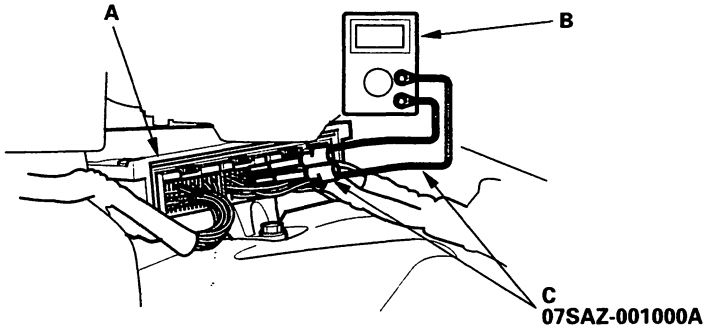

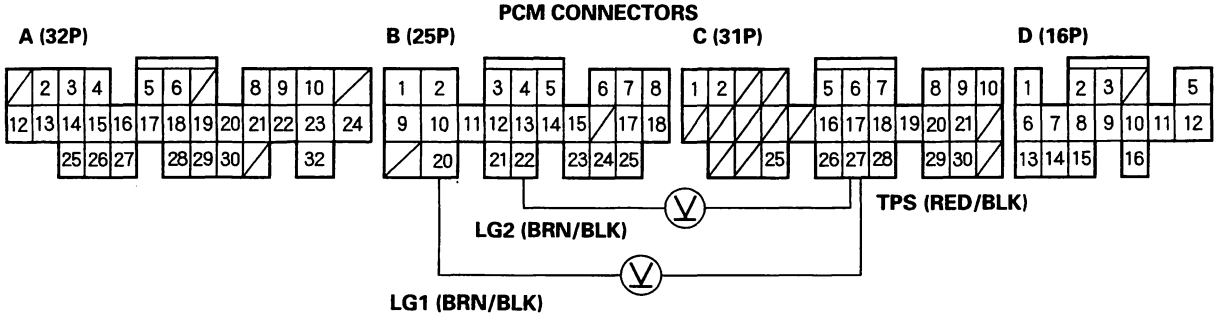

Wire side of female terminals

(cont'd)

Road Test (cont'd)

7. Test-drive the vehicle on a flat road in the D4 position. Check for abnormal noise and clutch slippage. While driving, check that the shift points occur at the proper speeds by monitoring the throttle position sensor voltage and comparing your shift point speeds and voltage to those in the table. (The throttle position sensor voltage represents the throttle opening.)

Upshift-D4 position

Throttle Opening	Unit of Speed	1st → 2nd	2nd → 3rd	3rd → 4th	Lock-up ON
Throttle position sensor voltage: 0.8 V	mph	9–11	21–23	26–30	47–49
	km/h	15–17	33–37	42–48	75–79
Throttle position sensor voltage: 2.25 V	mph	21–23	39–43	58–62	68–72
	km/h	33–37	63–69	94–100	110–116
Fully-opened throttle, Throttle position sensor voltage: 4.5 V	mph	34–38	62–65	96–100	97–101
	km/h	55–61	99–105	155–161	156–162

Downshift-D4 position

Throttle Opening	Unit of Speed	Lock-up OFF	4th → 3rd	3rd → 2nd	2nd → 1st
Throttle position sensor voltage: 0.8 V	mph	45–48	19–21	———	5–7 (3rd → 1st)
	km/h	73–77	30–34	———	8–12 (3rd → 1st)
Throttle position sensor voltage: 2.25 V	mph	58–62	———	———	———
	km/h	94–100	———	———	———
Fully-opened throttle, Throttle position sensor voltage: 4.5 V	mph	91–94	85–89	54–58	26–30
	km/h	146–152	137–143	87–93	42–48

8. Accelerate to about 35 mph (57 km/h) so the transmission is in 4th, then shift from D4 position to 2 position. The vehicle should immediately begin slowing down from engine braking.

9. Check for abnormal noise and clutch slippage in the following positions.

   1 (1st Gear) Position
   Accelerate from a stop at full throttle. Check that there is no abnormal noise or clutch slippage. Upshifts should not occur with the shift lever in this position.

   2 (2nd Gear) Position
   Accelerate from a stop at full throttle. Check that there is no abnormal noise or clutch slippage. Upshifts and downshifts should not occur with the shift lever in this position.

   R (Reverse) Position
   Accelerate from a stop at full throttle, and check that there is no abnormal noise or clutch slippage.

10. Test in P (Park) Position.
    Park the vehicle on a slope (approx. 16°), apply the parking brake, and shift into P position. Release the brake; the vehicle should not move.

BACK

Stall Speed Test

1. Set the parking brake, and block the front wheels.

2. Connect a tachometer to the engine, and start the engine.

3. Make sure the A/C switch is OFF.

4. After the engine has warmed up to normal operating temperature (the radiator fan comes on), shift to [2] position.

5. Fully press the brake pedal and accelerator for 6 to 8 seconds, and note engine speed. Do not move the shift lever while raising engine speed.

6. Allow two minutes for cooling, then repeat the test in [D4], [1], and [R] positions.

NOTE:
- Do not test stall speed for more than 10 seconds at a time.
- Stall speed tests should be used for diagnostic purposes only.
- Stall speed should be the same in [D4], [2], [1], and [R] positions.
- Do not test stall speed with the A/T pressure gauges installed.

Stall Speed rpm:
F23A1 and F23A4 Engines:
Specification: 2,550 rpm
Service Limit: 2,400—2,700 rpm
F23A5 Engine:
Specification: 2,500 rpm
Service Limit: 2,350—2,650 rpm

TROUBLE	PROBABLE CAUSE
Stall rpm high in [D4], [2], [1], and [R] positions	• Low fluid level or ATF pump output • Clogged ATF strainer • Pressure regulator valve stuck closed • Slipping clutch
Stall rpm high in [1] position	Slippage of 1st clutch
Stall rpm high in [2] position	Slippage of 2nd clutch
Stall rpm high in [R] position	Slippage of 4th clutch
Stall rpm low in [D4], [2], [1] and [R] positions	• Engine output low • Torque converter one-way clutch slipping

Pressure Tests

Special Tools Required
- A/T oil pressure gauge set 07406-0020400
- A/T pressure hose, 2210 mm 07MAJ-PY4011A
- A/T pressure hose adapter 07MAJ-PY40120

1. Before testing, be sure the transmission fluid is filled to the proper level.
2. Raise the front of the vehicle, and make sure it is securely supported.
3. Set the parking brake, and block rear wheels securely.
4. Allow the front wheels to rotate freely.
5. Warm up the engine (the radiator fan comes on), then stop it and connect the tachometer.
6. Connect the oil pressure gauges to each inspection hole securely, and do not allow dust or other foreign particles to enter the holes.

   TORQUE: 18 N·m (1.8 kgf·m, 13 lbf·ft)

A/T OIL PRESSURE GAUGE SET W/PANEL 07406-0020400

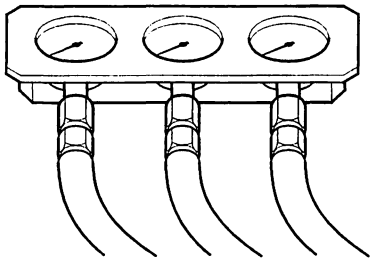

A/T PRESSURE HOSE, 2210 mm 07MAJ-PY4011A (4 Required)

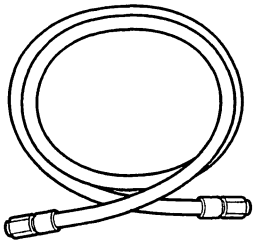

A/T PRESSURE HOSE ADAPTER 07MAJ-PY40120 (4 Required)

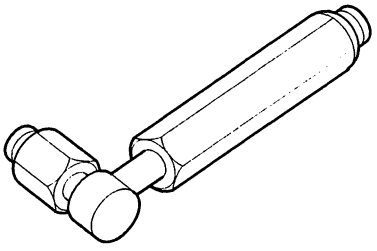

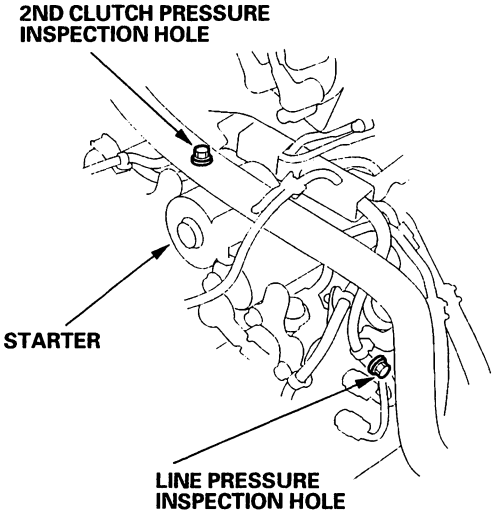

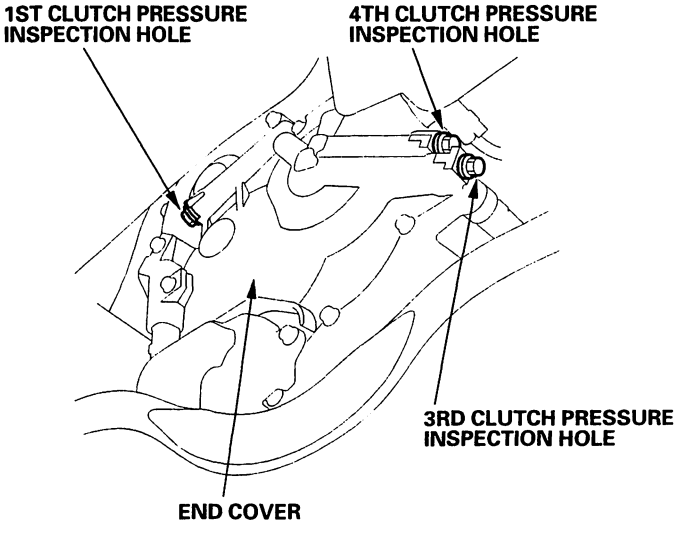

BACK

7. Start the engine, and run it at 1,500 rpm.

8. Shift to [N] or [P] position, and measure line pressure at the line pressure inspection hole (A).

   NOTE: Higher pressure may be indicated if measurements are made in shift lever positions other than [N] or [P].

9. Shift to [1] position, and measure 1st clutch pressure at the 1st clutch pressure inspection hole (B).

10. Shift to [2] position, and measure 2nd clutch pressure at the 2nd clutch pressure inspection hole (C).

11. Shift to [P] position, then press the brake pedal and hold it.

12. Shift to [D4] position, and release the brake pedal (the transmission is in 1st gear).

13. Accelerate the engine to 2,500 rpm (the transmission will shift to 2nd gear).

14. Release the accelerator for more than 5 seconds after the transmission is shifted to 2nd gear; the engine speed will decrease to about 1,000 rpm.

15. Press the accelerator slowly (so it takes at least 5 seconds to raise the engine speed to 2,000 rpm), then hold the engine speed at 2,000 rpm.

16. Measure 3rd and 4th clutch pressure at the 3rd clutch pressure inspection hole (D), and the 4th clutch pressure inspection hole (E), as the transmission shifts from 2nd gear to 3rd gear, then to 4th gear.

PRESSURE	SHIFT LEVER POSITION	SYMPTOM	PROBABLE CAUSE	FLUID PRESSURE	
				Standard	Service Limit
Line (A)	[N] or [P]	No (or low)line pressure	Torque converter, ATF pump, pressure regulator valve, torque converter check valve	850 – 910 kPa (8.7 – 9.3 kgf/cm², 120 – 130 psi)	800 kPa (8.2 kgf/cm², 120 psi)
1st clutch (B)	[1]	No or low 1st pressure	1st clutch	840 – 920 kPa (8.6 – 9.4 kgf/cm², 120 – 130 psi)	790 kPa (8.1 kgf/cm², 120 psi)
2nd clutch (C)	[2]	No or low 2nd pressure	2nd clutch		
3rd clutch (D)	[D4]	No or low 3rd pressure	3rd clutch		
4th clutch (E)		No or low 4th pressure	4th clutch		
	[R]		Servo valve or 4th clutch		

17. Install the sealing bolt with a new sealing washers, and tighten the bolts to the specified torque.

    TORQUE: 18 N·m (1.8 kgf·m, 13 lbf·ft)

    NOTE: Do not reuse old sealing washers.

Torque Converter Clutch Solenoid Valve - Shift Solenoid Valve A Test

1. Disconnect the torque converter clutch solenoid valve/shift solenoid valve A 2P connector.

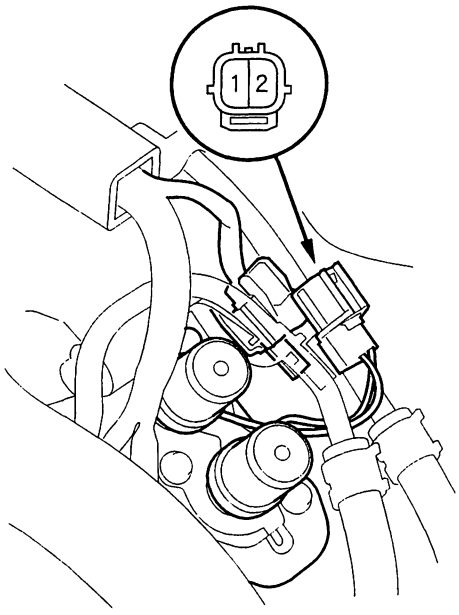

2. Measure the resistance of the torque converter clutch solenoid valve between the No. 1 terminal of the 2P connector and body ground.

   STANDARD: 12−25 Ω

3. Measure the resistance of the shift solenoid valve A between the No. 2 terminal of the 2P connector and body ground.

   STANDARD: 12−25 Ω

4. Replace the torque converter clutch solenoid valve/ shift solenoid valve A if either resistance is out of specification.

5. If the resistance is within the standard, connect the No. 1 terminal of the 2P connector to the battery positive terminal. A clicking sound should be heard. Connect the No. 2 terminal to the battery positive terminal. A clicking sound should be heard. Replace the torque converter clutch solenoid valve/ shift solenoid valve A if no sound is heard when connecting either terminal to the battery positive terminal.

Torque Converter Clutch Solenoid Valve - Shift Solenoid Valve A Replacement

NOTE: Torque converter clutch solenoid valve-shift solenoid valve A must be removed/replaced as an assembly.

1. Remove the mounting bolts and torque converter clutch solenoid valve-shift solenoid valve A.

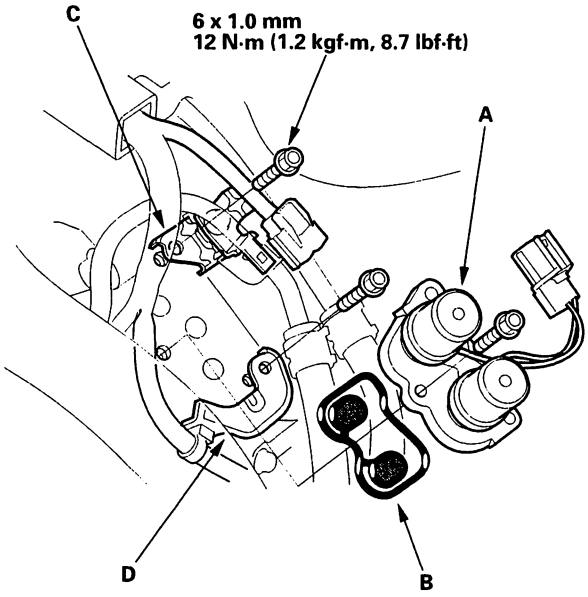

2. Clean the mounting surface and fluid passage of the torque converter clutch solenoid valve-shift solenoid valve A, and install a new torque converter clutch solenoid valve-shift solenoid valve A with a new filter/gasket (B).

3. Install the bolts with the connector bracket (C) and the harness clamp bracket (D), and tighten the bolts.

4. Check the connector for rust, dirt, or oil, then reconnect the connector securely.

BACK

Shift Solenoid Valves B and C Test

1. Disconnect the shift solenoid valve B or C 2P connector.

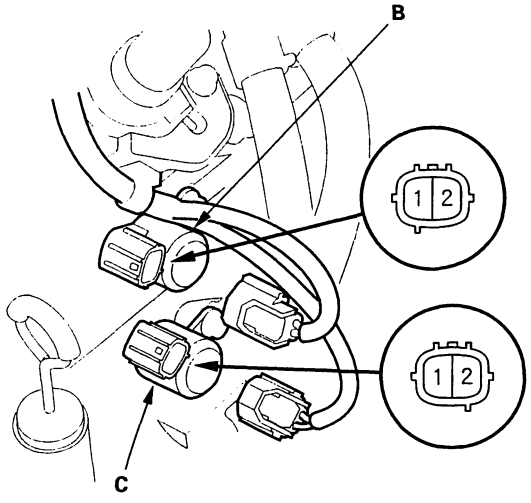

2. Measure the resistance between the No. 1 and No. 2 terminals of the shift solenoid valve B or C.

   STANDARD: 12 – 25 Ω

3. Replace the shift solenoid valve B or C if the resistance is out of standard.

4. If the resistance is within the standard, connect the No. 2 terminal of the shift solenoid valve B or C connector to the battery positive terminal, and connect the No. 1 terminal to the battery negative terminal. A clicking sound should be heard. Replace the shift solenoid valve B or C if no clicking sound is heard.

Shift Solenoid Valves B and C Replacement

NOTE: If the shift solenoid valves B and C are replaced or removed at the same time, be sure to reinstall them correctly. The connector color of shift solenoid valve B is black, and the connector color of shift solenoid valve C is brown.

1. Remove the mounting bolt and the shift solenoid valve B.

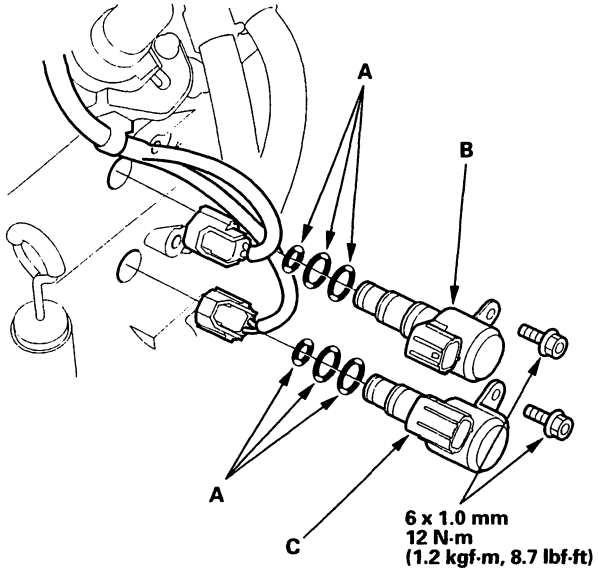

2. Remove the mounting bolt and the shift solenoid valve C.

3. Install a new shift solenoid valve B or C with new O-rings (A). While installing the valves, do not allow dust or other foreign particles to enter the transmission.

4. Check the connector for rust, dirt, or oil, then reconnect the connector securely.

A/T Clutch Pressure Control Solenoid Valves A and B Test

1. Disconnect the A/T clutch pressure control solenoid valves A and B 2P connectors.

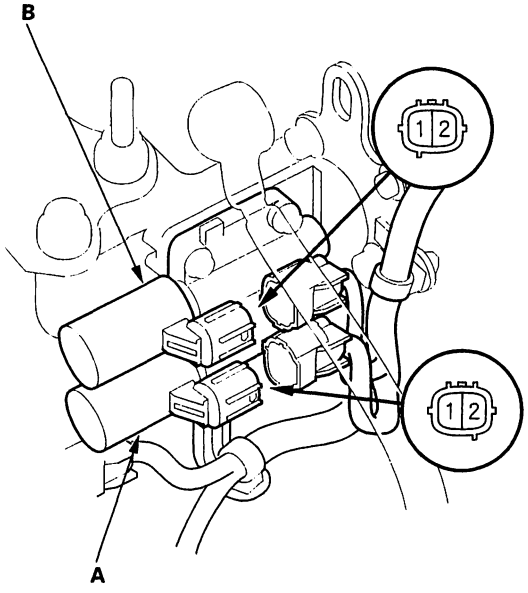

2. Measure the resistance of the A/T clutch pressure control solenoid valves A and B between the No. 1 and No. 2 terminals of each connector.

   STANDARD: About 5.0 Ω

3. If the resistance of either A/T clutch pressure control solenoid is out of standard, replace the A/T clutch pressure control solenoid valves A and B.

4. Connect the No. 1 terminal of the A/T clutch pressure control solenoid valve A (and B) to the battery positive terminal, and connect the No. 2 terminal to the battery negative terminal. A clicking sound should be heard.

5. If not, remove the A/T clutch pressure control solenoid valves A and B.

6. Check the fluid passage of the A/T clutch pressure control solenoid valves for dust and dirt.

7. Connect the No. 1 terminal of the A/T clutch pressure control solenoid valves A and B to the battery positive terminal, and connect the No. 2 terminal to the battery negative terminal. Make sure the A/T clutch pressure control solenoid valves A (A) and B (B) move.

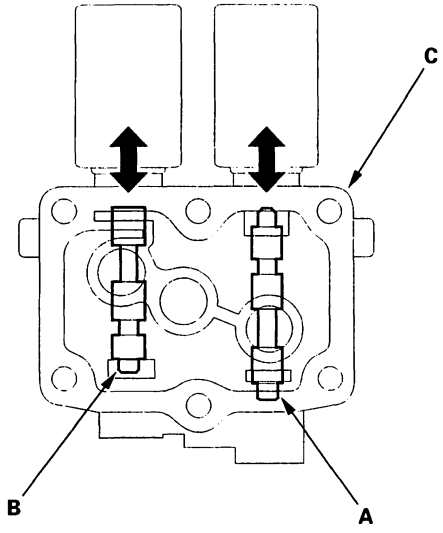

8. Disconnect one of the battery terminals and check valve movement.

   NOTE: You can see the valve movement through the fluid passage in the mounting surface of the A/T clutch pressure control solenoid valves A and B body (C).

9. If either valve binds, or moves sluggishly, or if the A/T clutch pressure control solenoid does not operate, replace the A/T clutch pressure control solenoid valves A and B.

BACK

A/T Clutch Pressure Control Solenoid Valves A and B Replacement

1. Remove the mounting bolts and the A/T clutch pressure control solenoid valves A and B (A).

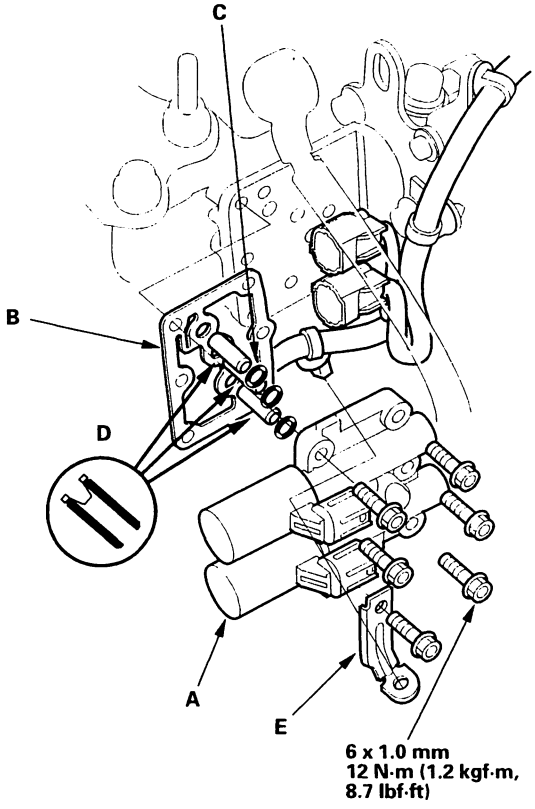

2. Clean the mounting surface and fluid passage of the A/T clutch pressure control solenoid valves A and B and the transmission housing.

3. Install a new A/T clutch pressure control solenoid valves A and B with a new gasket (B), new O-rings (C), ATF feed pipes (D), and harness clamp bracket (E).

   NOTE: Install the filter side of the ATF feed pipes in the transmission housing.

4. Check the A/T clutch pressure control solenoid valve connectors for rust, dirt, or oil, then connect them securely.

Speed Sensor Replacement

1. Disconnect the connectors from the mainshaft and countershaft speed sensors.

2. Remove the bolt securing the mainshaft speed sensor, then remove the mainshaft speed sensor (A) from the end cover.

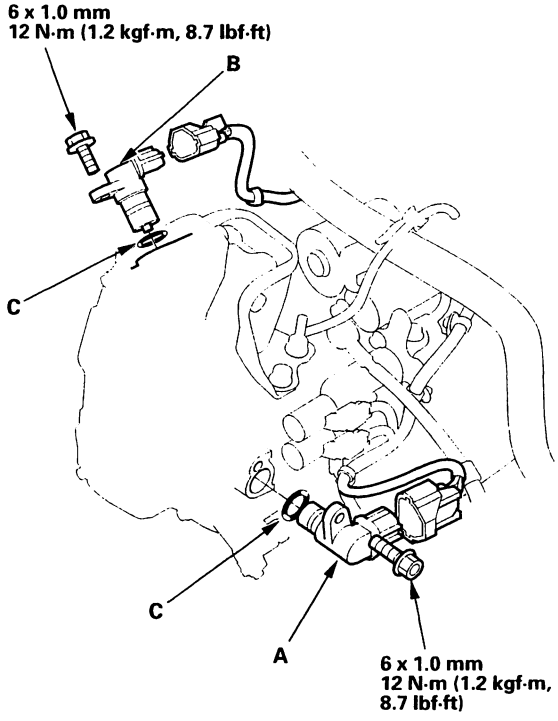

3. Remove the bolt securing the countershaft speed sensor, then remove the countershaft speed sensor (B) from the transmission housing.

4. Replace the O-rings (C) with new ones before installing the sensors.

5. Install the mainshaft and countershaft speed sensors, then connect the connectors.

2nd Clutch Pressure Switch ('98-00 Models) Replacement

1. Remove the rear stiffener (A).

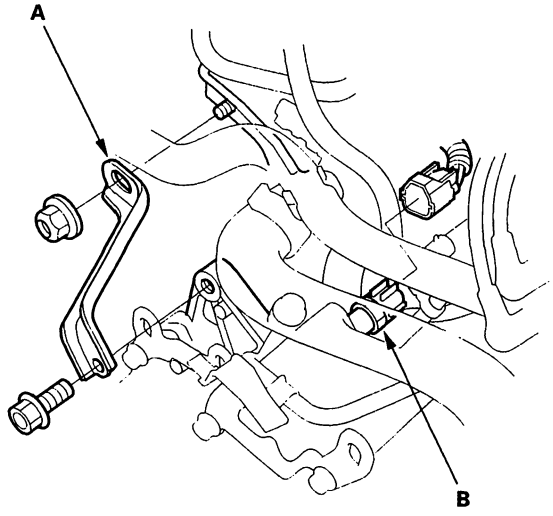

2. Disconnect the 2nd clutch pressure switch connector (B).

3. Replace the 2nd clutch pressure switch, then install a new one with a new sealing washer. Tighten the switch on the metal part, not the plastic part.

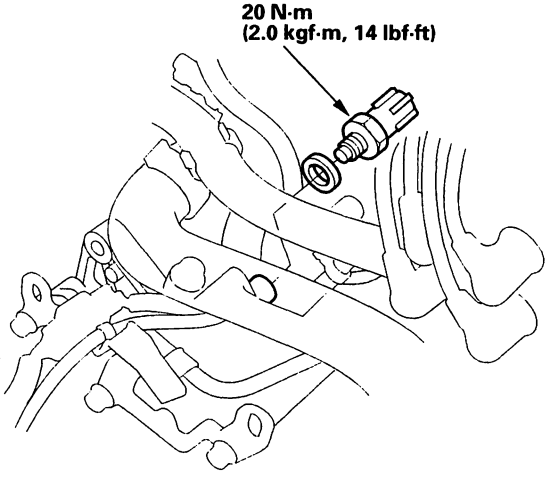

4. Reconnect the connector (A), making sure there is no water, oil, dust, or other foreign particles inside it.

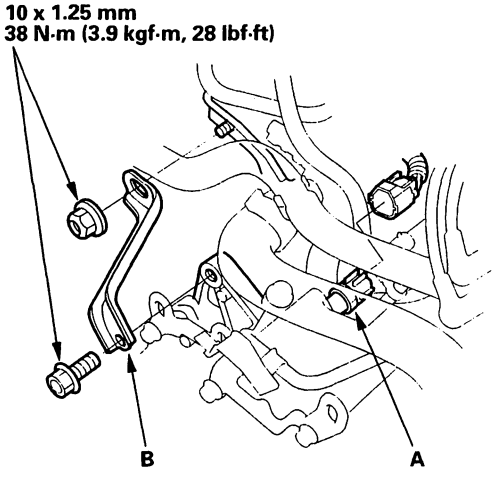

5. Install the rear stiffener (B).

BACK

2nd Clutch Pressure Switch ('01-02 Models) Replacement

1. Support the transmission with a transmission jack.

2. Remove the rear mount bracket bolts.

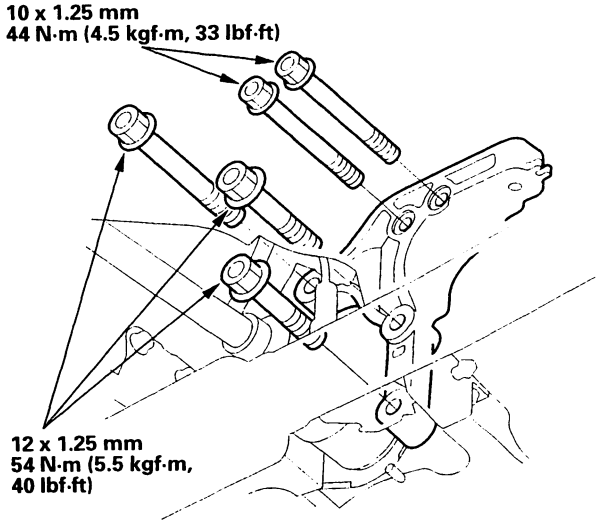

3. Remove the rear mount nut (A), then remove the rear mount bracket (B).

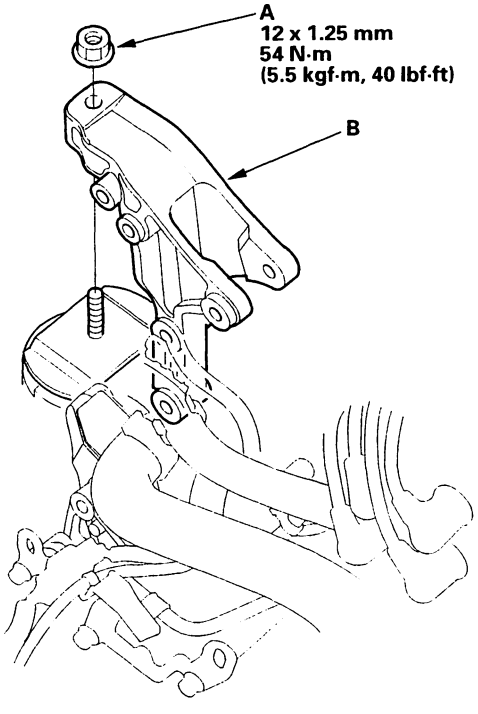

4. Remove the rear stiffener (A).

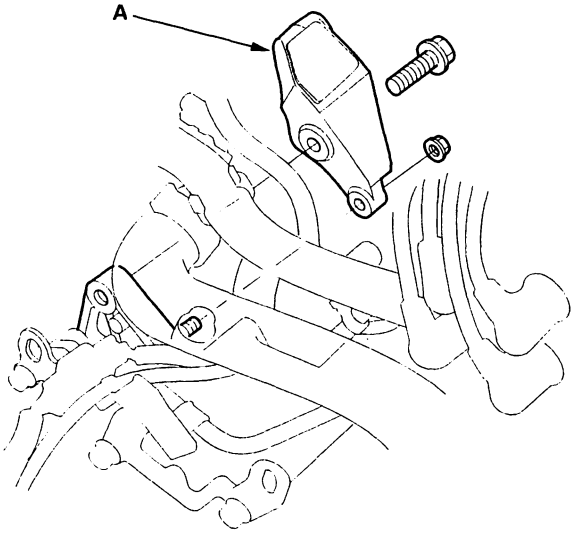

5. Disconnect the 2nd clutch pressure switch connector.

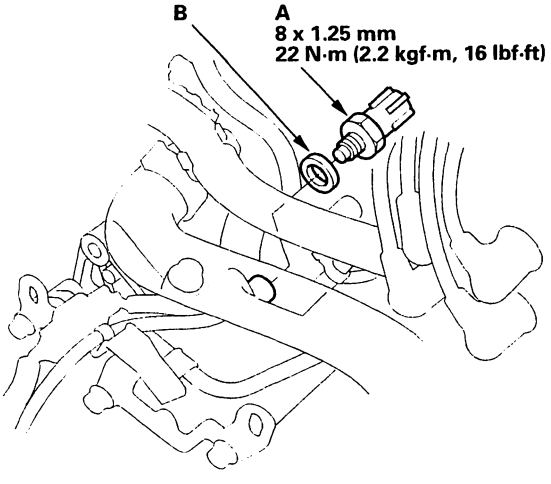

6. Replace the 2nd clutch pressure switch (A), then install a new one with a new sealing washer (B). Tighten the switch on the metal part, not the plastic part.

(cont'd)

2nd Clutch Pressure Switch ('01-02 Models) Replacement (cont'd)

7. Install the rear stiffener (A), then tighten the 10 x 1.25 mm bolt (B) to the specified torque.

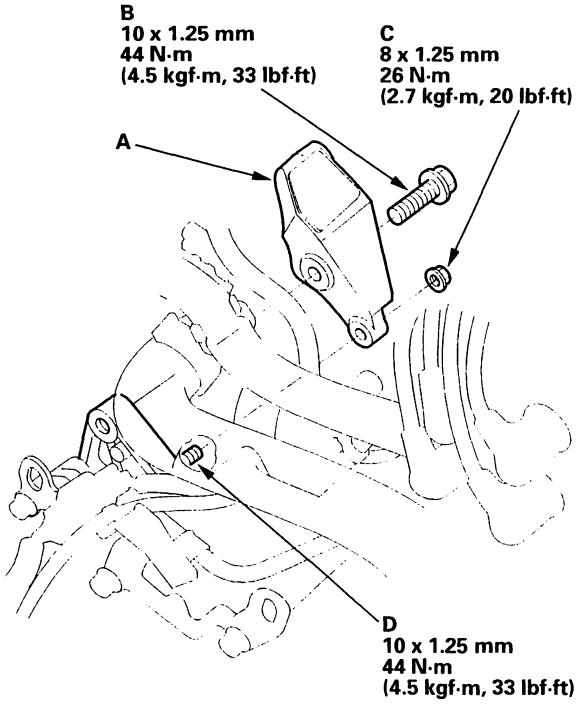

8. Secure the nut (C) by your hand until it contacts the stiffener, then tighten it to the specified torque. If you can not tighten the nut to the stiffener surface by hand, replace the nut and the special bolt (D).

9. Reconnect the connector, making sure there is no water, oil, dust, or other foreign particles inside it.

10. Install the rear mount bracket, and loosely tighten the rear mount nut.

11. Install the rear mount bracket bolts.

12. Tighten the rear mount nut to the specified torque.

3rd Clutch Pressure Switch Replacement

1. Disconnect the connector from the 3rd clutch pressure switch.

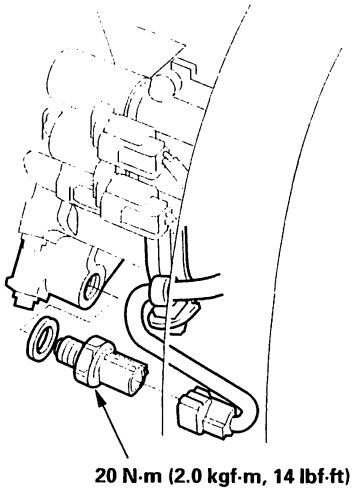

2. Replace the 3rd clutch pressure switch, then install a new one with a new sealing washer. Tighten the switch on the metal part, not the plastic part.

3. Reconnect the connector, making sure there is no water, oil, dust, or other foreign particles inside it.

BACK

ATF Level Check

NOTE: Keep all foreign particles out of the transmission.

1. Warm up the engine to normal operating temperature (the radiator fan comes on).

2. Park the vehicle on the level ground. Turn off the engine.

3. Remove the dipstick (yellow loop) (A) from the transmission, and wipe it with a clean cloth.

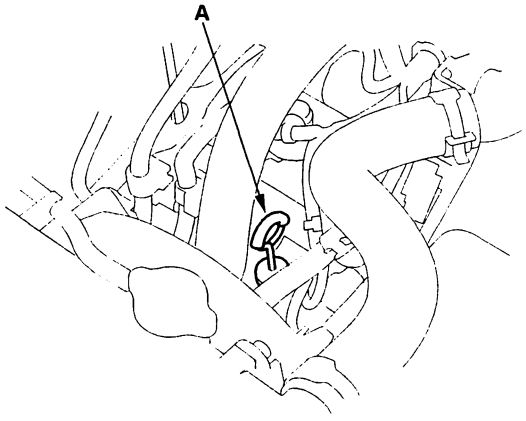

4. Insert the dipstick into the transmission.

5. Remove the dipstick and check the fluid level. It should be between the upper mark (B) and lower mark (C).

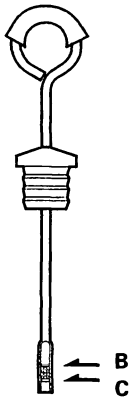

6. If the level is below the lower mark, pour the recommended fluid into the filler hole to bring it to the upper mark. Always use Honda ATF-Z1 Automatic Transmission Fluid (ATF). Using a non-Honda ATF can affect shift quality.

7. Insert the dipstick back into the transmission.

ATF Replacement

NOTE: Keep all foreign particles out of the transmission.

1. Bring the transmission up to operating temperature (the radiator fan comes on) by driving the vehicle.

2. Park the vehicle on level ground, and turn the engine off.

3. Remove the drain plug, and drain the automatic transmission fluid (ATF).

   NOTE: If a cooler flusher is to be used, refer to ATF Cooler Flushing (see page 14-125).

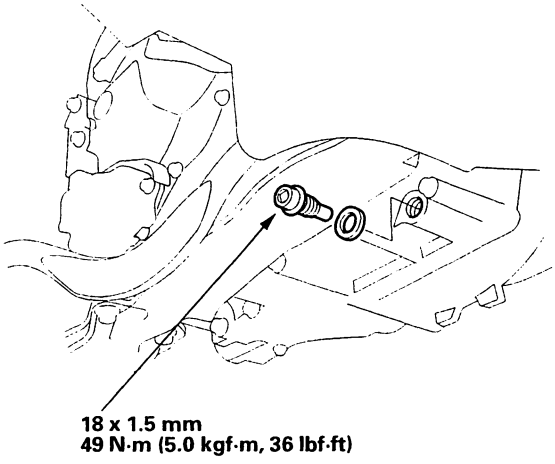

4. Reinstall the drain plug with a new sealing washer, then refill the transmission with the recommended fluid into the filler hole to the upper mark on the dipstick. Always use Honda ATF-Z1 Automatic Transmission Fluid (ATF). Using a non-Honda ATF can affect shift quality.

   Automatic Transmission Fluid Capacity:
   2.5 ℓ (2.6 US qt, 2.2 Imp qt) at changing
   6.1 ℓ (6.4 US qt, 5.4 Imp qt) at overhaul

Transmission Removal

1. Before disconnecting power, make sure you have the anti-theft code for the radio, then write down the frequencies for the radio's preset stations.

2. Disconnect the battery negative terminal, then remove the positive terminal.

3. Remove the battery hold-down bracket, then remove the battery and battery tray.

4. Remove the battery cable clamps from the battery base.

5. Remove the battery base.

6. Remove the intake air duct and air cleaner housing assembly.

7. Raise the vehicle, and make sure it is sacurely supported. Remove the drain plug, and drain the automatic transmission fluid (ATF). Reinstall the drain plug with a new sealing washer.

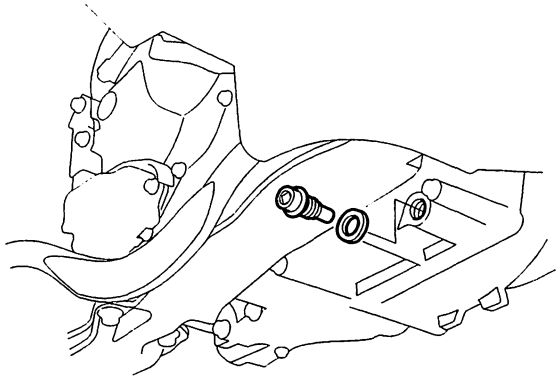

8. Remove the starter cables (A) and harness clamps (B), and remove the breather tube (C) and radiator hose (D) from the clamps (E).

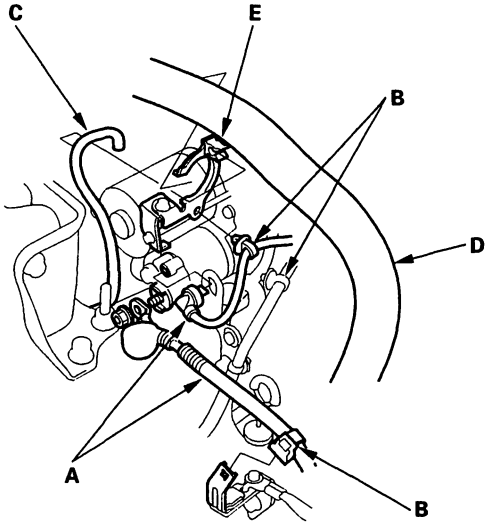

9. Remove the transmission ground cable (A), and disconnect the connectors from the A/T clutch pressure control solenoid valves A and B (B), mainshaft speed sensor (C) and 3rd clutch pressure switch (D), then remove the harness clamps (E) from the clamp brackets.
Do not allow water, fluid, oil, dust, or other foreign particles to get inside the 3rd clutch pressure switch connector.

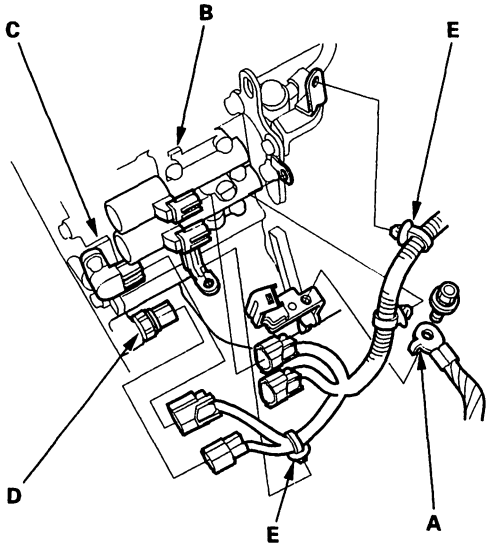

BACK

10. Disconnect the torque converter clutch solenoid valve/shift solenoid valve A connector (A).

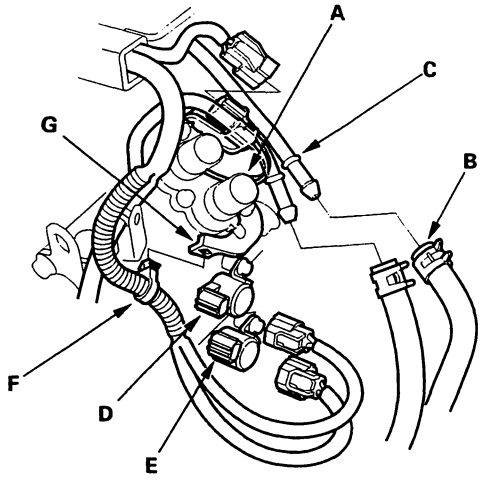

11. Remove the ATF cooler hoses (B) from the ATF cooler lines (C). Turn the ends of the ATF cooler hoses up to prevent ATF from flowing out, then plug the ATF cooler hoses and lines.

    NOTE: Check for any signs of leakage at the hose joints.

12. Disconnect the shift solenoid valve B connector (D), and C connector (E), then remove the harness clamp (F) from the clamp bracket (G).

13. Disconnect the countershaft speed sensor connector (A), and remove the harness clamp (B) from the connector/clamp bracket (C).

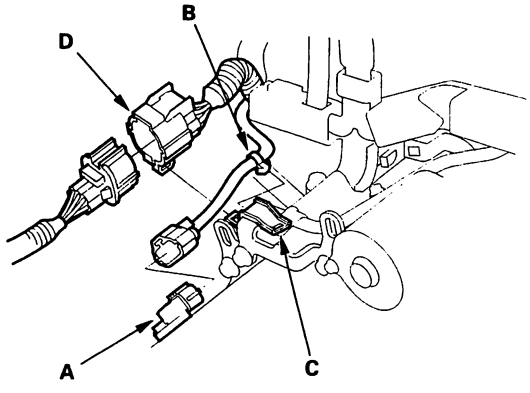

14. Remove the transmission range switch connector (D) from the connector/clamp bracket, then disconnect it.

15. Disconnect the 2nd clutch pressure switch connector (A), then remove the rear stiffener (B) ('98-00 models). Do not allow water, fluid, oil, dust, or other foreign particles to get inside the connector.

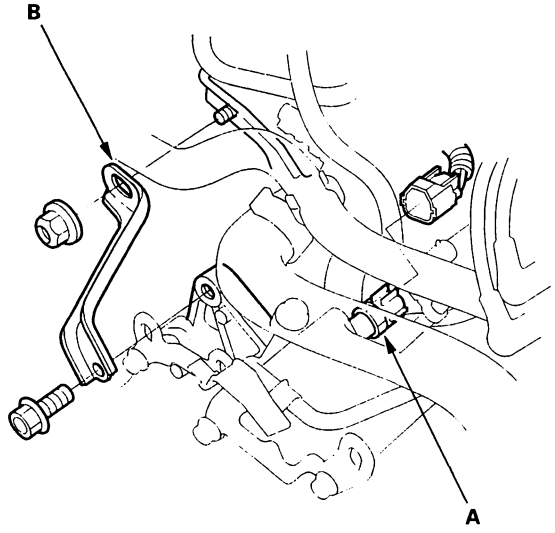

16. Remove the transmission housing bolts.

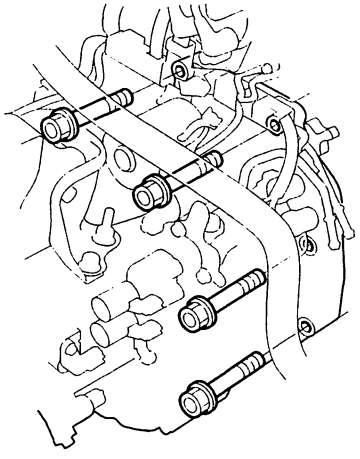

(cont'd)

Transmission Removal (cont'd)

17. Remove the front mount bracket bolts.

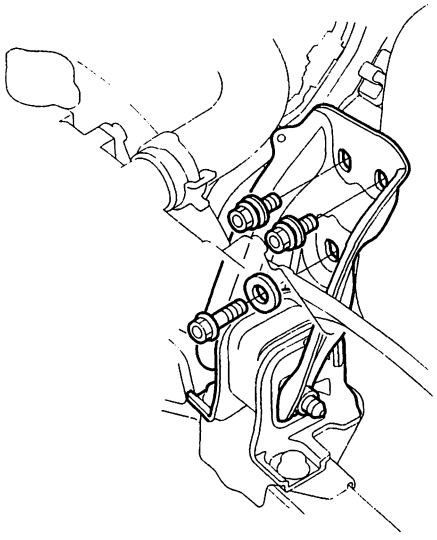

18. Remove the splash shield.

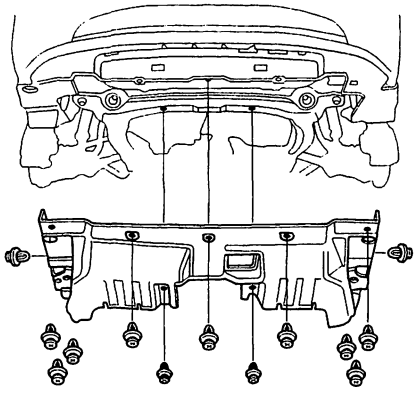

19. Remove the cotter pins (A) and castle nuts (B), and remove the damper forks (C), then separate the ball joints from the lower arms (D) (see page 18-17).

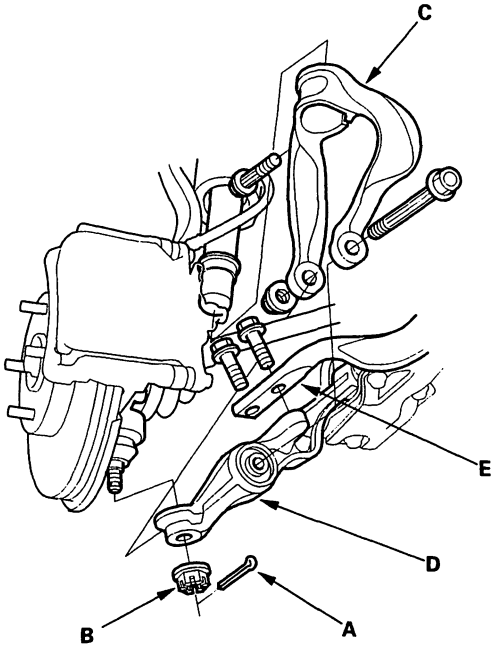

20. Remove the bolts securing the radius rods (E), then separate the radius rods from the lower arms (D).

21. Pry the driveshaft out of the differential (see step 10 on page 16-4).

22. Make a reference mark (A) across the front beam (both side) (B) and the rear beam (C).

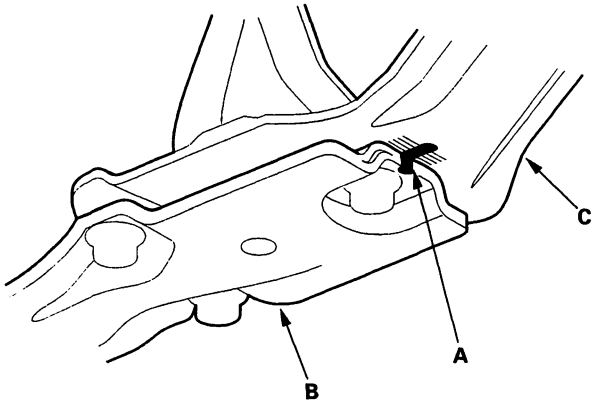

BACK

23. Remove the front beam.

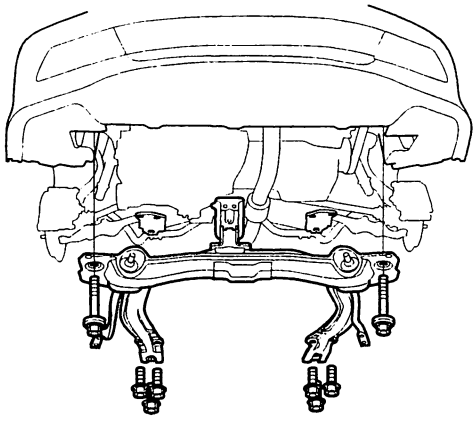

24. Pull on the inboard joints to remove the driveshafts (A) from the differential.

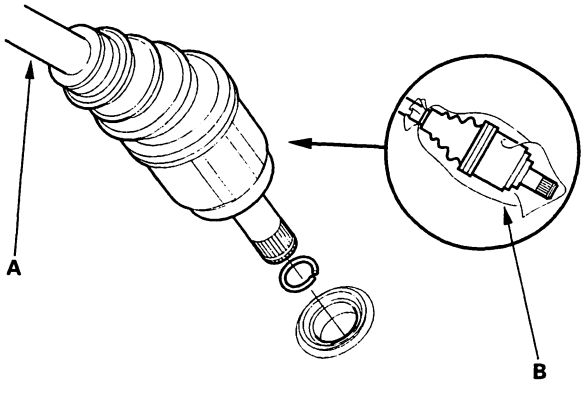

25. Coat all precision finished surfaces with clean engine oil, then tie plastic bags (B) over the driveshaft ends.

26. Remove the engine stiffener (A).

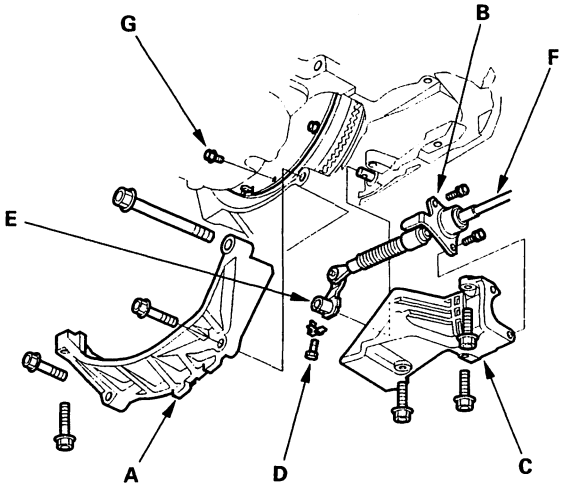

27. Remove the bolts securing the shift cable holder (B), then remove the shift cable cover (C).

NOTE: To prevent damage to the control lever joint, remove the bolts securing the shift cable holder before removing the bolts securing the shift cable cover.

28. Remove the lock bolt (D) securing the control lever (E), then remove the shift cable (F) with the control lever. Do not bend the shift cable excessively.

29. Remove the eight drive plate bolts (G) one at a time while rotating the crankshaft pulley.

30. Lift and support the engine/transmission assembly with an engine hanger (P/N AAR-T-1256, available through the American Honda Tool and Equipment program, or equivalent).

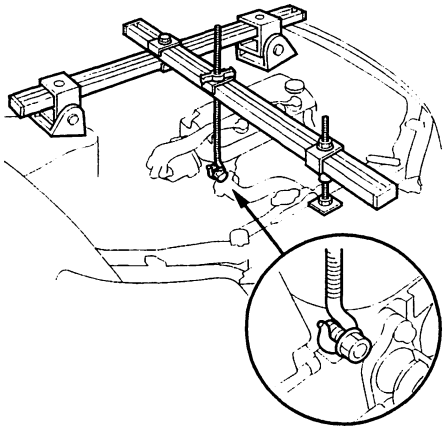

(cont'd)

Transmission Removal (cont'd)

31. Place a transmission jack under the transmission.

32. Remove the transmission mount bracket.

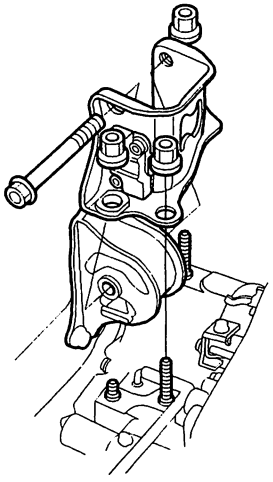

33. Remove the rear mount bracket bolts:

- 12 x 1.25 mm bolts (2) (A) for all models.
- 10 x 1.25 mm bolts (2) (B) for '01-02 models.

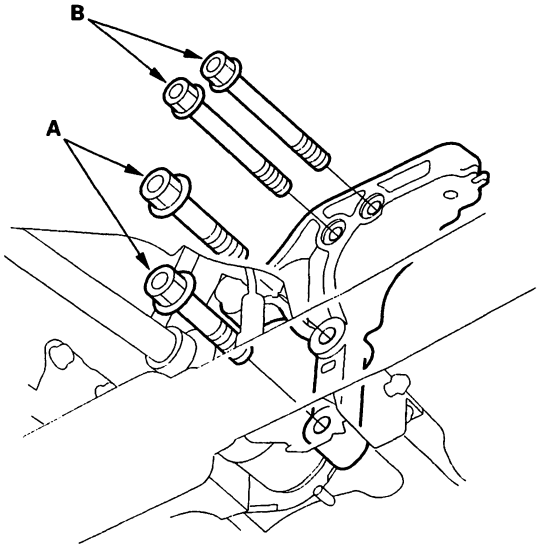

34. Pull the transmission away from the engine until it clears the dowel pins, then lower it on the transmission jack.

35. Remove the torque converter assembly.

36. Remove the starter from the torque converter housing.

37. Inspect the drive plate, and replace it if it's damaged.

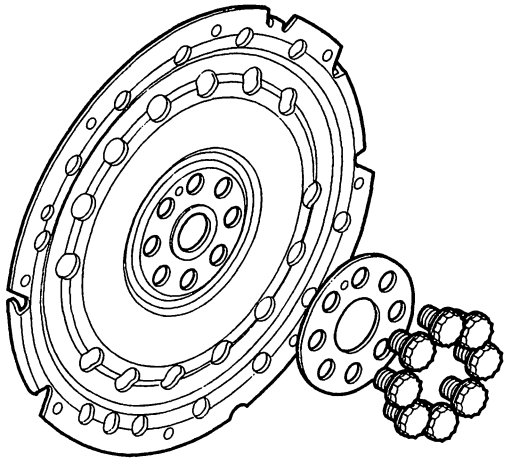

BACK

Transmission Installation

1. Flush the ATF cooler (see page 14-125).

2. Install the torque converter assembly (A) on the mainshaft (B) with a new O-ring (C).

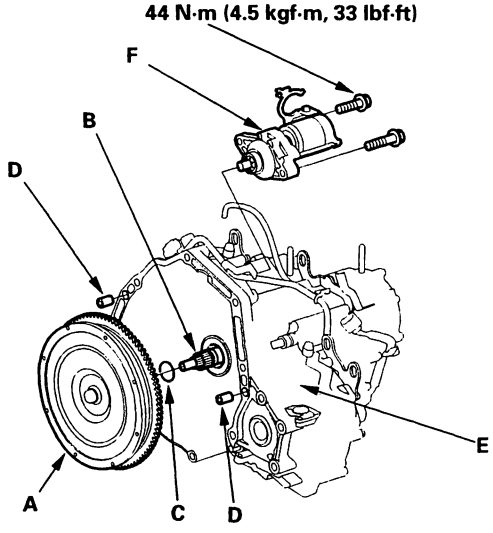

3. Install the 14 mm dowel pins (D) in the torque converter housing (E).

4. Install the starter (F) on the torque converter housing.

5. Place the transmission on a transmission jack, and raise it to engine level.

6. Attach the transmission to the engine, then install the rear mount bracket bolts:

   - 12 x 1.25 mm bolts (2) (A) for all models.
   - 10 x 1.25 mm bolts (2) (B) for '01-02 models.

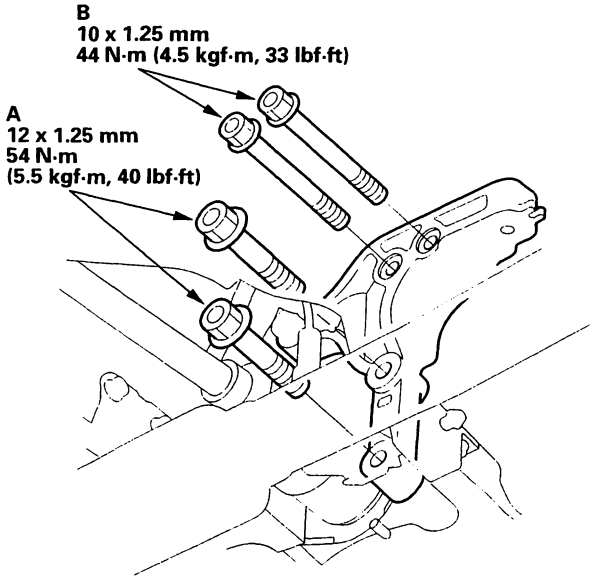

7. Install the transmission housing mounting bolts.

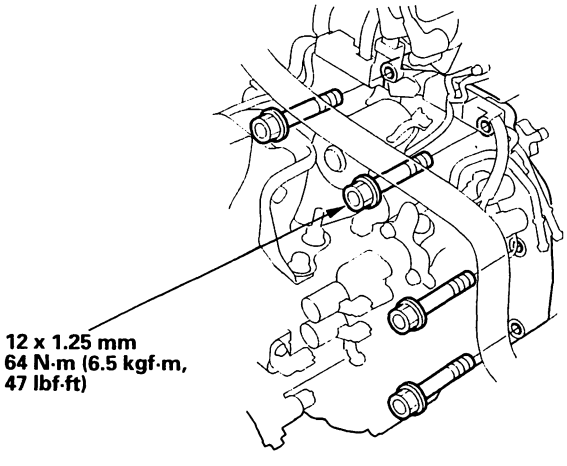

(cont'd)

Transmission Installation (cont'd)

8. Face the dot mark (A) on the breather tube (B) up.

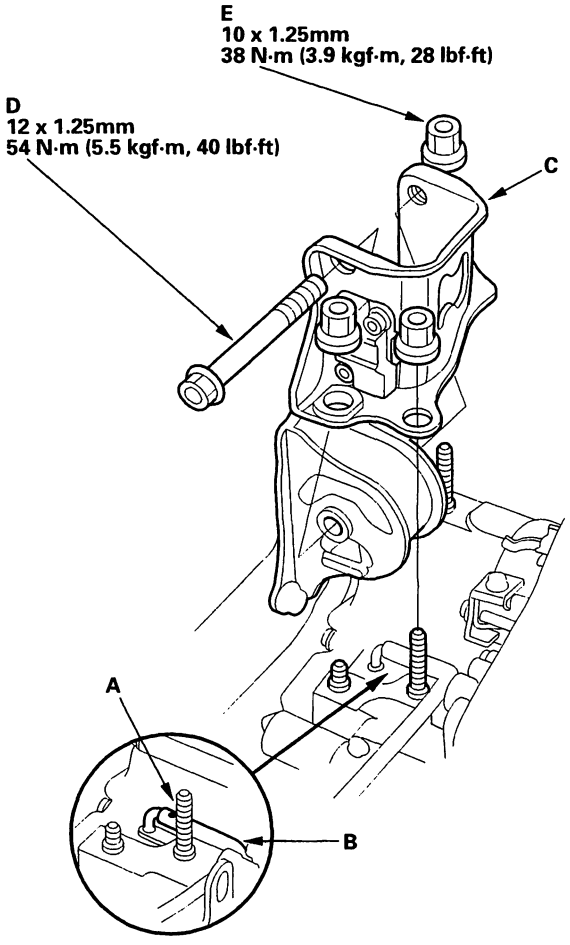

9. Install the transmission mount bracket (C). Tighten the bolt (D) loosely, and tighten the nuts (E) to the specified torque, then tighten the bolt to the specified torque.

10. Remove the transmission jack and hoist bracket.

11. Attach the torque converter to the drive plate (A) with eight bolts (B). Rotate the crankshaft pulley as necessary to tighten the bolts to 1/2 of the specified torque, then to the final torque, in a crisscross pattern. After tightening the last bolt, check that the crankshaft rotates freely.

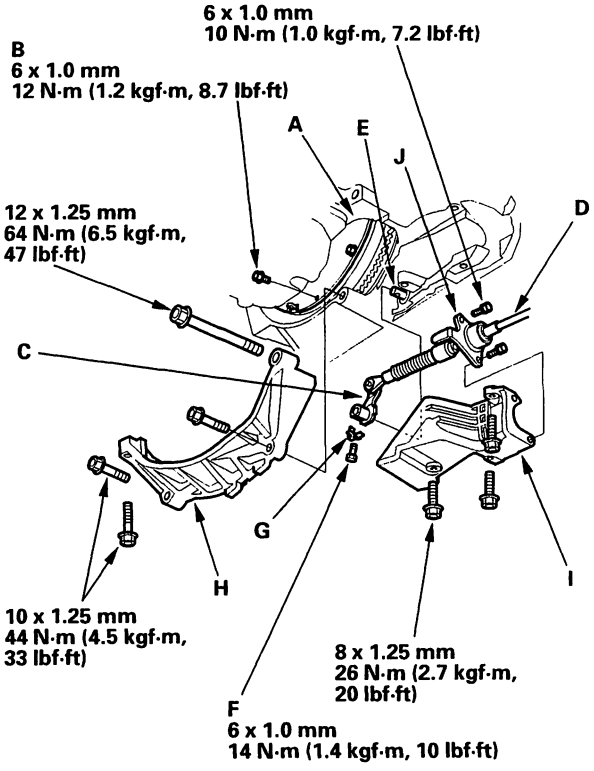

12. Tighten the crankshaft pulley bolt as necessary (see page 6-18).

13. Install the control lever (C) with the shift cable (D) on the control shaft (E). Do not bend the shift cable excessively.

14. Install the lock bolt (F) with a new lock washer (G), then bend the lock washer tab against the bolt.

15. Install the engine stiffener (H).

16. Install the shift cable cover (I), then install the shift cable holder (J) on the shift cable cover.

    NOTE: To prevent damage to the control lever joint, be sure to install the shift cable holder after installing the shift cable cover to the torque converter housing.

BACK

17. Install new set rings on the right and left driveshafts.

18. Install the right and left driveshaft (see page 16-20). While installing the driveshaft in the differential, be sure not to allow dust or other foreign particles to enter the transmission.

    NOTE:
    - Clean the areas where the driveshaft contacts the transmission (differential) with solvent or carburetor cleaner, and dry with compressed air.
    - Turn the right and left steering knuckle fully outward, and slide the driveshaft into the differential until you feel its spring clip engage the side gear.

19. Install the front beam (A) by aligning the reference marks (B) on the rear beam (C).

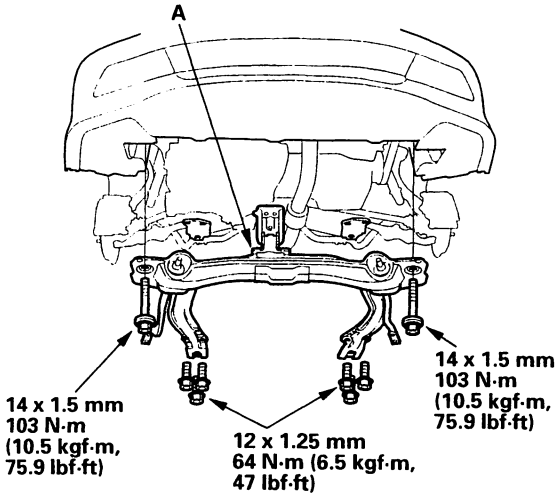

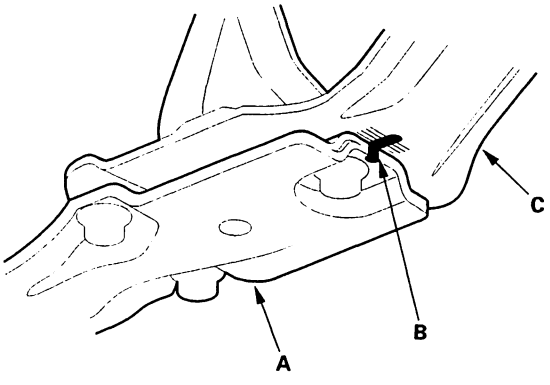

20. Install the front mount bracket bolts.

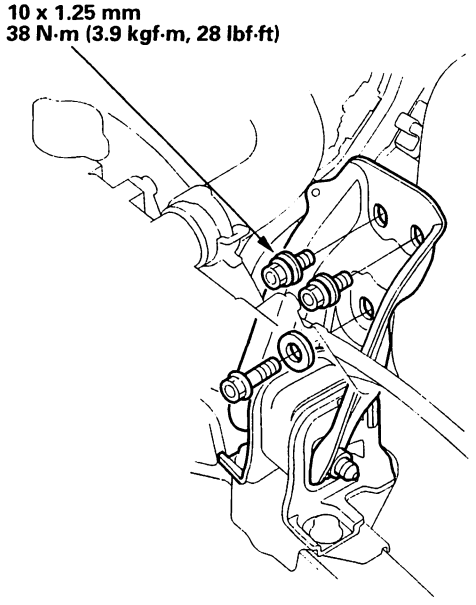

21. Install the damper forks (A), then install the ball joints on each lower arms (B) with the castle nuts (C) and new cotter pins (D).

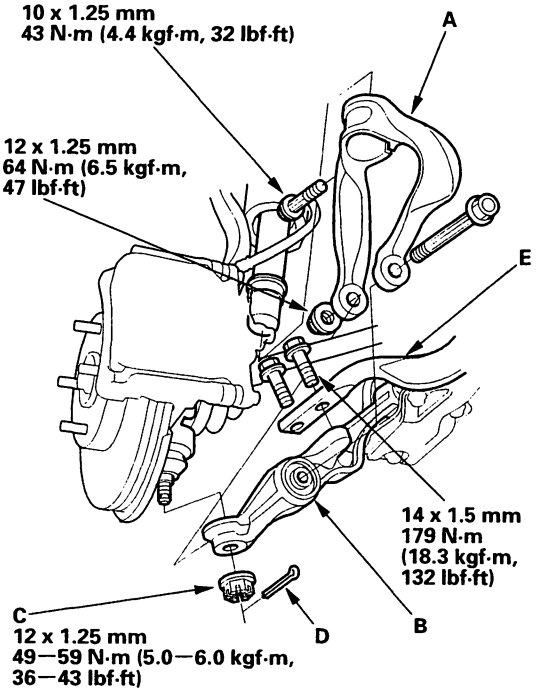

22. Install the radius rods (E) on each lower arm.

(cont'd)

Transmission Installation (cont'd)

23. Install the splash shield.

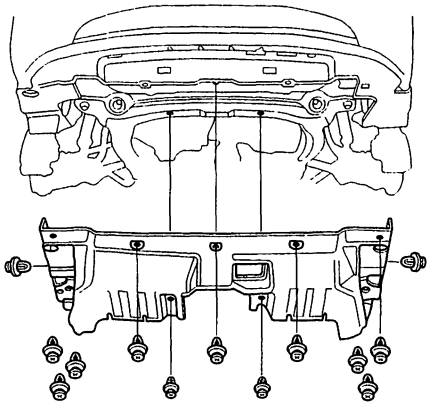

24. Connect the 2nd clutch pressure switch connector (A), and install the rear stiffener (B) ('98-00 models). Do not allow water, fluid, oil, dust, or other foreign particles to get inside the 2nd clutch pressure switch connector.

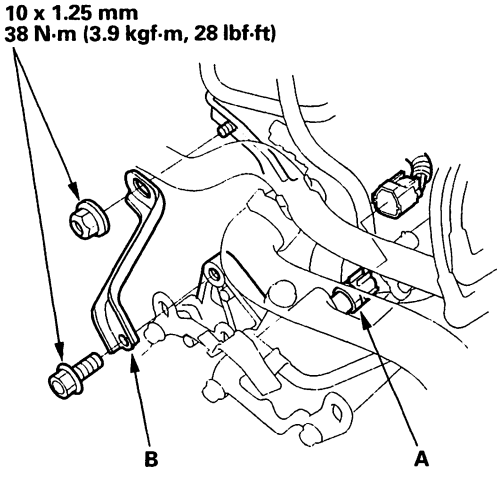

25. Connect the connectors to the shift solenoid valve B (A) and C (B), and install the clamp (C) on the clamp bracket (D).

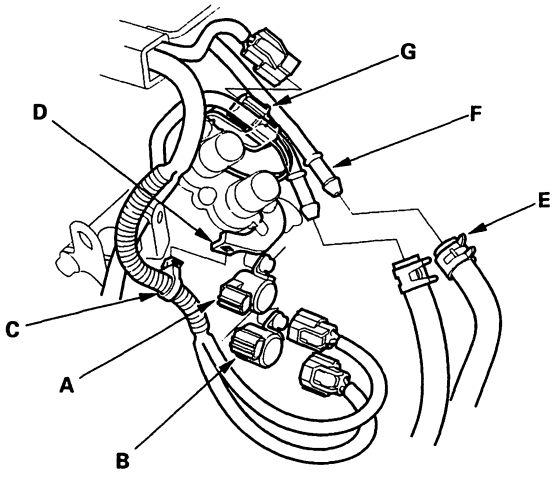

26. Connect the ATF cooler hoses (E) to the cooler lines (F) (see page 14-126).

27. Connect the torque converter clutch solenoid valve/ shift solenoid valve A connector (G).

28. Connect the connector to the countershaft speed sensor (A) and transmission range switch (B), and install the harness clamp and transmission range switch connector on the connector/clamp bracket (D).

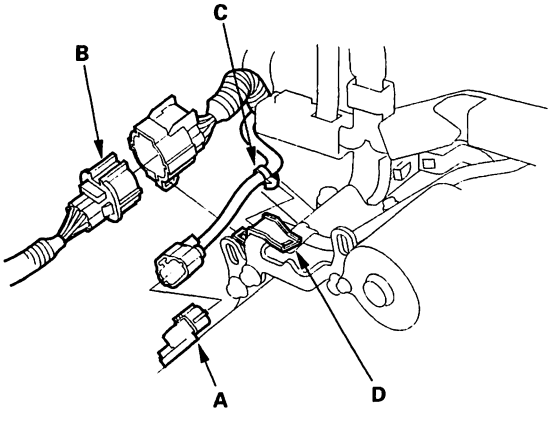

BACK

29. Install the transmission ground cable terminal (A).

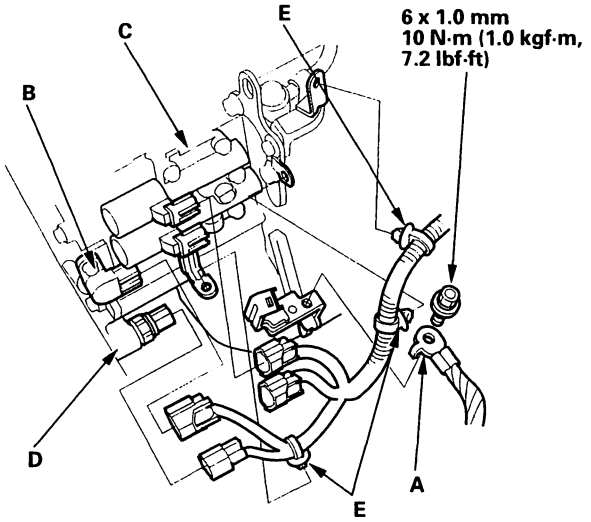

30. Connect the connectors to the mainshaft speed sensor (B), A/T clutch pressure control solenoid valves A and B (C) and 3rd clutch pressure switch (D), and install the harness clamps (E) on the clamp brackets. Do not allow water, fluid, oil, dust, or other foreign particles to get inside the 3rd clutch pressure switch connector.

31. Install the starter cables (A) with crimped side of the ring terminals facing out.

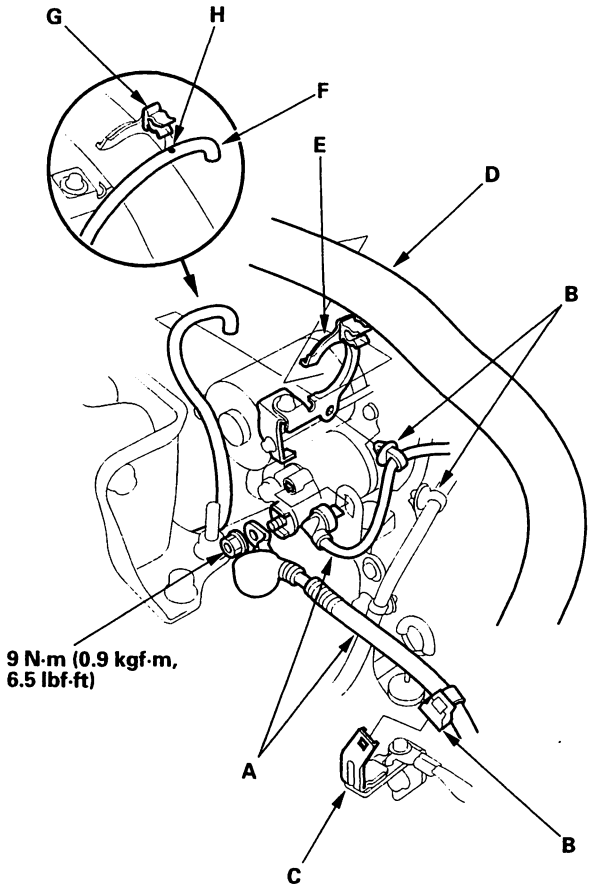

32. Install the harness clamps (B) on the clamp brackets (C).

33. Install the radiator hose (D) on the clamp (E).

34. Install the breather tube (F) on the clamp (G) with the dot (H) on the tube facing up.

(cont'd)

BACK

Transmission Installation (cont'd)

35. Install the battery base.

36. Install the battery cable clamps on the battery base.

37. Install the battery tray and battery, then secure the battery with its hold-down bracket.

38. Install the intake air duct and air cleaner housing assembly.

39. Refill the transmission with ATF (see page 14-113).

40. Connect the battery positive terminal, then connect the negative terminal.

41. Set the parking brake. Start the engine, and shift the transmission through all gears three times.

42. Check the shift lever operation, A/T gear position indicator operation, and shift cable adjustment.

43. Check and adjust the front wheel alignment (see page 18-5).

44. Start the engine and let it reach normal operating temperature (the radiator fan comes on) with the transmission in [P] or [N] position, then turn it off and check the ATF level (see page 14-113).

45. Perform a road test (see page 14-101).

46. Enter the anti-theft code for the radio, then enter the customer's radio station presets.

47. Loosen the front mount bracket bolt (A) after the road test, then retighten the bolts to the specified torque.

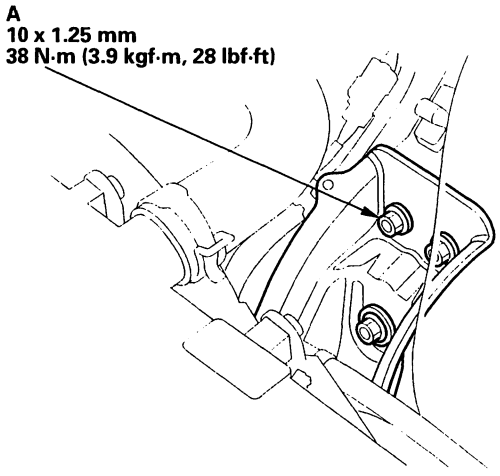

BACK

ATF Cooler Flushing

Special Tools Required
Commercially available transmission cooler flusher
Kent-Moore J38405-A or equivqlent

This procedure should be performed before reinstalling the transmission.

1. Check the equipment for wear and cracks before using it. Replace any worn or cracked components.

2. Using the measuring cup, fill the flusher (A) with 21 ounces (approximately 2/3 full) of biodegradable flushing fluid (J35944-20). Do not substitute with any other fluid. Follow the handling procedure on the fluid container.

3. Secure the flusher filler cap, and pressurize the flusher with compressed air to 550 – 829 kpa (5.6 – 8.45 kgf/cm², 80 – 120 psi). The air line should be equipped with a water trap to ensure a dry air system.

4. Hang the flusher under the vehicle.

5. Attach the flusher discharge hose (B) to the return line of the ATF cooler using a clamp.

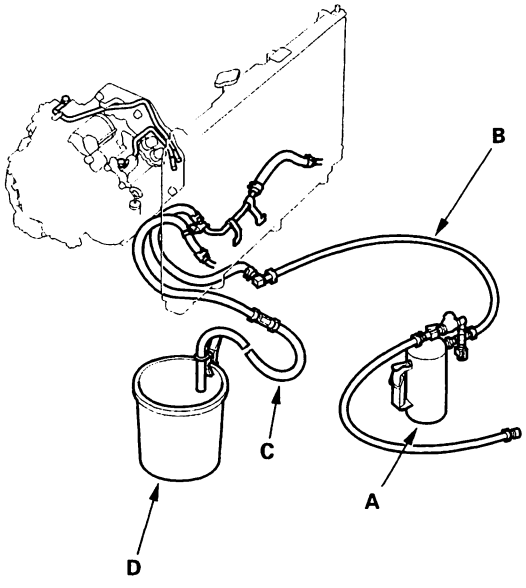

6. Connect the drain hose (C) to the inlet line on the ATF cooler using a clamp. Securely clamp the opposite end of the drain hose to a bucket (D) or floor drain.

7. With the water and air valves (A) off, attach the water and air supplies to the flusher. (Hot water if available.)

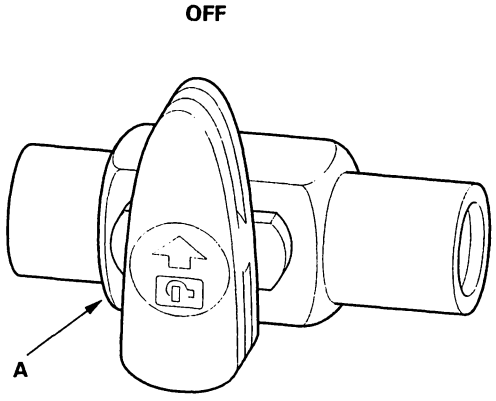

8. Turn on the water valve for 10 seconds. If water does not flow through the cooler, it is completely plugged, cannot be flushed, and must be replaced.

9. Depress the trigger to mix the flushing fluid into the water flow. Use the wire clip to hold the trigger down.

10. While flushing with the water and flushing fluid for two minutes, turn the air valve on for five seconds every 15 – 20 seconds to create a surging action.

    AIR PRESSURE:
    MAX 845 kpa (8.45 kgf/cm², 120 psi)

11. Turn the water valve off. Release the trigger, then reverse the hoses to the cooler so you can flush in the opposite direction. Repeat steps 8 through 10.

12. Release the trigger, and rinse the cooler with water for one minute.

13. Turn the water valve and the water supply off.

14. Turn the air valve on for two minutes, or until no moisture is visible leaving the drain hose. Residual moisture in the cooler or lines can damage the transmission.

15. Remove the flusher form the cooler line. Attach the drain hose to an ATF container.

16. Install the transmission, and leave the drain hose attached to the cooler line.

(cont'd)

ATF Cooler Flushing (cont'd)

17. Make sure the transmission is in [P] position. Fill the transmission with ATF, and run the engine for 30 seconds or until approximately 0.95 ℓ (1.0 US qt., 0.8 Imp qt.) is discharged.

18. Remove the drain hose, and reconnect the cooler return hose to the transmission.

19. Refill the transmission with ATF to the proper level (see page 14-113).

ATF Cooler Hoses Replacement

1. Connect the cooler hoses (A) to the lines (B) and the ATF cooler (C), and secure them with the clips (D) as shown.

2. Install the clamp (E) on the cooler hoses.

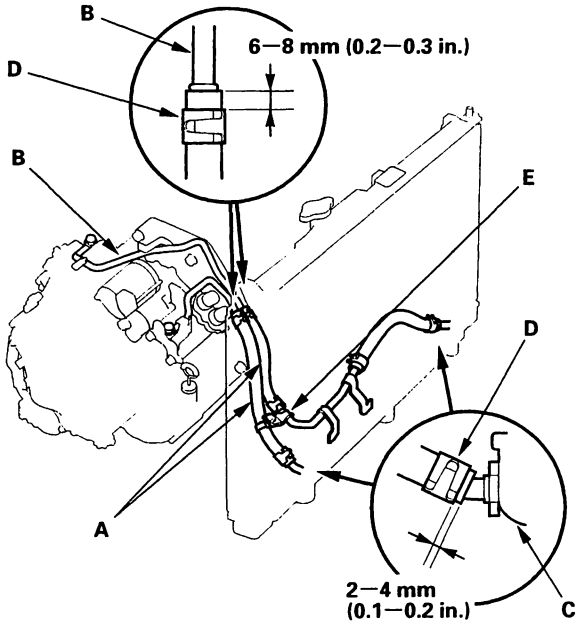

BACK

Shift Lever Removal

1. Shift the transmission into R position.

2. Remove the center console (see page 20-83).

3. Remove the nut securing the shift cable end (A), then separate the shift cable end from the shift lever assembly.

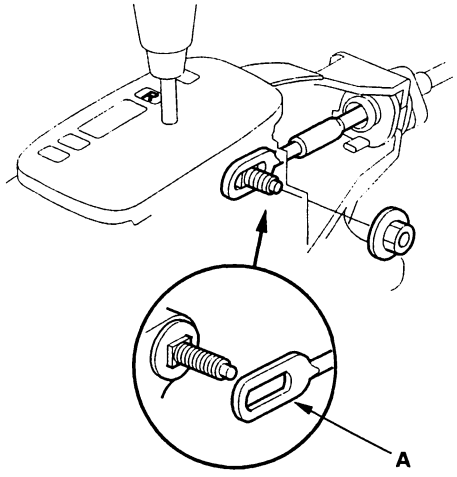

4. Rotate the socket holder (A) on the shift cable (B) counterclockwise a quarter turn, then slide the holder to remove the shift cable from the shift lever bracket base (C).

   NOTE: Do not remove the shift cable by twisting the shift cable guide pipe (D).

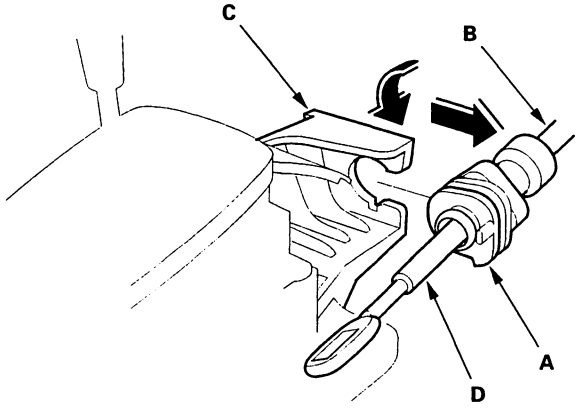

5. Disconnect the shift lock solenoid connector (A) and park pin switch 4P connector (B).

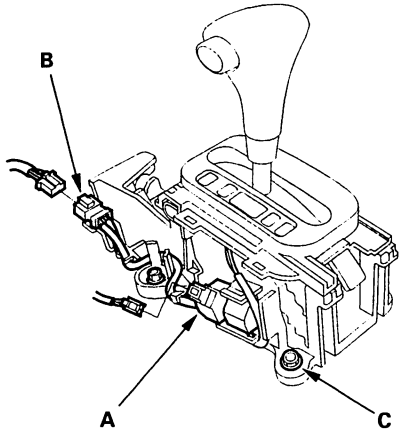

6. Remove the four bolts (C) securing the shift lever bracket base, then remove the shift lever assembly.

Shift Lever Installation

1. Install the shift lever assembly.

2. Turn the ignition switch ON (II), and verify that the R position indicator comes on.

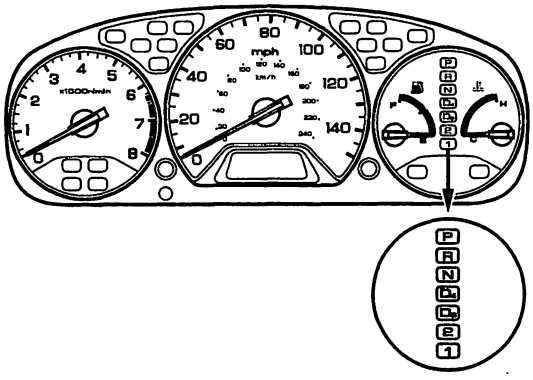

3. If necessary, push the shift cable until it stops, then release your hand. Pull the shift cable back one step so that the shift position is in R.

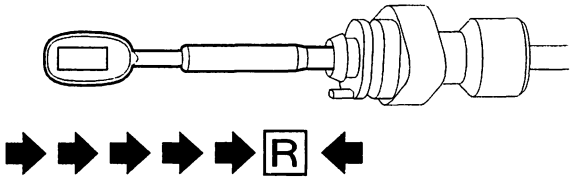

4. Turn the ignition switch OFF.

5. Insert a 6.0 mm (0.24 in.) pin (A) into the positioning hole (B) on the shift lever bracket base through the positioning hole on the shift lever assembly.

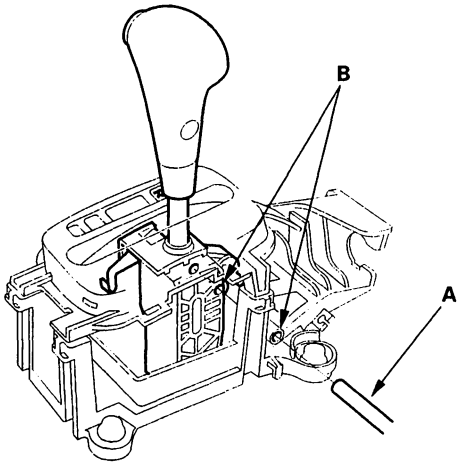

6. Rotate the socket holder (A) on the shift cable (B) counterclockwise a quarter turn, then slide the holder onto the shift lever bracket base (C). Install the shift cable end (D) over the mounting stud (E) by aligning its square hole (F) with the square shape (G) at the bottom of the stud. Rotate the holder clockwise a quarter turn to secure the shift cable.

   NOTE: Do not install the shift cable by twisting the shift cable guide (H).

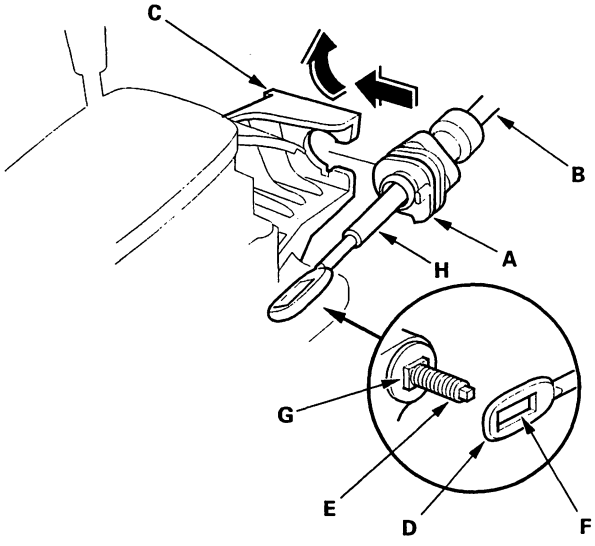

BACK

7. Verify that the shift cable end (A) is properly installed on the mounting stud (B).

Properly Installed:

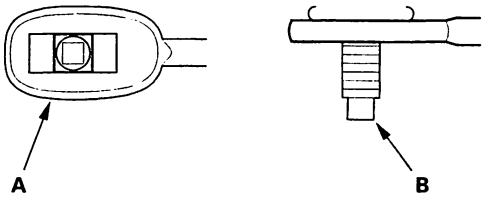

Not Properly Installed:

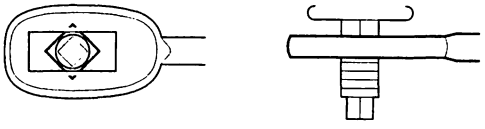

Cable end rides on the bottom of the mounting stud.

8. If not properly installed, remove the shift cable from the shift lever bracket base, and reinstall the shift cable. Do not install the shift cable end on the mounting stud while the shift cable is on the shift cable bracket base.

9. Install and tighten the nut.

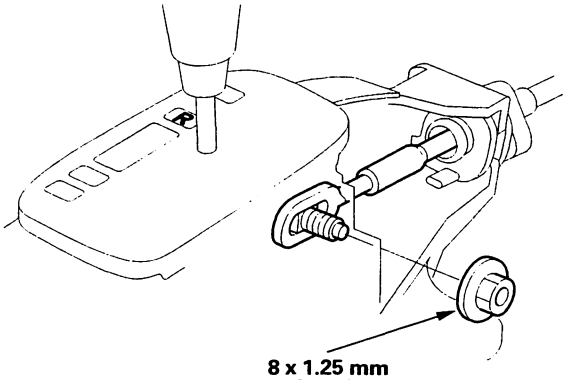

8 x 1.25 mm
22 N·m (2.2 kgf·m, 16 lbf·ft)

10. Remove the 6.0 mm (0.24 in.) pin that was installed to hold the shift lever.

11. Connect the shift lock solenoid connector and park pin switch 4P connector.

12. Move the shift lever to each gear, and verify that the A/T gear position indicator follows the transmission range switch.

13. Push the shift lock release, and verify that the shift lever releases.

Shift Lever Disassembly/Reassembly

SRS components are located in this area. Review the SRS component locations, precautions, and procedures in the SRS section before performing repairs or service (see page 23-28).

Apply silicone grease to these parts:

- Movable parts of the shift lever.
- Movable parts of the shift lock mechanism.
- Sliding surfaces on the detent spring.

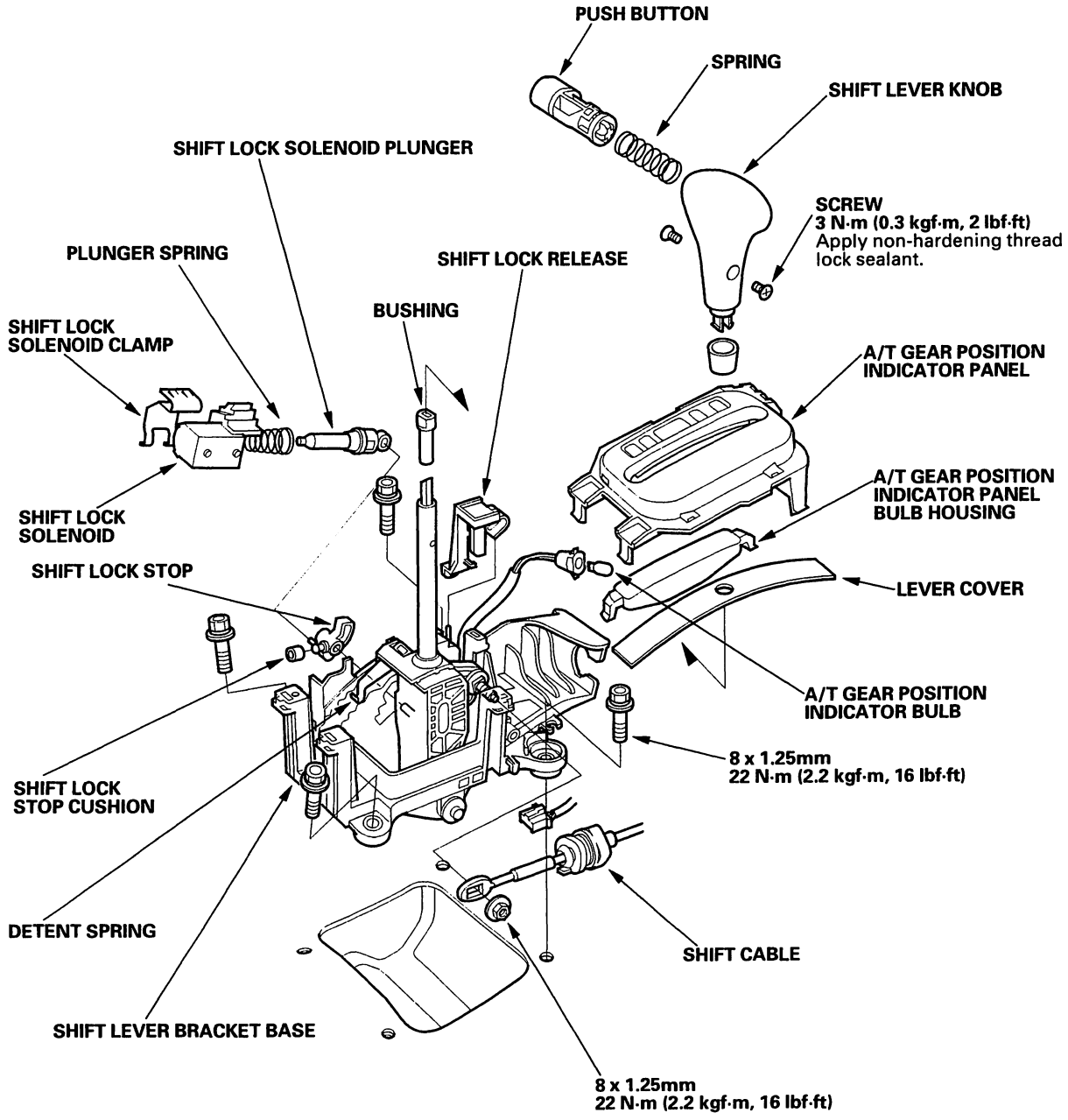

BACK

Shift Cable Replacement

1. Raise the front of the vehicle, and make sure it is securely supported (see page 1-17).

2. Set the parking brake, and block the rear wheels securely.

3. Shift the transmission into R position.

4. Remove the console panel (see page 20-83).

5. Remove the nut securing the shift cable end (A), then separate the shift cable end from the shift lever assembly.

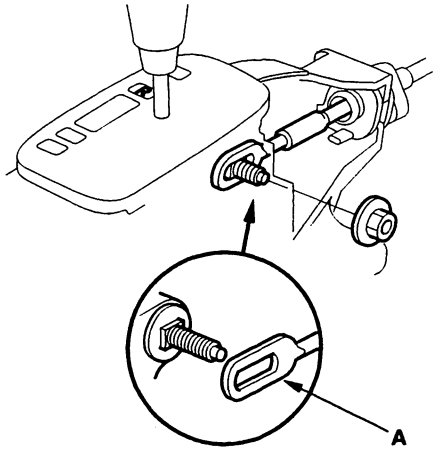

6. Rotate the socket holder (A) on the shift cable (B) counterclockwise a quarter turn, then slide the holder to remove the shift cable from the shift lever bracket base (C).

   NOTE: Do not remove the shift cable by twisting the shift cable guide pipe (D).

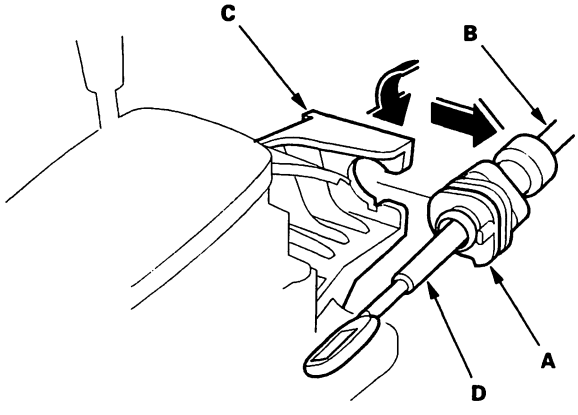

7. Remove the floor heat shield.

8. Remove the shift cable guide bracket (A) and grommet (B).

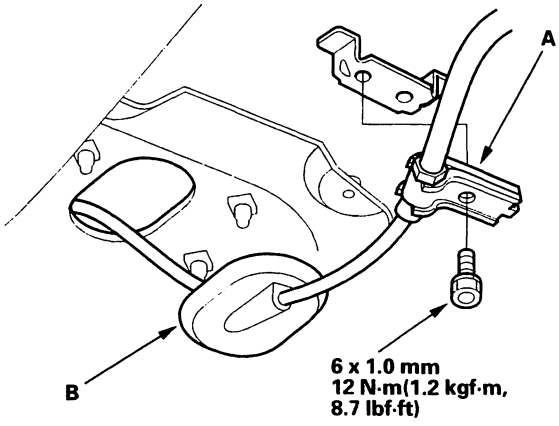

9. Remove the bolts securing the shift cable holder (A), then remove the shift cable cover (B).

   NOTE: To prevent damage to the control lever joint, remove the bolts securing the shift cable holder before removing the bolts securing the shift cable cover.

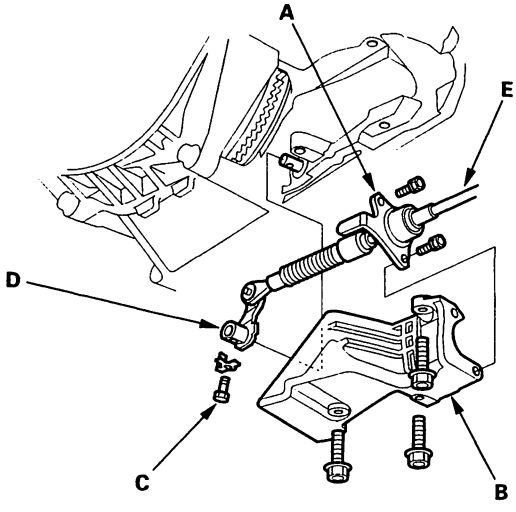

10. Remove the lock bolt (C) securing the control lever (D), then remove the shift cable (E) with the control lever.

(cont'd)

Shift Cable Replacement (cont'd)

11. Insert the new shift cable through the grommet hole, then install the shift cable guide bracket.

12. Verify that the transmission is in R position on the control shaft.

13. Install the control lever (A) with the shift cable (B) on the control shaft (C). Do not bend the shift cable excessively.

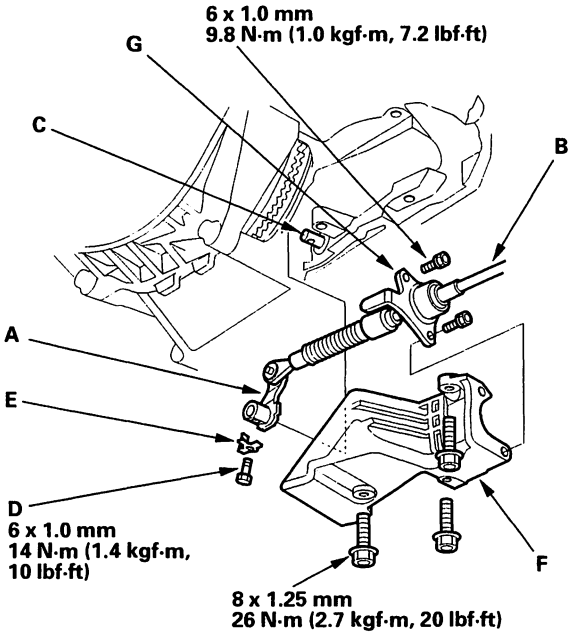

14. Install the lock bolt (D) with a new lock washer (E), then bend the lock washer tab against the bolt.

15. Install the shift cable cover (F), then install the shift cable holder (G) on the cover.

    NOTE: To prevent damage to the control lever joint, be sure to install the shift cable holder after installing the shift cable cover to the torque converter housing.

16. Install the floor heat shield.

17. Turn the ignition switch ON (II), and verify that the R position indicator light comes on.

18. If necessary, push the shift cable until it stops, then release your hand. Pull the shift cable back one step so that the shift position is in R.

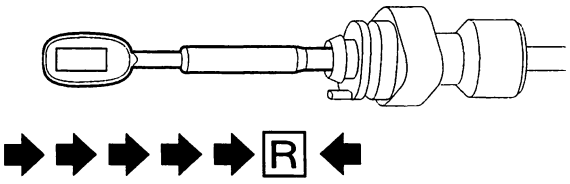

19. Turn the ignition switch OFF.

20. Insert a 6.0 mm (0.24 in.) pin (A) into the positioning hole (B) on the shift lever bracket base through the positioning hole on the shift lever assembly.

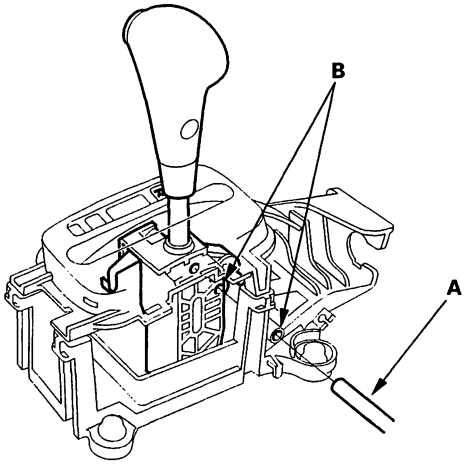

BACK

21. Rotate the socket holder (A) on the shift cable (B) counterclockwise a quarter turn, then slide the holder onto the shift lever bracket base (C). Install the shift cable end (D) over the mounting stud (E) by aligning its square hole (F) with the square shape (G) at the bottom of the stud. Rotate the holder clockwise a quarter turn to secure the shift cable.

NOTE: Do not install the shift cable by twisting the shift cable guide (H).

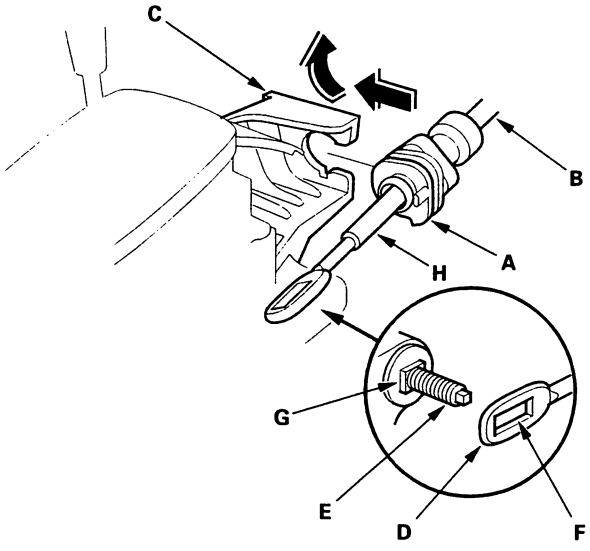

22. Verify that the shift cable end (A) is properly installed on the mounting stud (B).

Properly Installed:

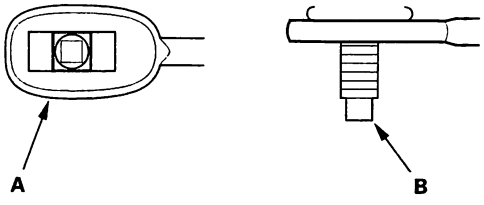

Not Properly Installed:

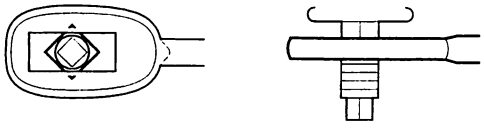

Cable end rides on the bottom of the mounting stud.

23. If not properly installed, remove the shift cable from the shift lever bracket base, and reinstall the shift cable. Do not install the shift cable end on the mounting stud while the shift cable is on the shift cable bracket base.

24. Install the tighten the nut.

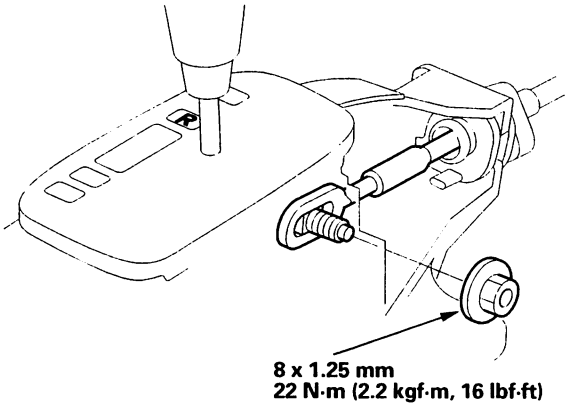

25. Remove the 6.0 mm (0.24 in.) pin that was installed to hold the shift lever.

26. Move the shift lever to each gear, and verify that the A/T gear position indicator follows the transmission range switch.

27. Start the engine, and check the shift lever operation in all gears.

Shift Cable Adjustment

1. Shift the transmission into R position.
2. Remove the console panel (see page 20-83).
3. Remove the nut securing the shift cable end (A), then separate the shift cable end from the shift lever assembly.

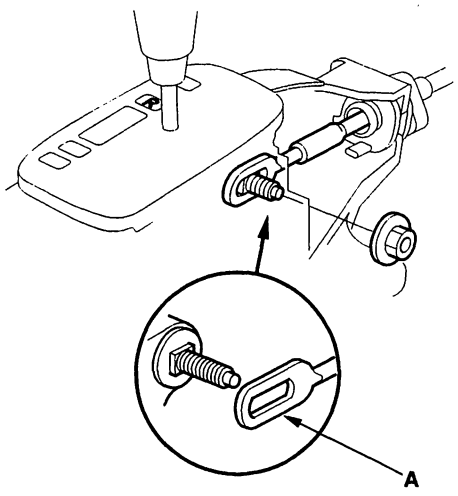

4. Rotate the socket holder (A) on the shift cable (B) counterclockwise a quarter turn, then slide the holder to remove the shift cable from the shift lever bracket base (C).

   NOTE: Do not remove the shift cable by twisting the shift cable guide (D).

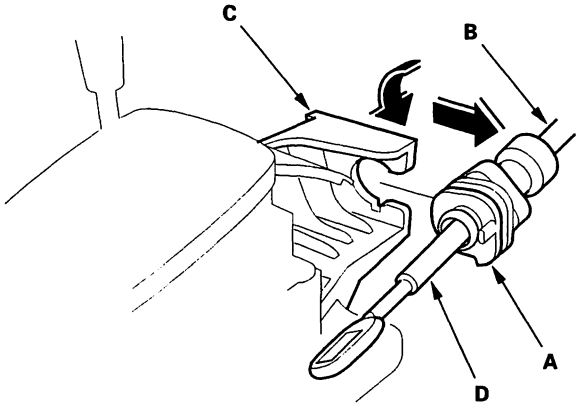

5. Push the shift cable until it stops, then release your hand. Pull the shift cable back one step so that the shift position is in R.

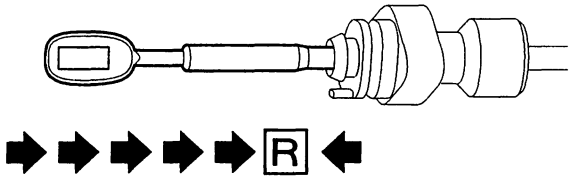

6. Turn the ignition switch ON (II), and verify that the R position indicator light comes on.
7. Turn the ignition switch OFF.
8. Insert a 6.0 mm (0.24 in.) pin (A) into the positioning hole (B) on the shift lever bracket base through the positioning hole on the shift lever assembly.

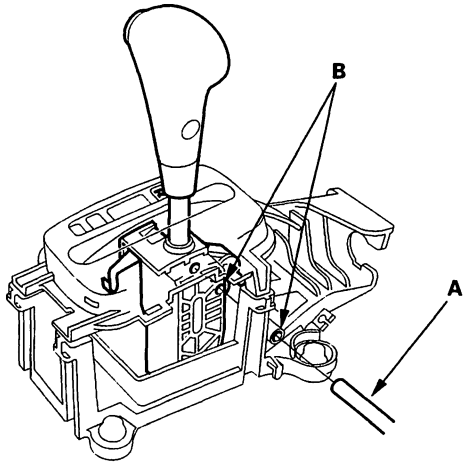

BACK

9. Rotate the socket holder (A) on the shift cable (B) counterclockwise a quarter turn, then slide the holder onto the shift lever bracket base (C). Install the shift cable end (D) over the mounting stud (E) by aligning its square hole (F) with the square shape (G) at the bottom of the stud. Rotate the holder clockwise a quarter turn to secure the shift cable.

   NOTE: Do not install the shift cable by twisting the shift cable guide (H).

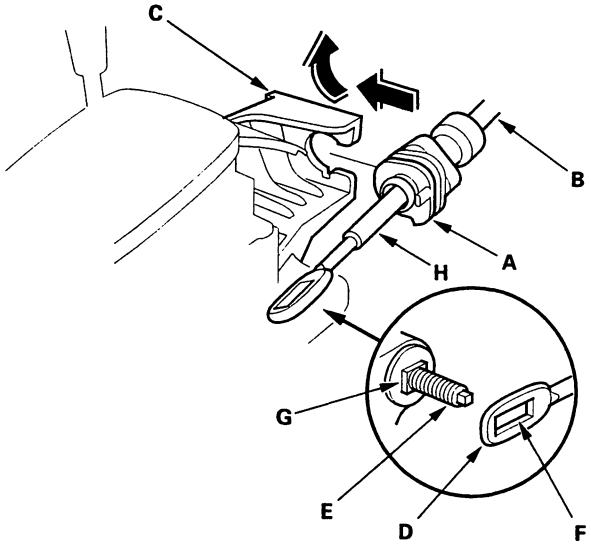

10. Verify that the shift cable end (A) is properly installed on the mounting stud (B).

Properly Installed:

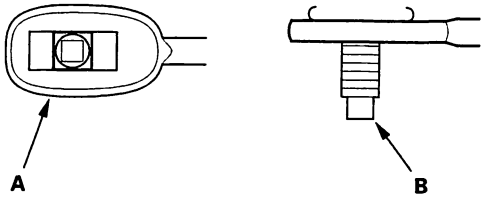

Not Properly Installed:

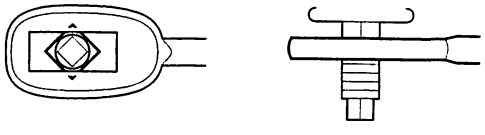

Cable end rides on the bottom of the mounting stud.

11. If not properly installed, remove the shift cable from the shift lever bracket base, and reinstall the shift cable. Do not install the shift cable end on the mounting stud while the shift cable is on the shift cable bracket base.

12. Install and tighten the nut.

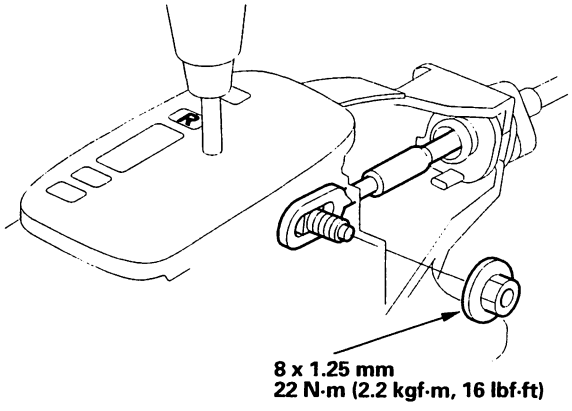

13. Remove the 6.0 mm (0.24 in.) pin that was installed to hold the shift lever.

14. Move the shift lever to each gear, and verify that the A/T gear position indicator follows the transmission range switch.

15. Push the shift lock release, and verify that the shift lever releases.

A/T Gear Position Indicator

Component Location Index

A/T GEAR POSITION INDICATOR
Indicator Input Test, page 14-141
Indicator Bulb Replacement, page 14-142

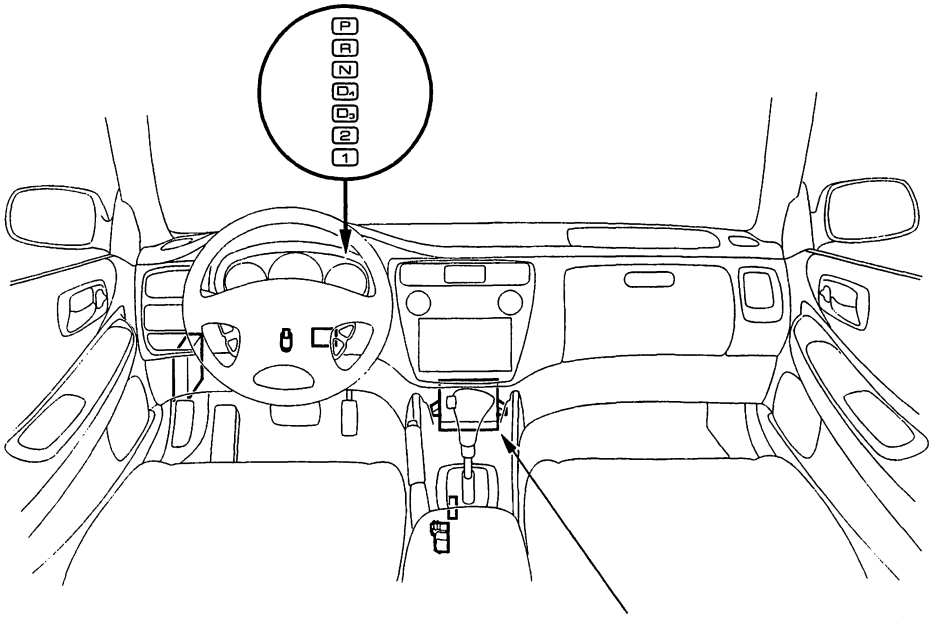

POWERTRAIN CONTROL MODULE (PCM)

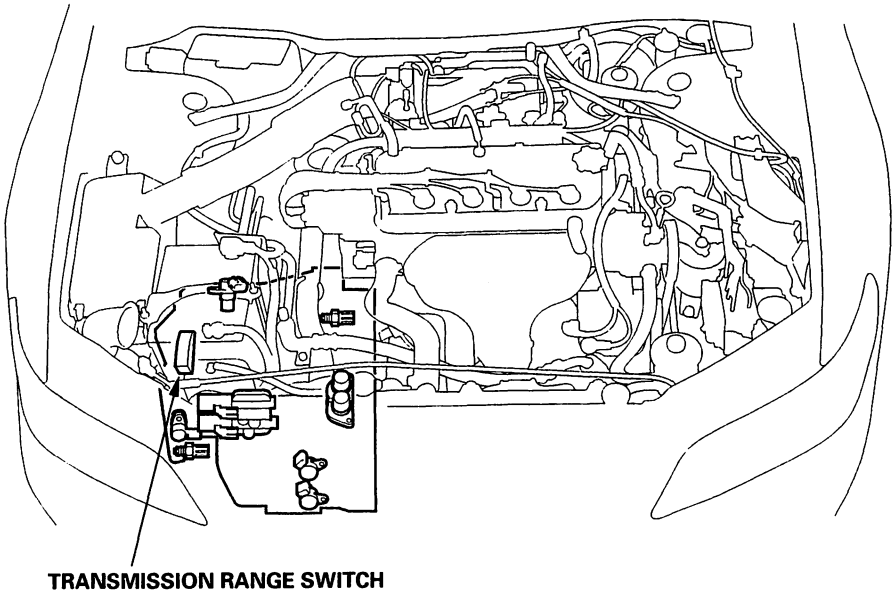

TRANSMISSION RANGE SWITCH
Test, page 14-138
Replacement, page 14-139

BACK

Circuit Diagram

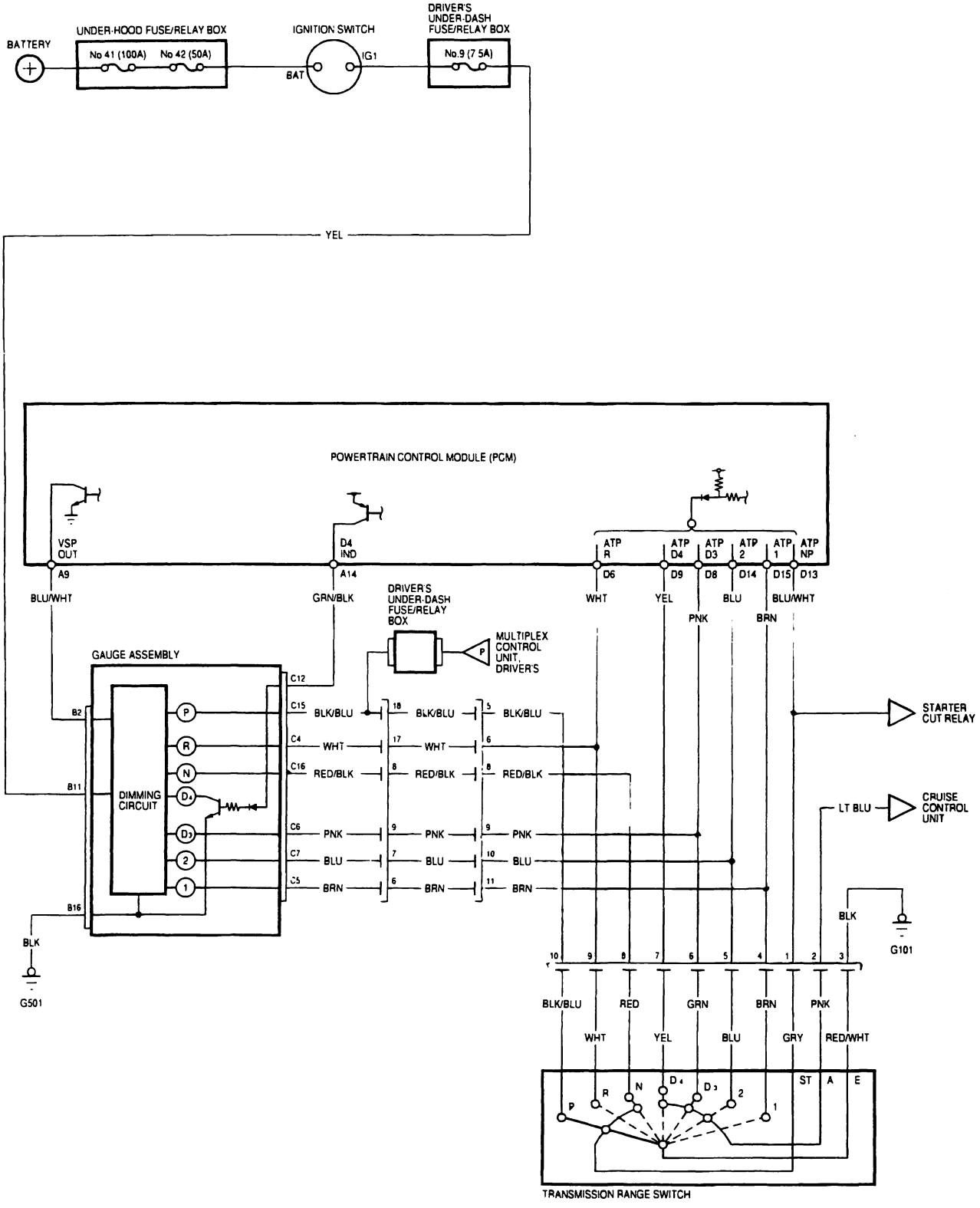

Transmission Range Switch Test

1. Remove the transmission range switch connector (A) from the connector bracket (B), then disconnect the transmission range switch connector.

2. Check for continuity between the terminals in each switch position according to the table below.

   NOTE: Terminal No.1: Neutral position switch

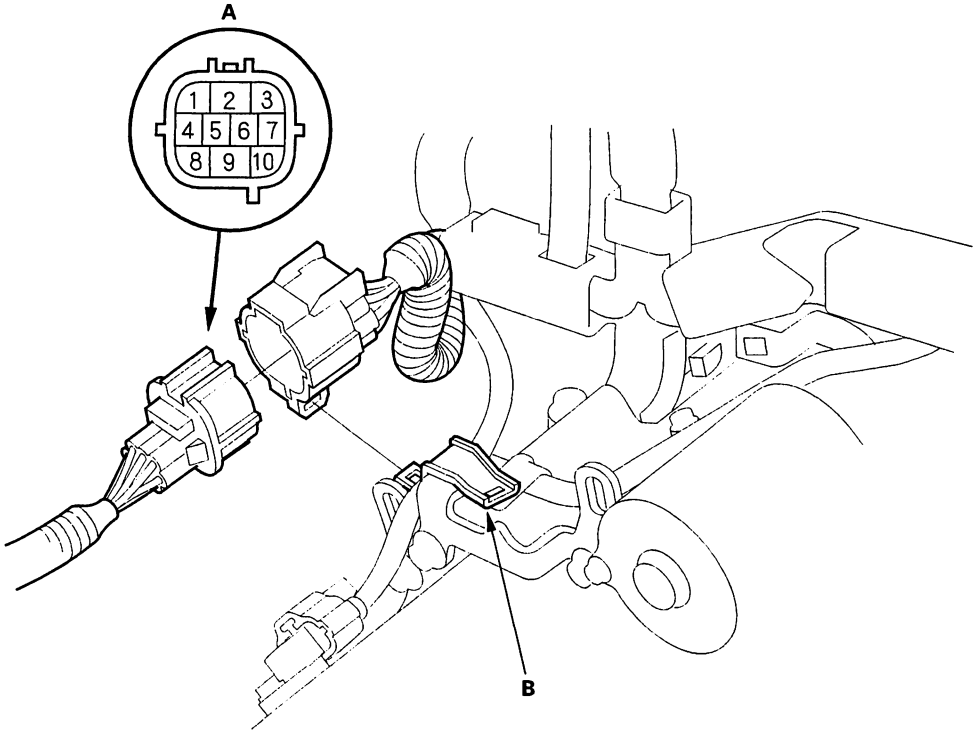

Transmission Range Switch Continuity Check

Position \ Terminal	1	2	3	4	5	6	7	8	9	10
P	○		○							○
R			○						○	
N	○		○					○		
D4		○	○				○			
D3		○	○			○				
2		○	○		○					
1			○	○						

BACK

Transmission Range Switch Replacement

1. Raise the front of the vehicle, and make sure it is securely supported (see page 1-17).

2. Set the parking brake, and block both rear wheels securely.

3. Shift to N position.

4. Remove the transmission range switch connector (A) from the connector bracket (B), then disconnect transmission range switch connector.

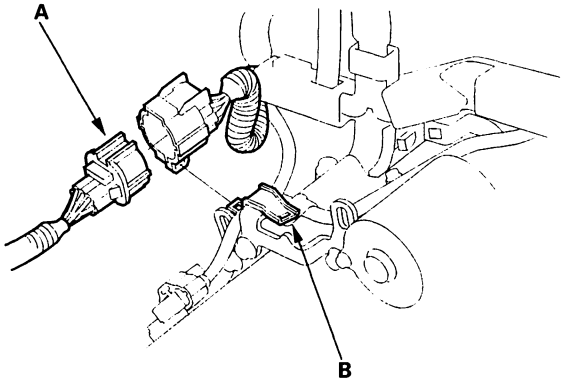

5. Remove the clamp from clamp bracket on the transmission housing, and remove the harness clamp (A) from the end cover (B).

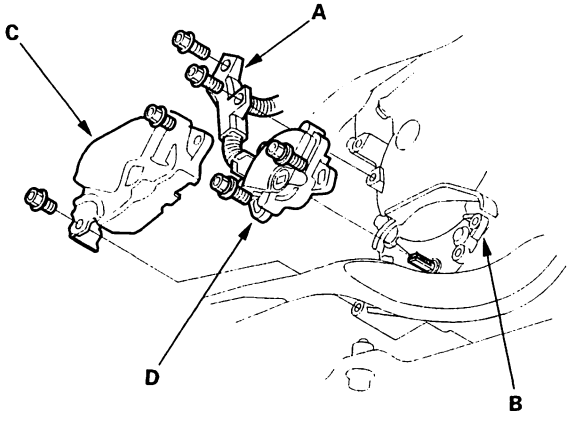

6. Remove the transmission range switch cover (C), then remove the transmission range switch (D) from the end cover.

7. Set the transmission range switch to N position.

   NOTE: The transmission range switch clicks in N position.

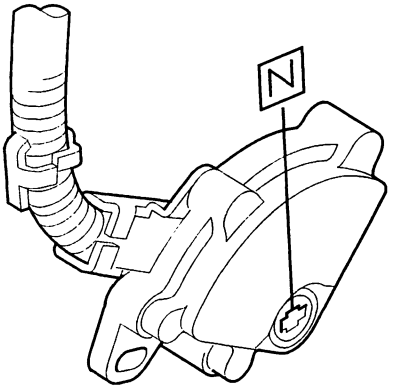

8. Set the control shaft to N position.

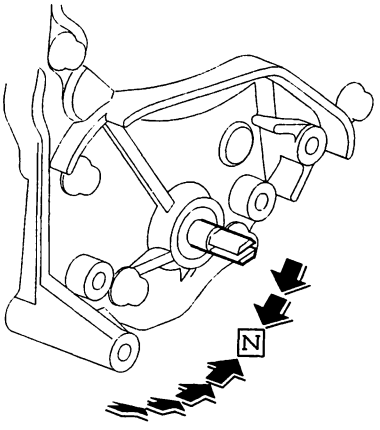

(cont'd)

Transmission Range Switch Replacement (cont'd)

9. Install the transmission range switch (A) gently on the control shaft (B), then secure it with the bolts.

   NOTE: Do not move the transmission range switch when tightening the bolts.

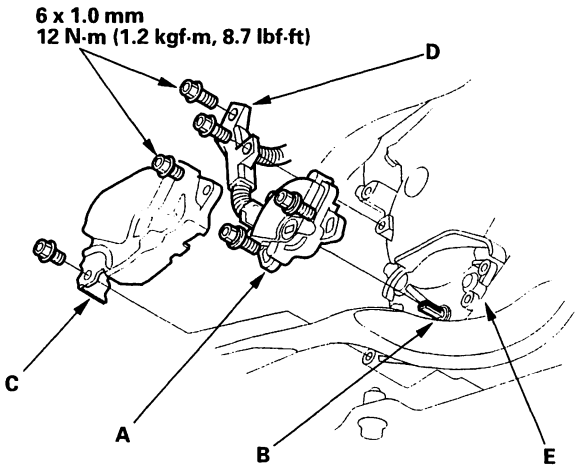

10. Install the transmission range switch cover (C) and the harness clamp (D) on the end cover (E).

11. Connect the transmission range switch connector (A), then install it on the connector bracket (B).

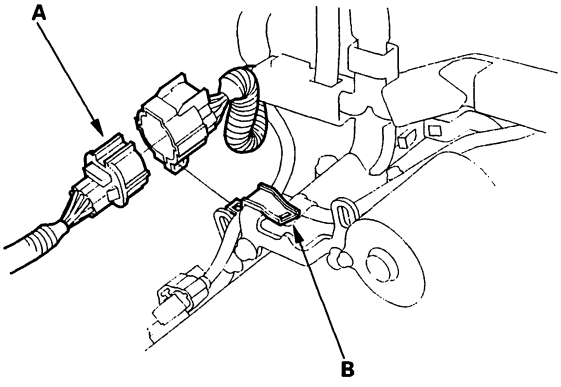

12. Turn the ignition switch ON (II). Move the shift lever through all gears, and check the transmission range switch synchronization with the A/T gear position indicator (A).

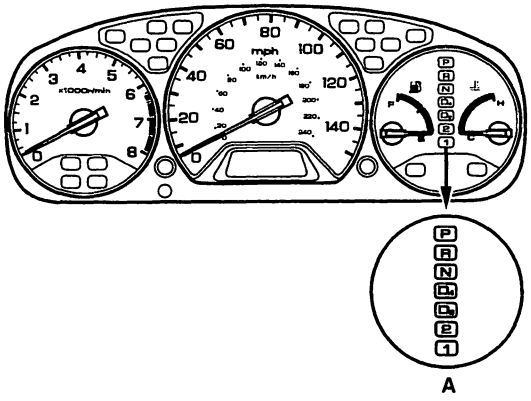

13. Start the engine. Move the shift lever through all gears, and verify the following:

   - The engine will not start in any position other than N or P.
   - The back-up lights come on when the shift lever is in R position.

BACK

Indicator Input Test

SRS components are located in this area. Review the SRS component locations, precautions, and procedures in the SRS section before performing repairs or service (see page 23-28).

1. Remove the instrument panel (see page 20-84).
2. Remove the gauge assembly from the dashboard (see page 22-68), then disconnect the gauge assembly B (22P) and C (16P) connectors.
3. Inspect the connectors and connector terminals to be sure they are all making good contact.
   - If the terminals are bent, loose, or corroded, repair them as necessary, and recheck the system.
   - If the terminals look OK, make the following input tests at the gauge assembly B (22P) and C (16P) connectors.
     - If a test indicates a problem, find a correct the cause, then recheck the system.
     - If all the input tests prove OK, but the indicator is faulty, replace the printed circuit board.

GAUGE ASSEMBLY CONNECTORS

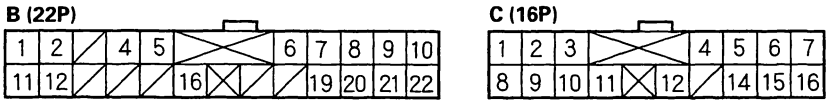

Wire side of female terminals

Cavity	Wire Color	Test Condition	Test: Desired Result	Possible Cause (If result is not obtained)
B11	YEL	Ignition switch ON (II)	Check for voltage to ground: There should be battery voltage.	• Blown No.9 (7.5 A) fuse in the driver's under-dash fuse/relay box • An open in the wire
B16	BLK	Under all conditions	Check for continuity to ground: There should be continuity.	• Poor ground (G501) • An open in the wire
C4	WHT	Ignition switch ON (II) and shift lever in R	Check for voltage to ground: There should be 1 V or less. NOTE: There should be battery voltage in any other shift lever position.	• Faulty transmission range switch • An open in the wire
C5	BRN	Ignition switch ON (II) and shift lever in 1		
C6	PNK	Ignition switch ON (II) and shift lever in D3		
C7	BLU	Ignition switch ON (II) and shift lever in 2		
C12	GRN/BLK	Ignition switch ON (II) and shift lever in D4	Check for voltage to ground: There should be battery voltage.	• Faulty transmission range switch • Faulty PCM • An open in the wire
C15	BLK/BLU	Shift lever in P	Check for continuity to ground: There should be no continuity in any other shift lever position.	• Faulty transmission range switch • An open in the wire
C16	RED/BLK	Ignition switch ON (II) and shift lever in N	Check for voltage to ground: There should be 1 V or less. NOTE: There should be battery voltage in any other shift lever position.	

Indicator Bulb Replacement

SRS components are located in this area. Review the SRS component locations, precautions, and procedures in the SRS section before performing repairs or service (see page 23-28).

1. Remove the instrument panel (see page 20-84).
2. Remove the gauge assembly, and disassemble it (see page 22-68).
3. Replace the bulbs (A) at the gauge assembly (B).

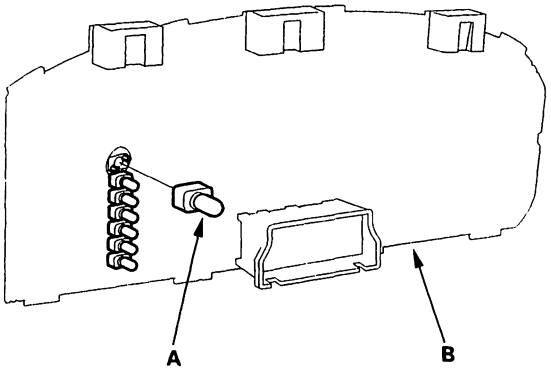

BACK

Component Location Index

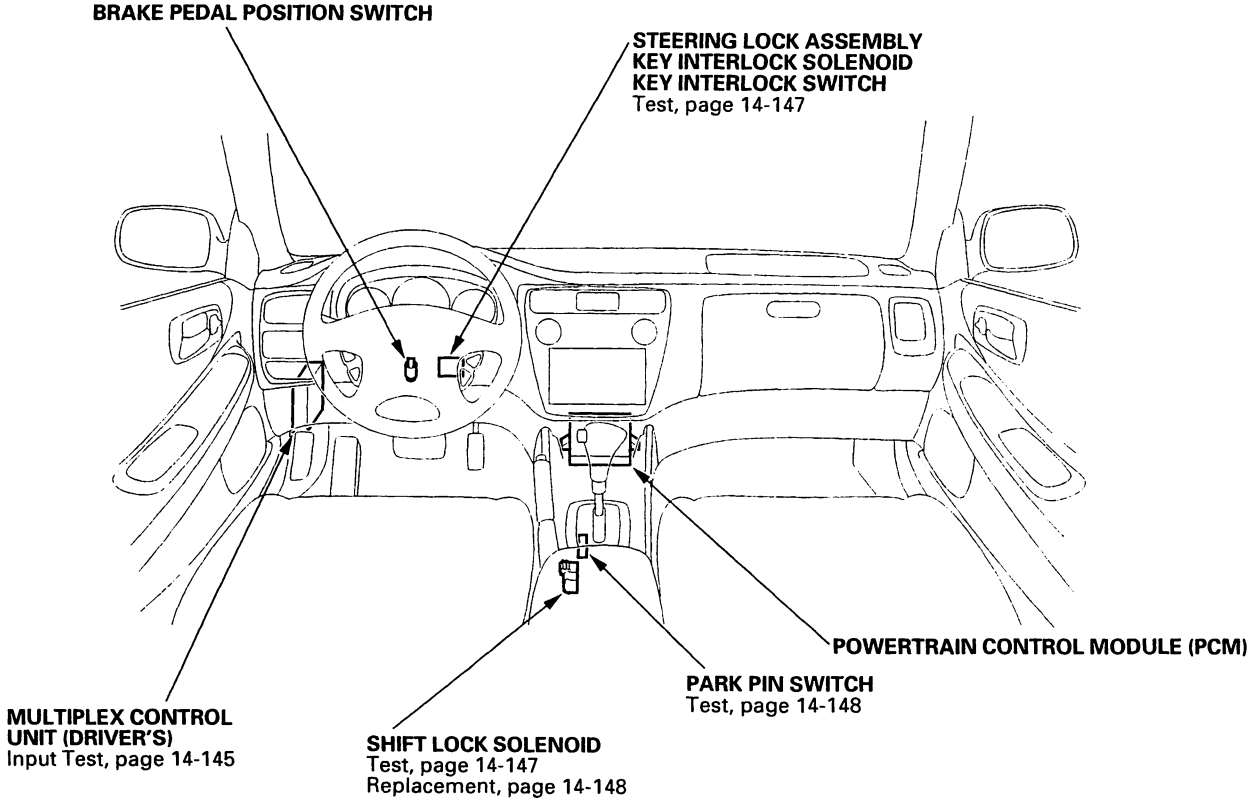

A/T Interlock System

Circuit Diagram

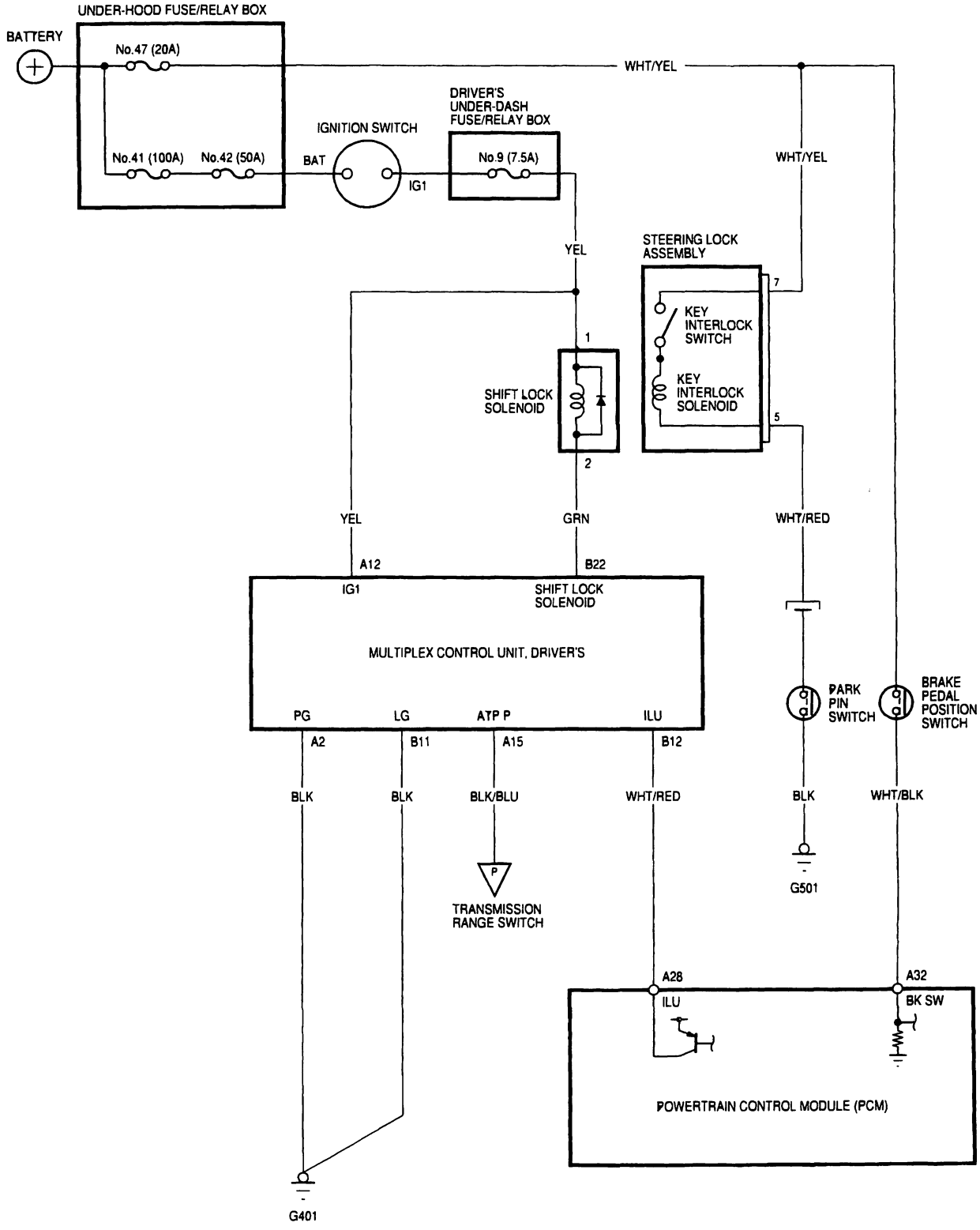

BACK

Control Unit Input Test

SRS components are located in this area. Review the SRS component locations, precautions, and procedures in the SRS section before performing repairs or service (see page 23-28).

1. Disconnect the multiplex control unit 22P connector driver's, then remove the multiplex control unit (driver's) from the driver's under-dash fuse/relay box.

2. Inspect the connectors and connector terminals to be sure they are all making good contact.

   - If the terminals are bent, loose, or corroded, repair them as necessary, and recheck the system.
   - If the terminals look OK, go to step 3.

   NOTE: If the shift lock solenoid clicks when the ignition switch is turned ON (II) while depressing the brake pedal with the shift lever in [P] position, the shift lock system is OK. If the shift lever cannot be shifted from [P] position, test the transmission range switch.

3. With the driver's unit still disconnected from its connector and the fuse/relay box, make these input test at its connector or its fuse/relay box socket.

   - If a test indicates a problem, find and correct the cause, then recheck the system.
   - If all the input tests prove OK, go to step 4.

(cont'd)

Control Unit Input Test (cont'd)

MULTIPEX CONTROL UNIT, DRIVER'S CONNECTORS

A (24P)

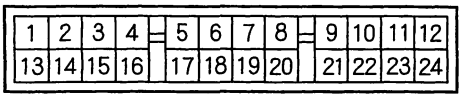

Terminal side of male terminals

B (22P)

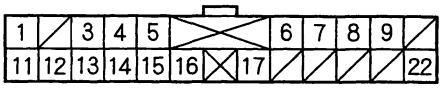

Wire side of female terminals

Multiplex Control Unit (Driver's) 24P Connector

Cavity	Wire Color	Test Condition	Test: Desired Result	Possible Cause (If result is not obtained)
A3	———	Shift lever in P	Check for continuity to ground: There should be continuity.	• Faulty transmission range switch • Poor ground (G101) • An open in the wire
A12	———	Under all conditions	Check for voltage to ground: There should be battery voltage.	• Blown No.13 (7.5A) fuse in the passenger's under-dash fuse/relay • Faulty passenger's under-dash fuse/relay box • An open in the wire
A14	———	Under all conditions	Check for continuity to ground: There should be continuity.	• Poor ground (G401) • An open in the wire
A24	———	Ignition switch turned ON (II)	Check for voltage to ground: There should be battery voltage.	• Blown No.9 (7.5 A) fuse in the driver's under-dash fuse/relay box • Faulty driver's under-dash fuse/relay box

Multiplex Control Unit (Driver's) 22P Connector

Cavity	Wire Color	Test Condition	Test: Desired Result	Possible Cause (If result is not obtained)
B11	BLK	Under all conditions	Check for continuity to ground: There should be continuity.	• Poor ground (G503) • An open in the wire
B22	GRN	Ignition switch ON (II)	Check for voltage to ground: There should be battery voltage.	• Blown No.9 (7.5 A) fuse in the driver's under-dash fuse/relay box • Faulty shift lock solenoid • An open in the wire

4. Reconnect the connectors to the multiplex control unit (driver's), and make this input test.

Cavity	Wire Color	Test Condition	Test: Desired Result	Possible Cause (If result is not obtained)
B12	WHT/RED	Ignition switch ON (II), and brake pedal pushed	Check for voltage to ground: There should be battery voltage.	• Faulty brake pedal position switch • Faulty PCM • Faulty multiplex control unit (driver's) • An open in the wire
		Ignition switch ON (II), brake pedal and accelerator pedal pressed at the same time	Check for voltage to ground: There should be 1 V or less.	

- If a test indicates a problem, find and correct the cause, then recheck the system.
- If all the input tests prove OK, substitute a known-good multiplex control unit (driver's), and recheck the system. If the system is OK, the multiplex control unit (driver's) must be faulty; replace it.

BACK

Key Interlock Solenoid/Switch Test

SRS components are located in this area. Review the SRS component locations, precautions, and procedures in the SRS section before performing repairs or service (see page 23-28).

1. Remove the driver's dashboard lower cover (see page 20-84).

2. Disconnect the key switch 7P connector from the steering lock assembly.

3. Check for continuity between the No. 5 and No. 7 terminals when the key is pushed, and check for no continuity when the key is released.

KEY SWITCH CONNECTOR (7P)

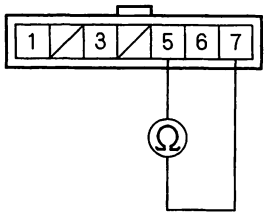

Terminal side of male terminals

4. Check that the key cannot be removed with power connected to the No. 7 terminal and ground connected to the No. 3 terminals.

   - If the key cannot be removed, the key interlock solenoid is OK.
   - If the key can be removed, replace the steering lock assembly (the key interlock solenoid is not available separately).

Shift Lock Solenoid Test

1. Remove the center console (see page 20-83).

2. Disconnect the shift lock solenoid 2P connector.

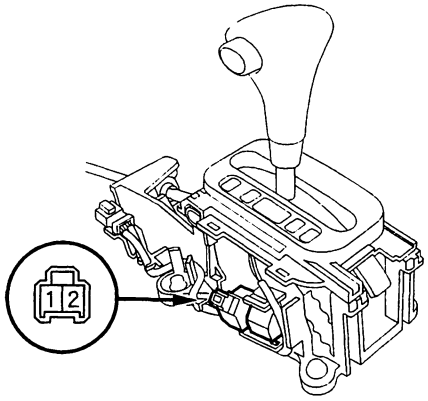

3. Connect the No. 1 terminal of the shift lock solenoid connector to the battery positive terminal, and connect the No. 2 terminal to the battery negative terminal.

4. Check that the shift lever can be moved from the P position. Release the battery terminals from the shift lock solenoid connector. Move the shift lever back to the P position, and make sure it locks.

   NOTE: Do not connect power to the No. 2 terminal (reverse polarity) or you will damage the diode inside the solenoid.

5. Check that the shift lock releases when the release lever is pushed, and check that it locks when the release lever is released.

6. If the solenoid does not work, replace it.

Shift Lock Solenoid Replacement

1. Remove the center console (see page 20-83).
2. Disconnect the shift lock solenoid 2P connector.
3. Pry the shift lock solenoid clamp (A) with a screwdriver, then remove the shift lock solenoid (B).

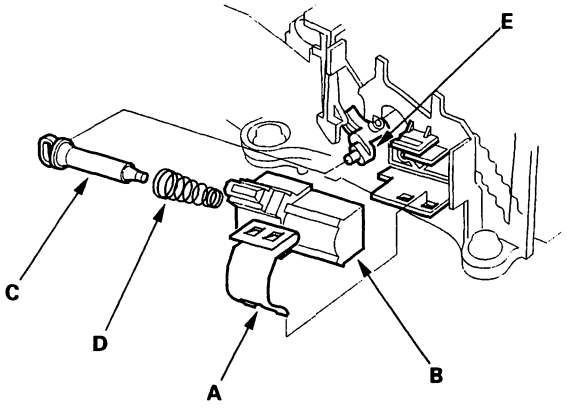

4. Install the shift lock solenoid plunger (C) and plunger spring (D) in the new shift lock solenoid.
5. Install the shift lock solenoid by aligning the joint of the shift lock solenoid with the tip of the shift lock stop (E).
6. Secure the shift lock solenoid with the clamp, then connect the shift lock solenoid connector.

Park Pin Switch Test

1. Remove the center console (see page 20-83).
2. Disconnect the park pin 4P connector.

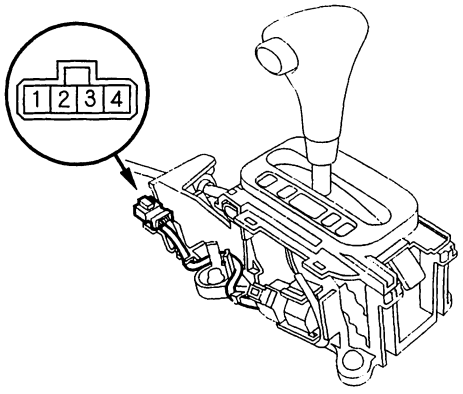

3. Shift the shift lever into the P position, then check for continuity between the No.3 and No.4 terminals. There should be no continuity.
4. Shift the shift lever out of the P position, and check for continuity between the terminals in step 3. There should be continuity.
5. If the park pin switch is faulty, replace the shift lever bracket base.

   NOTE: The park pin switch is not available separately from the shift lever bracket base.

BACK

End Cover and Idler Gears Removal

Exploded View

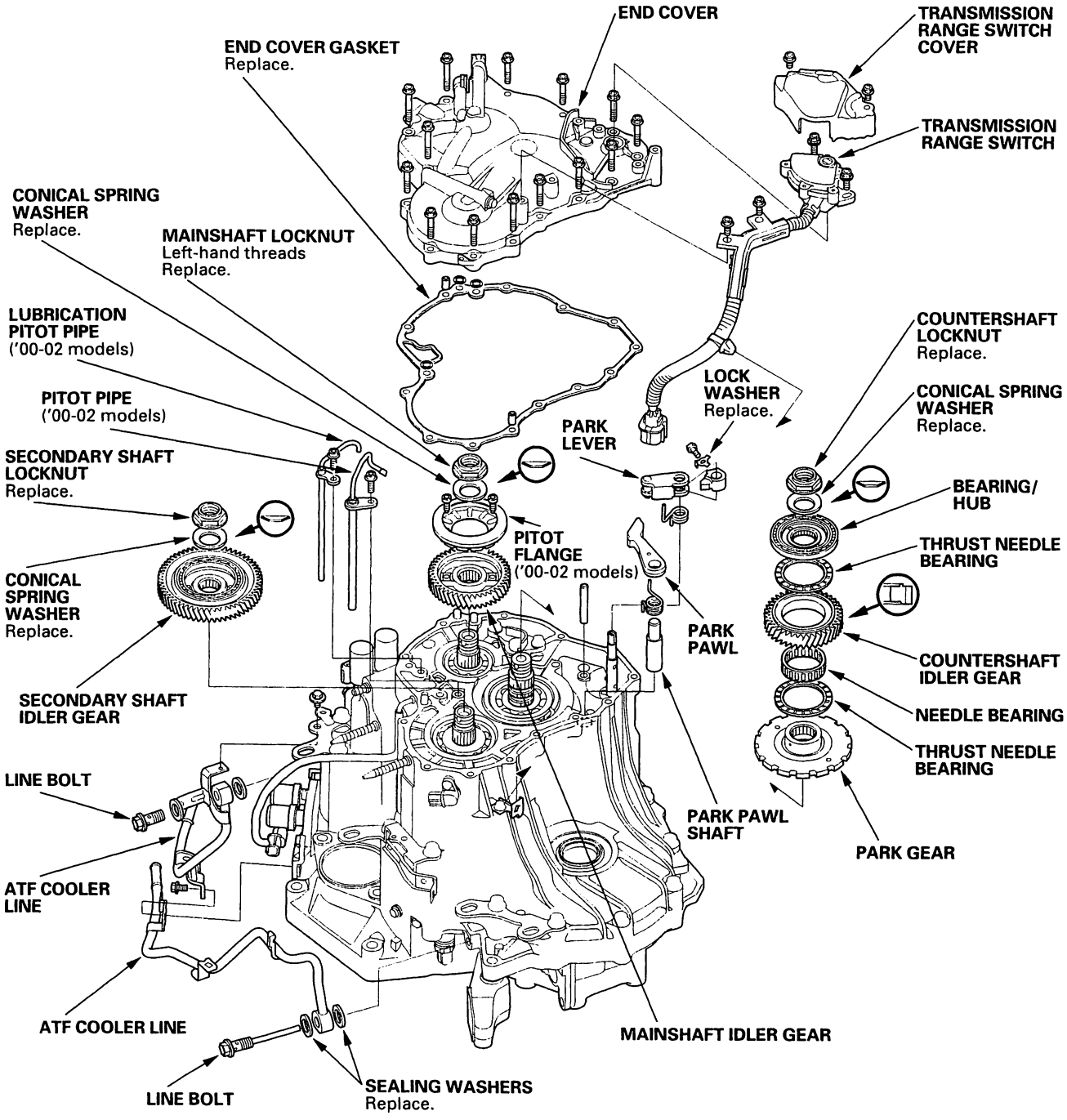

(cont'd)

End Cover and Idler Gears Removal (cont'd)

Special Tools Required
Mainshaft holder 07GAB-PF50101 or 07GAB-PF50100

NOTE: Refer to the Exploded View as needed during this procedure.

1. Remove the transmission range switch cover.
2. Remove the bolts securing the harness clamp (two bolts), then remove the transmission range switch.
3. Remove the bolts securing the end cover (14 bolts), then remove the cover.
4. For '00-02 models: Remove the lubrication pitot pipe (A) and the pitot pipe (B), then remove the pitot flange (C) from the mainshaft 1st gear (D).

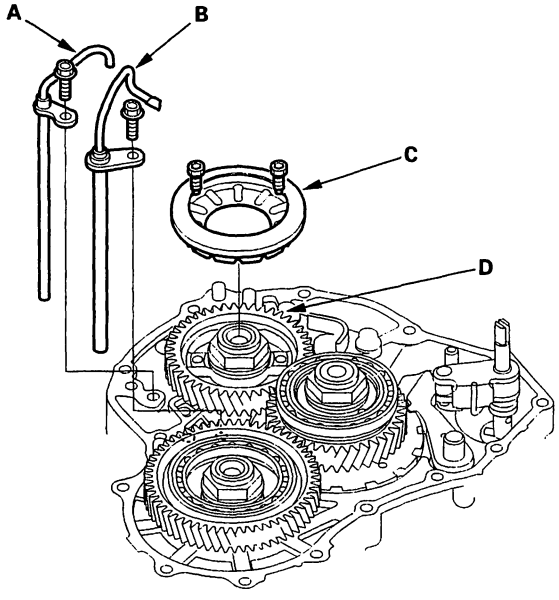

5. Slip the special tool onto the mainshaft.

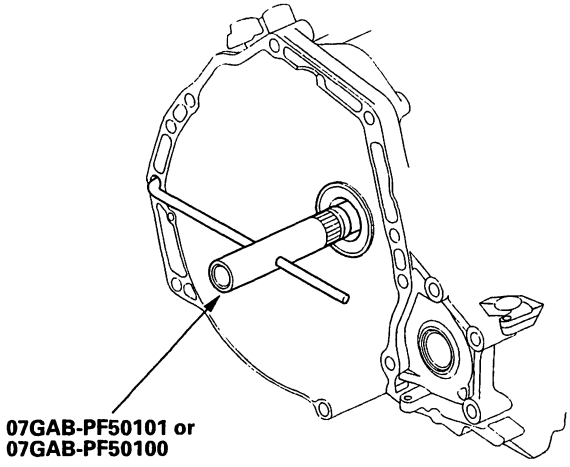

6. Engage the park pawl with the park gear.

BACK

7. Cut the lock tabs (A) of each shaft locknut (B) using a chisel (C). Then remove the locknuts and conical spring washers from each shaft.

   NOTE:
   - Mainshaft locknut has left-hand threads.
   - Clean the old locknuts; they are used to install the press fit idler gears on the mainshaft and secondary shaft, and the park gear and bearing hub on the countershaft.
   - Keep all of the chiseled particles out of the transmission.

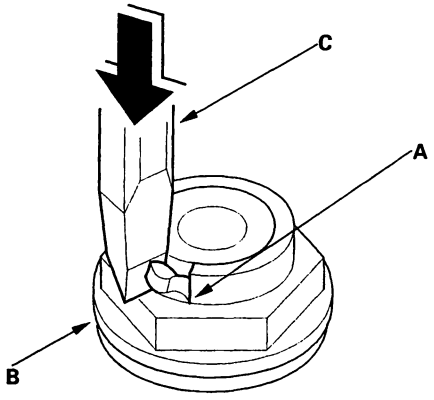

8. Remove the special tool (mainshaft holder) from the mainshaft.

9. Remove the mainshaft idler gear (A) and the secondary shaft idler gear (B) with a puller (C).

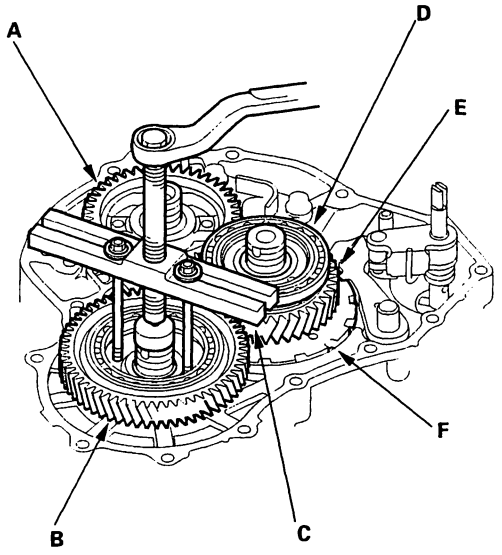

10. With the puller, remove the bearing hub (D) from the countershaft, then remove the countershaft idler gear (E) and bearings.

11. Remove the park gear (F) with the puller.

12. Remove the park pawl, spring, shaft, and shaft stop.

13. Remove the park lever from the control shaft.

14. Remove the line bolts, then remove the ATF cooler lines.

Park Lever Stop Inspection and Adjustment

1. Set the park lever in the P position.

2. Measure the distance (A) between the park pawl shaft (B) and the park lever roller pin (C).

   STANDARD:
   69.5 – 70.5 mm (2.74 – 2.78 in.)

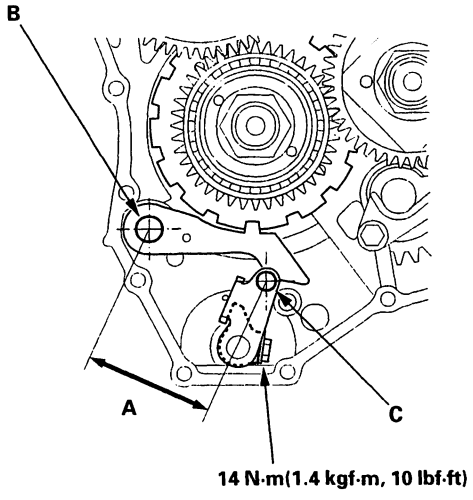

3. If the measurement is out of tolerance, select and install the appropriate park lever stop (A) from the table below.

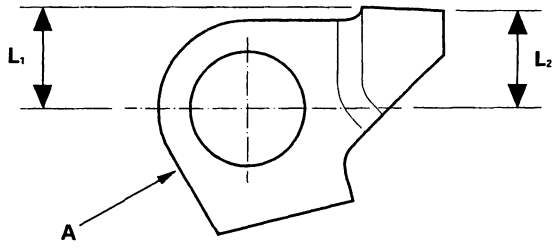

PARK LEVER STOP

Mark	Part Number	L_1	L_2
1	24537-PA9-003	11.00 mm (0.433 in.)	11.00 mm (0.433 in.)
2	24538-PA9-003	10.80 mm (0.425 in.)	10.65 mm (0.419 in.)
3	24539-PA9-003	10.60 mm (0.417 in.)	10.30 mm (0.406 in.)

4. After replacing the park lever stop, make sure the distance is within tolerance.

BACK

Housing and Shaft Assemblies Removal

Exploded View

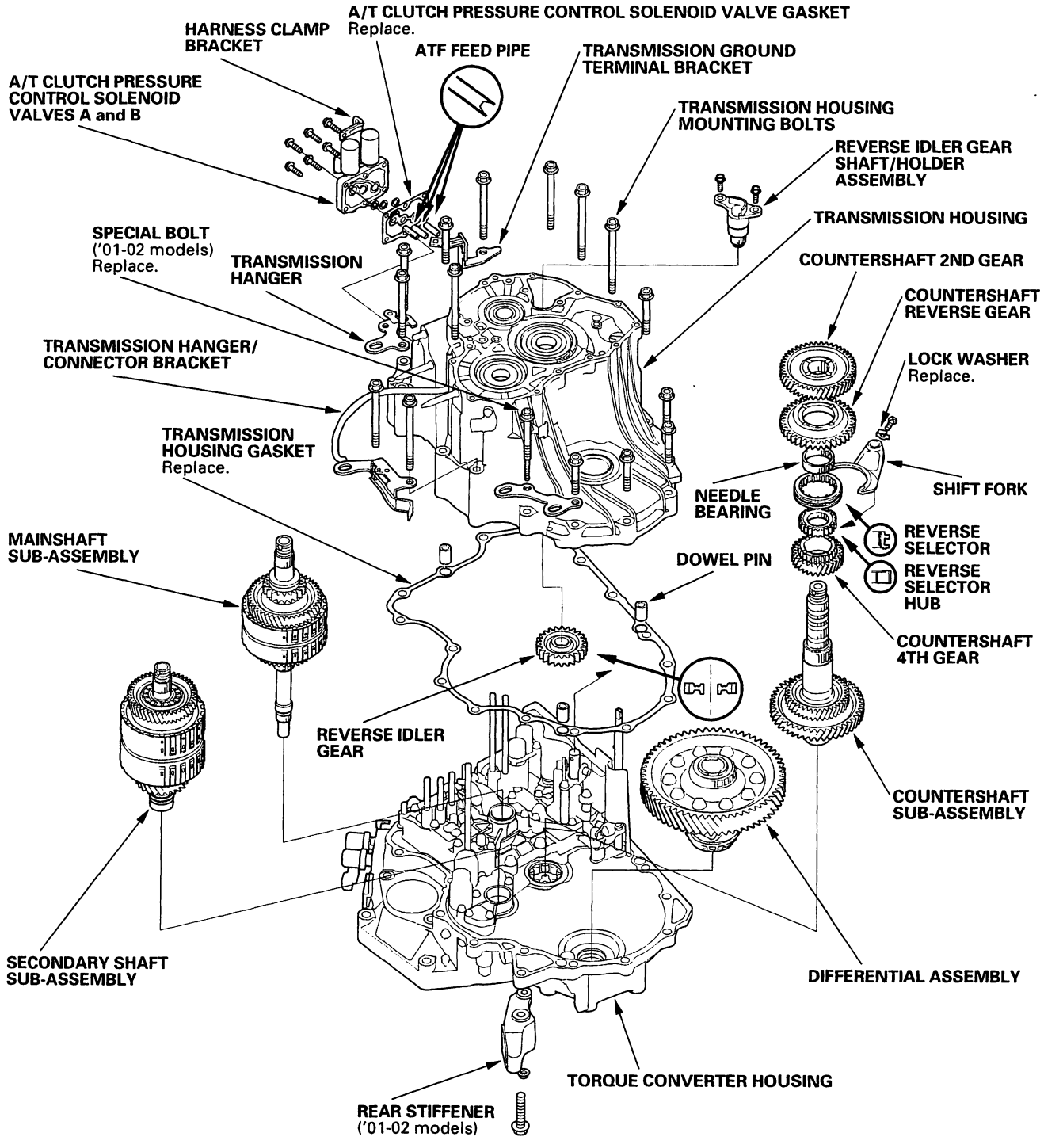

(cont'd)

Housing and Shaft Assemblies Removal (cont'd)

Special Tools Required
Housing puller 07HAC-PK40102

NOTE: Refer to the Exploded View as needed during this procedure.

1. Remove the A/T clutch pressure control solenoid valves A and B.

2. Remove the transmission housing mounting bolts.

   - '98-00 models:
     Remove the 16 bolts, hangers, and brackets.
   - '01-02 models:
     Remove the rear stiffener and special bolt, then remove 15 bolts, hanger, and brackets.

3. Install a 5 x 0.8 mm bolt (A) in the reverse idler gear shaft (B), then remove the reverse idler gear shaft/ holder assembly (C).

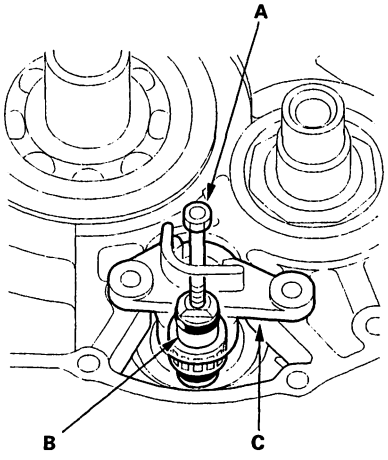

4. When removing the transmission housing from the torque converter housing, move the reverse idler gear out of way of the countershaft 2nd gear in the direction shown.

   NOTE: The transmission housing will not separate from the torque converter housing if the reverse idler gear is not moved.

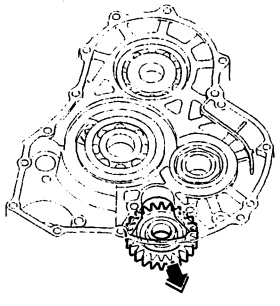

5. Align the spring pin (A) on the control shaft (B) with the transmission housing groove (C) by turning the control shaft.

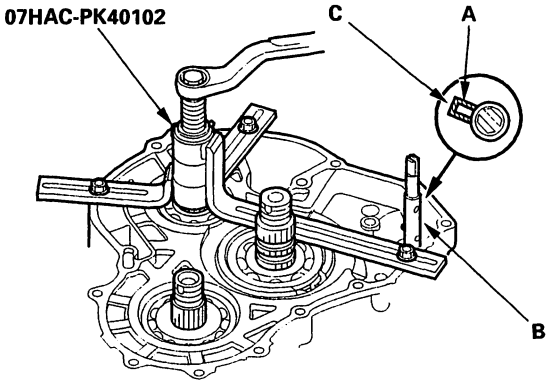

6. Install the special tool over the mainshaft, then remove the transmission housing.

   NOTE: If the top arm of your housing puller is too short, replace it with Housing Puller Arm, 205 mm, 07SAC-P0Z0101.

7. Remove the reverse idler gear from the transmission housing.

8. Remove the countershaft 2nd gear, then slide and remove the countershaft reverse gear and the needle bearing.

9. Remove the bolt securing the shift fork, then remove the shift fork, reverse selector, reverse selector hub, and countershaft 4th gear.
   If the reverse selector hub is press-fitted, leave it and 4th gear on the countershaft.

10. Remove the secondary shaft sub-assembly.
    If the reverse selector hub is press-fitted, remove the secondary shaft sub-assembly, countershaft sub-assembly and mainshaft sub-assembly together.

11. Remove the mainshaft sub-assembly.

12. Remove the countershaft sub-assembly.

13. Remove the differential assembly.

BACK

Bearing Replacement

Special Tools Required
- Driver 07749-0010000
- Driver 07949-3710001
- Driver attachment 07JAD-PH80101
- Attachment, 72 x 75 mm, 07746-0010600

NOTE: Coat all parts with ATF before assembly.

1. To remove the mainshaft bearing (A), countershaft bearing (B), and secondary shaft bearing (C) from the transmission housing, expand each snap ring with the snap ring pliers, then push the bearing out using the special tools and a press.

   NOTE: Do not remove the snap rings unless it's necessary to clean the grooves in the housing.

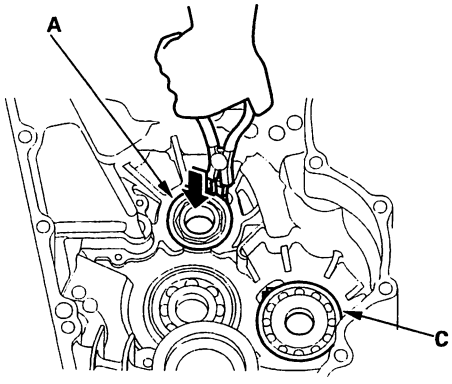

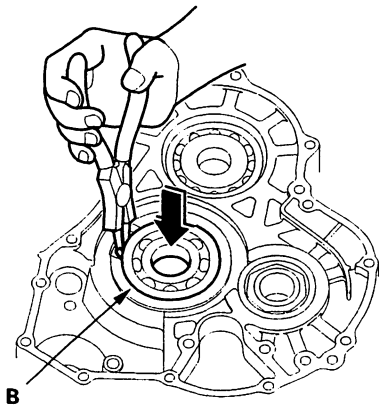

2. Install the bearings in the direction shown.

3. Expand each snap ring with the snap ring pliers, and insert the bearing part-way into the housing using the special tools and a press.

4. Release the pliers, then push the bearing down into the housing until the snap ring snaps in place around it.

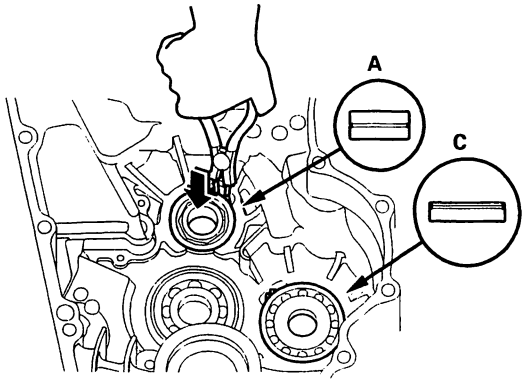

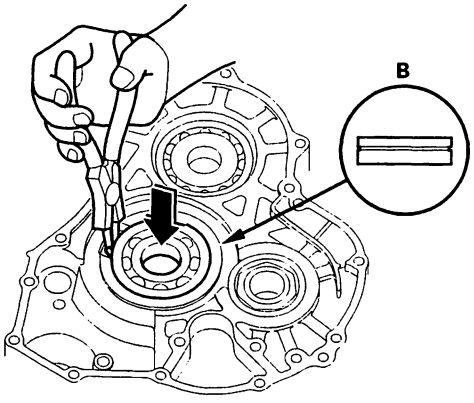

5. After installing the bearings verify the following:

   - The snap rings (A) are seated in the bearing and housing grooves.
   - The ring end gaps (B) are correct.

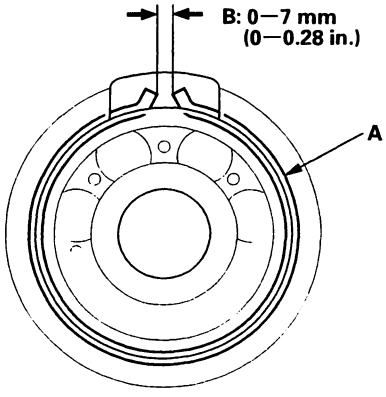

Valve Bodies and ATF Strainer Removal

Exploded View

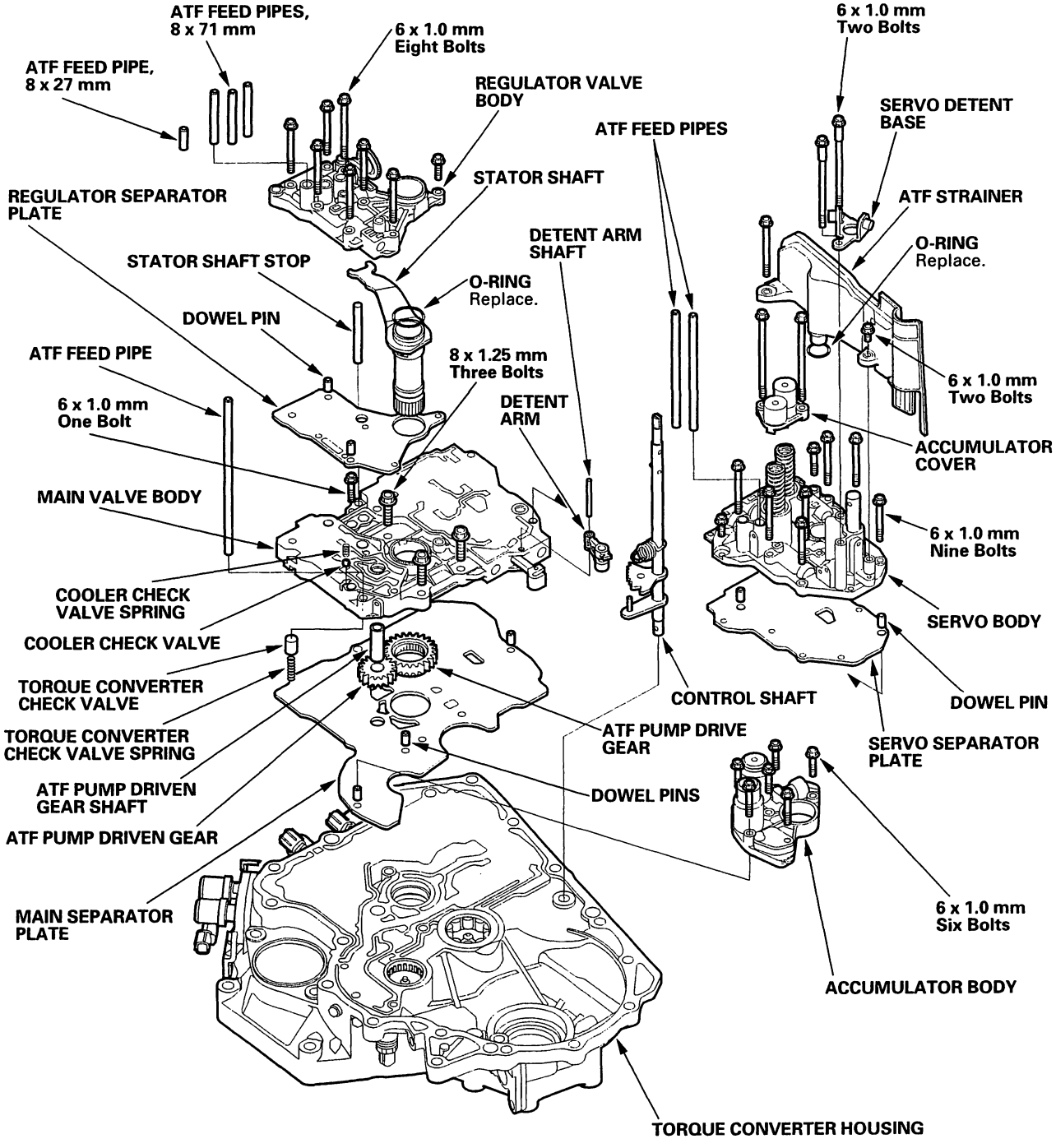

BACK

NOTE: Refer to the Exploded View as needed during this procedure.

1. Remove the ATF feed pipes from the main valve body, regulator valve body, and servo body.

2. Remove the servo detent base (two bolts).

3. Remove the ATF strainer (two bolts).

4. Remove the accumulator cover (two bolts).

   NOTE: The accumulator cover is spring loaded. To prevent stripping the threads in the servo body, press down on the accumulator cover while unscrewing the bolts in a crisscross pattern.

5. Remove the bolts securing the servo body (nine bolts), then remove the servo body and servo separator plate.

6. Remove the accumulator body (six bolts).

7. Remove the regulator valve body (eight bolts).

8. Remove the stator shaft and stator shaft stop.

9. Unhook the detent spring from the detent arm, then remove the detent arm shaft, detent arm, and control shaft.

10. Remove the cooler check valve spring and cooler check valve (steel ball).

11. Remove the main valve body (four bolts).

12. Remove the torque converter check valve and spring.

13. Remove the ATF pump driven gear shaft, then remove the ATF pump gears.

14. Remove the main separator plate and dowel pins (three).

15. Clean the inlet opening (A) of the ATF strainer (B) thoroughly with compressed air, then check that it is in good condition, and the inlet opening is not clogged or damaged.

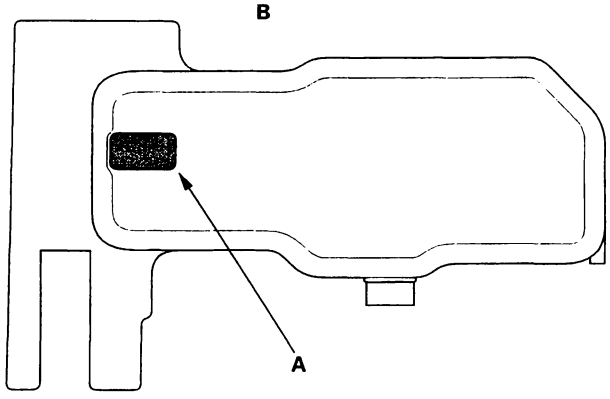

16. Test the ATF strainer by pouring clean ATF through the inlet opening, and replace it if it is clogged or damaged.

Valve Body Repair

NOTE: This repair is only necessary if one or more of the valves in a valve body do not slide smoothly in their bores. Use this procedure to free the valves.

1. Soak a sheet of # 600 abrasive paper in ATF for about 30 minutes.

2. Carefully tap the valve body so the sticking valve drops out of its bore. It may be necessary to use a small screwdriver to pry the valve free. Be careful not to scratch the bore with the screwdriver.

3. Inspect the valve for any scuff marks. Use the ATF-soaked # 600 paper to polish off any burrs that are on the valve, then wash the valve in solvent and dry it with compressed air.

4. Roll up half a sheet of ATF-soaked # 600 paper and insert it in the valve bore of the sticking valve. Twist the paper slightly, so that it unrolls and fits the bore tightly, then polish the bore by twisting the paper as you push it in and out.

   NOTE: The valve body is aluminum and doesn't require much polishing to remove any burrs.

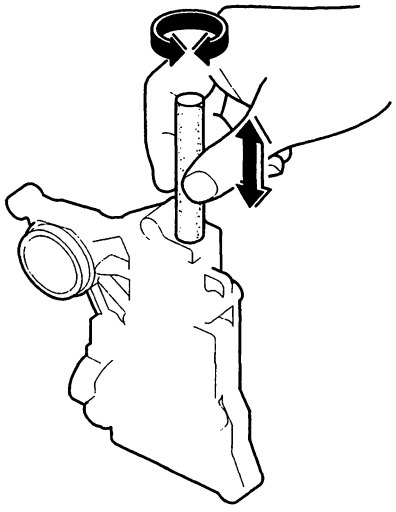

5. Remove the # 600 paper. Thoroughly wash the entire valve body in solvent, then dry it with compressed air.

6. Coat the valve with ATF, then drop it into its bore. It should drop to the bottom of the bore under its own weight. If not, repeat step 4, then retest. If the valve still sticks, replace the valve body.

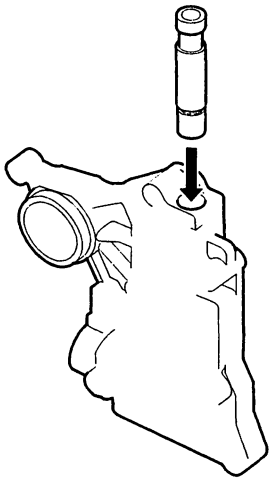

7. Remove the valve, and thoroughly clean it and the valve body with solvent. Dry all parts with compressed air, then reassemble using ATF as a lubricant.

BACK

Valve Body Valve Installation

1. Coat all parts with ATF before assembly.

2. Install the valves and springs in the sequence shown for the main valve body (see page 14-160), regulator valve body (see page 14-163), and servo body (see page 14-164). Refer to the following valve cap illustrations, and install each valve cap so the end shown facing up will be facing the outside of the valve body.

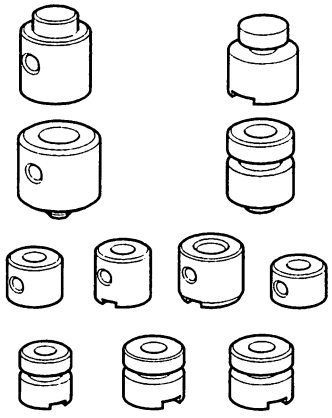

3. Install all the springs and seats. Insert the spring (A) in the valve, then install the valve in the valve body (B). Push the spring in with a screwdriver, then install the spring seat (C).

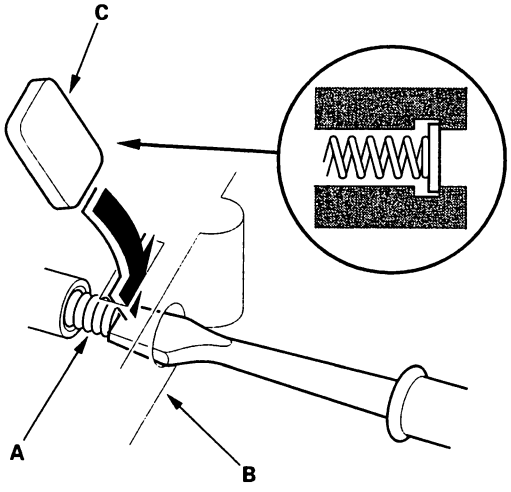

Main Valve Body Disassembly, Inspection, and Reassembly

1. Clean all parts thoroughly in solvent or carburetor cleaner, and dry them with compressed air. Blow out all passages.
2. Do not use a magnet to remove the check valve ball; it may magnetize the ball.
3. Check all valves for free movement. If any fail to slide freely, refer to Valve Body Repair (see page 14-158).
4. Replace the valve body as an assembly if any parts worn or damaged.
5. Coat all parts with ATF during assembly.
6. Install the filter in the direction shown.

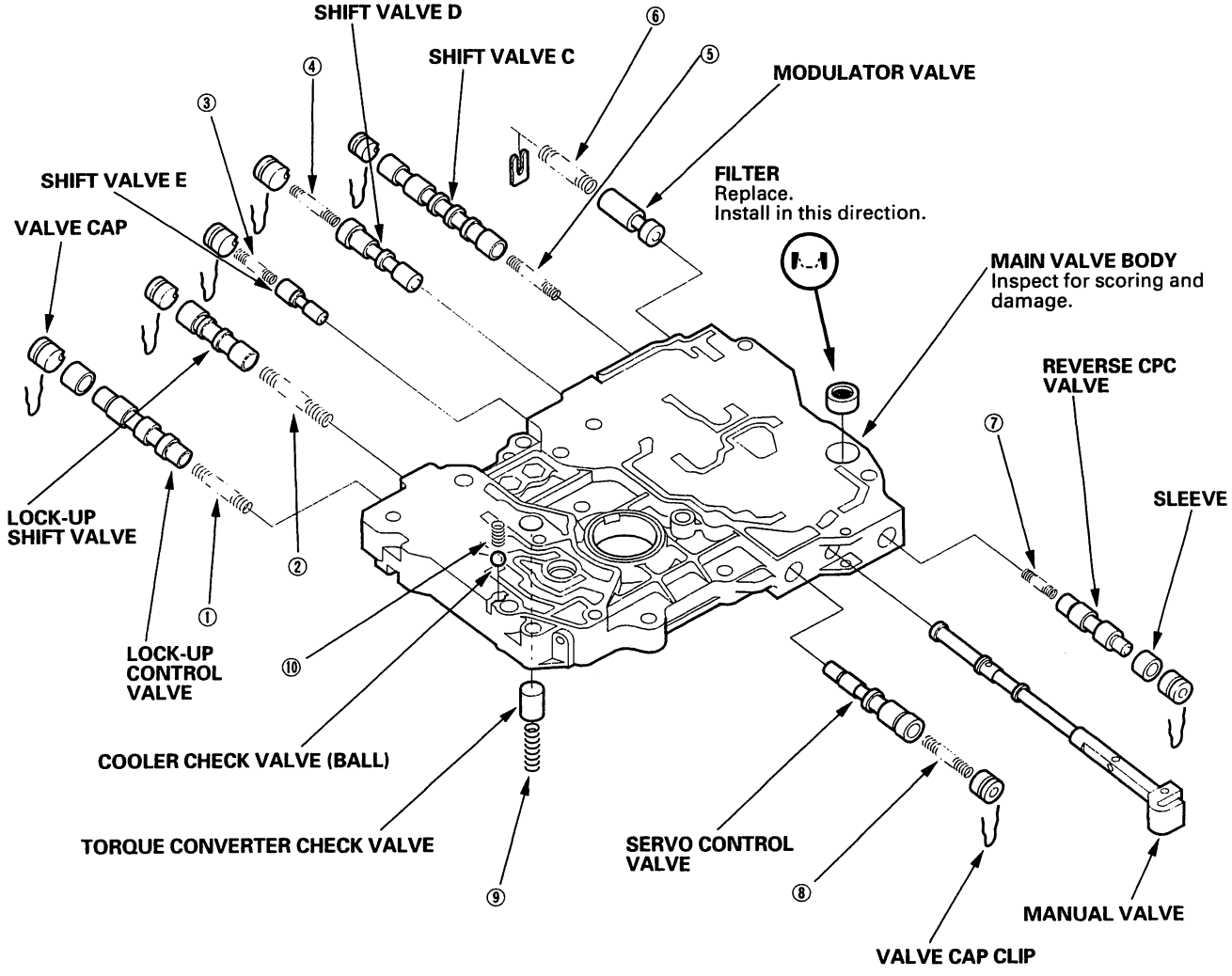

BACK

Sectional View

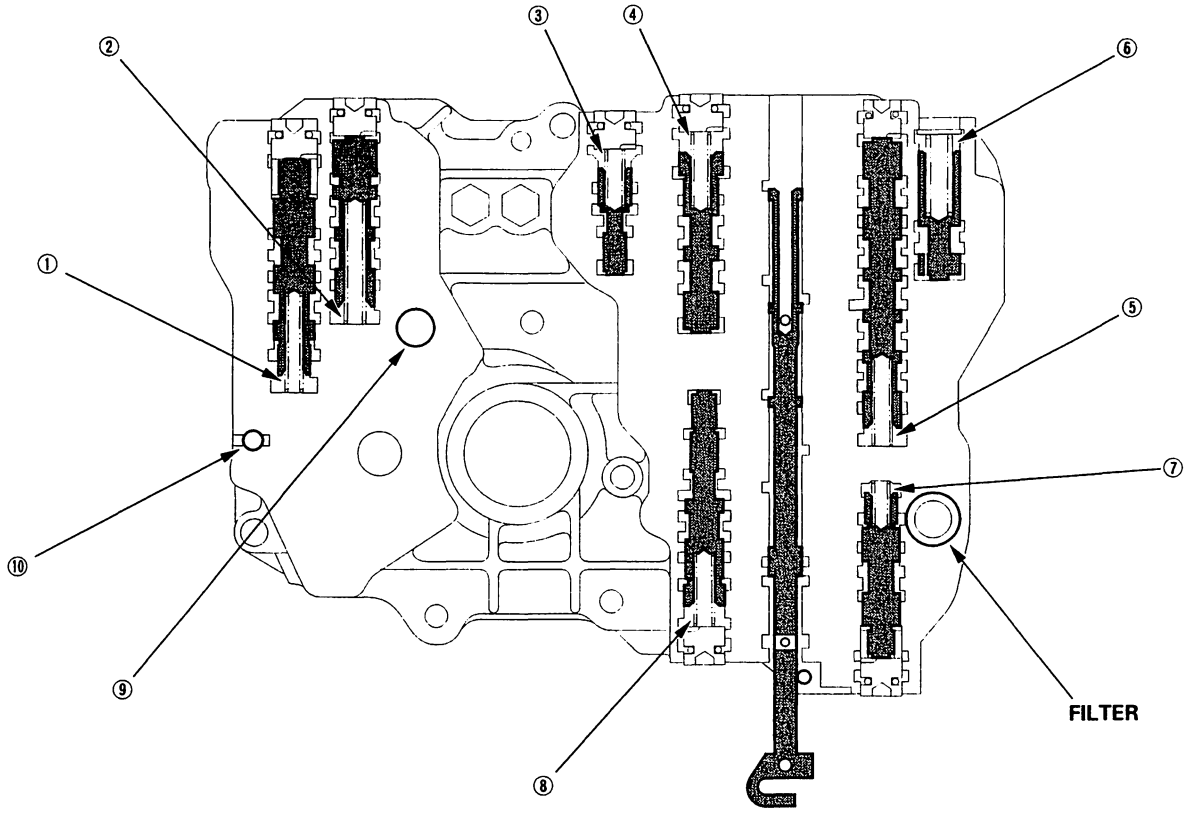

SPRING SPECIFICATIONS

No.	Spring	Standard (New) Unit: mm (in.)			
		Wire Dia.	O.D.	Free Length	No. of Coils
①	Lock-up control valve spring	0.7 (0.028)	6.6 (0.260)	42.9 (1.689)	14.2
②	Lock-up shift valve spring	0.9 (0.035)	7.6 (0.299)	63.0 (2.480)	22.4
③	Shift valve E spring	0.7 (0.028)	6.6 (0.260)	32.2 (1.268)	13.4
④	Shift valve D spring	0.7 (0.028)	6.6 (0.260)	35.7 (1.406)	17.2
⑤	Shift valve C spring	0.8 (0.031)	6.6 (0.260)	49.1 (1.933)	21.7
⑥	Modulator valve spring	1.6 (0.063)	10.4 (0.409)	33.5 (1.319)	9.8
⑦	Reverse CPC valve spring	0.7 (0.028)	6.1 (0.240)	17.8 (0.701)	7.9
⑧	Servo control valve spring	0.7 (0.028)	6.6 (0.260)	35.7 (1.406)	17.2
⑨	Torque converter check valve spring	1.1 (0.043)	8.4 (0.331)	38.2 (1.504)	14.0
⑩	Cooler check valve spring	0.6 (0.024)	5.8 (0.228)	14.5 (0.571)	6.8

ATF Pump Inspection

1. Install the ATF pump drive gear (A), driven gear (B) and ATF pump driven gear shaft (C) in the main valve body (D). Lubricate all parts with ATF, and install the ATF pump driven gear with its grooved and chamfered side facing up.

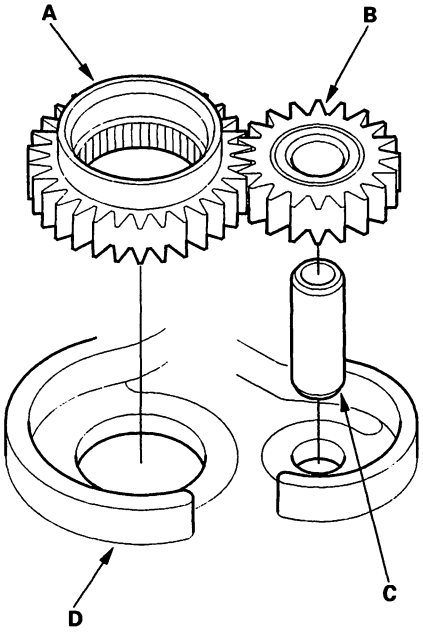

2. Measure the side clearance of the ATF pump drive gear (A) and driven gear (B).

ATF Pump Gears Side (Radial) Clearance:
Standard (New):
ATF Pump Drive Gear
0.210 – 0.265 mm (0.0083 – 0.0104 in.)
ATF Pump Driven Gear
0.070 – 0.125 mm (0.0028 – 0.0049 in.)

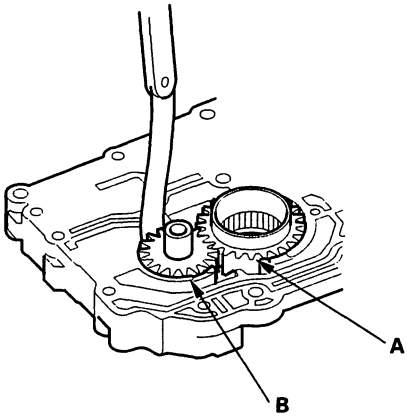

3. Remove the ATF pump driven gear shaft. Measure the thrust clearance between the ATF pump driven gear (A) and the valve body (B) with a straight edge (C) and a feeler gauge (D).

ATF Pump Drive/Driven Gear Thrust (Axial) Clearance:
Standard (New):
0.03 – 0.05 mm (0.001 – 0.002 in.)
Service Limit:
0.07 mm (0.003 in.)

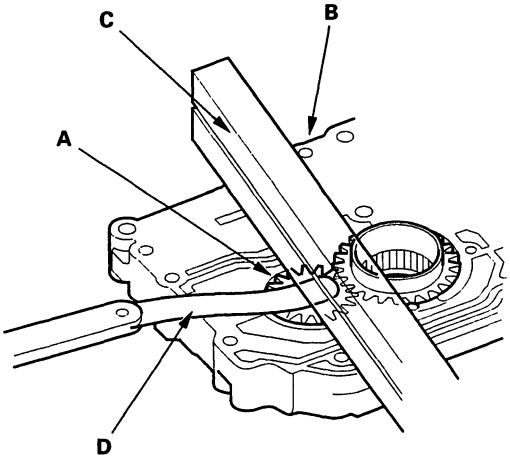

BACK

Regulator Valve Body Disassembly, Inspection, and Reassembly

1. Clean all parts thoroughly in solvent or carburetor cleaner, and dry them with compressed air. Blow out all passages.
2. Check all valves for free movement. If any fail to slide freely, refer to Valve Body Repair (see page 14-158).
3. Replace the valve body as an assembly if any parts are worn or damaged.
4. Hold the regulator spring cap in place while removing the stop bolt. The regulator spring cap is spring loaded. Once the stop bolt is removed, release the spring cap slowly so it does not pop out.
5. Reassembly is the reverse of the disassembly. Install the filter in the direction shown.
6. Align the hole in the regulator spring cap with the hole in the valve body, then press the spring cap into the valve body, and tighten the stop bolt.
7. Coat all parts with ATF during reassembly.

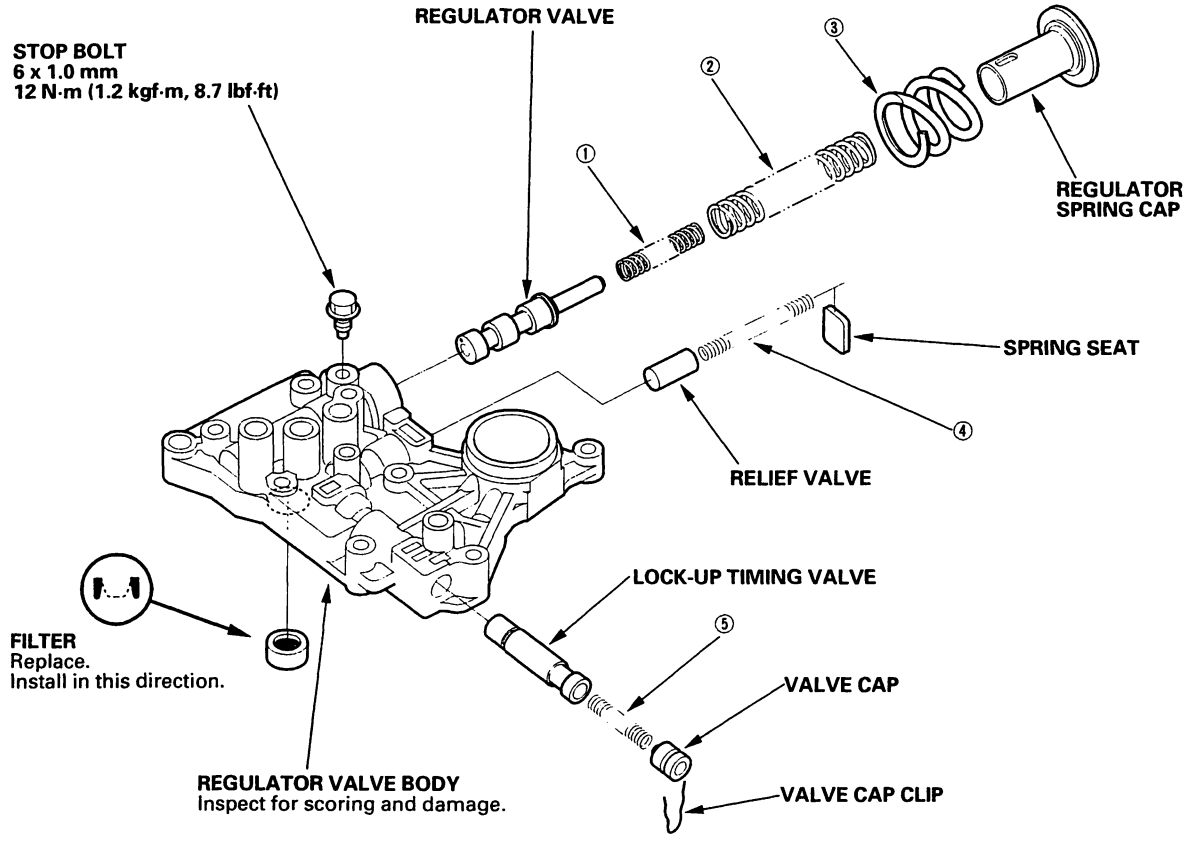

SPRING SPECIFICATIONS

No.	Spring	Standard (New) Unit: mm (in.)			
		Wire Dia.	O.D.	Free Length	No. of Coils
①	Regulator valve spring B	1.6 (0.063)	9.2 (0.362)	44.0 (1.732)	12.5
②	Regulator valve spring A	1.9 (0.075)	14.7 (0.579)	77.4 (3.047)	15.2
③	Stator reaction spring	4.5 (0.177)	35.4 (1.394)	30.3 (1.193)	1.92
④	Relief valve spring	0.9 (0.035)	6.6 (0.260)	39.8 (1.567)	20.4
⑤	Lock-up timing valve spring	0.65 (0.026)	6.6 (0.260)	34.8 (1.370)	15.6

Servo Body Disassembly, Inspection, and Reassembly

1. Clean all parts thoroughly in solvent or carburetor cleaner, and dry them with compressed air. Blow out all passages.
2. Check all valves for free movement. If any fail to slide freely, refer to Valve Body Repair (see page 14-158).
3. Replace the valve body as an assembly if any parts are worn or damaged.
4. Coat all parts with ATF during assembly.

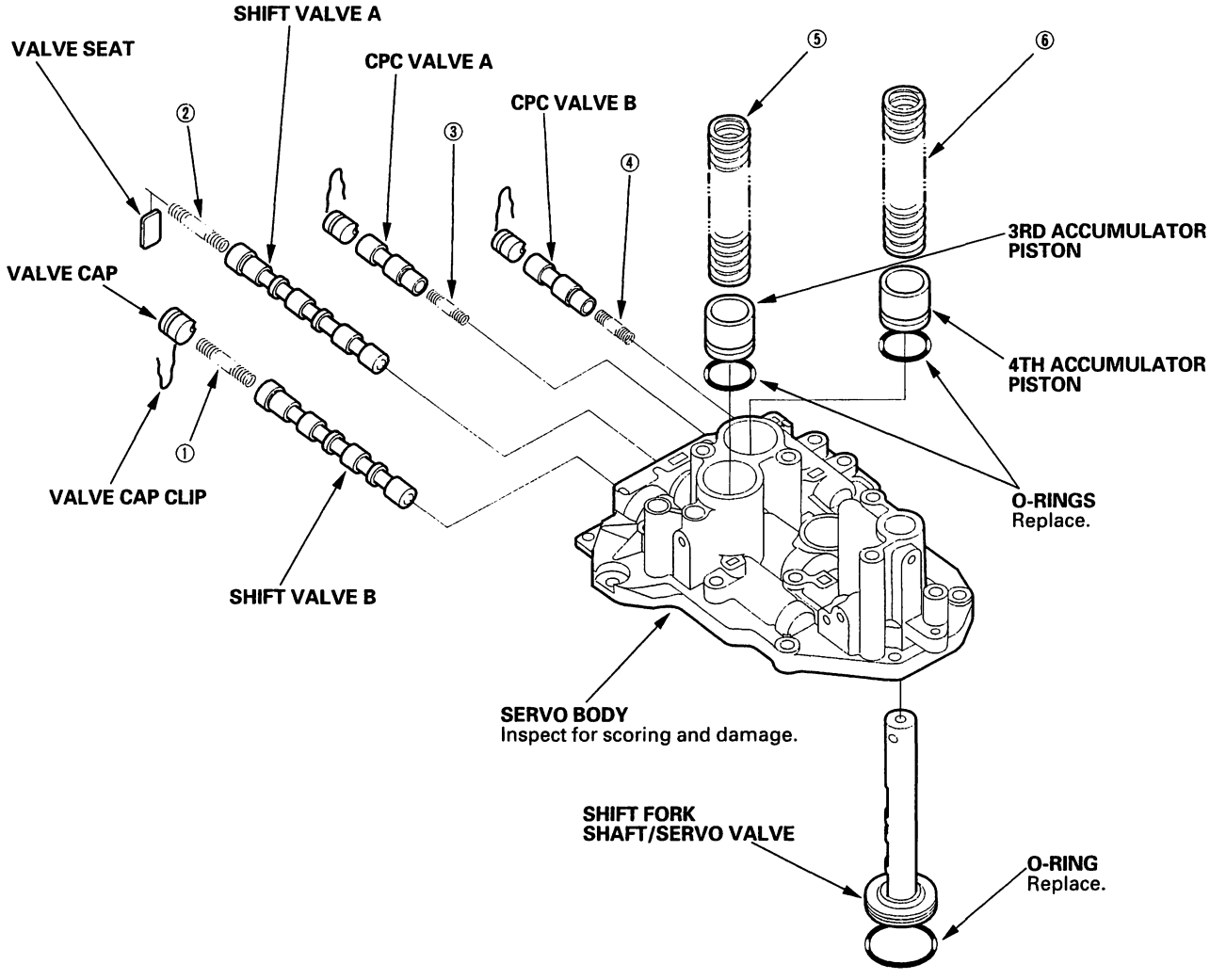

SPRING SPECIFICATIONS

No.	Spring	Standard (New) Unit: mm (in.)			
		Wire Dia.	O.D.	Free Length	No. of Coils
①	Shift valve B spring	0.8 (0.031)	7.1 (0.280)	40.4 (1.591)	16.9
②	Shift valve A spring	0.8 (0.031)	7.1 (0.280)	40.4 (1.591)	16.9
③	CPC valve A spring	0.7 (0.028)	6.1 (0.240)	17.8 (0.701)	7.9
④	CPC valve B spring	0.7 (0.028)	6.1 (0.240)	17.8 (0.701)	7.9
⑤	3rd accumulator spring	3.8 (0.150)	19.6 (0.772)	59.8 (2.354)	7.8
⑥	4th accumulator spring	3.8 (0.150)	19.6 (0.772)	59.8 (2.354)	7.8

BACK

Accumulator Body Disassembly, Inspection, and Reassembly

1. Do not use a magnet to remove the check balls; it may magnetize the balls.
2. Clean all parts thoroughly in solvent or carburetor cleaner, and dry them with compressed air. Blow out all passages.
3. Coat all parts with ATF during reassembly.

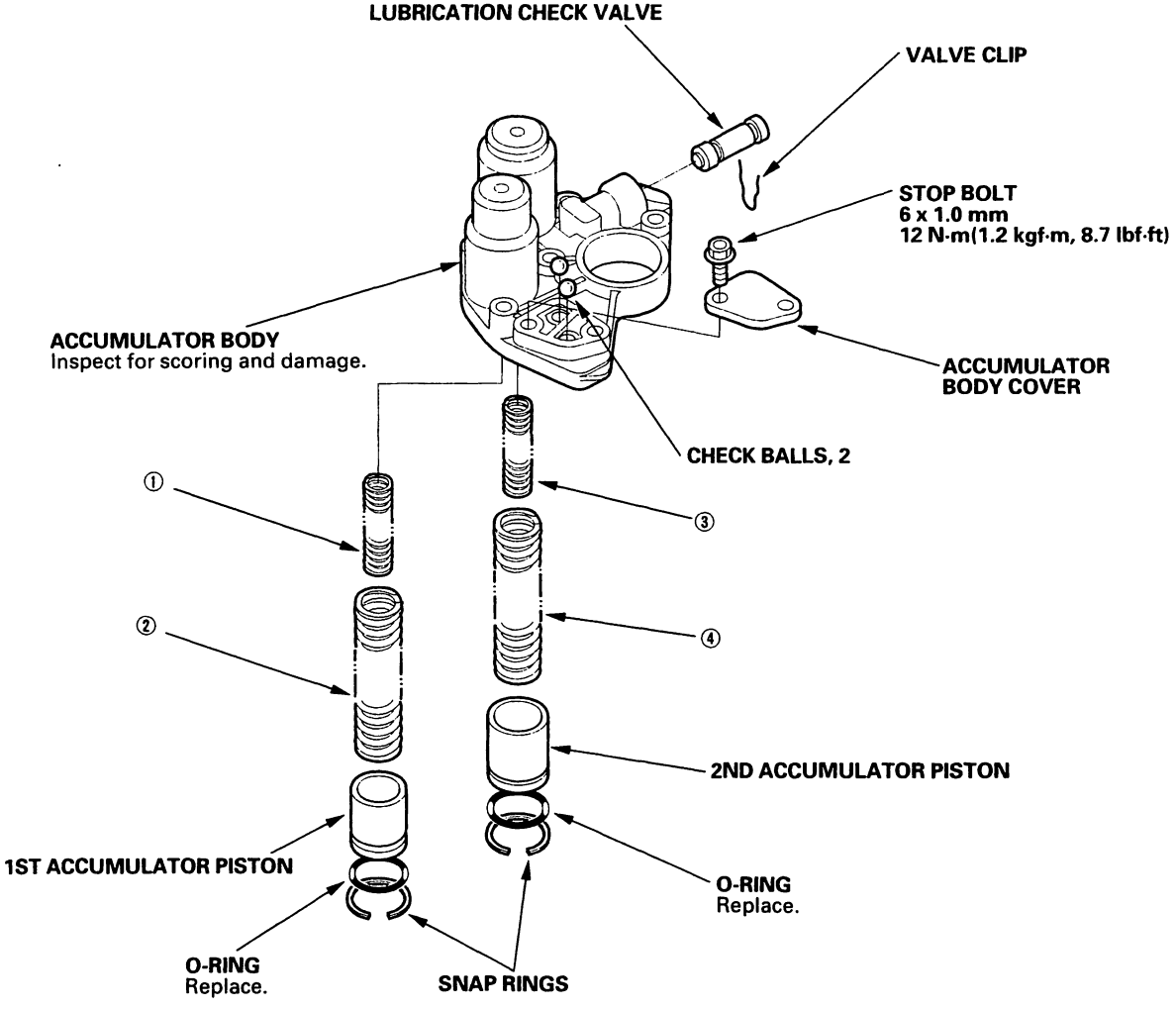

SPRING SPECIFICATIONS

No.	Springs	Standard (New) Unit: mm (in.)			
		Wire Dia.	O.D.	Free Length	No. of Coils
①	1st accumulator spring B	2.5 (0.098)	12.8 (0.504)	49.5 (1.949)	8.5
②	1st accumulator spring A	2.6 (0.102)	19.6 (0.772)	69.7 (2.744)	10.8
③	2nd accumulator spring B	2.7 (0.106)	14.8 (0.583)	51.0 (2.008)	9.6
④	2nd accumulator spring A	2.6 (0.102)	21.6 (0.850)	73.2 (2.882)	10.0

Mainshaft Bearing and Oil Seal Replacement

Special Tools Required
- Adjustable bearing puller, 25 – 40 mm 07736-A01000B or 07736-A01000A
- Driver 07749-0010000
- Attachment, 62 x 68 mm 07746-0010500
- Attachment, 72 x 75 mm 07746-0010600

1. Remove the mainshaft bearing and oil seal with the special tool.

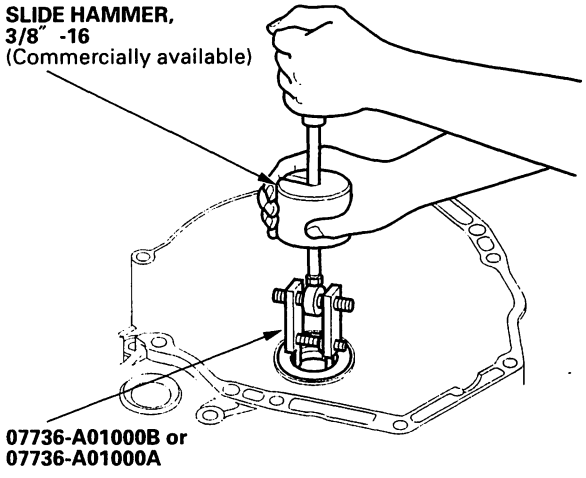

2. Drive in the new mainshaft bearing until it bottoms in the housing with the special tools.

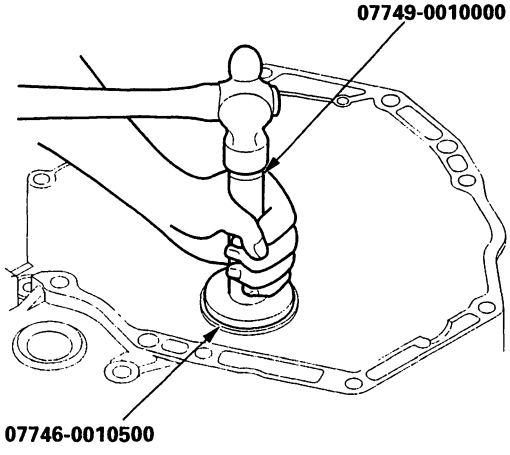

3. Install the new oil seal flush with the housing using the special tools.

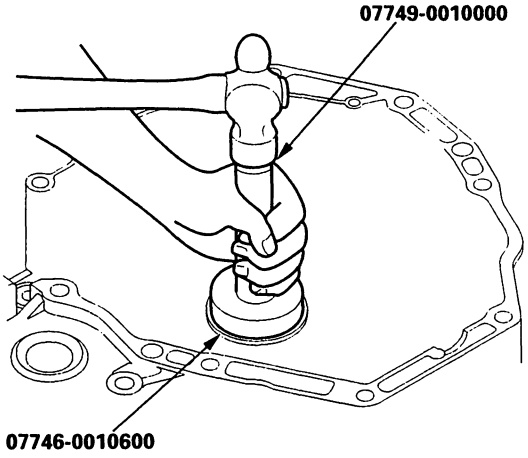

BACK

Countershaft Bearing Replacement

Special Tools Required
- Adjustable bearing puller, 25—40 mm 07736-A01000B or 07736-A01000A
- Driver 07749-0010000
- Attachment, 62 x 68 mm 07746-0010500

1. Remove the countershaft bearing (A) with the special tool.

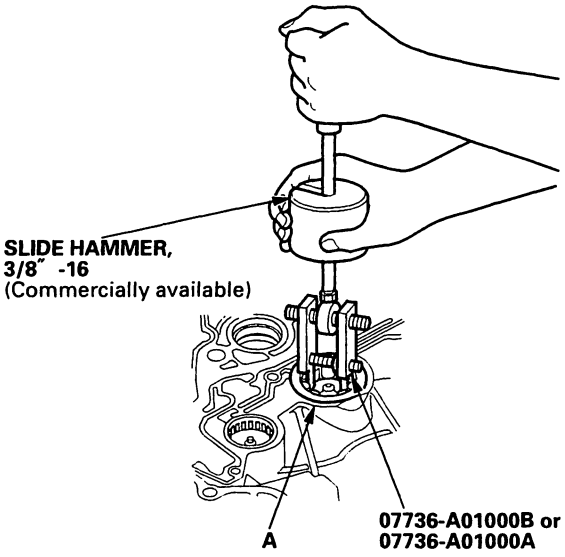

2. Install the ATF guide plate (A).

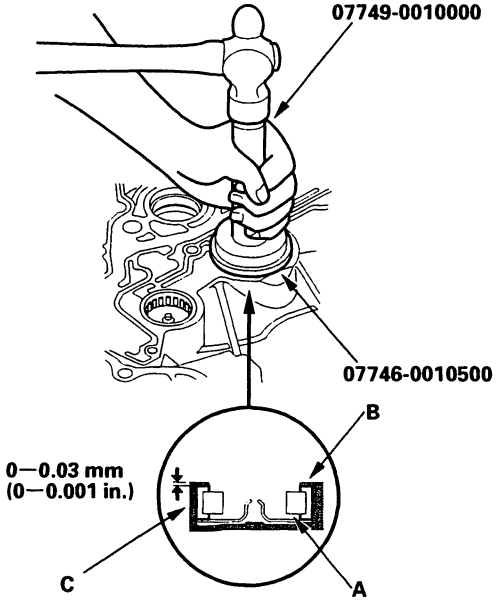

3. Install the new bearing (B) into the housing (C) with the special tools.

Secondary Shaft Bearing Replacement

Special Tools Required
- Adjustable bearing puller, 25—40 mm 07736-A01000B or 07736-A01000A
- Driver 07749-0010000
- Driver attachment 07947-6340500

1. Remove the secondary shaft bearing (A) with the special tool.

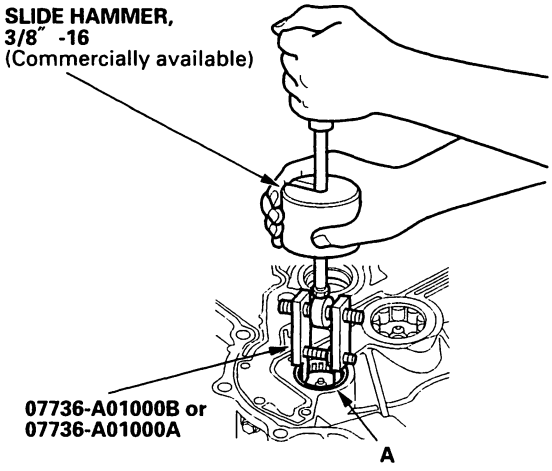

2. Install the ATF guide plate (A).

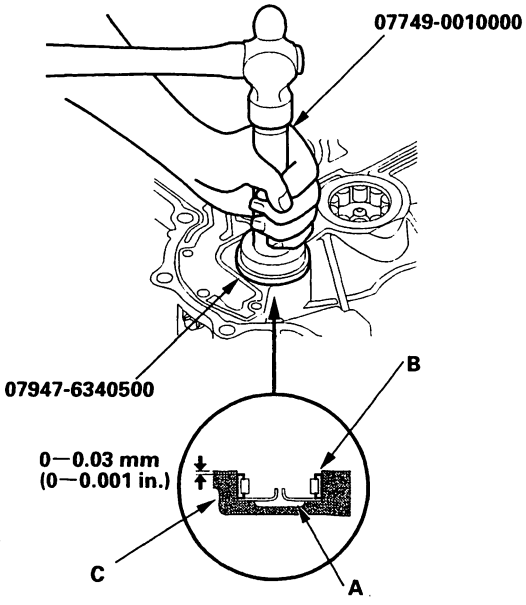

3. Install the new bearing (B) into the housing (C) with the special tools.

Mainshaft Disassembly, Inspection, and Reassembly

1. Lubricate all parts with ATF during reassembly.
2. Check clearance of 3rd/4th clutch assembly (see page 14-169).
3. Inspect the thrust needle bearing and the needle bearing for galling and rough movement.
4. Inspect the splines for excessive wear and damage.
5. Check shaft bearing surfaces for scoring and excessive wear.
6. Before installing the O-rings, wrap the shaft splines with tape to prevent damage to the O-rings.
7. Install the conical spring washer and 41 x 72 mm thrust shim in the direction shown.
8. Inspect condition of the sealing rings. If the sealing rings are worn, distorted, or damaged, replace them (see page 14-170).

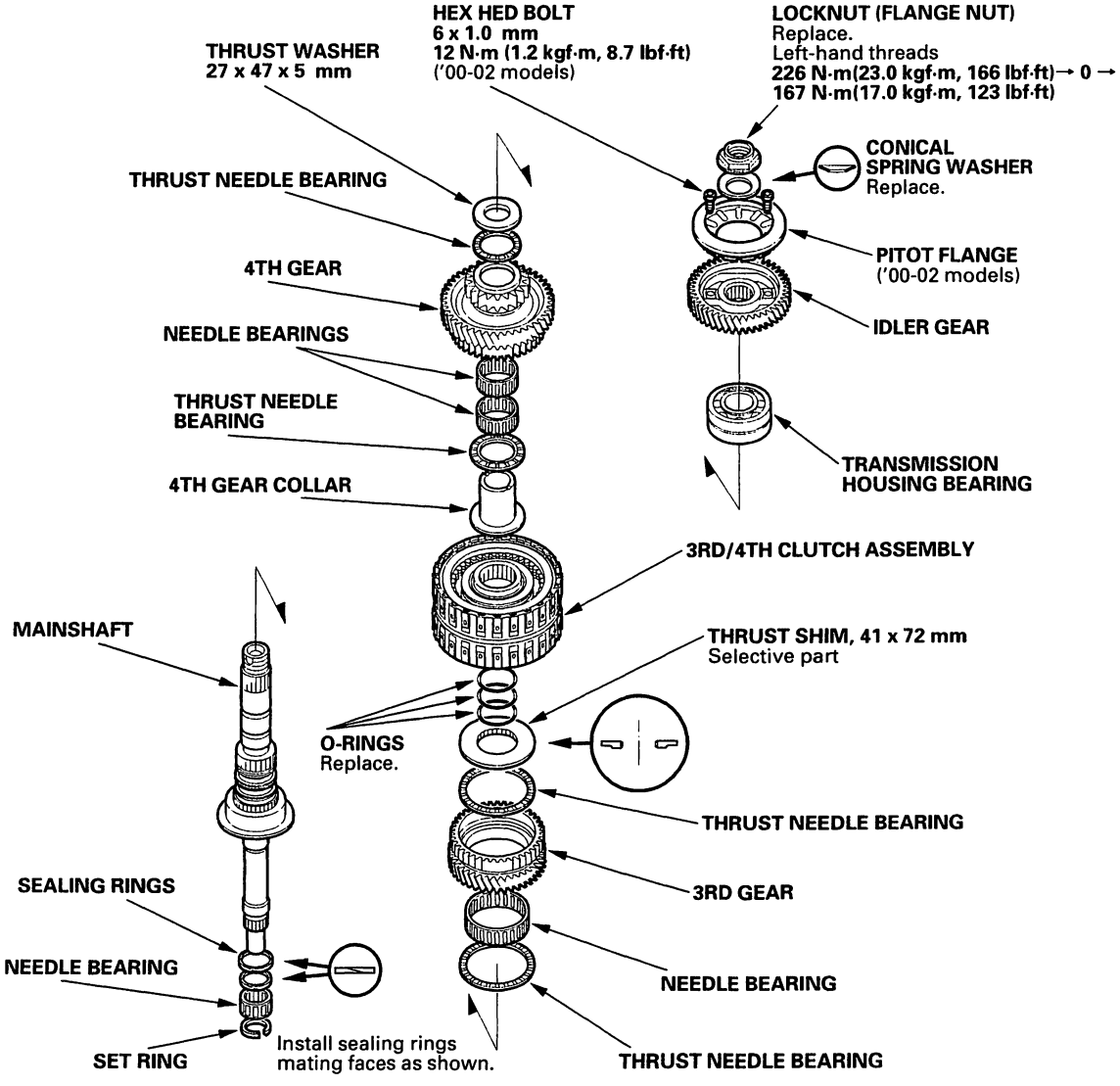

BACK

3rd/4th Clutch Clearance Inspection

1. Remove the O-rings from the mainshaft.

2. Assemble the 41 x 72 mm thrust shim (A), 3rd/4th clutch assembly (B) and 4th gear collar (C) on the mainshaft (D).

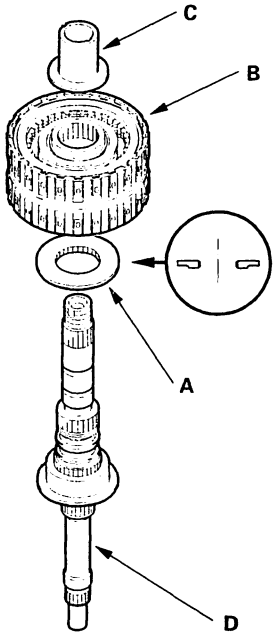

3. Hold the 4th gear collar (C) against the clutch assembly (B), then measure the clearance between the clutch guide (E) and the 4th gear collar with a feeler gauge (F) in at least 3 places. Use the average as the actual clearance.

STANDARD:
0.03 – 0.11 mm (0.001 – 0.004 in.)

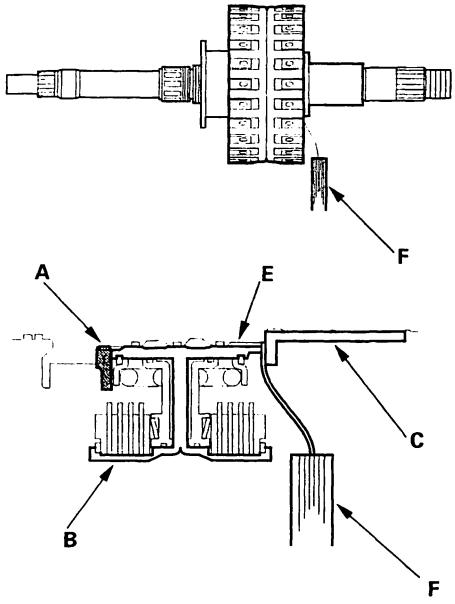

4. If the clearance is out of standard, remove the thrust shim and measure its thickness.

5. Select and install a new shim, then recheck.

THRUST SHIM, 41 x 72 mm

No.	Part Number	Thickness
1	90414-P6H-010	6.35 mm (0.250 in.)
2	90415-P6H-010	6.40 mm (0.252 in.)
3	90416-P6H-010	6.45 mm (0.254 in.)
4	90417-P6H-010	6.50 mm (0.256 in.)
5	90418-P6H-010	6.55 mm (0.258 in.)
6	90419-P6H-010	6.60 mm (0.260 in.)

6. After replacing the thrust shim, make sure the clearance is within standard.

Mainshaft Sealing Rings Replacement

The sealing rings on the mainshaft are synthetic resin with chamfered ends. Check condition of the sealing rings, and replace them only if they are worn, distorted, or damaged.

1. For a better fit, squeeze the sealing ring together slightly before installing them.

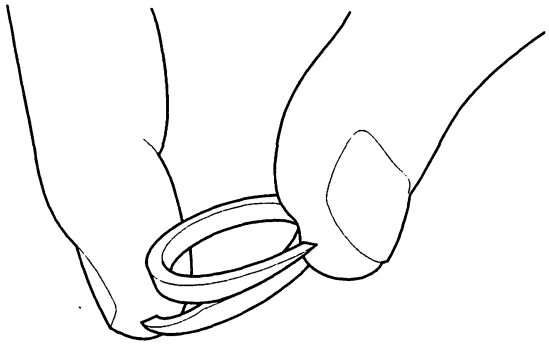

2. Apply ATF to the new sealing rings then install them on the mainshaft.

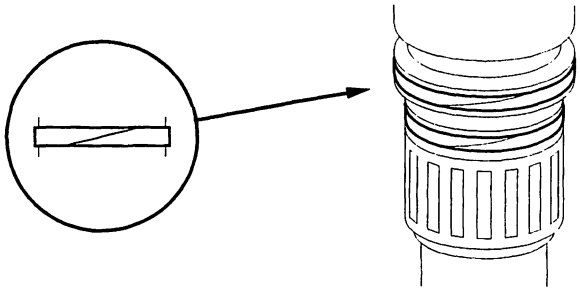

3. After installing the sealing rings, verify the following:

   - The rings are fully seated in the groove.
   - The rings are not twisted.
   - The chamfered ends of the rings are properly joined.

BACK

Countershaft Disassembly, Inspection, and Reassembly

1. Remove the locknut, and take off components down to the reverse selector hub.
2. Remove the reverse selector hub, 3rd gear, and 1st gear (see page 14-172).
3. Check the bearing in the bearing hub for wear and rough movement. If the bearing is worn or damaged, replace it (see page 14-174).
4. Inspect the thrust needle bearing and the needle bearing for galling and rough movement.
5. Check the splines for excessive wear and damage.
6. Check the shaft bearing surfaces for scoring and excessive wear.
7. Lubricate all parts with ATF, and reassemble the shaft and gears.
8. Install the conical spring washer, idler gear, reverse selector, reverse selector hub, and distance collar in the direction shown.

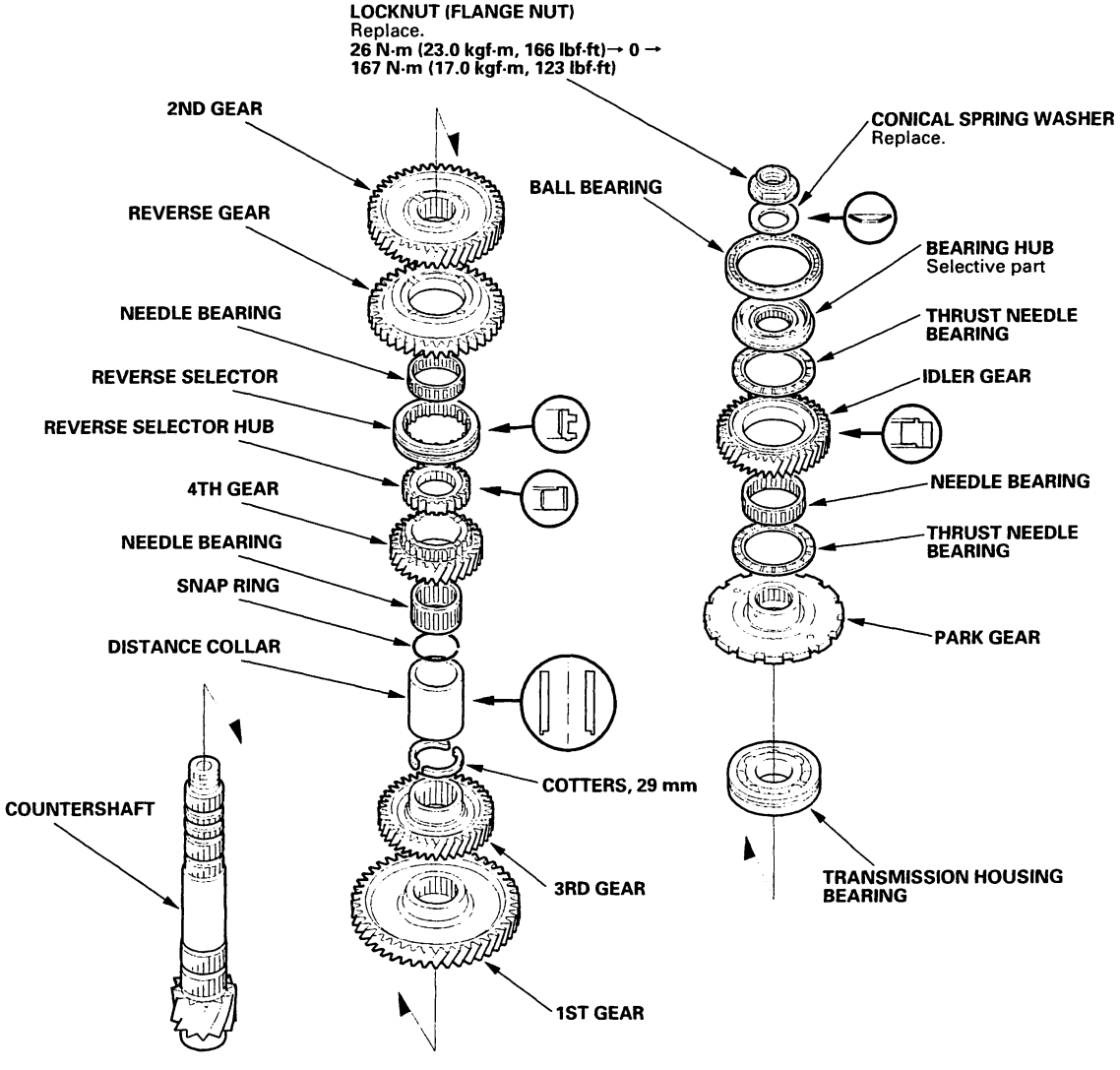

Countershaft Reverse Selector Hub, 3rd Gear, and 1st Gear Replacement

Special Tools Required
Driver 40 mm I.D. 07746-0030100

Removal

1. Remove the reverse selector hub (A) and the 4th gear (B) with a universal 2-jaw (or 3-jaw) puller (C). Place a shaft protector (D) between the puller and countershaft (E) to prevent damaging the countershaft.

   NOTE: Some of the reverse selector hubs are not pressfitted, and can be removed without using a puller.

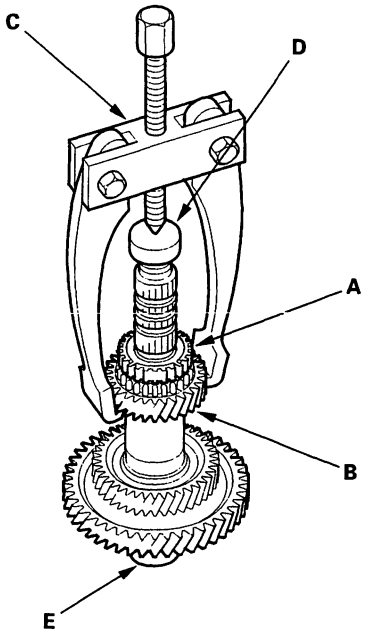

2. Remove the needle bearing, snap ring, distance collar, and 29 mm cotters from the countershaft.

3. Remove the 1st gear (A) and 3rd gear (B) together from the countershaft (C) with a puller (D). Place a shaft protector (E) between the puller and countershaft to prevent damaging the countershaft.

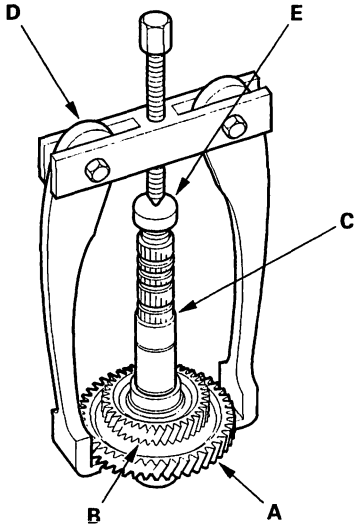

BACK

Installation

1. Apply ATF to the parts.

2. Align the shaft splines with those on 1st gear, then press the countershaft (A) into the 1st gear (B) with a press.

   - Place an attachment (C) between the press and countershaft to prevent damaging the countershaft.
   - Stop pressing the countershaft when the 1st gear contacts the final drive gear (D).

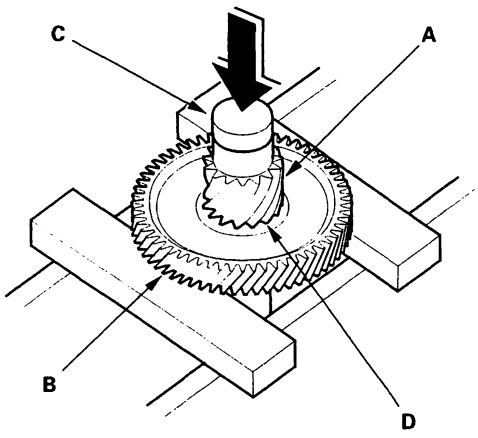

3. Align the shaft splines with those on 3rd gear, then press the countershaft into the 3rd gear with a press.

   - Place an attachment between the press and countershaft to prevent damaging the countershaft.
   - Stop pressing the countershaft when the 3rd gear contacts the 1st gear.

4. Install the 29 mm cotters, distance collar, snap ring, needle bearing, and 4th gear (A) on the countershaft.

5. Slide the reverse selector hub (B) over the countershaft (C), and then press it into place with the special tool and a press.

   NOTE: Some of the reverse selector hubs are not press-fitted and can be installed without using the special tool and a press.

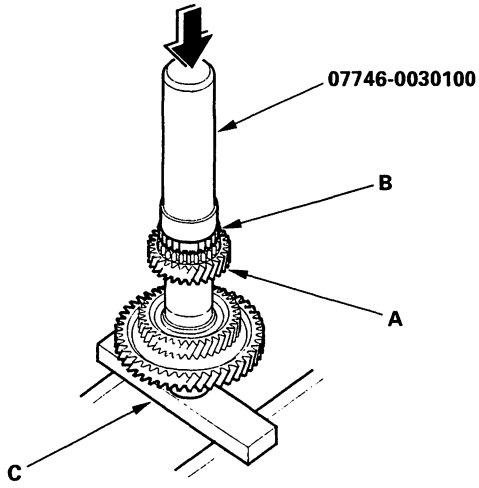

Countershaft Bearing Hub/Bearing Replacement

Special Tools Required
- Driver 07749-0010000
- Attachment, 42 x 47 mm 07746-0010300
- Attachment, 62 x 68 mm 07746-0010500

1. Check the bearing for wear, damage, and rough movement. If the bearing is worn or damaged, replace it.

2. Remove the bearing (A) from the bearing hub with the special tools, a bearing separator (B), and a press.

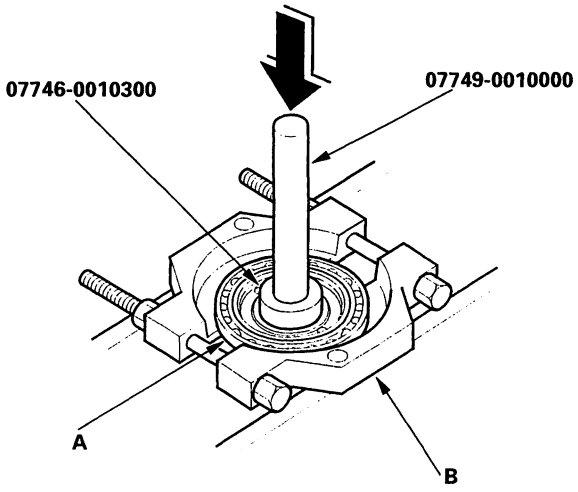

3. Install the new bearing on the bearing hub with the special tools and a press.

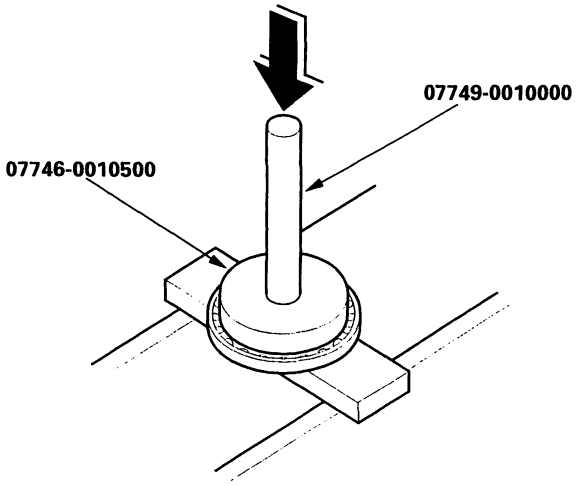

BACK

Secondary Shaft Disassembly, Inspection, and Reassembly

1. Remove the locknut, and disassemble the shaft and gears.
2. Inspect the thrust needle bearing and the needle bearing for galling and rough movement.
3. Check clearance of the secondary shaft assembly (see page 14-176).
4. Check the splines for excessive wear and damage.
5. Check the shaft bearing surfaces for scoring and excessive wear.
6. Check the idler gear bearing for wear and rough movement. If the bearing is worn or damaged, replace it (see page 14-178).
7. Before installing the O-rings, wrap the shaft splines with tape to prevent damage to the O-rings.
8. Lubricate all parts with ATF during reassembly.
9. Install the conical spring washer and 38 x 56.5 mm splined washer in the direction shown.

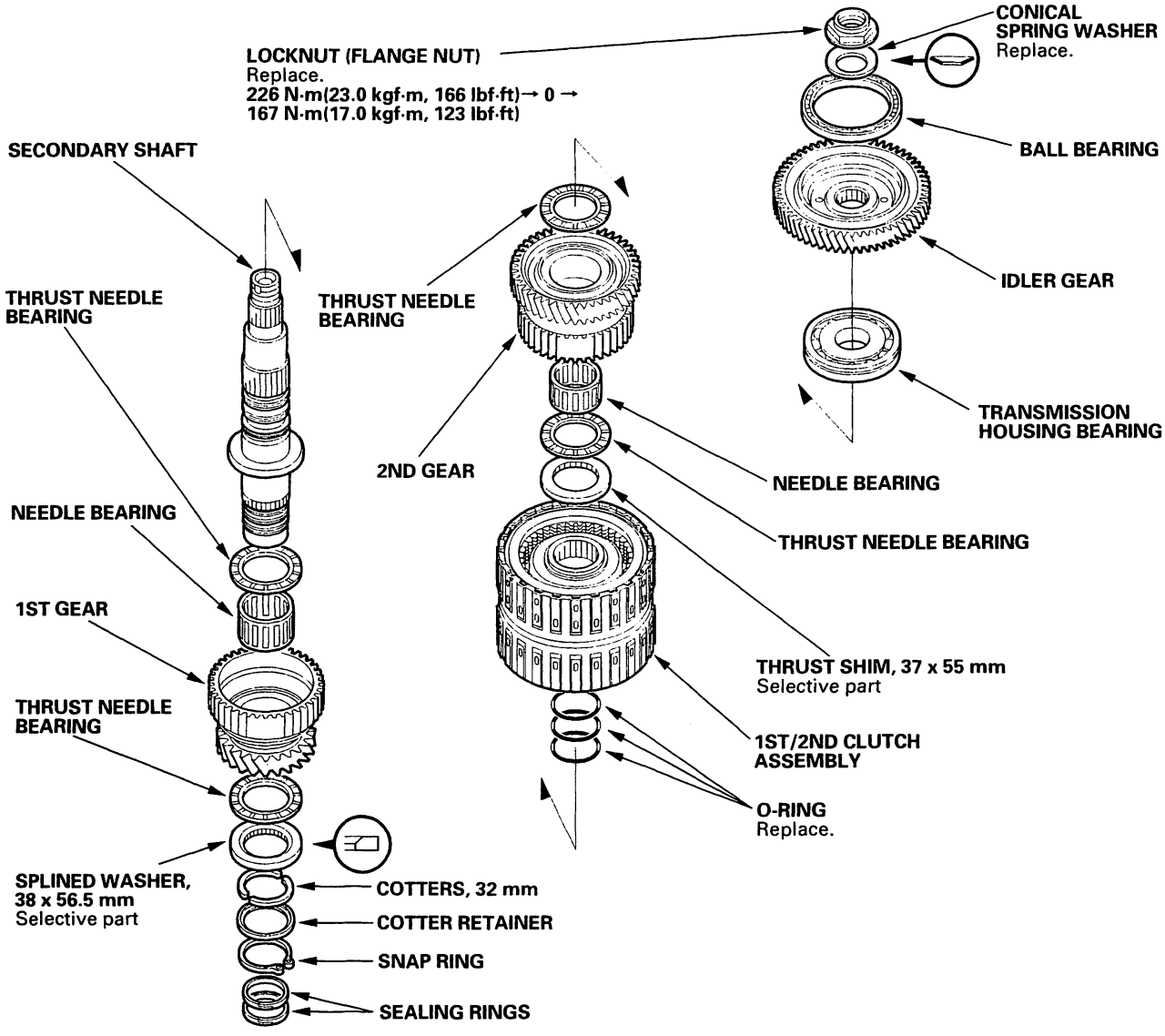

Secondary Shaft Clearance Inspection

1. Remove all O-rings from the shaft.

2. Assemble the thrust needle bearing (A), needle bearing (B), 1st gear (C), thrust needle bearing (D), 38 x 56.5 mm splined washer (E), 32 mm cotters (F), cotter retainer (G), and snap ring (H) on the secondary shaft (I).

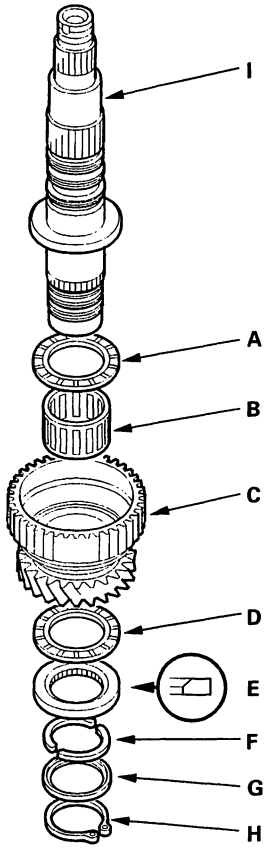

3. Measure the clearance between the 38 x 56.5 mm splined washer (E) and cotters (F) with a feeler gauge (J) in at least three places. Use the average as the actual clearance.

STANDARD:
0.07 – 0.15 mm (0.003 – 0.006 in.)

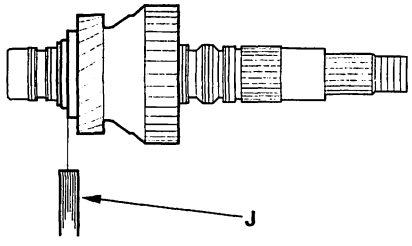

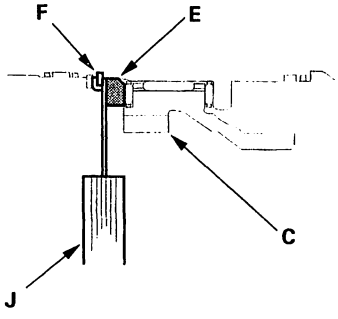

4. If the clearance is out of standard, remove the splined washer, and measure its thickness.

5. Select and install a new splined washer, then recheck.

SPLINED WASHER, 38 x 56.5 mm

No.	Part Number	Thickness
1	90502-P0Z-000	6.85 mm (0.270 in.)
2	90503-P0Z-000	6.90 mm (0.272 in.)
3	90504-P0Z-000	6.95 mm (0.274 in.)
4	90505-P0Z-000	7.00 mm (0.276 in.)
5	90506-P0Z-000	7.05 mm (0.278 in.)
6	90507-P0Z-000	7.10 mm (0.280 in.)

BACK

6. Remove the 27 x 47 x 5 mm thrust washer from the mainshaft.

7. Assemble the 1st/2nd clutch assembly (A), 37 x 55 mm thrust shim (B), thrust needle bearing (C), needle bearing (D), 2nd gear (E), thrust needle bearing (F), and 27 x 47 x 5 mm thrust washer (removed from mainshaft) (G) on the secondary shaft (H).

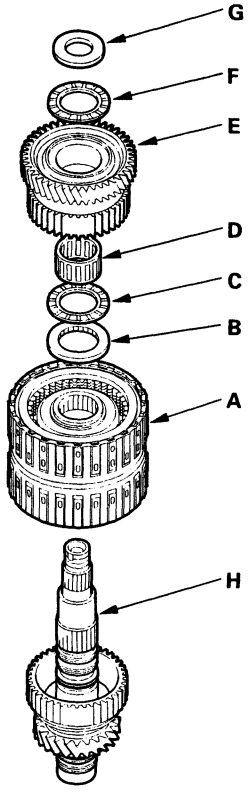

8. Set the dial indicator (I) on 2nd gear (E).

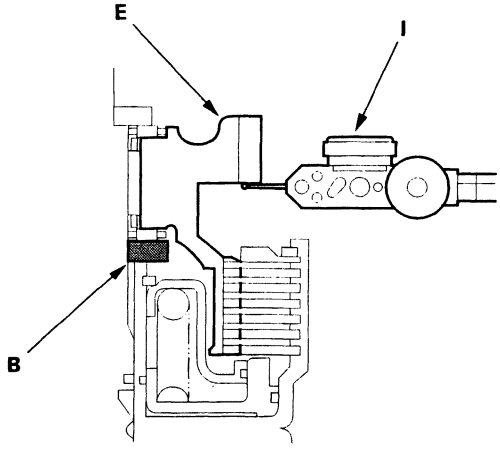

9. Hold the 27 x 47 x 5 mm thrust washer (G) against the clutch assembly (A), and measure the 2nd gear axial clearance in at least three places while moving the 2nd gear (E). Use the average as the actual clearance.

STANDARD:
0.04 – 0.12 mm (0.002 – 0.005 in.)

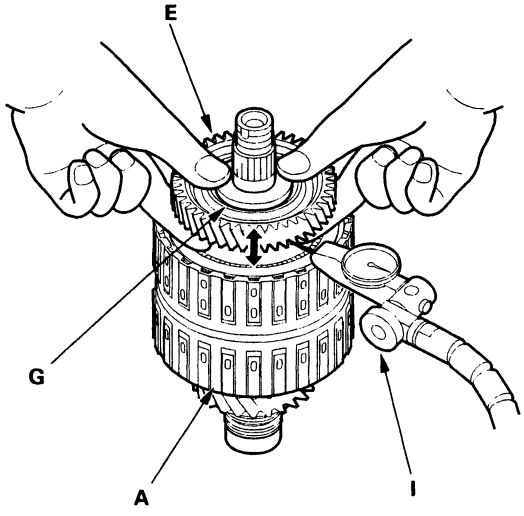

10. If the clearance is out of standard, remove the 37 x 55 mm thrust shim and measure its thickness.

11. Select and install a new thrust shim, then recheck.

THRUST SHIM, 37 x 55 mm

No.	Part Number	Thickness
1	90406-P0Z-000	4.90 mm (0.193 in.)
2	90407-P0Z-000	4.95 mm (0.195 in.)
3	90408-P0Z-000	5.00 mm (0.197 in.)
4	90409-P0Z-000	5.05 mm (0.199 in.)
5	90410-P0Z-000	5.10 mm (0.201 in.)
6	90411-P0Z-000	5.15 mm (0.203 in.)
7	90412-P0Z-000	5.20 mm (0.205 in.)

12. Disassemble the shaft and gears.

13. Reinstall the 27 x 47 x 5 mm thrust washer on the mainshaft.

Secondary Shaft Idler Gear Bearing Replacement

Special Tools Required
- Driver 07749-0010000
- Attachment, 78 x 90 mm 07GAD-SD40101

1. Check the bearing for wear, damaged, and rough movement. If the bearing is worn or damaged, replace it.

2. Place the secondary shaft idler gear in a vise with soft jaws.

3. Remove the bearing (A) from the secondary shaft idler gear (B) with a commercially availables, 1-1/2"-2" blind hole bearing puller (C), and 1-5/8"-3" slide hammer (D).

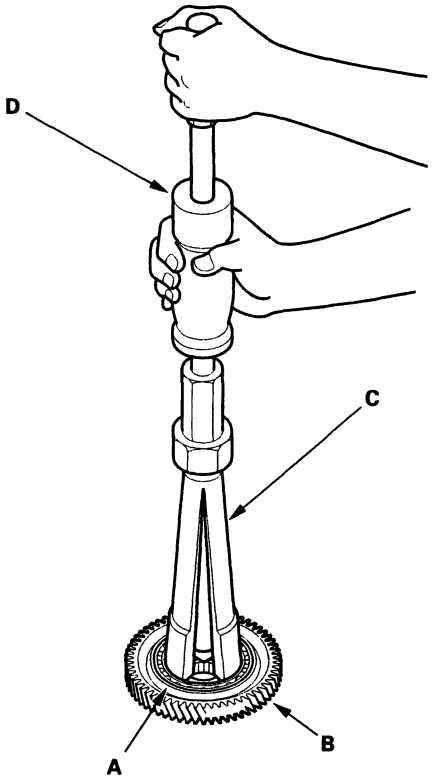

4. Install the new bearing on the secondary shaft idler gear with the special tool and a press.

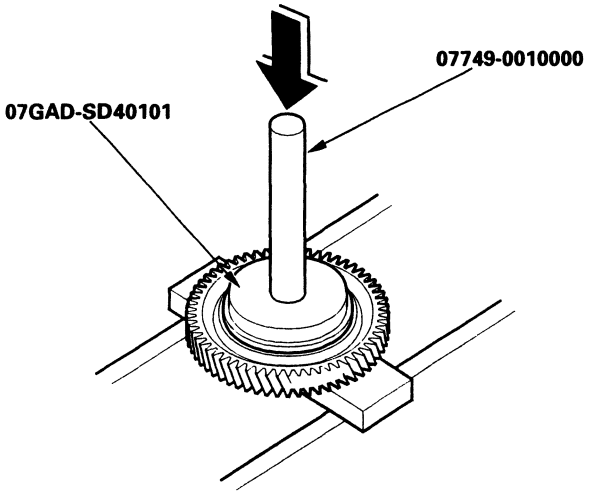

BACK

Clutch Disassembly

Special Tools Required
- Clutch spring compressor attachment 07LAE-PX40100
- Clutch spring compressor attachment 07HAE-PL50101
- Clutch spring compressor bolt assembly 07GAE-PG40200 or 07GAE-PG4020A

1. Remove the snap ring (A), then remove the clutch end plate, the clutch discs, and the plates with a screwdriver (B).

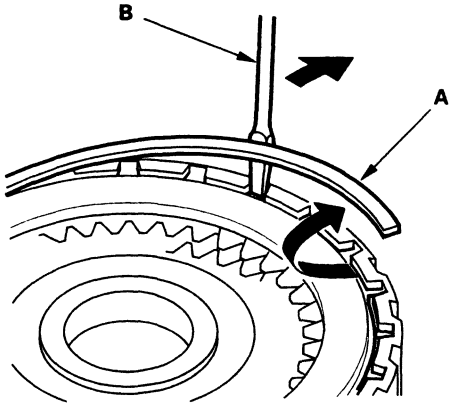

2. Remove the disc spring from the 3rd and 4th clutches.

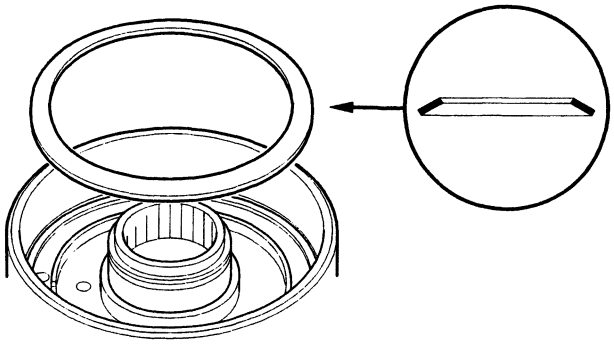

3. Remove the wave spring from the 1st clutch.

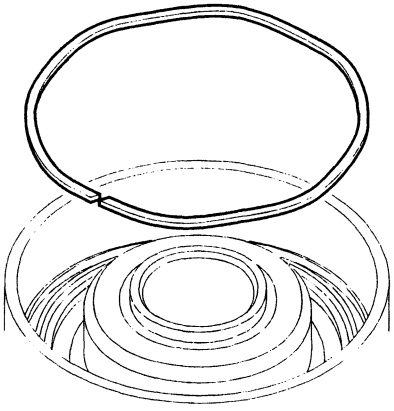

4. Install the special tools on the 3rd/4th clutch assembly.

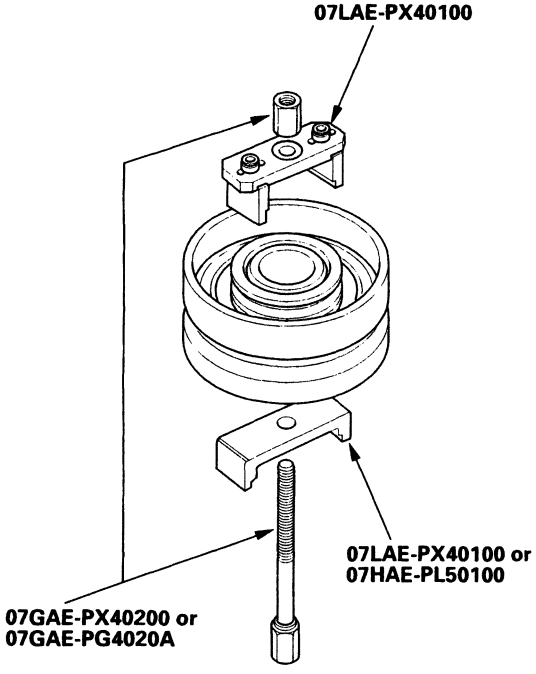

(cont'd)

Clutch Disassembly (cont'd)

5. Be sure the special tool (A) is adjusted to have full contact with the spring retainer (B) on the 3rd and 4th clutches.

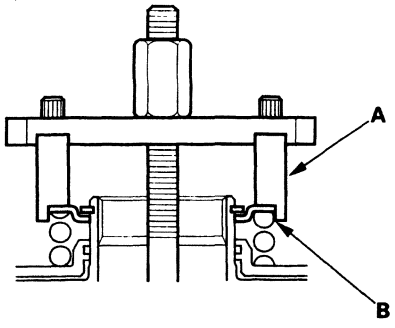

6. Set the special tool (A) on the spring retainer (B) of the 1st and 2nd clutches in such a way that the special tool works on the clutch return spring (C).

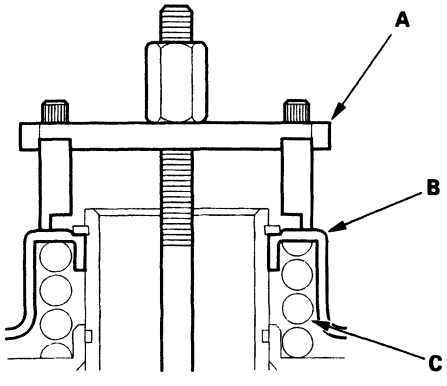

7. If either end of the special tool is set over an area of the spring retainer which is unsupported by the return spring, the retainer may be damaged.

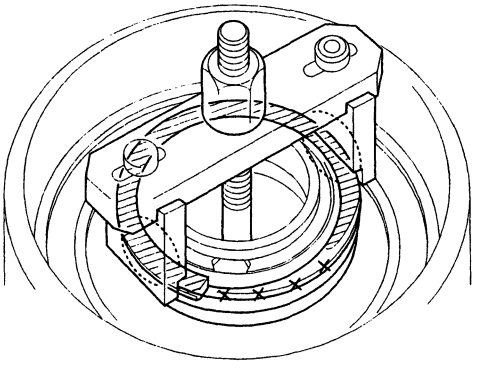

8. Compress the spring until the snap ring can be removed.

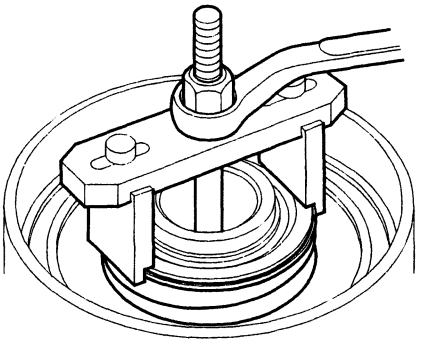

BACK

9. Remove the snap ring (A). Then remove the special tools (B), spring retainer (C), return spring.

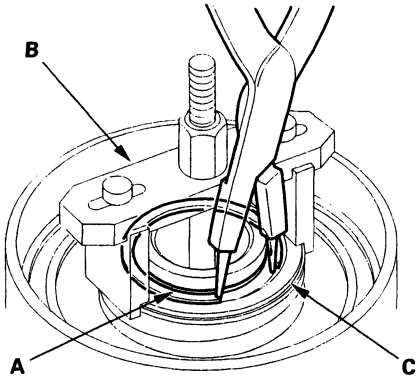

10. For 3rd and 4th clutch:
Wrap a shop rag around the clutch drum (A), and apply air pressure to the fluid passage to remove the piston (B). Place a finger tip on the other end while applying air pressure.

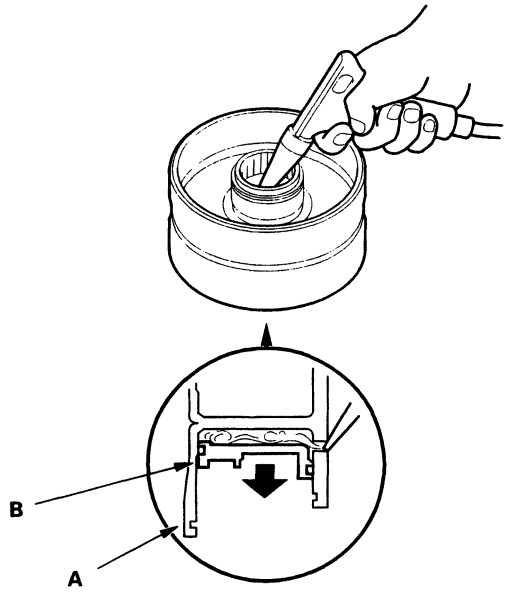

Clutch Inspection

1ST/2ND CLUTCH

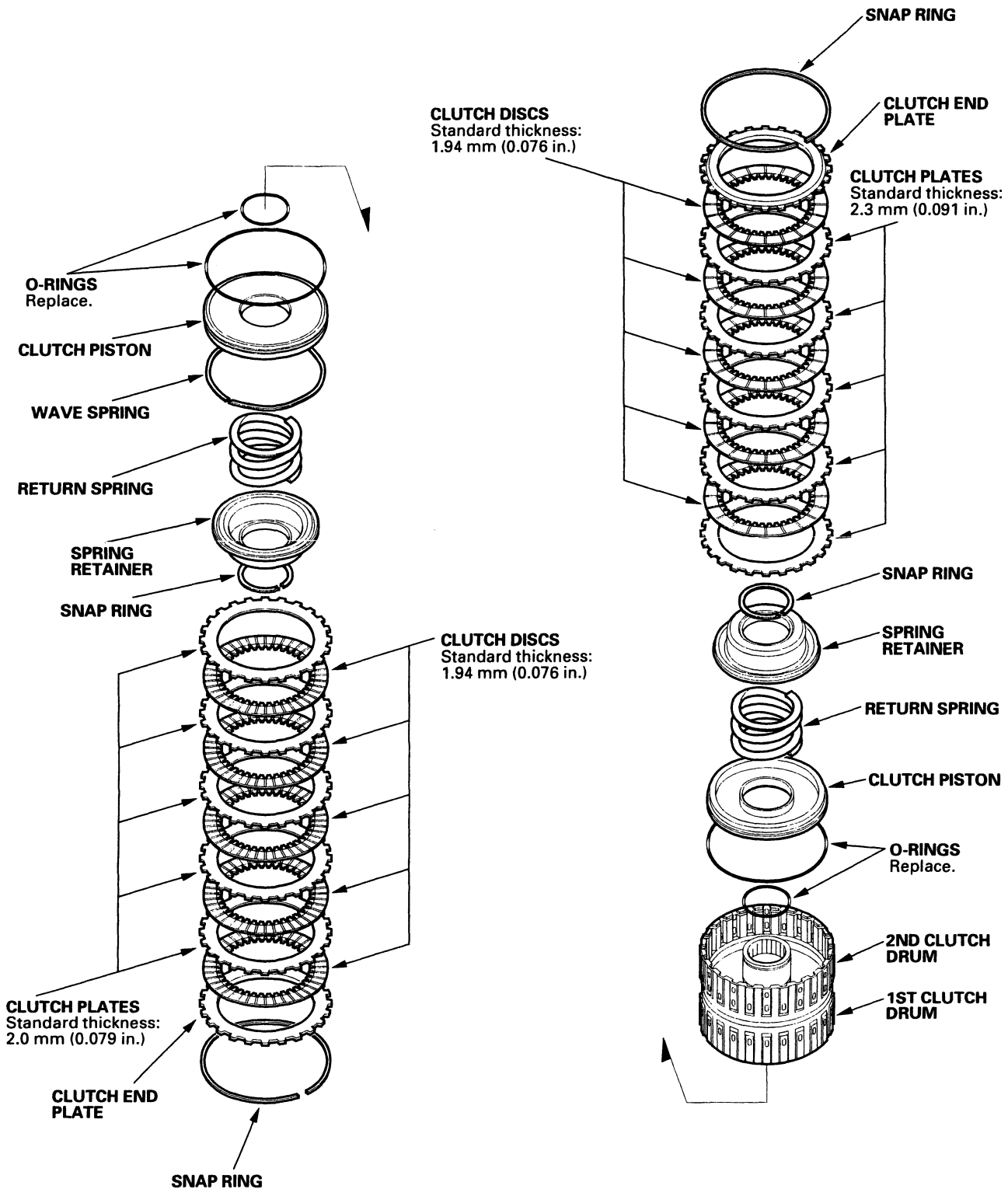

BACK

3RD/4TH CLUTCH

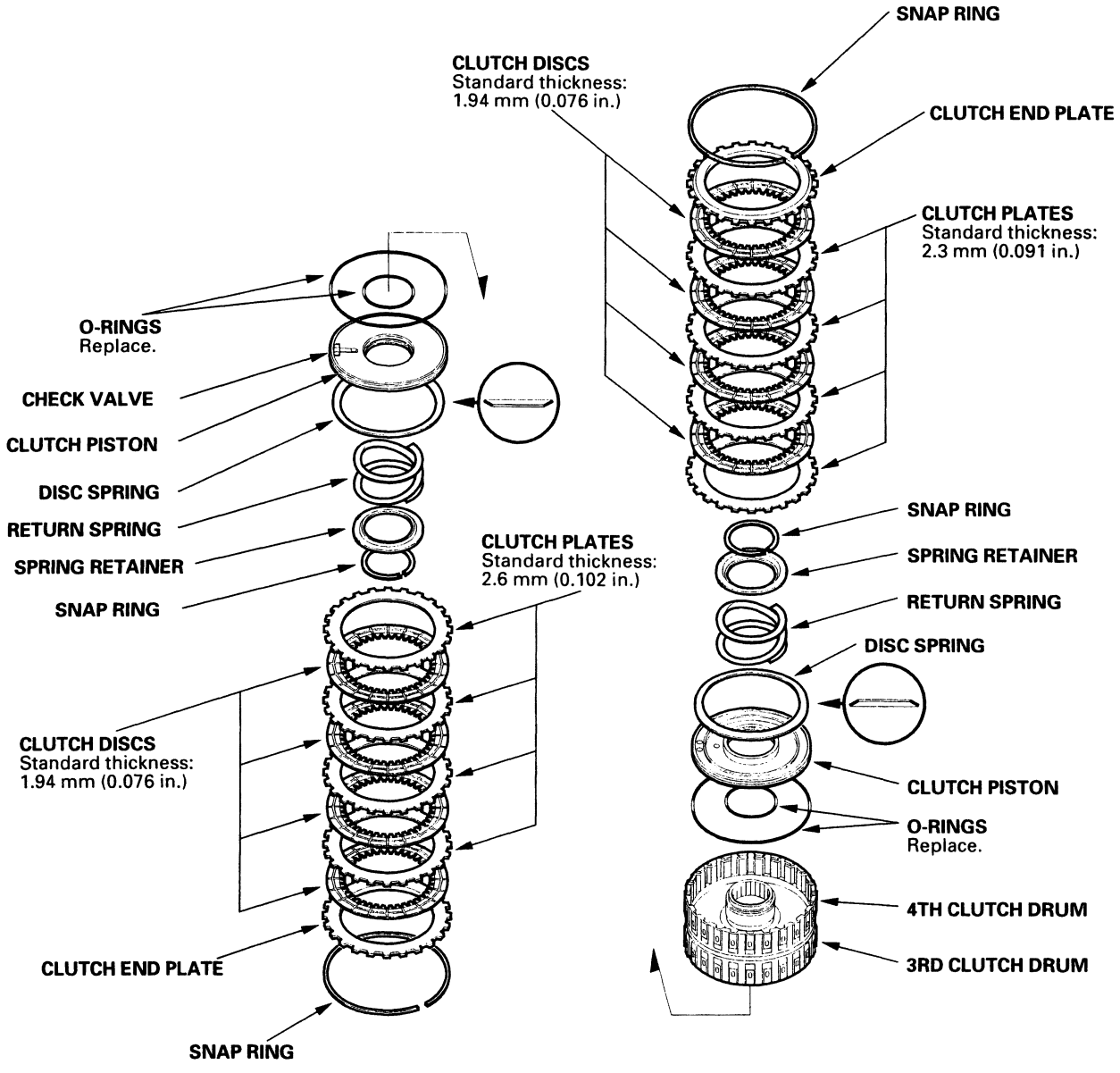

Clutch Reassembly

Special Tools Required
- Clutch spring compressor attachment 07LAE-PX40100
- Clutch spring compressor attachment 07HAE-PL50101
- Clutch spring compressor bolt assembly 07GAE-PG40200 or 07GAE-PG4020A
- Clutch compressor attachment 07ZAE-PRP0100

NOTE:
- Clean all parts thoroughly in solvent or carburetor cleaner, and dry them with compressed air.
- Blow out all passages.
- Apply ATF to all parts before assembly.

1. Inspect the check valve (A) on the 3rd and 4th clutches; if it's loose, replace the piston (B).

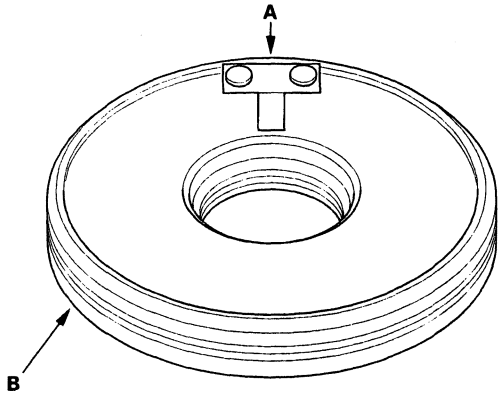

2. Install new O-rings (A) on the piston (B).

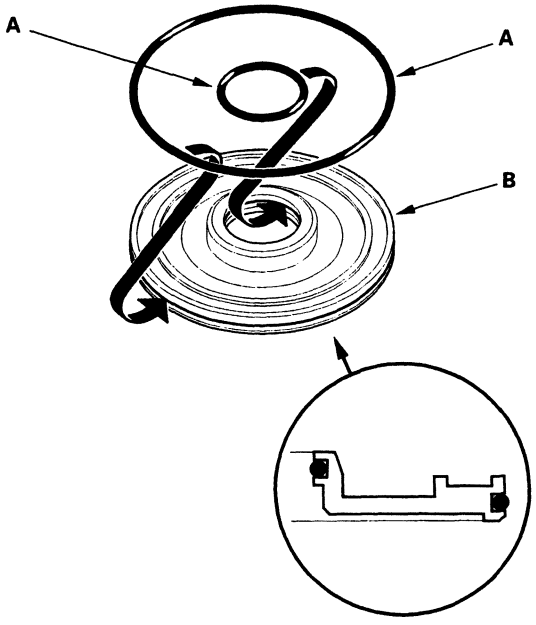

3. Install the piston (A) in the clutch drum (B). Apply pressure and rotate to ensure proper seating. Lubricate the piston O-ring with ATF before installing.

   NOTE: Do not pinch the O-ring by installing the piston with too much force.

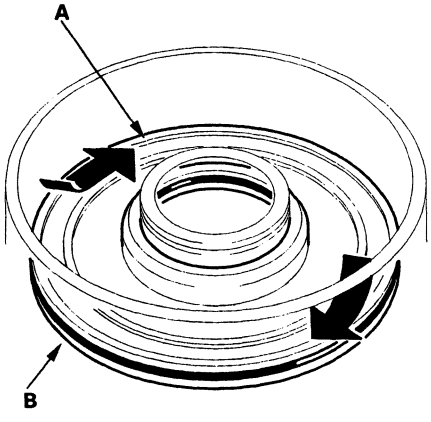

BACK

4. Install the return spring (A) and spring retainer (B), and position the snap ring (C) on the retainer.

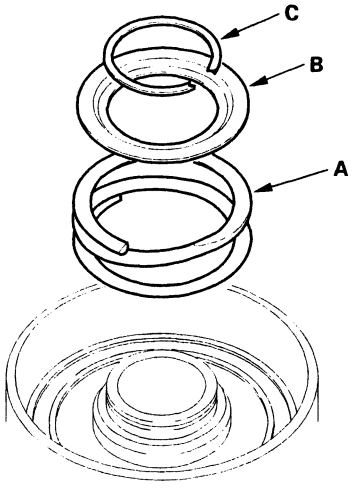

5. Install the special tools on the 3rd/4th clutch assembly.

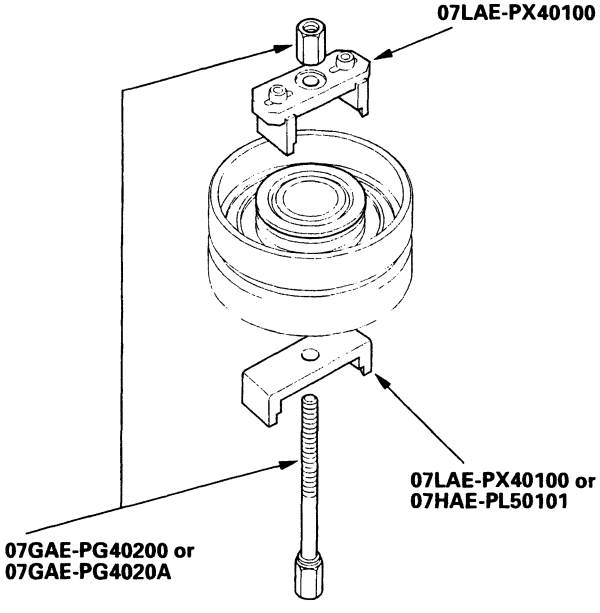

6. Be sure the special tool (A) is adjusted to have full contact with the spring retainer (B) on the 3rd and 4 the clutches.

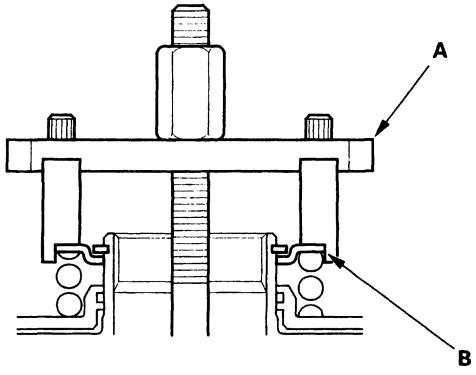

7. Set the special tool (A) on the spring retainer (B) of the 1st and 2nd clutches in such a way that the special tool work on the clutch return spring (C).

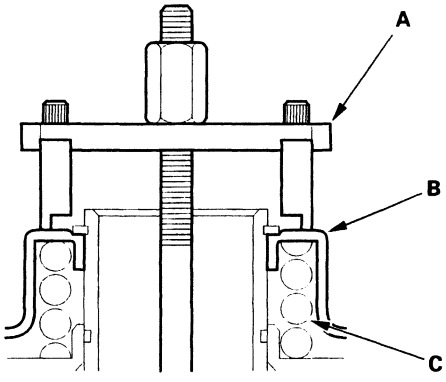

(cont'd)

Clutch Reassembly (cont'd)

8. If either end of the special tool is set over an area of the spring retainer which is unsupported by the return spring, the retainer may be damaged.

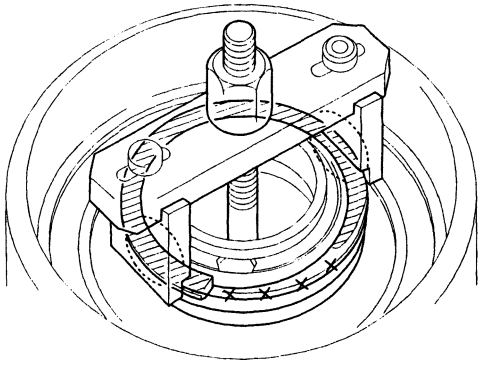

9. Compress the return spring.

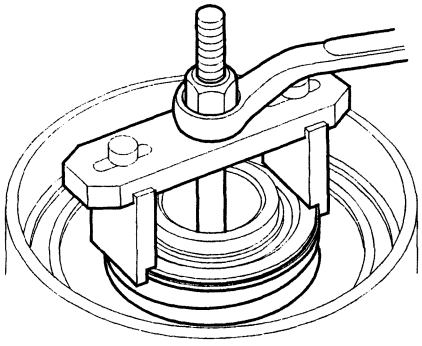

10. Install the snap ring (A).

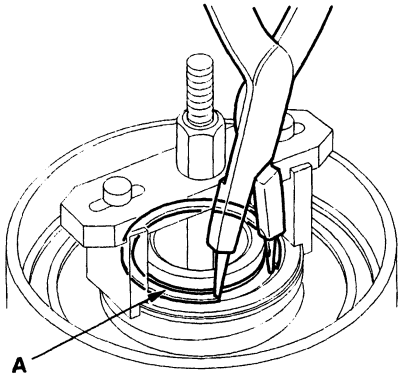

11. Remove the special tools.

12. Install the disc spring in the 3rd, and 4th clutches in the direction shown.

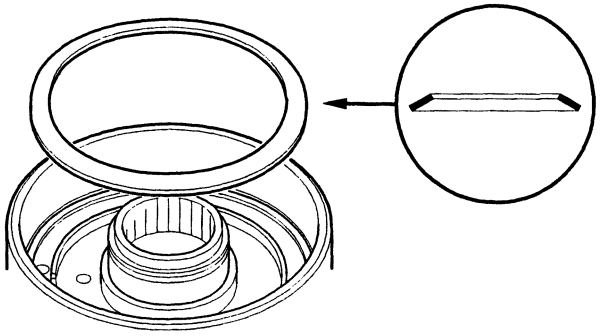

13. Install the wave spring in the 1st clutch.

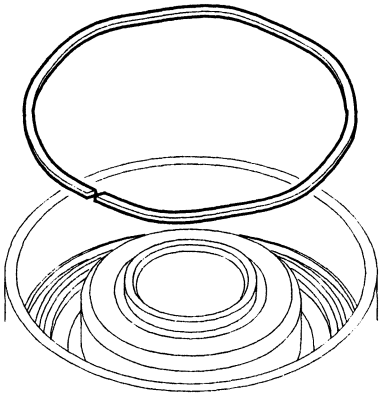

BACK

14. Soak the clutch discs thoroughly in ATF for a minimum of 30 minutes. Before installing the plates and discs, make sure the inside of the clutch drum is free of dirt and other foreign matter.

15. Starting with a clutch plate, alternately install the clutch plates and discs. Install the clutch end plate (A) with the flat side toward the disc (B).

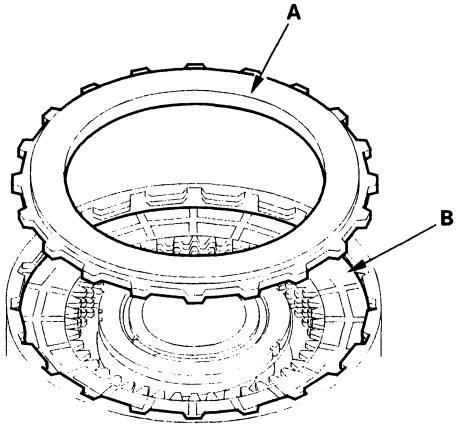

16. Install the snap ring (A) with a screwdriver (B).

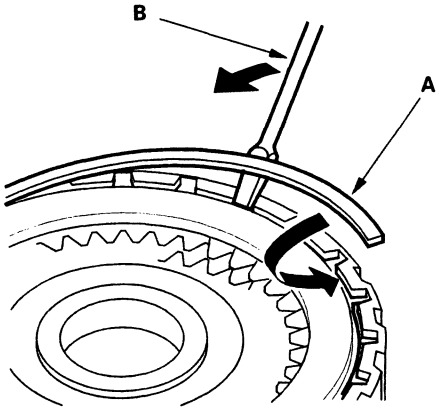

17. Set a dial indicator (A) on the clutch end plate (B).

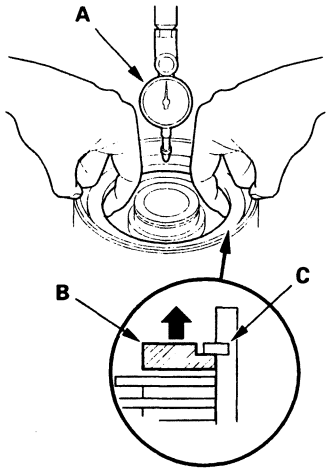

18. Zero the dial indicator with the clutch end plate lifted up to the snap ring (C).

(cont'd)

Clutch Reassembly (cont'd)

19. Release the clutch end plate to lower the clutch end plate, then put the special tool on the end plate (A).

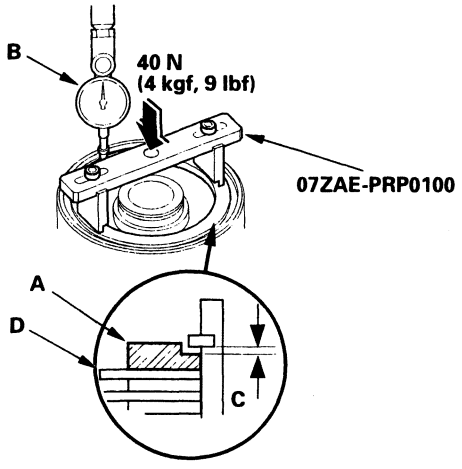

20. Press the special tool down with 40 N (4 kgf, 9 lbf) using a force gauge, and read the dial indicator (B). The dial indicator reads the clearance (C) between the clutch end plate and top disc (D). Take measurements in at least three places, and use the average as the actual clearance.

Clutch End Plate-to-Top Disc Clearance:

Clutch	Service Limit
1st	1.15–1.35 mm (0.045–0.053 in.)
2nd	0.7–0.9 mm (0.028–0.035 in.)
3rd	0.6–0.8 mm (0.024–0.031 in.)
4th	0.4–0.6 mm (0.016–0.024 in.)

21. If the clearance is not within the service limits, select a new clutch end plate from the following table.

NOTE: If the thickest clutch end plate is installed, but the clearance is still over the standard, replace the clutch discs and clutch plates.

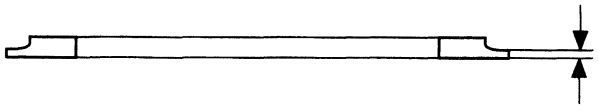

1ST and 2ND CLUTCH END PLATES

Mark	Part Number	Thickness
6	22551-P6H-003	2.6 mm (0.102 in.)
7	22552-P6H-003	2.7 mm (0.106 in.)
8	22553-P6H-003	2.8 mm (0.110 in.)
9	22554-P6H-003	2.9 mm (0.114 in.)
0	22555-P6H-003	3.0 mm (0.118 in.)
1	22556-P6H-003	3.1 mm (0.122 in.)
2	22557-P6H-003	3.2 mm (0.126 in.)
3	22558-P6H-003	3.3 mm (0.130 in.)
4	22559-P6H-003	3.4 mm (0.134 in.)

3RD and 4TH CLUTCH END PLATES

Mark	Part Number	Thickness
1	22551-PX4-003	2.1 mm (0.083 in.)
2	22552-PX4-003	2.2 mm (0.087 in.)
3	22553-PX4-003	2.3 mm (0.091 in.)
4	22554-PX4-003	2.4 mm (0.094 in.)
5	22555-PX4-003	2.5 mm (0.098 in.)
6	22556-PX4-003	2.6 mm (0.102 in.)
7	22557-PX4-003	2.7 mm (0.106 in.)
8	22558-PX4-003	2.8 mm (0.110 in.)
9	22559-PX4-003	2.9 mm (0.114 in.)

BACK

Valve Bodies and ATF Strainer Installation

Exploded View

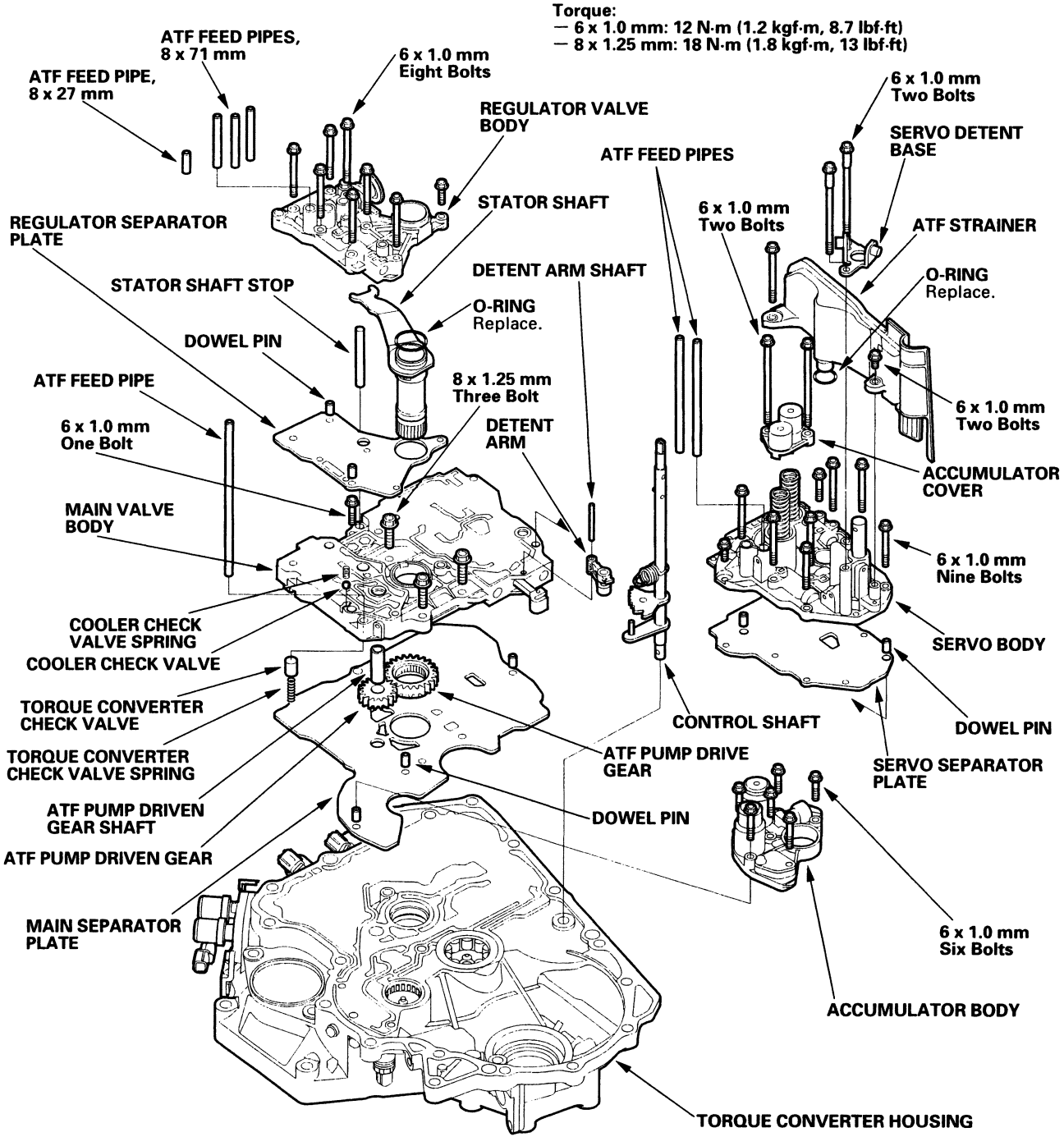

(cont'd)

Valve Bodies and ATF Strainer Installation (cont'd)

NOTE: Refer to the Exploded View as needed during this procedure.

1. Install the main separator plate (A) and three dowel pins on the torque converter housing. Then install the ATF pump drive gear (B), driven gear (C) and ATF pump driven gear shaft (D). Install the ATF pump driven gear with its grooved and chamfered side facing down.

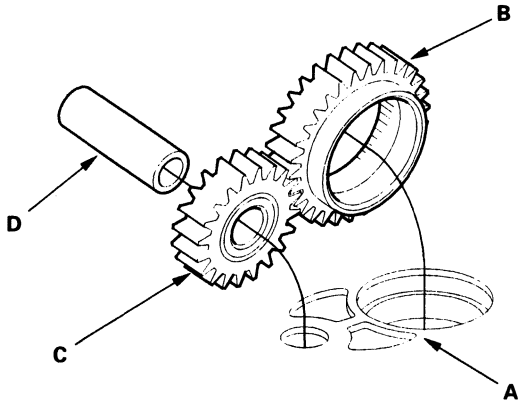

2. Install the torque converter check valve and spring, then install the main valve body (one 6 mm bolt and three 8 mm bolts). Make sure the ATF pump drive gear (B) rotates smoothly in the normal operating direction, and the ATF pump driven gear shaft (D) moves smoothly in the axial and normal operating direction.

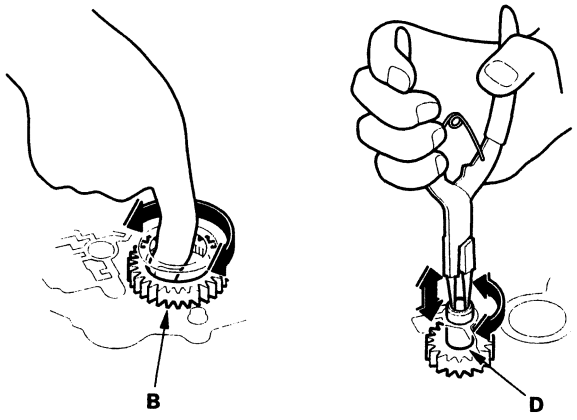

3. If the ATF pump drive gear and ATF pump driven gear shaft do not move smoothly, loosen the main valve body bolts. Realign the ATF pump driven gear shaft, and retighten the bolts to the specified torque, then recheck. Failure to align the ATF pump driven gear shaft correctly will result in a seized ATF pump drive gear or ATF pump driven gear shaft.

4. Install the cooler check valve and spring on the main valve body, then install the two dowel pins and the regulator separator plate.

5. Install the stator shaft and stator shaft stop.

6. Install the regulator valve body (eight bolts).

7. Install the two dowel pins and the servo separator plate on the main valve body.

8. Install the control shaft (A) in the torque converter housing along with the manual valve (B).

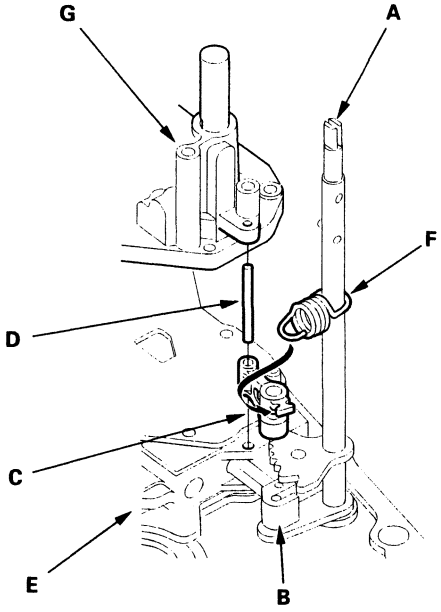

9. Install the detent arm (C) and arm shaft (D) in the main valve body (E), then hook the detent arm spring (F) to the detent arm.

10. Install the servo body (G) (nine bolts).

11. Install the accumulator cover (two bolts).

12. Install the ATF strainer (two bolts).

13. Install the servo detent base (two bolts).

14. Install the accumulator body (six bolts).

15. Install the two ATF feed pipes in the servo body, four pipes in the regulator valve body, and one pipe in the main valve body.

BACK

Shaft Assemblies and Housing Installation

Exploded View

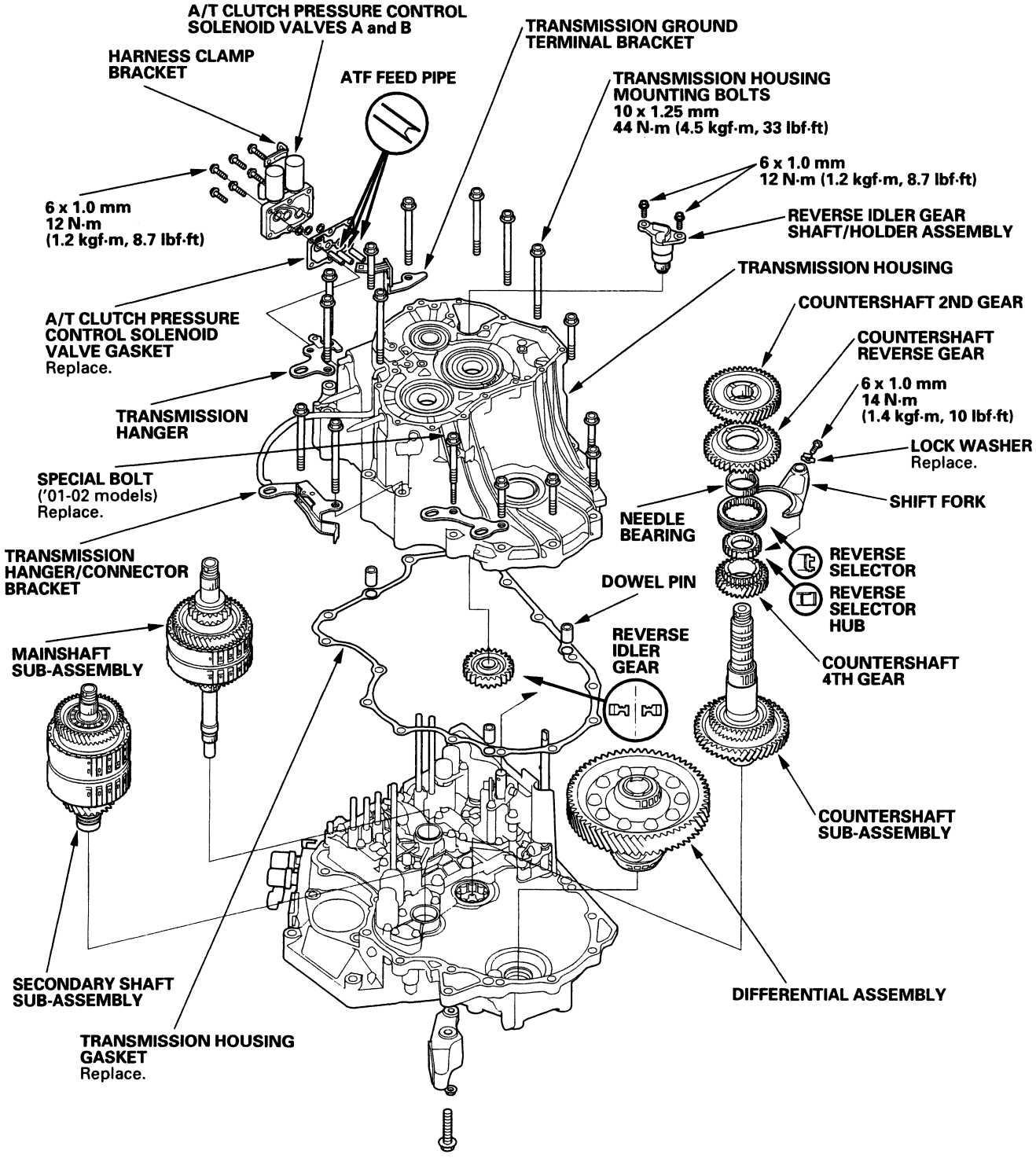

(cont'd)

Shaft Assemblies and Housing Installation (cont'd)

NOTE: Refer to the Exploded View as needed during this procedure.

1. Install the differential assembly, countershaft sub-assembly, mainshaft sub-assembly, and secondary shaft sub-assembly in the torque converter housing.

2. Install the countershaft 4th gear and reverse selector hub on the countershaft. If the reverse selector hub is a press-fitted type, refer to the installation (see page 14-173).

3. Turn the shift fork shaft (A) so the large chamfered hole is facing the fork bolt hole. Then install the shift fork (B) and reverse selector (C) together on the shift fork shaft and countershaft (D). Secure the shift fork to the shift fork shaft with the lock bolt (E) and a new lock washer (F), then bend the lock washer against the bolt head.

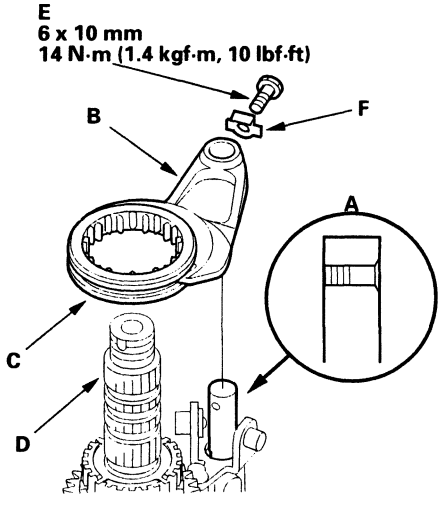

4. Install the needle bearing, countershaft reverse gear, and countershaft 2nd gear on the countershaft.

5. Place the reverse idler gear in the transmission housing in the direction shown, then move it the direction shown.

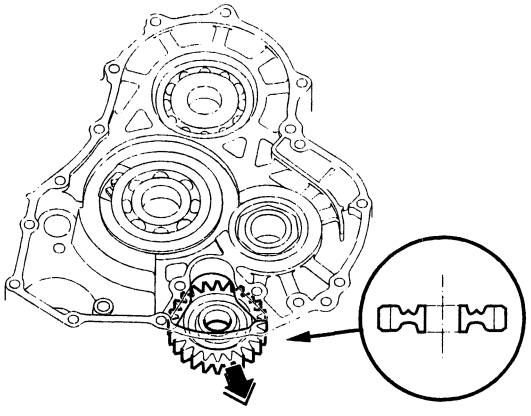

6. Align the spring pin (A) on the control shaft (B) with the transmission housing groove (C) by turning the control shaft.

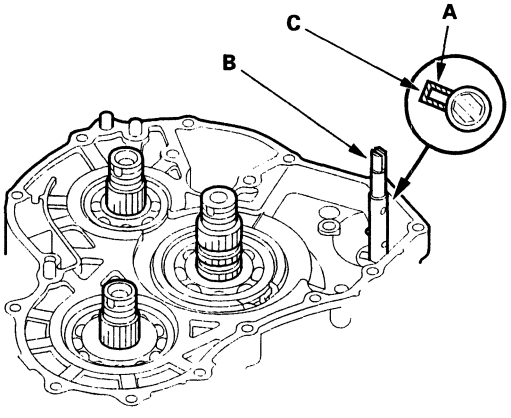

BACK

7. Install three dowel pins and a new gasket on the torque converter housing.

8. Place the transmission housing on the torque converter housing, then install the housing bolts along with the transmission hanger/connector bracket (A), transmission hangers (B), and transmission ground terminal bracket (C). Tighten the bolts and new special bolt ('01-02 models) (D) in two or more steps in the sequence shown to 44 N·m (4.5kgf·m, 33 lbf·ft).

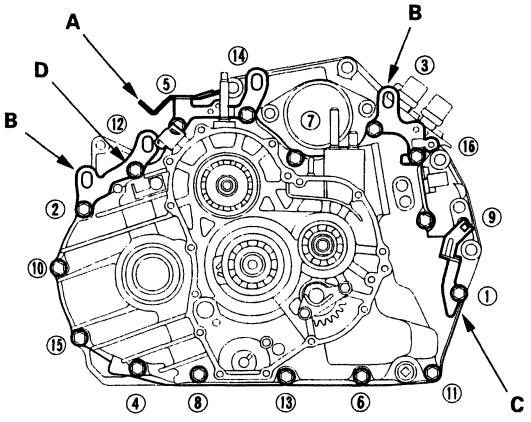

9. Install the ATF feed pipes (A) with their filter (B) side into the transmission housing, then install new O-rings (C), new gasket (D), harness clamp bracket (E) and the A/T clutch pressure control solenoid valves A and B (F) over the ATF feed pipes on the transmission housing.

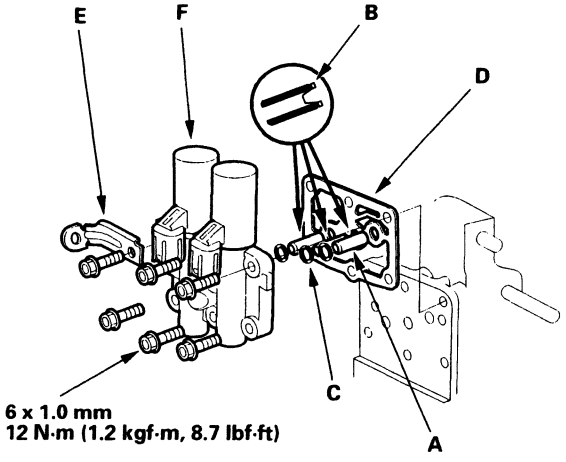

10. Coat the reverse idler gear shaft (A), needle bearing (B), and new O-rings (C) with lithium gearse lightly. Assemble the new O-rings and needle bearing on the reverse idler gear shaft, then install the reverse idler gear shaft in the reverse idler gear shaft holder (D). Align the D-shaped cut out of the shaft with the D-shaped area of the holder.

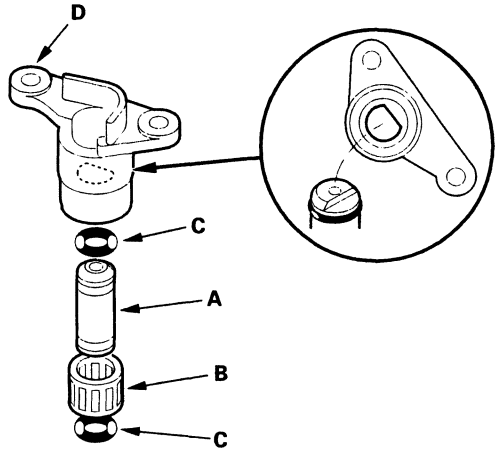

11. Engage the reverse idler gear (A) with the countershaft reverse gear and mainshaft reverse gear, then install the reverse gear shaft/holder assembly (B) on the transmission housing.

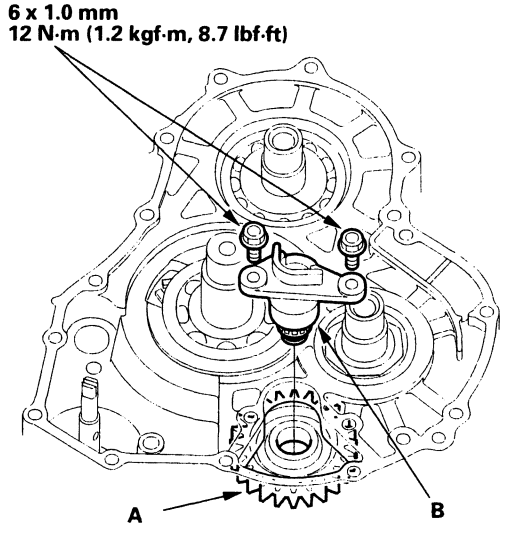

End Cover and Idler Gears Installation

Special Tools Required
Mainshaft holder 07GAB-PF50101 or 07GAB-PF50100

1. Install the park lever (A) and park lever stop (B) on the control shaft (C), then install the lock bolt (D) with a new lock washer (E). Do not bend the lock tab of the lock washer in this step; bend it after check the park pawl engagement in step 25.

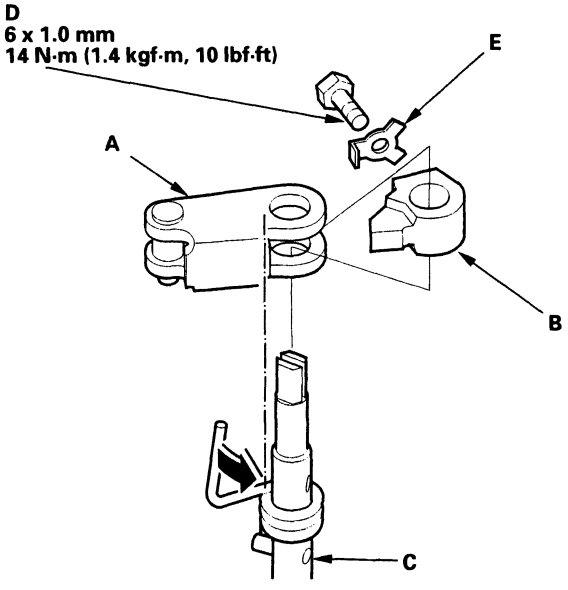

2. Coat the following parts with ATF:
   - Splines of the countershaft, park gear, and old locknut.
   - Threads of the countershaft and old locknut.
   - Old conical spring washer.

3. Install the park gear (A) using the old locknut (B) and a collar (C). Engage the park pawl (D) to the park gear, then tighten the old locknut until the shaft splines come out slightly over the park gear splines.

   NOTE: Do not use an impact wrench.

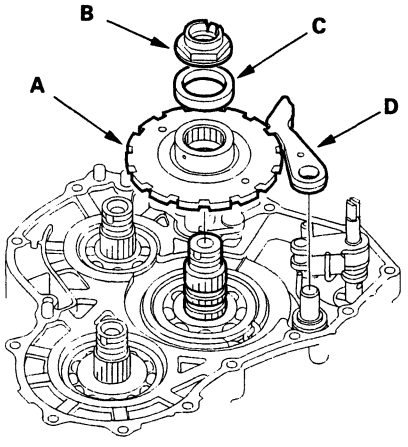

4. Remove the locknut and the collar, then install only the bearing hub/bearing assembly (A) and old conical spring washer (B). Tighten the old locknut (C) to seat the park gear to 226 N·m (230 kgf·m, 166 lbf·ft), then remove the locknut and conical spring washer.

   NOTE: Do not use an impact wrench. Always use a torque wrench to tighten the locknut.

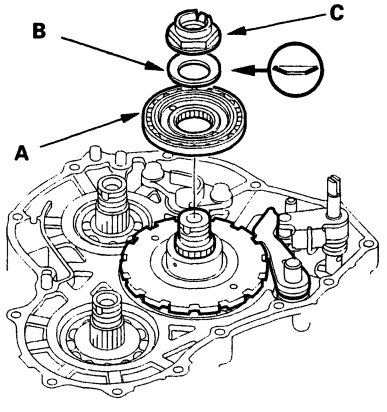

BACK

5. Remove the bearing hub/bearing assembly (A) using a puller (B).

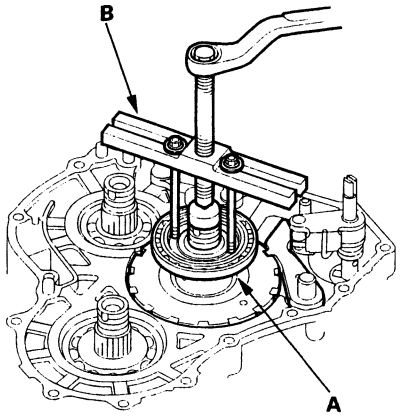

6. Install the thrust needle bearing (A), needle bearing (B), countershaft idler gear (C), thrust needle bearing (D), bearing hub/bearing assembly (E), and the old conical spring washer (F). Then tighten the old locknut (G) to seat the bearing hub/bearing assembly to 164 N·m (17.0 kgf·m, 123 lbf·ft).

   NOTE: Do not use an impact wrench. Always use a torque wrench to tighten the locknut.

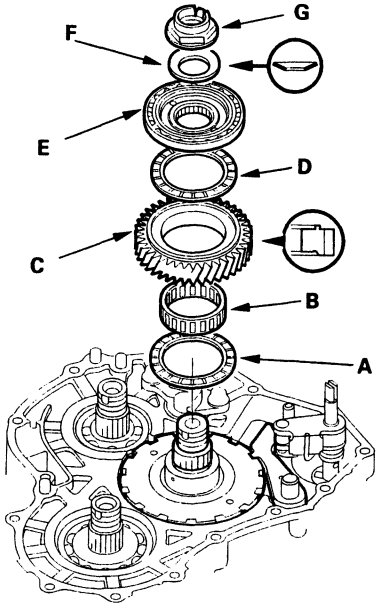

7. Set the dial indicator (A) to the countershaft idler gear (B) as shown.

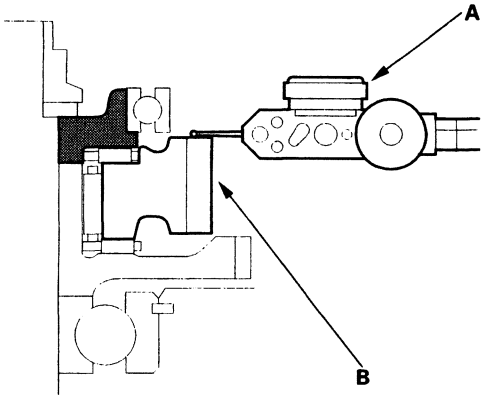

8. Measure the countershaft idler gear axial clearance in at least three places while moving the countershaft idler gear(A). Use the avarage as the actual clearance.

   STANDARD:
   0.015–0.045mm (0.0006–0.0018 in.)

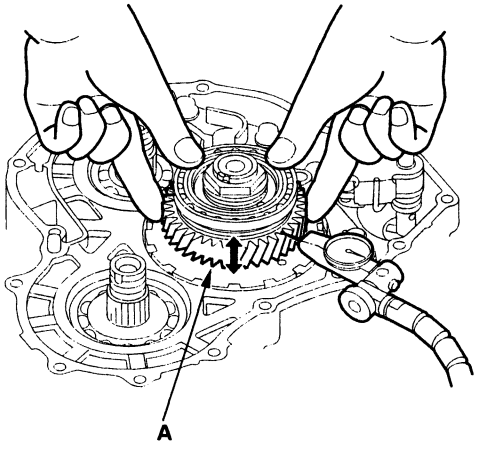

(cont'd)

End Cover and Idler Gears Installation (cont'd)

9. If the clearance is out of standard, remove the bearing hub/bearing assembly using a puller as descriped on the previous page.

10. Select and install the new bearing hub/bearing assembly, then recheck.

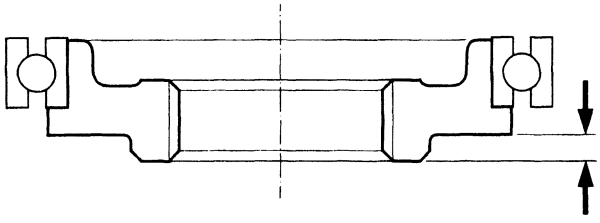

BEARING HUB

Mark	Part Number	Difference
A	90520-P6H-000	3.503mm(0.1379 in.)
B	90521-P6H-000	3.490 mm(0.1374 in.)
C	90522-P6H-000	3.477 mm(0.1369 in.)
D	90523-P6H-000	3.464 mm(0.1364 in.)

11. After replacing the bearing hub/bearing assembly, make sure the clearance is within standard.

12. Remove the old locknut and old conical spring washer from the countershaft.

13. Install the special tool onto the mainshaft.

07GAB-PF50101 or 07GAB-PF50100

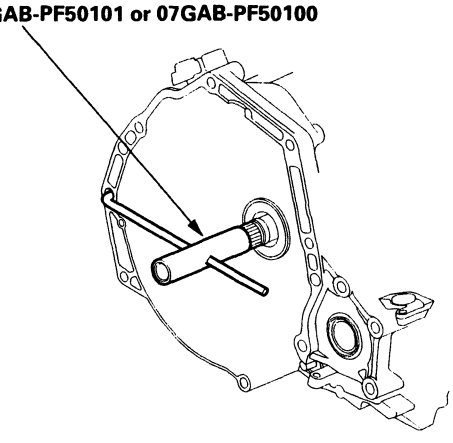

14. Lubricate the following parts with ATF:

    - Splines of the mainshaft, secondary shaft, and idler gears.
    - Threads of the mainshaft, and secondary shaft.
    - Threads of the old mainshaft and secondary shaft locknuts.
    - Old conical spring washers.

15. Install the mainshaft idler gear (A) and the old conical spring washer (B) on the mainshaft (C). Tighten the old locknut (D) to seat the mainshaft idler gear to 226 N·m (23.0 kgf·m, 166 lbf·ft).

    NOTE:
    - Do not use an impact wrench, always use a torque wrench to tighten the locknut.
    - Mainshaft locknut has left-hand threads.

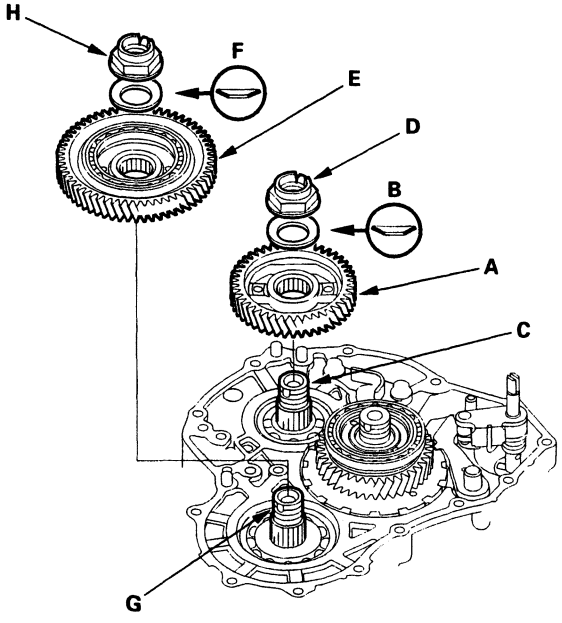

16. Install the secondary shaft idler gear (E) and the old conical spring washer (F) on the secondary shaft (G). Tighten the old locknut (H) to seat the sedondary shaft idler gear to 226 N·m (23.0 kgf·m, 166 lbf·ft).

    NOTE: Do not use an impact wrench, always use a torque wrench to tighten the locknut.

17. Remove the old locknuts and old conical spring washer from the mainshaft and the secondary shaft.

BACK

18. Lubricate the threads of each shaft and new locknuts, and new conical spring washers with ATF.

19. Install the new conical spring washers (A) in the direction shown, and install the new locknuts (B).

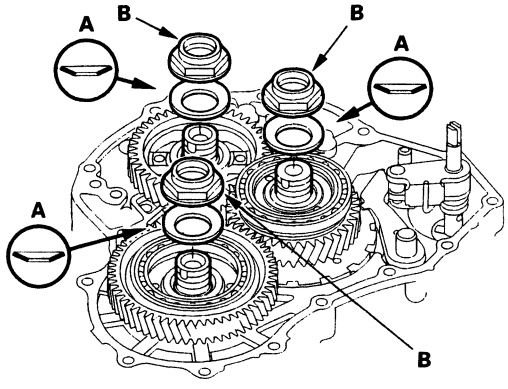

20. Tighten the locknuts to 167 N·m (17.0 kgf·m, 123 lbf·ft).

NOTE:
- Do not use an impact wrench, always use a torque wrench to tighten the locknut.
- Mainshaft locknut has left-hand threads.

21. Stake each locknut into its shaft using a 3.5 mm punch.

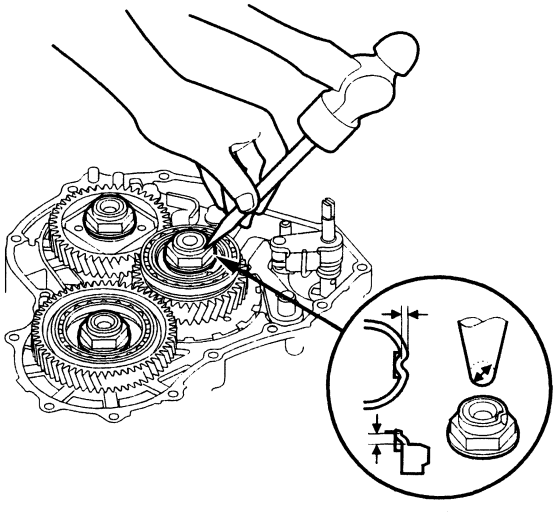

22. For '00-02 models: Install the pitot flange (A) on the mainshaft idler gear (B), then install the lubrication pitot pipe (C) and the pitot pipe (D) on the transmission housing.

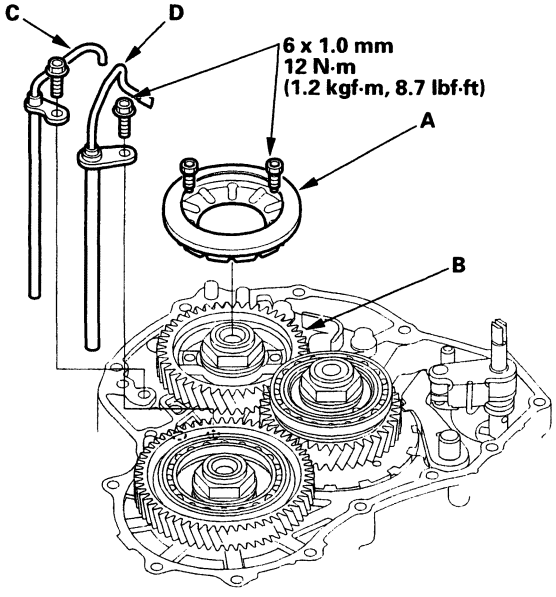

23. Set the park lever in the P position, then verify that the park pawl (A) engages the park gear (B).

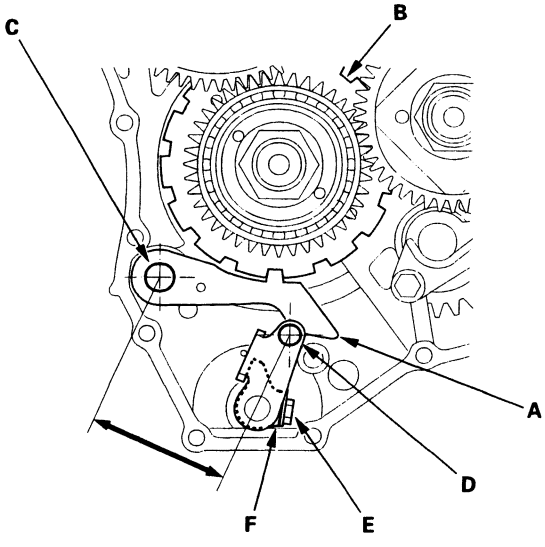

24. If the park pawl does not engage fully, check the distance between the park pawl shaft (C) and the park lever roller pin (D) (see page 14-152).

25. Tighten the lock bolt (E), and bend the lock tab of the lock washer (F) against the lock bolt head.

(cont'd)

End Cover and Idler Gears Installation (cont'd)

26. Install the end cover along with two dowel pins and new O-rings. Tighten the 14 bolts to 12 N·m (1.2 kgf·m, 8.7 lbf·ft).

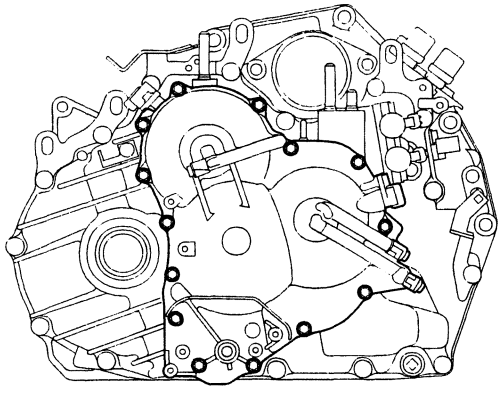

27. Set the transmission range switch to N position.

NOTE: The transmission range switch clicks in N position.

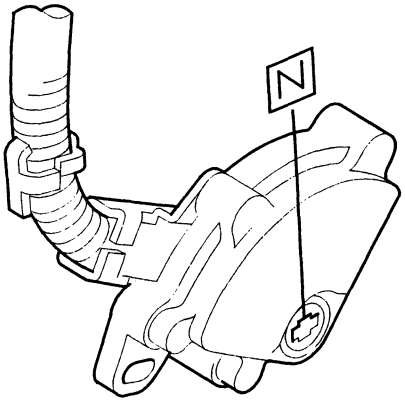

28. Set the control shaft to the N position by turning it.

NOTE: Be careful not to squeeze the end of the control shaft tips together when turning into position. If the tips are squeezed together it will cause a faulty shift signal or position due to the play between the control shaft and the switch.

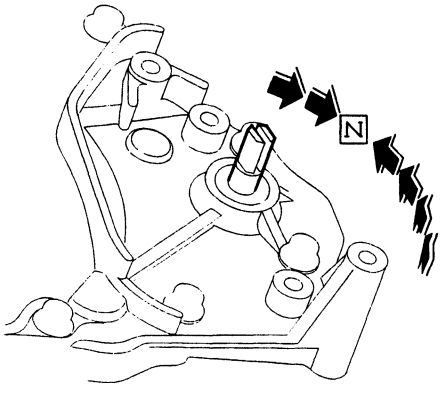

BACK

29. Install the transmission range switch (A) loosely on the control shaft (B), then secure it with the bolts. Do not move the transmission range switch when tightening the bolts.

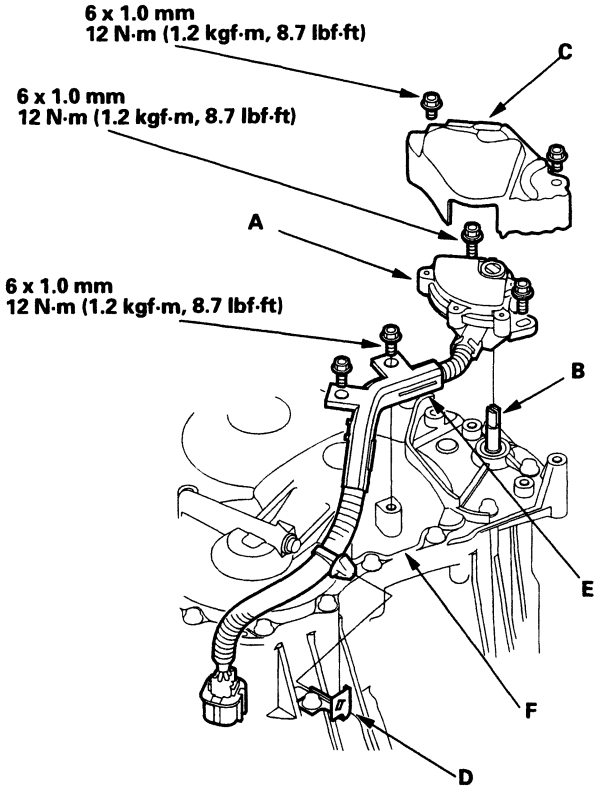

30. Install the transmission range switch cover (C), and install the harness clamp on the clamp bracket (D) on the transmission housing, then install the harness clamp (E) on the end cover (F).

31. Install the ATF cooler lines and new sealing washers. Tighten the line fittings to 28 N·m (2.9 kgf·m, 21 lbf·ft).

32. Install the breather tube.

33. Install the ATF dipstick.

For '01-02 models, follow this procedure:

34. Install the rear stiffener (A), then tighten the 10 x 1.25 mm bolt (B) to the specified torque.

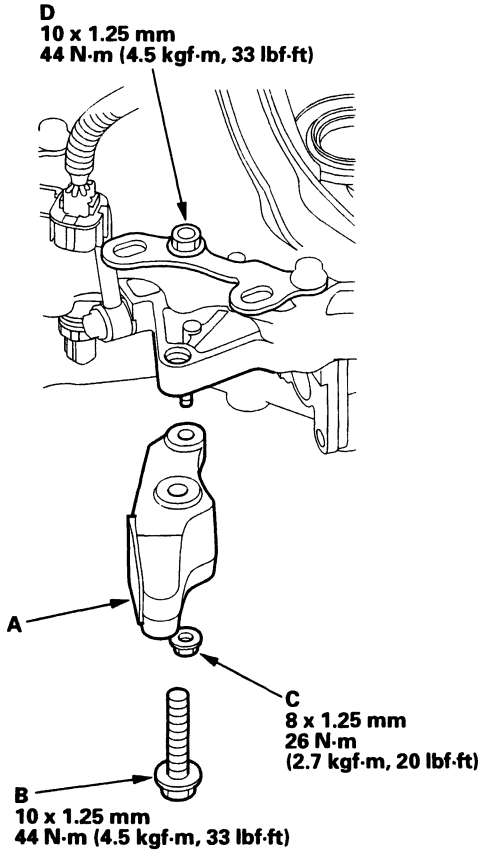

35. Secure the nut (C) by your hand until it contacts the stiffener, then tighten it to the specified torque. If you can not tighten the nut to the stiffener surface by hand, replace the nut and the special bolt (D).

Component Location Index

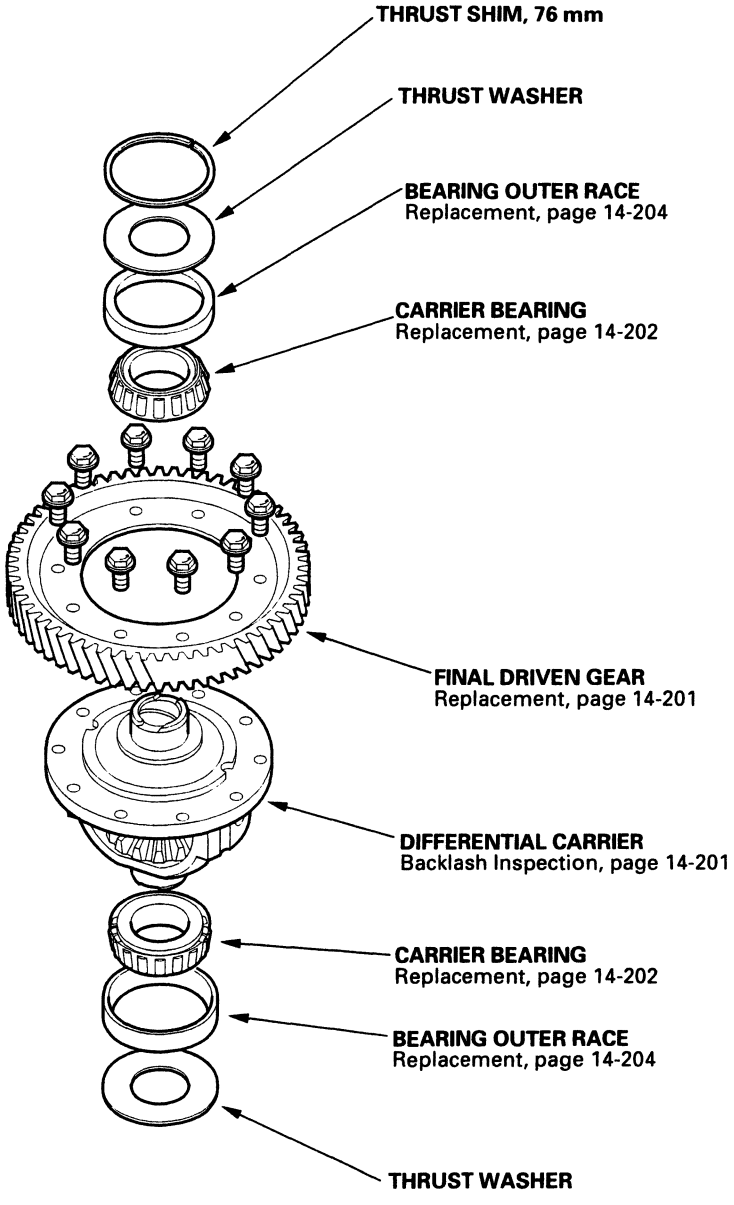

BACK

Backlash Inspection

1. Install both axles, and place the differential assembly on V-blocks (A).

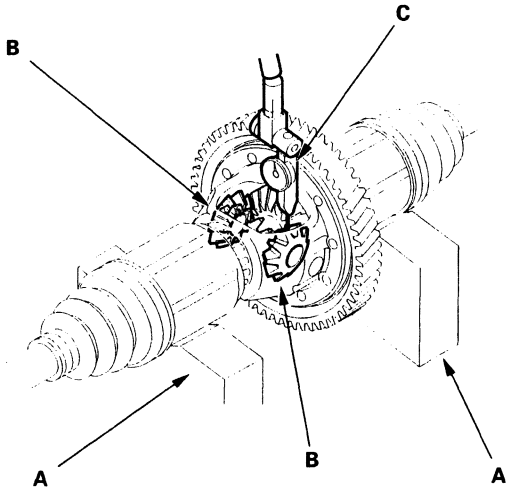

2. Check the backlash of both pinion gears (B) with a dial indicator (C). If the backlash is out of standard, replace the differential carrier.

   STANDARD:
   0.05 – 0.15 mm (0.002 – 0.006 in.)

Final Driven Gear/Carrier Replacement

1. Remove the final driven gear from the differential carrier.

   NOTE: The final driven gear bolts have left-hand threads.

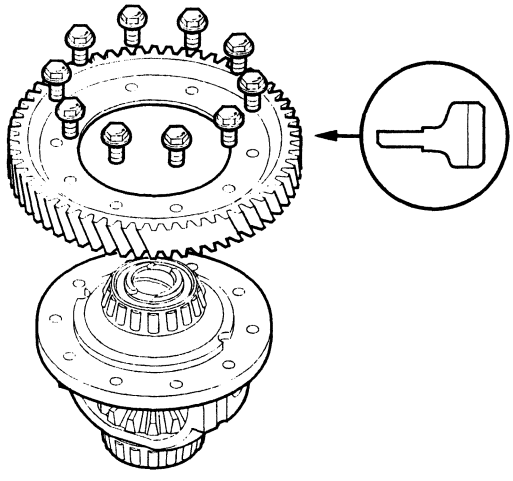

2. Install the final driven gear with the chamfered side on the inner bore facing the differential carrier.

3. Tighten the bolts to the specified torque in a crisscross pattern.

   TORQUE:
   101 N·m (10.3 kgf·m, 74.5 lbf·ft)

Carrier Bearing Replacement

Special Tools Required
Attachment, 40 x 50 mm 07LAD-PW50601

NOTE:
- The bearing and outer race should be replaced as a set.
- Inspect and adjust the bearing preload whenever bearing is replaced.

1. Remove the tapered roller bearing (A) with a bearing puller (B), a bearing separator (C), and a stepper adapter (D).

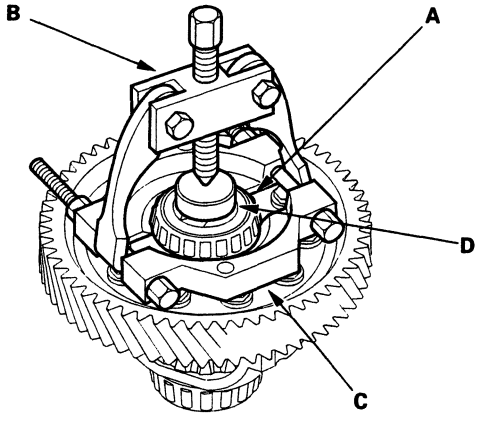

2. Using the small end of the special tool, install the new tapered roller bearings with a press.
   Press the bearings on securely so there is no clearance between the bearings and the differential carrier.

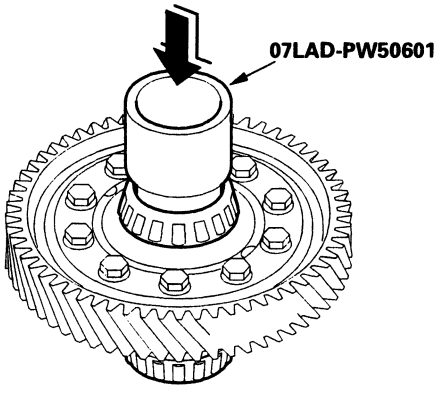

BACK

Oil Seal Replacement

Special Tools Required
- Driver 07749-0010000
- Seal driver attachment 07GAD-PG40101 or 07GAD-PG 40100
- Pilot, 28 x 30 mm 07JAD-PH80400

1. Remove the differential assembly.

2. Remove the oil seal (A) from the transmission housing (B).

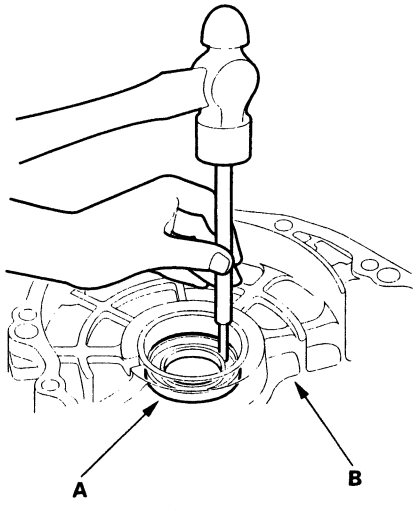

3. Remove the oil seal (A) from the torque converter housing (B).

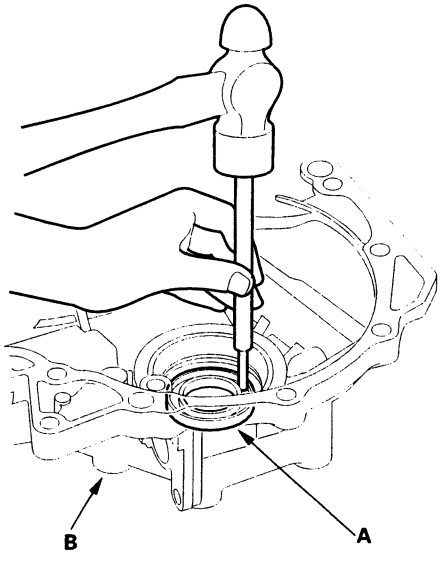

4. Install the oil seal (A) in the transmission housing with the special tools.

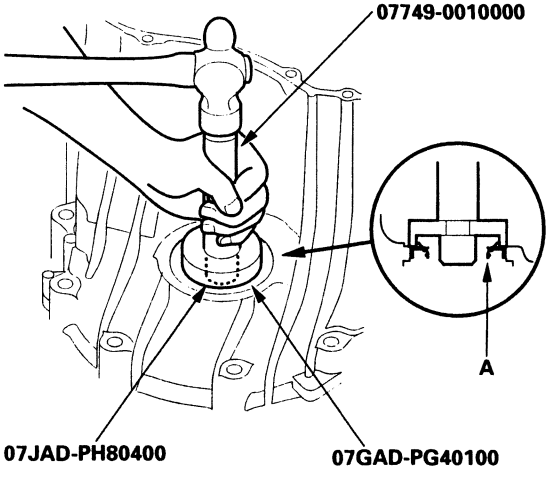

5. Install the oil seal (A) in the torque converter housing with the special tools.

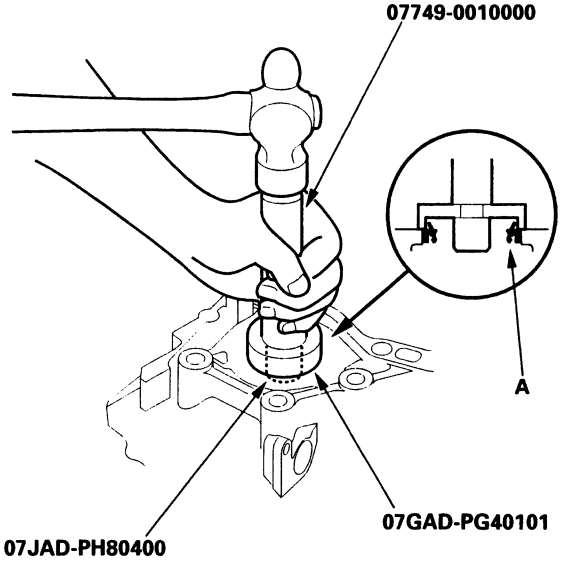

Carrier Bearing Outer Race Replacement

Special Tools Required
- Driver 07749-0010000
- Driver attachment 07HAD-SF10100

NOTE:
- Replace the bearing with a new one whenever the outer race is to be replaced.
- Do not use shim (s) on the torque converter housing side.
- Adjust preload after replacing the bearing and outer race.
- Coat all parts with ATF during installation.

1. Remove the bearing outer race from the transmission housing by heating the housing to about 212°F (100°C) with a heat gun. Do not heat the housing more than 212°F (100°C).

2. Remove the bearing outer race from the torque converter housing.

3. Install the thrust shim (A), thrust washer (B) and outer race (C) in the transmission housing (D) with the special tools.

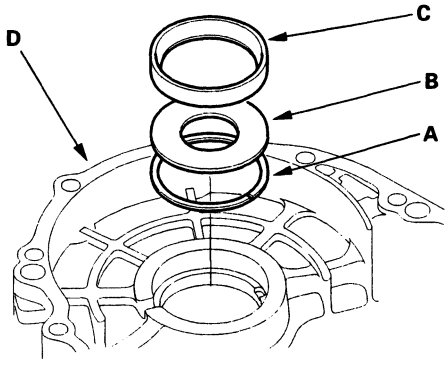

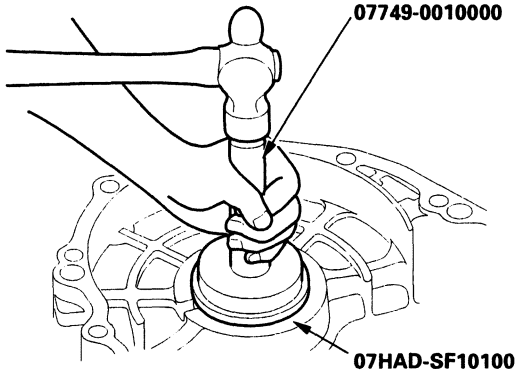

4. Install the thrust washer (A) and outer race (B) in the torque converter housing (C), and be sure to install the outer race until it bottoms is the housing with the special tools.

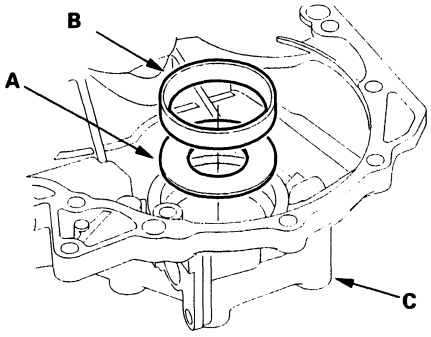

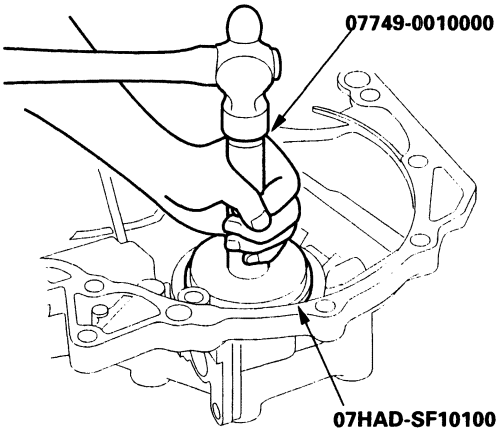

BACK

Carrier Bearing Preload Inspection

Special Tools Required
- Driver 07749-0010000
- Driver attachment 07HAD-SF10100
- Preload inspection tool 07HAJ-PK40201

NOTE: If the transmission housing, torque converter housing, differential carrier, tapered roller bearing, outer race, or thrust shim were replaced, the bearing preload must be adjusted.

1. Remove the bearing outer race (A), thrust washer (B) and thrust shim (C) from the transmission housing (D) by heating the housing to about 212°F (100°C) with a heat gun (E). Do not heat the housing more than 212°F (100°C).

   NOTE: Let the transmission housing cool to room temperature before adjusting the bearing preload.

2. Replace the tapered roller bearing when the outer race is to be replaced.

3. Do not use a shim on the torque converter housing side.

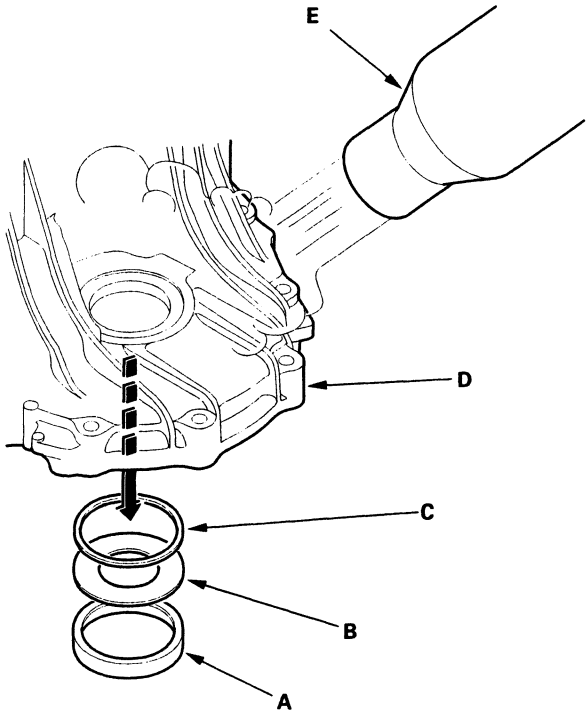

4. Select the 2.60 mm (0.102 in.) thrust shim from the middle of the table below.

THRUST SHIM, 76 mm

No.	Part Number	Thickness
S	41438-PX4-700	2.05 mm (0.081 in.)
T	41439-PX4-700	2.01 mm (0.083 in.)
U	41440-PX4-700	2.15 mm (0.085 in.)
A	41441-PK4-000	2.20 mm (0.087 in.)
B	41442-PK4-000	2.25 mm (0.089 in.)
C	41443-PK4-000	2.30 mm (0.091 in.)
D	41444-PK4-000	2.35 mm (0.093 in.)
E	41445-PK4-000	2.40 mm (0.094 in.)
F	41446-PK4-000	2.45 mm (0.096 in.)
G	41447-PK4-000	2.50 mm (0.098 in.)
H	41448-PK4-000	2.55 mm (0.100 in.)
I	41449-PK4-000	2.60 mm (0.102 in.)
J	41450-PK4-000	2.65 mm (0.104 in.)
K	41451-PK4-000	2.70 mm (0.106 in.)
L	41452-PK4-000	2.75 mm (0.108 in.)
M	41453-PK4-000	2.80 mm (0.110 in.)
N	41454-PK4-000	2.85 mm (0.112 in.)
O	41455-PK4-000	2.90 mm (0.114 in.)
P	41456-PK4-000	2.95 mm (0.116 in.)
Q	41457-PK4-000	3.00 mm (0.118 in.)
R	41458-PK4-000	3.05 mm (0.120 in.)

(cont'd)

Carrier Bearing Preload Inspection (cont'd)

5. Install the thrust shim (A), thrust washer (B) and bearing outer race (C) in the transmission housing (D).

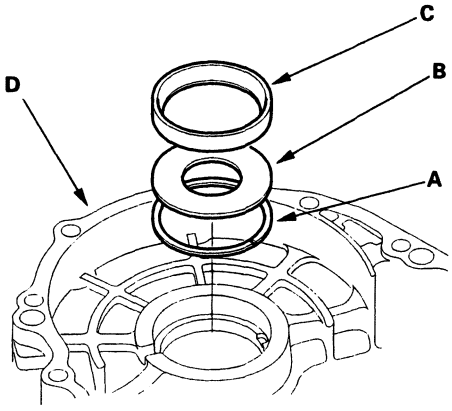

6. Drive the outer race with the special tools, and install it securely in the transmission housing.

7. Check that there is no clearance between the thrust washer, outer race, shim and transmission housing.

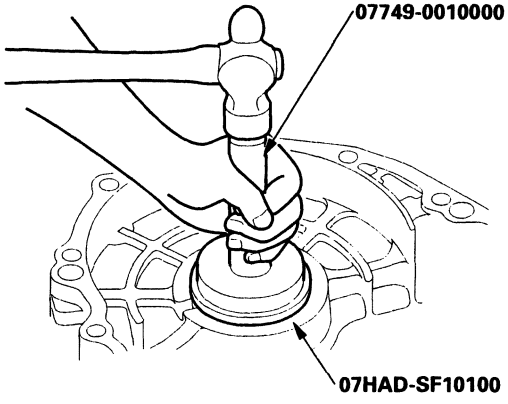

8. Install the differential assembly (A), gasket (B), and dowel pins (C) on the torque converter housing (D). Align the spring pin on the control shaft (E) with the transmission housing groove.

9. Install the transmission housing (F) with the transmission hangers (G), hanger/connector bracket (H) and ground terminal bracket (I), then tighten the bolts.

   NOTE:
   For '01-02 models: Use old special bolt (J) during inspection, install the new special bolt when assembling the transmission.

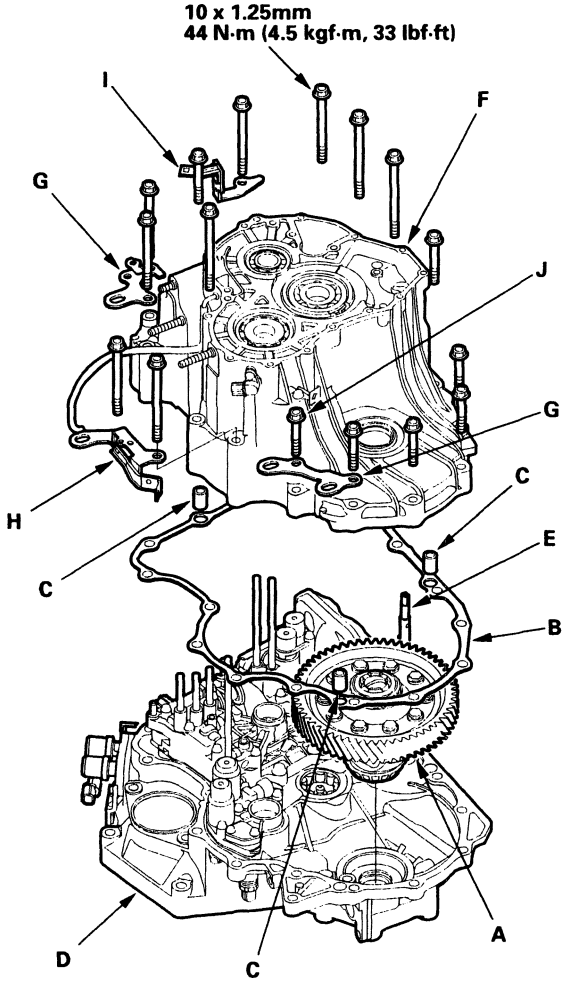

BACK

10. Rotate the differential assembly in both directions to seat the bearings.

11. Measure the starting torque of the differential assembly with the special tool and a torque wrench (A). Measure the starting torque at normal room temperature in both directions.

    STANDARD:
    New bearing:
    2.7 – 3.9 N·m (28 – 40 kgf·cm, 24 – 35 lbf·in.)
    Reused bearings:
    2.5 – 3.6 N·m (25 – 37 kgf·cm, 22 – 32 lbf·in.)

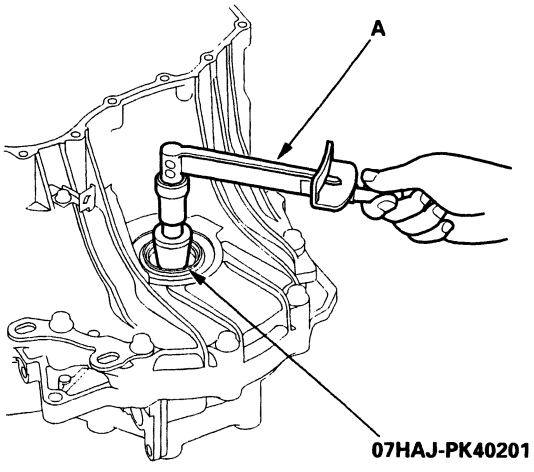

12. To increase the starting torque, increase the thickness of the shim. To decrease the starting torque, decrease the thickness of the shim. Changing the shim to the next size will increase or decrease starting torque about 0.3 – 0.4 N·m (3 – 4 kgf·cm, 3 – 3 ibf·in.)

BACK

Transaxle

Driveline/Axle

Special Tools 16-2
Driveshaft Inspection 16-3
Driveshafts Removal 16-3
Driveshafts Disassembly 16-5
Driveshafts Reassembly 16-9
Driveshafts Installation 16-20
Intermediate Shaft Removal 16-21
Intermediate Shaft Disassembly 16-22
Intermediate Shaft Reassembly 16-24
Intermediate Shaft Installation 16-26

BACK

Special Tools

Ref. No.	Tool Number	Description	Qty
①	07LAF-SM40300	Support Base Attachment	1
②	07MAC-SL00200	Ball Joint Remover, 28 mm	1
③	07XAC-001020A	Threaded Adapter, 24 x 1.5 mm	1
④	07746-0010300	Attachment, 42 x 47 mm	1
⑤	07746-0030100	Driver, 40 mm I.D.	1
⑥	07749-0010000	Driver	1
⑦	07947-SD90101	Oil Seal Driver Attachment	1
⑧	07947-4630100	Fork Seal Driver, 39.2 x 49.5 x15 mm	1
⑨	07947-6340500	Driver Attachment	1
⑩	07965-SD90100	Support Base	1

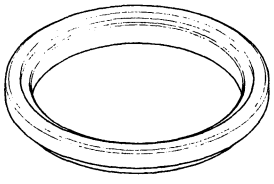

①

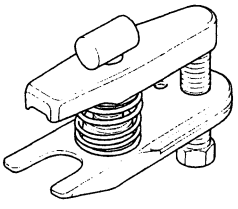

②

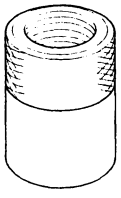

③

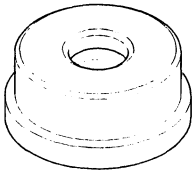

④

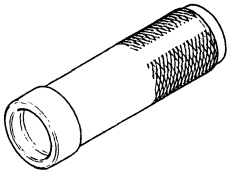

⑤

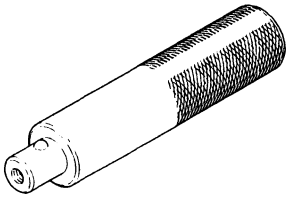

⑥

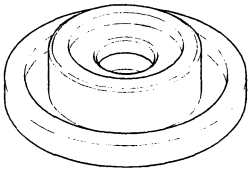

⑦

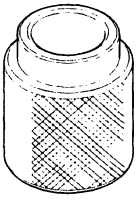

⑧

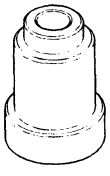

⑨

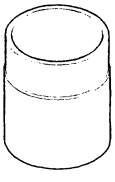

⑩

BACK

Driveshaft Inspection

1. Check the inboard boot (A) and the outboard boot (B) on the driveshaft (C) for cracks, damage, leaking grease, and loose boot bands (D). If any damage is found, replace the boot and boot bands.

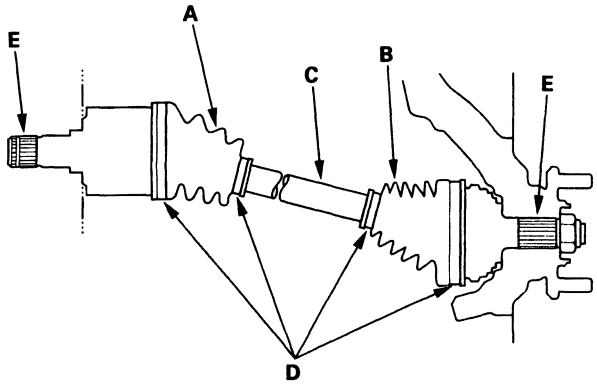

2. Turn the driveshaft by hand, and make sure the splines (E) and joint are not excessively loose.

3. Make sure the driveshaft is not twisted or cracked; if it is, replace it.

Driveshafts Removal

Special Tool Required
Ball joint remover, 28 mm 07MAC-SL00200

1. Loosen the wheel nuts slightly.

2. Raise the front of the vehicle, and support it with safety stands in the proper locations (see page 1-17).

3. Remove the wheel nuts and front wheels.

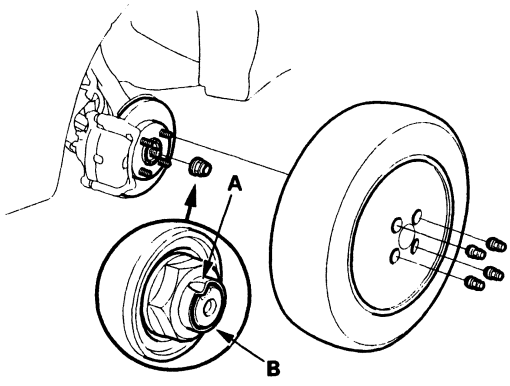

4. Lift up the locking tab (A) on the spindle nut (B), then remove the nut.

5. If the right driveshaft is removed, drain the MTF (see page 13-3) or the ATF (see page 14-113). It is not necessary to drain the transmission fluid when the left driveshaft is removed (for vehicles with intermediate shaft).

6. Remove the self-locking nut (A) and 10 mm flange bolts (B and C), then remove the damper fork (D).

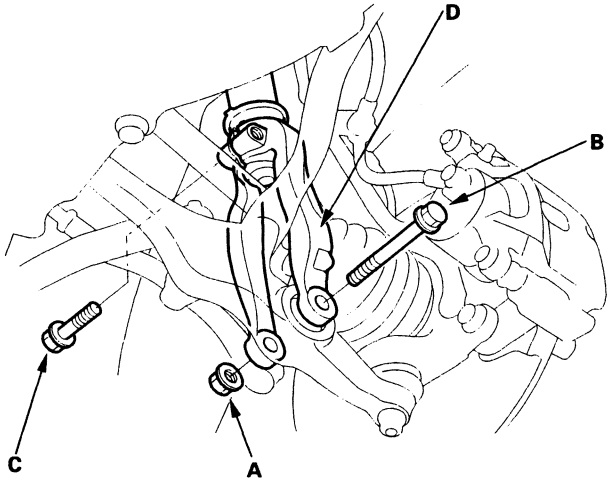

(cont'd)

Driveshafts Removal (cont'd)

7. Remove the cotter pin (A) from the lower arm ball joint castle nut (B), and remove the nut.

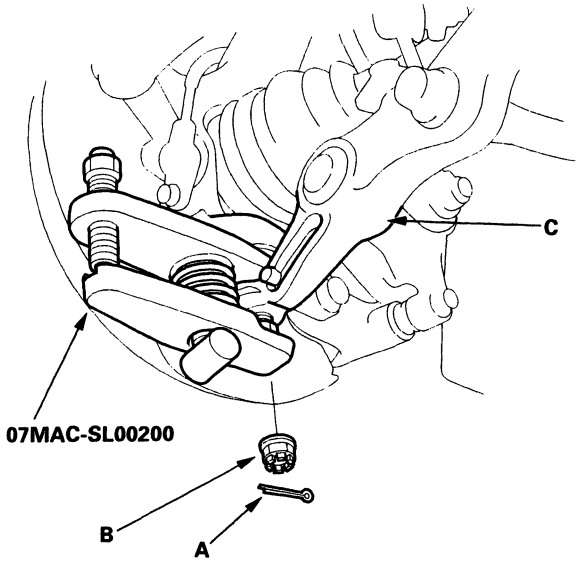

8. Separate the ball joint from the lower arm (C) with the special tool (see page 18-9).

9. Pull the knuckle outward, and remove the driveshaft outboard joint from the front wheel hub using a plastic hammer.

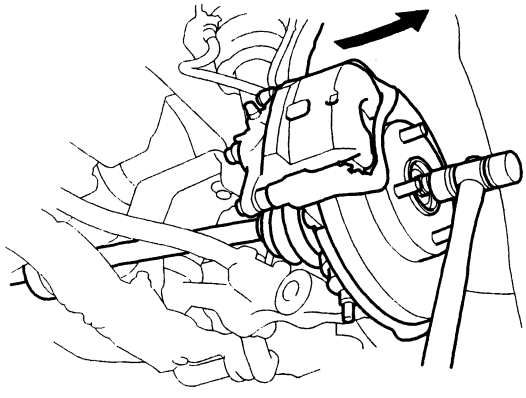

10. Pry out the inboard joint (A) with a prybar, and remove the driveshaft from the differential case or bearing support as an assembly. Do not pull on the driveshaft (B), because the inboard joint may come apart. Draw the driveshaft straight out to avoid damaging the differential oil seal or the intermediate shaft outer seal.

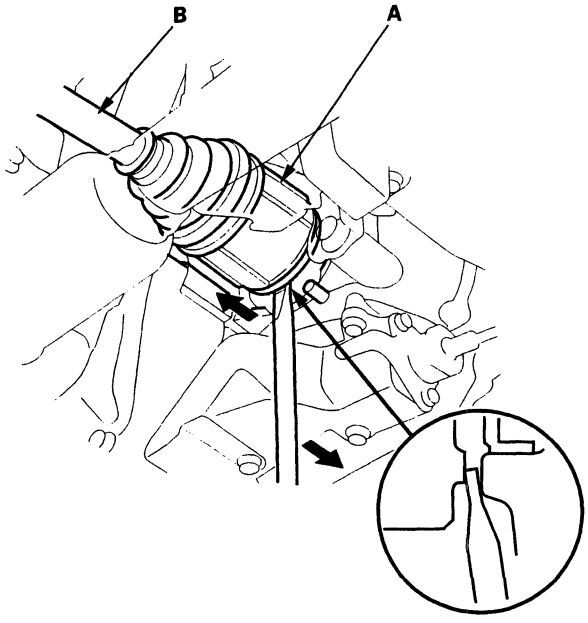

Left driveshaft with intermediate shaft:

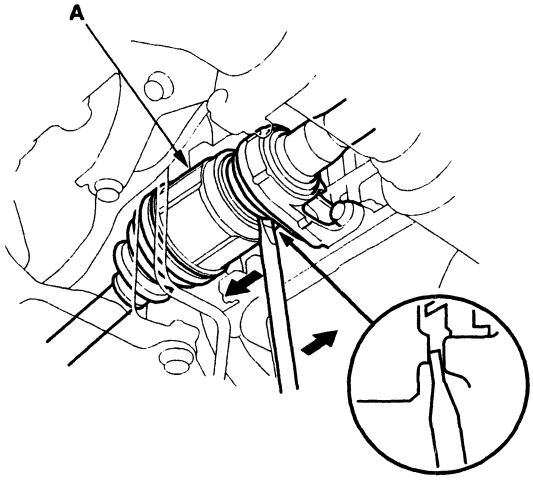

BACK

Driveshafts Disassembly

Special Tools Required
- Threaded adapter, 24 x 1.5 mm 07XAC-001020A
- Slide hammer, commercially available
- Boot band pincer, commercially available

Inboard Joint Side:

1. Remove the set ring (A) from the inboard joint.

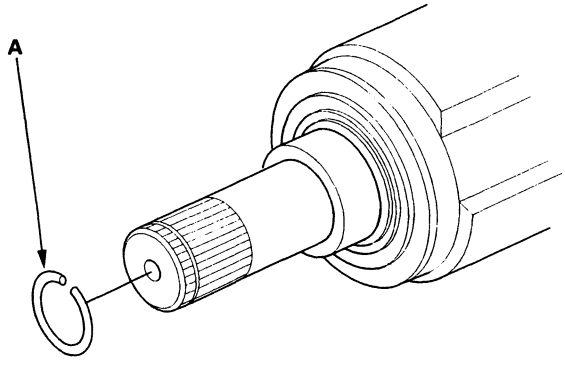

2. Remove the boot bands. Take care not to damage the boot and dynamic damper.

   - If the boot band is welded type (A), cut the boot band (B).
   - If the boot band is a double loop type (C), lift up the band bend (D), and push it into the clip (E).
   - If the boot band is a low profile type (F), pinch and remove the boot band with a commercially available boot band pincer (G).

Welded Type

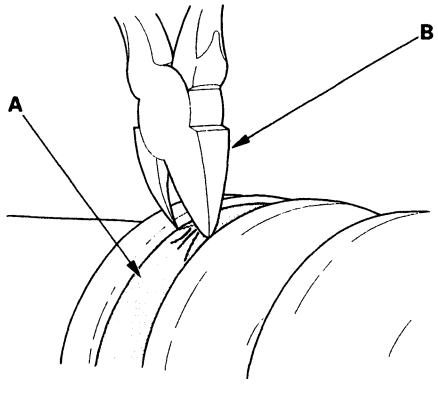

Double Loop Type

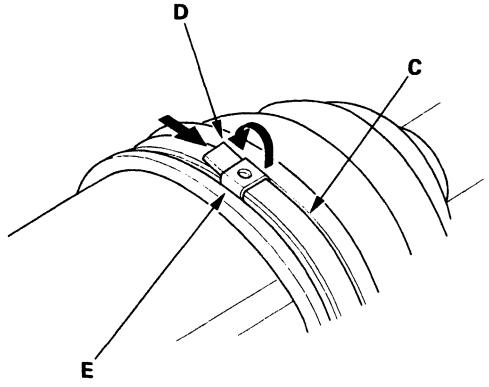

Low Profile Type

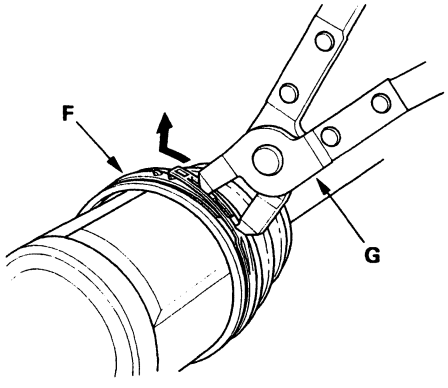

3. Make a mark (A) on each roller (B) and inboard joint (C) to identify the locations of rollers and grooves in the inboard joint. Then remove the inboard joint on the shop towel (D). Be careful not to drop the rollers when separating them from the inboard joint.

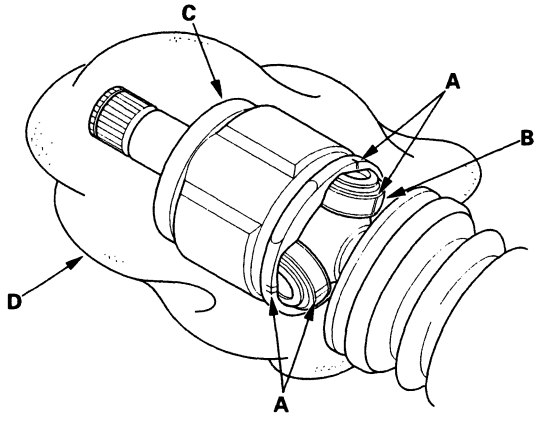

(cont'd)

Driveshafts Disassembly (cont'd)

4. Make a mark (A) on the rollers (B or C) and spider (D) to identify the locations of rollers on the spider, them remove the rollers.

   NOTE:
   - Roller (B) is used on '98-00 A/T models and all '01-02 models.
   - Roller (C) is used on '98-00 M/T models.

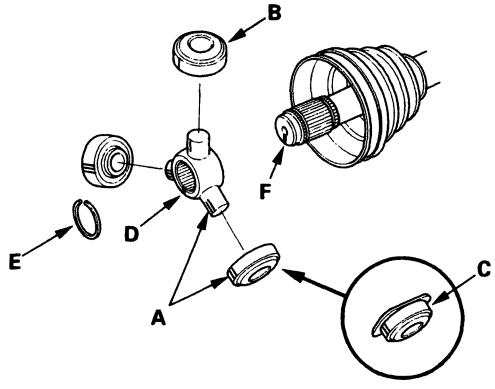

5. Remove the circlip (E).

6. Mark the spider (D) and driveshaft (F) to identify the position of the spider on the shaft.

7. Remove the spider.

8. Wrap the splines on the driveshaft with vinyl tape (A) to prevent damage to the boot and dynamic damper (for left driveshaft on A/T models and all right driveshafts).

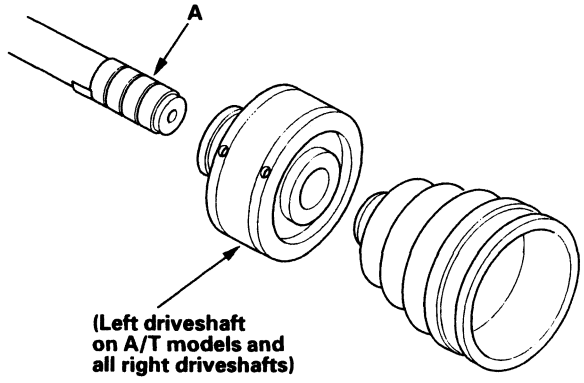

9. Remove the inboard boot and dynamic damper. Take care not to damage the boot and dynamic damper.

10. Remove the vinyl tape.

BACK

Outboard Joint Side:

1. Remove the boot bands. Take care not to damage the boot and dynamic damper.
   - If the boot band is a welded type (A), cut the boot band (B).
   - If the boot band is a double loop type (C), lift up the band bend (D), and push it into the clip (E).
   - If the boot band is an ear clamp type (F), lift up the three tabs (G) with a screwdriver.
   - If the boot band is the locking tabs type, pry up the tabs with a screwdriver, and lift up the end of the band.

Welded Type

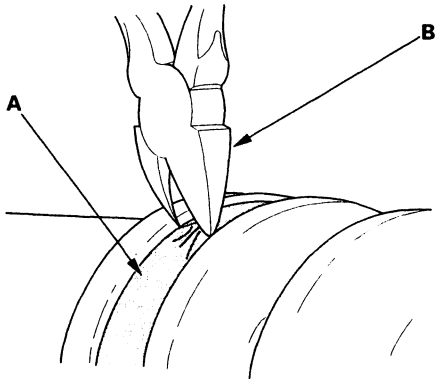

Double Loop Type

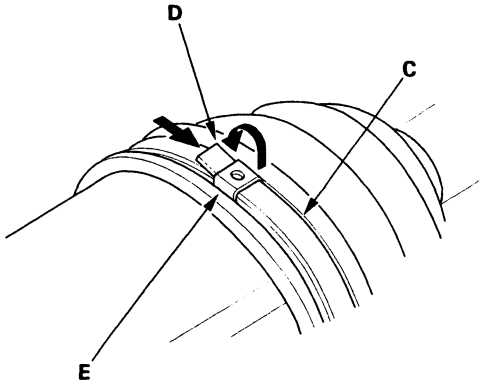

Ear Clamp Type

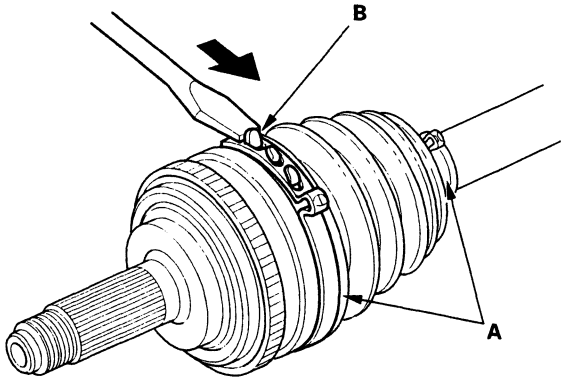

2. Slide the outboard boot (A) to the inboard joint side. Take care not to damage the boot.

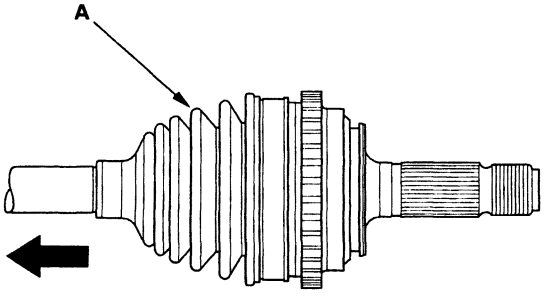

(cont'd)

Driveshafts Disassembly (cont'd)

3. Wipe off the grease to expose the driveshaft and the outboard joint inner race.

4. Make a mark (A) on the driveshaft (B) at the same position of the outboard joint end (C).

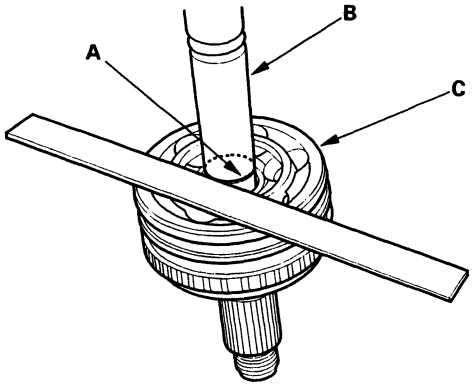

5. Carefully clamp the driveshaft in a vise.

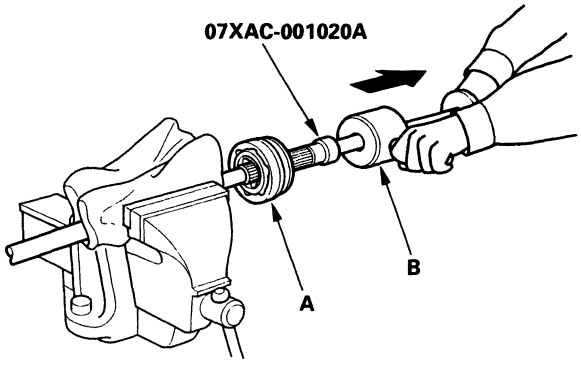

6. Remove the outboard joint (A) using the special tool and a commercially available 5/8" x 18 slide hammer (B).

7. Remove the driveshaft from the vise.

8. Remove the stop ring from the driveshaft.

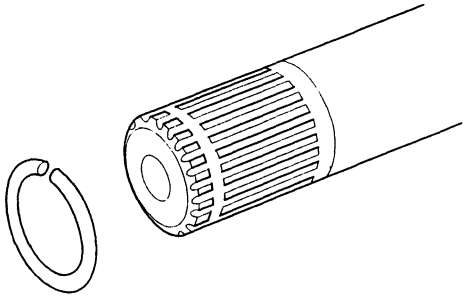

BACK

Driveshafts Reassembly

Exploded View

'98-00 models

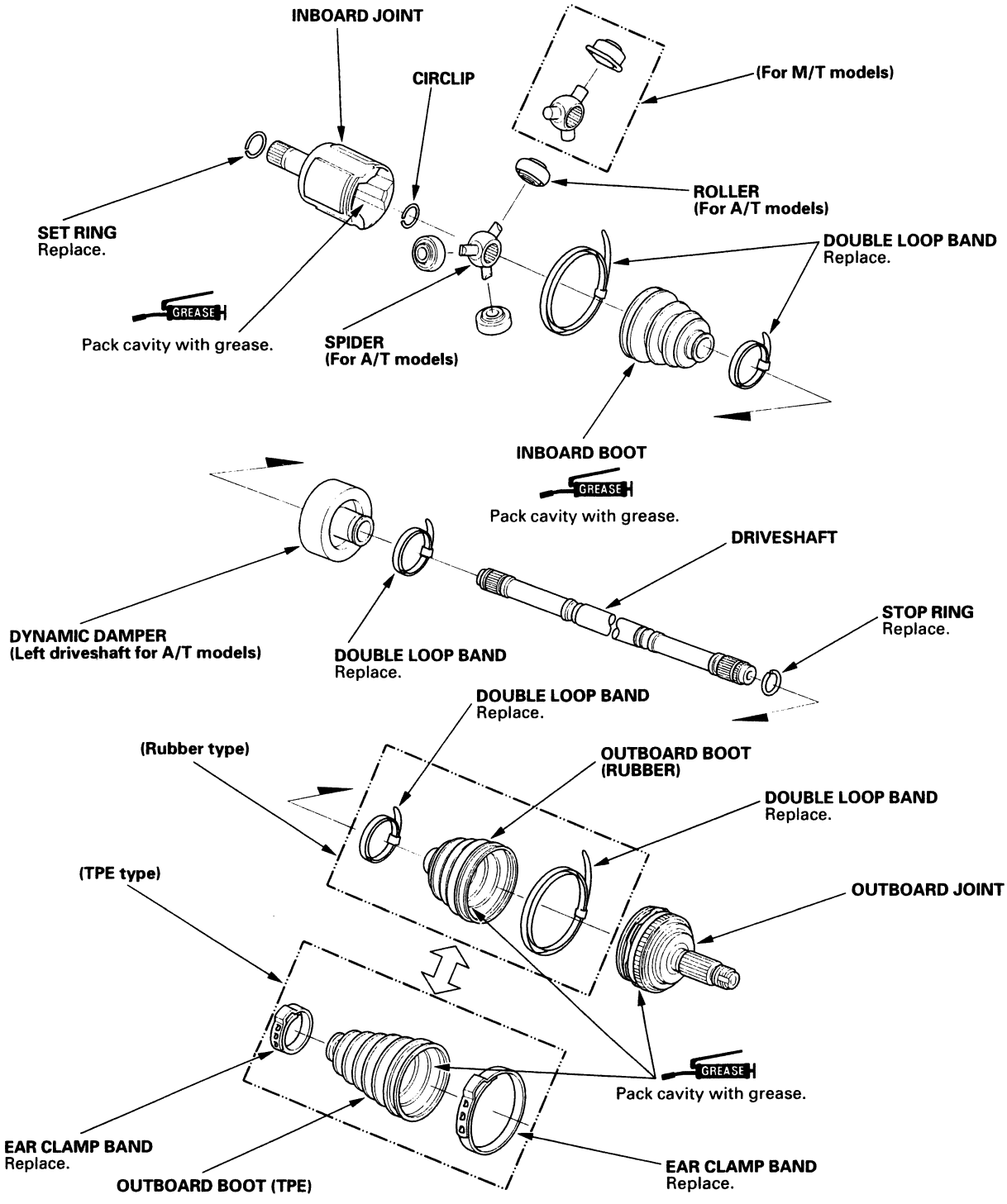

(cont'd)

Driveshafts Reassembly (cont'd)

Exploded View

'01-02 models

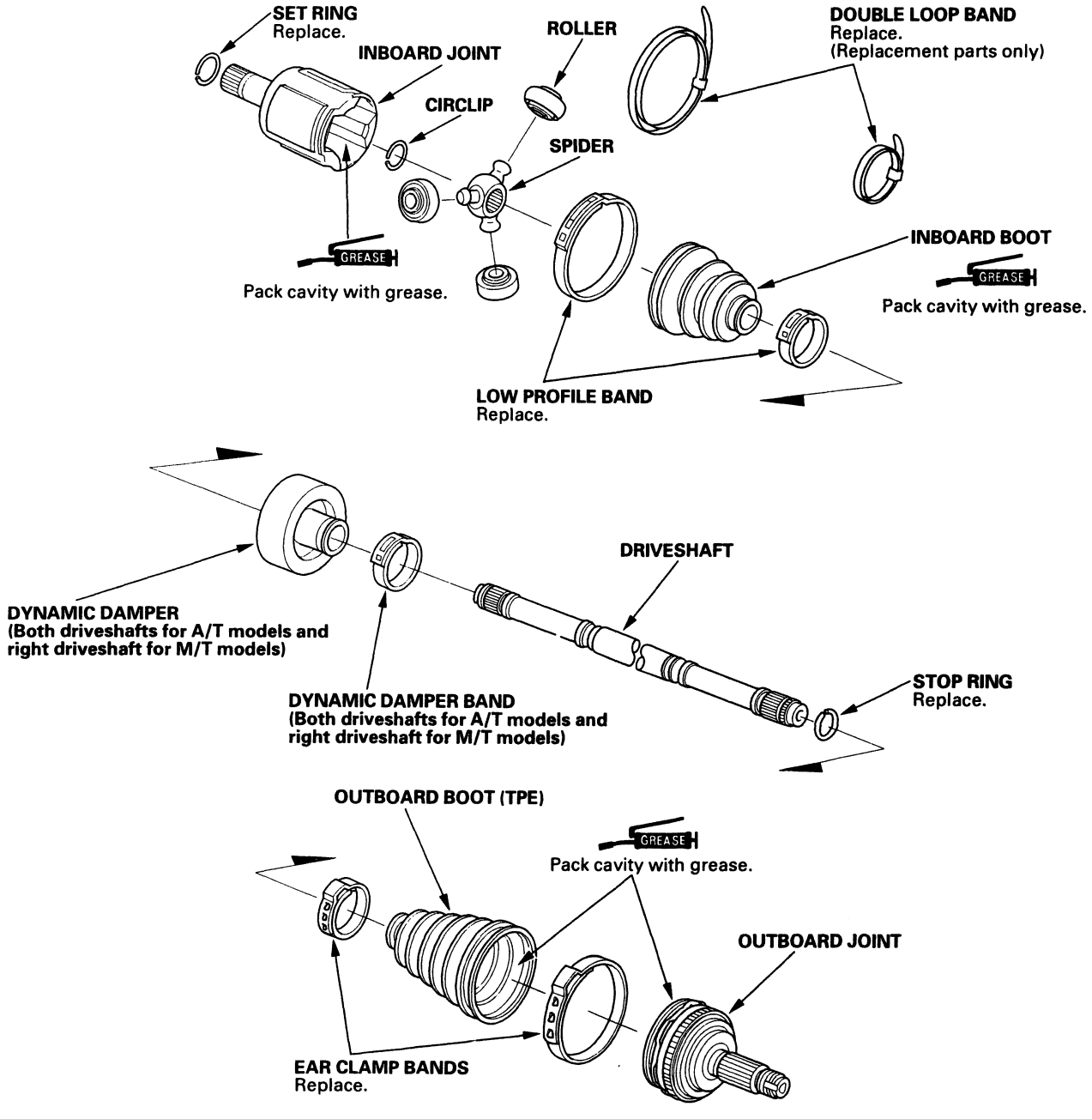

BACK

Special Tools Required
- Boot band tool, KD-3191 or equivalent commercially available
- Boot band pincers, Kent-Moore J-35910 or equivalent commercially available
- Boot band pincer, commercially available

NOTE: Refer to the Exploded View as needed during this procedure.

Inboard Joint Side:

1. Wrep the splines with vinyl tape (A) to prevent damage to the inboard boot and dynamic damper (for left driveshaft on A/T models and all right driveshafts).

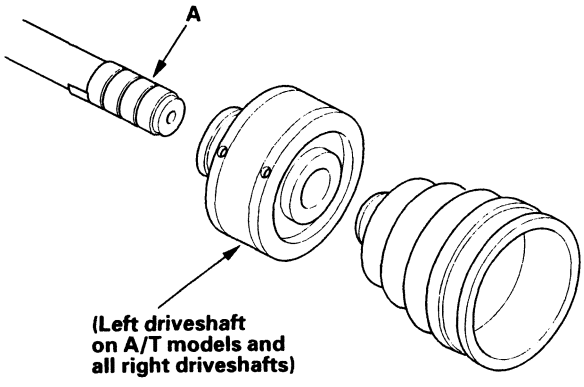

2. Install the dynamic damper and inboard boot to the driveshaft, then remove the vinyl tape.Take care not to damage the inboard boot and dynamic damper.

3. Install the spider (A) onto the driveshaft by aligning the marks (B) on the spider and the end of the driveshaft.

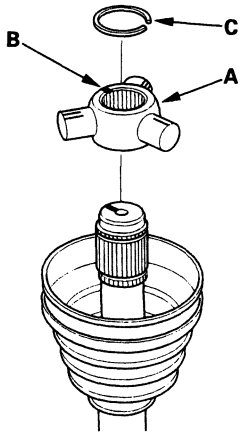

4. Fit the circlip (C) into the driveshaft groove. Always rotate the circlip in its groove to be sure it is fully seated.

5. Fit the rollers (A or B) onto the spider (C) with their high shoulders facing outward, and note these items:

   - Reinstall the rollers in their original positions on the spider by aligning the marks (D).
   - Hold the driveshaft pointed up to prevent the rollers from falling off.
   - Roller (A) is used on '98-00 A/T models and all '01-02 models.
   - Roller (B) is used on '98-00 M/T models.

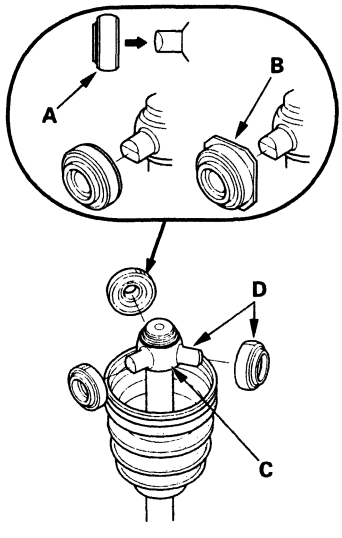

(cont'd)

Driveshafts Reassembly (cont'd)

6. Pack the inboard joint with the joint grease included in the new driveshaft set.

   Grease quantity
   Inboard joint: 120 – 130 g (4.2 – 4.6 oz) ('98-00 models)
   150 – 160 g (5.3 – 5.6 oz) ('01-02 models)

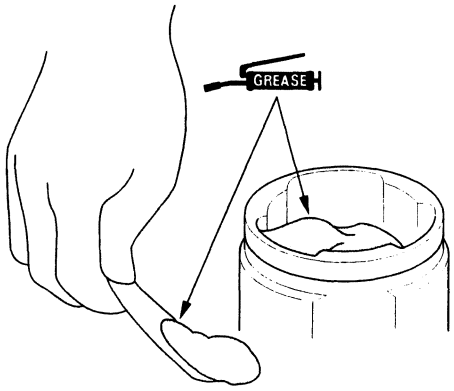

7. Fit the inboard joint onto the driveshaft, and note these items:

   - Reinstall the inboard joint (A) onto the driveshaft by aligning the marks (B) on the inboard joint and the rollers.
   - Hold the driveshaft so the inboard joint points up to prevent it from falling off.
   - For M/T models, align the roller holders (C) with the grooves in the inboard joint ('98-00 models).

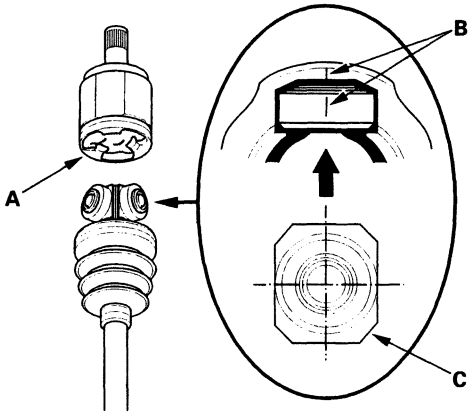

8. Adjust the length of the driveshafts to the figure below, then adjust the boots to halfway between full compression and full extension. Make sure the ends of the boots seat in the grooves of the driveshaft and joint.

   Left driveshaft:
   M/T: 531 – 536 mm (20.9 – 21.1 in.)
   A/T: 883 – 888 mm (34.8 – 35.0 in.)
   Right driveshaft: 511 – 516 mm (20.1 – 20.3 in.)

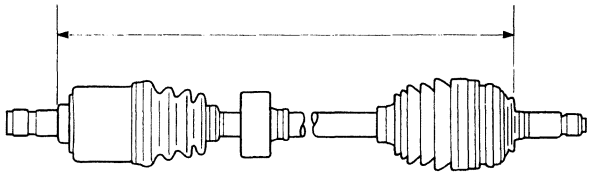

9. Position the dynamic damper as shown below.

   Left driveshaft:
   A/T: 539 – 543 mm (21.2 – 24.1 in.)
   Right driveshaft: 260 – 264 mm (10.2 – 10.4 in.)

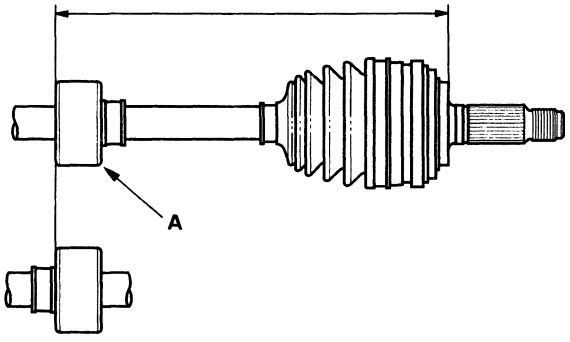

10. Install the boot bands.

    - For the double loop type, go to step 13. (Boot band replacement only)
    - For the low profile type, go to step 11.

BACK

11. Install the new low profile band (A) onto the boot (B) and dynamic damper, then hook the tab (C) of the band.

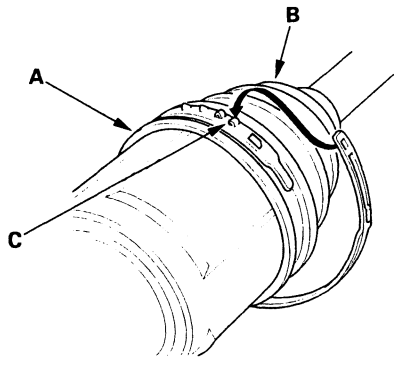

12. Close the hook portion of the band with a commercially available boot band pincers (A), then hook the tabs (B) of the band.

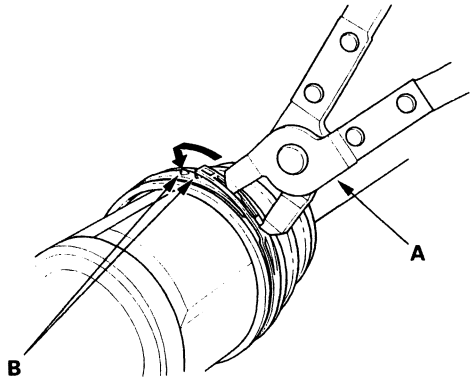

13. Fit the boot ends onto the driveshaft and the inboard joint, then install the band (A) onto the boot (B).

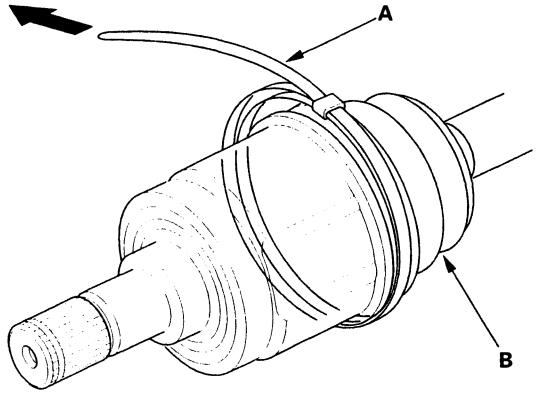

14. Pull up the slack in the band by hand.

15. Mark a position (A) on the band 10 – 14 mm (0.4 – 0.6 in.) from the clip (B).

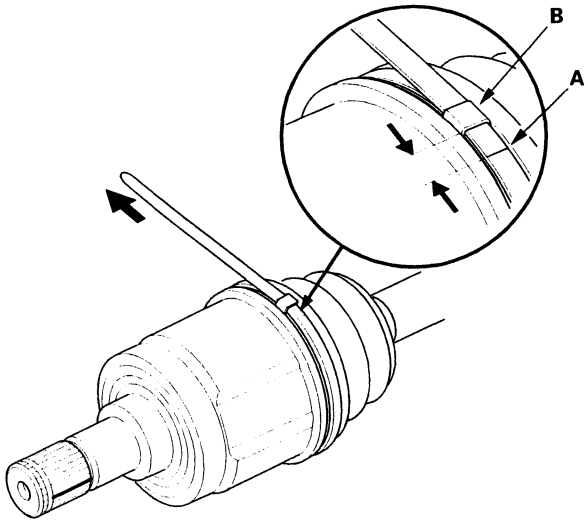

(cont'd)

Driveshafts Reassembly (cont'd)

16. Thread the free end of the band through the nose section of the commercially available boot band tool KD-3191 or equvialent (A), and into the slot on the winding mandrel (B).

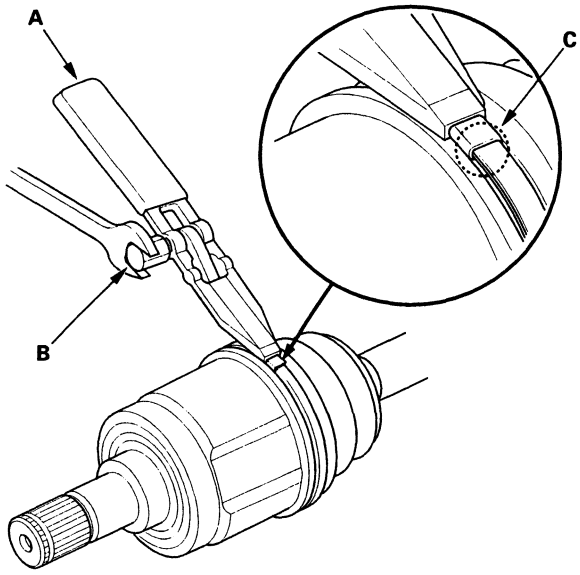

17. Place a wrench on the winding mandrel of the boot band tool, and tighten the band until the marked spot (C) on the band meets the edge of the clip.

18. Lift up the boot band tool to bend the free end of the band 90 degrees to the clip. Center-punch the clip, then fold over the remaining tail onto the clip.

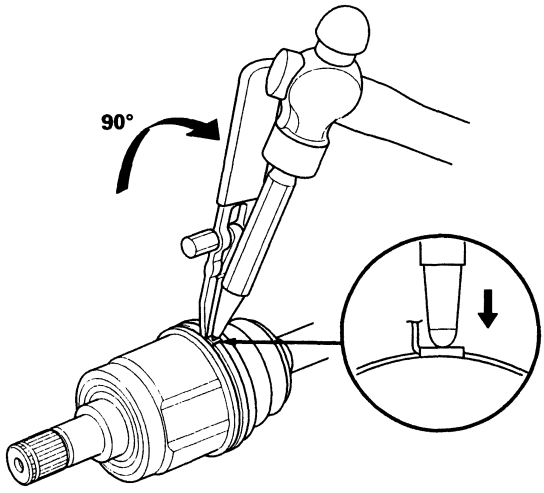

19. Unwind the boot band tool, and cut off the excess free end of the band to leave a 5 – 10 mm (0.2 – 0.4 in.) tail protruding from the clip.

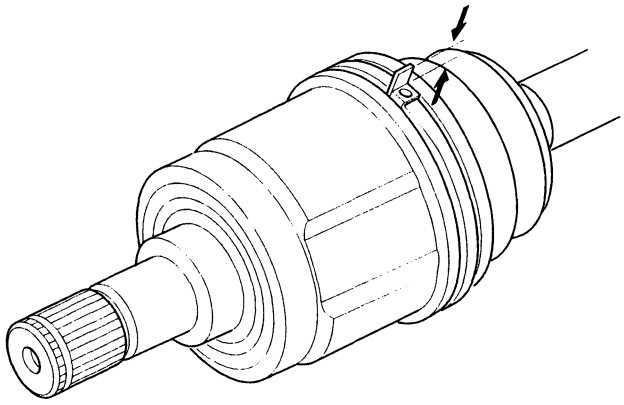

20. Bend the band end (A) by tapping it down with a hammer.

NOTE:
- Make sure the band and clip do not interfere with anything and the band does not move.
- Remove any grease remaining on the surrounding surfaces

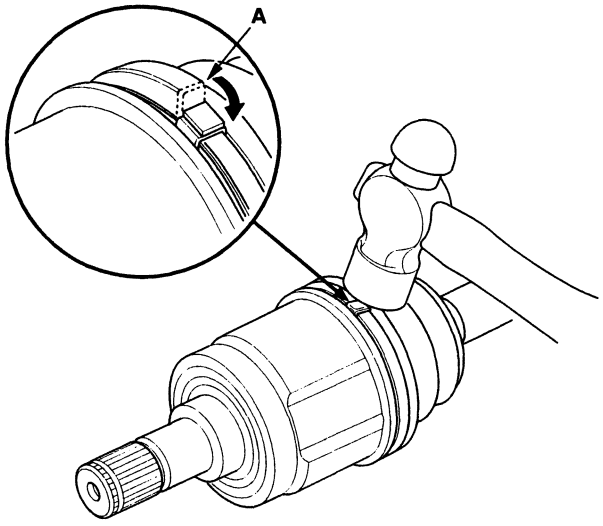

BACK

21. Install the new set ring.

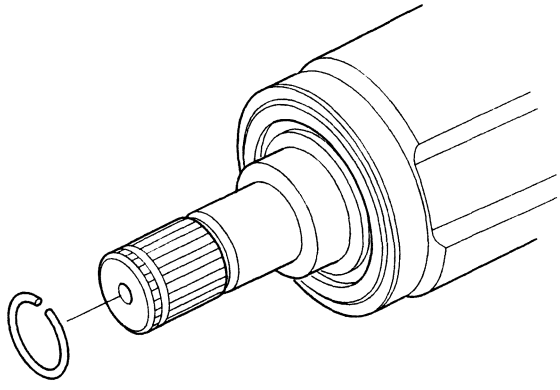

Outboard Joint Side:

1. Wrap the splines with vinyl tape (A) to prevent damage to the outboard boot.

Rubber Type

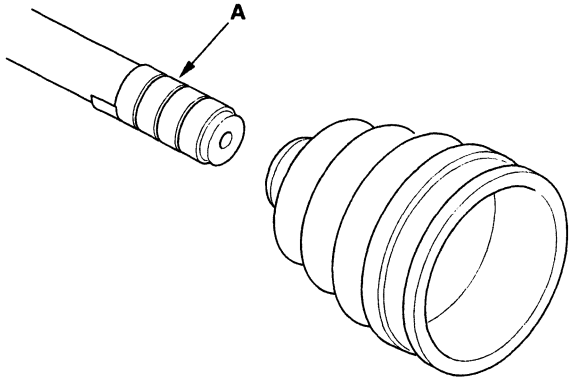

TPE Type

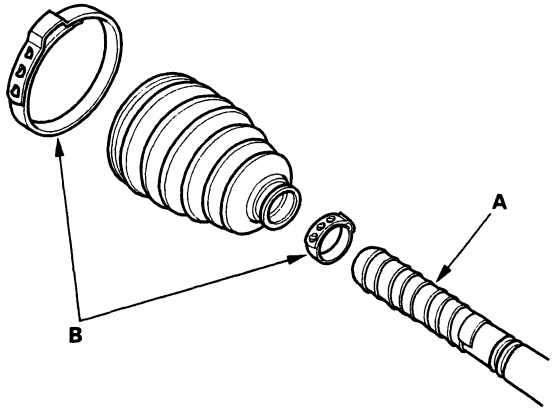

2. Install the new boot bands (B) (ear clamp type).
3. Install the outboard boot. Take care not to damage the outboard boot.
4. Remove the vinyl tape.

(cont'd)

Driveshafts Reassembly (cont'd)

5. Install the new stop ring (A) into the driveshaft groove (B).

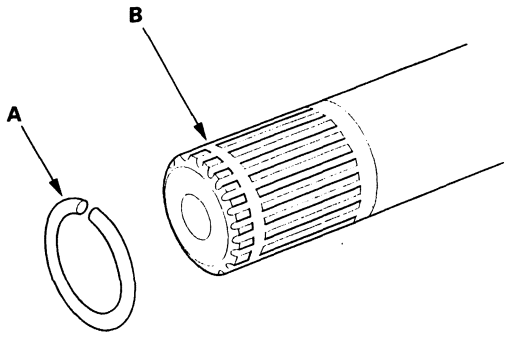

6. Insert the driveshaft (A) into the outboard joint (B) until the stop ring (C) is close on the joint.

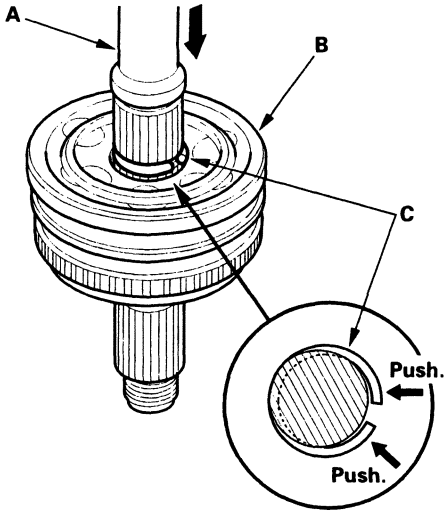

7. To completely seat the outboard joint, pick up the driveshaft and joint, and drop them from about 10 cm (4 in.) onto a hard surface. Do not use a hammer as excessive force may damage the driveshaft.

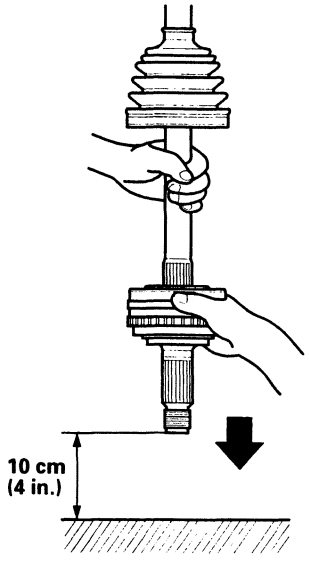

8. Check the alignment of the paint mark (A) with the outboard joint end (B).

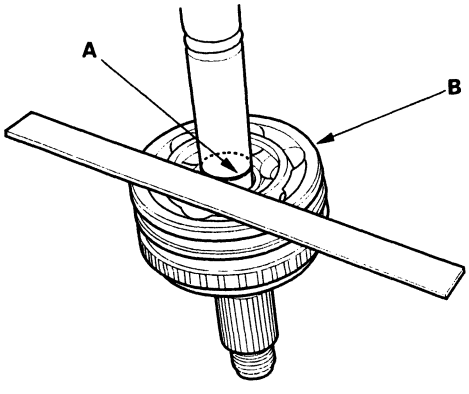

BACK

9. Pack the outboard joint with the joint grease included in the new joint boot set.

Grease quantity
Outboard joint (Rubber): 130 – 140 g (4.6 – 4.9 oz)
Outboard joint (TPE): 140 – 150 g (4.9 – 5.3 oz)

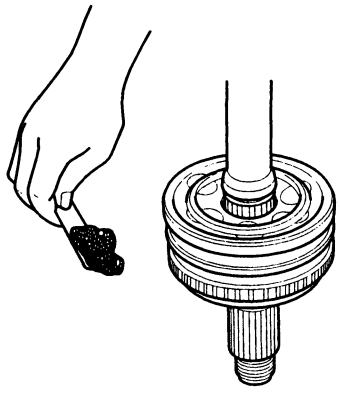

10. Install the outboard boot and boot bands.

- For TPE type boot, go to step 20.
- For rubber type boot, go to step 11.

11. Fit the boot (A) ends onto the driveshaft (B) and outboard joint (C).

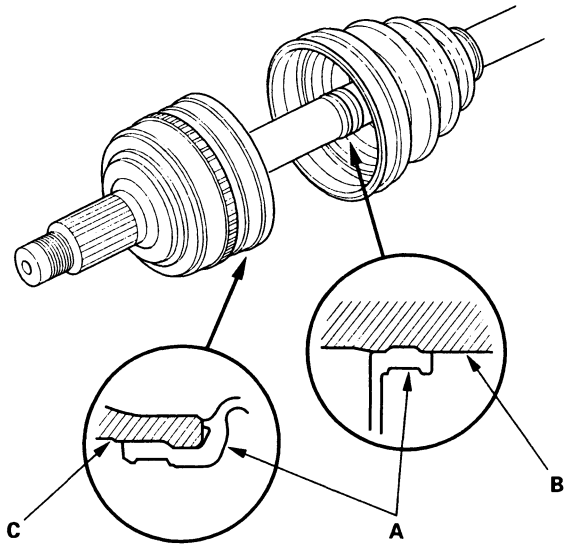

12. Set the new double loop band (A) onto the boot.

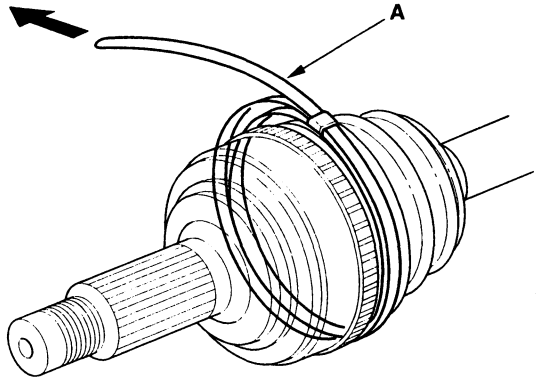

13. Pull up the slack in the band by hand.

14. Mark a position (A) on the band 10 – 14 mm (0.4 – 0.6 in.) from the clip (B).

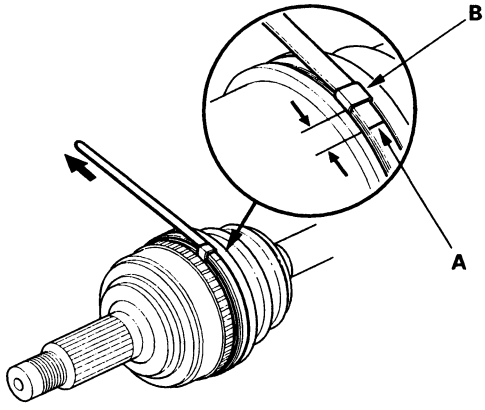

(cont'd)

Driveshafts Reassembly (cont'd)

15. Thread the free end of the band through the nose section of a commercially available boot band tool KD-3191 or equivalent (A), and into the slot on the winding mandrel (B).

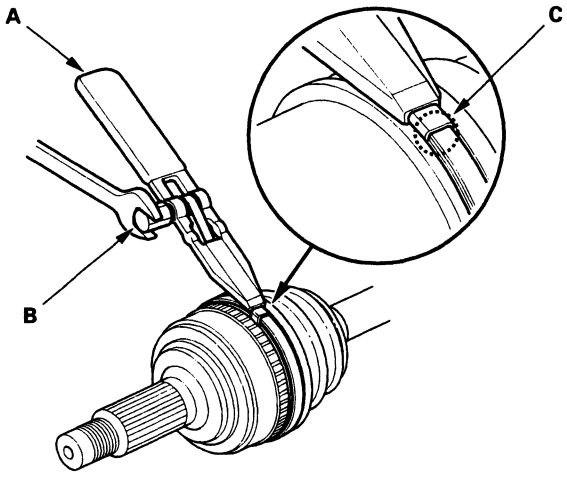

16. Place a wrench on the winding mandrel of the boot band tool, and tighten the band until the marked spot (C) on the band meets the edge of the clip.

17. Lift up the boot band tool to bend the free end of the band 90° to the clip. Center-punch the clip, then fold over the remaining tail onto the clip.

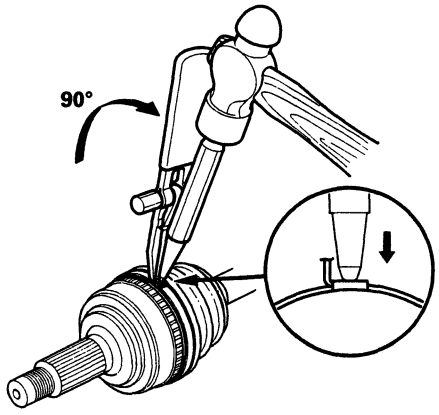

18. Unwind the boot band tool, and cut off the excess free end of the band to leave a 5 – 10 mm (0.2 – 0.4 in.) tail protruding from the clip.

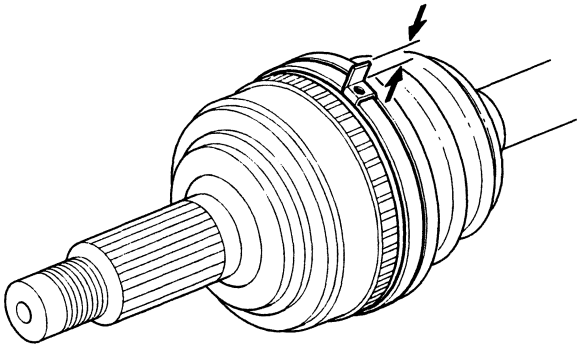

19. Bend the band end (A) by tapping it down with a hammer.

NOTE:
- Make sure the band and clip do not interfere with anything, and the band does not move.
- Remove any grease remaining on the surrounding surfaces.

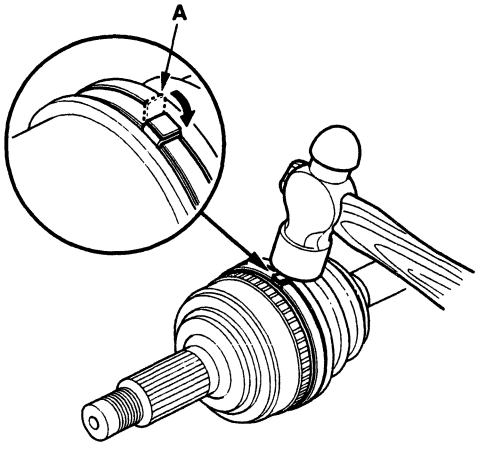

BACK

20. Fit the boot (A) ends onto the driveshaft (B) and outboard joint (C).

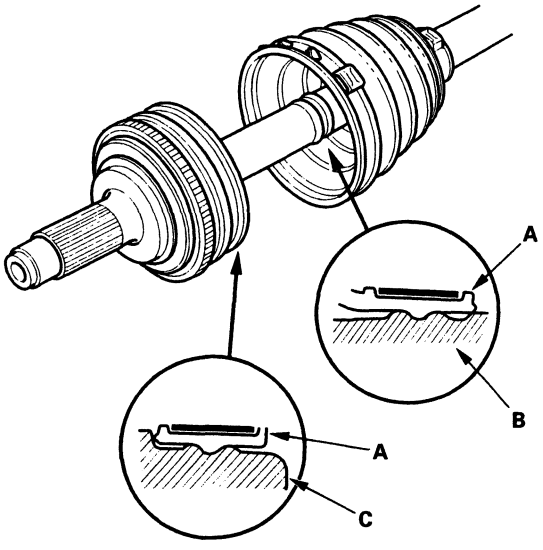

21. Close the ear portion (A) of the band with a commercially available boot band pincers (B).

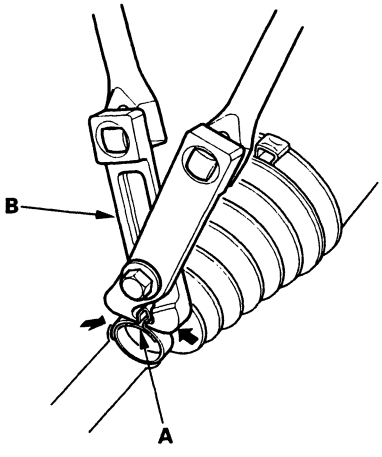

22. Check the clearance between the closed ear portion of the band. If the clearance is not within the standard, close the ear portion of the band further.

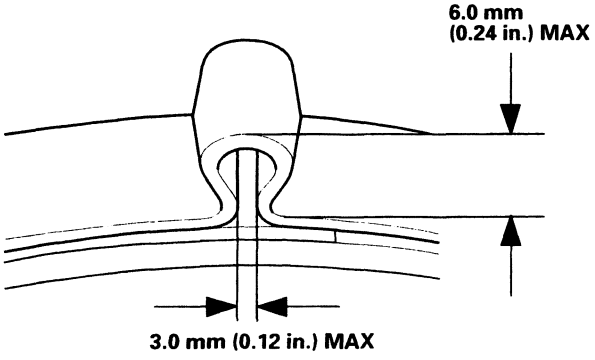

Driveshafts Installation

1. Apply 0.3 – 1.0 g (0.01 – 0.04 oz) of specified grease to the whole splined surface (A) of the left driveshaft (for vehicles with intermediate shaft). After applying grease, remove the grease from the splined grooves at intervals of 2 – 3 splines and from the set ring groove (B) so that air can bleed from the intermediate shaft.

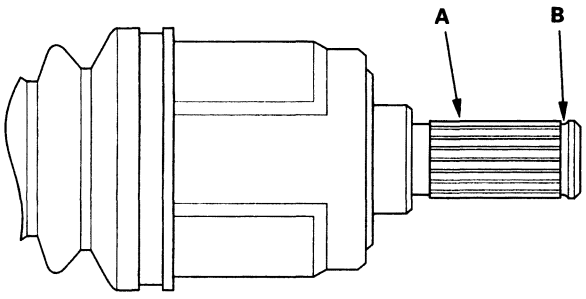

2. Install a new set ring onto the set ring groove of the driveshaft.

3. Clean the areas where the driveshaft contacts the differential thoroughly with solvent or carburetor cleaner, and dry with compressed air. Insert the inboard end (A) of the driveshaft into the differential (B) or intermediate shaft (C) unitl the set ring (D) locks in the groove (E).

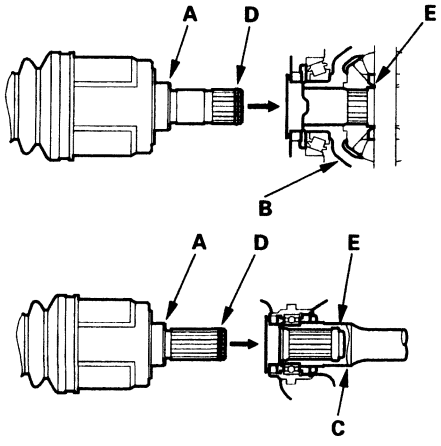

4. Install the outboard joint (A) into the front hub (B).

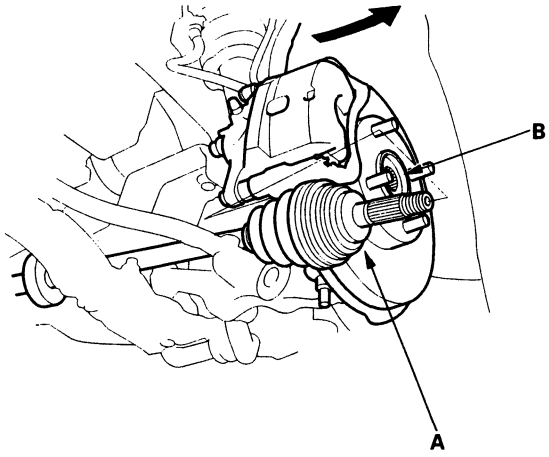

5. Install the knuckle (A) onto the lower arm (B). Be careful not to damage the ball joint boot (C). Wipe off the grease before tightening the nut at the ball joint. Torque the castle nut (D) to the lower torque specification, then tighten it only far enough to align the slot with the pin hole. Do not align the nut by loosening.

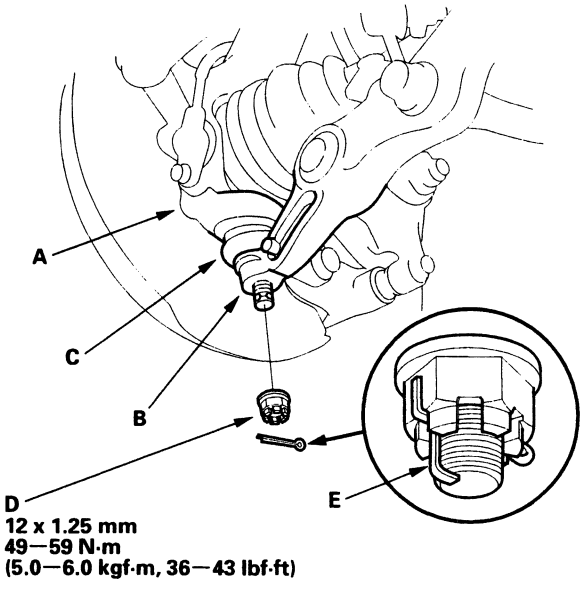

6. Install the new cotter pin (E) into the pin hole, and bend the cotter pin as shown.

BACK

7. Install the damper fork (A) over the driveshaft and onto the lower arm. Install the damper in the damper fork so the aligning tab (B) is aligned with the slot in the damper fork. Loosely install the flange bolt (C).

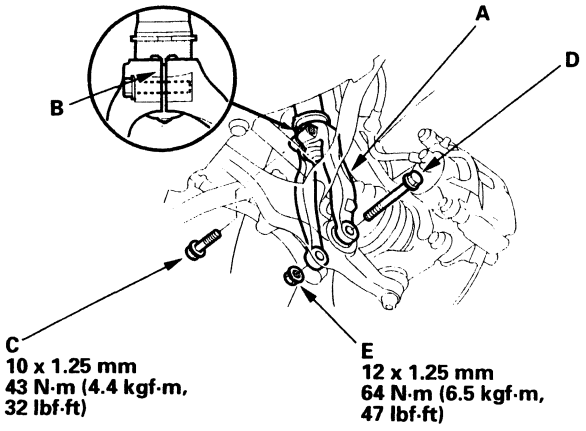

8. Loosely install the flange bolt (D) and a new self-locking nut (E).

9. Install a new spindle nut (A), then tighten the nut. After tightening, use a drift to stake the spindle nut shoulder (B) against the driveshaft.

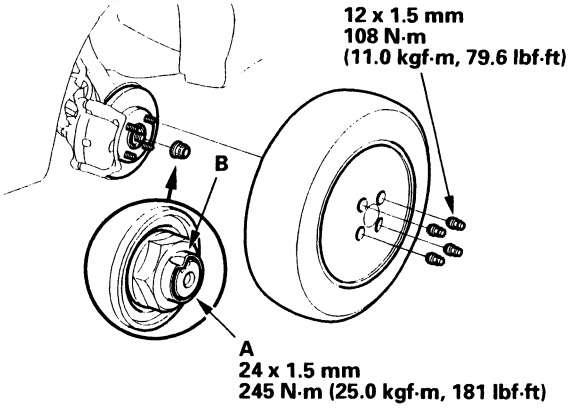

10. Clean the mating surfaces of the brake disc and the front wheel, then install the front wheel with the wheel nuts.

11. Tighten the flange bolts and the self-locking nut with the vehicles weight on the damper.

12. Refill the transmission with recommended MTF (see page 13-3) or ATF (see page 14-113).

13. Check the front wheel alignment and adjust if necessary (see page 18-5).

Intermediate Shaft Removal

1. Drain the MTF (see page 13-3) or ATF (see page 14-113).

2. Remove the left driveshaft (see page 16-3).

3. Remove the flange bolt (A) and two dowel bolts (B).

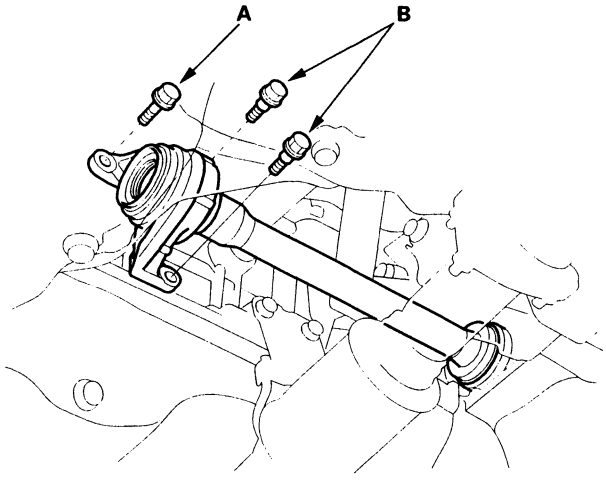

4. Remove the intermediate shaft (A) from the differential. Hold the intermediate shaft horizontal until it is clear of the differential to prevent damage to the differential oil seal (B).

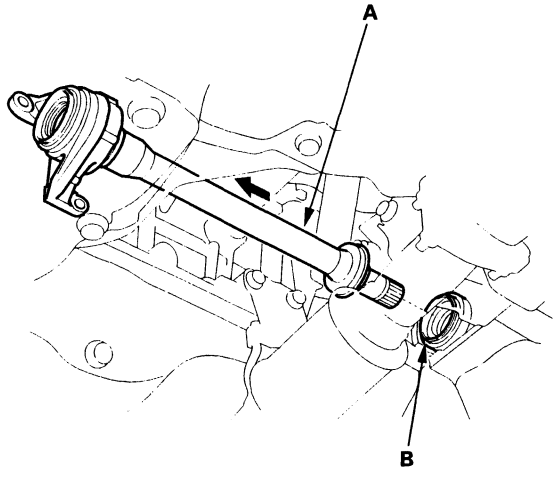

Intermediate Shaft Disassembly

Special Tools Required
- Driver, 07749-0010000
- Driver attachment, 07947-6340500
- Support base attachment, 07LAF-SM40300
- Support base, 07965-SD90100
- Attachment, 42 x 47 mm, 07746-0010300

1. Remove the intermediate shaft outer seal (A) from the bearing support (B).

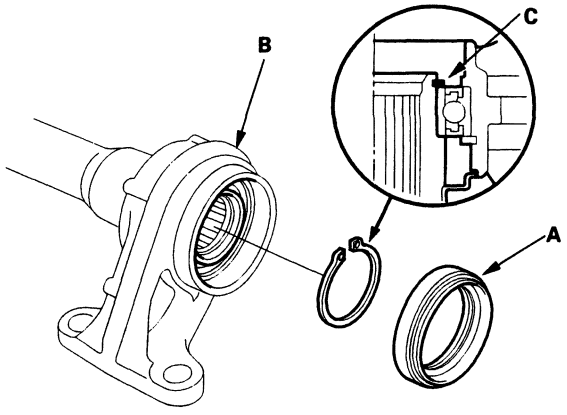

2. Remove the external snap ring (C).

3. Press the intermediate shaft (A) out of the intermediate shaft bearing (B) using the special tools and a press. Be careful not to damage the metal rings (C) on the intermediate shaft during disassembly.

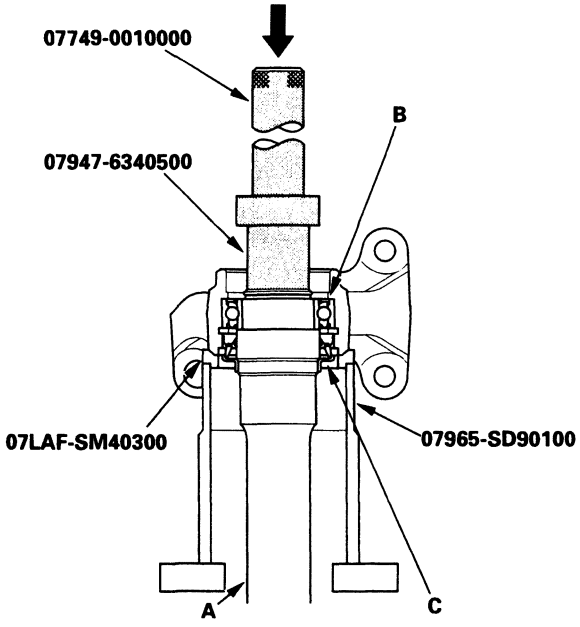

4. Remove the internal snap ring.

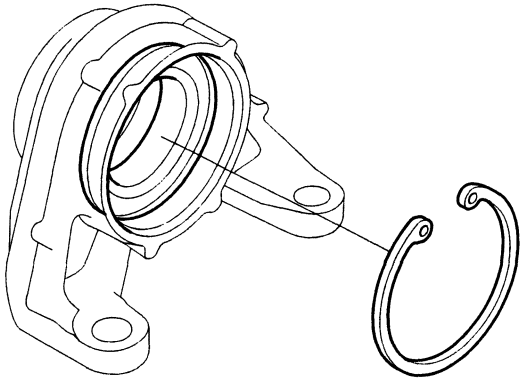

BACK

5. Press the intermediate shaft bearing (A) out of the bearing support (B) using the special tools and a press.

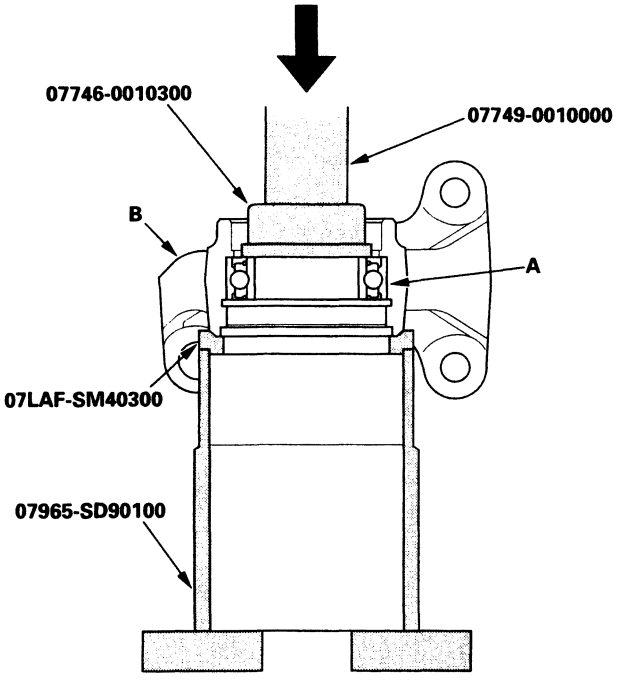

Intermediate Shaft Reassembly

Exploded View

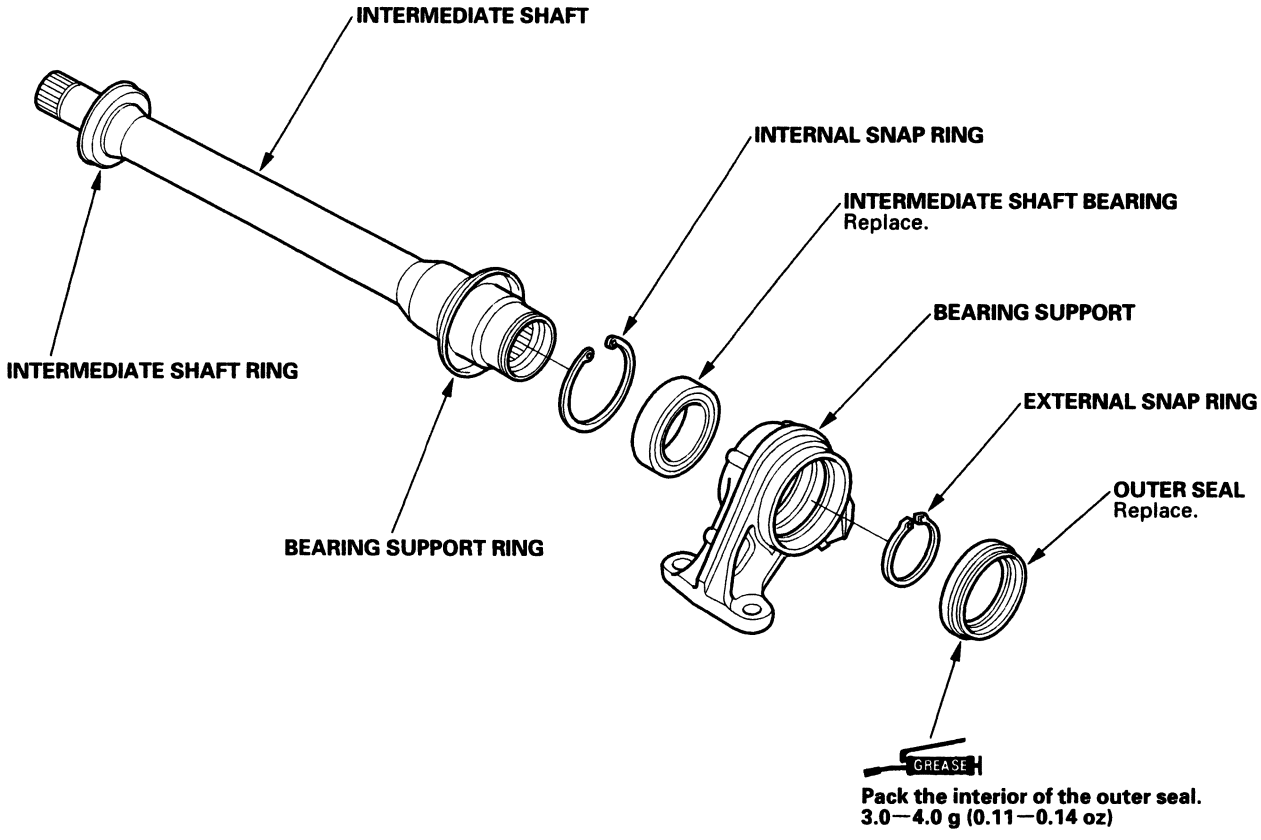

BACK

Special Tools Required
- Driver 07749-0010000
- Support base attachment 07LAF-SM40300
- Support base 07965-SD90100
- Oil seal driver attachment 07947-SD90101
- Fork seal driver, 39.2 x 49.5 x 15 mm 07947-4630100

NOTE: Refer to the Exploded View as needed during this procedure.

1. Clean the disassembled parts with solvent, and dry them with compressed air. Do not wash the rubber parts with solvent.

2. Press the intermediate shaft bearing (A) into the bearing support (B) using the special tools and a press.

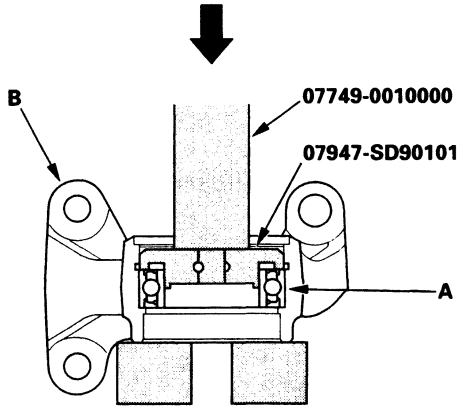

3. Seat the internal snap ring in the groove of the bearing support.

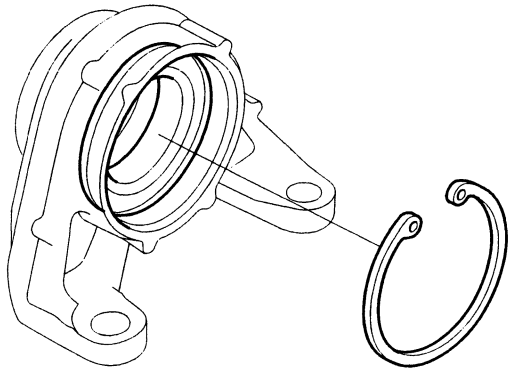

4. Press the intermediate shaft into the shaft bearing using the special tool and a press.

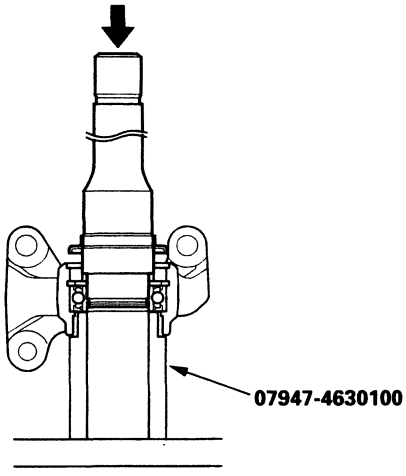

5. Seat the external snap ring (A) into the groove of the intermediate shaft (B).

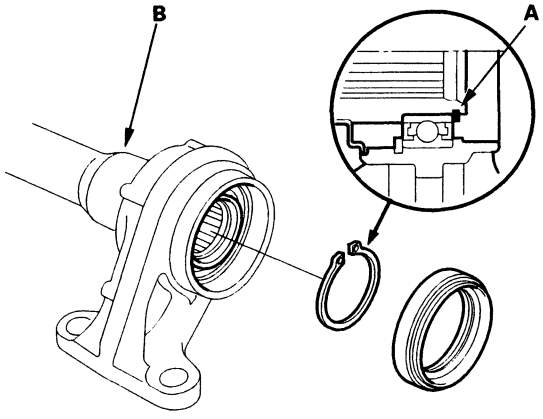

(cont'd)

Intermediate Shaft Reassembly (cont'd)

6. Pack the interior of the outer seal (A). Install the outer seal into the bearing support (B) using the special tools and a press.

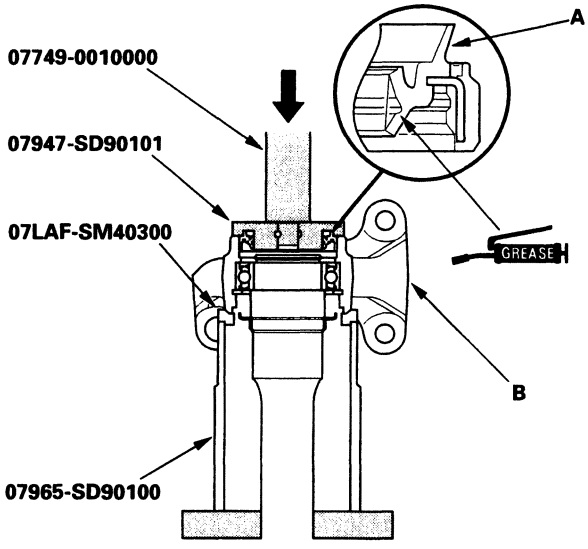

Intermediate Shaft Installation

1. Clean the areas where the intermediate shaft (A) contacts the transmission (differential) thoroughly with solvent or carburetor cleaner, and dry with compressed air. Insert the intermediate shaft assembly into the differential. Hold the intermediate shaft horizontal to prevent damage to the differential oil seal (B).

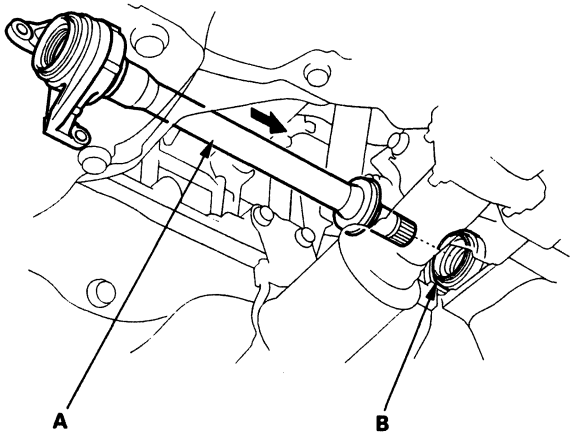

2. Install the flange bolt (A) and two dowel bolts (B).

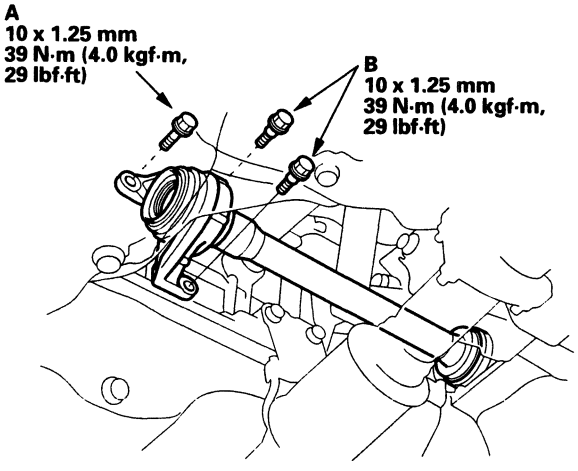

BACK

Steering

Power Steering

Special Tools 17-2
Component Location Index 17-3
Symptom Troubleshooting Index 17-4
Symptom Troubleshooting 17-6
Steering Wheel Rotational Play Check 17-7
Power Assist Check 17-7
Steering Linkage and Gearbox Inspection 17-8
Pump Pressure Test-with T/N 07406-0010001 17-9
Pump Pressure Test-with T/N 07406-001000A 17-10
Fluid Leakage Inspection 17-11
Pump Belt Inspection and Adjustment 17-12
Fluid Replacement 17-14
Hoses and Lines Replacement 17-15
Pump Replacement 17-16
Pump Overhaul 17-17
Steering Wheel Removal 17-22
Steering Wheel Disassembly and Reassembly 17-23
Steering Wheel Installation 17-24
Steering Column Removal/Installation 17-25
Steering Column Inspection 17-27
Steering Column Tilt Lever Inspection/
Adjustment 17-28
Steering Lock Replacement 17-28
Rack Guide Adjustment 17-29
Steering Gearbox Removal 17-30
Steering Gearbox Overhaul 17-32
Steering Gearbox Installation 17-47
Tie-Rod Ball Joint Boot Replacement 17-50

Special Tools

Ref.No.	Tool Number	Description	Qty
①	07GAF-PH70100	Pilot Collar	1
②	07HAG-SF10100	Piston Seal Ring Guide	1
③	07HAG-SF1020A or 07HAG-SF10200	Piston Seal Ring Sizing Tool	1
*④	07JGG-001010A	Belt Tension Gauge	1
⑤	07MAC-SL00200	Ball Joint Remover, 28 mm	1
⑥	07NAD-SR3020A	Cylinder End Seal Remover Attachment	1
⑦	07NAG-SR3090A	Valve Seal Ring Sizing Tool	1
⑧	07RAK-S040110	P/S Joint Adaptor (Pump)	1
⑨	07RAK-S040121	P/S Joint Adaptor (Hose)	1
⑩	07406-0010001 or 07406-001000A	P/S Pressure Gauge	1
⑪	07725-0030000	Universal Holder	1
⑫	07746-0010100	Attachment, 32x35 mm	1
⑬	07749-0010000	Driver	1
⑭	07916-SA50001	Locknut Wrench, 40 mm	1
⑮	07965-SA50500	Front Hub Dis/Assembly Tool	1
⑯	07974-SA5020A or 07974-SA50200	Sleeve Seal Ring Sizing Tool	1
⑰	07974-SA50800	Ball Joint Boot Clip Guide	1

* Included in the Belt Tension Gauge Set, 07TGG-001000A.

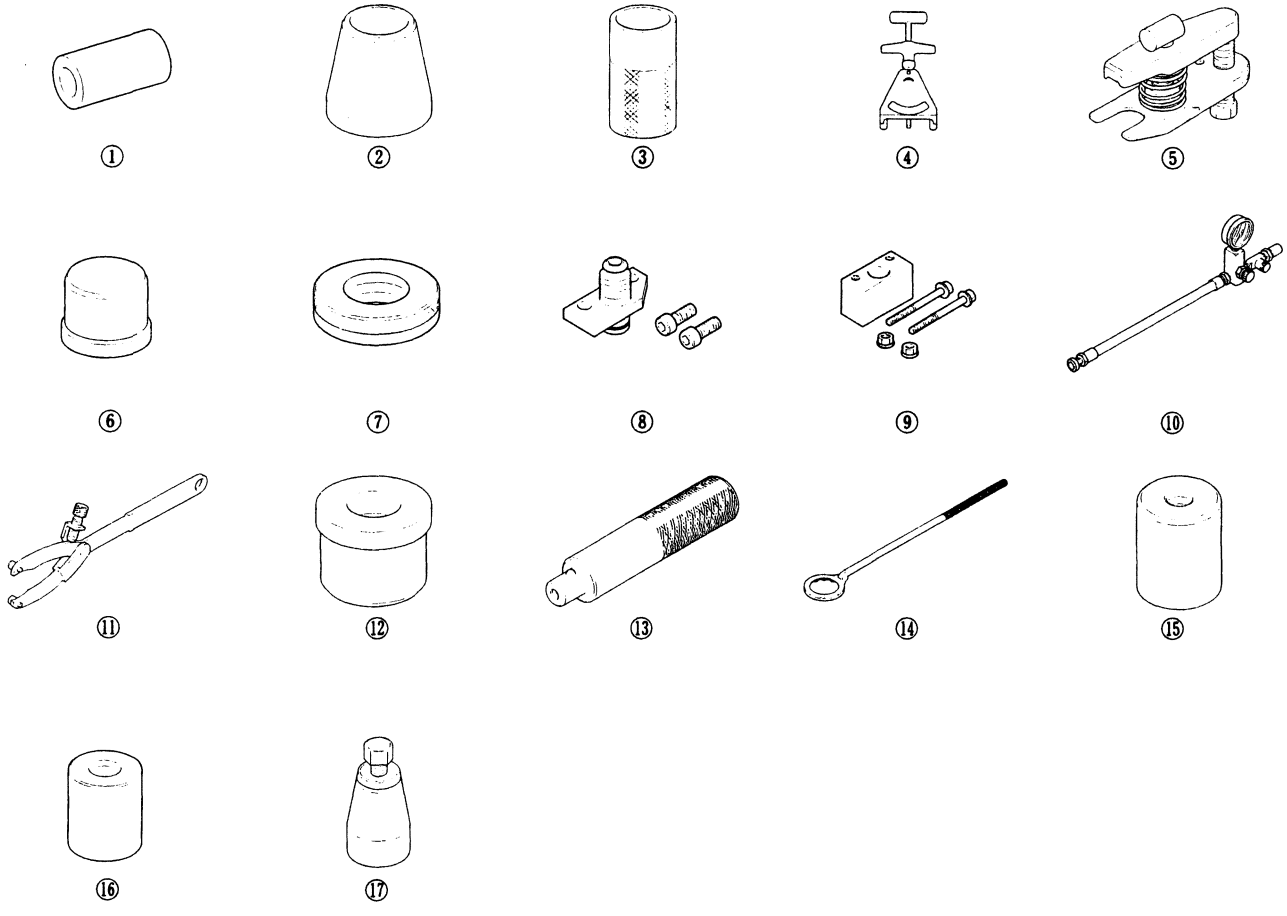

BACK

Component Location Index

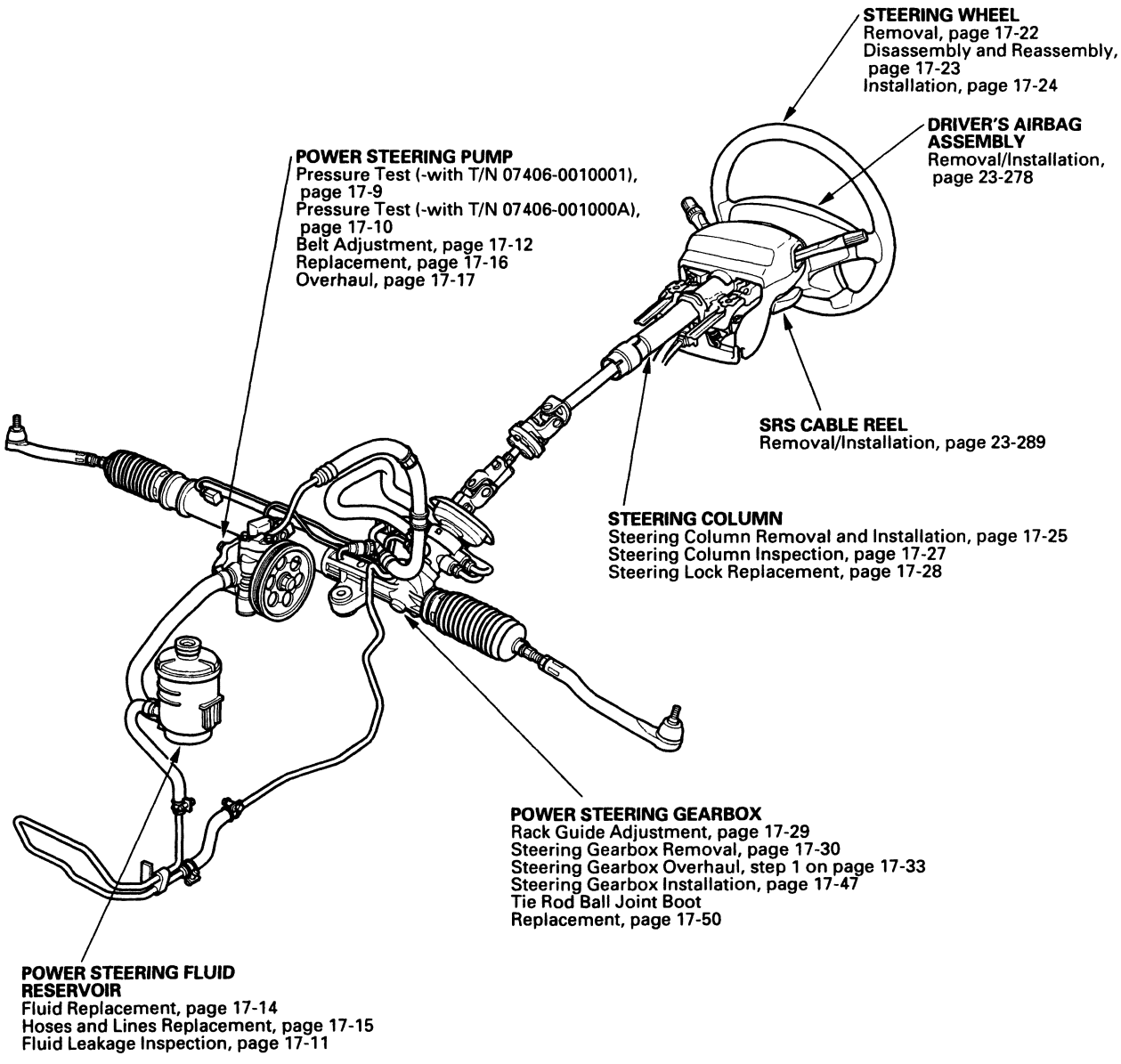

Symptom Troubleshooting Index

Find the symptom in the chart below, and do the related procedures in the order listed until you find the cause.

Symptom	Procedure(s)	Also check for:
Hard steering	Troubleshoot the system (see page 17-6)	• Modified suspension • Tire sizes, tire varieties, and air pressure • Power steering pump belt adjustment
Assist (excessively light steering at high speed)	Check the rack guide adjustment (see page 17-29).	Front wheel alignment (see page 18-5).
Shock or vibration when the wheel is turned to full lock	1. Check the rack guide adjustment (see page 17-29). 2. Check the power steering pump belt for slippage and adjust as necessary (see page 17-12). 3. Replace the steering gearbox (see page 17-30).	
Steering wheel will not return smoothly	1. Check cylinder lines A and B for deformation. 2. Check wheel alignment (see page 18-5). 3. Replace the steering gearbox (see page 17-30).	
Uneven or rough steering	1. Check the rack guide adjustment (see page 17-29). 2. Check the power steering pump belt adjustment (see page 17-12). 3. Check for low or erratic engine idle speed (see page 11-110). 4. Check for air in the power steering system due to low fluid level. 5. Check for low fluid level in the power steering reservoir due to possible leaks in system. 6. Replace the steering gearbox (see page 17-30).	
Steering wheel kicks back during wide turns	1. Check the power steering pump belt adjustment (see page 17-12). 2. Check the power steering pump fluid pressure with T/N 07406-0010001 (see page 17-9), with T/N 07406-001000A (see page 17-10).	
Humming	1. Check when the noise occurs. • If the noise happens 2—3 minutes after starting the engine in cold weather, this is normal. • If the noise happens when the wheel is turn with the vehicle stopped, this is normal due to the fluid pulsation. 2. Check for the high-pressure hose touching the sub-frame or body. 3. Check for automatic transmission convertor noise. Remove the power steering belt, and recheck.	
Rattle or chattering	1. Check for loose steering components (tie-rod and ball joints). Tighten or replace as necessary. 2. Check the steering column shaft for wobbling. If the steering columns wobbles, replace the steering column assembly (see page 17-25). 3. Check the rack guide adjustment (see page 17-29). 4. Check the power steering pump pulley. • If the pulley is loose, tighten it (see step 32 on page 17-21). • If the pump shaft is loose, replace the pump (see page 17-16).	

BACK

Hissing	• Check the fluid level. If low, fill the reservoir to the proper level and check for leaks. • Check the reservoir for leaks. • Check for crushed inlet hose or loose hose clamp allowing air into the suction side of the system. • Check the power steering pump shaft oil seal for leaks.	
Pump noise	• Compare the pump noise at normal operating temperature to another vehicle, (pump noise up to 2−3 minutes after starting the engine in cold weather is normal). • Remove and inspect the pump for wear and damage (see page 17-18).	
Squeaking	Check the power steering belt tension and adjust as necessary (see page 17-12).	
Fluid leaks from the steering gearbox	• Fluid leaks from the top of the valve body unit: Replace the valve oil seal on top of the valve housing. • Fluid leaks from the left tie-rod boot: Replace the valve oil seal on the pinion shaft. Replace the cylinder end seal on the gearbox side. • Fluid leaks from the right tie-rod boot: Replace the cylinder end seal. • Fluid leaks from pinion shaft near the lower steering joint bolt: Replace the valve body unit.	
Fluid leaks from lines	• Fluid leaks from the cylinder line A or B connections (flare nuts): Tighten the connection and retest. If it still leaks, replace the line. • Fluid leaks from a damaged cylinder line A or B: Replace the cylinder line. • Fluid leaks from the pump outlet hose or return line fitting on the valve body unit (flair nuts): Tighten the fitting and retest. If it still leaks, replace the hose, the line, or valve body unit as necessary.	
Fluid leaks from pump	• Fluid leaks from the front oil seal: Replace the front oil seal. • Fluid leaks from the power steering pump housing: Replace the leaking O-rings or seals (see page 17-17), and if necessary replace the power steering pump (see page 17-16).	
Fluid leaks from reservoir	• Fluid leaks from around the reservoir cap: Fluid level is too high: drain the reservoir to the proper level. • Fluid leaks from reservoir: Check for the reservoir for cracks and replace as necessary. Aerated fluid: check for an air leak on the inlet side of pump.	
Fluid leaks from pump outlet hose (high-pressure)	• Check the fitting for loose bolts. If the bolts are tight, replace the fitting O-ring. • Fluid leaks at the swagged joint: Replace the outlet hose.	
Fluid leaks from pump inlet hose (low-pressure)	Check the hose for damage, deterioration, or improper assembly. Replace or repair as necessary.	

Symptom Troubleshooting

Hard Steering

1. Check the power assist (see page 17-7).

   Is the power assist more than 29 N (3.0 kgf, 6.6 lbf)?

   YES—Go to step 2.

   NO—Power assist is OK.■

2. Measure steady—state fluid pressure from the pump at idle with T/N 07406-0010001 (see page 17-9), with T/N 07406-001000A (see page 17-10).

   Is the pressure 1,500 kPa (15 kgf/cm², 213 psi) or less?

   YES—Go to step 3.

   NO—Go to step 7.

3. Measure the pump relief pressure at idle with T/N 07406-0010001 (see page 17-9), with T/N 07406-001000A (see page 17-10).

   Is the pressure 7,200—7,800 kPa (73—80 kgf/cm², 1,040—1,140 psi) or less?

   YES—Go to step 4.

   NO—Go to step 8.

4. With a spring scale,measure the power assist in both directions, to the left and to the right.

   Are the two measurements within 5.0 N (0.51 kgf, 1.12 lbf) of each other?

   YES—Go to step 5.

   NO—Go to step 9.

5. Measure the fluid pressure with T/N 07406-0010001 (see page 17-9), with T/N 07406-001000A (see page 17-10) with both pressure gauge valves open (if so equipped), while turning the steering wheel fully to the left and fully to the right.

   Is the pressure 7,200—7,800 kPa (73—80 kgf/cm², 1,040—1,140 psi) or less?

   YES—Go to step 6.

   NO—Faulty gearbox.■

6. Adjust the rack guide (see page 17-29), and retest.

   Is the steering OK?

   YES—Repair is completed.■

   NO—Faulty gearbox.■

7. Check for the supply and return lines between the pump and the gearbox for clogging and deformation.

   Are the lines clogged or deformed?

   YES—Repair or replace the lines.■

   NO—Faulty valve body unit.■

8. Check the flow control valve (see step 10 on page 17-18) for smooth movement and leaks.

   Is the flow control valve OK?

   YES—Faulty pump assembly.■

   NO—Faulty flow control valve.■

9. Check the cylinder lines A and B for deformation (see page 17-8).

   Are the A or B lines deformed?

   YES—Replace the lines.■

   NO—Go to step 10.

10. Check for a bent rack shaft or misadjusted rack guide (to tight).

    Is the rack shaft bent or the rack guide adjusted too tight?

    YES—Replace the rack shaft or readjust the rack guide.■

    NO—Faulty valve body unit.■

BACK

Steering Wheel Rotational Play Check

1. Turn the front wheels to the straight ahead position.

2. Measure how far you can turn the steering wheel left and light without moving the front wheels.

   - If the play is within the limit, the gearbox and linkage are OK.
   - If the play exceeds the limit, adjust the rack guide (see page 17-29). If the play is still excessive after rack guide adjustment, inspect the steering linkage and gearbox (see page 17-8).

ROTATIONAL PLAY: 0—10 mm (0—0.39 in.)

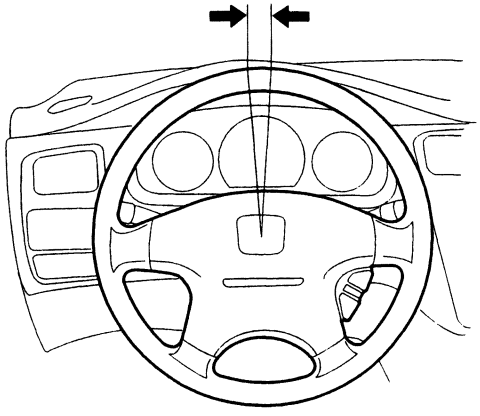

Power Assist Check

1. Check the power steering fluid level (see page 17-14) and pump belt tension (see page 17-12).

2. Start the engine, let it idle, and turn the steering wheel from lock-to-lock several times to warm up the fluid.

3. Attach a commercially available spring scale to the steering wheel. With the engine idling and the vehicle on a clean, dry floor, pull the scale as shown and read it as soon as the tires begin to turn.

   - If the scale reads no more than 30 N (3.1 kgf, 6.8 lbf) the gearbox and pump are OK.
   - If the scale reads more than 30 N (3.1 kgf, 6.8 lbf) check the gearbox and pump.

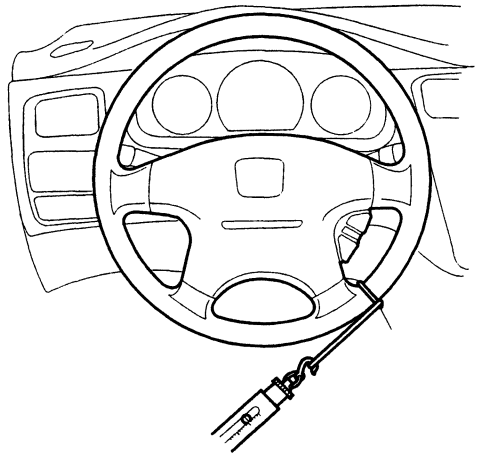

BACK

Steering Linkage and Gearbox Inspection

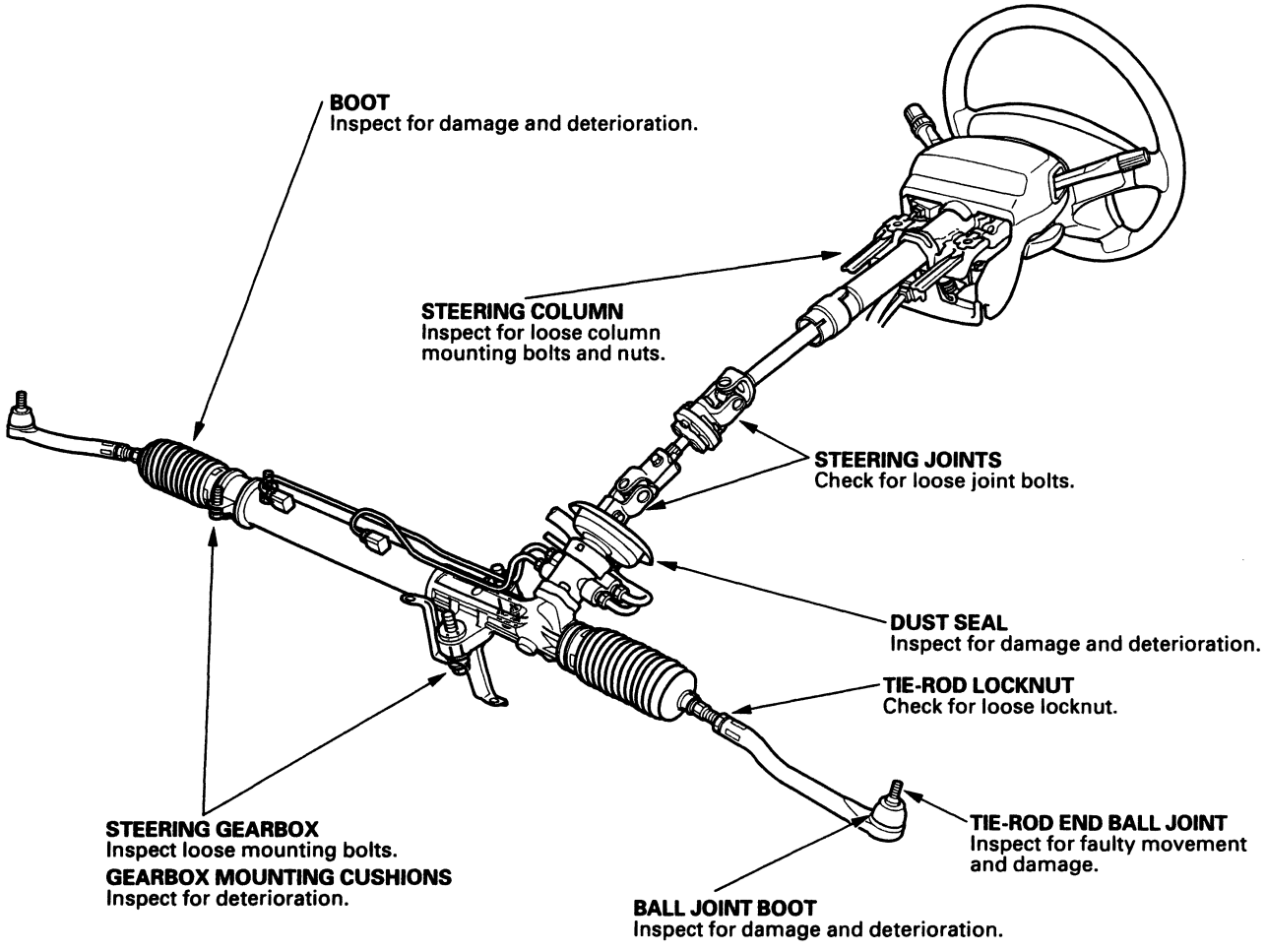

BACK

Pump Pressure Test with T/N 07406-0010001

Special Tools Required
- P/S joint adapter (pump), 07RAK-S040110
- P/S joint adapter (hose), 07RAK-S040121
- P/S pressure gauge, 07406-0010001

Check the fluid pressure as follows to determine whether the trouble is in the pump or gearbox.

1. Check the power steering fluid level (see page 17-14) and pump belt tension (see page 17-12).

2. Disconnect the pump outlet hose (A) from the pump outlet with care so as not to spill the power steering fluid on the frame and other parts, then install the P/S joint adapter (pump) on the pump outlet (B).

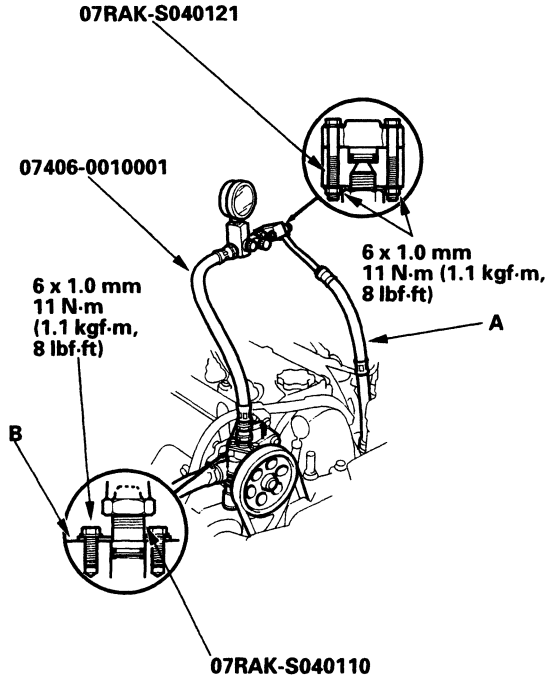

3. Connect the P/S joint adapter (hose) to the P/S pressure gauge, then connect the pump outlet hose (A) to the P/S joint adapter (hose).

4. Install the P/S pressure gauge to the P/S joint adapter (pump).

5. Fully open the shut-off valve (A).

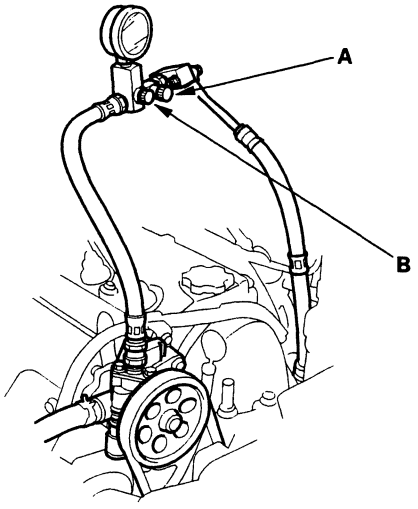

6. Fully open the pressure control valve (B).

7. Start the engine and let it idle.

8. Turn the steering wheel from lock-to-lock several times to warm the fluid to operating temperature.

9. Measure steady-state fluid pressure while the engine is idling. If the pump is in good condition, the gauge should read less than 1,500 kPa (15 kgf/cm², 213 psi).
   If it reads high, check for:
   - Clogged or deformed feed or return line between the pump and gearbox
   - Clogged valve body unit

10. Close the pressure control valve, then close the shut-off valve gradually until the pressure gauge needle is stable. Read the pressure.

    NOTICE
    Do not keep the pressure control valve closed more than 5 seconds or the pump could be damaged by over-heating.

11. Immediatery open the pressure control valve fully. If the pump is in good condition, the gauge should read at least 7,200–7,800 kPa (73–80 kgf/cm², 1,040–1,140 psi). A low reading means pump output is too low for full assist. Repair or replace the pump.

Pump Pressure Test with T/N 07406-001000A

Special Tools Required
- P/S joint adapter (pump), 07RAK-S040110
- P/S joint adapter (hose), 07RAK-S040121
- P/S pressure gauge, 07406-001000A

Check the fluid pressure as follows to determine whether the trouble is in the pump or gearbox.

1. Check the power steering fluid level (see page 17-14) and pump belt tension (see page 17-12).

2. Disconnect the pump outlet hose (A) from the pump outlet with care so as not to spill the power steering fluid on the frame and other parts, then install the P/S joint adapter (pump) on the pump outlet (B).

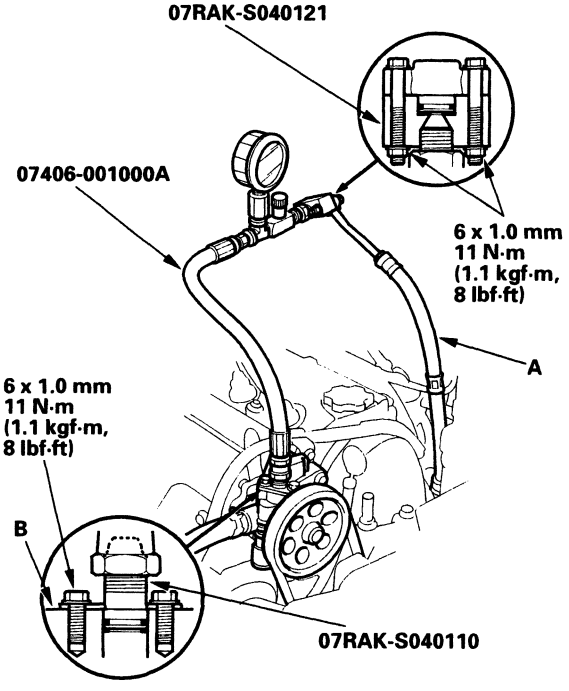

3. Connect the P/S joint adapter (hose) to the P/S pressure gauge, then connect the pump outlet hose (A) to the P/S joint adapter (hose).

4. Install the P/S pressure gauge to the P/S joint adapter (pump).

5. Open the pressure control valve (A) fully.

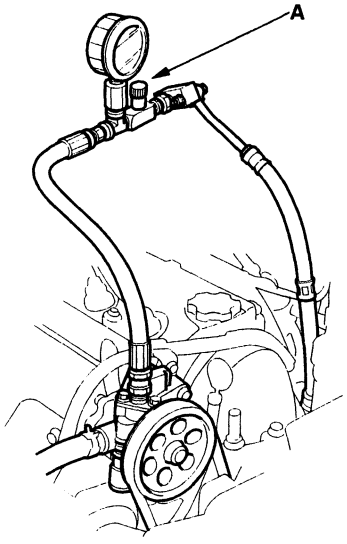

6. Start the engine and let it idle.

7. Turn the steering wheel from lock-to-lock several times to warm the fluid to operating temperature.

8. Measure steady-state fluid pressure while the engine is idling. If the pump is in good condition, the gauge should read less than 1,500 kPa (15 kgf/cm², 213 psi). If it reads high, check for:
   - Clogged or deformed feed or return line between the pump and gearbox
   - Clogged valve body unit

9. Close the pressure control valve gradually and read the pressure.

   NOTICE
   Do not keep the pressure control valve closed more than 5 seconds or the pump could be damaged by over-heating.

10. Immediately open the pressure control valve fully. If the pump is in good condition, the gauge should read at least 7,200 – 7,800 kPa (73 – 80 kgf/cm², 1,040 – 1,140 psi). A low reading means pump output is too low for full assist. Repair or replace the pump.

BACK

Fluid Leakage Inspection

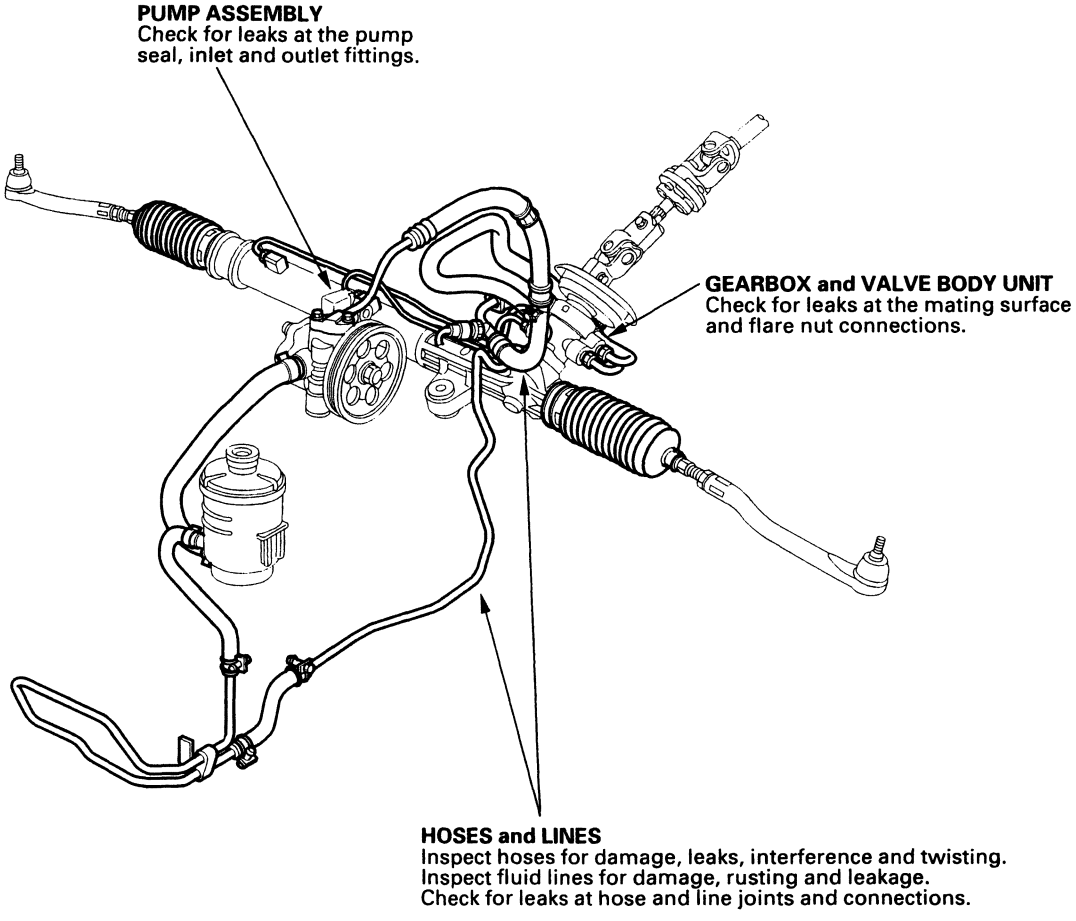

Pump Belt Inspection and Adjustment

Special Tools Required
- Belt tension gauge set, 07JGG-001000A
- Belt tension gauge, 07JGG-001010A

Belt Tension Gauge Method

Inspection

1. Remove the P/S reservoir from the bracket, and set it aside.

2. Attach the belt tension gauge to the belt with the gauge face toward the engine, and measure the tension of the belt. Follow the gauge manufacturer's instructions. If the belt is worn or damaged, replace it.

   NOTE: Remove the belt tension gauge carefully to avoid hitting the gauge reset lever.

   Tension:
   Used Belt: 390–540 N (40–55 kgf, 88–121 lbf)
   New Belt: 740–880 N (75–90 kgf, 165–198 lbf)

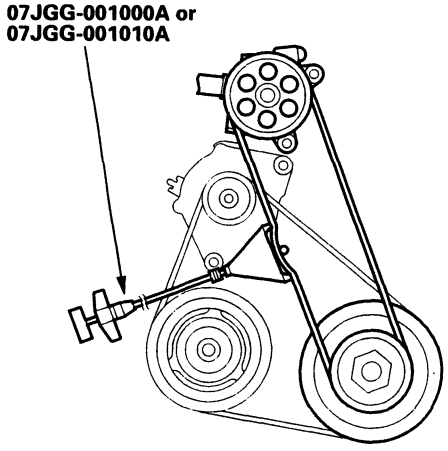

3. If you installed a new belt, run the engine for 5 minutes, then readjust the belt to the used belt specification.

Adjustment

4. Loosen the power steering pump mounting bolt (A) and pump lock bolt (B).

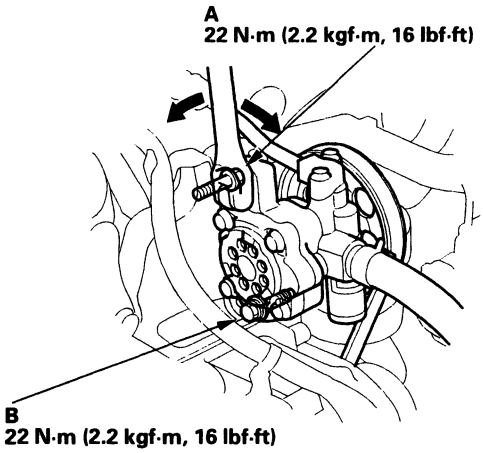

5. Adjust the belt tension by moving the power steering pump with a 1/2" drive breaker bar to obtain the proper belt tension, then retighten the mounting bolt and lock bolt.

6. Start the engine and turn the steering wheel from lock-to-lock several times, then stop the engine and recheck the tension of the belt.

BACK

Deflection Method

Inspection

1. Apply a force of 98 N (10 kgf, 22 lbf) and measure the deflection between the power steering pump pulley (A) and the crankshaft pulley (B). If the belt is worn or damaged, replace it.

   Deflection:
   Used Belt: 13.0 – 16.0 mm (0.51 – 0.63 in.)
   New Belt: 11.0 – 12.5 mm (0.43 – 0.49 in.)

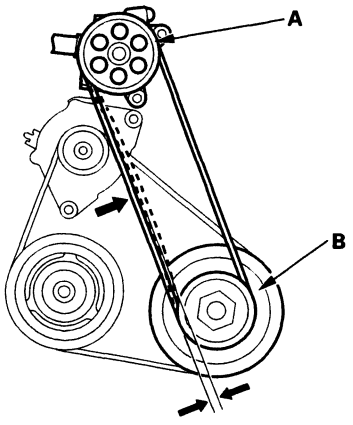

2. If you installed a new belt, run the engine for 5 minutes, then readjust the belt to the used belt specification.

Adjustment

3. Loosen the power steering pump mounting bolt (A) and pump lock bolt (B).

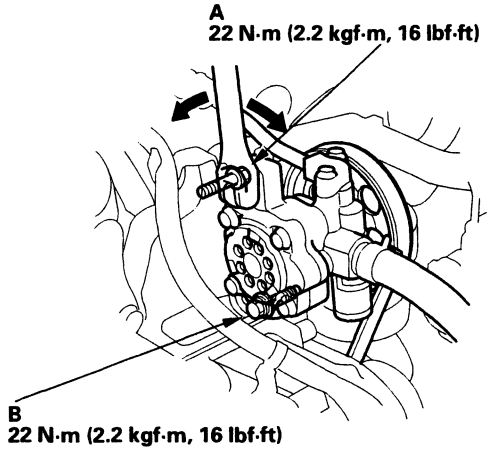

4. Adjust the belt tension by moving the power steering pump with a 1/2" drive breaker bar to obtain the proper belt tension, then retighten the mounting bolt and lock bolt.

5. Start the engine and turn the steering wheel from lock-to-lock several times, then stop the engine and recheck the tension of the belt.

Fluid Replacement

Check the reservoir (A) at regular intervals, and add the recommended fluid as necessary. Always use Honda Power Steering Fluid-V or S. Using any other type of power steering fluid or automatic transmission fluid can cause increased wear and poor steering in cold weather.

SYSTEM CAPACITY:
1.1 ℓ (1.16 US. qt, 0.97 Imp.qt) at disassembly
RESERVOIR CAPACITY:
0.4 ℓ (0.42 US. qt, 0.35 Imp.qt)

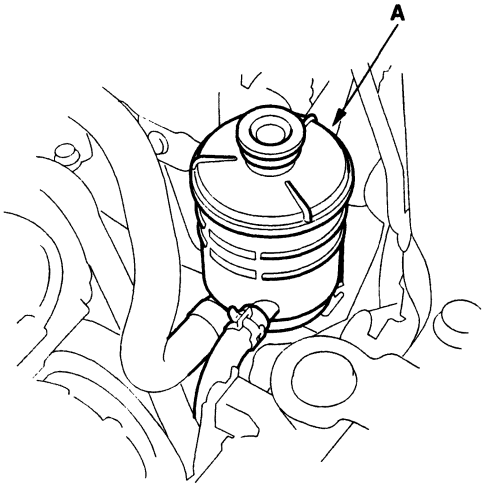

1. Raise the reservoir, then disconnect the return hose (A) to drain the reservoir. Take care not to spill the fluid on the body and parts. Wipe off any spilled fluid at once.

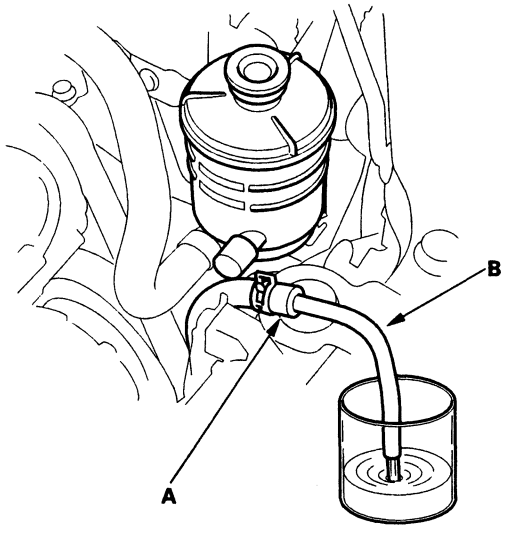

2. Connect a hose (B) of suitable diameter to the disconnected return hose, and put the hose end in a suitable container.
3. Start the engine, let it run at idle, and turn the steering wheel from lock-to-lock several times. When fluid stops running out of the hose, shut off the engine. Discard the fluid.
4. Reinstall the return hose on the reservoir.
5. Fill the reservoir to the upper level line.
6. Start the engine and run it at fast idle, then turn the steering from lock-to-lock several times to bleed air from the system.
7. Recheck the fluid level and add more if necessary. Do not fill the reservoir beyond the upper level line.

BACK

Hoses and Lines Replacement

Note these items during installation:

- Connect each hose to the corresponding line securely until it contacts the stop on the line. Install the clamp or adjustable clamp at the specified distance from the hose end as shown.
- Check all clamps for deterioration or deformation; replace with the clamps new ones if necessary.
- Add the recommended power steering fluid to the specified level on the reservoir and check for leaks.

ADJUSTABLE HOSE CLAMP (A)

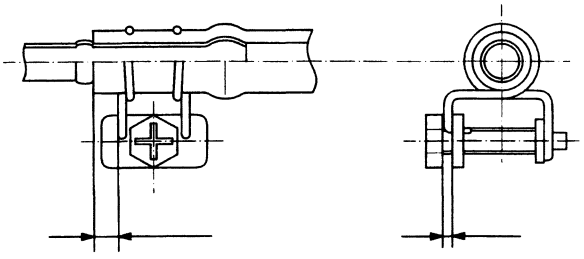

2.5—5.5 mm
(0.01—0.22 in.)

2.0—4.0 mm
(0.08—0.16 in.)

HOSE CLAMP (B)

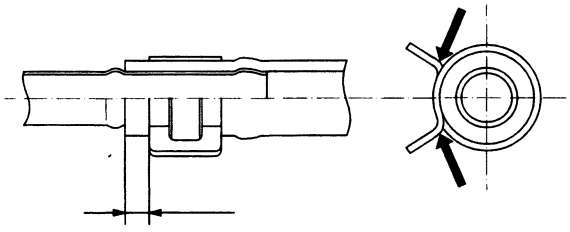

2.5—5.5 mm
(0.01—0.22 in.)

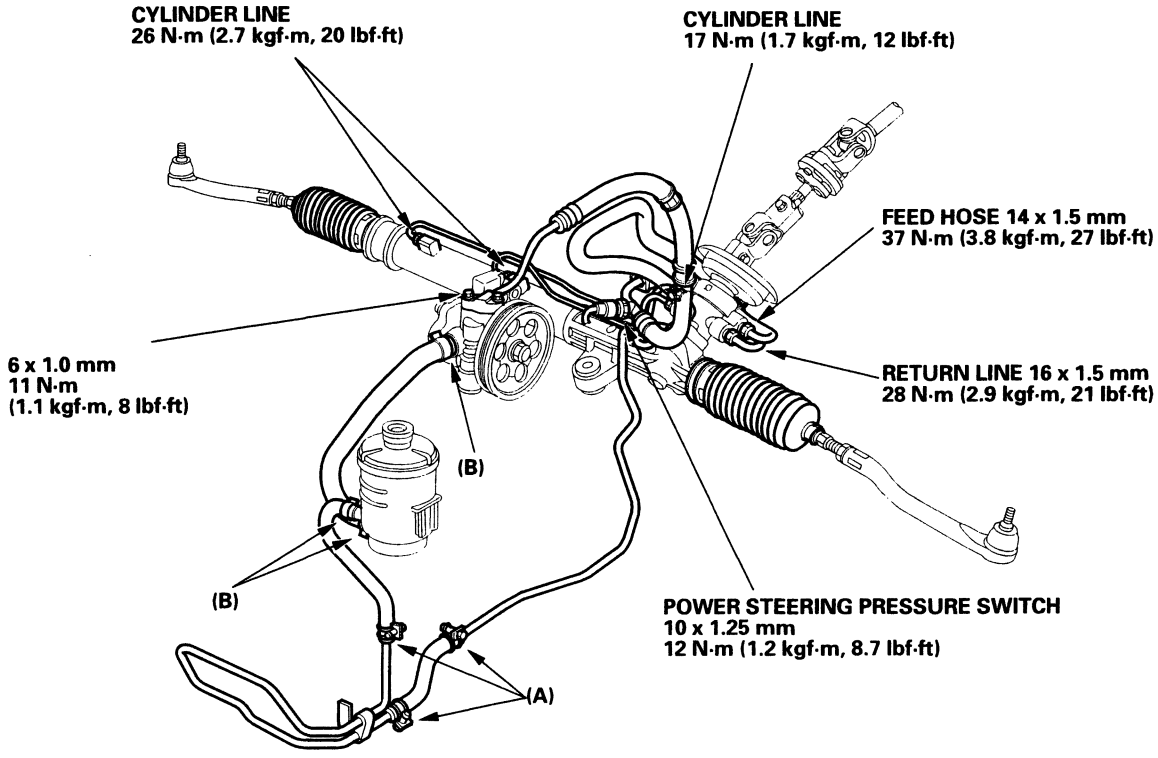

Pump Replacement

1. Place a suitable container under the vehicle.

2. Drain the power steering fluid from the reservoir.

3. Remove the belt (A) by loosening the pump mounting bolt (B) and pump lock bolt (C).

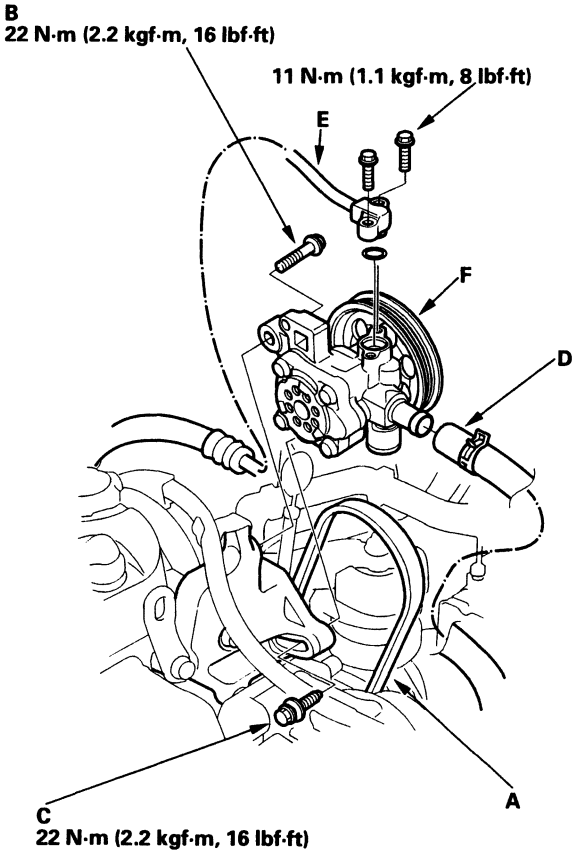

4. Cover the A/C compressor with several shop towels to protect it from spilled power steering fluid. Disconnect the pump inlet hose (D) and pump outlet hose (E) from the pump (F), and plug them. Take care not to spill the fluid on the body or parts. Wipe off any spilled fluid at once.

5. Remove the pump mounting bolt and pump lock bolt, then remove the pump. Do not turn the steering wheel with the pump removed.

6. Cover the opening of the pump with a piece of tape to prevent foreign material from entering the pump.

7. Connect the pump inlet hose and pump outlet hose. Tighten the pump fittings securely.

8. Loosely install the pump in the pump bracket with the mounting bolt and lock bolt.

9. Install the pump belt.

   Note these item during belt installation:
   - Make sure that the power steering belt (A) is properly positioned on the pulleys (B).
   - Do not get power steering fluid or grease on the power steering belt or pulley faces. Clean off any fluid or grease before installation.

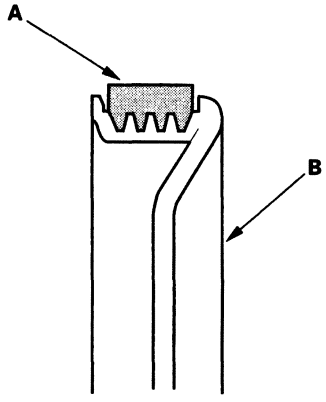

10. Adjust the pump belt adjustment (see page 17-12).

11. Fill the reservoir to the upper level line (see page 17-14).

BACK

Pump Overhaul

Exploded View

Replace the pump as an assembly if the parts indicated with asterisk (*) are worn or damaged.

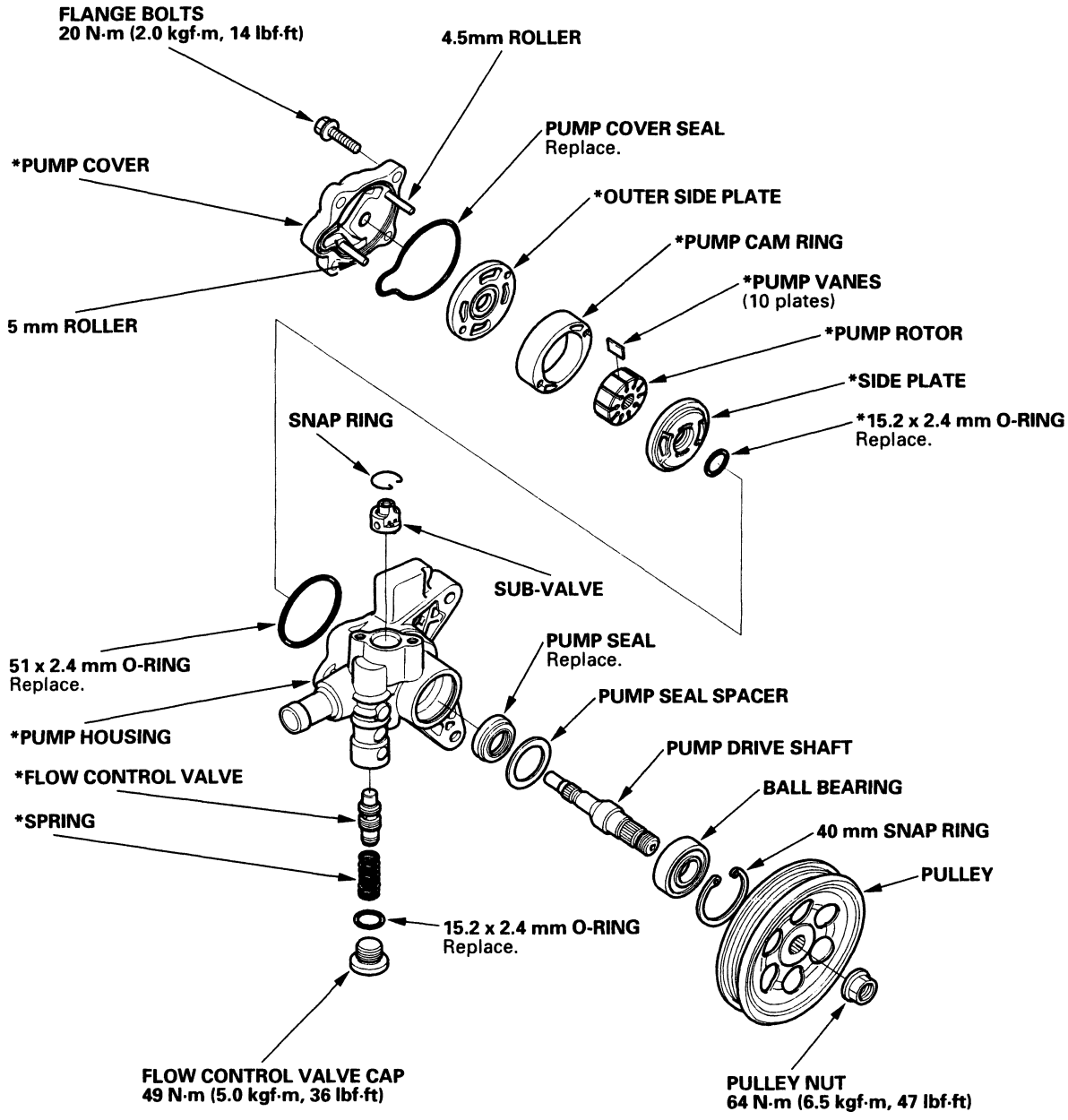

(cont'd)

Pump Overhaul (cont'd)

Special Tools Required
Universal holder, 07725-0030000

Disassembly

NOTE: Refer to the Exploded View as needed during the following procedure.

1. Remove the power steering pump (see page 17-16).
2. Drain the fluid from the pump.
3. Hold the steering pump (A) in a vise with soft jaws, hold the pulley (B) with the special tool, and remove the pulley nut (C) and pulley. Be careful not to damage the pump housing with the jaws of the vise.

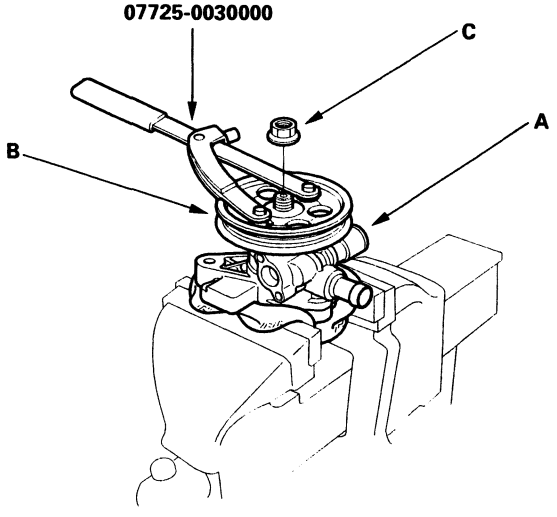

4. Loosen the flow control valve cap with a hex wrench, then remove it, and the O-ring, flow control valve, and spring.
5. Remove the pump cover and pump cover seal.
6. Remove the outer side plate, pump cam ring, pump rotor, pump vanes, side plate and O-rings.
7. Remove the snap ring, then remove the sub-valve from the pump housing.
8. Remove the circlip, then remove the pump drive shaft by tapping the shaft end with a plastic hammer.
9. Remove the pump seal spacer and pump seal.

Inspection

10. Check the flow control valve for wear, burrs, and other damage to the edges of the grooves in the valve.

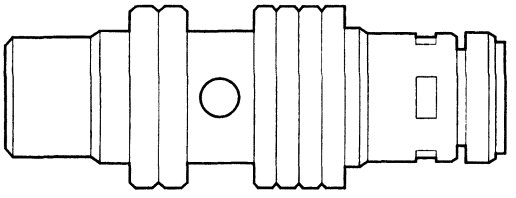

11. Inspect the bore of the flow control valve on the pump housing for scratches or wear.
12. Slip the flow control valve back in the pump housing, and check that it moves in and out smoothly. If OK, go to step 13; if not, replace the pump as an assembly. The flow control valve is not available separately.

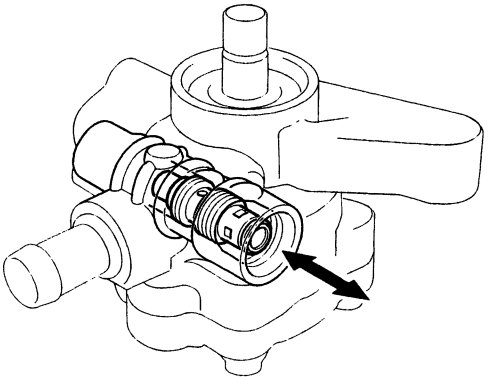

BACK

13. Attach a hose (A) to the end of the flow control valve (B) as shown. Then submerge the flow control valve (B) in a container of power steering fluid or solvent (C), and blow in the hose.

    - If air bubbles leak through the valve at less than 98 kPa (1.0 kgf/cm^2, 14.2 psi), replace the pump as an assembly. The flow control valve is not available separately.
    - If the flow control valve tests OK, set it aside for reassembly later.

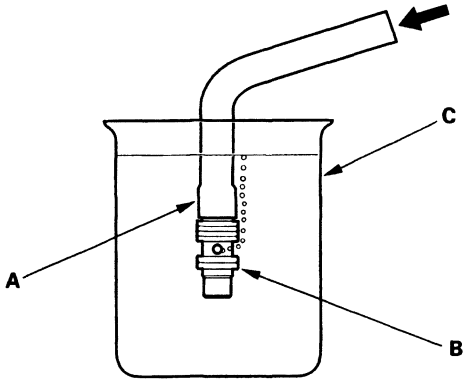

14. Inspect the ball bearing by rotating the outer race slowly. If you feel any play (axial or radial) or roughness, remove the faulty ball bearing (A), and install a new one (B).

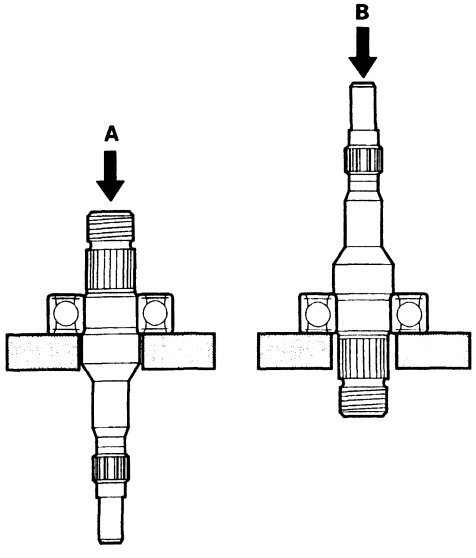

15. Inspect each part shown with an asterisk in the Exploded View; if any of them are worn or damaged, replace the pump as an assembly.

Reassembly

16. Clean the disassembled parts with solvent, and dry them with compressed air. Do not dip rubber parts in solvent.

17. Align the pin (A) of the sub-valve (B) with the oil passage (C) in the pump housing, and push the sub-valve into place. Then install the snap ring (D).

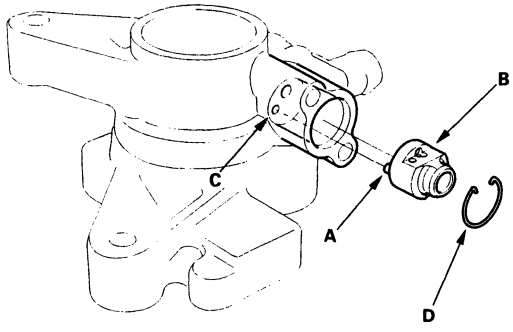

18. Install the new pump seal (A) (with its grooved side facing in) into the pump housing by hand, then install the pump seal spacer (B).

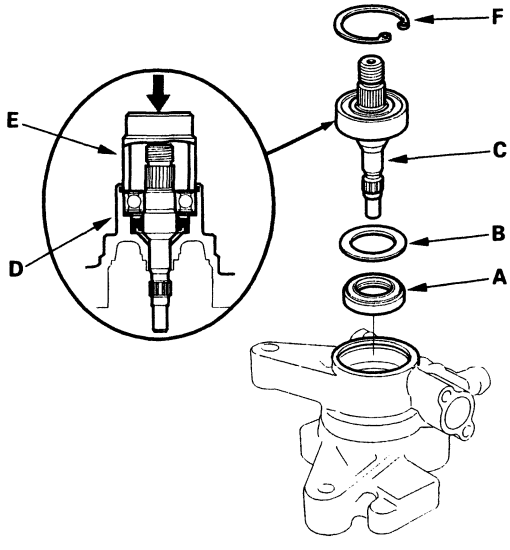

19. Position the pump drive shaft (C) in the pump housing (D), then drive it in using a 29 mm socket (E).

20. Install the 40 mm snap ring (F) with its radiused side facing out.

(cont'd)

Pump Overhaul (cont'd)

21. Coat the new pump cover seal (A) with power steering fluid, and install it into the groove in the pump cover (B).

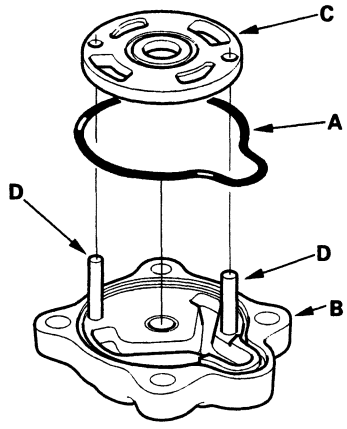

22. Install the outer side plate (C) over the two rollers (D).

23. Set the pump cam ring (A) over the two rollers with its "•" mark (B) facing up.

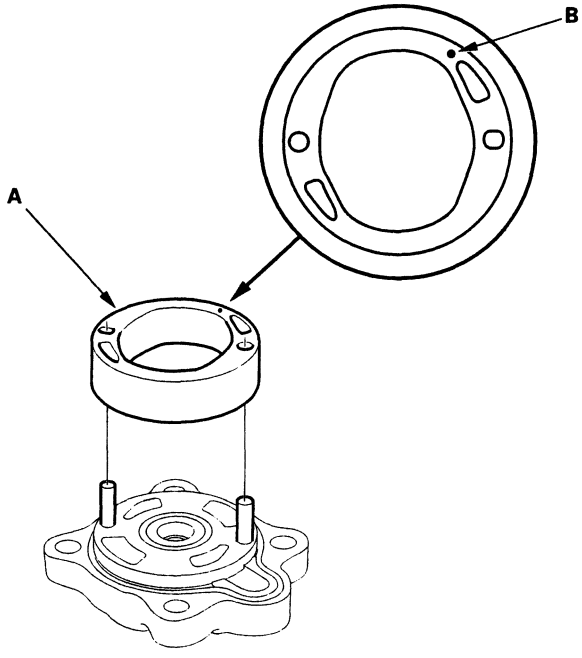

24. Assemble pump rotor (A) to the pump cover (B).

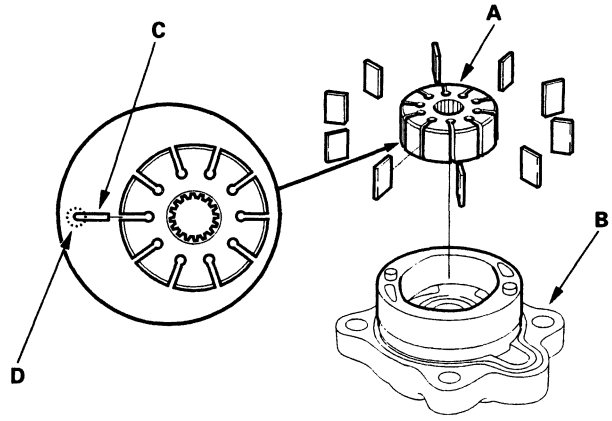

25. Set the 10 vanes (C) in the grooves in the rotor. Make sure that the round ends (D) of the vanes are in contact with the sliding surface of the cam ring.

26. Coat the new O-ring (A) with power steering fluid, and install it into the groove in the side plate (B).

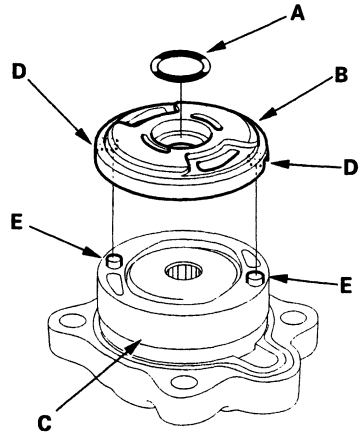

27. Install the side plate on the cam ring (C) by aligning the roller set holes (D) in the side plate with the rollers (E).

BACK

28. Coat the new O-ring (A) with power steering fluid, and position it in the bottom of the pump housing (B).

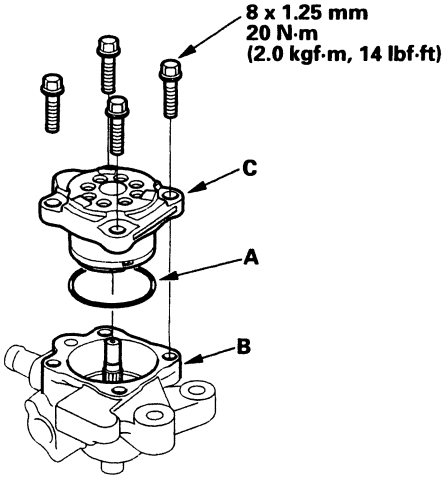

29. Install the pump cover assembly (C) in the pump housing.

30. Coat the flow control valve (A) with power steering fluid, then install it and the spring (B) in the pump housing.

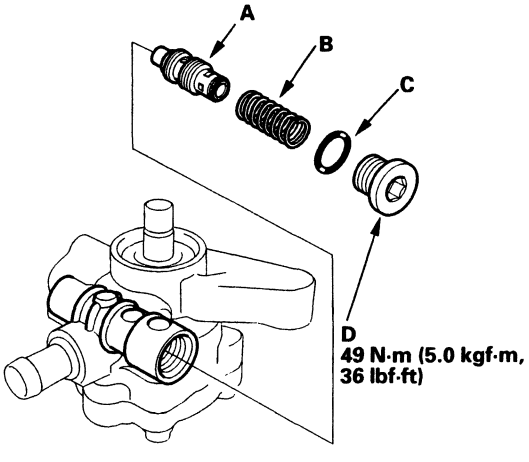

31. Coat the new O-ring (C) with power steering fluid, and install it on the flow control valve cap (D), then install the cap on the pump housing, and tighten it.

32. Install the pulley (A), then loosely install the pulley nut (B). Hold the steering pump in a vise with soft jaws. Be careful not to damage the pump housing with the jaws of the vise.

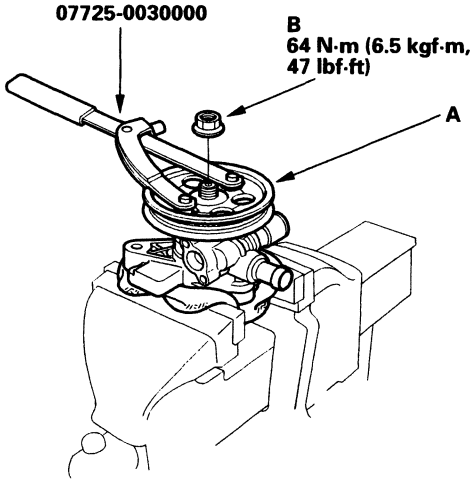

33. Hold the pulley (A) with the special tool, and tighten the pulley nut (B).

34. Check that the pump turns smoothly by turning the pulley by hand.

Steering Wheel Removal

SRS components are located in this area. Review the SRS component locations, precautions, and procedures in the SRS section before performing repairs or service (see page 23-28).

1. Align the front wheels straight ahead, then remove the driver's airbag from the steering wheel (see page 23-278).

2. Disconnect the radio remote switches connector and cruise control switches connector if equipped.

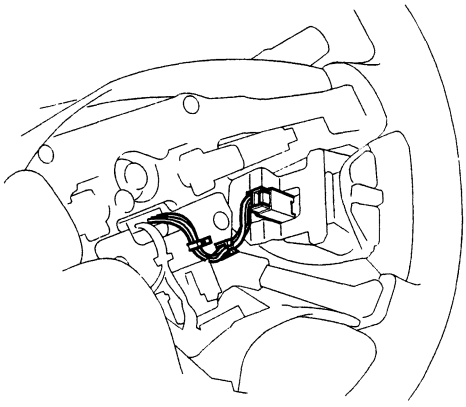

3. Loosen the steering wheel bolt (A), then install a steering wheel puller (B) on the steering wheel and remove it.

   Note these items when removing the steering wheel:
   - Do not tap on the steering wheel or the steering column shaft when removing the steering wheel.
   - If you thread the puller bolts (C) into the wheel hub more than five threads, the bolts will hit the cable reel and damage it. To prevent this, install a pair of jam nuts five threads up on each puller bolt.

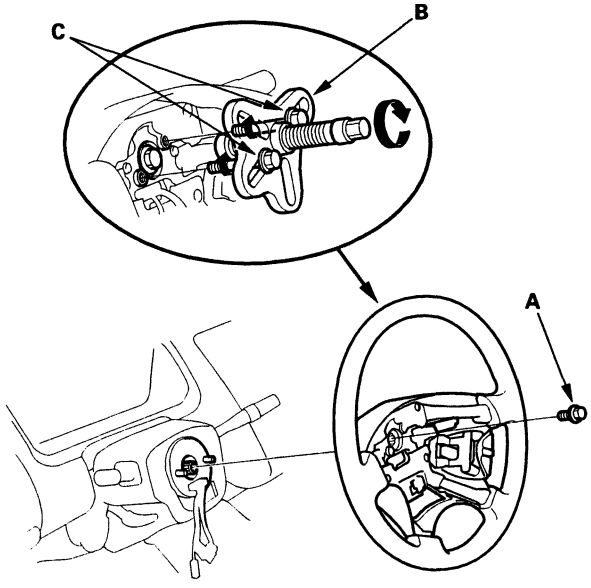

BACK

Steering Wheel Disassembly/Reassembly

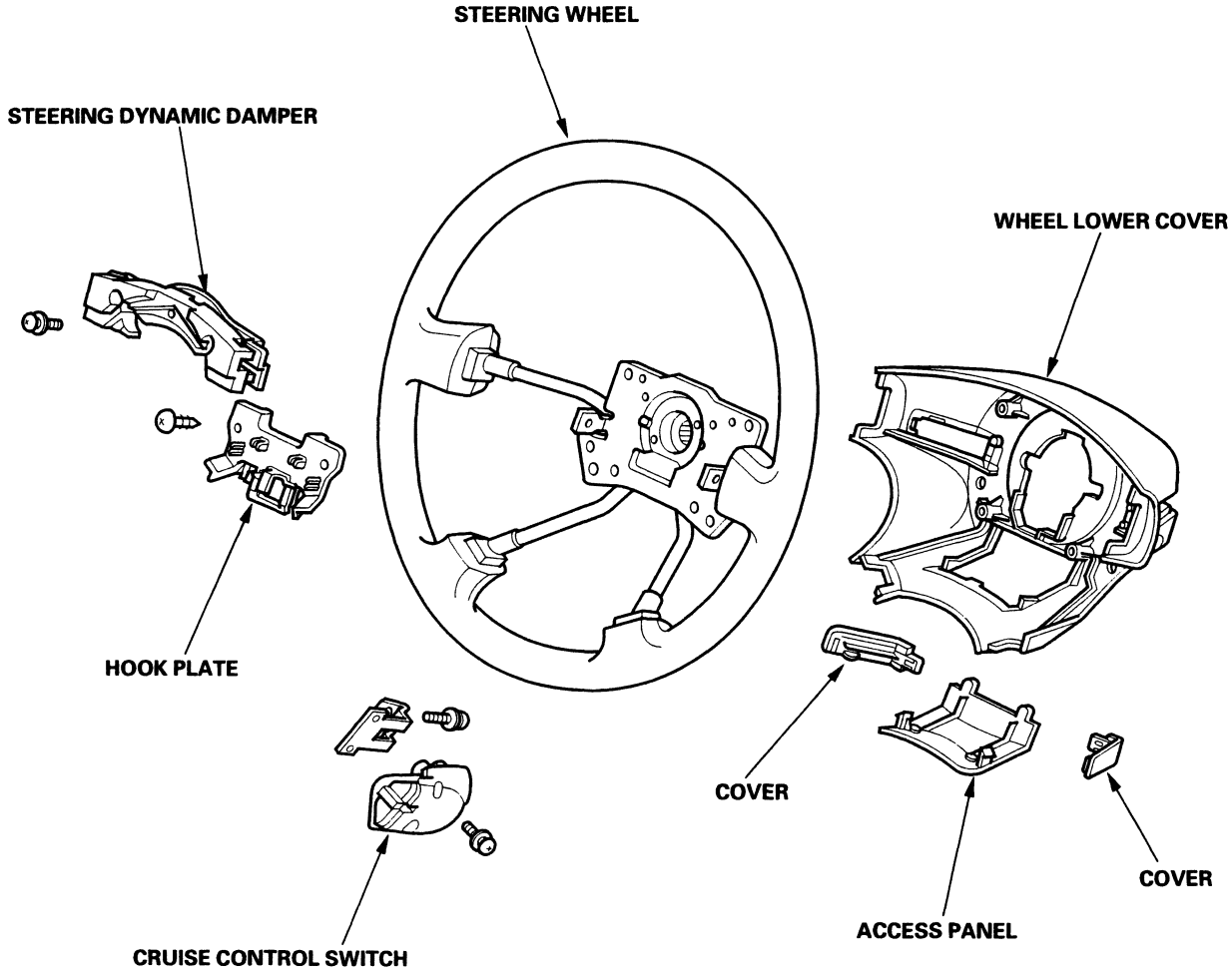

Steering Wheel Installation

1. Before installing the steering wheel, make sure the front wheels are aligned straight ahead, then center the cable reel (A). Do this by first rotating the cable reel clockwise until it stops. Then rotate it counterclockwise about 2 and half turns.
   The arrow mark (B) on the cable reel label point should point straight up.

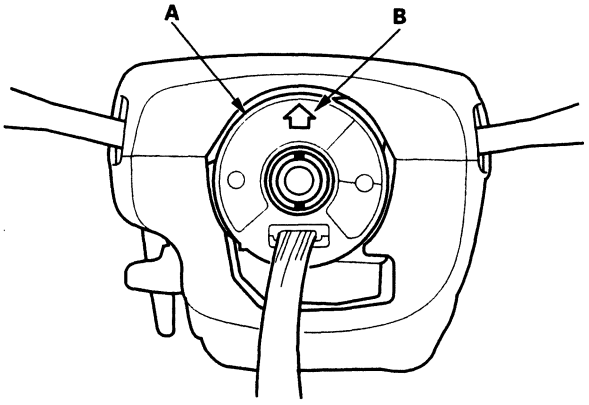

2. Position the two tabs (A) of the turn signal cancelling sleeve (B) as shown, and install the steering wheel on to the steering column shaft, making sure the steering wheel hub (C) engages the pins (D) of the cable reel and tabs of the canceling sleeve. Do not tap on the steering wheel or steering column shaft when installing the steering wheel.

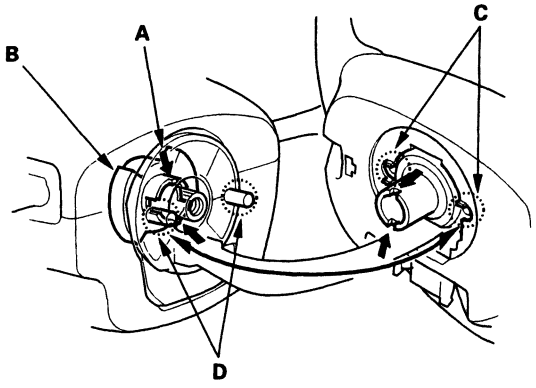

3. Install the steering wheel bolt and tighten it to 39 N·m (4.0 kgf·m, 29 lbf·ft).

4. Connect the radio remote switches connector and cruise control switches connector if equipped.

5. Install the driver's airbag, and confirm that the system is operating properly (see page 23-278).

6. Check the horn, radio remote switches, cruise control set/resume switch and turn signal cancelling for proper operation.

BACK

Steering Column Removal and Installation

SRS components are located in this area. Review the SRS component locations, precautions, and procedures in the SRS section before performing repairs or service (see page 23-28).

Removal

1. Record the radio station presets, and disconnect the battery.
2. Remove the driver's airbag, steering wheel, and cable reel; '98-00 models (see page 23-289); '01-02 models (see page 23-292)
3. Remove the driver's dashboard lower cover (see page 20-84).
4. Remove the column covers (A).

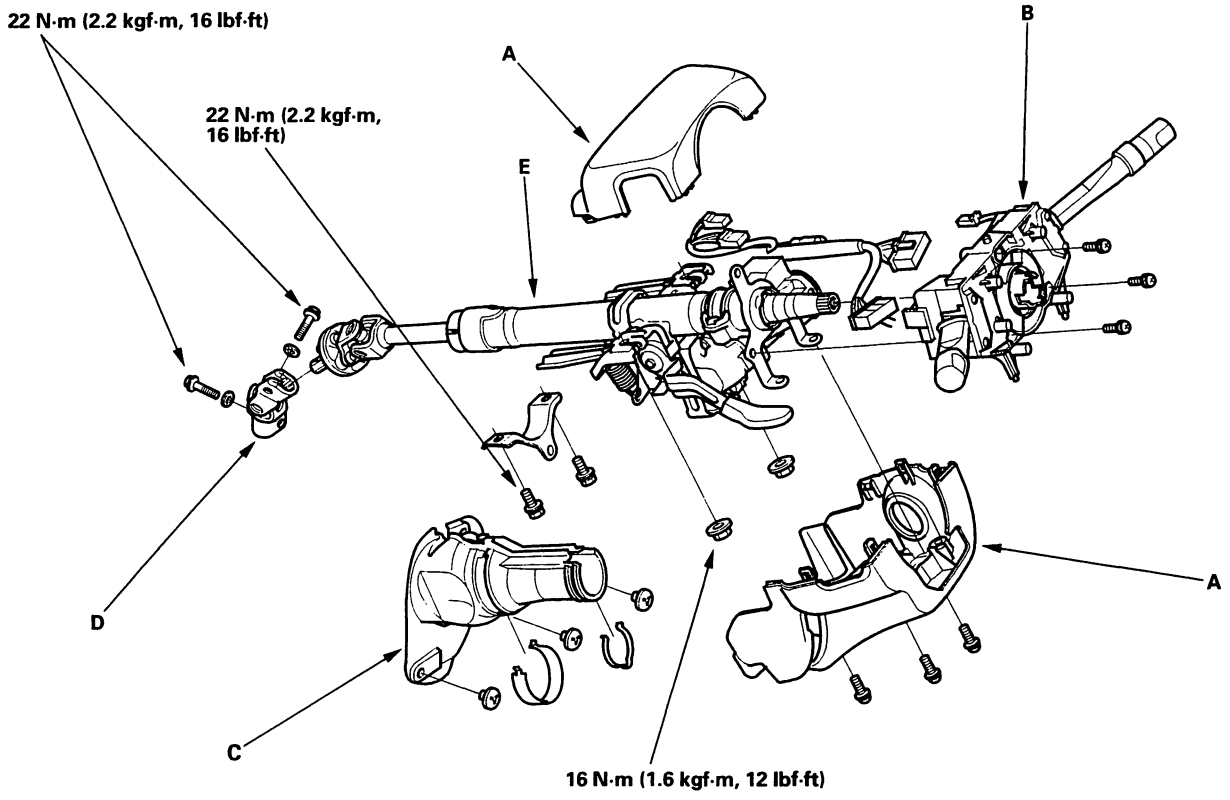

5. Remove the combination switch assembly (B) from the steering column shaft by disconnecting the connectors.
6. Disconnect the ignition switch connectors.
7. Remove the steering joint cover (C).
8. Disconnect the steering joint (D), and remove it from the column shaft.
9. Remove the steering column (E) by removing the attaching nuts and bolts.

(cont'd)

Steering Column Removal and Installation (cont'd)

Installation

1. Install the steering column and make sure the wires are not caught or pinched by any parts.

2. Insert the upper end of the steering joint onto the steering shaft (A) (line up the bolt hole (B) with the flat portion (C) on the shaft).

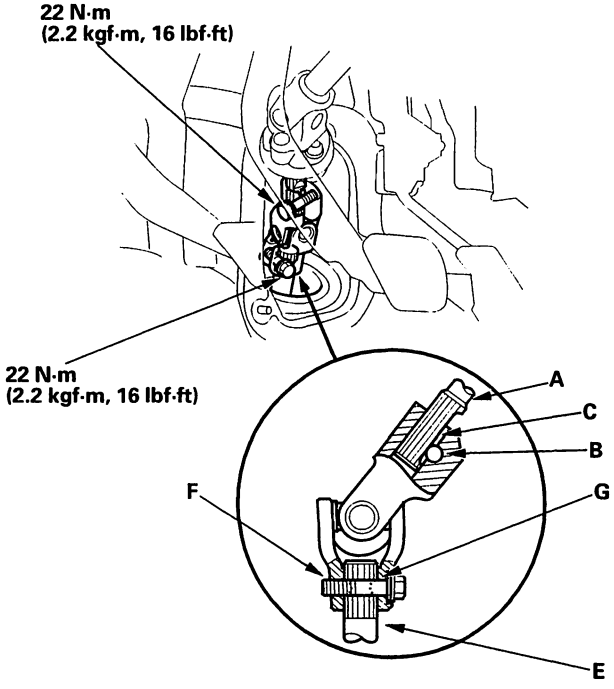

3. Slip the lower end of the steering joint onto the pinion shaft (E) (line up the bolt hole (F) with the groove (G) around the shaft), and loosely install the lower joint bolt. Be sure that the lower joint bolt is securely in the groove in the pinion shaft.

4. Pull on the steering joint to make sure that the steering joint is fully seated. Then install the upper joint bolt and tighten it.

5. Finish the installation, and note these items:
   - Make sure the wire harness is routed and fastened properly.
   - Make sure the connectors are properly connected.
   - Reinstall the steering wheel (see page 17-24).
   - Reconnect the battery and reset the radio presets.
   - Verify cruise control, horn, radio remote, and turn signal switch operation.
   - Check wheel alignment (see page 18-5).

BACK

Steering Column/Tilt Lever Inspection/Adjustment

- Check the steering column ball bearing (A) and the steering joint bearings (B) for play and proper movement. If any bearing is noisy or has is excessive play, replace the steering column as an assembly.
- Check the retaining collar (C) for damage. If it is damaged, replace the steering column as an assembly.
- Check the absorbing plates (D) for distortion or breakage. If there is distortion breakage replace the steering column as an assembly.

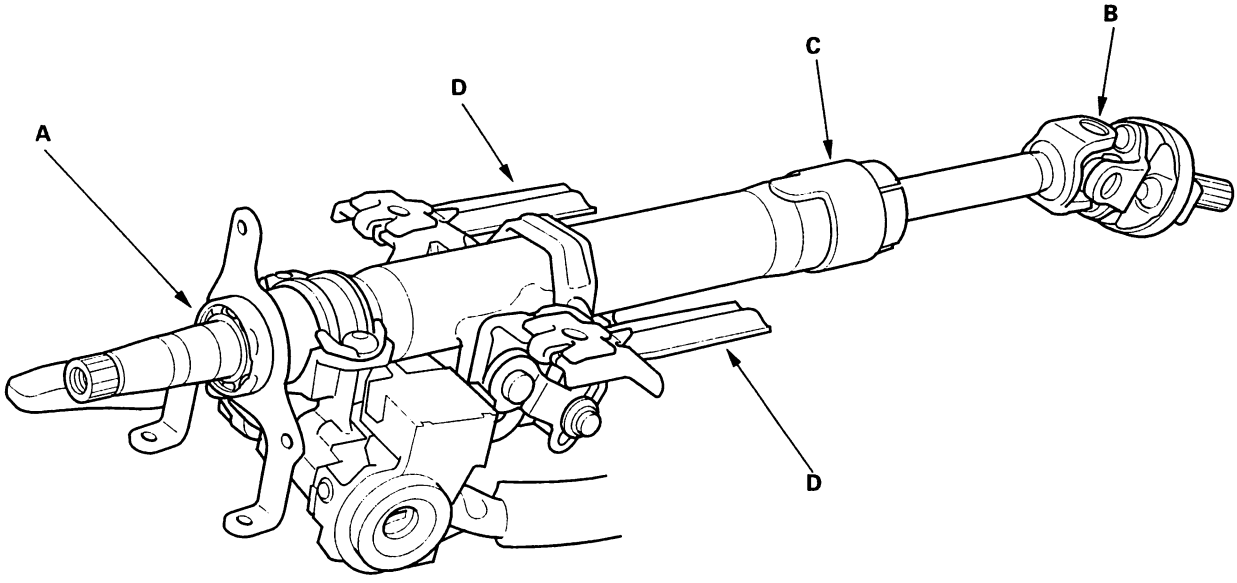

(cont'd)

Steering Column/Tilt Lever Inspection/Adjustment (cont'd)

1. Move the tilt lever (A) from the loose position to the lock position 3 to 5 times; then measure the tilt lever preload 10 mm (0.4 in) from the end of the tilt lever.

   Preload: 70–90 N (7–9 kgf, 15–20 lbf)

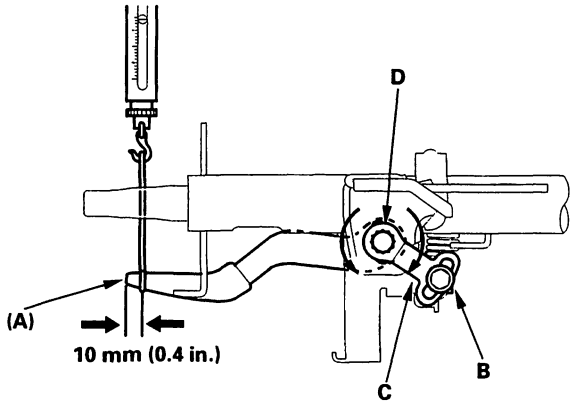

2. If the measurement is out of the specification, adjust the preload using the following procedures.

   - Loosen the tilt lever, and set the steering column in the neutral position.
   - Remove the 6 mm lock bolt (B), and remove the stop (C). Be careful not to loosen the tilt lever when installing the stop or tightening the 6 mm lock bolt.
   - Adjust the preload by turning the tilt lock bolt (D) left or right.
   - Pull up the tilt lever to the uppermost position, and install the stop. Check the preload again. If the measurement is still out of specification, repeat the above procedures to adjust.

Steering Lock Replacement

1. Remove the steering column (see page 17-25).

2. Center punch each of the two shear bolts, and drill their heads off with a 5 mm (3/16 in.) drill bit. Be careful not to damage the switch body when removing the shear bolts.

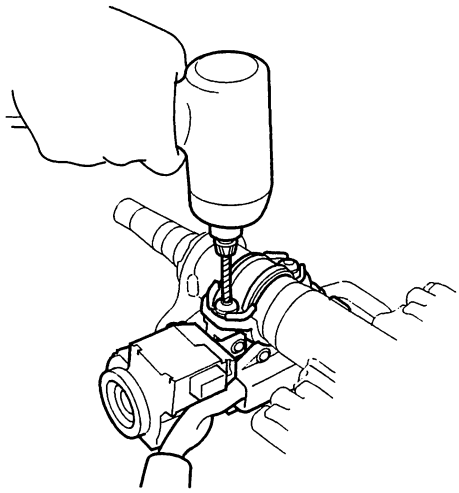

3. Remove the shear bolts from the switch body.

4. Install the switch body without the key inserted.

5. Loosely tighten the new shear bolts.

6. Insert the ignition key, and check for proper operation of the steering wheel lock and that the ignition key turns freely.

7. Tighten the shear bolts (A) until the hex heads (B) twist off.

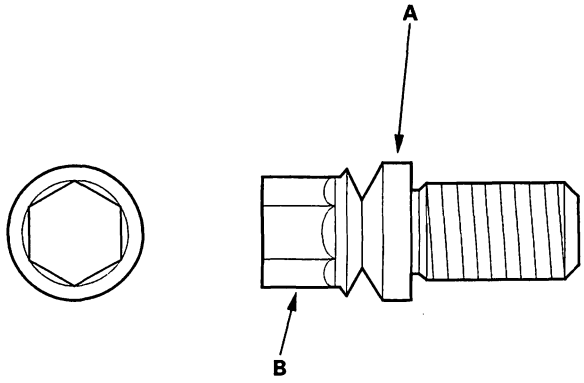

BACK

Rack Guide Adjustment

Special Tools Required
Locknut wrench, 40 mm, 07916-SA50001

1. Set the wheels in the straight ahead position.

2. Loosen the rack guide screw locknut (A) with the special tool, then remove the rack guide screw (B).

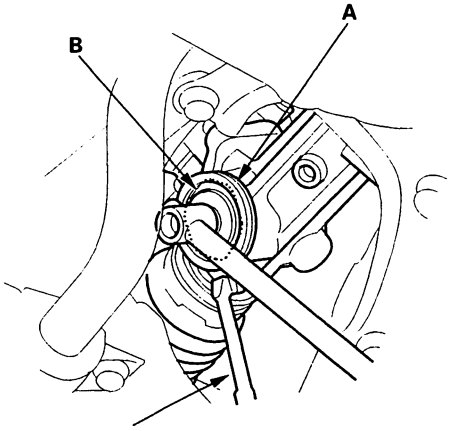

07916-SA50001

3. Remove the old sealant from rack guide screw, and apply new sealant all around the threads (C). Loosely install the rack guide screw on the steering gearbox.

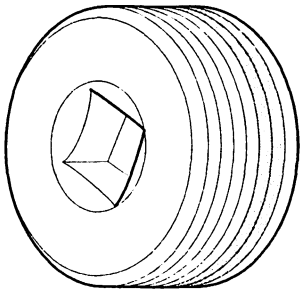

4. Tighten the rack guide screw to 25 N·m (2.5 kgf·m, 18 lbf·ft), then loosen it.

5. Retighten the rack guide screw to 3.9 N·m (0.4 kgf·m, 2.9 lbf·ft) then back it off to specified angle.

   Specified Return Angle: 20°

6. Tighten the locknut while holding the rack guide screw.

7. Check for unusual steering effort through the complete turning travel.

8. Check the steering wheel rotational play and the power assist (see page 17-7).

Steering Gearbox Removal

Special Tools Required
Ball joint remover, 28 mm, 07MAC-SL00200

Note these items during removal:

- Using solvent and a brush, wash any oil and dirt off of the valve body unit its lines, and the end if the gearbox. Blow dry with compressed air.
- Be sure to remove the steering wheel before disconnecting the steering joint. Damage to the cable reel can occur.

1. Drain the power steering fluid (see page 17-14).
2. Raise the vehicle, and make sure it is securely supported.
3. Remove the front wheels.
4. Remove the driver's airbag (see page 23-278).
5. Remove the steering wheel (see page 17-22).
6. Remove the steering joint cover.

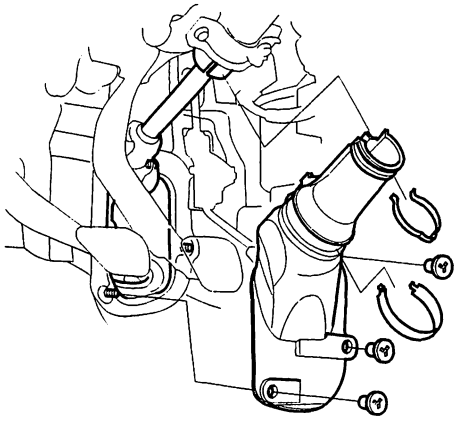

7. Remove the steering joint bolts (A), disconnect the steering joint by moving the steering joint (B) toward the column.

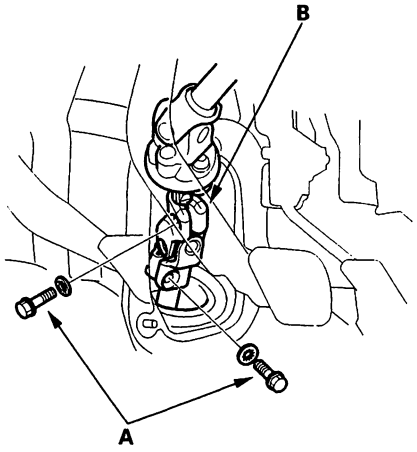

8. Remove the cotter pin (A) from the 10 mm nut (B), and loosen the nut.

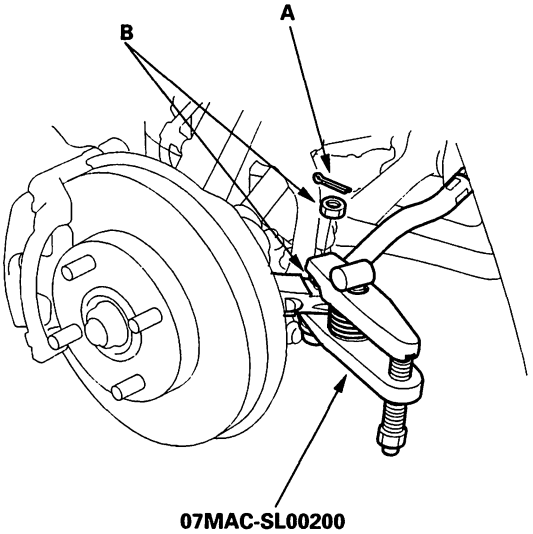

9. Separate the tie-rod ball joint and knuckle using the special tool (see page 18-9).

BACK

10. Loosen the 14 mm flare nut (A), and disconnect the pump outlet hose (B).

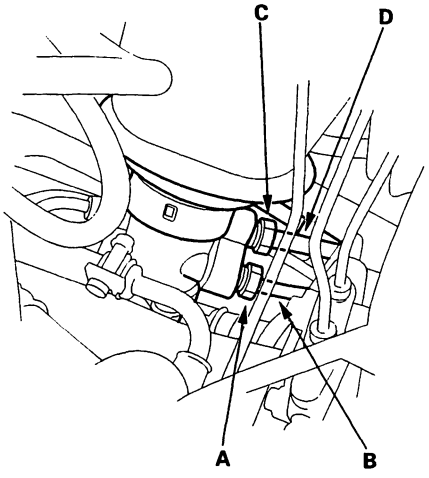

11. Loosen the 17 mm flare nut (C), and remove the return line (D).

12. After disconnecting the hoses and lines, plug or seal them with a piece of tape or equivalent to prevent foreign materials from entering.

    NOTE: Do not loosen the cylinder line A and B between the valve body unit and cylinder.

13. Grasp the right tie-rod and pull the rack all the way to the right, then remove the right and left tie-rod ends (A), and locknut (B).

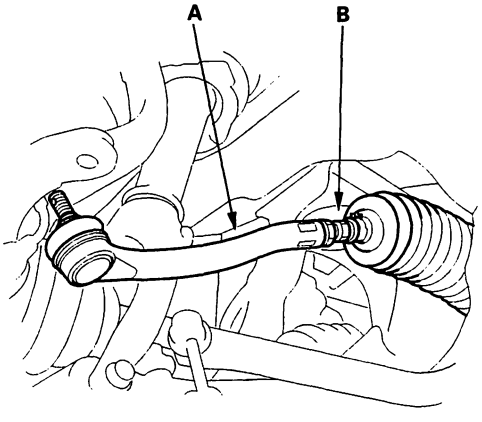

14. Remove the 3 way catalytic converter (see page 9-5).

15. Disconnect the M/T shift cable (see page 13-4) or A/T shift cable (see page 14-114) from the transmission.

16. Remove the stiffener plates (A), then remove the right mounting brackets (B).

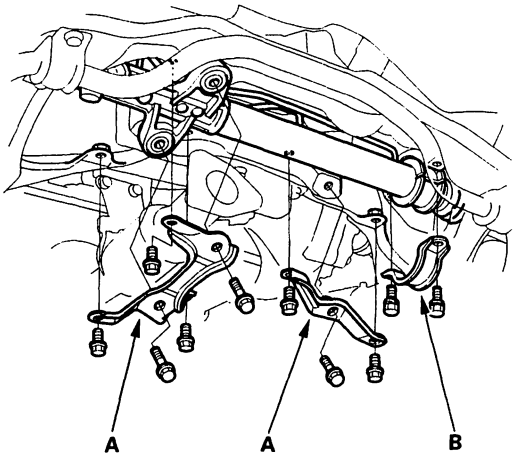

17. Pull the steering gearbox (A) all the way down to clear the pinion shaft (B) from the bulkhead, and remove the pinion shaft grommet from the top of the valve body unit.

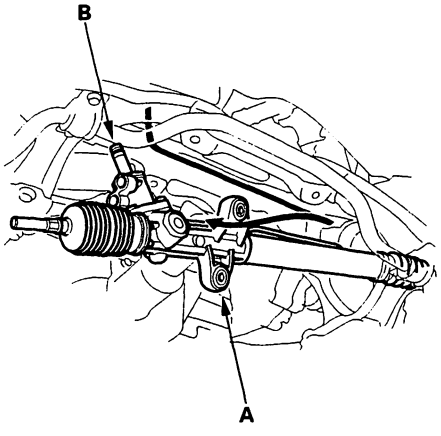

18. Move the steering gearbox to the right so the left rack end clears the rear beam, then place the left rack end below the rear beam.

19. Move the steering gearbox to the left, and tilt the left side down to remove it.

Steering Gearbox Overhaul

Exploded View

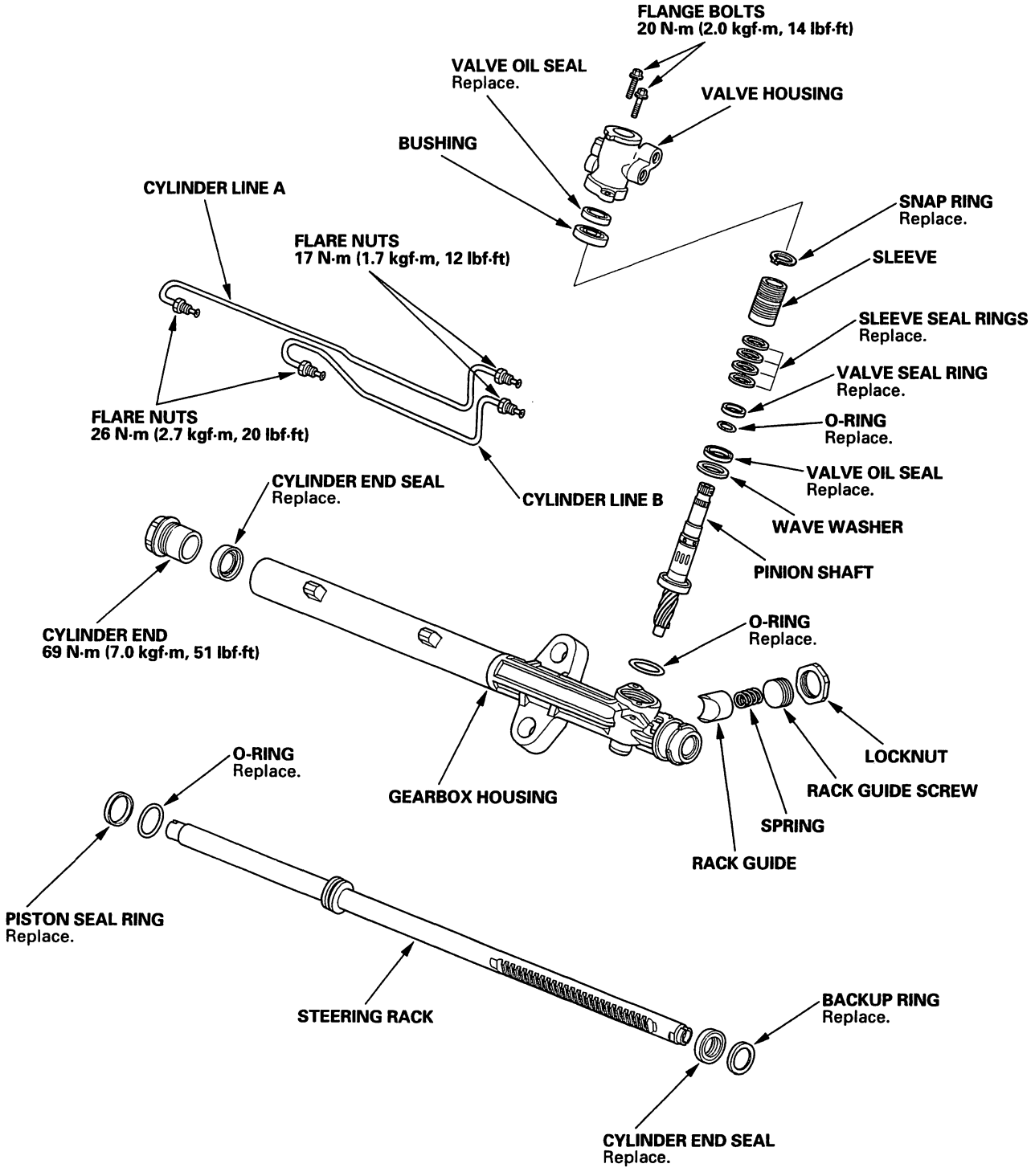

BACK

Special Tools Required
- Cylinder end seal remover attachment, 07NAD-SR3020A
- Pilot collar, 07GAF-PH70100
- Valve seal ring sizing tool, 07NAG-SR3090A
- Ball joint boot clip guide, 07974-SA50800
- Piston seal ring sizing tool, 07974-SA5020A or 07974-SA50200
- Attachment, 32 x 35 mm, 07746-0010100
- Driver, 07749-0010000
- Piston seal ring guide, 07HAG-SF10100
- Piston seal ring sizing tool, 07HAG-SF1020A or 07HAG-SF10200
- Pincers, Oetiker 1098, or equivalent, commercially available

NOTE: Refer to the Exploded View as needed during this procedure.

Disassembly

1. Remove the steering gearbox (see page 17-30).

2. Remove the boot bands (A) and tie-rod clips (B). Pull the boots away from the ends of the gearbox.

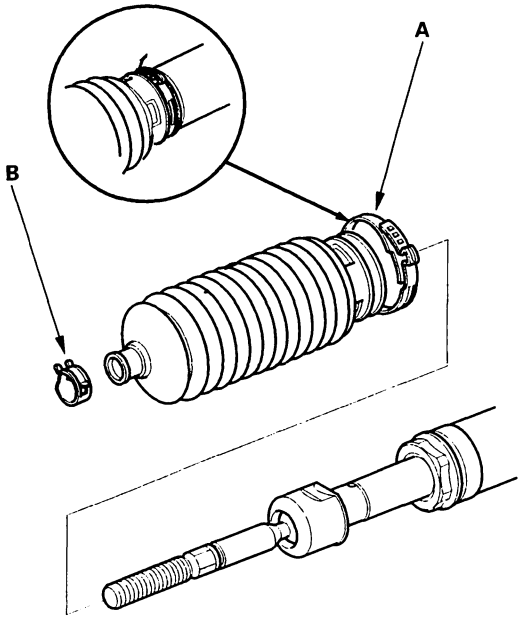

3. Unbend the lock washer.

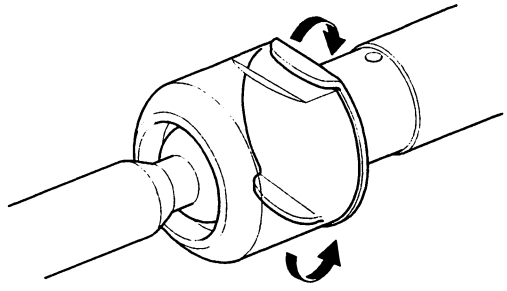

4. Hold the flat surface sections (A) of the right side steering rack (B) with a wrench, and unscrew the both rack ends (C) with a wrench. Be careful not to damage the rack surface with the wrench. Remove the lock washer (D) and stop washer (E).

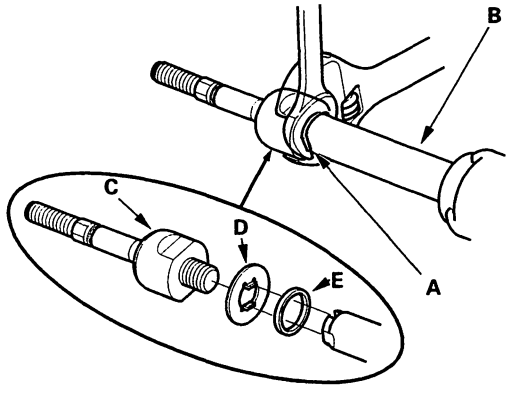

5. Loosen the locknut (A), then remove the rack guide screw (B).

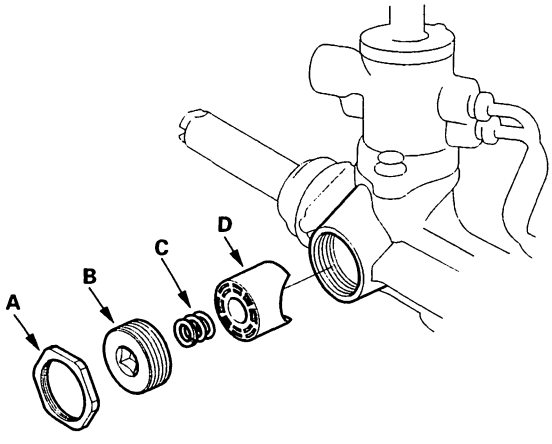

6. Remove the spring (C) and the rack guide (D) from the gearbox.

(cont'd)

Steering Gearbox Overhaul (cont'd)

7. Remove the cylinder lines from the gearbox.

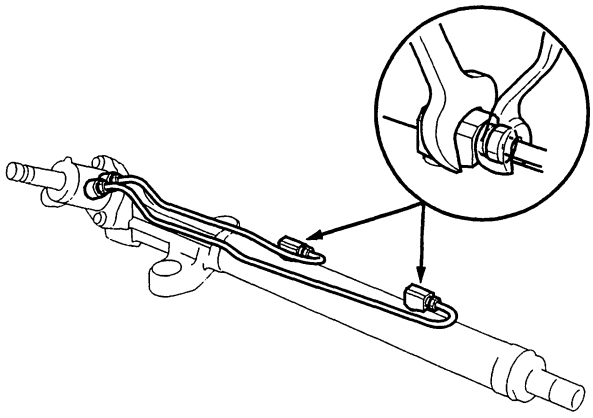

8. Drain the fluid from the cylinder fittings by slowly moving the steering rack back and forth.

9. Remove the two flange bolts, then remove the valve body unit (A) from the gearbox (B).

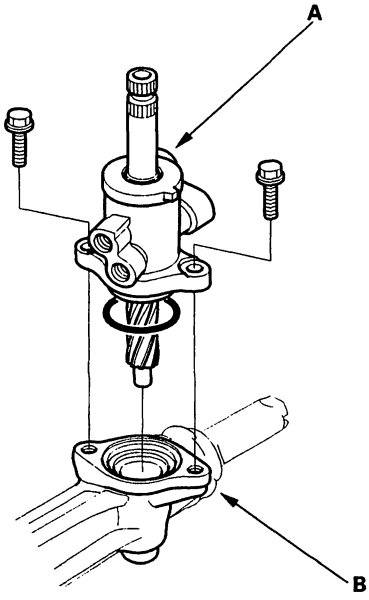

10. Drill a 3 mm (0.12 in.) diameter hole approximately 2.5–3.0 mm (0.10–0.12 in.) in depth in the staked point (A) on the cylinder. Do not allow metal shavings to enter the cylinder housing. After removing the cylinder end (B), remove any burrs at the staked point.

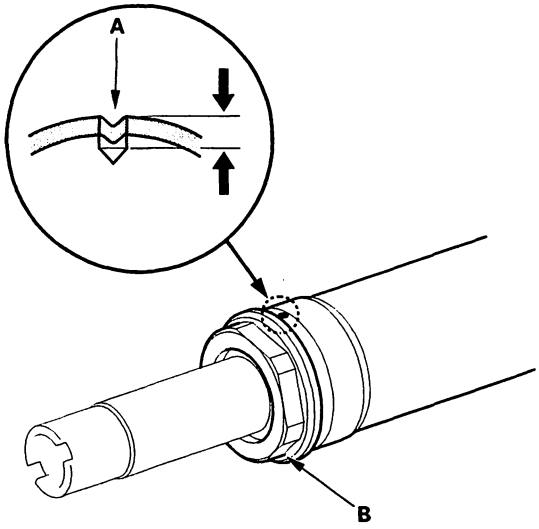

11. Attach the yoke of a universal puller (A) to the steering gearbox mounts with bolts. Clamp the yoke in a vise with soft jaws as shown, then loosen and remove the cylinder end (B). Do not clamp the cylinder housing or gearbox housing in the vise.

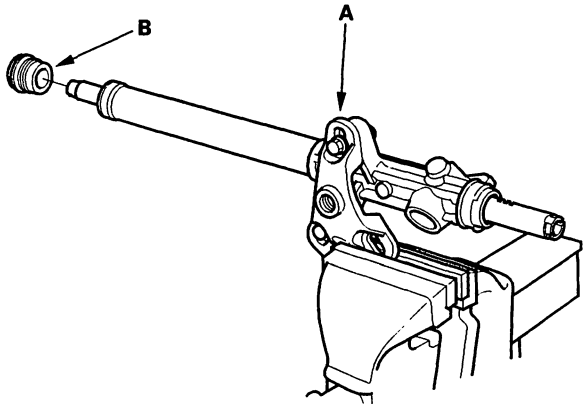

BACK

12. Install the bearing separator (A) on the gearbox housing as shown.

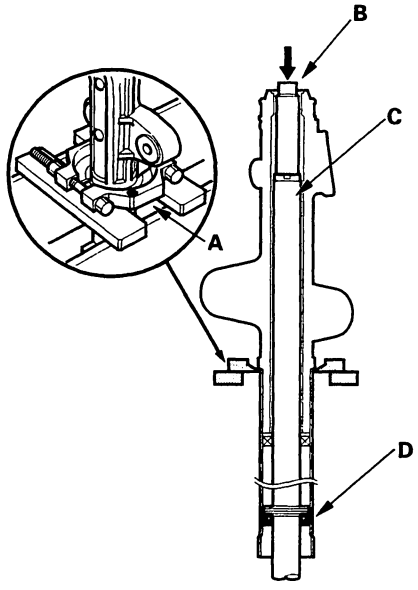

13. Place a appropriate size deep socket wrench (B) on the steering rack (C).

14. Set the steering gearbox in a press so the left side points upward, then press the cylinder end seal (D) and steering rack out of the gearbox. Hold the steering rack to keep it from falling when pressed clear. Be careful not to damage the inner surface of the cylinder housing with the tool.

15. Remove the cylinder end seal from the steering rack.

16. Insert a 24" long, 3/8" drive extension (A) and the special tool into the cylinder from the left side. Make sure that the special tool is securely positioned on the backup ring edges. Be careful not to damage the inner surface of the cylinder with the special tool.

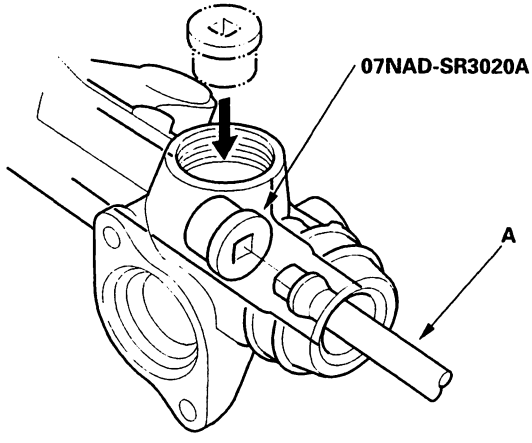

(cont'd)

Steering Gearbox Overhaul (cont'd)

17. Set the gearbox in a press, then press out the cylinder end seal (A) and backup ring (B) from the gearbox.

    Note these items when pressing the cylinder end seal:

    - Keep the tool straight to avoid damaging the cylinder wall. Check the tool angle, and correct it if necessary, when removing the cylinder end seal.
    - Use a press to remove the cylinder end seal. Do not try to remove the seal by striking the tool. It will break the backup ring, and the cylinder end seal will remain in the gearbox.

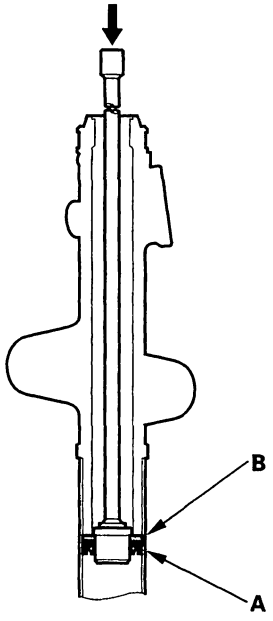

18. Carefully pry the piston seal ring (A) and O-ring (B) off the rack piston. Be careful not to damage the inside of the seal ring groove and piston edges when removing the seal ring.

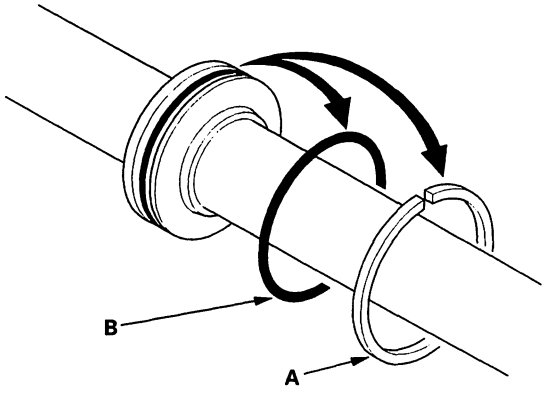

19. Before removing the valve housing (A), apply vinyl tape (B) to the splines on the pinion shaft (C).

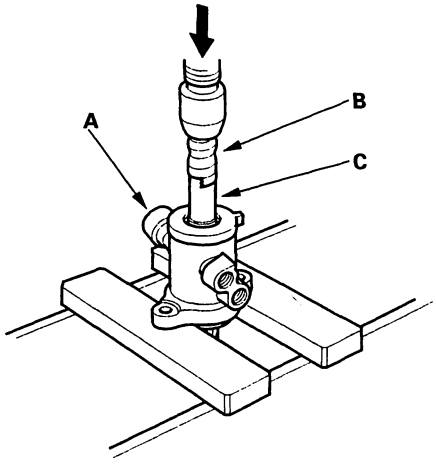

20. Separate the valve housing from the pinion shaft/ valve using a press.

BACK

21. With your finger check the inner wall of the valve housing where the seal ring slides. If there is a step in the wall, the housing is worn. Replace it.

    NOTE: There may be sliding marks from the seal ring on the wall of the valve housing. Replace the valve housing only if the wall is stepped.

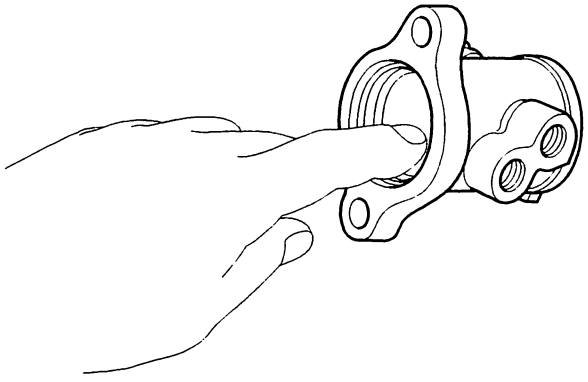

22. Check for wear, burrs and other damage to the edges of the grooves in the sleeve.

    NOTE: The pinion shaft and sleeve are a precision matched set. If either the pinion shaft or sleeve must be replaced, replace both parts as a set.

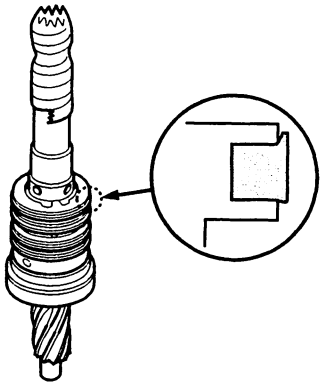

23. Remove the snap ring (A) and sleeve (B) from the pinion shaft.

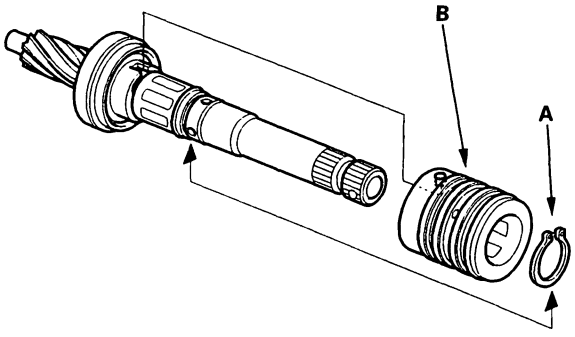

24. Using a cutter or an equivalent tool, cut and remove the four seal rings from the sleeve. Be careful not to damage the edges of the sleeve grooves and outer surface when removing the seal rings.

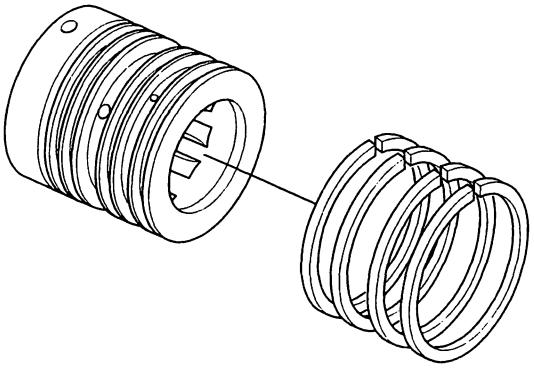

(cont'd)

Steering Gearbox Overhaul (cont'd)

25. Using a cutter or an equivalent tool, cut the valve seal ring (A) and O-ring (B) at the cutting groove position (C) in the pinion shaft. Remove the valve seal ring and O-ring. Be careful not to damage the edges of the pinion shaft groove and outer surface when removing the valve seal ring and O-ring.

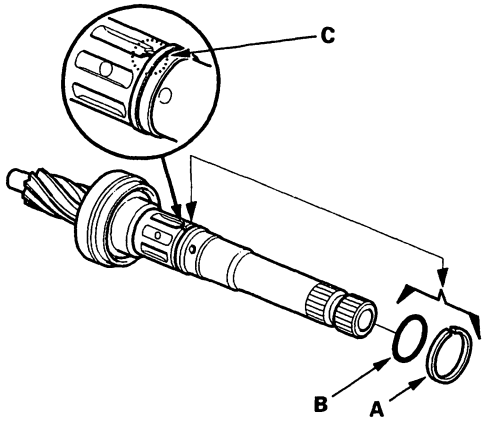

26. Remove the valve oil seal (A) and wave washer (B) from the pinion shaft.

    Note these items during disassembly:
    - Inspect the ball bearing (C) by rotating the outer race slowly. If there is any excessive play or wear, replace the pinion shaft and sleeve as an assembly.
    - The pinion shaft and sleeve are a precise fit; do not intermix old and new pinion shafts and sleeves.

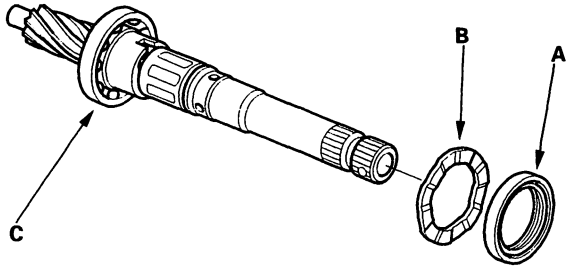

27. Press the valve oil seal (A) and bushing (B) out of the valve housing using a hydraulic press and special tool.

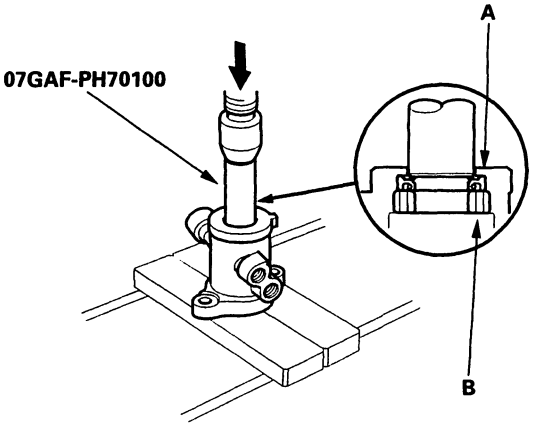

28. Clean the disassembled parts with solvent, and dry them with compressed air. Do not dip rubber parts in the solvent.

BACK

Reassembly

29. Apply vinyl tape (A) to the stepped portion of the pinion shaft, and coat the surface of the vinyl tape with the power steering fluid.

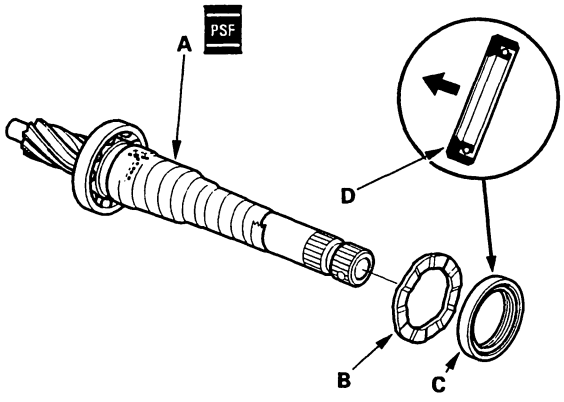

30. Install the wave washer (B).

31. Coat the inside surface of the new valve oil seal (C) with power steering fluid, and install the seal with its grooved side facing opposite the bearing, then slide it over the pinion shaft, being careful not to damage its sealing lip (D).

32. Apply vinyl tape (A) to the splines and stepped portion of the shaft, and coat the surface of the vinyl tape with the power steering fluid.

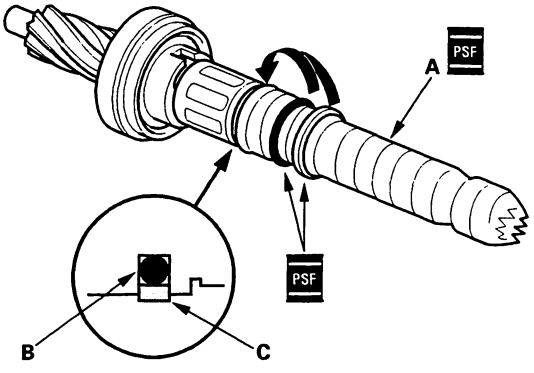

33. Fit the new O-ring (B) in the groove of the pinion shaft. Then slide the new valve seal ring (C) over the shaft and in the groove on the pinion shaft.

34. Remove the tape, and apply power steering fluid to the surface of the valve seal ring (A).

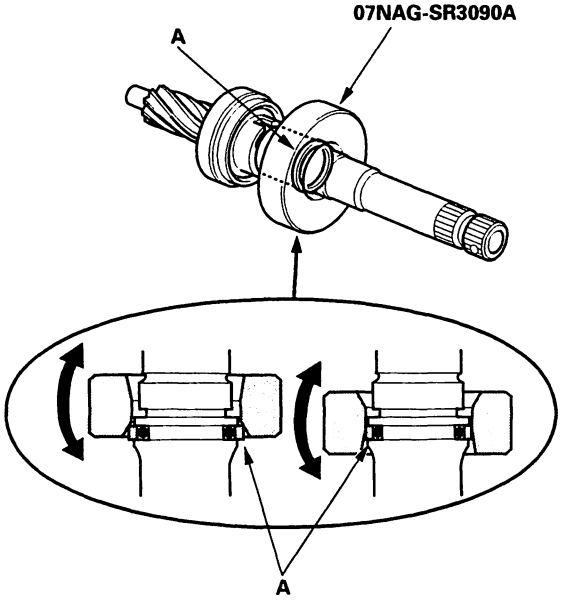

35. Apply power steering fluid to the inside of the special tool. Set the larger diameter end of the special tool over the valve seal ring, and move the special tool up and down several times to make the valve seal ring fit in the pinion shaft groove.

36. Remove the special tool, turn it over, slide the smaller diameter end over the valve seal ring. Move it up and down several times to make the valve seal ring fit snugly in the pinion shaft groove.

(cont'd)

Steering Gearbox Overhaul (cont'd)

37. Apply power steering fluid to the surface of the special tool. Slip 2 new seal rings (A) over the special tool from the smaller diameter end, and expand them. Install only 2 rings at a time from each end of the pinion shaft sleeve (B).

    Note these items when installing the seal ring:
    - Do not over-expand the seal ring. Install the resin seal rings with care so as not to damage them. After installation, be sure to contract the seal rings using the special tool (sizing tool).
    - There are two types of sleeve seal rings: black and brown. Do not mix the different types of rings as they are not compatible.

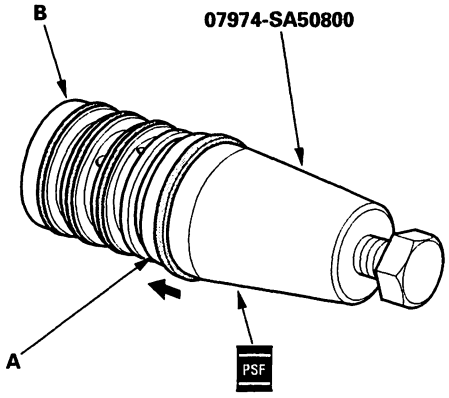

38. Align the special tool with each groove in the sleeve, and slide a sleeve seal ring into each groove. After installation, compress the seal rings with your fingers temporarily.

39. Apply power steering fluid to the seal rings on the sleeve, and to the entire inside surface of the special tool, then slowly insert the sleeve into the special tool.

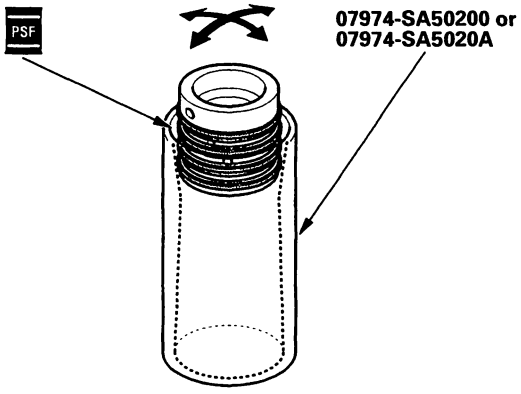

40. Move the sleeve back and forth several times to make the seal rings snugly fit in the sleeve. Be sure that the seal rings are not twisted.

41. Apply power steering fluid to the surface of the pinion shaft (A). Slide the sleeve (B) onto the pinion shaft by aligning the locating pin (C) on the inside of the sleeve with the cutout (D) in the shaft. Then install the new snap ring (E) securely in the pinion shaft groove.

    Note these items during reassembly:
    - Be careful not to damage the valve seal ring when inserting the sleeve.
    - Install the snap ring with its radiused side toward the sleeve.

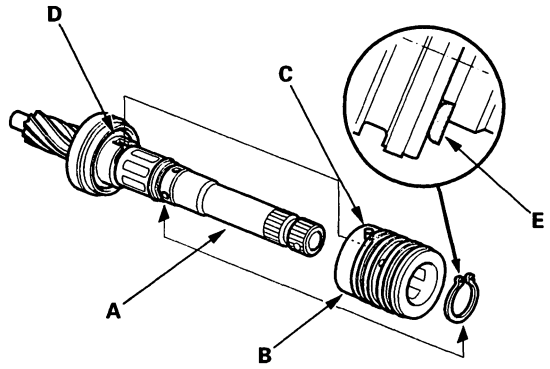

42. Apply power steering fluid to the seal ring lip of the new valve oil seal (A), then install the seal in the valve housing (B) using a hydraulic press and special tools. Install the seal with its grooved side facing the tool.

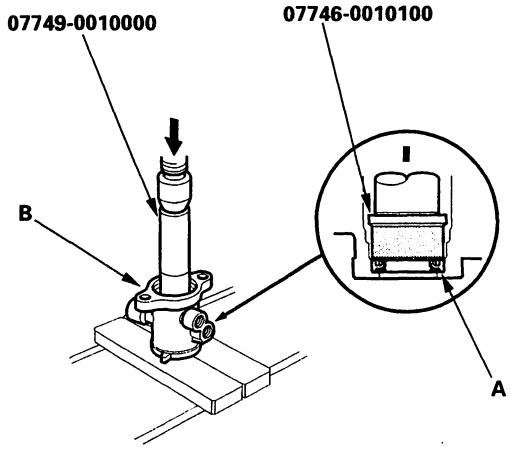

BACK

43. Press the bushing (A) into the valve housing with a hydraulic press and special tool.

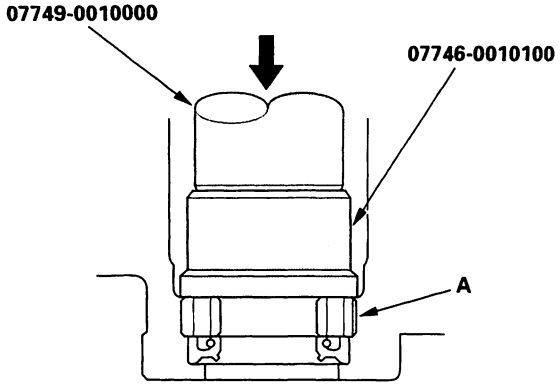

44. Apply vinyl tape (A) to the pinion shaft, then coat the vinyl tape with power steering fluid.

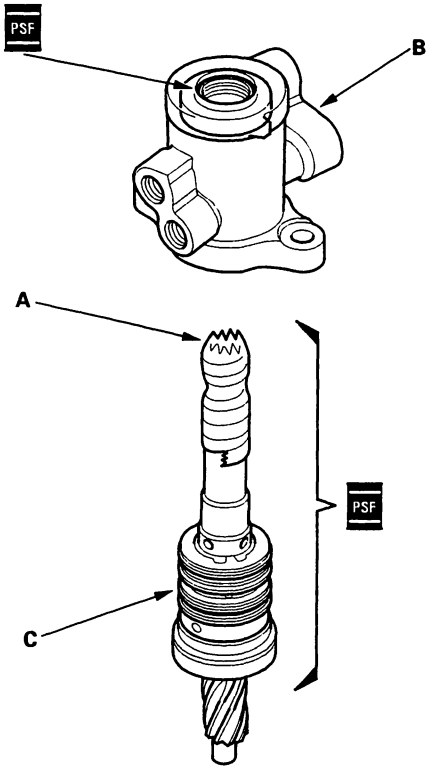

45. Insert the pinion shaft into the valve housing (B). Be careful not to damage the valve seal rings (C).

46. Remove the vinyl tape from the pinion shaft, then remove any residue from the tape adhesive.

47. Press the pinion shaft/sleeve into the valve housing with a hydraulic press. Check that the pinion shaft/ sleeve turns smoothly by hand after installing it.

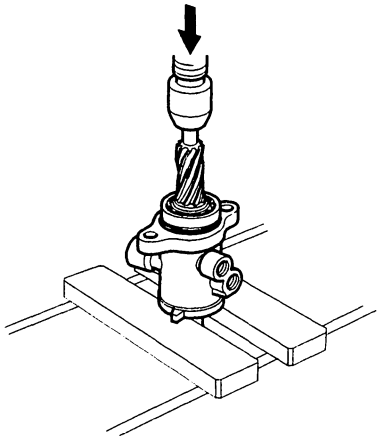

48. Coat the special tool with power steering fluid, then slide it onto the rack, big end first.

49. Position the new O-ring (A) and new piston seal ring (B) on the special tool, then slide them down toward the big end of the tool.

    Note these items during reassembly:
    - Do not over expand the resin seal rings. Install the resin seal rings with care so as not to damage them. After installation, be sure to contract the seal ring using the special tool (sizing tool).
    - Replace piston's O-ring and seal ring as a set.

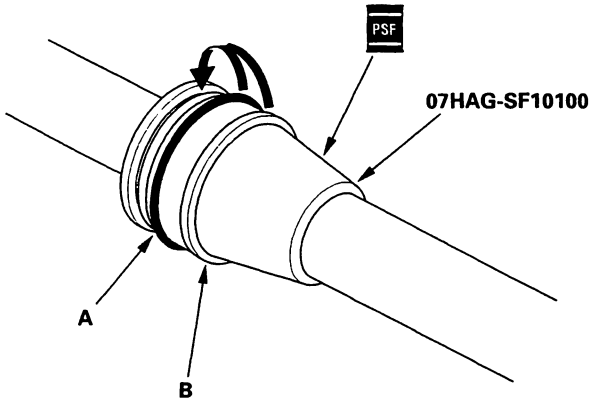

50. Pull the O-ring off into the piston groove, then pull the piston seal ring off into the piston groove on top of the O-ring.

(cont'd)

Steering Gearbox Overhaul (cont'd)

51. Coat the piston seal ring (A) and the inside of the special tool with power steering fluid, then carefully slide the tool onto the rack and over the piston seal ring.

52. Move the special tool back and forth several times to make the piston seal ring fit snugly in the piston.

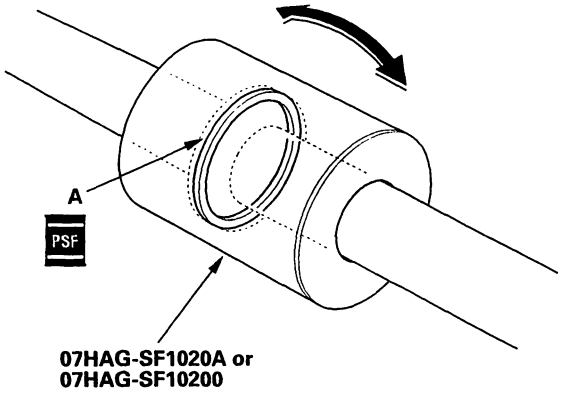

53. Wrap vinyl tape (A) around the rack teeth and rack end edges, then coat the surface of the tape with power steering fluid. Make sure that the vinyl tape is wrapped carefully so there is no stepped portion.

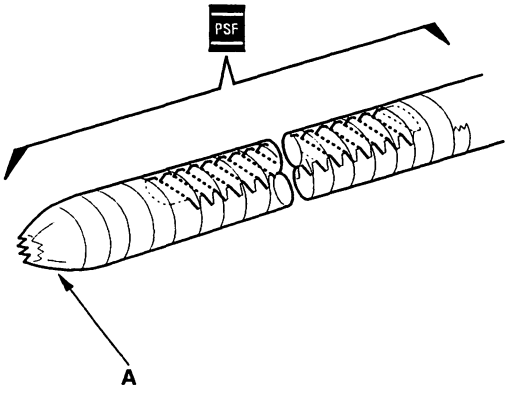

54. Coat the inside surface of the new cylinder end seal (A) with power steering fluid, then install it onto the steering rack with its grooved side toward the piston. When installing the cylinder end seal, be careful not damage the lip of the seal with the edges or teeth of the steering rack.

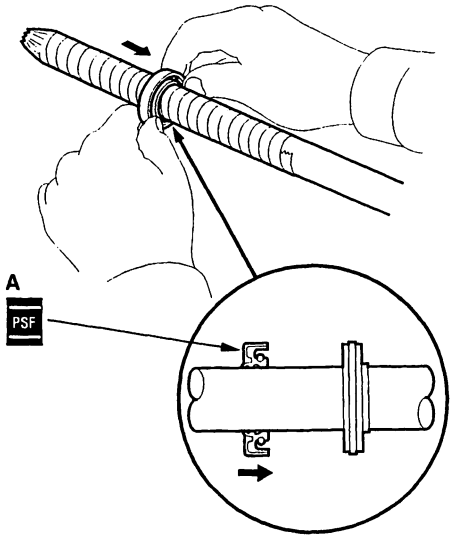

55. Remove the vinyl tape from the steering rack, then remove any adhesive residue.

56. Install the new backup ring (A) on the steering rack, then place the cylinder end seal (B) against the piston.

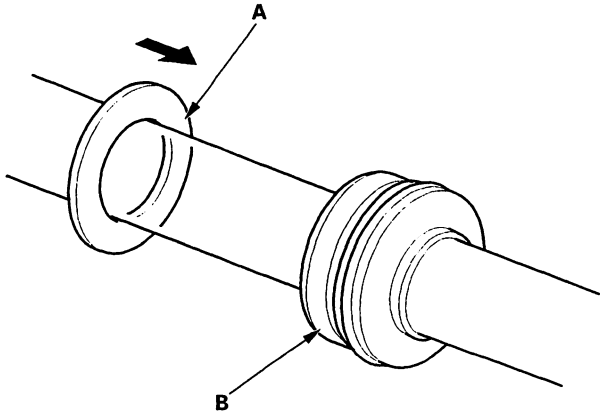

BACK

57. Grease the steering rack teeth, then insert the steering rack into the gear box housing. Be careful not to damage to inner surface of the cylinder wall with the rack edges.

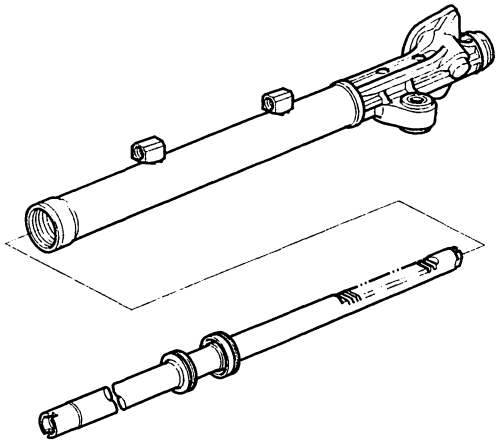

58. Insert an appropriate size deep socket wrench (A) onto the steering rack as shown.

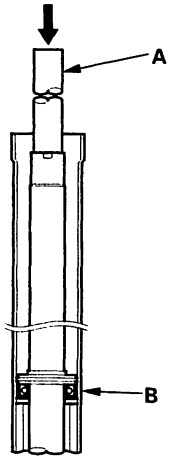

59. Install the cylinder end seal (B) into the bottom of the cylinder by pressing on the tool with a press. Do not push on the tool with excessive force as it may damage the cylinder end seal.

60. Remove the tool, and center the steering rack.

61. Wrap vinyl tape around the rack end edges, and coat the surface of the tape with the power steering fluid. Make sure that the vinyl tape is wrapped carefully so there is no stepped portion.

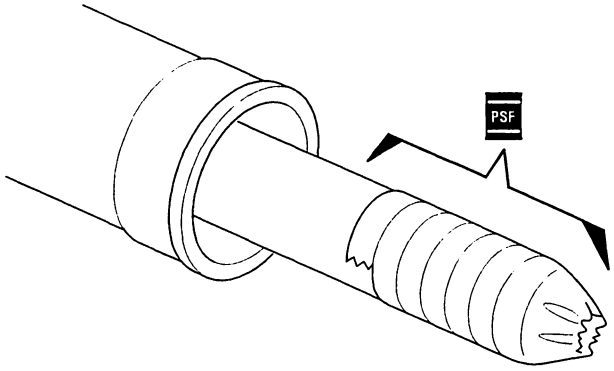

62. Coat the inside surface of the new cylinder end seal with power steering fluid, then install the seal onto the steering rack with its grooved side toward the piston.

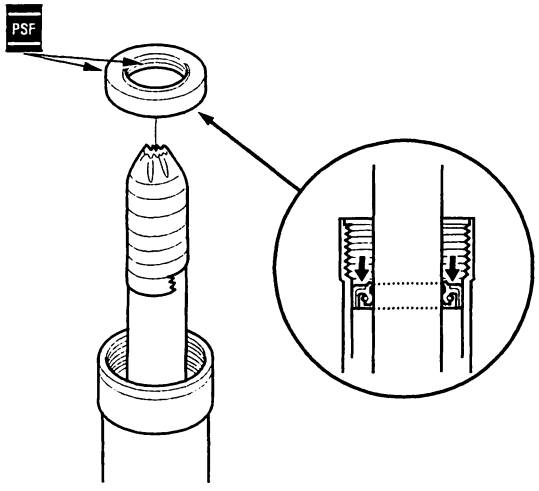

63. Push in the cylinder end seal with your finger.Be careful not to damage the face of the seal with the threads and burrs at the staked position of the cylinder housing.

64. Remove the vinyl tape from the steering rack, then remove any adhesive residue.

(cont'd)

Steering Gearbox Overhaul (cont'd)

65. Attach the yoke of a universal puller (A) to the steering gearbox mounts with bolts, then clamp the yoke in a vise with soft jaws. Do not clamp the cylinder housing or gearbox housing in the vise.

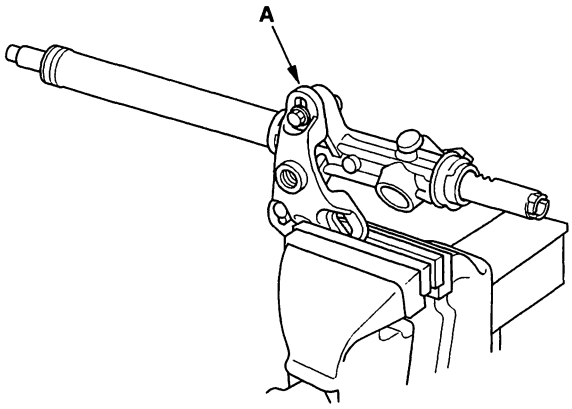

66. Coat the inside surface of the cylinder end (A) with power steering fluid, then install the cylinder end by screwing it into the cylinder (B).

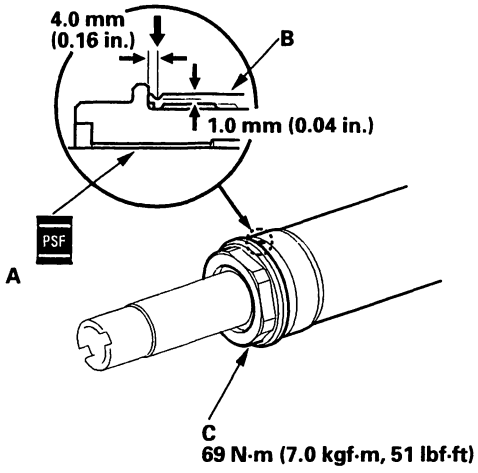

67. Remove the yoke from the gearbox, then, after tightening the cylinder end (C), stake the point of the cylinder shown (opposite from where the stake was removed during disassembly).

68. Coat the new O-ring (A) with grease, and carefully fit it on the valve housing.

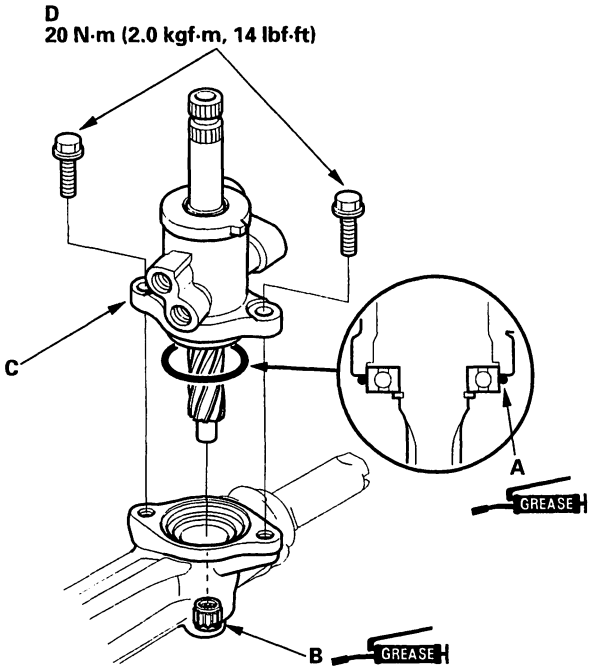

69. Apply grease to the needle bearing (B) in the gearbox housing, then install the valve body unit (C) by engaging the gears. Note the valve body unit installation position (direction of the line connections).

70. Tighten the flange bolts (D) to the specified torque.

BACK

71. Install the cylinder lines.

Note these items during reassembly:

- Thoroughly clean the joints of the cylinder lines. The joints must be free of foreign material.
- Install the cylinder lines by tightening the flare nuts by hand first, then tighten the flare nuts to the specified torque.

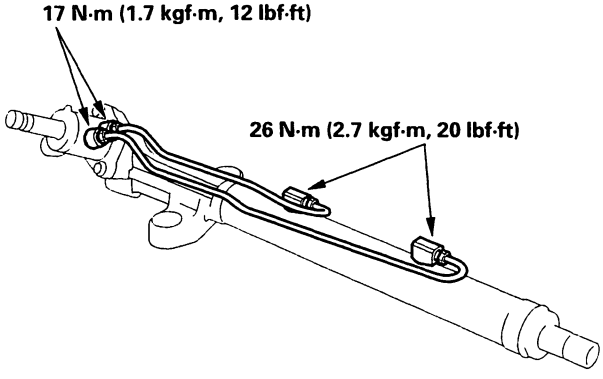

72. Grease the sliding surface of the rack guide (A), and install it onto the gearbox housing.

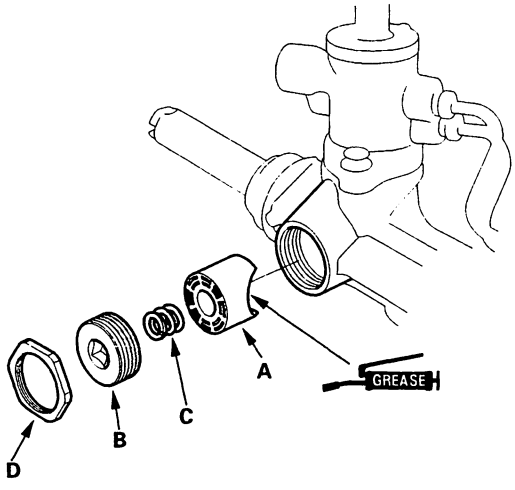

73. Apply sealant all around the threads on the rack guide screw (B), then install the spring (C), rack guide screw and locknut (D).

74. Adjust the rack guide screw (see page 17-29). After adjusting, check that the rack moves smoothly by sliding it right and left.

75. Install the stop washer (A), and screw each rack end (B) into the rack while holding the lock washer (C) so its tabs (D) are in the slots (E) in the end of the rack.

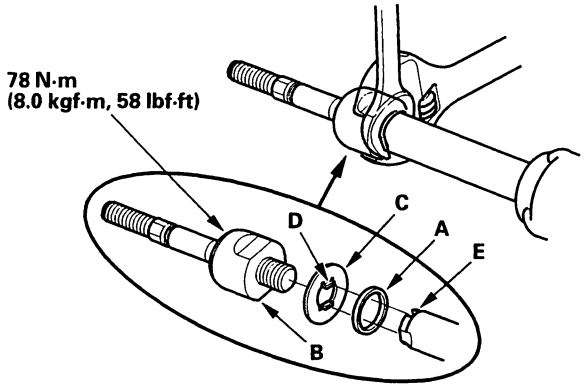

76. Hold the flat surface sections of the right side steering rack with a wrench, and tighten the both rack ends. Be careful not to damage the rack surface with the wrench.

77. Bend the lock washer back against the flat spots on the rack end joint housing.

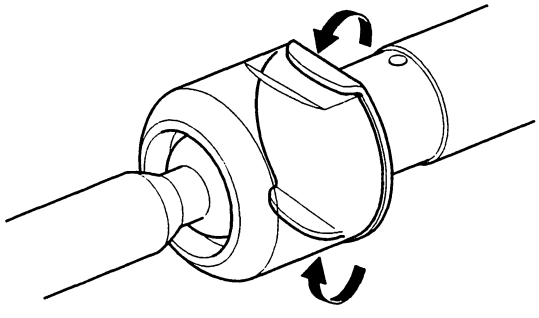

(cont'd)

Steering Gearbox Overhaul (cont'd)

78. Apply multipurpose grease (A) to the circumference of the rack end joint housing.

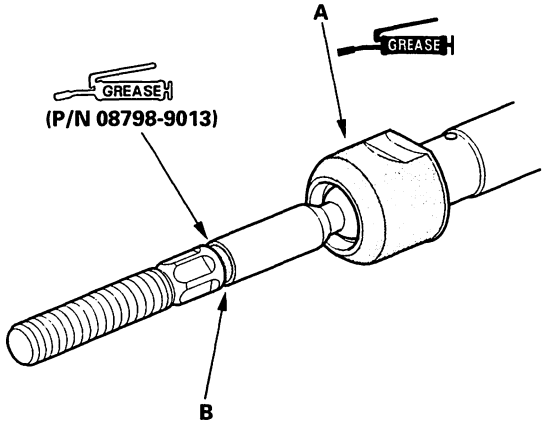

79. Apply a light coat of silicone grease to the boot grooves (B) on the rack ends.

80. Center the steering rack within its stroke. Install the boots on the rack ends with the tie-rod clips. After installing the boots, wipe the grease off the threaded section (A) of the rack end.

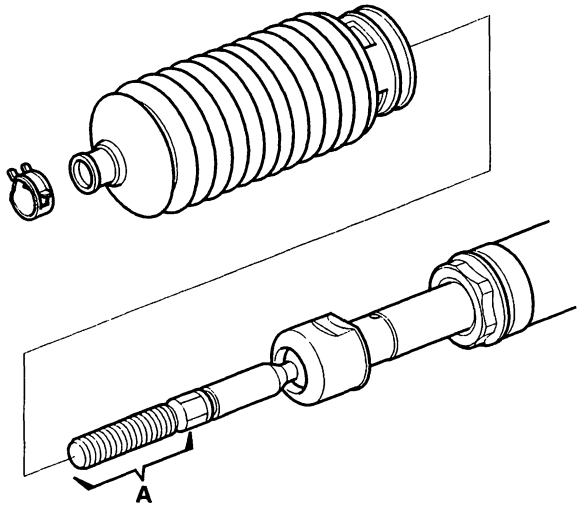

81. Install the new boot bands by aligning the tabs (A) with holes (B) of the band.

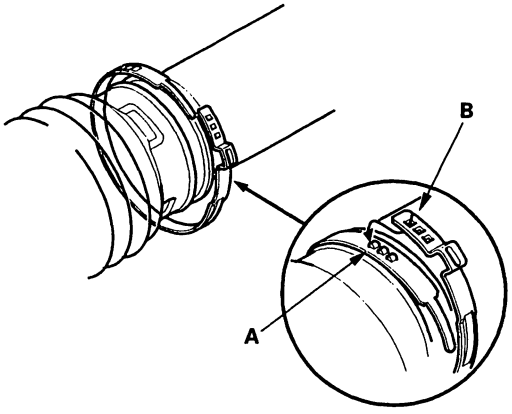

82. Close the ear portion (A) of the band with commercially available pincers Oetiker 1098 or equivalent (B).

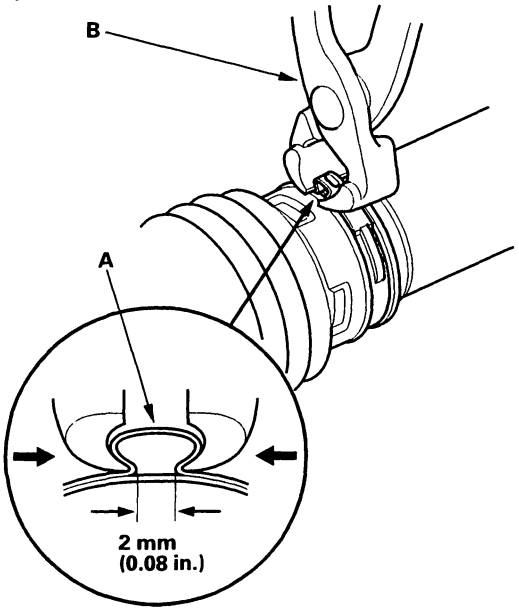

83. Slide the rack right and left to be certain that the boots are not deformed or twisted.

BACK

Steering Gearbox Installation

1. Before installing the gearbox, slide the rack all the way to right.

2. Pass the right side of the steering gearbox (A) above and through the right side of the rear beam. Be careful not to bend or damage the two power steering lines and cylinder lines when installing the gearbox.

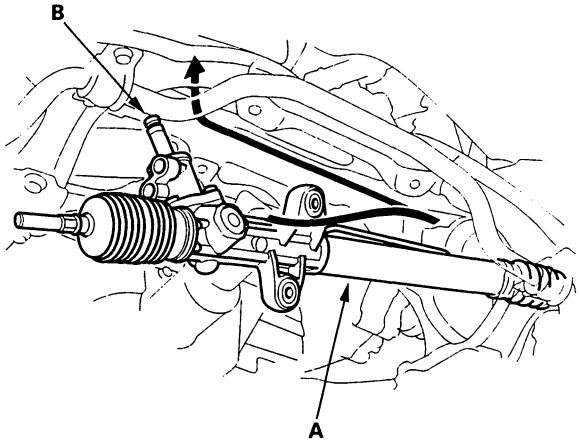

3. Raise the left side of the steering gearbox above and through the left side of the rear beam. Then insert the pinion shaft (B) up through the bulkhead.

4. Install the pinion shaft grommet (A). Align the slot (B) in the pinion shaft grommet with the lug portion on the valve housing.

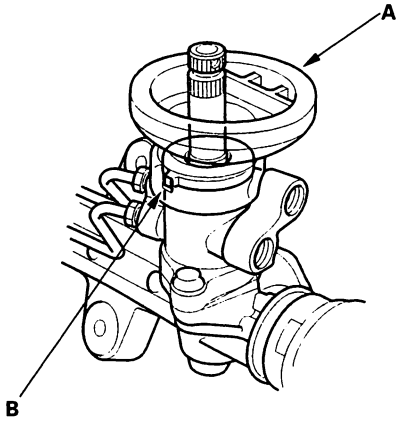

5. Install the mounting cushion (A) on the steering gearbox.

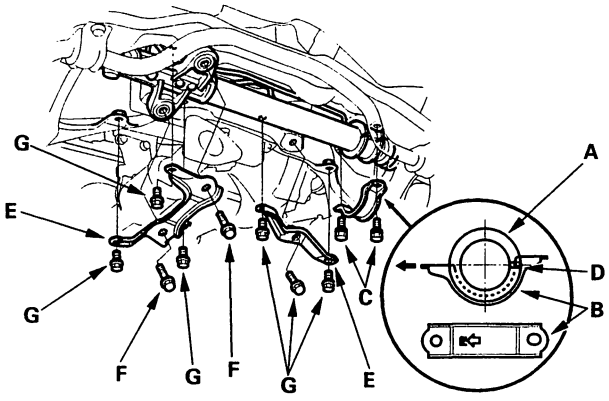

C, G: 38 N·m (3.9 kgf·m, 28 lbf·ft)
F: 43 N·m (4.4 kgf·m, 32 lbf·ft)

6. Install the mounting brackets (B) over the mounting cushion, then install the two gearbox mounting bolts (C). Position the split portion (D) of the mounting cushion as shown.

7. Install the stiffener plates (E) with the two gearbox mounting bolts (F) and six stiffener plate attaching bolts (G). Install the bolts loosely first, then tighten them securely.

8. Center the steering rack within its stroke.

(cont'd)

Steering Gearbox Installation (cont'd)

9. Install the steering joint (A), and reconnect the steering shaft (B) and pinion shaft (C). Make sure the steering joint is connected as follows:

   - Insert the upper end of the steering joint onto the steering shaft (line up the bolt hole (D) with the flat portion (E) on the shaft).
   - Slip the lower end of the steering joint onto the pinion shaft (line up the bolt hole (F) with the groove around the shaft), and loosely install the lower joint bolt. Be sure that the lower joint bolt is securely in the groove in the pinion shaft.
   - Pull on the steering joint to make sure that the steering joint is fully seated. Then install the upper joint bolt and tighten it.

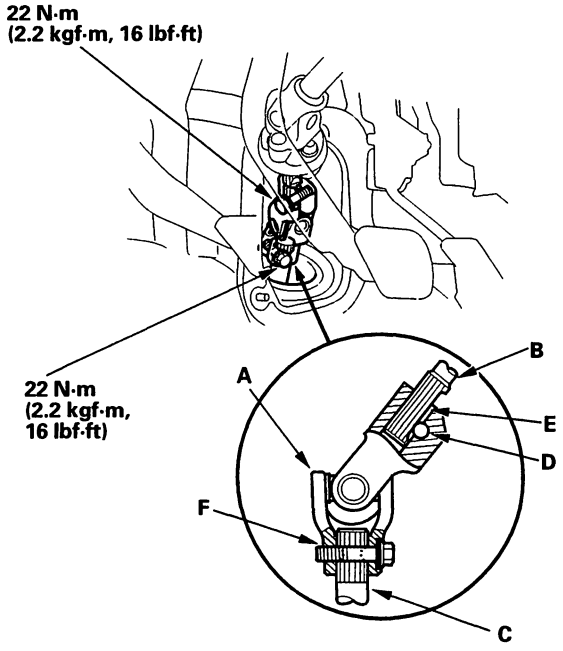

10. Center the cable reel by first rotating it clockwise until it stops. Then rotate it counterclockwise (about 2 turns) until the arrow mark on the label points straight up.
    Reinstall the steering wheel (see page 17-24).

11. Install the steering joint cover (A) with the clamps (B) and clips (C).

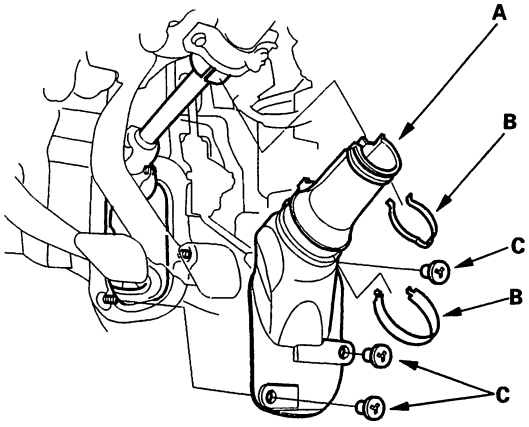

12. Connect the return line (A) and feed line (B) to the valve body unit (C). After connecting the fluid lines, make sure that there is no interference between the lines and other parts.

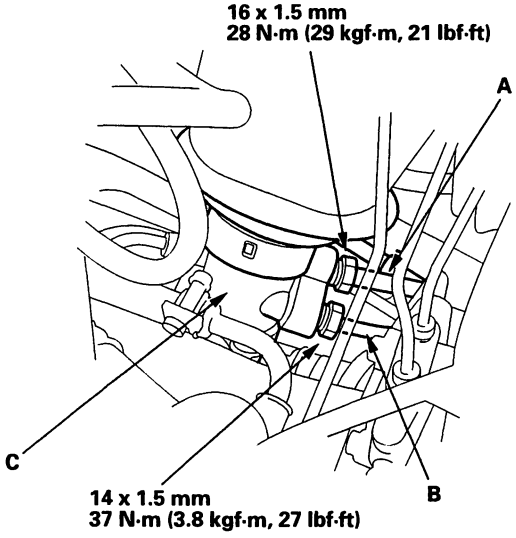

BACK

13. Thread the right and left tie-rod ends (A) and locknut (B) onto the rack an equal number of turns.

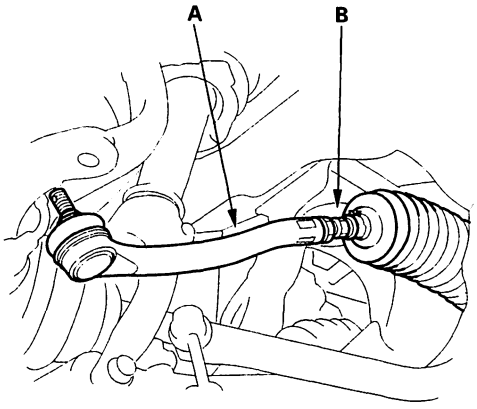

14. Wipe off any grease contamination from the ball joint tapered section and threads then reconnect tie-rod ends (A) to the steering knuckles. Install the 10 mm nut (B) and tighten it.

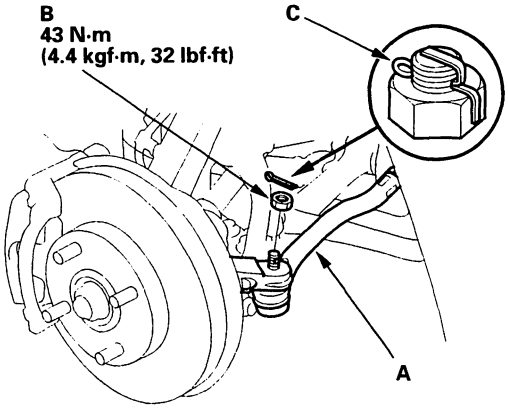

15. Install the new cotter pin (C) and bend it as shown.

16. Connect the M/T shift linkage (see step 26 on page 13-15) or A/T shift cable (see step 13 on page 14-120) from the transmission.

17. Install the three way catalytic converter (see page 9-5).

18. Install the front wheels.

19. Fill the system with power steering fluid, and bleed air from the system (see page 17-14).

20. After installation, perform the following checks.

- Start the engine, allow it to idle, and turn the steering wheel from lock-to-lock several times to warm up the fluid. Check the gearbox for leaks (see page 17-11).
- Adjust the front toe (see page 18-5).
- Check the steering wheel spoke angle. Adjust by turning the right and left tie-rods equally, if necessary.

Tie-rod Ball Joint Boot Replacement

Special Tools Required
Front hub dis/assembly tool, 07965-SA50500

1. Remove the boot from the tie-rod end, and wipe the old grease off the ball pin.

2. Pack the lower area of the ball pin (A) with fresh multipurpose grease.

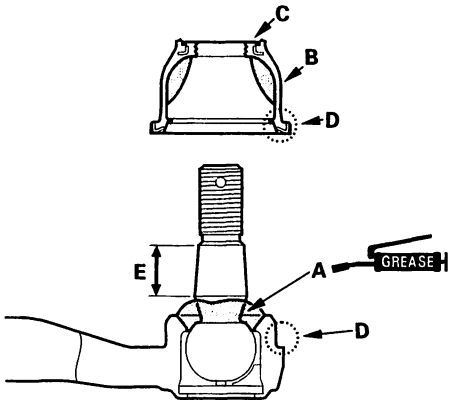

3. Pack the interior of the new boot (B) and lip (C) with fresh multipurpose grease.

   Note these items when installing new grease:

   - Keep grease off the boot installation section (D) and the tapered section (E) if the ball pin.
   - Do not allow dust, dirt, or other foreign materials to enter the boot.

4. Install the new boot (A) using the special tool. The boot must not have a gap at the boot installation sections (B). After installing the boot, check the ball pin tapered section for grease contamination, and wipe it if necessary.

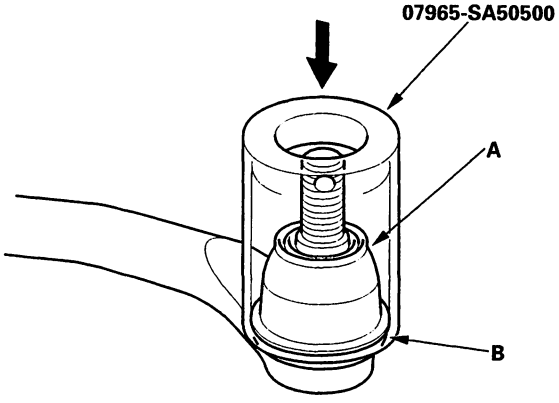

BACK

Suspension

Front and Rear Suspension

Special Tools 18-2
Component Location Index 18-3
Wheel Alignment 18-5
Wheel Bearing End Play Inspection 18-8
Wheel Runout Inspection 18-8
Ball Joint Removal 18-9

Front Suspension

Knuckle/Hub Replacement 18-10
Ball Joint Boot Replacement 18-15
Upper Arm Replacement 18-16
Lower Arm Replacement 18-17
Damper/Spring Replacement 18-18

Rear Suspension

Hub/Bearing Replacement-Disc Brake 18-22
Hub/Bearing Replacement-Drum Brake 18-24
Knuckle Replacement 18-25
Upper Arm Replacement 18-27
Trailing Arm Replacement 18-28
Leading Arm Replacement 18-28
Lower Arm Replacement 18-29
Control Arm Replacement 18-29
Damper/Spring Replacement 18-30

Special Tools

Ref.No.	Tool Number	Description	Qty
①	07GAF-SE00100	Hub Dis/Assembly Tool	1
②	07GAG-SD40700	Ball Joint Boot Clip Guide	1
③	07MAC-SL00200	Ball Joint Remover, 28 mm	1
④	07965-SA00600	Bearing Driver Attachment	1
⑤	07749-0010000	Driver	1
⑥	07947-6340201	Attachment, 58 x 72 mm	1
⑦	07965-SD90100	Support Base	1

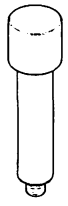

①

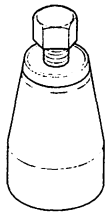

②

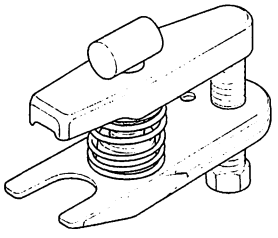

③

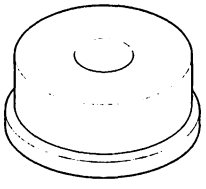

④, ⑥

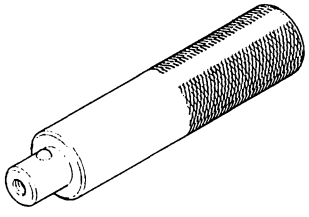

⑤

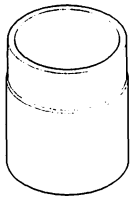

⑦

BACK

Component Location Index

Front Suspension

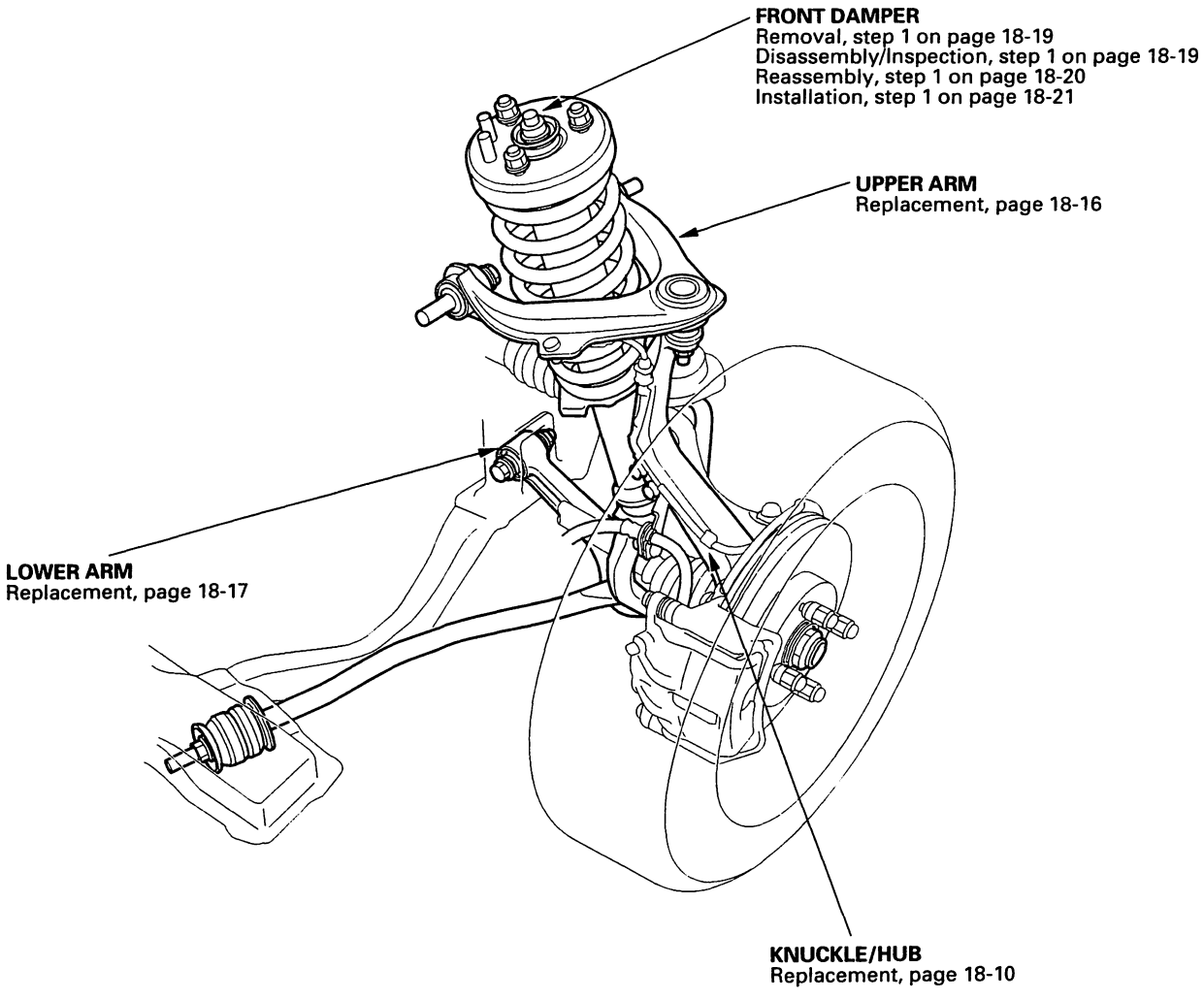

Component Location Index (cont'd)

Rear Suspension

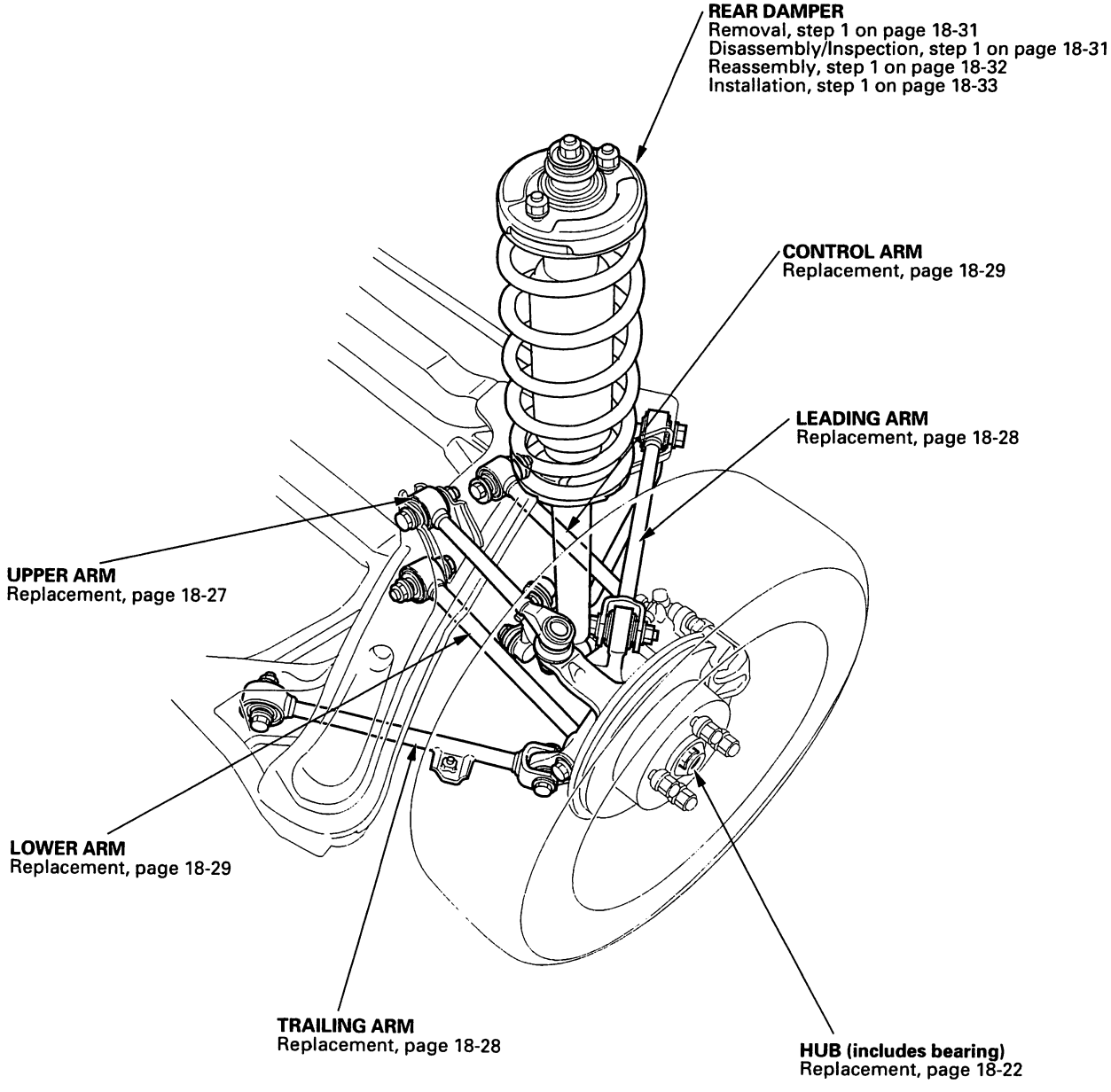

BACK

Wheel Alignment

Caster Inspection

For proper inspection/adjustment of the wheel alignment, check and adjust the following before checking the alignment:

- Check that the suspension is not modified.
- Check the tire size and tire pressure.
- Check the runout of the wheels and tires.
- Check the suspension ball joints. (Hold a wheel with your hands and move it up and down and right and left to check for wobbling).

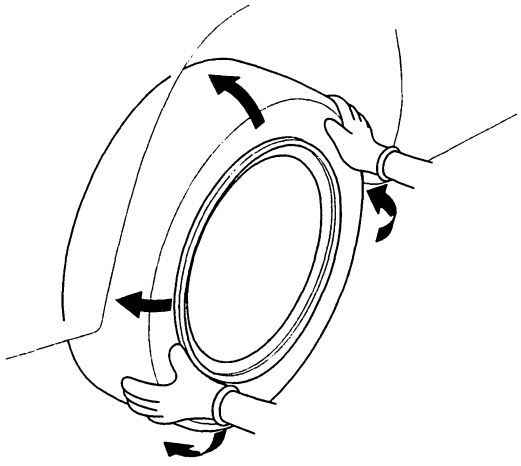

Use commercially-available computerized four wheel alignment equipment to measure wheel alignment (caster, camber, toe, and/or turning angle). Follow the equipment manufacturer's instructions.

1. Check the caster angle.

   Caster angle: 2°48′ ± 1°

2. If out of specification, record the caster reading, then adjust the caster.

Caster Adjustment

Caster angle can be adjusted by increasing/decreasing the number of the adjusting shims. Remove and install the radius rod each time the caster angle is adjusted.

1. Raise the front of the vehicle, and make sure it is securely supported.

2. Remove the self-locking nut (A) on the end of the radius rod (B).

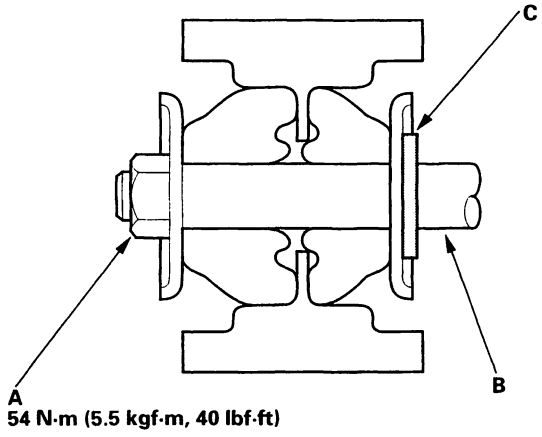

54 N·m (5.5 kgf·m, 40 lbf·ft)

3. Remove the flange bolts at the radius rod (B) on the lower arm, and remove the radius rod (see page 18-17).

4. Adjust the caster angle by increasing/decreasing the adjusting shims (C).

   Note these items during adjustment:

   - Do not use more than two adjusting shims.
   - One adjusting shim changes the caster angle by 35′ and the caster angle can be adjusted by 1°10′ maximum.
   - One adjusting shim is 3.2 mm (0.13 in.) in thickness.

5. After the adjustment, install the radius rod onto the lower arm, and tighten the flange bolts (see page 18-17).

6. Tighten the new self-locking nut to the specified torque.

(cont'd)

Wheel Alignment (cont'd)

Camber Inspection

Use commercially-available computerized four wheel alignment equipment to measure wheel alignment (caster, camber, toe, and/or turning angle). Follow the equipment manufacturer's instructions.

1. Check the camber angle.

   Camber angle:
   Front: 0°00′ ± 1°
   Rear: −0°30′ ± 1°

2. If out of specification, check for bent or damaged suspension components.

Front Toe Inspection/Adjustment

Use commercially-available computerized 4 wheel alignment equipment to measure wheel alignment (caster, camber, toe, and/or turning angle). Follow the equipment manufacturer's instructions.

1. Check the tire pressure.

2. Center the steering wheel spokes.

3. Check the toe with the wheels pointed straight ahead.

   Front toe: 0 ± 2 mm (0 ± 1/16 in.)

   - If adjustment is required, go on to step 4.
   - If no adjustment is required, remove alignment equipment.

4. Loosen the tie-rod locknuts (A), and turn both tie-rods (B) in the same direction until the front wheels are pointing straight ahead.

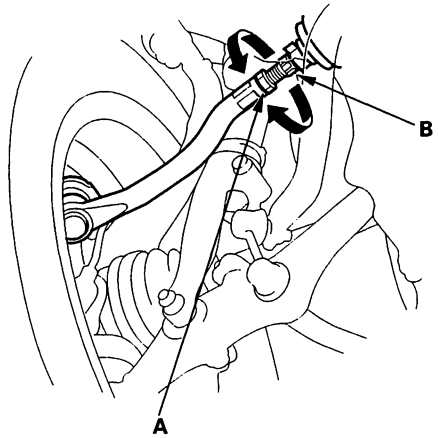

14 x 1.5 mm
44 N·m (4.5 kgf·m, 33 lbf·ft)

5. Turn both tie-rods equally until the toe reading on the turning radius gauge is correct.

6. After adjusting, tighten the tie-rod locknuts. Reposition the tie-rod boot if it is twisted or displaced.

BACK

Rear Toe Inspection/Adjustment

Use commercially-available computerized four wheel alignment equipment to measure wheel alignment (caster, camber, toe, and/or turning angle). Follow the equipment manufacturer's instructions.

1. Release the parking brake to avoid an incorrect measurement.

2. Check the toe.

   Rear toe-in: 2±2 mm (1/16±1/16 in.)

   - If adjustment is required, go to step 3.
   - If no adjustment is required, remove alignment equipment.

3. Hold the adjusting bolt (A) on the rear control arm, and loosen the self-locking nut (B).

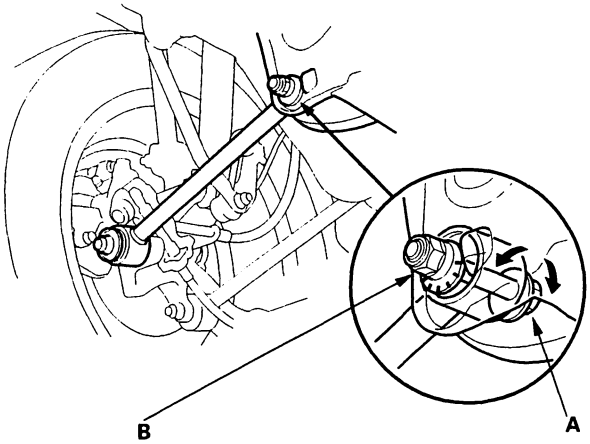

B
10 x 1.25mm
54 N·m (5.5 kgf·m, 40 lbf·ft)

4. Adjust the rear toe by turning the adjusting bolt until the toe is correct.

5. Install the self-locking nut, and tighten it while holding the adjusting bolt.

Turning Angle Inspection

Use commercially-available computerized four wheel alignment equipment to measure wheel alignment (caster, camber, toe, and/or turning angle). Follow the equipment manufacturer's instructions.

1. Turn the wheel right and left while applying the brake, and measure the turning angle of both wheels.

   Turning angle:
   Inward wheel: 38°32′ ± 1°
   Outward wheel: 31°03′ (Reference)

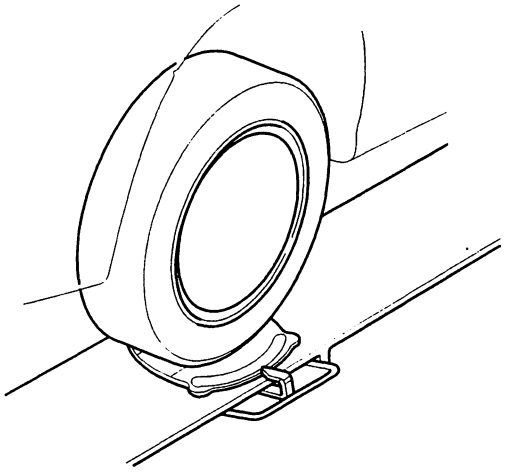

2. If the turning angle is not within the specifications, check for bent or damaged suspension components.

Wheel Bearing End Play Inspection

1. Raise the vehicle, and make sure it is securely supported.

2. Remove the wheels, then reinstall the wheel nuts.

3. Attach the dial gauge. On the front, place the dial gauge against the hub flange. On the rear, place the dial gauge against the center of the hub cap.

   Front/Rear:
   Standard: 0 – 0.05 mm (0 – 0.002 in.)

   Front:

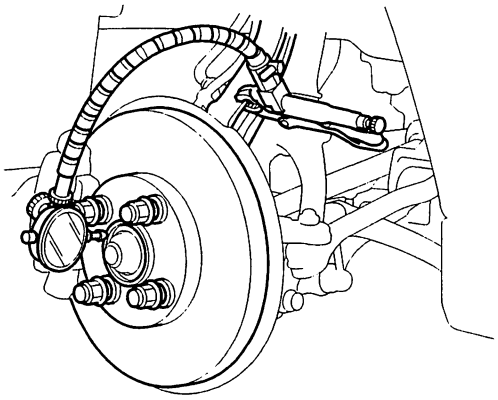

   Rear:

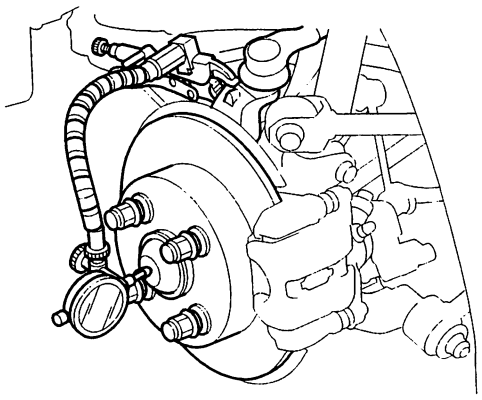

4. Measure the bearing end play moving the brake disc inward or outward.

5. If the bearing end play measurement is more than the standard, replace the wheel bearing.

Wheel Runout Inspection

1. Raise the vehicle, and make sure it is securely supported.

2. Check for bent or deformed wheels.

3. Set up the dial gauge as shown, and measure axial runout by turning the wheel.

   Front and Rear Wheel Axial Runout:
   Standard:
   Steel Wheel: 0 – 1.0 mm (0 – 0.04 in.)
   Aluminum Wheel: 0 – 0.7 mm (0 – 0.03 in.)
   Service Limit: 2.0 mm (0.08 in.)

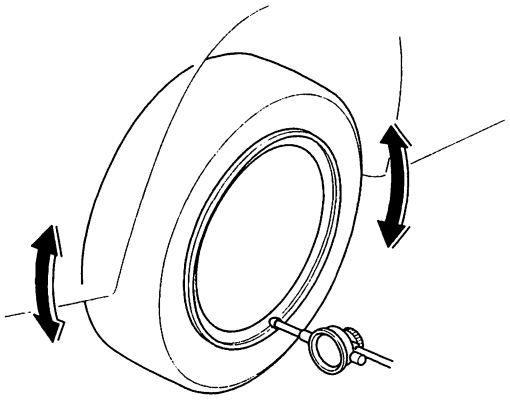

4. Readjust the dial gauge to the position shown, and measure radial runout.

   Front and Rear Wheel Radial Runout:
   Standard:
   Steel Wheel: 0 – 1.0 mm (0 – 0.04 in.)
   Aluminum Wheel: 0 – 0.7 mm (0 – 0.03 in.)
   Service Limit: 1.5 mm (0.06 in.)

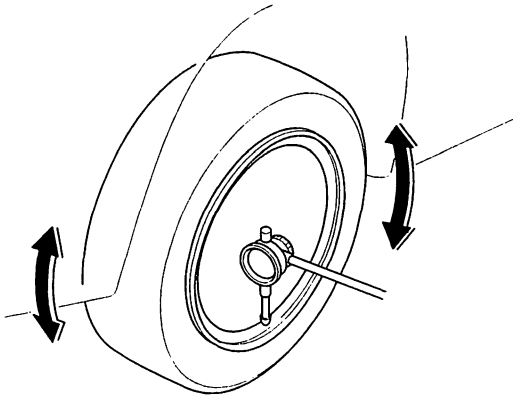

5. If the wheel runout is more than the service limit, replace the wheel.

BACK

Ball Joint Removal

Special Tools Required
Ball Joint Remover, 28 mm 07MAC-SL00200

1. Install a hex nut onto the threads of the ball joint. Make sure the nut is flush with the ball joint pin end to prevent damage to the threads end of the ball joint.

2. Apply grease (A) to the special tool on the areas shown. This will ease installation of the tool and prevent damage to the pressure bolt (B) threads.

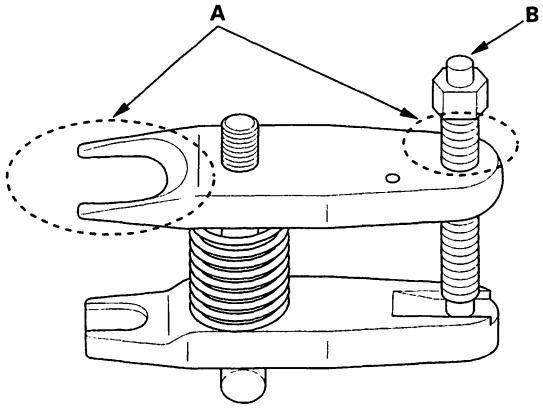

3. Install the special tool as shown. Insert the jaws carefully, making sure you do not damage the ball joint boot. Adjust the jaw spacing by turning the pressure bolt.

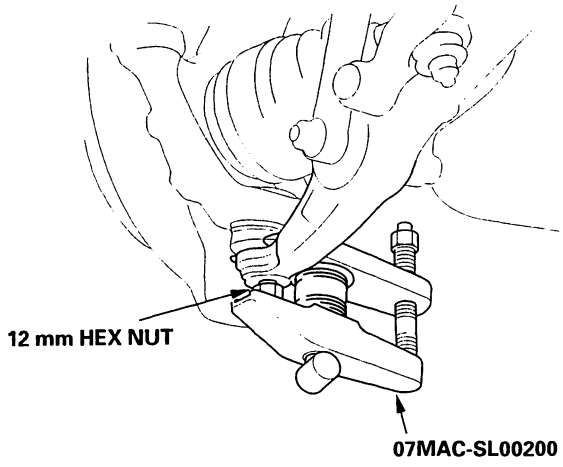

4. Once the special tool is in place, turn the adjusting bolt (A) as necessary to make the jaws parallel. Then hand-tighten the pressure bolt (B), and recheck the jaws to make sure they are still parallel.

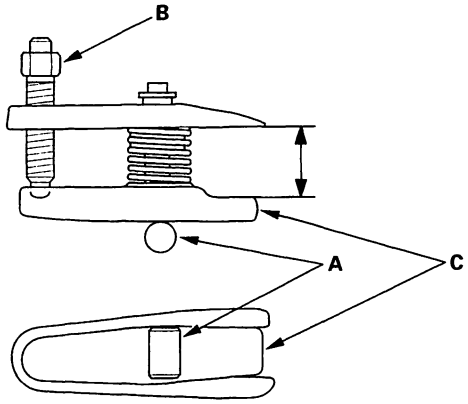

5. After making the adjustment to the adjusting bolt, make sure the head of the adjusting bolt is in this position (A) to allow the jaw (C) to pivot.

6. With a wrench, tighten the pressure bolt (B) until the ball joint pin pops loose from the steering/ suspension arm. If necessary, apply penetrating type lubricant to loosen the ball joint.

7. Remove the tool, then remove the nut from the end of the ball joint, and pull the ball joint out of the steering/suspension arm. Inspect the ball joint boot, and replace it if damaged.

Knuckle/Hub Replacement

Exploded View

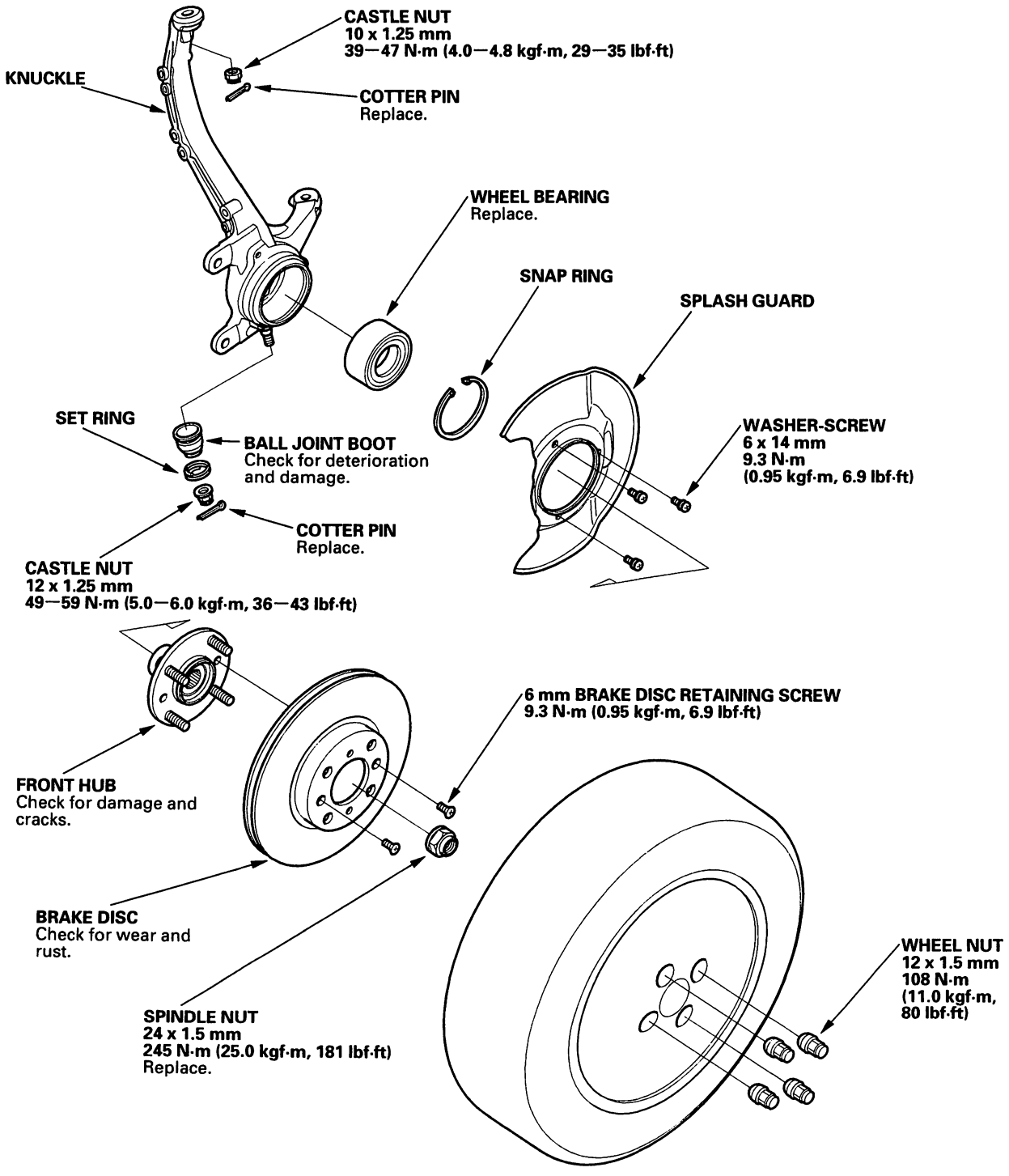

BACK

Special Tools Required
- Ball Joint Remover, 28 mm 07MAC-SL00200
- Hub Dis/Assembly Tool 07GAF-SE00100
- Attachment, 58 x 72 mm 07947-6340201
- Bearing Driver Attachment 07965-SA00600
- Driver 07749-0010000
- Support Base 07965-SD90100

1. Loosen the wheel nuts slightly.

2. Raise the front of the vehicle, and make sure it is securely supported.

3. Remove the wheel nuts and front wheel.

4. Raise the locking tab on the spindle nut (A), then remove the nut.

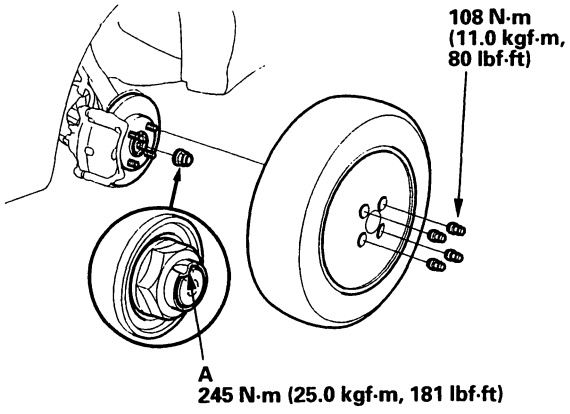

5. Remove the brake hose mounting bolts (A).

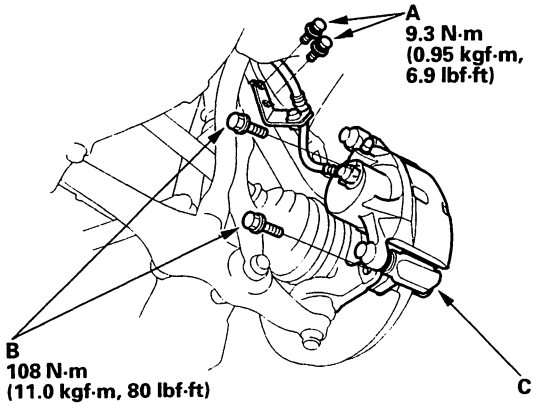

6. Remove the caliper mounting bolts (B), and hang the caliper assembly (C) to one side. To prevent damage to the caliper assembly or brake hose, use a short piece of wire to hang the caliper from the undercarriage.

7. Remove the wheel sensor (A) from the knuckle (B) (for vehicles with ABS). Do not disconnect the wheel sensor connector.

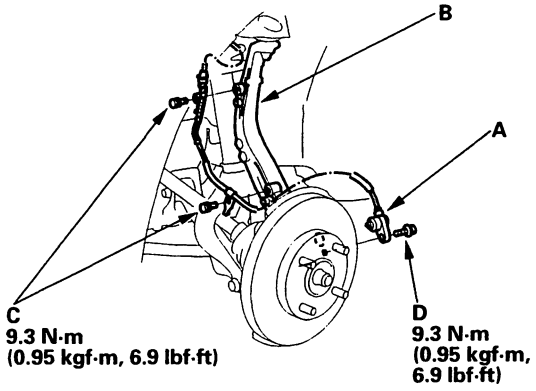

8. Remove the 6 mm brake disc retaining screws (A).

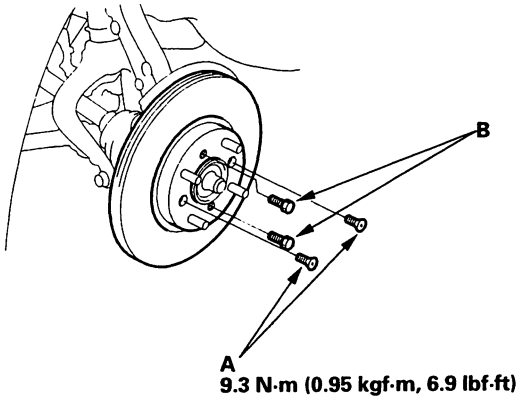

9. Screw two 8 x 1.25 mm bolts (B) into the disc to push it away from the hub. Turn each bolt two turns at a time to prevent cocking the disc excessively.

10. Remove the brake disc from the knuckle.

11. Check the front hub for damage and cracks.

(cont'd)

Knuckle/Hub Replacement (cont'd)

12. Remove the cotter pin (A) from the tie-rod end ball joint, then loosen the nut (B).

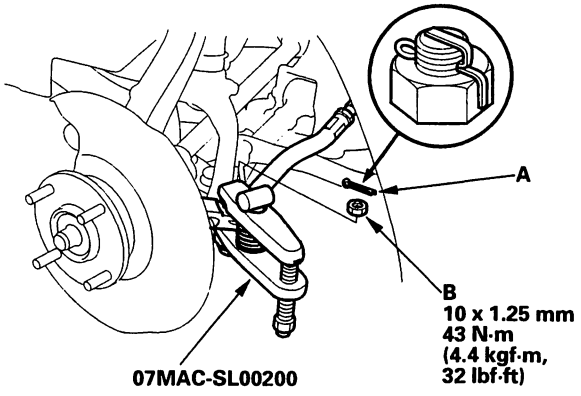

13. Remove the tie-rod ball joint from the knuckle using the special tool (see page 18-9).

14. Remove the cotter pin (A) from the lower arm ball joint castle nut (B), and remove the nut.

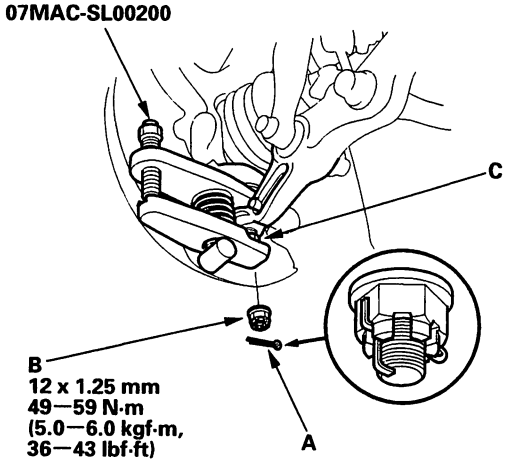

15. Remove the lower ball joint from the knuckle using the special tool (see page 18-9).

16. Remove the cotter pin (A) from the upper ball joint castle nut (B), and remove the nut.

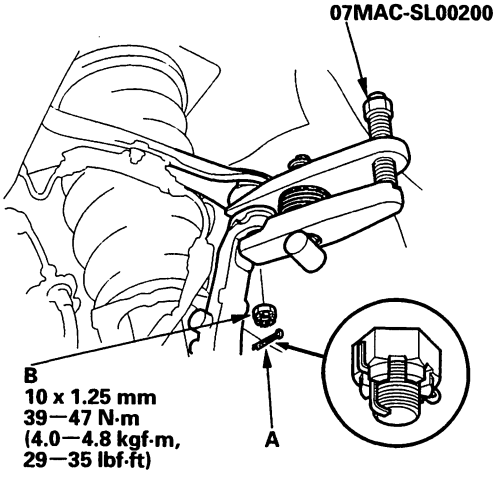

17. Remove the upper ball joint from the knuckle using the special tool (see page 18-9).

18. Pull the knuckle outward, and remove the driveshaft outboard joint (B) from the knuckle (A) by tapping the driveshaft end (C) with a plastic hammer, then remove the knuckle.

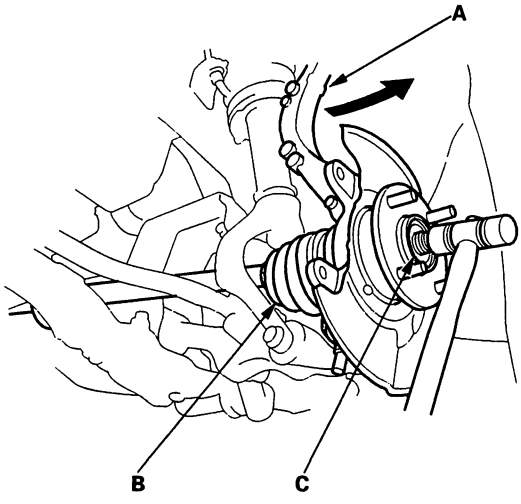

BACK

19. Separate the hub (A) from the knuckle (B) using the special tool, and a hydraulic press. Take care not to distort the splash guard. Hold onto the hub to keep it from falling when pressed clear.

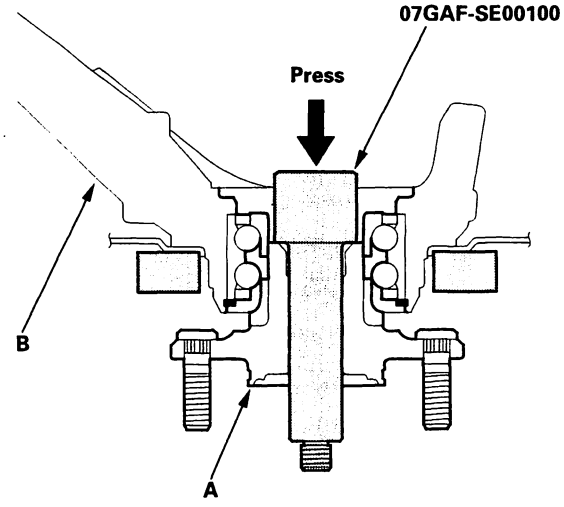

20. Remove the snap ring (A) and the splash guard (B) from the knuckle (C).

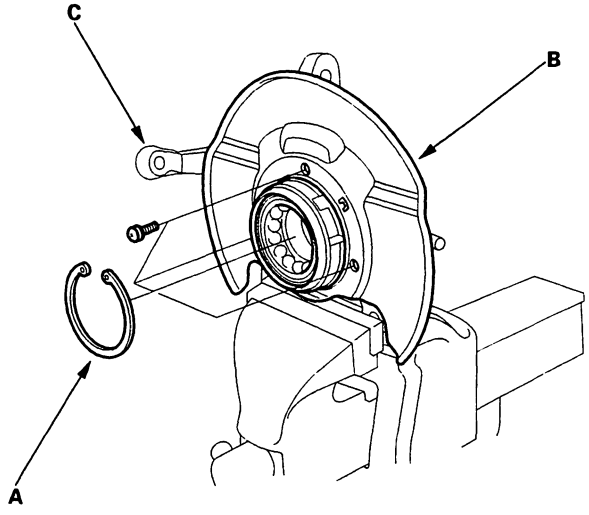

21. Press the wheel bearing (A) out of the knuckle (B) using the special tools and a press.

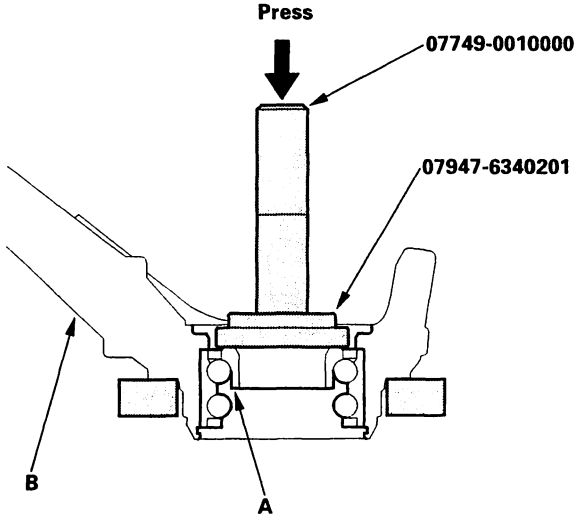

22. Press the wheel bearing inner race (A) from the hub (B) using the special tool, a commercially available bearing separator (C), and a press.

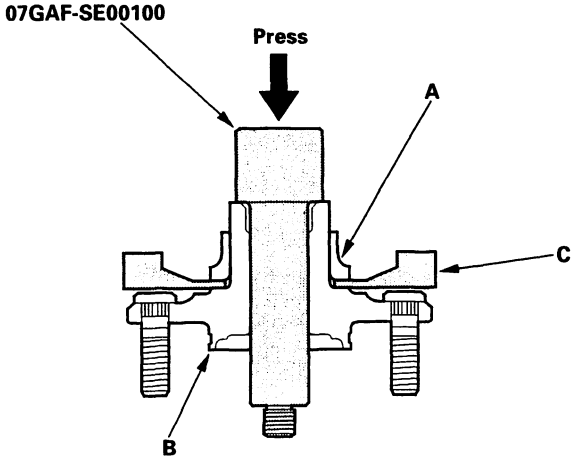

23. Wash the knuckle and hub thoroughly in high flash point solvent before reassembly.

(cont'd)

Knuckle/Hub Replacement (cont'd)

24. Press a new wheel bearing (A) into the knuckle (B) using the old bearing (C), a steel plate (D), the special tool, and a press. Place the wheel bearing on the knuckle with the pack seal side facing (metal color) toward the inside. Be careful not to damage the sleeve of the pack seal.

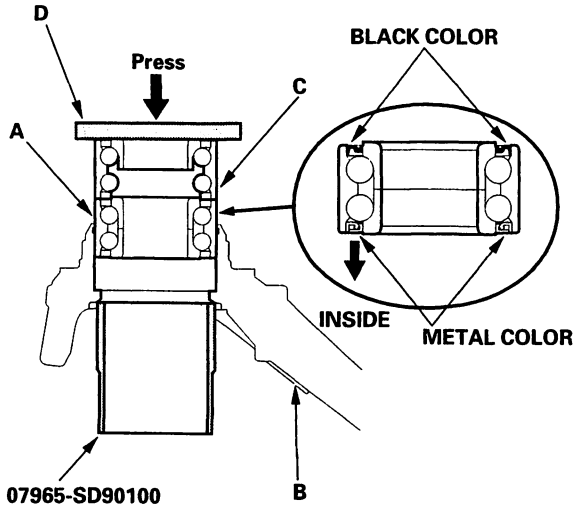

25. Install the snap ring (A) securely in the knuckle (B).

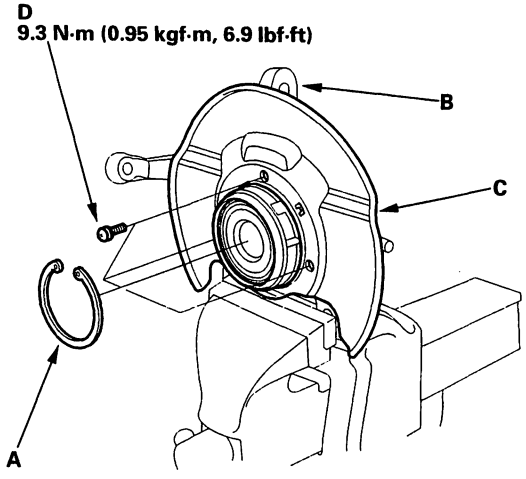

26. Install the splash guard (C), and tighten the screws (D).

27. Install the hub (A) on the knuckle (B) using the special tools shown and a hydraulic press. Be careful not to distort the splash guard (C).

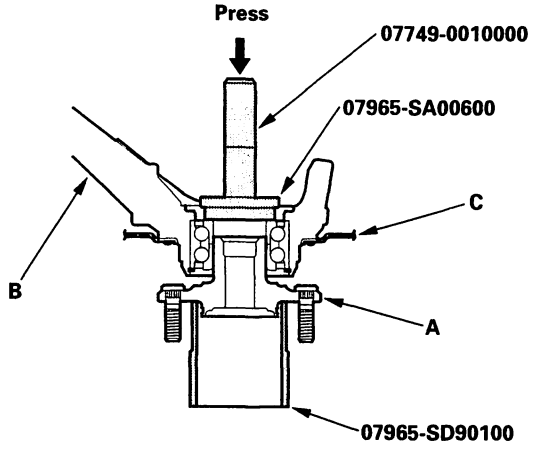

28. Install the knuckle in the reverse order of removal, and pay particular attention to the following items:

- Be careful not to damage the ball joint boots when installing the knuckle.
- Torque all mounting hardware to the specified torque values.
- Torque the castle nuts to the lower torque specifications, then tighten them only far enough to align the slot with the pin hole. Do not align the castle nut by loosening.
- Install new cotter pins on the castle nuts after torquing.
- Raise the locking tab on the spindle nut (C), then remove the nut.
- Before installing the brake disc, clean the mating surface of the front hub and the inside of the brake disc.
- Before installing the spindle nut, apply a small amount of engine oil to the seating surface of the nut. After tightening, use a drift to stake the spindle nut shoulder against the driveshaft.
- Before installing the wheel, clean the mating surface of the brake disc and the inside of the wheel.
- Check the front wheel alignment, and adjust it if necessary (see page 18-5).

BACK

Ball Joint Boot Replacement

Special Tools Required
Ball Joint Boot Clip Guide 07GAG-SD40700

1. Remove the boot clip and the boot.

2. Pack the interior of the boot and lip (A) with grease. Do not contaminate the lower collar of the boot (B) with grease.

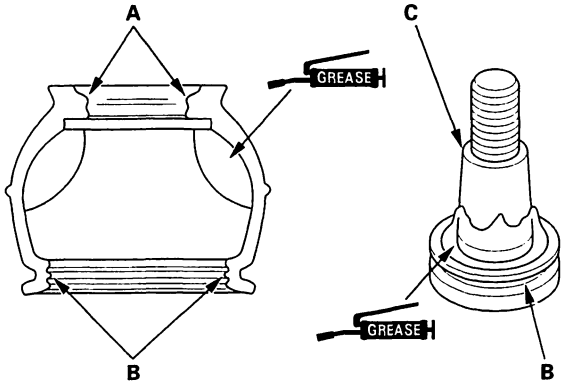

3. Wipe the grease off the tapered portion of the shaft and pack fresh grease into the base. Do not let dirt, or other foreign materials get into the boot.

4. Install the boot on the ball joint, then squeeze it gently to force out any air.

5. For a lower ball joint, adjust the special tool with the adjusting bolt (B) until its base is just above the groove around the bottom of the boot. Then slide the clip over the tool and into position on the boot.

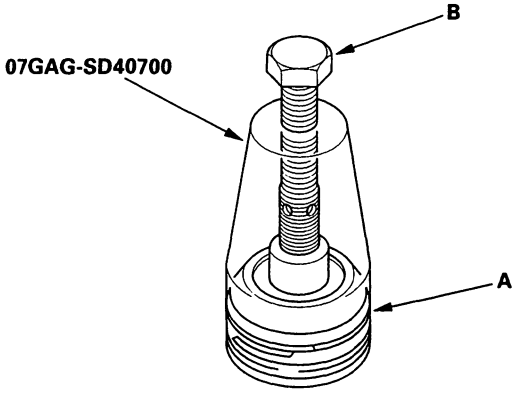

6. For an upper ball joint, just hold the tool over the joint, then slide the clip over the tool and into position on the boot.

7. After installing a boot, wipe any grease off the exposed portion of the ball joint shaft.

Upper Arm Replacement

1. Raise the front of the vehicle, and make sure it is securely supported. Remove the front wheel.

2. Remove the front damper (see step 1 on page 18-19).

3. Remove the wheel sensor bracket nut (A) from the upper arm (B).

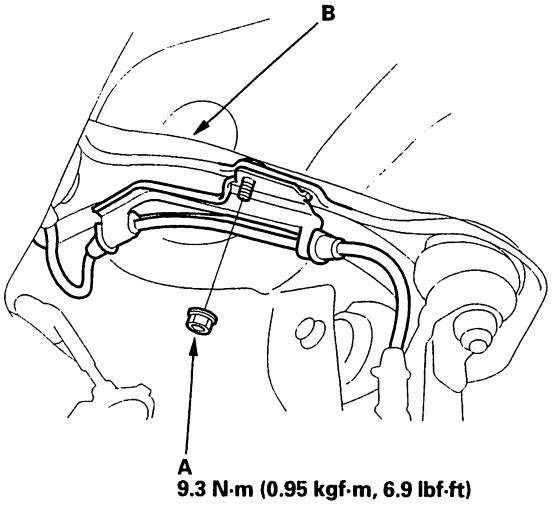

4. Remove the cotter pin from the upper ball joint castle nut, and remove the nut.

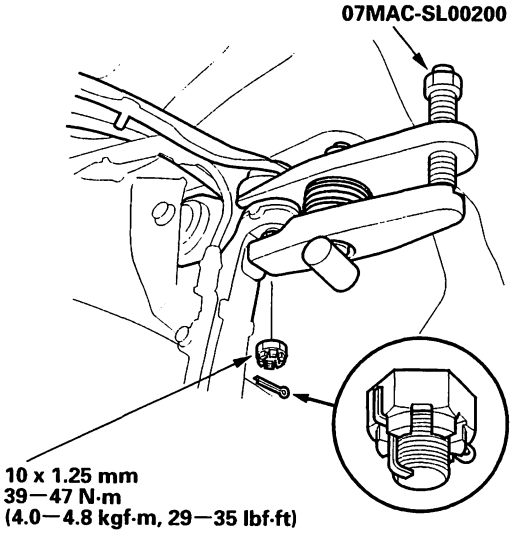

5. Remove the upper ball joint from the knuckle using the special tool (see page 18-9).

6. Remove the flange bolts (A) from the upper arm (B).

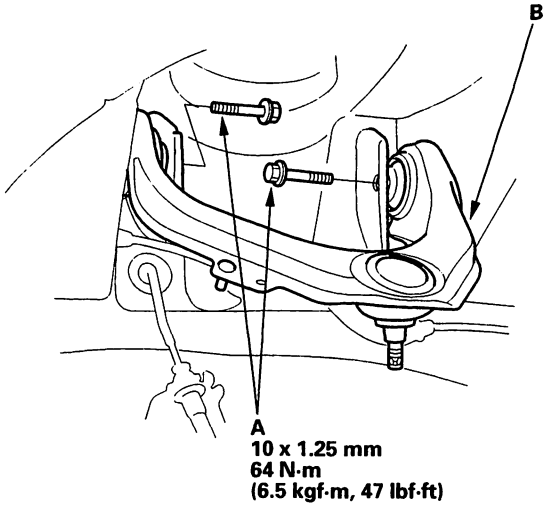

7. Install the upper arm in the reverse order of removal, and note these items:

   - Be careful not to damage the ball joint boot when connecting the upper arm to the knuckle.
   - Tighten all mounting hardware to the specified torque values.Tighten the castle nut to the lower torque value, then tighten it only far enough to align the slot with the hole in the stud. Do not align the castle nut by loosening it.
   - Use a new cotter pin on the castle nut.
   - Before installing the wheel, clean the mating surface on the brake disc and the inside of the wheel.
   - Check the front wheel alignment, and adjust it if necessary (see page 18-5).

BACK

Lower Arm Replacement

1. Raise the front of the vehicle, and make sure it is securely supported. Remove the front wheel.

2. Remove the damper fork.
   –1 Remove the damper pinch bolt (A).
   –2 Remove the lower bolt and self-locking nut (B) from the damper fork.
   –3 Remove the damper fork (C) from the damper.

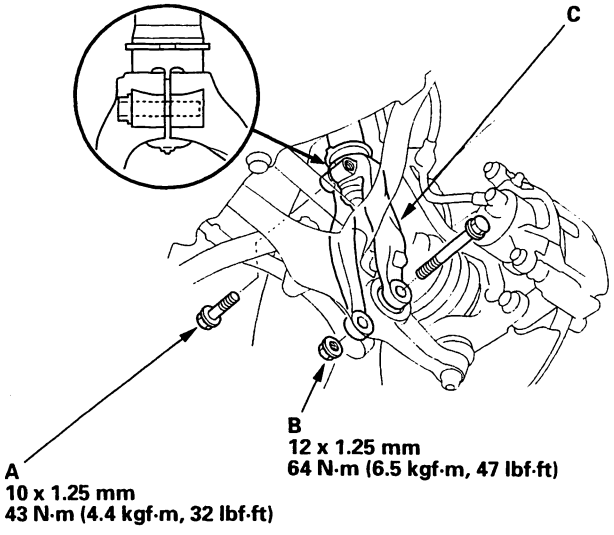

3. Remove the cotter pin from the lower ball joint castle nut, and remove the nut.

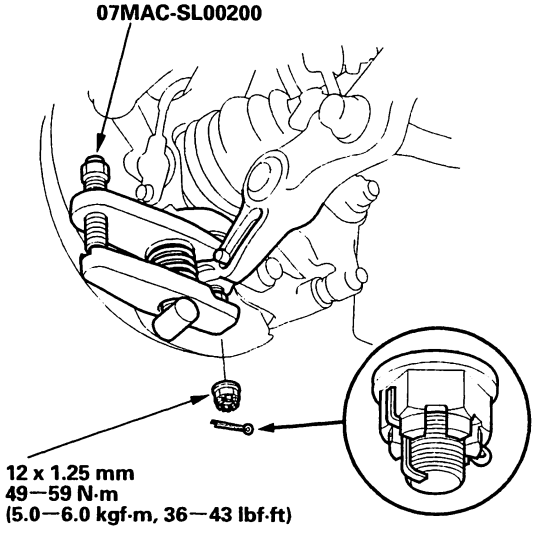

4. Remove the lower ball joint from the knuckle using the special tool (see page 18-9).

5. Remove the lower arm.
   –1 Remove the self-locking nut from the stabilizer link (A).
   –2 Remove the radius rod bolts (B).
   –3 Remove the lower arm mounting bolt (C).
   –4 Remove the lower arm (D) from the rear beam.

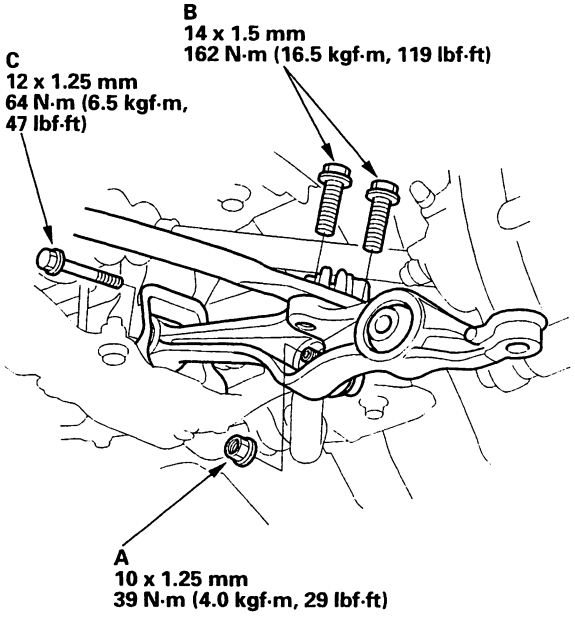

6. Install the lower arm in the reverse order of removal, and note these items:

   - Be careful not to damage the ball joint boot when connecting the lower arm to the knuckle.
   - Tighten all mounting hardware to the specified torque values.
   - Tighten the castle nut to the lower torque value, then tighten it only far enough to align the slot with the hole in the stud. Do not align the castle nut by loosening it.
   - Use a new cotter pin on the castle nut.
   - Before installing the wheel, clean the mating surfaces on the brake disc and the inside of the wheel.
   - Check the front wheel alignment, and adjust it if necessary (see page 18-5).

Damper/Spring Replacement

Exploded View

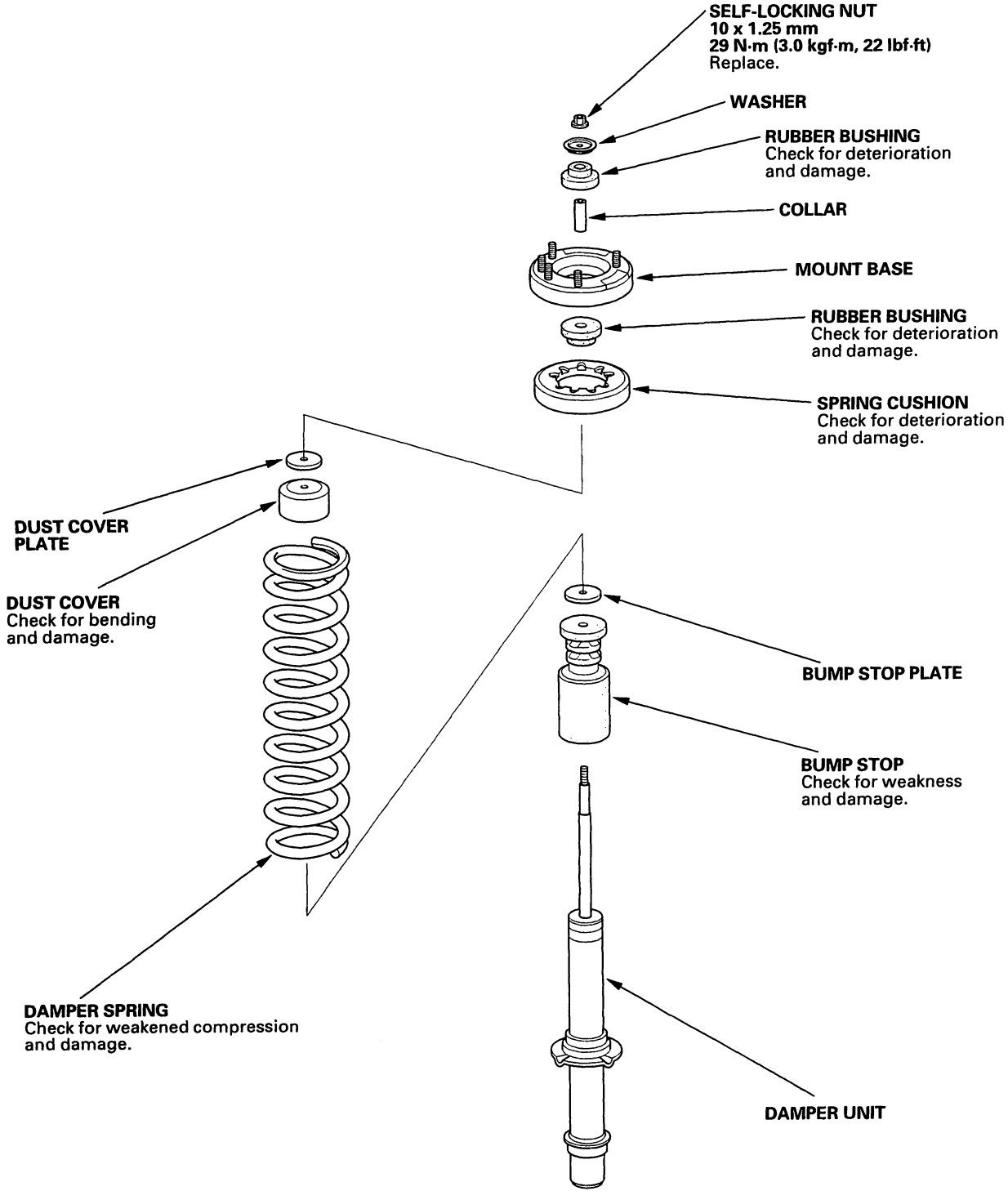

BACK

Special Tools Required
Strut Spring Compressor, Branick MST-580A or Model 7200, or equivalent, commercially available

Removal

1. Raise the front of the vehicle, and make sure it is securely supported. Remove the front wheel.

2. Remove the damper fork.
   –1 Remove the damper pinch bolt (A).
   –2 Remove the lower bolt (B) and self-locking nut (C) from the damper fork.
   –3 Remove the damper fork (D) from the damper.

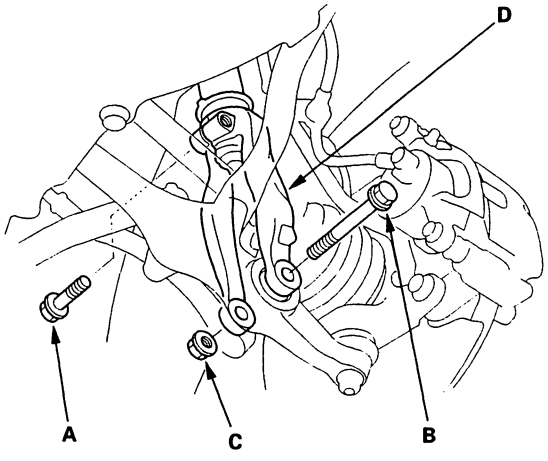

3. Remove the damper by removing the five flange nuts.

   NOTE: Damper springs are different, left and right. Mark the springs L and R before you continue.

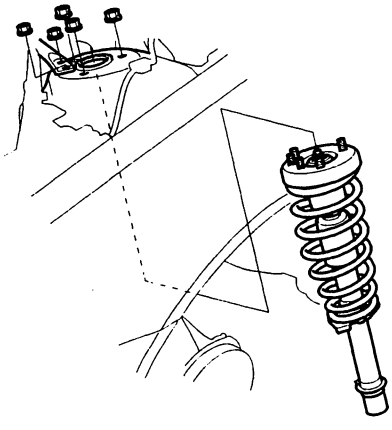

Disassembly/Inspection

1. Compress the damper spring with a commercially available strut spring compressor (A) according to the manufacturer's instructions, then remove the self-locking nut (B). Do not compress the spring more than necessary to remove the nut.

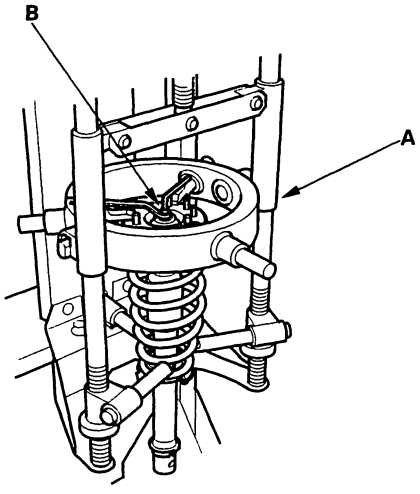

2. Release the pressure from the strut spring compressor, then disassemble the damper as shown in the Exploded View.

3. Reassemble all parts, except the spring.

4. Compress the damper assembly by hand, and check for smooth operation through a full stroke, both compression and extension. The damper should move smoothly. If it does not (no compression or no extension), the gas is leaking, and the damper should be replaced.

5. Check for oil leaks, abnormal noises, or binding during these tests.

(cont'd)

Damper/Spring Replacement (cont'd)

Reassembly

1. Install the damper unit on a commercially available strut spring compressor (A).

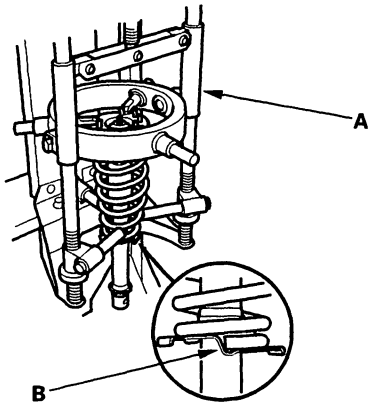

2. Assemble the damper in the reverse order of removal except for the washer and self-locking nut. Align the bottom of the damper spring and the spring lower seat (B).

3. Position the mount base (A) on the damper unit.

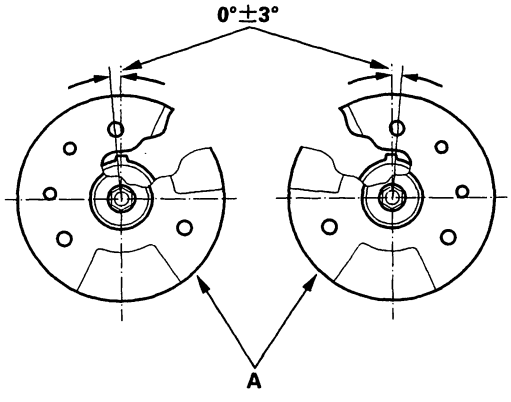

4. Compress the damper spring with the spring compressor.

5. Install the rubber bushing, washer (A), and a new 10 mm self-locking nut (B).

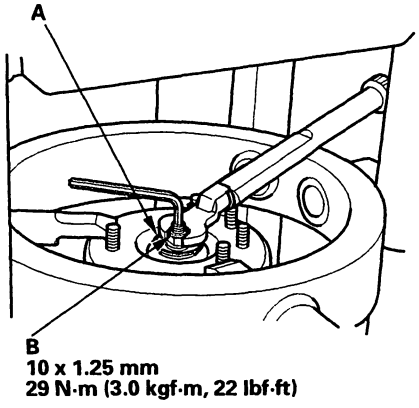

6. Hold the damper shaft, and tighten the 10 mm self-locking nut.

BACK

Installation

1. Loosely install the damper (A) on the frame with the aligning tab (B) facing inside, then loosely install the five flange nuts (C).

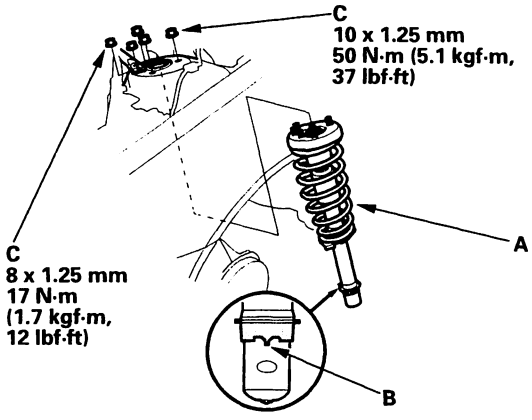

2. Install the damper fork (D) over the driveshaft and onto the lower arm. Install the front damper in the damper fork so the aligning tab (B) is aligned with the slot in the damper fork.

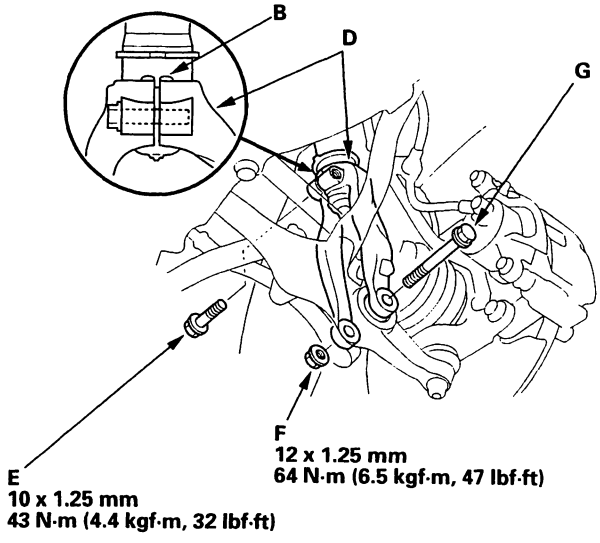

3. Loosely install the damper pinch bolt (E) into the damper fork.

4. Loosely install a new self-locking nut (F) with the flange bolt (G).

5. Raise the knuckle with a floor jack until the vehicle just lifts off the safety stand.

6. Tighten damper pinch bolt.

7. Tighten the flange bolt and the self-locking nut.

8. Tighten the flange nuts on the top of the damper to the specified torque.

9. Install the front wheel.

Hub/Bearing Replacement - Disc Brake

Exploded View

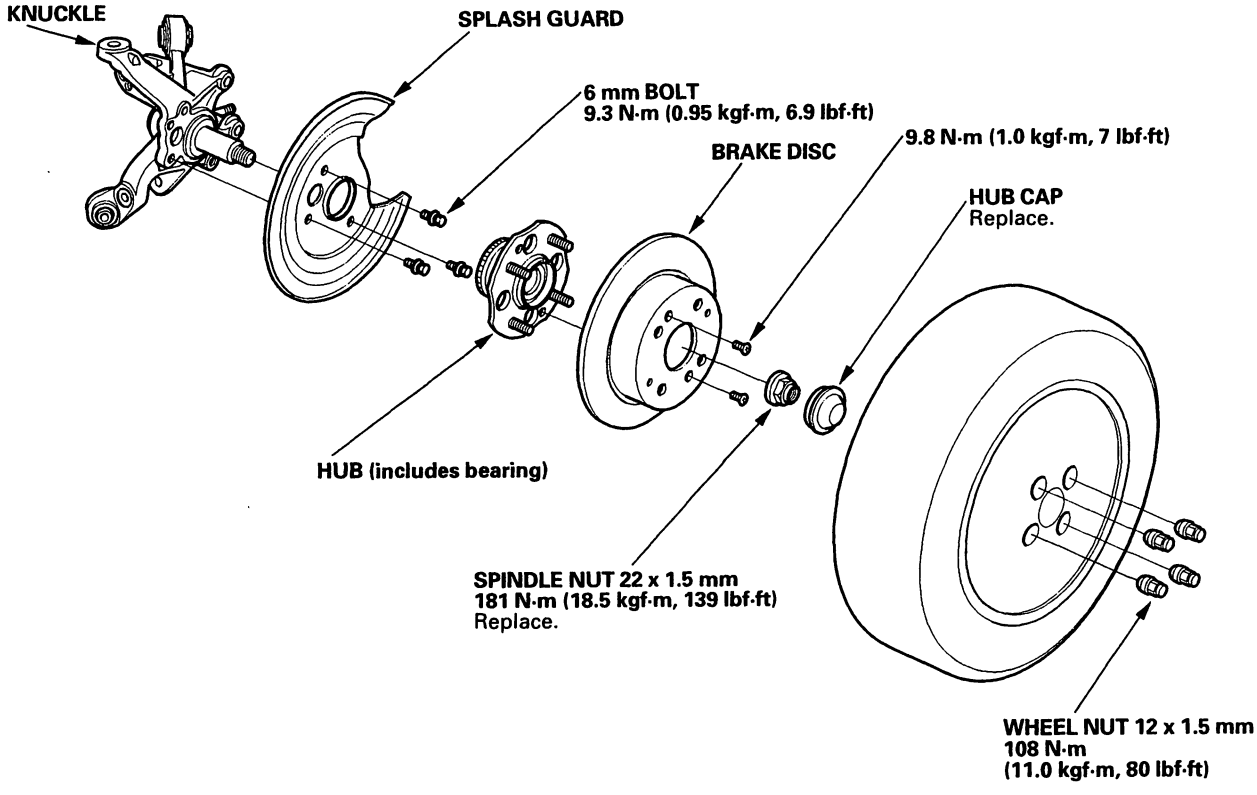

BACK

1. Raise the rear of the vehicle, and make sure it is securely supported.

2. Remove the wheel nuts and rear wheel.

3. Pull the parking brake lever up.

4. Remove the hub cap (A).

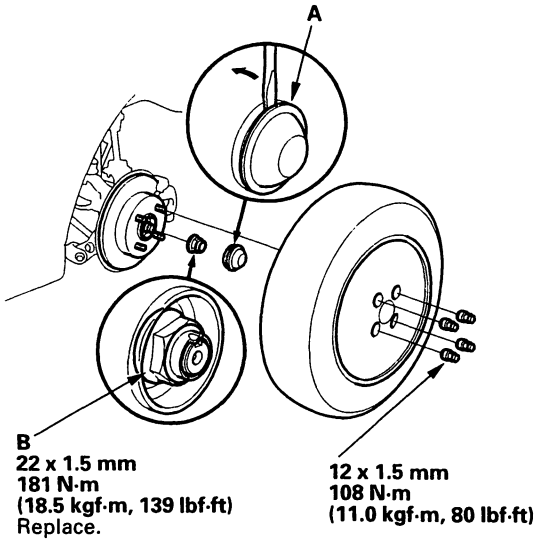

5. Raise the locking tab on the spindle nut (B), then remove the nut.

6. Release the parking brake lever.

7. Remove the brake hose mounting bolt (A).

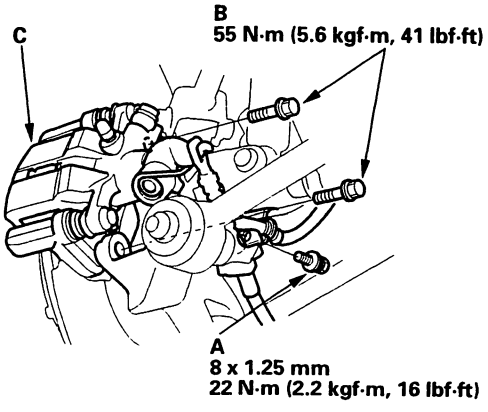

8. Remove the caliper bracket mounting bolts (B), and hang the caliper (C) to one side. To prevent damage to the caliper or brake hose, use a short piece of wire to hang the caliper from the undercarriage.

9. Remove the 6 mm brake disc retaining screws (A).

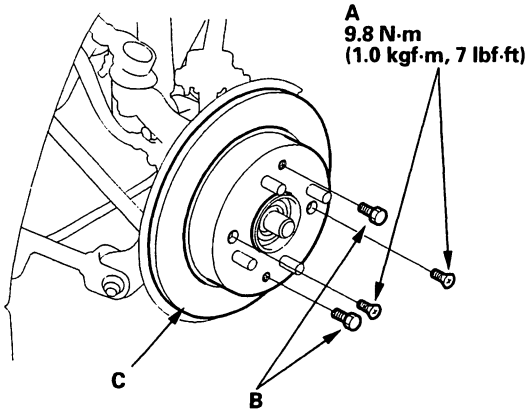

10. Screw two 8 x 1.25 mm bolts (B) into the disc (C) to push it away from the hub. Turn each bolt 2 turns at a time to prevent cocking the disc excessively.

11. Remove the hub bearing unit from the knuckle.

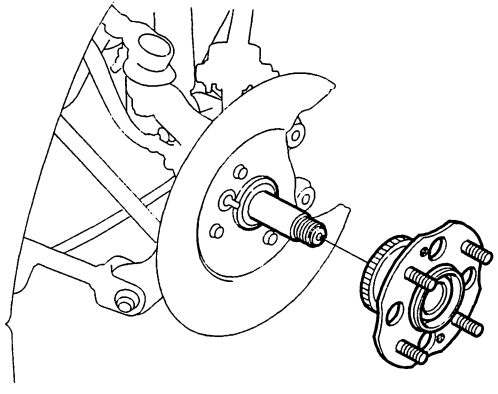

12. Install the hub/bearing unit in the reverse order of removal, and pay particular attention to the following items:

- Before installing the brake disc, clean the mating surfaces of the rear hub and brake disc.
- Wash the bearing and spindle thoroughly in high flash point solvent before reassembly.
- To prevent damage to the caliper or brake hose, use a short piece of wire to hang the caliper from the undercarriage.
- After tightening, use a drift to stake the spindle nut shoulder against the spindle.

Hub/Bearing Replacement - Drum Brake

Exploded View

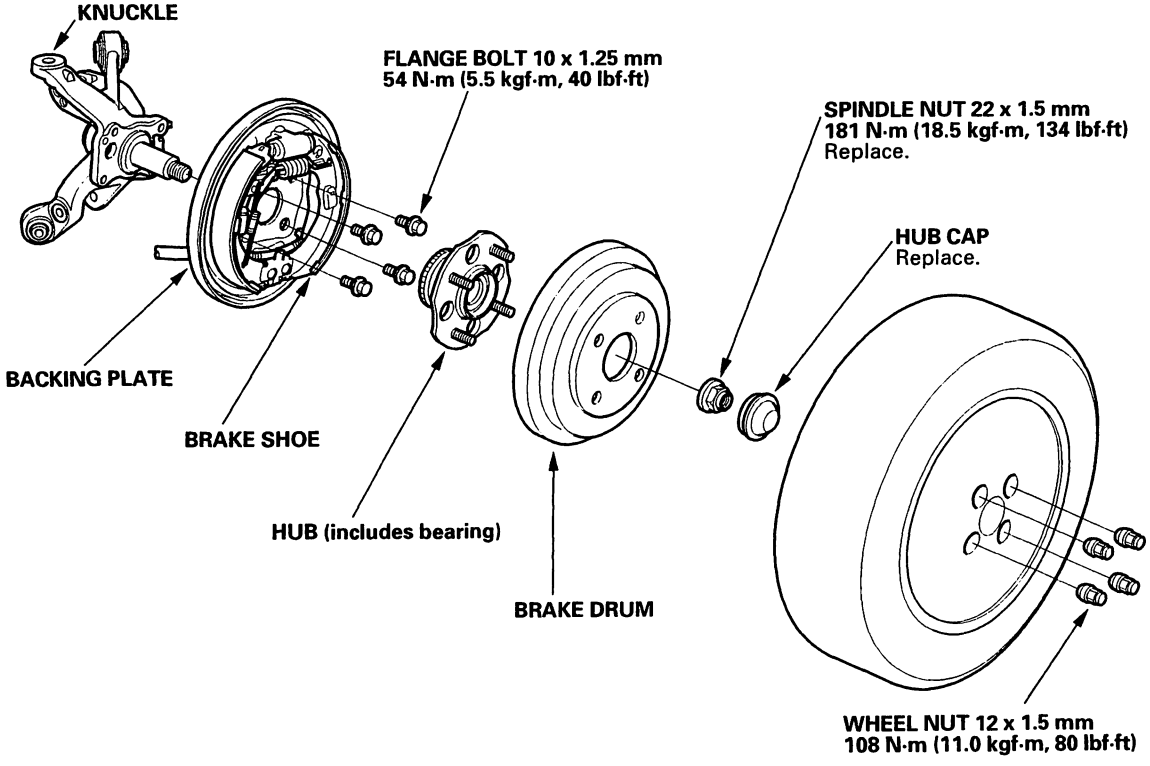

BACK

1. Raise the rear of the vehicle, and make sure it is securely supported.

2. Remove the wheel nuts and rear wheel.

3. Pull the parking brake lever up.

4. Remove the hub cap (A).

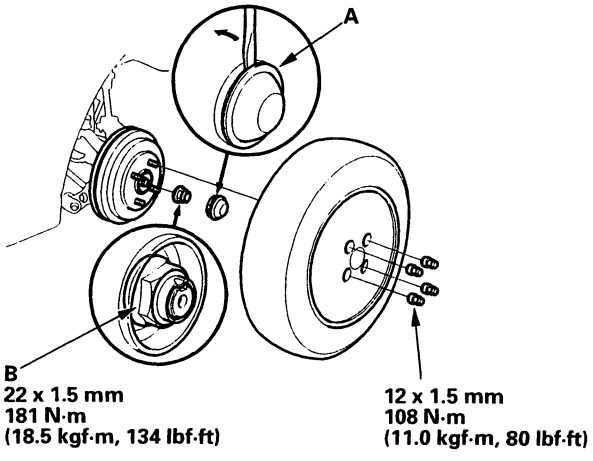

5. Raise the locking tab on the spindle nut (B), then remove the nut.

6. Release the parking brake lever.

7. Remove the brake drum and the hub/bearing unit.

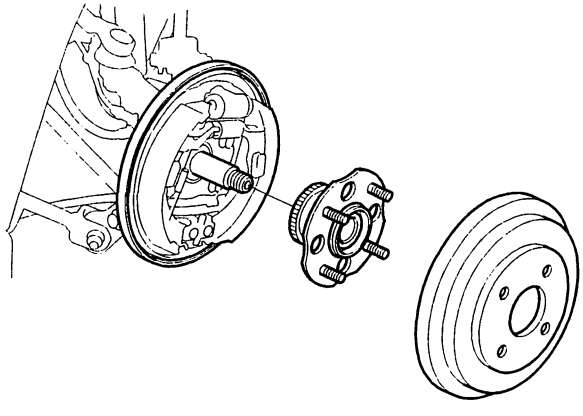

8. Install the hub/bearing unit in the reverse order of removal, and pay particular attention to the following items:

   - Wash the bearing and spindle thoroughly in high flash point solvent before reassembly.
   - After tightening, use a drift to stake the spindle nut shoulder against the spindle.

Knuckle Replacement

Special Tools Required
Ball joint remover, 28 mm 07MAC-SL00200

1. Raise the rear of the vehicle, and make sure it is securely supported, then remove the rear wheel.

2. Remove the rear brake caliper, the caliper mounting bracket, and the brake hose mounting bolt from the rear knuckle (disc brake model) (see step 7 on page 18-23).

3. Remove the rear brake disc and hub/bearing unit (disc brake model) (see step 9 on page 18-23) or brake drum and hub/bearing unit (drum brake model) (see left column).

4. Remove the cotter pin from the upper ball joint castle nut, and remove the nut.

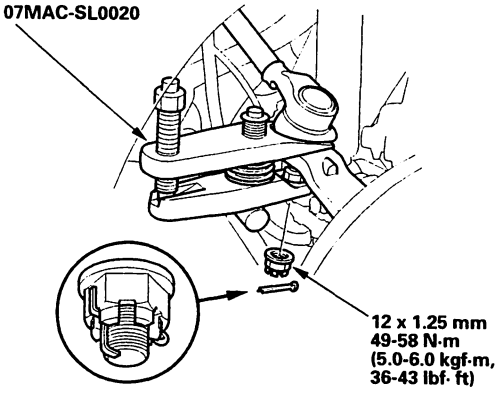

5. Separate the upper ball joint from the knuckle using the special tool (see page 18-9).

6. Remove the ABS sensor from the splash guard (disc brake model) (see page 19-71).

7. Remove the flange nut (A) from the stabilizer link.

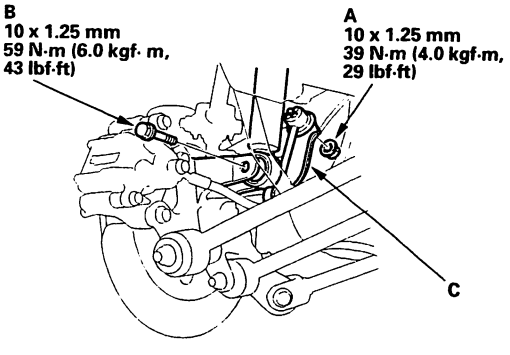

8. Remove the damper lower mount bolt (B), and the stabilizer link mounting bracket (C).

(cont'd)

Knuckle Replacement (cont'd)

9. Remove the control arm mounting nut from the rear knuckle.

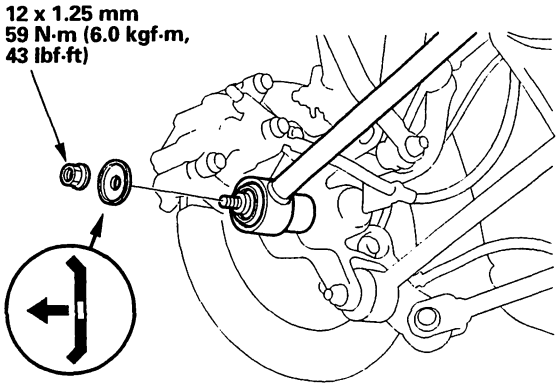

10. Remove the leading arm mounting bolt from the rear knuckle.

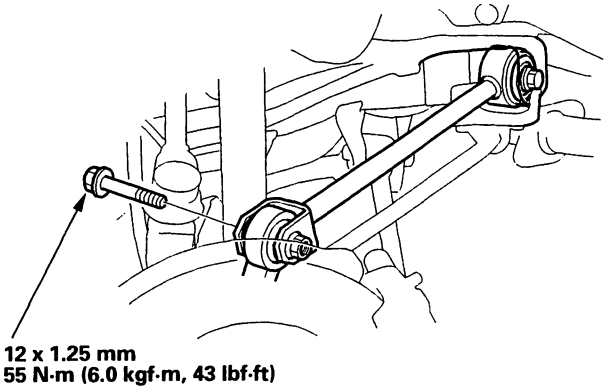

11. Remove the splash guard mounting bolts and the splash guard (A) (on disc brake model), or the backing plate mounting bolts and the backing plate (B) (on drum brake model).

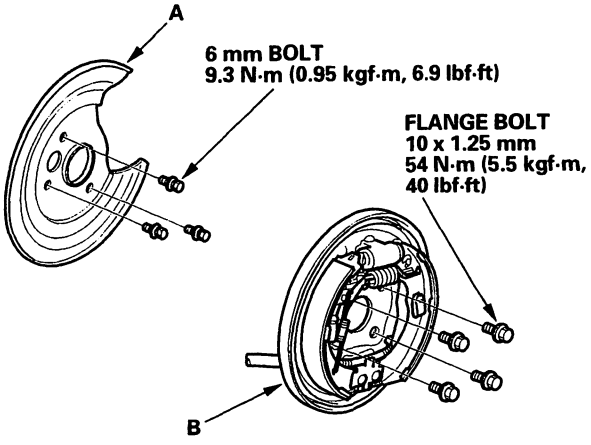

12. Remove the parking brake cable mounting bolt (A) from the trailing arm, then remove the trailing arm mounting bolt (B) from the rear knuckle.

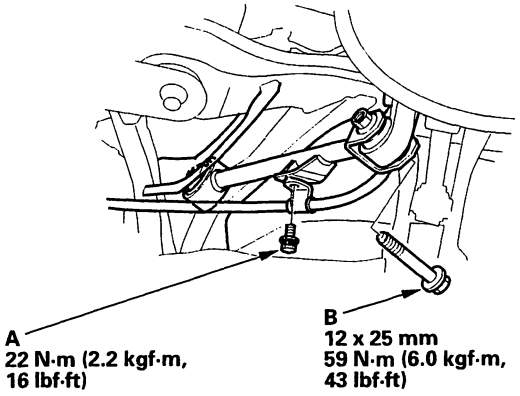

13. Remove the lower arm mounting bolt (A) and nut (B), then remove the knuckle.

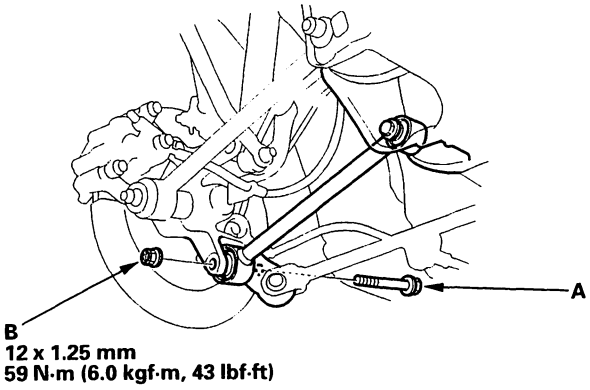

14. Install the knuckle in the reverse order of removal, and pay particular attention to the following items:

- Be careful not to damage the ball joint boot when connecting the upper arm to the knuckle.
- Tighten all mounting hardware to the specified torque values.
- Tighten the castle nut to the lower torque specifications, then tighten it only far enough to align the slot with the hole in the ball joint pin. Do not align the castle nut by loosening it.
- Use a new cotter pin in the castle nut.
- Before installing the wheel, clean the mating surfaces on the brake disc or drum and inside of the wheel.
- Check the rear wheel alignment, and adjust it if necessary (see page 18-5).

BACK

Upper Arm Replacement

1. Raise the rear of the vehicle, and make sure it is securely supported, then remove the rear wheel.

2. Remove the cotter pin from the upper ball joint castle nut, and remove the nut.

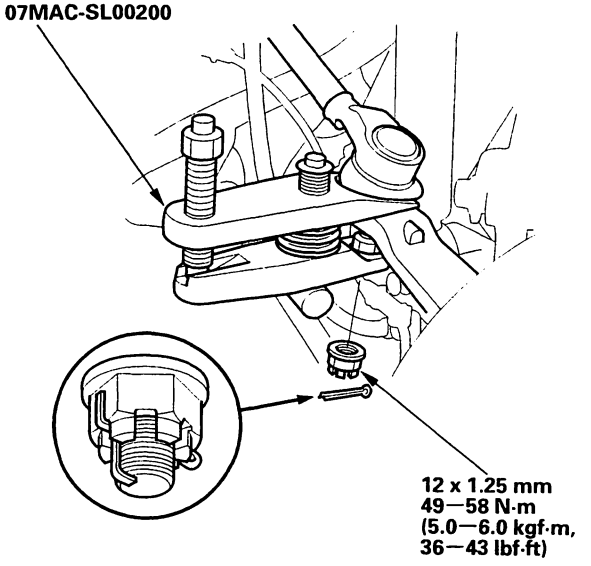

3. Remove the upper ball joint from the knuckle using the special tool (see page 18-9).

4. Remove the brake hose mounting bolts (A).

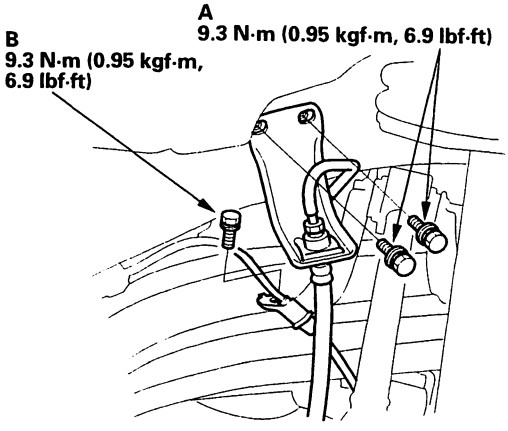

5. Remove the wheel sensor mounting bolt (B) (for vehicles with ABS).

6. Remove the upper arm bolt (A). Remove the upper arm (B) from the vehicle.

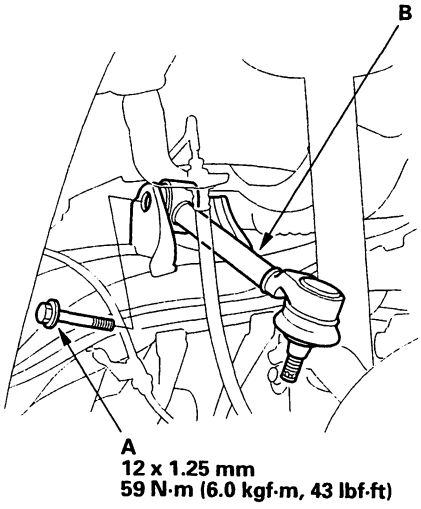

7. Install the upper arm in the reverse order of removal, and note these items:

   - Be careful not to damage the ball joint boot when connecting the upper arm to the knuckle.
   - Tighten all mounting hardware to the specified torque values.
   - Tighten the castle nut to the lower torque specifications, then tighten it only far enough to align the slot with the hole in the stud. Do not align the castle nut by loosening it.
   - Use a new cotter pin in the castle nut.
   - Before installing the wheel, clean the mating surfaces on the brake disc and the inside of the wheel.
   - Check the rear wheel alignment, and adjust it if necessary (see page 18-5).

Trailing Arm Replacement

1. Raise the rear of the vehicle, and make sure it is securely supported. Remove the rear wheel.
2. Remove the parking brake cable mounting bolt (A) from the trailing arm (B).
3. Remove the trailing arm mounting bolts (C).
4. Remove the trailing arm (B) from the vehicle.

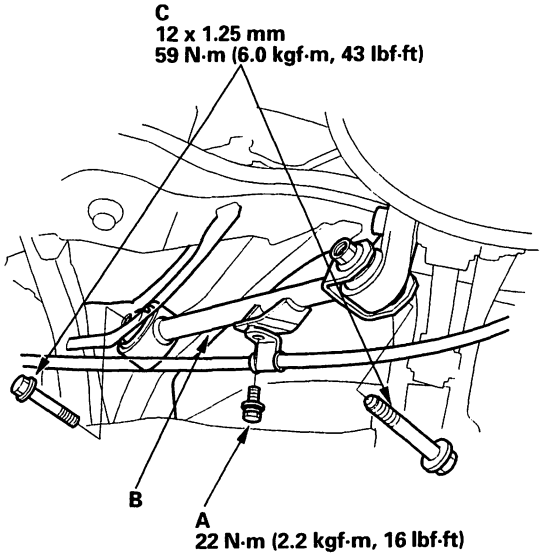

5. Install the trailing arm in the reverse order of removal, and note these items:
   - Tighten all mounting hardware to the specified torque values.
   - Before installing the wheel, clean the mating surfaces on the brake disc and the inside of the wheel.
   - Check the rear wheel alignment, and adjust it if necessary (see page 18-5).

Leading Arm Replacement

1. Raise the rear of the vehicle, and make sure it is securely supported. Remove the rear wheel.
2. Remove the leading arm mounting bolts (A), and remove the leading arm (B) from the vehicle.

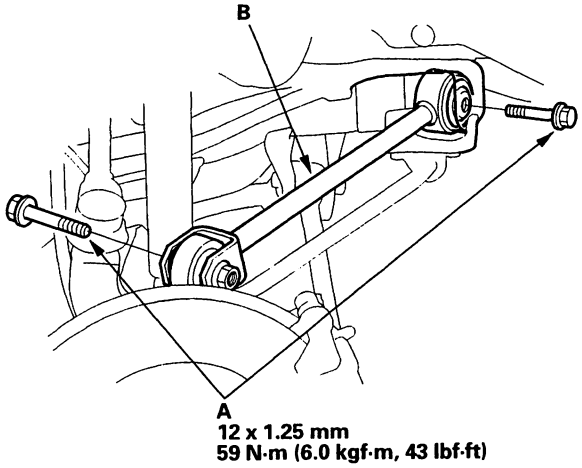

3. Install the leading arm in the reverse order of removal, and note these items:
   - Tighten all mounting hardware to the specified torque values.
   - Before installing the wheel, clean the mating surfaces on the brake disc and the inside of the wheel.
   - Check the rear wheel alignment, and adjust it if necessary (see page 18-5).

BACK

Lower Arm Replacement

1. Raise the rear of the vehicle, and make sure it is securely supported. Remove the rear wheel.

2. Remove the lower arm mounting bolt (A).

3. Remove the lower arm mounting nut (B) and mounting bolt (C).

4. Remove the lower arm (D) from the vehicle.

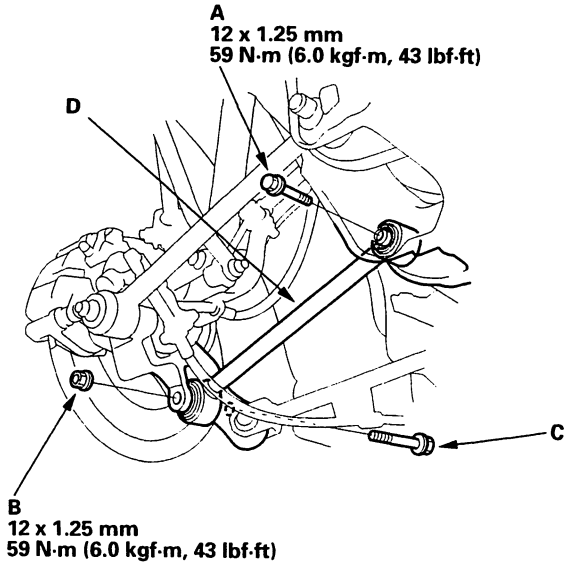

5. Install the lower arm in the reverse order of removal, and note these items:

   - Tighten all mounting hardware to the specified torque values.
   - Before installing the wheel, clean the mating surfaces on the brake disc and the inside of the wheel.
   - Check the rear wheel alignment, and adjust it if necessary (see page 18-5).

Control Arm Replacement

1. Raise the rear of the vehicle, and make sure it is securely supported. Remove the rear wheel.

2. Remove the control arms from the vehicle.
   - –1 Remove the self-locking nut (A) from the knuckle bolt.
   - –2 Remove the self-locking nut (B) from the rear suspension subframe.
   - –3 Remove the control arms (C) from the vehicle.

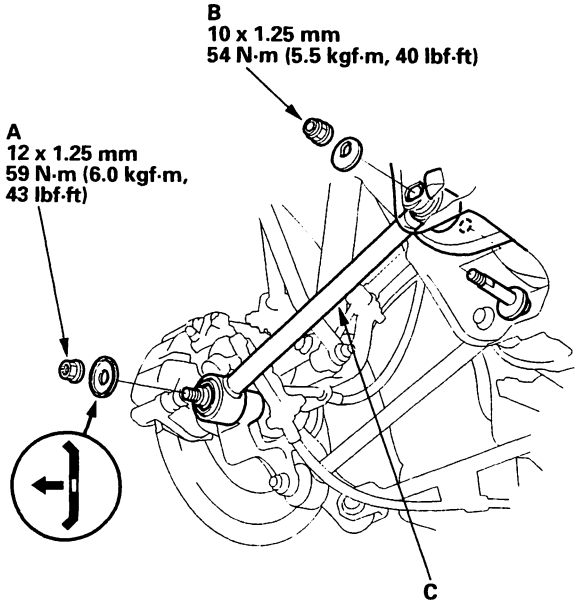

3. Install the control arm in the reverse order of removal, and note these items:

   - Tighten all mounting hardware to the specified torque values.
   - Before installing the wheel, clean the mating surfaces on the brake disc and the inside of the wheel.
   - Check the rear wheel alignment, and adjust it if necessary (see page 18-5).

Damper/Spring Replacement

Exploded View

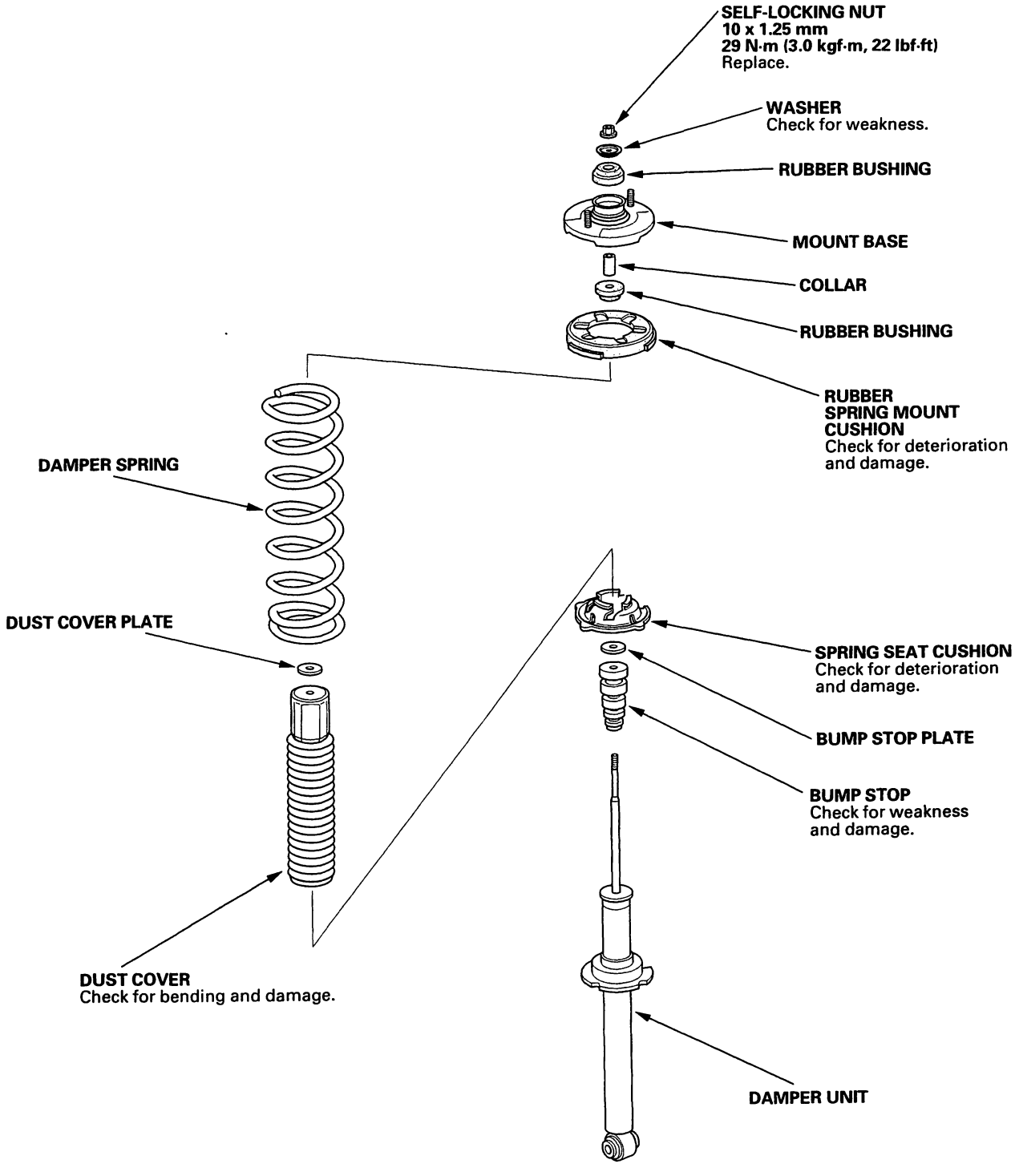

BACK

Special Tools Required
Strut Spring Compressor, Branick MST-580A or Model 7200, or equivalent, commercially available.

Removal

1. Raise the rear of the vehicle, and make sure it is securely supported. Remove the rear wheel.

2. Remove the rear bulkhead cover (see page 20-76).

3. Remove the two flange nuts (A).

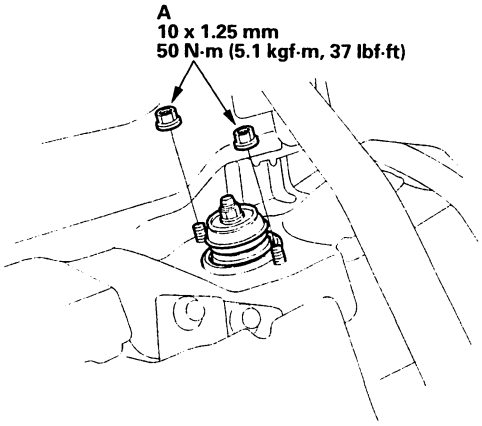

4. Remove the flange bolt (A) from the knuckle.

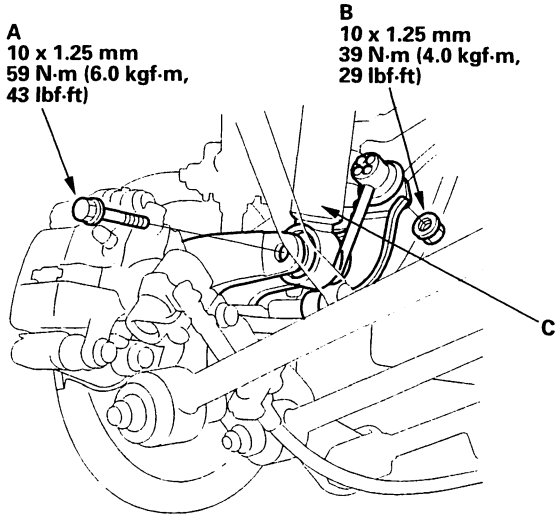

5. Remove the flange nut (B) from the stabilizer link.

6. Lower the rear suspension, and remove the damper (C) from the vehicle.

   NOTE: Damper springs are different, left and right. Mark the springs L and R before you continue.

Disassembly/Inspection

1. Compress the damper spring with a commercially available strut spring compressor (A) according to the manufacturer's instructions, then remove the self-locking nut (B). Do not compress the spring more than necessary to remove the self-locking nut.

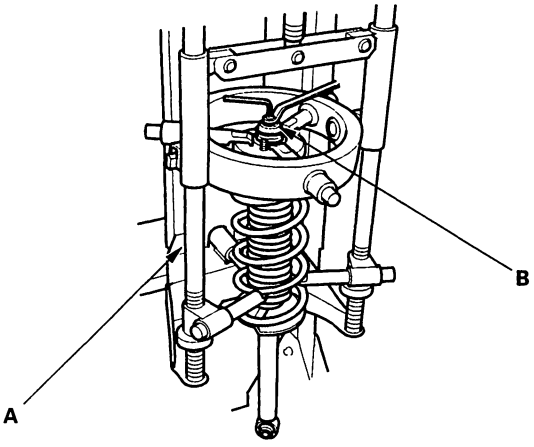

2. Release the pressure from the strut spring compressor, then disassemble the damper as shown in the Exploded View.

3. Reassemble all parts, except the spring.

4. Compress the damper by hand, and check for smooth operation through a full stroke, both compression and extension. The damper should move smoothly. If it does not, replace it.

5. Check for oil leaks, abnormal noises, and binding during these tests.

(cont'd)

Damper/Spring Replacement (cont'd)

Reassembly

1. Install the damper unit on a commercially available strut spring compressor (A).

2. Assemble the damper in the reverse order of disassembly, except for the washer and self-locking nut. Align the bottom of the damper spring and the spring lower seat (B).

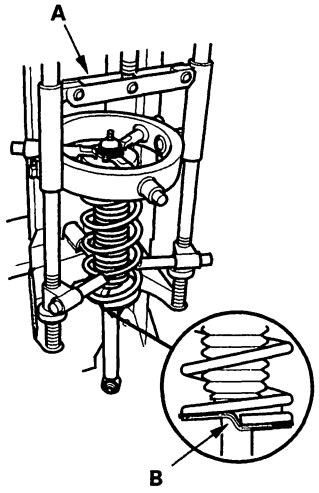

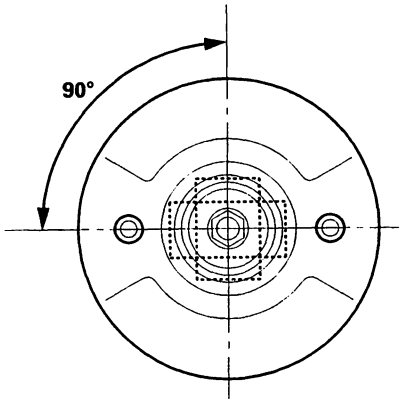

3. Position the damper mounting base on the damper unit.

4. Compress the damper spring with the spring compressor.

5. Install the washer(A), and loosely install a new self-locking nut (B).

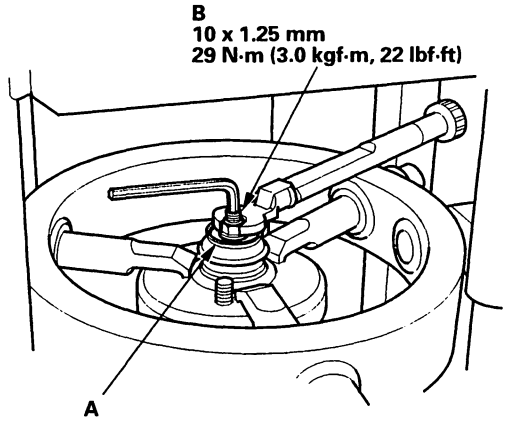

6. Hold the damper shaft with a hex wrench, and tighten the self-locking nut.

BACK

Installation

1. Lower the rear suspension, position the damper(A), and loosely install the two flange nuts(B).

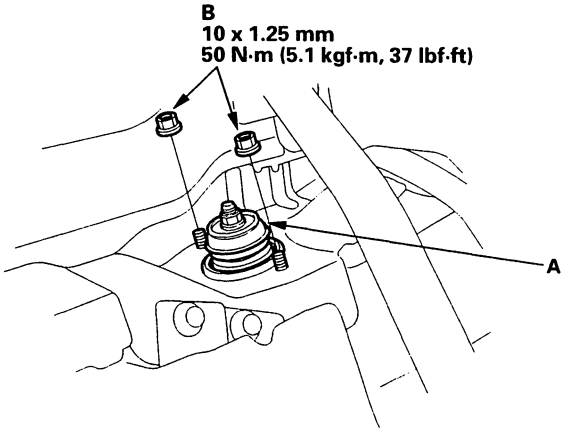

2. Loosely install the flange bolt(A)and nut(B).

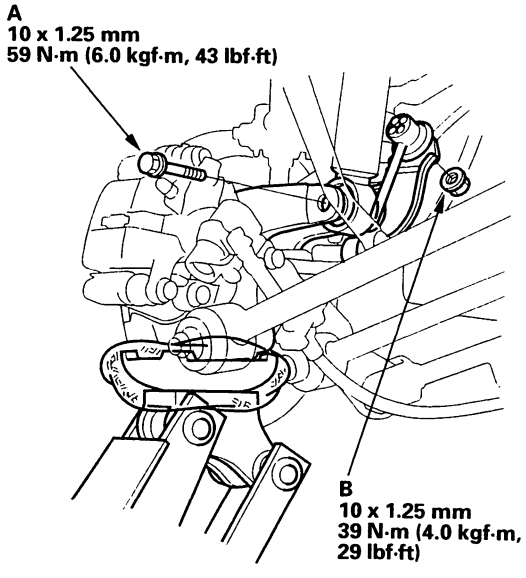

3. Raise the rear suspension with a floor jack until the vehicle just lifts off the safety stand.
4. Tighten the flange bolt and nut on the bottom of the damper to the specified torque.
5. Tighten the two flange nuts on top of the damper to the specified torque.
6. Install the rear bulkhead cover (see page 20-76).
7. Install the rear wheels.
8. Check the rear wheel alignment, and adjust it if necessary (see page 18-5).

BACK

Brakes

Conventional Brake Components

Special Tools 19-2
Component Location Index 19-3
Brake System Operation and Leakage Check 19-4
Brake Pedal and Brake Pedal Position Switch Adjustment 19-5
Parking Brake Check and Adjustment 19-6
Brake System Bleeding 19-7
Brake System Indicator Circuit Diagram 19-8
Parking Brake Switch Test 19-9
Brake Fluid Level Switch Test 19-9
Front Brake Pads Inspection/ Replacement 19-10
Front Brake Disc Inspection 19-12
Front Brake Caliper Overhaul 19-13
Master Cylinder Replacement 19-14
Master Cylinder Inspection 19-15
Master Cylinder Pushrod Clearance Adjustment 19-15
Brake Booster Test 19-17
Brake Booster Replacement 19-18
Rear Brake Pads Inspection/ Replacement 19-19
Rear Brake Disc Inspection 19-21
Rear Brake Caliper Overhaul 19-22
Rear Drum Brake Inspection 19-25
Rear Brake Shoes Replacement 19-27
Rear Wheel Cylinder Replacement 19-29
Brake Hoses and Lines Inspection 19-30
Brake Hose Replacement 19-31
Parking Brake Cable Replacement 19-32

ABS (Anti-lock Brake System) Components 19-35

Conventional Brake Components

Special Tools

Ref.No.	Tool Number	Description	Qty
①	07JAG-SD40100	Pushrod Adjustment Gauge	1

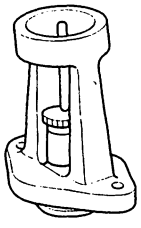

①

BACK

Component Location Index

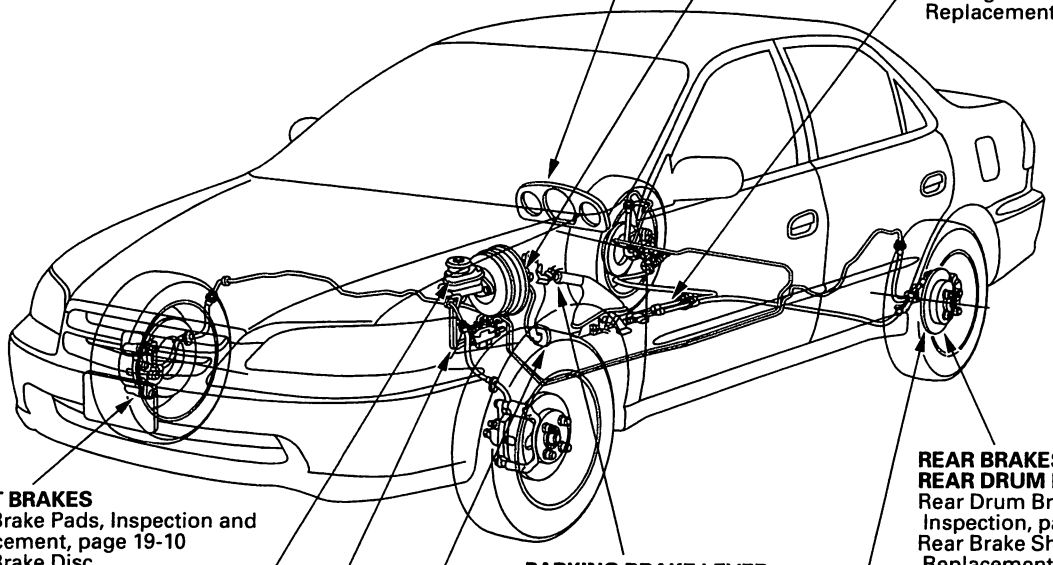

INDICATOR
Brake System Indicator Circuit Diagram, page 19-8
Parking Brake Switch Test, page 19-9
Brake Fluid Level Switch Test, page 19-9

BRAKE BOOSTER
Brake Booster Test, page 19-17
Brake Booster Replacement, page 19-18

PARKING BRAKE CABLE
Parking Brake Cable Replacement, page 19-32

FRONT BRAKES
Front Brake Pads, Inspection and Replacement, page 19-10
Front Brake Disc Inspection, page 19-12
Front Brake Caliper Overhaul, page 19-13

PARKING BRAKE LEVER
Parking Brake Check and Adjustment, page 19-6

REAR BRAKES
REAR DRUM BRAKE:
Rear Drum Brake Inspection, page 19-25
Rear Brake Shoes Replacement, page 19-27
Rear Wheel Cylinder Replacement, page 19-29

BRAKE PEDAL
Brake Pedal and Brake Pedal Position Switch Adjustment, page 19-5

REAR BRAKES
REAR DISC BRAKE:
Rear Brake Pads Inspection and Replacement, page 19-19
Rear Brake Disc Inspection, page 19-21
Rear Brake Caliper Overhaul, page 19-22

BRAKE HOSES/LINES
Brake Hoses and Lines Inspection, page 19-30
Brake Hoses Replacement, page 19-31

MASTER CYLINDER
Master Cylinder Replacement, page 19-14
Master Cylinder Inspection, page 19-15
Master Cylinder Pushrod Clearance Adjustment, page 19-15
Brake System Bleeding, page 19-7

Conventional Brake Components

Brake System Operation and Leakage Check

Check all of the following items:

Component	Procedure
Brake Booster (A)	Check brake operation by applying the brakes during a test drive. If the brakes do not work properly, check the brake booster. Replace the brake booster as an assembly if it does not work properly or if there are signs of leakage.
Piston Cup and Pressure Cup Inspection (B)	• Check brake operation by applying the brakes. Look for damage or signs of fluid leakage. Replace the master cylinder as an assembly if the pedal does not work properly or if there is damage or signs of fluid leakage. • Check for a difference in brake pedal stroke between quick and slow brake applications. Replace the master cylinder if there is a difference in pedal stroke.
Brake Hoses (C)	Look for damage or signs of fluid leakage. Replace the brake hose with a new one if it is damaged or leaking.
Caliper Piston Seal and Piston Boots (D)	Check brake operation by applying the brakes. Look for damage or signs of fluid leakage. If the pedal does not work properly, the brakes drag, or there is damage or signs of fluid leakage, disassemble and inspect the brake caliper. Replace the boots and seals with new ones whenever the brake caliper is disassembled.
Wheel Cylinder Piston Cup and Dust Cover (E)	Check brake operation by applying the brakes. Look for damage or signs of fluid leakage. If the pedal does not work properly, the brakes drag, or there is damage or signs of fluid leakage, replace the wheel cylinder.

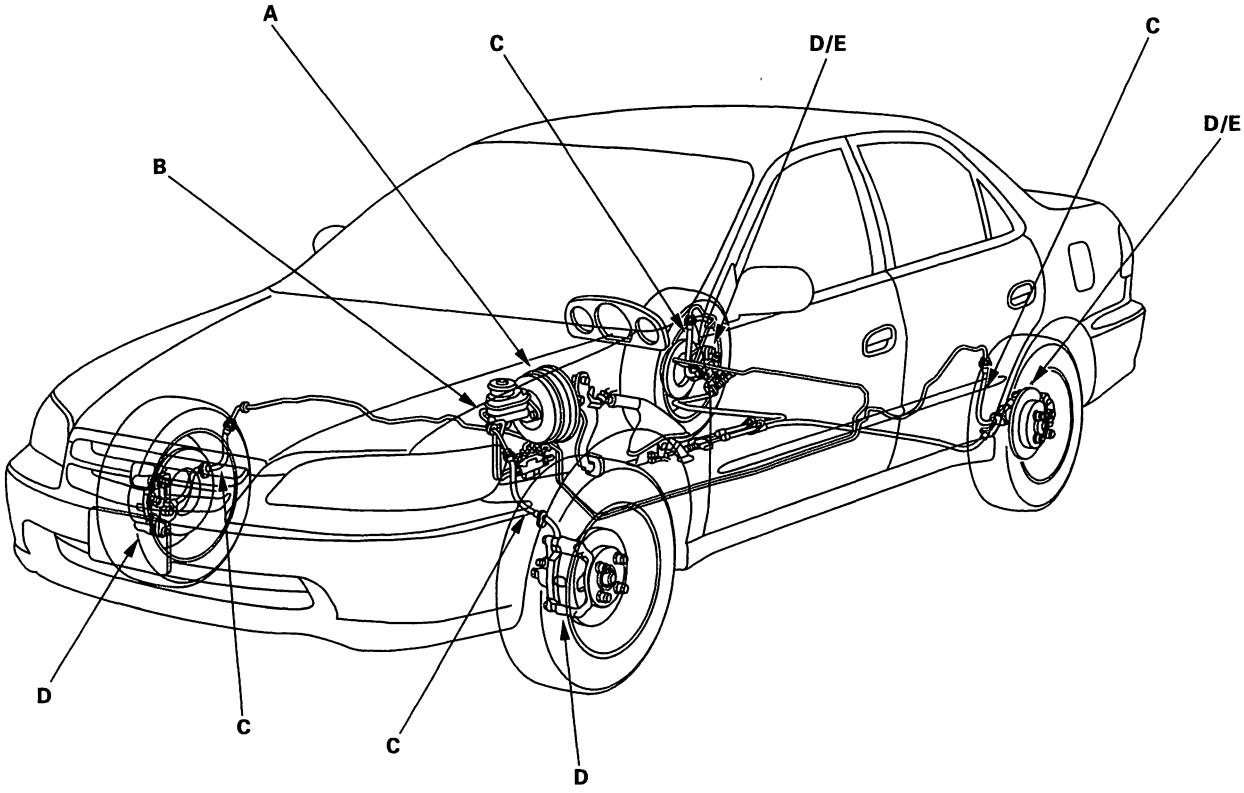

BACK

Brake Pedal and Brake Pedal Position Switch Adjustment

Pedal Height

1. Disconnect the brake pedal position switch connector, loosen the brake pedal position switch locknut (A), and back off the brake pedal position switch (B) until it is no longer touching the brake pedal.

2. Lift up the carpet. At the insulator cutout, measure the pedal height (C) from the middle of the left side of the pedal pad (D).

   Standard Pedal Height (with carpet removed):
   M/T: 165 mm (6 8/16 in.)
   A/T: 169 mm (6 10/16 in.)

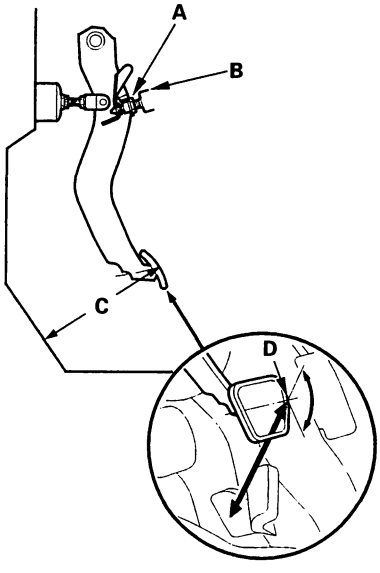

3. Loosen the pushrod locknut (A), and screw the pushrod in or out with pliers until the standard pedal height from the floor is reached. After adjustment, tighten the locknut firmly. Do not adjust the pedal height with the pushrod pressed.

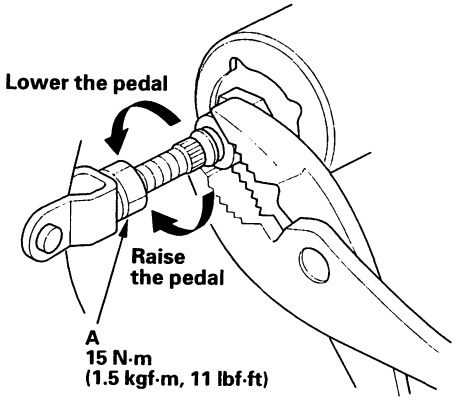

4. Screw in the brake pedal position switch until its plunger is fully pressed (threaded end (A) touching the pad (B) on the pedal arm). Then back off the switch 3/4 of a turn to make 0.9 mm (0.04 in.) of clearance between the threaded end and the pad. Tighten the locknut firmly.
   Connect the brake pedal position switch connector. Make sure the brake lights go off when the pedal is released.

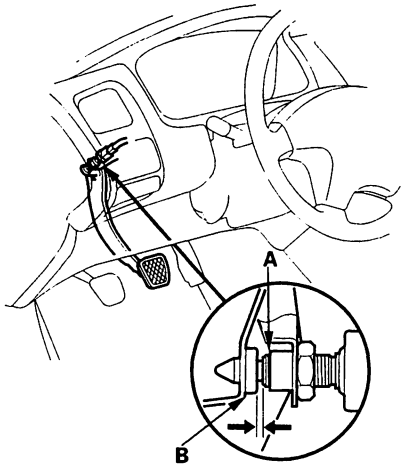

5. Check the brake pedal free play as described below.

Pedal Free Play

1. With the engine off, check the pedal free play (A) on the pedal pad (B) by pushing the pedal by hand.

   Free Play: 1–5 mm (1/16–3/16 in.)

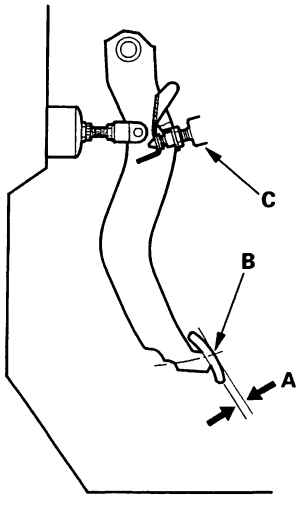

2. If the pedal free play is out of specification, adjust the brake pedal position switch (C). If the pedal free play is insufficient, it may result in brake drag.

Parking Brake Check and Adjustment

Check

1. Pull the parking brake lever (A) with 196 N (20 kgf, 44 lbf) force to fully apply the parking brake. The parking brake lever should be locked within the specified number of clicks (B).

   Lever Locked Clicks:
   Vehicle With Rear Disc Brakes: 9–11
   Vehicle With Rear Drum Brakes: 9–11

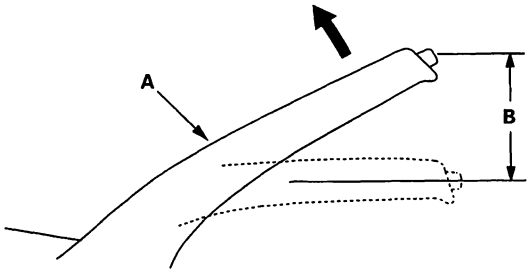

2. Adjust the parking brake if the lever clicks are out of specification.

Adjustment

NOTE: After rear brake caliper servicing, loosen the parking brake adjusting nut, start the engine, and press the brake pedal several times to set the self-adjusting brake before adjusting the parking brake.

1. Block the front wheels, then raise the rear of the vehicle, and make sure it is securely supported.

2. Make sure the parking brake arm (A) on the rear brake caliper contacts the brake caliper pin (B).

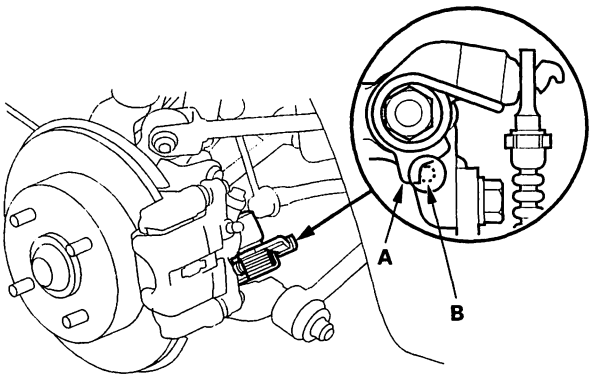

3. Pull the parking brake lever up one click.

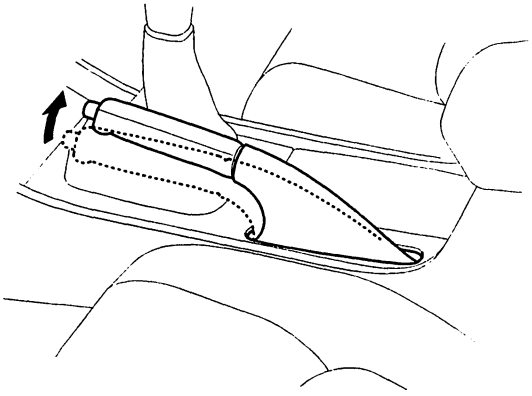

4. Remove the rear console lid (see page 20-83).

5. Tighten the adjusting nut (A) until the parking brakes drag slightly when the rear wheels are turned.

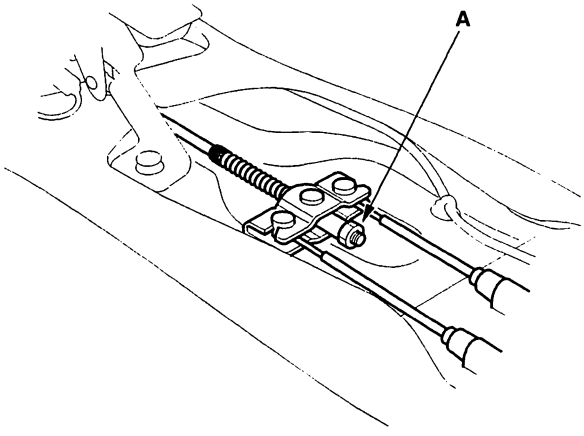

6. Release the parking brake lever fully, and check that the parking brakes do not drag when the rear wheels are turned. Readjust if necessary.

7. Make sure the parking brakes are fully applied when the parking brake lever is pulled up fully.

8. Reinstall the rear console lid.

BACK

Brake System Bleeding

NOTE:
- Do not reuse the drained fluid.
- Always use Genuine Honda DOT 3 Brake Fluid. Using a non-Honda brake fluid can cause corrosion and decrease the life of the system.
- Make sure no dirt or other foreign matter is allowed to contaminate the brake fluid.
- Do not spill brake fluid on the vehicle, it may damage the paint; if brake fluid does contact the paint, wash it off immediately with water.
- The reservoir on the master cylinder must be at the MAX (upper) level mark at the start of the bleeding procedure and checked after bleeding each brake caliper. Add fluid as required.

1. Make sure the brake fluid level in the reservoir is at the MAX (upper) level line (A).

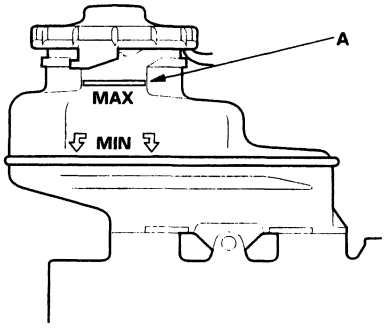

2. Have someone slowly pump the brake pedal several times, then apply steady pressure.

3. Loosen the left-front brake bleed screw to allow air to escape from the system. Then tighten the bleed screw securely.

4. Repeat the procedure for each wheel in the sequence shown below until air bubbles no longer appear in the fluid.

5. Refill the master cylinder reservoir to the MAX (upper) level line.

BLEEDING SEQUENCE:

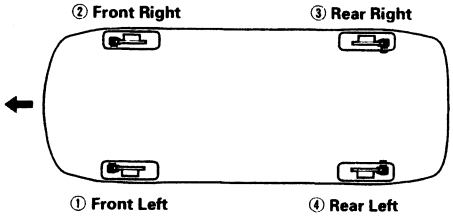

FRONT DISC BRAKE:

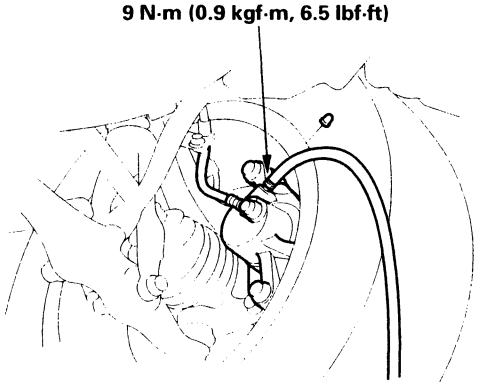

REAR DISC BRAKE:

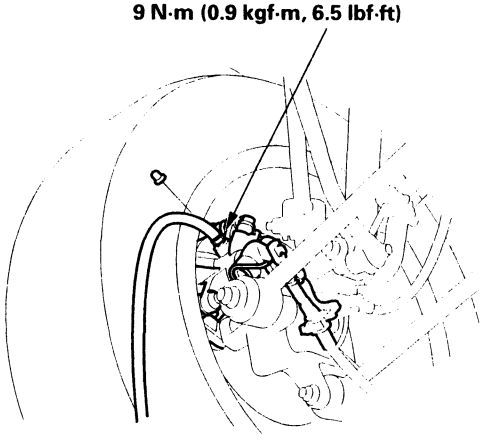

REAR DRUM BRAKE:

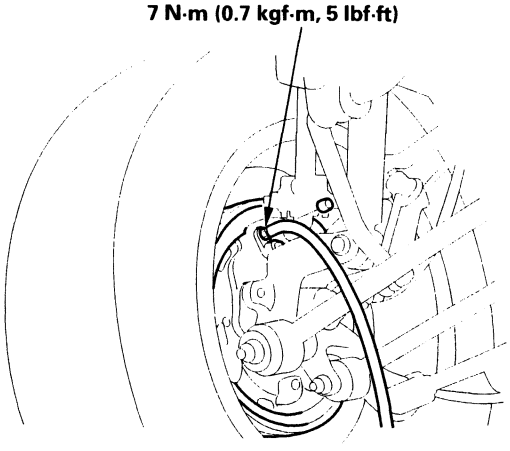

Brake System Indicator Circuit Diagram

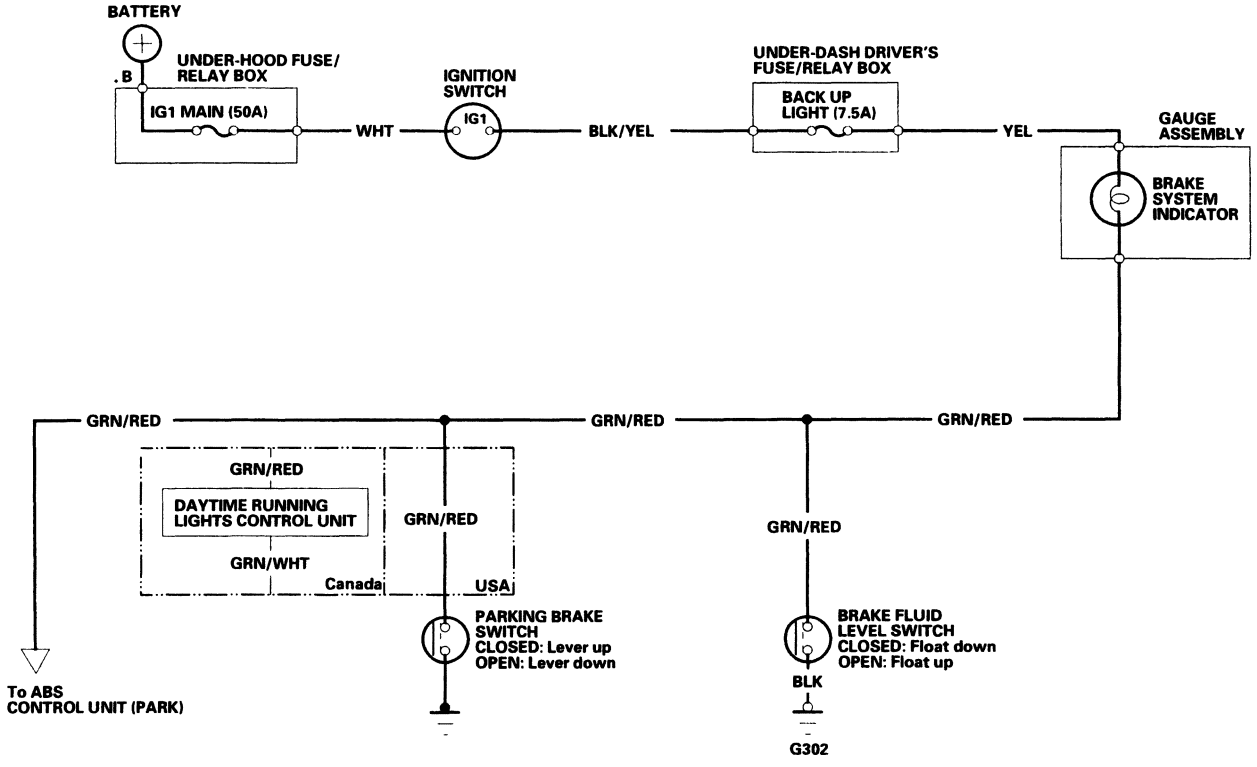

BACK

Parking Brake Switch Test

1. Remove the rear console, and disconnect the connector (A) from the switch (B).

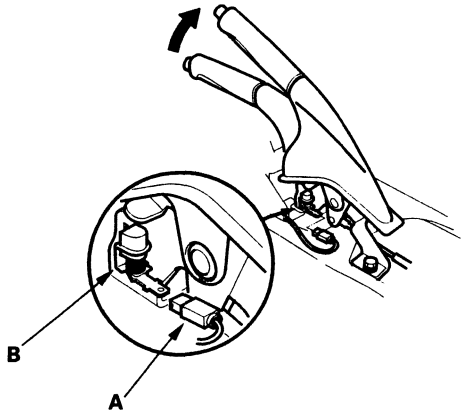

2. Check for continuity between the positive terminal and body ground:

   - With the brake lever up, there should be continuity.
   - With the brake lever down, there should be no continuity.

   NOTE (Canada): If the parking brake switch is OK, but the brake system indicator does not function, do the input test for the daytime running lights control unit (see page 22-96).

Brake Fluid Level Switch Test

1. Remove the reservoir cap (A). Check that the float (B) moves up and down freely; if it doesn't, replace the reservoir cap assembly.

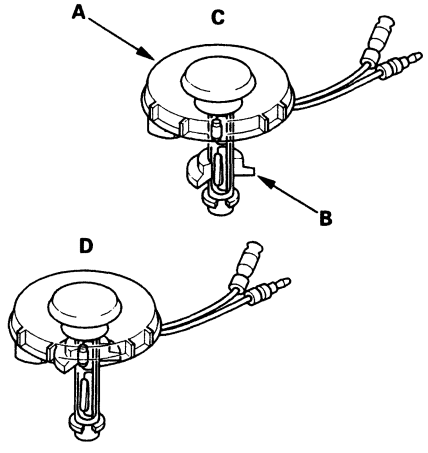

2. Check for continuity between the terminals with the float in the down position (C) and the up position (D):

   - With the float up, there should be no continuity.
   - With the float down, there should be continuity.

Front Brake Pads Inspection and Replacement

⚠CAUTION

Frequent inhalation of brake pad dust, regardless of material composition, could be hazardous to your health.
- Avoid breathing dust particles.
- Never use an air hose or brush to clean brake assemblies. Use an OSHA-approved vacuum cleaner.

1. Loosen the front wheel nuts slightly. Raise the front of the vehicle, and make sure it is securely supported. Remove the front wheels.

2. Remove the brake hose mounting bolts (A) from the knuckle.

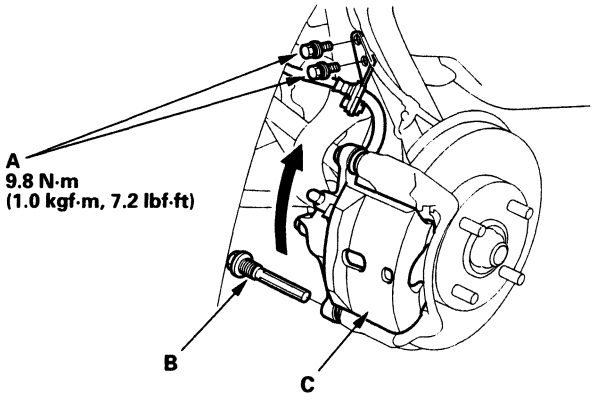

3. Remove pin A (B) and pivot the caliper (C) up out of the way. Check the hoses and pin boots for damage and deterioration.

4. Remove the pad shims (A), pad retainers (B), and pads (C).

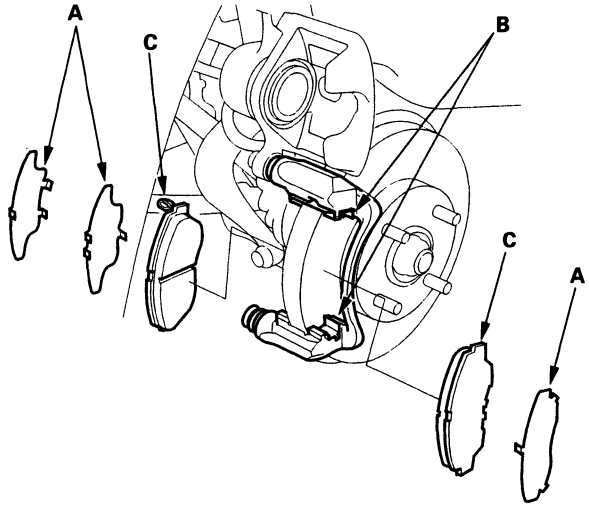

5. Using vernier calipers, measure the thickness of each brake pad lining. The measurement does not include pad backing plate (A) thickness.

Brake Pad Thickness:
Standard: 10.5 – 11.5 mm (0.41 – 0.45 in.)
Service Limit: 1.6 mm (0.06 in.)

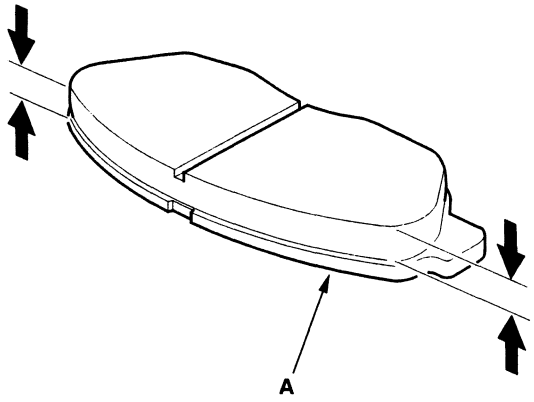

6. If the brake pad thickness is less than the service limit, replace the front pads as a set.

7. Clean the caliper thoroughly; remove any rust, and check for grooves and cracks.

8. Check the brake disc for damage and cracks.

9. Install the pad retainers (A).

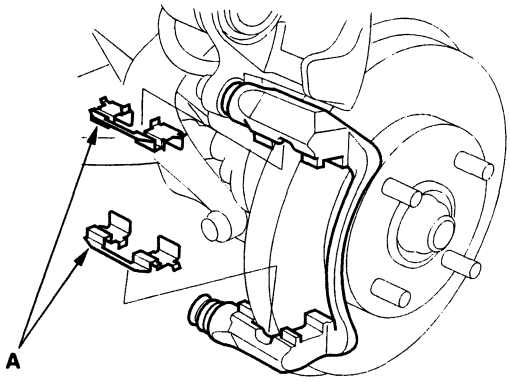

BACK

10. Apply Molykote M77 grease to both sides of the pad shims (A) and the back of the pads (B). Wipe excess grease off the shim.
Contaminated brake discs or pads reduce stopping ability. Keep grease off the discs and pads.

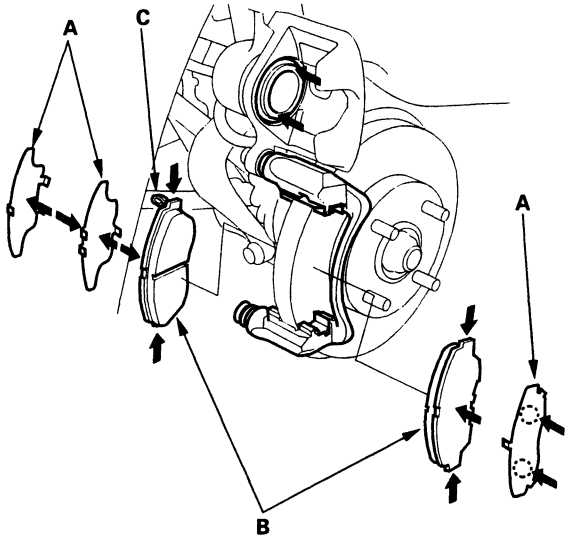

11. Install the brake pads and pad shims correctly. Install the pad with the wear indicator (C) on the inside.
If you are reusing the pads, always reinstall the brake pads in their original positions to prevent a momentary loss of braking efficiency.

12. Push in the piston (A) so the caliper will fit over the pads. Make sure the piston boot is in position to prevent damaging it when pivoting the caliper down.

13. Pivot the caliper down into position. Being careful not to damage the pin boot, install the caliper bolt (B) and torque it to proper specification.

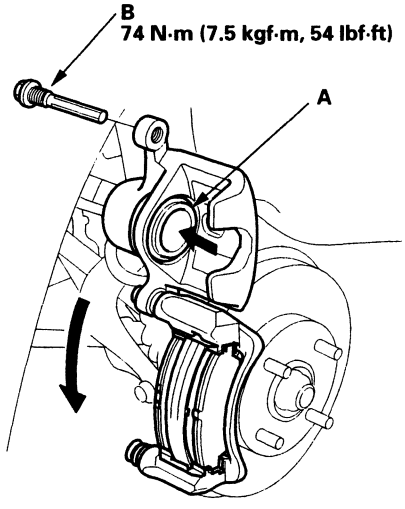

14. Install the brake hose onto the knuckle.

15. Press the brake pedal several times to make sure the brakes work, then test-drive.

    NOTE: Engagement of the brake may require a greater pedal stroke immediately after the brake pads have been replaced as a set. Several applications of the brake pedal will restore the normal pedal stroke.

16. After installation, check for leaks at hose and line joints or connections, and retighten if necessary.

Front Brake Disc Inspection

Runout

1. Loosen the front wheel nuts slightly, then raise the vehicle, and make sure it is securely supported. Remove the front wheels.

2. Remove the brake pads (see page 19-10).

3. Inspect the disc surface for damage and cracks. Clean the disc thoroughly, and remove all rust.

4. Use wheel nuts and suitable flat washers (A) to hold the disc securely against the hub, then mount a dial indicator as shown, and measure the runout at 10 mm (0.4 in.) from the outer edge of the disc.

   Brake Disc Runout:
   Service Limit: 0.10 mm (0.004 in.)

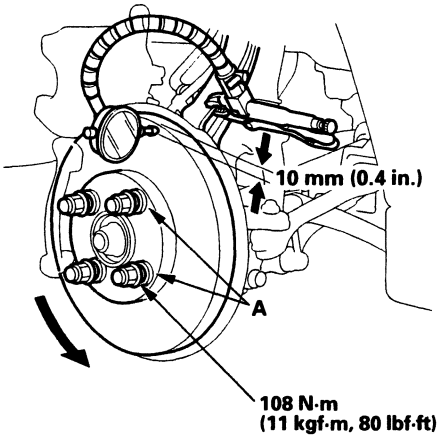

5. If the disc is beyond the service limit, refinish the brake disc with an on-car brake lathe. The Kwik-Lathe produced by Kwik-way Manufacturing Co. and the "Front Brake Disc Lathe" offered by Snap-on Tools Co. are approved for this operation.

   Max. Refinish Limit: 21.0 mm (0.83 in.)

   NOTE:
   - If the brake disc is beyond the service limit for refinishing, replace it (see page 18-10).
   - A new disc should be refinished if its runout is greater than 0.10 mm (0.004 in.).

Thickness and Parallelism

1. Loosen the front wheel nuts slightly, then raise the vehicle, and make sure it is securely supported. Remove the front wheels.

2. Remove the brake pads (see page 19-10).

3. Using a micrometer, measure disc thickness at eight points, approximately 45° apart and 10 mm (0.4 in.) in from the outer edge of the disc. Replace the brake disc if the smallest measurement is less than the max. refinishing limit.

   Brake Disc Thickness:
   Standard: 22.9 – 23.1 mm (0.90 – 0.91 in.)
   Max. Refinishing Limit: 21.0 mm (0.83 in.)
   Brake Disc Parallelism: 0.015 mm (0.0006 in.) max.

   NOTE: This is the maximum allowable difference between the thickness measurements.

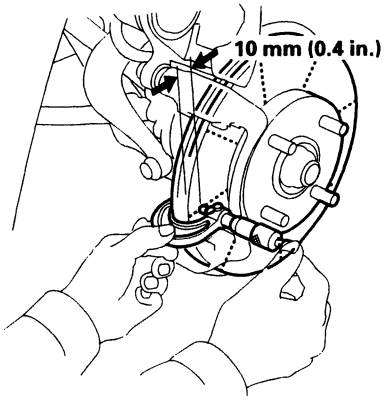

4. If the disc is beyond the service limit for parallelism, refinish the brake disc with an on-car brake lathe. The Kwik-Lathe produced by Kwik-way Manufacturing Co. and the "Front Brake Disc Lathe" offered by Snap-on Tools Co. are approved for this operation.

   NOTE: If the brake disc is beyond the service limit for refinishing, replace it (see page 18-10).

BACK

Front Brake Caliper Overhaul

⚠CAUTION

Frequent inhalation of brake pad dust, regardless of material composition, could be hazardous to your health.
- Avoid breathing dust particles.
- Never use an air hose or brush to clean brake assemblies. Use an OSHA-approved vacuum cleaner.

Remove, disassemble, inspect, reassemble, and install the caliper and note these items:

- Do not spill brake fluid on the vehicle; it may damage the paint; if brake fluid gets on the paint, wash it off immediately with water.
- To prevent dripping, cover disconnected hose joints with rags or shop towels.
- Clean all parts in brake fluid and air dry; blow out all passages with compressed air.
- Before reassembling, check that all parts are free of dirt and other foreign particles.
- Replace parts with new ones as specified in the illustration.
- Make sure no dirt or other foreign matter gets into the brake fluid.
- Make sure no grease or oil gets on the brake discs or pads.
- When reusing pads, always reinstall them in their original positions to prevent loss of braking efficiency.
- Do not reuse drained brake fluid.
- Always use Genuine Honda DOT 3 Brake Fluid. Non-Honda brake fluid can cause corrosion and shorten the life of the system.
- Coat the piston, piston seal groove, and caliper bore with clean brake fluid.
- Replace all rubber parts with new ones.
- After installing the caliper,check the brake hose and line for leaks, interference, and twisting.

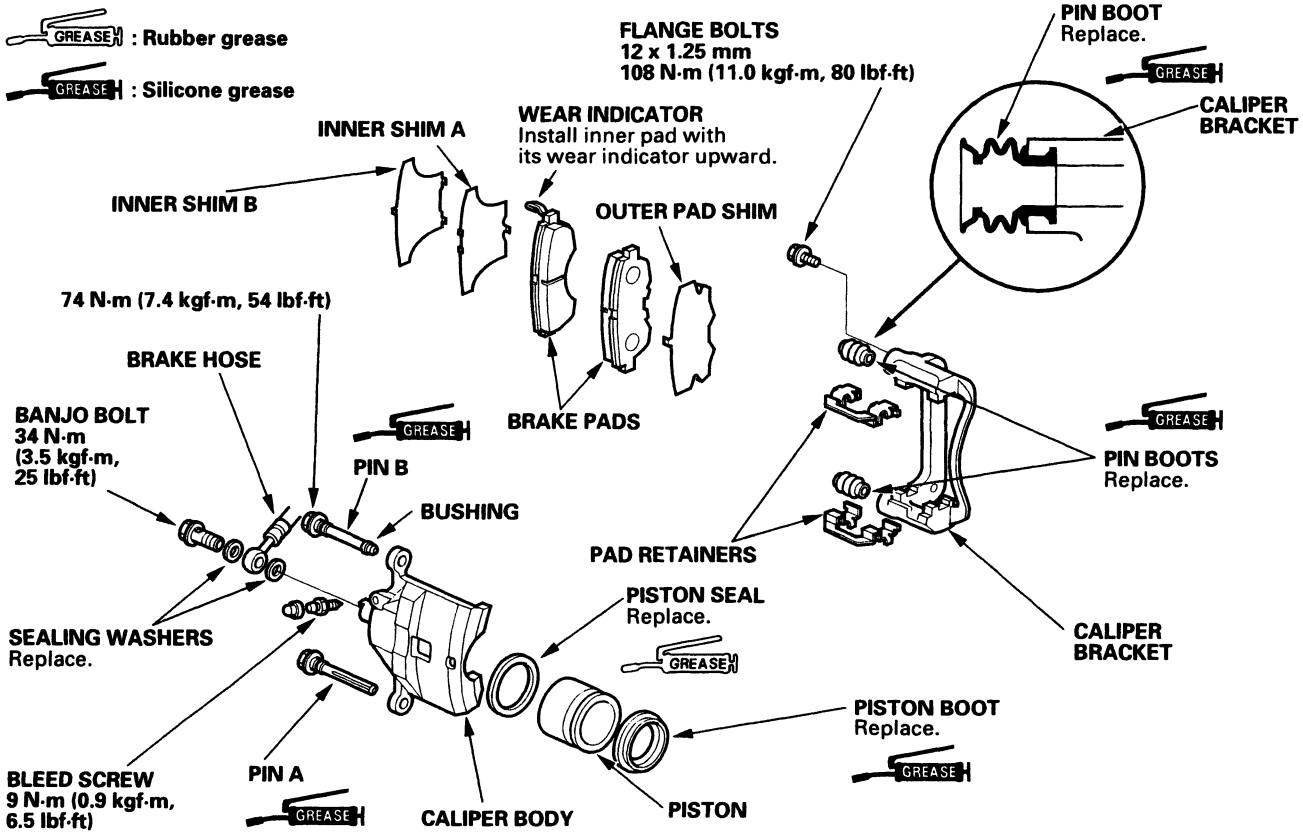

BACK

Master Cylinder Replacement

NOTICE
Do not spill brake fluid on the vehicle; it may damage the paint; if brake fluid does contact the paint, wash it off immediately with water.

1. Remove the 8 mm flange nuts (A).

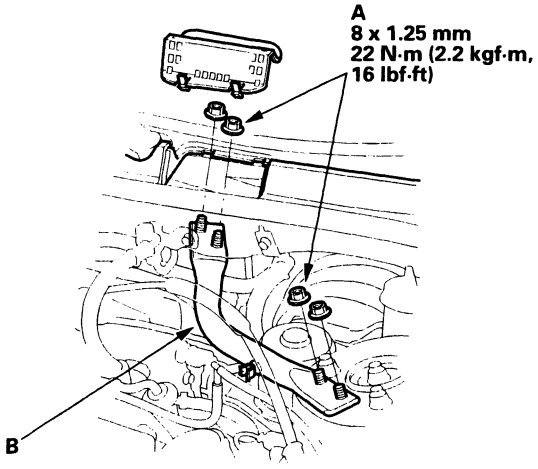

2. Remove the strut brace (B).

3. Disconnect the brake fluid level switch connectors (A), and remove the reservoir cap (B).

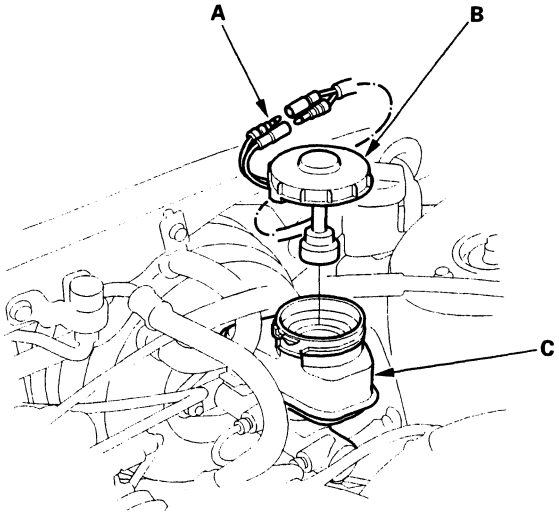

4. Remove the brake fluid from the master cylinder reservoir (C) with a syringe.

5. Disconnect the brake lines (A) from the master cylinder. To prevent spills, cover the hose joints with rags or shop towels.

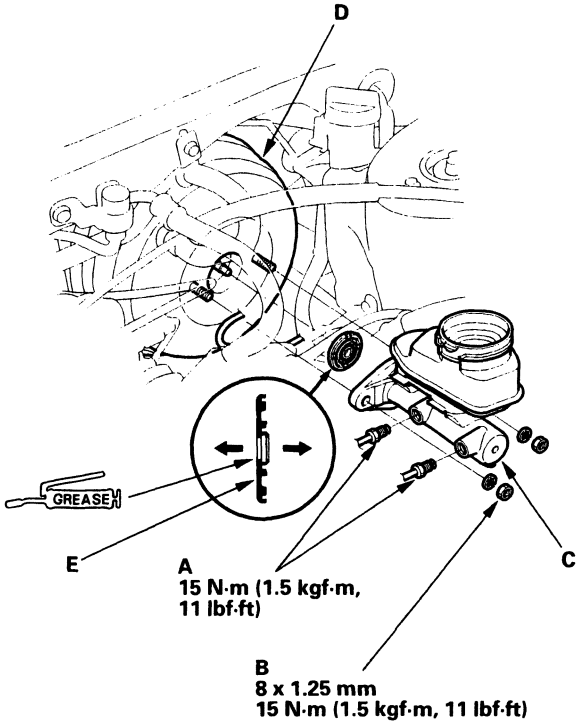

6. Remove the master cylinder mounting nuts (B) and washers.

7. Remove the master cylinder (C) from the brake booster (D). Be careful not to bend or damage the brake lines when removing the master cylinder.

8. Remove the rod seal (E) from the brake booster.

9. Install the master cylinder in the reverse order of removal, and note these items:

   - Replace all rubber parts with new ones whenever removed.
   - Coat the lip of the new rod seal with recommended seal grease in the master cylinder set.
   - Install the rod seal onto the brake booster with its grooved side toward the master cylinder.

BACK

Master Cylinder Inspection

NOTE:
- Before reassembling, check that all parts are free of dust and other foreign particles.
- Do not try to disassemble the master cylinder assembly. Replace the master cylinder assembly with a new part if necessary.
- Do not allow dirt or foreign matter to contaminate the brake fluid.

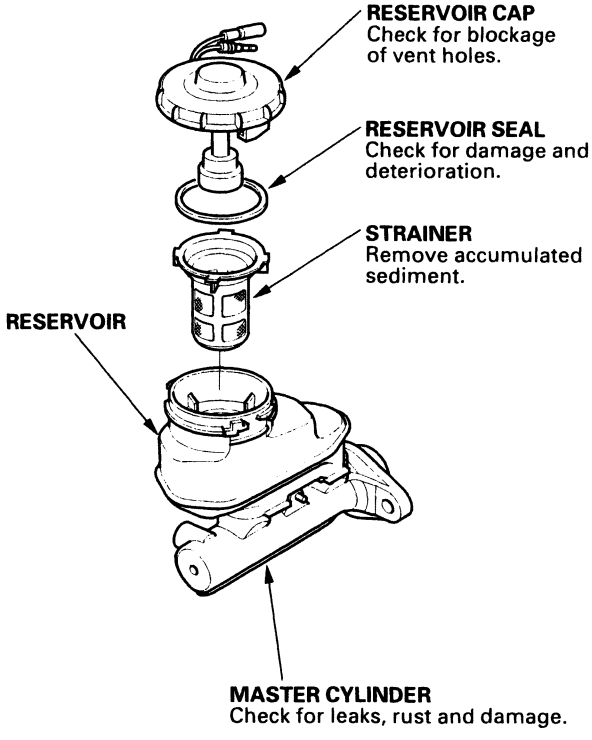

Master Cylinder Pushrod Clearance Adjustment

Special Tools Required
Pushrod Adjustment Gauge 07JAG-SD40100

NOTE: Master cylinder pushrod-to-piston clearance must be checked and adjustments made, if necessary, before installing the master cylinder.

1. Set the special tool (A) on the master cylinder body (B), push in the center shaft (C) until the top of it contacts the end of the secondary piston (D) by turning the adjusting nut (E).

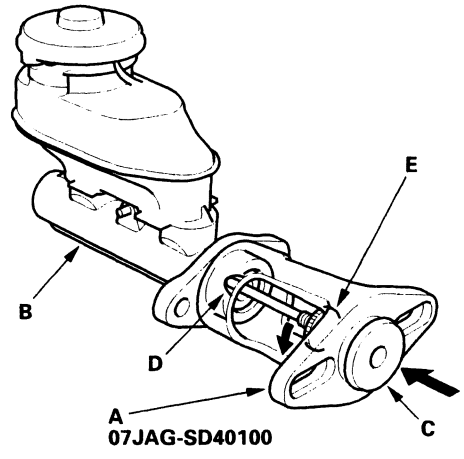

2. Without disturbing the center shaft's position, install the special tool (A) backwards on the booster.

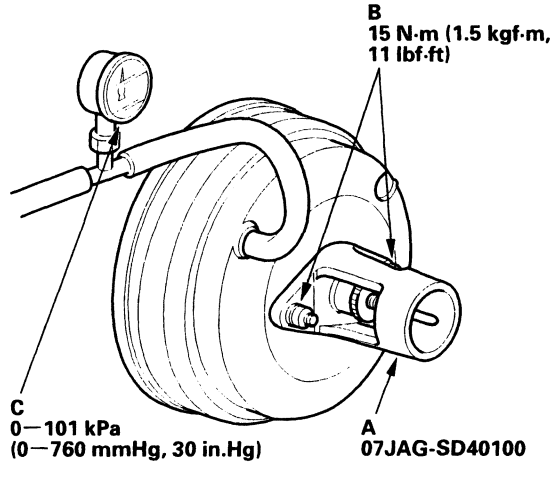

3. Install the master cylinder nuts (B), and tighten to the specified torque.

4. Connect the booster in-line with a vacuum gauge (C) 0—101 kPa (0—760 mmHg, 30 in.Hg) to the booster's engine vacuum supply, and maintain an engine speed that will deliver 66 kPa (500 mmHg, 20 in.Hg) of vacuum.

(cont'd)

Master Cylinder Pushrod Clearance Adjustment (cont'd)

5. With a feeler gauge (A), measure the clearance between the gauge body and the adjusting nut (B) as shown.
   If the clearance between the gauge body and adjusting nut is 0.4 mm (0.02 in.), the pushrod-to-piston clearance is 0 mm. However, if the clearance between the gauge body and adjusting nut is 0 mm, the pushrod-to-piston clearance is 0.4 mm (0.02 in.) or more. Therefore it must be adjusted and rechecked.

   Clearance: 0 – 0.4 mm (0 – 0.02 in.)

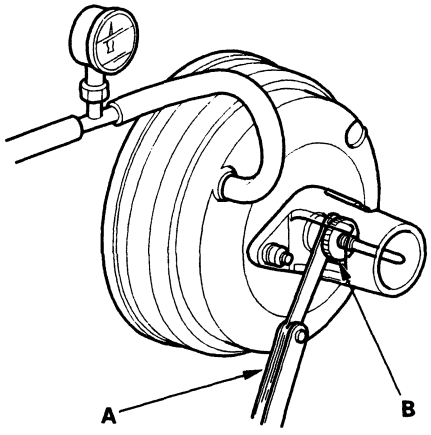

6. If the clearance is incorrect, loosen the star locknut (A) and turn the adjuster (B) in or out to adjust.
   - Adjust the clearance while the specified vacuum is applied to the booster.
   - Hold the clevis (C) while adjusting.

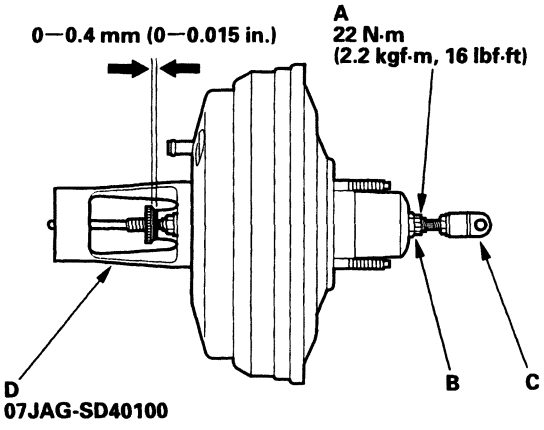

7. Tighten the star locknut securely.

8. Remove the special tool (D).

9. Check the pushrod length (A) as shown if the booster is removed. If the length is incorrect, loosen the pushrod locknut (B), and turn the clevis (C) in or out to adjust.

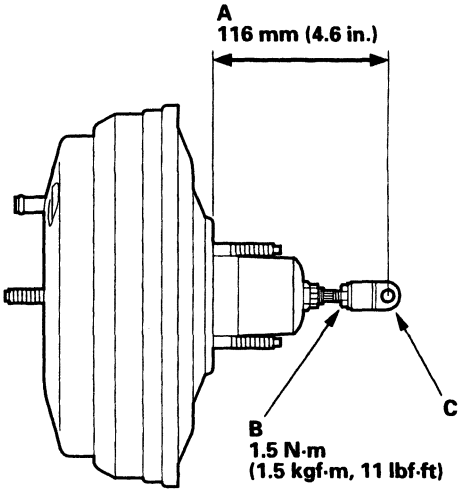

10. Install the master cylinder (see page 19-14).

BACK

Brake Booster Test

Functional Test

1. With the engine stopped, press the brake pedal several times to deplete the vacuum reservoir, then press the pedal hard and hold it for 15 seconds. If the pedal sinks, either the master cylinder is bypassing internally, or the brake system (master cylinder, lines, modulator, proportioning valve, or caliper) is leaking.

2. Start the engine with the pedal pressed. If the pedal sinks slightly, the vacuum booster is operating normally. If the pedal height does not vary, the booster or check valve is faulty.

3. With the engine running, press the brake pedal lightly. Apply just enough pressure to hold back automatic transmission creep. If the brake pedal sinks more than 10 mm (3/8 in.) in 3 minutes, the master cylinder is faulty. A slight change in pedal height when the A/C compressor cycles on and off is normal. (The A/C compressor load changes the vacuum available to the booster.)

Leak Test

1. Press the brake pedal with the engine running, then stop the engine. If the pedal height does not vary while pressed for 30 seconds, the vacuum booster is OK. If the pedal rises, the booster is faulty.

2. With the engine stopped, press the brake pedal several times using normal pressure. When the pedal is first pressed, it should be low. On consecutive applications, the pedal height should gradually rise. If the pedal position does not vary, check the booster check valve.

Booster Check Valve Test

1. Disconnect the brake booster vacuum hose (check valve built-in) (A) at the booster (B).

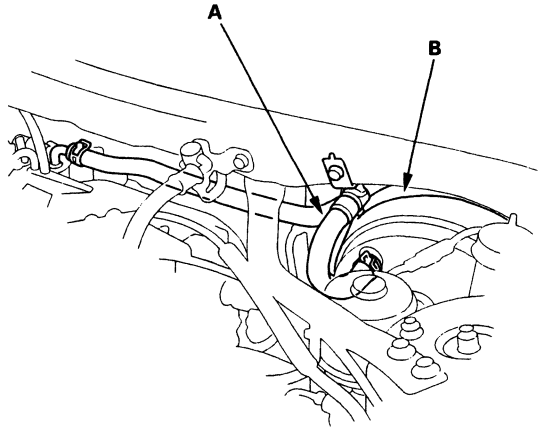

2. Start the engine, and let it idle. There should be vacuum available. If no vacuum is available, the check valve is not working properly. Replace the brake booster vacuum hose and check valve, and retest.

Brake Booster Replacement

1. Remove the master cylinder (see page 19-14).

2. Disconnect the vacuum hose (A) from the brake booster (B), then remove the vacuum hose bracket (C).

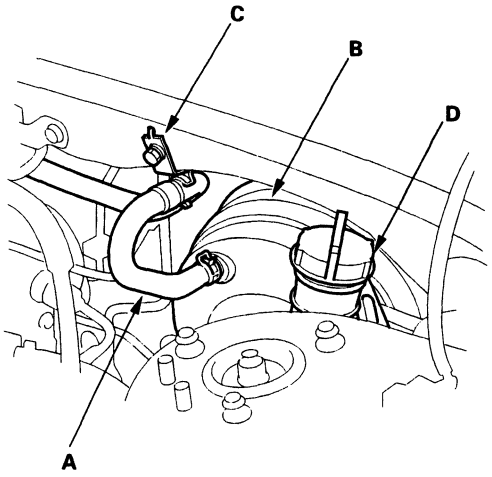

3. For M/T model only, remove the clutch reservoir (D) and reservoir bracket. Do not disconnect the clutch hose from the reservoir.

4. Remove the IAT sensor.

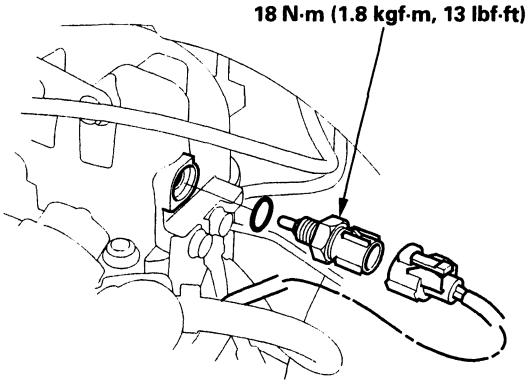

5. Remove the cotter pin (A) and joint pin (B).

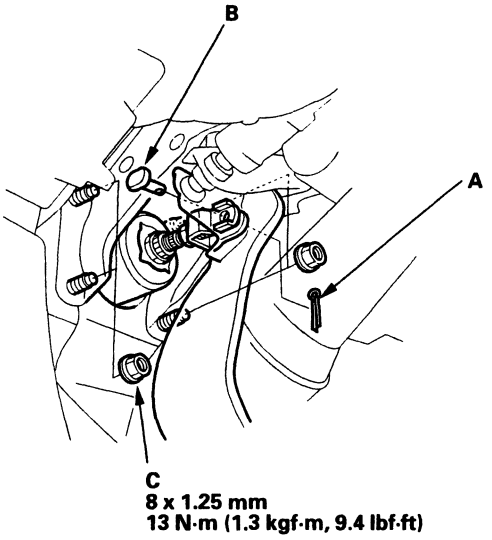

6. Remove the four booster mounting nuts (C).

7. Pull the brake booster (A) forward, then turn it to the right until the clevis (B) is clear of the bulkhead (C).

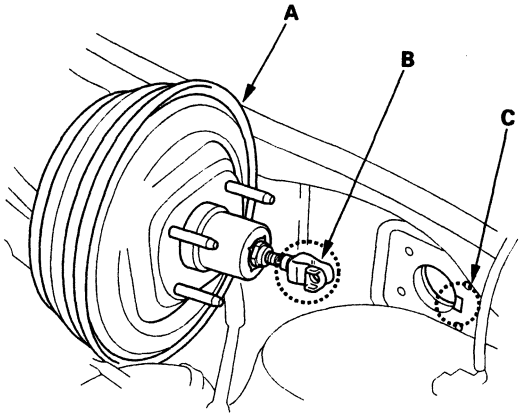

8. Remove the brake booster from the engine compartment.

9. Install the brake booster in the reverse order of removal, and note these items:

   - Adjust the pushrod length before installing the brake booster.
   - After installation, adjust brake pedal height and brake pedal free play (see page 19-5).
   - Replace the IAT sensor O-ring and the booster clevis cotter pin.

BACK

Rear Brake Pads Inspection and Replacement

⚠CAUTION

Frequent inhalation of brake pad dust, regardless of material composition, could be hazardous to your health.
- Avoid breathing dust particles.
- Never use an air hose or brush to clean brake assemblies. Use an OSHA-approved vacuum cleaner.

1. Raise the rear of the vehicle, and make sure it is securely supported. Remove the rear wheel.

2. Release the parking brake.

3. Remove the brake hose (A) from the suspension arm by removing the mounting bolt (B). Thoroughly clean the outside of the caliper to prevent dust and dirt from entering inside. Support the caliper with a piece of wire so that it does not hang from the brake hose.

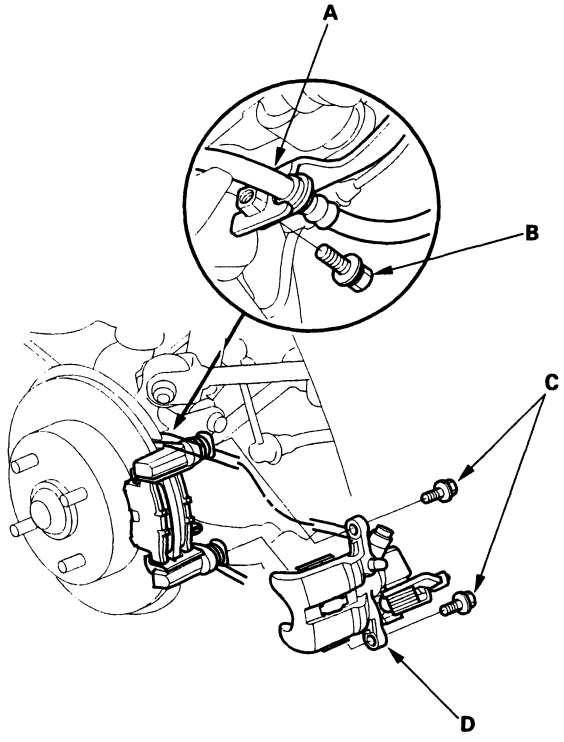

4. Remove the two caliper bolts (C) and caliper (D) from the bracket.

5. Remove the pad shim (A) and brake pads (B).

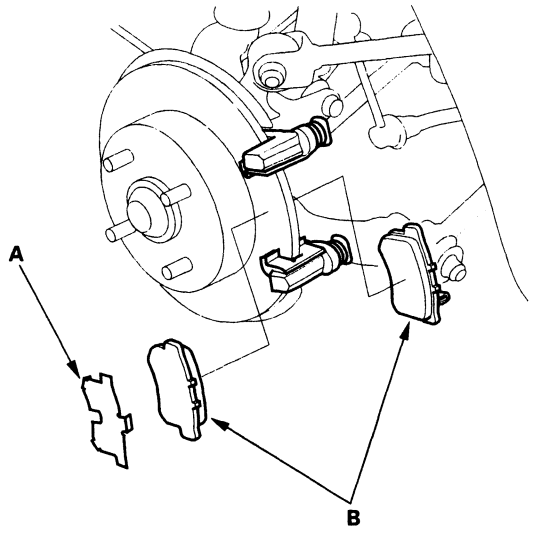

6. Using vernier calipers, measure the thickness of each brake pad lining. Measurement does not include pad backing plate (A) thickness.

Brake Pad Thickness:
Standard: 8.5 – 9.5 mm (0.33 – 0.37 in.)
Service Limit: 1.6 mm (0.06 in.)

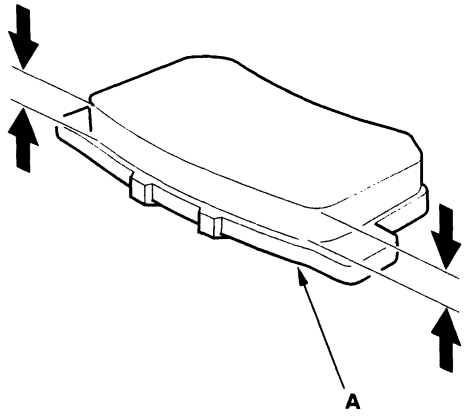

(cont'd)

Rear Brake Pads Inspection and Replacement (cont'd)

7. Remove the pad retainers.

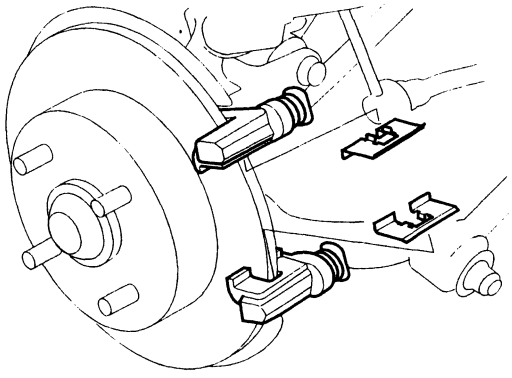

8. Clean the caliper thoroughly; remove any rust, and check for grooves and cracks.

9. Check the brake disc for damage and cracks.

10. Install the pad retainers.

11. Apply Molykote M77 grease to the pad side of the shim (A). Wipe excess grease off the shim. Contaminated brake discs or pads reduce stopping ability. Keep grease off the discs and pads.

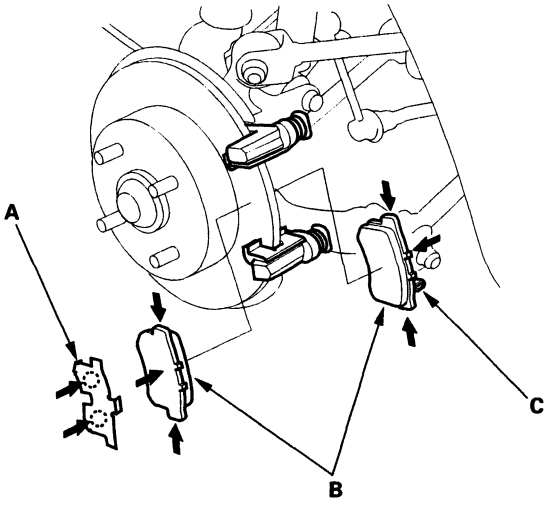

12. Install the brake pads (B) and pad shim on the caliper bracket. Install the inner pad with its wear indicator (C) facing downward.

    If you are reusing the pads, always reinstall the brake pads in their original positions to prevent a momentary loss of braking efficiency.

13. Rotate the caliper piston (A) clockwise into the cylinder, then align the cutout (B) in the piston with the tab (C) on the inner pad by turning the piston back. Lubricate the boot with rubber grease to avoid twisting the piston boot. If the piston boot is twisted, back it out so it is positioned properly.

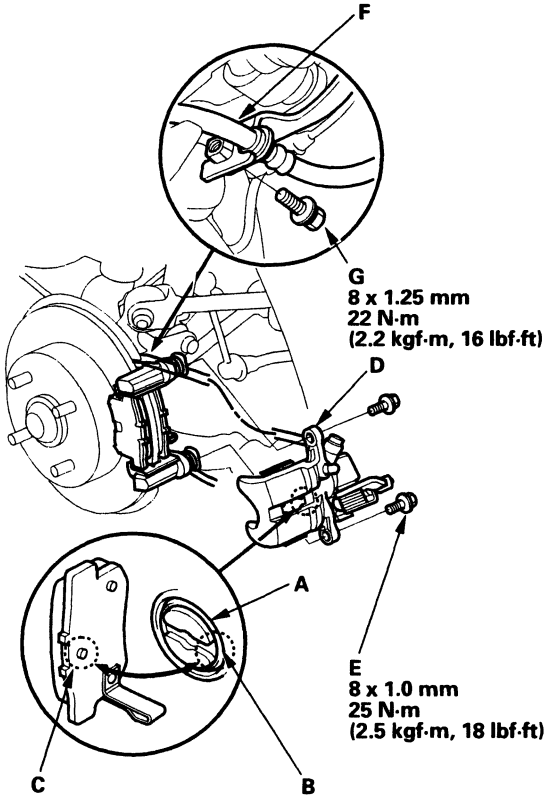

14. Install the brake caliper (D).

15. Install and torque the caliper bolts (E) to proper specification.

16. Install the brake hose (F) onto the suspension arm with the mounting bolt (G).

17. After installation, check for leaks at hose and line joints and connections, and retighten if necessary.

18. Press the brake pedal several times to make sure the brakes work, then test-drive.

    NOTE: Engagement of the brake may require a greater pedal stroke immediately after the brake pads have been replaced as a set. Several applications of the brake pedal will restore the normal pedal stroke.

BACK

Rear Brake Disc Inspection

Runout

1. Raise the rear of the vehicle, and make sure it is securely supported.

2. Remove the brake pads (see page 19-19).

3. Inspect the disc surface for damage and cracks. Clean the disc thoroughly, and remove all rust.

4. Use wheel nuts and suitable flat washers (A) to hold the disc securely against the hub, then mount a dial indicator (B) as shown, and measure the runout at 10 mm (0.4 in.) from the outer edge of the disc.

   Brake Disc Runout:
   Service Limit: 0.10 mm (0.004 in.)

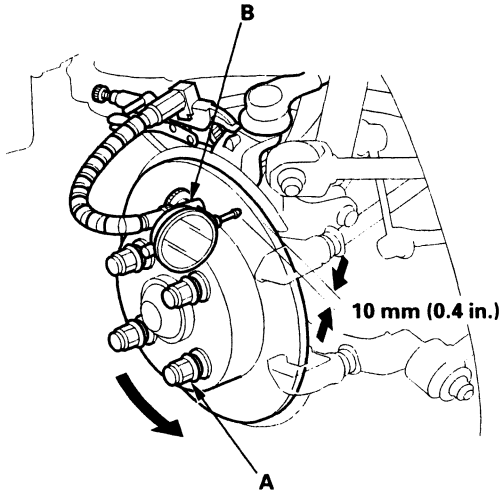

5. If the disc is beyond the service limit, refinish the brake disc.

   Max. Refinishing Limit: 8.0 mm (0.31 in.)

   NOTE: A new disc should be refinished if its runout is greater than 0.10 mm (0.004 in.).

Thickness and Parallelism

1. Loosen the rear wheel nuts slightly, then raise the vehicle, and make sure it is securely supported. Remove the rear wheels.

2. Remove the brake pads (see page 19-19).

3. Using a micrometer (A), measure disc thickness at eight points, approximately 45° apart and 10 mm (0.4 in.) in from the outer edge of the disc. Replace the brake disc if the smallest measurement is less than the max. refinishing limit.

   Brake Disc Thickness:
   Standard: 8.9 – 9.1 mm (0.350 – 0.358 in.)
   Max. Refinishing Limit: 8.0 mm (0.31 in.)
   Brake Disc Parallelism: 0.015 mm (0.0006 in.) max.

   This is the maximum allowable difference between the thickness measurements.

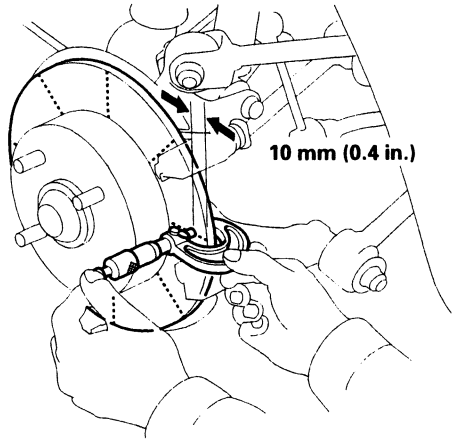

4. If the disc is beyond the service limit for parallelism, refinish the brake disc.

   NOTE: If the brake disc is beyond the service limit for refinishing, replace it (see page 18-22).

Rear Brake Caliper Overhaul

⚠CAUTION

Frequent inhalation of brake pad dust, regardless of material composition, could be hazardous to your health.
- Avoid breathing dust particles.
- Never use an air hose or brush to clean brake assemblies. Use an OSHA-approved vacuum cleaner.

Remove, disassemble, inspect, reassemble, and install the caliper and note these items:

- Do not spill brake fluid on the vehicle; it may damage the paint; if brake fluid gets on the paint, wash it off immediately with water.
- Clean all parts in brake fluid and air dry; blow out all passages with compressed air.
- Before reassembling, check that all parts are free of dirt and other foreign particles.
- Replace parts with new ones as specified in the illustration.
- Make sure no dirt or other foreign matter gets into the brake fluid.
- Make sure no grease or oil gets on the brake discs or pads.
- When reusing pads, always reinstall them in their original positions to prevent loss of braking efficiency.
- Do not reuse drained brake fluid.
- Always use Honda DOT 3 Brake Fluid. Non-Honda brake fluid can cause corrosion and shorten the life of the system.
- Coat the piston, piston seal groove, and caliper bore with clean brake fluid.
- Replace all rubber parts with new ones.
- After installing the caliper, check the brake hose and line for leaks, interference, and twisting.

Sedan:

GREASE : Silicone grease

GREASE : Rubber grease

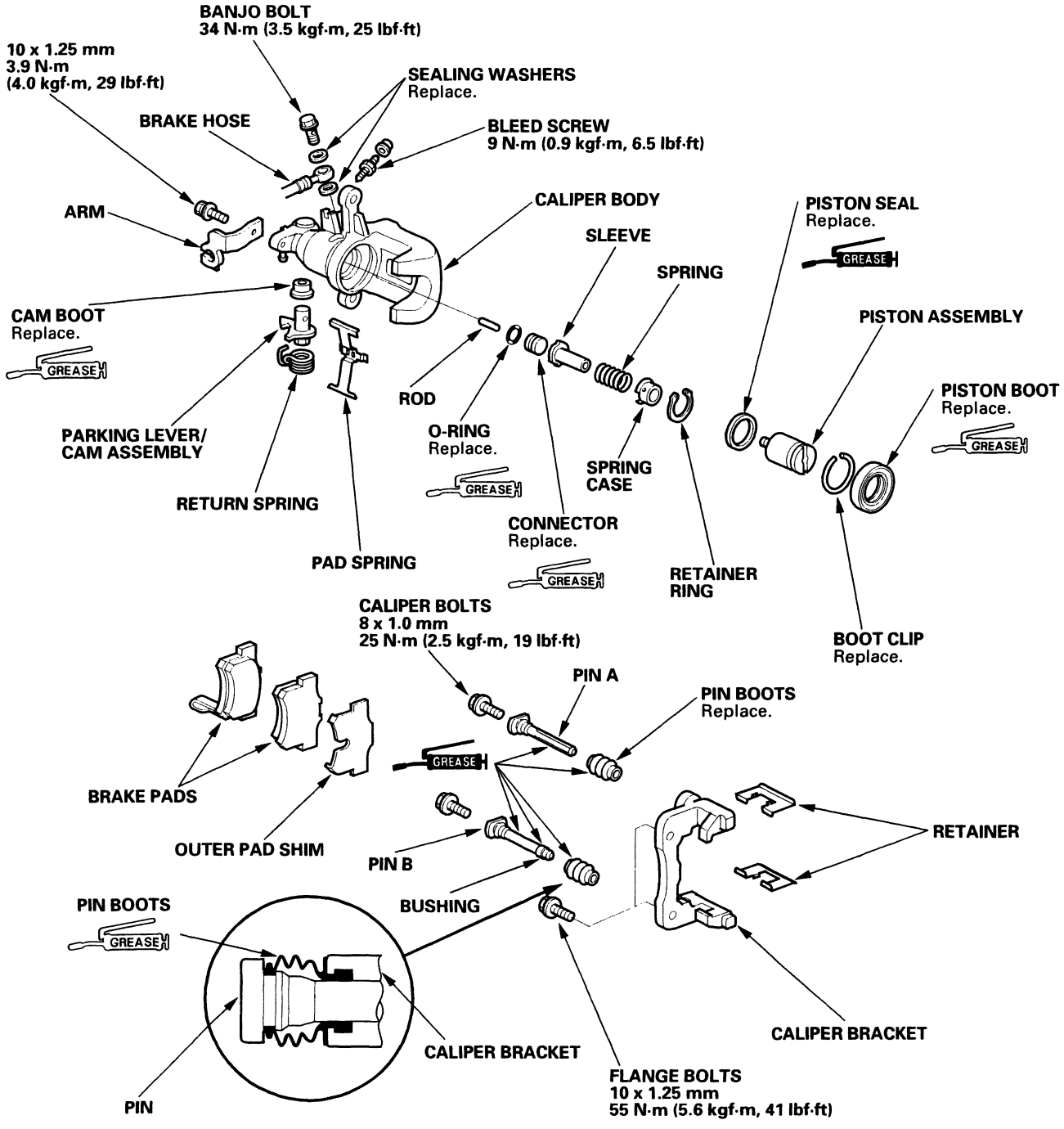

(cont'd)

Rear Brake Caliper Overhaul (cont'd)

Coupe:

GREASE : Silicone grease

GREASE : Rubber grease

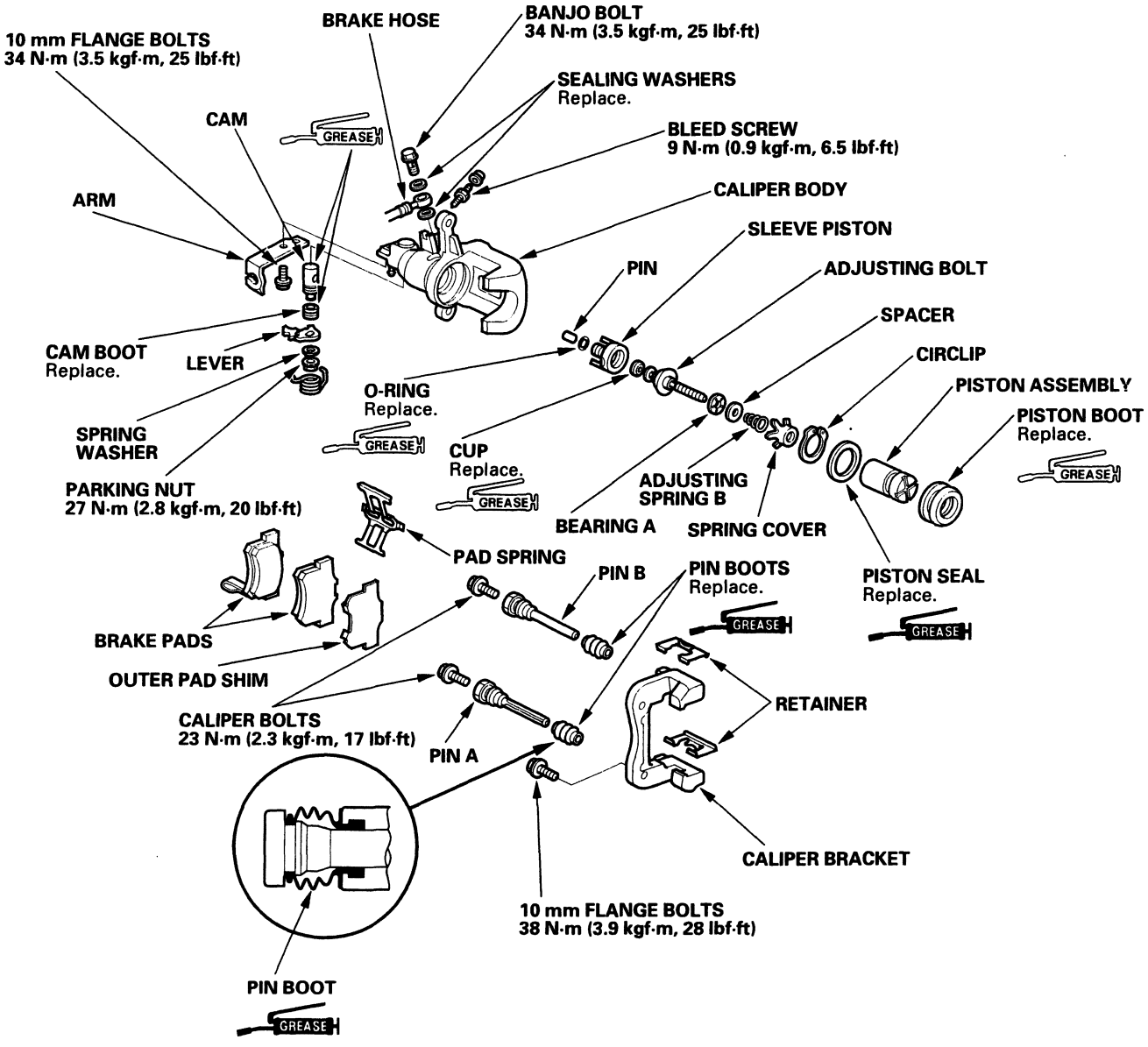

BACK

Rear Drum Brake Inspection

⚠CAUTION

Frequent inhalation of brake pad dust, regardless of material composition, could be hazardous to your health.
- Avoid breathing dust particles
- Never use an air hose or brush to clean brake assemblies. Use an OSHA-approved vacuum cleaner.

NOTE:
- Contaminated brake linings or drums reduce stopping ability.
- Block the front wheels before jacking up the rear of the vehicle.

1. Raise the rear of the vehicle, and make sure it is securely supported.

2. Release the parking brake, and remove the rear brake drum (see page 19-27).

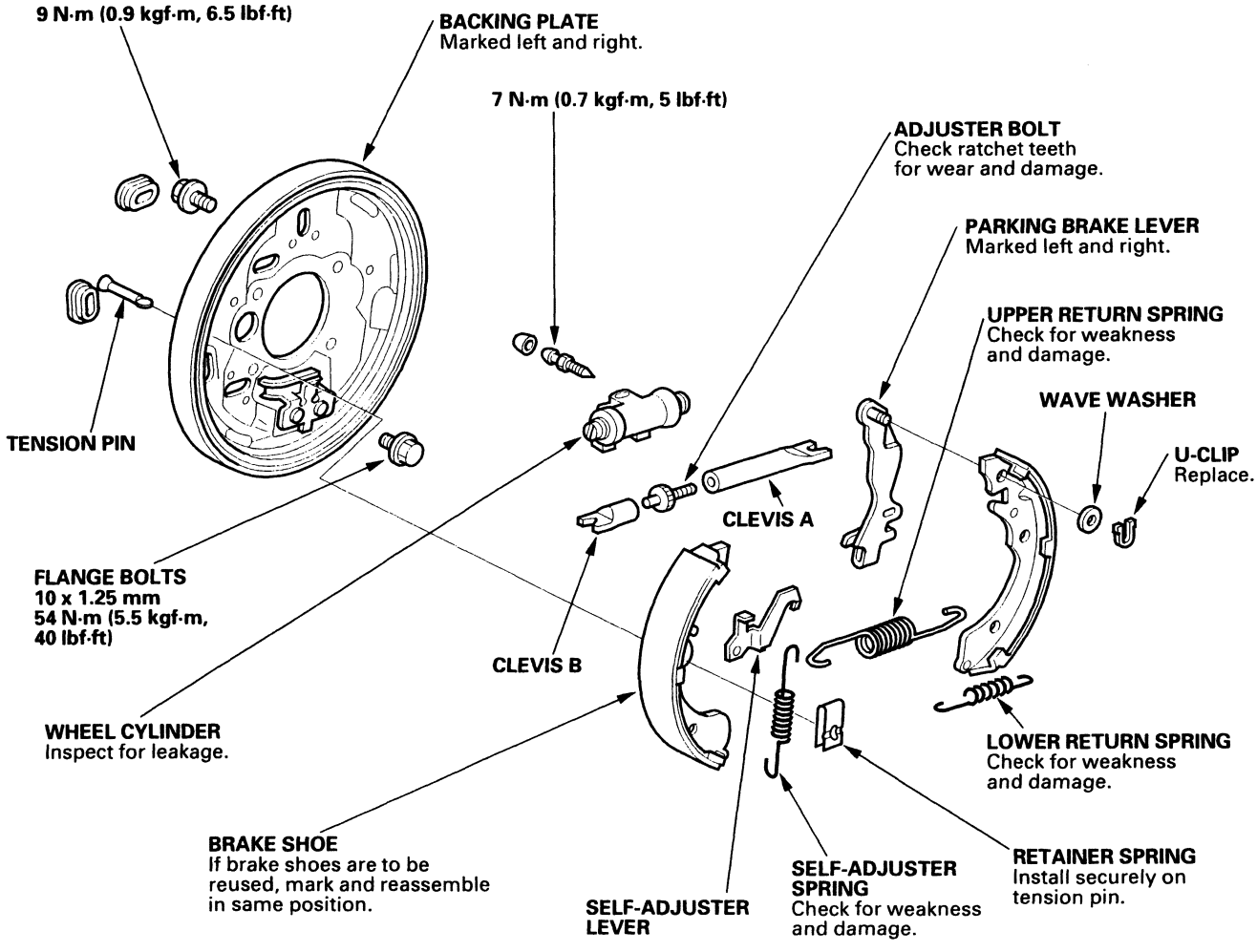

(cont'd)

Rear Drum Brake Inspection (cont'd)

3. Check the wheel cylinder (A) for leakage.

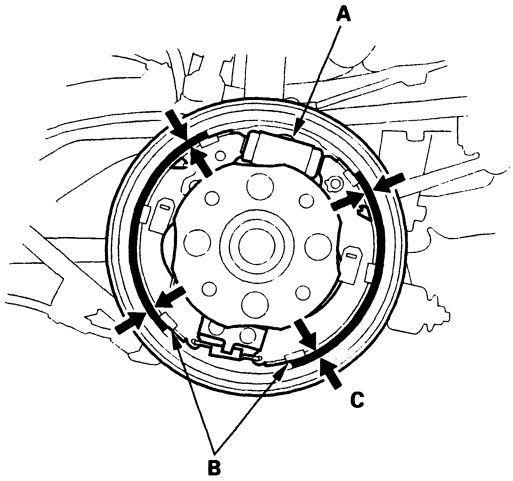

4. Check the brake linings (B) for cracking, glazing, wear, and contamination.

5. Measure the brake lining thickness (C). Measurement does not include brake shoe thickness.

   Brake Lining Thickness:
   Standard: 4.5 mm (0.18 in.)
   Service Limit: 2.0 mm (0.08 in.)

6. If the brake lining thickness is less than the service limit, replace the brake shoes as a set.

7. Check the bearings in the hub unit for smooth operation. If it requires servicing, replace it (see step 1 on page 18-23).

8. Measure the inside diameter of the brake drum with inside vernier calipers.

   Drum Inside Diameter:
   Standard: 219.9 – 220.0 mm (8.657 – 8.661 in.)
   Service Limit: 221.0 mm (8.700 in.)

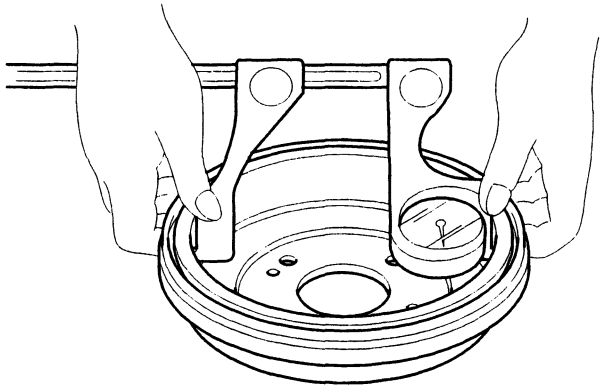

9. If the inside diameter of the brake drum is more than the service limit, replace the brake drum.

10. Check the brake drum for scoring, grooves, and cracks.

BACK

Rear Brake Shoes Replacement

⚠CAUTION

Frequent inhalation of brake pad dust, regardless of material composition, could be hazardous to your health.
- Avoid breathing dust particles.
- Never use an air hose or brush to clean brake assemblies. Use an OSHA-approved vacuum cleaner.

1. Disengage the upper return spring (A) with the tool (B).

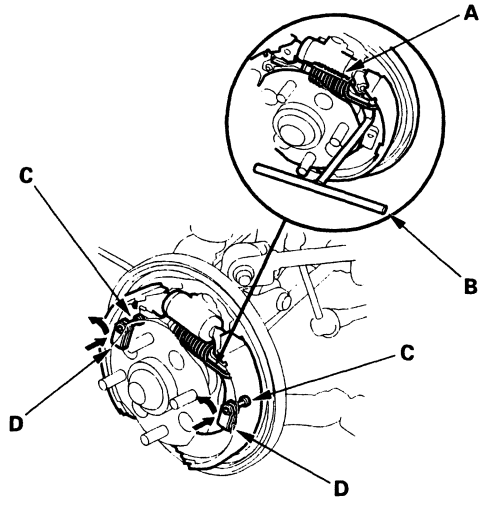

2. Remove the tension pins (C) by pushing the retainer spring (D) and turning them.

3. Lower the brake shoe assembly (A), and remove the lower return spring (B). Make sure not to damage the dust cover on the wheel cylinder.

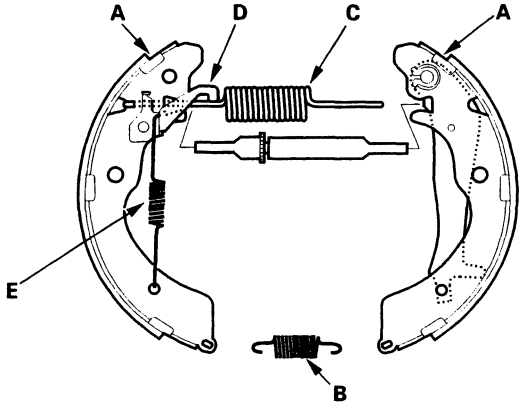

4. Disconnect the parking brake cable from the parking brake lever.

5. Remove the brake shoe assembly.

6. Remove the upper return spring (C), self-adjuster lever (D), and self-adjuster spring (E), and separate the brake shoes.

7. Remove the wave washer (A), parking brake lever (B), and pivot pin (C) from the brake shoe (D) by removing the U-clip (E).

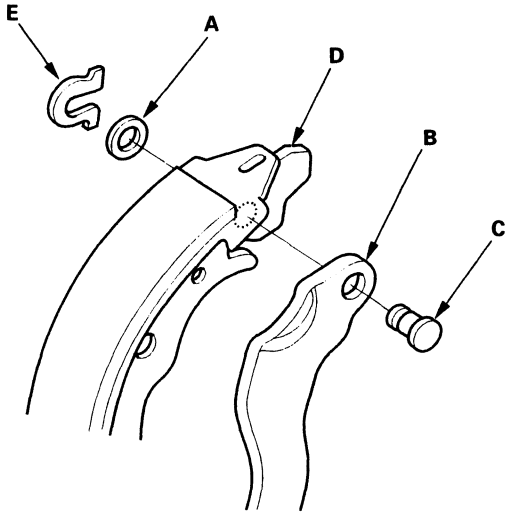

8. Apply brake cylinder grease (P/N: 08733-B0202) or equivalent rubber grease to the sliding surface of the pivot pin (A), and insert the pin into the brake shoe.

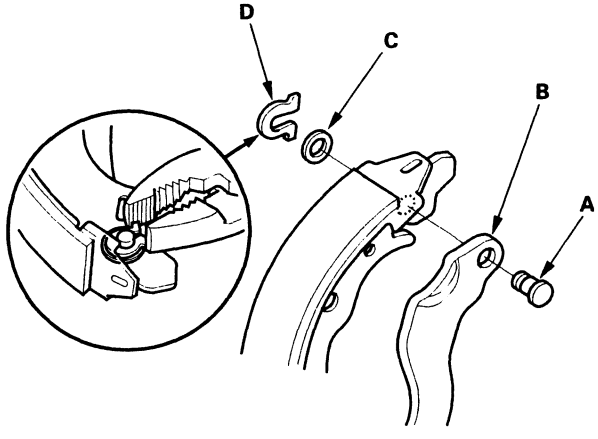

(cont'd)

Rear Brake Shoes Replacement (cont'd)

9. Install the parking brake lever (B) and wave washer (C) on the pivot pin, and secure with a new U-clip (D).
   - Install the wave washer with its convex side facing out.
   - Pinch the U-clip securely to prevent the pivot pin from coming out from the brake shoe.

10. Connect the parking brake cable to the parking brake lever.

11. Clean the threaded portions of clevises A and B. Coat the threads of the clevises with grease. To shorten the clevises, turn the adjuster bolt (C).

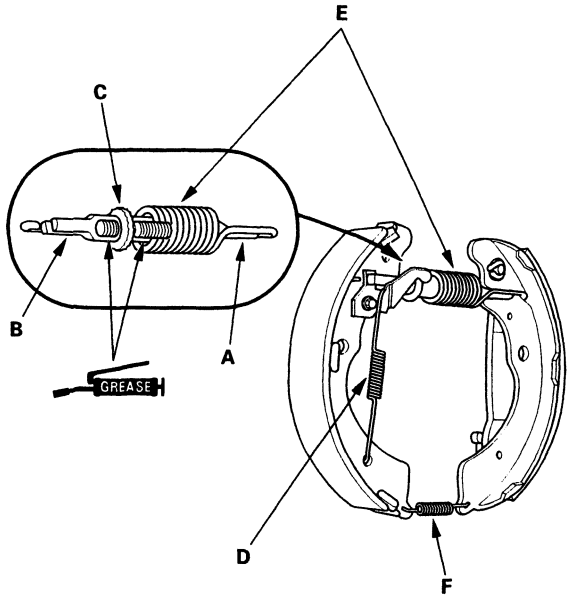

12. Hook the self-adjuster spring (D) to the adjuster lever first, then to the brake shoe.

13. Install the clevises and upper return spring (E), noting the installation direction. Be careful not to damage the wheel cylinder dust covers.

14. Install the lower return spring (F).

15. Apply brake cylinder grease (P/N: 08733-B020E) or equivalent rubber grease to the sliding surfaces shown. Wipe off any excess. Don't get grease on the brake linings.

➡● Sliding surface

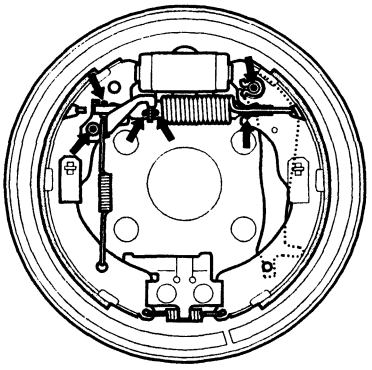

16. Apply Molykote 44MA to the brake shoe ends and opposite edges of the shoes shown. Wipe off any excess. Don't get grease on the brake linings.

➡● Opposite edge of the shoe
⇨○ Brake shoe ends (Shoe side ends and backing plate contact surface)

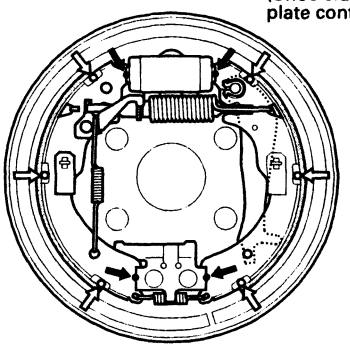

BACK

17. Install the brake shoes (A) onto the backing plate. Be careful not to damage the wheel cylinder dust covers.

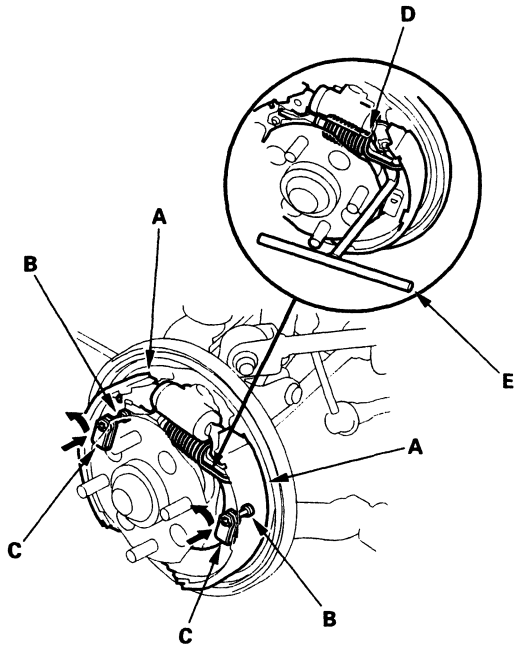

18. Install the tension pins (B) and the retainer springs (C).

19. Hook the upper return spring (D) with the tool (E).

20. Install the brake drum.

21. If the wheel cylinder has been removed, bleed the brake system (see page 19-7).

22. Press the brake pedal several times to set the self-adjusting brake.

23. Adjust the parking brake (see page 19-5).

Rear Wheel Cylinder Replacement

NOTE:
- Do not spill brake fluid on the vehicle; it may damage the paint; if brake fluid does contact the paint, wash it off immediately with water.
- To prevent spills, cover the hose joints with rags or shop towels.
- Use only a genuine Honda wheel cylinder special bolt.

1. Remove the brake shoes (see page 19-27).

2. Disconnect the brake line (A) from the wheel cylinder (B).

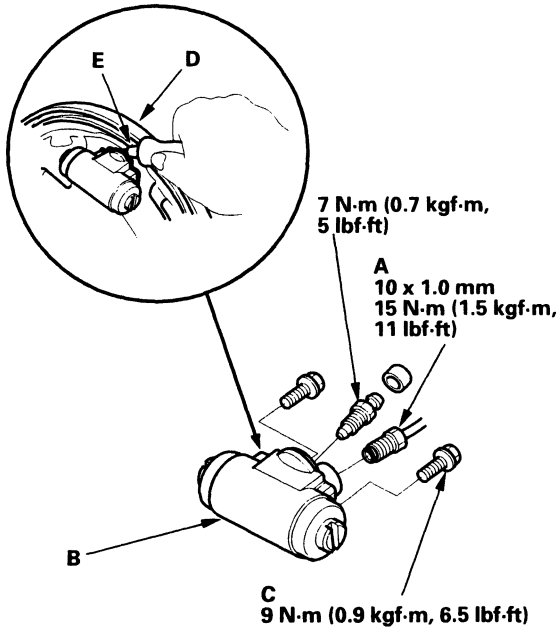

3. Remove the bolt (C) and the wheel cylinder from the backing plate.

4. Apply sealant (E) between the wheel cylinder (B) and backing plate (D), and install the wheel cylinder.

5. Install the removed parts in the reverse order of removal.

6. Fill the brake reservoir up, and bleed the brake system (see page 19-7).

7. After installation, check for a leak at the line joint, and retighten if necessary.

Conventional Brake Components

Brake Hoses and Lines Inspection

1. Inspect the brake hoses, for damage, deterioration, leaks, interference, and twisting.
2. Check the brake lines for damage, rusting, and leakage. Also check for bent brake lines.
3. Check for leaks at hose and line joints or connections, and retighten if necessary.
4. Check the master cylinder and ABS modulator unit for damage and leakage.

   NOTE: Replace the brake hose clip whenever the brake hose is serviced.

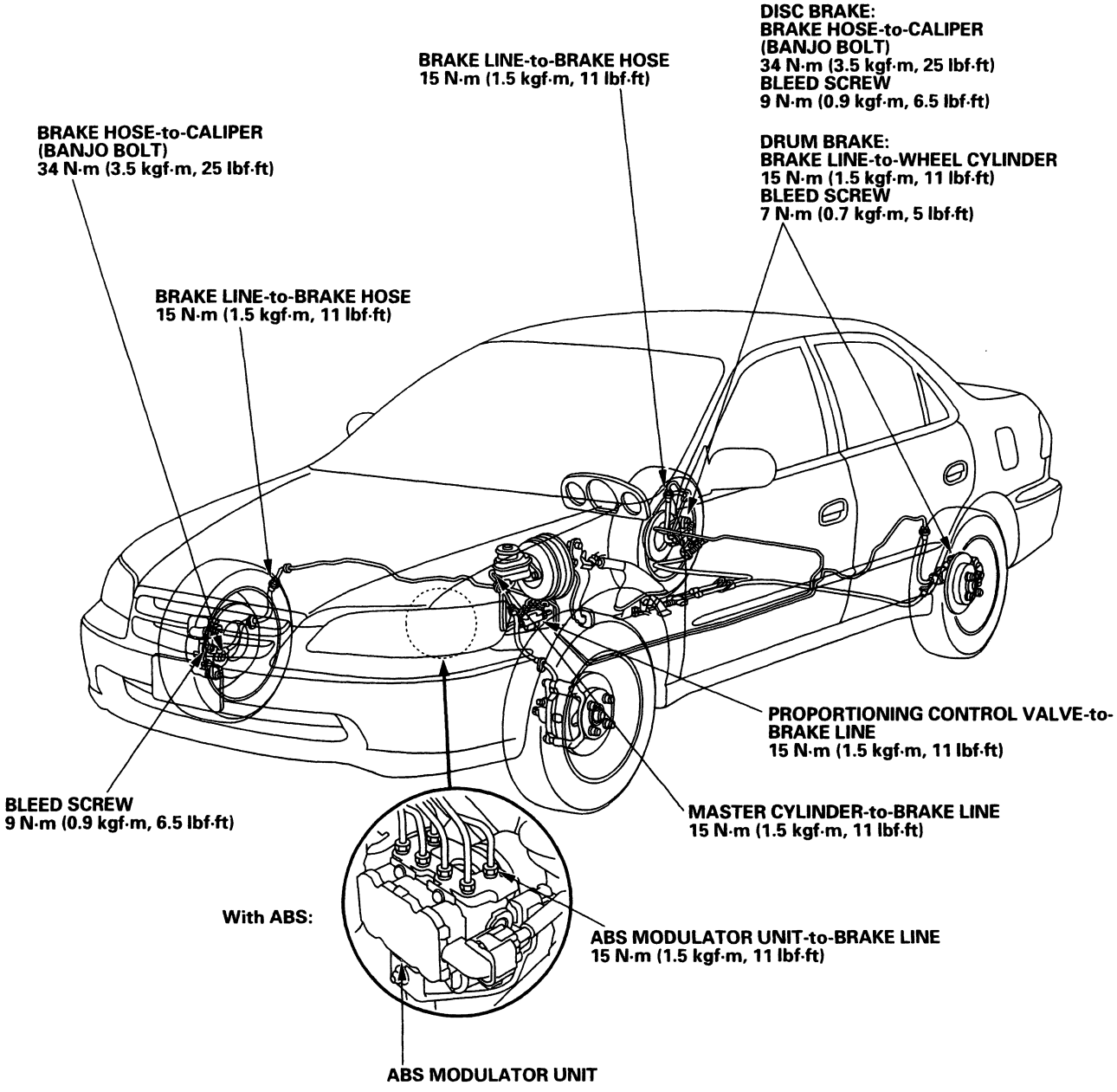

BACK

Brake Hose Replacement

NOTE:
- Before reassembling, check that all parts are free of dust and other foreign particles.
- Replace parts with new ones whenever specified to do so.
- Do not spill brake fluid on the vehicle; it may damage the paint; if brake fluid gets on the paint, wash it off immediately with water.

1. Replace the brake hose (A) if the hose is twisted, cracked, or if it leaks.

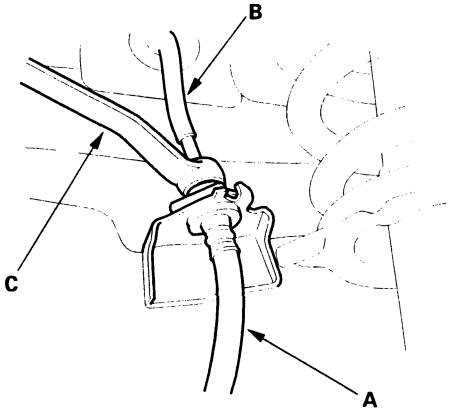

2. Disconnect the brake hose from the brake line (B) using a 10 mm flare-nut wrench (C).

3. Remove and discard the brake hose clip (A) from the brake hose (B).

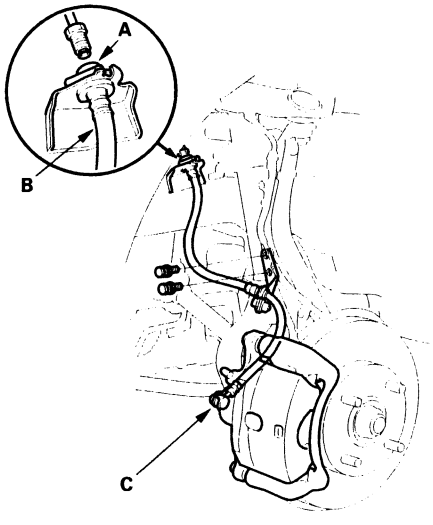

4. Remove the banjo bolt (C), and disconnect the brake hose from the caliper.

5. Remove the brake hose from the knuckle.

6. Install the brake hose (A) on the knuckle with 2 6 mm flange bolts (B) first, then connect the brake hose to the caliper with the banjo bolt (C) and new sealing washers (D).

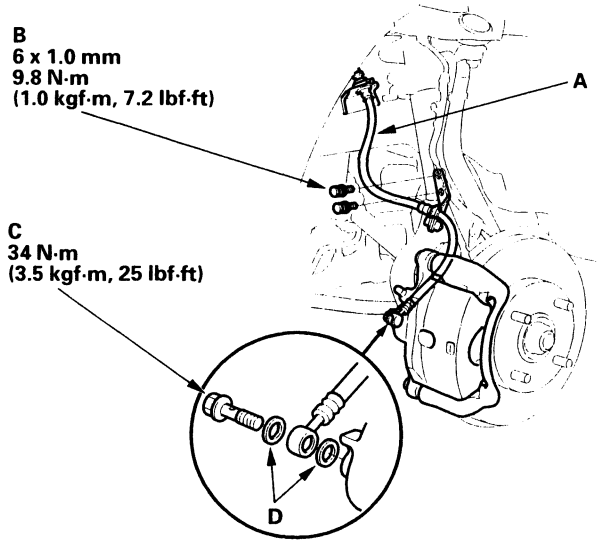

7. Install the brake hose (A) on the upper brake hose bracket (B) with a new brake hose clip (C).

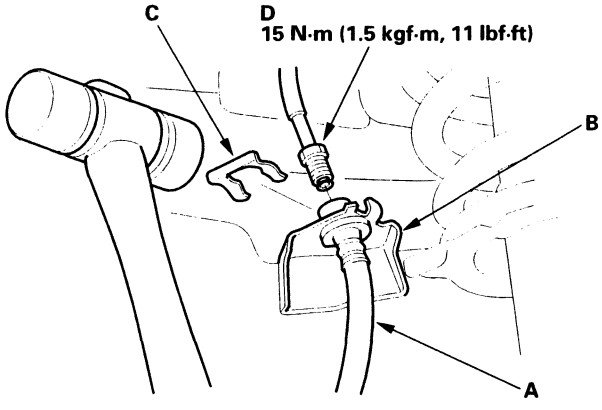

8. Connect the brake line (D) to the brake hose.

9. After installing the brake hose, bleed the brake system (see page 19-7).

10. Do the following checks:

    - Check the brake hose and line joint for leaks, and tighten if necessary.
    - Check the brake hoses for interference and twisting.

Parking Brake Cable Replacement

Exploded View

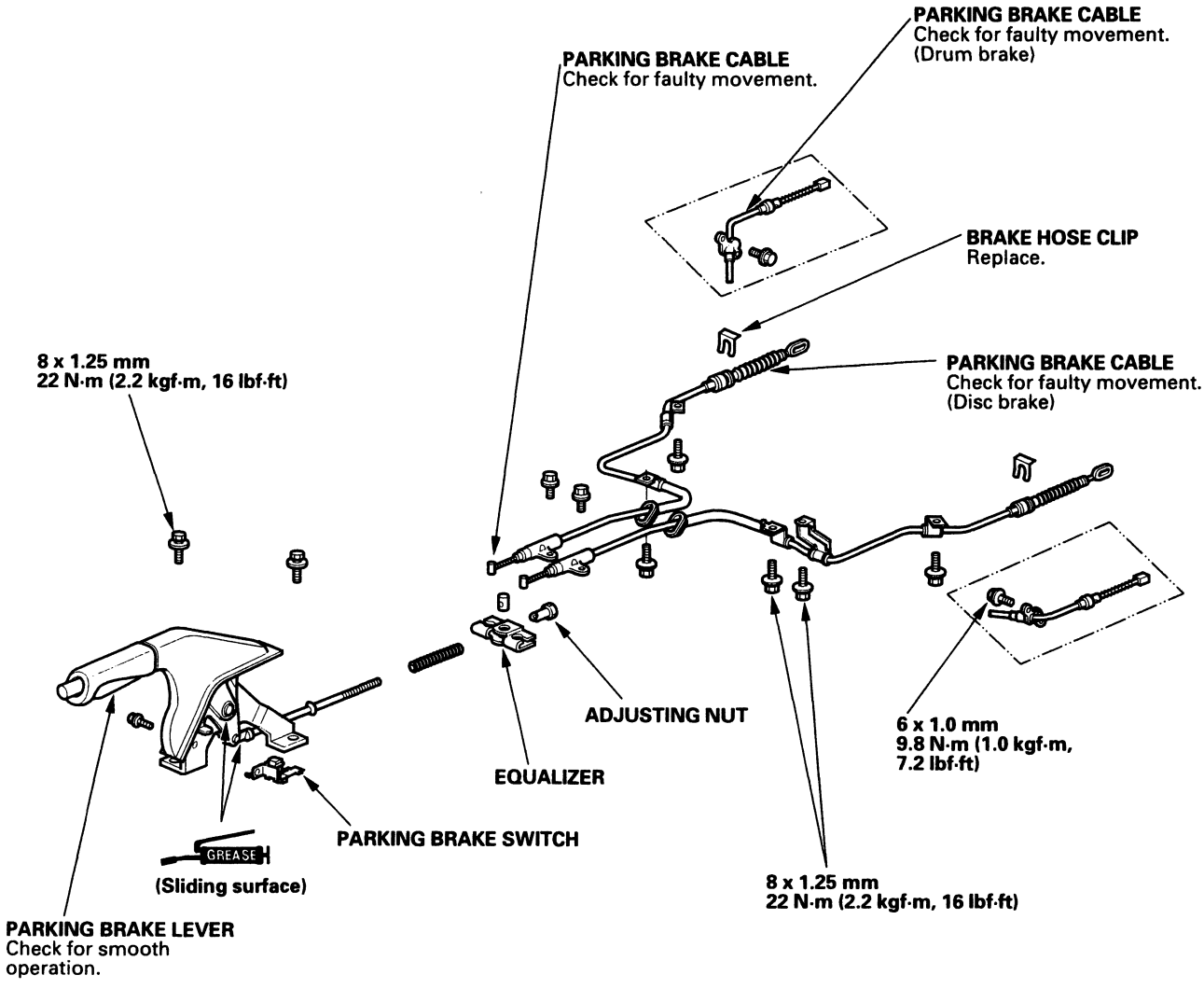

BACK

NOTE:
- The parking brake cables must not be bent or distorted. This will lead to stiff operation and premature failure.
- Refer to the Exploded View as needed during this procedure.

Rear Disc Brake: (EX Type)

1. Release the parking brake lever fully, and remove the brake hose clip (A) from the parking brake cable.

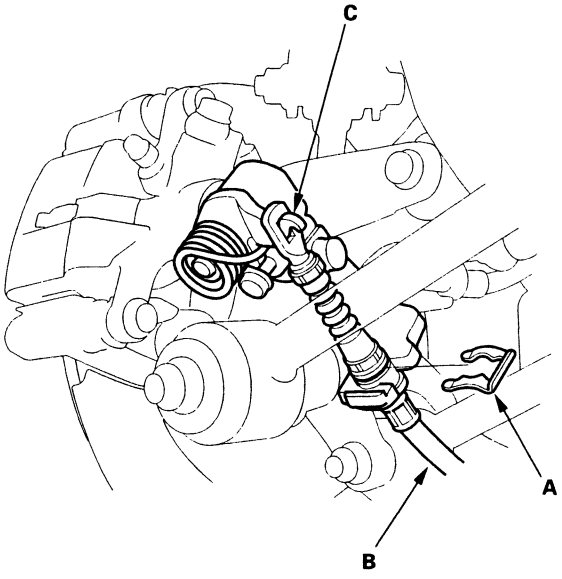

2. Disconnect the parking brake cable (B) from the lever (C).

Rear Drum Brake: (DX and LX Type)

1. Remove the brake shoe assembly (see page 19-27).
2. Remove the parking brake cable mounting bolts from the backing plate.
3. Remove the parking brake cable (A) from the backing plate (B) using a 12 mm offset wrench (C).

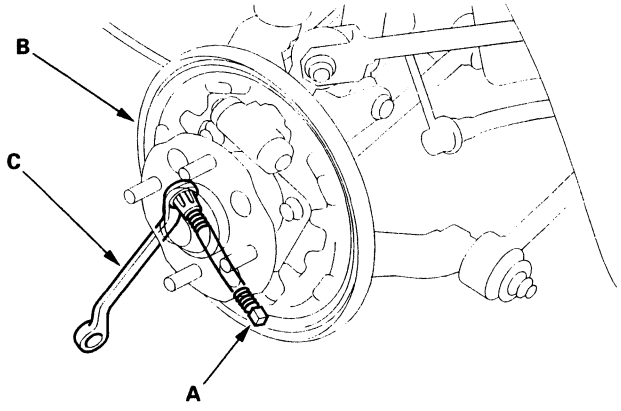

BACK

Brakes

Conventional Brake Components 19-1

ABS (Anti-lock Brake System) Components

Component Location Index 19-36
General Troubleshooting Information 19-37
DTC Troubleshooting Index 19-40
Sympton Troubleshooting Index 19-41
System Description 19-42
Circuit Diagram 19-50
DTC Troubleshooting 19-52
ABS Indicator Circuit Troubleshooting 19-67
Modulator Unit Removal and
Installation 19-69
ABS Control Unit Replacement 19-70
Wheel Sensor Inspection 19-70
Wheel Sensor Replacement 19-71

ABS Components

Component Location Index

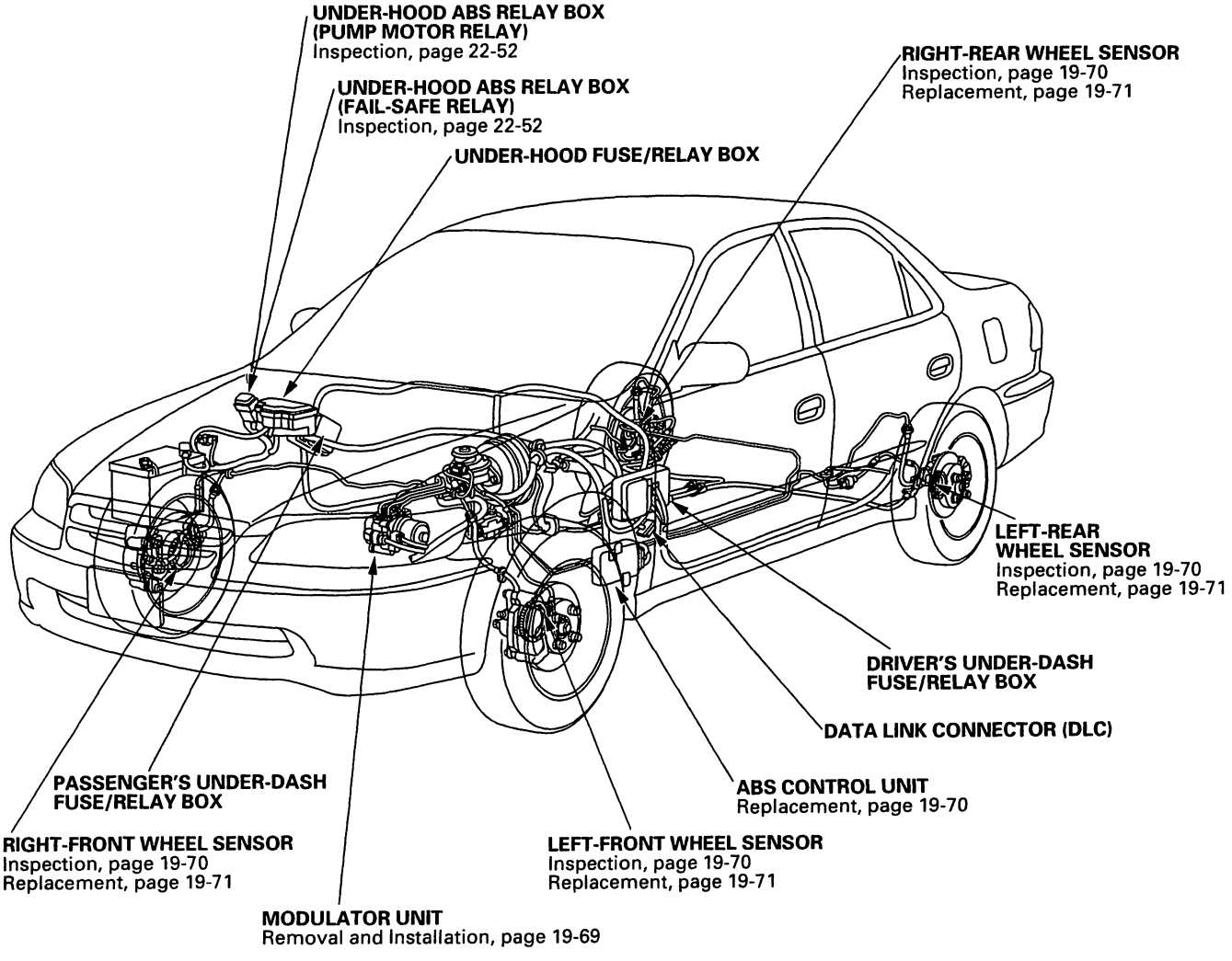

BACK

General Troubleshooting Information

ABS Indicator

- If the system is OK, the ABS indicator goes off two seconds after turning the ignition switch ON (II) without starting the engine, and then comes on again and goes off 2 seconds after starting the engine. This occurs because the ABS control unit is turned on by the IG2 power source.
- The ABS indicator comes on when the ABS control unit detects a problem in the system. However, even though the system is operating properly, the ABS indicator will come on, under the following conditions:
  - Only drive wheels rotate
  - One drive wheel is stuck
  - Vehicle spins
  - ABS continues to operate for a long time
  - Signal disturbance

To determine the actual cause of the problem, question the customer about the problem, taking the above-listed conditions into consideration.

- When a problem is detected and the ABS indicator comes on, there are cases when the indicator stays on until the ignition switch is turned OFF, and cases when the indicator light goes off automatically when the system returns to normal. For DTCs 61 and 62, the indicator goes off automatically when the system returns to normal. For all other codes, the indicator stays on until the ignition switch is turned OFF.
- For DTCs 12, 14, 16, 18, 21, 22, 23, 24, 51, 52 and 53, the ABS indicator goes off when the vehicle is driven again and the system is OK after the ignition switch is turned from OFF to ON (II). However, if the DTC is cleared, the CPU resets and the indicator goes off right after the engine is started if the system is OK.

Diagnostic Trouble Code (DTC)

- If the CPU cannot be activated or the CPU fails, the ABS indicator comes on, but the DTC is not memorized.
- The memory can hold any number of DTCs. However, when the same DTC is detected more than once, the later one is written over the old one.
  Therefore, when the same problem is detected repeatedly, it is memorized as one DTC.
- The DTCs are indicated in the order of ascending number, not in the order they occur.
- The DTCs are memorized in the EEPROM (non-volatile memory). Therefore, the memorized DTCs cannot be canceled by disconnecting the battery.
  Do the specified procedures to clear the DTCs.

Self-diagnosis

- Self-diagnosis can be classified into 2 categories:
  - Initial diagnosis:
    Done right after the engine starts and until the ABS indicator goes off.
  - Regular diagnosis:
    Done right after the initial diagnosis until the ignition switch is turned OFF.
- When a problem is detected by self-diagnosis, the system:
  - Turns the fail-safe relay OFF
  - Turns the solenoid valve OFF
  - Turns the pump motor OFF
  - Turns the ABS indicator ON

Kickback

The motor operates when the ABS is functioning, and the fluid in the reservoir is forced out to the master cylinder, causing kickback at the brake pedal.

Pump Motor

- The pump motor operates when the ABS is functioning.
- The ABS control unit checks the pump motor operation during initial diagnosis when the vehicle is started. You may hear the motor operate at this time, but it is normal.

Brake Fluid Replacement/Air Bleeding

Brake fluid replacement and air bleeding procedures are the same as for vehicles without ABS.
To ease bleeding, start with the front wheels.

(cont'd)

General Troubleshooting Information (cont'd)

How to Troubleshoot ABS DTCs

The troubleshooting flowchart procedures assume that the cause of the problem is still present and the ABS indicator is still on. Following the flowchart when the ABS indicator does not come on can result in incorrect diagnosis.
The connector illustrations show the female terminal connectors with a single outline and the male terminal connectors with a double outline.

1. Question the customer about the conditions when the problem occured, and try to reproduce the same conditions for troubleshooting. Find out when the ABS indicator came on, such as during initial diagnosis, during ABS control, after ABS control, when vehicle speed was at a certain speed, etc.

2. When the ABS indicator does not come on during the test-drive, but troubleshooting is done based on the DTC, check for loose connectors, poor contact of the terminals, etc. before you start troubleshooting.

3. After troubleshooting, clear the DTC, and test-drive the vehicle. Make sure the ABS indicator does not come on.

How to Retrieve ABS DTCs

1. Connect the Honda PGM Tester (A) to the 16P Data Link Connector (B) located behind the driver's side kick panel with the ignition switch OFF.

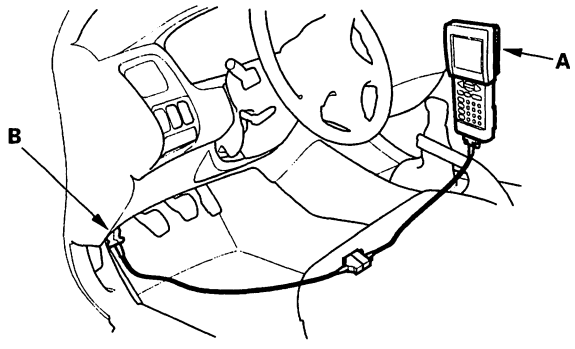

2. Select "SCS" on the display of the Honda PGM Tester, then push "YES" at the "SERVICE CHECK SIGNAL" mode.

3. Turn the ignition switch ON (II) without the brake pedal pressed.

   NOTE: If the brake pedal is pressed when turning the ignition switch ON (II), the system shifts to the MES mode.

4. The blinking frequency indicates the DTC.

   NOTE: If the DTC is not memorized, the ABS indicator will go off for 3.6 seconds, and then come back on.

   The system will not indicate the DTC unless these conditions are met:

   - Vehicle speed is 6 mph (10 km/h) or less.
   - SCS circuit is shorted to body ground before the ignition switch is turned ON (II).
   - The brake pedal is released.

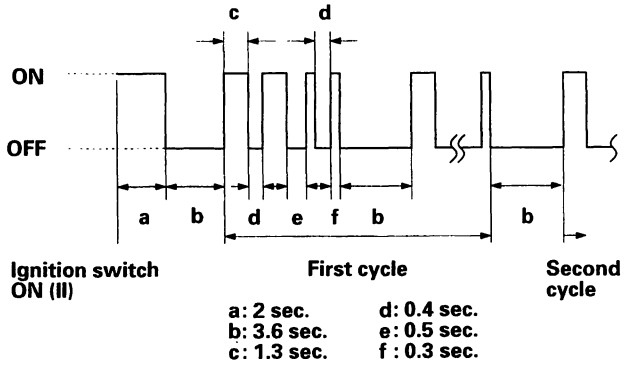

5. Turn the ignition switch OFF.

6. Press "EXIT" on the Honda PGM Tester.

7. Disconnect the Honda PGM Tester from the 16P Data Link Connector.

BACK

How to Clear ABS DTCs

1. Connect the Honda PGM Tester (A) to the 16P Data Link Connector (B) located behind of the driver's kick panel with the ignition switch OFF.

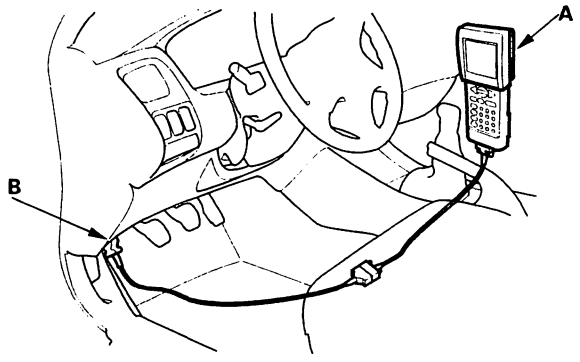

2. Select "SCS" on the display of the Honda PGM Tester, then push "YES" at the "SERVICE CHECK SIGNAL" mode.

3. Press the brake pedal.

4. Turn the ignition switch ON (II) while keeping the brake pedal pressed.

5. After the ABS indicator goes off, release the brake pedal.

6. After the ABS indicator comes on, press the brake pedal again.

7. After the ABS indicator goes off, release the brake pedal again.

   You cannot clear the DTC unless these conditions are met:

   - Vehicle speed is 6 mph (10 km/h) or less.
   - SCS circuit is shorted to body ground before the ignition switch is turned ON (II).
   - The brake pedal is pressed before the ignition switch is turned ON (II).

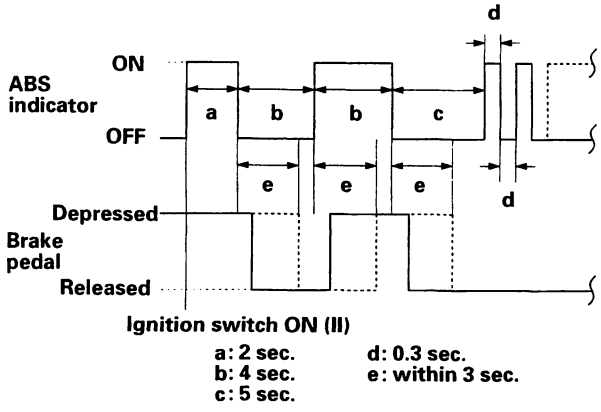

8. After a few seconds, the ABS indicator blinks twice and the DTC is cleared. If the indicator does not blink twice, repeat steps 1 through 7. If the indicator stays on after the indicator blinks twice, check the DTC because a problem was detected during initial diagnosis before shifting to MES mode.

9. Turn the ignition switch OFF.

10. Press "EXIT" on the Honda PGM Tester.

11. Disconnect the Honda PGM Tester from the 16P Data Link Connector.

DTC Troubleshooting Index

DTC	Detection Item	Note
DTC:11	Right-front wheel sensor (open/short to body ground/short to power)	(see page 19-52)
DTC:12	Right-front wheel sensor (electrical noise/intermittent interruption)	(see page 19-53)
DTC:13	Left-front wheel sensor (open/short to body ground/short to power)	(see page 19-52)
DTC:14	Left-front wheel sensor (electrical noise/intermittent interruption)	(see page 19-53)
DTC:15	Right-rear wheel sensor (open/short to body ground/short to power)	(see page 19-52)
DTC:16	Right-rear wheel sensor (electrical noise/intermittent interruption)	(see page 19-53)
DTC:17	Left-rear wheel sensor (open/short to body ground/short to power)	(see page 19-52)
DTC:18	Left-rear wheel sensor (electrical noise/intermittent interruption)	(see page 19-53)
DTC:21	Right-front pulser	(see page 19-54)
DTC:22	Left-front pulser	(see page 19-54)
DTC:23	Right-rear pulser	(see page 19-54)
DTC:24	Left-rear pulser	(see page 19-54)
DTC:31	Right-front inlet solenoid	(see page 19-55)
DTC:32	Right-front outlet solenoid	(see page 19-55)
DTC:33	Left-front inlet solenoid	(see page 19-55)
DTC:34	Left-front outlet solenoid	(see page 19-55)
DTC:35	Right-rear inlet solenoid	(see page 19-55)
DTC:36	Right-rear outlet solenoid	(see page 19-55)
DTC:37	Left-rear inlet solenoid	(see page 19-55)
DTC:38	Left-rear outlet solenoid	(see page 19-55)
DTC:41	Right-front wheel lock	(see page 19-58)
DTC:42	Left-front wheel lock	(see page 19-58)
DTC:43	Right-rear wheel lock	(see page 19-58)
DTC:44	Left-rear wheel lock	(see page 19-58)
DTC:51	Motor lock	(see page 19-59)
DTC:52	Motor stuck OFF	(see page 19-59)
DTC:53	Motor stuck ON	(see page 19-61)
DTC:54	Fail-safe relay	(see page 19-63)
DTC:61	Low ignition voltage	(see page 19-65)
DTC:62	High ignition voltage	(see page 19-65)
DTC:71	Different diameter tire	(see page 19-66)
DTC:81	Central Processing Unit (CPU) diagnosis, and ROM/RAM diagnosis	(see page 19-66)

BACK

Symptom Troubleshooting Index

Symptom	Diagnostic procedure	Also check for
ABS indicator does not come on	ABS Indicator Circuit Troubleshooting (see page 19-67)	
ABS indicator does not go off and no DTC is stored	ABS Indicator Circuit Troubleshooting (see page 19-67)	

ABS Components

System Description

ABS Control Unit Inputs and Outputs for Connector A (22P)

ABS CONTROL UNIT CONNECTOR A (22P)

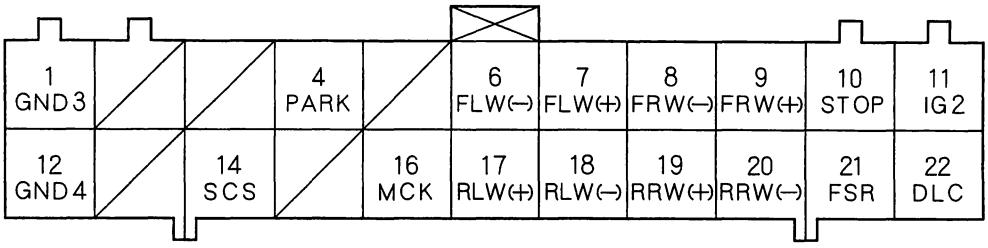

Wire side of female terminals

Terminal number	Wire color	Terminal sign (Terminal name)	Description	Measurement			
				Terminal	Conditions (Ignition switch ON (II))		Voltage
1	BLK	GND3 (Ground 3)	Ground	1−GND	———		Below 0.3 V
4	GRN/ RED	PARK (Parking)	Detects parking brake switch signal	4−GND	Engine running, Parking brake	Pulled	Below 0.3 V
						Release	Battery Voltage
6	BRN	FLW (−) (Front-left wheel negative)	Detects left-front wheel sensor signal	6−7	Wheel	Turn wheel at 1 turn/ second	AC: 0. 053V or above (Reference) Oscilloscope: 0.15 Vp-p or above
7	GRN/ BLU	FLW (+) (Front-left wheel positive)					
8	GRN	FRW (−) (Front-right wheel negative)	Detects right-front wheel sensor signal	8−9			
9	GRN/ BLK	FRW (+) (Front-right wheel positive)				Stopped	0.25 V− 1.15 V
10	WHT/ BLK	STOP	Detects brake switch signal	10−GND	Brake pedal	Depressed	Battery Voltage
						Released	Below 0.3 V
11	YEL/ BLK	IG2 (Ignition 2)	Power source for activating the system	11−GND	Ignition switch	ON (II)	Battery Voltage
						Start (III)	Below 0.3 V

BACK

Terminal number	Wire color	Terminal sign (Terminal name)	Description	Measurement			
				Terminal	Conditions (Ignition switch ON (II))		Voltage
12	BLK	GND4 (Ground 4)	Ground	12 – GND	———		Below 0.3 V
14	BRN	SCS (Service check signal)	Detects service check connector signal (DTC indication or DTC erasure)	14 – GND	SCS circuit	Shorted	Below 0.3 V
						Opened	Approx. 5 V
16	GRN	MCK (Motor check)	Detects pump motor drive signal	16 – GND	Pump motor	ON	Battery Voltage
						OFF	Below 0.3 V
					Remove MCK fuse		Approx. 10 V
17	LT BLU	RLW (+) (Rear-left wheel positive)	Detects left-rear wheel sensor signal	17 – 18	Wheel	Turn wheel at 1 turn/ second	AC: 0. 053V or above (Reference) Oscilloscope: 0.15 Vp-p or above
18	GRY	RLW (–) (Rear-left wheel positive)					
19	GRN/ YEL	RRW (+) (Rear-right wheel positive)	Detects right-rear wheel sensor signal	19 – 20			
20	BLU/ YEL	RRW (–) (Rear-right wheel negative)				Stopped	0.25 V – 1.15 V
21	YEL/ GRN	FSR (Fail-safe relay)	Drives fail-safe relay (Fail-safe relay is turned OFF to shut off the power source to the solenoid and pump motor relay when problem occurs.)	21 – GND	ABS (SCS circuit must be open)	Warning	Below 0.3 V
						Normal	Approx. 11V
22	LT BLU	DLC (Data link connector)	Communicates with Honda PGM Tester	22 – GND	———		———

(cont'd)

System Description (cont'd)

ABS Control Unit Inputs and Outputs for Connector B (12P)

ABS CONTROL UNIT CONNECTOR B (12P)

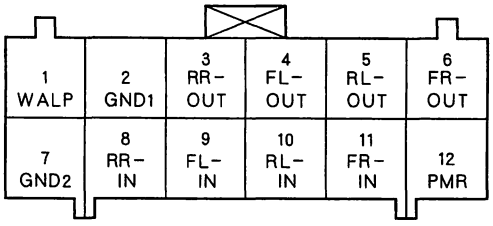

Wire side of female terminals

Terminal number	Wire color	Terminal sign (Terminal name)	Description	Measurement				
				Terminal	Conditions (Ignition switch ON (II))			Voltage
1	BLU/WHT	WALP (Warning lamp)	Drives ABS indicator light (Turns the indicator light drive transistor to ON, then turns off the indicator light)	1 – GND	ABS indicator	ON		4 – 6 V
						OFF		Below 0.3 V
2	BLK	GND1 (Ground 1)	Ground	2 – GND	———			Below 0.3 V
3	YEL/WHT	RR-OUT (Rear-right outlet)	Drives right-rear outlet solenoid valve	3 – GND	ABS indicator	OFF		Battery Voltage
4	YEL/BLU	FL-OUT (Front-left outlet)	Drives left-front outlet solenoid valve	4 – GND				
5	YEL/GRN	RL-OUT (Rear-left outlet)	Drives left-rear outlet solenoid valve	5 – GND		ON (Disconnect connector A to turn light on)		Below 0.3 V
6	YEL/BLK	FR-OUT (Front-right outlet)	Drives right-front outlet solenoid valve	6 – GND				
7	BLK	GND2 (Ground 2)	Ground	7 – GND	———			Below 0.3 V
8	RED/WHT	RR-IN (Rear-right inlet)	Drives right-rear inlet solenoid valve	8 – GND	ABS indicator	OFF		Battery Voltage
9	RED/BLU	FL-IN (Front-left inlet)	Drives left-front inlet solenoid valve	9 – GND				
10	RED/GRN	RL-IN (Rear-left inlet)	Drives left-rear inlet solenoid valve	10 – GND		ON (Disconnect connector A to turn light on)		Below 0.3 V
11	RED/BLK	FR-IN (Front-right inlet)	Drives right-front inlet solenoid valve	11 – GND				
12	YEL/RED	PMR (Pump motor relay)	Drives pump motor relay	12 – GND	ABS indicator	OFF	Pump motor ON	Below 1.0 V
							Pump motor OFF	Battery Voltage
						ON		Below 0.3 V

BACK

Features

When the brake pedal is pressed during driving, the wheels can lock before the vehicle comes to a stop. In such an event, the maneuverability of the vehicle is reduced if the front wheels are locked, and the stability of the vehicle is reduced if the rear wheels are locked, creating an extremely unstable condition. The ABS precisely controls the slip rate of the wheels to ensure maximum grip force from the tires, and it thereby ensures maneuverability and stability of the vehicle.

The ABS calculates the slip rate of the wheels based on the vehicle speed and the wheel speed, then it controls the brake fluid pressure to reach the target slip rate.

Grip Force of Tire and Road Surface

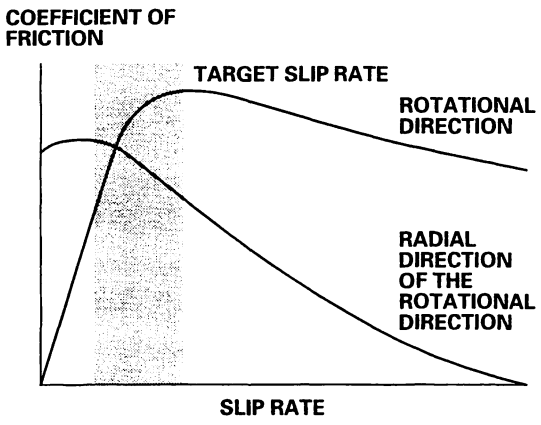

Slip Rate

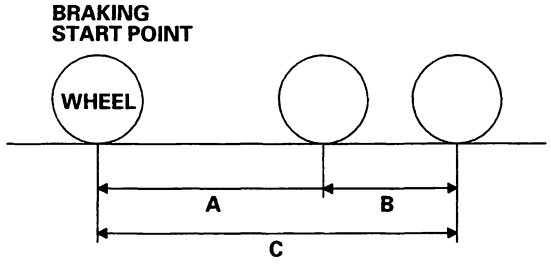

A: Distance without slip
B: Slipped distance
C: Actual distance

$$\text{SLIP RATE} = \frac{B}{C} = \frac{\text{VEHICLE SPEED—WHEEL SPEED}}{\text{VEHICLE SPEED}}$$

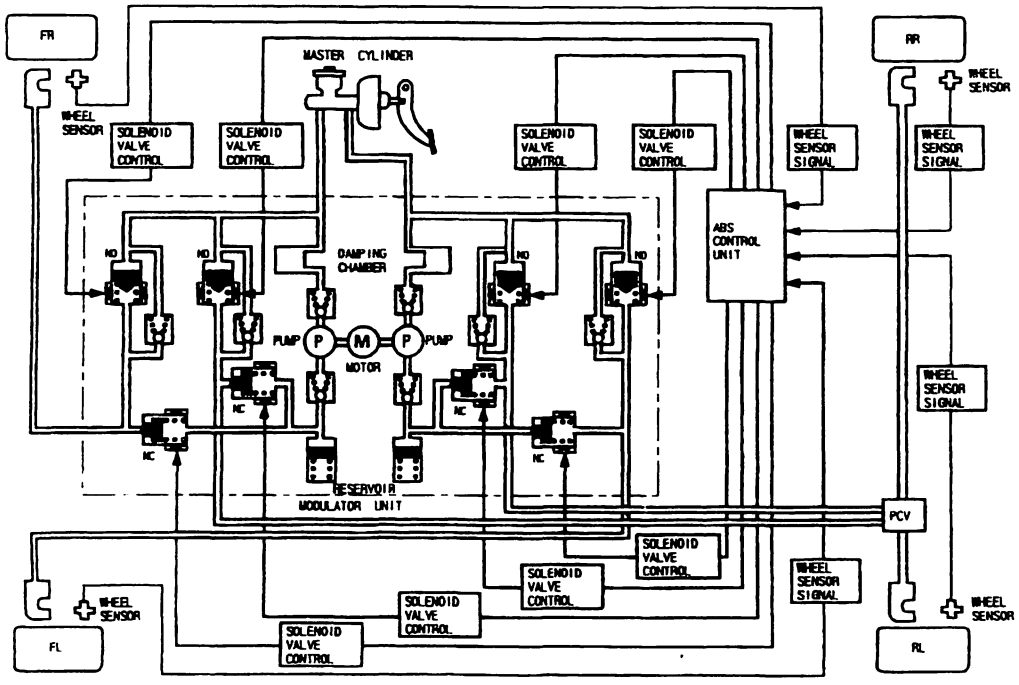

NO: Normally Open
NC: Normally Closed

(cont'd)

System Description (cont'd)

ABS Control Unit

Main Control
The ABS control unit detects the wheel speed based on the wheel sensor signal it received, then it calculates the vehicle speed based on the detected wheel speed. The control unit detects the vehicle speed during deceleration based on the rate of deceleration.

The ABS control unit calculates the slip rate of each wheel, and it transmits the control signal to the modulator unit solenoid valve when the slip rate is high.

The pressure reduction control has 3-modes: pressure reducing, pressure retaining, and pressure intensifying.

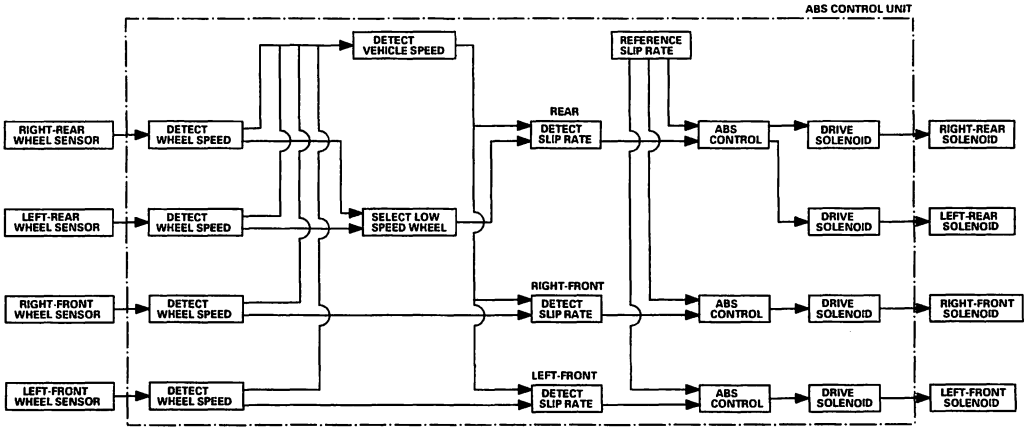

BACK

Self-diagnosis

1. The ABS control unit is equipped with a main CPU and a sub CPU, that check each other for problems.
2. The CPUs check the circuit of the system.
3. Self-diagnosis can be classifield into 2 categories:

   - Initial diagnosis: Done right after the engine starts and until the ABS indicator goes off.
   - Regular diagnosis: Done right after the initial diagnosis until the ignition switch is turned OFF.

4. When a problem is detected by self-diagnosis, the system:

   - Turns the fail-safe relay OFF
   - Turns the solenoid valve OFF
   - Turn the pump motor OFF
   - Turns the ABS indicator ON

Self-diagnosis Table

Diagnostic Trouble Code (DTC)	Detection Item	Detection Timing		Fail-safe Mode
		Initial Diagnosis	Regular Diagnosis	
11, 13, 15, 17	Wheel sensor (open/short to body ground/short to power)	○	○	A
12, 14, 16, 18	Wheel sensor (electrical noise/intermittent interruption)		○	S, A and L, S and L
21-24	Pulser		○	A and L
31-38	Solenoid (short to body ground/short to wire)	○	○	S
41-44	Wheel lock		○	A and L
51	Motor lock		○	S and L
52	Motor stuck OFF		○	A and L
53	Motor stuck ON	○	○	A and L
54	Fail-safe relay	○	○	S
61	Low ignition voltage		○	B
62	High ignition voltage		○	B
71	Different diameter tire		○	S
81	Central Processing Unit (CPU) diagnosis, and ROM/RAM diagnosis	○	○	S

Operation Mode Table

Operation Mode	Description	ABS Indicator
Regular operation	Operation in normal condition	OFF
Fail-safe mode-S	The ABS control unit turns the system off when the control unit detects a problem.	Comes ON when a problem is detected.
Fail-safe mode-A	If the ABS control unit detects a malfunction during an emergency stop, it will turn off the malfunctioning component, and continue to modulate the rest of the ABS system until the vehicle comes to a stop. At that, the entire system will be turned off until the problem goes away.	Comes ON when a problem is detected.
Fail-safe mode-L	The ABS control unit stores a DTC in back-up memory when it detects a problem. If a problem is detected when the ignition switch is turned ON (II), the ABS control unit will turn the system off. If the problem goes away, the ABS control unit will turn the system on again.	ON
Fail-safe mode-B	The ABS control unit will turn the system off if ignition voltage drops, and will turn on again when ignition voltage returns to normal.	Comes ON when a problem is detected.

On-board Diagnosis Function

The ABS control unit is connected to the 16P Data Link Connector.
The ABS can be diagnosed with the Honda PGM Tester.
The ALB Checker cannot be used with this system. For air bleeding, and checking wheel sensor signals, use the Honda PGM Tester. See the Honda PGM Tester user's manuals for specific operating instructions.

(cont'd)

System Description (cont'd)

ABS Modulator

The ABS modulator consists of the inlet solenoid valve, outlet solenoid valve, reservoir, pump, pump motor, and the damping chamber. The modulator reduces the caliper fluid pressure directly. It is a circulating-type modulator because the brake fluid circulates through the caliper, reservoir, and the master cylinder. The hydraulic control has three modes: pressure intensifying, pressure retaining, and pressure reducing. The hydraulic circuit is an independent four channel-type, one channel for each wheel.

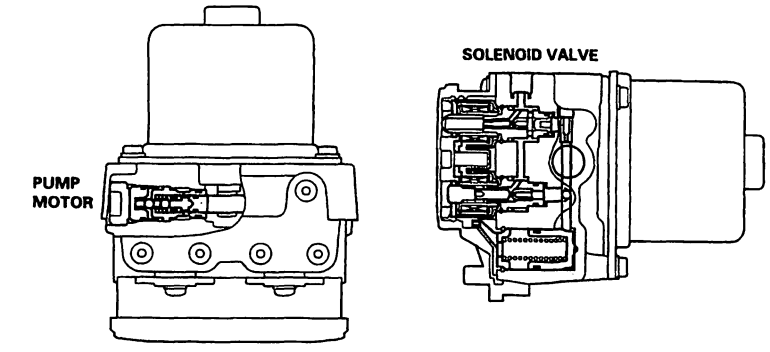

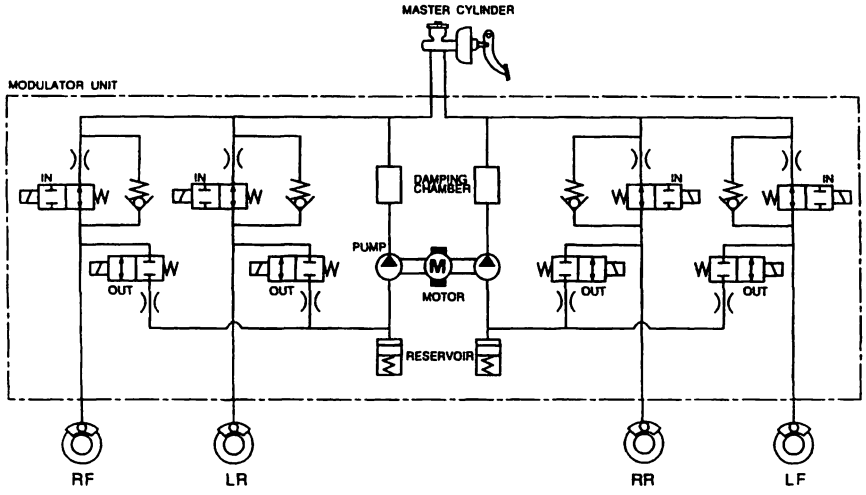

IN: INLET VALVE (NORMALLY OPEN)
OUT: OUTLET VALVE (NORMALLY CLOSED)

Pressure intensifying mode:	Inlet valve open, outlet valve closed Master cylinder fluid is pumped out to the caliper.
Pressure retaining mode:	Inlet valve closed, outlet valve closed Caliper fluid is retained by the inlet valve and outlet valve.
Pressure reducing mode:	Inlet valve closed, outlet valve open Caliper fluid flows through the outlet valve to the reservoir.
Motor operation mode:	When starting the pressure reducing mode, the pump motor is ON. When stopping ABS operation, the pump motor is OFF. The reservoir fluid is pumped out by the pump, through the damping chamber, to the master cylinder.

BACK

Wheel Sensor

The wheel sensors are the magnetic contactless type. As the gear pulser teeth rotate past the wheel sensor's magnetic coil, AC current is generated. The AC frequency changes in accordance with the wheel speed. The ABS control unit detects the wheel sensor signal frequency and thereby detects the wheel speed.

Wheel Speed and Modulator Control

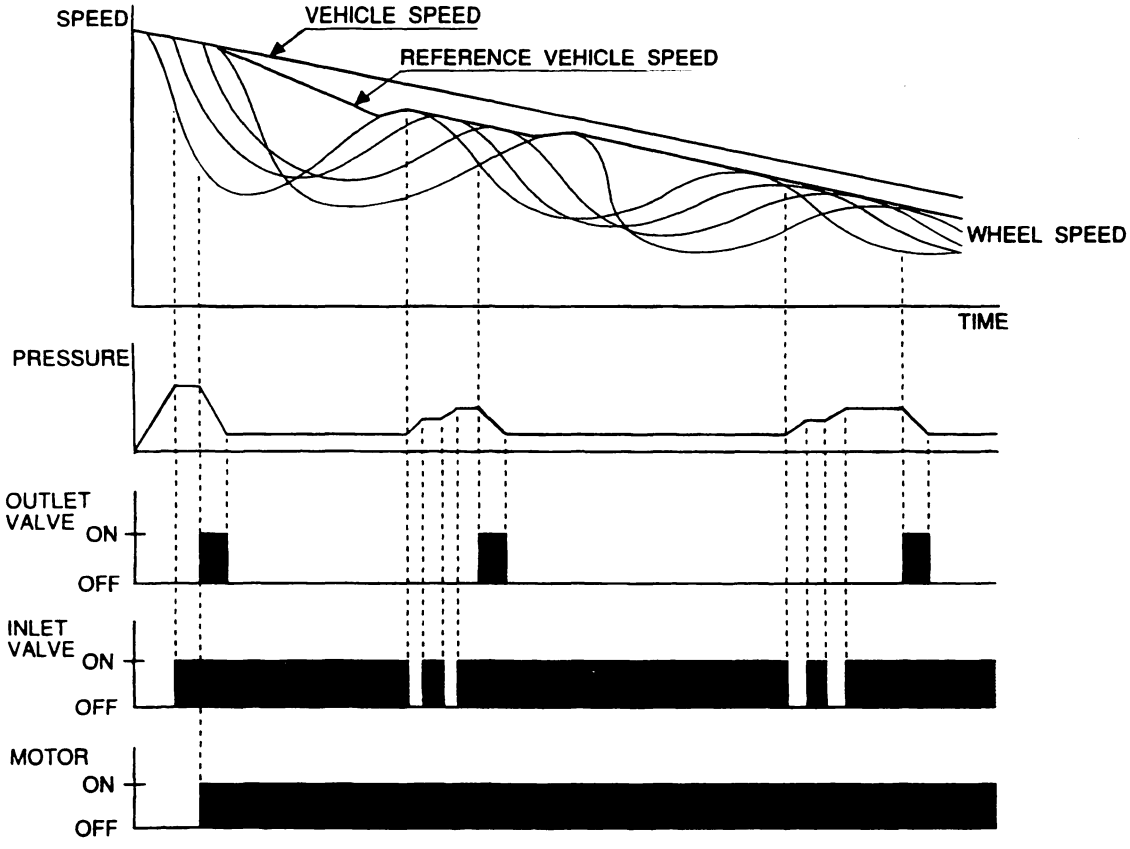

When the wheel speed drops sharply below the vehicle speed, the inlet valve closes to retain the caliper fluid pressure. When the wheel speed drops further, the outlet valve opens momentarily to reduce the caliper fluid pressure. The pump motor starts at this time. As the wheel speed is restored, the inlet valve opens momentarily to increase the caliper fluid pressure.

ABS Components

Circuit Diagram

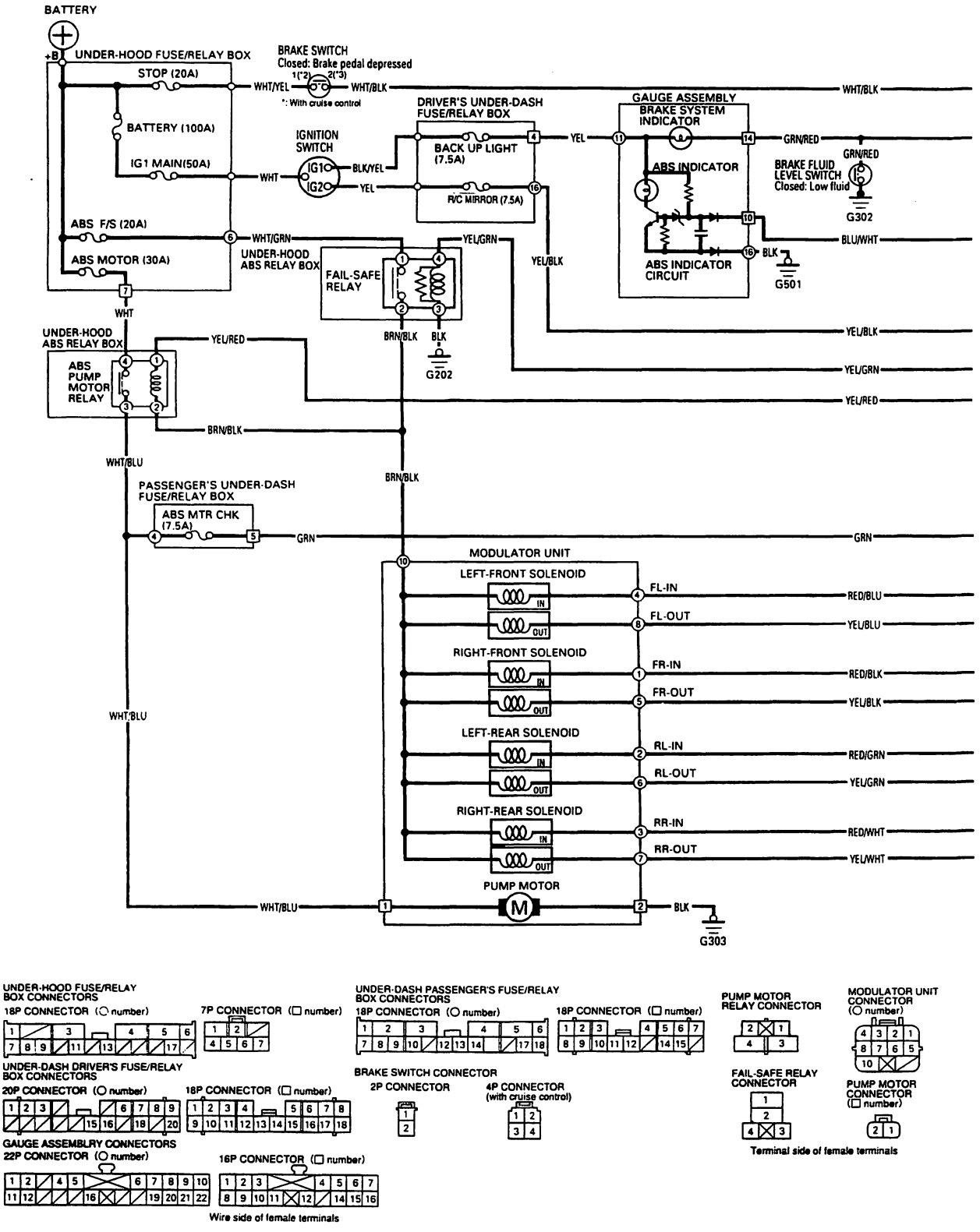

BACK

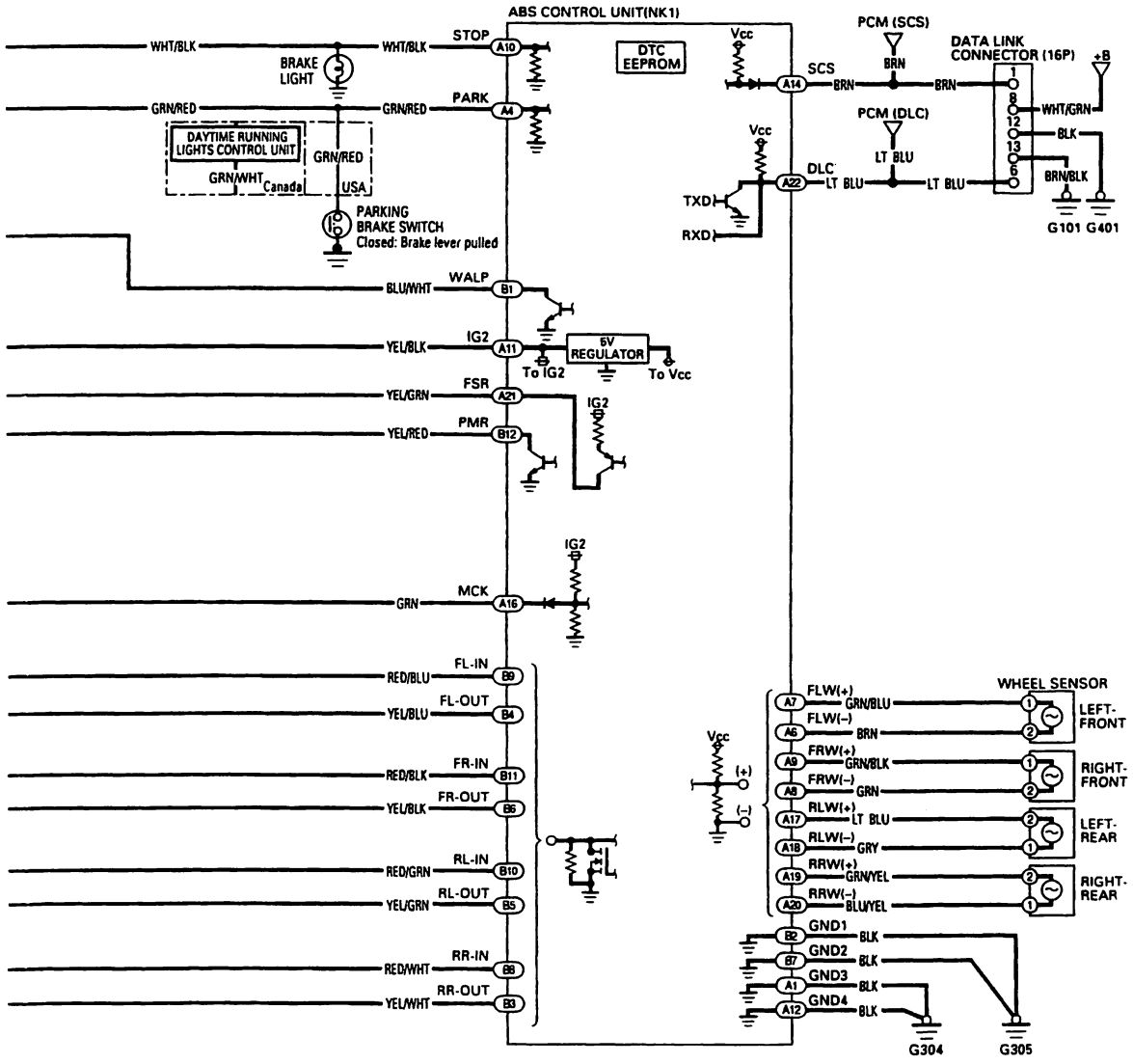

ABS CONTROL UNIT CONNECTORS

CONNECTOR A(22P)

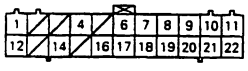

CONNECTOR B(12P)

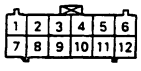

Wire side of female terminals

DATA LINK CONNECTOR (16P)

WHEEL SENSOR CONNECTOR

FRONT/REAR

Terminal side of male terminals

BACK

DTC Troubleshooting

DTC 11, 13,15,17: Wheel Sensor (Open/Short to Body Ground/Short to Power)

1. Disconnect the ABS control unit connector A (22P).
2. Start the engine.
3. Measure the voltage between the appropriate wheel sensor (+) circuit terminal and body ground (see table).

DTC	Appropriate Terminal
11 (Right-front)	A9: FRW (+)
13 (Left-front)	A7: FLW (+)
15 (Right-rear)	A19: RRW (+)
17 (Left-rear)	A17: RLW (+)

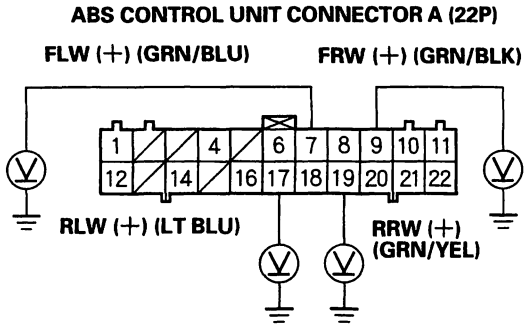

Wire side of female terminals

Is there 2 V or more?

YES—Repair short to power in the (+) circuit wire between the ABS control unit and the appropriate wheel sensor.■

NO—Go to step 4.

4. Check for continuity between the appropriate wheel sensor (+) circuit terminal and body ground (see table).

DTC	Appropriate Terminal
11 (Right-front)	A9: FRW (+)
13 (Left-front)	A7: FLW (+)
15 (Right-rear)	A19: RRW (+)
17 (Left-rear)	A17: RLW (+)

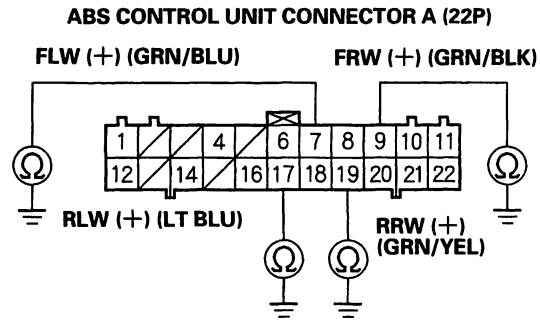

Wire side of female terminals

Is there continuity?

YES—Go to step 5.

NO—Go to step 6.

5. Disconnect the harness 2P connector from the appropriate wheel sensor, then check for continuity between the (+) and (−) terminals of the harness and body ground.

Is there continuity?

YES—Repair short to body ground in the (+) or (−) circuit wire between the ABS control unit and the wheel sensor.■

NO—Replace the wheel sensor.■

BACK

6. Check the resistance between the appropriate wheel sensor (+) and (−) circuit terminals (see table).

DTC	Appropriate Terminal	
	(+) Side	(−) Side
11 (Right-front)	A9: FRW (+)	A8: FRW (−)
13 (Left-front)	A7: FLW (+)	A6: FLW (−)
15 (Right-rear)	A19: RRW (+)	A20: RRW (−)
17 (Left-rear)	A17: RLW (+)	A18: RLW (−)

ABS CONTROL UNIT CONNECTOR A (22P)

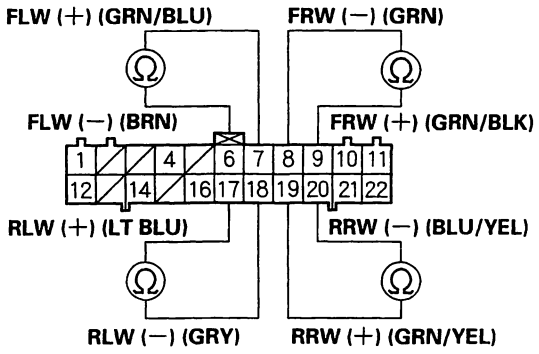

Wire side of female terminals

Is the resistance 450−2,000 Ω ?

YES−Check for loose ABS control unit connectors. If necessary, substitute a known-good ABS control unit, and recheck■

NO−Go to step 7.

7. Disconnect the harness 2P connector from the appropriate wheel sensor, and check the resistance between the (+) and (−) terminals of the wheel sensor.

Is the resistance 450−2,000 Ω ?

YES−Repair open in the (+) or (−) circuit wire, or short between the (+) circuit wire and the (−) circuit wire between the ABS control unit and the wheel sensor.■

NO−Replace the wheel sensor.■

DTC 12, 14, 16, 18: Wheel Sensor (Electrical Noise/Intermittent Interruption)

NOTE: If the ABS indicator comes on for the reasons described below,the indicator goes off when you test-drive the vehicle at 19 mph (30 km/h).

- Only the drive wheels rotated
- The vehicle spun
- Electrical noise

1. Visually check for appropriate wheel sensor and pulser installation (see table).

DTC	Appropriate Wheel Sensor
12	Right-front
14	Left-front
16	Right-rear
18	Left-rear

Are they installed correctly?

YES−Go to step 2.

NO−Reinstall or replace the appropriate wheel sensor or pulser.■

2. Disconnect the ABS control unit connector A (22P).

3. Measure the resistance between the appropriate wheel sensor (+) and (−) circuit terminals (see table).

DTC	Appropriate Terminal	
	(+) Side	(−) Side
11 (Right-front)	A9: FRW (+)	A8: FRW (−)
13 (Left-front)	A7: FLW (+)	A6: FLW (−)
15 (Right-rear)	A19: RRW (+)	A20: RRW (−)
17 (Left-rear)	A17: RLW (+)	A18: RLW (−)

Is there less than 450 Ω ?

YES−Repair short to wire between the appropriate wheel sensor (+) and (−) circuits.■

NO−Go to step 4.

(cont'd)

DTC Troubleshooting (cont'd)

4. Check for continuity between the appropriate wheel sensor (+) circuit terminal and other wheel sensor (+) circuit terminals (see table).

DTC	Appropriate Terminal	Othere Terminal		
12	A9: FRW (+)	A7: FLW (+)	A19: RRW (+)	A17: RLW (+)
14	A7: FLW (+)	A9: FRW (+)	A19: RRW (+)	A17: RLW (+)
16	A19: RRW (+)	A9: FRW (+)	A7: FLW (+)	A17: RLW (+)
18	A17: RLW (+)	A9: FRW (+)	A7: FLW (+)	A19: RRW (+)

Is there continuity?

YES—Repair short to wire between the appropriate wheel sensor and the other wheel sensor.■

NO—Clear the DTC, and test-drive the vehicle. If the ABS indicator comes on and the same DTC is indicated, replace the ABS control unit.■

DTC 21, 22, 23, 24: Pulser

1. Clear the DTC.

2. Test-drive the vehicle at 19 mph (30 km/h) or more.

   Does the ABS indicator come on and are DTCs 21, 22, 23, or 24 indicated?

   YES—Go to step 3.

   NO—The system is OK at this time.■

3. Check the appropriate pulser gear for a chipped tooth (see table).

DTC	Appropriate Pulser
21	Right-front
22	Left-front
23	Right-rear
24	Left-rear

Is the pulser OK?

YES—Check for loose ABS control unit connectors. If necessary, substitute a known-good ABS control unit, and recheck. ■

NO—Replace the driveshaft or the hub unit. (Chipped pulser gear)■

BACK

DTC 31, 32, 33, 34, 35, 36, 37, 38: Solenoid

1. Verify the DTC.

   Is DTC 54 indicated?

   YES – Do the appropriate troubleshooting for DTC 54. ■

   NO – Go to step 2.

2. Turn the ignition switch OFF.

3. Disconnect the modulator unit connector and the ABS control unit connector B (12P).

4. Check for continuity between the appropriate ABS control unit connector B (12P) solenoid circuit terminal and body ground (see table).

DTC	Appropriate Terminal
31: FR-IN	B11
32: FR-OUT	B6
33: FL-IN	B9
34: FL-OUT	B4
35: RR-IN	B8
36: RR-OUT	B3
37: RL-IN	B10
38: RL-OUT	B5

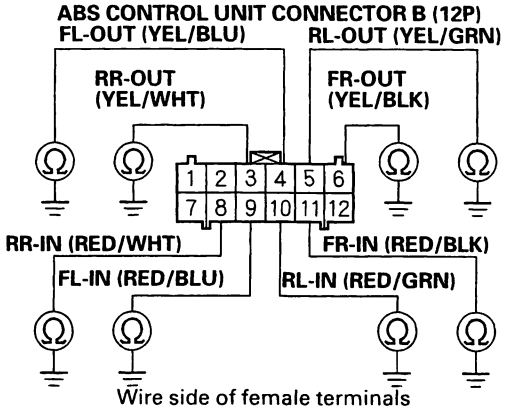

Is there continuity?

YES – Repair short to body ground in the appropriate solenoid circuit wire between the ABS control and the modulator unit. ■

NO – Go to step 5.

5. Connect the modulator unit connector.

6. Check for continuity between the appropriate ABS control unit connector B (12P) solenoid circuit terminal and body ground (see table).

DTC	Appropriate Terminal
31: FR-IN	B11
32: FR-OUT	B6
33: FL-IN	B9
34: FL-OUT	B4
35: RR-IN	B8
36: RR-OUT	B3
37: RL-IN	B10
38: RL-OUT	B5

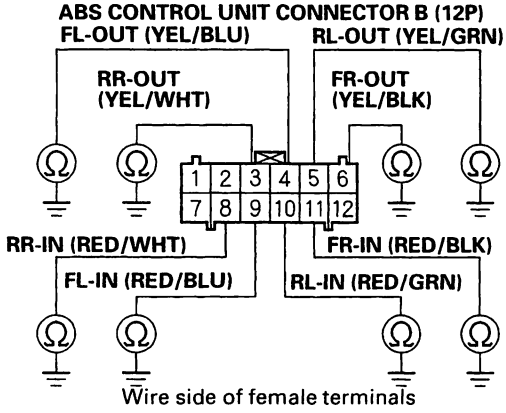

Is there continuity?

YES – Replace the modulator unit. ■

NO – Go to step 7.

7. Disconnect the modulator unit connector.

(cont'd)

DTC Troubleshooting (cont'd)

8. Connect the appropriate modulator unit connector solenoid circuit terminal to body ground with a jumper wire (see table).

DTC	Appropriate Terminal
31: FR-IN	No.1
32: FR-OUT	No.5
33: FL-IN	No.4
34: FL-OUT	No.8
35: RR-IN	No.3
36: RR-OUT	No.7
37: RL-IN	No.2
38: RL-OUT	No.6

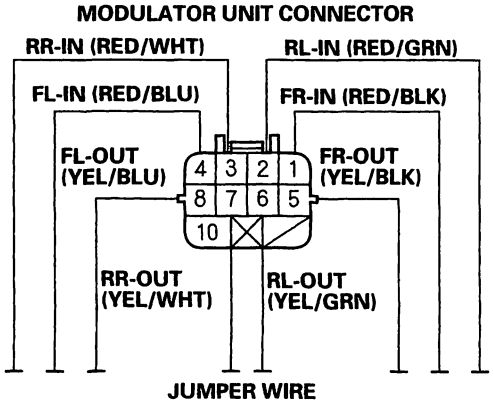

Terminal side of female terminals

9. Check for continuity between the appropriate ABS control unit connector B (12P) solenoid circuit terminal and body ground (see table).

DTC	Appropriate Terminal
31: FR-IN	B11
32: FR-OUT	B6
33: FL-IN	B9
34: FL-OUT	B4
35: RR-IN	B8
36: RR-OUT	B3
37: RL-IN	B10
38: RL-OUT	B5

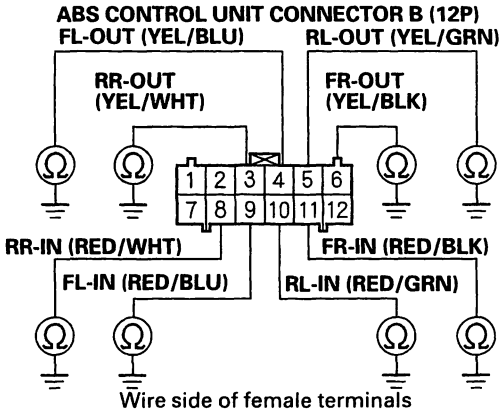

Wire side of female terminals

Is there continuity?

YES—Go to step 10.

NO—Repair open in the appropriate solenoid circuit wire between the ABS control unit and the modulator unit.■

10. Remove the jumper wire from the modulator unit connector.

11. Connect the modulator unit connector.

BACK

12. Connect the fail-safe relay connector terminal No.2 to body ground with a jumper wire.

    NOTE: The wire colors of the fail-safe relay connector are WHT/GRN, BRN/BLK, BLK, YEL/GRN.

FAIL-SAFE RELAY CONNECTOR

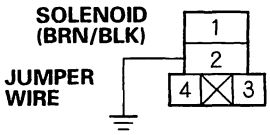

Terminal side of female terminals

13. Check the resistance between the appropriate ABS control unit connector B (12P) terminal and body ground (see table).
    IN: 8 – 10 Ω (at 20°C, 68°F)
    OUT: 3 – 5 Ω (at 20°C, 68°F)

DTC	Appropriate Terminal
31: FR-IN	B11
32: FR-OUT	B6
33: FL-IN	B9
34: FL-OUT	B4
35: RR-IN	B8
36: RR-OUT	B3
37: RL-IN	B10
38: RL-OUT	B5

ABS CONTROL UNIT CONNECTOR B (12P)

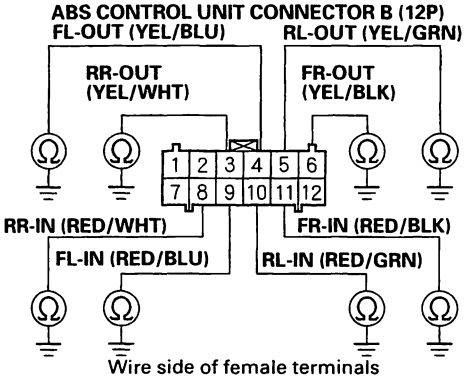

Wire side of female terminals

Is there resistance OK?

YES – Go to step 14.

NO – Replace the modulator unit. ■

14. Disconnect the modulator unit connector, and remove the jumper wire from the fail-safe relay connector terminal.

15. Check for continuity between the appropriate ABS control unit connector B (12P) terminal and all other solenoid circuit terminals (see table).

DTC	Appropriate Terminal
31: FR-IN	B11
32: FR-OUT	B6
33: FL-IN	B9
34: FL-OUT	B4
35: RR-IN	B8
36: RR-OUT	B3
37: RL-IN	B10
38: RL-OUT	B5

ABS CONTROL UNIT CONNECTOR B (12P)

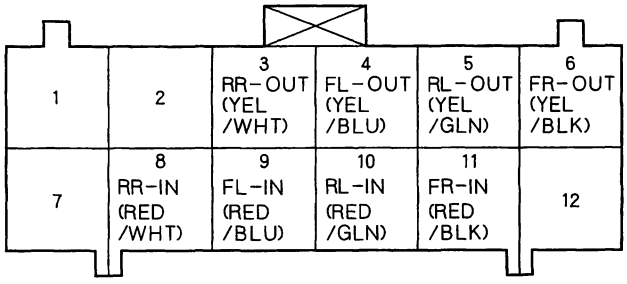

Wire side of female terminals

Is there continuity?

YES – Repair the short in the appropriate wires between the ABS control unit and the modulator unit. ■

NO – Go to step 16.

(cont'd)

DTC Troubleshooting (cont'd)

16. Connect the modulator unit connector.

17. Check for continuity between the appropriate ABS control unit connector B (12P) terminal and all other solenoid circuit terminals (see table).

DTC	Appropriate Terminal
31: FR-IN	B11
32: FR-OUT	B6
33: FL-IN	B9
34: FL-OUT	B4
35: RR-IN	B8
36: RR-OUT	B3
37: RL-IN	B10
38: RL-OUT	B5

ABS CONTROL UNIT CONNECTOR B (12P)

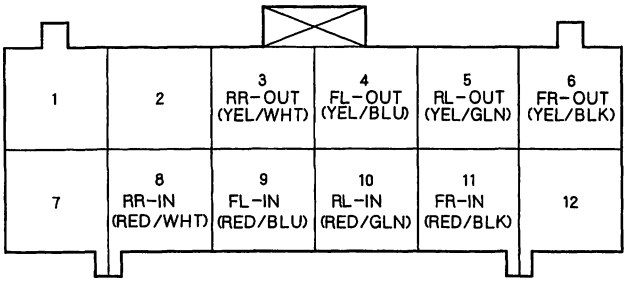

Wire side of female terminals

Is there less than 3 Ω ?

YES—Replace the modulator unit.■

NO—Check for loose ABS control unit connectors. If necessary, substitute a known-good ABS control unit, and recheck.■

DTC 41, 42, 43, 44: Wheel Lock

1. Check for brake drag.

   Do the brakes drag?

   YES—Repair the brake drag.■

   NO—Go to step 2.

2. Check the installation of the appropriate wheel sensor (see table).

DTC	Appropriate Wheel Sensor
41	Right-front
42	Left-front
43	Right-rear
44	Left-rear

   Is it correct?

   YES—Go to step 3.■

   NO—Reinstall the wheel sensor correctly.■

3. Check the modulator using the Honda PGM Tester.

   Is kick-back felt in the pedal?

   YES—The probable cause was the vehicle spun during cornering. If the problem recurs, check for loose connectors, or try a known-good ABS/TCS control unit.■

   NO—Check for loose modulator unit connectors. If necessary, replace the modulator unit.■

BACK

DTC 51: Motor Lock

1. Clear the DTC.
2. Test-drive the vehicle at 6 mph (10 km/h) or more.

   Does the ABS indicator come on, and is DTC 51 indicated?

   YES—Replace the modulator unit.■

   NO—The system is OK at this time.■

DTC 52: Motor Stuck OFF

1. Check the ABS MOTOR (30 A) fuse in the under-hood fuse/relay box, and reinstall the fuse if it is OK.

   Is the fuse OK?

   YES—Go to step 3.

   NO—Replace the fuse, and go to step 2.

2. Connect the pump motor relay connector terminal No. 3 to No. 4 with a jumper wire for a moment, and check the fuse.

PUMP MOTOR RELAY CONNECTOR

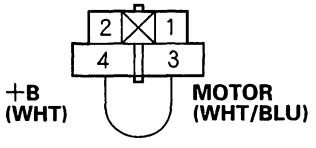

JUMPER WIRE

Terminal side of female terminals

   Is the fuse blown?

   YES—Check for a short to body ground in the motor power source circuit.■

   NO—Go to step 3.

3. Check the ABS MTR CHK (7.5 A) fuse in the passenger's under-dash fuse/relay box, and reinstall the fuse if it is OK.

   Is the fuse OK?

   YES—Go to step 5.

   NO—Replace the fuse, and go to step 4.

(cont'd)

DTC Troubleshooting (cont'd)

4. Connect the pump motor relay connector terminal No. 3 to No. 4 with a jumper wire for a moment, and check the fuse.

PUMP MOTOR RELAY CONNECTOR

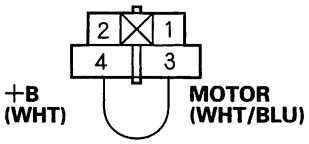

JUMPER WIRE

Terminal side of female terminals

Is the fuse blown?

YES—Check for a short to body ground in the MCK circuit. ■

NO—Go to step 5.

5. Check the pump motor relay in the under-hood ABS relay box (see page 22-52).

Is the relay OK?

YES—Go to step 6.

NO—Replace the pump motor relay. ■

6. Connect the pump motor relay connector terminal No. 3 to No. 4 with a jumper wire for a moment.

Does the pump motor operate?

YES—Go to step 11.

NO—Go to step 7.

7. Disconnect the pump motor connector.

8. Connect the pump motor relay connector terminal No. 3 to No. 4 with a jumper wire.

9. Measure the voltage between the pump motor connector terminal No. 1 and body ground.

PUMP MOTOR CONNECTOR

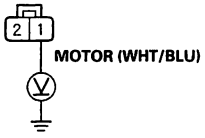

Terminal side of female terminals

Is there battery voltage?

YES—Go to step 10.

NO—Repair open in the wire between the under-hood ABS relay box and the pump motor. ■

10. Measure the voltage between the pump motor connector terminal No. 1 and No. 2.

PUMP MOTOR CONNECTOR

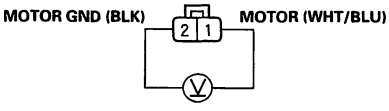

Terminal side of female terminals

Is there battery voltage?

YES—Replace the modulator unit. ■

NO—Repair open in the wire between the pump motor and body ground (G303). ■

11. Disconnect the pump motor connector B (12).

12. Connect the pump motor relay connector terminal No. 1 to No. 4 with a jumper wire.

PUMP MOTOR RELAY CONNECTOR

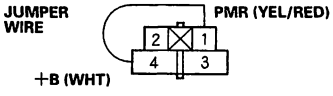

Terminal side of female terminals

BACK

13. Measure the voltage between the ABS control unit connector terminal B12 and body ground.

ABS CONTROL UNIT CONNECTOR B (12P)

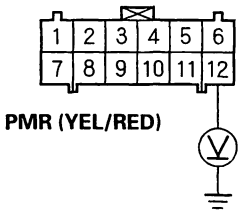

Wire side of female terminals

Is there battery voltage?

YES – Go to step 14.

NO – Repair open in the wire between the under-hood ABS relay box and the ABS control unit. ■

14. Remove the jumper wire from the pump motor relay connector.

15. Start the engine.

16. Measure the voltage between the ABS control unit connector terminal B12 and body ground.

ABS CONTROL UNIT CONNECTOR B (12P)

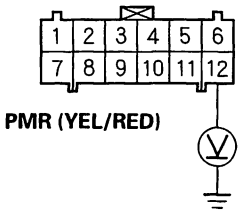

Wire side of female terminals

Is there battery voltage?

YES – Repair a short to power between the under-hood ABS relay box and the ABS control unit.

NO – If the problem recurs, replace the ABS control unit.

DTC 53: Motor Stuck ON

1. Check that the pump motor operates with the ignition switch OFF.

   Does the pump motor operate?

   YES – Replace the pump motor relay. (Pump motor relay stuck ON.) ■

   NO – Go to step 2.

2. Remove the ABS MTR CHK (7.5 A) fuse in the passenger's under-dash fuse/relay box.

   Is the fuse OK?

   YES – Remove the fuse, and go to step 3.

   NO – Replace the fuse, and recheck. ■

3. Turn the ignition switch ON (II).

4. Measure the voltage between the passenger's under-dash fuse/relay box 16P connector terminal No. 5 and body ground.

PASSENGER'S UNDER-DASH FUSE/RELAY BOX 16P CONNECTOR

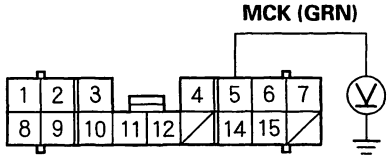

Wire side of female terminals

Is there approx. 10 V?

YES – Go to step 5.

NO – Repair open in the wire between the passenger's under-dash fuse/relay box and the ABS control unit. ■

5. Reinstall the ABS MTR CHK (7.5 A) fuse in the passenger's under-dash fuse/relay box.

(cont'd)

DTC Troubleshooting (cont'd)

6. Disconnect the pump motor connector.
7. Measure the voltage between terminal No. 1 and body ground.

PUMP MOTOR CONNECTOR

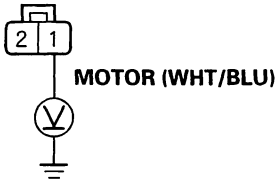

Terminal side of female terminals

Is there approx. 10 V?

YES – Go to step 8.

NO – Repair open in the wire between the under-hood ABS relay box and the pump motor. ■

8. Measure the voltage between the pump motor connector terminal No. 1 and No. 2.

PUMP MOTOR CONNECTOR

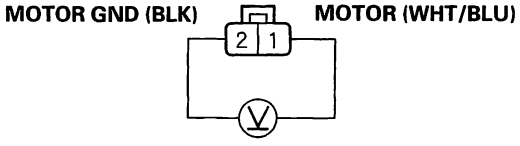

Terminal side of female terminals

Is there approx. 10 V?

YES – Go to step 9.

NO – Repair open in the wire between the pump motor and body ground (G303). ■

9. Remove the pump motor relay, then connect relay terminals No. 4 and No. 5 together with a jumper wire.

Does the pump motor run?

YES – Go to step 10.

NO – Replace the pump motor. ■

10. Disconnect the ABS control unit connector B (12P).
11. Check for continuity between terminal B12 and body ground.

ABS CONTROL UNIT CONNECTOR B (12P)

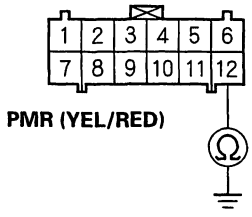

Wire side of female terminals

Is there continuity?

YES – Repair short to body ground in the wire between the under-hood ABS relay box and the ABS control unit. ■

NO – If the problem recurs, replace the ABS control unit. ■

BACK

DTC 54: Fail-safe Relay

1. Check the ABS F/S (20 A) fuse in the under-hood fuse/relay box, and reinstall the fuse if it is OK.

   Is the fuse OK?

   YES – Go to step 2.
   NO – Replace the fuse, and recheck. ■

2. Reinstall the fuse, and turn the ignition switch ON (II).

   Does the fuse blow?

   YES – Repair short to body ground in the wire between the fail-safe relay, pump motor relay, and modulator unit. ■
   NO – Go to step 3.

3. Check the fail-safe relay in the under-hood ABS relay box (see page 22-52). The wire colors of fail-safe relay connector are WHT/GRN, BRN/BLK, BLK, and YEL/GRN.

   Is the relay OK?

   YES – Leave the fail-safe relay removed, and go to step 4.
   NO – Replace the fail-safe relay. ■

4. Measure the voltage between the fail-safe relay connector terminal No. 1 and body ground.

FAIL-SAFE RELAY CONNECTOR

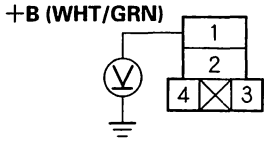

Terminal side of female terminals

Is there battery voltage?

YES – Go to step 5.
NO – Repair open in the wire between the under-hood fuse/relay box and the fail-safe relay. ■

5. Connect the fail-safe relay connector terminal No. 1 to No. 2 with a jumper wire.

FAIL-SAFE RELAY CONNECTOR

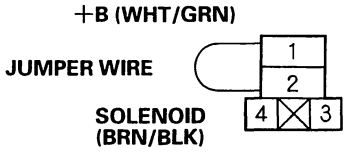

Terminal side of female terminals

6. Disconnect the modulator unit connector.

7. Measure the voltage between terminal No.10 and body ground.

MODULATOR UNIT CONNECTOR

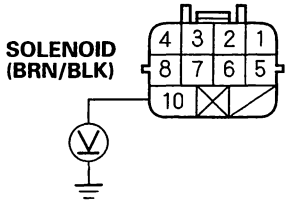

Terminal side of female terminals

Is there battery voltage?

YES – Go to step 8.

NO – Repair open in the wire between the fail-safe relay and the modulator unit. ■

8. Remove the jumper wire from the fail-safe relay connector.

(cont'd)

DTC Troubleshooting (cont'd)

9. Measure the voltage between the modulator unit connector terminal No. 10 and body ground.

MODULATOR UNIT CONNECTOR

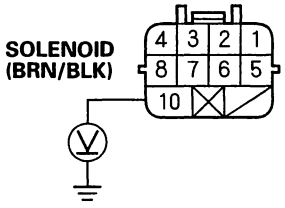

Terminal side of female terminals

Is there battery voltage?

YES—Repair short to power in the wire between the fail-safe relay, modulator unit, and under-hood ABS relay box.■

NO—Go to step 10.

10. Disconnect the ABS control unit connector A (22P).

11. Turn the ignition switch ON (II).

12. Measure the voltage between terminal A21 and body ground.

ABS CONTROL UNIT CONNECTOR A (22P)

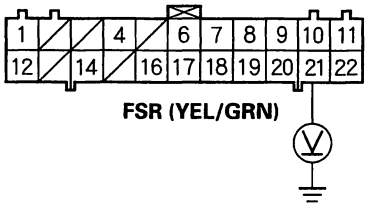

Wire side of female terminals

Is there battery voltage?

YES—Repair short to power in the wire between the ABS control unit and the fail-safe relay.■

NO—Go to step 13.

13. Check for continuity between the ABS control unit connector terminal A21 and body ground.

ABS CONTROL UNIT CONNECTOR A (22P)

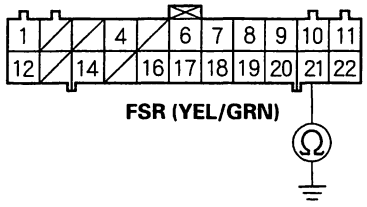

Wire side of female terminals

Is there continuity?

YES—Repair short to body ground in the wire between the ABS control unit and the fail-safe relay.■

NO—Go to step 14.

14. Check for continuity between the fail-safe relay connector terminal No. 3 and body ground.

FAIL-SAFE RELAY CONNECTOR

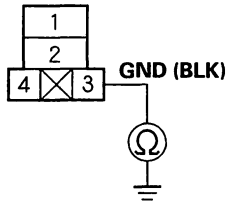

Terminal side of female terminals

Is there continuity?

YES—Go to step 15.

NO—Repair open in the wire between the fail-safe relay and body ground.■

BACK

15. Connect the fail-safe relay connector terminals No. 3 and No. 4 with a jumper wire.

FAIL-SAFE RELAY CONNECTOR

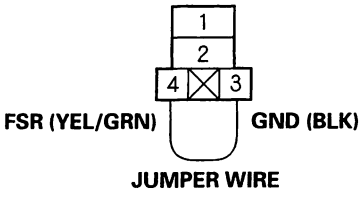

Wire side of female terminals

16. Check for continuity between the ABS control unit connector terminal A21 and body ground.

ABS CONTROL UNIT CONNECTOR A (22P)

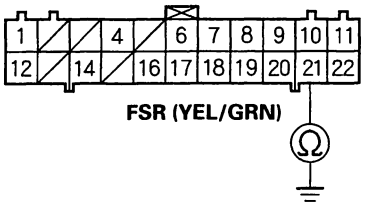

Wire side of female terminals

Is there continuity?

YES—If the problem recurs, replace the ABS control unit.■

NO—Repair open in the wire between the ABS control unit and the fail-safe relay.■

DTC 61, 62: Ignition Voltage

1. Clear the DTC.
2. Test-drive the vehicle at 6 mph (10 km/h) or more.

   Does the ABS indicator come on?

   YES—Go to step 3.

   NO—The system is OK at this time.■

3. Verify the DTC.

   Is DTC 61 or 62 indicated?

   YES—Check the charging system.■

   NO—Do the appropriate troubleshooting for the DTC. ■

DTC Troubleshooting (cont'd)

DTC 71: Different Diameter Tire

1. Clear the DTC.
2. Test-drive the vehicle.

   Does the ABS indicator come on, and is DTC 71 indicated?

   YES—Make sure all four tires are the specified size.■

   NO—Intermittent failure; the vehicle is OK at this time.■

DTC 81: Central Processing Unit (CPU) Diagnosis, and ROM/RAM Diagnosis

1. Clear the DTC.
2. Test-drive the vehicle.

   Does the ABS indicator come on, and is DTC 81 indicated?

   YES—Replace the ABS control unit.■

   NO—Intermittent failure; the vehicle is OK at this time.■

BACK

ABS Indicator Circuit Troubleshooting

1. Turn the ignition switch ON (II), and watch the ABS indicator.

   Does the ABS indicator come on?

   YES—If the ABS indicator comes on and goes off, it's OK. If the ABS indicator stays on, go to step 13.

   NO—Go to step 2.

2. Turn the ignition switch OFF then ON (II) again.

   Does the brake system indicator come on?

   YES—Go to step 3.

   NO—Repair open in the brake system indicator circuit. ■
   - Blown BACK-UP LIGHT (7.5 A) fuse.
   - Open in the wire between the BACK-UP LIGHT (7.5 A) fuse and the gauge assembly.
   - Open circuit inside the fuse box.

3. Turn the ignition switch OFF.

4. Disconnect the ABS control unit connector B (12P).

5. Turn the ignition switch ON (II).

   Does the ABS indicator come on?

   YES—Check for loose ABS control unit connectors. If necessary, substitute a known-good ABS control unit, and recheck. ■

   NO—Go to step 6.

6. Check the ABS indicator bulb in the gauge assembly.

   Is the bulb OK?

   YES—Go to step 7.

   NO—Replace the ABS indicator bulb. ■

7. Turn the ignition switch OFF.

8. Disconnect the gauge assembly 16P connector.

9. Check for continuity between the gauge assembly 16P connector terminal No. 10 and body ground.

GAUGE ASSEMBLY 16P CONNECTOR

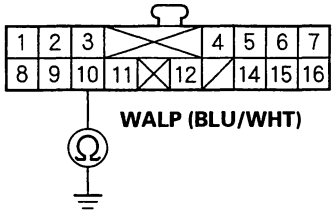

Wire side of female terminals

Is there continuity?

YES—Repair short to body ground in the wire between the gauge assembly and the ABS control unit. ■

NO—Go to step 10.

10. Connect the gauge assembly 16P connector.

11. Connect the gauge assembly 22P connector terminal No. 16 to body ground with a jumper wire.

12. Turn the ignition switch ON (II).

GAUGE ASSEMBLY 22P CONNECTOR

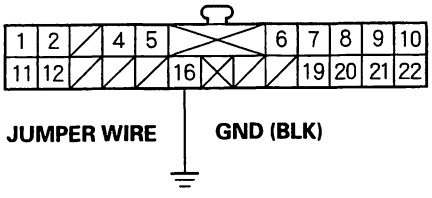

Wire side of female terminals

Does the ABS indicator come on?

YES—Repair open in the wire between the gauge assembly and body ground (G501). ■

NO—Replace the printed circuit board in the gauge assembly. ■

(cont'd)

ABS Indicator Circuit Troubleshooting (cont'd)

13. Check the POWER MIRROR (7.5 A) fuse in the under-dash driver's fuse/relay box, and reinstall the fuse if it is OK.

    Is the fuse OK?

    YES—Go to step 14.
    NO—Replace the fuse, and recheck. ■

14. Connect the ABS control unit connector terminal A1 to body ground with a jumper wire.

ABS CONTROL UNIT CONNECTOR A (22P)

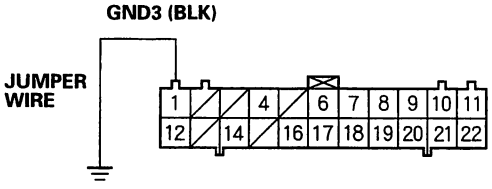

Wire side of female terminals

15. Turn the ignition switch ON (II).

    Does the ABS indicator go off?

    YES—Repair open in the wire between the ABS control unit and body ground (G304). ■
    NO—Go to step 16.

16. Measure the voltage between the ABS control unit connector terminal A11 and body ground.

ABS CONTROL UNIT CONNECTOR A (22P)

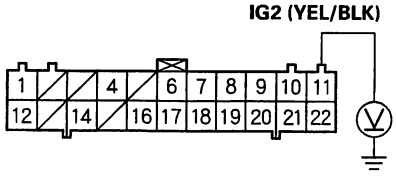

Wire side of female terminals

Is there battery voltage?

YES—Go to step 17.
NO—Repair open in the wire between the CLOCK (7.5 A) fuse and the ABS control unit. ■

17. Connect the ABS control unit connector terminal B1 to body ground with a jumper wire.

ABS CONTROL UNIT CONNECTOR B (12P)

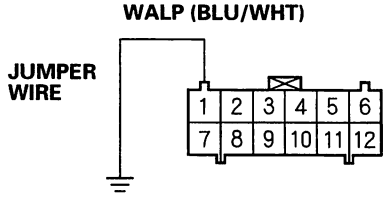

Wire side of female terminals

Does the ABS indicator go off?

YES—Check for loose ABS control unit connectors. If necessary, substitute a known-good ABS control unit, and recheck. ■

NO—Go to step 18.

18. Connect the gauge assembly 16P connector terminal No. 10 to body ground with a jumper wire.

GAUGE ASSEMBLY 16P CONNECTOR

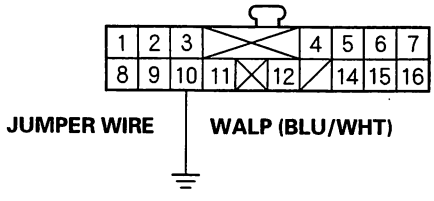

Wire side of female terminals

Does the ABS indicator go off?

YES—Repair open in the wire between the gauge assembly and the ABS control unit. ■

NO—Replace the printed circuit board in the gauge assembly. ■

BACK

Modulator Unit Removal and Installation

NOTE:
- Do not spill brake fluid on the vehicle; it may damage the paint; if brake fluid gets on the paint, wash it off immediately with water.
- Take care not to damage or deform the brake lines during removal and installation.
- To prevent the brake fluid from flowing, plug and cover the hose ends and joints with a shop towel or equivalent material.

Removal

1. Disconnect the modulator unit connector (C) and the pump motor connector (B).
2. Disconnect the brake lines, then remove the modulator unit (A).

Installation

1. Install the modulator unit, then connect the brake lines. Tighten the flare nuts to 15 N·m (1.5 kgf·m, 11 lbf·ft).
2. Connect the modulator unit connector and the pump motor connector.
3. Bleed the brake system, starting with the front wheels.
4. Start the engine, and check that the ABS indicator goes off.
5. Test-drive the vehicle, and check that the ABS indicator does not come on.

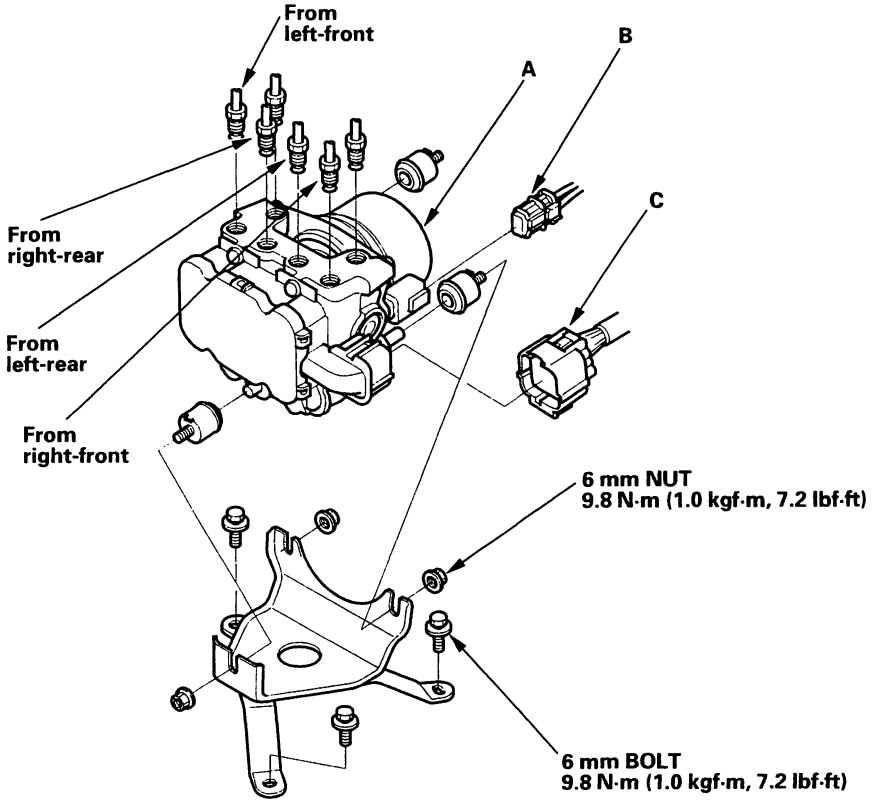

ABS Control Unit Replacement

1. Remove the driver's kick panel.
2. Disconnect the ABS control unit connectors (A).

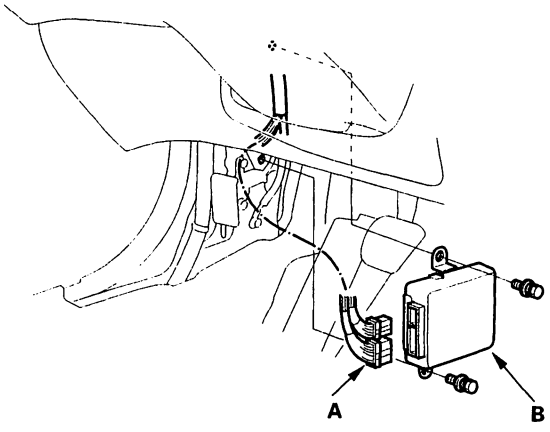

3. Remove the ABS control unit (B).
4. Install the ABS control unit in the reverse order of removal.

Wheel Sensor Inspection

1. Inspect the front and rear pulsers for chipped or damaged teeth.
2. Measure the air gap between the wheel sensor and pulser all the way around while rotating the pulser. Remove the rear brake disc to measure the gap on the rear wheel sensor. If the gap exceeds 1.0 mm (0.04 in), check for a bent suspension arm.

Standard: 0.4–1.0 mm (0.02–0.04 in.)

Front

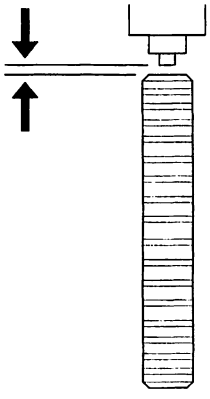

Rear

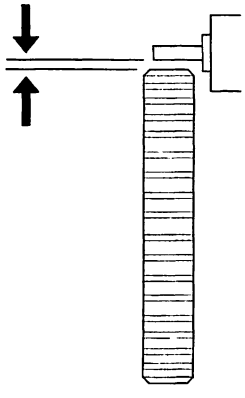

BACK

Wheel Sensor Replacement

Install the sensors carefully to avoid twisting the wires.

Front

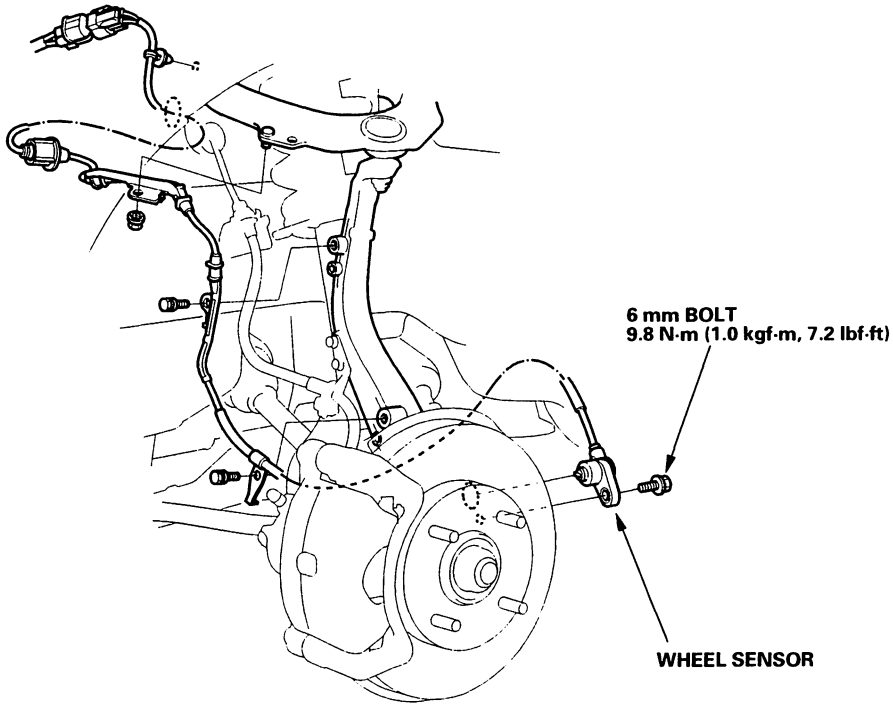

Rear

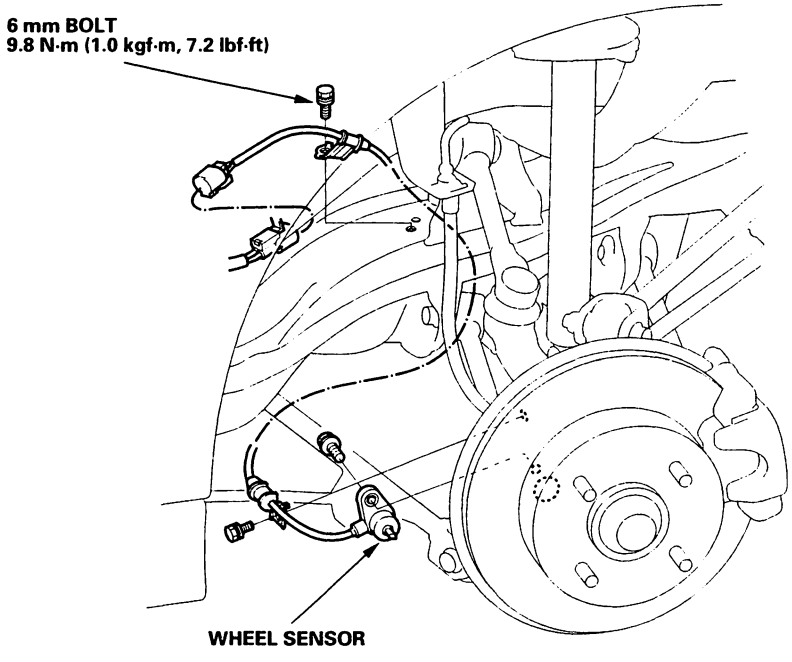

BACK

SUPPLEMENTAL RESTRAINT SYSTEM (SRS) (If body maintenance is required)

The Accord Sedan/Coupe (L4) SRS includes a driver's airbag in the steering wheel hub, a passenger's airbag in the dashboard above the glove box, seat belt tensioners ('01-02 models) in the front seat belt retractors, and side airbags ('00-02 models) in the front seat-backs. Information necessary to safely service the SRS is included in this Service Manual. Items marked with an asterisk (*) on the contents page include or are located near SRS components. Servicing, disassembling, or replacing these items will require special precautions and tools, and should be done only by an authorized Honda dealer.

- To avoid rendering the SRS inoperative, which could lead to personal injury or death in the event of a severe frontal collision, all SRS service work must be performed by an authorized Honda dealer.
- Improper service procedures, including incorrect removal and installation of the SRS, could lead to personal injury caused by unintentional deployment of the airbags and side airbags.
- Do not bump the SRS unit. Otherwise, the system may fail in a collision, or the airbags may deploy when the ignition switch is ON (II).
- SRS electrical connectors are identified by yellow color coding. Related components are located in the steering column, front console, dashboard, dashboard lower panel, in the dashboard above the glove box, in the front seats, and around the floor. Do not use electrical test equipment on these circuits.

BACK

Body

Door
Component Location Index-Coupe 20-2
Component Location Index -Sedan Front Door 20-4
Component Location Index -Sedan Rear Door 20-6
Front Door Panel Removal/ Installation-Coupe 20-8
Front Door Panel Removal/ Installation-Sedan 20-9
Front Door Outer Handle Replacement 20-11
Front Door Latch Replacement 20-14
Front Door Glass and Regulator Replacement-Coupe 20-14
Front Door Glass and Regulator Replacement-Sedan 20-16
Rear Door Panel Removal/Installation 20-17
Rear Door Outer Handle Replacement 20-19
Rear Door Latch Replacement 20-21
Rear Door Glass, Quarter Glass and Regulator Replacement 20-22
Sticker Replacement 20-25
Rear Door Hook Pin and Catcher Replacement 20-26
Front Door Glass Adjustment-Coupe 20-26
Front and Rear Door Glass Adjustment -Sedan 20-28
Door Position Adjustment 20-29
Door Striker Adjustment 20-30

Mirrors
Component Location Index-Coupe 20-31
Component Location Index-Sedan 20-32
Mirror Holder Replacement-Coupe 20-33
Manual Mirror Replacement-Sedan 20-34
Power Mirror Replacement 20-35
Mirror Holder Replacement-Sedan 20-36
Rearview Mirror Replacement 20-37

Glass
Component Location Index-Coupe 20-38
Component Location Index-Sedan 20-39
Windshield Replacement 20-40
Rear Window Replacement 20-49
Quarter Glass Replacement -Coupe..... 20-55
Sticker Replacement 20-59

Moonroof
Component Location Index 20-60
Symptom Troubleshooting Index 20-61
Glass Height Adjustment 20-62
Glass Replacement 20-62
Drain Channel Replacement 20-63
Sunshade Replacement 20-64
Motor Replacement 20-65
Frame and Drain Tube Replacement 20-66
Drain Channel Slider and Cable Assembly Replacement 20-68
Position Switch Adjustment 20-70
Closing Force and Opening Drag Check 20-71

Interior Trim
Component Location Index-Coupe 20-72
Component Location Index-Sedan 20-73
Trim Removal/Installation -Door Area -Coupe 20-74
Trim Removal/Installation -Door Area -Sedan 20-75
Trim Removal/Installation -Rear Shelf Area -Coupe 20-76
Trim Removal/Installation -Rear Shelf Area -Sedan 20-77
Trim Removal/Installation-Trunk 20-78
Headliner Removal and Installation 20-79
*Carpet Replacement 20-81

Console
Center Console Removal/Installation 20-83

Dashboard
Instrument Panel Removal/ Installation 20-84
*Driver's Dashboard Lower Cover Removal/Installation 20-84
Passenger's Dashboard Lower Cover Removal/Installation 20-85
Center Panel Removal/ Installation 20-86
*Glove Box Removal/Installation 20-87
Driver's Side Vent Removal/ Installation 20-88
Passenger's Side Vent Removal and Installation 20-89
Side Defogger Vent Trim Removal and Installation 20-89
*Dashboard Removal/Installation 20-90
Steering Hanger Beam Replacement 20-94

Seats
Component Location Index-Coupe 20-97
Component Location Index-Sedan 20-98
*Front Seat Removal/Installation 20-99
Front Seat Disassembly/Reassembly -Manual without Side Airbag-Coupe 20-102
*Front Seat Disassembly/Reassembly -Manual with Side Airbag-Coupe 20-103
Front Seat Disassembly/Reassembly -Manual without Side Airbag-Sedan 20-104
*Front Seat Disassembly/Reassembly -Manual with Side Airbag-Sedan 20-105
Front Seat Disassembly/Reassembly -Manual Height Adjustable without Side Airbag-Coupe 20-106
Front Seat Disassembly/Reassembly -Manual Height Adjustable with Side Airbag-Coupe 20-107
Front Seat Disassembly/Reassembly -Manual Height Adjustable without Side Airbag-Sedan 20-108
*Front Seat Disassembly/Reassembly -Manual Height Adjustable with Side Airbag-Sedan 20-109
Front Seat Disassembly/Reassembly -2-Way Powerwithout Side Airbag 20-110
*Front Seat Disassembly/Reassembly -2-Way Powerwith Side Airbag 20-111
*Front Seat Disassembly/Reassembly-8-Way power without Side Airbag-Coupe 20-112
*Front Seat Disassembly/Reassembly-8-Way power with Side Airbag-Sedan 20-113
*Front Seat Disassembly/Reassembly -8-Way power -Sedan 20-114
Front Seat Wiring Harness and Cable Installation-Coupe 20-115
Front Seat Wiring Harness Installation-Sedan 20-118
Front Seat Torsion Bar Replacement Manual Height Adjustable 20-120
Front Seat Linkage Disassembly/ Reassembly 2-Way Power 20-121
Front Seat Linkage Disassembly/ Reassembly-8-Way-Power 20-122
*Front Seat Cover Replacement 20-123
Rear Seat Removal/Installation-Coupe 20-128
Rear Seat Removal/Installation-Sedan 20-129
Rear Seat Armrest/Trunk Pass -through Cover Replacement-Sedan 20-130
Trunk Pass-through Cover Key Cylinder Replacement 20-131
Rear Seat-back Latch and Lock Cylinder Replacement-Coupe 20-132

Rear Seat-back Latch
Replacement-Sedan 20-133
Rear Seat-back Lock
CylinderReplacement-Sedan 20-133
Rear Seat Cover Replacement-Coupe 20-134
Rear Seat Cover Replacement-Sedan 20-135
Rear Seat Side Bolster Cover
Replacement 20-137
Rear Seat Cushion Cover
Replacement-Coupe 20-138
Rear Seat Cushion Cover
Replacement-Sedan 20-139

Bumpers

Front Bumper Removal/
Installation-Coupe 20-140
Front Bumper Removal/
Installation-Sedan 20-142
Rear Bumper Removal/
Installation-Coupe 20-145
Rear Bumper Removal/
Installation-Sedan 20-148

Hood

Replacement 20-150
Adjustment 20-151
Hood Insulator Replacement 20-152
Hood Seal Rubber and Hood Molding
Replacement 20-153

Trunk Lid

Replacement 20-154
Adjustment 20-156
Trunk Lid Torsion Bar Replacement..... 20-157
Trunk Lid Dynamic Damper
Replacement-Sedan 20-158
Trunk Lid Weatherstrip Replacement 20-158

Exterior Trim

Emblem Replacement-Coupe 20-159
Emblem Replacement-Sedan 20-160
Front Grille Replacement-Coupe 20-160
Roof Drip Molding Replacement -Coupe 20-161
Roof Drip and Rear Pillar Moldings
Replacement-Sedan 20-162
Roof Moldings Replacement 20-163
Door Moldings Replacement-Sedan 20-164
Side Sill Panel Replacement-Coupe 20-165
Side Sill Panel Replacement-Sedan 20-166

Fenderwell

Inner Fender Replacement 20-167
Fuel Pipe Protector Replacement 20-167
Rear Air Outlet Replacement 20-168

Openers

Component Location Index 20-169
Hood Opener Cable Replacement 20-170
Trunk Lid Opener/Fuel Lid Opener
Cable Replacement-Coupe 20-171
Trunk Lid Opener/Fuel Lid Opener
Cable Replacement-Sedan 20-173
Hood Release Handle Replacement 20-175
Hood Latch Replacement 20-175
Trunk Lid Opener/Fuel Fill Door
Opener Replacement 20-176
Fuel Fill Door Latch Replacement 20-177
Trunk Lid Latch Replacement 20-178
Trunk Lid Lock Cylinder Replacement 20-179

Frame

Sub-frame Replacement 20-180
*Frame Repair Chart 20-182

Component Location Index - Coupe

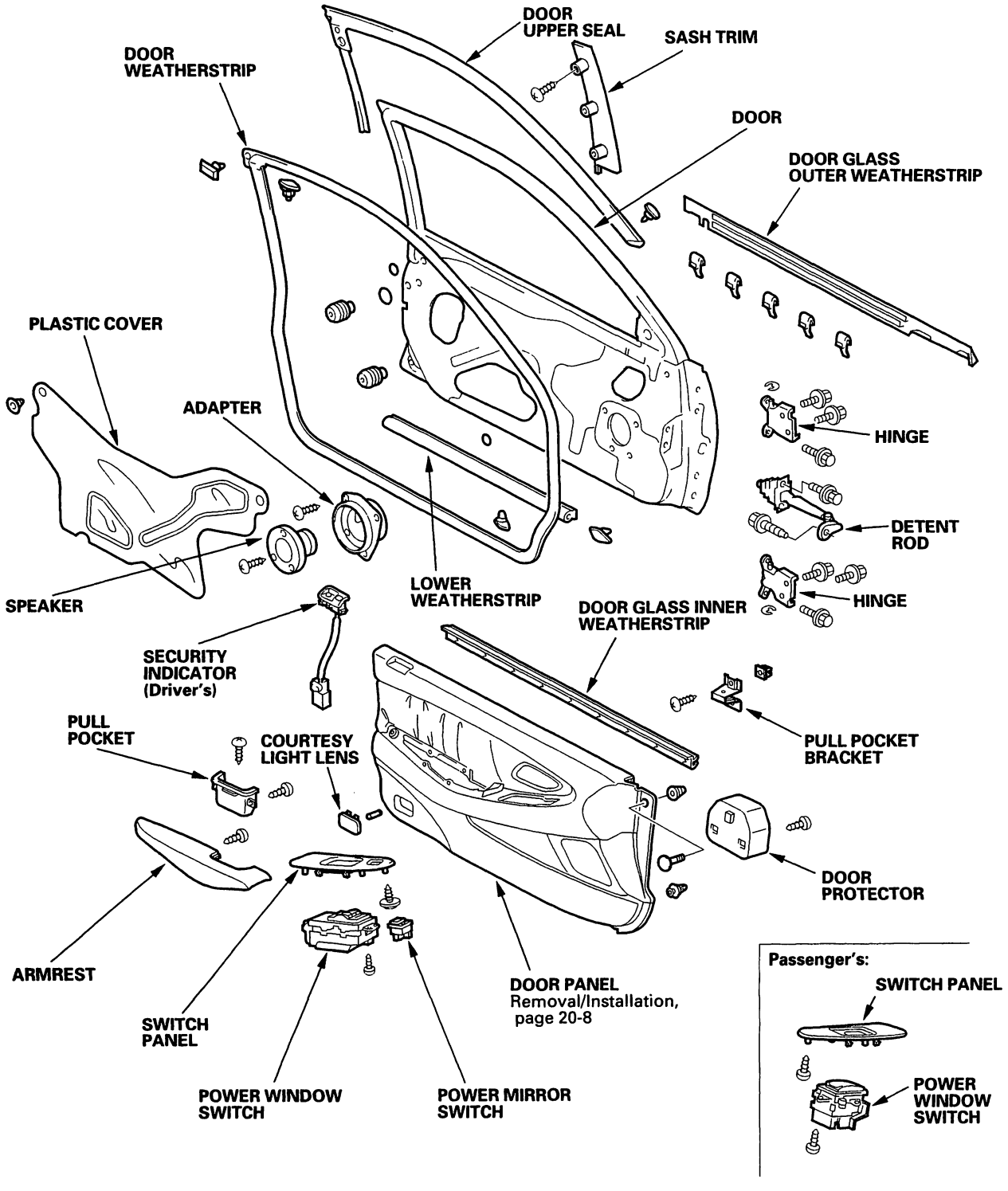

BACK

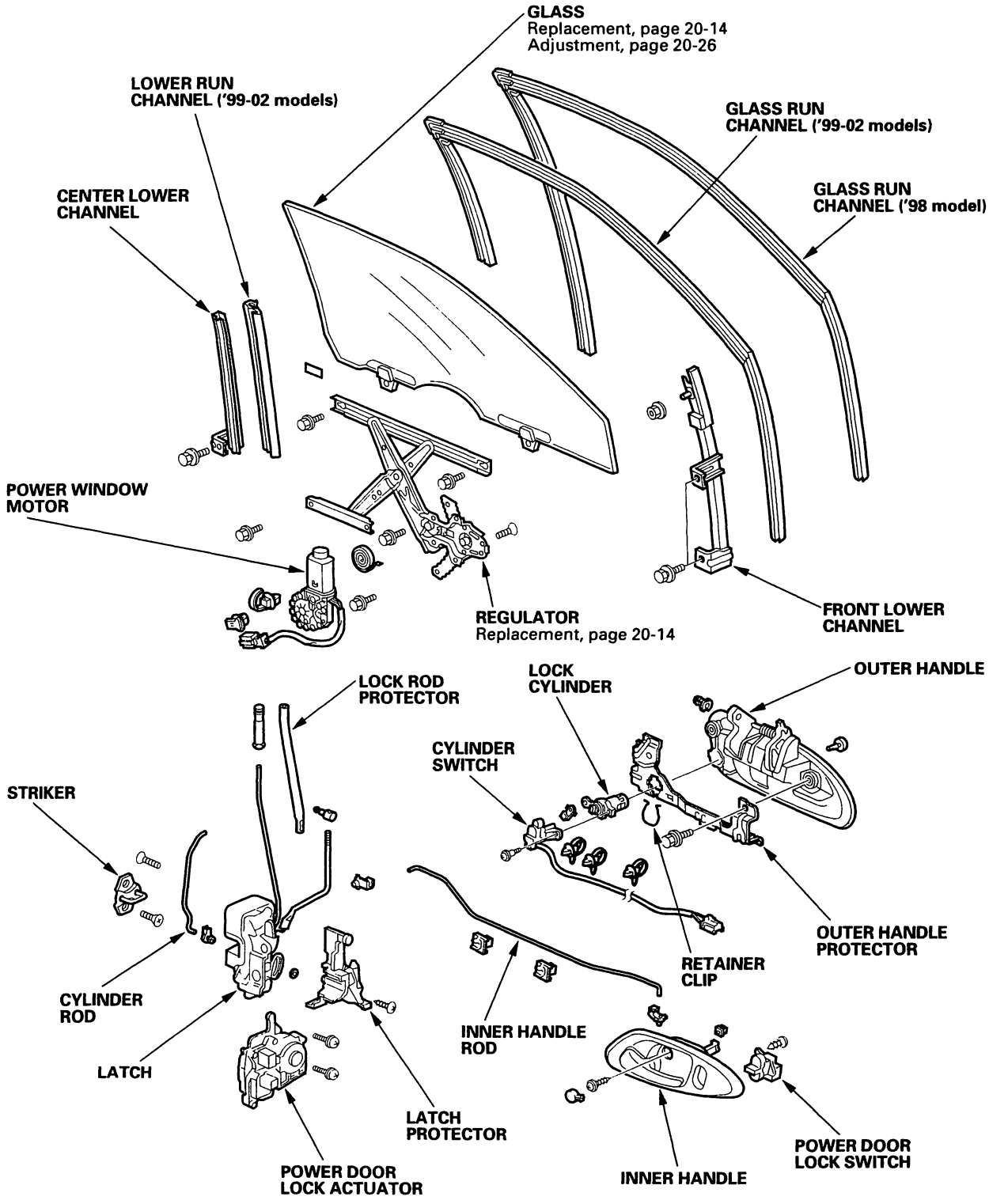
GLASS
Replacement, page 20-14
Adjustment, page 20-26
LOWER RUN CHANNEL ('99-02 models)
GLASS RUN CHANNEL ('99-02 models)
CENTER LOWER CHANNEL
GLASS RUN CHANNEL ('98 model)
POWER WINDOW MOTOR
REGULATOR
Replacement, page 20-14
FRONT LOWER CHANNEL
LOCK ROD PROTECTOR
LOCK CYLINDER
OUTER HANDLE
CYLINDER SWITCH
STRIKER
OUTER HANDLE PROTECTOR
RETAINER CLIP
CYLINDER ROD
INNER HANDLE ROD
LATCH
LATCH PROTECTOR
POWER DOOR LOCK SWITCH
POWER DOOR LOCK ACTUATOR
INNER HANDLE

BACK

Component Location Index - Sedan Front Door

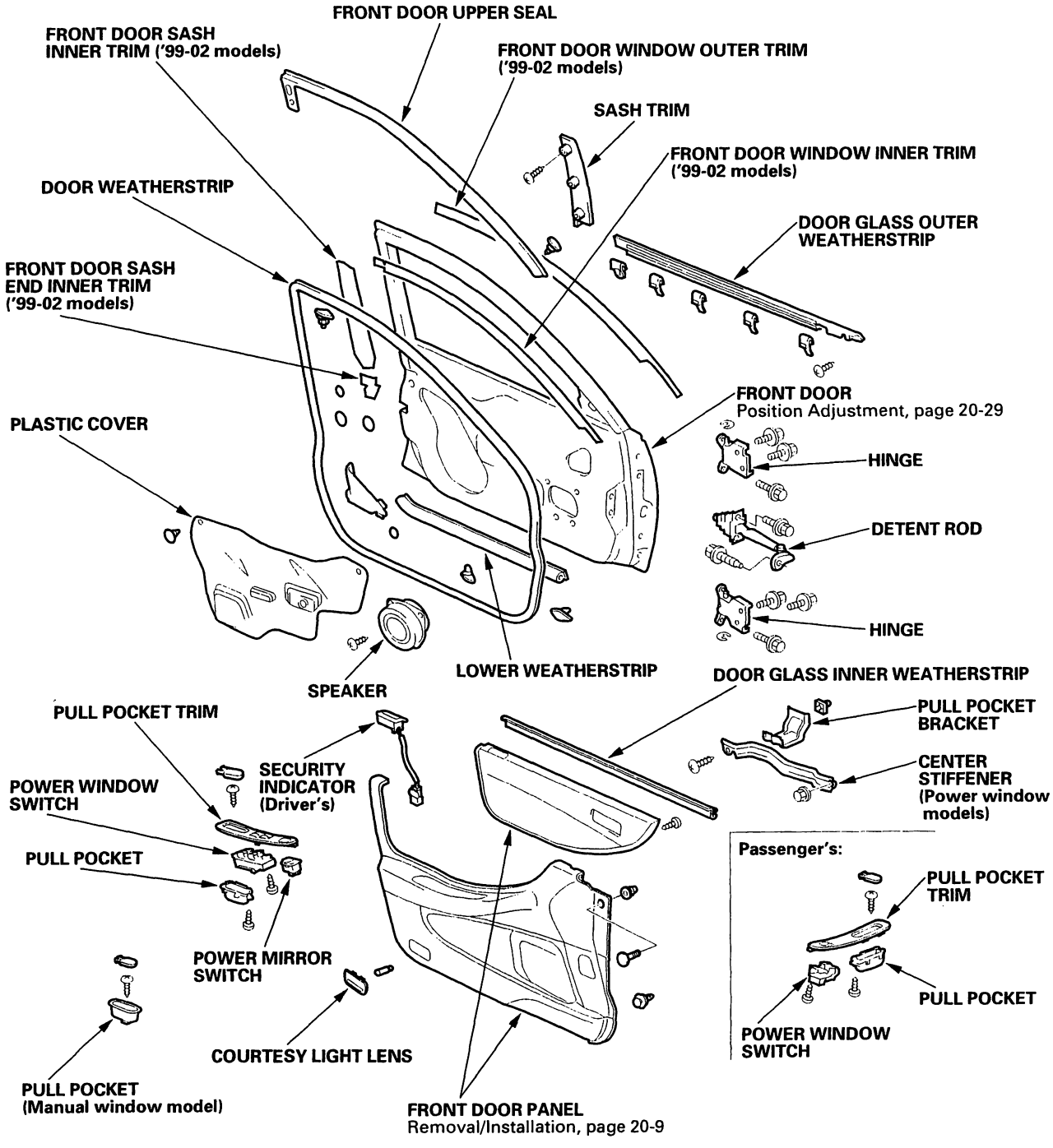

BACK

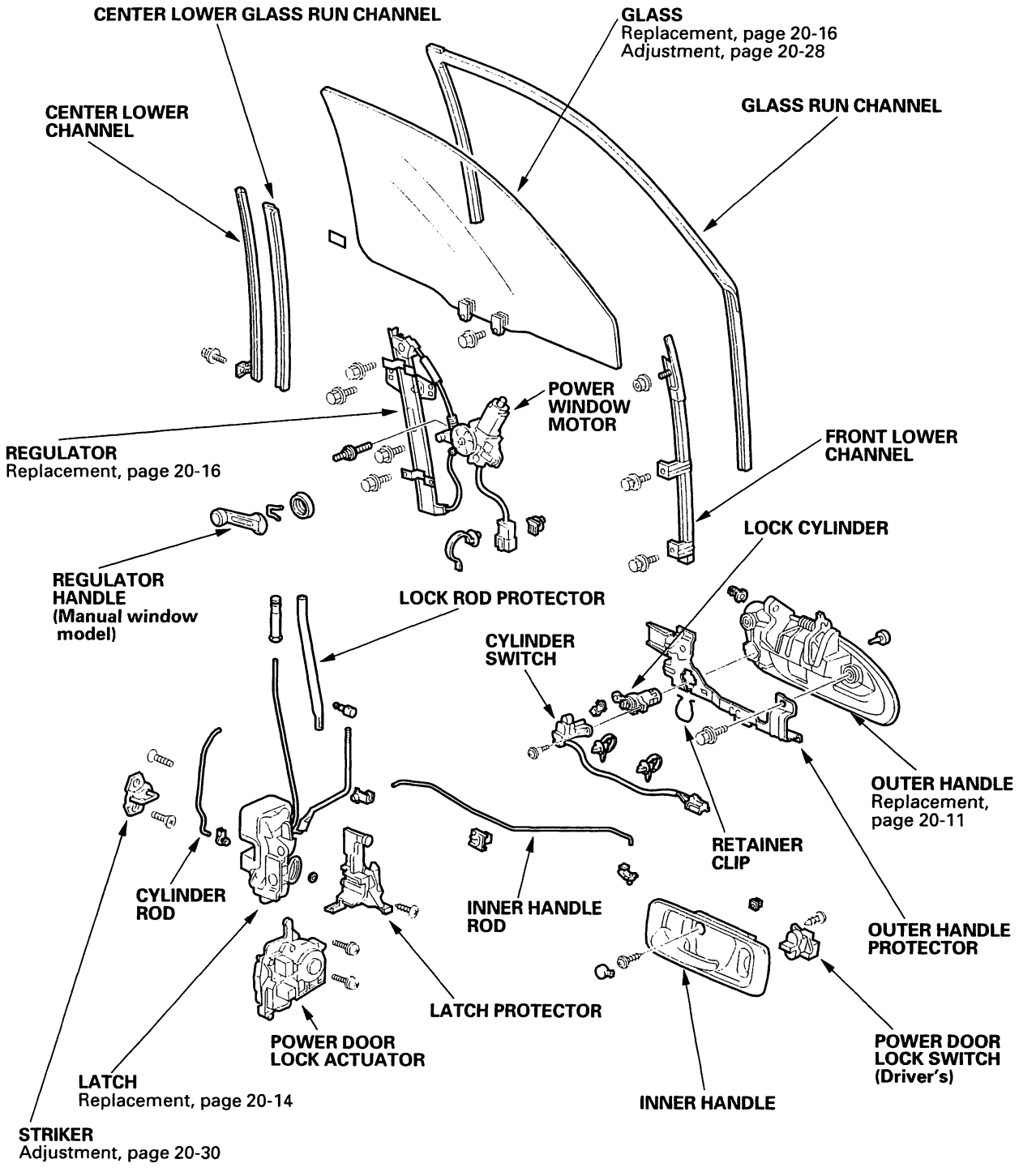
CENTER LOWER GLASS RUN CHANNEL
GLASS
Replacement, page 20-16
Adjustment, page 20-28
CENTER LOWER CHANNEL
GLASS RUN CHANNEL
POWER WINDOW MOTOR
REGULATOR
Replacement, page 20-16
FRONT LOWER CHANNEL
LOCK CYLINDER
REGULATOR HANDLE (Manual window model)
LOCK ROD PROTECTOR
CYLINDER SWITCH
OUTER HANDLE
Replacement, page 20-11
RETAINER CLIP
CYLINDER ROD
INNER HANDLE ROD
OUTER HANDLE PROTECTOR
LATCH PROTECTOR
POWER DOOR LOCK ACTUATOR
POWER DOOR LOCK SWITCH (Driver's)
LATCH
Replacement, page 20-14
INNER HANDLE
STRIKER
Adjustment, page 20-30

Component Location Index - Sedan Rear Door

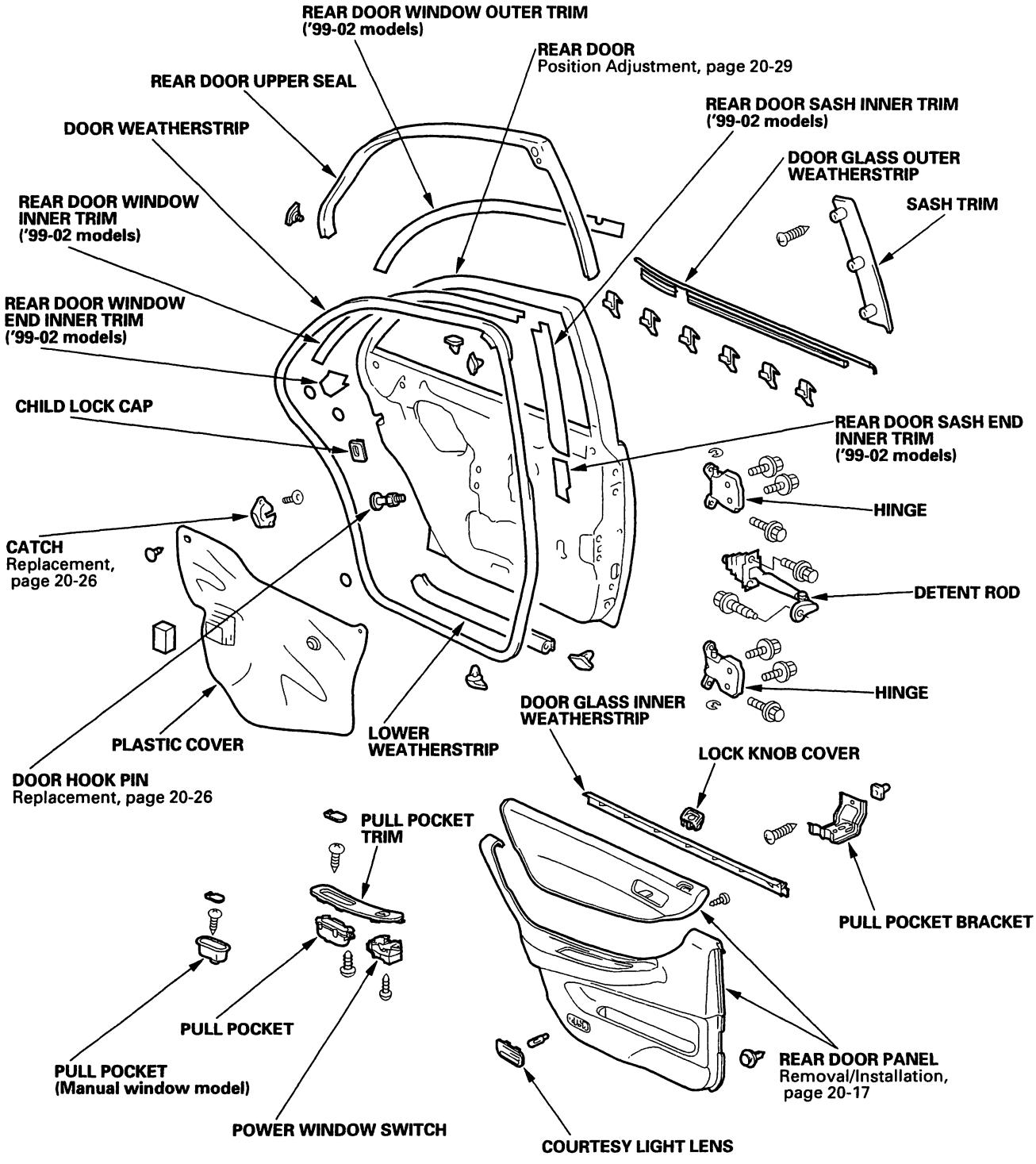

BACK

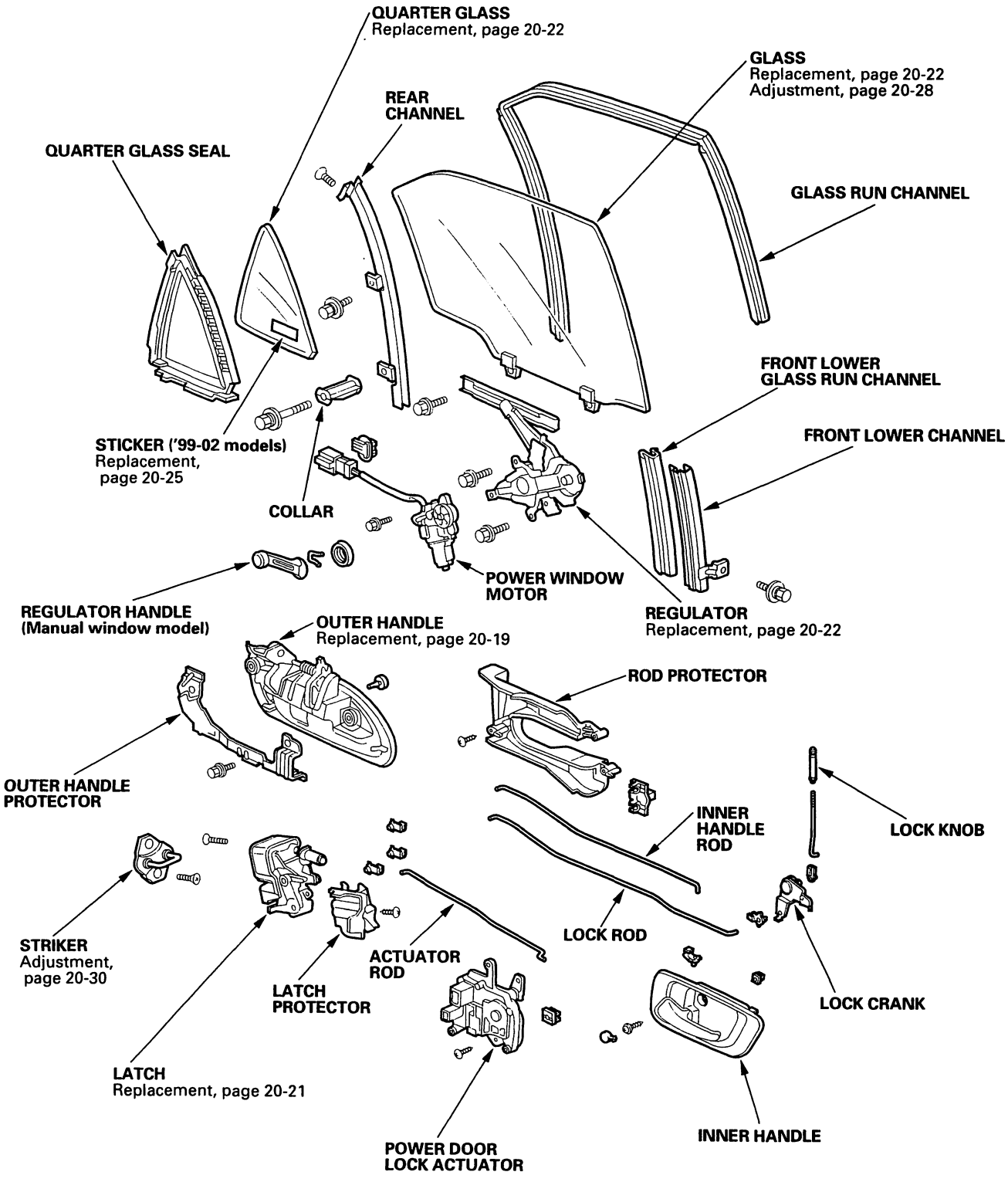
QUARTER GLASS
Replacement, page 20-22
GLASS
Replacement, page 20-22
Adjustment, page 20-28
REAR CHANNEL
QUARTER GLASS SEAL
GLASS RUN CHANNEL
FRONT LOWER GLASS RUN CHANNEL
FRONT LOWER CHANNEL
STICKER ('99-02 models)
Replacement, page 20-25
COLLAR
POWER WINDOW MOTOR
REGULATOR HANDLE
(Manual window model)
OUTER HANDLE
Replacement, page 20-19
REGULATOR
Replacement, page 20-22
ROD PROTECTOR
OUTER HANDLE PROTECTOR
INNER HANDLE ROD
LOCK KNOB
STRIKER
Adjustment, page 20-30
LOCK ROD
ACTUATOR ROD
LATCH PROTECTOR
LOCK CRANK
LATCH
Replacement, page 20-21
INNER HANDLE
POWER DOOR LOCK ACTUATOR

BACK

Door Panel Removal/Installation - Coupe

Special Tool Required
Trim Pad Remover, Snap-on A177A, or equivalent, commercially available.

1. Remove the mirror mount cover (see step 2 on page 20-35). Take care not to scratch the door panel.

2. Remove the inner handle (A). Take care not to scratch the door panel.

   – 1 Pry out the cap (B), and remove the screw.
   – 2 Pull the inner handle forward and out half-way.
   – 3 Disconnect the inner handle rod (C) and power door lock switch connector (D).

Fastener Location

▶ : Screw, 1

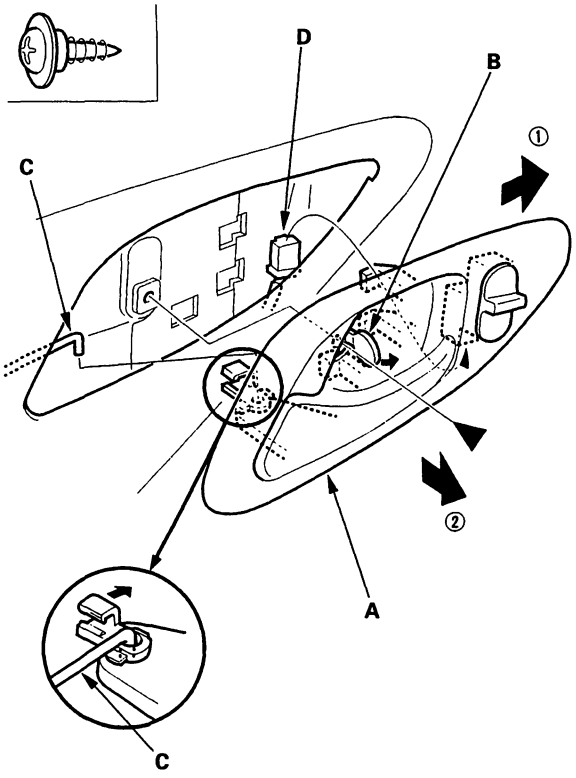

3. Remove the screw, and release the clips (A, B) that hold the door panel (C) with a commercially available trim pad remover (D), then remove the door panel by pulling it upward. Disconnect the power window switch connectors (E), and the power mirror switch connector (F) (driver's side), security indicator connector (G) (driver's side for some models), and courtesy light bulb socket (H). Remove the door panel with as little bending as possible to avoid creasing or breaking it.

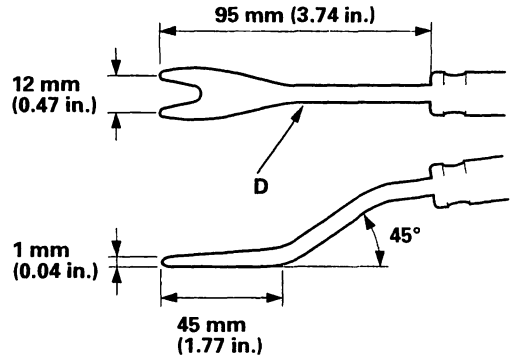

Fastener Locations

▶ : Screw, 1 A ▷ : Clip, 10 B ▷ : Clip, 1

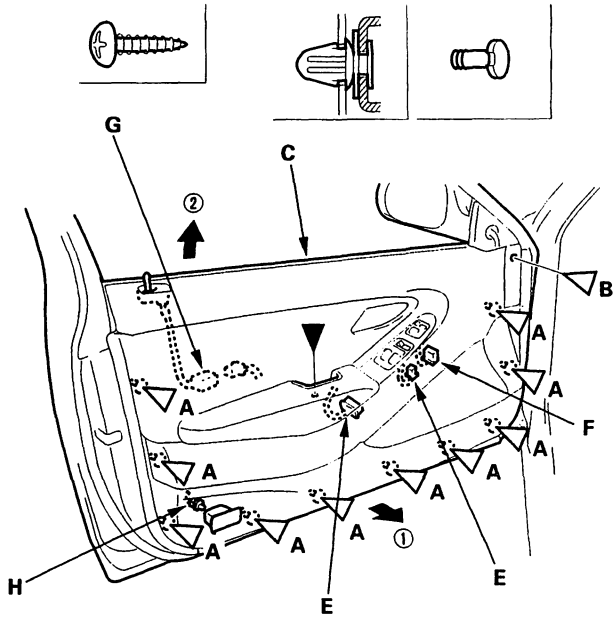

4. Install the door panel in the reverse order of removal; make sure the connectors and the courtesy light bulb socket are plugged in properly, and the inner handle rod is connected properly.

BACK

Front Door Panel Removal/Installation - Sedan

Special Tools Required
Trim Pad Remover, Snap-on A177A or equivalent, commercially available.

1. Remove the mirror mount cover, power mirror (see step 2 on page 20-35), manual mirror (see step 2 on page 20-34). Take care not to scratch the door panel.

2. If applicable, remove the regulator handle (A) by pulling the clip (B) out with a wire hook (C).

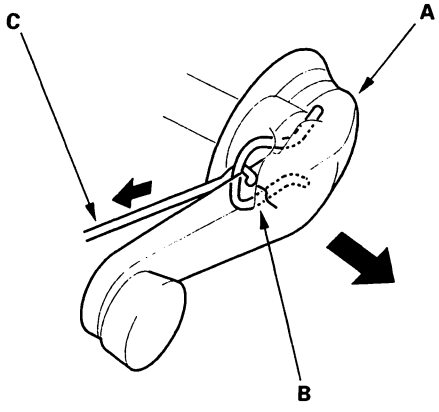

3. Remove the inner handle (A). Take care not to scratch the door panel.

   - 1 Pry out the cap (B), and remove the screw.
   - 2 Pull the inner handle forward and out half-way.
   - 3 Disconnect the inner handle rod (C) and power door lock switch connector (D) (for some models).

Fastener Location

▶ : Screw, 1

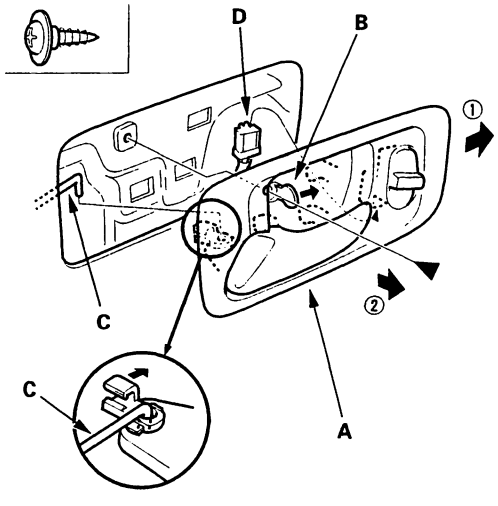

4. Power window models: Remove the pull pocket panel (A). Take care not to scratch the door panel.

   - 1 Pry out the cap (B), and remove the screw.
   - 2 Release the hooks (C), disconnect the power window switch connector (D), and the power mirror switch connector (E), driver's side only.

Driver's

Fastener Location

▶ : Screw, 1

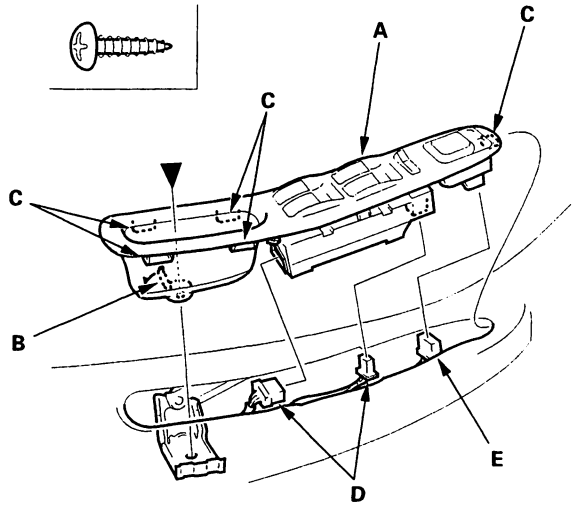

Passenger's

Fastener Location

▶ : Screw, 1

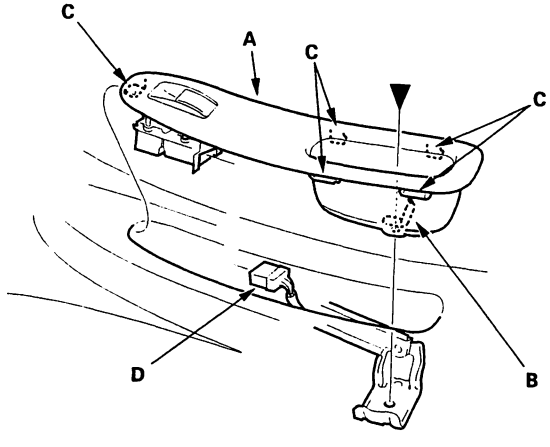

(cont'd)

Front Door Panel Removal/Installation - Sedan (cont'd)

5. Manual window model: Remove the pull pocket (A). Take care not to scratch the door panel.

   – 1 Pry out the cap (B), and remove the screw.
   – 2 Lift out the pull pocket.

Fastener Location

▶ : Screw, 1

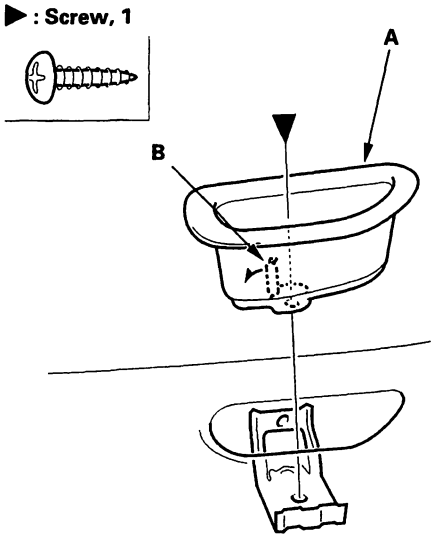

6. Release the clips (A, B) that hold the door panel (C) with a commercially available trim pad remover (D), then remove the door panel by pulling it upward. Disconnect the security indicator connector (E) (driver's) and courtesy light bulb socket (F). Remove the door panel with as little bending as possible to avoid creasing or breaking it.

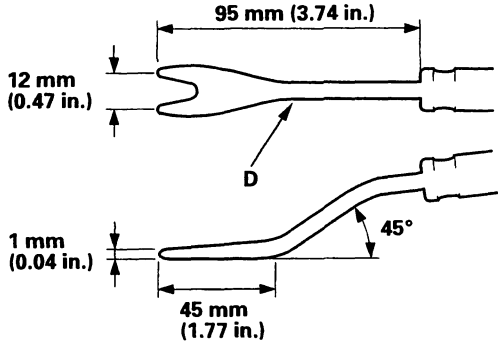

Fastener Locations

A ▷ : Clip, 8 B ▷ : Clip, 1

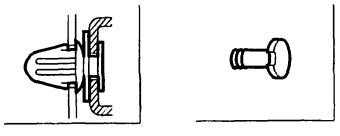

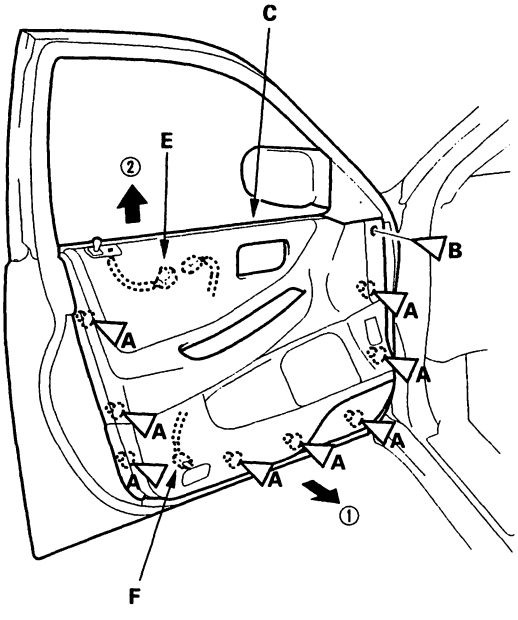

BACK

7. Install the door panel in the reverse order of removal, and note these items:

   - Make sure the connectors and the courtesy light bulb socket are plugged in properly, and the rod is connected properly.
   - If applicable, install the regulator handle so it points forward and up at a 45 degree angle with the glass fully closed.

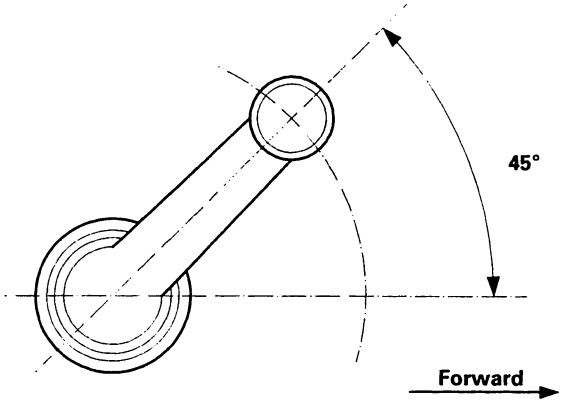

Front Door Outer Handle Replacement

NOTE: Put on gloves to protect your hands.

1. Raise the glass fully.

2. Remove these items:

   - Mirror mount cover, power mirror (see step 2 on page 20-35), manual mirror (see step 2 on page 20-34)
   - Door panel
     - Coupe (see page 20-8)
     - Sedan (see page 20-9)
   - Plastic cover, as necessary
     - Coupe (see page 20-2)
     - Sedan (see page 20-4)

3. Remove the bolt, then remove the center lower channel (A) with center lower glass run channel (B) by pulling it downward.

Fastener Location

▶ : **Bolt, 1**

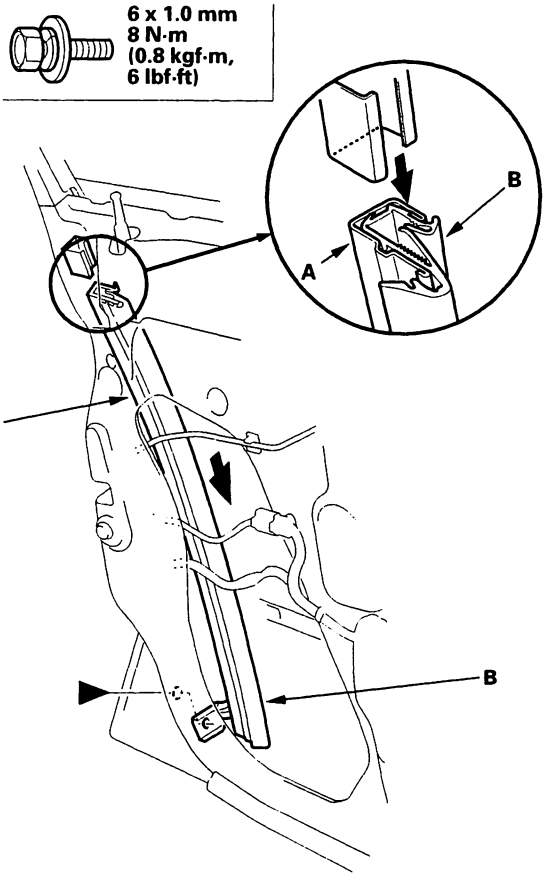

(cont'd)

Front Door Outer Handle Replacement (cont'd)

4. Disconnect the cylinder rod (A). Release the retainer clip (B), then remove the lock cylinder (C).

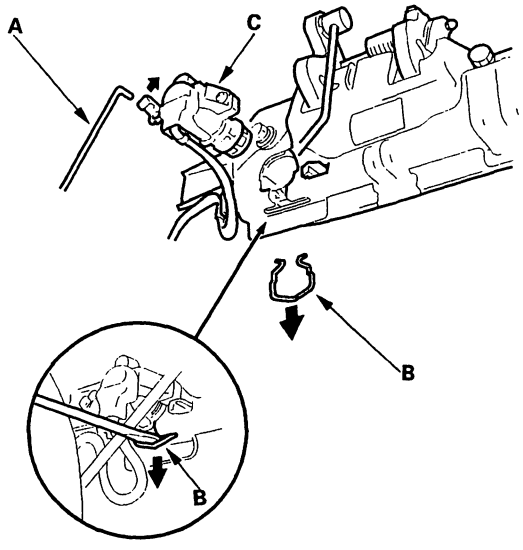

5. Remove the screw, then separate the lock cylinder (A) and cylinder switch (B).

Fastener Location

▶ : **Screw, 1**

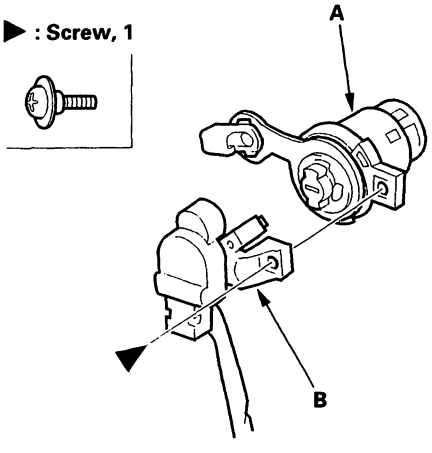

6. Disconnect the cylinder switch connector (A), and detach the harness clips (B).

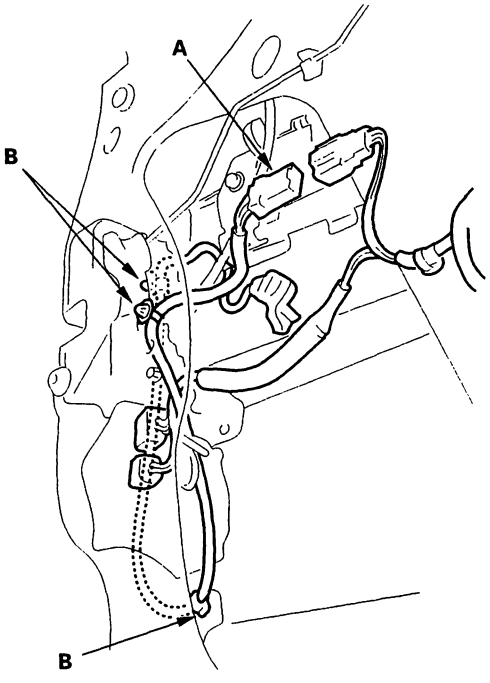

7. Remove the hole seal (A), and remove the bolts securing the outer handle protector (B) and outer handle (C).

Fastener Locations

▶ : **Bolt, 2**

6 x 1.0 mm
9.8 N·m
(1.0 kgf·m,
7.2 lbf·ft)

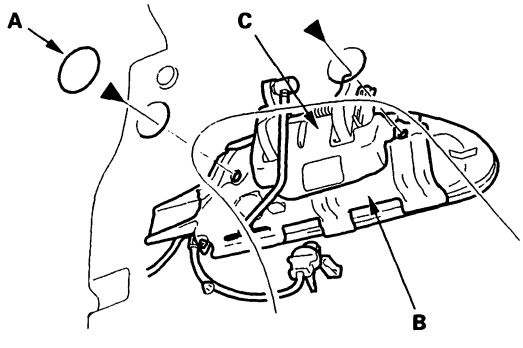

BACK

8. Remove the outer handle protector (A) from the outer handle (B) by releasing the hook (C).

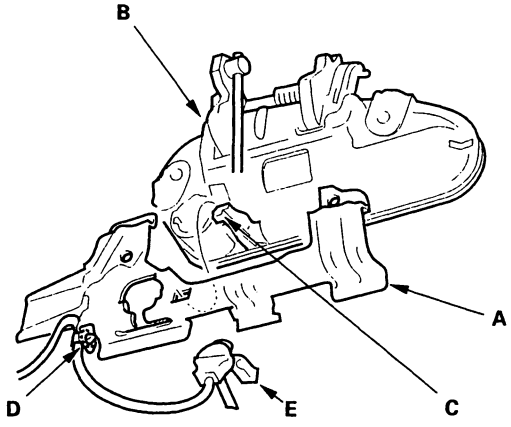

9. Detach the harness clip (D) from the outer handle protector, then remove the outer handle protector and cylinder switch (E) from the door.

10. Pull out the outer handle (A). Pry the outer handle rod (B) out of its joint (C) using diagonal cutters (D).

NOTE:
- To ease reassembly, note the distance (E) of the outer handle rod on the joint before disconnecting it.
- Take care not to bend the outer handle rod.
- Use a shop towel (F) to protect the opening in the door.

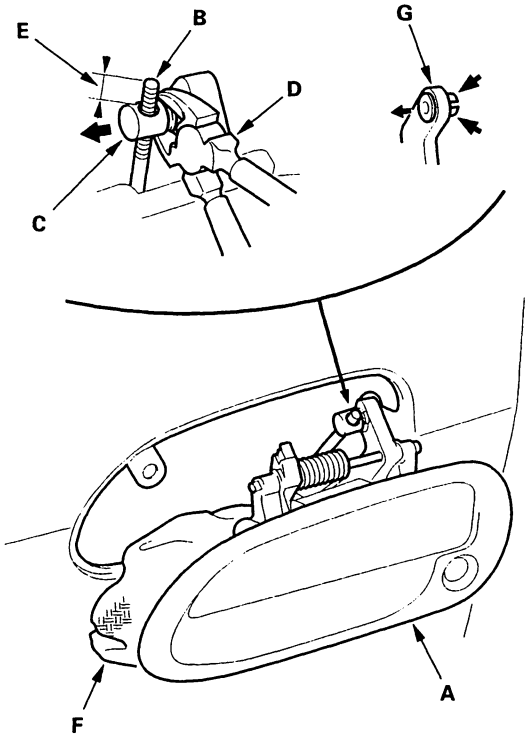

11. Replace the bushing (G) on the outer handle.

12. Install the handle in the reverse order of removal, and note these items:

- Make sure the cylinder switch harness is routed properly.
- Make sure the connector is plugged in properly, and each rod is connected securely.
- Make sure the door locks and opens properly.
- When installing the lock cylinder, leave the outer door handle bolts loose so the inner protector does not interfere with the lock cylinder.
- Install the lock cylinder retaining clip on the handle, then install the lock cylinder. Be sure the clip is fully seated in the slot on the lock cylinder.

Front Door Latch Replacement

NOTE: Put on gloves to protect your hands.

1. Raise the glass fully.

2. Remove these items:

   - Mirror mount cover, power mirror (see page 20-35), manual mirror (see page 20-34)
   - Door panel
     - Coupe (see page 20-8)
     - Sedan (see page 20-9)
   - Plastic cover, as necessary
   - Outer handle (see page 20-11)

3. Detach the harness clip (A) and inner handle rod (B), and disconnect the actuator connectors (C).

Fastener Locations

▶ : Screw, 3

6 x 1.0 mm
6 N·m (0.6 kgf·m, 4 lbf·ft)

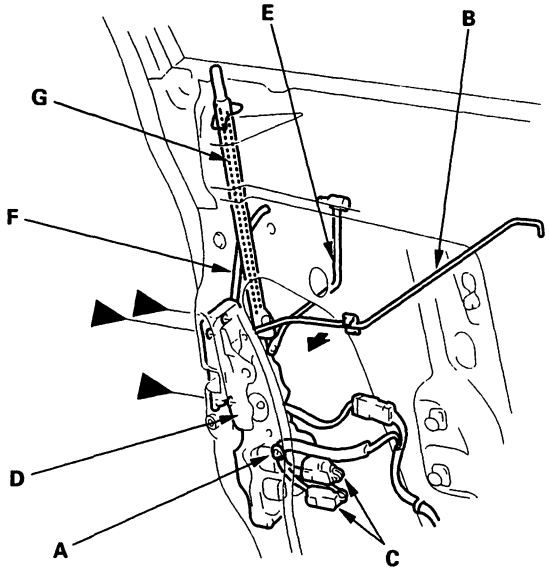

4. Remove the screws, then remove the latch (D) through the hole in the door. Take care not to bend the outer handle rod (E), cylinder rod (F), lock rod (G) and inner handle rod (B).

5. Install the latch in the reverse order of removal, and note these items:

   - Make sure the actuator connectors are plugged in properly, and each rod is connected securely.
   - Make sure the door locks and opens properly.

Door Glass and Regulator Replacement - Coupe

NOTE: Put on gloves to protect your hands.

1. Remove these items:

   - Mirror mount cover (see page 20-35)
   - Door panel (see page 20-8)
   - Plastic cover (see page 20-2)

2. Carefully lower the glass until you can see the bolts, then loosen them. Slide the guide (A) to the rear, then remove the glass from the guide, and lift it out through the window slot. Take care not to drop the glass inside the door.

Fastener Locations

▶ : Bolt, 2

6 x 1.0 mm
9.8 N·m (1.0 kgf·m, 7.2 lbf·ft)

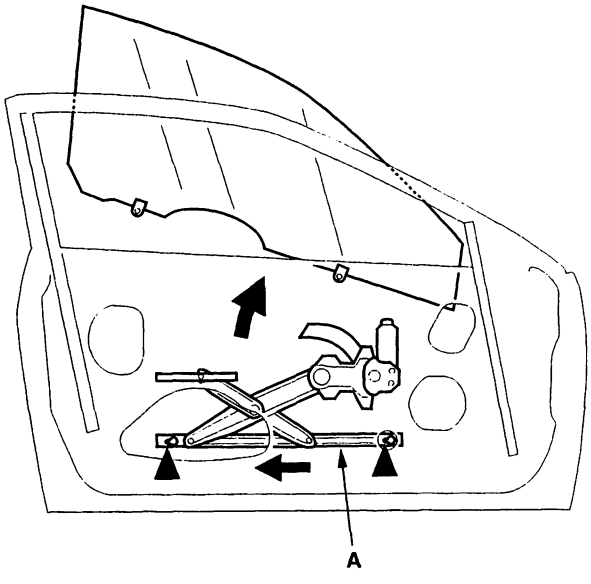

BACK

3. Disconnect and detach the connector (A) and harness clip (B) from the door. Scribe a line around the rear roller guide bolt (C) to show the original adjustment. Remove the bolts (C, D) and loosen the bolts (E), then remove the regulator (F) through the hole in the door.

Fastener Locations

C, D ▶ : Bolt, 4 **E ▶ : Bolt, 2**

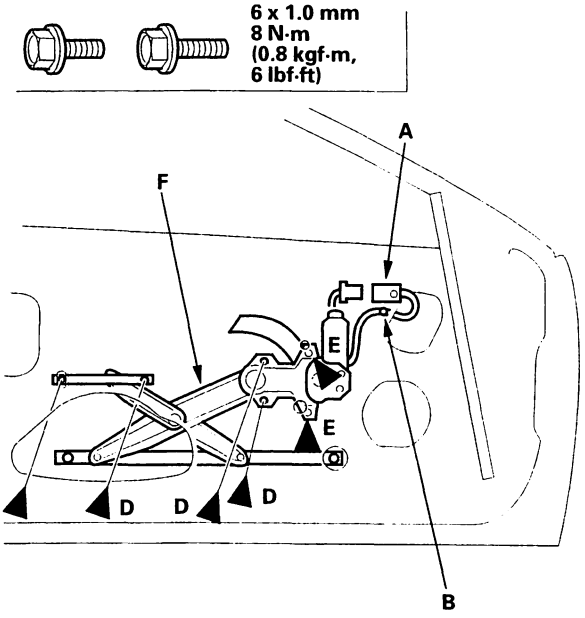

4. Scribe a line (A) across the regulator (B) and sector gear (C).

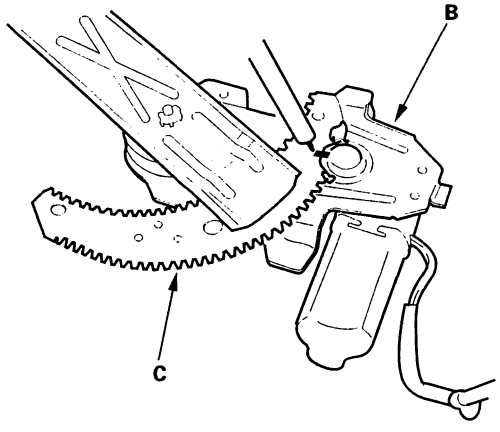

5. Using a Torx T20 bit, remove the screws, then separate the power window motor and regulator (B).

Fastener Locations

▶ : Screw, 3

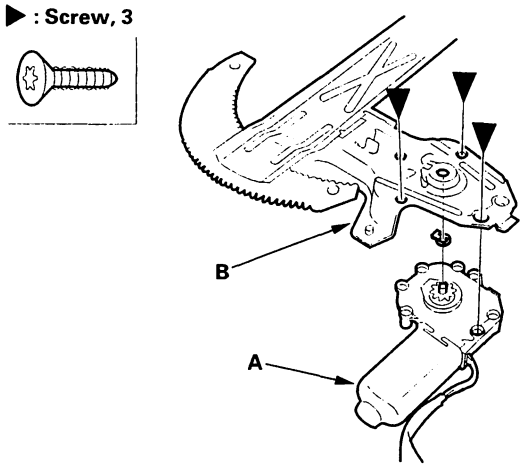

6. Grease the moving portions of the regulator (A) indicated by the arrows.

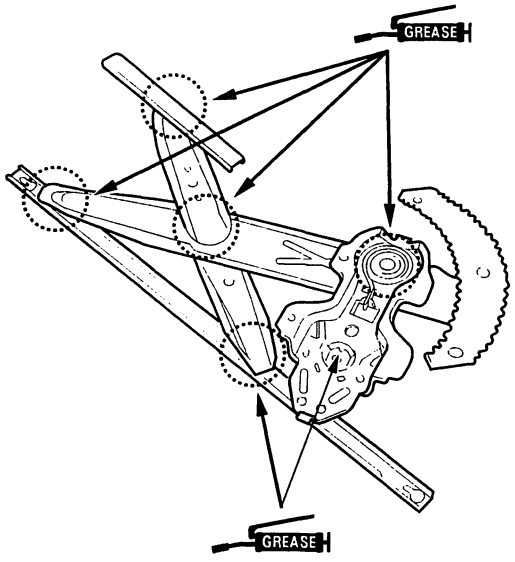

7. Install the glass and regulator in the reverse order of removal, and note these items:

- Roll the glass up and down to see if it moves freely without binding.
- Make sure that there is no clearance between the glass and glass run channel when the glass is closed.
- Adjust the position of the glass as necessary.

Front Door Glass and Regulator Replacement - Sedan

1. Remove these items:
   - Mirror mount cover, power mirror (see page 20-35), manual mirror (see page 20-34)
   - Door panel (see page 20-9)

2. Remove the screws securing the pull pocket bracket (A). On power window models, remove the nut securing the center stiffener (B).

Fastener Locations

▶ : Screw, 2 ● : Nut, 1

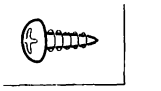

6 x 1.0 mm
8 N·m
(0.8 kgf·m,
6 lbf·ft)

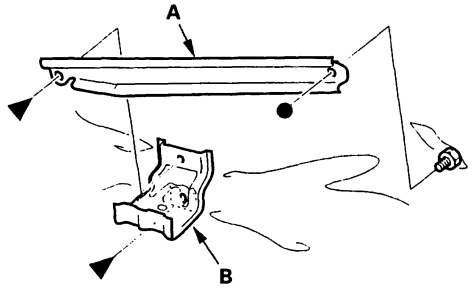

3. Remove the plastic cover (see page 20-4).

4. Carefully raise the glass until you can see the bolts, then remove them. Carefully pull the glass out through the window slot. Take care not to drop the glass inside the door.

Fastener Locations

▶ : Bolt, 2

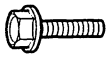

6 x 1.0 mm
9.8 N·m
(1.0 kgf·m,
7.2 lbf·ft)

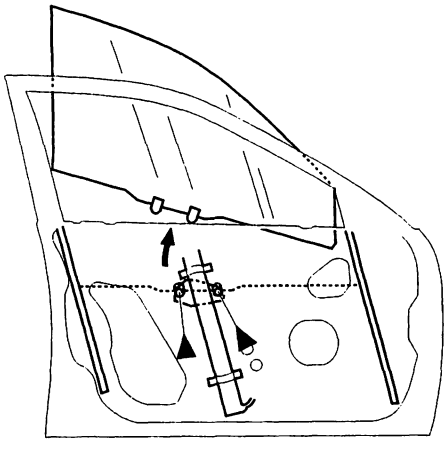

5. Disconnect and detach the connector (A) and harness clip (B) from the door (power window models). Remove the bolts (C, D) and loosen the bolts (E), then remove the regulator (F) through the hole in the door.

Power window models:

Fastener Locations

C ▶ : Bolt, 3 D ▶ : Bolt, 1 E ▶ : Bolt, 3

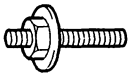

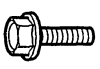

6 x 1.0 mm
8 N·m
(0.8 kgf·m,
6 lbf·ft)

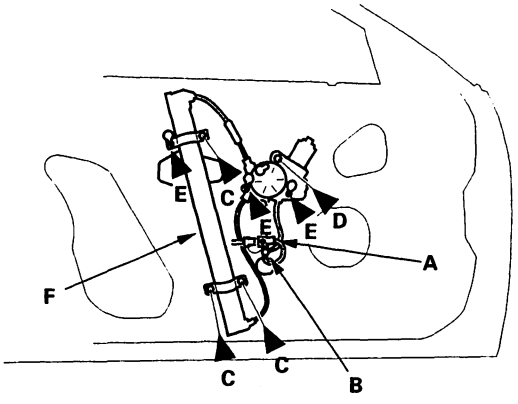

Manual window models:

Fastener Locations

C ▶ : Bolt, 3 E ▶ : Bolt, 4

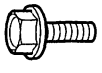

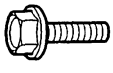

6 x 1.0 mm
8 N·m
(0.8 kgf·m,
6 lbf·ft)

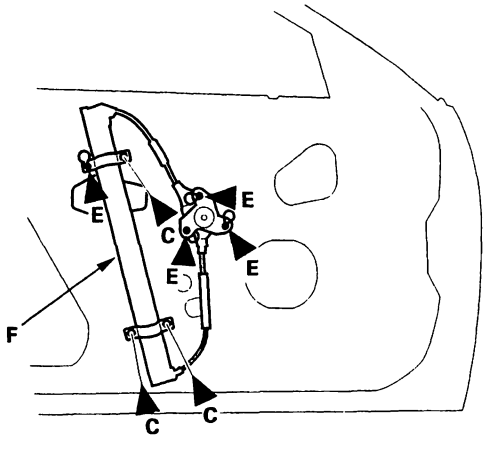

BACK

6. Grease all the sliding surfaces of the regulator (A) where shown.

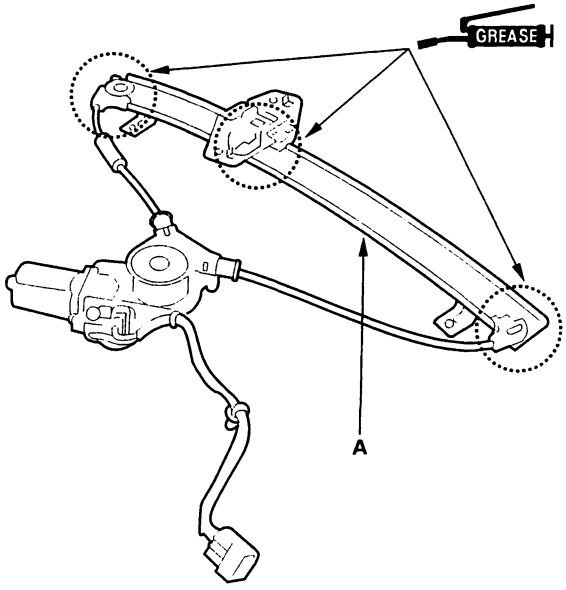

7. Install the glass and regulator in the reverse order of removal, and note these items:

   - Roll the glass up and down to see if it moves freely without binding.
   - Make sure that there is no clearance between the glass and glass run channel when the glass is closed.
   - Adjust the position of the glass as necessary (see page 20-28).

Rear Door Panel Removal/ Installation

Special Tools Required
Trim Pad Remover, Snap-on A177A or equivalent, commercially available.

1. If applicable, remove the regulator handle (A) by pulling the clip (B) out with a wire hook (C).

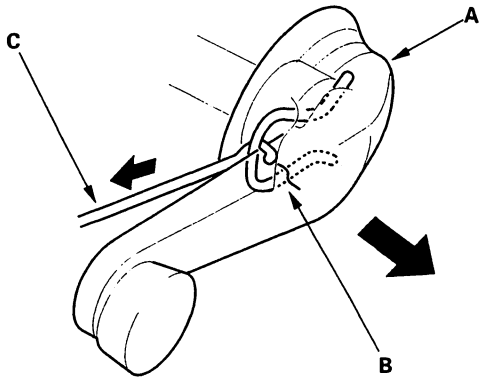

2. Remove the inner handle (A). Take care not to scratch the door panel.

   – 1 Pry out the cap (B), and remove the screw.
   – 2 Move the inner handle forward and half-way out, then disconnect the inner handle rod (C).

Fastener Location

▶ : Screw, 1

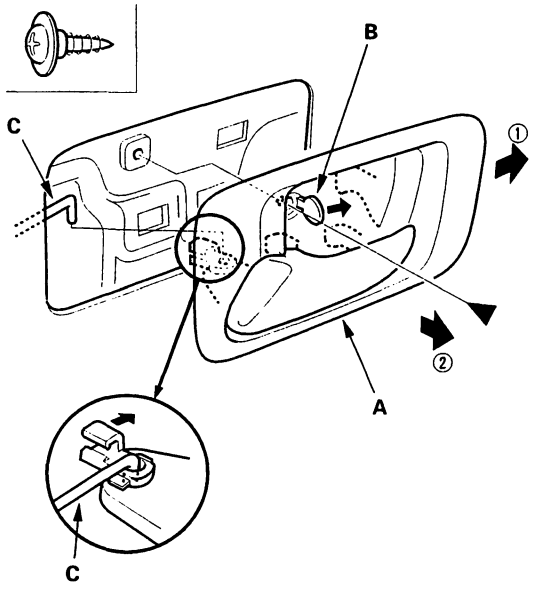

(cont'd)

Rear Door Panel Removal/Installation (cont'd)

3. Power window models: Remove the pull pocket panel (A). Take care not to scratch the door panel.

   – 1 Pry out the cap (B), and remove the screw.
   – 2 Release the hooks (C), and disconnect the power window switch connector (D).

Fastener Location

▶ : Screw, 1

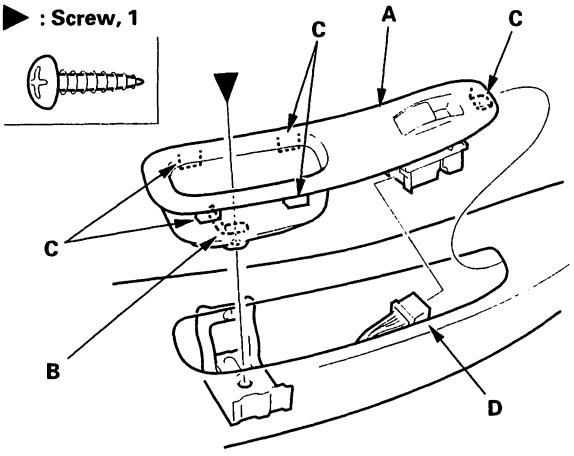

4. Manual window model: Remove the pull pocket (A). Take care not to scratch the door panel.

   – 1 Pry out the cap (B), and remove the screw.
   – 2 Lift out the pull pocket.

Fastener Location

▶ : Screw, 1

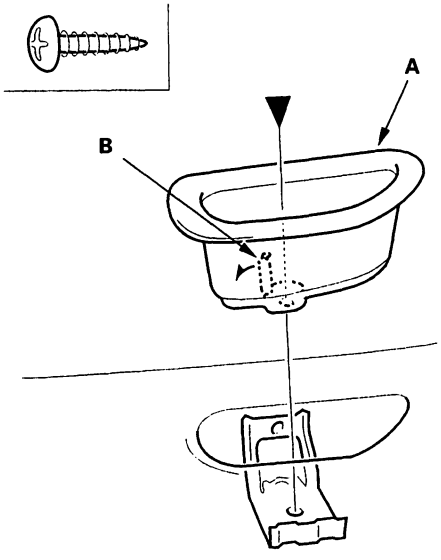

5. Release the clips that hold the door panel (A) with a (commercially available) trim pad remover (B), then remove the door panel by pulling it upward, and removing the courtesy light bulb socket (C). Remove the door panel with as little bending as possible to avoid creasing or breaking it.

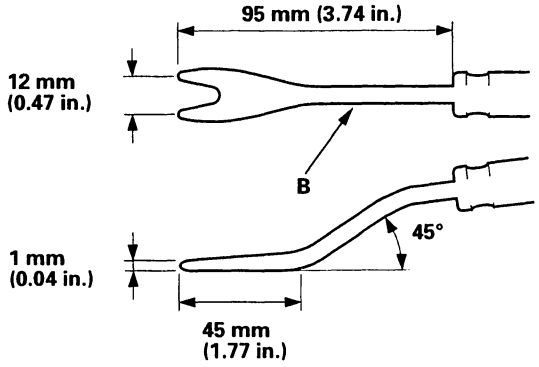

Fastener Locations

▷ : Clip, 7

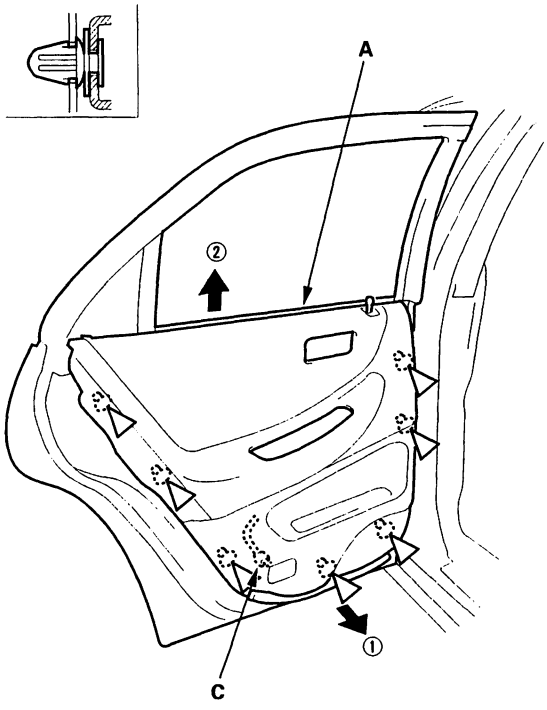

BACK

6. Install the door panel in the reverse order of removal, and note these items:

   - Make sure the connector and courtesy light bulb socket are plugged in properly.
   - If applicable, install the regulator handle so it points forward and up at a 45 degree angle with the glass fully closed.

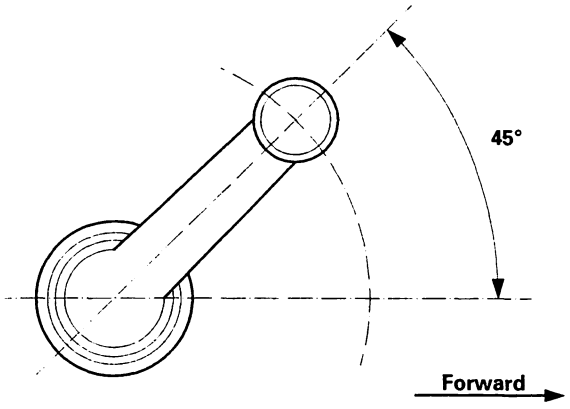

Rear Door Outer Handle Replacement

NOTE: Put on gloves to protect your hands.

1. Raise the glass fully.

2. Remove these items:

   - Door panel (see page 20-17)
   - Plastic cover, as necessary (see page 20-4)

3. Remove the screws, then remove the rod protector (A).

Fastener Locations

▶ : Screw, 3

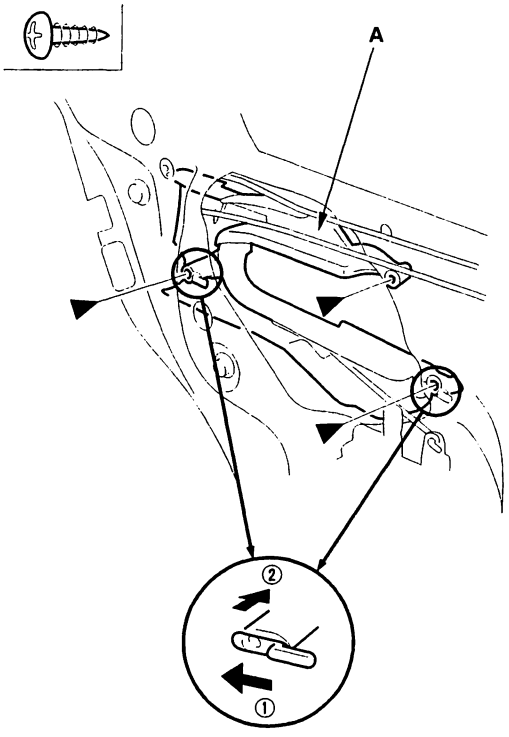

(cont'd)

Rear Door Outer Handle Replacement (cont'd)

4. Remove the screws, then remove the power door lock actuator (A) from the door. Take care not to bend the actuator rod (B).

Fastener Locations

▶ : Screw, 2

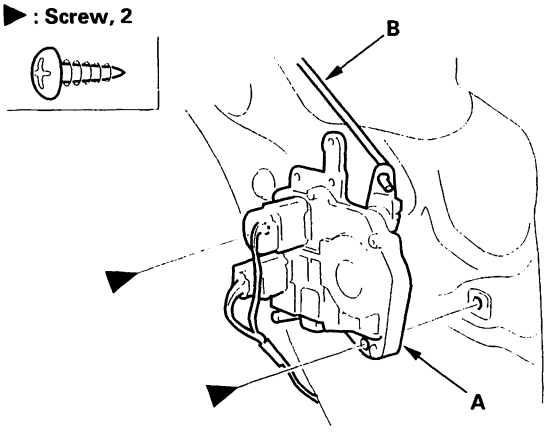

5. Remove the screws, then move the latch (A) down. Take care not to bend the inner handle rod (B), lock rod (C) and actuator rod (D).

Fastener Locations

▶ : Screw, 3

6 x 1.0 mm
6 N·m
(0.6 kgf·m,
4 lbf·ft)

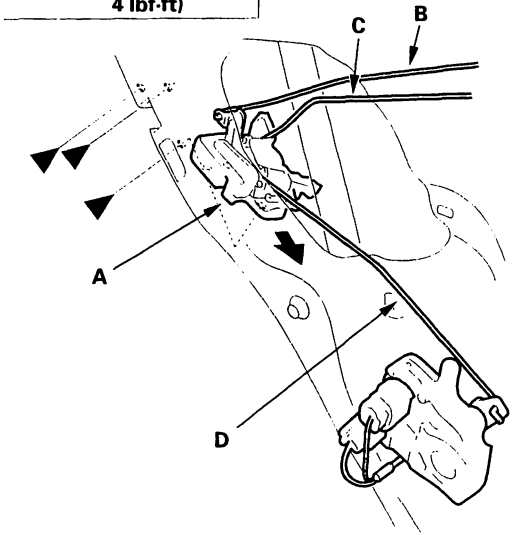

6. Remove the bolts securing the outer handle (A).

Fastener Locations

▶ : Bolt, 2

6 x 1.0 mm
9.8 N·m
(1.0 kgf·m,
7.2 lbf·ft)

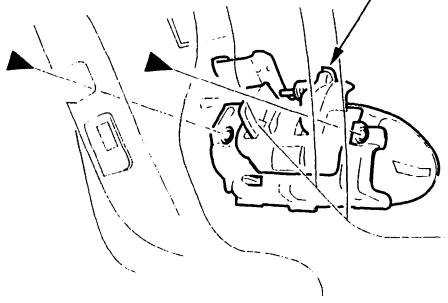

7. Release the hook (A) while holding the outer handle (B), then remove the outer handle and outer handle protector (C) from the door.

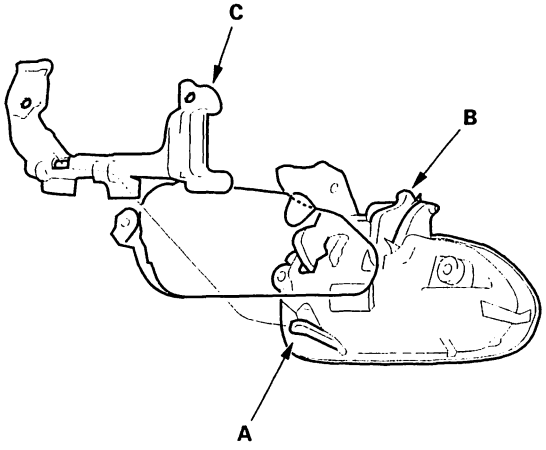

8. Install the handle in the reverse order of removal, and make sure the door locks and opens properly.

BACK

Rear Door Latch Replacement

NOTE: Put on gloves to protect your hands.

1. Raise the glass fully.

2. Remove these items:

   - Door panel (see page 20-17)
   - Plastic cover, as necessary (see page 20-4)
   - Outer handle (see page 20-19)

3. Disconnect the connectors (A) and actuator rod (B), then remove the power door lock actuator (C).

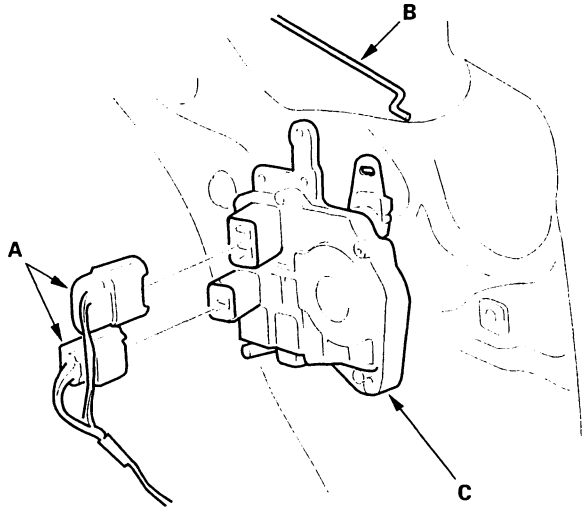

4. Disconnect the lock rod (A) from the lock crank (B).

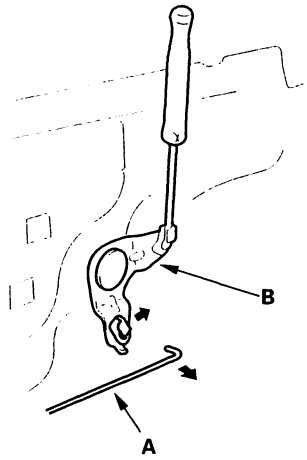

5. Move the latch (A) until you can disconnect each rod, and disconnect the inner handle rod (B), lock rod (C) and actuator rod (D) from the latch.Take care not to bend any of the rods.

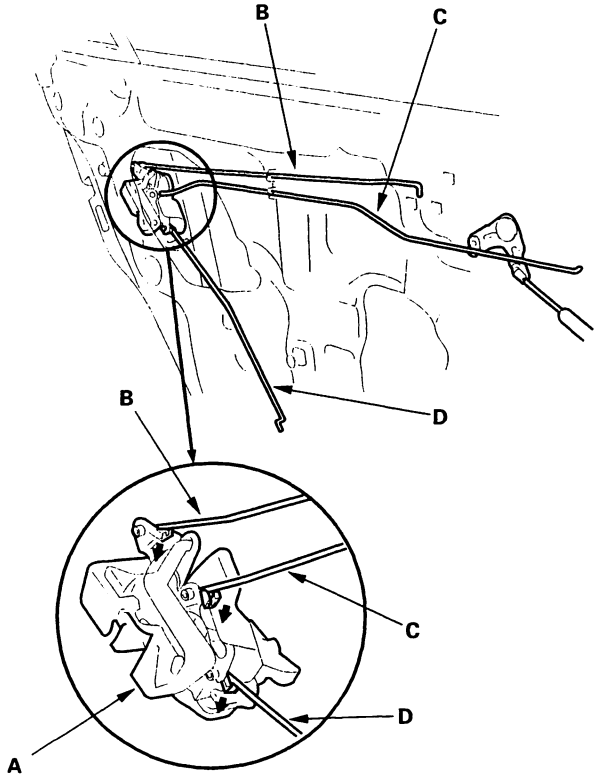

(cont'd)

Rear Door Latch Replacement (cont'd)

6. With a shop towel (A) to protect the outer handle opening, remove the latch (B) through the outer handle opening.

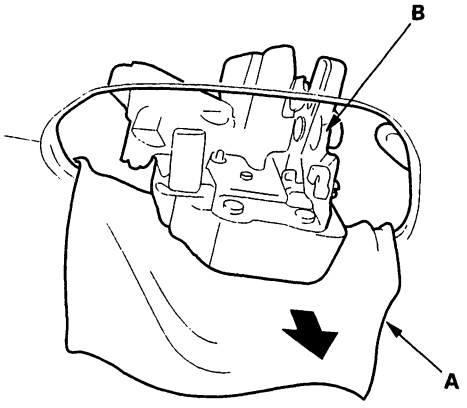

7. Remove the inner handle rod (A) and lock rod (B) from the rod holder (C), and remove the lock crank (D) from the door.

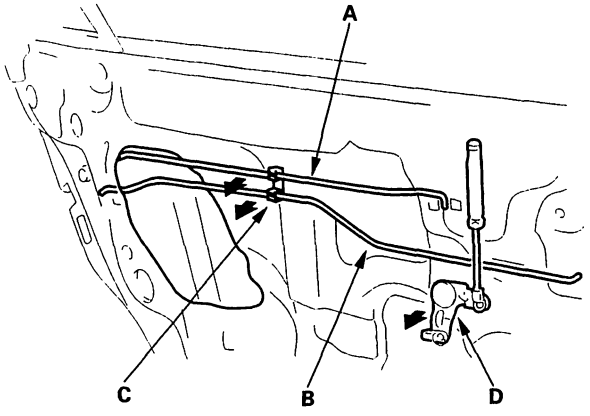

8. Install the latch in the reverse order of removal, and note these items:

   - Make sure the connectors are plugged in properly, and each rod is connected securely.
   - Make sure the door locks and opens properly.

Rear Door Glass, Quarter Glass, and Regulator Replacement

NOTE: Put on gloves to protect your hands.

1. Remove these items:

   - Door panel (see page 20-17)
   - Pull pocket bracket (see page 20-6)
   - Plastic cover (see page 20-6)
   - Rod protector (see page 20-6)

2. Carefully move the glass (A) until you can see the bolts, then loosen them. Slide the guide (B) to the rear, then remove the glass from the guide, and carefully lower the glass. Take care not to drop the glass inside the door.

Fastener Locations

▶ : Bolt, 2

6 x 1.0 mm
9.8 N·m
(1.0 kgf·m, 7.2 lbf·ft)

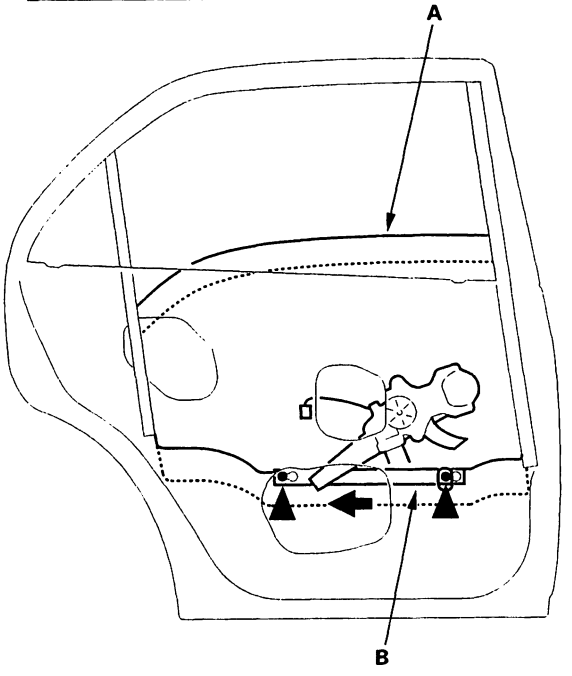

BACK

3. Remove the bolts (A, B) and collar (C) from the rear channel (D). Pull the sub-seal (E) away as needed, and remove the screw (F). Pull the glass run channel (G) away as needed from the rear channel.

Fastener Locations

A ▶ : Bolt, 1 **B ▶ : Bolt, 1**

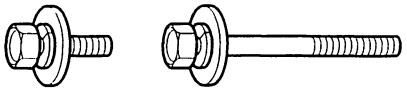

6 x 1.0 mm
8 N·m
(0.8 kgf·m, 6 lbf·ft)

F ▶ : Screw, 1

4 x 0.8 mm
4 N·m
(0.4 kgf·m, 3 lbf·ft)

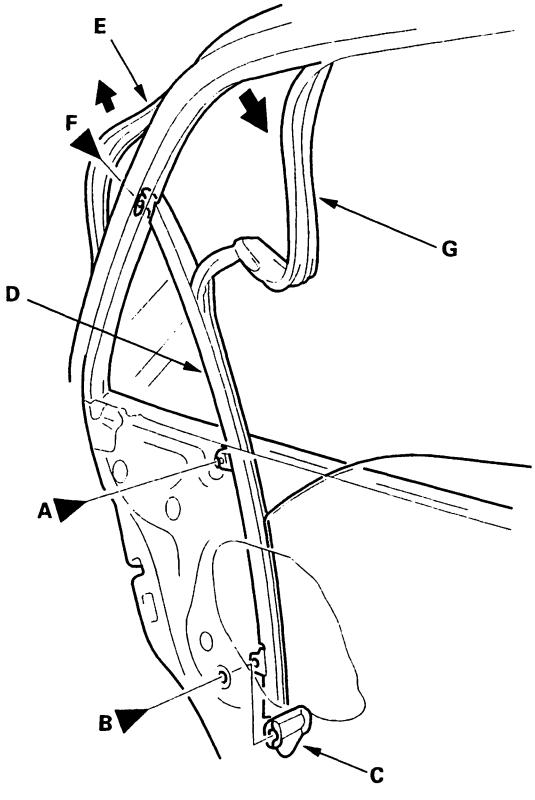

4. Move the rear channel (A) away from the quarter glass (B) and the rear door glass (C), then carefully remove the rear channel out through the window slot.

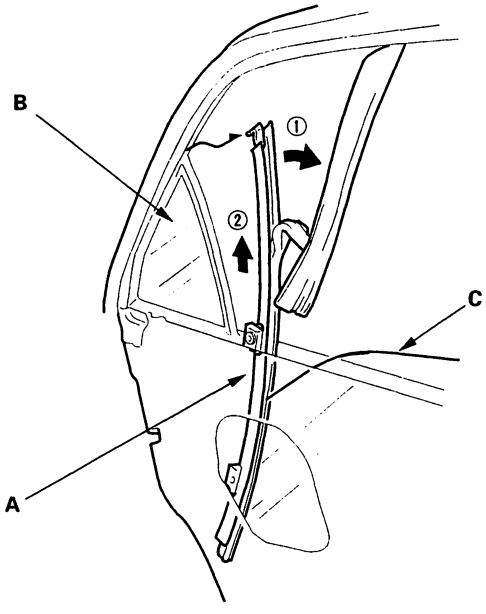

5. Carefully remove the glass (A) out through the window slot. Take care not to drop the glass inside the door.

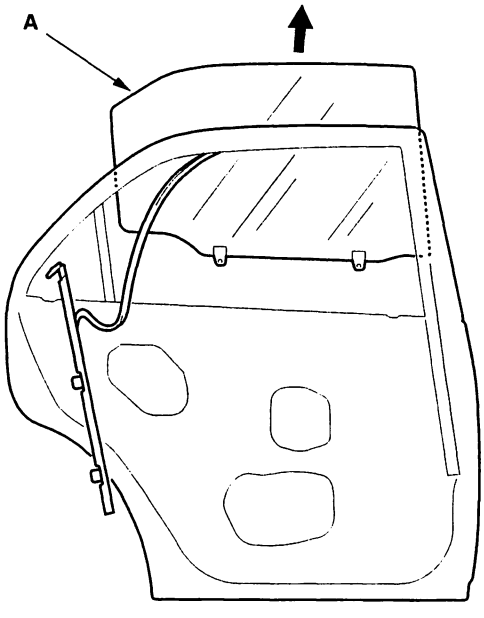

(cont'd)

Rear Door Glass, Quarter Glass, and Regulator Replacement (cont'd)

6. Remove the quarter glass (A). Take care not to damage the door molding (B).

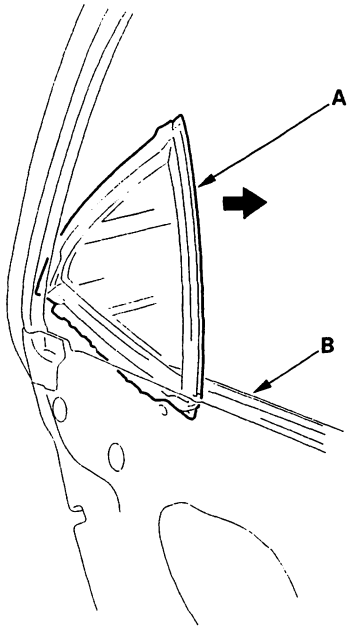

7. Disconnect and detach the connector (A) from the door (power window models). Remove the bolts (B), and loosen the bolts (C), then remove the regulator (D) through the hole in the door.

Power window models

Fastener Locations

B ▶ : Bolt, 2 **C ▶ : Bolt, 2**

6 x 1.0 mm
8 N·m
(0.8 kgf·m, 6 lbf·ft)

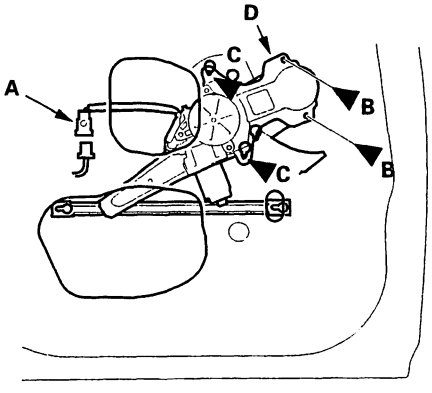

Manual window models

Fastener Locations

B ▶ : Bolt, 2 **C ▶ : Bolt, 2**

6 x 1.0 mm
8 N·m
(0.8 kgf·m, 6 lbf·ft)

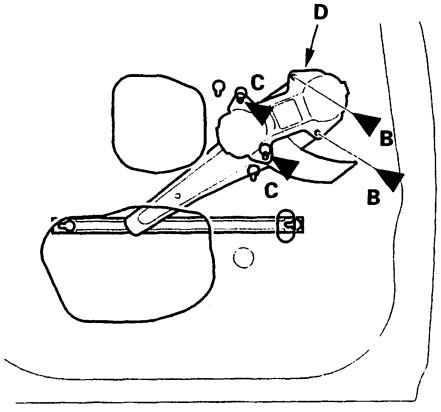

8. Scribe a line across the regulator (A) and sector gear (B). Connect a 12 V battery supply to the power window motor, and move the regulator until you can remove the bolts securing the power window motor (C).

Fastener Locations

▶ : Bolt, 3

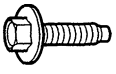

6 x 1.0 mm
7 N·m
(0.7 kgf·m, 5 lbf·ft)

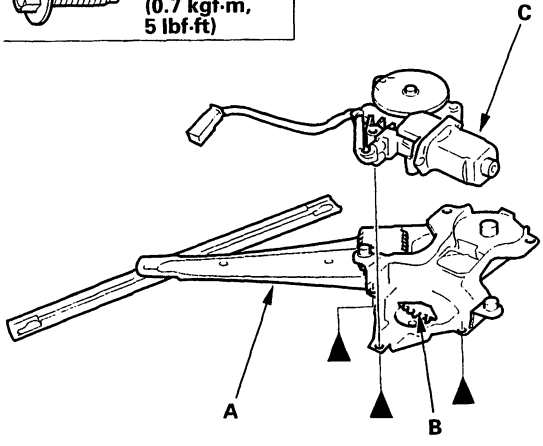

9. Remove the bolts, then separate the regulator (A) and power window motor (C).

BACK

10. Grease the moving portions of the regulator (A) indicated by the arrows.

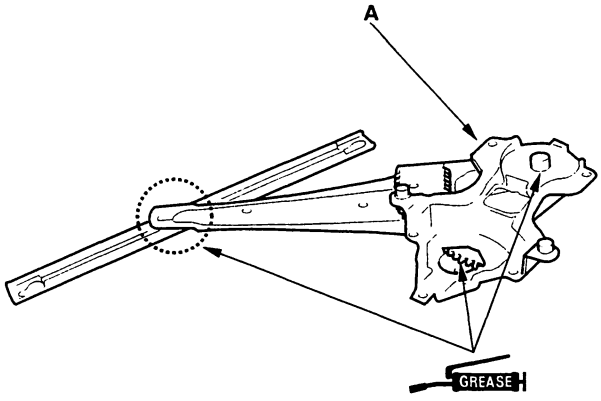

11. Install the glass and regulator in the reverse order of removal, and note these items:

- Roll the glass up and down to see if it moves freely without binding.
- Make sure that there is no clearance between the glass and glass run channel when the glass is closed.
- Adjust the position of the glass as necessary (see page 20-28)

Sticker Replacement

1. Clean the quarter glass surface with a sponge dampened in alcohol. After cleaning, keep oil, grease and water from getting on the surface.

2. Apply the sticker where shown.

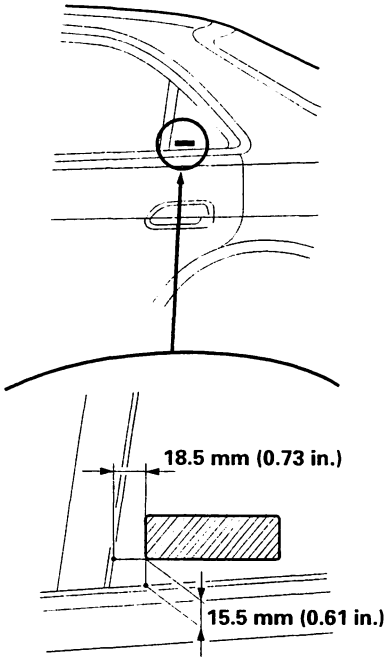

Rear Door Hook Pin and Catch Replacement

1. With a Torx T40 bit, remove the door hook pin (A) from the door.

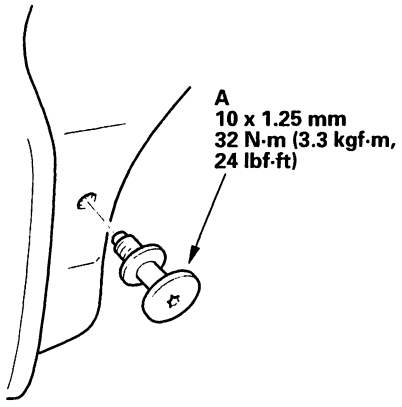

2. With a Torx T40 bit, remove the bolts, then remove the catch (A) from the body.

Fastener Locations

▶ : Bolt, 2

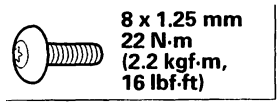

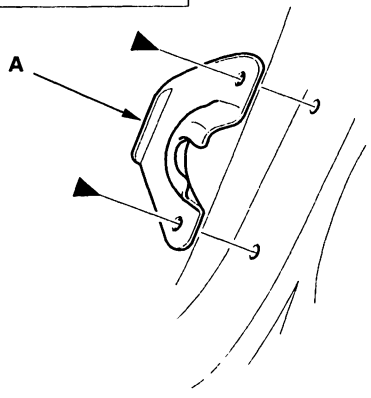

3. Install the hook pin and catch in the reverse order of removal, and apply liquid thread lock to the threads of the door hook pin.

Front Door Glass Adjustment - Coupe

NOTE: Check the weatherstrips and glass run channel for damage or deterioration, and replace them if necessary.

1. Place the vehicle on a firm, level surface.

2. Remove these items:

   - Mirror mount cover (see page 20-35)
   - Door panel (see page 20-8)
   - Pull pocket bracket (see page 20-2)
   - Plastic cover (see page 20-2)

3. Raise the glass (A) up as far as possible, and hold it against the glass run channel (B).

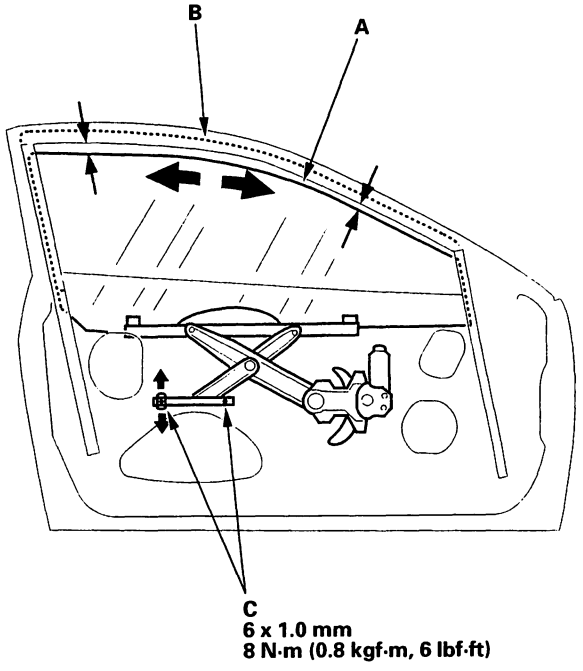

4. Loosen the roller guide bolts (C), and adjust the glass (A) so it is parallel with the glass run channel (B).

5. Tighten the roller guide bolts (C).

BACK

6. Loosen the front lower channel mounting bolts (A) and nut (B), then lower the glass (C).

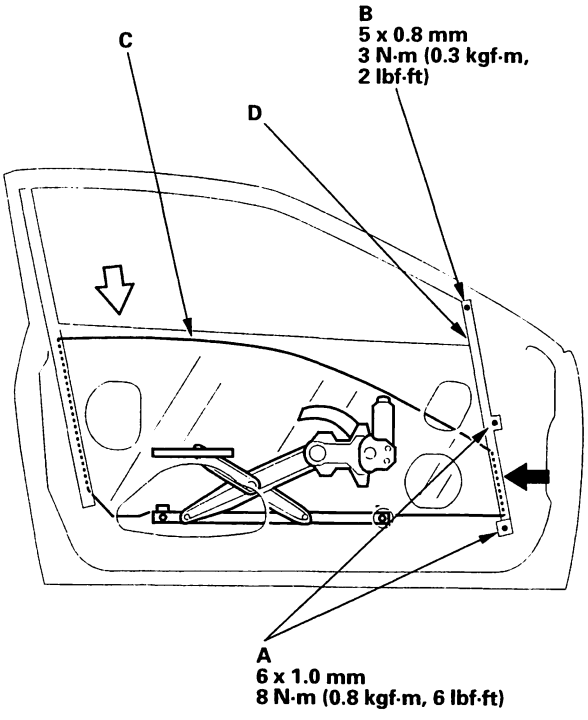

7. Push the front lower channel (D) against the glass (C) while you tighten the mounting bolts (A) and nut (B).

8. Check that the glass moves smoothly.

9. Raise the glass fully, and check for gaps. Check that the glass (A) contacts the glass run channel (B) evenly.

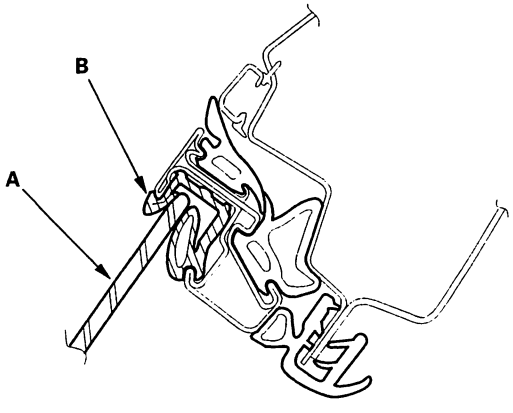

10. Check for water leaks. Run water over the roof and on the sealing area as shown, and note these items:

- Use a 12 mm (1/2 in.) diameter hose (A).
- Adjust the rate of water flow (B)
- Do not use a nozzle.
- Hold the hose about 300 mm (12 in.) away from the door.

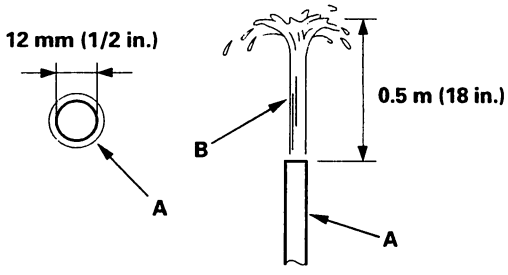

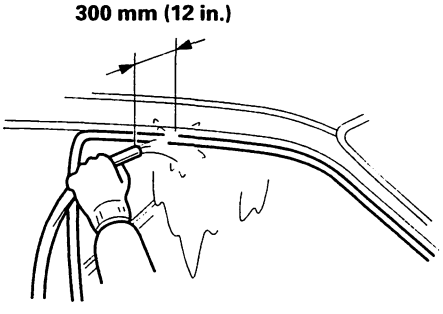

11. Reinstall all removed parts in the reverse order of removal.

Front and Rear Door Glass Adjustment - Sedan

NOTE: Check the weatherstrips and glass run channel for damage or deterioration, and replace them if necessary.

1. Place the vehicle on a firm, level surface.

2. Remove these items:

   - Mirror mount cover, front door (see page 20-34)
   - Door panel
     - Front door (see page 20-9)
     - Rear door (see page 20-17)
   - Center stiffener, front door (see page 20-4)
   - Pull pocket bracket
     - Front door (see page 20-4)
     - Rear door (see page 20-6)
   - Plastic cover
     - Front door (see page 20-4)
     - Rear door (see page 20-6)

3. Carefully move the glass (A) until you can see the glass mounting bolts (B), then loosen them.

Front:

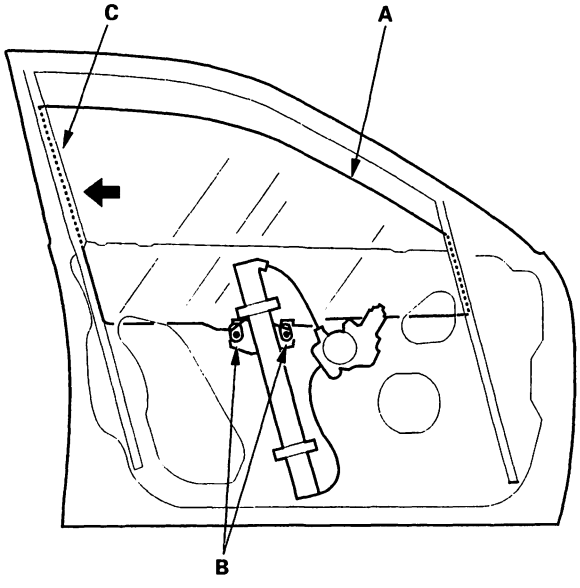

Rear:

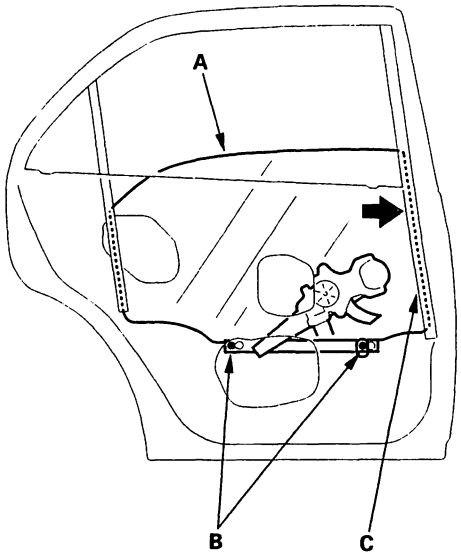

4. Push the glass (A) against the center channel (C), then tighten the glass mounting bolts.

5. Check that the glass moves smoothly.

6. Raise the glass fully, and check for gaps. Check that the glass (A) contacts the glass run channel (B) evenly.

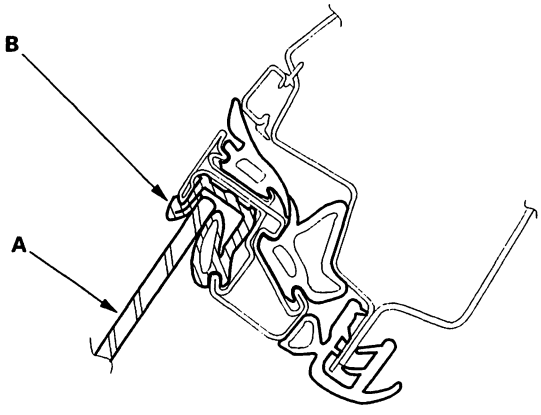

BACK

7. Check for water leaks. Run water over the roof and on the sealing area as shown, and note these items:

   - Use a 12mm (1/2 in.) diameter hose (A).
   - Adjust the rate of water flow as shown(B).
   - Do not use a nozzle.
   - Hold the hose about 300 mm (12 in.) away from the door.

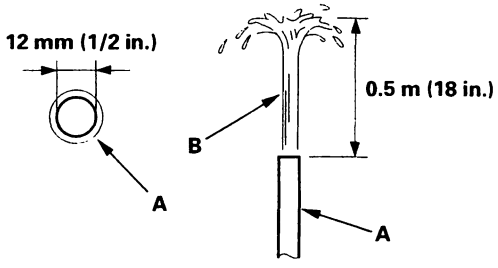

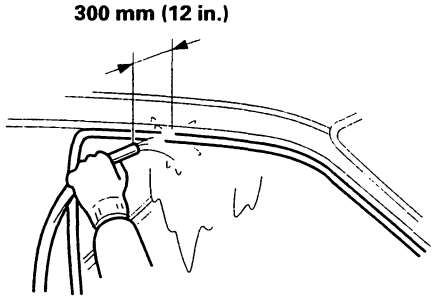

8. Reinstall all removed parts in the reverse order of removal.

Door Position Adjustment

NOTE: After installing the door, check for a flush fit with the body, then check for equal gaps between the front, rear, and bottom door edges and the body. Check that the door and body edges are parallel. Before adjusting, replace the mounting bolts.

1. Place the vehicle on a firm, level surface when adjusting the doors.

2. Adjust at the hinges (A):

   - Loosen the door mounting bolts (B) slightly, and move the door in or out until it's flush with the body.
   - Remove the inner fender (see page 20-167). With a shop towel (C) on the jack (D), slightly loosen the hinge mounting bolts (E), and move the door backward or forward, up or down as necessary to equalize the gaps.

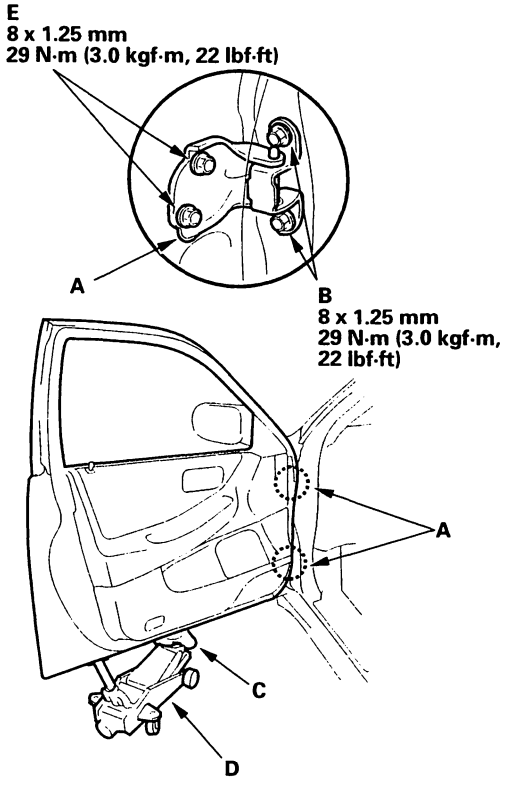

(cont'd)

Door Position Adjustment (cont'd)

3. Check that the door and body edges are parallel. If necessary, adjust the door cushions (A) to make the rear of the doors flush with the body.

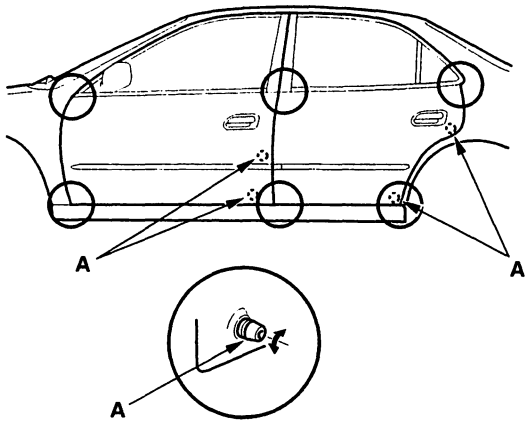

4. Grease the pivot portions of the hinges indicated by the arrows.

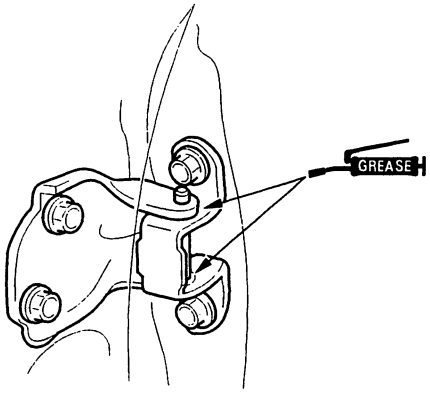

5. Apply body paint to the hinge mounting bolts and around the hinges.

6. Check for water leaks (see step 7 on page 20-29).

Door Striker Adjustment

Make sure the door latches securely without slamming it. If necessary, adjust the striker (A); the striker nuts are fixed. The striker can be adjusted slightly up or down, and in or out.

1. Loosen the screws (B), then insert a shop towel (C) between the body and striker.

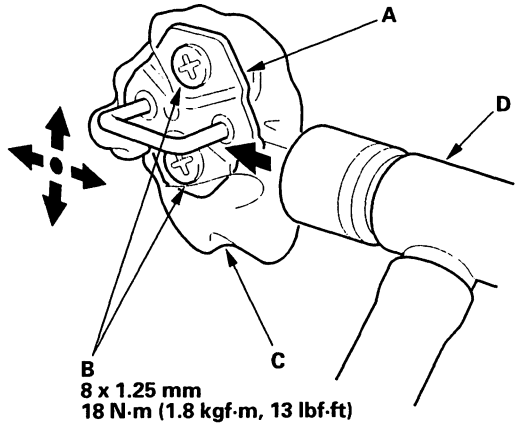

2. Lightly tighten the screws.

3. Wrap the striker with a shop towel, then adjust the striker by tapping it with a plastic hammer (D). Do not tap the striker too hard.

4. Loosen the screws and remove the shop towel.

5. Lightly tighten the screws.

6. Hold the outer handle out, and push the door against the body to be sure the striker allows a flush fit. If the door latches properly, tighten the screws and recheck.

BACK

Component Location Index - Coupe

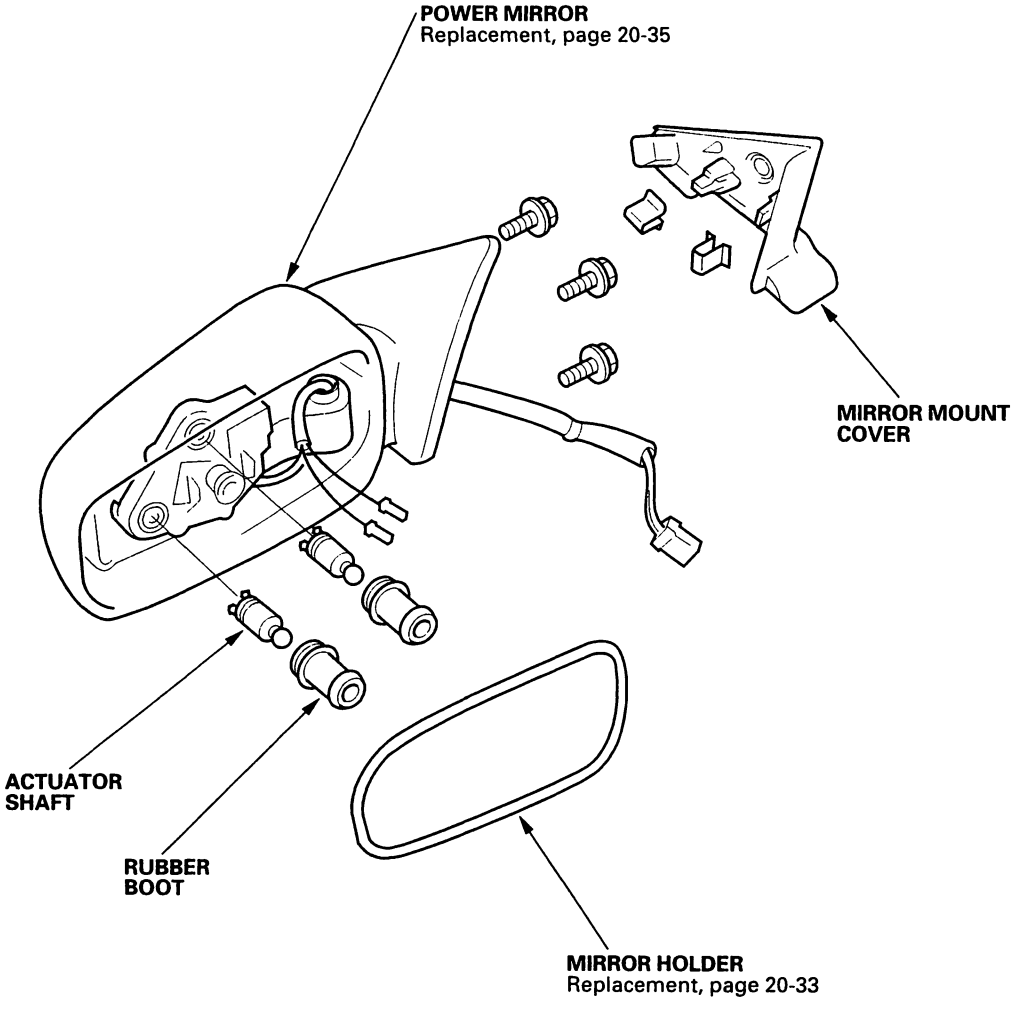

Component Location Index - Sedan

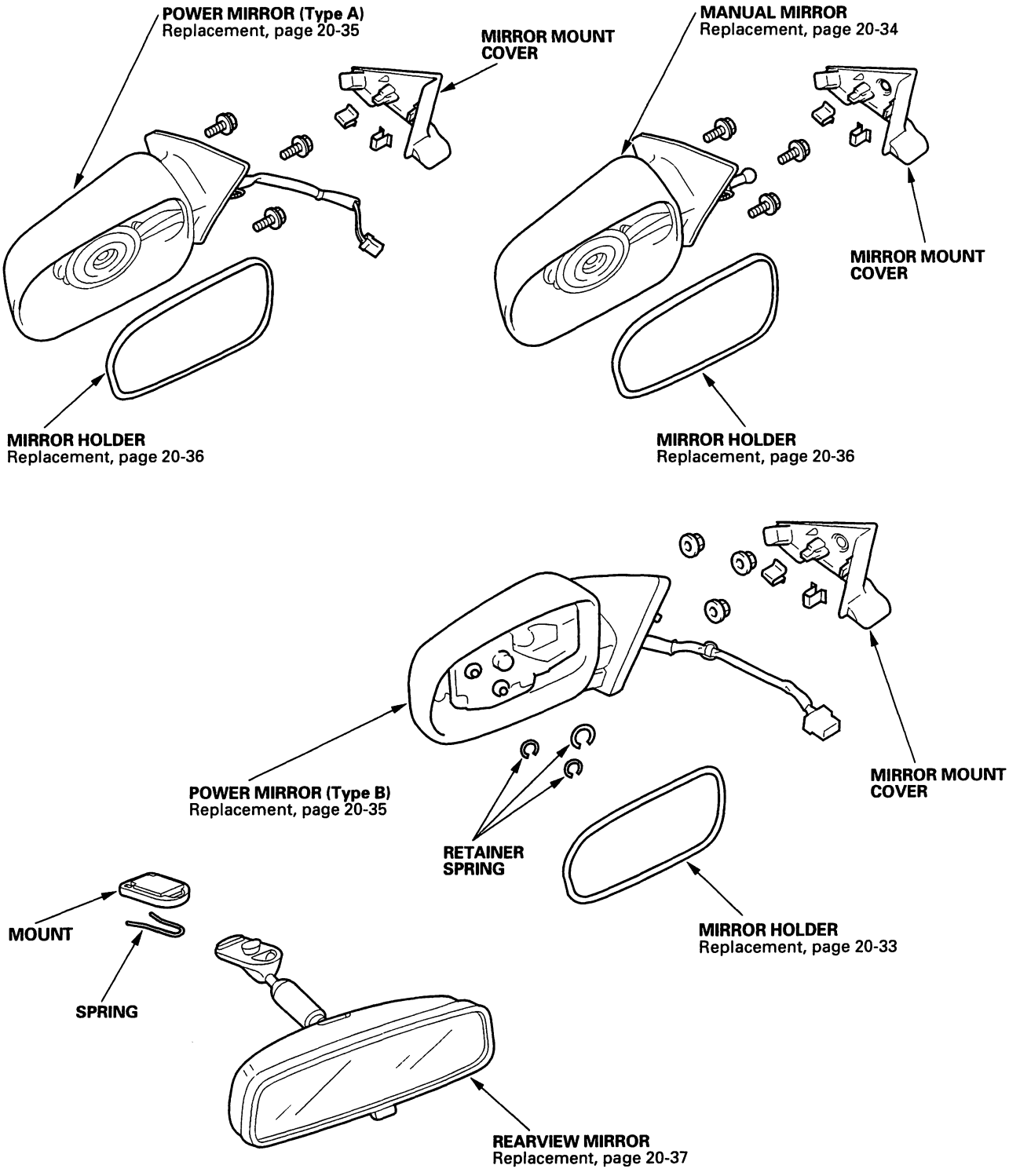

BACK

Mirror Holder Replacement - Coupe

1. Pry the mirror holder (A) out from the bottom until you can see the pivot (B) of the actuator, then detach the pivot using a flat-tip screwdriver. Take care not to scratch the mirror(C).

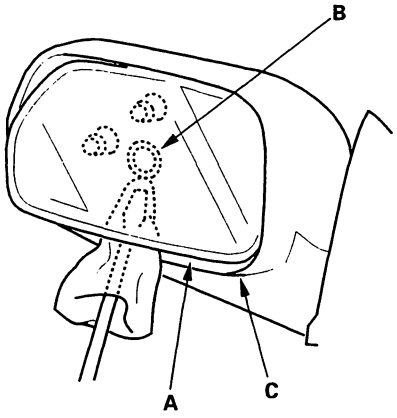

2. Remove the actuator shafts (A) and release the hooks (B) from the actuator (C), then remove the mirror holder (D). If equipped, disconnect the mirror defogger terminals.

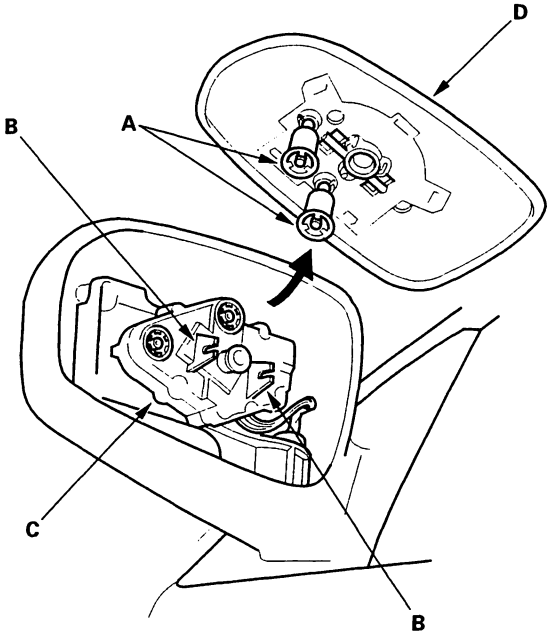

3. Remove the actuator shafts (A) and rubber boots (B) from the mirror holder (C). Check the actuator shaft and rubber boot for damage or deterioration, and replace them if necessary.

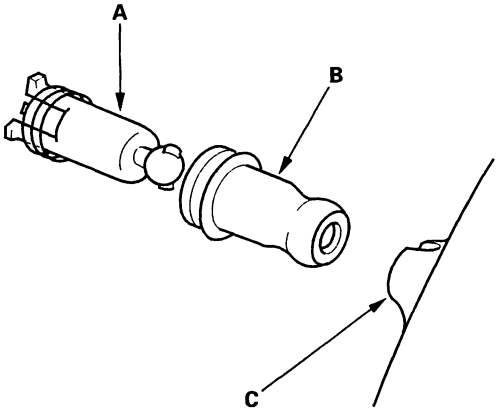

4. Install the mirror holder in the reverse order of removal, and note these items:

   - Before installing the mirror holder, install the actuator shafts and boots on the actuator.
   - Apply the grease to the pivot (A) and actuator shafts (B).
   - Reattach the mirror holder (C) to the pivot (A) and actuator shafts (B) of the actuator, then carefully push on the pivot and actuator shaft portions of the holder until it locks into place.
   - If necessary, before installing the mirror holder, heat the pivot and actuator shafts joint portions of the holder.
   - Check the operation of the actuator.

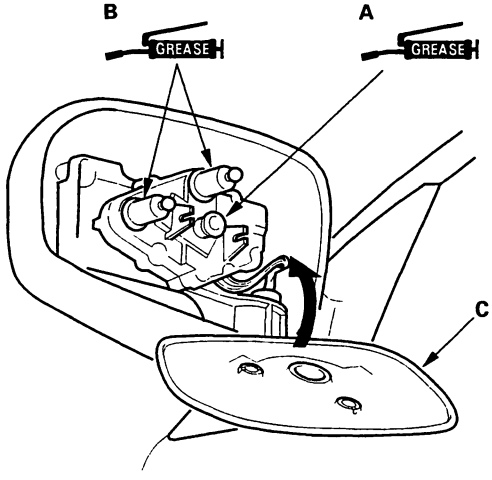

Manual Mirror Replacement - Sedan

1. Lower the door glass fully.
2. Carefully pry out the mirror mount cover (A) by hand in the sequence shown.

Fastener Locations

▷ : Clip, 2

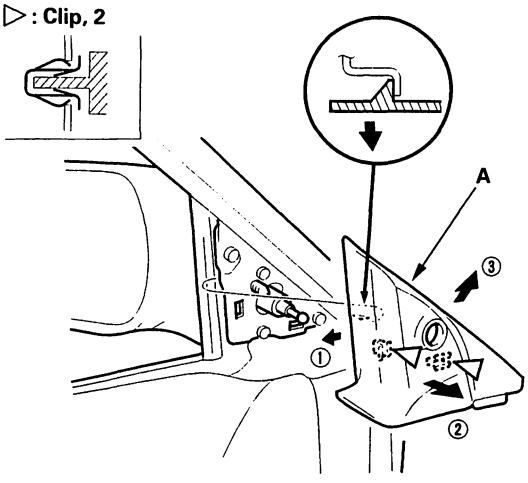

3. Remove the bolts securing the mirror.

Fastener Locations

▶ : Bolt, 3

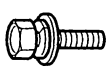

5 x 0.8 mm
5 N·m
(0.5 kgf·m,
4 lbf·ft)

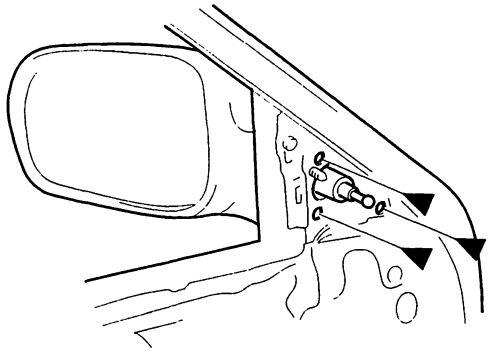

4. While holding the mirror, push out the clip (A), and remove the mirror. Take care not to scratch the door.

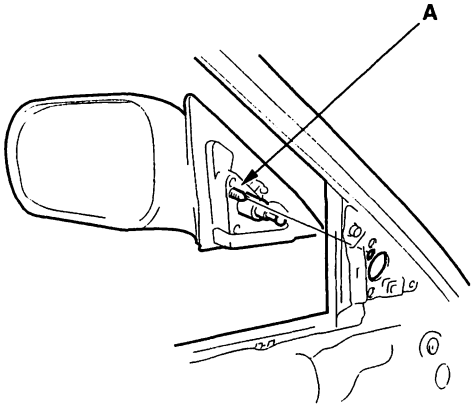

5. Install the mirror in the reverse order of removal.

BACK

Power Mirror Replacement

1. Lower the door glass fully.

2. Carefully pry out the mirror mount cover (A) by hand in the sequence shown.

Fastener Locations
▷: **Clip, 2**

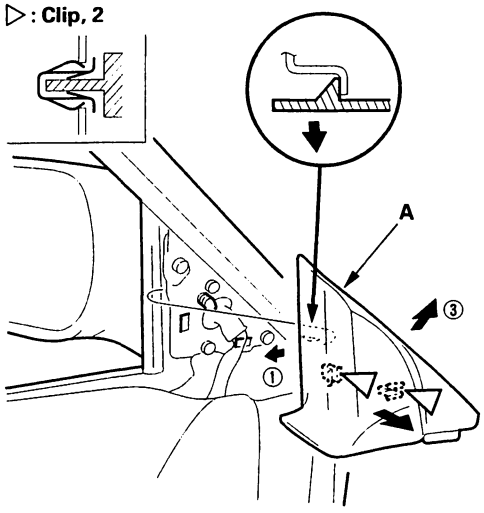

3. Remove the door panel (see page 20-9).

4. Disconnect the connector (A), and detach the harness clip (B), then remove the nuts or bolts securing the mirror.

Fastener Locations

▶: **Bolt, 3**	●: **Nut, 3 (Type B)**
5 x 0.8 mm 5 N·m (0.5 kgf·m, 4 lbf·ft)	**5 x 0.8 mm 5 N·m (0.5 kgf·m, 4 lbf·ft)**

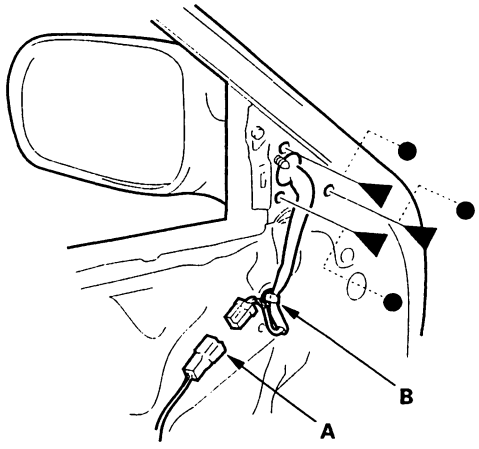

5. While holding the mirror, push out the clip (A), and remove the mirror (B). Take care not to scratch the door.

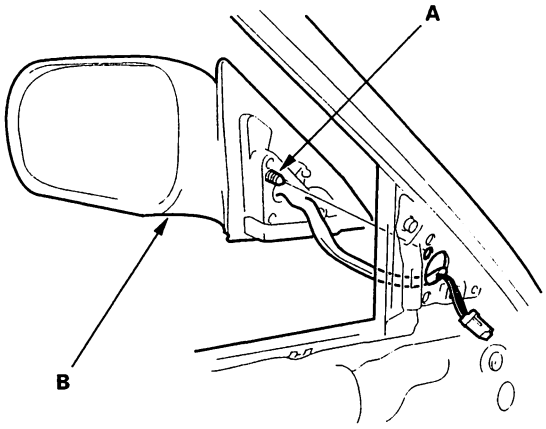

6. Install the mirror in the reverse order of removal, and note these items:

- Make sure the connector is plugged in properly.
- Attach the harness clip.

Mirror Holder Replacement - Sedan

1. Carefully pull out the bottom edge of the mirror holder (A) by hand. Take care not to scratch the mirror.

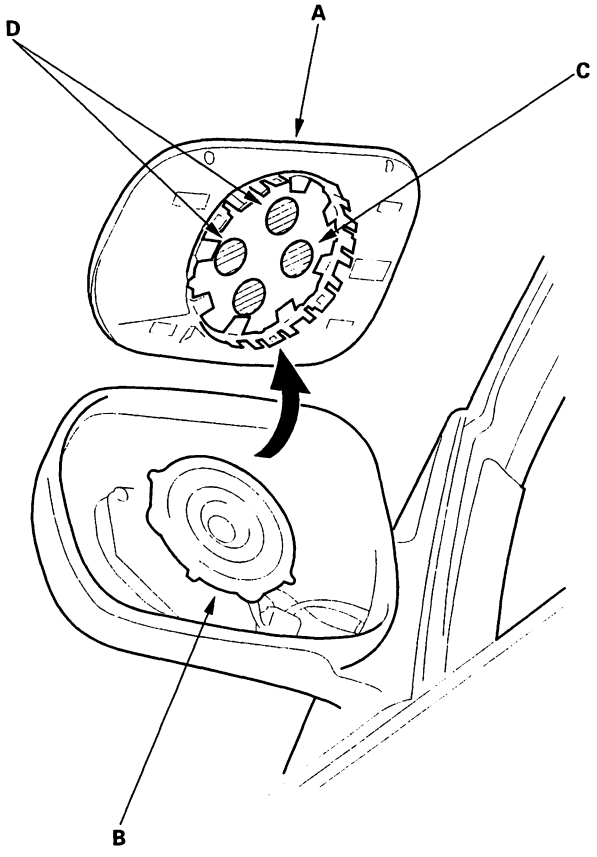

2. Separate the mirror holder from the actuator (B) by slowly pulling them apart while removing the adhesive (C), and detaching the clips (D). If equipped, disconnect the mirror defogger terminals.

3. If equipped, connect the mirror defogger terminals.

4. Reattach the clips of the mirror holder to the actuator, then position the mirror holder on the actuator. Carefully push on the clip portions of the mirror holder until the holder locks into place.

5. Check the operation of the actuator.

BACK

Rearview Mirror Replacement

1. Slide the rearview mirror (A) down toward the bottom of the windshield, then detach it from the spring (B) in the mount (C), and remove the rearview mirror. Take care not to scratch the mirror base (D).

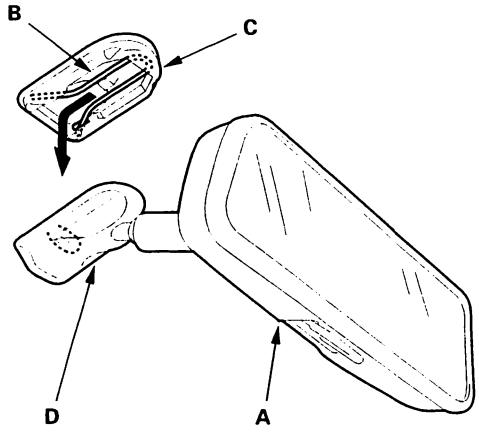

2. If necessary, remove the spring from the mount.

3. Fit the mirror base over the mount.

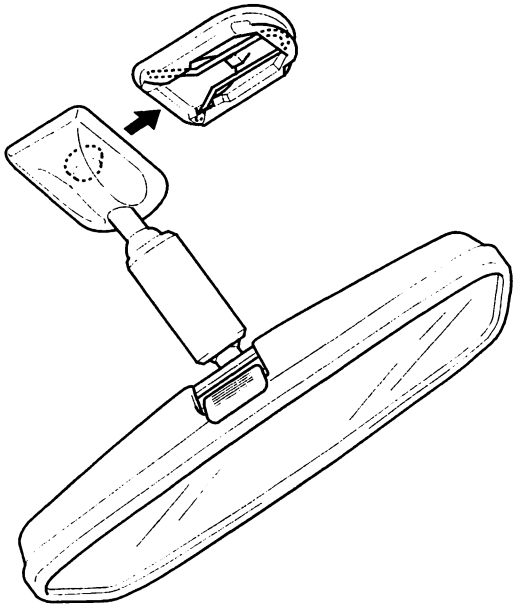

4. Secure the mirror by turning the base 90°.

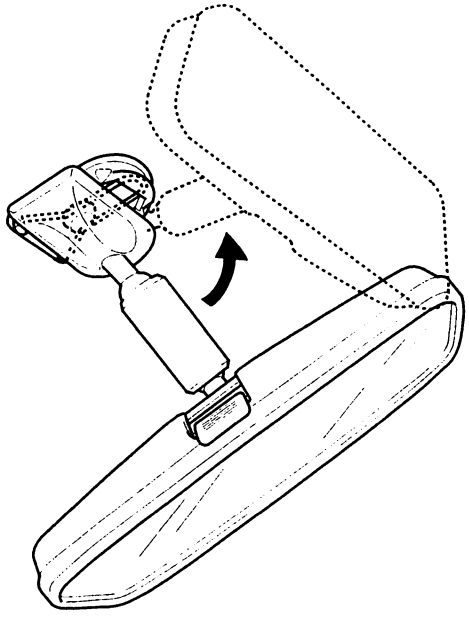

Component Location Index - Coupe

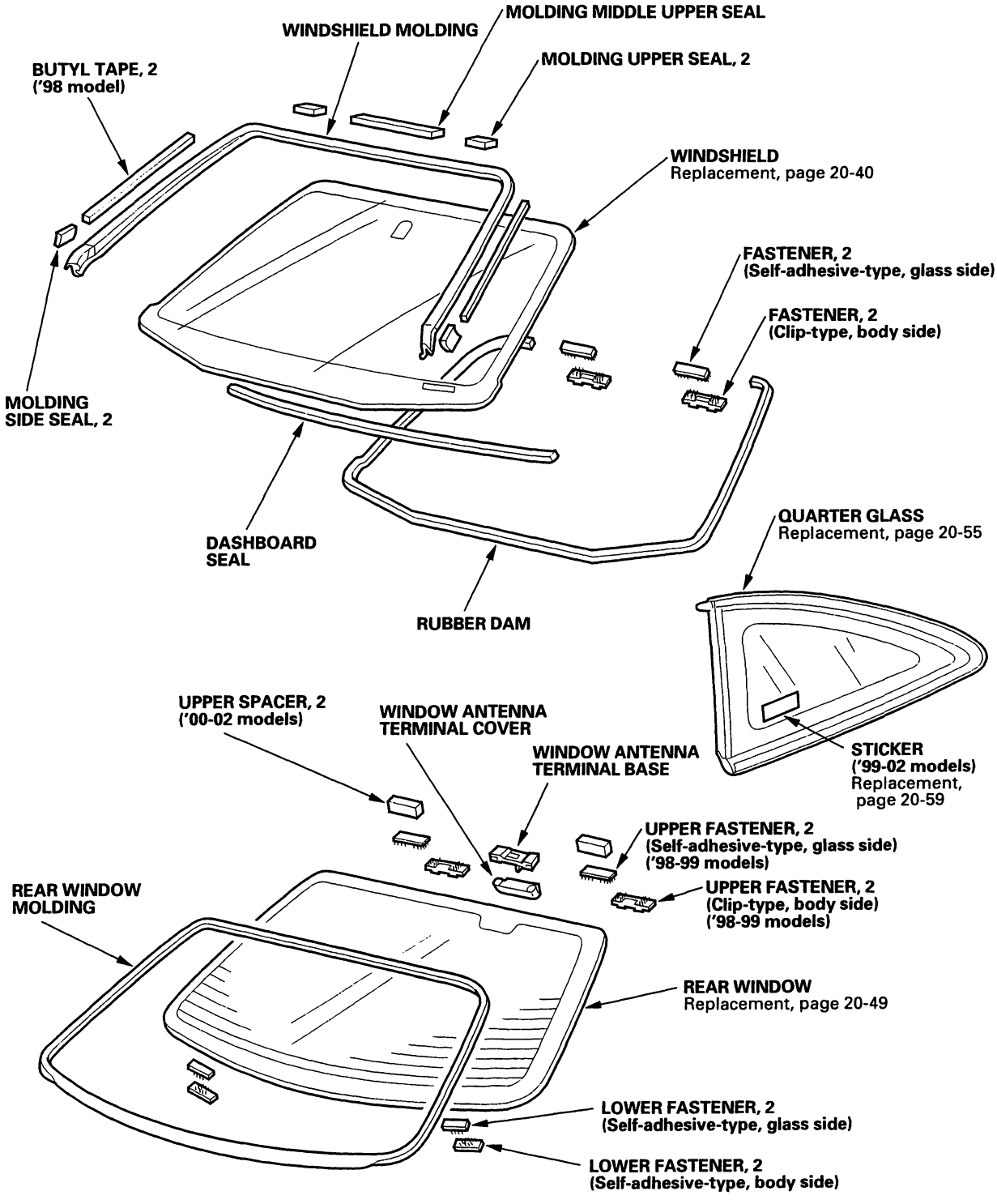

BACK

Component Location Index - Sedan

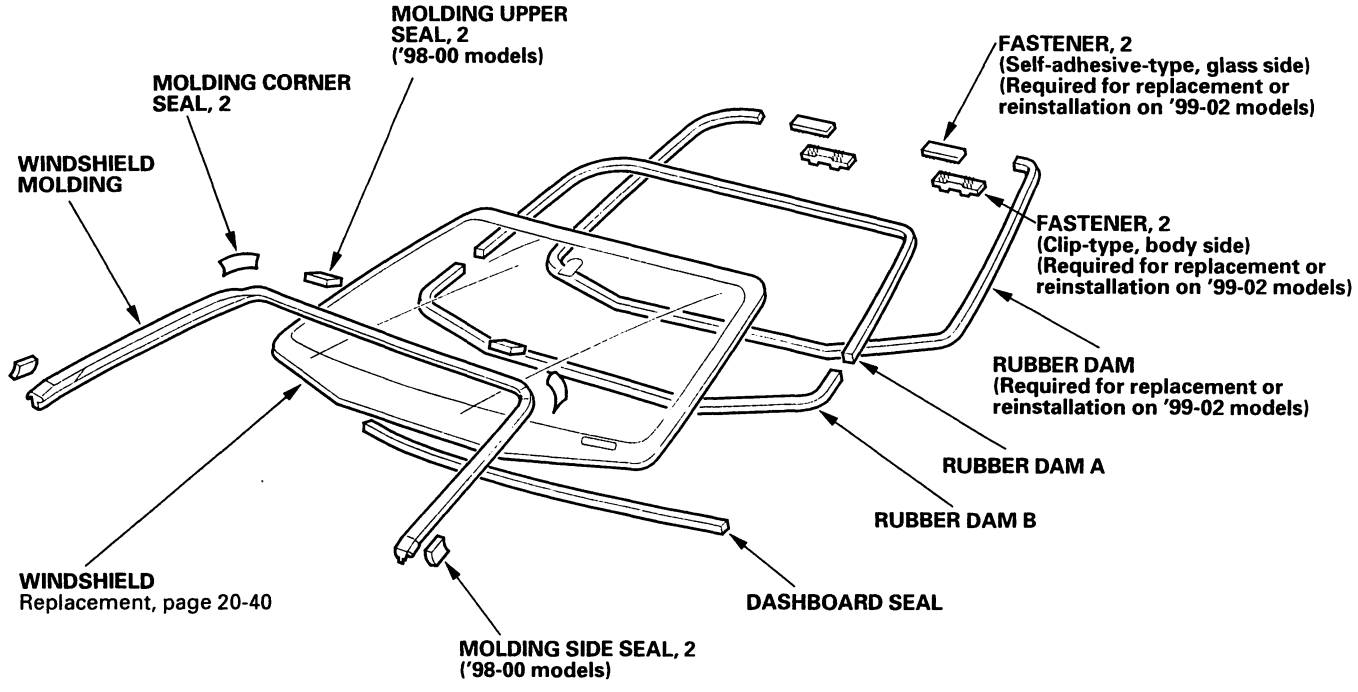

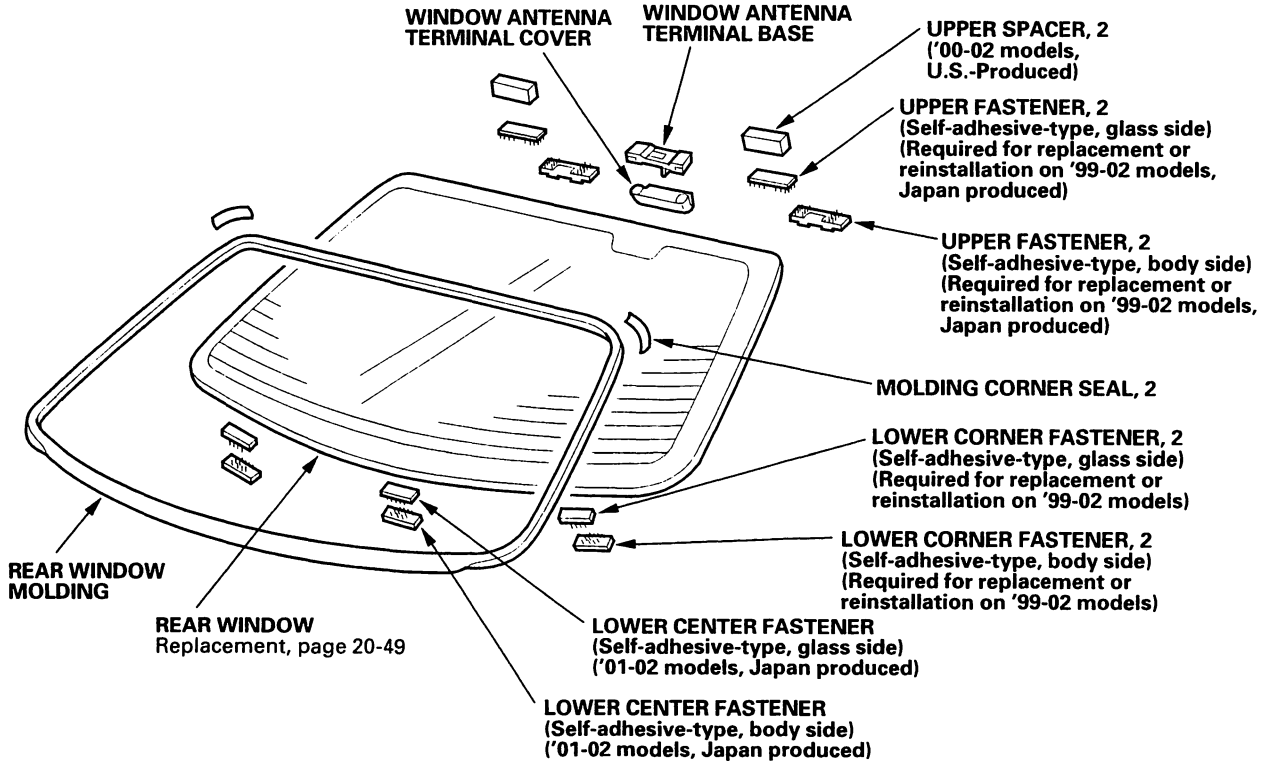

Windshield Replacement

NOTE:
- Put on gloves to protect your hands.
- Wear eye protection when removing the glass with piano wire.
- Use seat covers to avoid damaging any surfaces.

1. Remove these items:
   - Rearview mirror (see page 20-37)
   - Sunvisors and holders, both sides, Roof console, Grab handles, both sides (see page 20-79)
   - Front door opening trim, both sides as necessary
     - Coupe (see page 20-74)
     - Sedan (see page 20-75)
   - Front pillar trim, both sides
     - Coupe (see page 20-74)
     - Sedan (see page 20-75)
   - Windshield wiper arms and cowl cover (see page 22-188)

2. Remove the molding (A) from the edge of the windshield (B). If necessary, cut the molding with a utility knife.

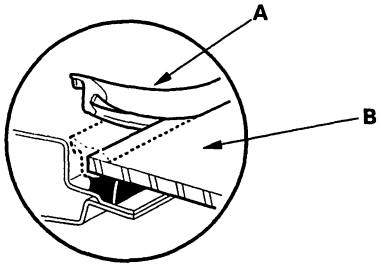

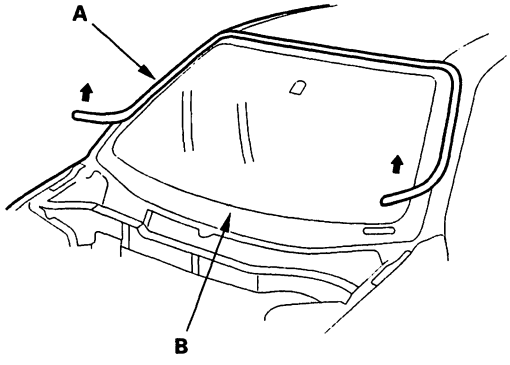

3. Pull down the front portion of the headliner (see page 20-79). Take care not to bend the headliner excessively, or you may crease or break it.

4. Apply protective tape (A) along the edge of the dashboard (B) and body as shown. Using an awl, make a hole through the rubber dam (C), adhesive (D), and dashboard seal (E) from inside the vehicle. Push a piece of piano wire (F) through the hole, and wrap each end around a piece of wood.

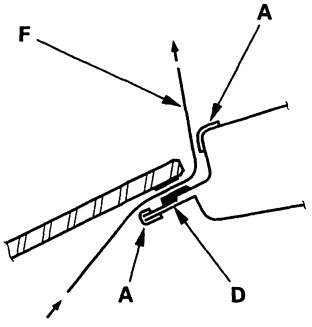

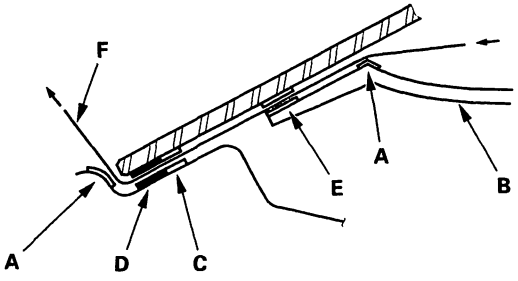

5. With a helper on the outside, pull the piano wire (A) back and forth in a sawing motion. Hold the piano wire as close to the windshield as possible to prevent damage to the body and dashboard. Carefully cut through the rubber dam and adhesive around the entire windshield.

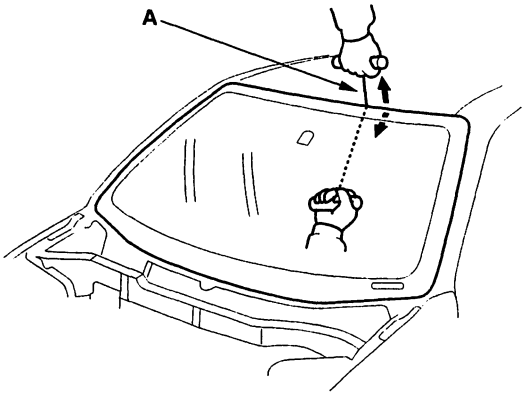

6. Carefully remove the windshield.

BACK

7. With a knife, scrape the old adhesive smooth to a thickness of about 2 mm (0.08 in) on the bonding surface around the entire windshield opening flange:

   - Do not scrape down to the painted surface of the body; damaged paint will interfere with proper bonding.
   - Remove the rubber dam and fasteners from the body.
   - Mask off surrounding surfaces before painting.

8. Clean the body bonding surface with a sponge dampened in alcohol. After cleaning, keep oil, grease, and water from getting on the clean surface.

9. If the old windshield is to be reinstalled, use a putty knife to scrape off all of the old adhesive, the fastener, the rubber dam, and the dashboard seal from the windshield. Clean the shaded portion of the windshield with alcohol where new adhesive is to be applied. Make sure the bonding surface is kept free of water, oil, and grease.

Coupe:

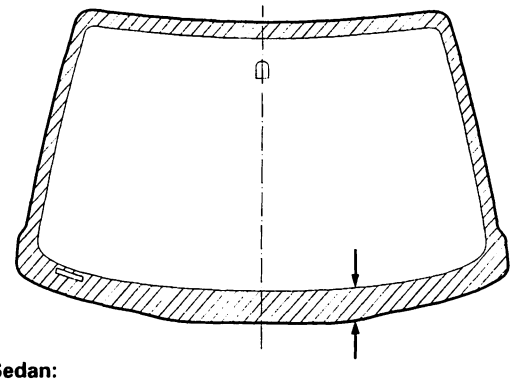

Sedan:

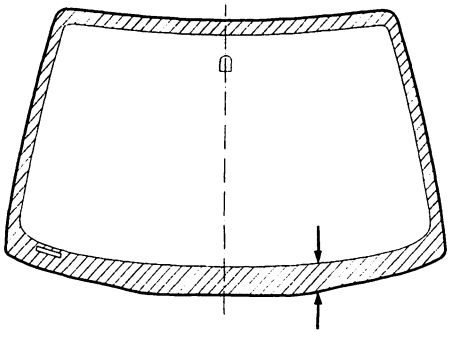

10. Glue the rubber dam (A), fasteners (B) and dashboard seal (C) to the inside face of the windshield (D) as shown:

   - Be sure the rubber dam, fasteners, and dashboard seal line up with the alignment marks (E).
   - Be careful not to touch the windshield where adhesive will be applied.

Coupe:

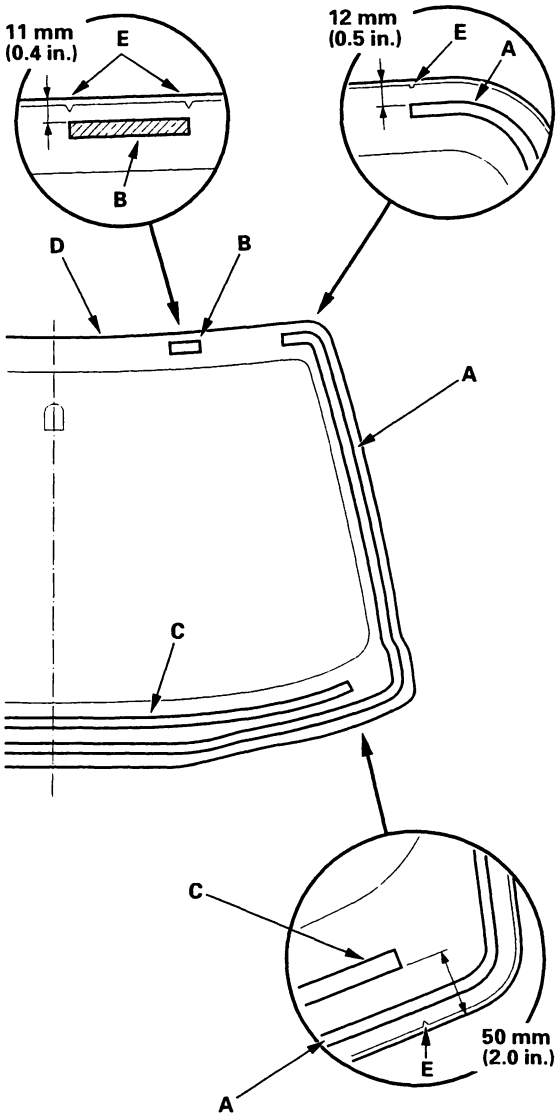

(cont'd)

Windshield Replacement (cont'd)

Sedan:

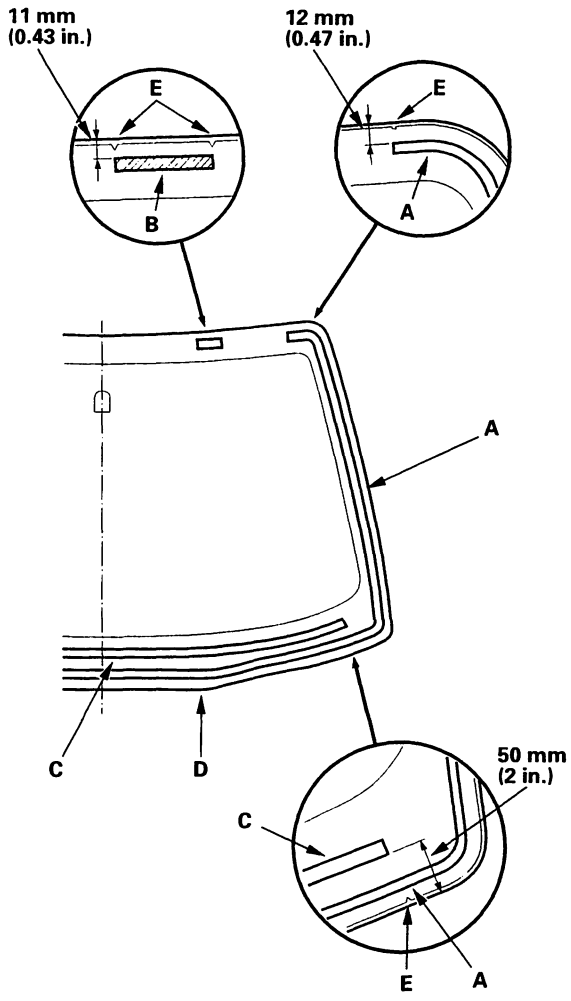

11. Apply primer (3M N-200, or equivalent) to the areas between the alignment marks (A), and glue the adhesive tape (B) (NITTO 501, or equivalent) to the edge of the windshield. Be careful not to touch the windshield where adhesive will be applied.

Coupe:

: Apply primer here.

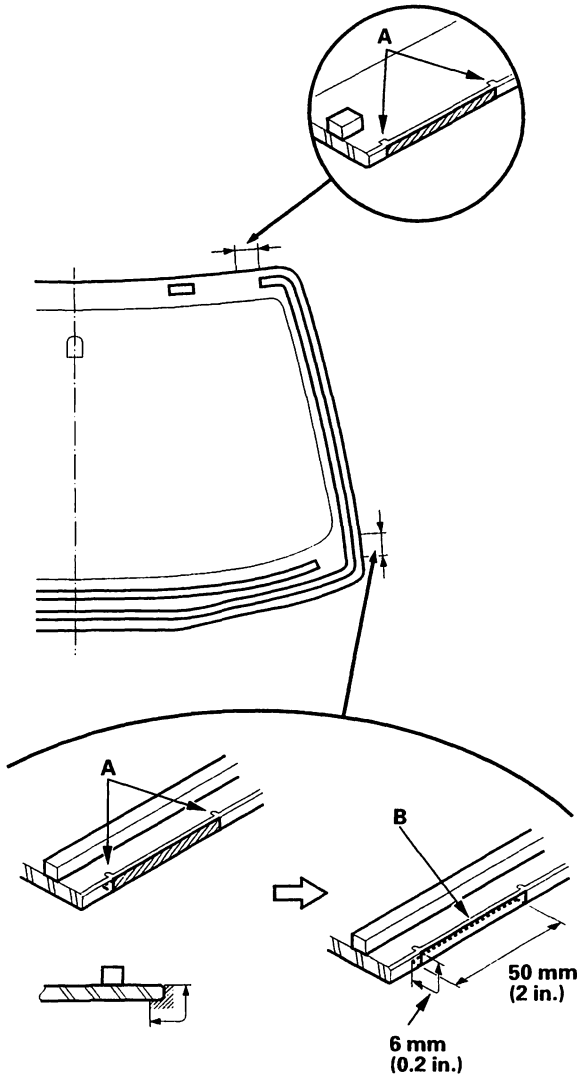

BACK

Sedan:

: Apply primer here.

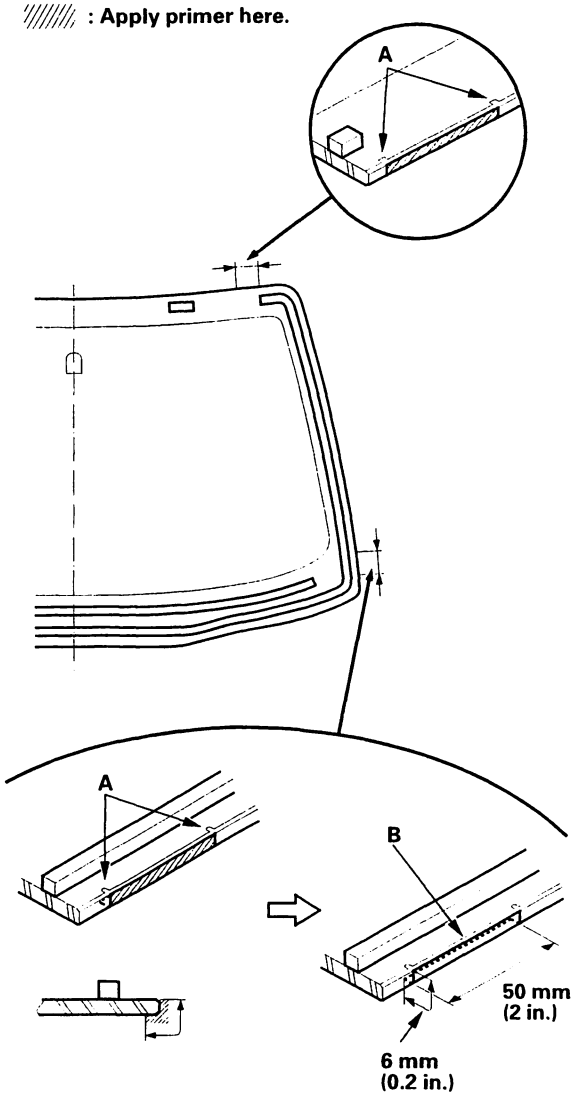

12. Glue the molding (A) with adhesive tape (B) to the edge of the windshield (C):

    - Be sure the alignment mark (D) of the molding lines up with the alignment mark (E) of the windshield.
    - Be careful not to touch the windshield where adhesive will be applied.

Coupe:

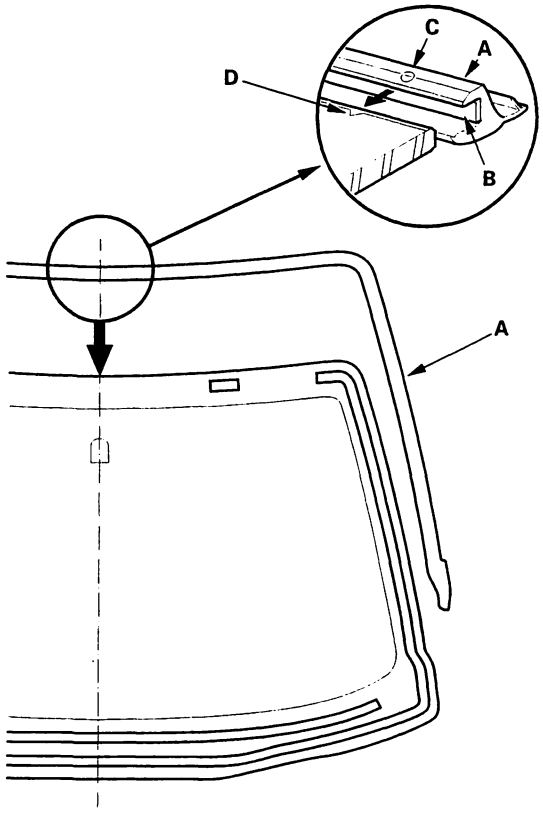

(cont'd)

Windshield Replacement (cont'd)

Sedan:

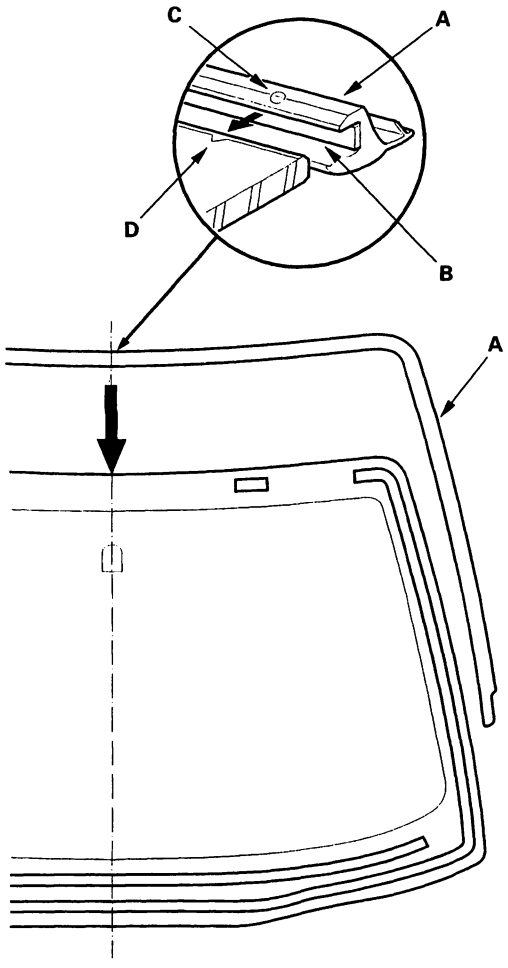

13. Glue the molding middle upper seal (coupe) (A), molding upper seal (coupe) (B), molding Corner Seal (Sedan) (C) and molding side seal (coupe) (D) to the molding (E). Be careful not to touch the windshield where adhesive will be applied.

Coupe:

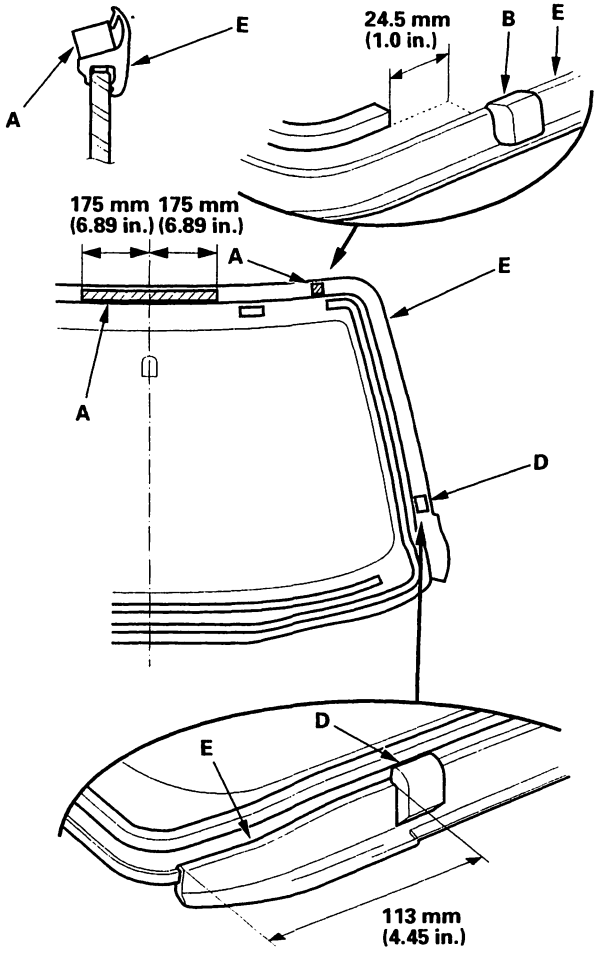

BACK

Sedan:

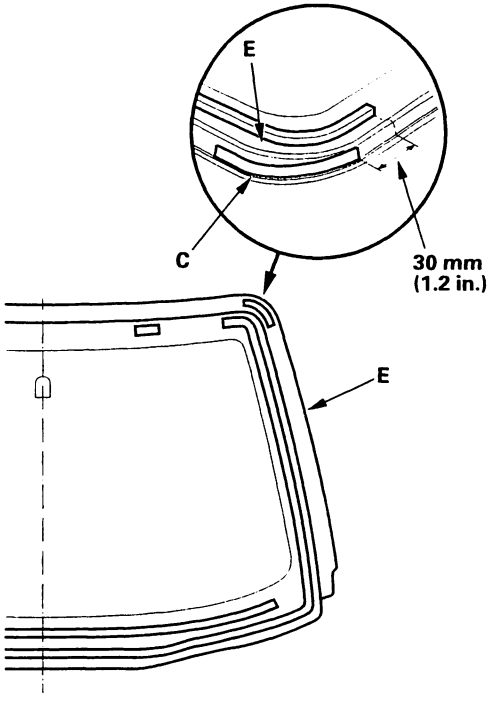

14. Install the fasteners to the body.

Fastener Locations

▷ : **Fastener, 2**

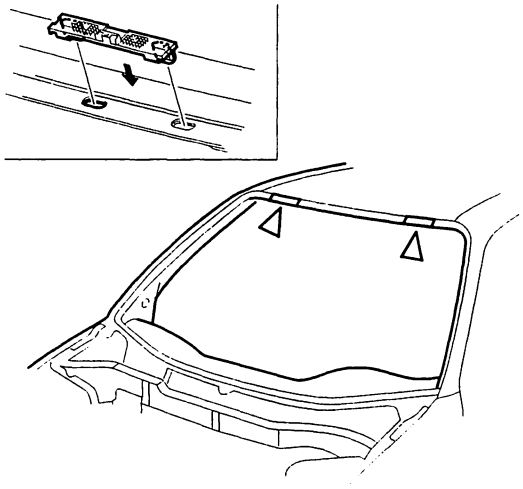

15. Set the windshield in the opening, and center it. Make alignment marks (A) across the windshield and body with a grease pencil at the four points shown. Be careful not to touch the windshield where adhesive will be applied.

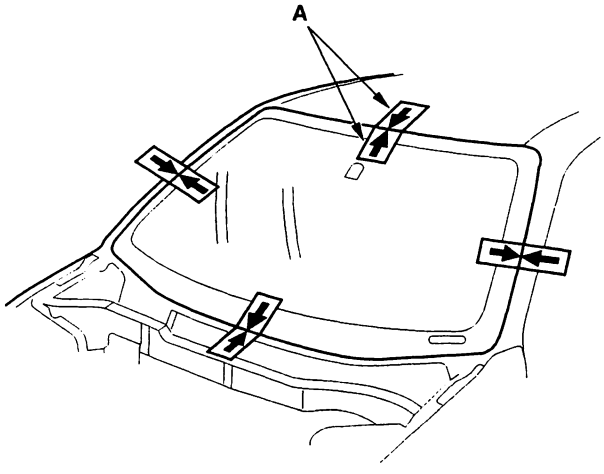

16. Remove the windshield.

(cont'd)

Windshield Replacement (cont'd)

17. With a sponge, apply a light coat of glass primer around the edge of the windshield (A) between the dam (B) and molding (C) as shown, then lightly wipe it off with gauze or cheesecloth:

    - Apply glass primer to the molding.
    - Do not apply body primer to the windshield, and do not get the body and glass primer sponges mixed up.
    - Never touch the primed surfaces with your hands. If you do, the adhesive may not bond to the windshield properly, causing a leak after the windshield is installed.
    - Keep water, dust, and abrasive materials away from the primed surface.

Coupe:

: Apply glass primer here.

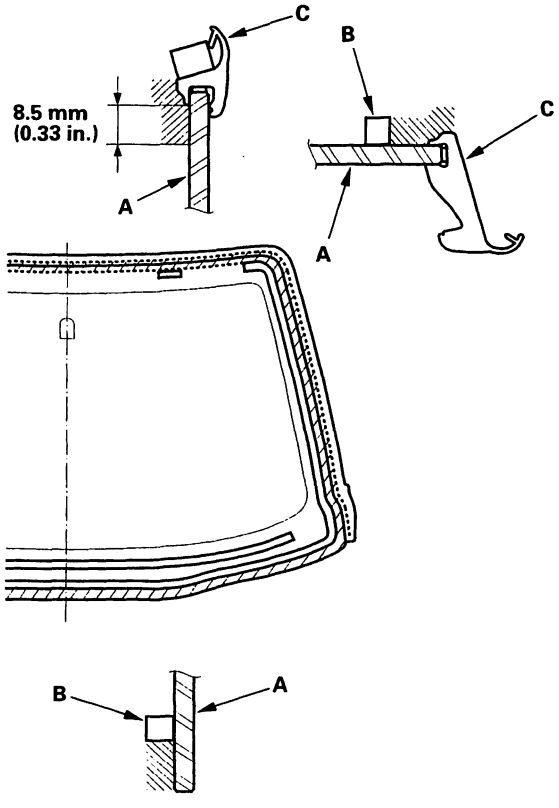

Sedan:

: Apply glass primer here.

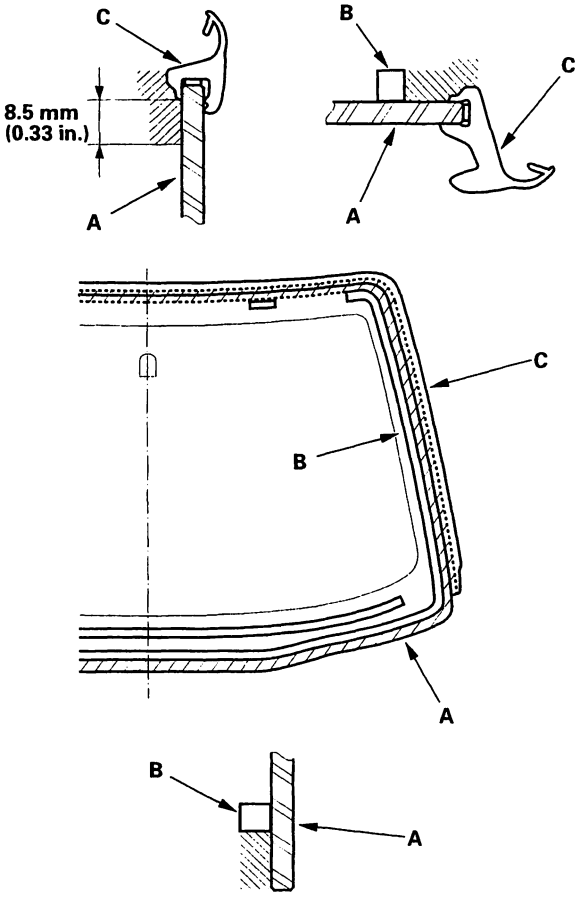

BACK

18. With a sponge, apply a light coat of body primer to the original adhesive remaining around the windshield opening flange. Let the body primer dry for at least 10 minutes:

- Do not apply glass primer to the body, and be careful not to mix up the glass and body primer sponges.
- Never touch the primed surfaces with your hands.
- Mask off the dashboard before painting the flange.

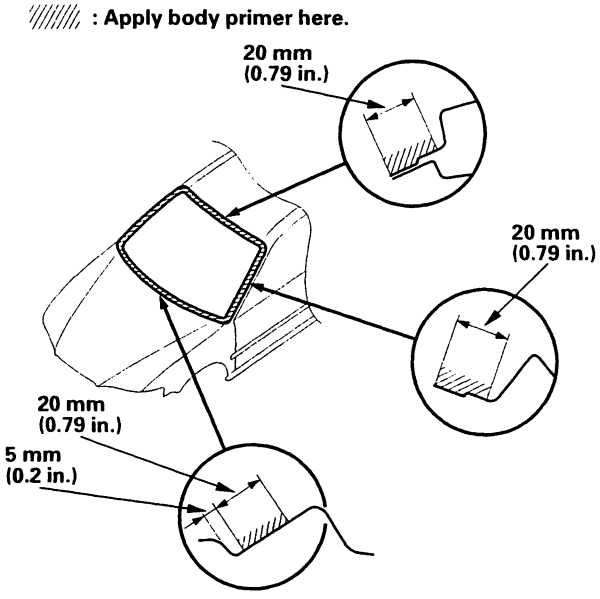

19. Before filling a cartridge, cut a "V" in the end of the nozzle (A) as shown.

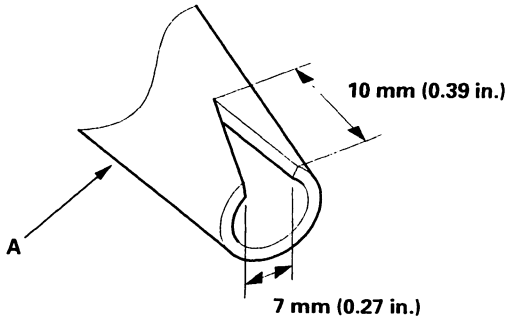

20. Pack adhesive into the cartridge without air pockets to ensure continuous delivery. Put the cartridge in a caulking gun, and run a bead of adhesive (A) around the edge of the windshield (B) between the dam (C) and molding (D) as shown. Apply the adhesive within 30 minutes after applying the glass primer. Make a slightly thicker bead at each corner.

Coupe:

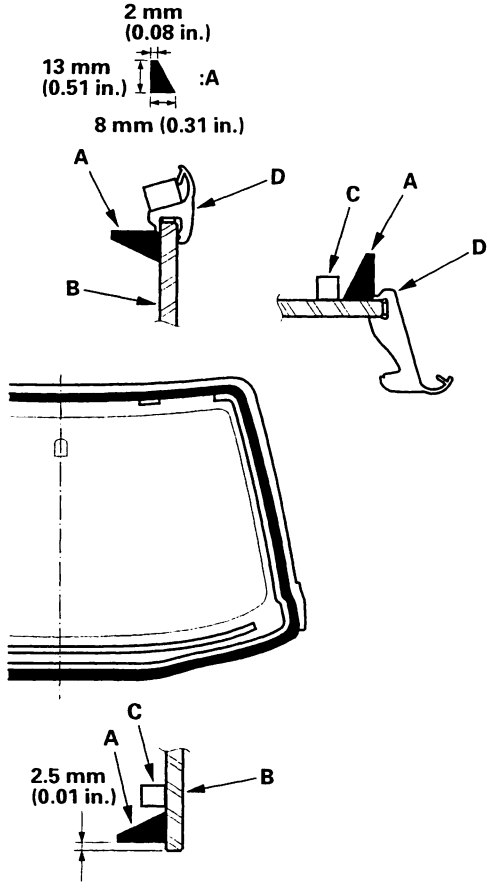

(cont'd)

Windshield Replacement (cont'd)

Sedan:

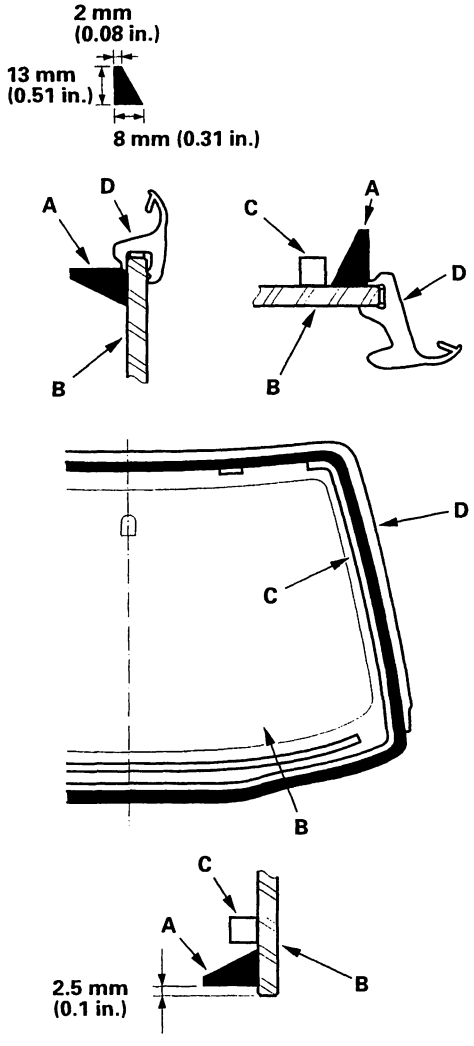

21. Use suction cups (A) to hold the windshield over the opening, align it with the alignment marks (B) made in step 15, and set it down on the adhesive. Lightly push on the windshield until its edges are fully seated on the adhesive all the way around. Do not open or close the doors until the adhesive is dry.

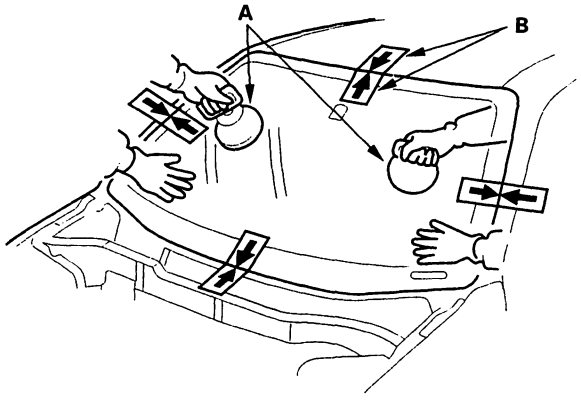

22. Scrape or wipe the excess adhesive off with a putty knife or towel. To remove adhesive from a painted surface or the windshield, wipe with a soft shop towel dampened with alcohol.

23. Let the adhesive dry for at least 1 hour, then spray water over the windshield and check for leaks. Mark leaking areas, and let the windshield dry, then seal with sealant:

    - Let the vehicle stand for at least 4 hours after windshield installation. If the vehicle has to be used within the first 4 hours, it must be driven slowly.
    - Keep the windshield dry for the first hour after installation.

24. Reinstall all remaining removed parts. Install the rearview mirror after the adhesive has dried thoroughly. Advise the customer not to do the following things for 2 to 3 days:

    - Slam the doors with all the windows rolled up.
    - Twist the body excessively (such as when going in and out of driveways at an angle or driving over rough, uneven roads).

BACK

Rear Window Replacement

NOTE:
- Put on gloves to protect your hands.
- Wear eye protection when removing the glass with piano wire.
- Use seat covers to avoid damaging any surfaces.
- Do not damage the rear window defogger grid lines, window antenna grid lines, and terminals.

1. Remove the trunk lid (see page 20-154).

2. Remove these items:

   Sedan (see page 20-129)
   - Rear seat cushion
   - Rear seat side bolster (both sides)

   Coupe (see page 20-128)
   - Rear seat-back
   - Rear seat-cushion

3. Remove these items:

   Sedan (see page 20-77)
   - Rear door opening trim (both sides as necessary)
   - Rear pillar trim (both sides)
   - Rear bulkhead cover
   - Center anchor bolt of the center belt
   - Center belt cover
   - High mount brake light
   - Lock cylinder trim
   - Rear shelf

   Coupe (see page 20-76)
   - Rear bulkhead cover
   - Rear shelf

   Coupe (see page 20-74)
   - Door sill trim
   - Rear side trim panel
   - Upper anchor bolts of the front and rear seat belts
   - Coat hanger
   - Quarter trim panel

4. Remove the window antenna terminal cover (A) from the window antenna terminal base (B), and disconnect the window antenna connector (C).

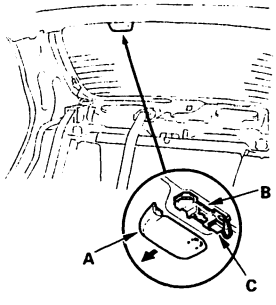

5. Disconnect the rear window defogger connectors (A).

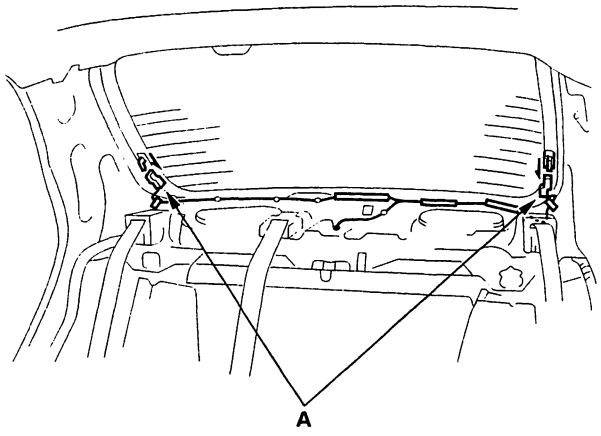

6. Remove the molding (A) from the edge of the rear window (B). If necessary, cut the molding with a utility knife.

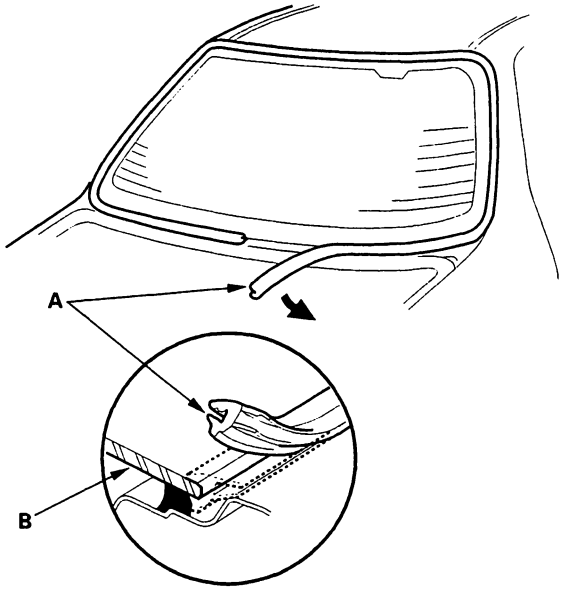

7. Pull down the rear portion of the headliner (see page 20-79). Take care not to bend the headliner excessively, or you may crease or break it.

(cont'd)

Rear Window Replacement (cont'd)

8. Apply protective tape (A) along the inside and outside edges of the body as shown. Using an awl, make a hole through the adhesive (B) from inside the vehicle. Push a piece of piano wire (C) through the hole, and wrap each end around a piece of wood.

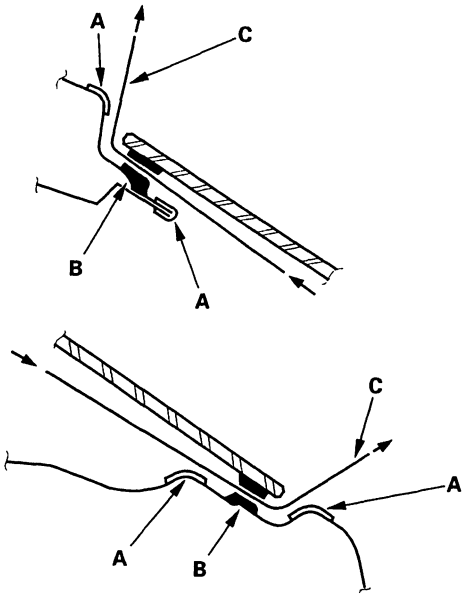

9. With a helper on the outside, pull the piano wire (A) back and forth in a sawing motion. Hold the piano wire as close to the rear window as possible to prevent damage to the body, and carefully cut through the adhesive around the entire rear window.

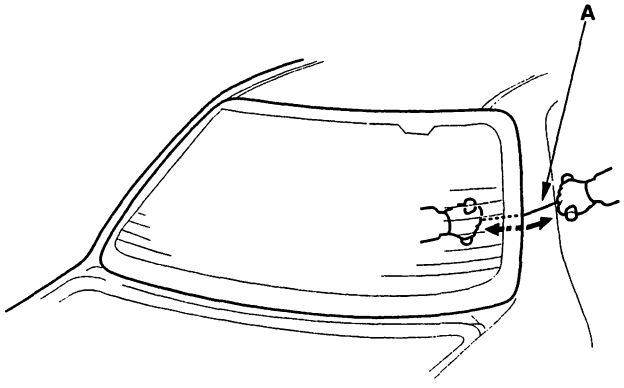

10. Carefully remove the rear window.

11. With a putty knife, scrape the old adhesive smooth to a thickness of about 2 mm (0.08 in) on the bonding surface around the entire rear window opening flange:

    - Do not scrape down to the painted surface of the body; damaged paint will interfere with proper bonding
    - Mask off surrounding surfaces before painting.
    - Remove the fasteners from the body.

12. Clean the body bonding surface with a sponge dampened in alcohol. After cleaning, keep oil, grease, and water from getting on the surface.

13. If the old rear window is to be reinstalled, use a putty knife to scrape off all of the old adhesive, then clean the shaded portion of the rear window with alcohol where new adhesive is to be applied. Make sure the bonding surface is kept free of water, oil, and grease.

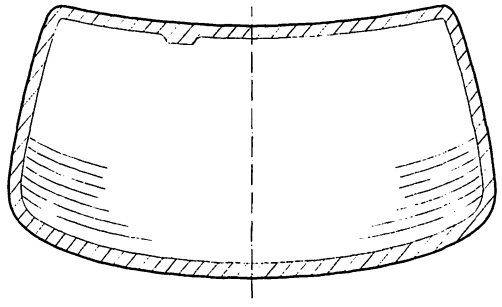

BACK

14. Glue the fasteners (A, B) and spacers (U.S.-Produced); (C) to the inside face of the rear window as shown. If necessary, apply primer (3M N-200, or equivalent) to the areas where the window antenna terminal base (D) will be glued, then glue the base on:

- Be sure the fasteners, spacers (and window antenna terminal base cover) line up with the alignment marks (E).
- Be careful not to touch the rear window where adhesive will be applied.

U.S.-Produced models:

: Apply primer here.

Fastener and spacer Locations

B ▷ : Fastener
Coupe, 2 (both sides)
Sedan, 3 (both sides and center)

C ▷ : Spacer, 2

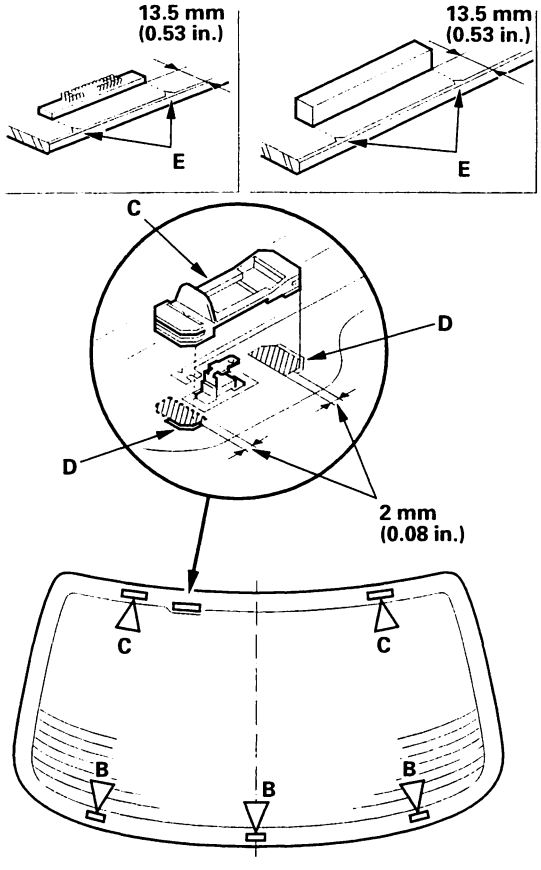

Japan produced models:

: Apply primer here.

Fastener Locations

A ▷ : Fastener, 2 **B ▷ : Fastener, 2**

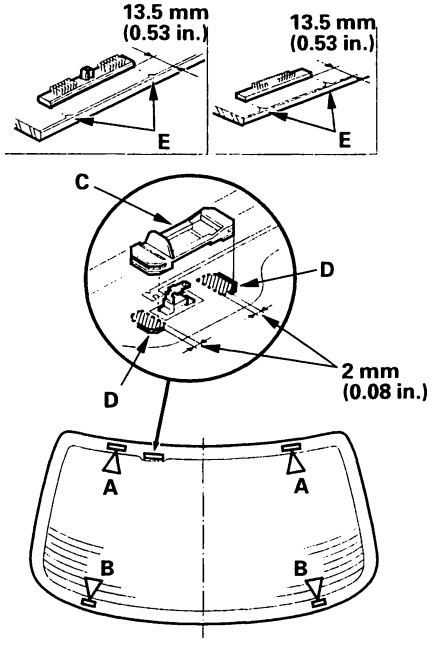

15. Apply the adhesive tape (A) (3M 4216, or equivalent) to the edge of the rear window (B):

- Be sure the adhesive tape lines up with the alignment marks (C).
- Be careful not to touch the rear window where adhesive will be applied.

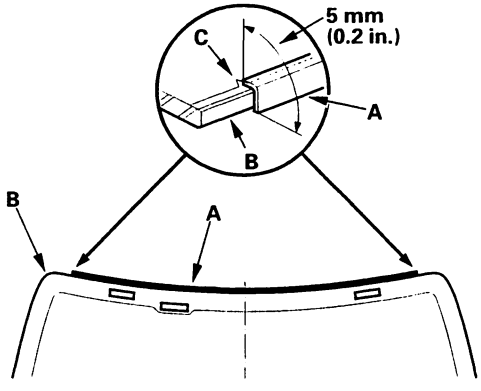

(cont'd)

Rear Window Replacement (cont'd)

16. Glue the molding (A) around the edge of the rear window (B):
    - Be sure the joint (C) lines up with the alignment mark (D).
    - Be careful not to touch the rear window where adhesive will be applied.

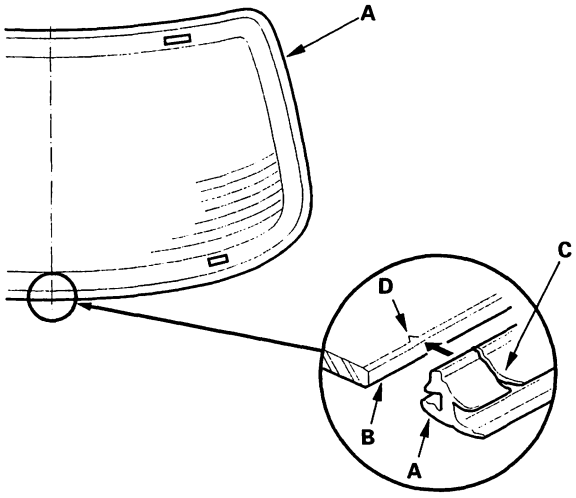

17. Sedan only, glue the molding corner seal (A) to the molding (B). Be careful not to touch the rear window where adhesive will be applied.

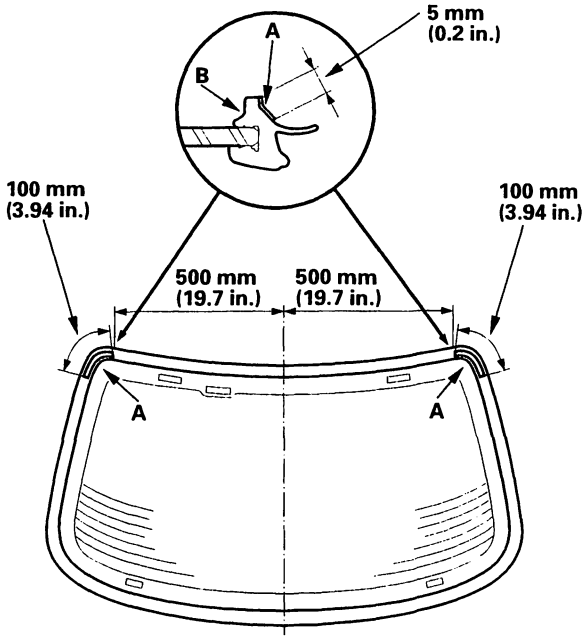

18. Install the upper fasteners (A) (Japan-Produced models). Glue the lower fasteners (B) to the body as shown. Align the lower fasteners with 1.0 mm (0.04 in.) offset surface of the rear parcel shelf (C).

U.S.-Produced models:

Fasterner Locations

B ▷ : Fastener
Coupe, 2 (both sides)
Sedan, 3 (both sides and center)

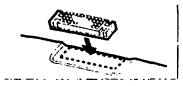

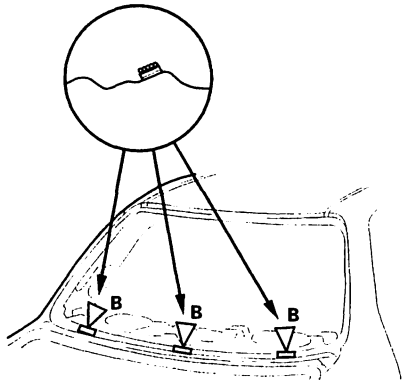

Japan-Produced models:

Fastener Locations

A ▷ : Fastener, 2 **B ▷ : Fastener, 2**

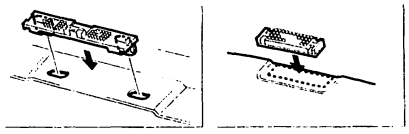

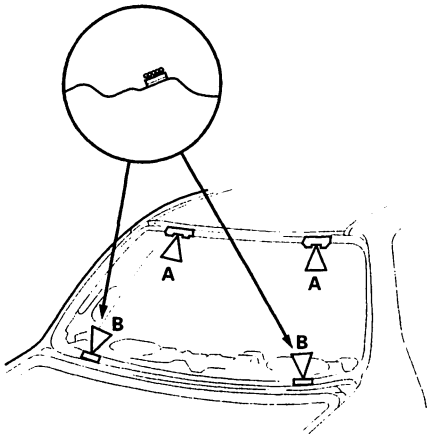

BACK

19. Set the rear window in the opening, and center it. Make alignment marks (A) across the rear window and body with a grease pencil at the four points shown. Be careful not to touch the rear window where adhesive will be applied.

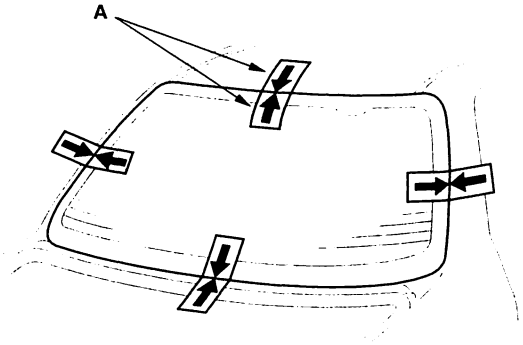

20. Remove the rear window.

21. With a sponge, apply a light coat of glass primer along the edge of the rear window (A) and molding (B) as shown, then lightly wipe it off with gauze or cheesecloth:

- Do not apply body primer to the rear window, and do not get the body and glass primer sponges mixed up.
- Never touch the primed surfaces with your hands. If you do, the adhesive may not bond to the rear window properly, causing a leak after the rear window is installed.
- Keep water, dust, and abrasive materials away from the primed surface.

: Apply glass primer here.

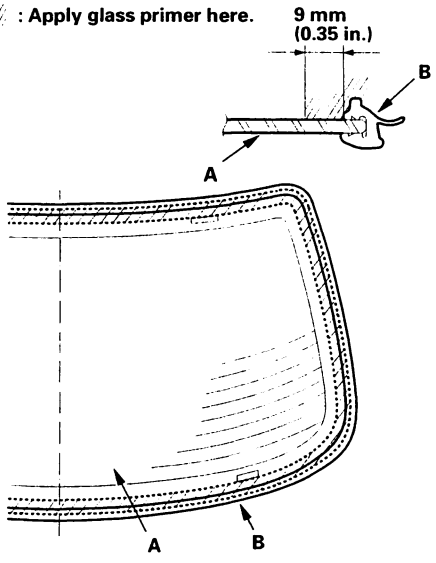

22. With a sponge, apply a light coat of body primer to the original adhesive remaining around the rear window opening flange. Let the body primer dry for at least 10 minutes:

- Do not apply glass primer to the body, and be careful not to mix up the glass and body primer sponges.
- Never touch the primed surfaces with your hands.

: Apply body primer here.

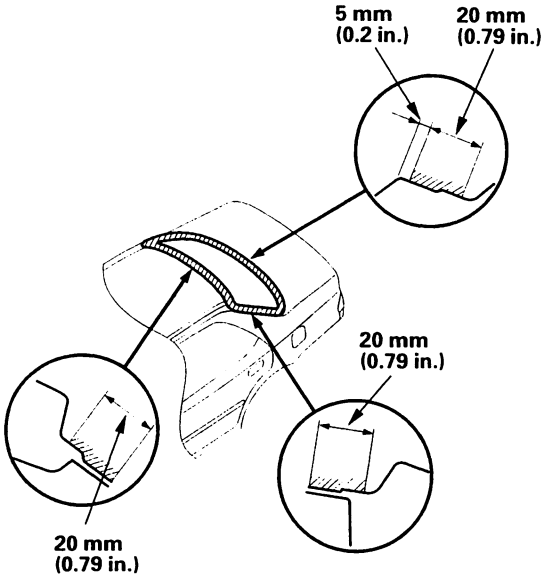

23. Before filling a cartridge, cut a "V" in the end of the nozzle (A) as shown.

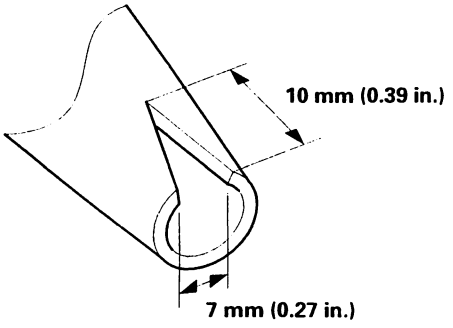

(cont'd)

Rear Window Replacement (cont'd)

24. Pack adhesive into the cartridge without air pockets to ensure continuous delivery. Put the cartridge in a caulking gun, and run a bead of adhesive (A) around the edge of the rear window (B) as shown. Apply the adhesive within 30 minutes after applying the glass primer. Make a slightly thicker bead at each corner.

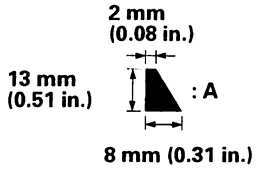

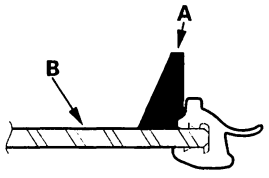

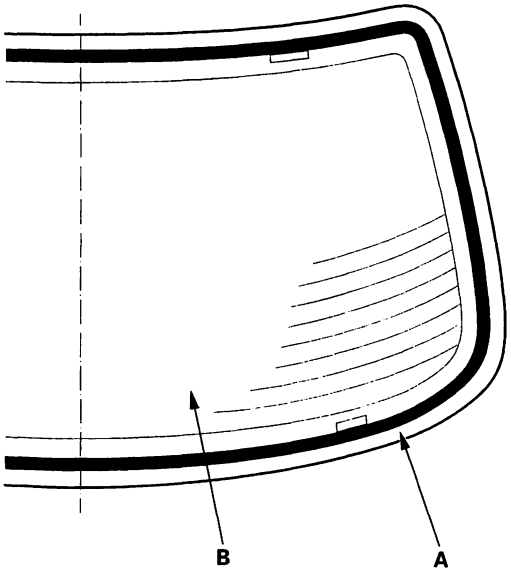

25. Use suction cups (A) to hold the rear window over the opening, align it with the alignment marks (B) you made in step 19, and set it down on the adhesive. Lightly push on the rear window until its edges are fully seated on the adhesive all the way around. Do not open or close the doors until the adhesive is dry.

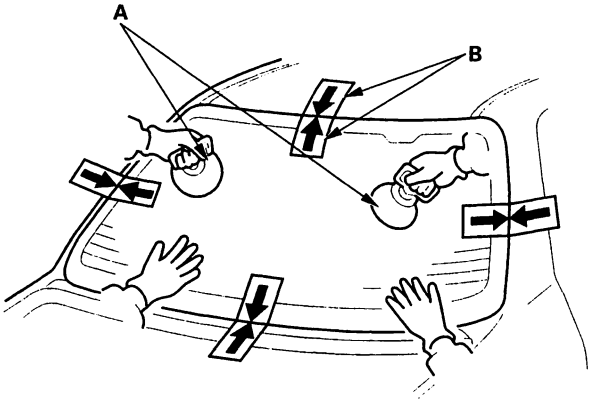

26. Scrape or wipe the excess adhesive off with a putty knife or towel. To remove adhesive from a painted surface or the rear window, use a soft shop towel dampened with alcohol.

27. Let the adhesive dry for at least 1 hour, then spray water over the rear window and check for leaks. Mark the leaking areas, let the rear window dry, then seal with sealant. Let the vehicle stand for at least 4 hours after rear window installation. If the vehicle has to be used within the first 4 hours, it must be driven slowly.

28. Reinstall all remaining removed parts. Advise the customer not to do the following things for 2 to 3 days:

    - Slam the doors with all the windows rolled up.
    - Twist the body excessively (such as when going in and out of driveways at an angle or driving over rough, uneven roads).

BACK

Quarter Glass Replacement - Coupe

NOTE:
- Put on gloves to protect your hands.
- Use seat covers to avoid damaging any surface.

1. Remove these items (see page 20-128):

   - Rear seat-back
   - Rear seat cushion

2. Remove these items (see page 20-76):

   - Rear bulkhead cover
   - Center anchor bolt of the center belt
   - Center belt lid
   - High mount brake light
   - Lock cylinder trim
   - Rear shelf

3. Remove these items (see page 20-74):

   - Door sill trim
   - Rear side trim panel
   - Upper anchor bolts of the front and rear seat belts
   - Coat hanger
   - Quarter trim panel

4. From inside the vehicle, use a knife (A) to cut through the quarter glass adhesive (B) all the way around:

   - If the quarter glass (C) is to be reinstalled, take care not to damage the molding (D).
   - If the molding is damaged, replace the quarter glass, molding and clips (E) as an assembly.
   - If any of the clips are broken, the quarter glass can be reinstalled using butyl tape (refer to step 9).
   - Apply protective tape (F) along the edge of the entire quarter glass opening flange.

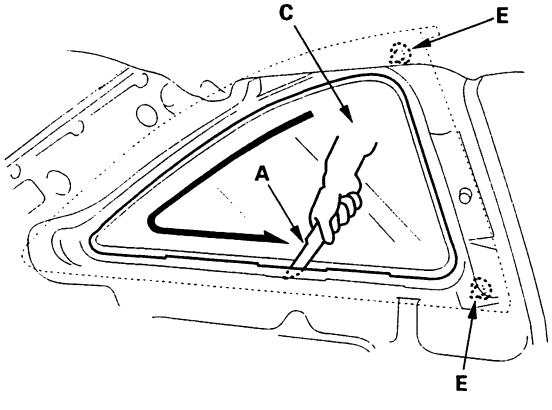

Upper portion:

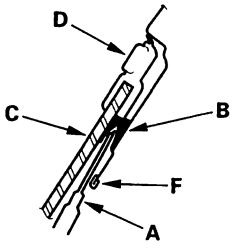

Lower portion:

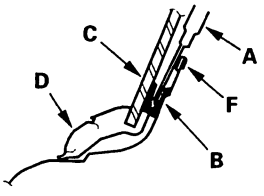

Center piller portion:

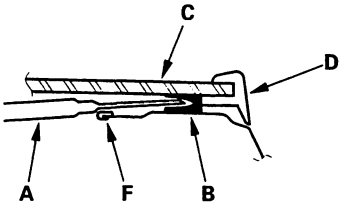

Clip portion:

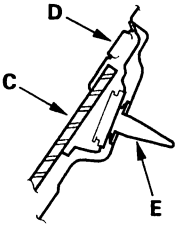

5. Carefully remove the quarter glass, and check the molding for damage, and replace the quarter glass if necessary.

(cont'd)

Quarter Glass Replacement - Coupe (cont'd)

6. With a knife, scrape the old adhesive smooth to a thickness of about 2 mm (0.08 in.) on the bonding surface around the entire quarter glass opening flange:

   - Do not scrape down to the painted surface of the body; damaged paint will interfere with proper bonding.
   - If any of the clips are broken, remove them from the body.
   - Mask off surrounding surfaces before applying primer.

7. Clean the body bonding surface with a sponge dampened in alcohol. After cleaning, keep oil, grease, and water from getting on the glass surface.

8. If the old quarter glass is to be reinstalled, use a putty knife to scrape off all traces of old adhesive from the quarter glass. Scrape the old adhesive from the molding with a knife, then clean the quarter glass and molding shaded portion of the with alcohol where adhesive is to be applied. Make sure the bonding surface is kept free of water, oil, and grease.

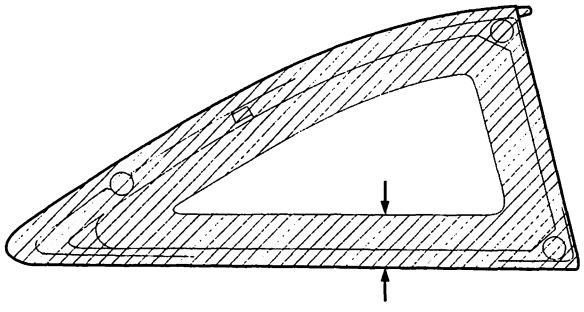

9. If the old quarter glass is to be reinstalled (and either clip is broken off the molding), apply a light coat of primer (C-100, or equivalent), then apply butyl tape (A) and (B) to the molding (C) as shown:

   - Be careful not to touch the quarter glass where adhesive will be applied.
   - Do not peel the separator off the butyl tape.

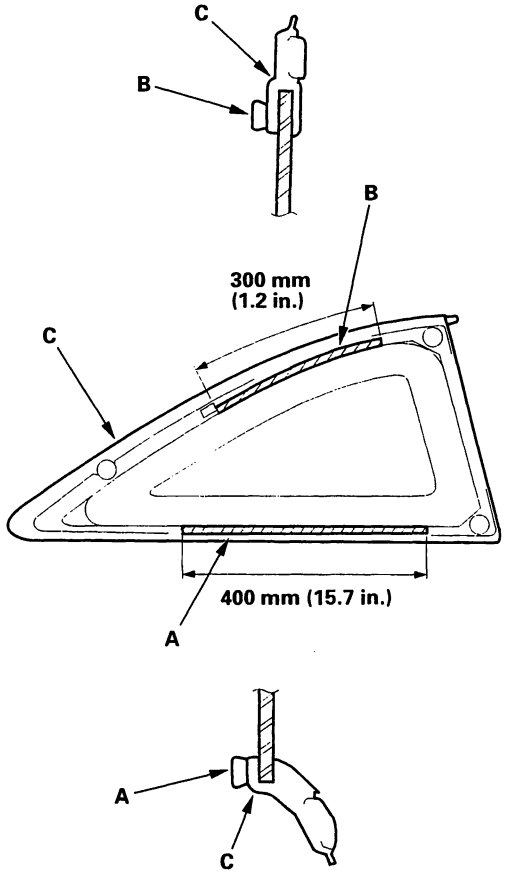

BACK

10. If the old quarter glass is to be reinstalled (and either clip is broken off the molding), seal the body holes with pieces of urethane tape (A). Then set the quarter glass upright in the opening, and make alignment marks (B) across the quarter glass and body with a grease pencil at the three points shown. Be careful not to touch the quarter glass where adhesive will be applied.

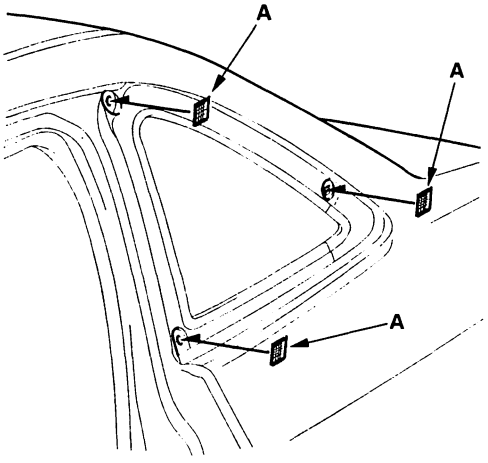

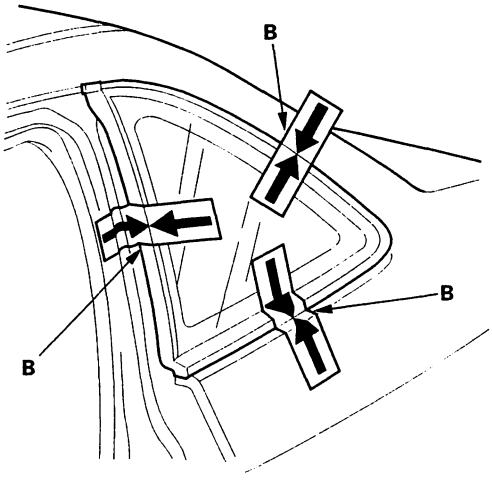

11. Remove the quarter glass.

12. With a sponge, apply a light coat of glass primer to the inside face of the quarter glass (A) as shown, then lightly wipe it off with gauze or cheesecloth:

- Do not apply body primer to the quarter glass, and do not get the body and glass primer sponges mixed up.
- Never touch the primed surfaces with your hands. If you do the adhesive may not bond to the quarter glass properly, causing a leak after the quarter glass is installed.
- Keep water, dust, and abrasive materials away from the primed surface.

: Apply glass primer here.

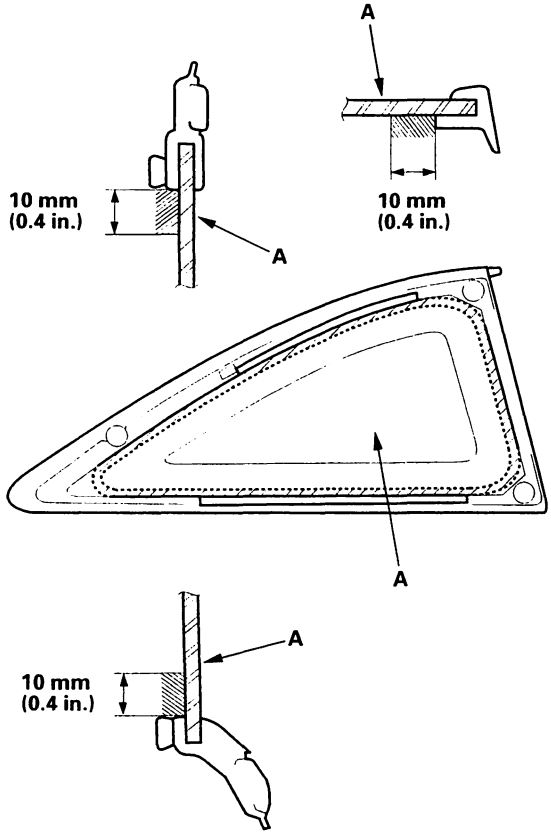

(cont'd)

Quarter Glass Replacement - Coupe (cont'd)

13. With a sponge, apply a light coat of body primer to the original adhesive remaining around the quarter glass opening flange. Let the body primer dry for at least 10 minutes:

    - Do not apply glass primer to the body, and be careful not to mix up the glass and body primer sponges.
    - Never touch the primed surfaces with your hands.
    - Mask off the dashboard before painting the flange.

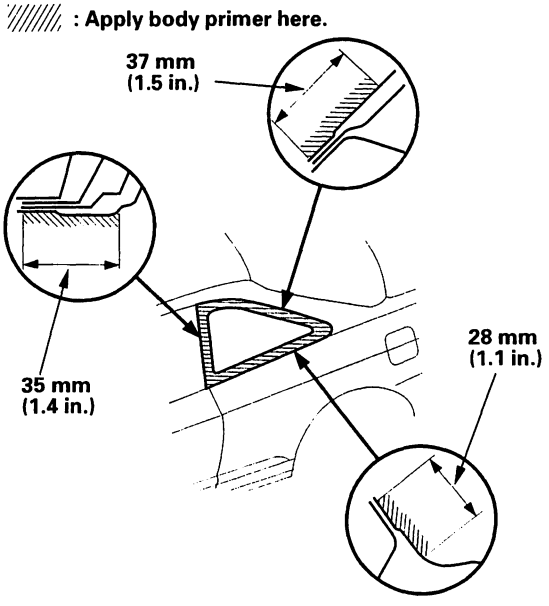

14. Before filling a cartridge, cut a "V" in the end of the nozzle (A) as shown.

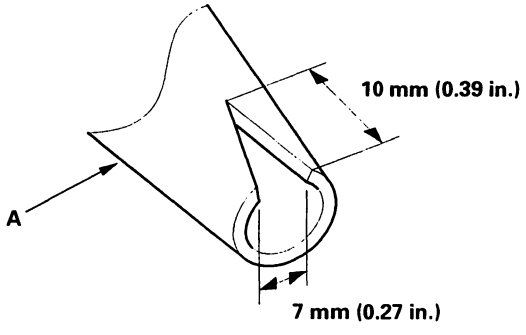

15. Pack adhesive into the cartridge without air pockets to ensure continuous delivery. Put the cartridge in a caulking gun, and run a bead of adhesive (A) around the edge of the quarter glass (B) as shown:

    - After applying the adhesive, peel the separator off the butyl tape.
    - Apply the adhesive within 30 minutes after applying the glass primer. Make slightly thicker bead at each corner.

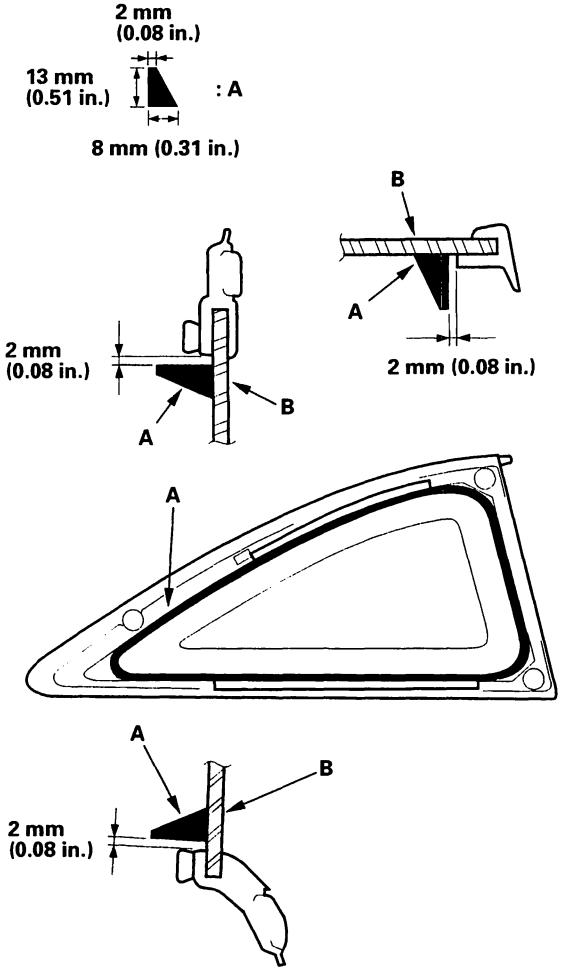

BACK

16. Use suction cups (A) to hold the quarter glass (B) over the opening, align the clips or the alignment marks (C) made in step 10, and set it down on the adhesive. Lightly push on the quarter glass until its edges are fully seated on the adhesive all the way around. Do not open or close the doors until the adhesive is dry.

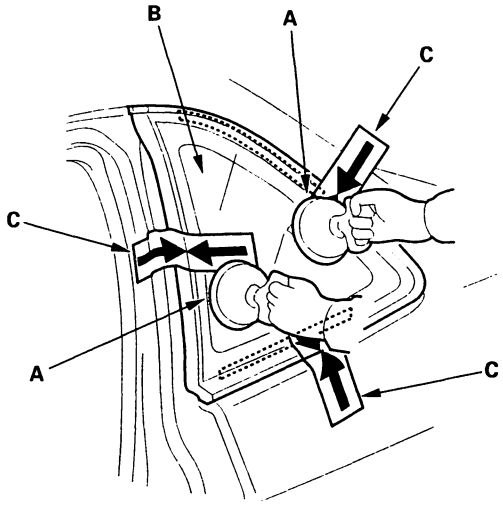

17. Scrape or wipe the excess adhesive off with a putty knife or towel. To remove adhesive from a painted surface or the quarter glass, wipe with a soft shop towel dampened with alcohol.

18. Let the adhesive dry for at least 1 hour, then spray water over the quarter glass and check for leaks. Mark the leaking areas and let the quarter glass dry, then seal with sealant. Let the vehicle stand for at least 4 hours after quarter glass installation. If the vehicle has to be used within the first 4 hours, it must be driven slowly.

19. Reinstall all remaining removed parts. Advise the customer not to do the following things for 2 to 3 days:

    - Slam the doors with all the windows rolled up.
    - Twist the body excessively (such as when going in and out of driveways at an angle or driving over rough, uneven roads).

Sticker Replacement

1. Clean the quarter glass surface with a sponge dampened in alcohol. After cleaning, keep oil, grease and water from getting on the surface.

2. Apply the sticker where shown.

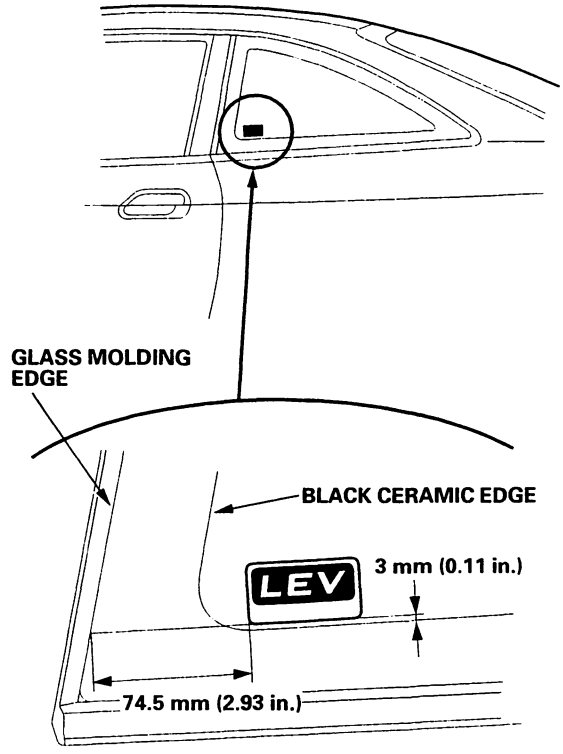

Component Location Index

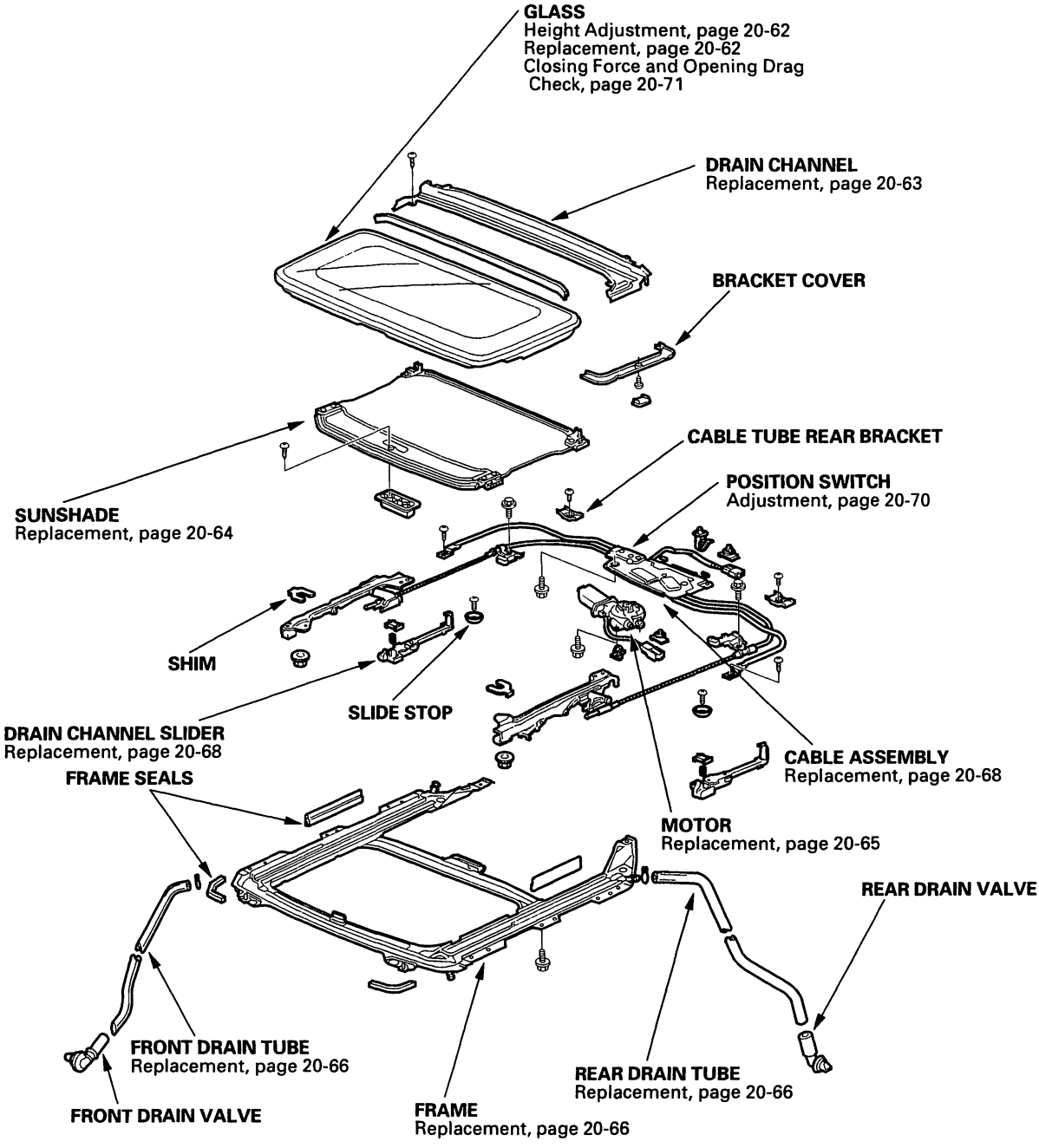

BACK

Symptom Troubleshooting Index

Symptom	Diagnostic procedure	Also check for
Water leaks	1. Check for a clogged drain tube. 2. Check for a gap between the glass weatherstrip and the roof panel. 3. Check for a defective or an improperly installed glass weatherstrip. 4. Check for a gap between the drain seal and the roof panel.	
Wind noise	1. Check for excessive clearance between the glass weatherstrip and the roof panel.	
Motor noise	1. Check for a loose motor. 2. Check for a worn gear or bearing. 3. Check for a deformed cable assembly.	
Glass does not move, but motor turns	1. Check for a defective gear or inner cable. 2. Check for foreign material stuck between the guide rail and the slider. 3. Check for a loose inner cable. 4. Make sure the cable assembly is attached properly. 5. Check clutch adjustment.	
Glass does not move and motor does not turn (glass can be moved with moonroof wrench)	1. Check for a blown fuse. 2. Check for a faulty moonroof switch. 3. Check the open/close-tilt/close switches. 4. Check for a run down battery. 5. Check for a defective motor. 6. Check for a faulty relay.	

Glass Height Adjustment

The roof panel (A) should be even with the glass weatherstrip (B), to within 2+0.5/−1 mm (0.08+0.02/−0.04 in.) all the way around. If not, make the following adjustment:

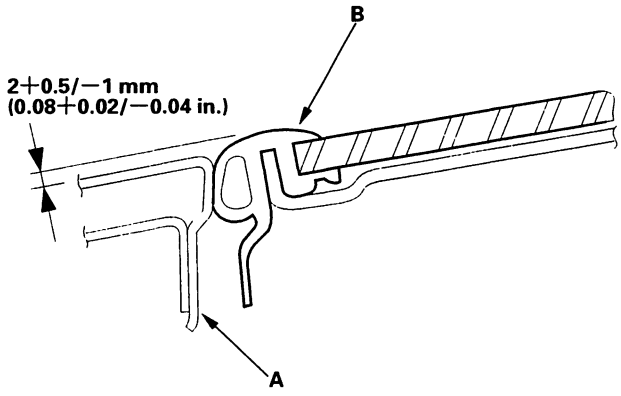

1. Open the glass all the way,and remove the bracket cover.
2. Loosen the nuts (A), and install the shims (B) between the glass frame (C) and glass bracket (D) on each side.

   Shim thickness: Front and rear max. 2 mm (0.08 in.)

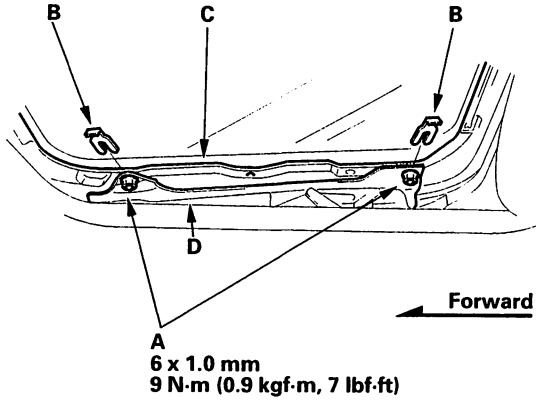

3. Repeat on opposite side if necessary.

Glass Replacement

1. Tilt the glass all the way up.
2. Slide the sunshade all the way back.
3. Remove the caps (A) and screws, then remove both bracket covers (B). Remove the nuts and shims (C) from both glass brackets (D).

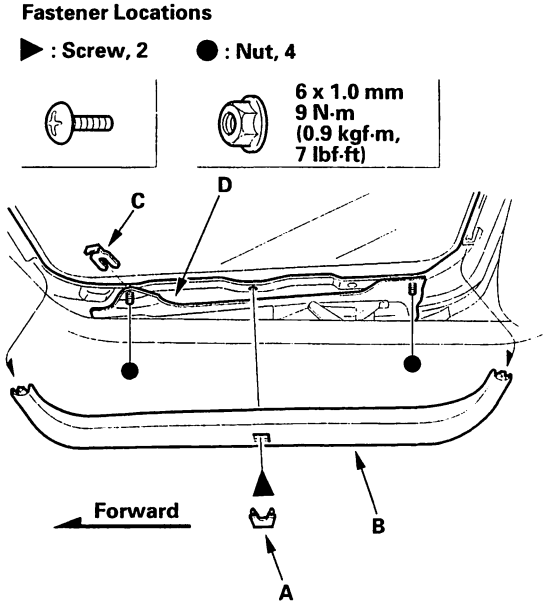

4. Remove the moonroof glass by lifting it up. Do not damage the roof panel.

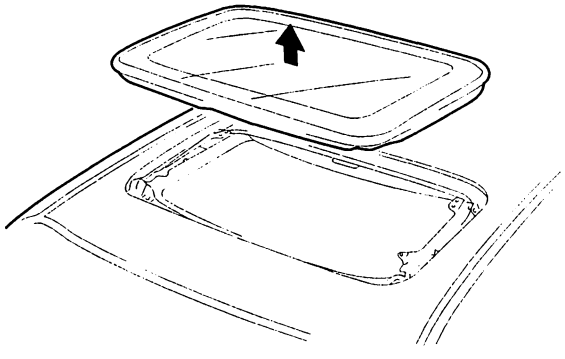

5. Install the glass in the reverse order of the removal, and adjust the glass height.
6. Check for water leaks. Use free flowing water from a hose without a nozzle. Do not use high-pressure water.

BACK

Drain Channel Replacement

1. Remove the moonroof glass.

2. With the moonroof wrench, move both glass brackets (A) to the position where the moonroof normally pivots down, and remove the screws securing the drain channel (B).

Fastener Locations

▶ : Screw, 2

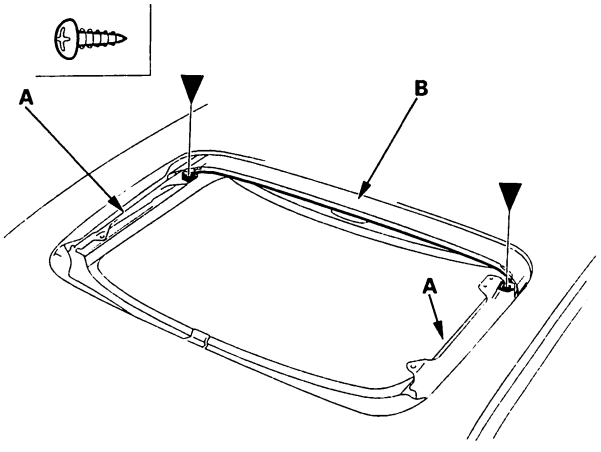

3. Release the drain channel (A) from both hooks (B) of the drain channel slider by pulling the drain channel forward.

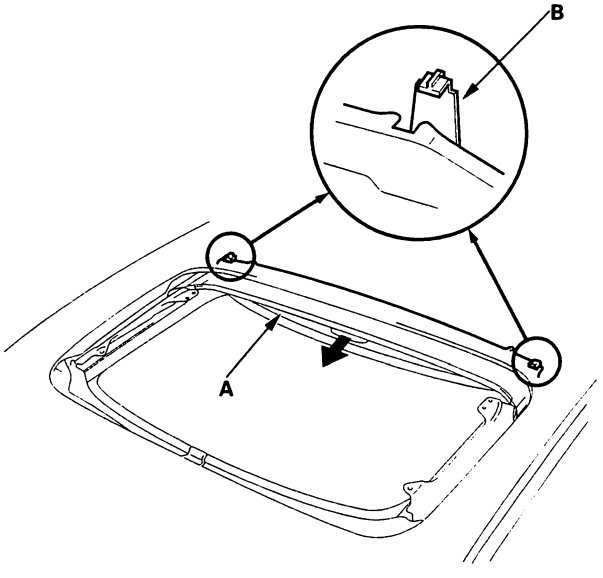

4. Remove the drain channel (A).

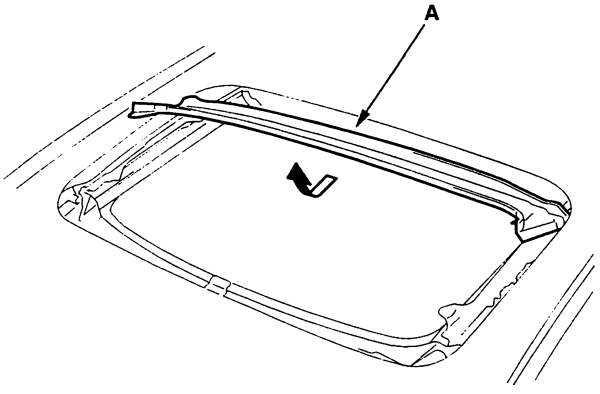

5. Install the drain channel in the reverse order of removal, and note these items:

   - Push the drain channel onto the hooks until a faint click is heard.
   - Check the glass height adjustment.

6. Check for water leaks. Let the water run freely from a hose without a nozzle. Do not use a high-pressure spray.

Sunshade Replacement

1. Remove these items:
   - Glass (see page 20-62)
   - Drain channel (see page 20-63)

2. Slide the sunshade (A) until you can see both sunshade slider spacers (B).

Fastener Locations

▶ : Screw, 4

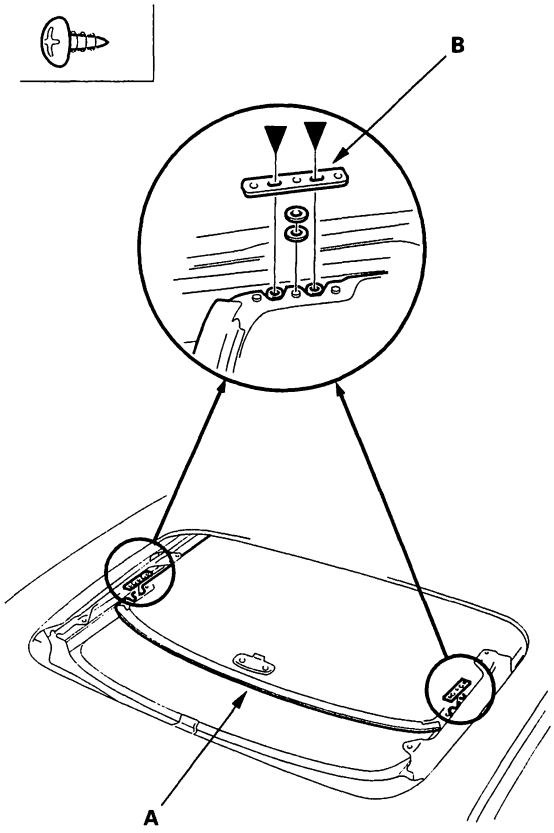

3. Remove the screws, then remove both spacers.

4. While lifting the front portion of the sunshade (A), move the sunshade forward until you can see both sunshade rear hooks (B). Do not damage the sunshade and hooks.

Fastener Locations

▶ : Screw, 4

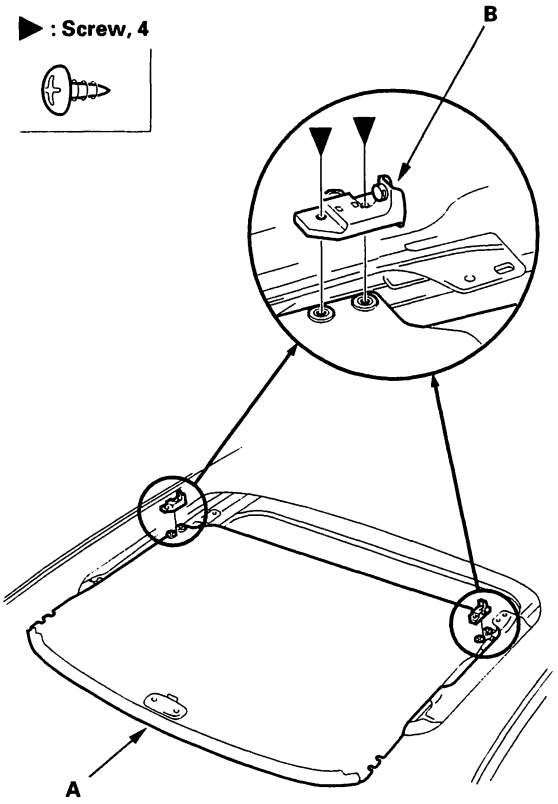

5. Remove the screws, then remove both hooks.

BACK

6. Release both rear sunshade base sliders (A) from the guide rail portions of the frame, then remove the sunshade.

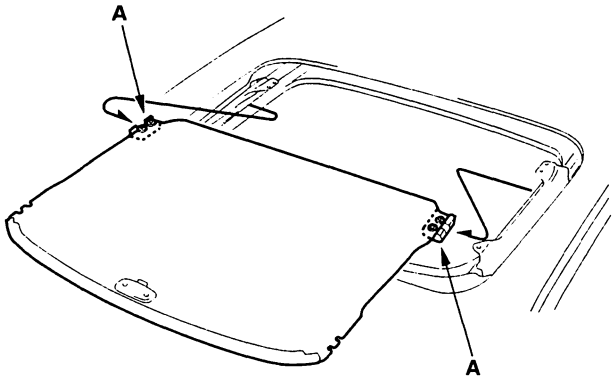

7. Remove both front sunshade base sliders (A).

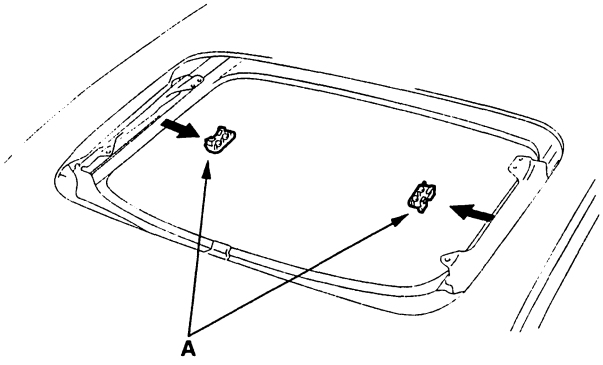

8. Install the sunshade in the reverse order of removal, and check the glass height adjustment (see page 20-62).

9. Check for water leaks. Let the water run freely from a hose without a nozzle. Do not use a high-pressure spray.

Motor Replacement

1. Remove the headliner (see page 20-79).

2. Put on gloves to protect your hands. Disconnect and detach the connector (A), and remove the bolts, then remove the motor (B).

Fastener Locations

▶ : Bolt, 2

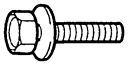

6 x 1.0 mm
9 N·m
(0.9 kgf·m,
7 lbf·ft)

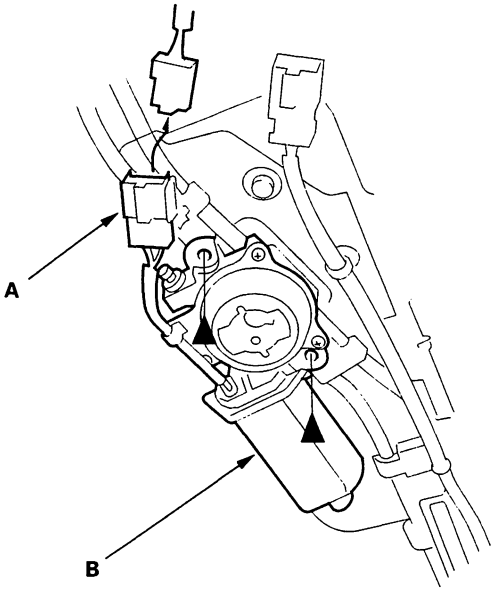

3. Install the motor in the reverse order of removal, and note these items:

- Make sure the connector is plugged in properly.
- Check the motor operation.

Frame and Drain Tube Replacement

1. Remove these items:

   - Headliner (see page 20-79)
   - Moonroof glass (see page 20-62)

2. Put on gloves to protect your hands. Disconnect the motor connector (A), open/close-tilt/close switch connector (B), and the drain tubes (C).

Fastener Locations

▶ : Bolt, 10

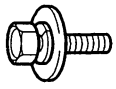

6 x 1.0 mm
9.8 N·m
(1.0 kgf·m,
7.2 lbf·ft)

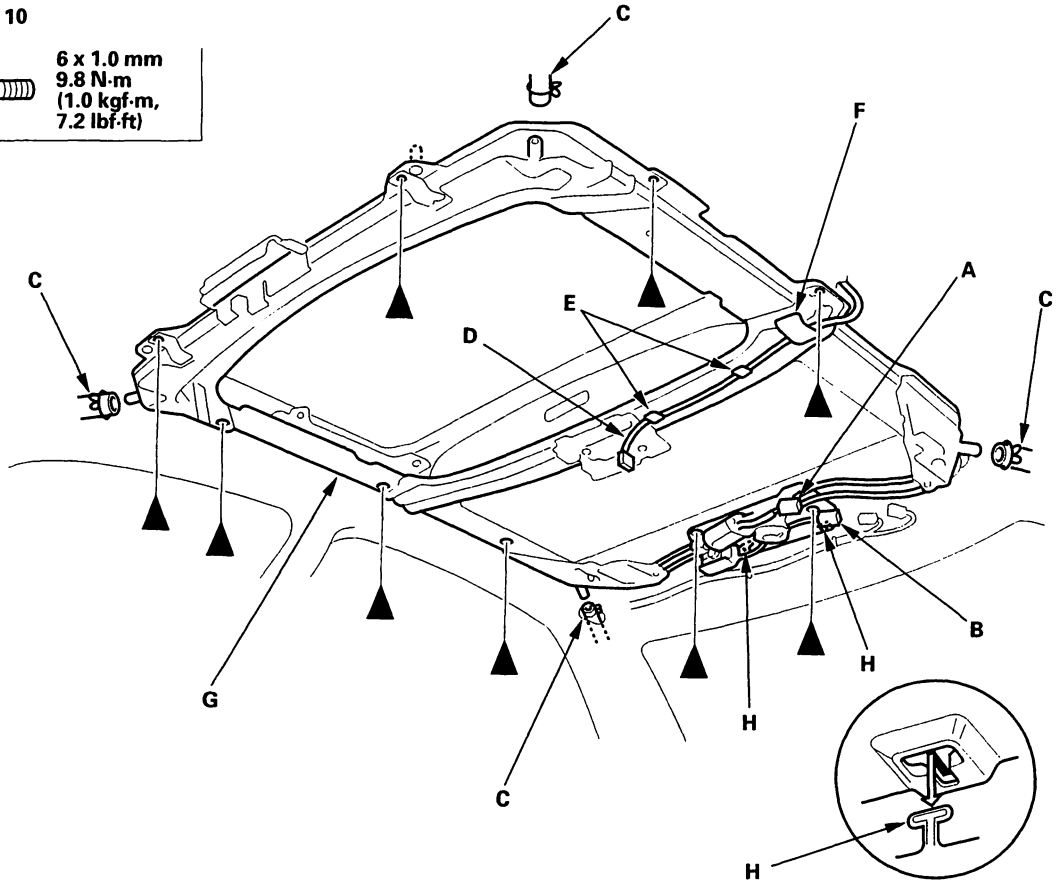

3. Remove the ceiling light harness (D) by detaching the harness clips (E), and remove the harness cushion (F).

4. With an assistant holding the frame (G), remove the bolts, and release the rear hooks (H) by moving the frame forward, then remove the frame. Remove the front bolts last.

5. With the help of an assistant, carefully remove the frame through the front door opening. Take care not to scratch the interior trim and body, or tear the seat covers.

BACK

6. To remove a front drain valve (A) from the body remove the kick panel, left or right (Sedan (see page 20-75), Coupe (see page 20-74)). Tie a string to the end of the front drain tube (B) then pull the drain tube down out of the front pillar.

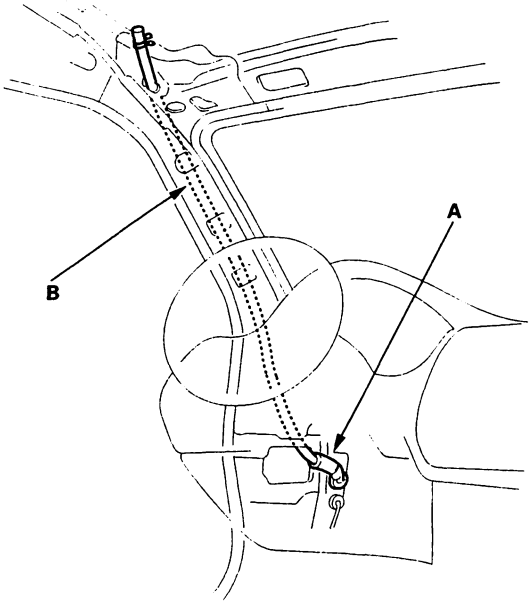

7. To remove a rear drain valve (A) from the body, remove these parts (see page 20-78):

   - Trunk floor
   - Trunk side trim panel
   - Trunk side pocket, left or right

   Tie a string to the top end of the rear drain tube (B), then pull back the trunk side trim panel and pull the drain tube down out of the pillar.

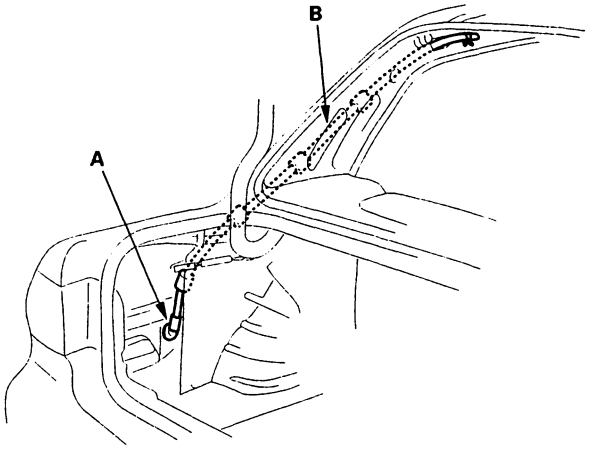

8. Install the frame and drain tubes in the reverse order of removal, and note these items:

   - Before installing the frame, clear the drain tubes and drain valves using compressed air.
   - Check the frame seal.
   - Clean the surface of the frame.
   - When installing the frame, first attach the rear hooks into the body holes.
   - Make sure the connectors are plugged in properly.
   - When connecting the drain tube, slide it over the frame nozzle at least 10 mm (0.39 in.).
   - Install the tube clip (A) on the drain tube (B) as shown.

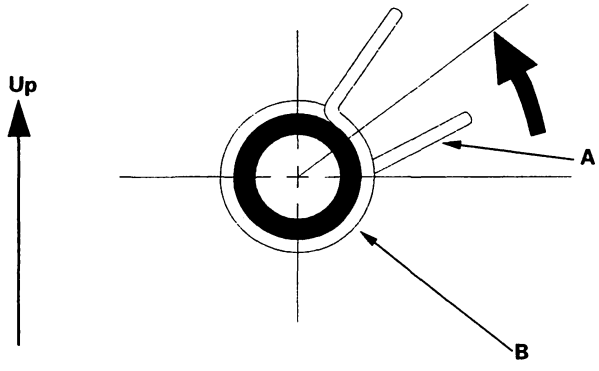

9. Check for water leaks. Let the water run freely from a hose without a nozzle. Do not use a high-pressure spray.

Drain Channel Slider and Cable Assembly Replacement

1. Remove the frame (see page 20-66).

2. Remove these parts from the frame:

   - Drain channel (see page 20-63)
   - Sunshade (see page 20-64)
   - Moonroof motor (see page 20-65)

3. Put on gloves to protect your hands. Remove the slide stops (A), cable tube rear brackets (B), cable tube side bracket mounting bolts (C) and the cable tube mounting screws (D) from both sides of the frame (E).

Fastener Locations

C ▶ : Bolt, 2

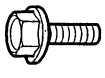

6 x 1.0 mm
9.8 N·m
(1.0 kgf·m, 7.2 lbf·ft)

D ▶ : Screw, 2

F ▶ : Screw, 2

G ▶ : Screw, 2

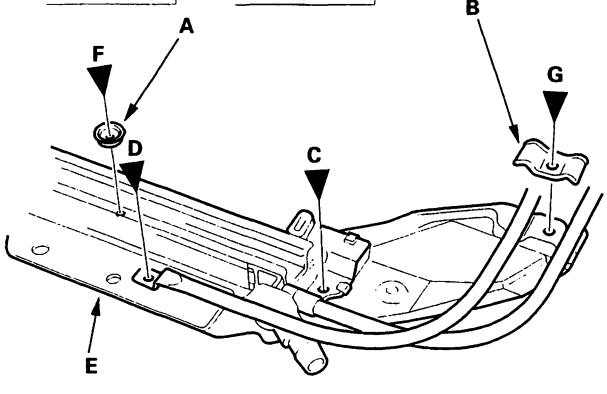

4. While pushing down on the hook (A), slide the drain channel sliders (B) back on both sides.

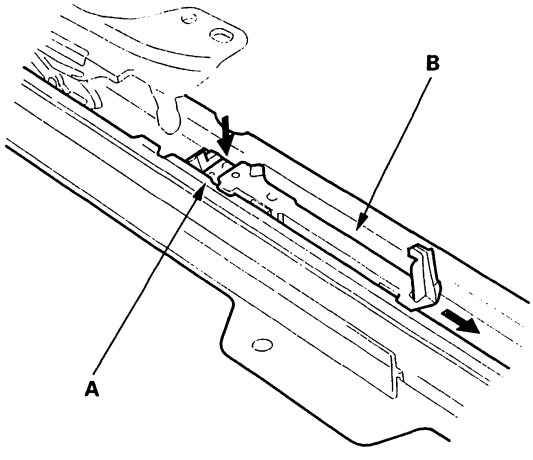

5. Turn both cable tube side brackets (A) up, and remove the drain channel sliders (B).

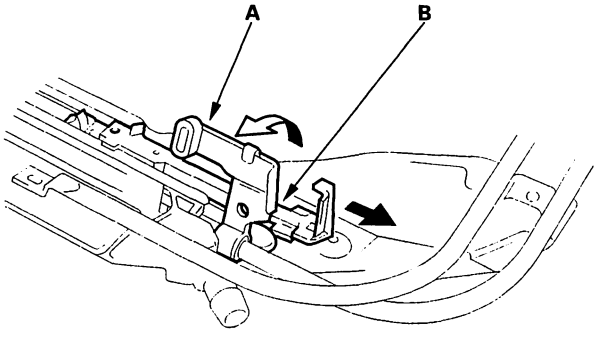

BACK

6. Pivot the glass bracket (A) down by sliding the link lifter (B) back, then slide both glass brackets back with the link lifter.

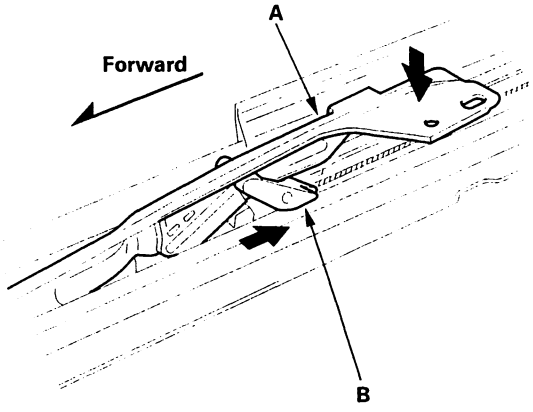

7. Slide the cable assembly (A) and both glass brackets (B) back, then remove them from the frame (C).

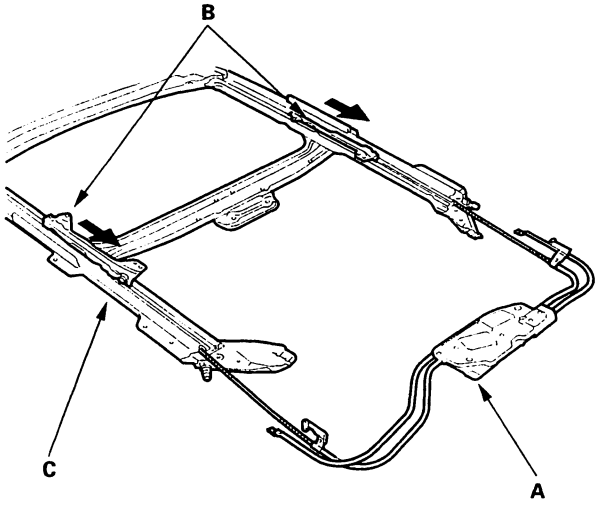

8. Install the sliders and cables in the reverse order of removal, and note these items:

- Damaged parts should be replaced.
- Apply multipurpose grease to the glass bracket (A) and guide rail portion of the frame (B) indicated by the arrows.
- Before reinstalling the moonroof motor, make sure both link lifters are parallel, and in the fully closed position.
- Before reinstalling the moonroof motor, install the frame and glass, then check the opening drag (see page 20-71).

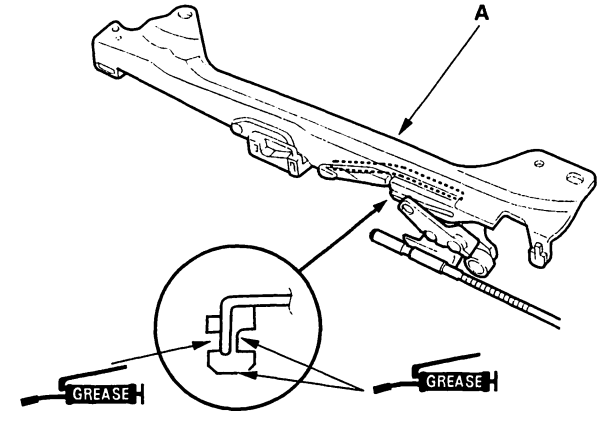

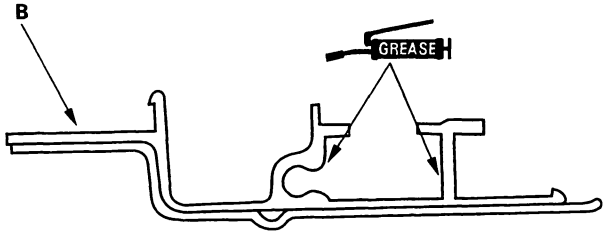

Position Switch Adjustment

1. Remove the headliner (see page 20-79).

2. With the moonroof wrench, close the glass (A) fully:

   - Make sure both link lifters (B) are parallel, and in the position shown.
   - Check the glass fit to the roof panel and the glass height (see page 20-62).

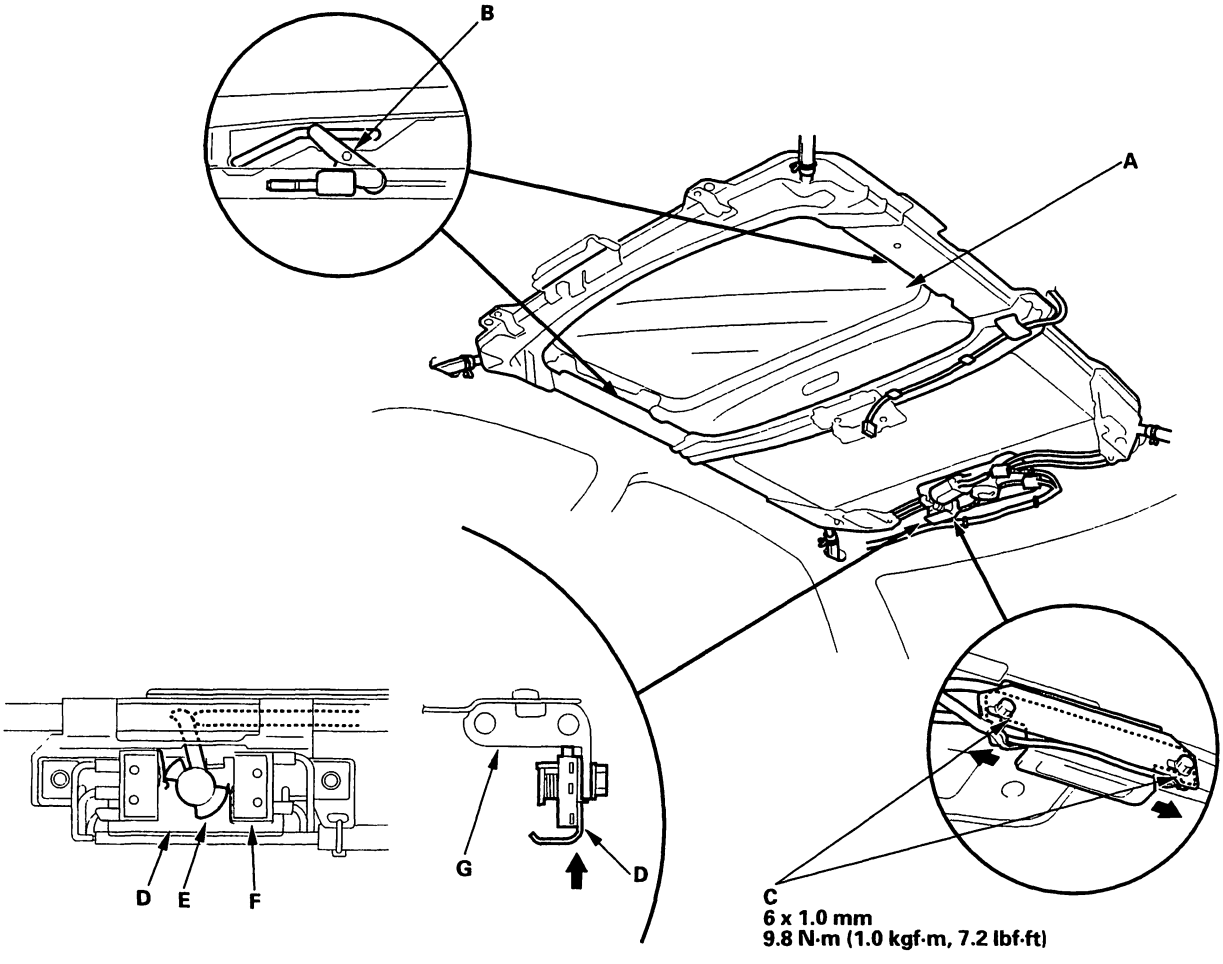

3. With an open-end wrench, loosen the position switch mounting bolts (C).

4. Adjust the position switch (D):

   - Move the switch a little at a time, then secure it at the position where you hear a faint click when the switch cam (E) pushes the open/close switch (F).
   - Check that the switch contacts the switch bracket (G).

5. Check the operation of the glass (from the tilt-up position to the fully closed position, and from the fully open position to the fully closed position) by operating the moonroof switch.

BACK

Closing Force and Opening Drag Check

1. Remove the headliner (see page 20-79).

2. Closing force check:

   - With a shop towel (A) on the leading edge of the glass (B), attach a spring scale (C) as shown.
   - Have an assistant hold the switch to close the glass while you measure the force required to stop it.
   - Read the force as soon as the glass stops moving, then immediately release the switch and spring scale.

   Closing Force:
   200 – 290 N (20 – 30 kgf, 44 – 66 lbf)

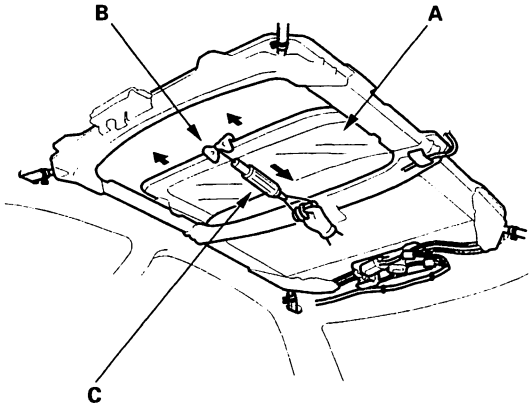

3. If the force in not within specification, remove the moonroof motor (see page 20-65), then check these items:

   - The gear portion and the inner cable for breakage and damage. If the gear portion is broken, replace the motor. If the inner cable is damaged, remove the frame (see page 20-66), and replace the cable assembly (see page 20-68).
   - The moonroof motor (see page 20-65). If the motor fails to run or doesn't turn smoothly, replace it.
   - The opening drag. Go to step 4.

4. Opening drag check: Protect the leading edge of the glass with a shop towel (A). Measure the effort required to open the glass using a spring scale (B) as shown.

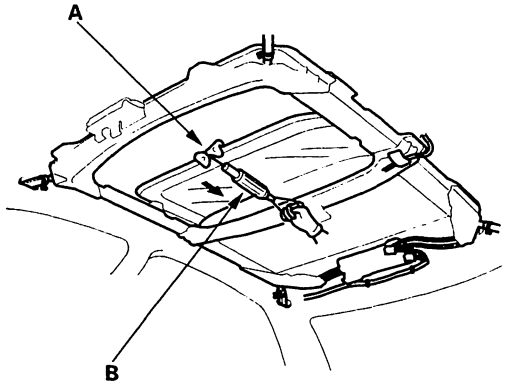

5. If the load is over 40 N (4 kgf, 9 lbf), check these items:

   - The side clearance and glass height adjustment (see page 20-62).
   - For broken or damaged sliding parts. If any sliding parts are damaged, replace them.

Component Location Index - Coupe

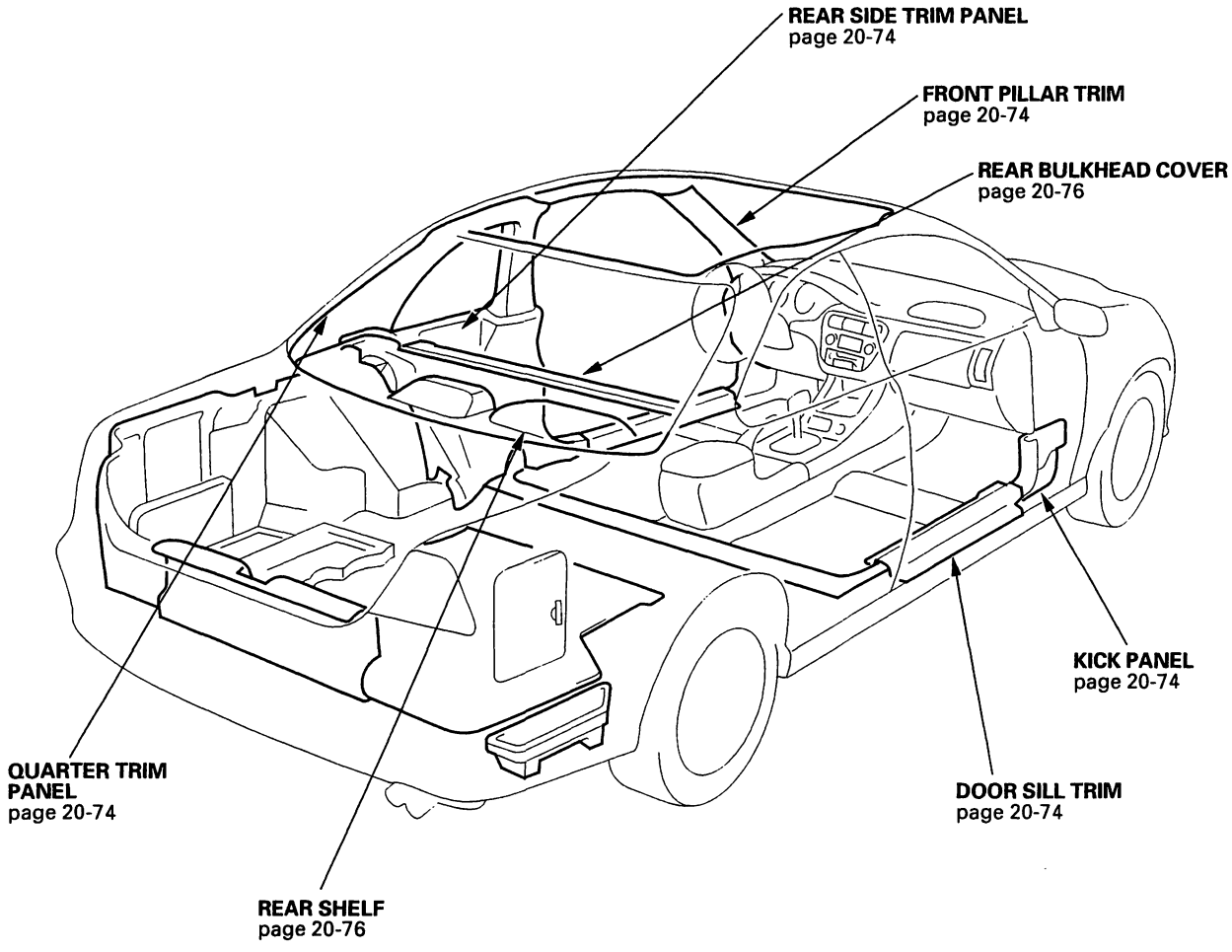

BACK

Component Location Index - Sedan

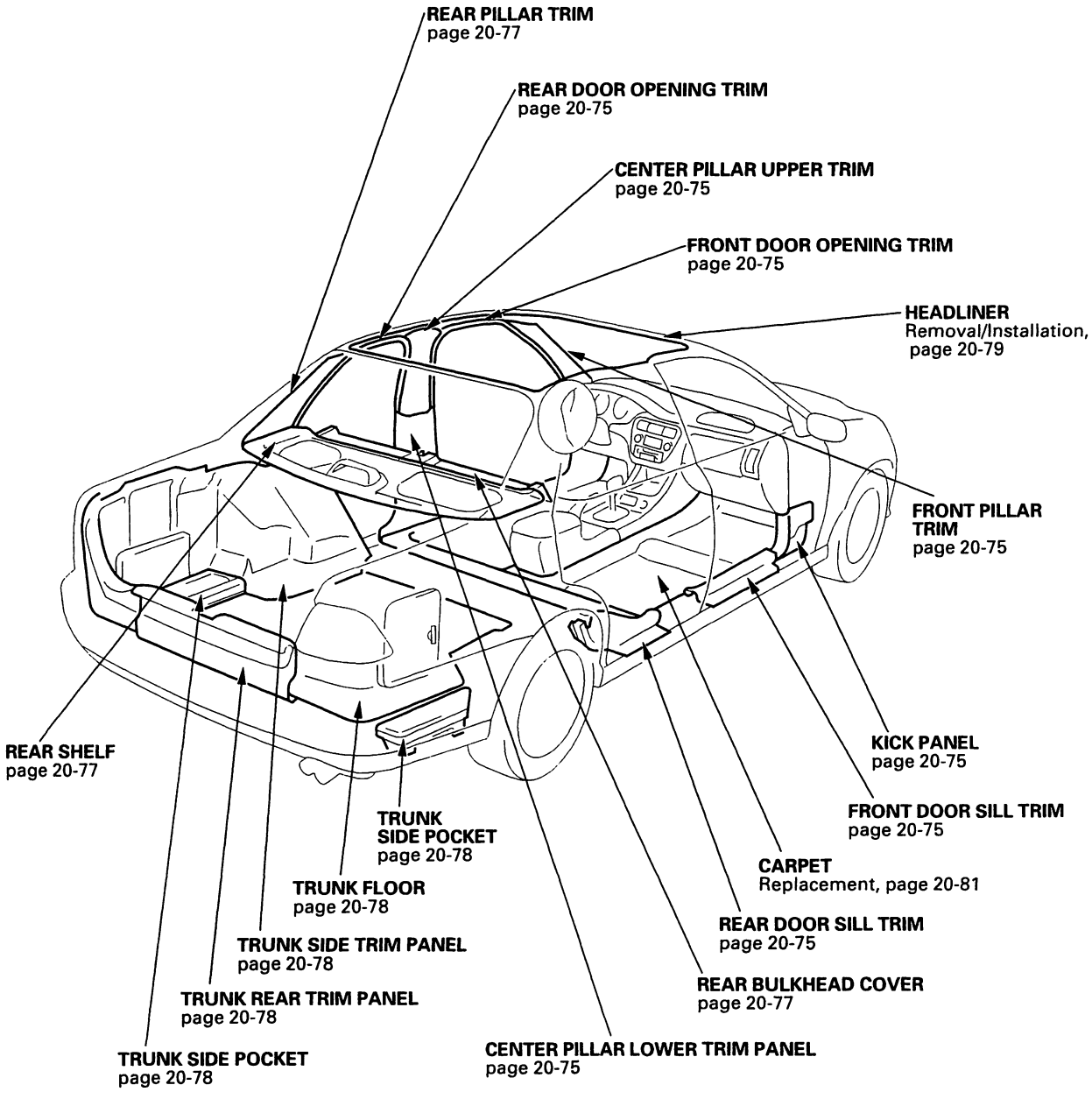

Trim Removal/Installation - Door Area - Coupe

NOTE:
- When prying with a flat-tip screwdriver, wrap it with protective tape to prevent damage.
- Take care not to bend or scratch the trim and panels.
- Put on gloves to protect your hands.

Remove the trim as shown.
Install the trim in the reverse order of removal, and note these items:

- Replace any damage clips.
- Apply liquid thread lock to the front seat belt upper anchor bolt before installation.
- Before installing the anchor bolts, make sure there are no twists or kinks in the belts.

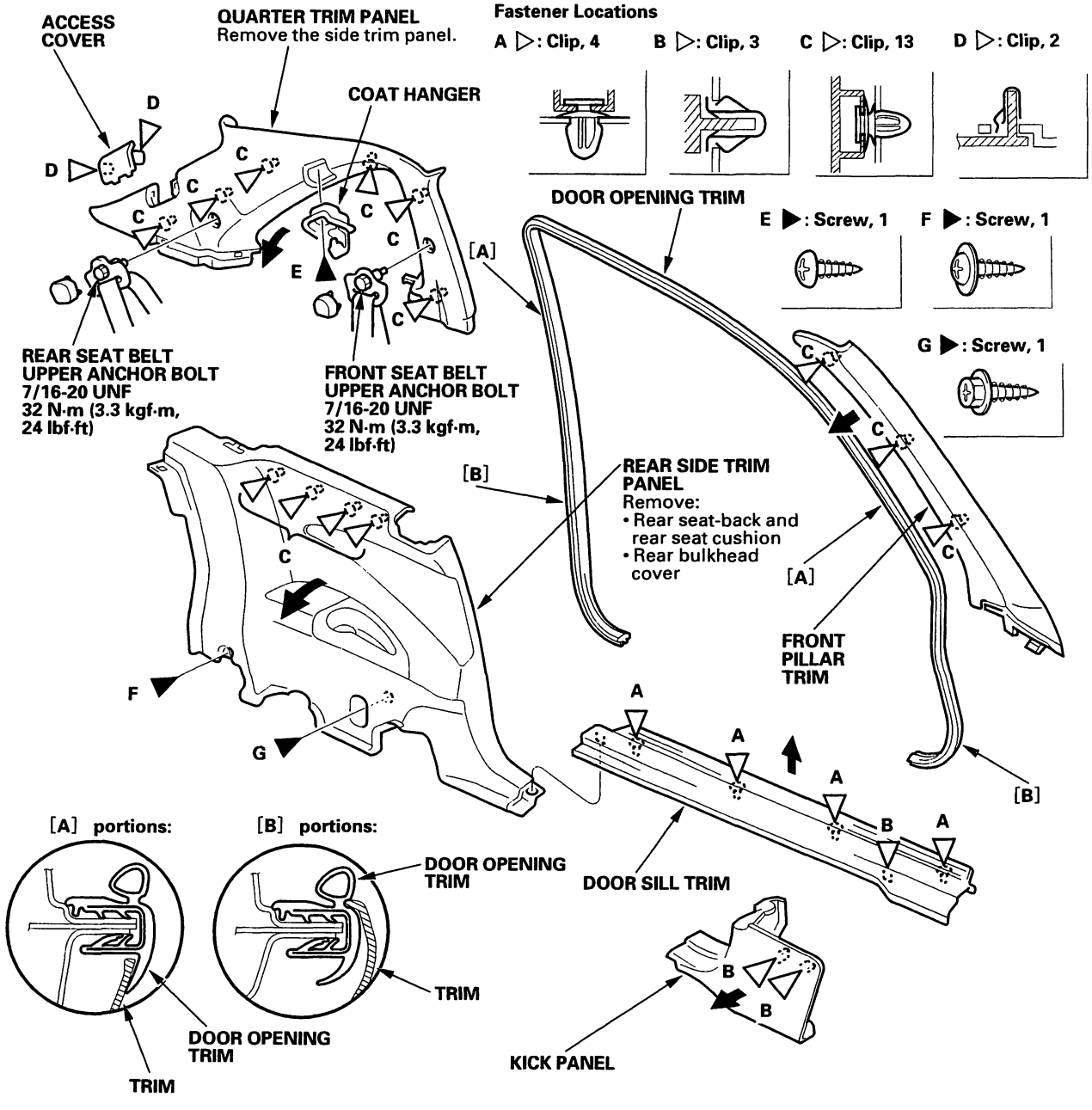

BACK

Trim Removal/Installation - Door Area - Sedan

NOTE:
- Put on gloves to protect your hands.
- When prying with a flat-tip screwdriver, wrap it with protective tape to prevent damage.
- Take care not to bend or scratch the trim and panels.

Remove the trim as shown.
Install the trim in the reverse order of removal, and note these items:

- Replace any damage clips.
- Apply liquid thread lock to the front seat belt upper anchor bolt before installation.
- Before installing the anchor bolts, make sure there are not twists or kinks in the belts.

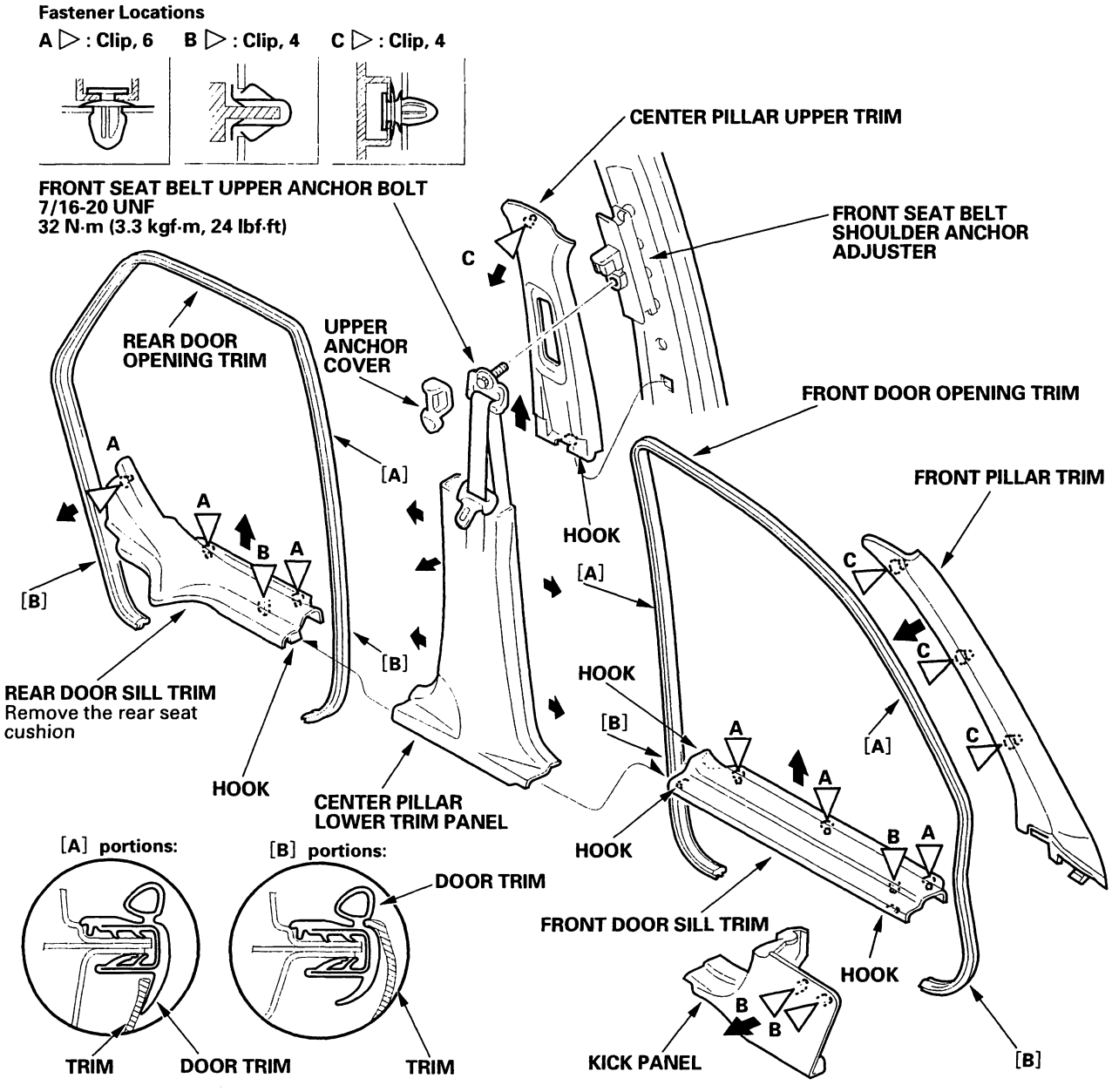

BACK

Trim Removal/Installation - Rear Shelf Area - Coupe

NOTE:
- Put on gloves to protect your hands.
- When prying with a flat-tip screwdriver, wrap it with protective tape to prevent damage.
- Take care not to bend or scratch the trim and panels.

Remove the trim as shown.
Install the trim in the reverse order of removal, and note these items:

- Replace any damaged clips.
- Before installing the anchor bolts, make sure there are no twists or kinks in the seat belts.

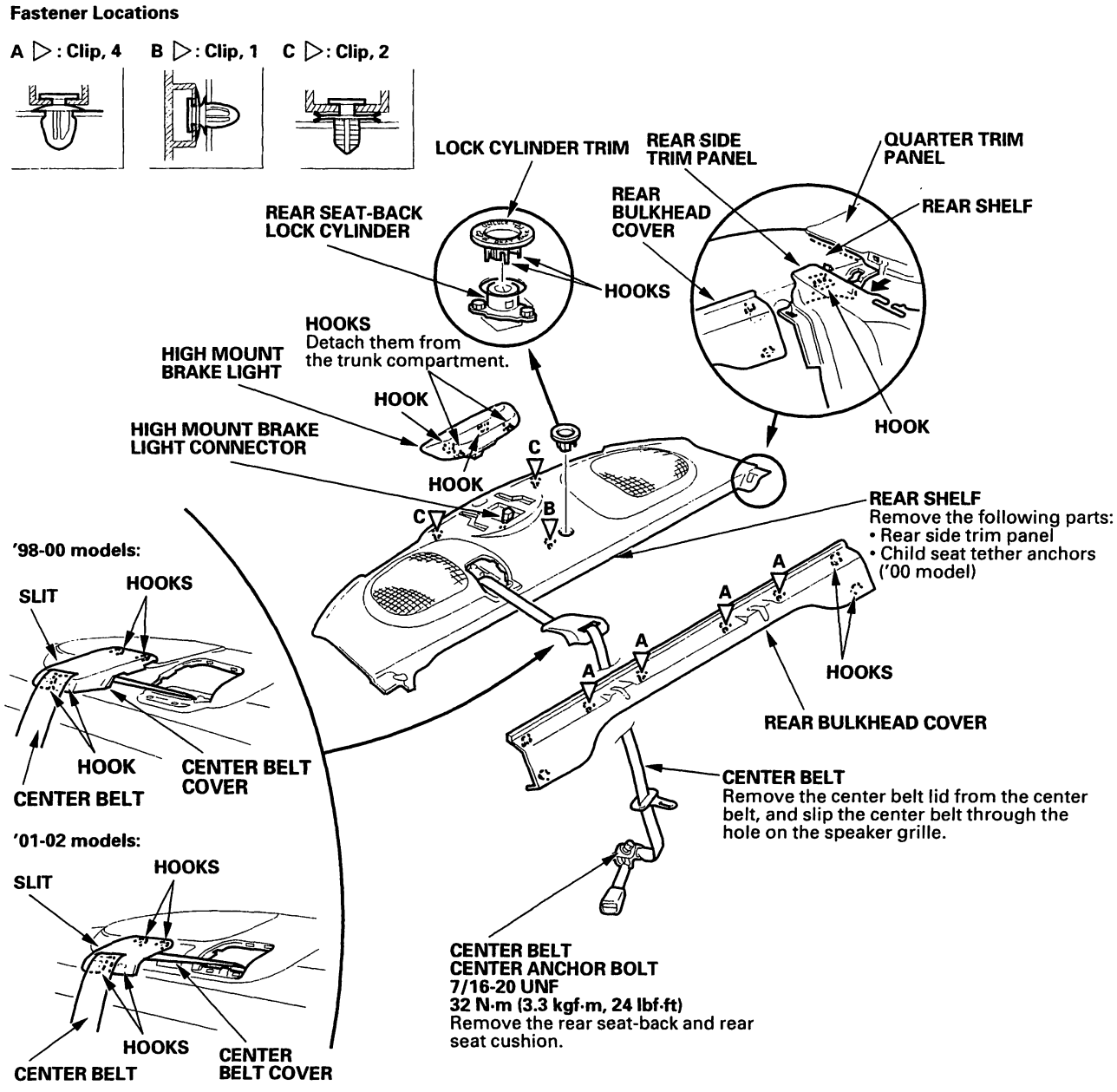

BACK

Trim Removal/Installation - Rear Shelf Area - Sedan

NOTE:
- Put on gloves to protect your hands.
- When prying with a flat-tip screwdriver, wrap it with protective tape to prevent damage.
- Take care not to bend or scratch the trim and panels.

Remove the trim as shown.
Install the trim in the reverse order of removal, and note these items:

- Replace any damage clips.
- Apply liquid thread lock to the front seat belt upper anchor bolt before installation.
- Before installing the anchor bolts, make sure there are not twists or kinks in the belts.

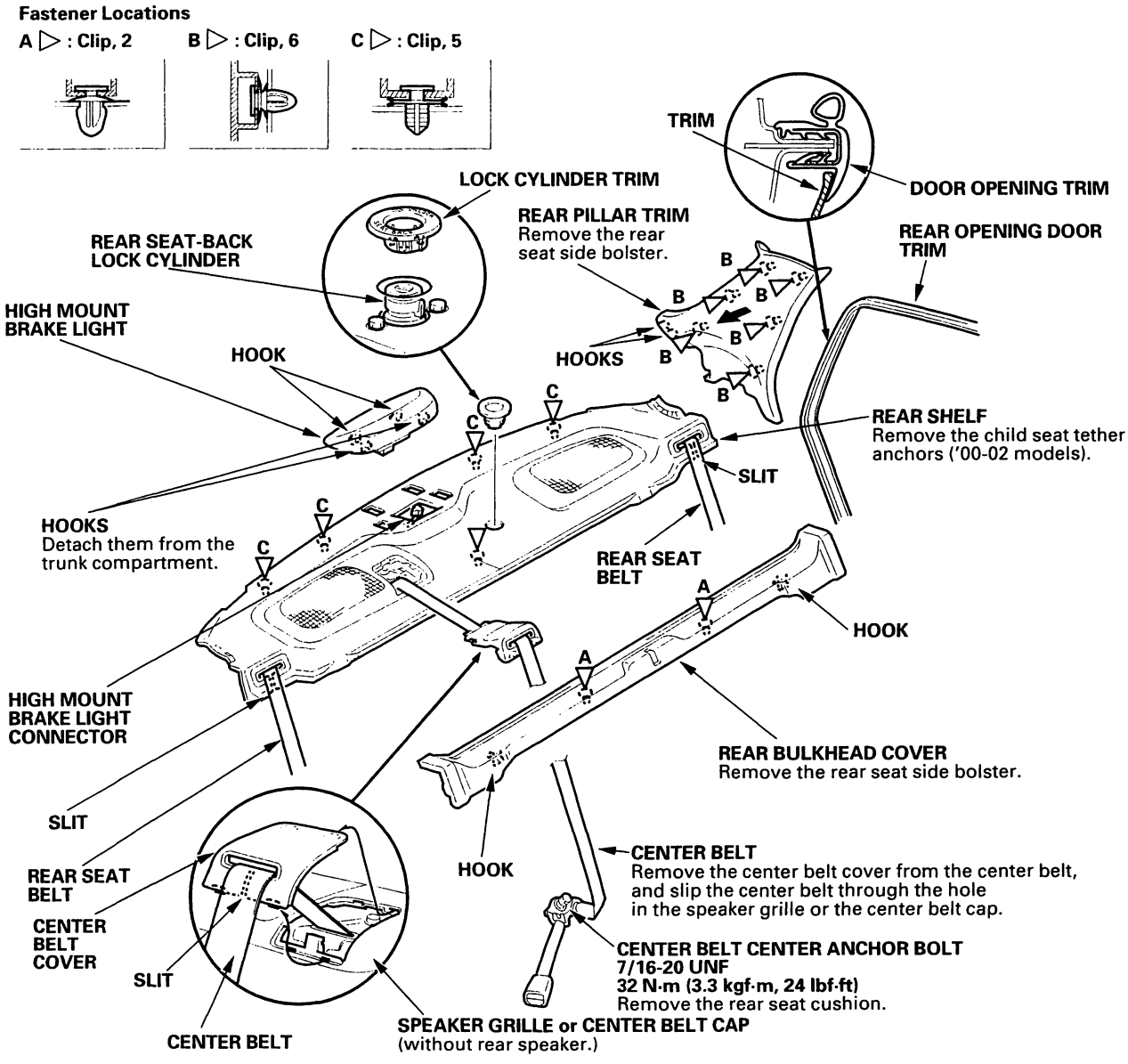

Trim Removal/Installation - Trunk Area

NOTE:
- Put on gloves to protect your hands.
- When prying with a flat-tip screwdriver, wrap it with protective tape to prevent damage.
- Take care not to bend or scratch the trim and panels.

Remove the trim as shown.
Install the trim in the reverse order of removel, and replace any damaged clips.

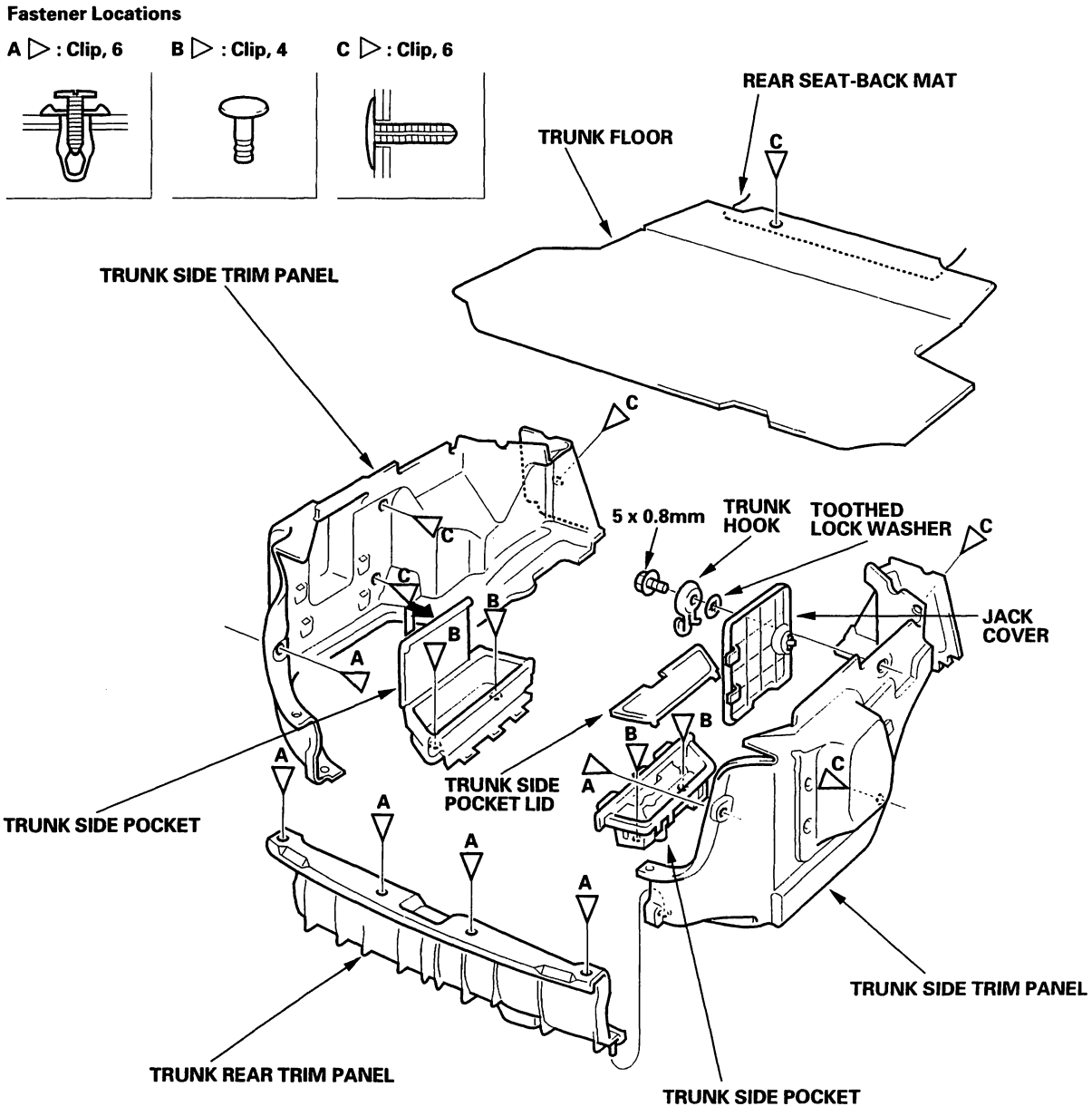

BACK

Headliner Removal/Installation

NOTE:
- When prying with a flat-tip screwdriver, wrap it with protective tape to prevent damage.
- Take care not to bend and scratch the headliner.
- Be careful not to damage the dashboard and other interior trim.

1. Remove these items: (Sedan (see page 20-75), Coupe (see page 20-74))
   - Door opening trim (both sides as necessary)
   - Front pillar trim (both sides)
   - Front seat belt upper anchor bolt (both sides)

2. Remove these items:

   Sedan (see page 20-75)

   - Center pillar upper trim (both sides)

   Coupe (see page 20-74)

   - Coat hanger (left side)
   - Rear seat belt upper anchor bolt
   - Quarter trim panel

3. Remove the rear window antenna terminal cover (see step 4 on page 20-49).

4. Remove the sunvisor (A) and holder (B) from each side. Disconnect the vanity mirror light connectors (C) (driver's and passenger's for some models).

Fastener Locations

▶ : ET screw, 4

5 x 0.8 mm
4 N·m
(0.4 kgf·m,
3 lbf·ft)

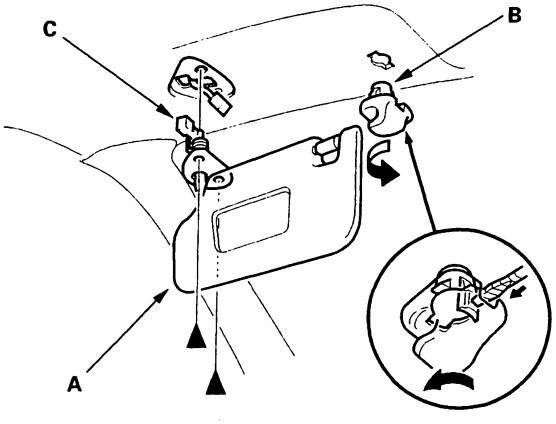

5. If equipped, remove the roof console.

   – 1 Remove the lens (A).
   – 2 Remove the screws.
   – 3 Pull out the roof console (B), and disconnect the spotlight connector (C).

Fastener Locations

▶ : Screw, 4

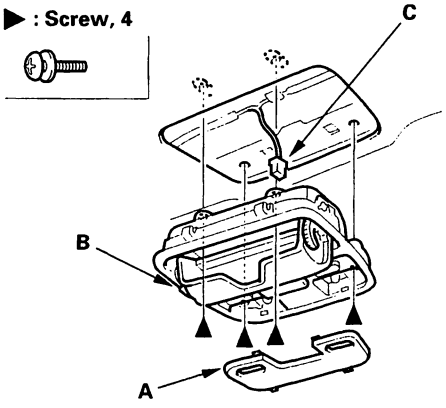

6. Remove the caps (A), and remove the ET screws and washers (B), then remove the grab handles (C) (driver's and each passenger's).

Fastener Locations

▶ : ET screw, 8

5 x 0.8 mm
4 N·m
(0.4 kgf·m,
3 lbf·ft)

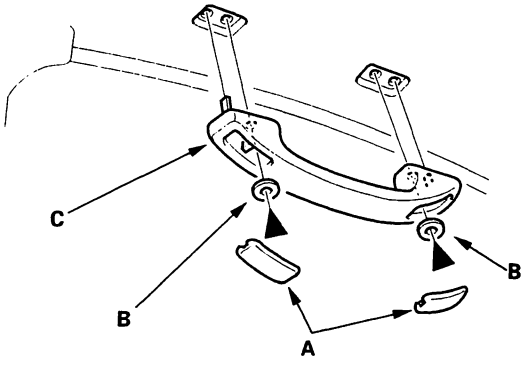

(cont'd)

Headliner Removal/Installation (cont'd)

7. Remove the headliner.

   -1 Remove the upper portion of the rear pillar trim (A) from each side
   -Coupe (see page 20-74)
   -Sedan (see page 20-77)
   -2 For moonroof model: remove the socket plug (B) and roof trim (C).
   - 3 With help of an assistant, detach the clips, and lower the headliner (D).
   -4 Remove the headliner through the front passenger's door opening.

Fastener Locations

▷ : **Clip, 3**

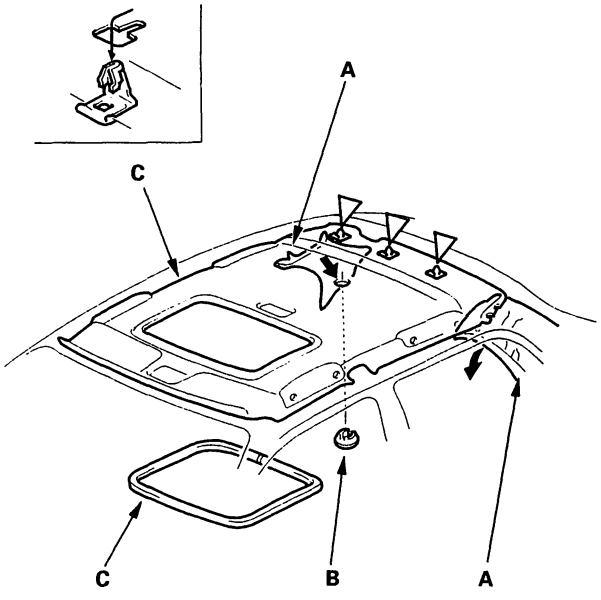

8. Install the headliner in the reverse order of removal, and note these items:

   - When reinstalling the headliner through the door opening, be careful not to fold or bend it. Also, be careful not to scratch the body.
   - For moonroof model: When reinstalling the roof trim (A), center the two joining ends (B) at the rear of the moonroof frame.
   - If the threads on a visor or grab handle ET screws are worn out, use an oversized ET screw (P/N 90137-S30-0030)made specifically for this application.
   - Check that both sides of the headliner are securely attached to the trim.

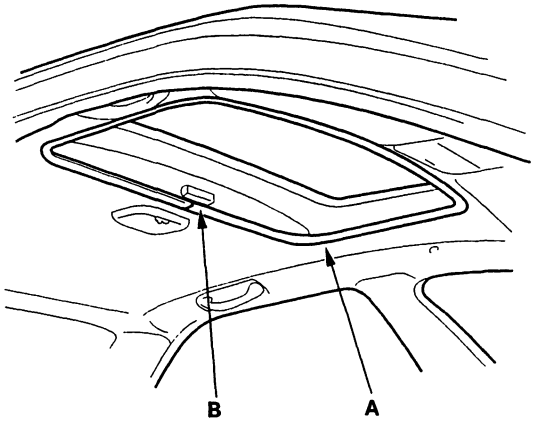

BACK

Carpet Replacement

SRS components are located in this area. Review the SRS component locations (see page 23-23), and precautions and procedures (see page 23-28) in the SRS section before performing repairs or service.

NOTE:
- Put on gloves to protect your hands.
- Take care not to damage, wrinkle or twist the carpet.
- Be careful not to damage the dashboard or other interior trim pieces.

1. Remove these items:

   - Front seats, both sides (see page 20-99)
   - Driver's dashboard lower cover (see page 20-84)
   - Passenger's dashboard lower cover (see page 20-85)
   - Center console (see page 20-83)
   - Rear seat cushion
     - Coupe (see page 20-128)
     - Sedan (see page 20-129)
   - Front seat belt lower anchor bolt, both sides
     - Coupe (see step 8 on page 23-6)
     - Sedan (see step 6 on page 23-7)
   - Trunk lid/fuel lid opener (see page 20-176)

2. Remove these items:

   Sedan (see page 20-75):

   - Front door sill trim (both sides)
   - Rear door sill trim (both sides)
   - Center pillar lower trim panel (both sides)
   - Kick panel (both sides)

   Coupe (see page 20-74):

   - Door sill trim (both sides)
   - Kick panel (both sides)

3. Remove the footrest.

Fastener Locations

▶ : Bolt, 2

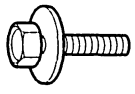

6 x 1.0 mm
7 N·m
(0.7 kgf·m,
5 lbf·ft)

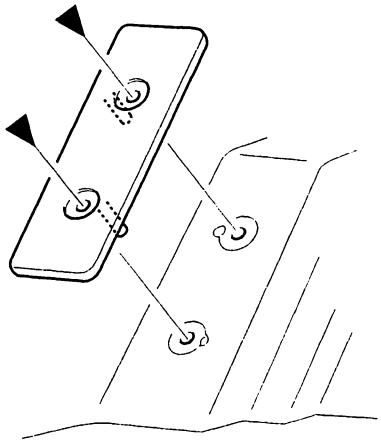

4. Remove the bolts from the parking brake lever.

Fastener Locations

▶ : Bolt, 2

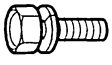

8 x 1.25 mm
22 N·m
(2.2 kgf·m,
16 lbf·ft)

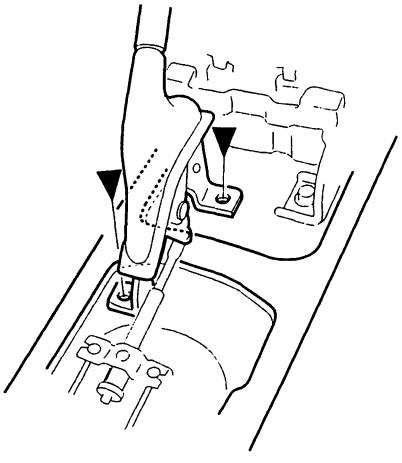

(cont'd)

Carpet Replacement (cont'd)

5. Remove the clips (A, B), and release the retainers (C), hooks (D) and fasteners (E), then remove the carpet (F). Put on gloves to protect your hands.

Coupe:

Fastener Locations

A ▷ : Clip, 2 **B ▷ : Clip, 1** **C ▷ : Clip, 2**

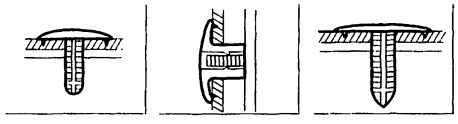

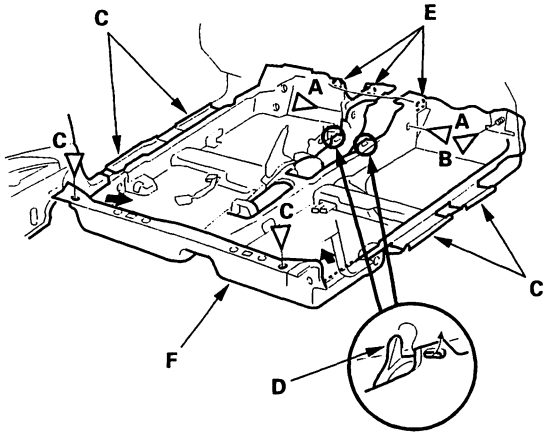

Sedan:

Fastener Locations

A ▷ : Clip, 3 **B ▷ : Clip, 1**

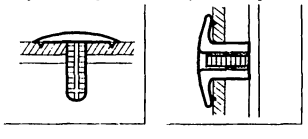

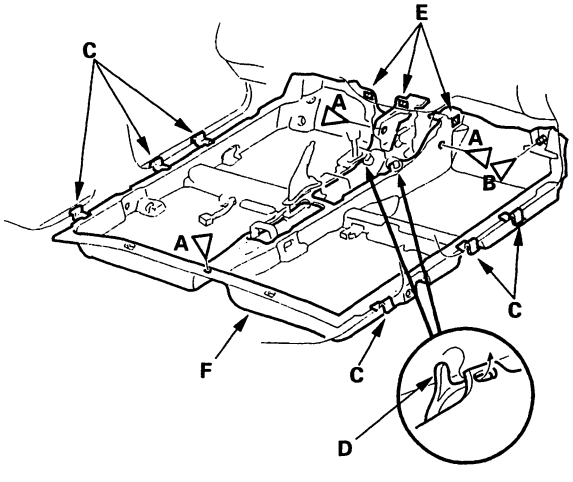

6. Install the carpet in the reverse order of removal, and note these items:

- Take care not to damage, wrinkle or twist the carpet.
- Make sure the seat harness is routed correctly.
- Slip the slits in the carpet over the hooks.
- Replace any damaged clips.

BACK

Center Console Removal/Installation

NOTE:
- When prying with a flat-tip screwdriver, wrap it with protective tape to prevent damage.
- Take care not to scratch the front seat, dashboard and related parts.
- Take care not to bend the parking brake cables.

Remove the center console as shown.
Install the center console in the reverse order of removal, and note these items:

- Replace any damaged clips.
- Make sure the connectors are plugged in properly.
- Readjust the parking brake cable, if necessary (see page 19-6).

Fastener Locations

▶ : Screw, 8 | A ▷ : Clip, 4 | B ▷ : Clip, 2 | C ▷ : Clip, 2 | D ▷ :Clip, 7

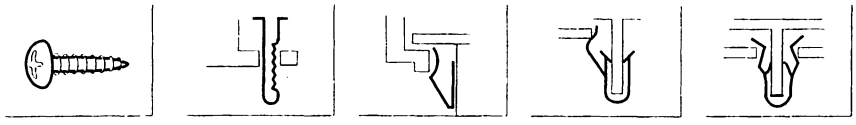

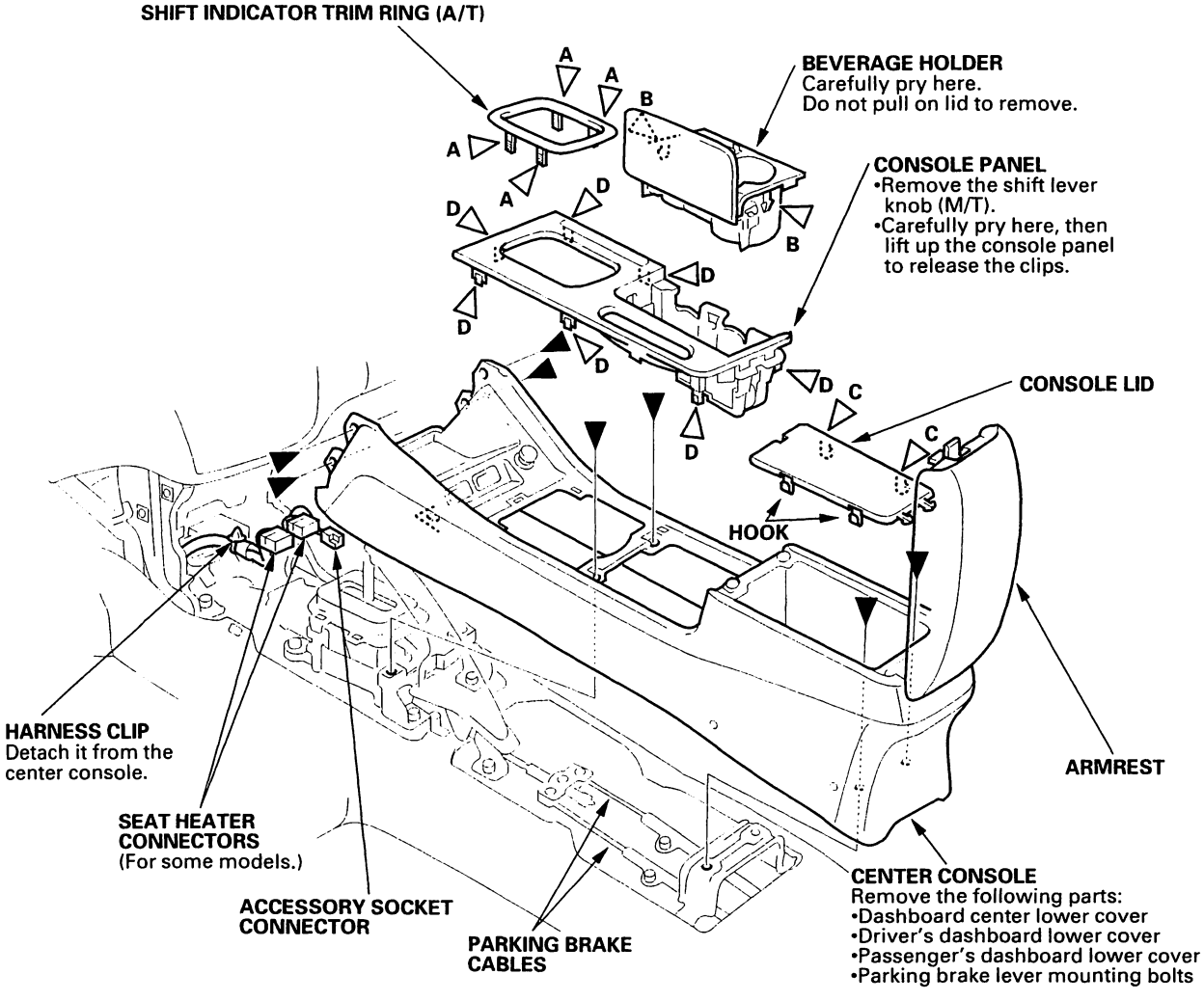

Instrument Panel Removal/ Installation

NOTE:
- When prying with a flat-tip screwdriver, wrap it with protective tape, and apply protective tape around the related parts, to prevent damage.
- Take care not to scratch the dashboard and related parts.

1. Tilt the steering column down.

2. Remove the screws, and detach the clips, then carefully remove the instrument panel (A).

Fastener Locations

▶ : Screw, 2 **▷ : Clip, 2**

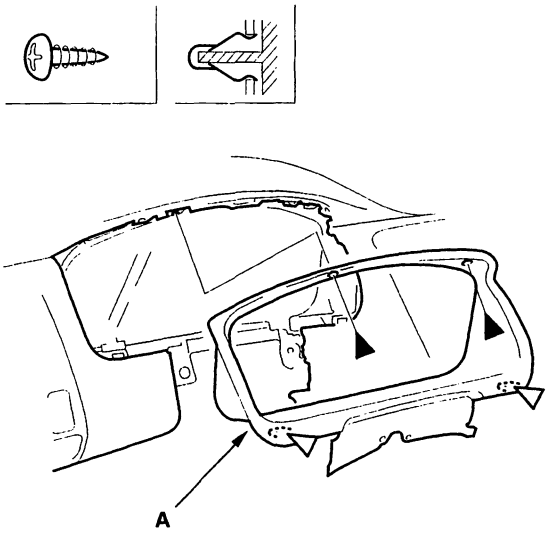

3. Install the instrument panel in the reverse order of removal.

Driver's Dashboard Lower Cover Removal/Installation

SRS components are located in this area. Review the SRS component locations (see page 23-23), and precautions and procedures (see page 23-28) in the SRS section before performing repairs or service.

NOTE:
- When prying with a flat-tip screwdriver, wrap it with protective tape, and apply protective tape around the related parts, to prevent damage.
- Take care not to scratch the dashboard and related parts.

1. Detach the clips, then remove the dashboard center lower cover.

Fastener Locations

▷ : Clip, 4

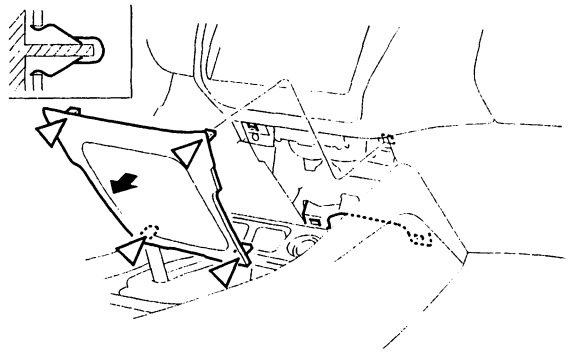

2. Detach the clips, and release the tabs (A), then remove the left fuse box cover.

Fastener Locations

▷ : Clip, 3

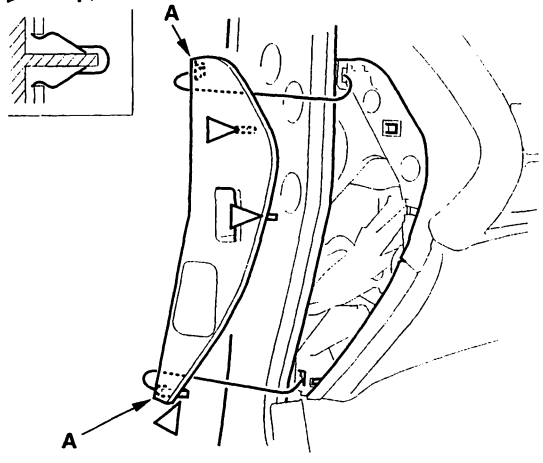

BACK

3. Remove the screws (A and B).

Fastener Locations

A ▶ : Screw, 1 **B ▶ : Screw, 2** **▷ : Clip, 5**

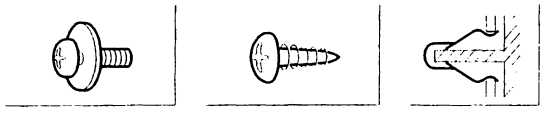

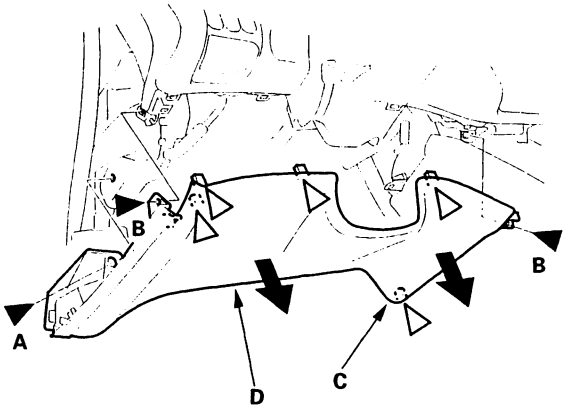

4. Detach the lower right clip (C) first by pulling down on the driver's dashbord lower cover (D), then detach the remaining clips and remove the lower cover.

5. Install the lower cover in the reverse order of removal.

Passenger's Dashboard Lower Cover Removal/Installation

NOTE:
- When prying with a flat-tip screwdriver, wrap it with protective tape, and apply protective tape around the related parts, to prevent damage.
- Take care not to scratch the dashboard and related parts.

1. Remove the dashboard center lower cover (see step 1 on page 20-84).

2. Detach the clips, and release the tabs (A), then remove the right fuse box cover.

Fastener Locations

▷ : Clip, 3

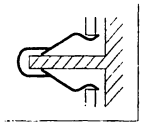

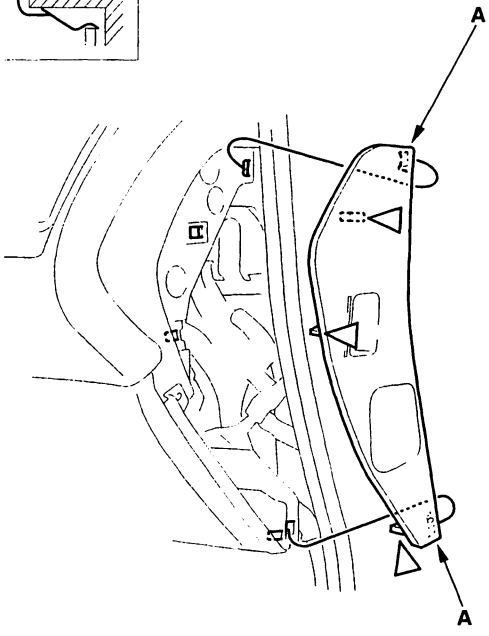

(cont'd)

Passenger's Dashboard Lower Cover Removal/Installation (cont'd)

3. Remove the screws (A and B).

Fastener Locations

A ▶ : Screw, 1 **B ▶ : Screw, 2** **▷ : Clip, 7**

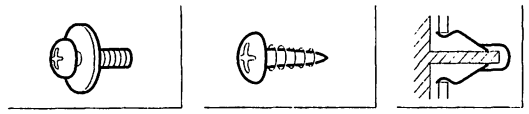

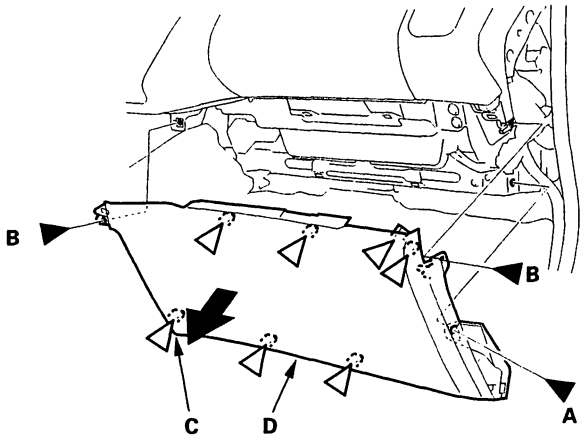

4. Detach the lower left clip (C) first by pulling down on the passenger's dashbord lower cover (D), then detach the remaining clips and remove the lower cover.

5. Install the lower cover in the reverse order of removal.

Center Panel Removal/Installation

NOTE:
- When prying with a flat-tip screwdriver, wrap it with protective tape, and apply protective tape around the related parts, to prevent damage.
- Take care not to scratch the dashboard and related parts.

1. Detach the clips, and release the retaining tabs (A), then pull the clock out. Disconnect the clock connector (B) and hazard warning switch connector (C).

Fastener Locations

▷ : Clip, 2

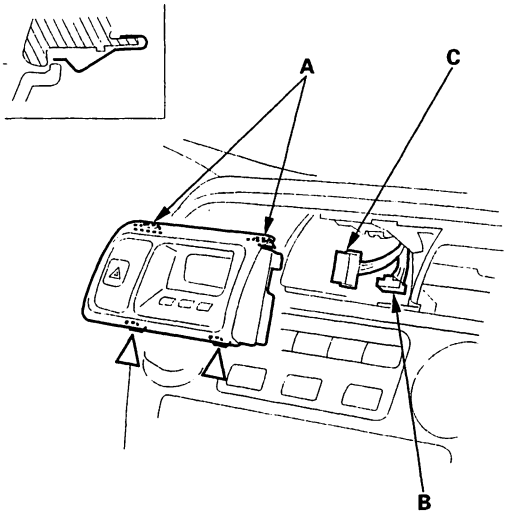

BACK

2. Remove the screws, and detach the clips (A), then detach the upper clips (A and B) to remove the center panel by disconnecting the heater control unit connectors (C).

Fastener Locations

▶ : Screw, 3 A ▷ : Clip, 5 B ▷ : Clip, 2

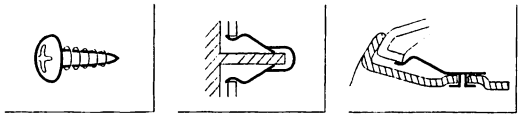

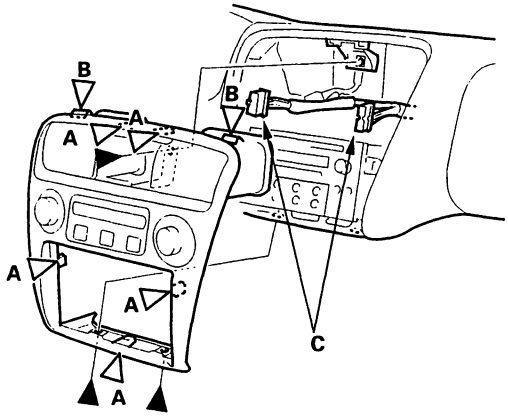

3. Install the panel in the reverse order of removal, and make sure the connectors are plugged in properly.

Glove Box Removal/Installation

SRS components are located in this area. Review the SRS component locations (see page 23-23), and precautions and procedures (see page 23-28) in the SRS section before performing repairs or service.

NOTE: Take care not to scratch the dashboard and related parts.

1. Remove these items:
   - Dashboard center lower cover (see step 1 on page 20-84)
   - Passenger's dashboard lower cover (see page 20-85)
2. Remove the screws from bottom of the glove box.

Fastener Locations

▶ : Screw, 4

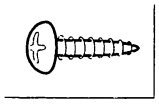

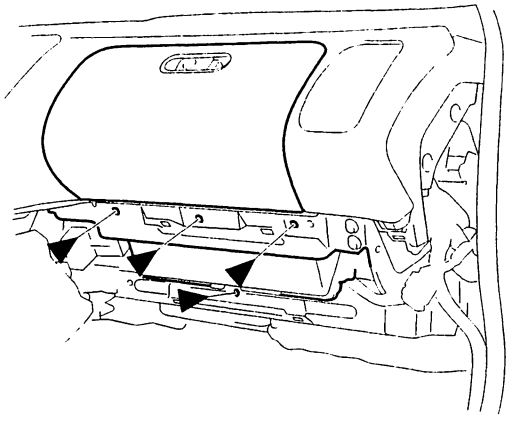

(cont'd)

Glove Box Removal/Installation (cont'd)

3. Wrap a flat-tip screwdriver with protective tape, and apply protective tape around the related parts, to prevent damage. Insert a flat-tip screwdriver in the notch (A) of the cap (B), and release the hooks (C) by prying up the cap (B).

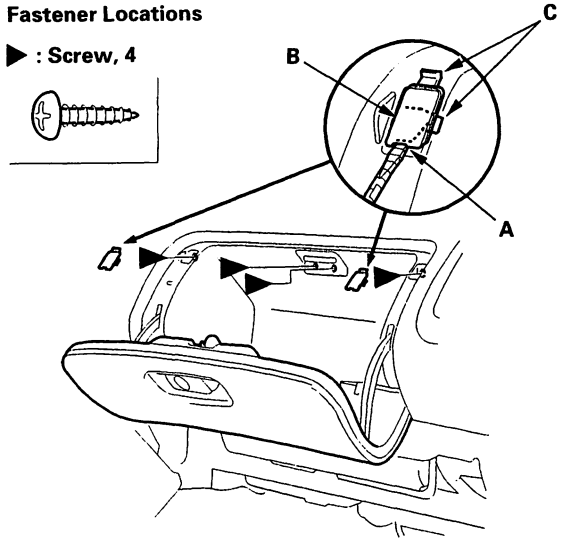

4. Remove the screws.

5. Release the hooks (A), then pull down on the striker (B) to remove the glove box. Disconnect the glove box light connector (C).

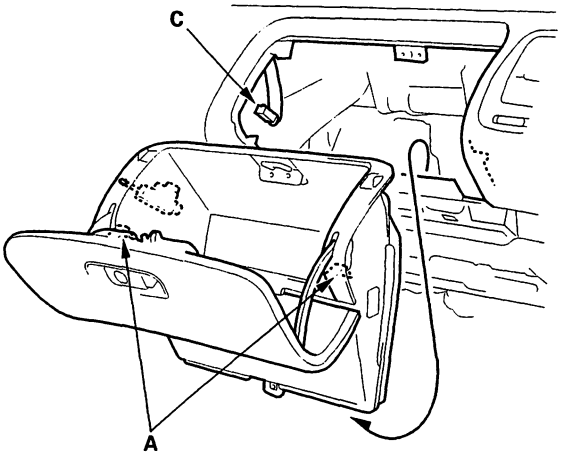

6. Install the glove box in the reverse order of removal, and make sure the glove box light connector is plugged in properly.

Driver's Side Vent Removal/ Installation

1. Remove the coin pocket(A), then remove the screws from under the coin pocket.

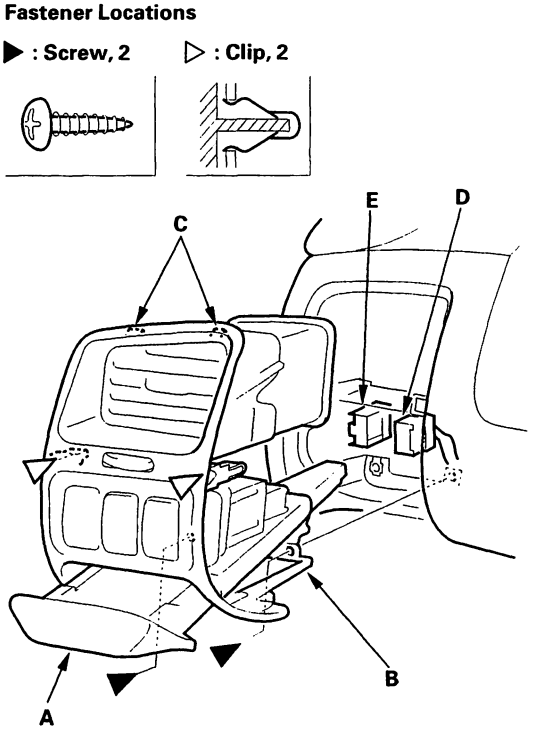

2. Wrap a flat-tip screwdriver with protective tape, and apply protective tape around the related parts to prevent damage. Carefully insert a flat-tip screwdriver next to the clip, and detach the clips by prying on the driver's side vent (B). Take care not to scratch the dashboard and related parts.

3. Release the retaining tabs (C), and remove the vent. Disconnect the moonroof switch connector (D)(for some models) and the cruise control master switch connector (E)(for some models).

4. Install the vent in the reverse order of removal, and make sure the connectors are plugged in properly (for some models).

BACK

Passenger's Side Vent Removal and Installation

1. Wrap a flat-tip screwdriver with protective tape, and apply protective tape around the related parts to prevent damage. Carefully insert a flat-tip screwdriver next to the clip, and detach the clips (A) by prying on the passenger's side vent (B). Take care not to scratch the dashboard and related parts.

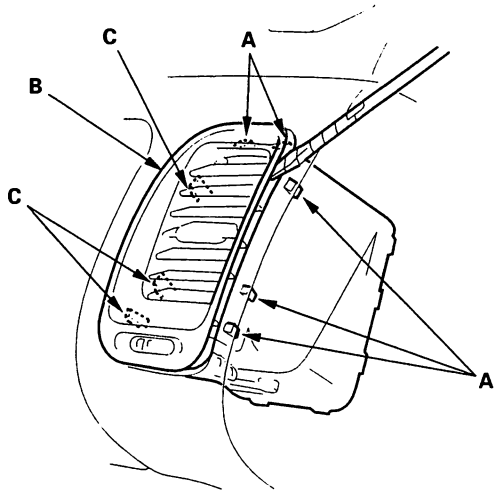

2. Remove the vent by detaching the clips (C).
3. Reinstall the hook portions of the vent first, then push the clip portions into place securely.

Side Defogger Vent Trim Removal and Installation

1. Wrap a flat-tip screwdriver with protective tape, and apply protective tape around the related parts to prevent damage. Carefully insert a flat-tip screwdriver next to the clip, and detach the clip by prying on the side defogger vent trim (A). Take care not to scratch the dashboard and related parts.

Fastener Location

▷ : **Clip, 1**

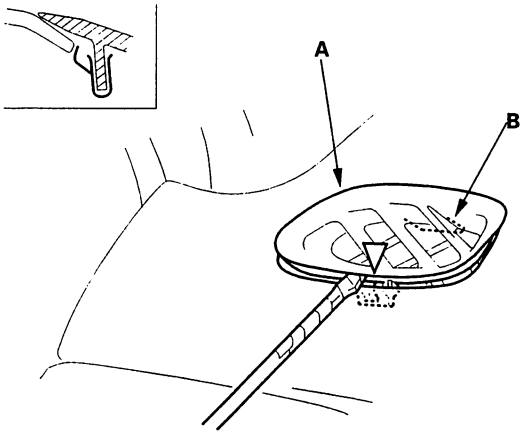

2. Pull the vent trim out by releasing the hooks (B).
3. Reinstall the hook portions of the vent trim first, then securely push the clips into place.

Dashboard Removal/Installation

SRS components are located in this area. Review the SRS component locations (see page 23-23), and precautions and procedures (see page 23-28) in the SRS section before performing repairs or service.

NOTE:
- When prying with a flat-tip screwdriver, wrap it with protective tape, and apply protective tape around the related parts to prevent damage.
- An assistant is helpful when removing and installing the dashboard.
- Take care not to scratch the dashboard, body and other related parts.
- Put on gloves to protect your hands.

1. Make sure you have the anti-theft code for the radio, then write down the frequencies for the radio's preset buttons.

2. Disconnect the negative cable from the battery.

3. Remove these items:

   - Center console (see page 20-83)
   - Glove box (see page 20-87)
   - Door opening trim, both sides as necessary, Coupe (see page 20-74)
   - Front door opening trim, both sides as necessary, Sedan (see page 20-75)
   - Front pillar trim, both sides
     - Coupe (see page 20-74)
     - Sedan (see page 20-75)

4. Disconnect the combination switch connectors, ignition switch connectors and driver's airbag connector, and lower the steering column (see page 17-25). To prevent damage to the steering column, wrap it with a shop towel.

Driver's side:

5. From outside the driver's door, disconnect the side wire harness connectors (A), cabin wire harness connectors (B) and door wire harness connectors (C) from the left (driver's) fuse box (D). Disconnect the dashboard wire harness connector (E).

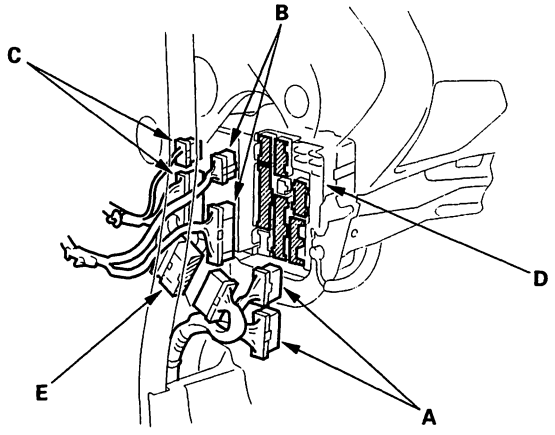

6. From under the dash, disconnect the dashboard wire harness connectors (A, B), steering hanger beam wire harness connector (C), and the brake switch connector (D). On M/T model, disconnect the clutch switch connectors (E).

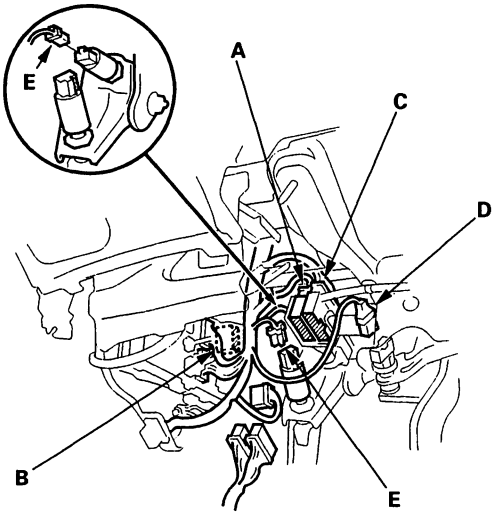

BACK

Middle portion:

7. From the passenger's side, pull the carpet (A) back as necessary (see page 20-81). Disconnect the SRS wire harness connector (B), ECM/PCM connector (C), air mix control motor connector (D), evaporator temperature sensor connector (E) and antenna lead (F). On '00 model Sedan and '01-02 models, disconnect the dashboard wire harness connector (s) (G). Detach the ECM/PCM and the antenna lead harness clips (H). On '00 model Coupe and '01-02 models, detach the connector holders (I) from the floor. Using a Torx T30 bit, remove the ground bolt.

'98-99 models:

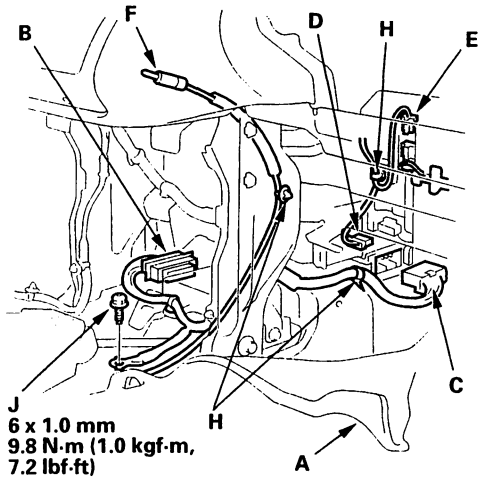

'00 model Sedan:

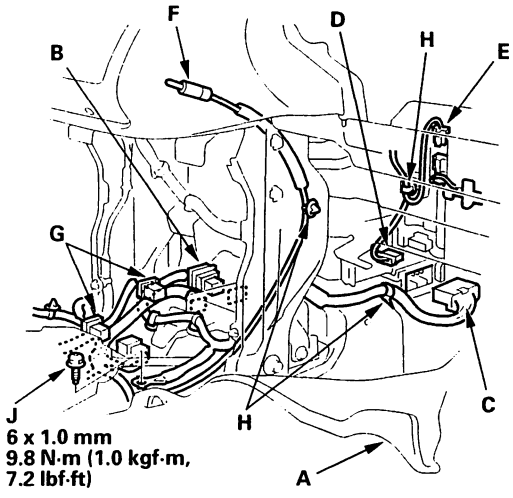

'00 model Coupe:

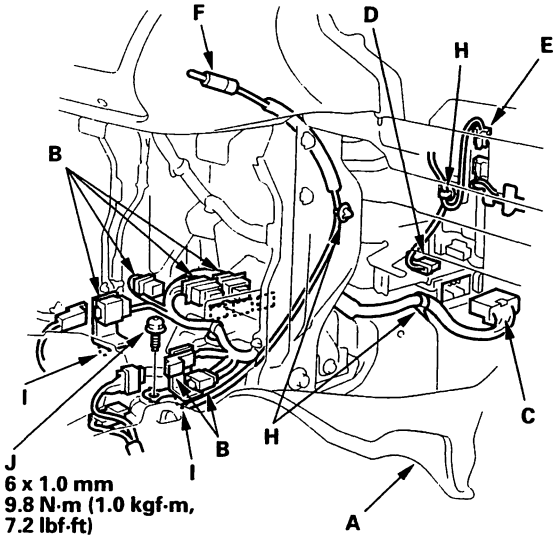

'01-02 models:

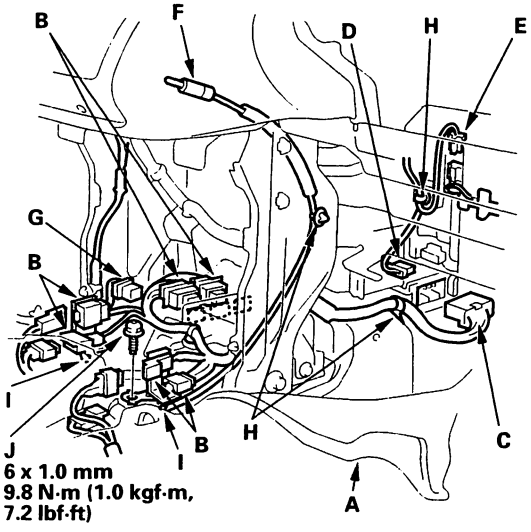

(cont'd)

Dashboard Removal/Installation (cont'd)

8. From the driver's side, disconnect the parking brake switch positive terminal (A), and detach the harness clips (B). On AT model, disconnect the parking pin shift connector (C), and the shift lock solenoid connector (D).

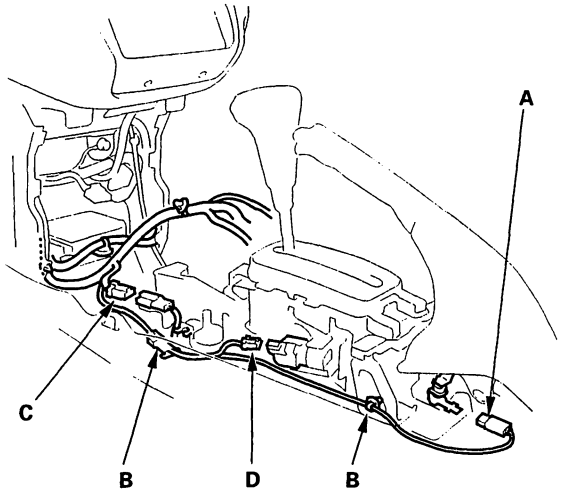

Passenger's side:

9. From outside the front passenger's door, disconnect the side wire harness connector (A), cabin wire harness connectors (B), roof wire harness connector (C) and the door wire harness connectors (D) from the right (passenger's) fuse box (E). Disconnect the dashboard wire harness connector(s) (F).

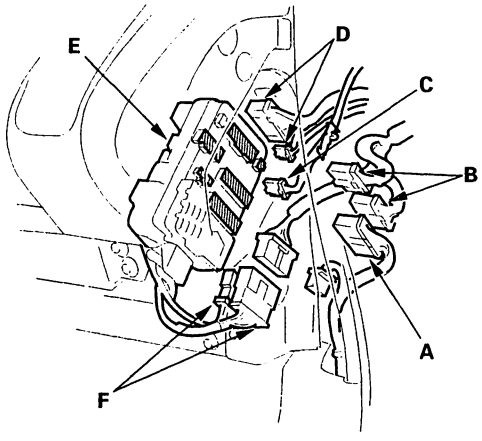

10. From under the dash, disconnect the steering hanger beam wire harness connectors (A), blower motor connector (B), blower resistor connector (C) and the recirculation control motor connector (D), then detach the harness clip (E), harness holder (F) and connector clip (G).

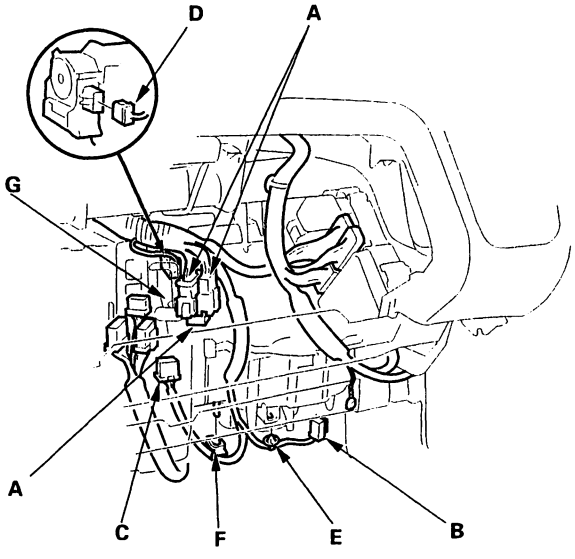

BACK

11. From outside the driver's door, remove the caps (A), then remove the bolts (B, C, D, E), and lift up on the dashboard (F) to release it from the guide pins (G).

Fastener Locations

B ▶ : Bolt, 6 **C ▶ : Bolt, 4** **D ▶ : Bolt, 3** **E ▶ : Bolt, 1**

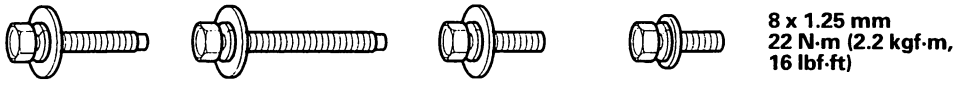

8 x 1.25 mm
22 N·m (2.2 kgf·m, 16 lbf·ft)

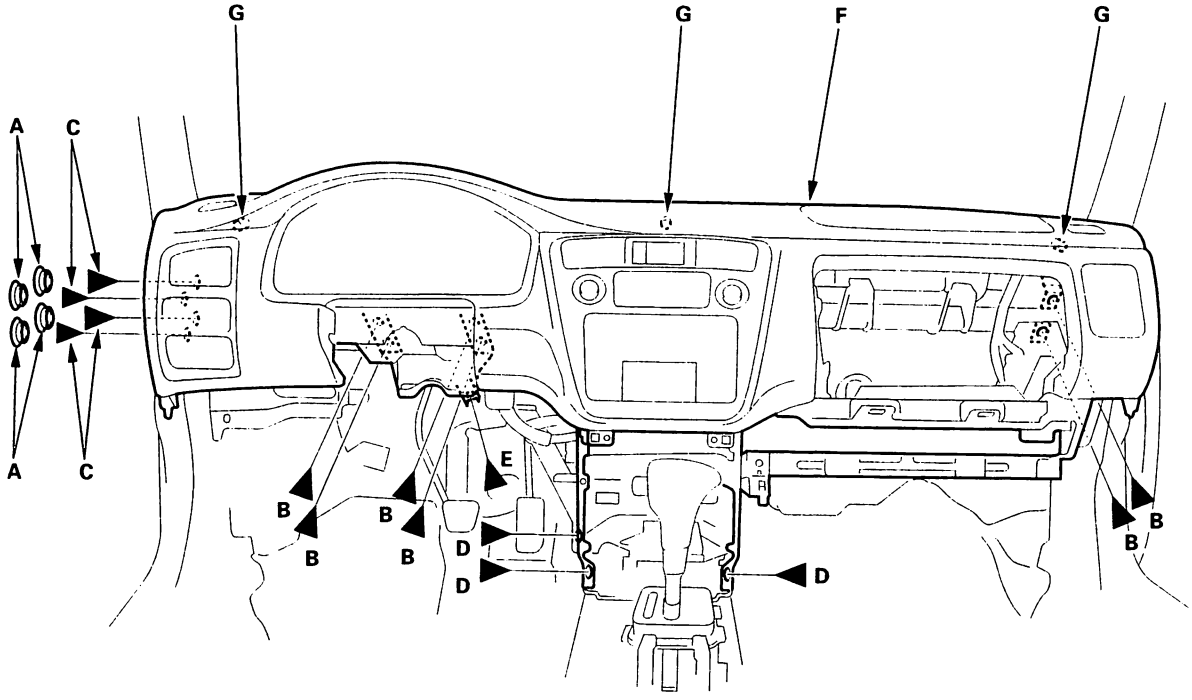

12. Carefully remove the dashboard through the front door opening.

13. Install the dashboard in the reverse order of removal, and note these items:

- Make sure the dashboard fits onto the guide pins correctly.
- Before tightening the bolts, make sure the dashboard wire harnesses are not pinched.
- Make sure the connectors are plugged in properly, and the antenna lead is connected properly.
- Enter the anti-theft code for the radio, then enter the customer's radio station presets.

Steering Hanger Beam Replacement

NOTE: Put on gloves to protect your hands.

1. Remove the dashboard (see page 20-90).

2. Remove the following parts from the dashboard:

   - Gauge assembly (see page 22-68)
   - Audio unit (see page 22-124)

3. From under the middle of the dash: release the passenger's airbag connector (A) from the connector holder (B), and disconnect the connector. Detach the harness clips (C), and remove the ground bolts (D).

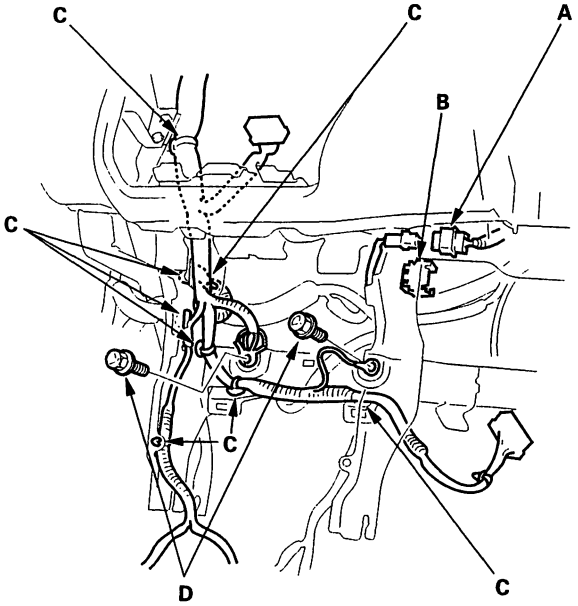

4. From the driver's side, if applicable, disconnect and detach the SRS wire harness connector (A).
   If equipped, disconnect the cruise control unit connector (B).

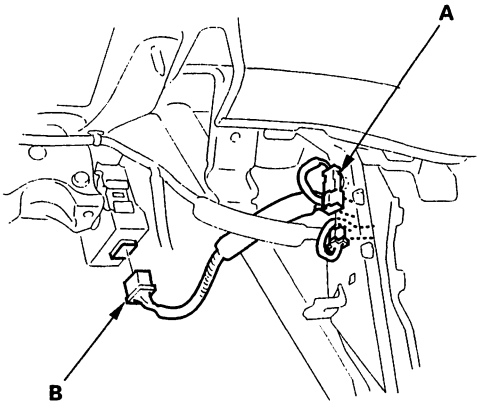

5. Disconnect the dashboard wire harness connectors (A) from the right (passenger's) fuse box (B).
   Detach the harness clip (C) and connector clip (D), and remove the ground bolt (E).

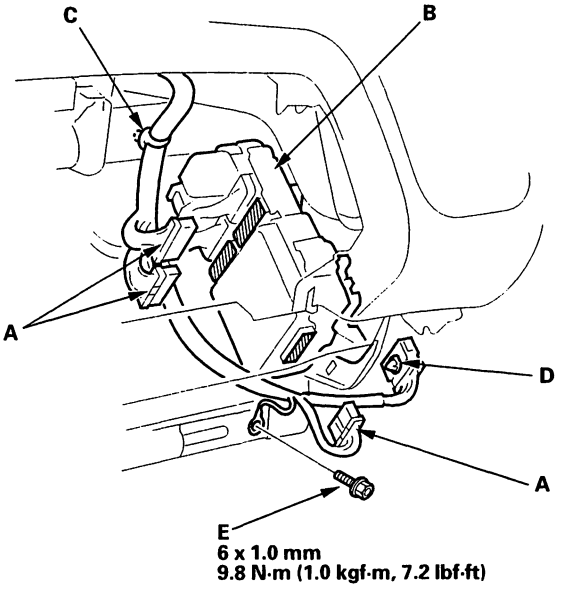

BACK

6. Disconnect the dashboard wire harness connectors (A) from the left (driver's) fuse box (B). Disconnect and detach the dashboard wire harness connector (C). Detach the dashboard wire harness connectors (D, E, F) from the connector holder (G), the steering hanger beam (H) and the driver's under-dash fuse/relay box (B). Detach the harness clip (I), and remove the ground bolt (J).

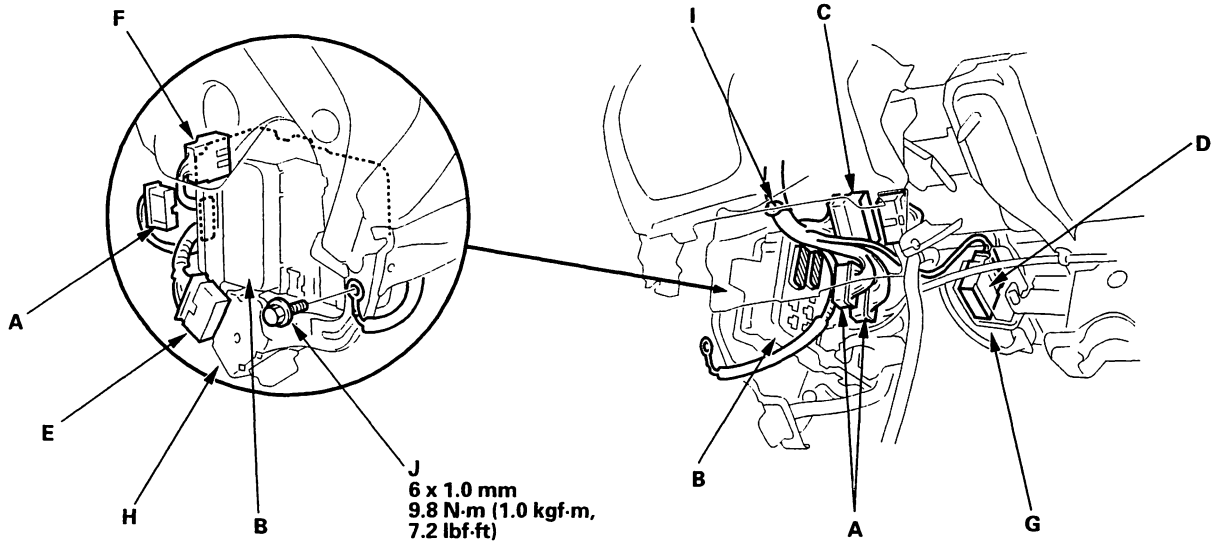

7. Remove the screws (A, B, C) and the front passenger's airbag mounting nuts from the dashboard.

Fastener Locations

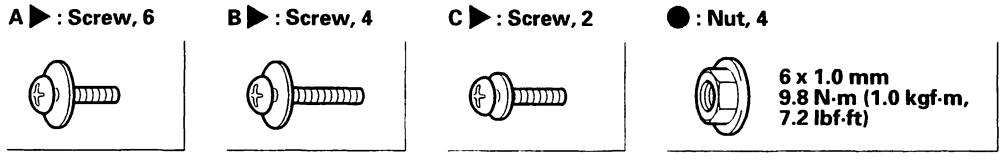

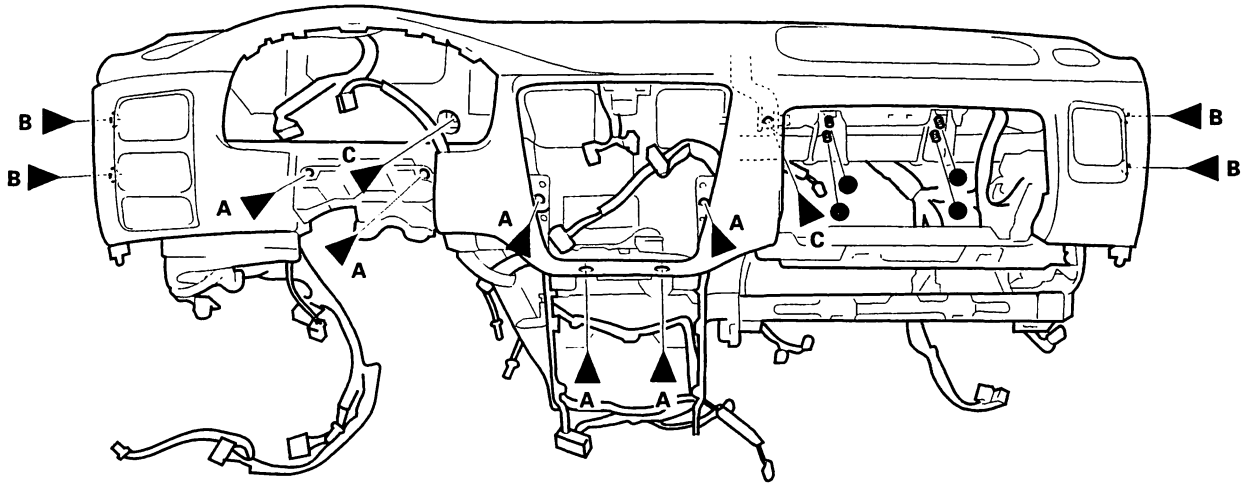

(cont'd)

Steering Hanger Beam Replacement (cont'd)

8. Separate the dashboard (A) and steering hanger beam (B).

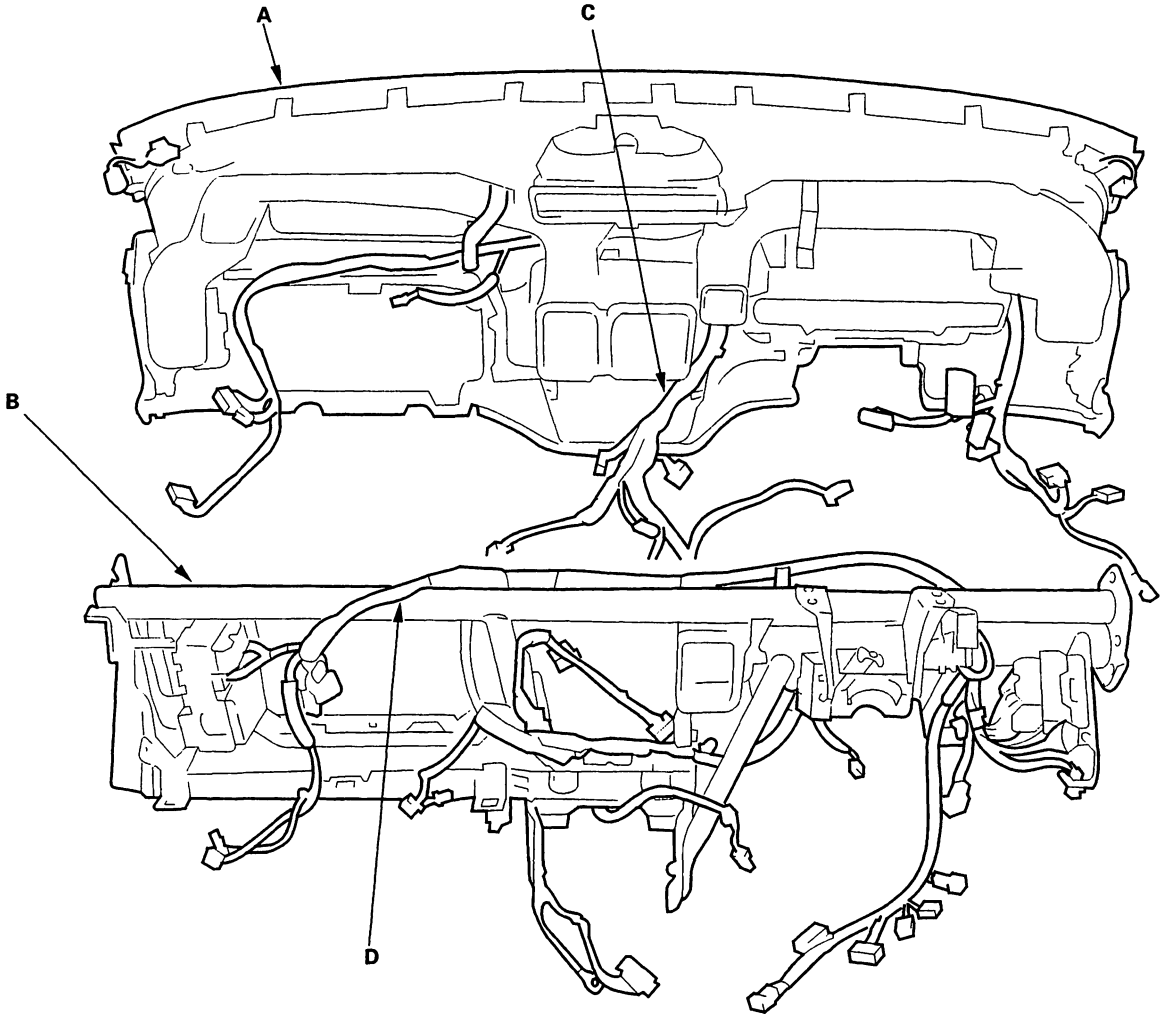

9. Install the steering hanger beam in the reverse order of removal, and note these items:

- Make sure the dashboard wire harness (C) and steering hanger beam wire harness (D) are not pinched.
- Make sure the connectors are plugged in properly.

BACK

Component Location Index - Coupe

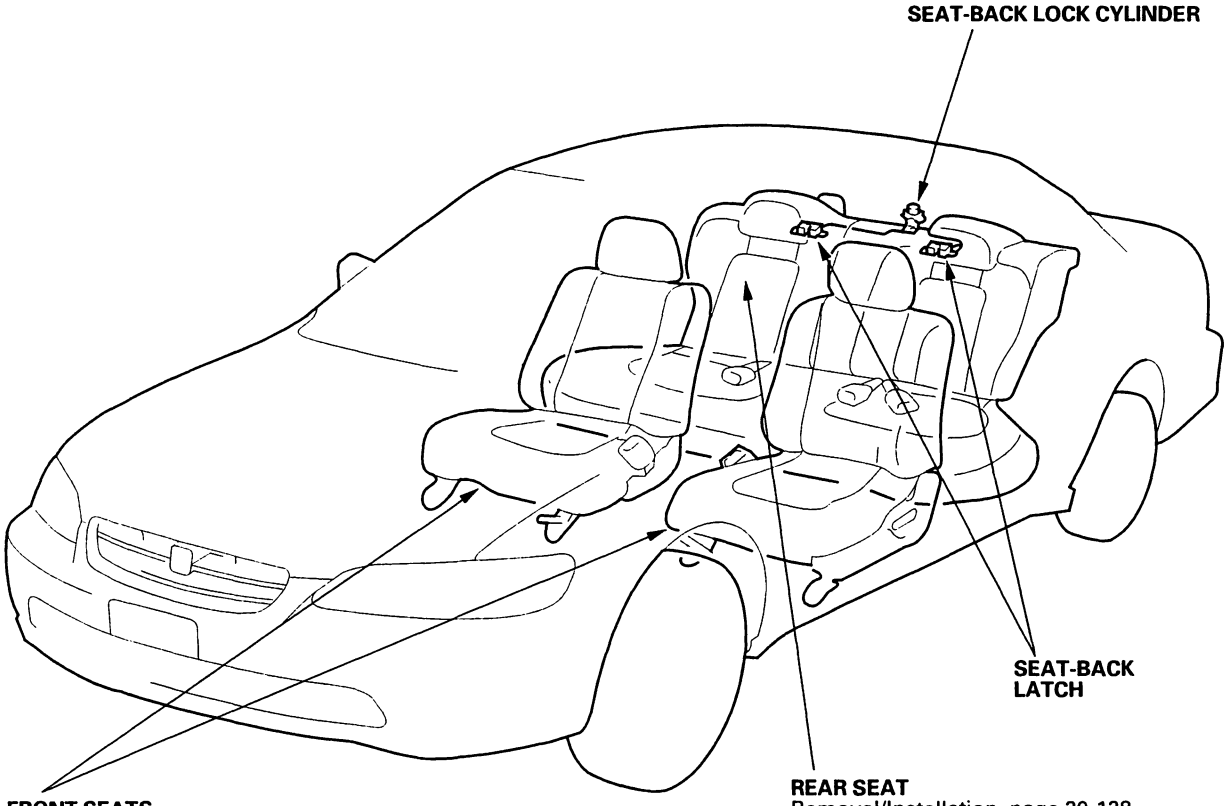

FRONT SEATS
Removal/Installation, page 20-99
Disassembly/Reassembly,
Manual Seat without Side Airbag, page 20-102
Manual Seat with Side Airbag, page 20-103
Manual Height Adjustable Seat without Side Airbag, page 20-106
Manual Height Adjustable Seat with Side Airbag, page 20-107
2-way Power Seat without Side Airbag, page 20-110
2-way Power Seat with Side Airbag, page 20-111
8-way Power Seat without Side Airbag, page 20-112
8-way Power Seat with Side Airbag, page 20-113
Seat Wiring Harness and Cable Installation, page 20-115
Torsion Bar Replacement, page 20-120
Seat Linkage Disassembly/Reassembly,
2-way Power Seat, page 20-121
8-way Power Seat, page 20-122
Seat Cover Replacement, page 20-123

REAR SEAT
Removal/Installation, page 20-128
Seat-back Latch and Lock Cylinder Replacement, page 20-132
Seat-back Cover Replacement, page 20-134
Cushion Cover Replacement, page 20-138

Component Location Index - Sedan

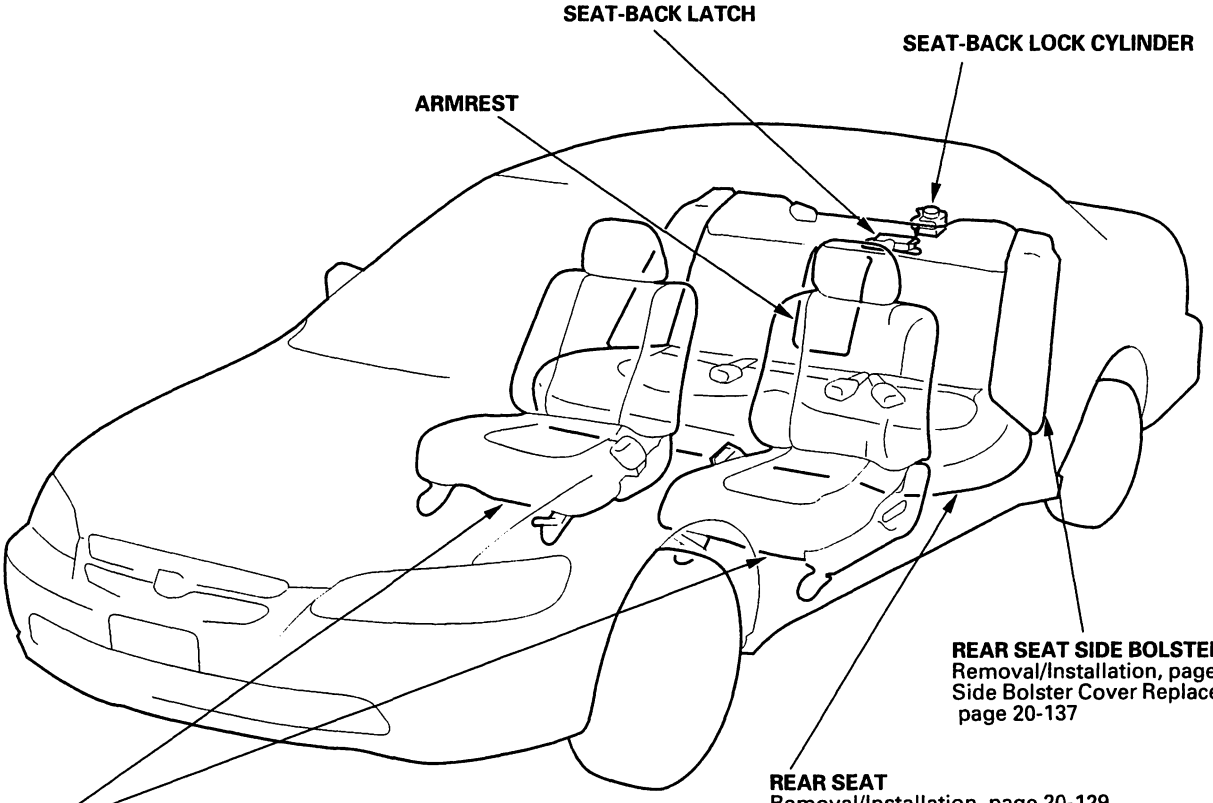

REAR SEAT SIDE BOLSTER
Removal/Installation, page 20-129
Side Bolster Cover Replacement, page 20-137

REAR SEAT
Removal/Installation, page 20-129
Armrest and Armrest Lid Replacement, page 20-130
Trunk Pass-through Cover Key Cylinder Replacement, page 20-131
Seat-back Latch Replacement, page 20-133
Seat-back Lock Cylinder Replacement, page 20-133
Seat-back Cover Replacement, page 20-135
Seat Cushion Cover Replacement, page 20-139

FRONT SEATS
Removal/Installation, page 20-99
Disassembly/Reassembly,
- Manual Seat without Side Airbag, page 20-104
- Manual Seat with Side Airbag, page 20-105
- Manual Height Adjustable Seat without Side Airbag, page 20-108
- Manual Height Adjustable Seat with Side Airbag, page 20-109
- 2-way Power Seat without Side Airbag, page 20-110
- 2-way Power Seat with Side Airbag, page 20-111
- 8-way Power Adjustable Seat, page 20-114

Seat Wiring Harness Installation, page 20-118
Torsion Bar Replacement, page 20-120
Seat Linkage Disassembly and Reassembly,
- 2-way Power Seat, page 20-121
- 8-way Power Seat, page 20-122

Seat Cover Replacement, page 20-123

BACK

Front Seat Removal/Installation

'00-02 models: SRS components are located in this area. Review the SRS component locations (see page 23-23), and precautions and procedures (see page 23-28) in the SRS section before performing repairs or service.

1. '00-02 models with side airbag: Make sure you have the anti-theft code for the radio, then write down the frequencies for the radio preset buttons. Disconnect the negative cable from the battery, and wait at leasts 3 minutes before beginning work.

2. Remove the seat track end covers (A), and remove the bolts securing the front seat (B). When prying with a flat-tip screwdriver, wrap it with protective tape to prevent damage. Take care not to scratch the body or tear the seat covers.

Fastener Locations

▶ : Bolt, 4

10 x 1.25 mm
34 N·m (3.5 kgf·m, 25 lbf·ft)

Without 8-way power seat: **With 8-way power seat:**

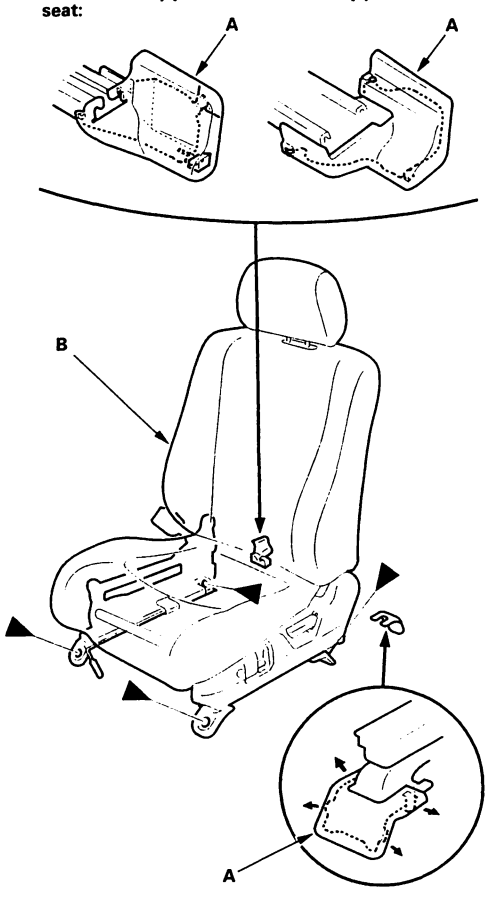

3. Lift up the front seat, then disconnect and detach the seat harness connector (A) and harness clip (B).

Manual seat (driver's seat):

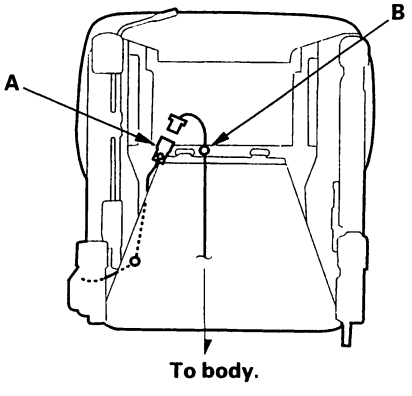

Manual seat ('98-99 models passenger's seat with seat heater):

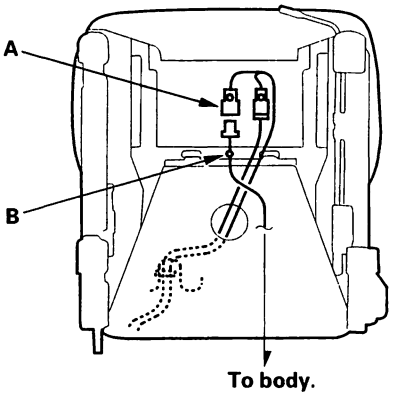

(cont'd)

Front Seat Removal/Installation (cont'd)

Manual seat ('00 model passenger's seat on Coupe with side airbag):

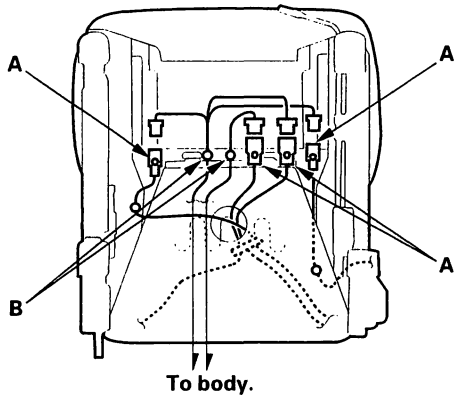

Manual seat ('01-02 models passenger's seat on Coupe with side airbag):

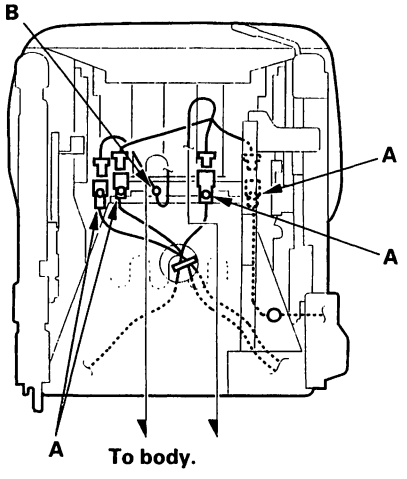

Manual height adjustable seat ('98-00 models, and '01-02 models without side airbag):

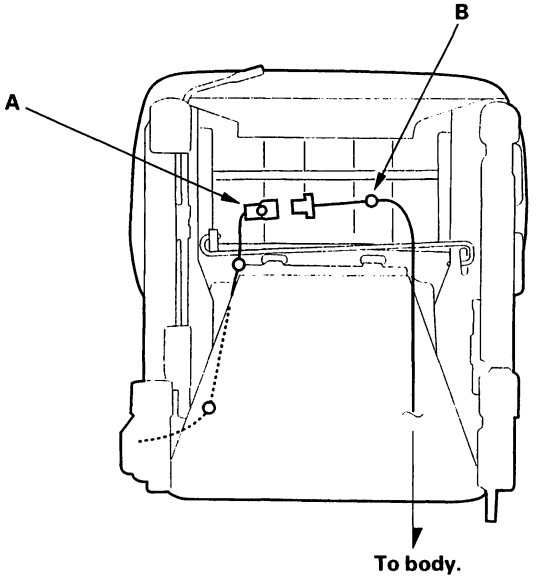

Manual height adjustable seat ('01-02 models with side airbag):

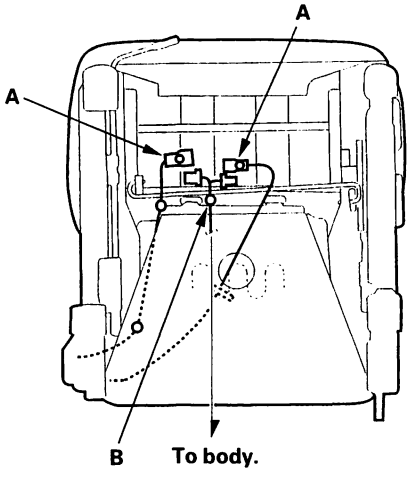

BACK

2-way power seat ('98-00 models):

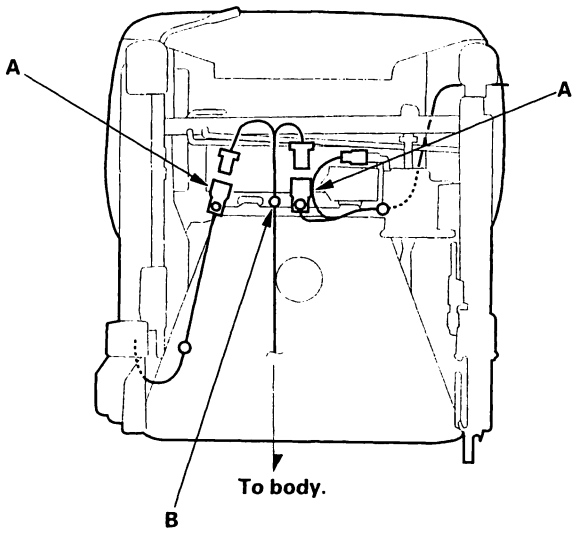

2-way power seat ('01-02 models):

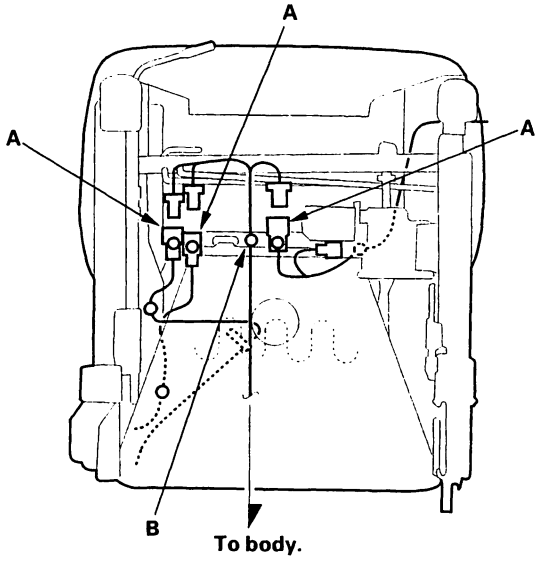

8-way power seat ('98-99 models):

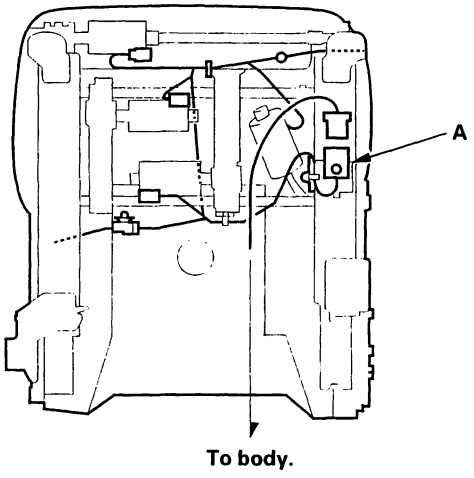

8-way power seat ('00-02 models):

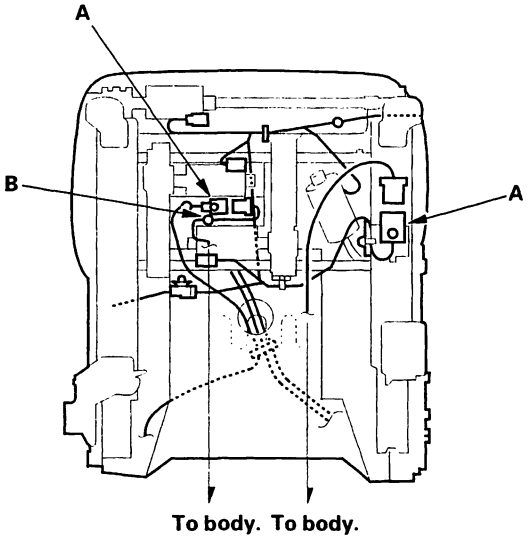

4. With the help of an assistant, carefully remove the front seat through the front door opening.

5. Install the seat in the reverse order of removal, and note these items:

   - Make sure the seat harness connector is plugged in properly.
   - '00-02 models: Enter the anti-theft code for the radio, then enter the customer's radio station presets.

Front Seat Disassembly/Reassembly - Manual without Side Airbag - Coupe

Disassemble the front seat as shown.
Reassemble the seat in the reverse order of disassembly, and note these items:

- Route the seat wire harness, recline cable and connecting cable ('99-02 models) correctly (see page 20-115).
- Make sure the bushing and pivot washer are installed correctly.
- Apply multipurpose grease to the moving portion of the seat track.
- To prevent wrinkles in the seat-back cover, stretch the material evenly over the pad.

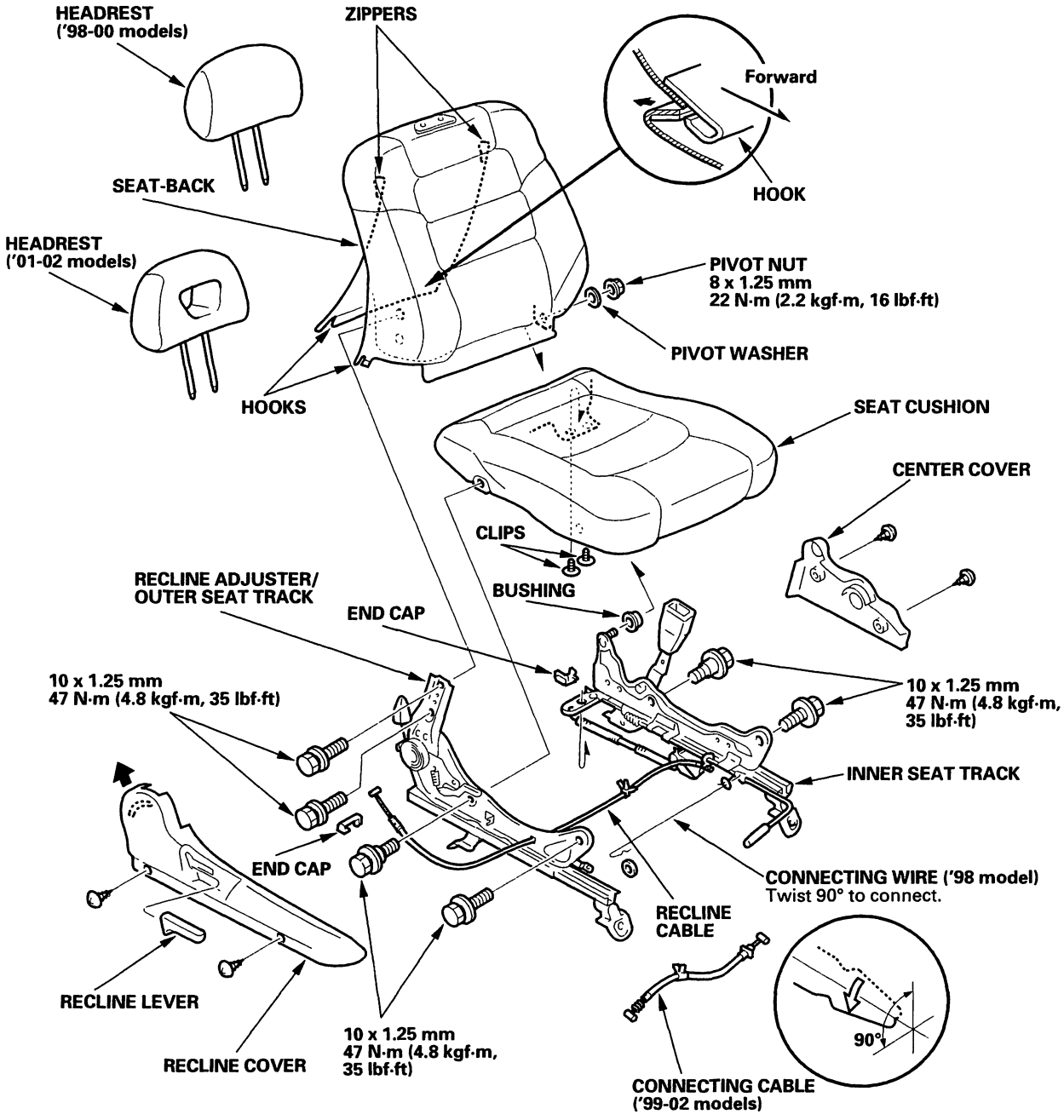

BACK

Front Seat Disassembly/Reassembly - Manual with Side Airbag - Coupe

'00-02 models

SRS components are located in this area. Review the SRS component locations (see page 23-23), and precautions and procedures (see page 23-28) in the SRS section before performing repairs or service.

Disassemble the '00 model front seat as shown. '01-02 models disassembly/reassembly is similar except the seat wire harness locations are different.
Reassemble the seat in the reverse order of disassembly, and note these items:

- Route the seat wire harness and recline cable correctly (see page 20-115).
- Make sure the bushing and pivot washer are installed correctly.
- Apply multipurpose grease to the moving portion of the seat track.
- To prevent wrinkles in the seat-back cover, stretch the material evenly over the pad.
- Replace the back panel clips with new ones.
- If the seat-back pad or the OPDS unit is replaced, reinitialize the OPDS unit (see page 23-46).

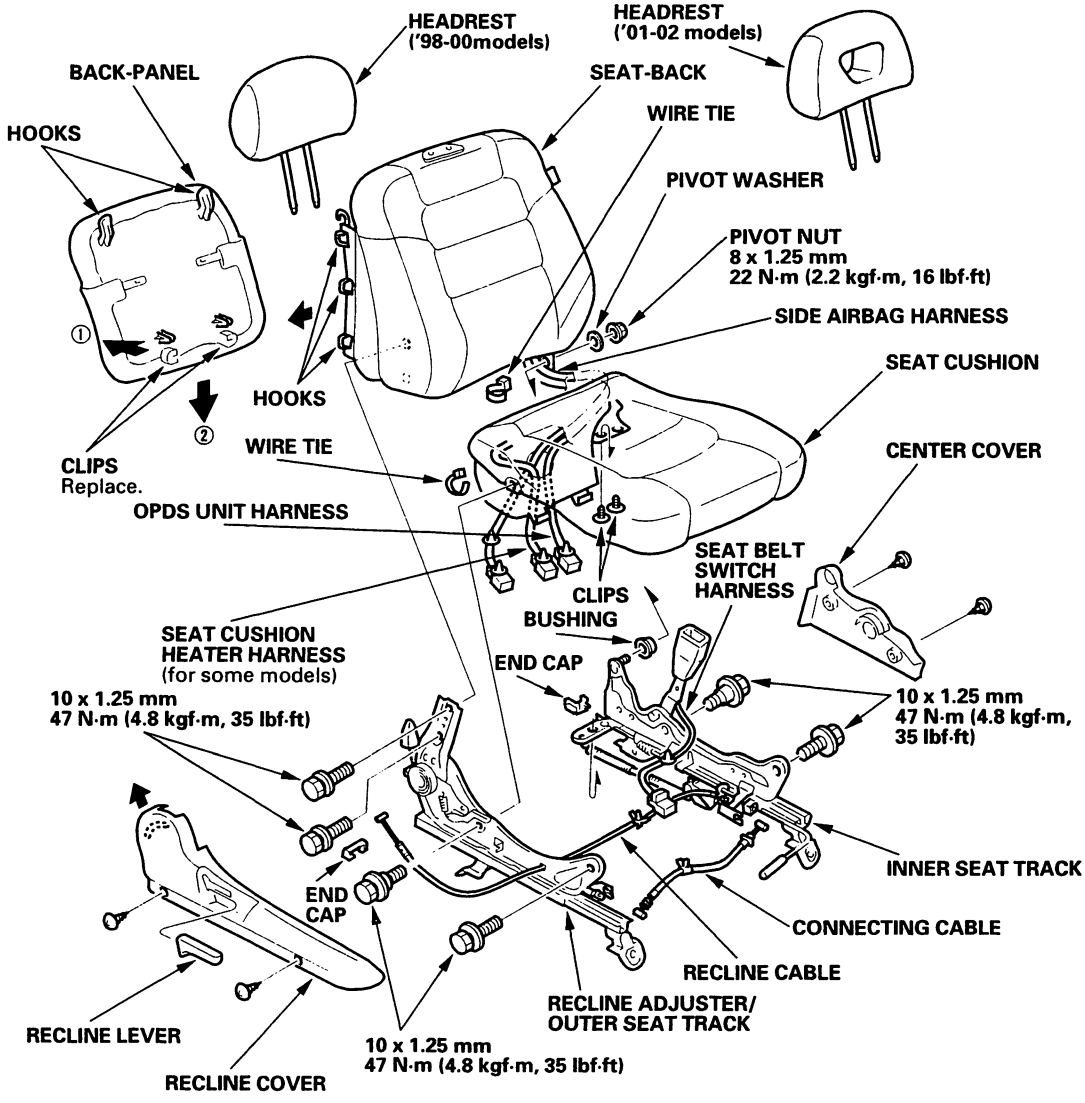

Front Seat Disassembly/Reassembly - Manual without Side Airbag - Sedan

Disassemble the driver's seat as shown. The passenger's seat is similar except that it doesn't have a seat belt switch harness.

Reassemble the seat in the reverse order of disassembly, and note these items:

- Route the seat wire harness correctly (see page 20-118).
- Make sure the bushing and pivot washer are installed correctly.
- Apply multipurpose grease to the moving portion of the seat track.
- To prevent wrinkles in the seat-back cover, stretch the material evenly over the pad.

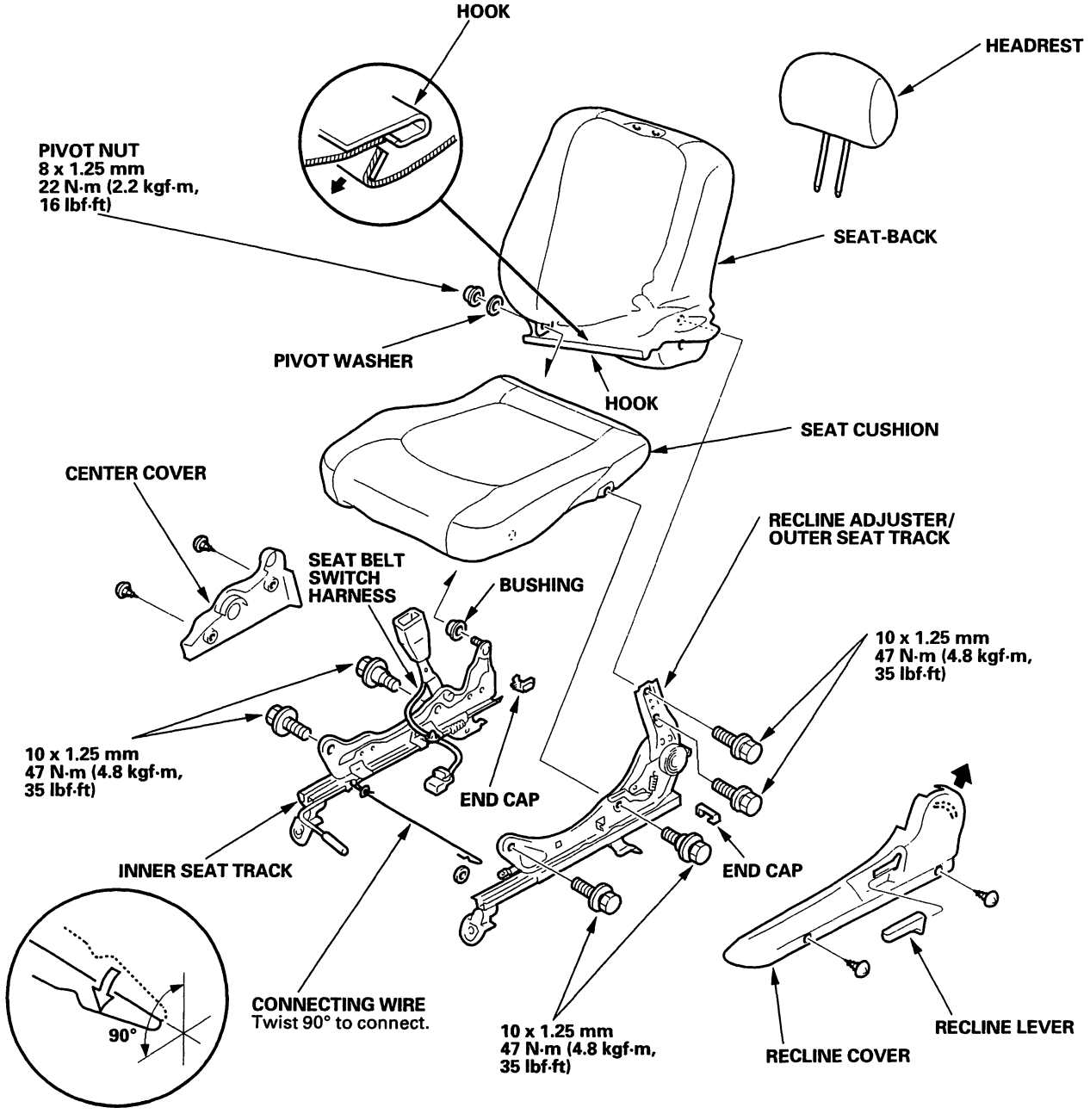

BACK

Front Seat Disassembly/Reassembly - Manual with Side Airbag - Sedan

'00-02 models

SRS components are located in this area. Review the SRS component locations (see page 23-23), and precautions and procedures (see page 23-28) in the SRS section before performing repairs or service.

Disassemble the front seat as shown.
Reassemble the seat in the reverse order of disassembly, and note these items:

- Route the seat wire harness and recline cable correctly (see page 20-118).
- Make sure the bushing and pivot washer are installed correctly.
- Apply multipurpose grease to the moving portion of the seat track.
- To prevent wrinkles in the seat-back cover, stretch the material evenly over the pad.
- Replace the back panel clips with new ones.
- If the seat-back pad or the OPDS unit is replaced, reinitialize the OPDS unit (see page 23-46).

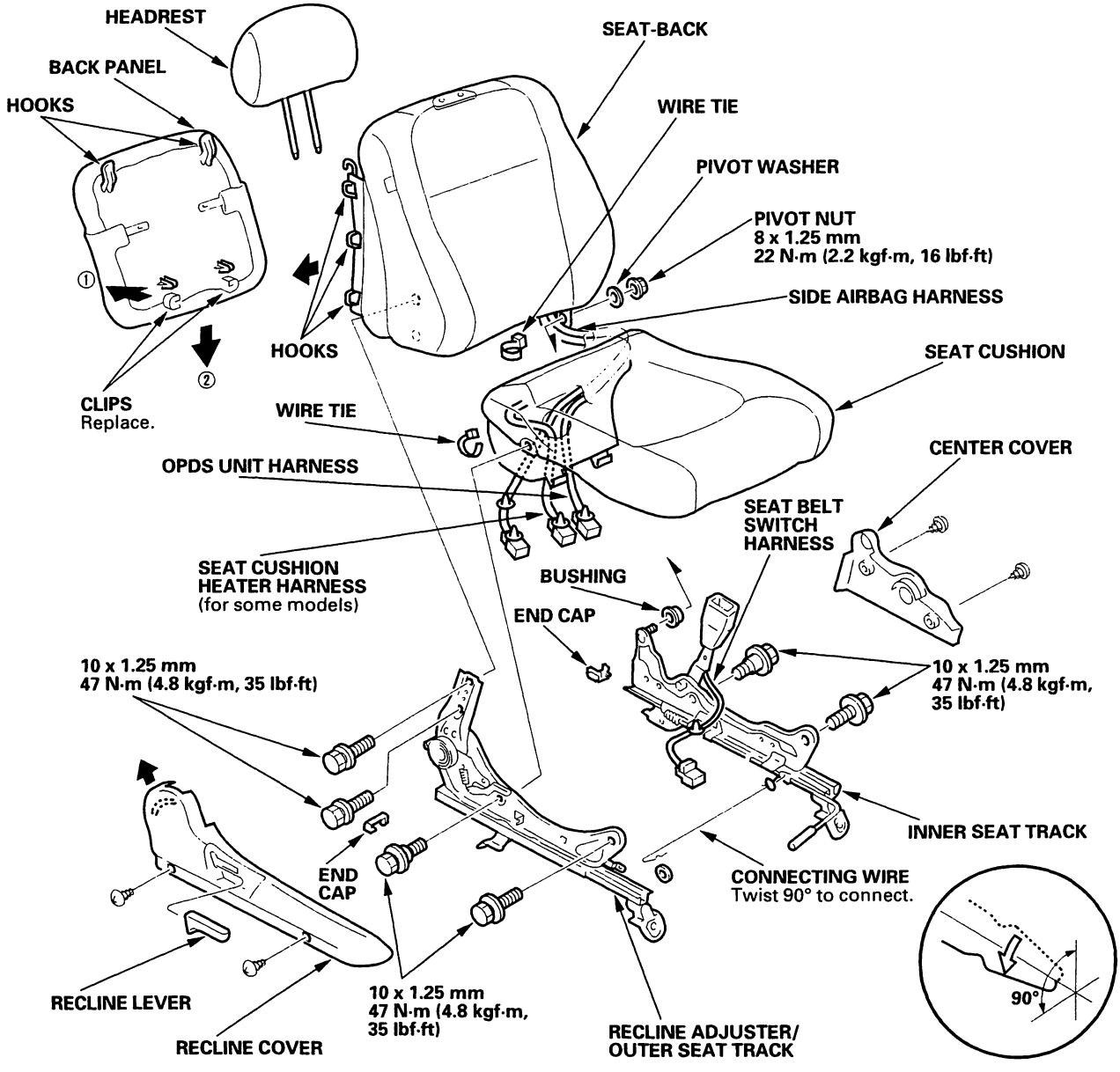

Front Seat Disassembly/Reassembly - Manual Height Adjustable without Side Airbag - Coupe

Disassemble the front seat as shown.
Reassemble the seat in the reverse order of disassembly, and note these items:

- Route the seat wire harness correctly (see page 20-115).
- '99-02 models: Route the connecting cable correctly (see page 20-115).
- Make sure the bushing and pivot washer are installed correctly.
- Apply multipurpose grease to the moving portion of the seat track.
- To prevent wrinkles in the seat-back cover, stretch the material evenly over the pad.

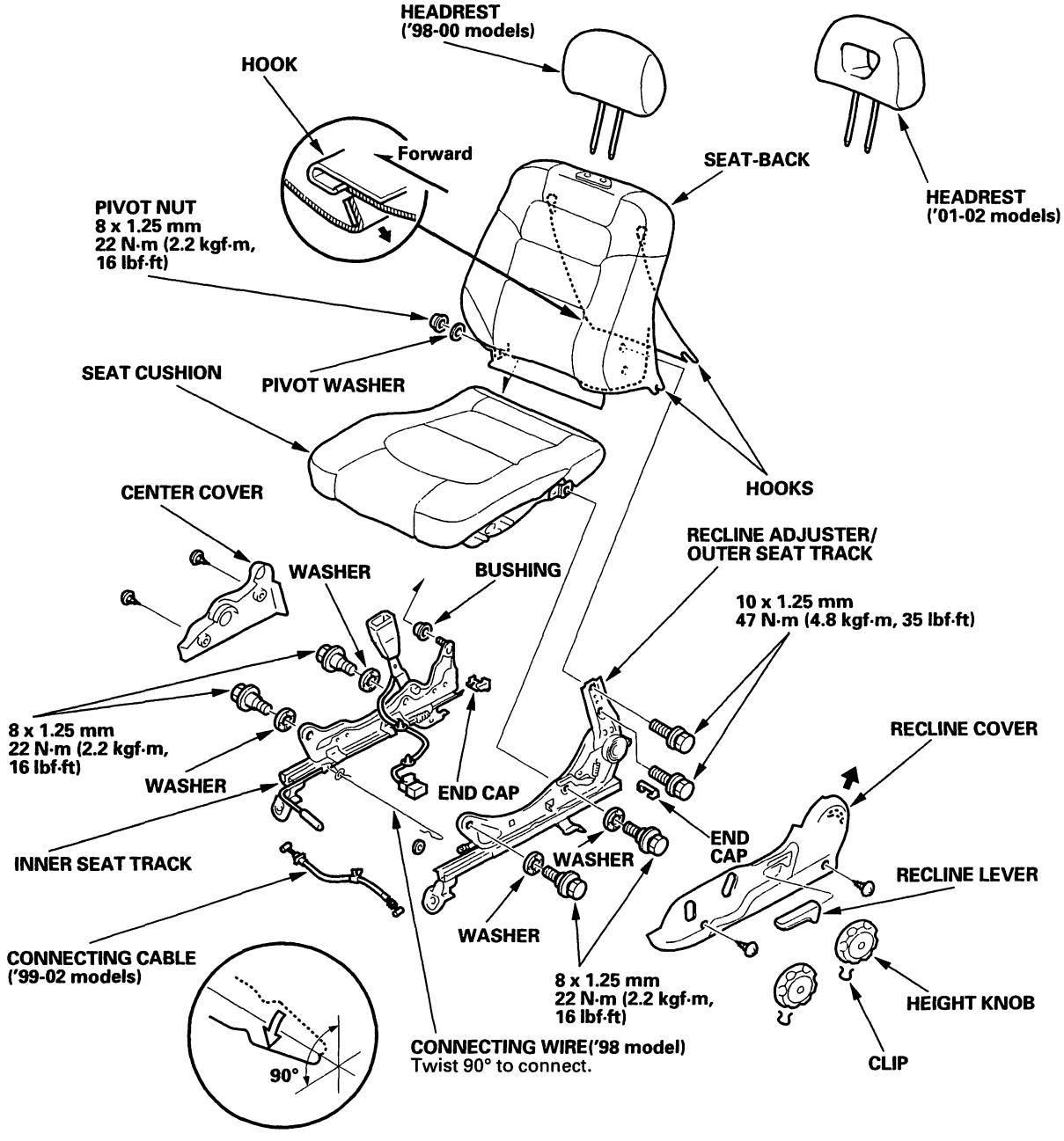

BACK

Front Seat Disassembly/Reassembly - Manual Height Adjustable with Side Airbag - Coupe

'01-02 model

SRS components are located in this area. Review the SRS component locations (see page 23-23), and precautions and procedures (see page 23-28) in the SRS section before performing repairs or service.

Disassemble the front seat as shown.
Reassemble the seat in the reverse order of disassembly, and note these items:

- Route the seat wire harness correctly (see page 20-115).
- Route the connecting cable correctly (see page 20-115).
- Make sure the bushing and pivot washer are installed correctly.
- Apply multipurpose grease to the moving portion of the seat track.
- To prevent wrinkles in the seat-back cover, stretch the material evenly over the pad.

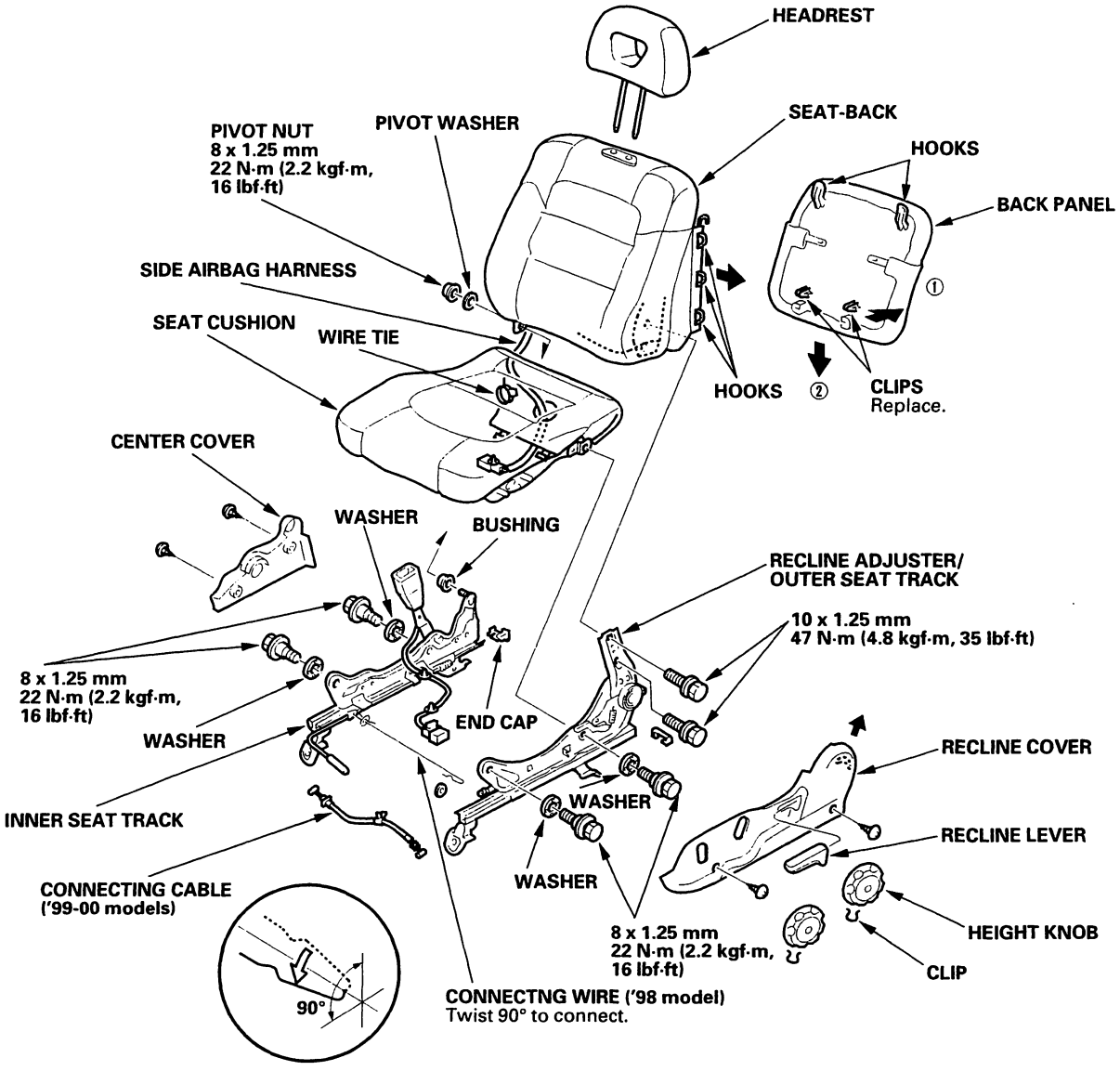

BACK

Front Seat Disassembly/Reassembly - Manual Height Adjustable without Side Airbag - Sedan

Disassemble the front seat as shown.
Reassemble the seat in the reverse order of disassembly, and note these items:

- Route the seat wire harness correctly (see page 20-118).
- Make sure the bushing and pivot washer are installed correctly.
- Apply multipurpose grease to the moving portion of the seat track.
- To prevent wrinkles in the seat-back cover, stretch the material evenly over the pad.

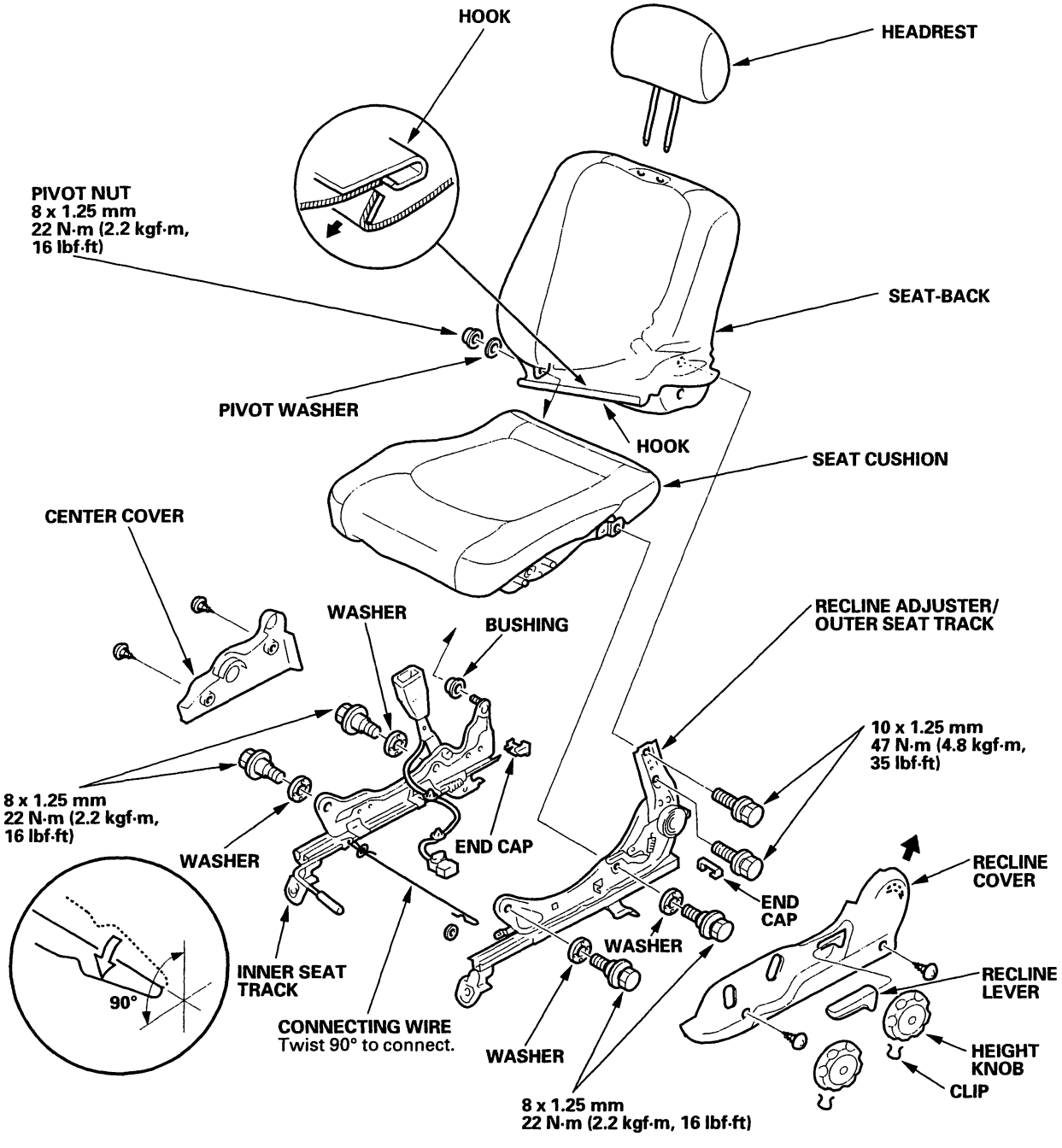

BACK

Front Seat Disassembly/Reassembly - Manual Height Adjustable with Side Airbag - Sedan

'01-02 model

SRS components are located in this area. Review the SRS component locations (see page 23-23), and precautions and procedures (see page 23-28) in the SRS section before performing repairs or service.

Disassemble the front seat as shown.
Reassemble the seat in the reverse order of disassembly, and note these items:

- Route the seat wire harness correctly (see page 20-118).
- Make sure the bushing and pivot washer are installed correctly.
- Apply multipurpose grease to the moving portion of the seat track.
- To prevent wrinkles in the seat-back cover, stretch the material evenly over the pad.

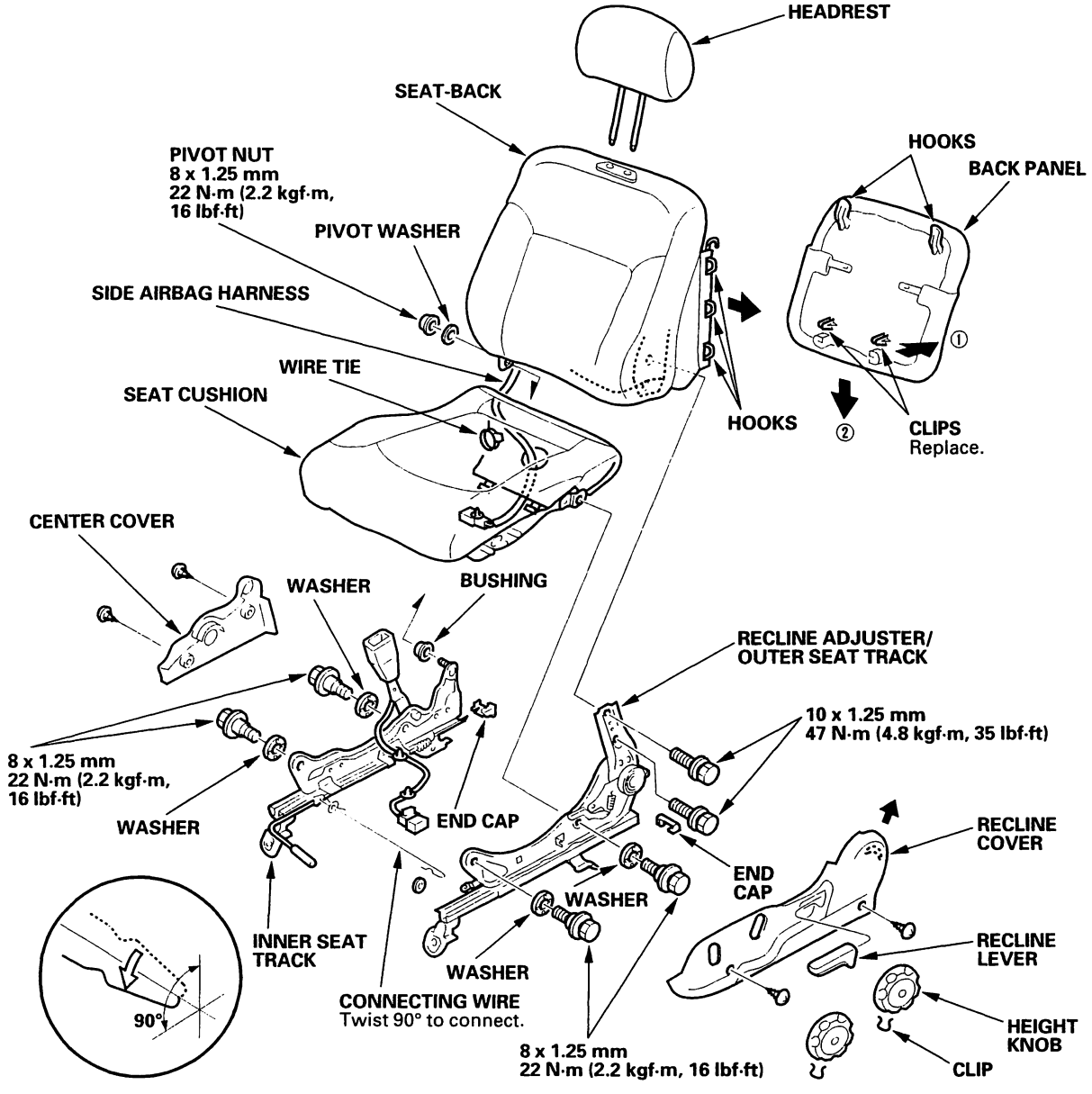

Front Seat Disassembly/Reassembly - 2-Way Power without Side Airbag

'98-00 models

Disassemble the front seat as shown.
Reassemble the seat in the reverse order of disassembly, and note these items:

- Route the seat wire harness correctly, Coupe (see page 20-115), Sedan (see page 20-118).
- Make sure the bushing and pivot washer are installed correctly.
- Apply multipurpose grease to the moving portion of the seat track.
- To prevent wrinkles in the seat-back cover, stretch the material evenly over the pad.
- Replace the back panel clips with new ones.

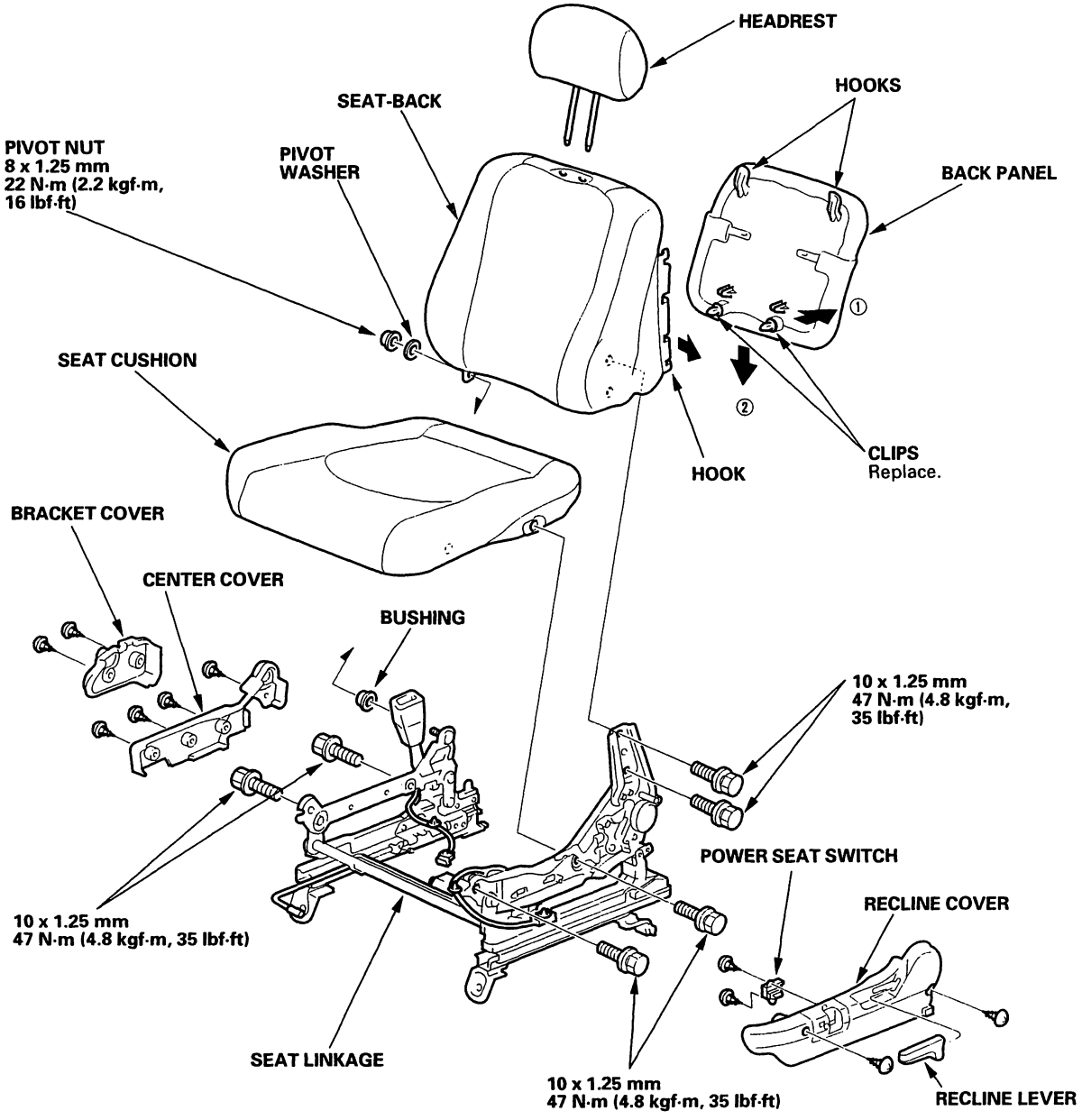

BACK

Front Seat Disassembly/Reassembly - 2-Way Power with Side Airbag

'01-02 model

SRS components are located in this area. Review the SRS component locations (see page 23-23), and precautions and procedures (see page 23-28) in the SRS section before performing repairs or service.

Disassemble the front seat as shown.
Reassemble the seat in the reverse order of disassembly, and note these items:

- Route the seat wire harness correctly, Coupe (see page 20-115), Sedan (see page 20-118).
- Make sure the bushing and pivot washer are installed correctly.
- Apply multipurpose grease to the moving portion of the seat track.
- To prevent wrinkles in the seat-back cover, stretch the material evenly over the pad.
- Replace the back panel clips with new ones.

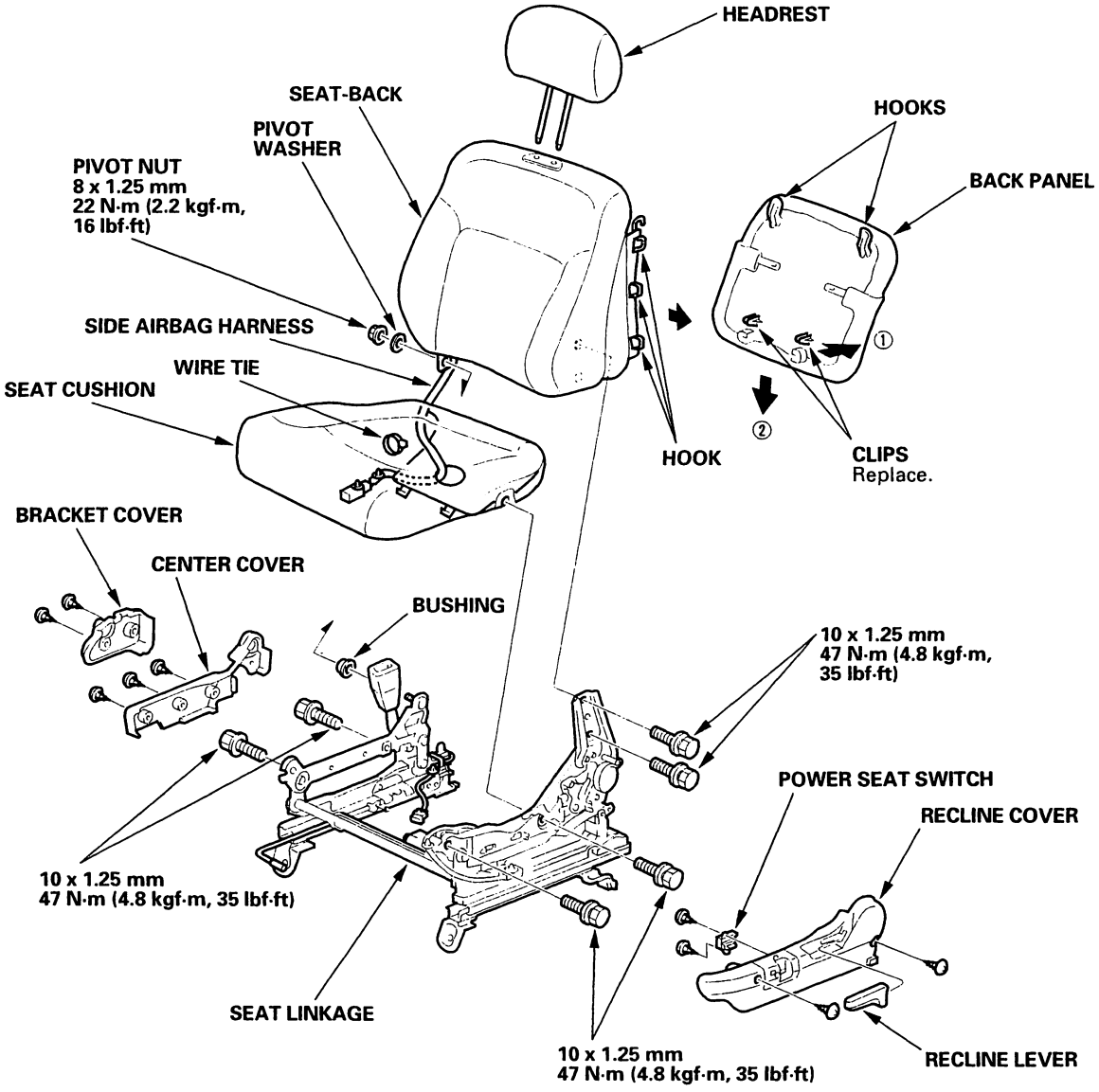

Front Seat Disassembly/Reassembly - 8-Way Power without Side Airbag - Coupe

'98-99 models

Disassemble the front seat as shown.
Reassemble the seat in the reverse order of disassembly, and note these items:

- Route the seat wire harness correctly (see page 20-115).
- Make sure the bushing and pivot washer are installed correctly.
- Apply multipurpose grease to the moving portion of the seat track.
- To prevent wrinkles in the seat-back cover, stretch the material evenly over the pad.
- Replace the back panel clips with new ones.

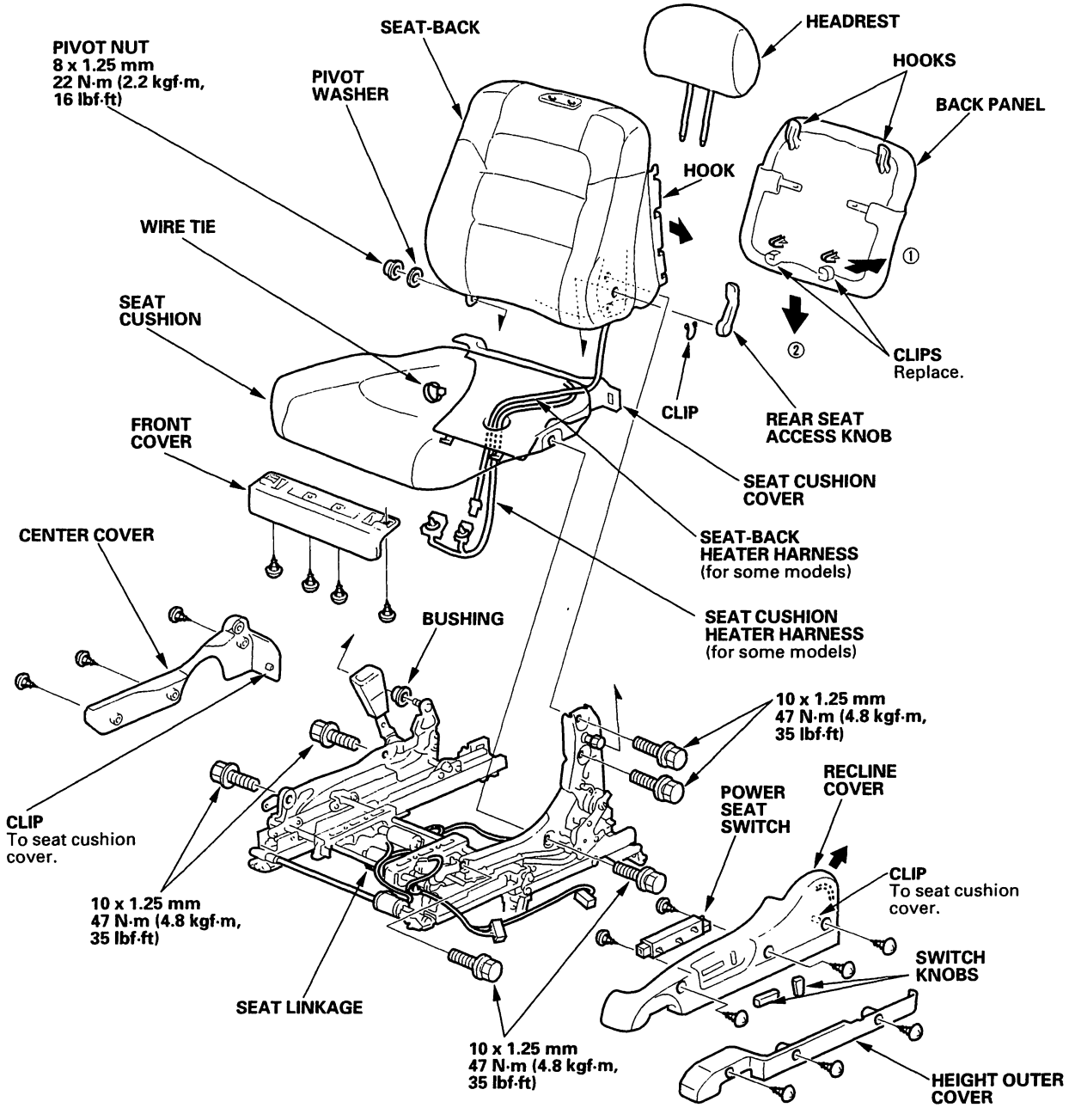

BACK

Front Seat Disassembly/Reassembly - 8-Way Power with Side Airbag - Coupe

'00-02 models

SRS components are located in this area. Review the SRS component locations (see page 23-23), and precautions and procedures (see page 23-28) in the SRS section before performing repairs or service.

Disassemble the '00 model front seat as shown. '01-02 models Disassembly/Reassembly is similar except the seat wire harness locations are different.
Reassemble the seat in the reverse order of disassembly, and note these items:

- Route the seat wire harness and recline cable correctly (see page 20-118).
- Make sure the bushing and pivot washer are installed correctly.
- Apply multipurpose grease to the moving portion of the seat track.
- To prevent wrinkles in the seat-back cover, stretch the material evenly over the pad.
- Replace the back panel clips with new ones.

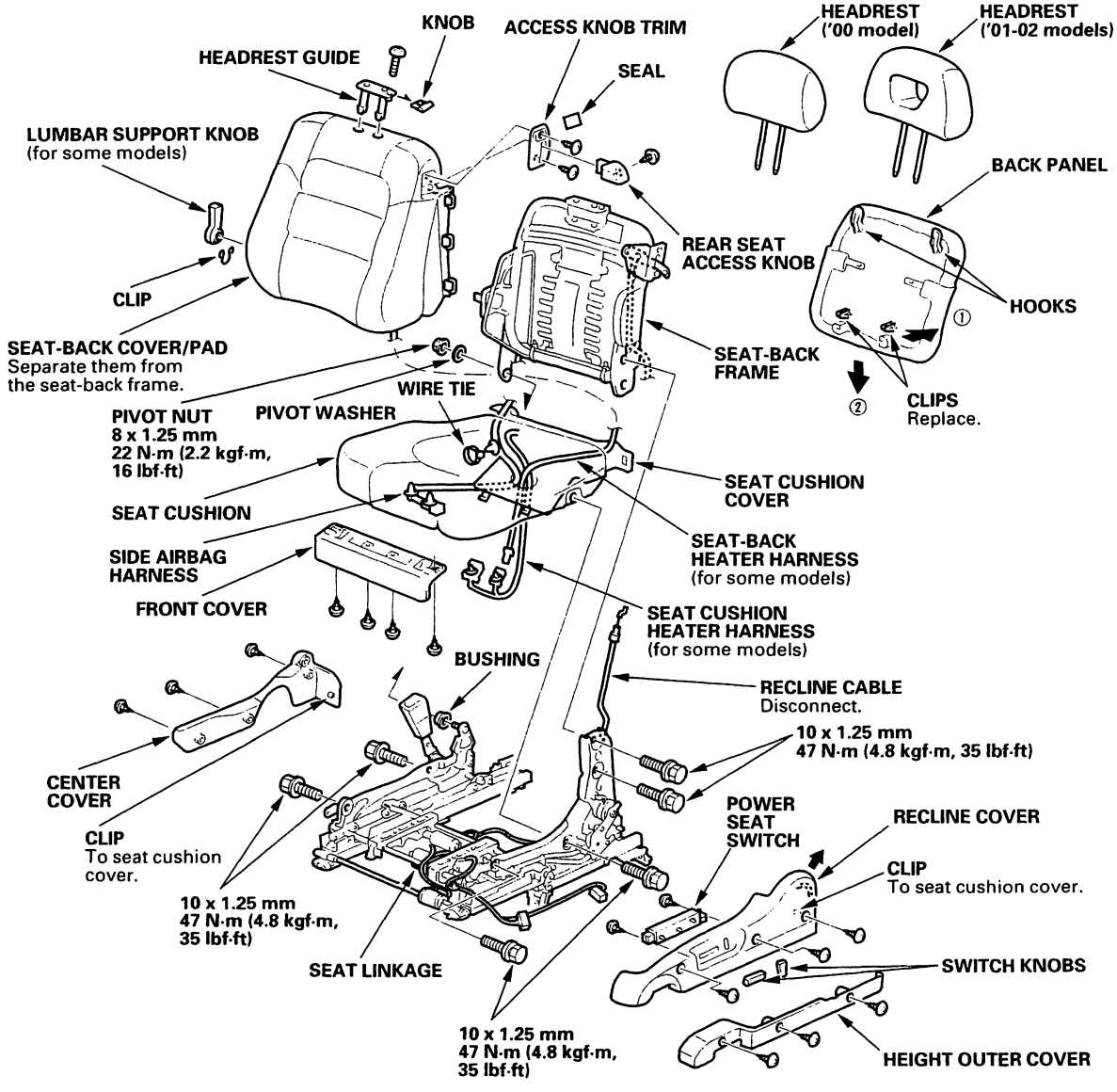

Front Seat Disassembly/Reassembly - 8-Way Power - Sedan

'00-02 models: SRS components are located in this area. Review the SRS component locations (see page 23-23), and precautions and procedures (see page 23-28) in the SRS section before performing repairs or service.

Disassemble the front seat as shown.
Reassemble the seat in the reverse order of disassembly, and note these items:

- Route the seat wire harness correctly (see page 20-118).
- Make sure the bushing and pivot washer are installed correctly.
- Apply multipurpose grease to the moving portion of the seat track.
- To prevent wrinkles in the seat-back cover, stretch the material evenly over the pad.
- Replace the back panel clips with new ones.

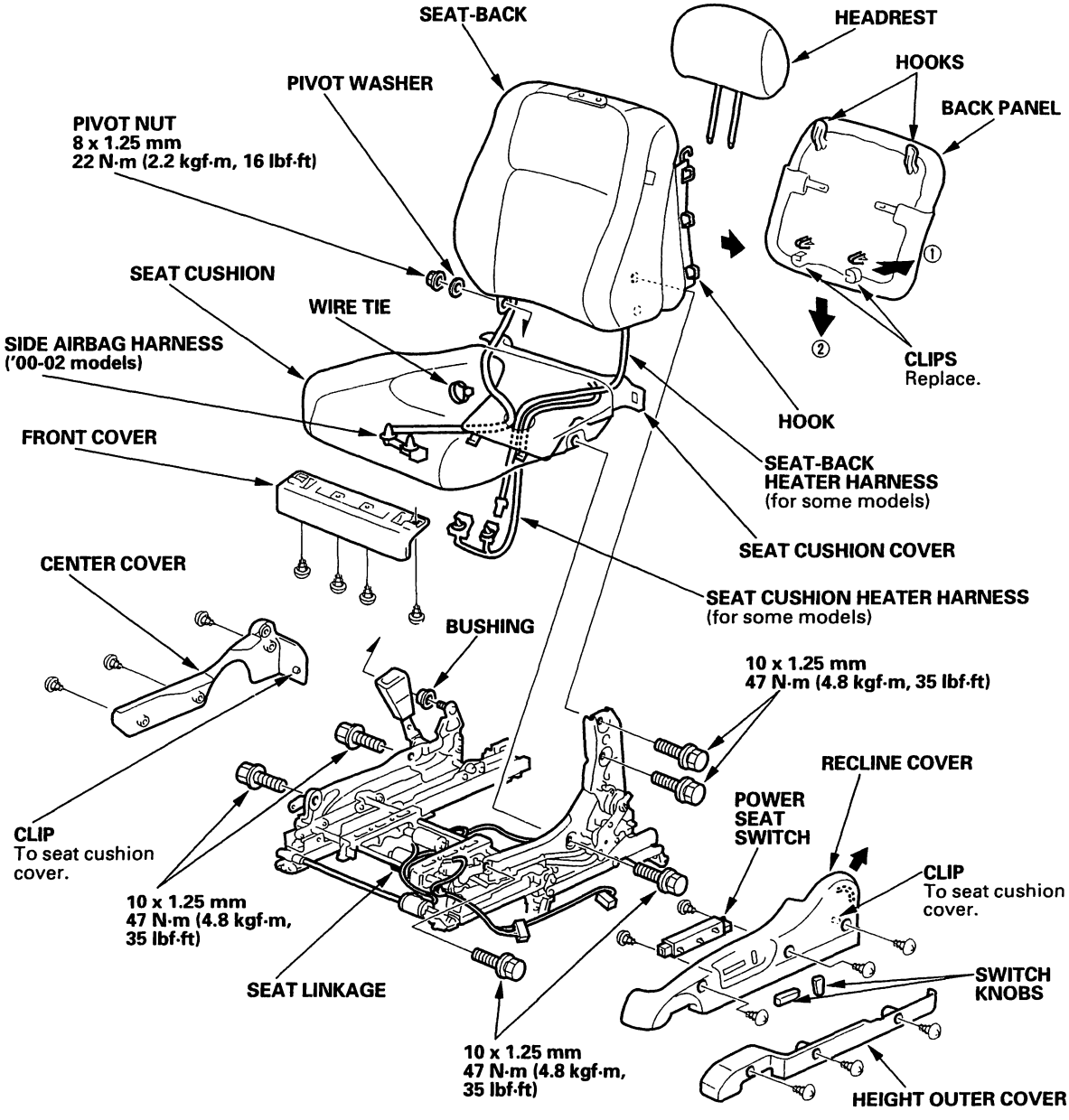

BACK

Front Seat Wiring Harness and Cable Installation - Coupe

When assembling the front seat, make sure the recline cable (A), and connecting cable ('99-02 models) (B), seat belt switch harnesses (C), seat harness (D), seat heater harness (E), side airbag harness ('00-02 models) (F), OPDS unit harness ('00-02 models) (G), connectors (H), clips (I) and wire ties (J) are fastened correctly.

Manual seat ('98-99 model passenger's seat with seat heater):

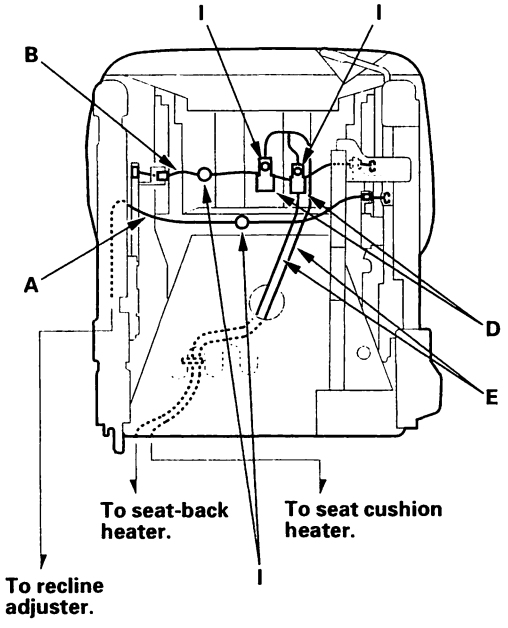

Manual seat ('00 model passenger's seat without side airbag):

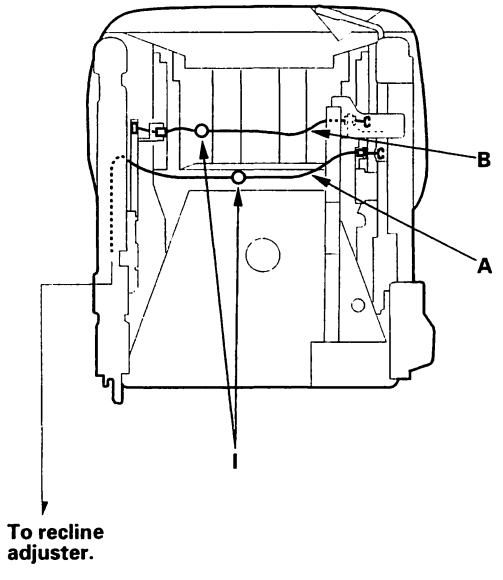

Manual seat ('00-02 models passenger's seat with side airbag):

-Seat back:

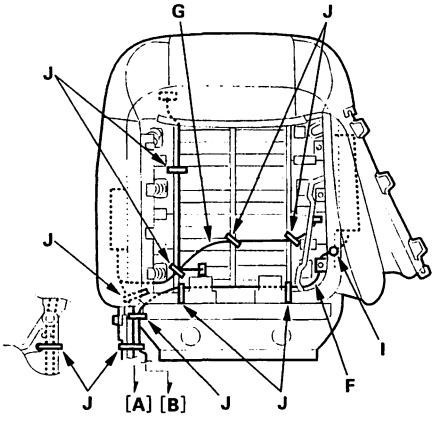

-Seat cushion ('00 model):

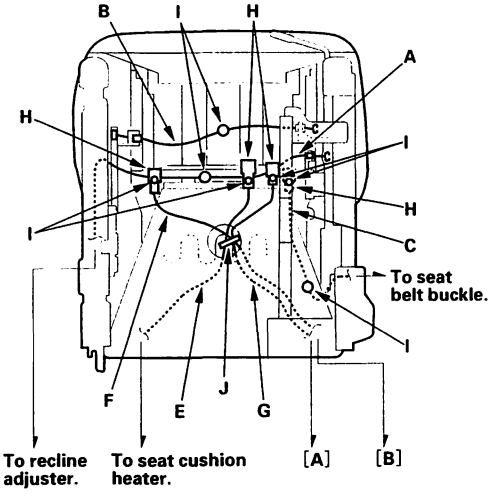

-Seat cushion ('01-02 models):

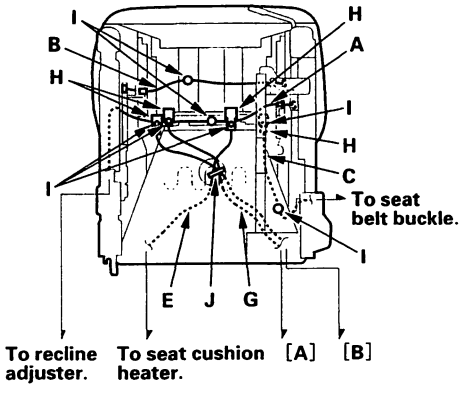

(cont'd)

BACK

Front Seat Wiring Harness and Cable Installation - Coupe (cont'd)

Manual height adjustable seat ('98-00 models):

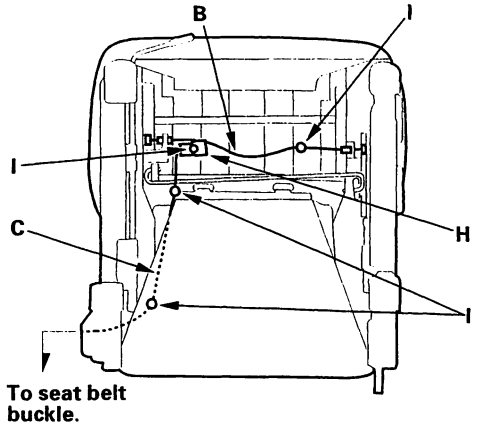

Manual height adjustable seat ('01-02 models with side airbag):

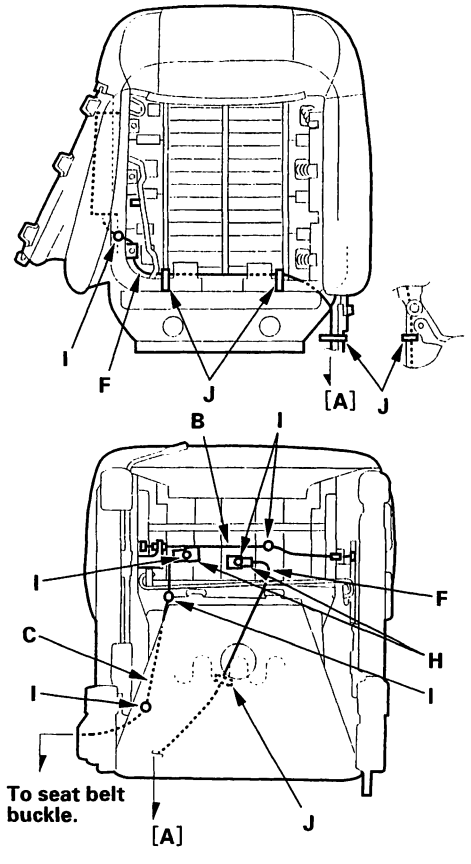

2-way power seat ('98-00 models):

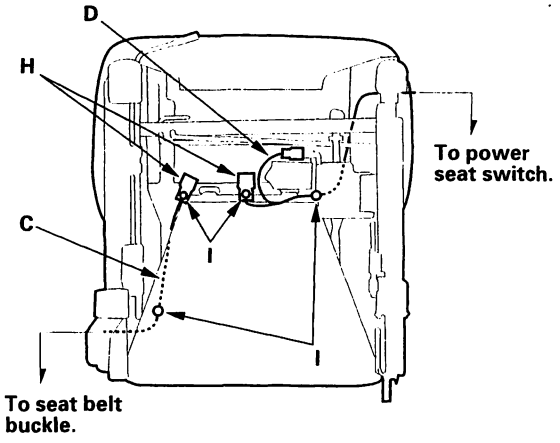

2-way power seat ('01-02 models):

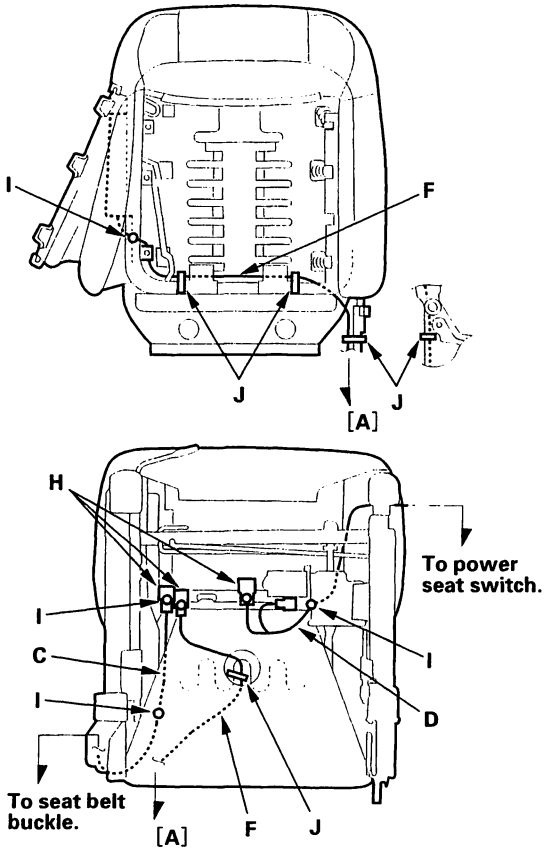

BACK

8-way power seat ('98-99 models with seat heater):

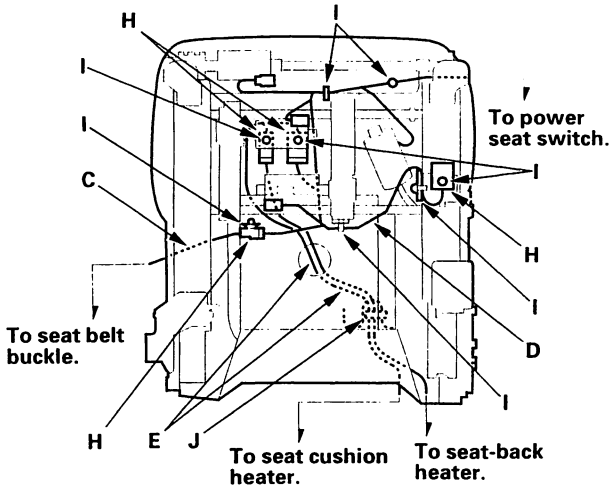

8-way power seat ('00 model with seat heater):

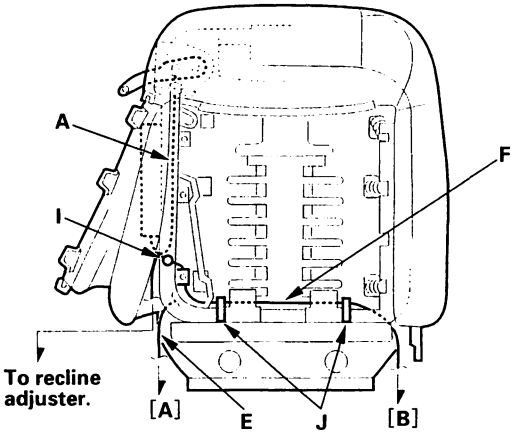

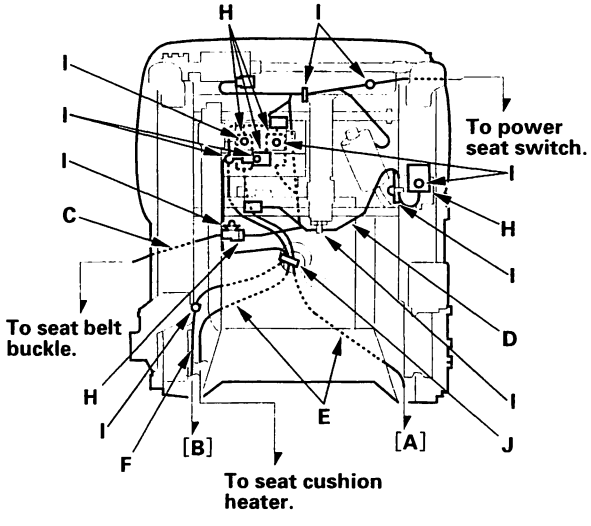

8-way power seat ('01-02 models with seat heater):

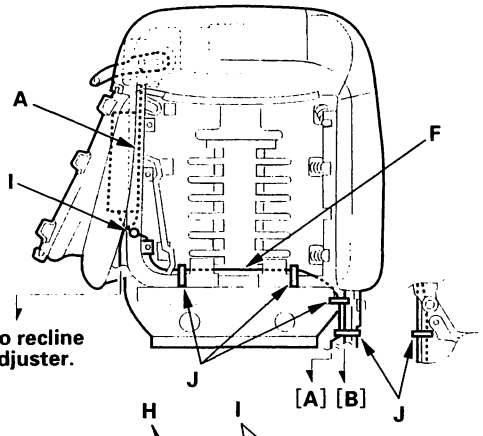

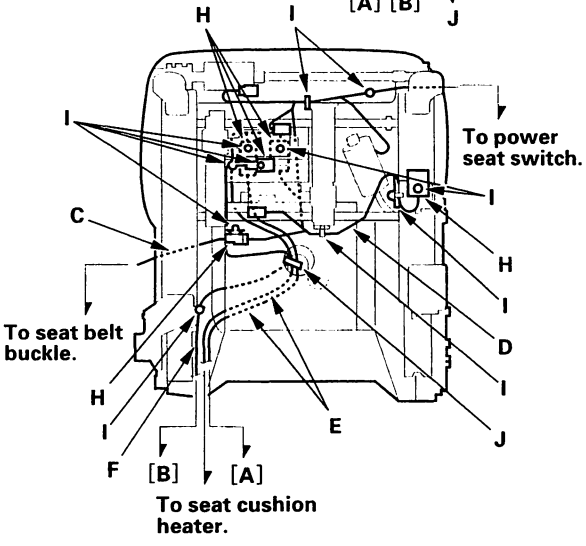

BACK

Front Seat Wiring Harness Installation - Sedan

When assembling the front seat, make sure the seat belt switch harness (A), seat harness (B), seat heater harnesses (C), side airbag harness ('00-02 models) (D), OPDS unit harness ('00-02 models) (E), connectors (F), clips (G) and wire ties (H) are fastened correctly.

Manual seat (driver's seat):

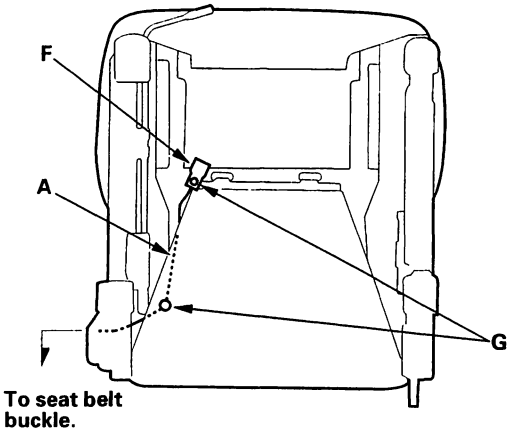

Manual seat ('98-99 models passenger's seat with seat heater):

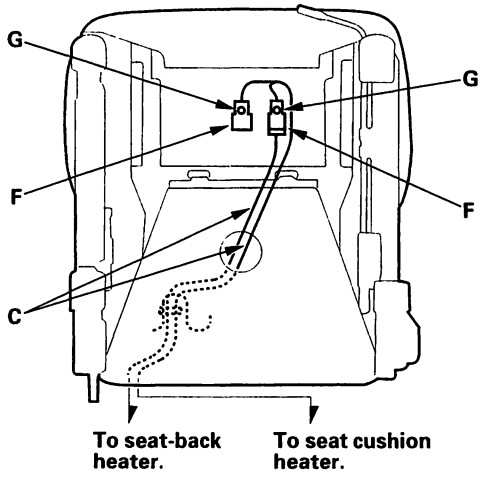

Manual seat ('00-02 models passenger's seat with side airbag):

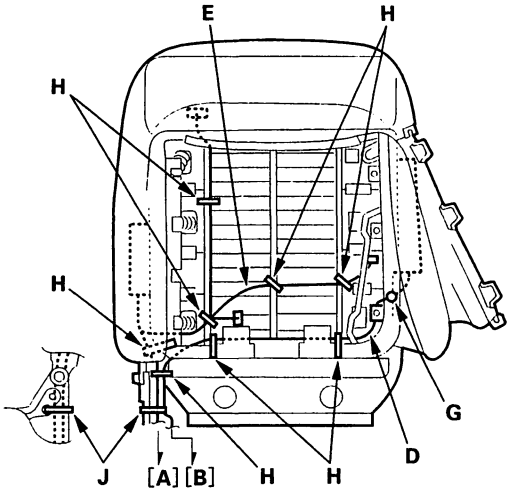

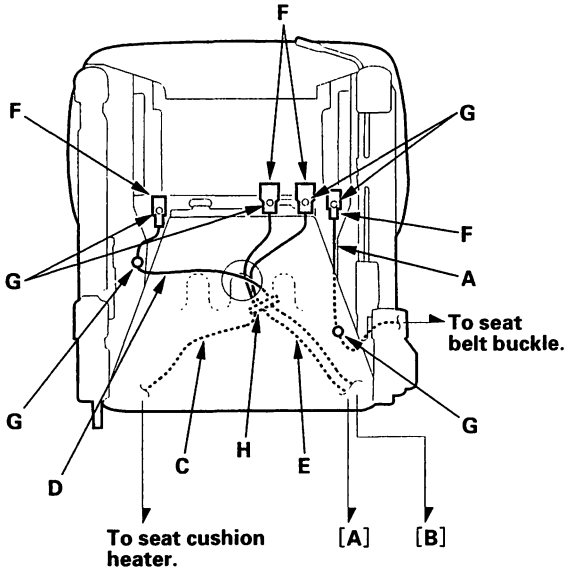

BACK

Manual height adjustable seat (without side airbag):

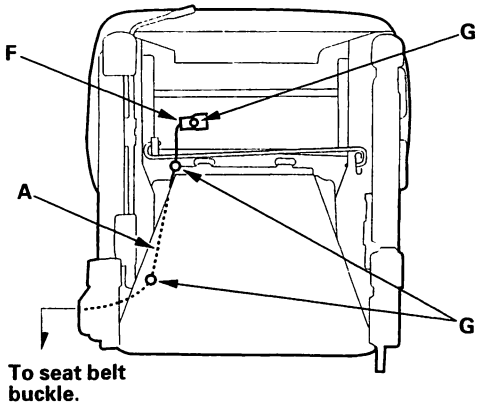

Manual height adjustable seat ('01-02 models with side airbag):

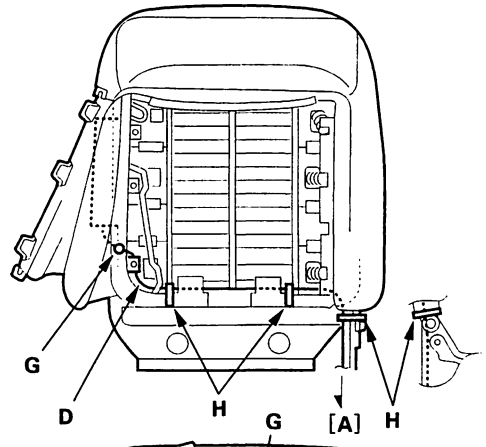

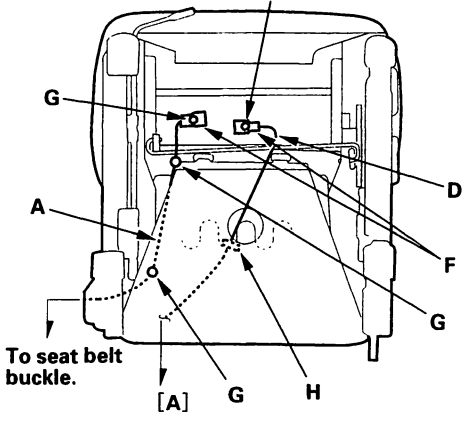

2-way power seat ('98-00 models):

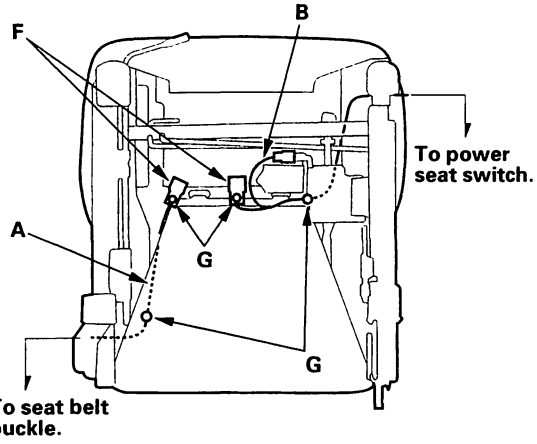

2-way power seat ('01-02 models):

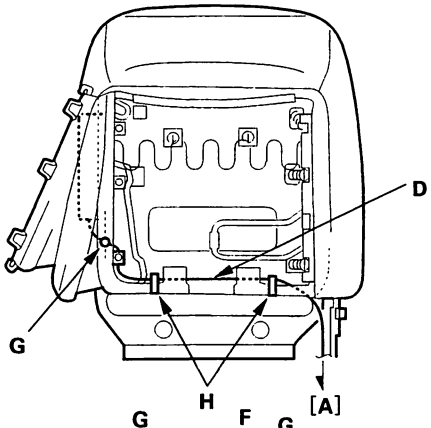

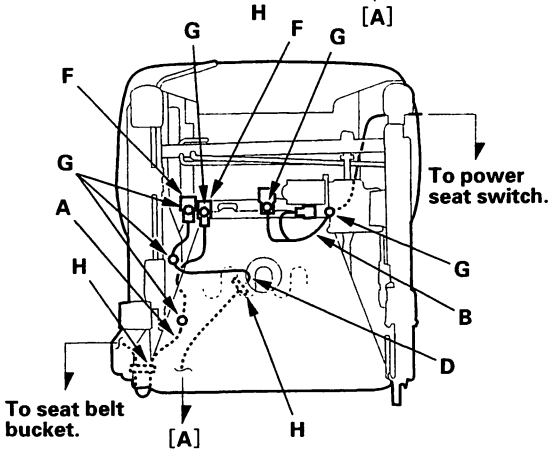

(cont'd)

Front Seat Wiring Harness Installation - Sedan (cont'd)

8-way power seat ('98-99 models with seat heater):

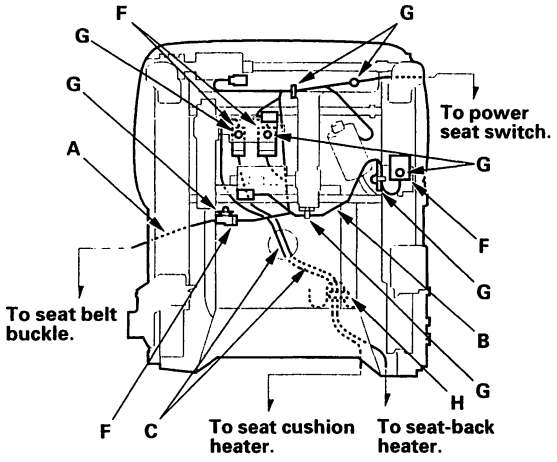

8-way power seat ('00-02 models with seat heater):

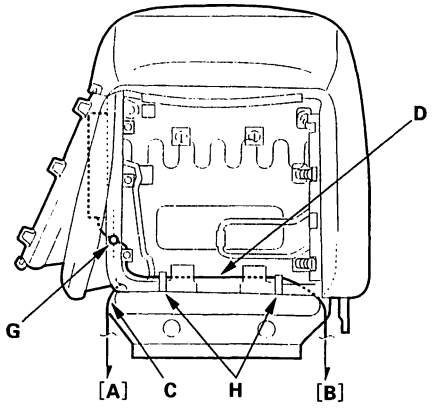

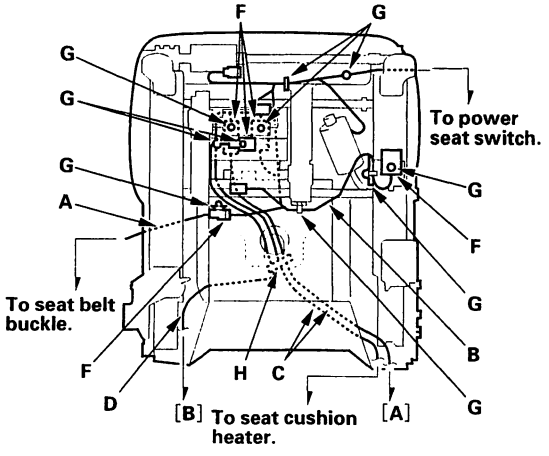

Front Seat Torsion Bar Replacement - Manual Height Adjustable

NOTE: Take care not to tear the seams or damage the seat covers.

1. Remove the front seat (see page 20-99).
2. Put on gloves to protect your hands. Remove the torsion bar (A) from the hook (B) with a flat-tip screwdriver (C), then pull out the torsion bar from the seat cushion frame (D).

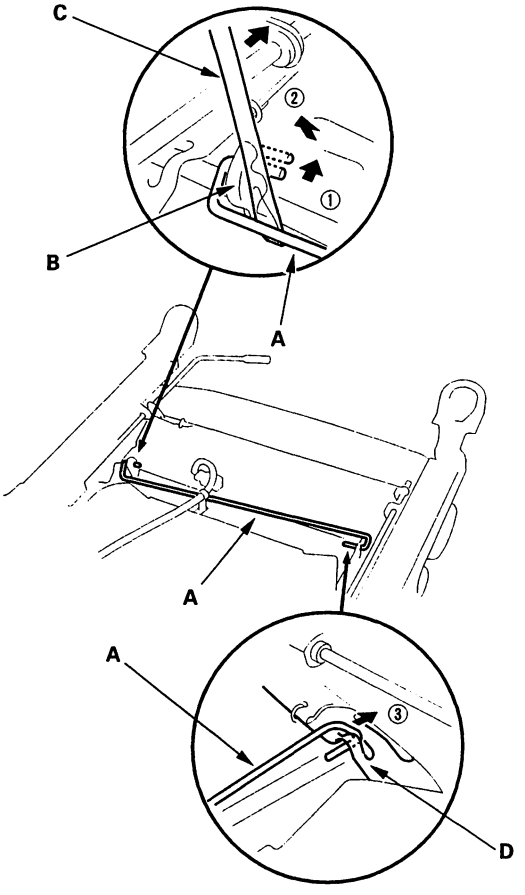

3. Install the torsion bar in the reverse order of removal.

BACK

Front Seat Linkage Disassembly/Reassembly - 2-Way Power

NOTE:
- Before removing the front seat from the vehicle, raise the seat cushion to its maximum height.
- Put on gloves to protect your hands.

Disassemble the front seat linkage as shown.
Reassemble the seat linkage in the reverse order of disassembly, and note these items:

- Replace the bushings with new ones.
- Apply multipurpose grease to the sliding and pivoting portions of the linkage.
- Check operation of the recline and slide/up-down adjusters

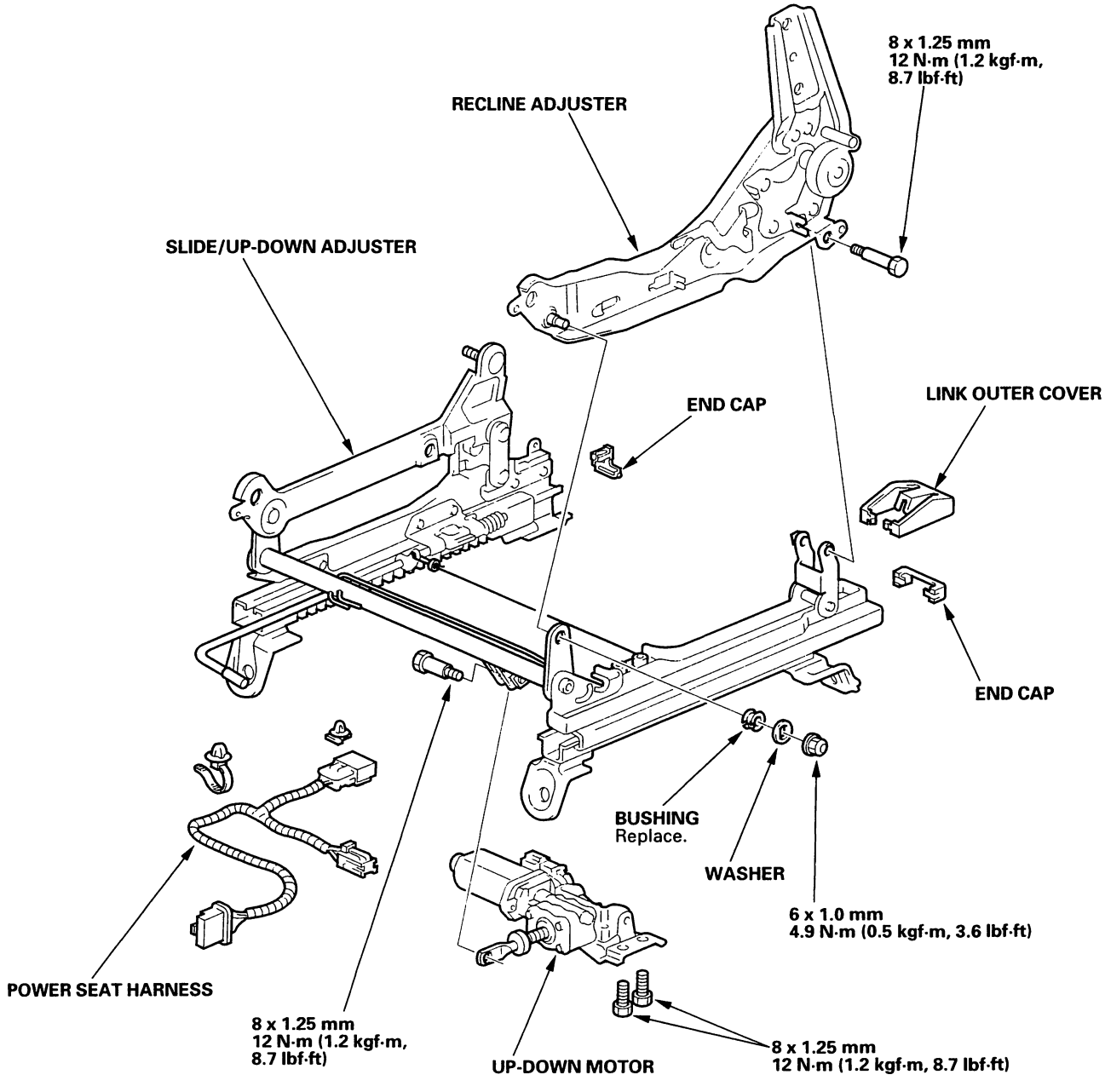

BACK

Front Seat Linkage Disassembly/Reassembly - 8-Way Power

Disassemble the front seat linkage as shown.
Reassemble the seat linkage in the reverse order of disassembly, and note these items:

- For the power height seat, replace the bushings with new ones.
- Apply multipurpose grease to the sliding and pivot portions.
- Check operation of the recline adjuster and slide/up-down adjuster.

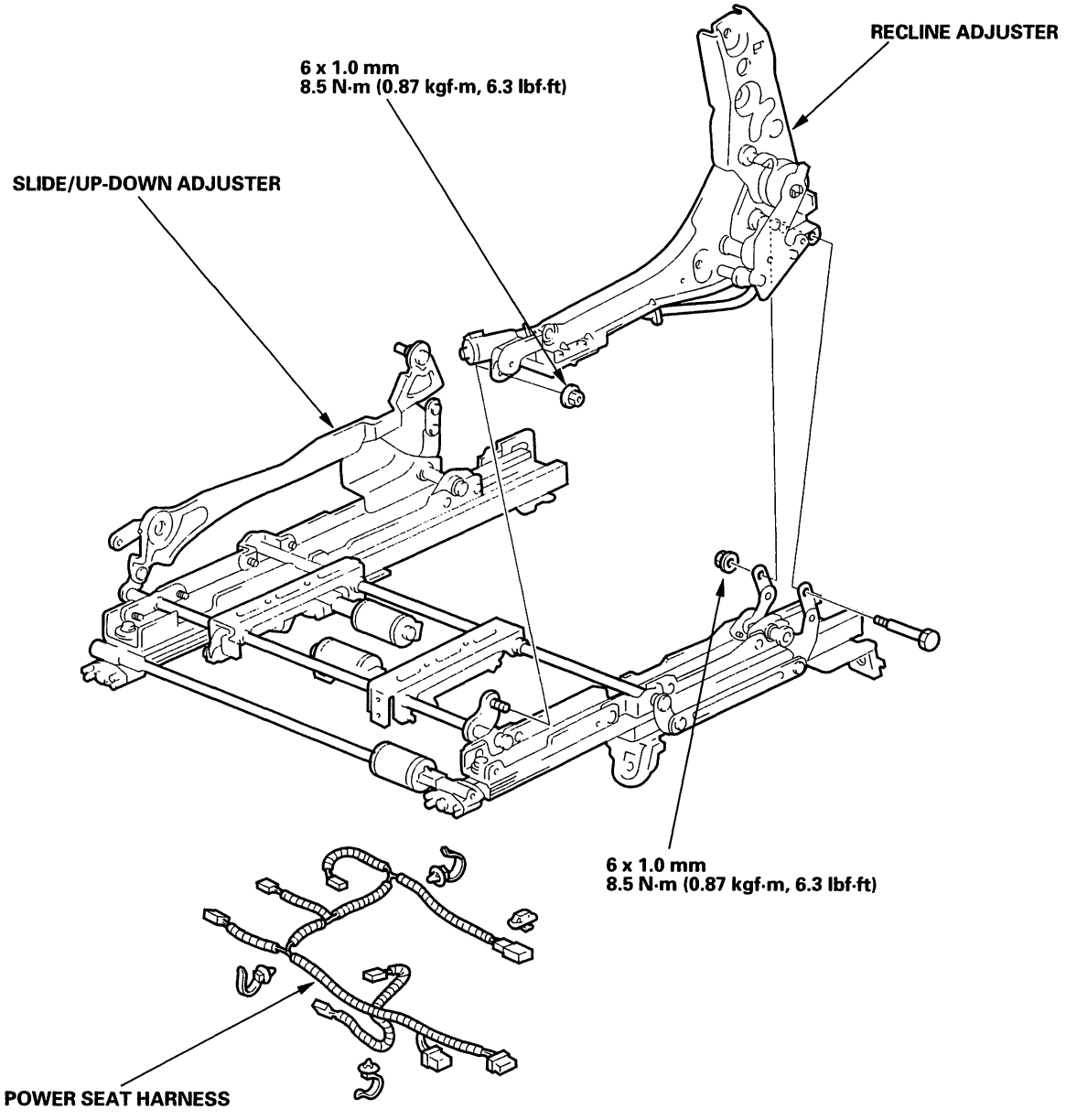

BACK

Front Seat Cover Replacement

'00-02 models Sedan: SRS components are located in this area. Review the SRS component locations (see page 23-23), and precautions and procedures (see page 23-28) in the SRS section before performing repairs or service.

NOTE:

- With side airbag ('00-02 models): The seat with a airbag is marked with a side airbag on the surface of the seat-back. Because the component parts (seat-back cover, cushion, etc.) of seats with and without airbags are different, make sure you install only the correct replacement parts.
- '00-02 models Sedan: The front seats with side airbags are produced by three different suppliers. Before replacing the seat-back, make sure the seat-back cover (A), pad (B) and frame (C) are from the same supplier. Before assembling the seat-back, make sure the suppliers identification (D) is the same on each part.

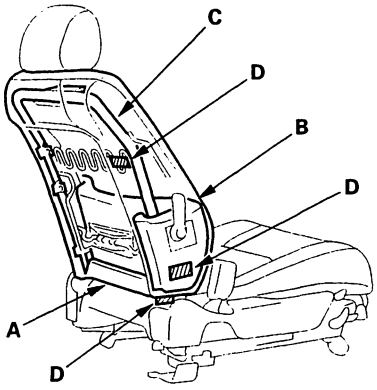

- With side airbag ('00-02 models): Do not repair any tears or frayed spots of the seat-back cover. If necessary, replace the seat-back cover.
- Take care not to tear the seams or damage the seat covers.
- With side airbag ('00-02 models): Do not touch the Occupant Position Detection System OPDS sensor in the seat-back pad. Keep the sensor free from grease oils and moisture, as they can damage the sensor. Oils can corrode the sensor, causing its faulty.
- Put on gloves to protect your hands.

Seat-back Cover

1. '98-99 models: With seat heater, remove the seat-back heater harness from the seat cushion:

   – 1 Remove the seat (see page 20-99).
   – 2 Disconnect the seat-back heater connector (A).
   – 3 Release the hooks (B), and pull back the seat cushion cover (C).
   – 4 Release the wire tie (D).
   – 5 Pull out the harness (E).

   Driver's seat (the passenger's seat is similar):

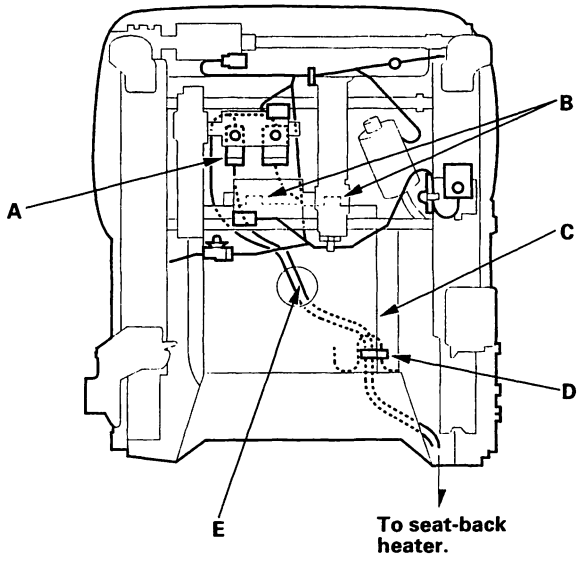

2. Fold the seat-back forward.

3. If equipped, remove the back panel (refer to step 7).

4. 8-way power seat on Coupe: Remove the rear seat access knob, '98-99 models (see page 20-112) or the access knob trim, '00-02 models (see page 20-113).

(cont'd)

Front Seat Cover Replacement (cont'd)

5. If equipped, remove the clip (A), then remove the lumbar support knob (B).

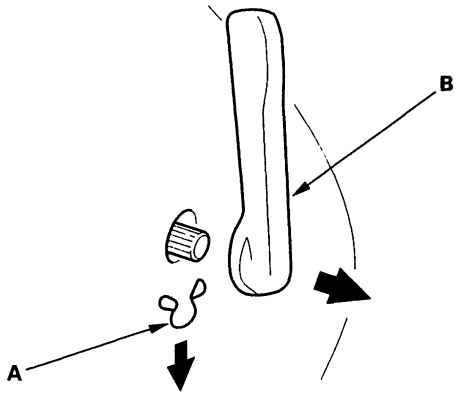

6. Without back panel, release the hook strip (A), and fold back the seat-back cover (B).

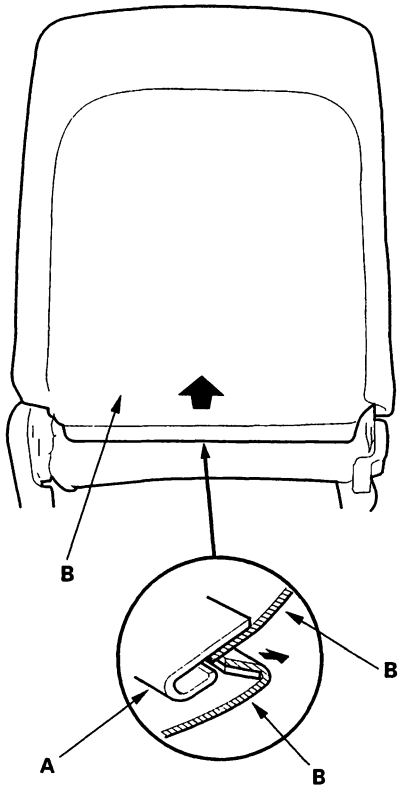

7. Release all of the inside springs (A), then fold back the seat-back cover (B), and release the hook strip (C).

Without back panel('98-00 models):

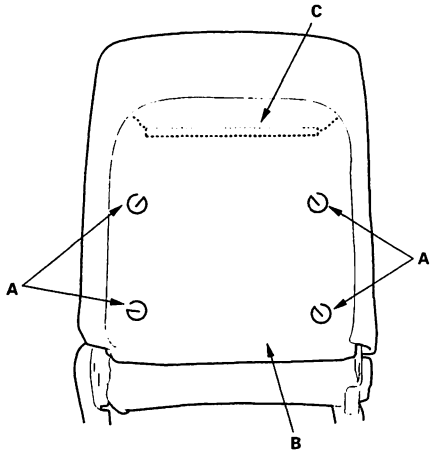

Without back panel ('01-02 models):

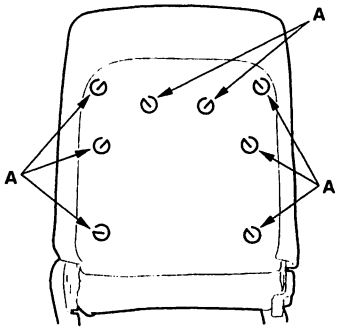

With back cover/Without side airbag (except leather seat cover, '98-00 model):

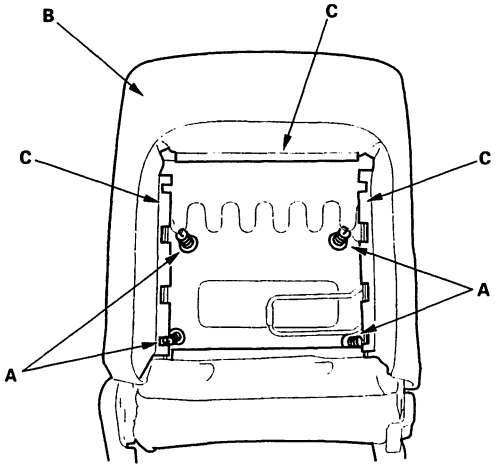

BACK

With back panel/Without side airbag (leather seat cover, '98-00 models):

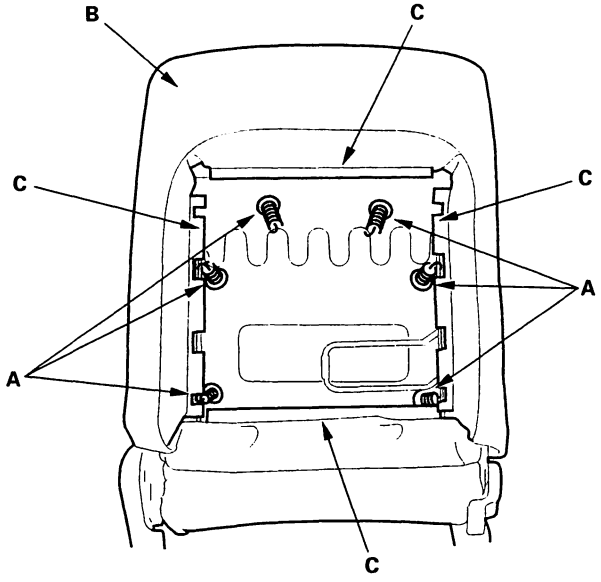

With side airbag ('00-02 models):

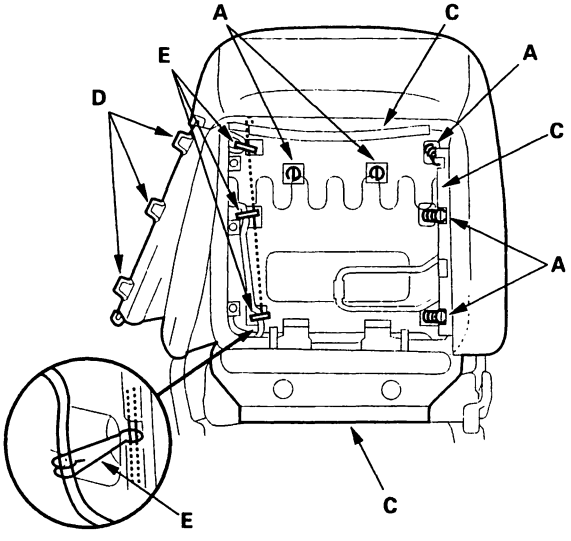

8. '00-02 models: If equipped with side airbag, release all the hooks (D, E). If there is no inside springs to release in step 7, release all of the clips from the locations which are showed as inside spring portions in this illustration.

9. Lift and pull out the release button (A), and remove the screw (B), then remove the headrest guide (C).

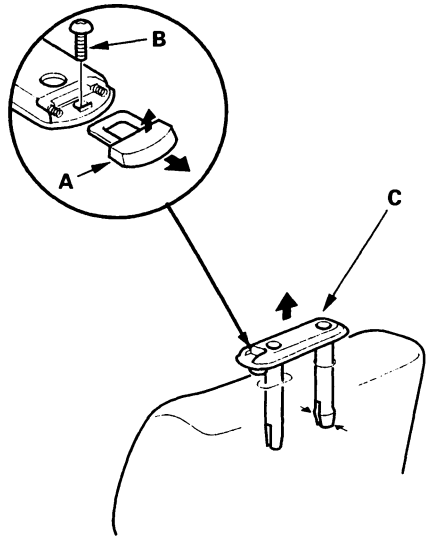

10. Pull back the edge of the seat-back cover all the way around.

11. '98-00 models Sedan: Except leather seat cover, release the fastner (A).

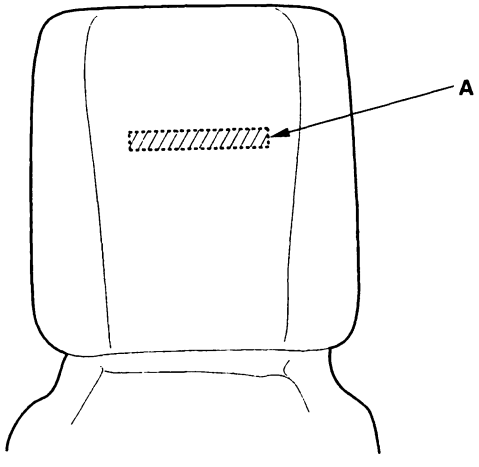

12. Remove the seat-back cover.

(cont'd)

Front Seat Cover Replacement (cont'd)

13. Install the cover in the reverse order of removal, and note these items:

    - To prevent wrinkles when installing a seat-back cover, make sure the material is stretched evenly over the pad before securing the fastener, hook and inside springs.
    - '00-02 models: On some type seats with side airbag, replace the clips (A) with new ones using commercially available upholstery ring pliers (B).
    - Use only original Honda replacement seat-back covers ('00-02 models).

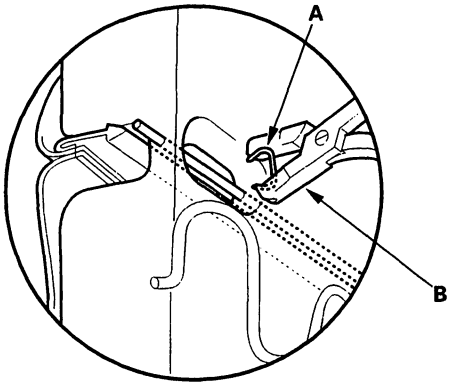

Seat Cushion Cover

1. Remove the front seat (see page 20-99).
2. Remove the seat cushion (see page 20-112).
3. Release the clips (A) and hooks (B) from under the s eat cushion, then loosen the seat cushion cover (C).

All except 8-way power seat:

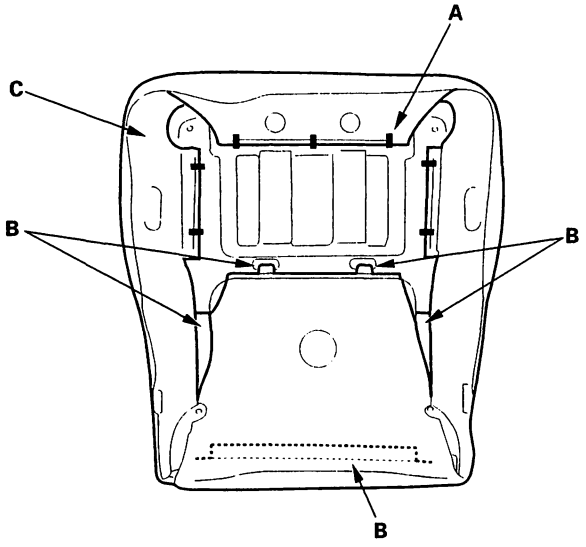

8-way power seat:

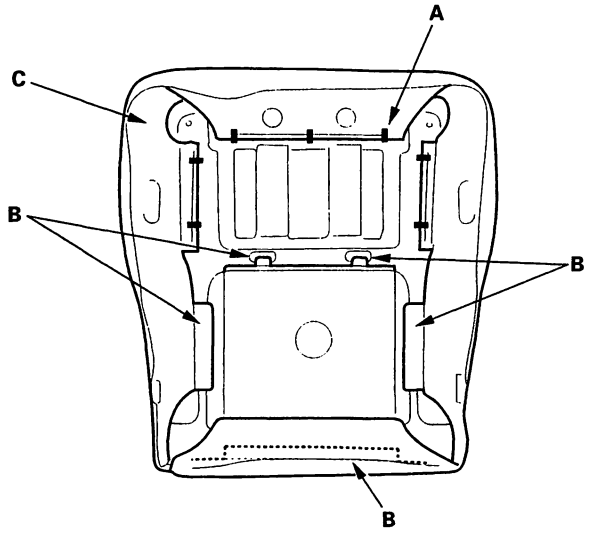

BACK

4. Pull back the edge of the seat cushion cover all the way around, and release the clips (A) and fastener (B), then remove the seat cushion cover. On a leather seat cover and '00-02 models seat cushion cover, there is no fastener to remove.

Except leather seat cover ('98-00 models):

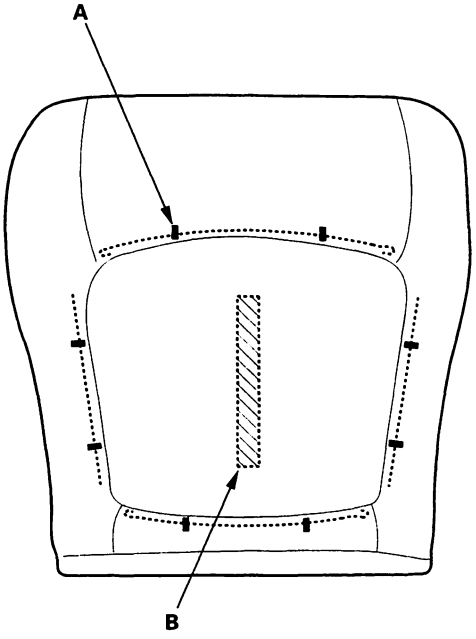

Except leather seat cover ('01-02 models):

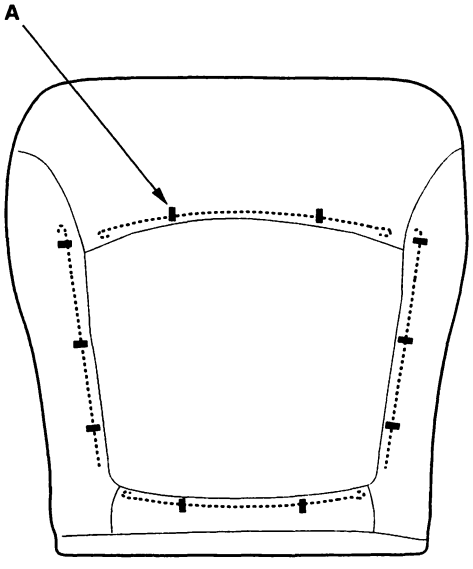

5. Install the cover in the reverse order of removal, and note these items.

- To prevent wrinkles when installing a seat cushion cover, make sure the material is stretched evenly over the pad before securing the clips and hooks.
- Replace the released clips with new ones (A) using commercially available upholstery ring pliers (B).

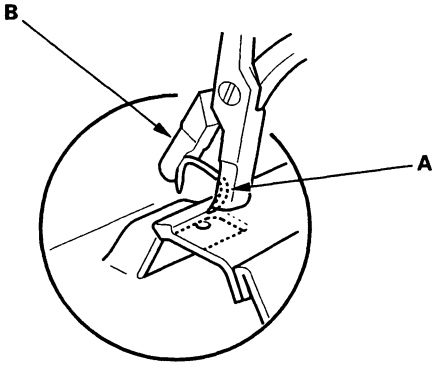

Rear Seat Removal/Installation - Coupe

NOTE: Take care not to scratch the body or tear the seat covers.

Remove the rear seat as shown.
Install the seat in the reverse order of removal, and note these items:

- Before attaching the rear seat-back and cushion, make sure there are no twists or kinks in the rear seat belts and center belt.
- When installing the seat cushion, slip the seat belt buckles through the openings in the seat cushion.
- Make sure the seat-back locks securely.

Fastener Locations

A ▶ : Bolt, 4	B ▶ : Bolt, 2	C ▶ : Bolt, 1	D ▶ : Bolt, 1
8 x 1.25 mm 22 N·m (2.2 kgf·m, 16 lbf·ft)	6 x 1.0 mm 9.8 N·m (1.0 kgf·m, 7.2 lbf·ft)	6 x 1.0 mm 9.8 N·m (1.0 kgf·m, 7.2 lbf·ft)	6 x 1.0 mm 9.8 N·m (1.0 kgf·m, 7.2 lbf·ft)

A ▷ : Clip, 1 B ▷ : Hook, 2

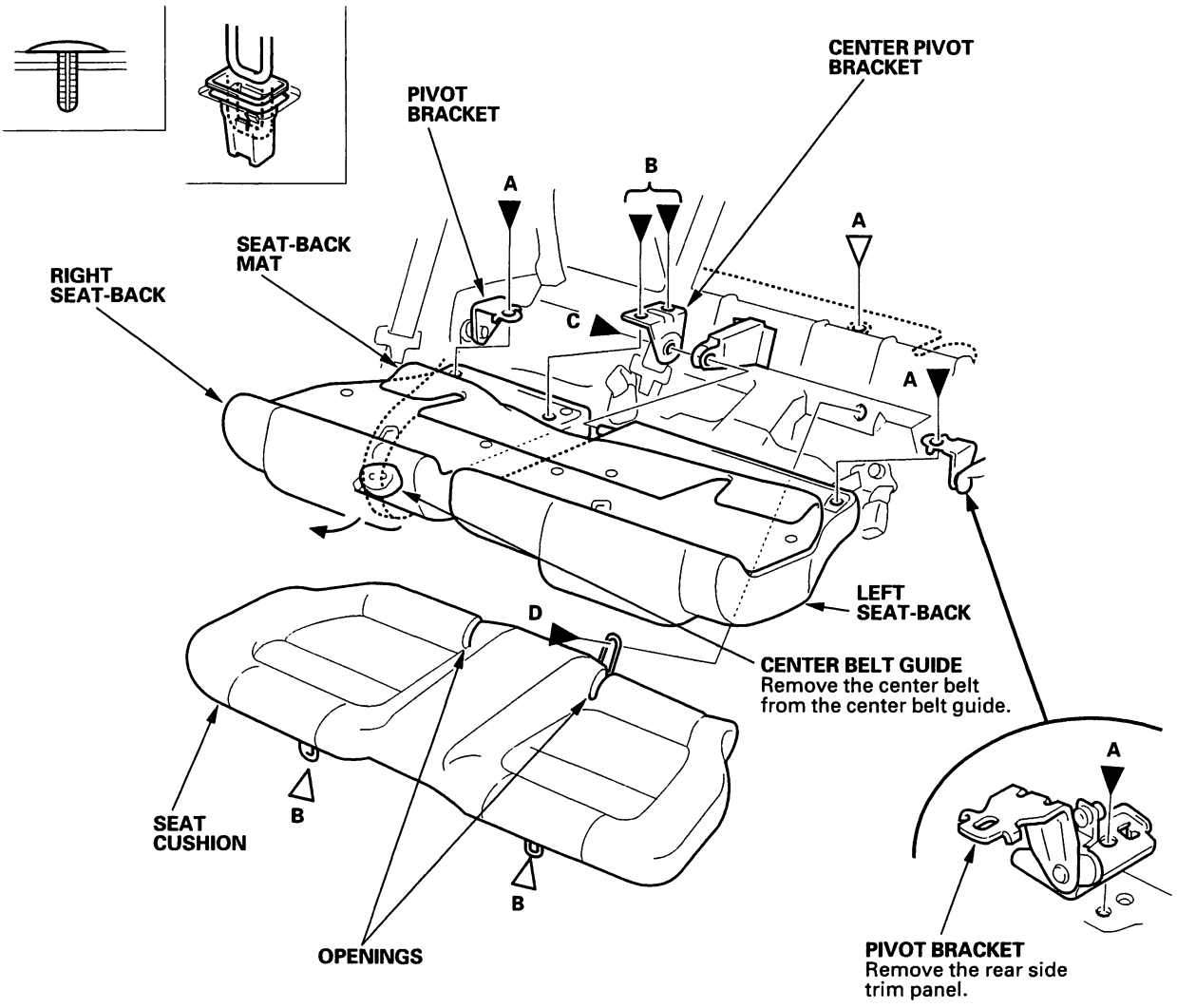

BACK

Rear Seat Removal/Installation - Sedan

NOTE: Take care not to scratch the body or tear the seat covers.

Remove the rear seat as shown.
Install the seat in the reverse order of removal, and note these items:

- Before attaching the rear seat-back and cushion, make sure there are no twists or kinks in the rear seat belts and center belt.
- When installing the seat cushion, slip the seat belt buckles through the slits in the seat cushion.
- Make sure the seat-back locks securelly.

Fastener Locations

A ▶ : Bolt, 4	B ▶ : Bolt, 2	C ▶ : Bolt, 1	A ▷ : Clip, 1	B ▷ : Hook, 2
8 x 1.25 mm 22 N·m (2.2 kgf·m, 16 lbf·ft)		6 x 1.0 mm 9.8 N·m (1.0 kgf·m, 7.2 lbf·ft)		

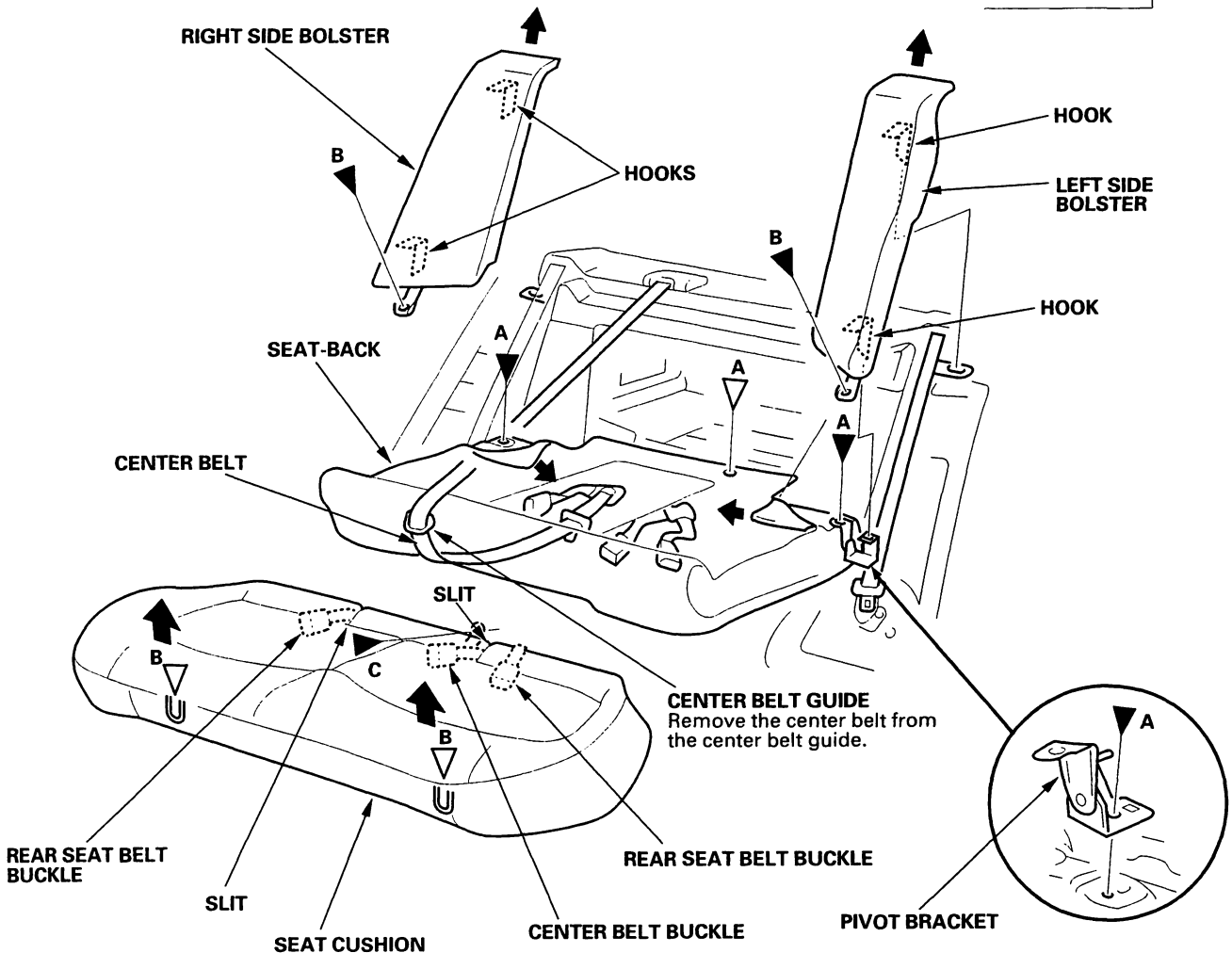

Rear Seat Armrest/Trunk Pass-through Cover Replacement - Sedan

NOTE: Take care not to tear the seams or damage the seat covers.

1. Remove the clip (A) from the left portion of the armrest pivot.

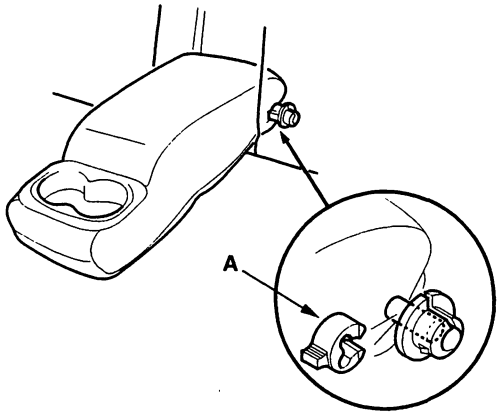

2. Remove the armrest.
   - 1 Slide the armrest (A) toward the driver's side of the vehicle.
   - 2 Remove the pivot shaft (B) from the collar (C) on the passenger's side of the vehicle by pulling up on the armrest, and remove the pivot shaft (B) from the collar (D) by pulling up on the armrest.

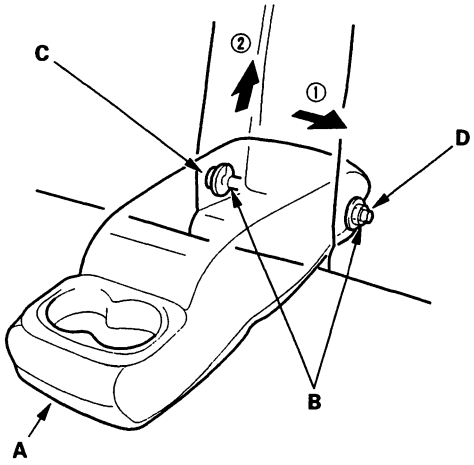

3. Remove the beverage holder.

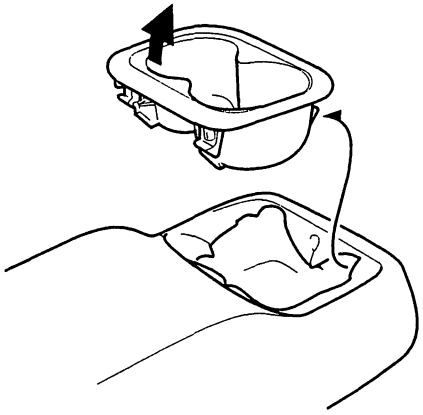

4. Fold the seat-back forward.

5. Remove the screws, and detach the hooks (A), then remove the trunk pass-through cover (B).

Fastener Locations

▶ : Screw, 2

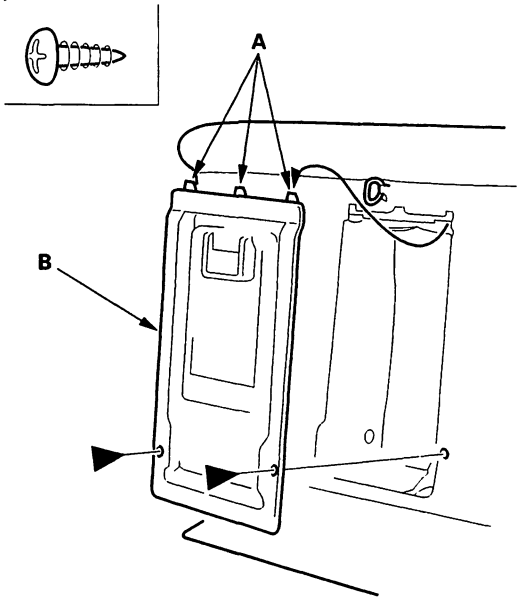

6. Install the armrest and trunk pass-through cover in the reverse order of removal.

BACK

Trunk Pass-through Cover Key Cylinder Replacement

NOTE:
- When prying with a flat-tip screwdriver, wrap it with protective tape to prevent damage.
- Take care not to scratch the cover.

1. Using a flat-tip screwdriver, pry the rear seat handle (A) up at either hook portion (B) on forward side of the trunk pass through cover (C). Then slide the handle half-way up.

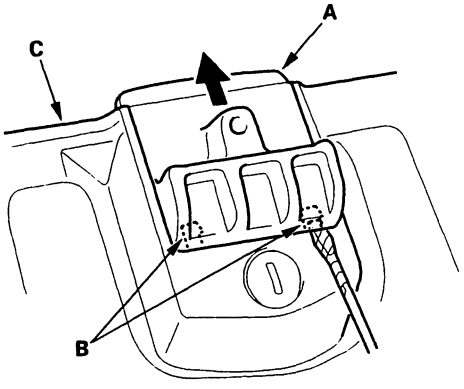

2. From trunk compartment side of the cover, using a small screwdriver, press the inside hook (A) down through the access hole (B).

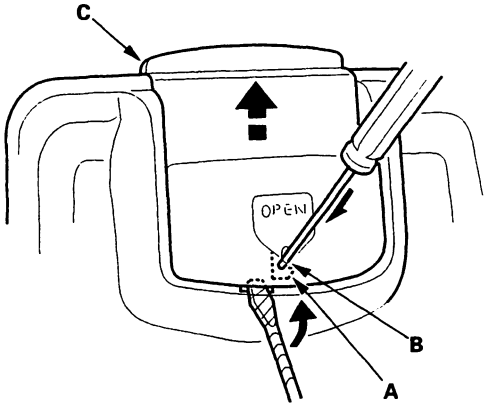

3. While pressing the hook, pry the trunk handle (C) up with a flat-tip screwdriver.

4. Remove the trunk handle (A) and rear seat handle (B) together at the same time.

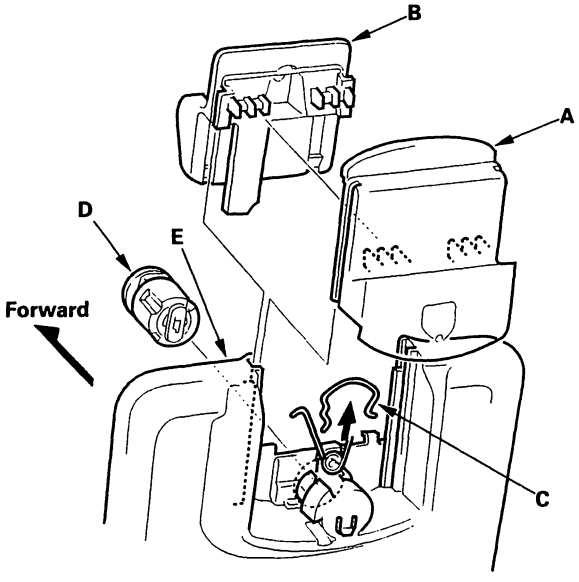

5. Remove the retainer clip (C), then remove the trunk pass-through cover key cylinder (D) from the cover (E).

6. Install the key cylinder in the reverse order of removal, and note these items:

   - Put the two handles together before installing them on the trunk pass-through cover.
   - Make sure the trunk pass-through cover opens properly and locks securely.

Rear Seat-back Latch and Lock Cylinder Replacement - Coupe

NOTE:
- When prying with a flat-tip screwdriver, wrap it with protective tape to prevent damage.
- Take care not to bend or scratch the interior trim.

1. Remove these items (see page 20-128):

   - Rear seat-backs and rear seat cushion

2. Remove these items (see page 20-76):

   - Rear bulkhead cover
   - Center anchor bolt of the center belt
   - Center belt lid
   - High mount brake light
   - Lock cylinder trim
   - Rear shelf

3. Remove these items (see page 20-74):

   - Door sill trim (both sides) and rear side trim panel

4. Disconnect the cylinder rods (A) from the seat-back latch (B) on both sides.

Fastener Locations

C ▶ : Bolt, 4

6 x 1.0 mm
9.8 N·m
(1.0 kgf·m, 7.2 lbf·ft)

D ▶ : Screw, 2

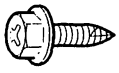

4 x 0.7 mm
1.6 N·m
(0.16 kgf·m, 1.2 lbf·ft)

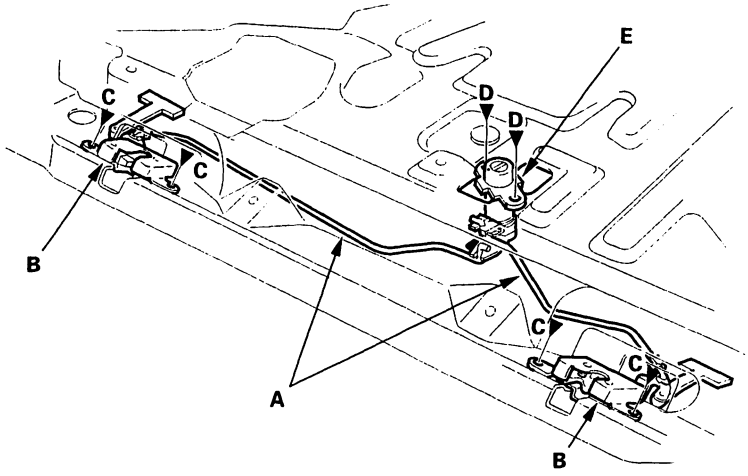

5. Remove the bolts (C), then remove the seat-back latch.

6. Remove the screws (D), then remove the seat-back lock cylinder (E) and cylinder rods.

7. Install the latch and lock cylinder in the reverse order of removal, and note these items:

   - Make sure the cylinder rods are securely connected.
   - Make sure the seat-backs open properly.

BACK

Rear Seat-back Latch Replacement - Sedan

NOTE:
- When prying with a flat-tip screwdriver, wrap it with protective tape to prevent damage.
- Take care not to bend or scratch the interior trim.

1. Remove these items:
   - Seat side bolster, both sides (see page 20-129)
   - Rear bulkhead cover (see page 20-77)
2. Disconnect the cylinder rod (A) from the trunk compartment.

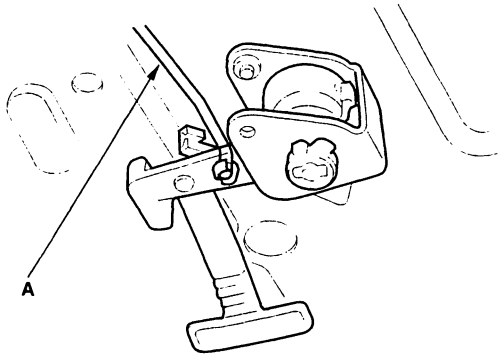

3. Remove the bolts, then remove the seat-back latch.

Fastener Locations

▶ : Bolt, 2

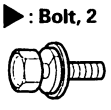

6 x 1.0 mm
9.8 N·m
(1.0 kgf·m, 7.2 lbf·ft)

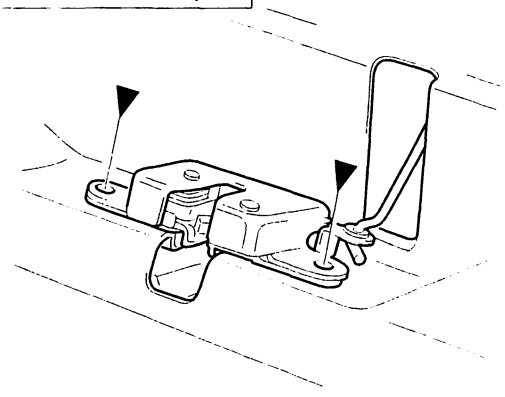

4. Install the latch in the reverse order of removal, and note these items:
   - Make sure the cylinder rod is connected securely.
   - Make sure the seat-back locks securely and opens properly.

Rear Seat-back Lock Cylinder Replacement - Sedan

NOTE:
- When prying with a flat-tip screwdriver, wrap it with protective tape to prevent damage.
- Take care not to bend or scratch the interior trim.

1. Remove the seat side bolsters (both sides) (see page 20-129).
2. Remove the rear door opening trim (both sides) (see page 20-75).
3. Remove these items (see page 20-75):
   - Rear door opening trim (both sides)
   - Rear pillar trim (both sides)
   - Rear bulkhead cover
   - Center anchor bolt of the center belt
   - Center belt lid
   - High mount brake light
   - Lock cylinder trim
   - Rear shelf
4. Disconnect the cylinder rod from the trunk compartment. Refer to the Seat-back Latch Replacement, step 2.
5. Remove the bolts, then remove the seat-back lock cylinder.

Fastener Locations

▶ : Bolt, 2

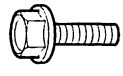

6 x 1.0 mm
9.8 N·m
(1.0 kgf·m, 7.2 lbf·ft)

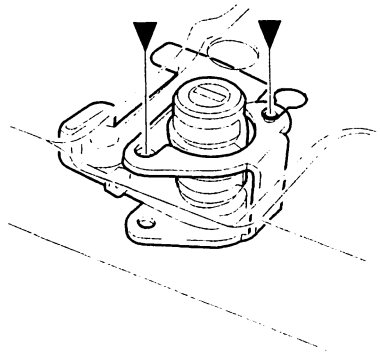

6. Install the lock cylinder in the reverse order of removal, and note these items:
   - Make sure the cylinder rod is connected securely.
   - Make sure the seat-back open properly.

Rear Seat-back Cover Replacement - Coupe

NOTE:
- Take care not to tear the seams or damage the seat covers.
- Put on gloves to protect your hands.

1. Remove the seat-backs (see page 20-128).

2. Remove the screws, then remove the center belt guide from right seat-back.

Fastener Locations

▶ : Screw, 2

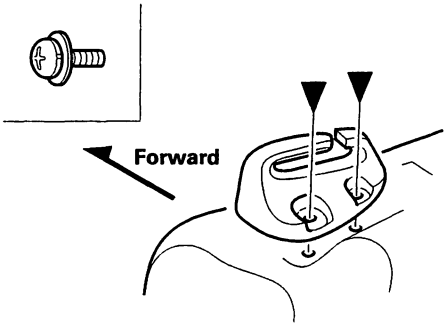

3. Remove the clips, and pull the seat-back mat (A) back, then separate the left seat-back (B) and right seat-back (C).

Fastener Locations

▷ : Clip, 16

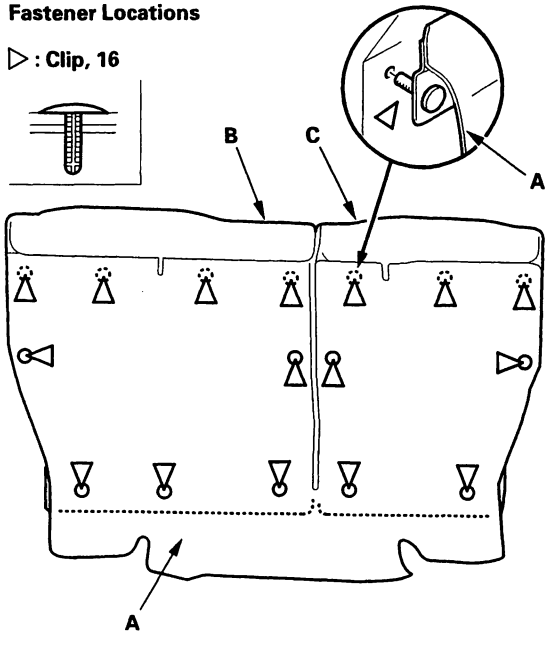

4. Release all the clips (A), and fold back the seat-back cover.

Left seat-back:

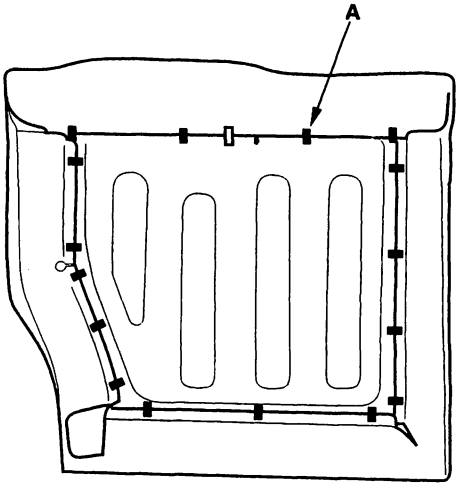

Right seat-back:

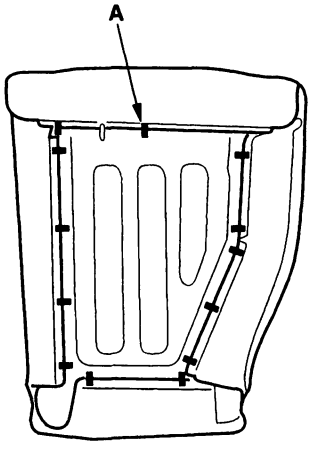

BACK

5. Pull back of the seat-back cover (A) all the way around, release the clips (B) and hooks (C) from the pad (D).

Left seat-back:

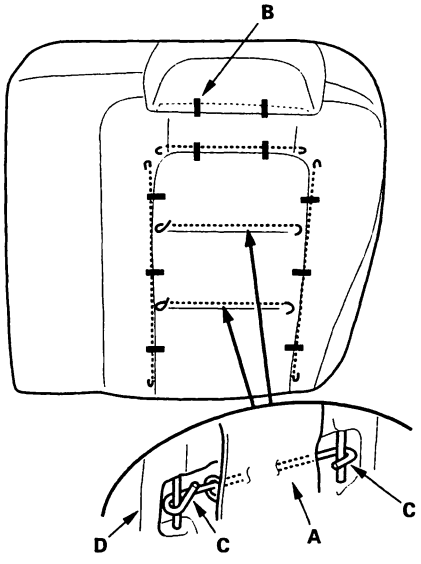

Right seat-back:

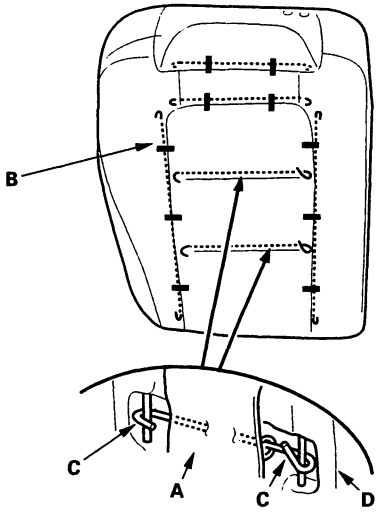

6. Install the cover in the reverse order of removal, and note these items:

   - To prevent wrinkles when installing a seat-back cover, make sure the material is stretched evenly over the pad before securing the hooks and clips.
   - Replace the released clips with new ones.

Rear Seat-back Cover Replacement - Sedan

NOTE:
- Take care not to tear the seams or damage the seat covers.
- Put on gloves to protect your hands.

1. Remove the seat-back (see page 20-129).

2. If equipped, remove the armrest and armrest frame (see page 20-130).

3. Remove the screws, then remove the center belt guide.

Fastener Locations

▶ : Screw, 2

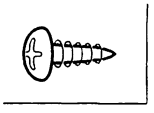

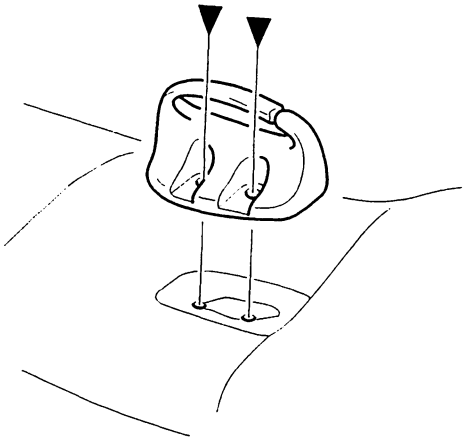

(cont'd)

Rear Seat-back Cover Replacement - Sedan (cont'd)

4. Remove the clips, then pull back the seat-back mat.

With armrest:

Fastener Locations

▷ : **Clip, 6**

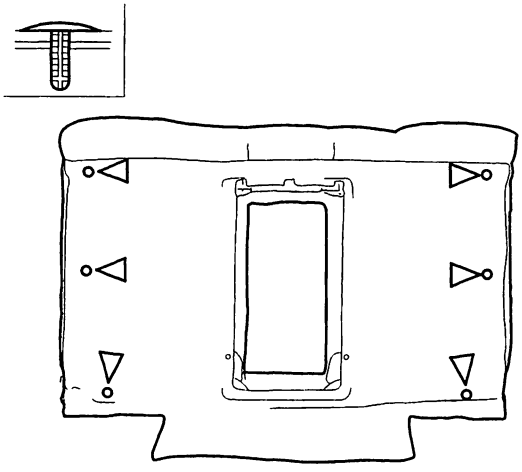

Without armrest:

Fastener Locations

▷ : **Clip, 8**

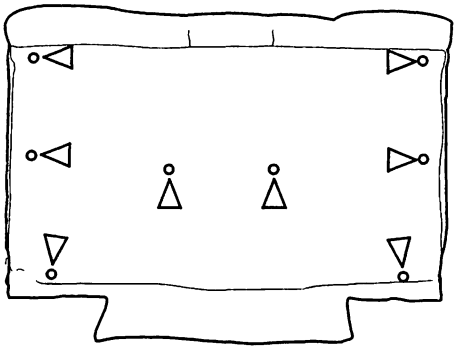

5. Release all the clips (A) and hook strips (B), and fold back the seat-back cover (C).

With armrest:

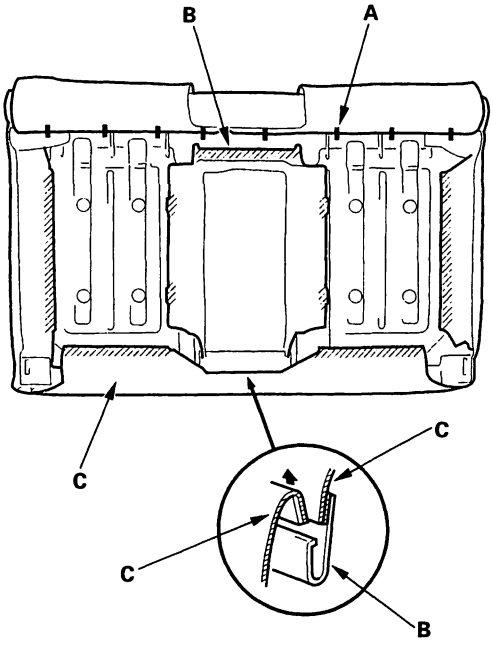

Without armrest:

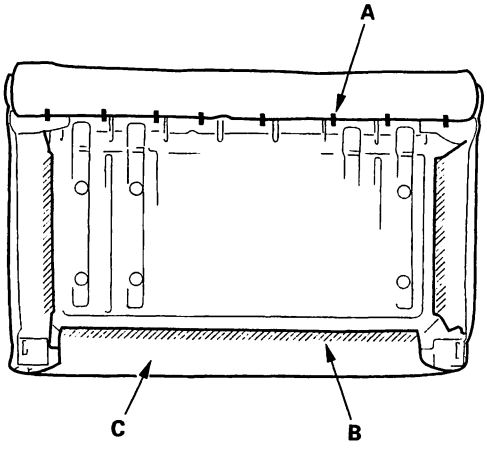

BACK

6. Pull back the edge of the seat-back cover (A) all the way around, and release the clips (B) and fasteners (C), then remove the seat-back cover. On a leather seat cover, there are no fasteners (C).

All except leather seat cover:

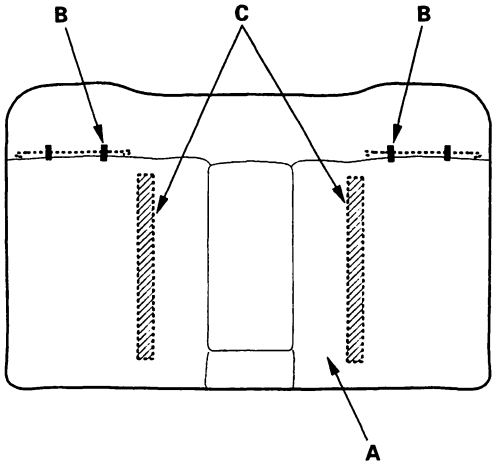

Leather seat cover:

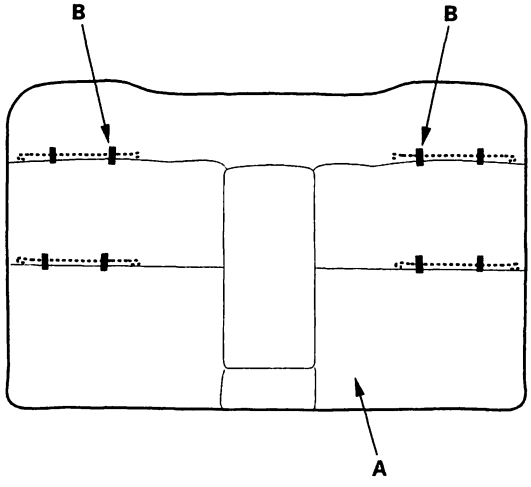

7. Install the cover in the reverse order of removal, and note these items:

   - To prevent wrinkles when installing a seat-back cover, make sure the material is stretched evenly over the pad before securing the fasteners, hooks and clips.
   - Replace the released clips with new ones.

Rear Seat Side Bolster Cover Replacement - Sedan

1. Remove the seat side bolster (see page 20-129).

2. Release all the hook strips (A), fold back the seat side bolster cover (B), and remove it.

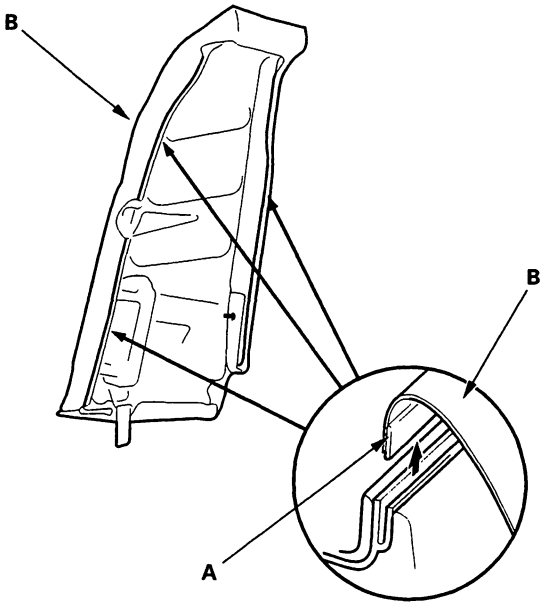

3. Install the cover in the reverse order of removal, and to prevent wrinkles, make sure the material is stretched evenly over the pad before securing the hook strips.

Rear Seat Cushion Cover Replacement - Coupe

1. Remove the seat-backs and seat cushion (see page 20-128).

2. Release all the clips (A) from under the seat cushion, and fold back the seat cushion cover.

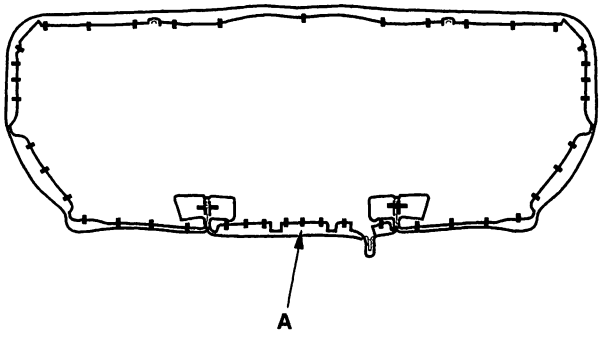

3. Pull back the edge of the seat cushion cover all the way around, and release the clips (A) and inside springs (B), then remove the seat cushion cover.

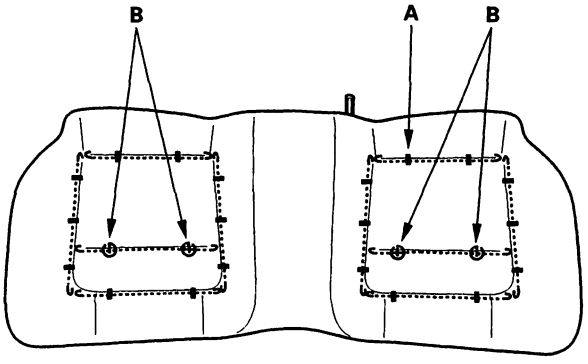

4. Install the cover in the reverse order of removal, and note these items:

   - To prevent wrinkles when installing a seat cushion cover, make sure the material is stretched evenly over the pad before securing the inside springs and clips.
   - Replace the clips with new ones (A) using commercially available upholstery ring pliers (B).

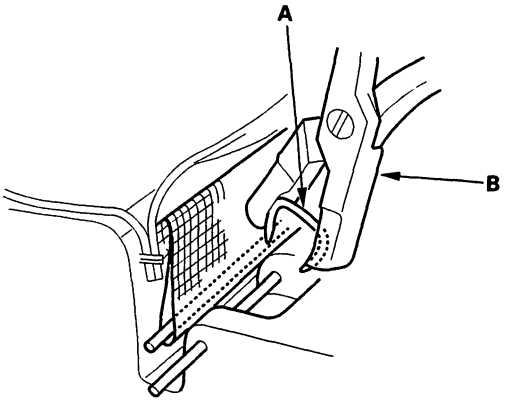

BACK

Rear Seat Cushion Cover Replacement - Sedan

1. Remove the seat cushion (see page 20-129).

2. Release all the clips (A) from under the seat cushion, and fold back the seat cushion cover.

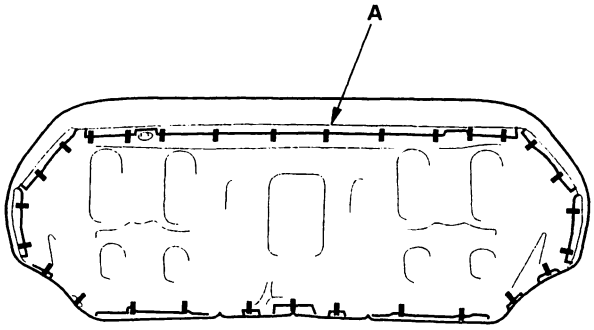

3. Pull back the edge of the seat cushion cover all the way around, and release the clips (A) and fasteners (B), then remove the seat cushion cover. On a leather seat cover, there are no fasteners (B).

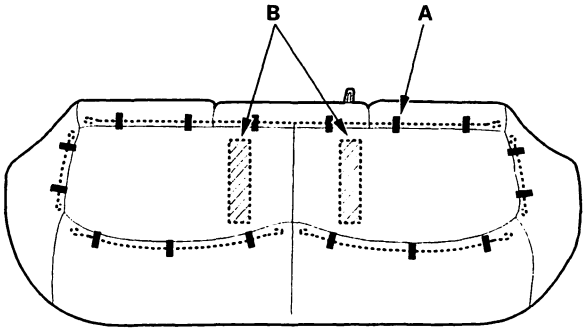

4. Install the cover in the reverse order of removal, and note these items:

   - To prevent wrinkles, make sure the material is stretched evenly over the pad before securing the fasteners and clips.
   - Replace the clips with new ones (A) using commercially available upholstery ring pliers (B).

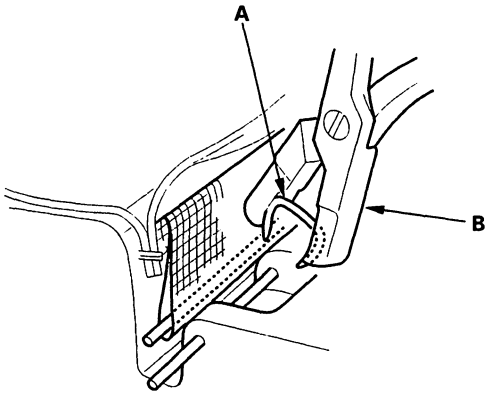

Front Bumper Removal/Installation - Coupe

'98-00 models

NOTE:
- An assistant is helpful when removing the front bumper.
- Take care not to scratch the front grille, front bumper and body.
- Put on gloves to protect your hands.

Remove the front bumper as shown.
Install the bumper in the reverse order of removal, and note these items:

- Make sure the front bumper engages the side clips, and the hooks (of the corner upper beams) on each side securely.
- Replace any damaged clips.

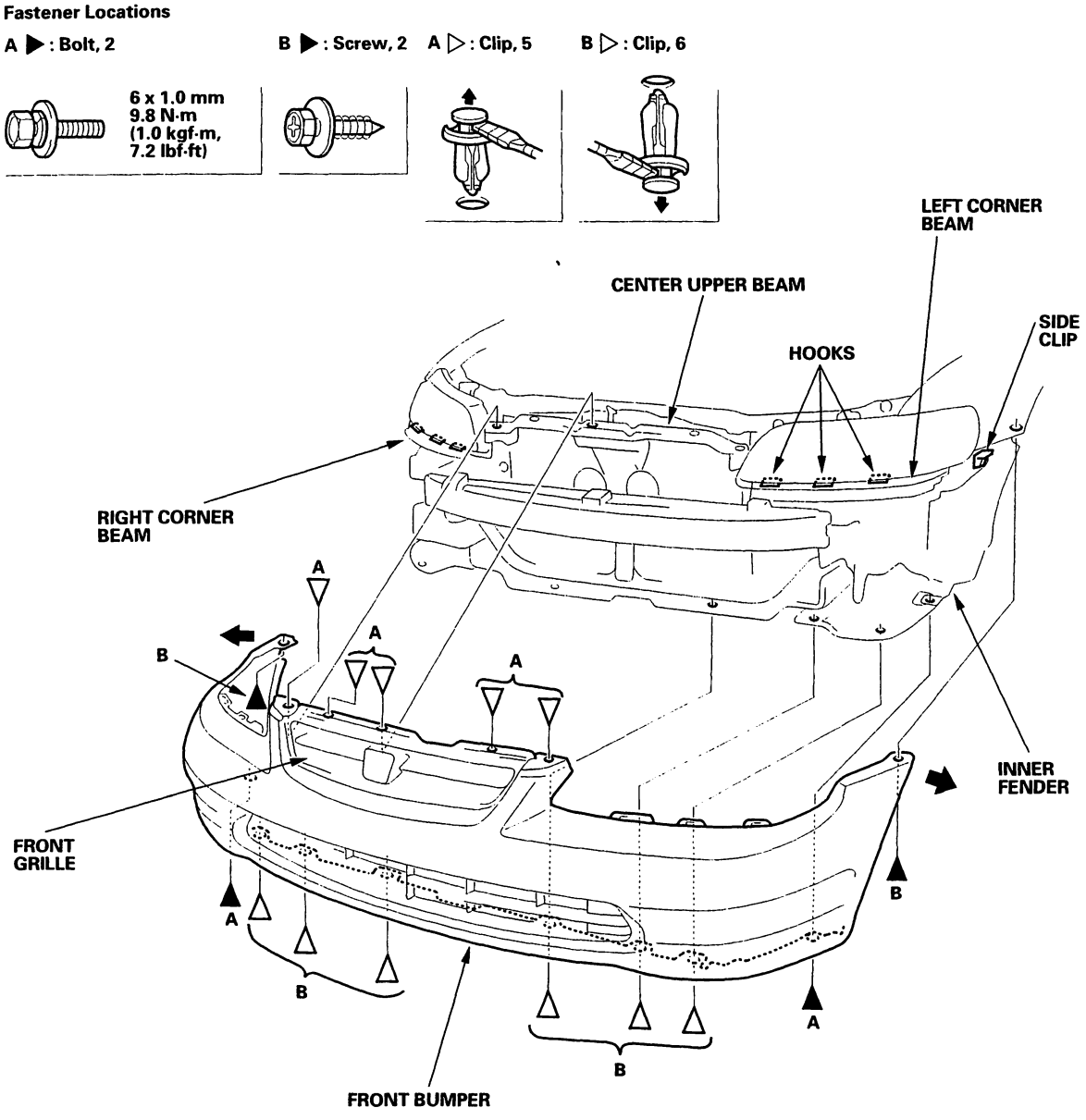

BACK

'01-02 models

NOTE:
- An assistant is helpful when removing the front bumper.
- Take care not to scratch the front grille, front bumper and body.
- Put on gloves to protect your hands.

Remove the front bumper as shown.
Install the bumper in the reverse order of removal, and note these items:

- Make sure the front bumper engages the side clips, and the hooks (of the corner upper beams) on each side securely.
- Replace any damaged clips.

Fastener Locations

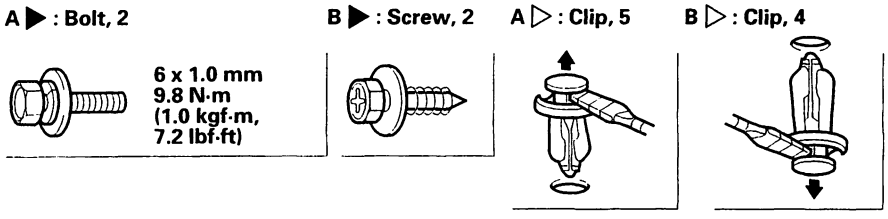

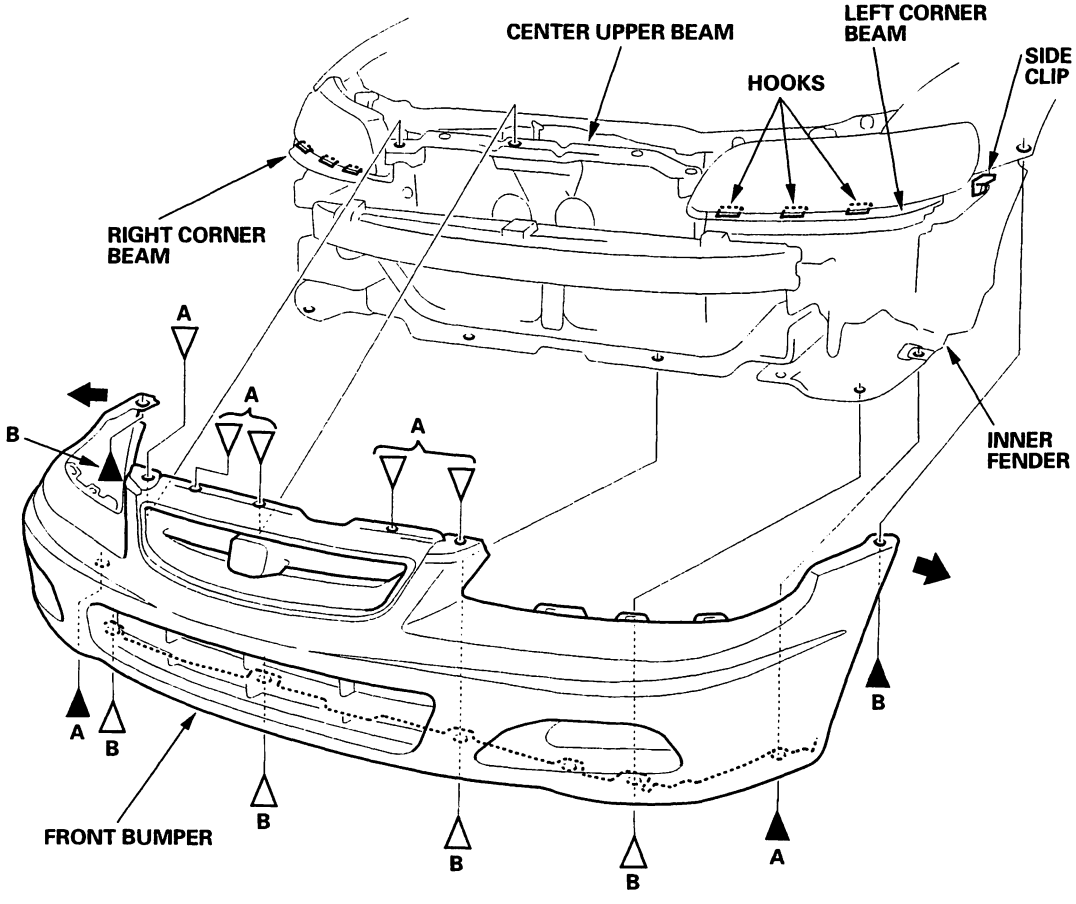

Front Bumper Removal/Installation - Sedan

'98-00 models

NOTE:
- An assistant is helpful when removing the front bumper.
- Take care not to scratch the front bumper and body.
- Put on gloves to protect your hands.

Remove the front bumper as shown.
Install the bumper in the reverse order of removal, and note these items:

- After reinstalling the center upper beam, check the aim of the headlights (see page 22-98).
- Make sure the front bumper engages the side clips, and the hooks (of the center and corner upper beams) on each side securely.
- Replace any damaged clips.

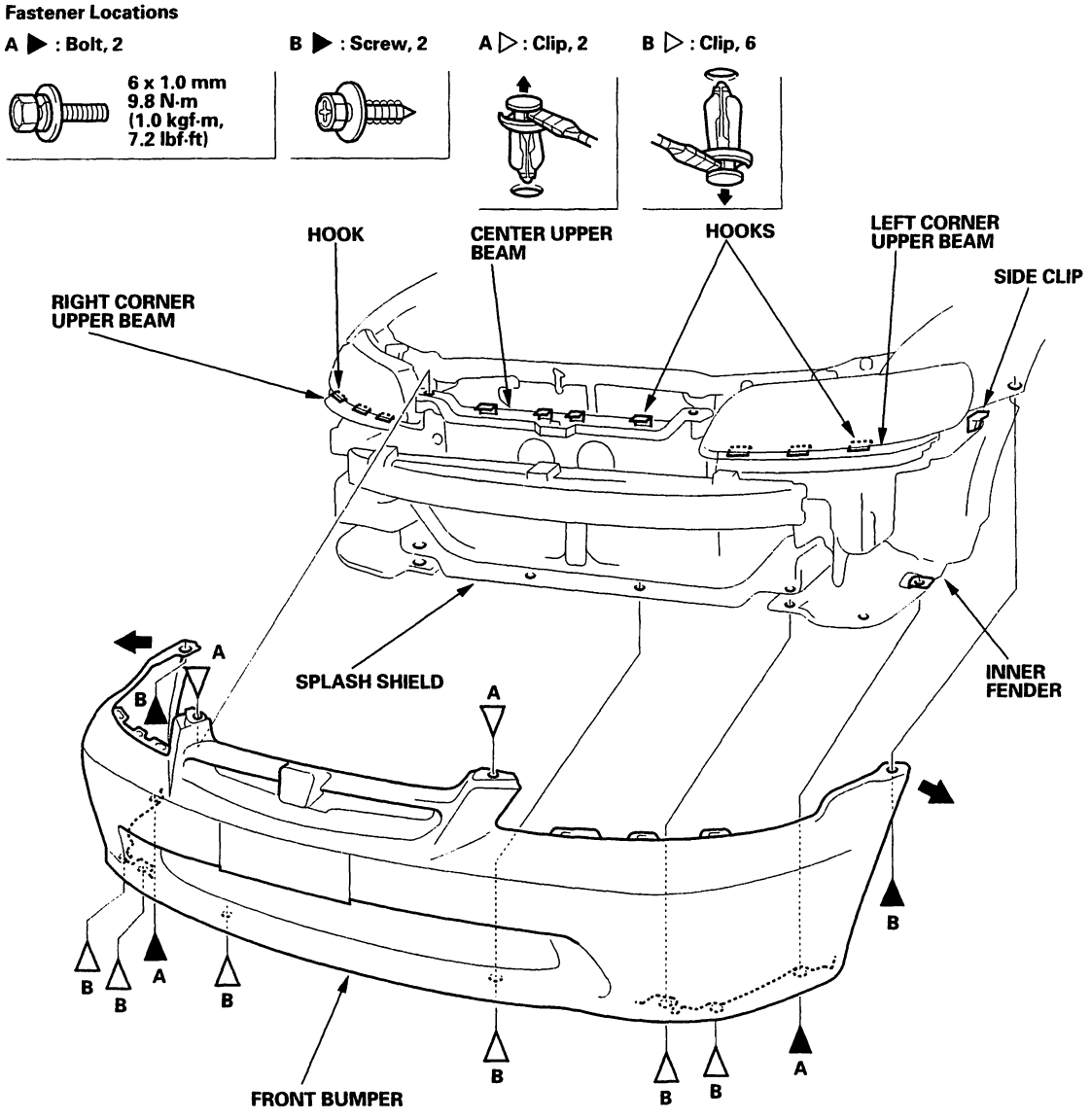

BACK

Fastener Locations

A ▶ : Bolt, 6 B ▶ : Bolt, 4 C ▶ : Bolt, 6

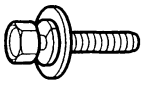

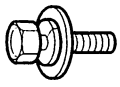

6 x 1.0 mm
9.8 N·m
(1.0 kgf·m,
7.2 lbf·ft)

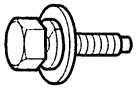

8 x 1.25 mm
22 N·m
(2.2 kgf·m,
16 lbf·ft)

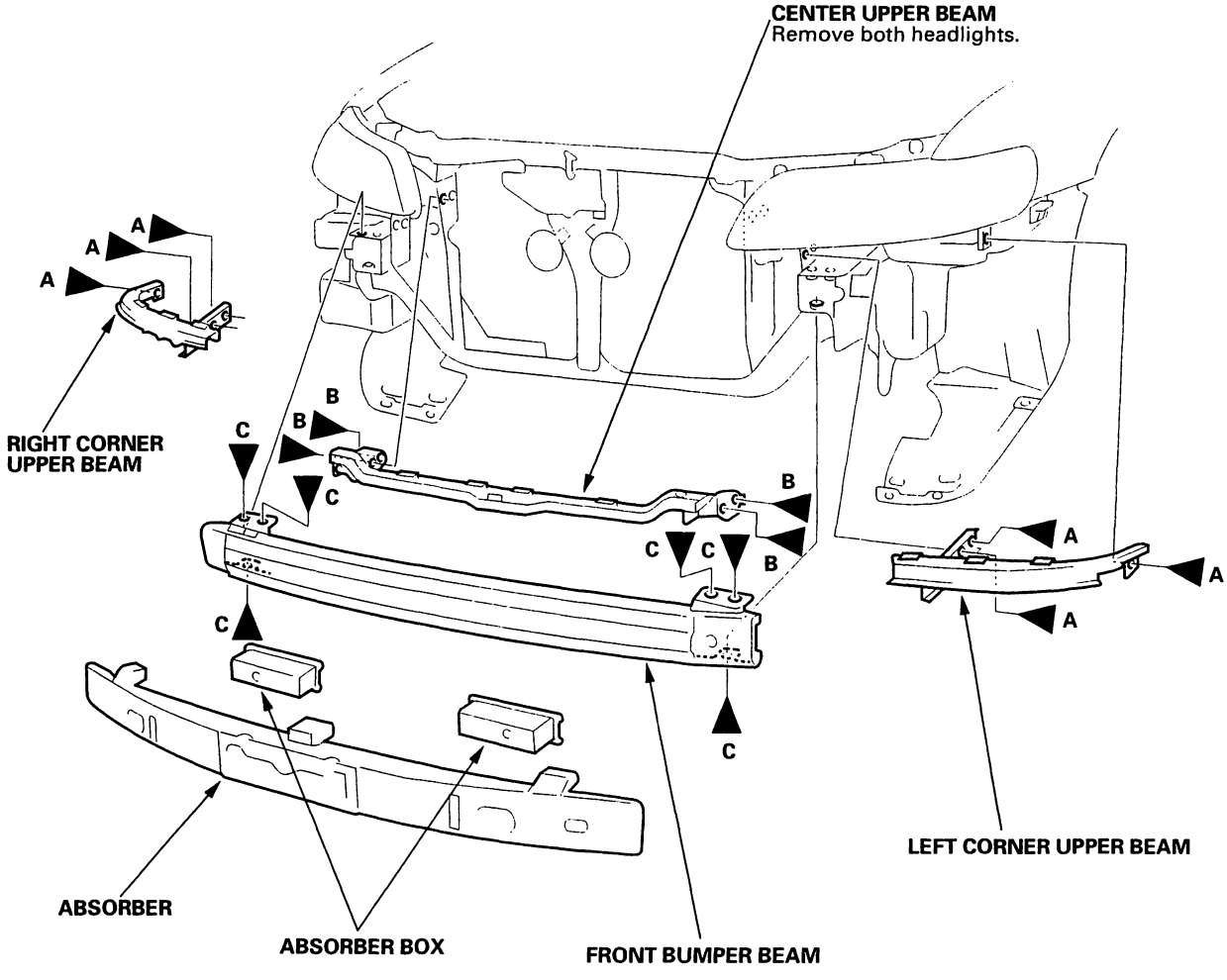

(cont'd)

BACK

Front Bumper Removal/Installation - Sedan (cont'd)

'01-02 models

NOTE:
- An assistant is helpful when removing the front bumper.
- Take care not to scratch the front bumper and body.
- Put on gloves to protect your hands.

Remove the front bumper as shown.
Install the front bumper in the reverse order of removal, and note these items:

- After reinstalling the center upper beam, check the aim of the headlights (see page 22-98).
- Make sure the front bumper engages the side clips, and the hooks (of the center and corner upper beams) on each side securely.
- Replace any damaged clips.

Fastener Locations

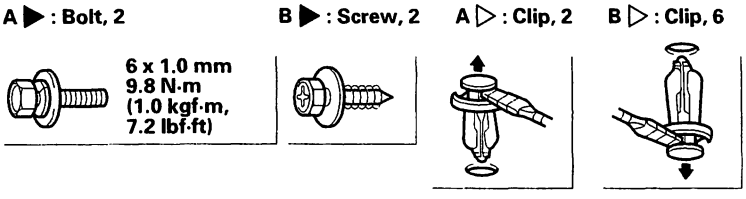

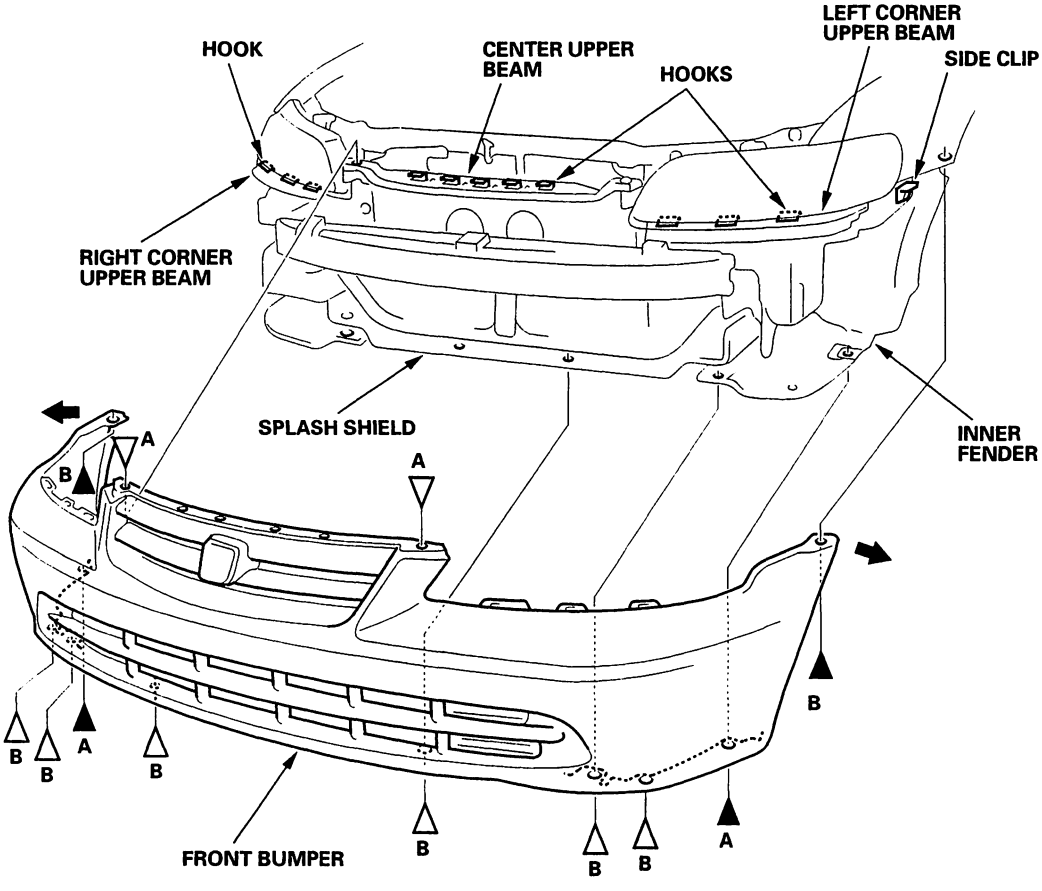

BACK

Rear Bumper Removal/Installation - Coupe

'98-00 models

NOTE:
- An assistant is helpful when removing the rear bumper.
- Take care not to scratch the rear bumper and body.
- Put on gloves to protect your hands.

Remove the rear bumper as shown.
Install the bumper in the reverse order of removal, and note these items:

- Make sure the rear bumper engages the side clips and the hooks (under the taillight) on each side securely.
- Replace any damaged clips.

Fastener Locations

▶ : Screw, 2 | A ▷ : Clip, 7 | B ▷ : Clip, 2 | C ▷ : Clip, 4

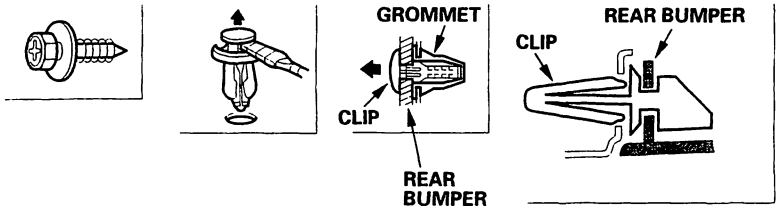

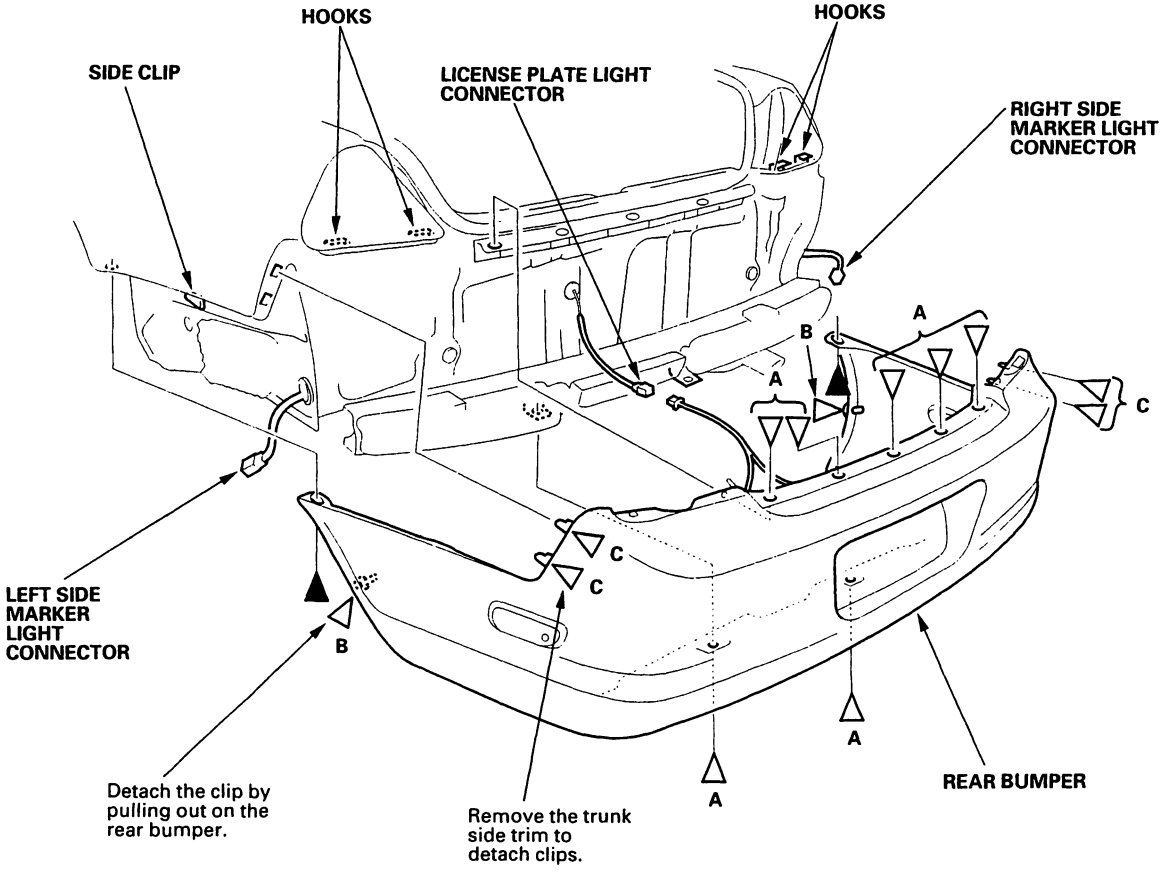

(cont'd)

Rear Bumper Removal/Installation - Coupe (cont'd)

Fastener Locations

● : Nut, 4

8 x 1.25 mm
22 N·m
(2.2 kgf·m,
16 lbf·ft)

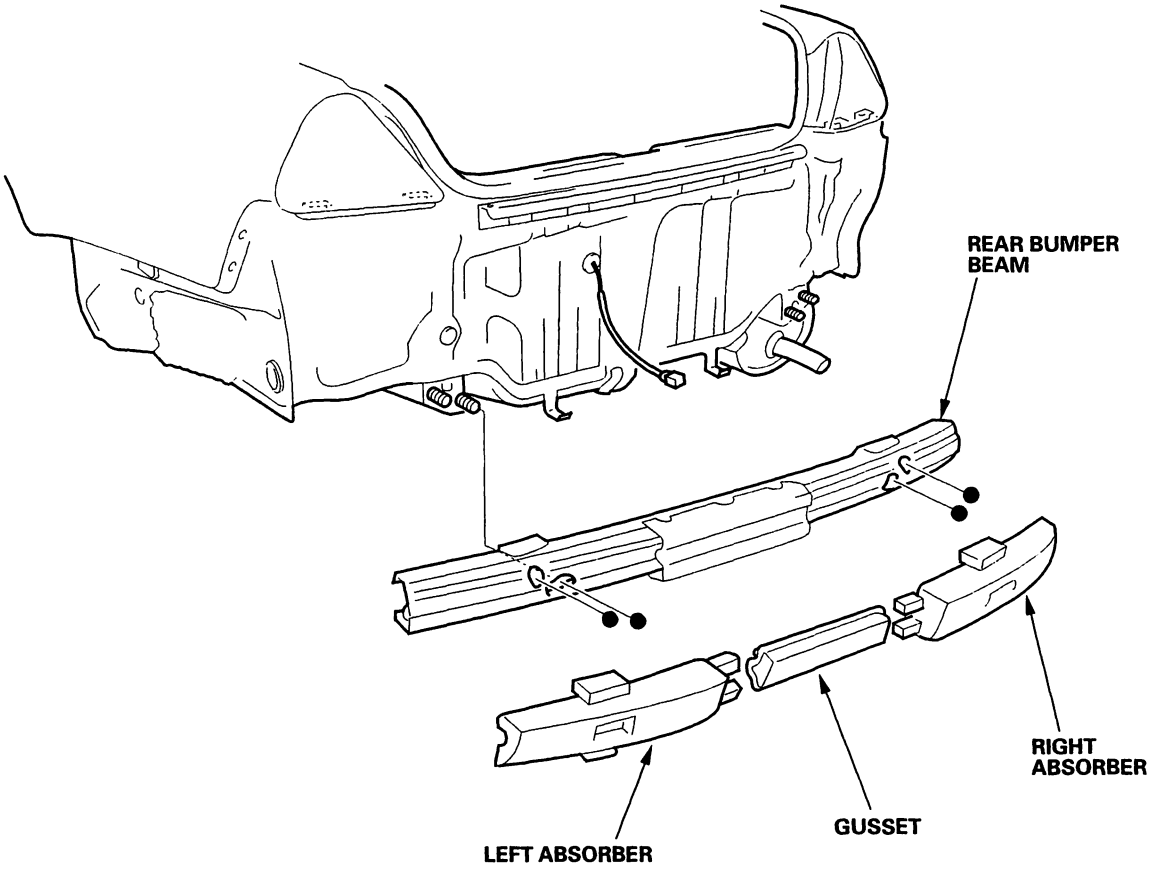

BACK

'01-02 models

NOTE:
- An assistant is helpful when removing the rear bumper.
- Take care not to scratch the rear bumper and body.
- Put on gloves to protect your hands.

Remove the rear bumper as shown.
Install the bumper in the reverse order of removal, and note these items:

- Make sure the rear bumper engages the side clips, rear clips, and the hooks (under the taillight) on each side securely.
- Replace any damaged clips.

Fastener Locations

A ▶ : Screw, 2 **A ▷ : Clip, 7** **B ▷ : Clip, 2**

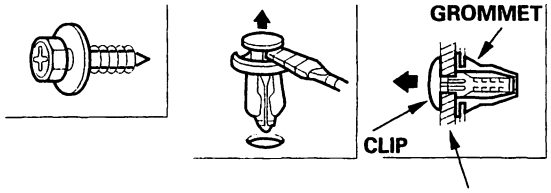

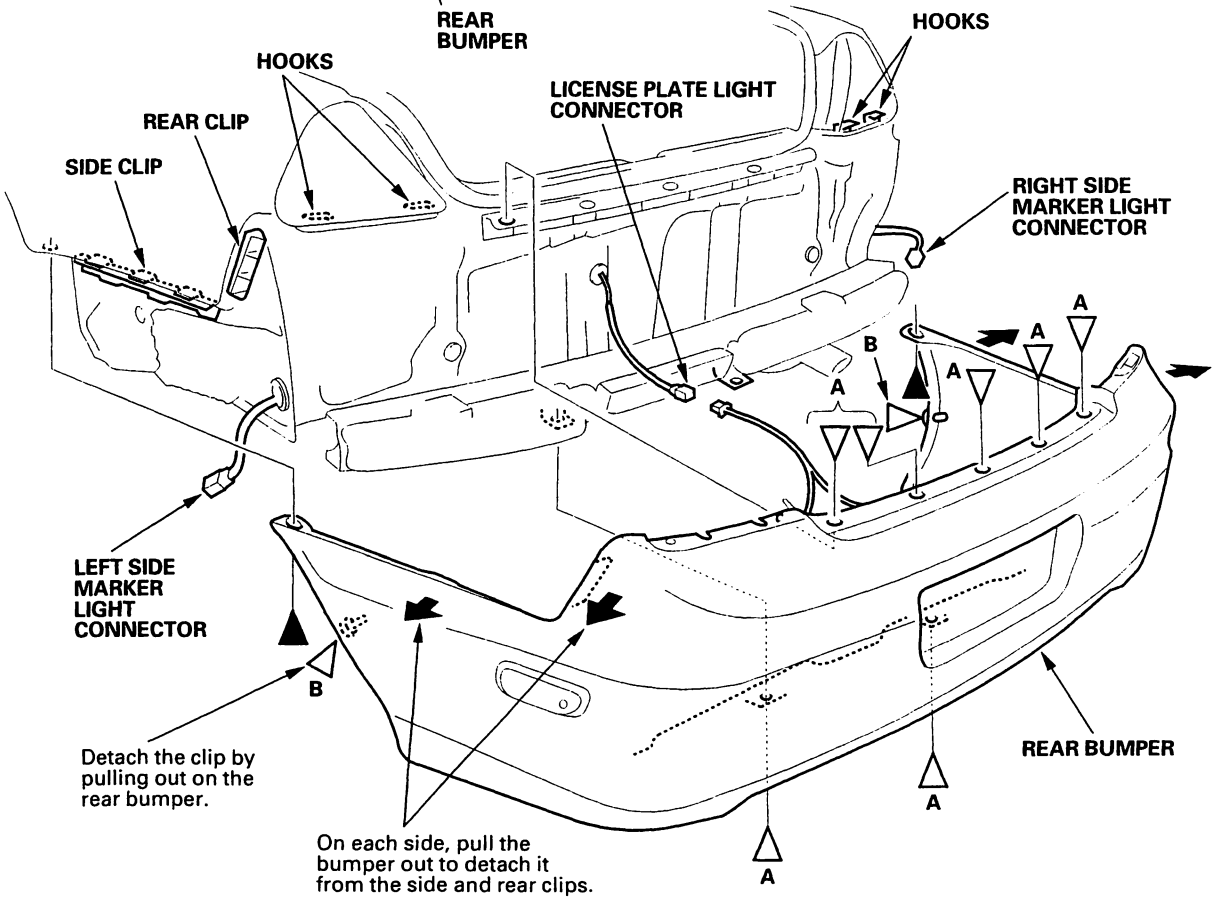

Rear Bumper Removal/Installation - Sedan

NOTE:
- An assistant is helpful when removing the rear bumper.
- Take care not to scratch the rear bumper and body.
- Put on gloves to protect your hands.

Remove the rear bumper as shown.
Install the bumper in the reverse order of removal, and note these items:

- Make sure the rear bumper engages the side clips and the hooks (under the taillight) on each side securely.
- Replace any damaged clips.

Fastener Locations

▶ : Screw, 2 A ▷ : Clip, 7 B ▷ : Clip, 2

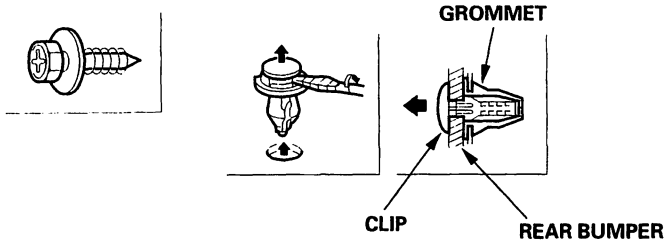

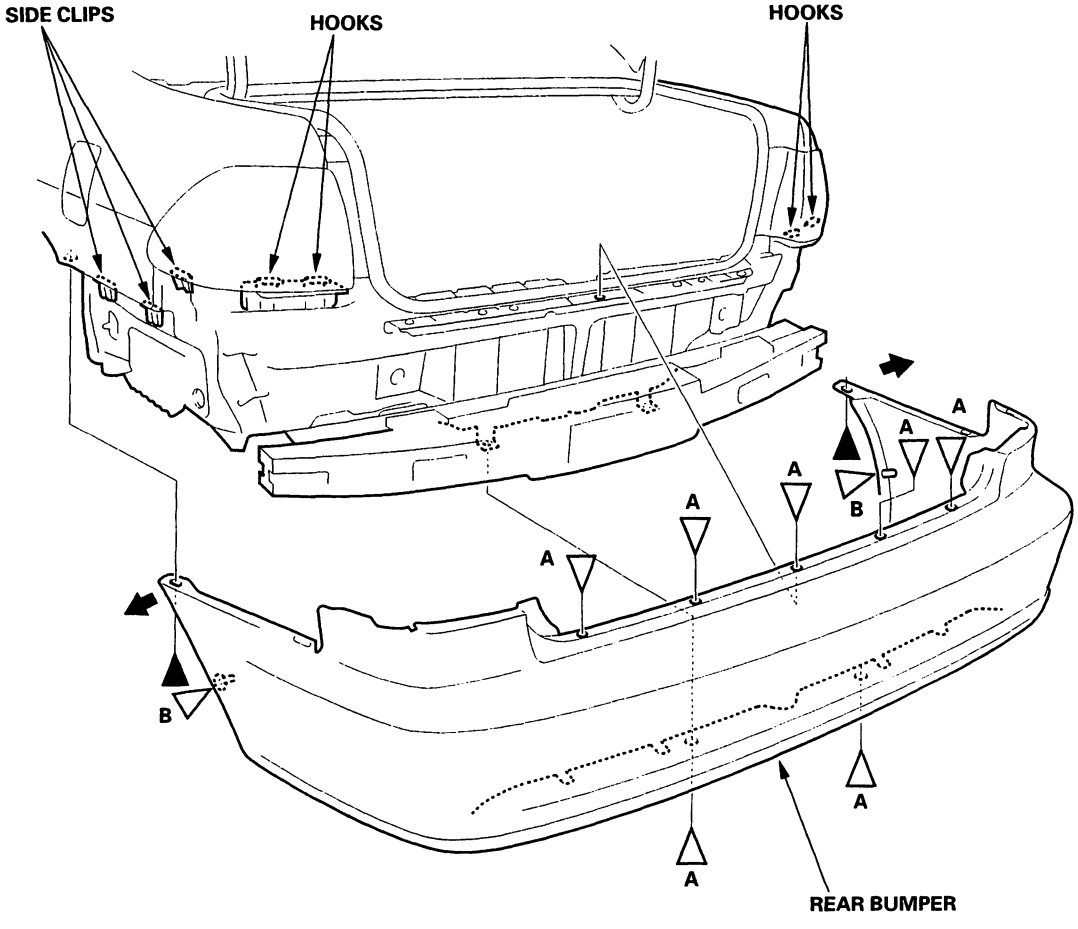

BACK

Fastener Locations

● : Nut, 4

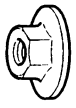

8 x 1.25 mm
22 N·m
(2.2 kgf·m,
16 lbf·ft)

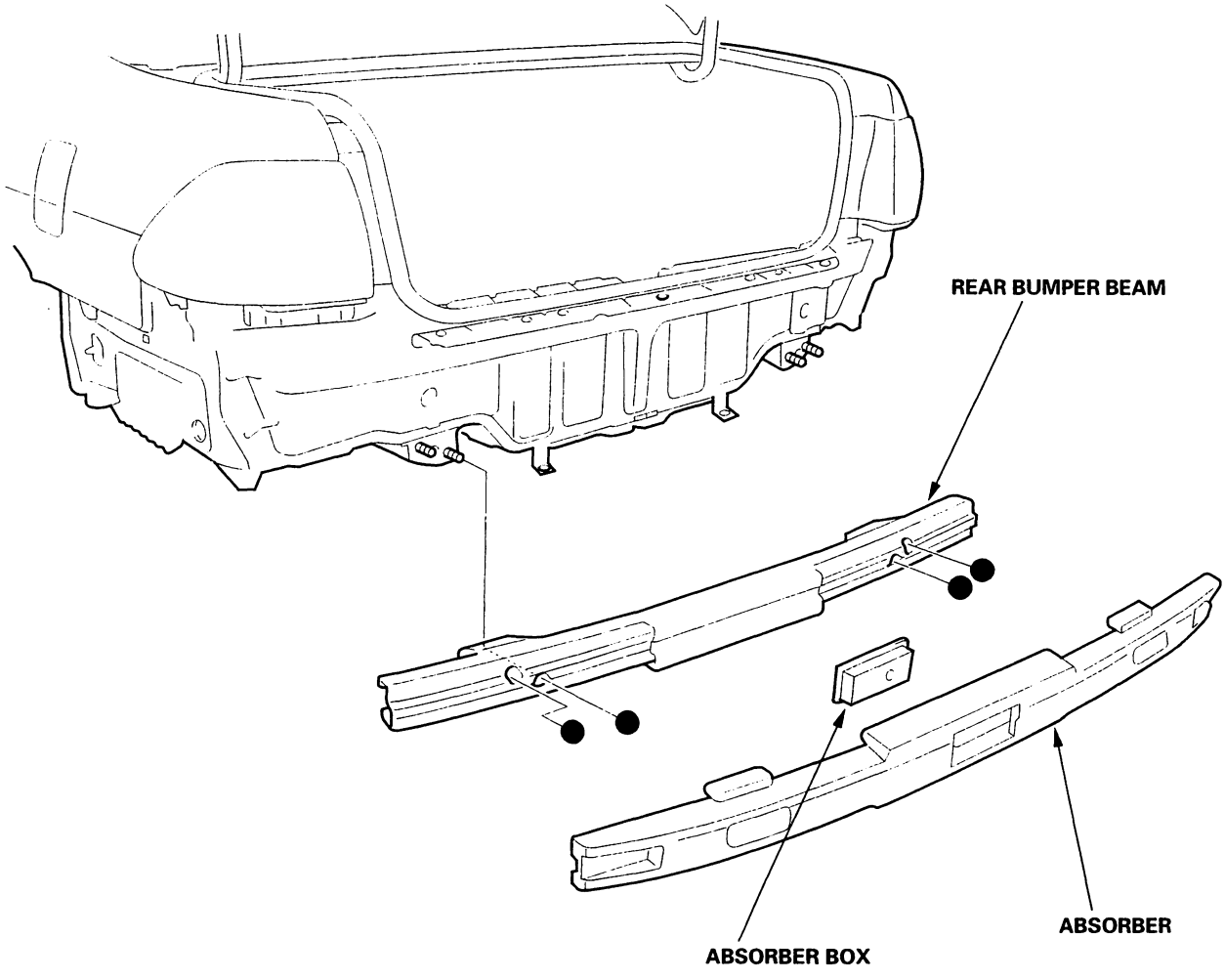

Hood

Replacement

NOTE:
- An assistant is helpful when removing and installing the hood.
- Take care not to damage the hood and body.

Remove the hood as shown.
Install the hood in the reverse order of removal, and note these items:

- Make sure the windshield washer tubes are connected properly.
- Make sure the hood opens properly and locks securely.
- Adjust the hood alignment (see page 20-151).

Fastener Locations

▶ : Bolt, 4

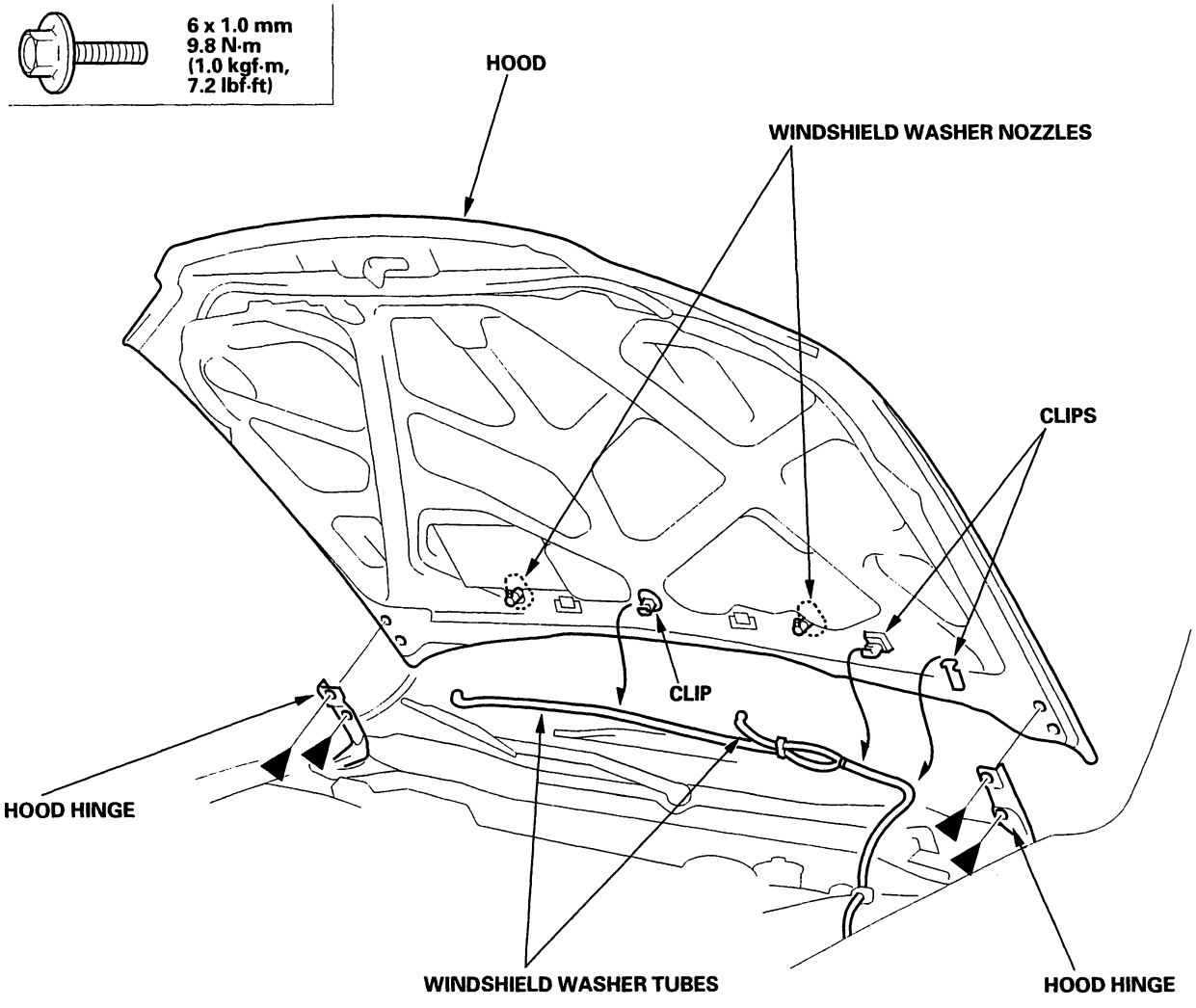

BACK

Adjustment

1. Slightly loosen each hood hinge bolt.

2. Adjust the hood alignment in this sequence.

   - Adjust the hood right and left, as well as forward and rearward, by using the elongated holes on the hood hinge (A).
   - Turn the hood edge cushions (B), as necessary, to make the hood fit flush with the body at front and side edges.
   - Adjust the hood latch (C) to obtain the proper height at the forward edge, and move the hood latch right or left until the striker (D) is centered in the hood latch.

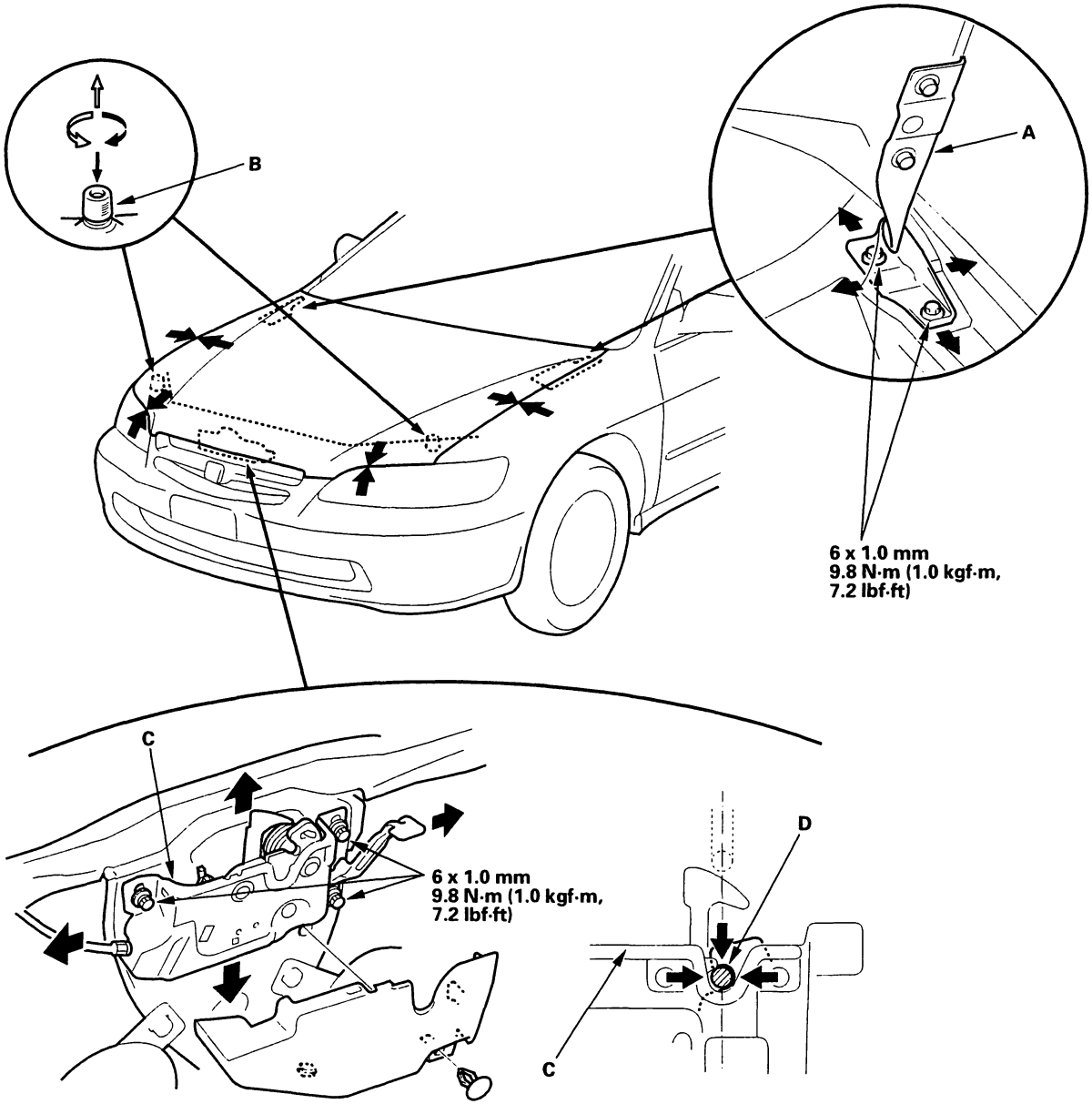

(cont'd)

Adjustment (cont'd)

3. Tighten each bolt securely.

4. Check that the hood opens properly and locks securely.

5. Apply body paint to the hinge mounting bolts and around the hinges.

6. Grease each location of the hood latch and hood hinge as indicated by the arrows.

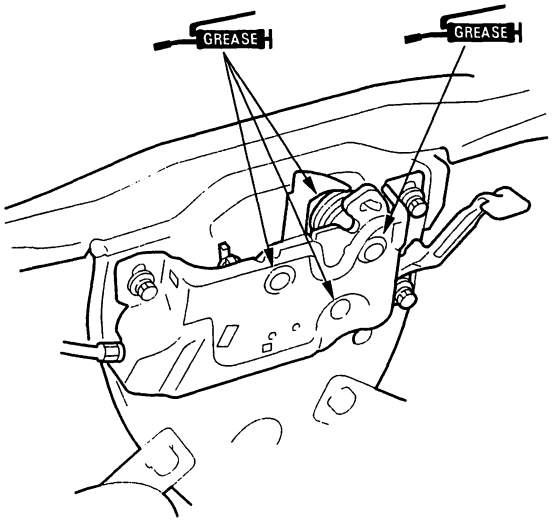

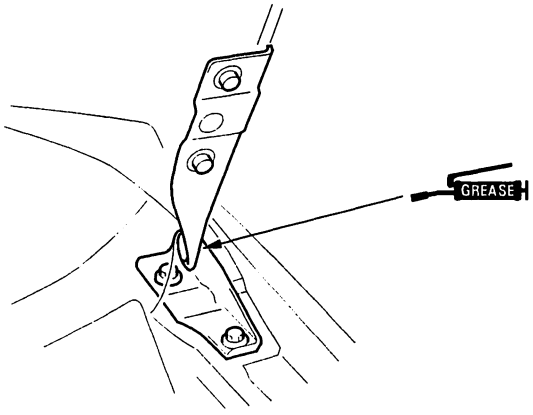

Hood Insulator Replacement

NOTE: Take care not to scratch the hood.

1. Remove the hood insulator (A).

   – 1 Disconnect the windshield washer tubes (B) from the windshield washer nozzles (C).
   – 2 Release the windshield washer tube from the clips (D).
   – 3 Using a clip remover, detach the clips (D, E) release the hooks (F), and remove the hood insulator.

Fastener Locations

D ▷ : Clip, 1 **E ▷ : Clip, 11**

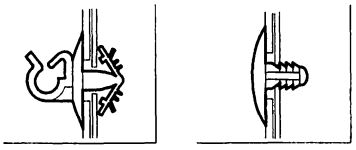

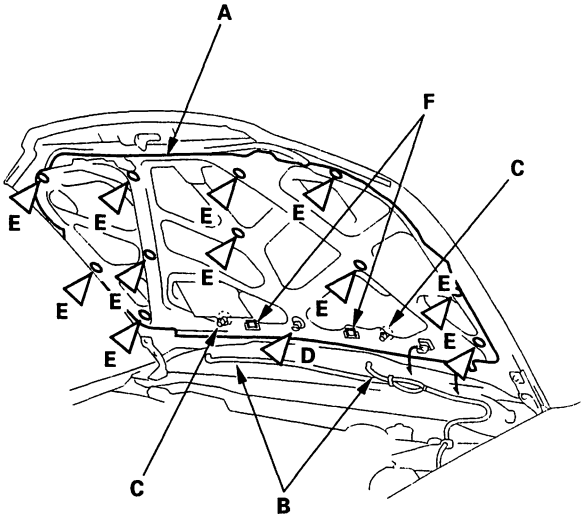

2. Install the insulator in the reverse order of removal, and note these items:

   - Replace any damaged clips.
   - Make sure the washer tubes are connected properly.

BACK

Hood Seal Rubber and Hood Molding Replacement

1. Using a clip remover, detach the clips, then remove the hood seals (A). On Canadian models, remove the hood molding (B). On '00-02 Canadian Coupe model, Carefully peel the hood molding adhesive tapes (F) off of the hood. Take care not to scratch the hood.

Coupe:

Adhesive tape ('00-02 models):
3M3511, or equivalent
Thickness: 1 mm (0.04 in.)
Width: 5 mm (0.2 in.)

Fastener Locations

C ▷ : Clip, 12

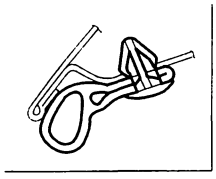

D ▷ : Clip, 9
'98-'99 models:

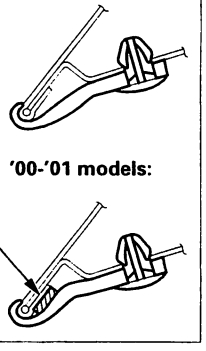

'00-'01 models:

E ▷ : Clip, 11

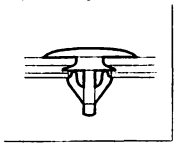

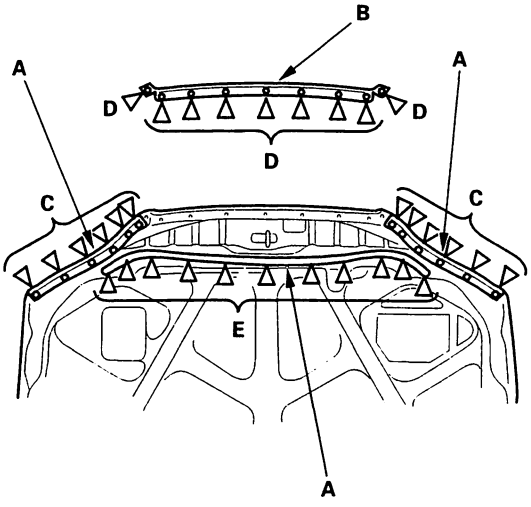

Sedan:

Fastener Locations

C ▷ : Clip, 12

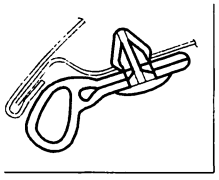

D ▷ : Clip, 7

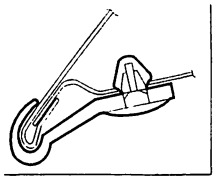

E ▷ : Clip, 11

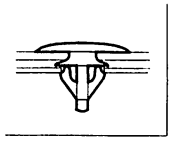

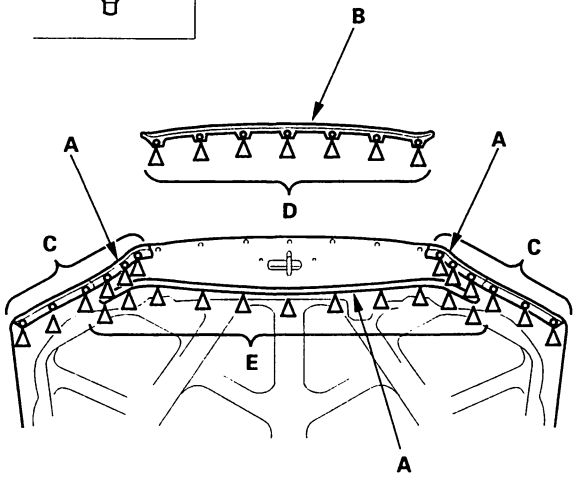

2. Install the hood seal and hood molding in the reverse order of removal, and note these items:

   - Replace any damaged clips.
   - On '00-02 Canadian Coupe model: If the old hood molding is to be reinstalled, scrape off all traces of the old adhesive tape, then clean the molding surface with alcohol. Apply primer (3M K500, or equivalent) to the hood molding where the new adhesive tape will attach, then give the molding into place securely with new adhesive tape.

Trunk Lid

Replacement

NOTE: Put on gloves to protect your hands.

1. Coupe only, remove the screws, then remove the taillight lid cover (A) from each side.

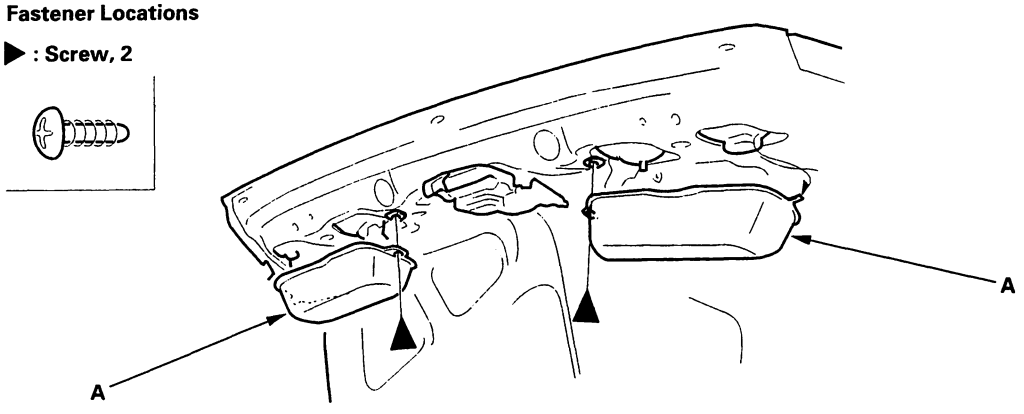

2. Disconnect the taillight connectors (A), license plate light connector (B), trunk lid latch actuator connector (C), trunk lid cylinder switch connector (D) and remove trunk lid opener cable (E).

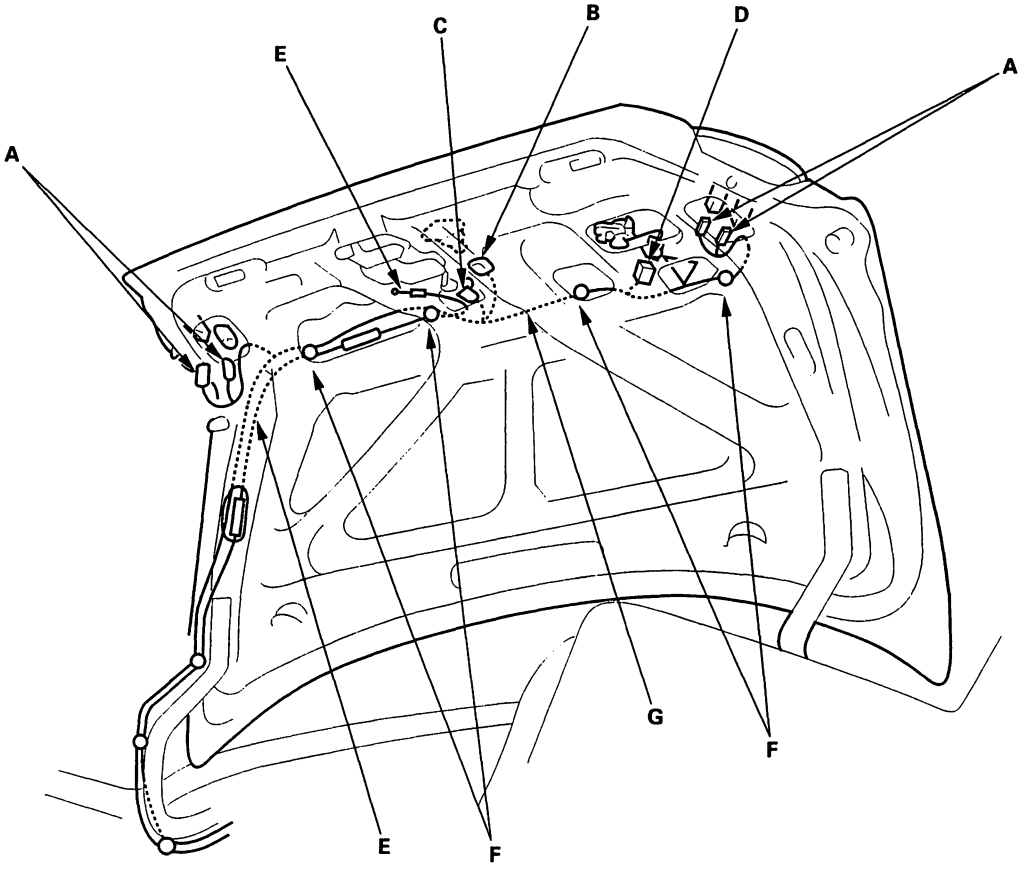

3. Detach the harness clips and connector clips (F), then remove the wire harness (G) and trunk lid opener cable from the trunk lid.

BACK

4. Remove the bolts, then remove the trunk lid.

Fastener Locations

▶ : **Bolt, 4**

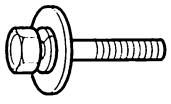

6 x 1.0 mm
9.8 N·m
(1.0 kgf·m,
7.2 lbf·ft)

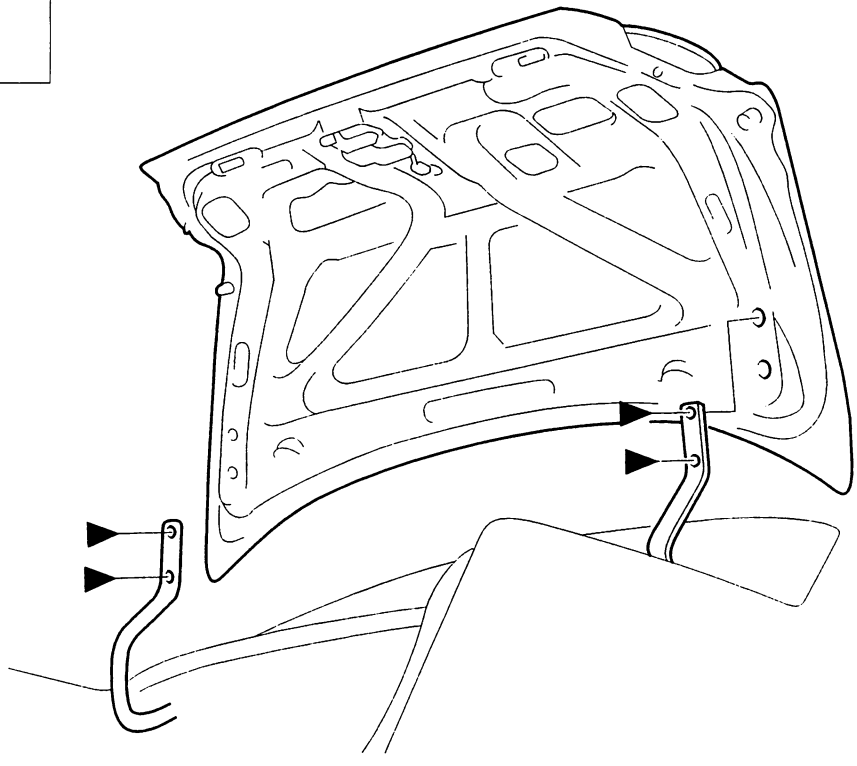

5. Install the trunk lid in the reverse order of removal, and note these items:

- Make sure the connectors are plugged in properly, and opener cable is connected properly, and the wire harness and opener cable are routed properly.
- Make sure the trunk lid opens properly and locks securely.
- Adjust the trunk lid alignment (see page 20-156).

Trunk Lid

Adjustment

1. Slightly loosen each bolt.

2. Adjust the trunk lid alignment in the following sequence.

   - Remove the rear shelf
     - Coupe (see page 20-76)
     - Sedan (see page 20-77)
   - Adjust the trunk lid hinges (A) right and left, as well as forward and rearward, by using the elongated holes. Take care not to hit the rear window when loosening the bolts (B).
   - Turn the trunk lid edge cushions in or out (C), as necessary, to make the trunk lid fit flush with the body at the rear and side edges.
   - Adjust the fit between the trunk lid and the trunk lid opening by removing the striker (D).

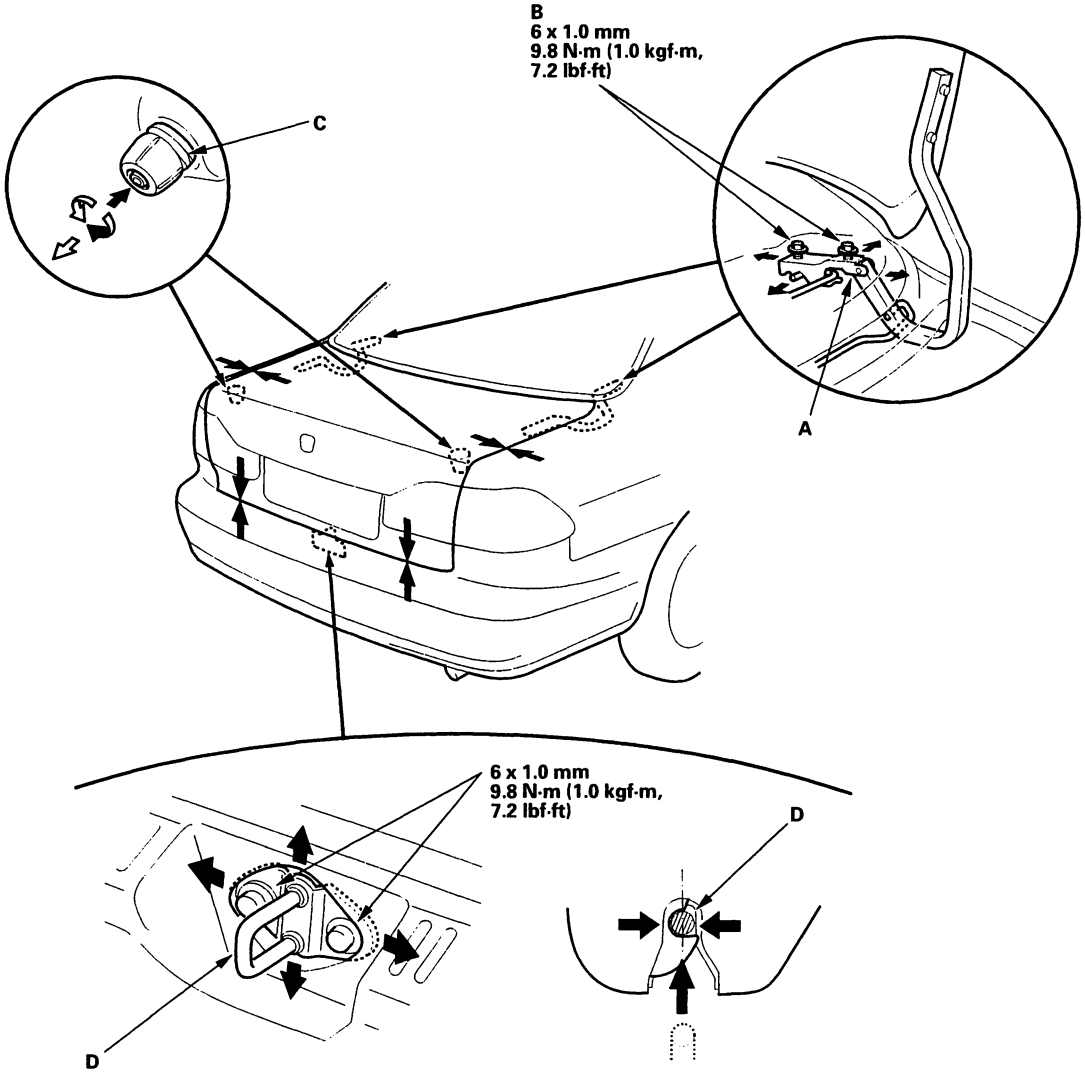

3. Tighten each bolt securely.

4. Make sure the trunk lid opens properly and locks securely.

BACK

Trunk Lid Torsion Bar Replacement

1. Remove the torsion bars (A) from the torsion bar center clip (B).

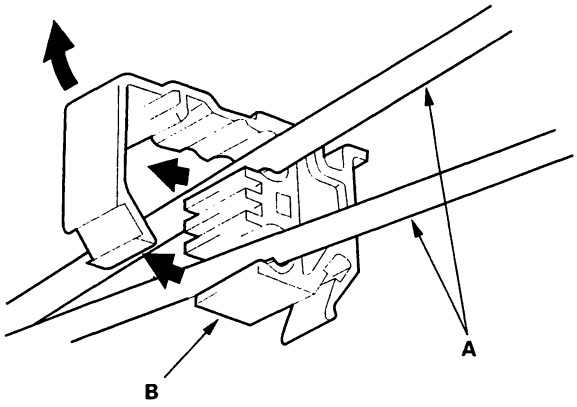

2. Put on gloves to protect your hands. Remove the torsion bars with the torsion bar tool (A) from both trunk lid hinges. First remove the right torsion bar (B), and then remove the left torsion bar (C).

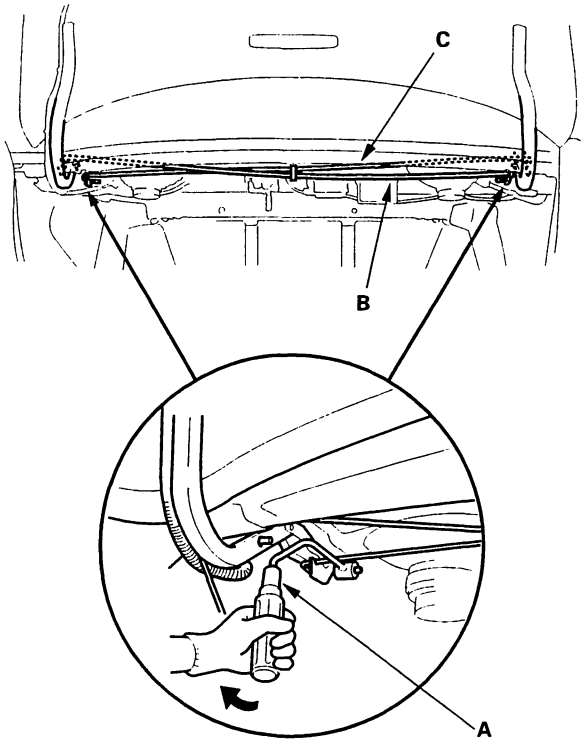

3. Remove the torsion bar center clip from the body.

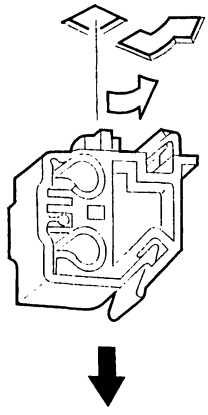

4. Install the torsion bars in the reverse order of removal, and note these items:

   - Adjust the torsion bars forward or rearward with the torsion bar assembly tool.
   - Make sure the trunk lid opens properly and locks securely.

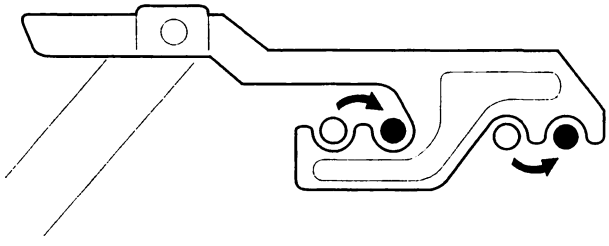

○ = Normal position
● = Higher tension

Trunk Lid Dynamic Damper Replacement - Sedan

1. Remove the cover (A), and remove the bolts, then remove the trunk lid dynamic damper (B). Take care not to scratch the trunk lid.

Fastener Locations

▶ : Bolt, 2

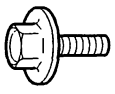

6 x 1.0 mm
9.8 N·m
(1.0 kgf·m, 7.2 lbf·ft)

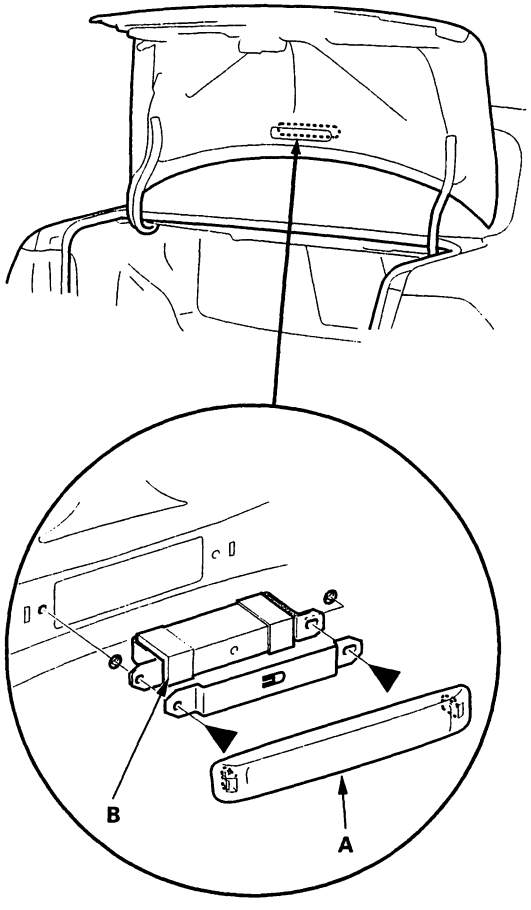

2. Install the damper in the reverse order of removal.

Trunk Lid Weatherstrip Replacement

1. Remove the trunk lid weatherstrip by pulling it off.

2. Apply sealant (Cemedine P/N 08712-0004, or equivalent) (A) in the groove of the trunk lid weatherstrip (B) in the areas indicated by arrows.

Unit: mm (in.)

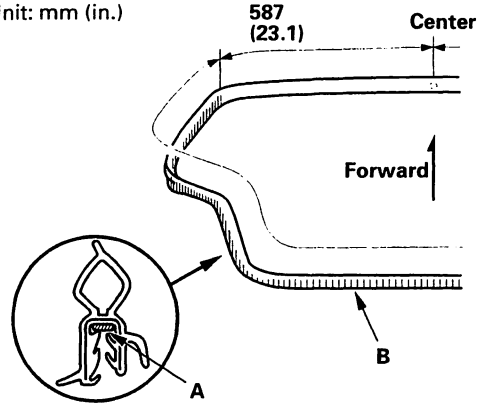

3. Locate the painted alignment mark (A) on the trunk lid weatherstrip (B). Align the painted mark with the alignment tab in the center of the trunk, and install the weatherstrip all the way around facing in the direction shown. Make sure there are no wrinkles in the weatherstrip.

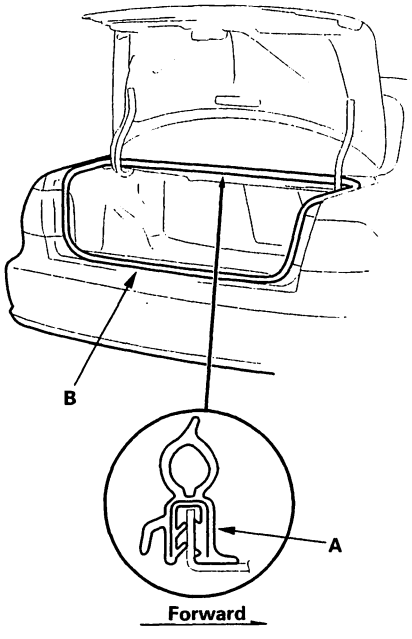

4. Check for water leaks.

BACK

Emblem Replacement - Coupe

1. Clean the trunk lid surface with a sponge dampened in alcohol. After cleaning, keep oil, grease and water from getting on the surface.
2. Apply the emblem where shown.

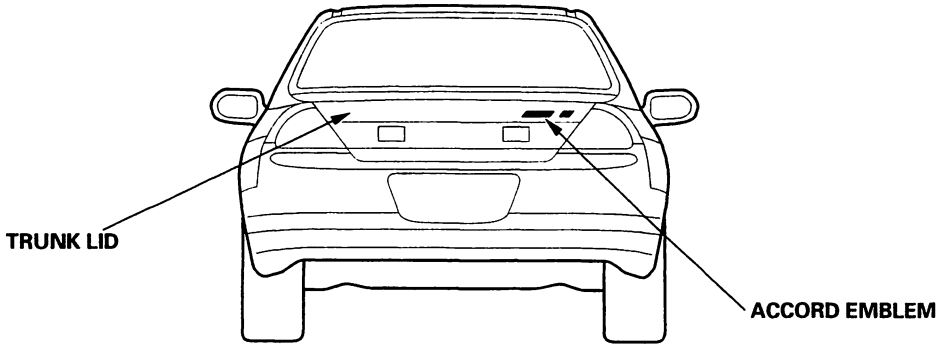

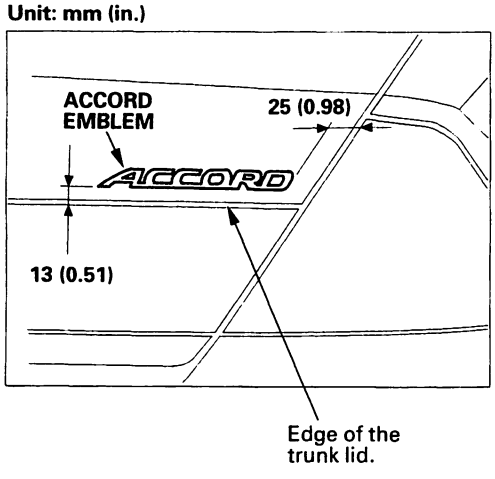

Emblem Replacement - Sedan

1. Clean the trunk lid surface with a sponge dampened in alcohol. After cleaning, keep oil, grease and water from getting on the surface.
2. Apply the emblem where shown.

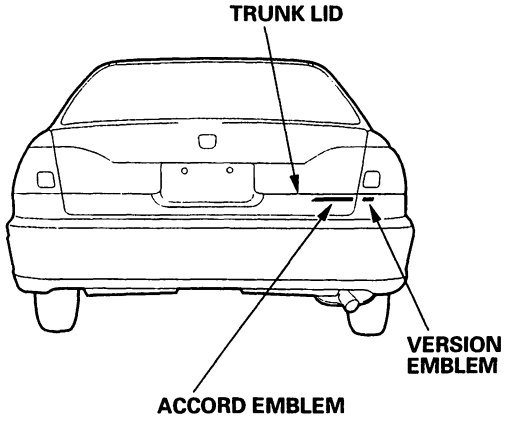

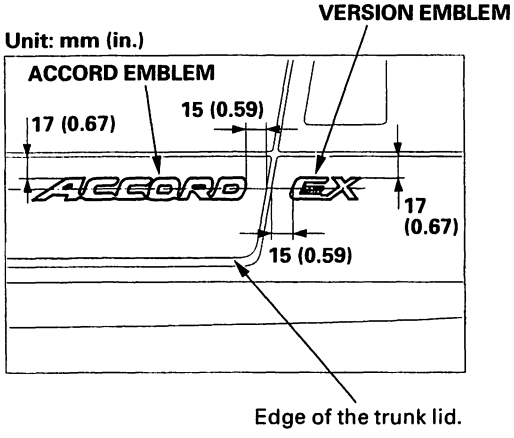

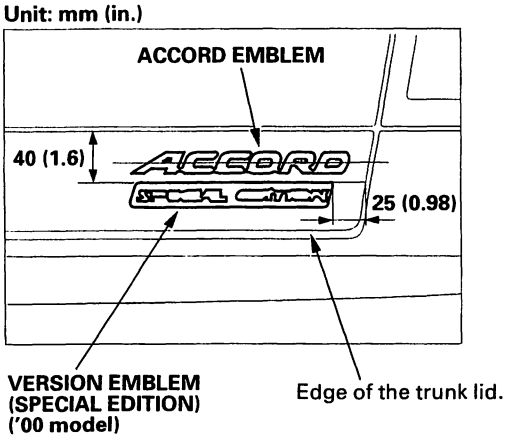

Front Grille Replacement - Coupe

'98-00 models

1. Remove the front bumper.
2. Remove the front grille by removing the screws from the front bumper. Take care not to scratch the front grille and front bumper.

Fastener Locations

▶ : Screw, 4

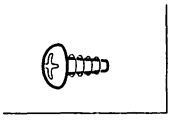

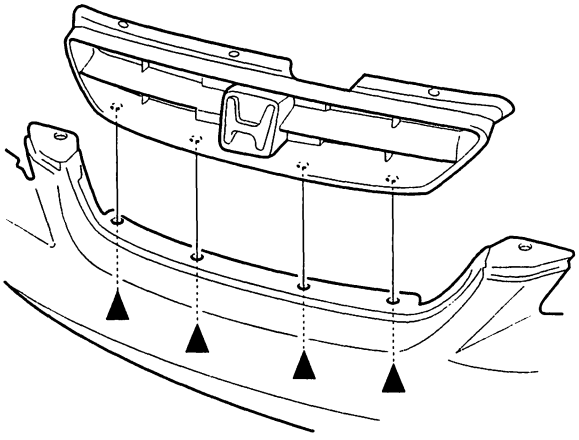

3. Install the grille in the reverse order of removal.

BACK

Roof Drip Molding Replacement - Coupe

NOTE: Put on gloves to protect your hands.

1. Detach the moldings from each clip, then remove the roof drip molding (A) from the quarter glass molding (B). Take care not to scratch the body.

Fastener locations

▷ : Clip, 9

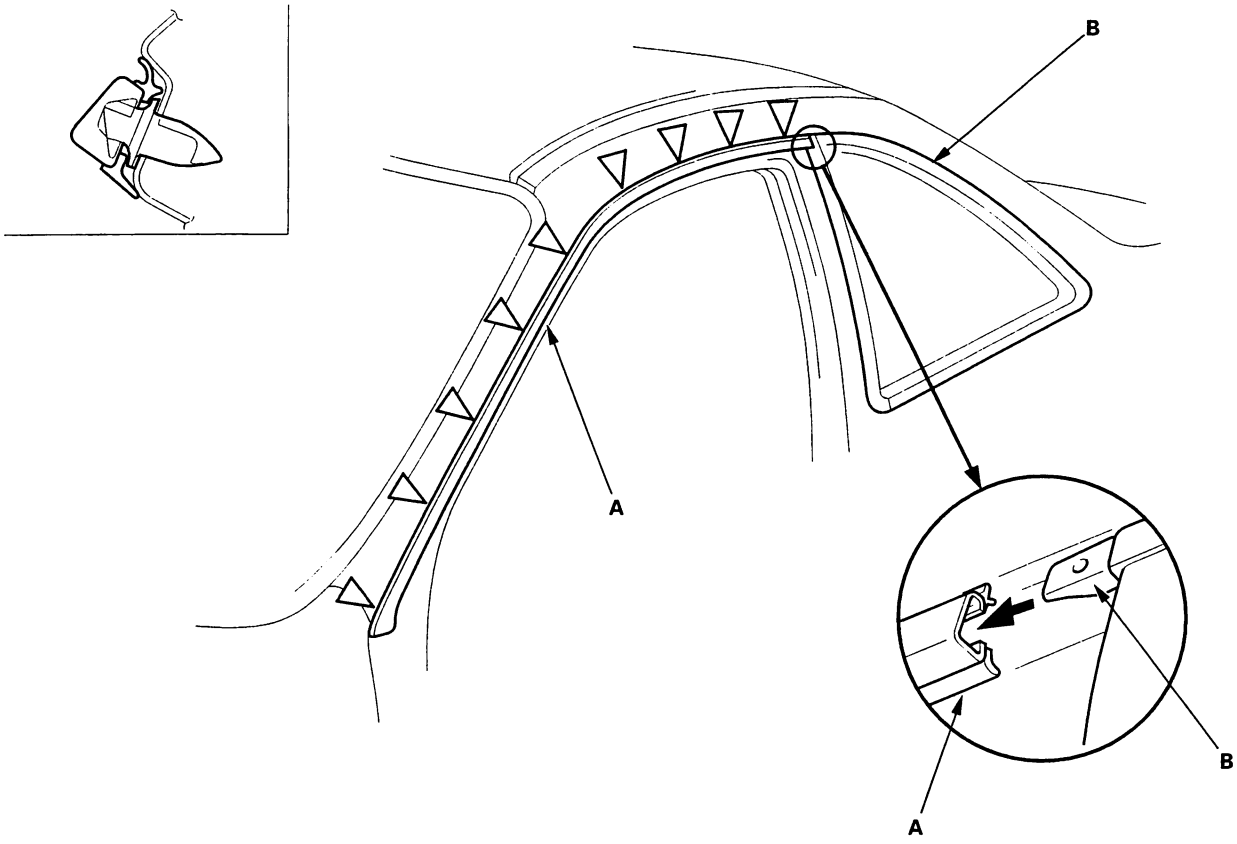

2. Install the molding in the reverse order of removal, and replace any damaged clips.

Roof Drip and Rear Pillar Moldings Replacement - Sedan

NOTE: Put on gloves to protect your hands.

1. Detach the moldings from each clip, then remove the roof drip molding (A) and rear pillar molding (B) as an assembly. Take care not to scratch the body.

Fastener Locations

C ▷ : Clip, 10 **D ▷ : Clip, 1** **E ▷ : Clip, 1** **F ▷ : Clip, 1**

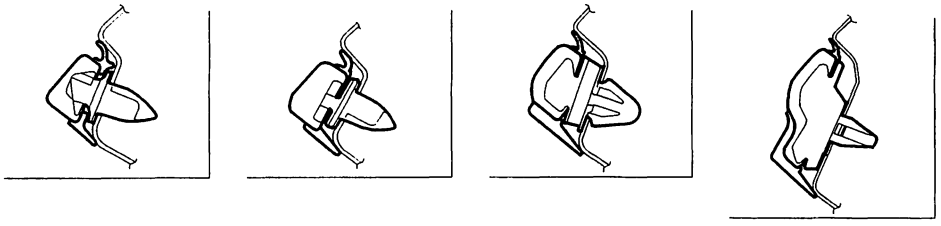

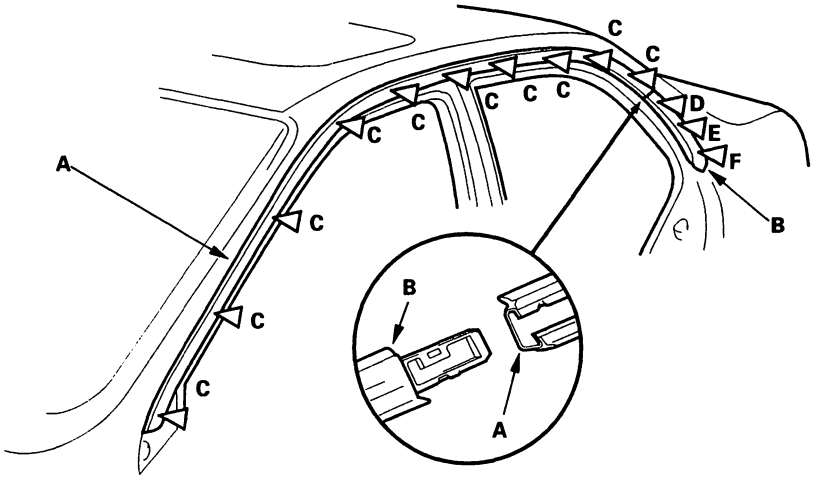

2. Separate the roof drip molding and rear pillar molding.

3. Install the molding in the reverse order of removal, and note these items:

   - After joining the rear pillar molding (B) with the roof drip molding (A), lightly tap the locking tabs (C).
   - Replace any damaged clips.

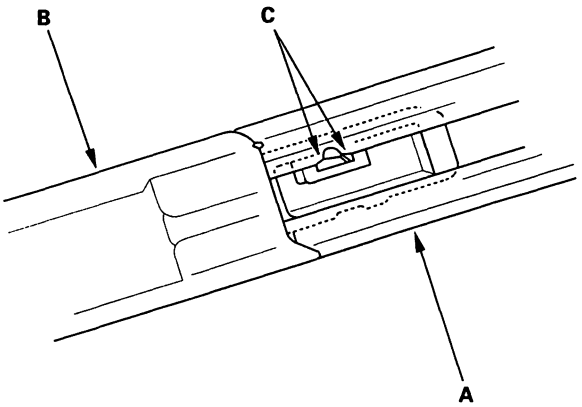

BACK

Roof Molding Replacement

1. Apply protective tape to the body (A). Using a flat-tip screwdriver wrapped with protective tape (B), pry up on the roof molding (C). Take care not to scratch the body.

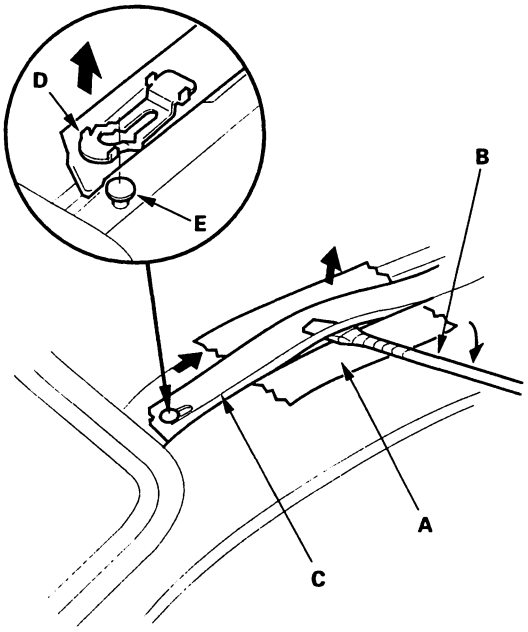

2. Pull up and slide the roof molding to release the front bracket (D) from the pin (E).

3. Pull up the front portion of roof molding.

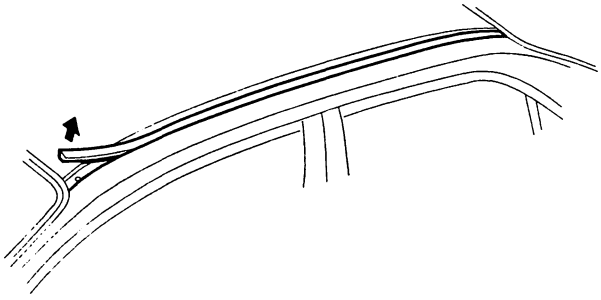

4. Pull up and release the rear bracket (A) from the pin (B), then remove the roof molding (C).

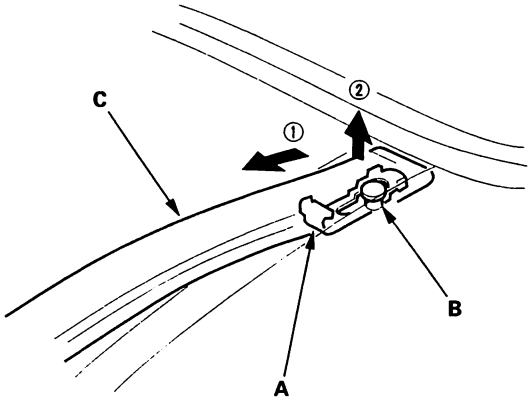

5. Install the molding in the reverse order of removal, and note these items:

   - Take care not to damage the windshield and rear window moldings.
   - Make sure the roof molding is installed securely.

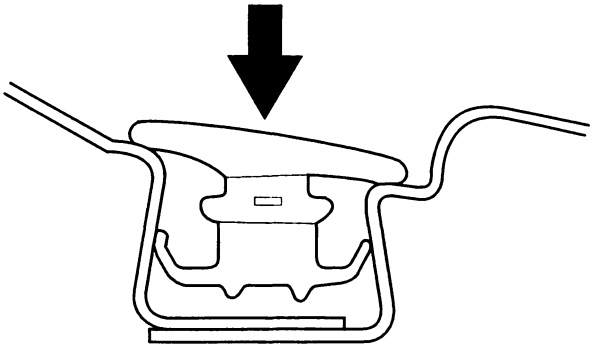

Door Moldings Replacement - Sedan

NOTE:
- Wrap the blade of your putty knife or flat-tip screwdriver with protective tape to prevent damage to the door.
- Be careful not to pry too far or you may bend the molding.
- Put on gloves to protect your hands.

1. Prepare to release the molding clips from inside the vehicle.

   - To remove the front door molding, remove the front door panel (see page 20-9) and plastic cover.
   - To remove the rear door molding, remove the rear door panel (see page 20-17) and plastic cover.

2. Release the clips, and gently pry the front door molding (A) or rear door molding (B) away from the door while removing the adhesive tape (C).

Fastener Locations

▷ : **Clip, 12**

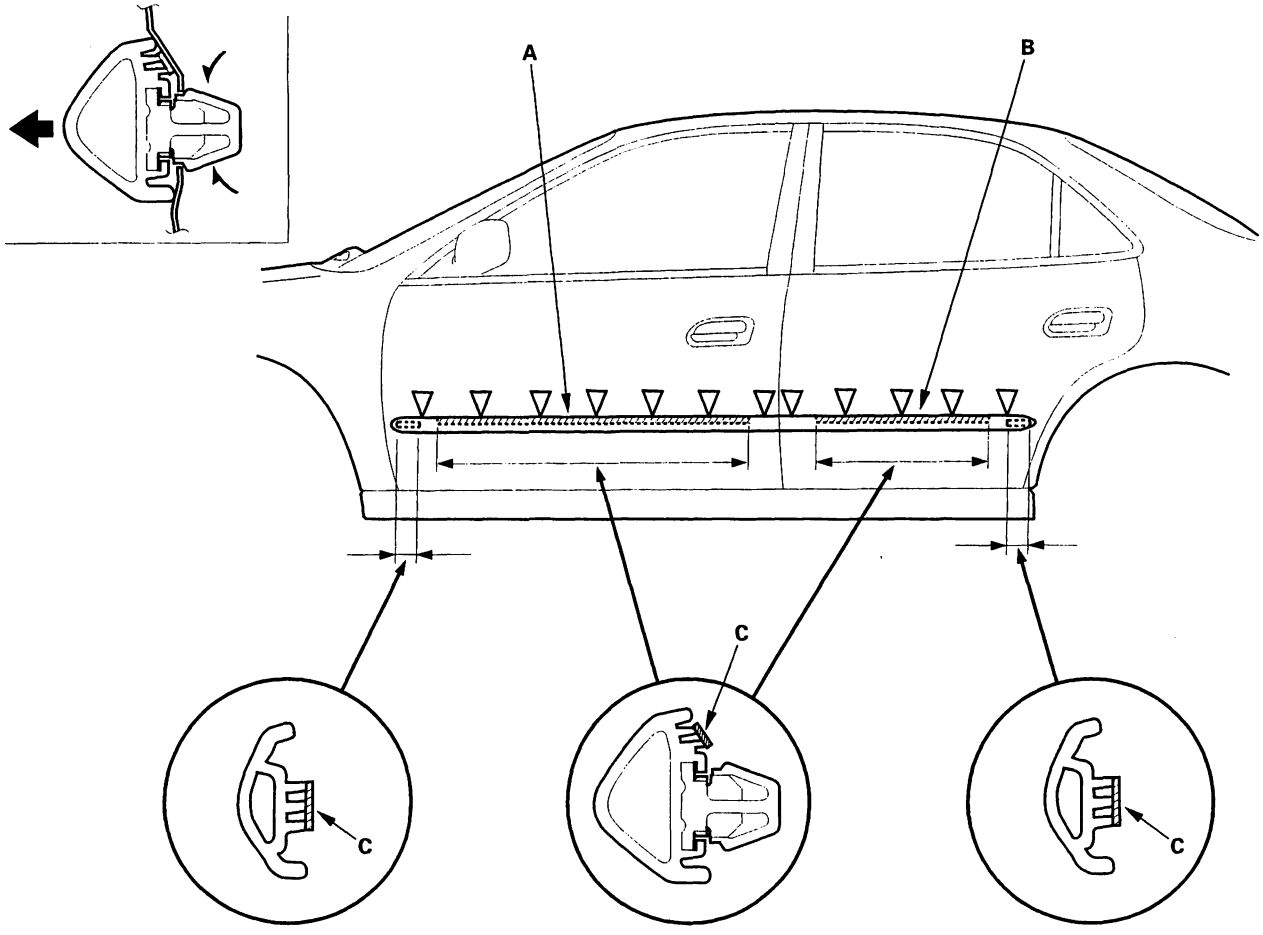

3. Install the moldings in the reverse order of removal, and replace any damaged clips and adhesive tape.

BACK

Side Sill Panel Replacement - Coupe

1. Remove the side sill panel.

   – 1 If equipped, remove the splash guard (A).
   – 2 Pull the inner fender (B) back as necessary, and remove the expansion clips (C).
   – 3 Slide the side sill panel (D) forward and remove it. Side clips (E) will stay in the body.
   – 4 Remove the side clips from the body.

Fastener Locations

▶ : Screw, 4 **C ▷ : Clip, 4** **E ▷ : Clip, 12**

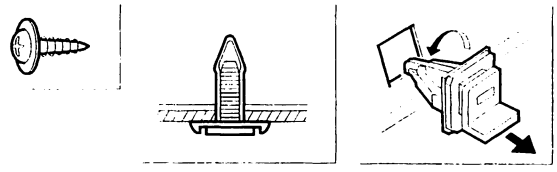

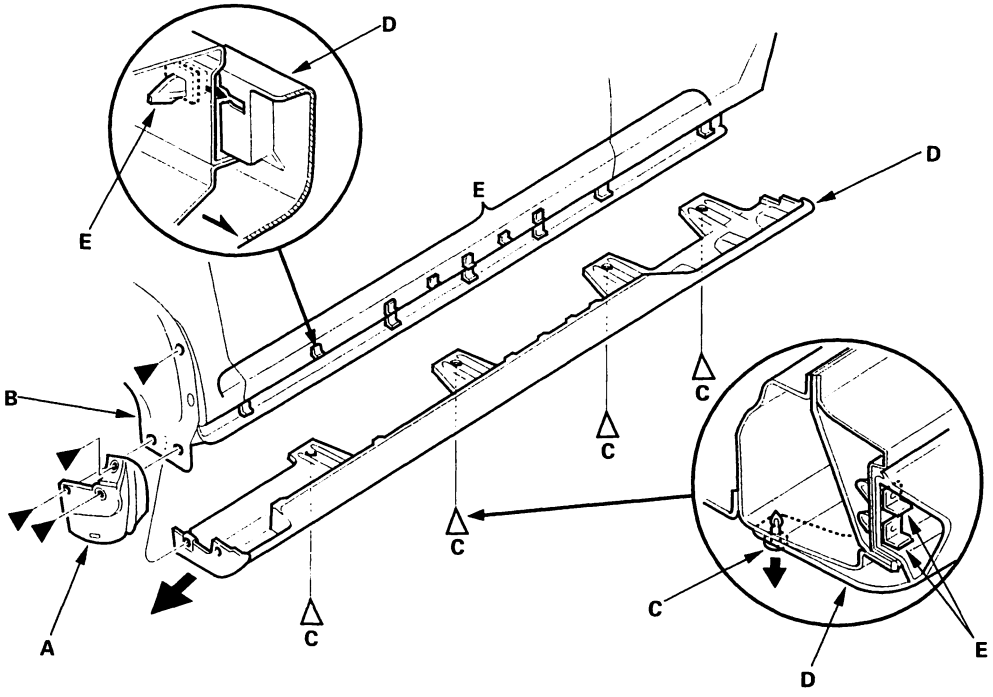

2. Replace any damaged clips.

3. Install the side clips on the side sill panel.

4. Hold the panel up, and fit all the side clips into the holes in the body, then push on the panel until the clips snap into place.

5. Install all the expansion clips.

6. Reinstall the inner fender and splash guard (if equipped).

Side Sill Panel Replacement - Sedan

1. Remove the side sill panel.

   – 1 If equipped, remove the splash guard (A).
   – 2 Pull the inner fender (B) back as necessary, and remove the expansion clip (C).
   – 3 Slide the side sill panel (D) forward and remove it. Side clips (E) will stay in the body.
   – 4 Remove the side clips from the body.

Fastener Locations

▶ : Screw, 4 C ▷ : Clip, 4 E ▷ : Clip, 9

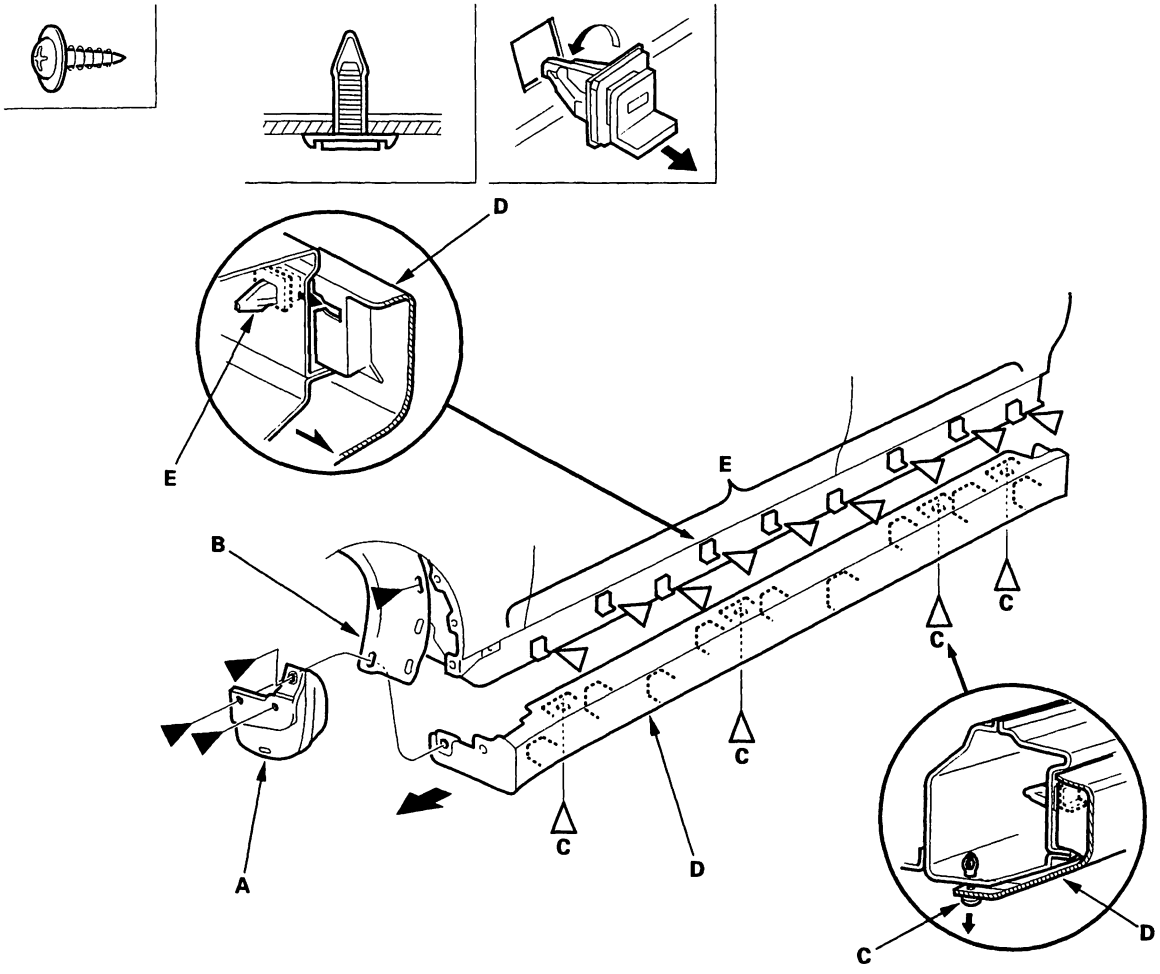

2. Replace any damaged clips.
3. Install the side clips on the side sill panel.
4. Hold the panel up, and fit all the side clips into the holes in the body, then push on the panel until the clips snap into place.
5. Install all the expansion clips.
6. Reinstall the inner fender and splash guard (if equipped).

BACK

Inner Fender Replacement

1. Remove the inner fender as shown. Take care to scratch the body.

Fastener Locations

A ▶ : Bolt, 2

6 x 1.0 mm
9.8 N·m
(1.0 kgf·m, 7.2 lbf·ft)

B ▶ : Screw, 2

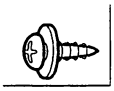

C ▷ : Clip, 7

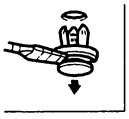

D ▷ : Clip, 3

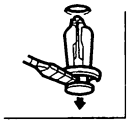

Except '01-02 models Coupe:

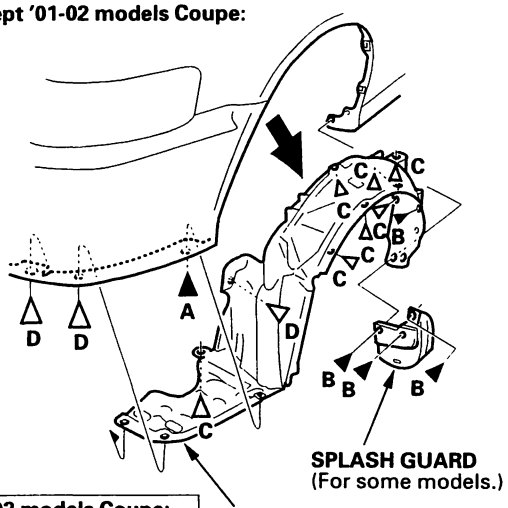

'01-02 models Coupe:

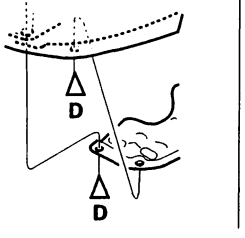

2. Install the inner fender in the reverse order of removal, and replace any damaged clips.

Fuel Pipe Protector Replacement

1. Remove the fuel pipe protector as shown. Take care to scratch the body.

Fastener Locations

▷ : Clip, 3

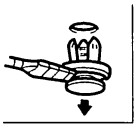

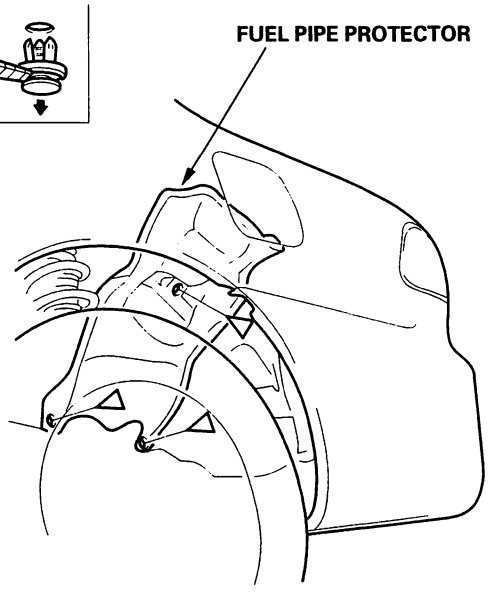

2. Install the protector in the reverse order of removal, and replace any damaged clips.

Rear Air Outlet Replacement

1. Remove the rear bumper
   -Coupe (see page 20-145)
   -Sedan (see page 20-148)

2. Remove the screws, then remove the rear air outlet (A). Take care not to scratch the body.

Fastener Locations

▶ : Screw, 2

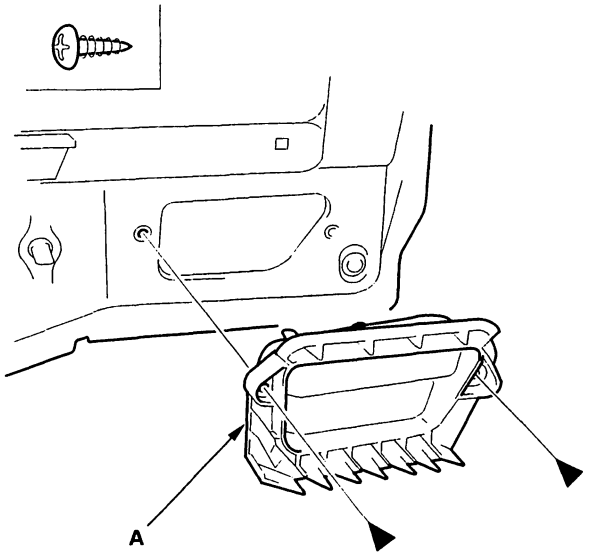

3. Install the air outlet in the reverse order of removal.

BACK

Component Location Index

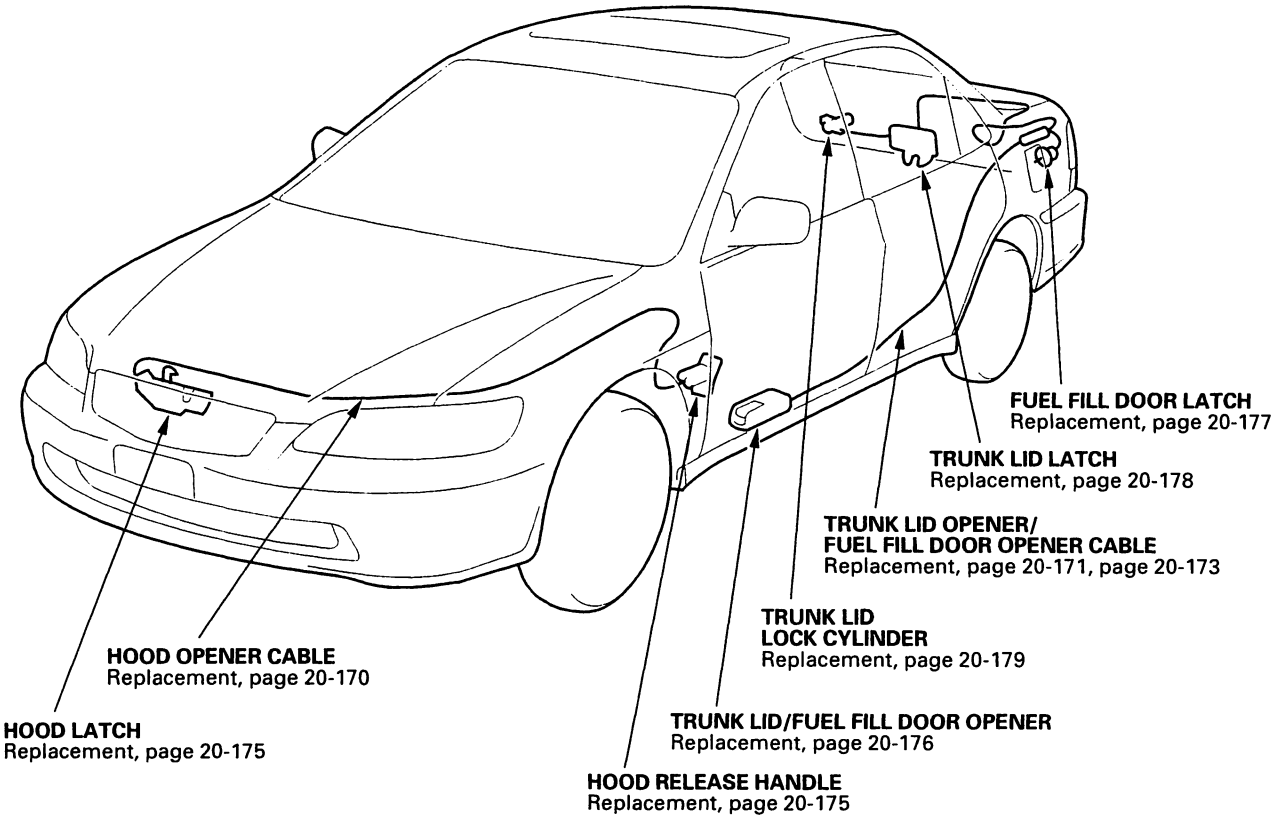

Hood Opener Cable Replacement

1. Remove these items from the left side of the vehicle (see page 20-167):
   - Splash guard (for some models)
   - Inner fender

2. Remove these items for the left side of the vehicle:

   Coupe (see page 20-74):
   - Door opening trim
   - Kick panel

   Sedan (see page 20-75):
   - Door opening trim
   - Kick panel

3. Disconnect the hood opener cable (A) from the hood latch (B) (see page 20-175) and hood release handle (C) (see step 2 on page 20-175).

Fastener Locations

D ▷ : Clip, 3 **E ▷ : Clip, 3**

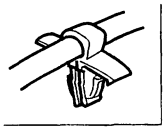

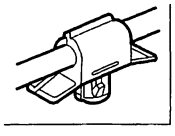

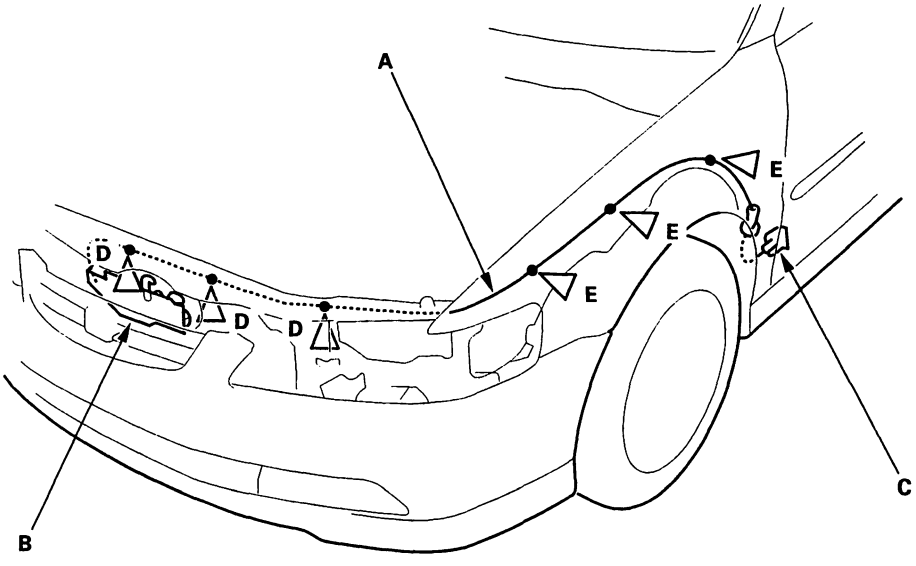

4. Using a clip remover, detach the clips (D, E) from the body, then remove the hood opener cable from the vehicle. Take care not to bend the cable.

5. Install the cable in the reverse order of removal, and replace any damaged clips.

BACK

Trunk Lid Opener/Fuel Fill Door Opener Cable Replacement - Coupe

'00-02 models: SRS components are located in this area. Review the SRS component locations (see page 23-23), and precautions and procedures (see page 23-28) in the SRS section before performing repairs or service.

1. Remove these items (see page 20-128):
   - Rear seat-back
   - Rear seat cushion

2. Remove these items:
   - Rear bulkhead cover (see page 20-76)
   - Front seat belt lower anchor bolt (left side) (see step 8 on page 23-6)

3. Remove these items (see page 20-74):
   - Door sill trim (left side)
   - Rear side trim panel

4. Remove these items (see page 20-78):
   - Trunk floor
   - Trunk rear trim panel
   - Trunk side pocket (left side)
   - Trunk side trim panel (left side)

5. Pull the carpet back as necessary (see page 20-81).

6. Disconnect the fuel fill door opener cable (A) from the opener (B) (see page 20-176).

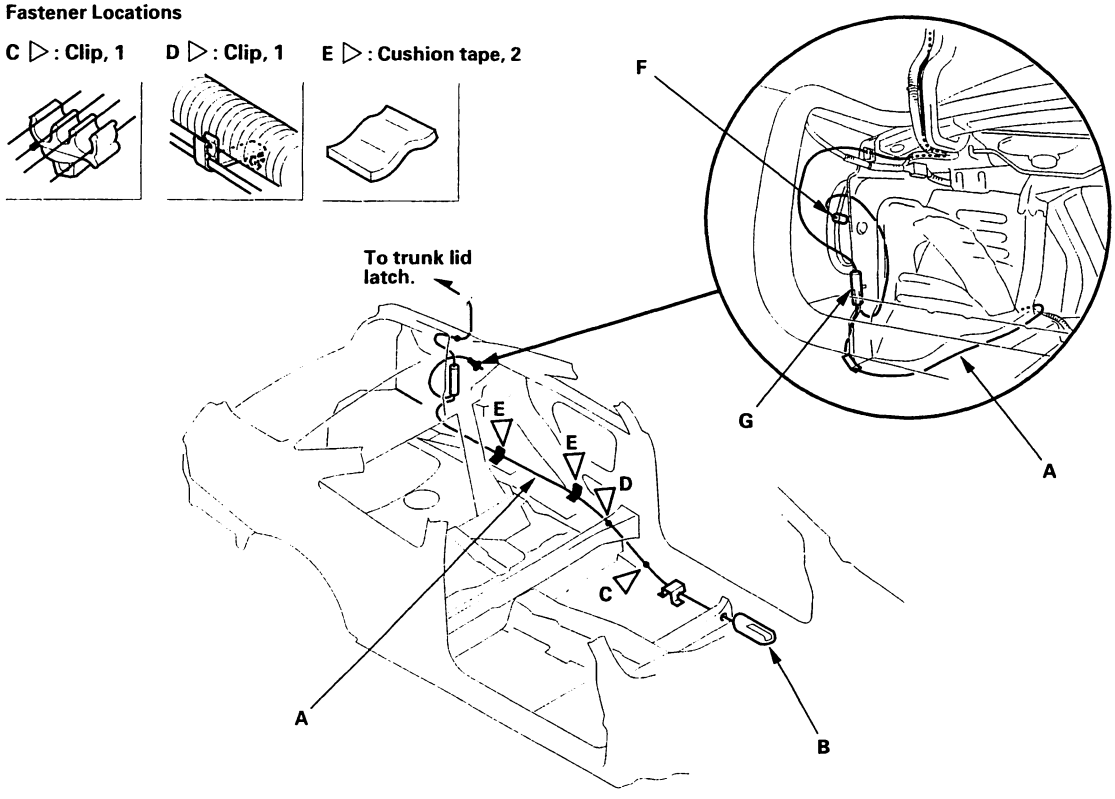

7. Release the opener cable from the clips (C, D), and remove the cushion tapes (E), then remove the fuel fill door latch (F) and the opener cable junction box (G) from the body.

(cont'd)

Trunk Lid Opener/Fuel Fill Door Opener Cable Replacement - Coupe (cont'd)

8. Disconnect the trunk lid opener cable (A) from the trunk lid latch (B) (see page 20-178).

With power trunk lid lock:

Fastener Locations

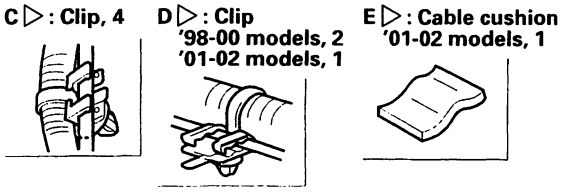

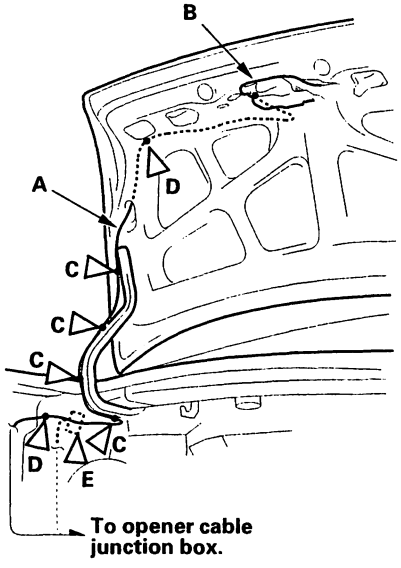

Without power trunk lid lock:

Fastener Locations

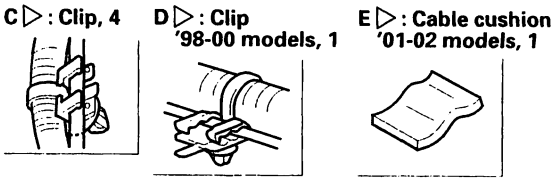

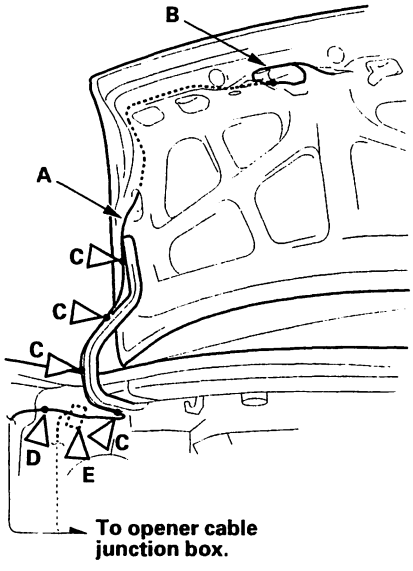

9. Using a clip remover, detach the clips (C,D) and/or cable cushion (E) from the body, trunk lid and trunk lid hinge.

10. Remove the trunk lid opener/fuel lid opener cable from the vehicle. Take care not to bend the opener cable.

11. Install the cable in the reverse order of removal, and replace any damaged clips.

BACK

Trunk Lid Opener/Fuel Fill Door Opener Cable Replacement - Sedan

'00-02 models: SRS components are located in this area. Review the SRS component locations (see page 23-23), and precautions and procedures (see page 23-28) in the SRS section before performing repairs or service.

1. Remove these items (see page 20-129):
   - Rear seat cushion
   - Rear seat side bolster

2. Remove these items:
   - Rear bulkhead cover (see page 20-77)
   - Front seat belt lower anchor bolt (left side) (see step 6 on page 23-7)

3. Remove these items (see page 20-75):
   - Front door sill trim (left side)
   - Rear door sill trim (left side)
   - Center pillar lower trim panel

4. Remove these items (see page 20-78):
   - Trunk floor
   - Trunk rear trim panel
   - Trunk side pocket (left side)
   - Trunk side trim panel (left side)

5. Pull the carpet back as necessary (see page 20-81).

6. Disconnect the trunk lid opener/fuel fill door opener cable (A) from the opener (B) (see page 20-176).

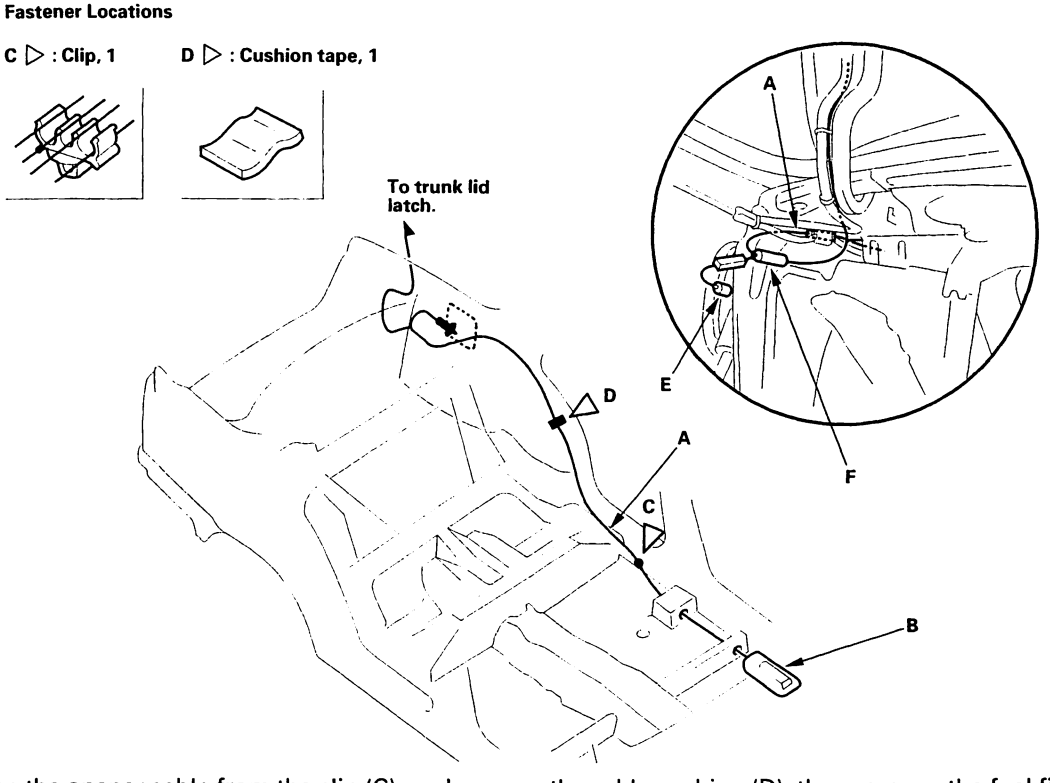

7. Release the opener cable from the clip (C), and remove the cable cushion (D), then remove the fuel fill door latch (E) and the opener cable junction box (F) from the body.

(cont'd)

Trunk Lid Opener/Fuel Fill Door Opener Cable Replacement - Sedan (cont'd)

8. Disconnect the trunk lid opener cable (A) from the trunk lid latch (B) (see page 20-178).

With power trunk lid lock:

Fastener Locations

C ▷ : Clip, 3 **D ▷ : Clip, 2**

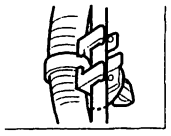

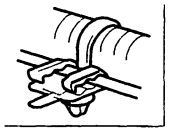

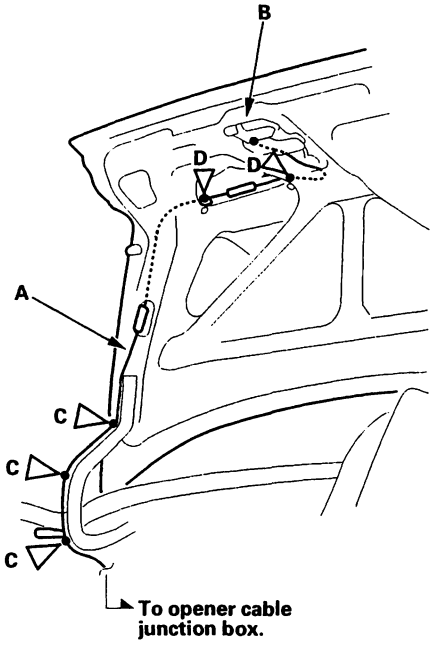

Without power trunk lid lock:

Fastener Locations

C ▷ : Clip, 3

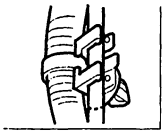

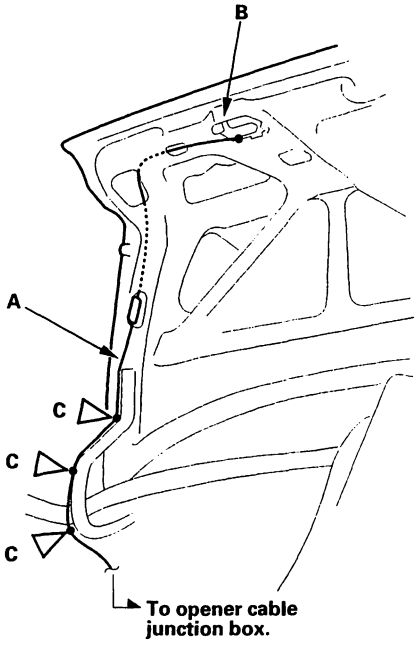

9. Using a clip remover, detach the clips (C, D) from the trunk lid hinge.

10. Remove the trunk lid opener/fuel fill door opener cable from the vehicle. Take care not to bend the cable.

11. Install the cable in the reverse order of removal, and replace any damaged clips.

BACK

Hood Release Handle Replacement

1. Remove these items for the left side of the vehicle.

   Coupe (see page 20-74):
   - Door sill trim
   - Kick panel

   Sedan (see page 20-75):
   - Front door sill trim
   - Kick panel

2. Disconnect the hood opener cable (A) from the hood release handle (B). Take care not to bend the cable.

Fastener Locations

▶ : Bolt, 2

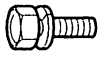

6 x 1.0 mm
9.8 N·m
(1.0 kgf·m,
7.2 lbf·ft)

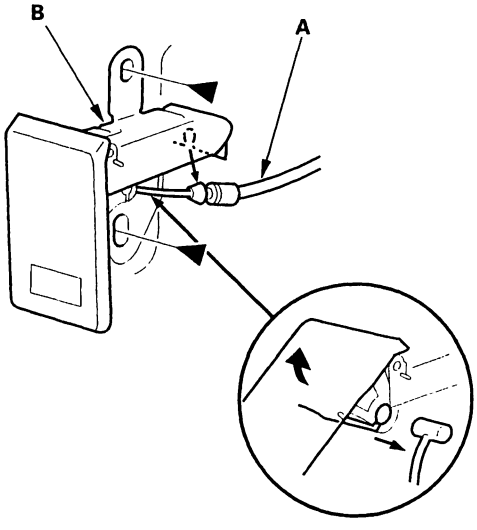

3. Remove the bolts, then remove the hood release handle.

4. Install the handle in the reverse order of removal, and note there items:

   - Make sure the hood opener cable is connected properly.
   - Make sure the hood opens properly.

Hood Latch Replacement

1. Remove the cover (A) from the hood latch (B).

Fastener Locations

▶ : Bolt, 3 ▷ : Clip, 1

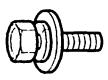

6 x 1.0 mm
9.8 N·m
(1.0 kgf·m,
7.2 lbf·ft)

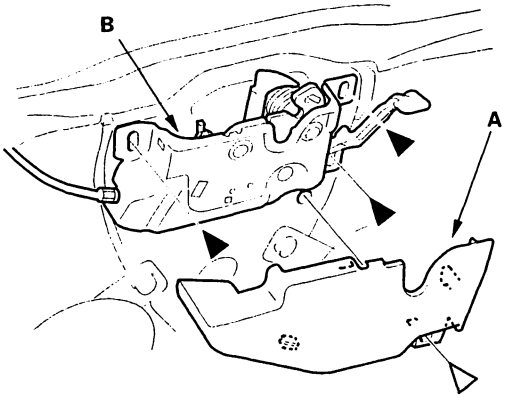

2. Remove the bolts, then remove the hood latch from the body.

3. Disconnect the hood opener cable (C) and hood latch switch connector (D), then detach the hood latch switch connector from the body. Take care not to bend the cable.

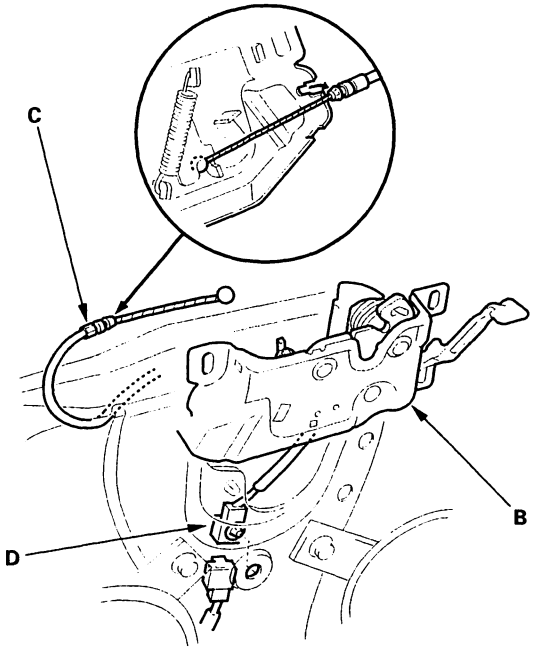

(cont'd)

Hood Latch Replacement (cont'd)

4. Install the latch in the reverse order of removal, and note these items:

   - Grease each location of the hood latch indicated by the arrows.
   - Make sure the hood opener cable is connected properly and hood latch switch connector is connected properly.
   - Adjust the hood latch alignment (see page 20-151).
   - Make sure the hood locks securely.

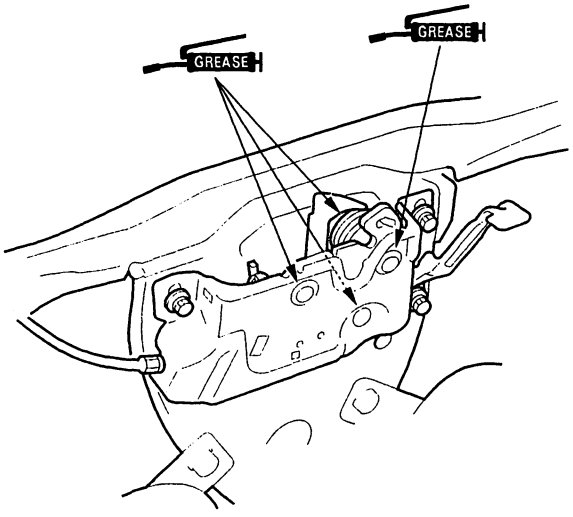

Trunk Lid Opener/Fuel Fill Door Opener Replacement

1. Using a flat-tip screwdriver wrapped with protective tape, pry open the cover (A), and remove the opener lock cylinder (B) from the opener (C).

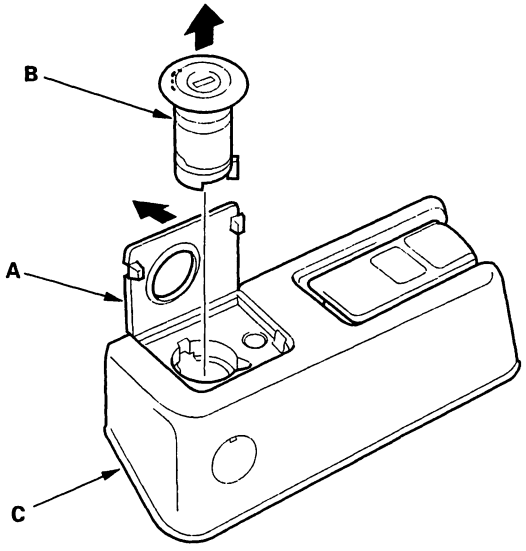

2. Pry out the access hole cover (A), and loosen the bolt.

Fastener Location
▶ : Bolt, 1

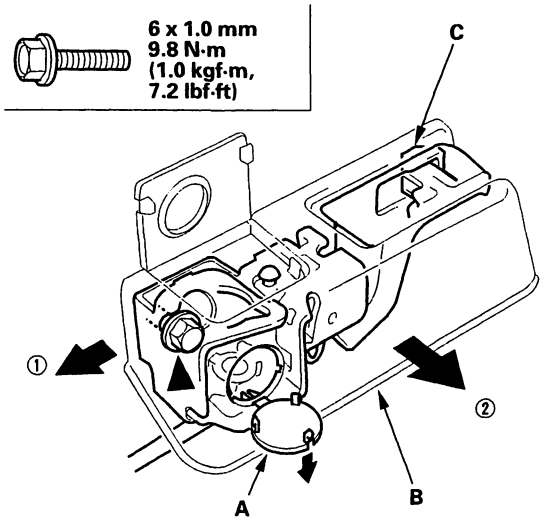

3. Remove the opener (B) from the bolt, and release the hook (C) by sliding the opener backward.

BACK

4. Disconnect the trunk lid/fuel fill door opener cable (A), then remove the opener (B).

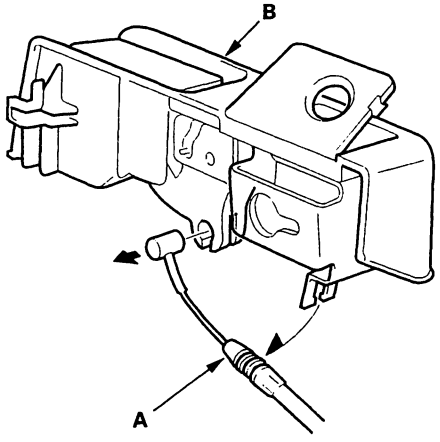

5. Install the opener in the reverse order of removal, and note these items:

   - Make sure the opener cable is connected properly.
   - Make sure the trunk lid and fuel fill door open properly.

Fuel Fill Door Latch Replacement

1. Remove the following items (see page 20-78):

   - Trunk floor
   - Trunk rear trim panel
   - Trunk side pocket, left side

2. Pull the rear edge of the left trunk side trim panel back (see page 20-78).

3. Turn the fuel fill door latch (A) 90°, and remove it.

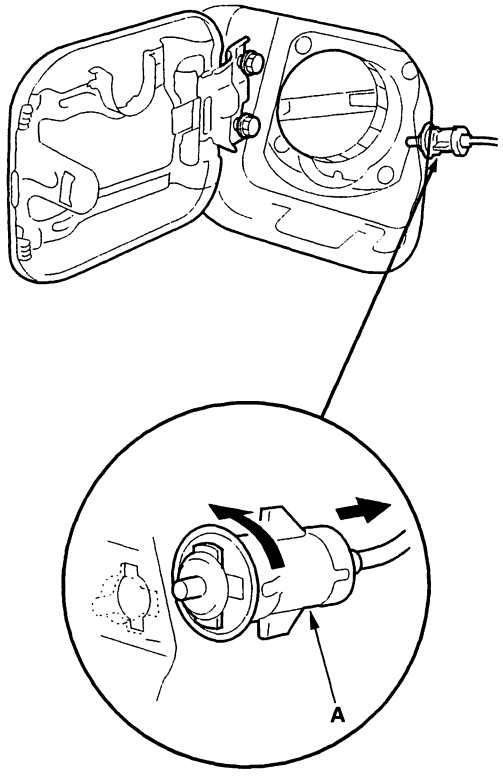

(cont'd)

Fuel Fill Door Latch Replacement (cont'd)

4. Install the latch in the reverse order of removal, and note these items:
   - Grease each location indicated by the arrows.
   - Make sure the fuel fill door opens properly and locks securely.

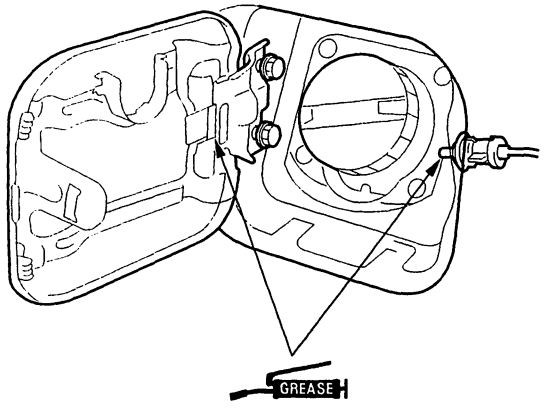

5. Check that the fuel fill door fits flush against the body. If necessary, adjust it.

Fastener Locations

▶ : Bolt, 2

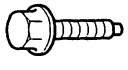

6 x 1.0 mm
9.8 N·m
(1.0 kgf·m,
7.2 lbf·ft)

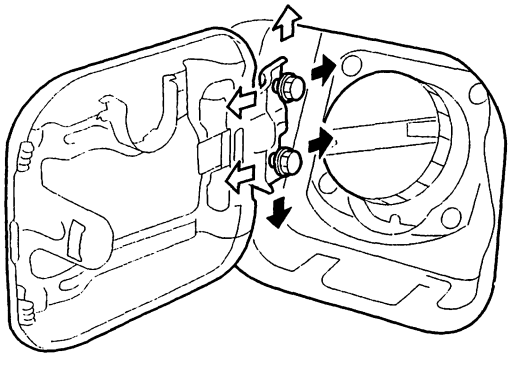

Trunk Lid Latch Replacement

1. Disconnect the cylinder rod from the lock cylinder (see page 20-179).

2. Disconnect the trunk lid opener cable (A) and trunk lid latch switch connector (B). If equipped with a power trunk lid lock, detach the trunk lid latch switch connector from the trunk lid. Take care not to bend the opener cable.

With power trunk lid lock:

Fastener Locations

▶ : Bolt, 2

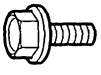

6 x 1.0 mm
9.8 N·m
(1.0 kgf·m,
7.2 lbf·ft)

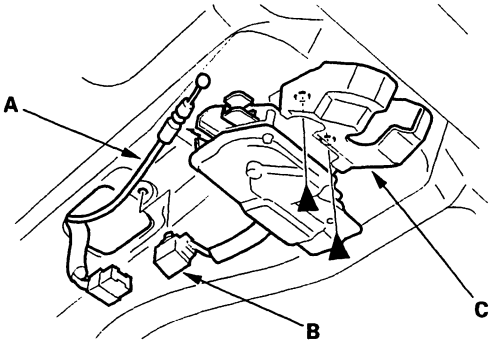

Without power trunk lid lock:

Fastener Locations

▶ : Bolt, 2

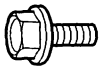

6 x 1.0 mm
9.8 N·m
(1.0 kgf·m,
7.2 lbf·ft)

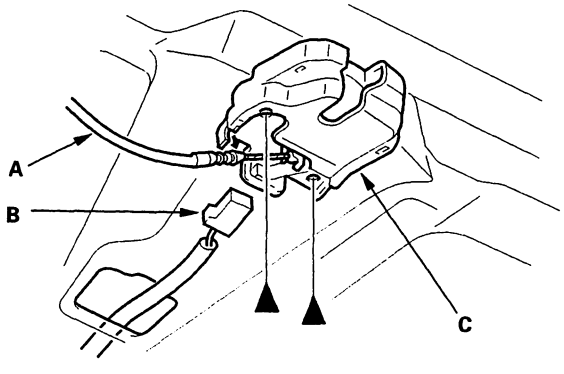

3. Remove the bolts from the trunk lid latch (C).

BACK

4. Pull the trunk lid latch out with the cylinder rod (A). Take care not to bend the cylinder rod.

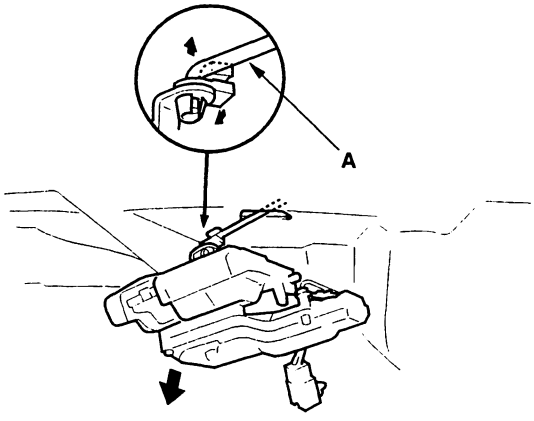

5. Disconnect the cylinder rod from the trunk lid latch.

6. Install the latch in the reverse order of removal, and note these items:

   - Grease the locations of the trunk lid latch indicated by the arrows.
   - Make sure the connector is plugged in properly and the cylinder rod is connected properly.
   - Make sure the trunk lid opens properly and locks securely.

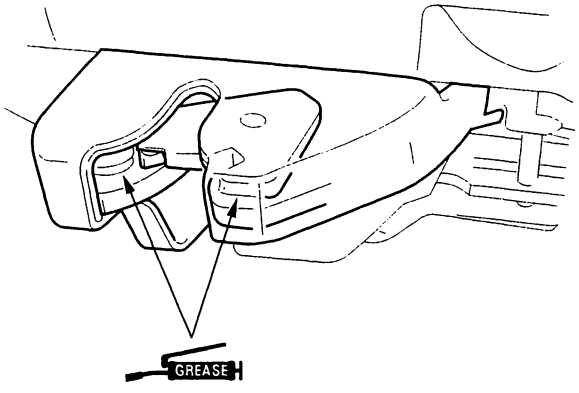

Trunk Lid Lock Cylinder Replacement

1. Disconnect the cylinder rod (A) and cylinder switch connector (B), then detach the cylinder switch connector from the trunk lid.

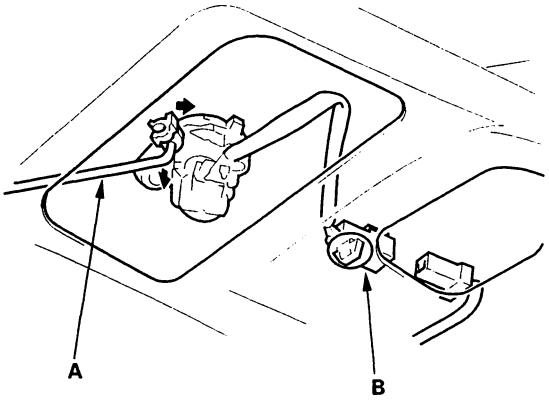

2. Remove the bolt securing the lock cylinder. Then turn the trunk lid lock cylinder (A) 45°, and remove it.

Fastener Location

▶ : Bolt, 1

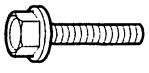

6 x 1.0 mm
9.8 N·m
(1.0 kgf·m,
7.2 lbf·ft)

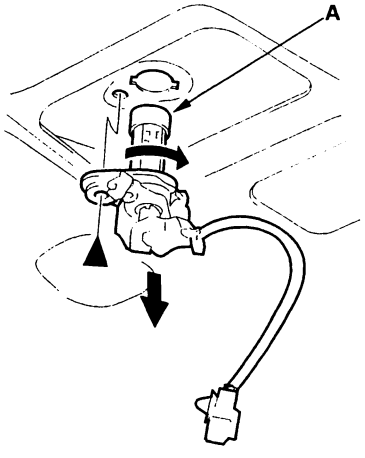

3. Install the lock cylinder in the reverse order of removal, and note these items:

   - Make sure the connector is connected properly and the cylinder rod is connected properly.
   - Make sure the trunk lid opens properly and locks securely.

Sub-frame Replacement

After loosening the sub-frame mounting bolts, be sure to replace them with new ones.

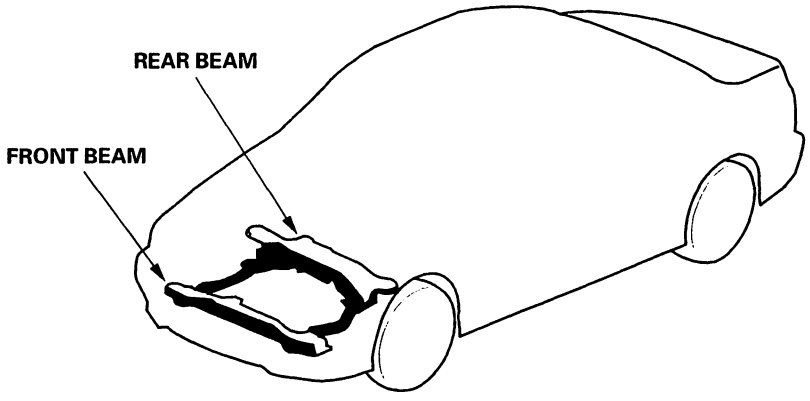

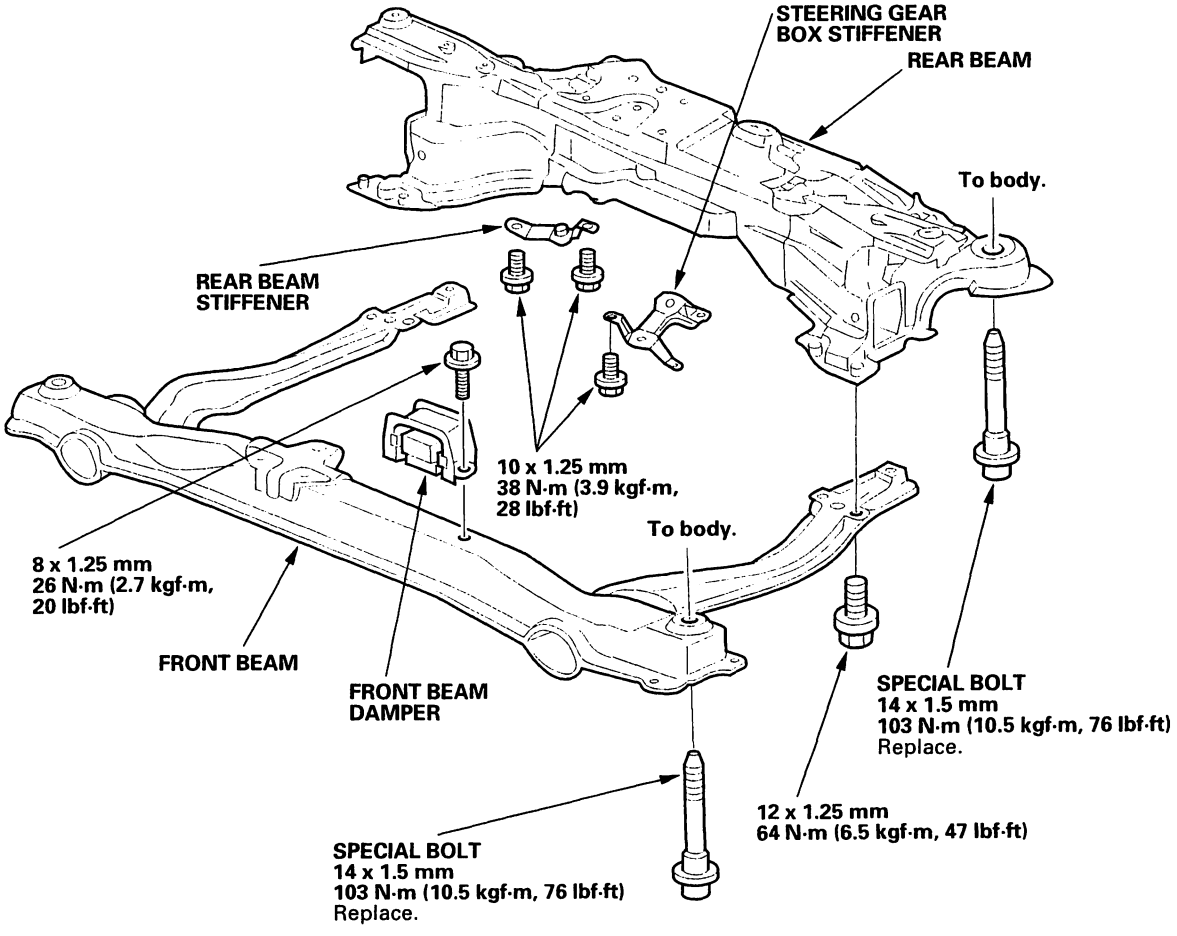

BACK

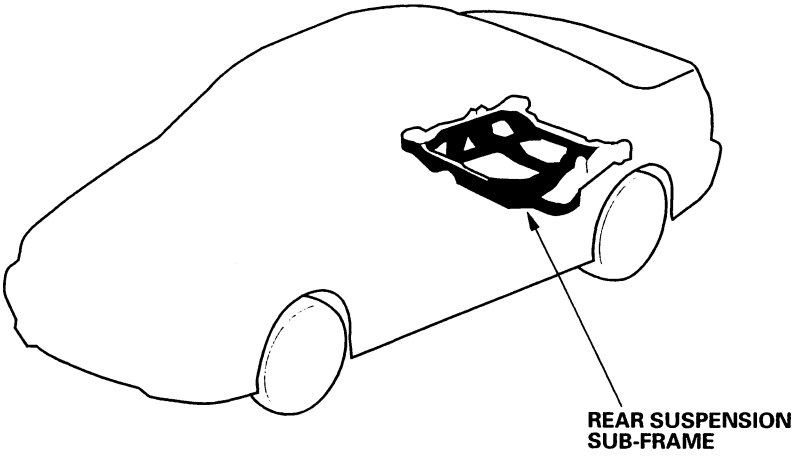
REAR SUSPENSION
SUB-FRAME

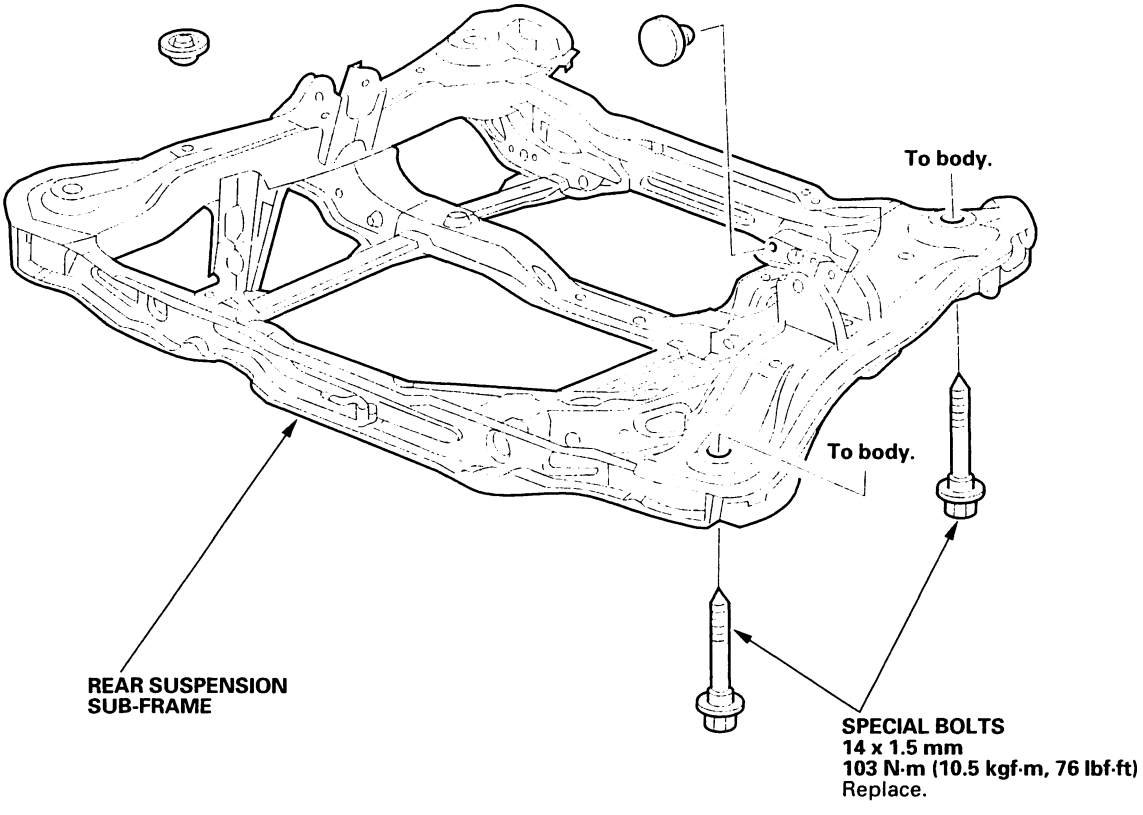
To body.
To body.
REAR SUSPENSION
SUB-FRAME
SPECIAL BOLTS
14 x 1.5 mm
103 N·m (10.5 kgf·m, 76 lbf·ft)
Replace.

Frame Repair Chart

Top View

Unit: mm (in.)
ø: Inner diameter

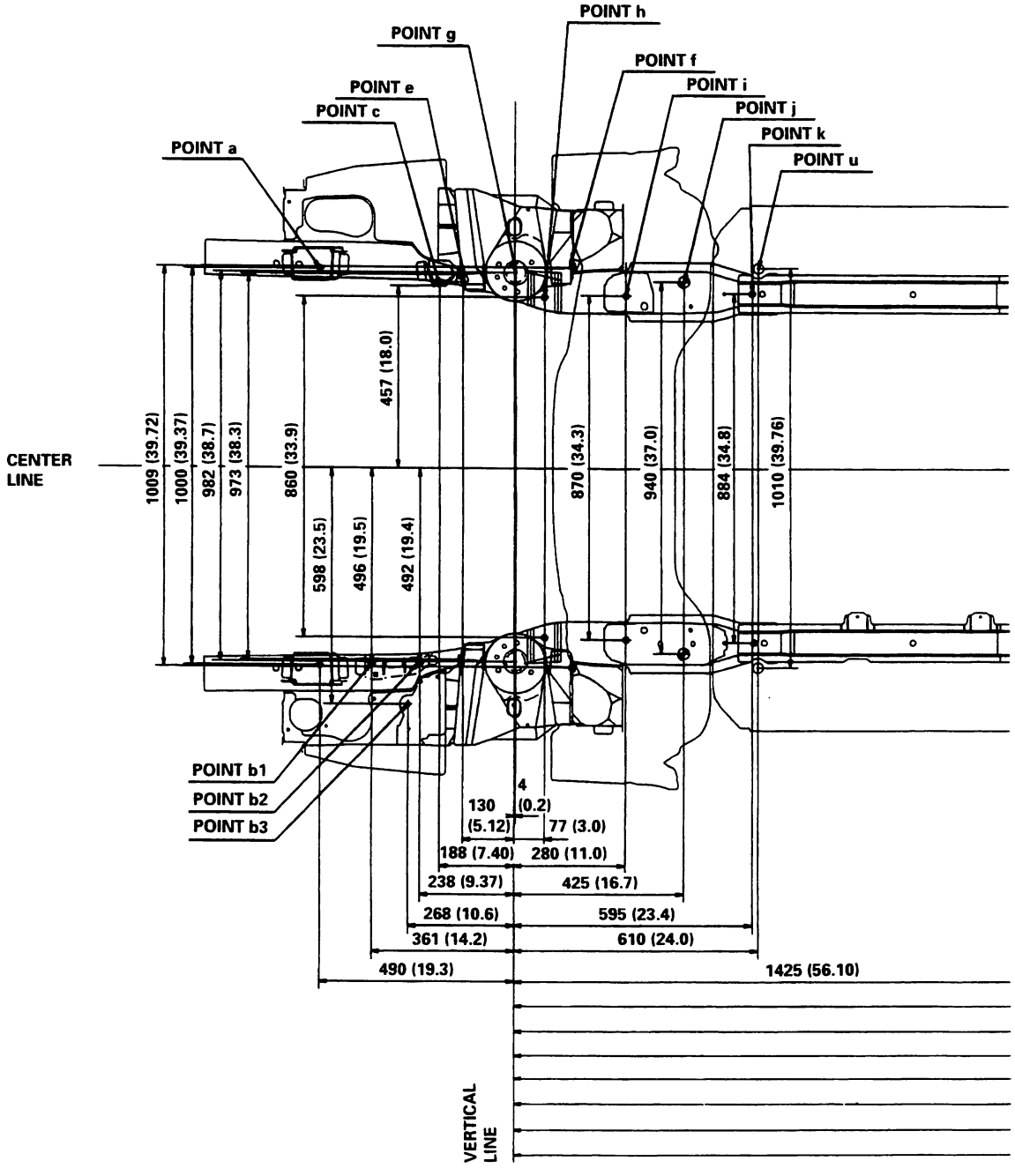

BACK

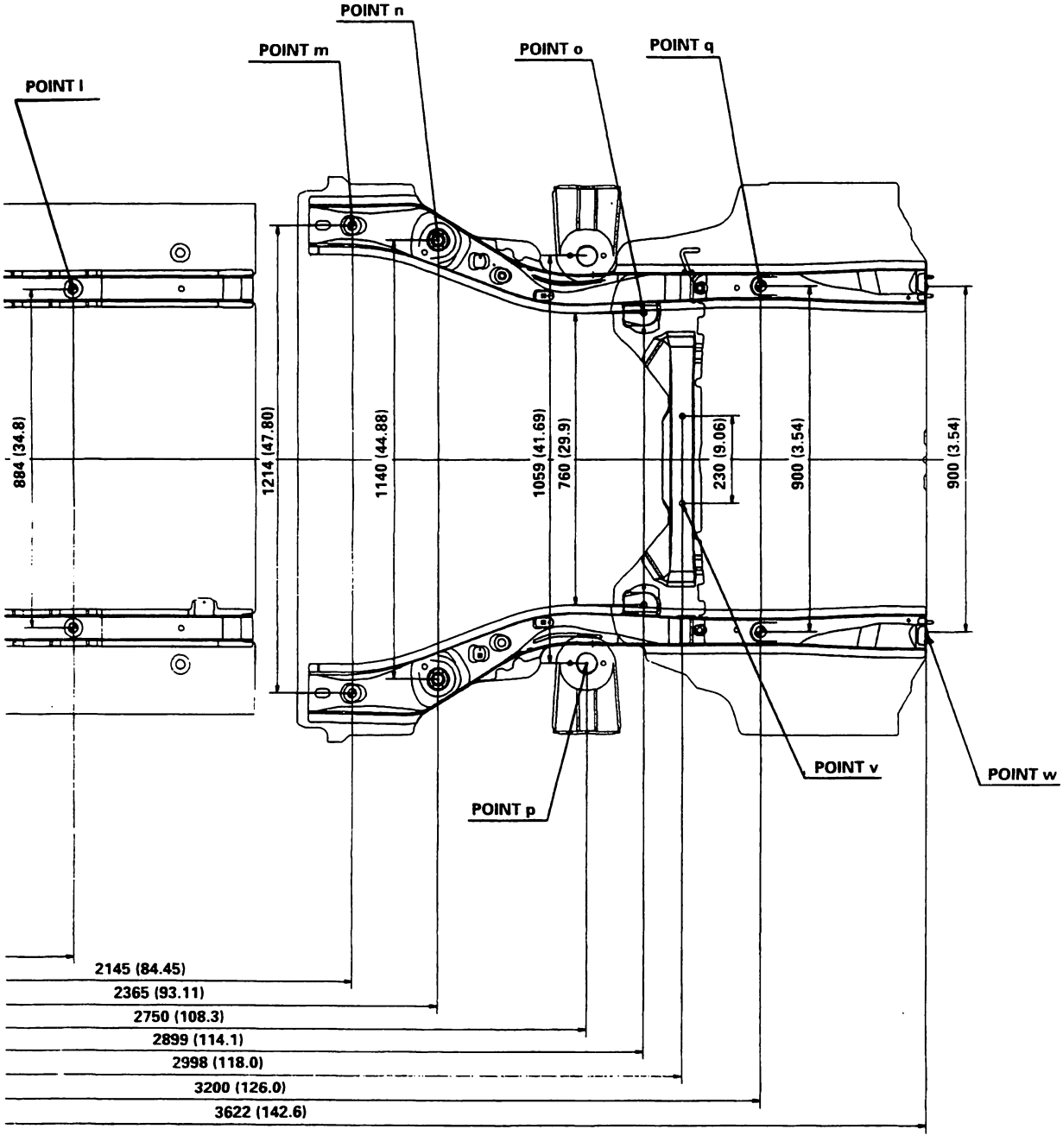
POINT n
POINT m
POINT o
POINT q
POINT l
884 (34.8)
1214 (47.80)
1140 (44.88)
1059 (41.69)
760 (29.9)
230 (9.06)
900 (3.54)
900 (3.54)
POINT v
POINT w
POINT p
2145 (84.45)
2365 (93.11)
2750 (108.3)
2899 (114.1)
2998 (118.0)
3200 (126.0)
3622 (142.6)

(cont'd)

Frame Repair Chart (cont'd)

Side View

Unit: mm (in.)
ø: Inner diameter

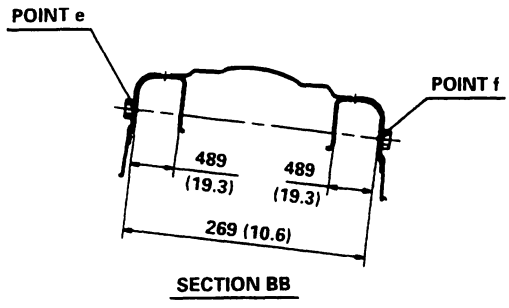

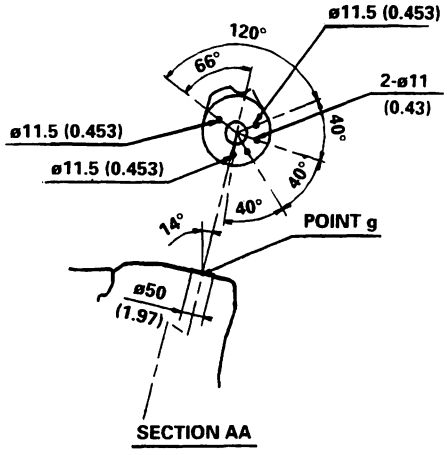

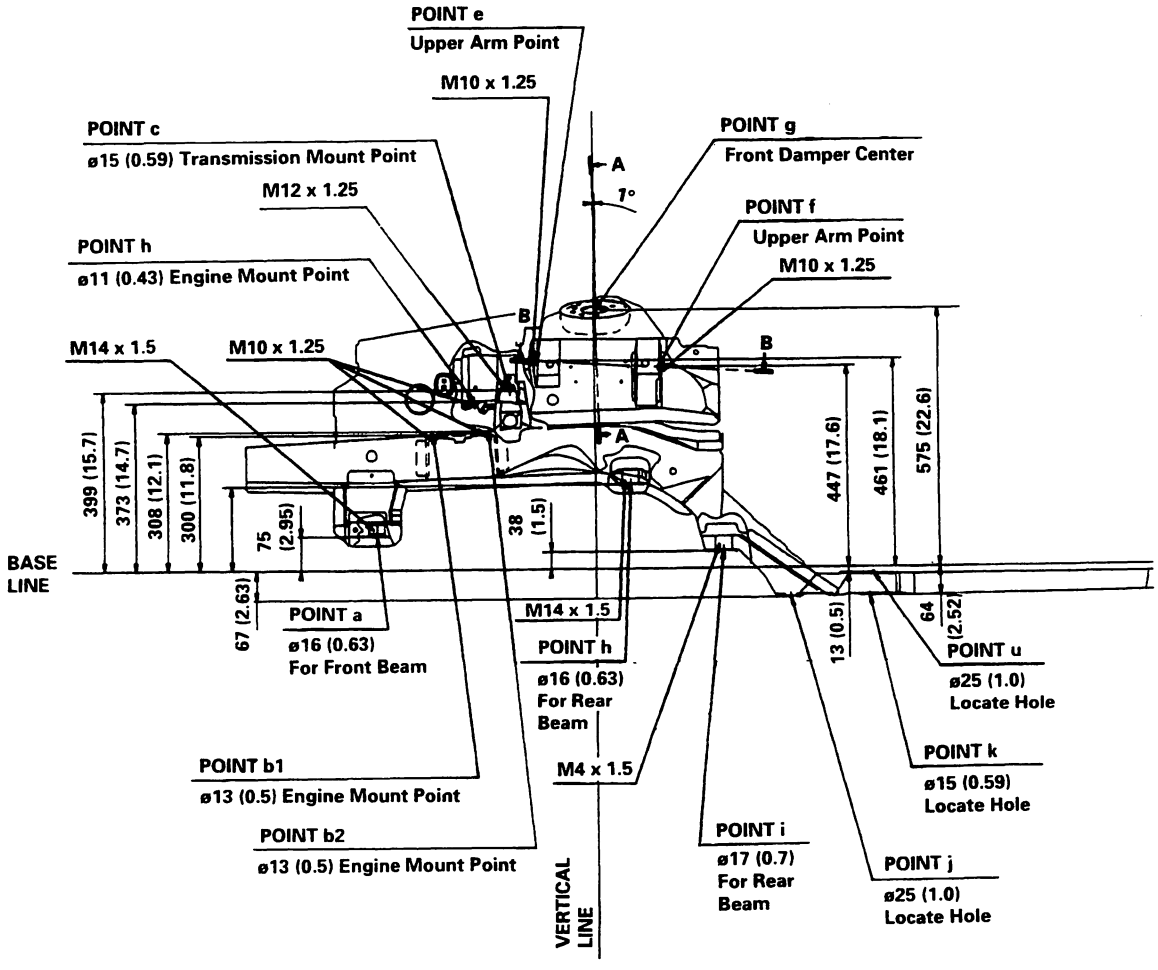

BACK

HVAC (Heating, Ventilation, and Air Conditioning)

Heating

Special Tools 21-2
Component Location Index 21-3
General Troubleshooting Information 21-4
DTC Troubleshooting Index 21-5
Symptom Troubleshooting Index 21-6
System Description 21-7
Circuit Diagram 21-8
DTC Troubleshooting 21-9
Recirculation Control Motor Circuit Troubleshooting 21-14
Blower Motor Circuit Troubleshooting 21-15
Heater Control Power and Ground Circuits Troubleshooting 21-19
Air Mix Control Motor Test and Replacement 21-20
Mode Control Motor Test and Replacement 21-21
Recirculation Control Motor Test and Replacement 21-22
Heater Fan Switch Test 21-23
Evaporator Temperature Sensor Test 21-23
Heater Control Panel Removal and Installation 21-24
Heater Control Panel Disassembly and Reassembly 21-24
Dust and Pollen Filter Replacement 21-25
*Blower Unit Removal and Installation 21-26
Blower Unit Components Replacement 21-27
*Heater Unit/Core Replacement 21-28
Heater Valve Cable Adjustment 21-30

Air Conditioning

Component Location Index 21-31
A/C Service Tips and Precautions 21-32
A/C Refrigerant Oil Replacement 21-32
Symptom Troubleshooting Index 21-34
System Description 21-35
Circuit Diagram 21-36
Condenser Fan Circuit Troubleshooting 21-37
Radiator and Condenser Fans Common Circuit Troubleshooting 21-38
Compressor Clutch Circuit Troubleshooting 21-39
A/C Pressure Switch Circuit Troubleshooting 21-41
A/C System Tests 21-43
Evaporator Removal and Installation 21-46
Evaporator Components Replacement 21-47
Compressor Replacement 21-48
Compressor Clutch Check 21-50
Compressor Clutch Overhaul 21-51
Compressor Relief Valve Replacement 21-52
Condenser Replacement 21-53
Refrigerant Recovery 21-54
System Evacuation 21-55
System Charging 21-56
Refrigerant Leak Test 21-57

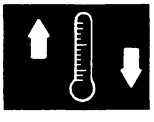

Special Tools

Ref.No.	Tool Number	Description	Qty
①	07SAZ-001000A	Backprobe Set	2

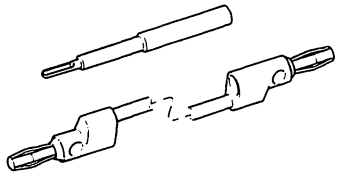

①

BACK

Component Location Index

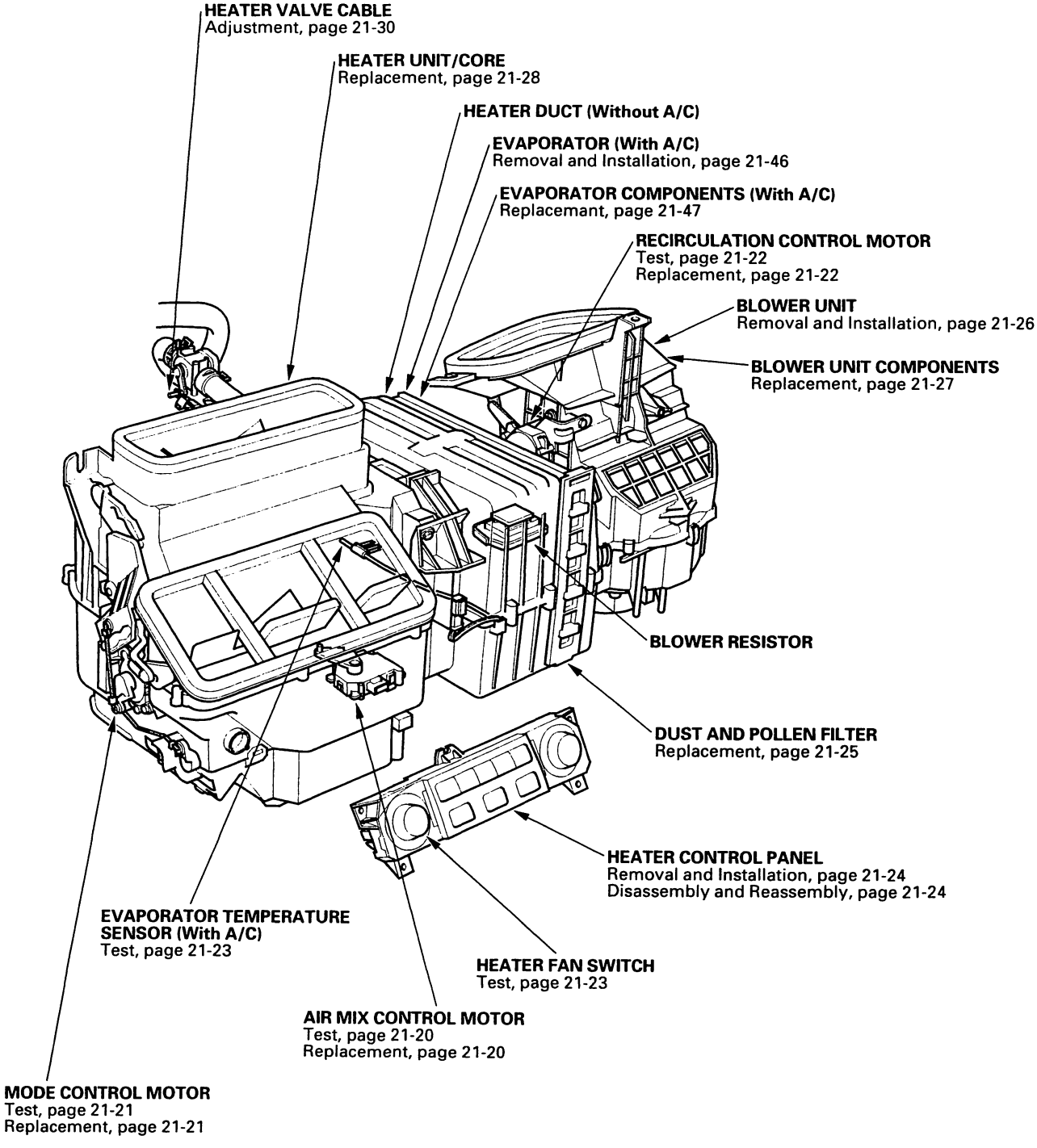

General Troubleshooting Information

How to Retrieve a DTC

The heater control panel has a self-diagnosis function.

Running the Self-diagnosis Function

1. Turn the ignition switch ON (II).
2. Turn the fan switch OFF, and the recirculation control switch to Recirculate (recirculation indicator comes on).
3. Press and hold the recirculation control switch to Fresh (recirculation indicator goes off). Continue to hold the switch until the recirculation indicator comes on for 2 seconds, then it will blink the Diagnostic Trouble Code (DTC) to indicate a faulty component.

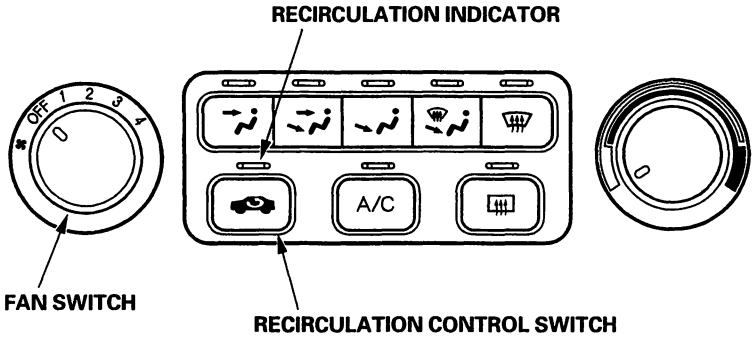

Example of DTC Indication Pattern (DTC 2):

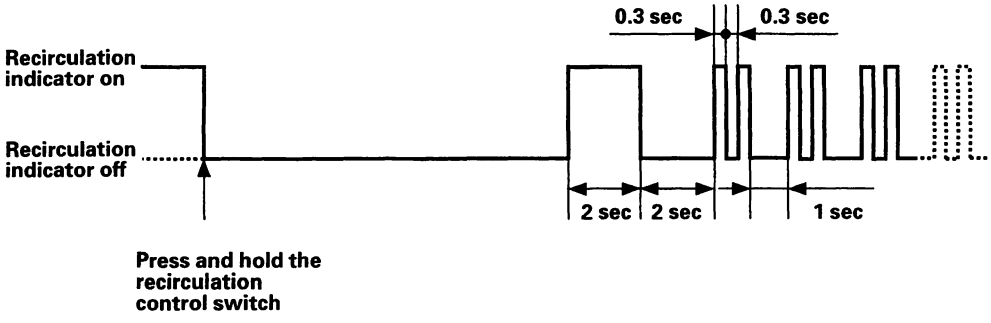

Resetting the Self-diagnosis Function
Turn the ignition switch OFF to cancel the self-diagnosis function. After completing repair work, run the self-diagnosis function again to make sure that there are no other malfunctions.

BACK

DTC Troubleshooting Index

DTC (Recirculation Indicator Blinks)	Detection Item	Page
1	A problem in the air mix control motor circuit	(see page 21-9)
2	A problem in the mode control motor circuit	(see page 21-10)
3 (With A/C)	A problem in the evaporator temperature sensor circuit	(see page 21-12)

In case of multiple problems, the recirculation indicator will indicate only the DTC with the least number of blinks.

Symptom Troubleshooting Index

Symptom	Diagnostic procedure	Also check for
Recirculation control doors do not change between Fresh and Recirculate.	Recirculation Control Motor Circuit Troubleshooting (see page 21-14)	• Blown fuse No. 3 (7.5A) in the driver's under-dash fuse/relay box • Cleanliness and tightness of all connectors
Blower motor runs, but one or more speeds are inoperative.	Blower Motor Circuit Troubleshooting (see page 21-15)	• Blown fuse No. 56 (40A) in the under-hood fuse/relay box, and No. 3 (7.5A) in the driver's under-dash fuse/relay box • Poor ground at G202 and G401 • Cleanliness and tightness of all connectors
Blower motor does not run at all.	Blower Motor Circuit Troubleshooting (see page 21-15)	• Blown fuse No. 56 (40A) in the under-hood fuse/relay box, and No. 3 (7.5A) in the driver's under-dash fuse/relay box • Poor ground at G202 and G401 • Cleanliness and tightness of all connectors
Both heater and A/C do not work.	Heater Control Power and Ground Circuits Troubleshooting (see page 21-19)	• Blown fuse No. 54 (40A) in the under-hood fuse/relay box, No. 3 (7.5A) in the driver's under-dash fuse/relay box, and No. 13 (7.5A) in the passenger's under-dash fuse/relay box • Poor ground at G202 and G401 • Cleanliness and tightness of all connectors

BACK

System Description

Heater Control Panel Inputs and Outputs

HEATER CONTROL PANEL 22P CONNECTOR

Wire side of female terminals

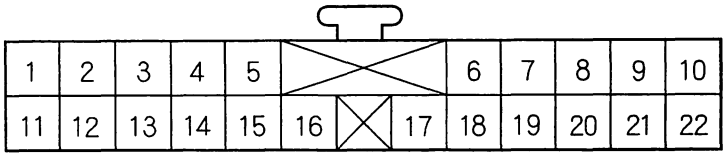

Cavity	Wire color	Signal	
1	GRN/WHT	RECIRCULATE	INPUT
2	BLK/YEL	IG2 (Power)	INPUT
3	WHT/YEL	+B (Power)	INPUT
4	BRN/YEL	REAR WINDOW DEFOGGER RELAY	INPUT
5 (With A/C)	YEL/GRN	A/C PRESSURE SWITCH	INPUT
6	BLU/GRN	MODE 4	OUTPUT
7	LT GRN/BLK	MODE 3	OUTPUT
8	GRN/YEL	MODE 2	OUTPUT
9	BLK	GROUND	OUTPUT
10	RED/BLK	COMBINATION LIGHT SWITCH or TAILLIGHT RELAY	INPUT
11	GRN/RED	FRESH	INPUT
12	RED/YEL	AIR MIX HOT	OUTPUT
13	RED/WHT	AIR MIX COOL	OUTPUT
14	BLU/WHT	MODE VENT+	OUTPUT
15	BLU/BLK	MODE DEF+	OUTPUT
16	GRY	AIR MIX POTENTIAL +5 V	OUTPUT
17	YEL/GRN	SENSOR COMMON GROUND	INPUT
18	GRN/BLK	MODE 1	OUTPUT
19	PNK/BLK	AIR MIX POTENTIAL	OUTPUT
20 (with A/C)	BRN	EVAPORATOR TEMPERATURE SENSOR	OUTPUT
21	GRN	FAN SWITCH	OUTPUT
22	RED	MULTIPLEX CONTROL UNIT (DRIVER'S)	OUTPUT

Circuit Diagram

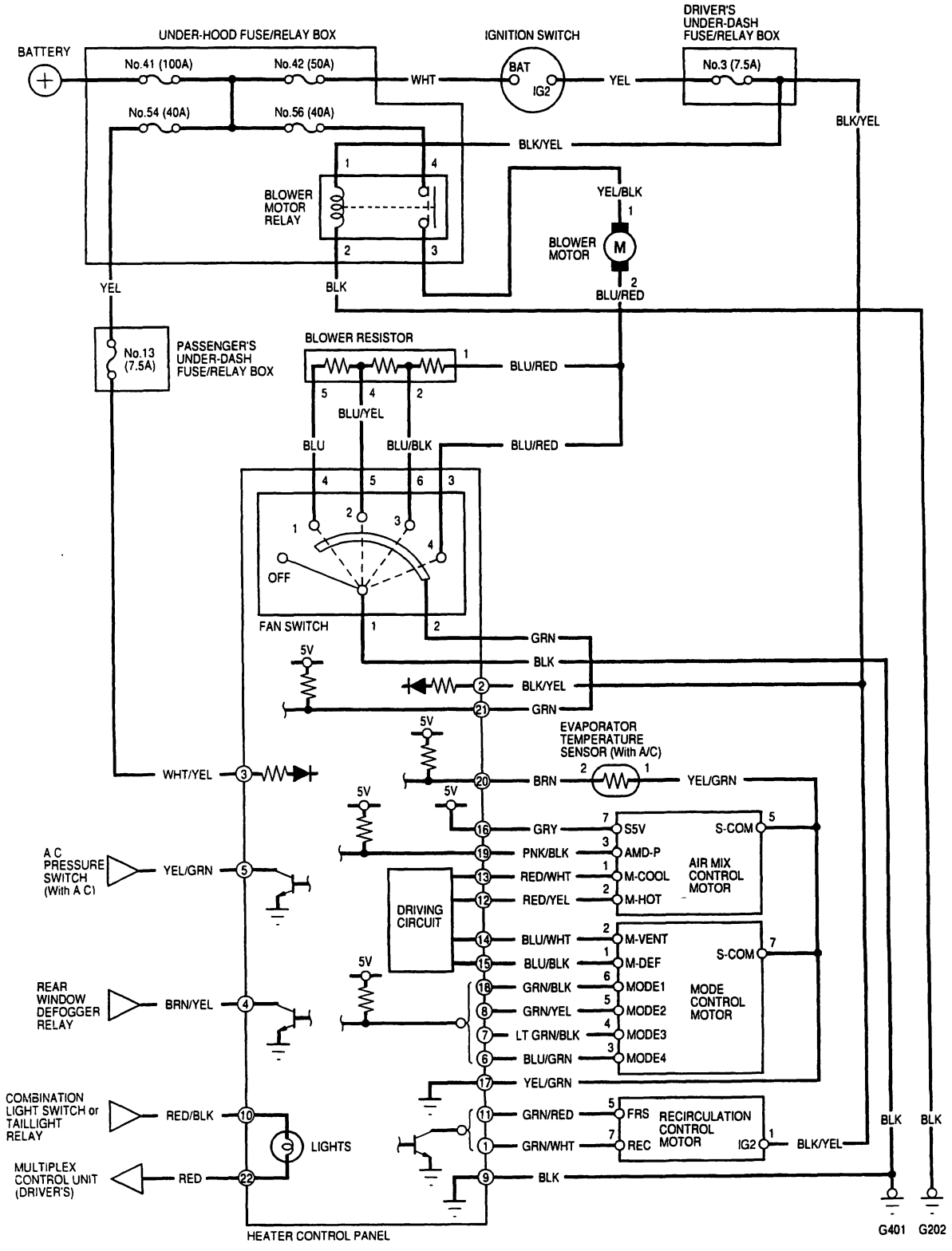

BACK

DTC Troubleshooting

DTC 1: A problem in the air mix control motor circuit

1. Disconnect the air mix control motor 7P connector.
2. Test the air mix control motor (see page 21-20).

   Is the air mix control motor OK?

   YES – Go to step 3.

   NO – Go to step 8.

3. Disconnect the heater control panel 22P connector.
4. Check for continuity between body ground and the heater control panel 22P connector terminals No. 12, 13, 16, 17 and 19 individually.

HEATER CONTROL PANEL 22P CONNECTOR

Wire side of female terminals

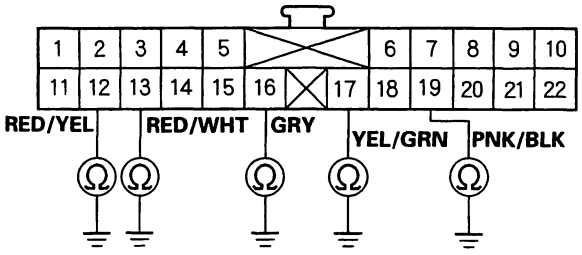

Is there continuity?

YES – Repair any short to body ground in the wire(s) between the heater control panel and the air mix control motor. ■

NO – Go to step 5.

5. Turn the ignition switch ON (II), and check the same terminals for voltage.

HEATER CONTROL PANEL 22P CONNECTOR

Wire side of female terminals

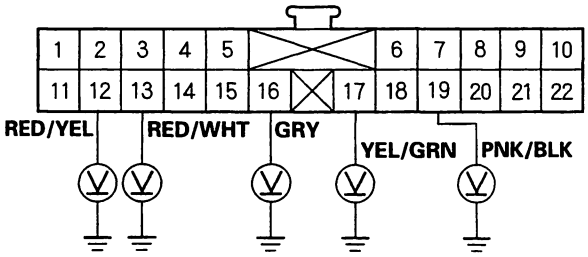

Is there any voltage?

YES – Repair any short to power in the wire(s) between the heater control panel and the air mix control motor. This short also damages the heater control panel. Repair the short to power before replacing the heater control panel. ■

NO – Go to step 6.

(cont'd)

DTC Troubleshooting (cont'd)

6. Turn the ignition switch OFF.

7. Check for continuity between following terminals of the heater control panel 22P connector and the air mix control motor 7P connector.

22P:	7P:
No. 12	No. 2
No. 13	No. 1
No. 16	No. 7
No. 17	No. 5
No. 19	No. 3

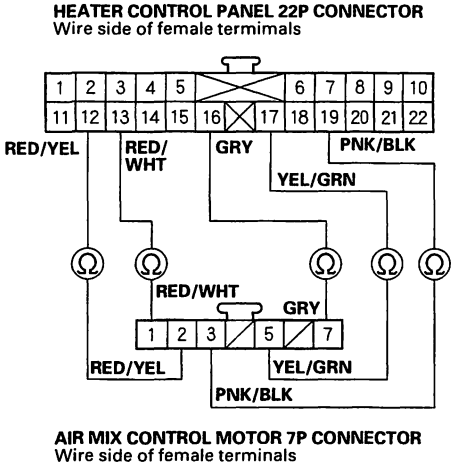

Is there continuity?

YES—Check for loose wires or poor connections at the heater control panel 22P connector and at the air mix control motor 7P connector. If the connections are good, substitute a known-good heater control panel, and recheck. If the symptom/ indication goes away, replace the original heater control panel.■

NO—Repair any open in the wire(s) between the heater control panel and the air mix control motor.■

8. Remove the air mix control motor (see page 21-20).

9. Check the air mix control linkage and door for smooth movement.

Do the air mix control linkage and door move smoothly?

YES—Replace the air mix control motor.■

NO—Repair the air mix control linkage or door.■

DTC 2: A problem in the mode control motor circuit

1. Disconnect the mode control motor 7P connector.

2. Test the mode control motor (see page 21-21).

Is the mode control motor OK?

YES—Go to step 3.

NO—Go to step 8.

3. Disconnect the heater control panel 22P connector.

4. Check for continuity between body ground and the heater control panel 22P connector terminals No. 6, 7, 8, 14, 15, 17 and 18 individually.

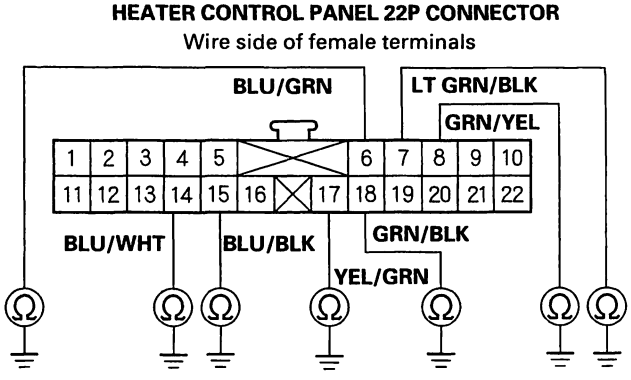

Is there continuity?

YES—Repair any short to body ground in the wire (s) between the heater control panel and the mode control motor.■

NO—Go to step 5.

BACK

5. Turn the ignition switch ON (II), and check the same terminals for voltage

HEATER CONTROL PANEL 22P CONNECTOR
Wire side of female terminals

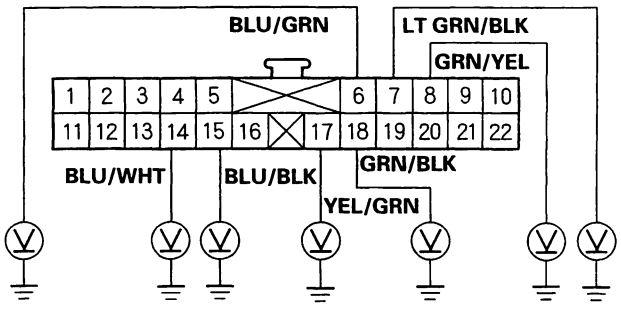

Is there any voltage?

YES—Repair any short to power in the wire(s) between the heater control panel and the mode control motor. This short also damages the heater control panel. Repair the short to power before replacing the heater control panel.■

NO—Go to step 6.

6. Turn the ignition switch OFF.

7. Check for continuity between following terminals of the heater control panel 22P connector and the air mix control motor 7P connector.

22P:	7P:
No. 6	No. 3
No. 7	No. 4
No. 8	No. 5
No. 14	No. 2
No. 15	No. 1
No. 17	No. 7
No. 18	No. 6

HEATER CONTROL PANEL 22P CONNECTOR
Wire side of female terminals

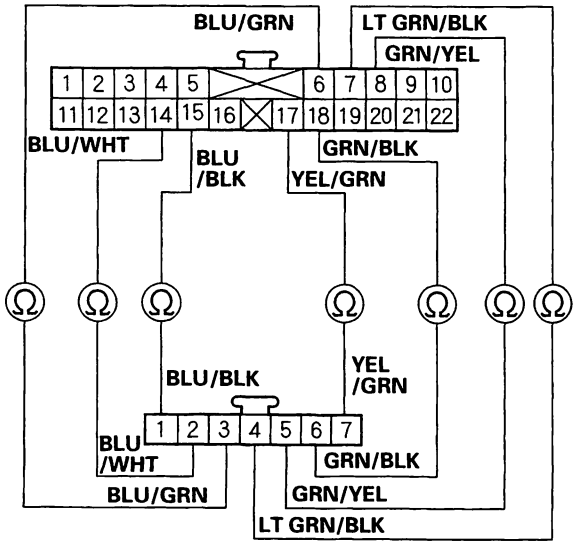

MODE CONTROL MOTOR 7P CONNECTOR
Wire side of female terminals

Is there continuity?

YES—Check for loose wires or poor connections at the heater control panel 22P connector and at the mode control motor 7P connector. If the connections are good, substitute a known-good heater control panel, and recheck. If the symptom/indication goes away, replace the original heater control panel.■

NO—Repair any open in the wire(s) between the heater control panel and mode control motor.■

(cont'd)

DTC Troubleshooting (cont'd)

8. Remove the mode control motor (see page 21-21).

9. Check the mode control linkage and doors for smooth movement.

   Do the mode control linkage and doors move smoothly?

   YES—Replace the air mix control motor.■

   NO—Repair the air mix control linkage or doors.■

DTC 3: A problem in the evaporator temperature sensor circuit

1. Disconnect the evaporator temperature sensor 2P connector.

2. Measure the resistance between the No. 1 and No. 2 terminals of the evaporator temperature sensor.

EVAPORATOR TEMPERATURE SENSOR
Terminal side of male terminals

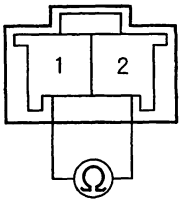

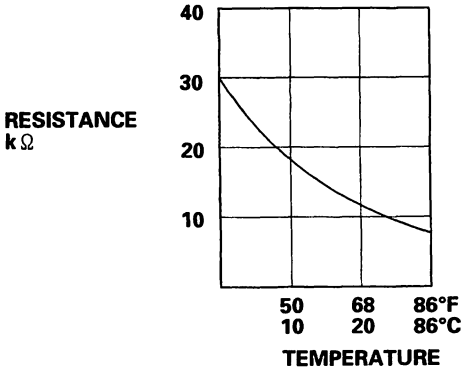

Is the resistance within the specifications shown on the graph?

YES—Go to step 3.

NO—Replace the evaporator temperature sensor.■

3. Disconnect the heater control panel 22P connector.

BACK

4. Check for continuity between the No. 20 terminal of the heater control panel 22P connector and body ground.

HEATER CONTROL PANEL 22P CONNECTOR
Wire side of female terminals

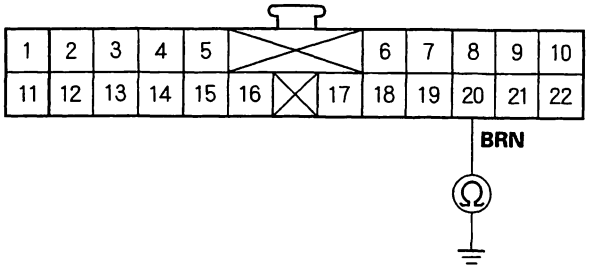

Is there continuity?

YES—Repair short to body ground in the wire between the heater control panel and the evaporator temperature sensor.■

NO—Go to step 5.

5. Check for continuity between the No. 20 terminal of the heater control panel 22P connector and the No.2 terminal of the evaporator temperature sensor 2P connector.

HEATER CONTROL PANEL 22P CONNECTOR
Wire side of female terminals

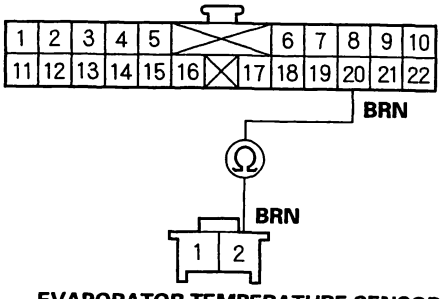

EVAPORATOR TEMPERATURE SENSOR 2P CONNECTOR
Wire side of female terminals

Is there continuity?

YES—Go to step 6.

NO—Repair open in the wire between the heater control panel and the evaporator temperature sensor.■

6. Check for continuity between the No. 17 terminal of the heater control panel 22P connector and the No. 1 terminal of the evaporator temperature sensor 2P connector.

HEATER CONTROL PANEL 22P CONNECTOR
Wire side of female terminals

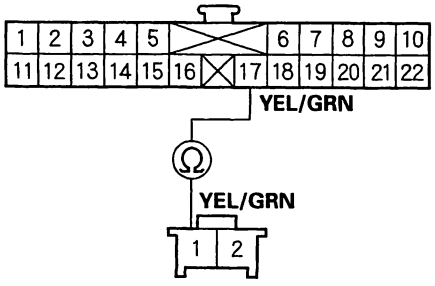

EVAPORATOR TEMPERATURE SENSOR 2P CONNECTOR
Wire side of female terminals

Is there continuity?

YES—Check for loose wires or poor connections at the heater control panel 22P connector and at the evaporator temperature sensor 2P connector. If the connections are good, substitute a known-good heater control panel, and recheck. If the symptom/indication goes away, replace the original heater control panel.■

NO—Repair open in the wire between the heater control panel and the evaporator temperature sensor.■

Recirculation Control Motor Circuit Troubleshooting

1. Check the No. 3 (7.5A) fuse in the driver's under-dash fuse/relay box.

   Is the fuse OK?

   YES—Go to step 2.

   NO—Replace the fuse, and recheck.■

2. Disconnect the recirculation control motor 7P connector.

3. Turn the ignition switch ON (II).

4. Measure the voltage between the No. 1 terminal of the recirculation control motor 7P connector and body ground.

   RECIRCULATION CONTROL MOTOR 7P CONNECTOR

   Wire side of female terminals

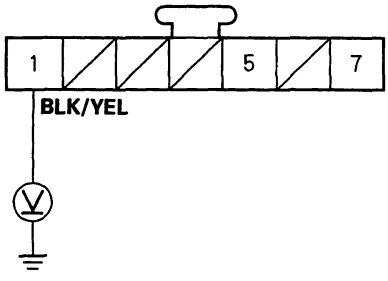

   Is there battery voltage?

   YES—Go to step 5.

   NO—Repair open in the wire between the No.3 fuse in the driver's under-dash fuse/relay box and the recirculation control motor.■

5. Turn the ignition switch OFF.

6. Test the recirculation control motor (see page 21-22).

   Is the recirculation control motor OK?

   YES—Go to step 7.

   NO—Go to step 12.

7. Disconnect the heater control panel 22P connector.

8. Check for continuity between the No. 1 and No. 11 terminals of the heater control panel 22P connector and body ground individually.

   HEATER CONTROL PANEL 22P CONNECTOR

   Wire side of female terminals

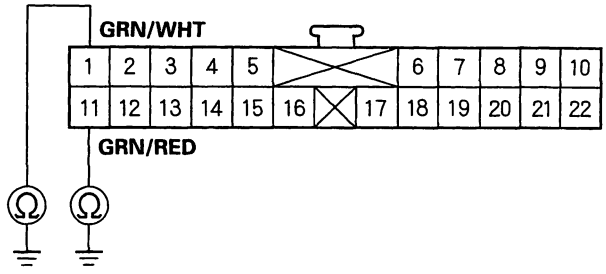

   Is there continuity?

   YES—Repair any short to body ground in the wire (s) between the heater control panel and the recirculation control motor.■

   NO—Go to step 9.

9. Turn the ignition switch ON (II), and check the same wires for voltage.

   HEATER CONTROL PANEL 22P CONNECTOR

   Wire side of female terminals

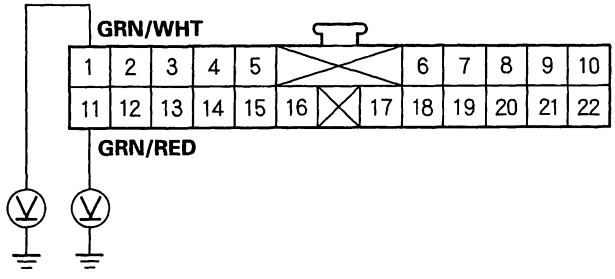

   Is there any voltage?

   YES—Repair any short to power in the wire(s) between the heater control panel and the recirculation control motor. This short also damages the heater control panel. Repair the short to power before replacing the heater control panel.■

   NO—Go to step 10.

BACK

10. Turn the ignition switch OFF.

11. Check for continuity between the following terminals of the heater control panel 22P connector and the recirculation control motor 7P connector.
    22P: 7P:
    No. 1 No. 7
    No. 11 No. 5

HEATER CONTROL PANEL 22P CONNECTOR
Wire side of female terminals

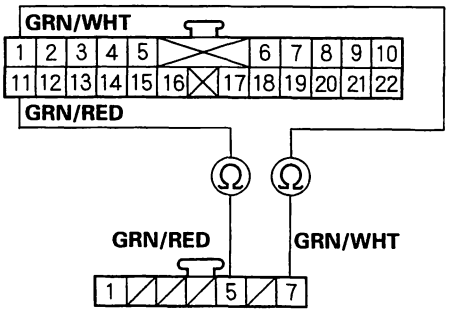

RECIRCULATION CONTROL MOTOR 7P CONNECTOR
Wire side of female terminals

Is there continuity?

YES—Check for loose wires or poor connections at the heater control panel 22P connector and at recirculation control motor 7P connector. If the connections are good, substitute a known-good heater control panel, and recheck. If the symptom/indication goes away, replace the original heater control panel. ■

NO—Repair any open in the wire(s) between the heater control panel and the recirculation control motor. ■

12. Remove the recirculation control motor (see page 21-22).

13. Check the recirculation control linkage and doors for smooth movement.

    Do the recirculation control linkage and doors move smoothly?

    YES—Replace the recirculation control motor. ■

    NO—Repair the recirculation control linkage or doors. ■

Blower Motor Circuit Troubleshooting

1. Turn the ignition switch ON (II) and the heater fan switch ON.

   Does the blower run?

   YES—Go to step 2.

   NO—Go to step 16.

2. Turn the heater fan switch OFF.

3. Make sure the ignition switch ON (II).

   Does the blower motor run?

   YES—Go to step 4.

   NO—Go to step 9.

4. Turn the ignition switch OFF.

5. Disconnect the blower motor 2P connector.

6. Disconnect the blower resistor 5P connector.

7. Disconnect the heater fan switch 7P connector.

8. Check for continuity between the No. 3, 4, 5 and 6 terminals of the heater fan switch 7P connector and body ground individually.

HEATER FAN SWITCH 7P CONNECTOR
Wire side of female terminals

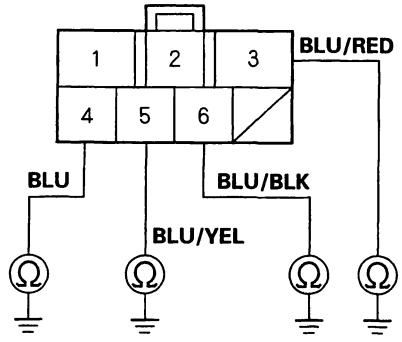

Is there continuity?

YES—Repair any short to body ground in the wire (s) between the blower motor, the blower resistor and the heater fan switch. ■

NO—Replace the heater fan switch. ■

(cont'd)

Blower Motor Circuit Troubleshooting (cont'd)

9. Turn the ignition switch OFF.

10. Disconnect the blower resistor 5P connector.

11. Measure the resistance between the No. 1 and No. 5 terminals of the blower resistor.

BLOWER RESISTOR

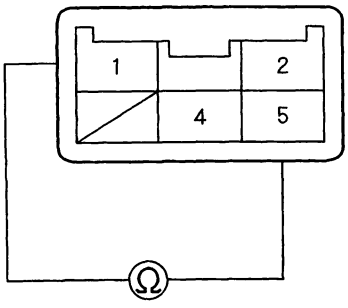

Is there about 3–3.5 ohms?

YES—Go to step 12.

NO—Replace the blower resistor.■

12. Reconnect the blower resistor 5P connector.

13. Disconnect the heater fan switch 7P connector.

14. Turn the ignition switch ON (II).

15. Ground each of the heater fan switch 7P connector terminals individually in the following order: No. 4, 5, 6 and 3.

HEATER FAN SWITCH 7P CONNECTOR
Wire side of female terminals

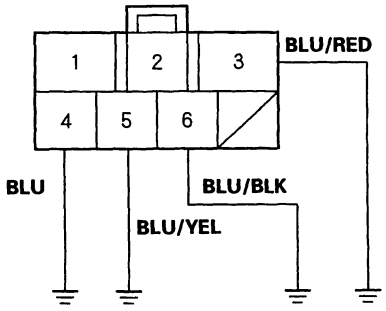

Does the blower motor run at progressively higher speeds?

YES—Replace the heater fan switch.■

NO—Repair any open or cause of excessive resistance in the appropriate wire(s) between the blower resistor and the heater fan switch.■

16. Turn the heater fan switch OFF and the ignition switch OFF.

17. Check the No. 56 (40 A) fuse in the under-hood fuse /relay box, and the No. 3 (7.5 A) fuse in the driver's under-dash fuse/relay box.

Are the fuses OK?

YES—Go to step 18.

NO—Replace the fuse(s), and recheck.■

18. Connect the No. 2 terminal of the blower motor 2P connector to body ground with a jumper wire.

BLOWER MOTOR 2P CONNECTOR
Wire side of female terminals

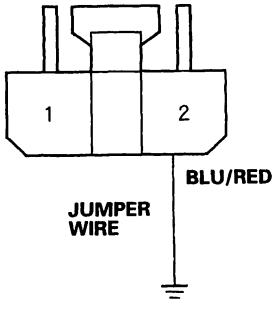

BACK

19. Turn the ignition switch ON (II).

Does the blower motor run?

YES – Go to step 20.

NO – Go to step 27.

20. Turn the ignition switch OFF.

21. Disconnect the jumper wire.

22. Disconnect the heater fan switch 7P connector.

23. Turn the ignition switch ON (II).

24. Measure the voltage between the No. 3 terminal of the heater fan switch 7P connector and body ground.

HEATER FAN SWITCH 7P CONNECTOR
Wire side of female terminals

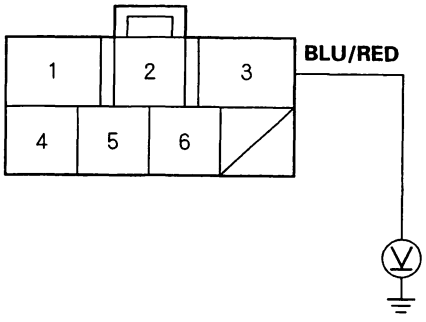

Is there battery voltage?

YES – Go to step 25.

NO – Repair open in the wire between the blower motor and the heater fan switch. ■

25. Turn the ignition switch OFF.

26. Check for continuity between the No. 1 terminal of the heater fan switch 7P connector and body ground.

HEATER FAN SWITCH 7P CONNECTOR
Wire side of female terminals

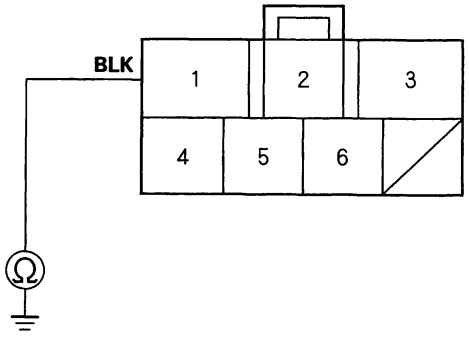

Is there continuity?

YES – Replace the heater fan switch. ■

NO – Check for an open in the wire between the heater fan switch and body ground. If the wire is OK, check for poor ground at G401. ■

27. Disconnect the jumper wire.

28. Disconnect the blower motor 2P connector.

29. Measure the voltage between the No. 1 terminal of the blower motor 2P connector and body ground.

BLOWER MOTOR 2P CONNECTOR
Wire side of female terminals

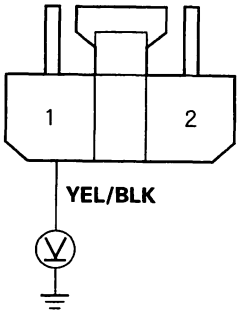

Is there battery voltage?

YES – Replace the blower motor. ■

NO – Go to step 30.

(cont'd)

Blower Motor Circuit Troubleshooting (cont'd)

30. Turn the ignition switch OFF.

31. Remove the blower motor relay from the under-hood fuse/relay box, and test it (see page 22-52).

    Is the relay OK?

    YES—Go to step 32.

    NO—Replace the blower motor relay.■

32. Measure the voltage between the No. 4 terminal of the blower motor relay 4P socket and body ground.

BLOWER MOTOR RELAY 4P SOCKET

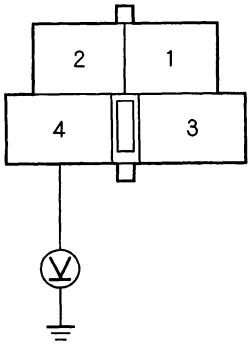

Is there battery voltage?

YES—Go to step 33.

NO—Replace the under-hood fuse/relay box.■

33. Turn the ignition switch ON (II).

34. Measure the voltage between the No. 1 terminal of the blower motor relay 4P socket and body ground.

BLOWER MOTOR RELAY 4P SOCKET

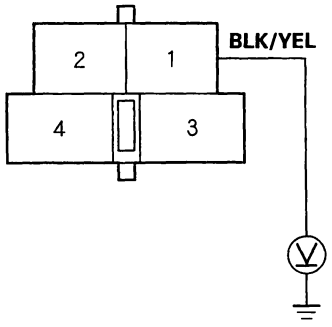

Is there battery voltage?

YES—Go to step 35.

NO—Repair open in the wire between the No. 3 fuse in the driver's under-hood fuse/relay box and the blower motor relay.■

35. Turn the ignition switch OFF.

36. Check for continuity between the No. 2 terminal of the blower motor relay 4P socket and body ground.

BLOWER MOTOR RELAY 4P SOCKET

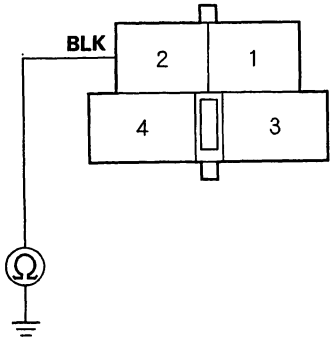

Is there continuity?

YES—Repair open in the wire between the blower motor relay and the blower motor.■

NO—Check for an open in the wire between the blower motor relay and body ground. If the wire is OK, check for poor ground at G202.■

BACK

Heater Control Power and Ground Circuits Troubleshooting

1. Check the No. 54 (40A) fuse in the under-hood fuse/relay box, the No. 3 (7.5A) fuse in the driver's under-dash fuse/relay box, and the No. 13 (7.5A) fuse in the passenger's under-dash fuse/relay box.

   Are the fuses OK?

   YES—Go to step 2.

   NO—Replace the fuse(s), and recheck.■

2. Disconnect the heater control panel 22P connector.

3. Turn the ignition switch ON (II).

4. Measure the voltage between the No. 2 terminal of the heater control panel 22P connector and body ground.

HEATER CONTROL PANEL 22P CONNECTOR

Wire side of female terminals

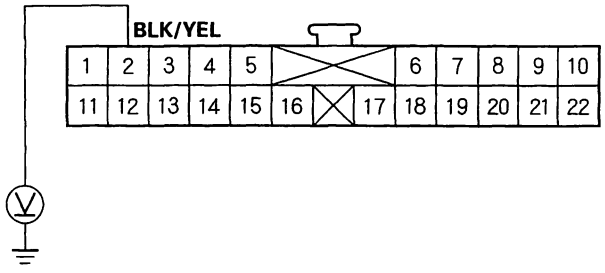

Is there battery voltage?

YES—Go to step 5.

NO—Repair open in the wire between the No. 3 fuse in the driver's under-dash fuse/relay box and the heater control panel.■

5. Turn the ignition switch OFF.

6. Measure the voltage between the No. 3 terminal of the heater control panel 22P connector and body ground.

HEATER CONTROL PANEL 22P CONNECTOR

Wire side of female terminals

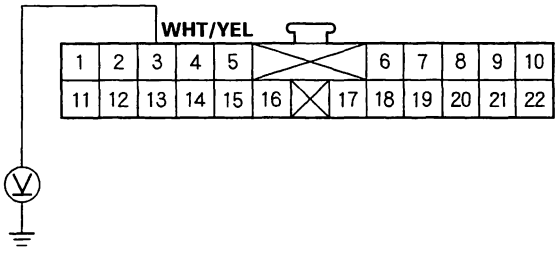

Is there battery voltage?

YES—Go to step 7.

NO—Repair open in the wire between the No. 13 fuse in the passenger's under-dash fuse/relay box and the heater control panel.■

7. Check for continuity between the No.9 terminal of the heater control panel 22P connector and body ground.

HEATER CONTROL PANEL 22P CONNECTOR

Wire side of female terminals

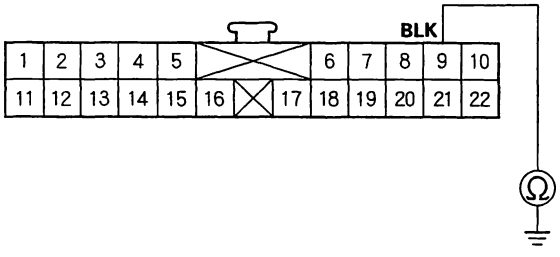

Is there continuity?

YES—Check for loose wires or poor connections at the heater control panel 22P connector. If the connections are good, substitute a known-good heater control panel, and recheck. If the symptom/indication goes away, replace the original heater control panel.■

NO—Check for an open in the wire between the heater control panel and body ground. If the wire is OK, check for poor ground at G401.■

Air Mix Control Motor Test

1. Disconnect the 7P connector from the air mix control motor.

2. Connect battery power to the No. 1 terminal of the air mix control motor, and ground the No. 2 terminal; the air mix control motor should run, and stop at Max Cool. If it doesn't, reverse the connections; the air mix control motor should run, and stop at Max Hot. If the air mix control motor does not run, remove it, then check the air mix control linkage and door for smooth movement.

   - If the linkage and door move smoothly, replace the air mix control motor.
   - If the linkage or door sticks or binds, repair them as needed.

AIR MIX CONTROL MOTOR

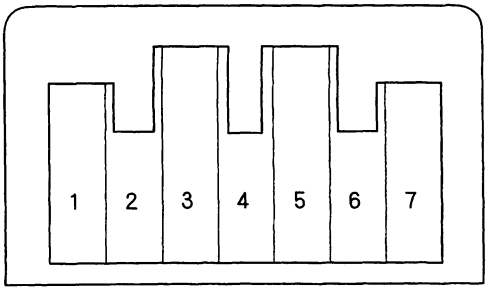

3. Measure the resistance between the No. 5 and No. 7 terminals. It should be between 4.2 k to 7.8 k Ω.

4. Measure the resistance between the No. 3 and No. 5 terminals.

   Max Cool – 0.58 k to 109 k Ω
   Max Hot – 3.52 k to 6.55 k Ω

Air Mix Control Motor Replacement

1. Disconnect the 7P connector (A) from the air mix control motor (B). Remove the rod (C) of the air mix control motor from the air mix control linkage (D). Remove the self-tapping screws and the air mix control motor from the heater unit.

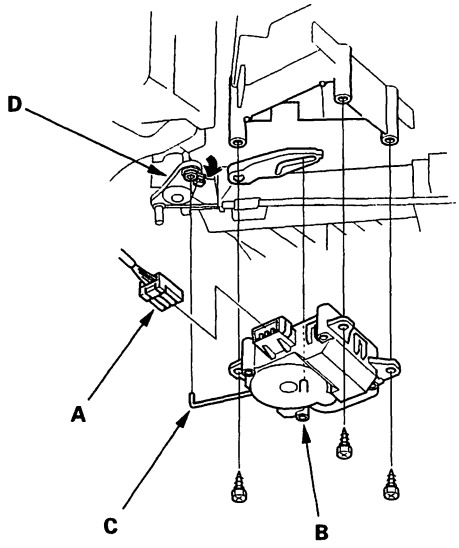

2. Install the motor in the reverse order of removal. After installation, make sure the motor runs smoothly.

BACK

Mode Control Motor Test

1. Disconnect the 7P connector from the mode control motor.

2. Connect battery power to the No. 2 terminal, and ground the No. 1 terminal; the mode control motor should run smoothly, and stop at Vent. If it doesn't, reverse the connections; the mode control motor should run smoothly, and stop at Defrost. When the mode control motor stops running, disconnect battery power immediately.

MODE CONTROL MOTOR

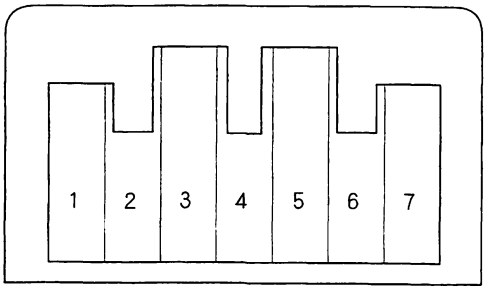

3. Use a digital multimeter with an output of 1 mA or less at the 20 kΩ range. With the mode control motor running as in step 2, check for continuity between the No. 3, 4, 5, 6 terminals and the No. 7 terminal individually. There should be continuity for a moment at each terminal.

4. If the mode control motor does not run in step 2, remove it, then check the mode control linkage and doors for smooth movement.

   - If the linkage and doors move smoothly, replace the mode control motor.
   - If the linkage or doors sticks or binds, repair them as needed.

Mode Control Motor Replacement

1. Remove the wire harness clip (A), then disconnect the 7P connector (B) from the mode control motor (C). Remove the rods (D) of the mode control motor from the mode control linkage (E). Remove the self-tapping screws and the mode control motor from the heater unit.

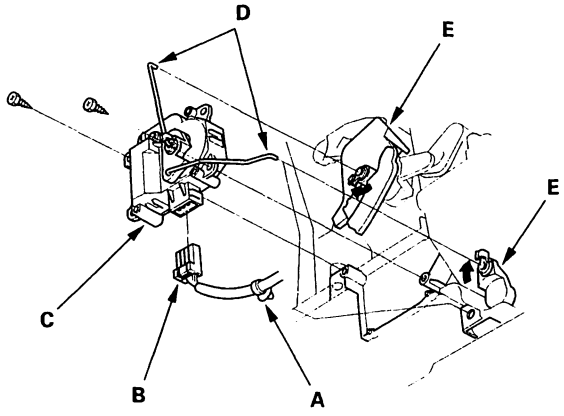

2. Install the motor in the reverse order of removal. After installation, make sure the motor runs smoothly.

Recirculation Control Motor Test

1. Disconnect the 7P connector from the recirculation control motor.

   NOTICE
   Incorrectly applying power and ground to the recirculation control motor will damage it. Follow the instructions carefully.

2. Connect battery power to the No. 1 terminal, and ground the No. 5 and No. 7 terminals; the recirculation control motor should run smoothly. To avoid damaging the recirculation control motor, do not reverse power and ground. Disconnect the No. 5 or No. 7 terminals from ground; the recirculation control motor should stop at Fresh or Recirculate. Don't cycle the recirculation control motor for a long time.

RECIRCULATION CONTROL MOTOR

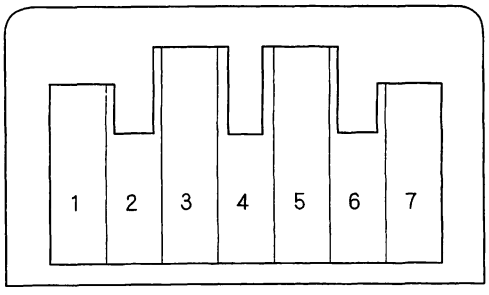

3. If the recirculation control motor does not run in step 2, remove it, then check the recirculation control linkage and doors for smooth movement.

   - If the linkage and doors move smoothly, replace the recirculation control motor.
   - If the linkage or doors sticks or binds, repair them as needed.

Recirculation Control Motor Replacement

1. Remove the glove box (see page 20-87).

2. Disconnect the 7P connector (A) from the recirculation control motor (B). Remove the self-tapping screws and the recirculation control motor from the blower unit.

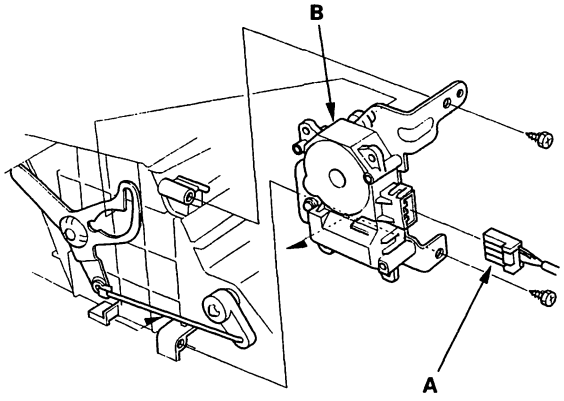

3. Install the motor in the reverse order of removal. After installation, make sure the motor runs smoothly.

BACK

Heater Fan Switch Test

Check for continuity between the terminals in each switch position according to the table.

Position \ Terminal	1	2	3	4	5	6
OFF						
1	○	○		○		
2	○	○			○	
3	○	○				○
4	○	○	○			

HEATER FAN SWITCH

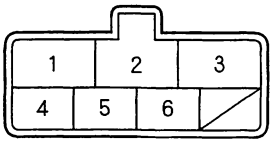

Evaporator Temperature Sensor Test

1. Dip the sensor in ice water, and measure the resistance between its terminals.

EVAPORATOR TEMPERATURE SENSOR
Terminal side of male terminals

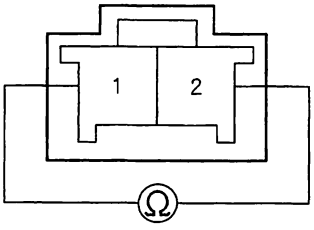

2. Then pour hot water on the sensor, and check for a change in resistance.

3. Compare the resistance readings with the specifications shown in the graph; the resistance should be within the specifications.

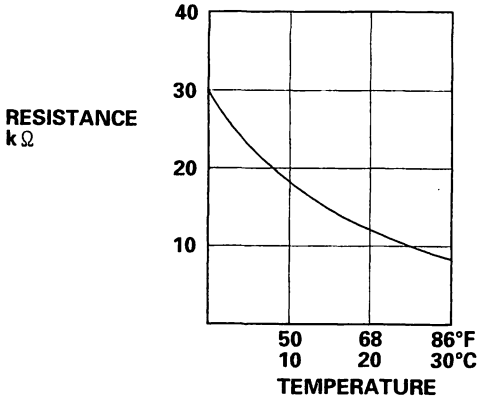

Heater Control Panel Removal and Installation

1. Remove the center panel together with the heater control panel (see page 20-86).

2. Remove the self-tapping screws and the heater control panel (A) from the center panel (B).

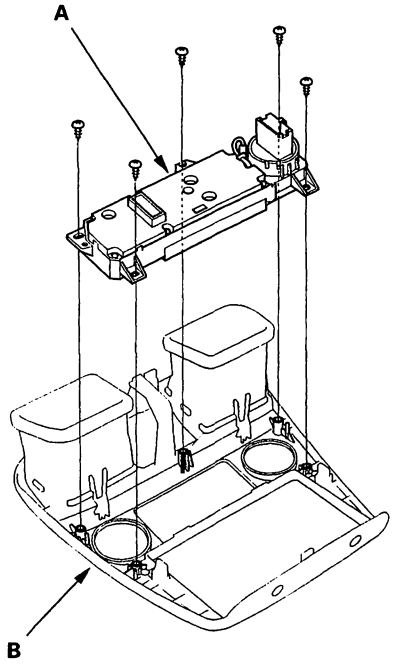

3. Install the control panel in the reverse order of removal. After installation, operate the control panel controls to see whether it works properly.

4. Run the self-diagnosis function to confirm that there are no problems in the system (see page 21-4).

Heater Control Panel Disassembly and Reassembly

1. Remove the fan switch (A) and temperature control dial (B), then remove the front panel (C). Remove the mode control switch (D), recirculation control switch (E), rear defogger switch (F) and A/C switch lid (G) (or A/C switch (H)) buttons.

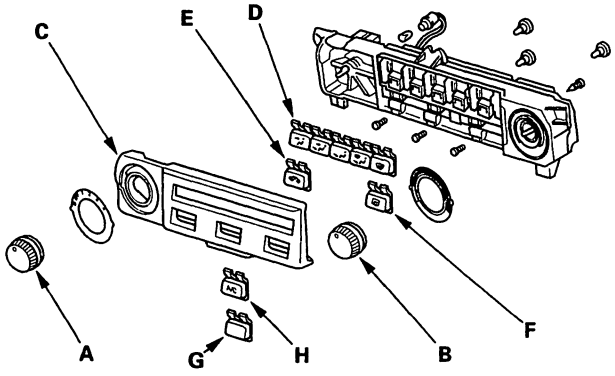

2. Reassemble the control panel in the reverse order of removal.

BACK

Dust and Pollen Filter Replacement

The dust and pollen filter should be replace every 30,000 miles (48,000 km) or 24 months whichever comes first. Replace the filter more often if the airflow is less than usual.

1. Remove the glove box (see page 20-87).

2. Remove the bolt, the screws and the glove box frame.

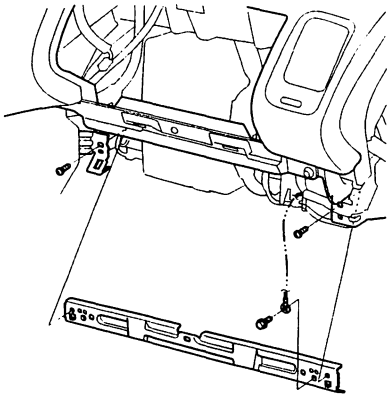

3. Remove the filter lid (A) from the evaporator, then pull out the lower dust and pollen filter (B) and the upper dust and pollen filter (C) in that order.

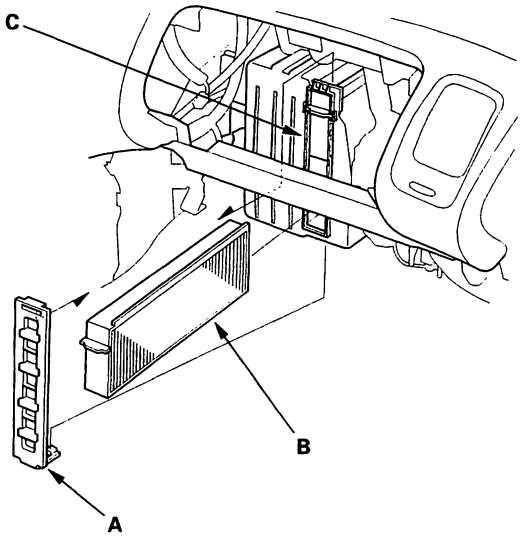

4. Remove the filter (A) from the housing (B), and replace it.

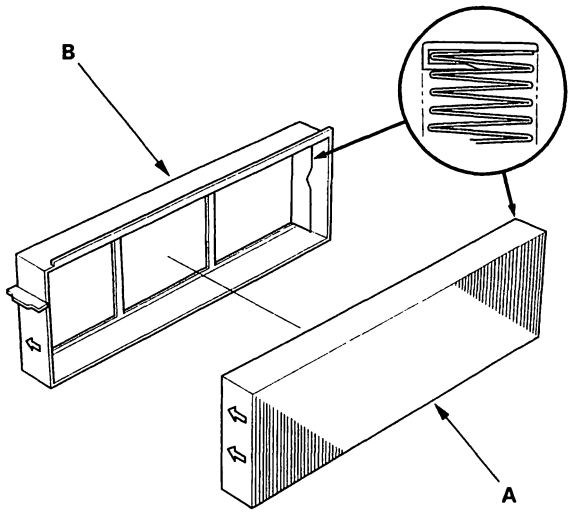

5. Install the filter in the reverse order of removal. Make sure that there is no air leaking out of the evaporator.

Blower Unit Removal and Installation

SRS components are located in this area. Review the SRS components locations, precautions, and procedures in the SRS section before performing repairs or service (see page 23-28).

1. Make sure you have the anti-theft code for the radio, then write down the frequencies for the radio's preset buttons.
2. Disconnect the negative cable from the battery.
3. Remove the dashboard (see page 20-90).
4. With air conditioning; remove the evaporator (see page 21-46).
5. Without air conditioning; remove the self-tapping screws, the moutning nut, the mounting bolts and the heater duct.

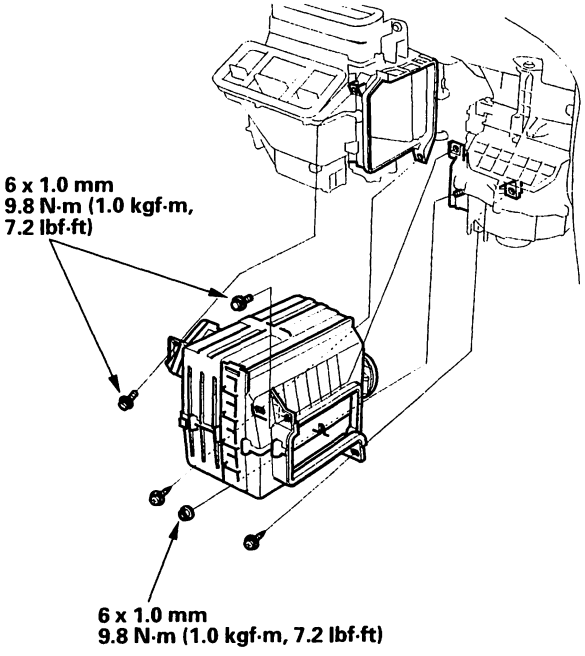

6. Disconnect the connectors (A) from the blower motor, the blower resistor and the recirculation control motor, then remove the wire harness clip (B). Remove the mounting nuts, the mounting bolt and the blower unit (C).

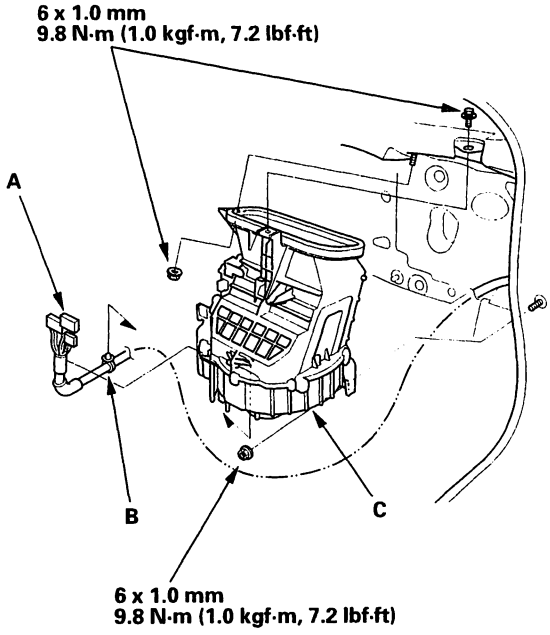

7. Install the unit in the reverse order of removal, and note these items:
   - Make sure that there is no air leakage.
   - Enter the anti-theft code for radio, then enter the customer's radio station presets.

BACK

Blower Unit Components Replacement

Note these items when overhauling the blower unit:

- The recirculation control motor (A), the blower resistor (B) and the blower motor (C) can be replaced without removing the blower unit.
- Before reassembly, make sure that the recirculation control linkage and doors move smoothly without binding.
- After reassembly, make sure the recirculation control motor runs smoothly (see page 21-22).

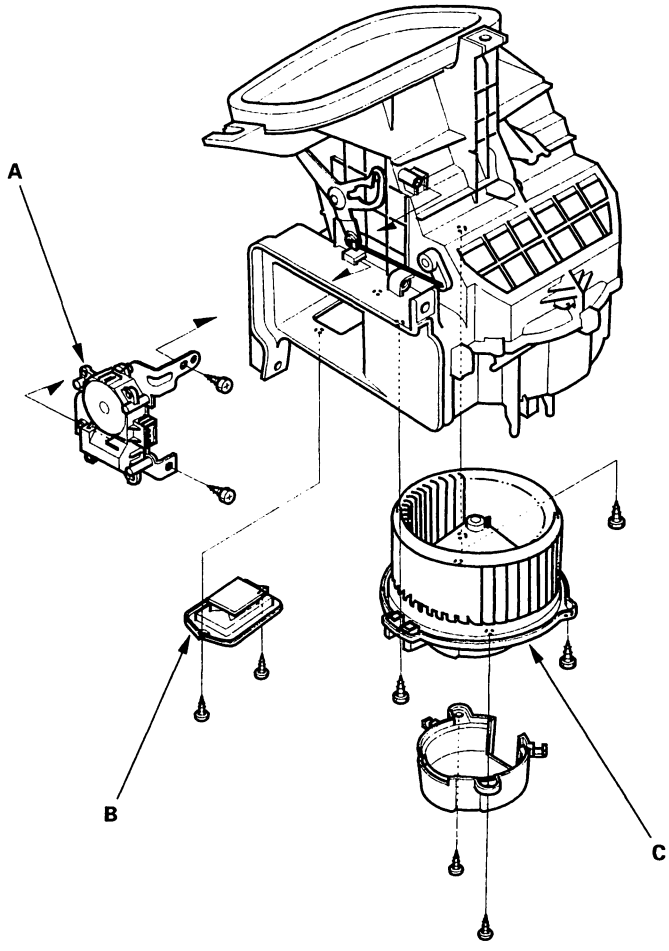

Heater Unit/Core Replacement

SRS components are located in this area. Review the SRS components locations, precautions, and procedures in the SRS section before performing repairs or service (see page 23-28).

1. Make sure you have the anti-theft code for the radio, then write down the frequencies for the radio's preset buttons.

2. Disconnect the negative cable from the battery.

3. From under the hood, open the cable clamp (A), then disconnect the heater valve cable (B) from the heater valve arm (C). Turn the heater valve arm to the fully opened position as shown.

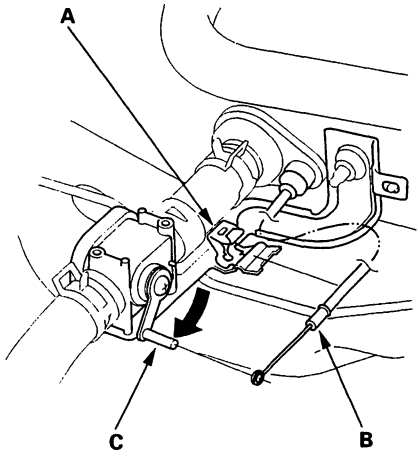

4. When the engine is cool, drain the engine coolant from the radiator (see page 10-10).

5. Remove the heater valve mounting nut. Slide the hose clamps (A) back, then disconnect the inlet (B) and outlet (C) heater hoses from the heater unit. Engine coolant will run out when the hoses are disconnected; drain it into a clean drip pan. Be sure not to let coolant spill on electrical parts or painted surfaces. If any coolant spills, rinse it off immediately.

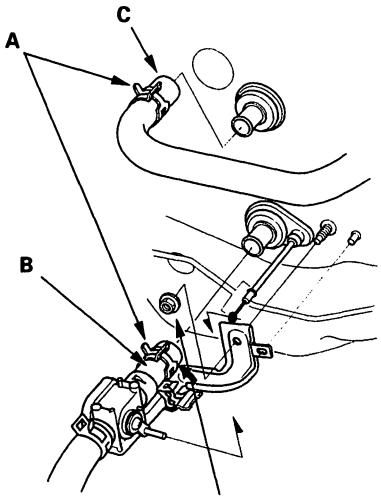

6 x 1.0 mm
9.8 N·m (1.0 kgf·m, 7.2 lbf·ft)

6. Remove the mounting nut from the heater unit. Take care not to damage or bend the fuel lines, the brake lines, etc.

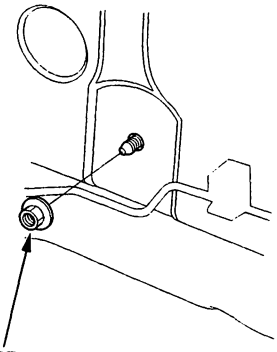

8 x 1.25 mm
13 N·m (1.3 kgf·m, 9.4 lbf·ft)

BACK

7. Remove the dashboard (see page 20-90).

8. Remove the heater duct (see page 21-26) or evaporator (see page 21-46).

9. Remove the mounting bolts and the heater unit.

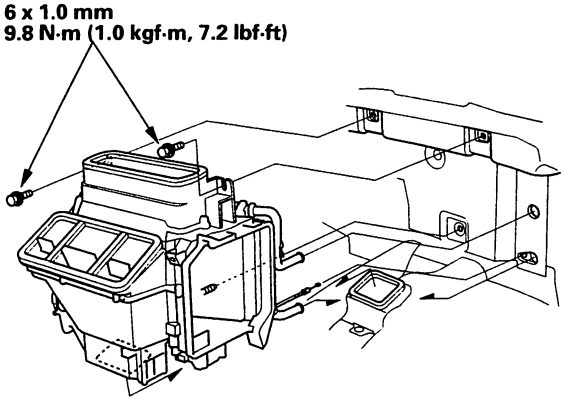

10. Remove the self-tapping screws and the bracket (A), then carefully pull out the heater core (B) so you don't bend the inlet and outlet pipes.

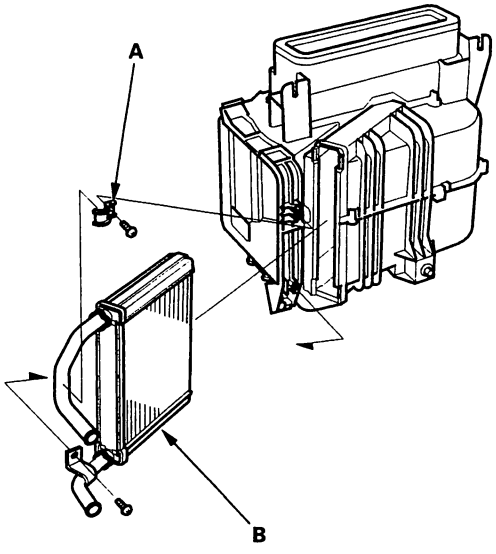

11. Install the heater core in the reverse order of removal.

12. Install the heater unit in the reverse order of removal, and note these items:

- Do not interchange the inlet and outlet heater hoses, and install the hose clamps securely.
- Refill the cooling system with engine coolant (see page 10-10).
- Adjust the heater valve cable (see page 21-30).
- Make sure that there is no coolant leakage.
- Make sure that there is no air leakage.
- Enter the anti-theft code for the radio, then enter the customer's radio station presets.

Heater Valve Cable Adjustment

1. From under the hood, open the cable clamp (A), then disconnect the heater valve cable (B) from the heater valve arm (C).

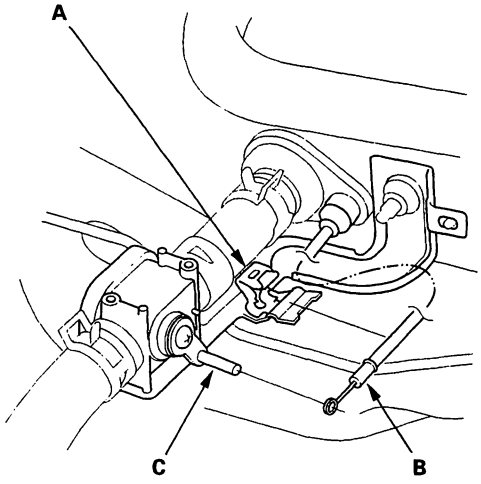

2. From under the dash, disconnect the heater valve cable housing from the cable clamp (A), and disconnect the heater valve cable (B) from the air mix control linkage (C).

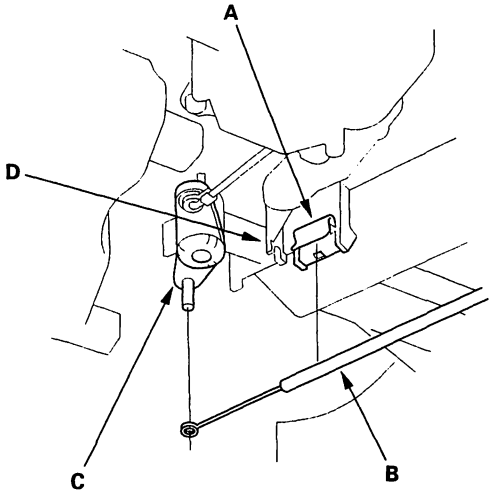

3. Set the temperature control dial on Max Cool (60°F or 18°C) with the ignition switch ON (II).

4. Attach the heater valve cable (B) to the air mix control linkage (C) as shown above. Hold the end of the heater valve cable housing against the stop (D), then snap the heater valve cable housing into the cable clamp (A).

5. From under the hood, turn the heater valve arm (C) to the fully closed position as shown, and hold it. Attach the heater valve cable (B) to the heater valve arm, and gently pull on the heater valve cable housing to take up any slack, then install the heater valve cable housing into the cable clamp (A).

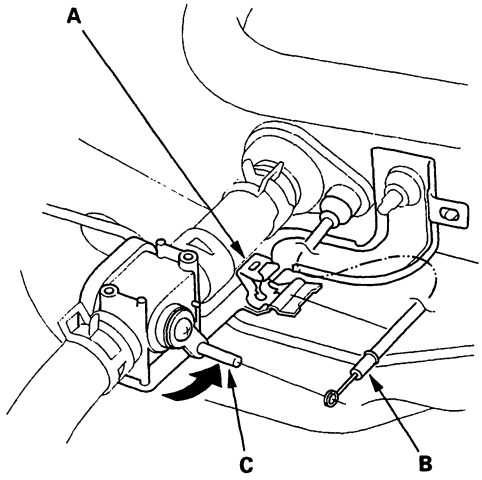

BACK

Component Location Index

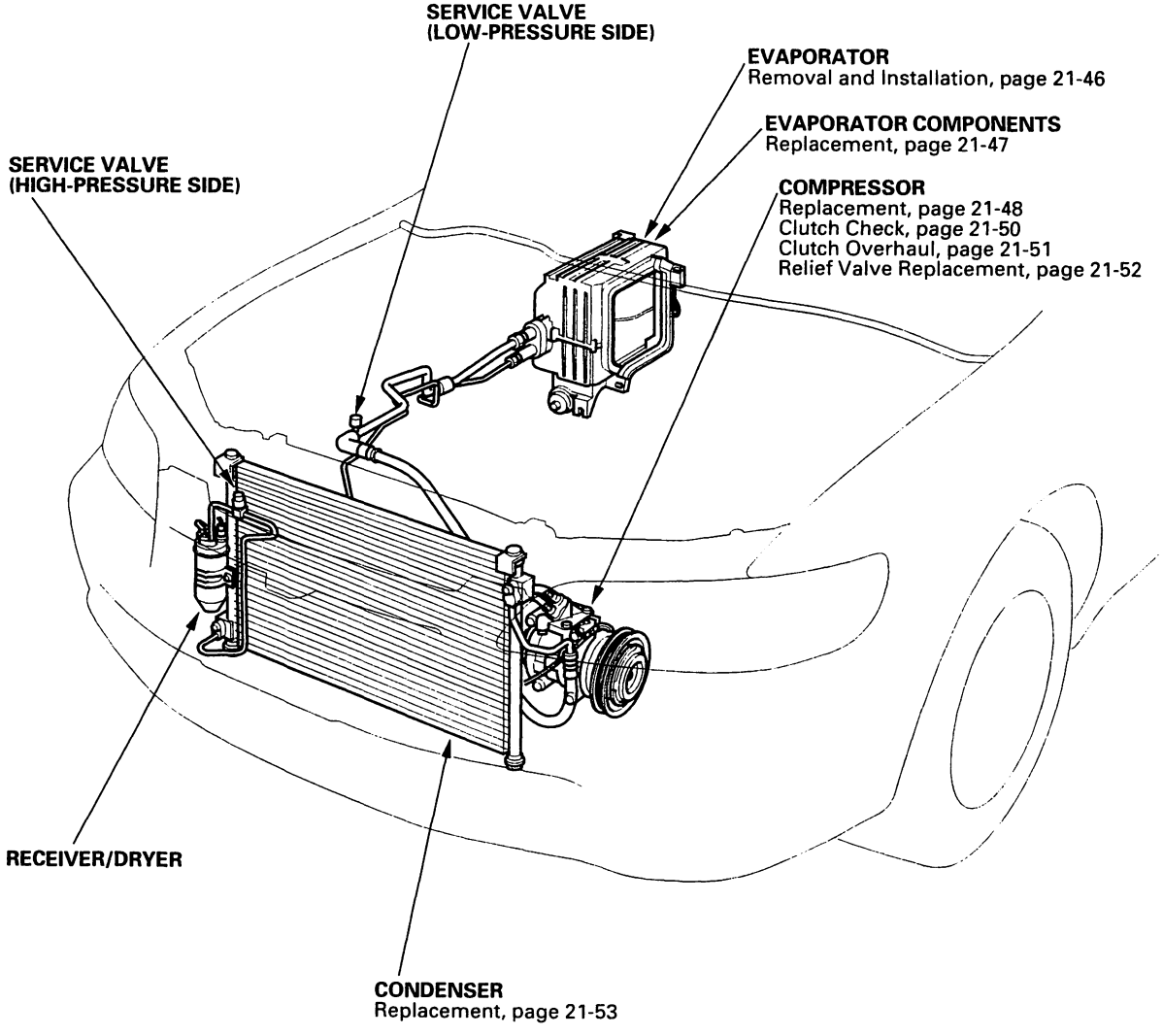

A/C Service Tips and Precautions

⚠ WARNING

- Compressed air mixed with R-134a forms a combustible vapor.
- The vapor can burn or explode causing serious injury.
- Never use compressed air to pressure test R-134 a service equipment or vehicle air conditioning systems.

⚠ CAUTION

- Air conditioning refrigerant or lubricant vapor can irritate your eyes, nose, or throat.
- Be careful when connecting service equipment.
- Do not breathe refrigerant or vapor.

The air conditioning system uses HFC-134a (R-134a) refrigerant and polyalkyleneglycol (PAG) refrigerant oil, which are not compatible with CFC-12 (R-12) refrigerant and mineral oil. Do not use R-12 refrigerant or mineral oil in this system, and do not attempt to use R-12 servicing equipment; damage to the air conditioning system or your servicing equipment will result.

Use only service equipment that is U.L.-listed and is certified to meet the requirements of SAE J2210 to remove R-134a from the air conditioning system.

If accidental system discharge occurs, ventilate work area before resuming service.

R-134a service equipment or vehicle air conditioning systems should not be pressure tested or leak tested with compressed air.

Additional health and safety information may be obtained from the refrigerant and lubricant manufacturers.

- Always disconnect the negative cable from the battery whenever replacing air conditioning parts.
- Keep moisture and dirt out of the system. When disconnecting any lines, plug or cap the fittings immediately; don't remove the caps or plugs until just before you reconnect each line.
- Before connecting any hose or line, apply a few drops of refrigerant oil to the O-ring.
- When tightening or loosening a fitting, use a second wrench to support the matching fitting.
- When discharging the system, use a R-134a refrigerant recovery/recycling/charging station; don't release refrigerant into the atmosphere.

A/C Refrigerant Oil Replacement

Recommended PAG oil: DENSO ND-OIL 8:

- P/N 38897 – PR7 – A01AH: 120 mℓ (4 fl·oz)
- P/N 38899 – PR7 – A01: 40 mℓ (1 1/3 fl·oz)

Add the recommended refrigerant oil in the amount listed if you replace any of the following parts.

- To avoid contamination, do not return the oil to the container once dispensed, and never mix it with other refrigerant oils.
- Immediately after using the oil, replace the cap on the container, and seal it to avoid moisture absorption.
- Do not spill the refrigerant oil on the vehicle; it may damage the paint; if it gets on the paint, wash it off immediately.

Condenser .....25 mℓ (5/6 fl·oz, 0.9 Imp·oz)
Evaporator .....40 mℓ (1 1/3 fl·oz, 1.4 Imp·oz)
Line or hose .....10 mℓ (1/3 fl·oz, 0.4 Imp·oz)
Receiver/Dryer .....10 mℓ (1/3 fl·oz, 0.4 Imp·oz)
Leakage repair .....25 mℓ (5/6 fl·oz, 0.9 Imp·oz)
Compressor .....For compressor replacement, subtract the volume of oil drained from the removed compressor from 160 mℓ (5 1/3 fl·oz, 5.6 Imp·oz), and drain the calculated volume of oil from the new compressor: 160 mℓ (5 1/3 fl·oz, 5.6 Imp·oz) – Volume of removed compressor = Volume to drain from new compressor.

NOTE: Even if no oil is drained from the removed compressor, don't drain more than 50 mℓ (1 2/3 fl·oz, 1.8 Imp·oz) from the new compressor.

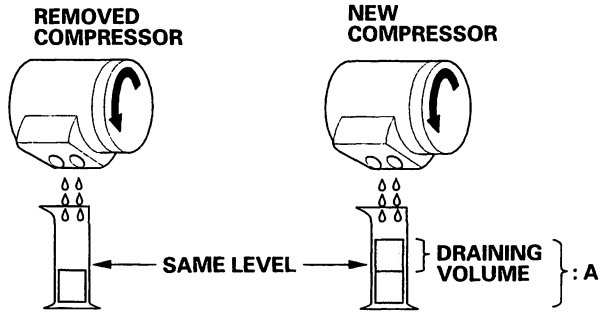

A: 160 mℓ (5 1/3 fl·oz, 5.6 Imp·oz)

BACK

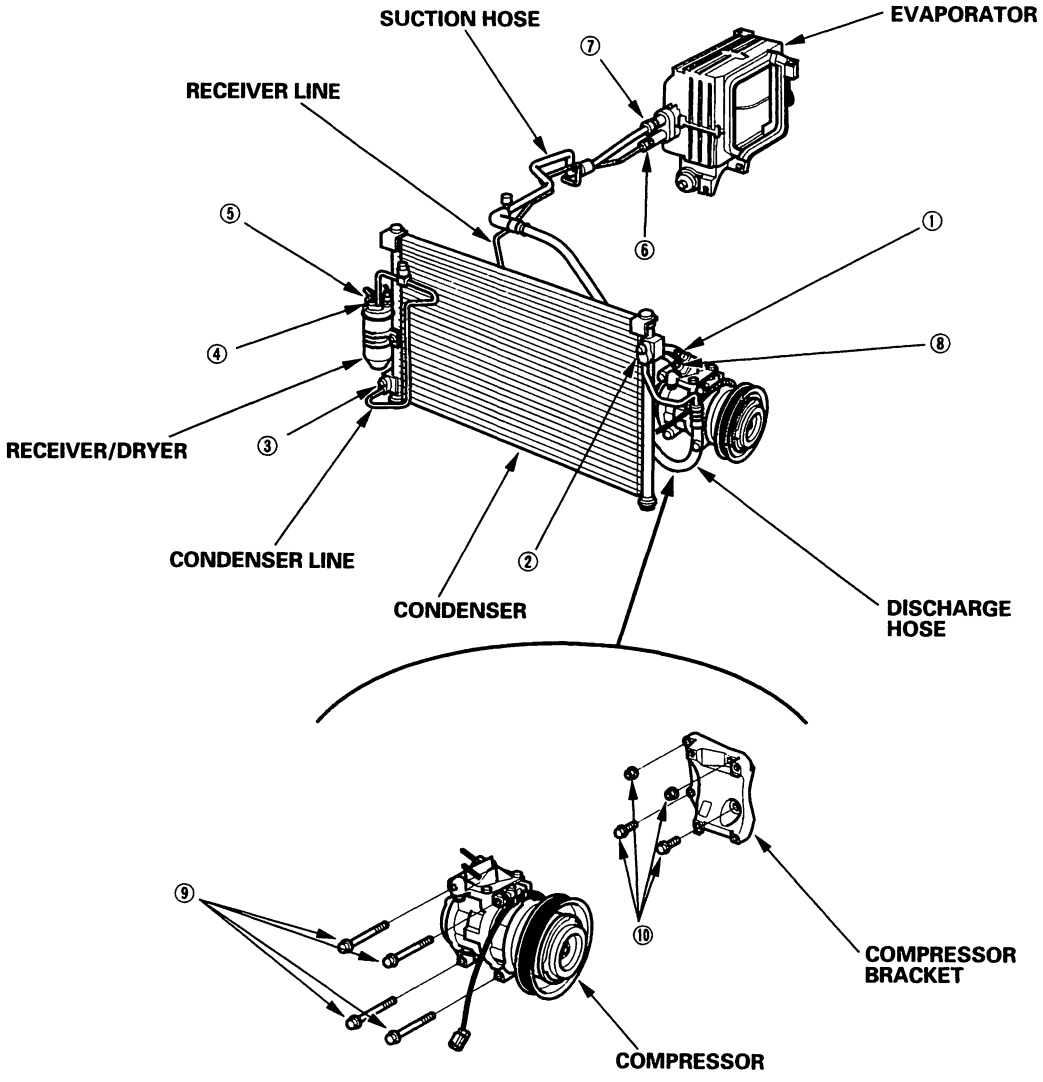

① Discharge hose to the compressor (6 x 1.0 mm) : 9.8 N·m (1.0 kgf·m, 7.2 lbf·ft)
② Discharge hose to the condenser (6 x 1.0 mm) : 9.8 N·m (1.0 kgf·m, 7.2 lbf·ft)
③ Condenser line to the condenser (6 x 1.0 mm) : 9.8 N·m (1.0 kgf·m, 7.2 lbf·ft)
④ Condenser line to the receiver/dryer : 9.8 N·m (1.0 kgf·m, 7.2 lbf·ft)
⑤ Receiver line to the receiver/dryer : 9.8 N·m (1.0 kgf·m, 7.2 lbf·ft)
⑥ Receiver line to the evaporator : 13 N·m (1.3 kgf·m, 9.4 lbf·ft)
⑦ Suction hose to the evaporator : 31 N·m (3.2 kgf·m, 23 lbf·ft)
⑧ Suction hose to the compressor (6 x 1.0 mm) : 9.8 N·m (1.0 kgf·m, 7.2 lbf·ft)
⑨ Compressor to compressor bracket (8 x 1.25 mm) : 22 N·m (2.2 kgf·m, 16 lbf·ft)
⑩ Compressor bracket to engine block (10 x 1.25 mm) : 49 N·m (5.0 kgf·m, 36 lbf·ft)

Symptom Troubleshooting Index

Symptom	Diagnostic procedure	Also check for
Condenser fan does not run at all (but radiator fan runs with the A/C on)	Condenser Fan Circuit Troubleshooting (see page 21-37)	• Blown fuse No. 58 (20A) in the under-hood fuse/relay box, and No. 3 (7.5A) in the driver's under-dash fuse/relay box • Poor ground at G201 • Cleanliness and tightness of all connectors
Both fans do not run with the A/C on	Radiator and Condenser Fans Common Circuit Troubleshooting (see page 21-38)	• Blown fuse No. 57 (20A) and No. 58 (20A) in the under-hood fuse/relay box, and No. 3 (7.5A) in the driver's under-dash fuse/relay box • Poor ground at G201 • Cleanliness and tightness of all connectors
Compressor clutch does not engage	Compressor Clutch Circuit Troubleshooting (see page 21-39)	• Blown fuse No. 58 (20A) in the under-hood fuse/relay box, and No. 3 (7.5A) in the driver's under-dash fuse/relay box • Cleanliness and tightness of all connectors
A/C system does not come on (both fans and compressor)	A/C Pressure Switch Circuit Troubleshooting (see page 21-25)	Cleanliness and tightness of all connectors

BACK

System Description

The air conditioning system removes heat from the passenger compartment by circulating refrigerant through the system as shown below.

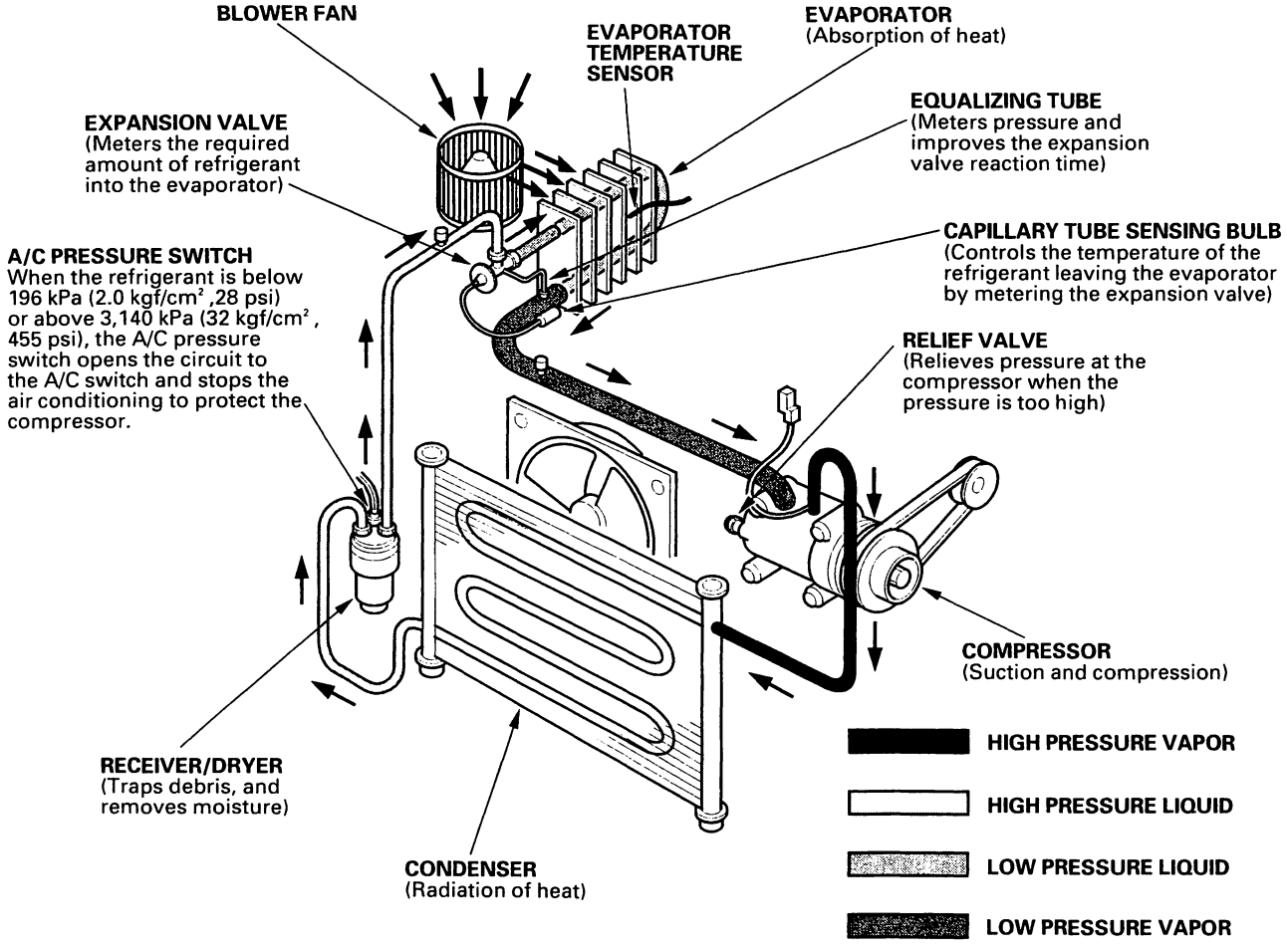

This vehicle uses HFC-134a (R-134a) refrigerant which does not contain chlorofluorocarbons. Pay attention to the following service items:

- Do not mix refrigerants CFC-12 (R-12) and HFC-134a (R-134a). They are not compatible.
- Use only the recommended polyalkyleneglycol (PAG) refrigerant oil (DENSO ND-OIL8) designed for the R-134a compressor. Intermixing the recommended (PAG) refrigerant oil with any other refrigerant oil will result in compressor failure.
- All A/C system parts (compressor, discharge line, suction line, evaporator, condenser, receiver/dryer, expansion valve, O-rings for joints) have to be proper for refrigerant R-134a. Do not confuse with R-12 parts.
- Use a halogen gas leak detector designed for refrigerant R-134a.
- R-12 and R-134a refrigerant servicing equipment are not interchangeable. Use only a recovery/recycling/charging station that is U.L.-listed and is certified to meet the requirements of SAE J2210 to service R-134a air conditioning system.
- Always recover the refrigerant R-134a with an approved recovery/recycling/charging station before disconnecting any A/C fitting.

Circuit Diagram

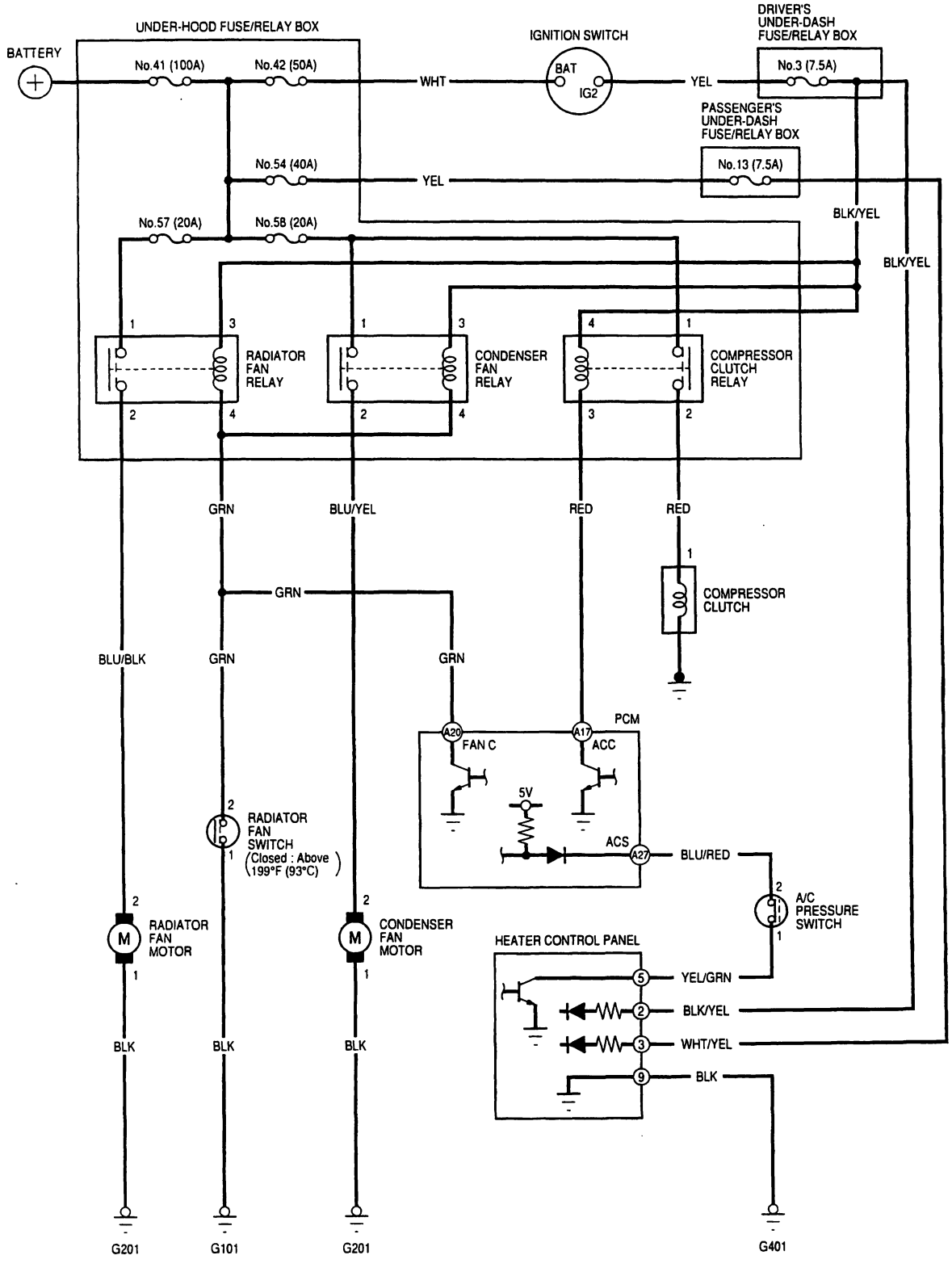

BACK

Condenser Fan Circuit Troubleshooting

1. Check the No. 58 (20 A) fuse in the under-hood fuse/relay box, and the No. 3 (7.5 A) fuse in the driver's under-dash fuse/relay box.

   Are the fuses OK?

   YES—Go to step 2.

   NO—Replace the fuse(s), and recheck.■

2. Remove the condenser fan relay from the under-hood fuse/relay box, and test it (see page 22-52).

   Is the relay OK?

   YES—Go to step 3.

   NO—Replace the condenser fan relay.■

3. Measure the voltage between the No. 1 terminal of the condenser fan relay 4P socket and body ground.

   CONDENSER FAN RELAY 4P SOCKET

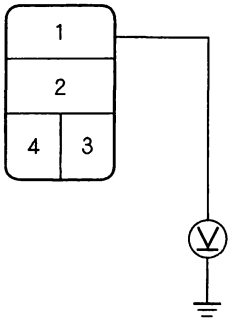

   Is there battery voltage?

   YES—Go to step 4.

   NO—Replace the under-hood fuse/relay box.■

4. Connect the No. 1 and No. 2 terminals of the condenser fan relay 4P socket with a jumper wire.

   CONDENSER FAN RELAY 4P SOCKET

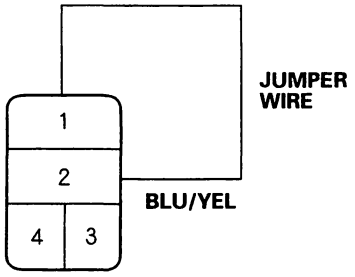

   Does the condenser fan run?

   YES—Go to step 5.

   NO—Go to step 8.

5. Disconnect the jumper wire.

6. Turn the ignition switch ON (II).

7. Measure the voltage between the No. 3 terminal of the condenser fan relay 4P socket and body ground.

   CONDENSER FAN RELAY 4P SOCKET

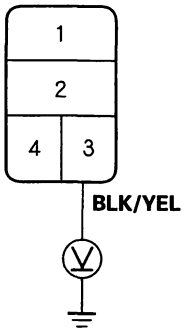

   Is there battery voltage?

   YES—Replace the under-hood fuse/relay box.■

   NO—Repair open in the wire between the No.3 fuse in the driver's under-dash fuse/relay box and the condenser fan relay.■

8. Disconnect the jumper wire.

9. Disconnect the condenser fan 2P connector.

(cont'd)

Condenser Fan Circuit Troubleshooting (cont'd)

10. Check for continuity between the No. 2 terminal of the condenser fan relay 4P socket and the No. 2 terminal of the condenser fan 2P connector.

CONDENSER FAN RELAY 4P SOCKET

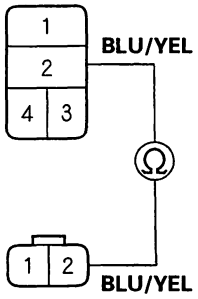

CONDENSER FAN 2P CONNECTOR
Wire side of female terminals

Is there continuity?

YES—Go to step 11.

NO—Repair open in the wire between the condenser fan relay and the condenser fan.■

11. Check for continuity between the No. 1 terminal of the condenser fan 2P connector and body ground.

CONDENSER FAN 2P CONNECTOR
Wire side of female terminals

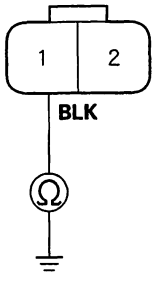

Is there continuity?

YES—Replace the condenser fan motor.■

NO—Check for an open in the wire between the condenser fan and body ground. If the wire is OK, check for poor ground at G201.■

Radiator and Condenser Fans Common Circuit Troubleshooting

1. Check the No. 57 (20A) and No. 58 (20A) fuses in the under-hood fuse/relay box, and the No. 3 (7.5A) fuse in the driver's under-dash fuse/relay box.

Are the fuses OK?

YES—Go to step 2.

NO—Replace the fuse(s), and recheck.■

2. Remove the condenser fan relay from the under-hood fuse/relay box.

3. Turn the ignition switch ON (II).

4. Measure the voltage between the No. 3 terminal of the condenser fan relay 4P socket and body ground.

CONDENSER FAN RELAY 4P SOCKET

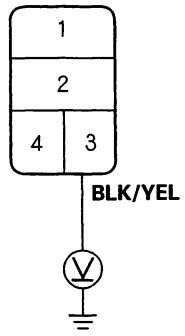

Is there battery voltage?

YES—Go to step 5.

NO—Repair open in the wire between the No.3 fuse in the driver's under-dash fuse/relay box and the condenser fan relay.■

5. Turn the ignition switch OFF.

6. Reinstall the condenser fan relay.

7. Make sure the A/C switch is OFF.

8. Turn the ignition switch ON (II).

BACK

9. Using a Backprobe Set, measure the voltage between the No. 20 terminal of the PCM connector A (32P) and body ground with the PCM connectors connected.

PCM CONNECTOR A (32P)
Wire side of female terminals

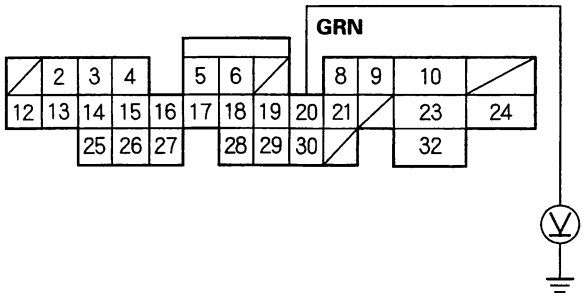

Is there battery voltage?

YES – Check for loose wires or poor connections at the PCM connector A(32P). If the connections are good, substitute a known-good PCM,and recheck. If the symptom/indication goes away, replace the original PCM. ■

NO – Repair open in the wire between the radiator and the condenser fan relays and PCM. ■

Compressor Clutch Circuit Troubleshooting

1. Check the No. 58 (20A) fuse in the under-hood fuse/relay box, and the No. 3 (7.5A) fuse in the driver's under-dash fuse/relay box.

   Are the fuses OK?

   YES – Go to step 2.

   NO – Replace the fuse(s), and recheck. ■

2. Check the engine coolant temperature (Use the Honda PGM Tester PGM-FI data list if possible).

   Is the coolant temperature higher than nomal?

   YES – Troubleshoot and repair cause of high engine coolant temperature. ■

   NO – Go to step 3.

3. Remove the compressor clutch relay from the under-hood fuse/relay box, and test it (see page 22-52).

   Is the relay OK?

   YES – Go to step 4.

   NO – Replace the compressor clutch relay. ■

4. Measure the voltage between the No.1 terminal of the compressor clutch relay 4P socket and body ground.

COMPRESSOR CLUTCH RELAY 4P SOCKET

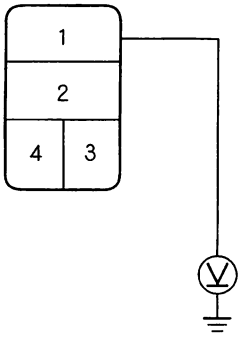

Is there battery voltage?

YES – Go to step 5.

NO – Replace the under-hood fuse/relay box. ■

(cont'd)

Compressor Clutch Circuit Troubleshooting (cont'd)

5. Connect the No. 1 and No. 2 terminals of the compressor clutch relay 4P socket with a jumper wire.

COMPRESSOR CLUTCH RELAY 4P SOCKET

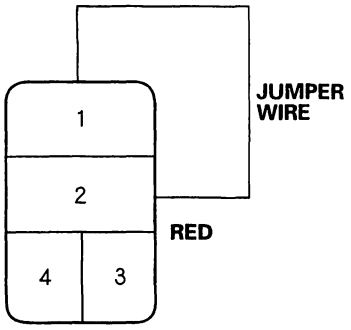

Does the compressor clutch click ?

YES—Go to step 6.

NO—Go to step 14.

6. Disconnect the jumper wire.

7. Turn the ignition switch ON (II).

8. Measure the voltage between the No. 4 terminal of the compressor clutch relay 4P socket and body ground.

COMPRESSOR CLUTCH RELAY 4P SOCKET

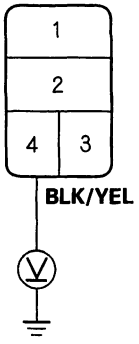

Is there battery voltage?

YES—Go to step 9.

NO—Repair open in the wire between the No. 3 fuse in the driver's under-dash fuse/relay box and the compressor clutch relay.■

9. Turn the ignition switch OFF.

10. Reinstall the compressor clutch relay.

11. Make sure the A/C switch is OFF.

12. Turn the ignition switch ON (II).

13. Using the Backprobe Set, measure the voltage between the No. 17 terminal of the PCM connector A (32P) and body ground with the PCM connectors connected.

PCM CONNECTOR A (32P)
Wire side of female terminals

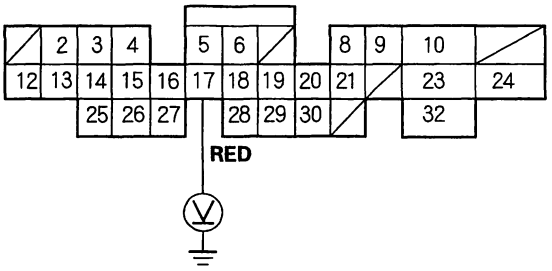

Is there battery voltage?

YES—Check for loose wires or poor connections at the PCM connector A (32P). If the connections are good, substitute a known-good PCM, and recheck. If the symptom/indication goes away, replace the original PCM.■

NO—Repair open in the wire between the compressor clutch relay and the PCM.■

14. Disconnect the jumper wire.

15. Disconnect the compressor clutch 1P connector.

BACK

16. Check for continuity between the No. 2 terminal of the compressor clutch relay 4P socket and the No. 1 terminal of the compressor clutch 1P connector.

COMPRESSOR CLUTCH RELAY 4P SOCKET

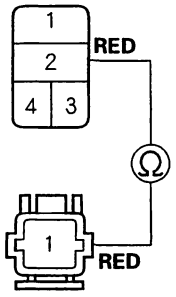

COMPRESSOR CLUTCH 1P CONNECTOR
Terminal side of male terminals

Is there continuity?

YES – Check the compressor clutch clearance and the compressor clutch field coil (see page 21-50). ■

NO – Repair open in the wire between the compressor clutch relay and the compressor clutch. ■

A/C Pressure Switch Circuit Troubleshooting

1. Disconnect the A/C pressure switch 2P connector.
2. Turn the ignition switch ON (II).
3. Measure the voltage between the No. 2 terminal of the A/C pressure switch 2P connector and body ground.

A/C PRESSURE SWITCH 2P CONNECTOR
Wire side of female terminals

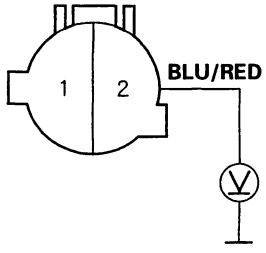

Is there about 5 volts?

YES – Go to step 4.

NO – Go to step 10.

4. Turn the ignition switch OFF.
5. Check for continuity between the No. 1 and No. 2 terminals of the A/C pressure switch.

A/C PRESSURE SWITCH

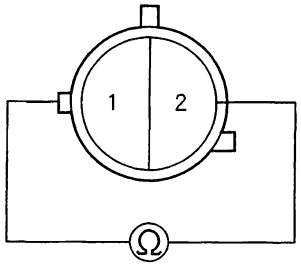

Is there continuity?

YES – Go to step 6.

NO – Go to step 11.

(cont'd)

A/C Pressure Switch Circuit Troubleshooting (cont'd)

6. Reconnect the A/C pressure switch 2P connector.

7. Disconnect the heater control panel 22P connector.

8. Turn the ignition switch ON (II).

9. Measure the voltage between the No. 5 terminal of the heater control panel 22P connector and body ground.

HEATER CONTROL PANEL 22P CONNECTOR
Wire side of female terminals

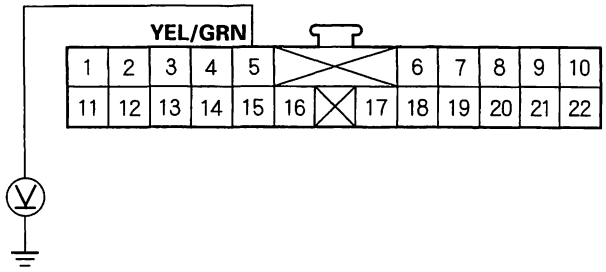

Is there about 5 volts?

YES—Check for loose wires or poor connections at the heater control panel 22P connector and at the A/C pressure switch 2P connector. If the connections are good, substitute a known-good heater control panel, and recheck. If the symptom/indication goes away, replace the original heater control panel.■

NO—Repair open in the wire between the heater control panel and the A/C pressure switch.■

10. Using a Backprobe Set, measure the voltage between the No. 27 terminal of the PCM connector A (32P) and body ground with the PCM connectors connected.

PCM CONNECTOR A (32P)
Wire side of female terminals

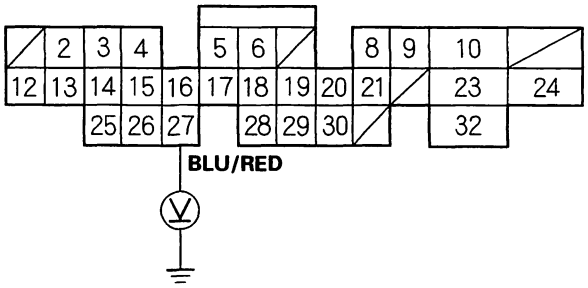

Is there about 5 volts ?

YES—Repair open in the wire between the PCM and the A/C pressure switch.■

NO—Check for loose wires or poor connections at the PCM connector A (32P). If the connections are good, substitute a known-good PCM, and recheck. If the symptom/indication goes away, replace the original PCM.■

11. Check for proper A/C system pressure.

Is the pressure within specifications?

YES—Replace the A/C pressure switch.■

NO—Repair the A/C pressure problem.■

BACK

A/C System Tests

Pressure Test

Test results	Related symptoms	Probable cause	Remedy
Discharge (high) pressure abnormally high	After stopping compressor, pressure drops to about 196 kPa (2.0 kgf/cm², 28 psi) quickly, and then falls gradually.	Air in system	Recover, evacuate (see page 21-55), and recharge with specified amount (see page 21-56).
	Reduced or no air flow through condenser	• Clogged condenser or radiator fins • Condenser or radiator fan not working properly	• Clean • Check voltage and fan rpm. • Check fan direction.
	Line to condenser is excessively hot.	Restricted flow of refrigerant in system	Restricted lines
Discharge pressure abnormally low	High and low pressures are balanced soon after stopping compressor. Low side is higher than normal.	• Faulty compressor discharge valve • Faulty compressor seal	Replace the compressor.
	Outlet of expansion valve is not frosted, low-pressure gauge indicates vacuum.	• Faulty expansion valve • Moisture in system	• Replace • Recover, evacuate, and recharge with specified amount.
Suction (low) pressure abnormally low	Expansion valve is not frosted, and low-pressure line is not cold. Low-pressure gauge indicates vacuum.	• Frozen expansion valve (Moisture in system) • Faulty expansion valve	• Recover, evacuate, and recharge with specified amount. • Replace the expansion valve.
	Discharge temperature is low, and the air flow from vents is restricted.	Frozen evaporator	Run the fan with compressor off, then check evaporator temperature sensor.
	Expansion valve is frosted.	Clogged expansion valve	Clean or replace.
	Receiver/dryer outlet is cool, and inlet is warm (should be warm during operation).	Clogged receiver/dryer	Replace
Suction pressure abnormally high	Low-pressure hose and check joint are cooler than the temperature around evaporator.	• Expansion valve open too long • Loose expansion capillary tube	Repair or replace.
	Suction pressure is lowered when condenser is cooled by water.	Excessive refrigerant in system	Recover, evacuate, and recharge with specified amount.
	High and low-pressure are equalized as soon as the compressor is stopped, and both gauges fluctuate while running.	• Faulty gasket • Faulty high-pressure valve • Foreign particle stuck in high-pressure valve	Replace the compressor.
Suction and discharge pressures abnormally high	Reduced air flow through condenser.	• Clogged condenser or radiator fins • Condenser or radiator fan not working properly	• Clean • Check voltage and fan rpm. • Check fan direction.
Suction and discharge pressure abnormally low	Low-pressure hose and metal end areas are cooler than evaporator.	Clogged or kinked low-pressure hose parts	Repair or replace.
	Temperature around expansion valve is too low compared with that around receiver/dryer.	Clogged high-pressure line	Repair or replace.
Refrigerant leaks	Compressor clutch is dirty.	Compressor shaft seal leaking	Replace the compressor.
	Compressor bolt(s) are dirty.	Leaking around bolt(s)	Tighten bolt(s) or replace compressor.
	Compressor gasket is wet with oil.	Gasket leaking	Replace the compressor.

(cont'd)

A/C System Tests (cont'd)

Performance Test

⚠ WARNING

- Compressed air mixed with R-134a forms a combustible vapor.
- The vapor can burn or explode causing serious injury.
- Never use compressed air to pressure test R-134a service equipment or vehicle air conditioning systems.

⚠ CAUTION

- Air conditioning refrigerant or lubricant vapor can irritate your eyes, nose, or throat.
- Be careful when connecting service equipment.
- Do not breathe refrigerant or vapor.

The performance test will help determine if the air conditioner system is operating within specifications.

Use only service equipment that is U.L.-listed and is certified to meet the requirements of SAE J2210 to remove HFC-134a (R-134a) from the air conditioning system.

If accidental system discharge occurs, ventilate work area before resuming service.

R-134a service equipment or vehicle air conditioning systems should not be pressure tested or leak tested with compressed air.

Additional health and safety information may be obtained from the refrigerant and lubricant manufacturers.

1. Connect a R-134a refrigerant recover/recycling/ charging station to the high-pressure service port and the low-pressure service port, following the equipment manufacturer's instructions.

2. Determine the relative humidity and air temperature.

3. Insert a thermometer in the center air vent.

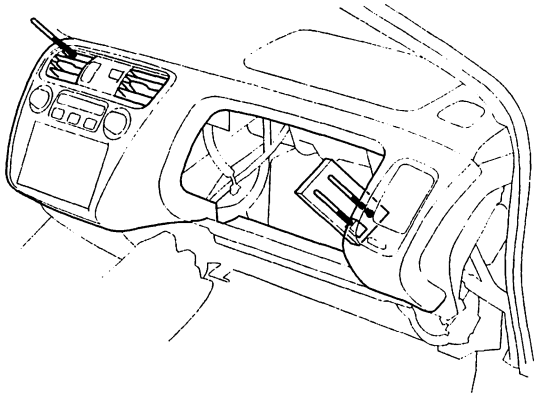

4. Test conditions:

   - Avoid direct sunlight.
   - Open the hood.
   - Open the front doors.
   - Set the temperature control dial on Max Cool, the mode control switch on Vent and the recirculation control switch on Recirculate.
   - Turn the A/C switch on and the fan switch on Max.
   - Run the engine at 1,500 rpm.
   - No driver or passengers in vehicle.

5. After running the air conditioning for 10 minutes under the above test conditions, read the delivery temperature from the thermometer in the dash vent, the intake temperature near the blower unit behind the glove box and the high and low system pressure from the A/C gauges.

BACK

6. To complete the charts:

- Mark the delivery temperature along the vertical line.
- Mark the intake temperature (ambient air temperature) along the bottom line.
- Draw a line straight up from the air temperature to the humidity.
- Mark a point 10 % above and 10 % below the humidity level.
- From each point, draw a horizontal line across the delivery temperature.
- The delivery temperature should fall between the two lines.
- Complete the low-side pressure test and high-side pressure test in the same way.
- Any measurements outside the line may indicate the need for further inspection.

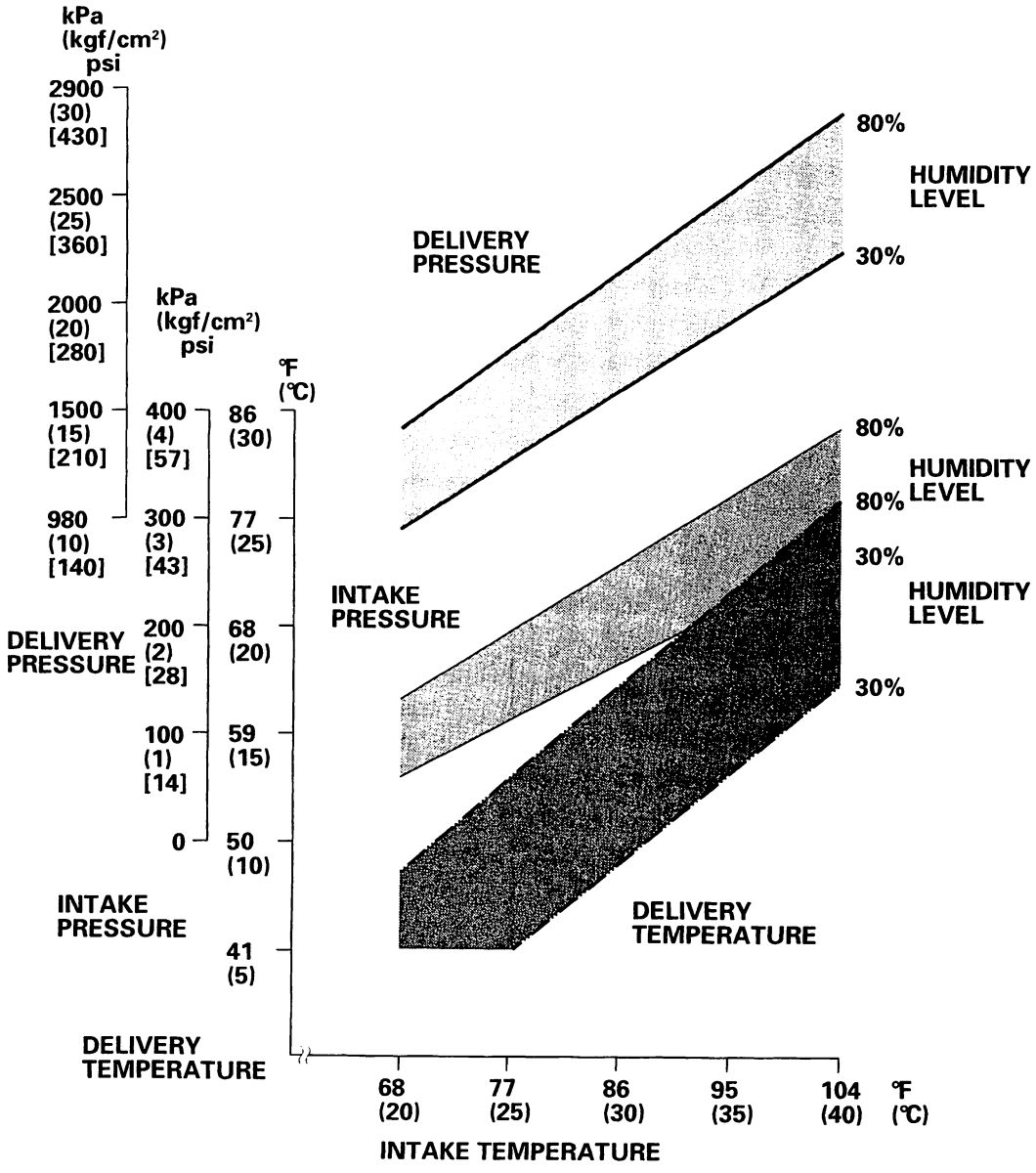

BACK

Evaporator Removal and Installation

1. Recover the refrigerant with a recovery/recycling/charging station (see page 21-54).

2. Disconnect the suction (A) and the receiver (B) lines from the evaporator. Plug or cap the lines immediately after disconnecting them to avoid moisture and dust contamination.

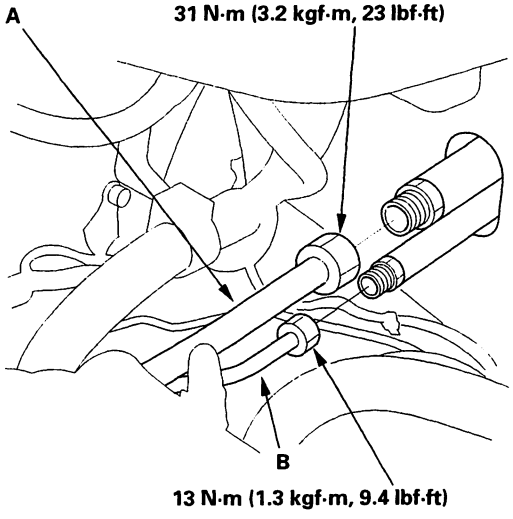

3. Remove the glove box (see page 20-87).

4. Remove the bolt, the screws and the glove box frame (A). Remove the self-tapping screw, the bolts and the passenger's knee bolster (B).

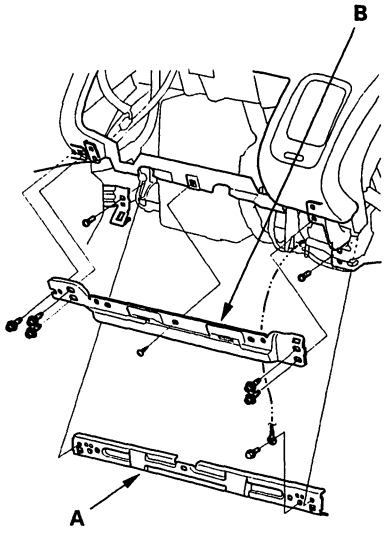

5. Disconnect the connector (A) from the evaporator temperature sensor, then remove the self-tapping screws, the mounting nut, the mounting bolts and the evaporator (B).

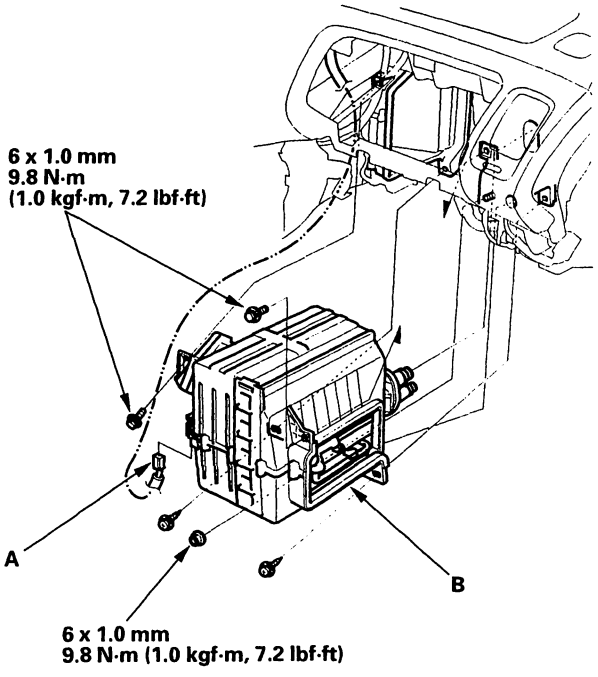

6. Install the evaporator in the reverse order of removal, and note these items:

   - If you're installing a new evaporator, add refrigerant oil (DENSO ND-OIL8) (see page 21-32).
   - Replace the O-rings with new ones at each fitting, and apply a thin coat of refrigerant oil before installing them. Be sure to use the right O-rings for HFC-134a (R-134a) to avoid leakage.
   - Immediately after using the oil, replace the cap on the container, and seal it to avoid moisture absorption.
   - Do not spill the refrigerant oil on the vehicle; it may damage the paint; if the refrigerant oil contacts the paint, wash it off immediately.
   - Make sure that there is no air leakage.
   - Charge the system (see page 21-56).

BACK

Evaporator Components Replacement

1. Remove the filter lid (A), then pull out the dust and pollen filters (B).

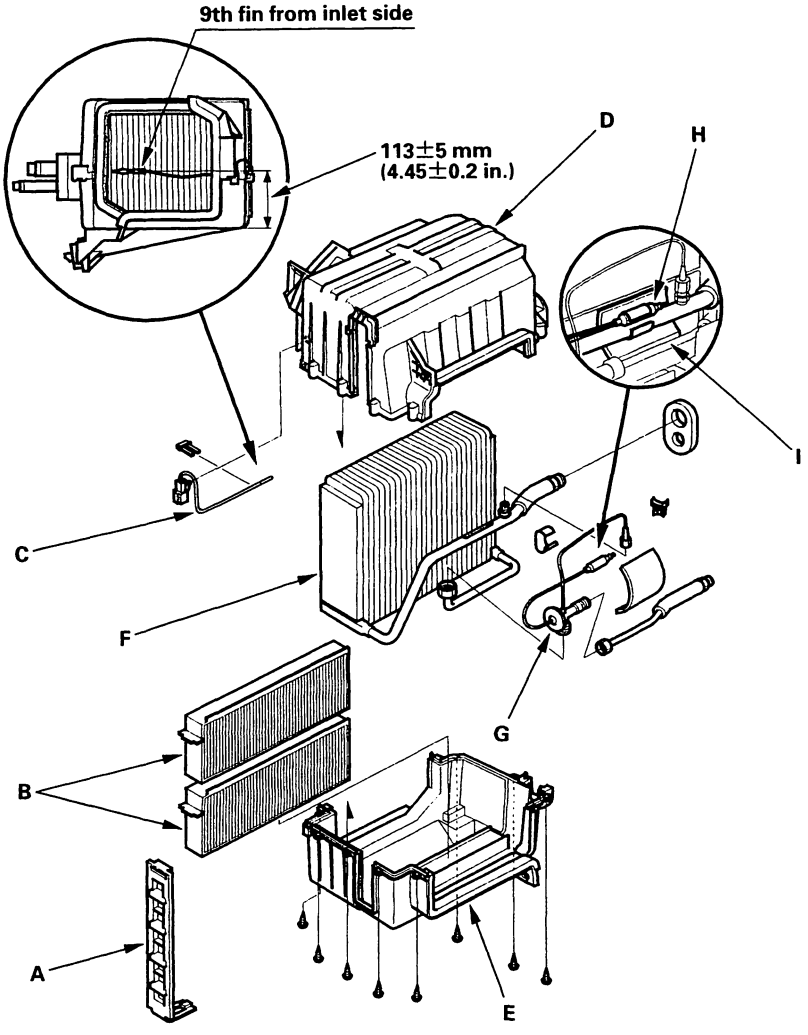

2. Pull out the evaporator temperature sensor (C) from the evaporator fins.

3. Remove the screws, carefully separate the upper housing (D) from the lower housing (E), then remove the evaporator core (F).

4. If necessary, remove the expansion valve (G). Use a second wrench to hold the other fitting on the valve so the evaporator line won't twist. Leave the first fitting loosely connected so you can use it to hold the valve while you loosen the second fitting.

5. Reassemble the evaporator in the reverse order of disassembly, and note these items:

   - Replace all O-rings with new ones at each fitting and apply a thin coat of refrigerant oil before installing them. Be sure to use the right O-rings for HFC-134a (R-134a) to avoid leakage.
   - Immediately after using the oil, replace the cap on the container, and seal it to avoid moisture absorption.
   - Install the capillary tube (H) directly against the outlet line, and wrap it with electrical tape (I).
   - Reinstall the evaporator temperature sensor in its original location.
   - Make sure no air is leaking from the upper housing and the lower housing fitting.

Compressor Replacement

1. If the compressor is marginally operable, run the engine at idle speed, and let the air conditioning work for a few minutes, then shut the engine off.

2. Make sure you have the anti-theft code for the radio, then write down the frequencies for the radio's preset buttons.

3. Disconnect the negative cable from the battery.

4. Recover the refrigerant with a recovery/recycling/charging station (see page 21-54).

5. Loosen the A/C compressor belt (see page 4-39).

6. Remove the nuts, then disconnect the suction line (A) and discharge line (B) from the compressor. Plug or cap the lines immediately after disconnecting them to avoid moisture and dust contamination.

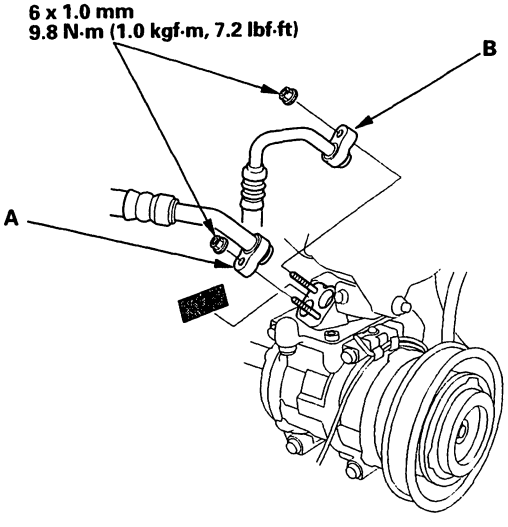

7. Disconnect the compressor clutch connector (A), then remove the mounting bolts and the compressor(B).

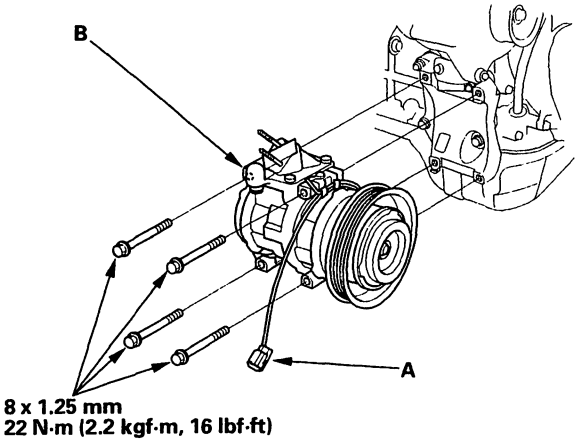

8. Remove the bolts, the suction service valve (A) and the O-ring (B) from the compressor.

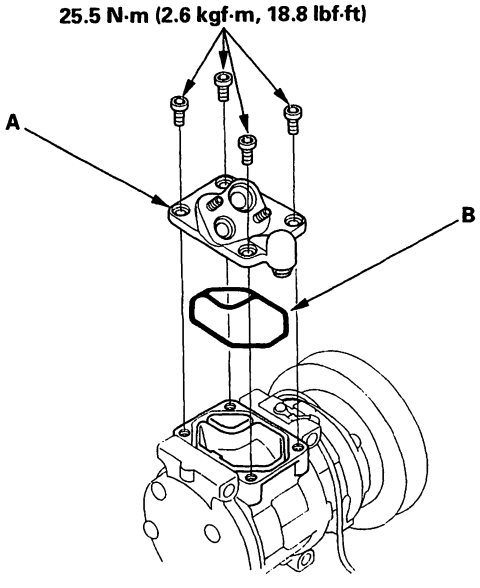

BACK

9. If necessary, remove the mounting bolts, mounting nuts and the compressor bracket.

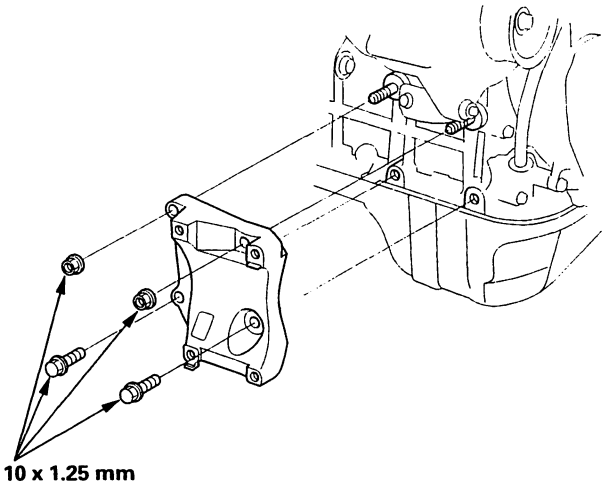

10 x 1.25 mm
49 N·m (5.0 kgf·m, 36 lbf·ft)

10. Install the compressor in the reverse order of removal, and note these items.

- If you're installing a new compressor, you must calculate the amount of refrigerant oil to be removed from it (see page 21-32).
- Replace the O-rings with new ones at each fitting, and apply a thin coat of refrigerant oil before installing them. Be sure to use the right O-rings for HFC-134a (R-134a) to avoid leakage.
- Use refrigerant oil (DENSO ND-OIL8) for HFC-134a DENSO piston type compressors only.
- To avoid contamination, do not return the oil to the container once dispensed, and never mix it with other refrigerant oils.
- Immediately after using the oil, replace the cap on the container, and seal it to avoid moisture absorption.
- Do not spill the refrigerant oil on the vehicle; it may damage the paint; if the refrigerant oil contacts the paint, wash it off immediately.
- Adjust the A/C compressor belt (see page 4-39).
- Charge the system (see page 21-56).
- Enter the anti-theft code for the radio, then enter the customer's radio station presets.

Compressor Clutch Check

1. Check the plated parts of the pressure plate for color changes, peeling or other damage. If there is damage, replace the clutch set (see page 21-51).

2. Check the pulley bearing play and drag by rotating the pulley by hand. Replace the clutch set with a new one if it is noisy or has excessive play/drag (see page 21-51).

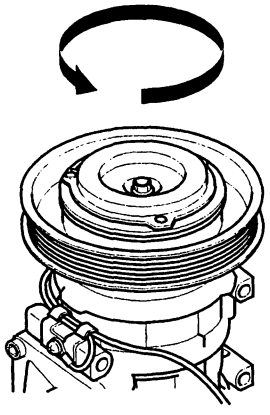

3. Measure the clearance between the pulley (A) and the pressure plate (B) all the way around. If the clearance is not within specified limits, remove the pressure plate (see page 21-51) and add or remove shims as needed to increase or decrease clearance.

   Clearance: 0.5±0.15 mm (0.020±0.006 in.)

   NOTE: The shims are available in three thicknesses: 0.1 mm, 0.3 mm and 0.5 mm.

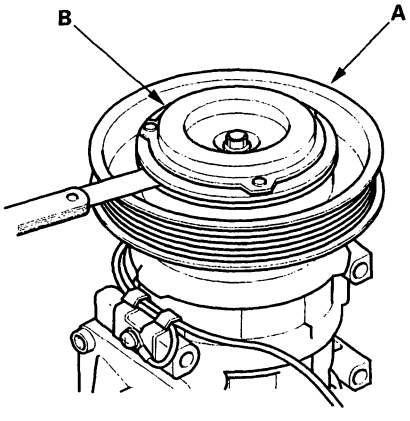

4. Check resistance of the field coil. If resistance is not within specifications, replace the field coil (see page 21-51).

   Field Coil Resistamce: 3.4–3.8 ohms at 68°F (20°C)

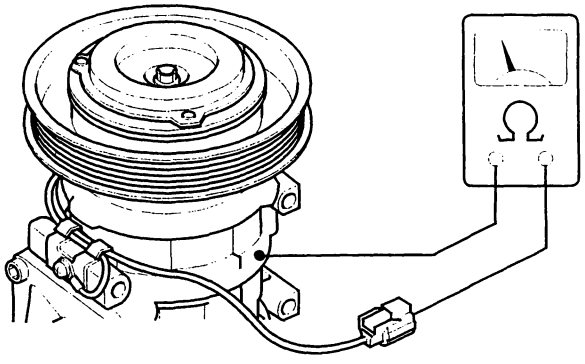

BACK

Compressor Clutch Overhaul

Special Tool Required
A/C clutch holder, Robinair 10204, Kent-Moore J37872, or Honda Tool and Equipment KMT-J33939, commercially available

1. Remove the center bolt while holding the pressure plate with a commercially available A/C clutch holder.

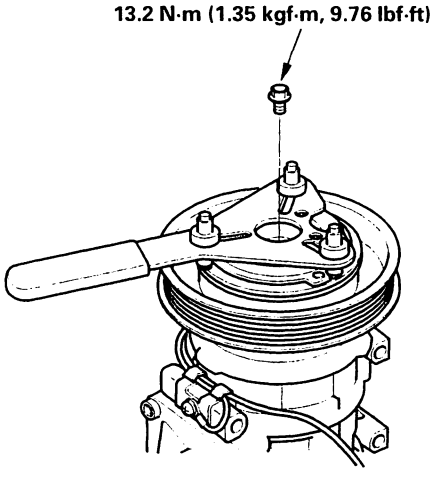

2. Remove the pressure plate (A) and shim(s) (B), taking care not to lose the shim(s). If the clutch needs adjustment, increase or decrease the number and thickness of shims as nesessary, then reinstall the pressure plate, and recheck its clearance (see page 21-50).

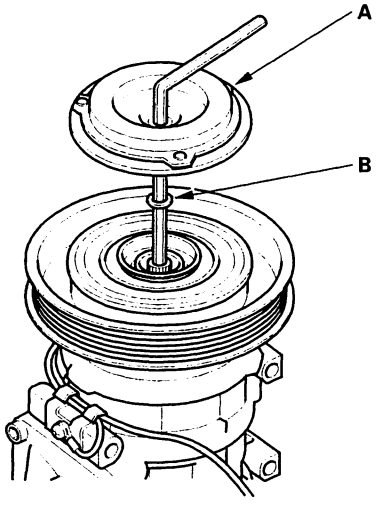

3. If you are replacing the field coil, remove the snap ring (A) with snap ring pliers, then remove the pulley (B). Be careful not to damage the pulley and compressor.

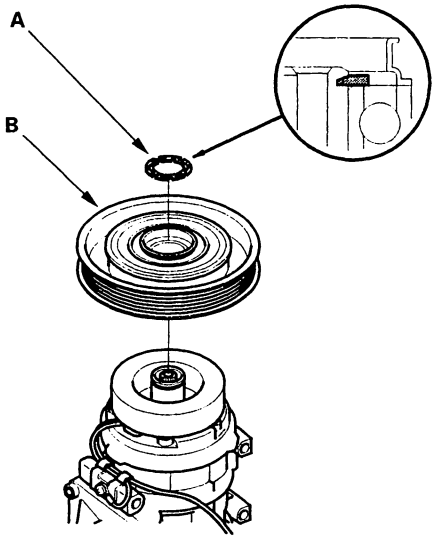

(cont'd)

Compressor Clutch Overhaul (cont'd)

4. Remove the screw from the field coil ground terminal (A). Remove the snap ring (B) with snap ring pliers, then remove the field coil (C). Be careful not to damage the field coil and compressor.

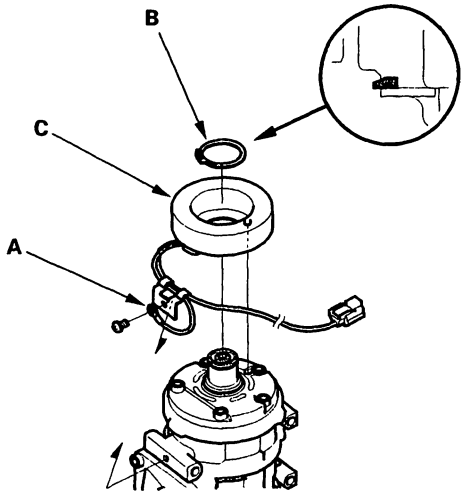

5. Reassemble the clutch in the reverse order of disassembly, and note these items:

   - Install the field coil with the wire side facing down, and align the boss on the field coil with the hole in the compressor.
   - Clean the pulley and compressor sliding surfaces with contact cleaner or other non-petroleum solvent.
   - Install new snap rings, note the installation direction, and make sure they are fully seated in the groove.
   - Make sure that the pulley turns smoothly after it's reassembled.
   - Route and clamp the wires properly or they can be damaged by the pulley.

Compressor Relief Valve Replacement

1. Recover the refrigerant with a recover/recycling/charging station (see page 21-54).

2. Remove the relief valve (A) and the O-ring (B). Plug the opening to keep foreign matter from entering the system and the compressor oil from running out.

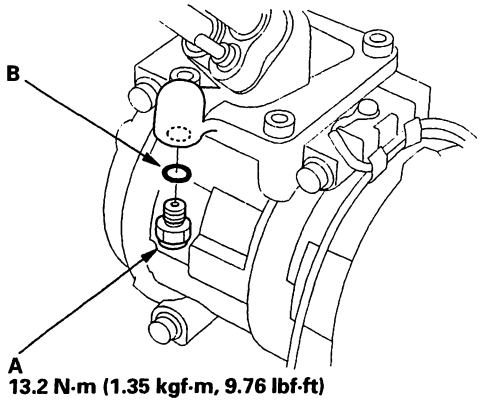

13.2 N·m (1.35 kgf·m, 9.76 lbf·ft)

3. Clean the mating surfaces.

4. Replace the O-ring with a new one at the relief valve, and apply a thin coat of refrigerant oil before installing it.

5. Remove the plug, and install and tighten the relief valve.

6. Charge the system (see page 21-56).

BACK

Condenser Replacement

1. Recover the refrigerant with a recovery/recycling/charging station (see page 21-54).

2. Remove the coolant reservoir, but do not disconnect the reservoir hose from the coolant reservoir and the radiator.

3. Remove the bolts, then remove the upper mount brackets from the radiator.

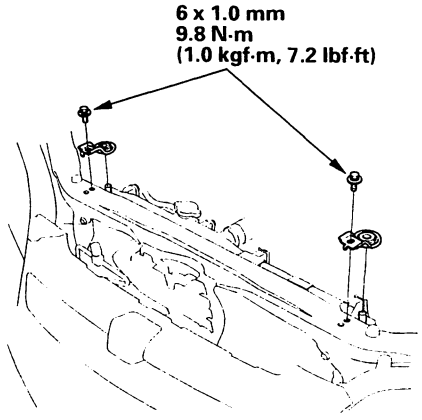

4. Remove the bolts, then disconnect the discharge line (A) and condenser line (B) from the condenser. Plug or cap the lines immediately after disconnecting them to avoid moisture and dust contamination.

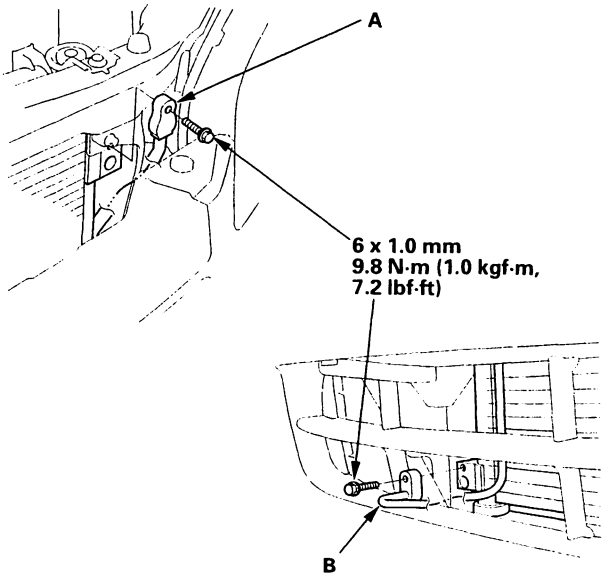

5. Remove the bolts and the upper mount brackets (A), then remove the condenser (B) by lifting it up. Be careful not to damage the radiator and condenser fins when removing the condenser.

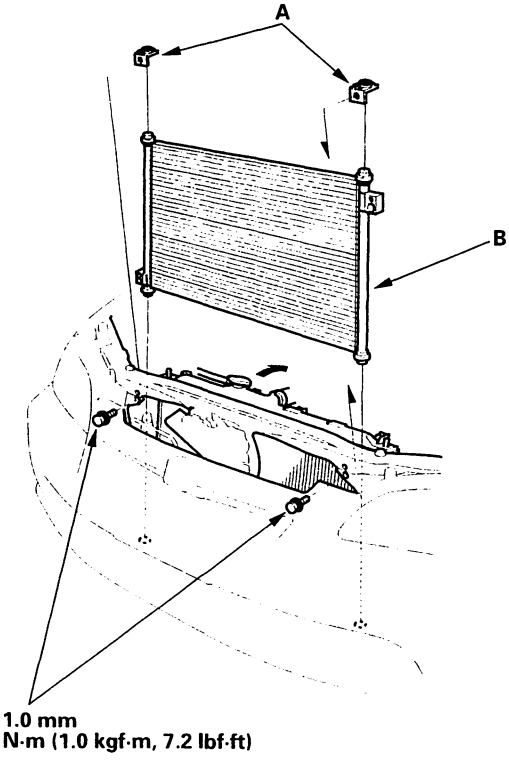

6. Install the condenser in the reverse order of removal, and note these items:

   - If you're installing a new condenser, add refrigerant oil (DENSO ND-OIL 8) (see page 21-32).
   - Replace the O-rings with new ones at each fitting, and apply a thin coat of refrigerant oil before installing them. Be sure to use the right O-rings for HFC-134a (R-134a) to avoid leakage.
   - Immediately after using the oil, replace the cap on the container, and seal it to avoid moisture absorption.
   - Do not spill the refrigerant oil on the vehicle; it may damage the paint; if the refrigerant oil contacts the paint, wash it off immediately.
   - Be careful not to damage the radiator and condenser fins when installing the condenser.
   - Charge the system (see page 21-56).

Refrigerant Recovery

⚠CAUTION

- Air conditioning refrigerant or lubricant vapor can irritate your eyes, nose, or throat.
- Be careful when connecting service equipment.
- Do not breathe refrigerant or vapor.

Use only service equipment that is U.L.-listed and is certified to meet the requirements of SAE J2210 to remove HFC-134a (R-134a) from the air conditioning system.

If accidental system discharge occurs, ventilate work area before resuming service.

Additional health and safety information may be obtained from the refrigerant and lubricant manufacturers.

1. Connect a R-134a refrigerant recovery/recycling/charging station (A) to the high-pressure service port (B) and the low-pressure service port (C), as shown, following the equipment manufacturer's instructions.

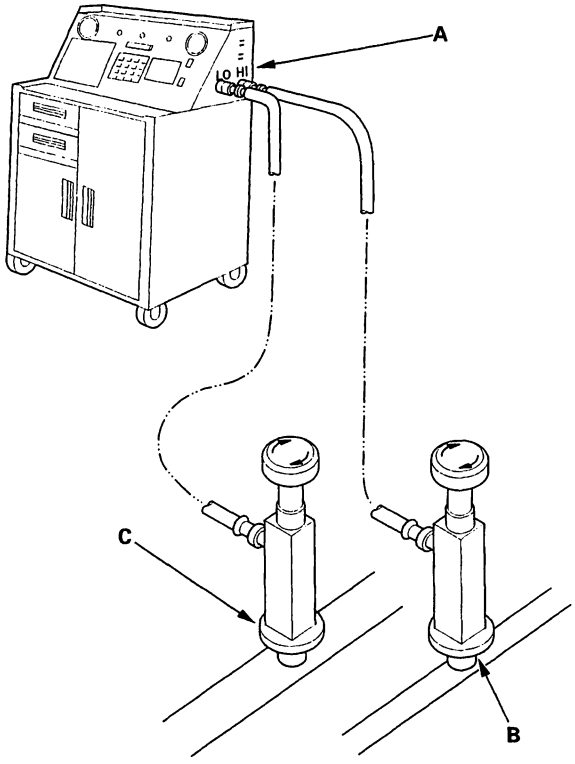

2. Measure the amount of refrigerant oil removed from the A/C system after the recovery process is completed. Be sure to put the same amount of new refrigerant oil back into the A/C system before charging.

BACK

System Evacuation

⚠CAUTION

- Air conditioning refrigerant or lubricant vapor can irritate your eyes, nose, or throat.
- Be careful when connecting service equipment.
- Do not breathe refrigerant or vapor.

Use only service equipment that is U.L.-listed and is certified to meet the requirements of SAE J2210 to remove HFC-134a (R-134a) from the air conditioning system.

If accidental system discharge occurs, ventilate work area before resuming service.

Additional health and safety information may be obtained from the refrigerant and lubricant manufacturers.

1. When an A/C System has been opened to the atmosphere, such as during installation or repair, it must be evacuated using a R-134a refrigerant recovery/recycling/charging station (If the system has been open for several days, the receiver/dryer should be replaced, and the system should be evacuated for several hours.)
2. Connect a R-134a refrigerant recovery/recycling/charging station (A) to the high-pressure service port (B) and the low-pressure service port (C), as shown, following the equipment manufacturer's instructions. Evacuate the system.

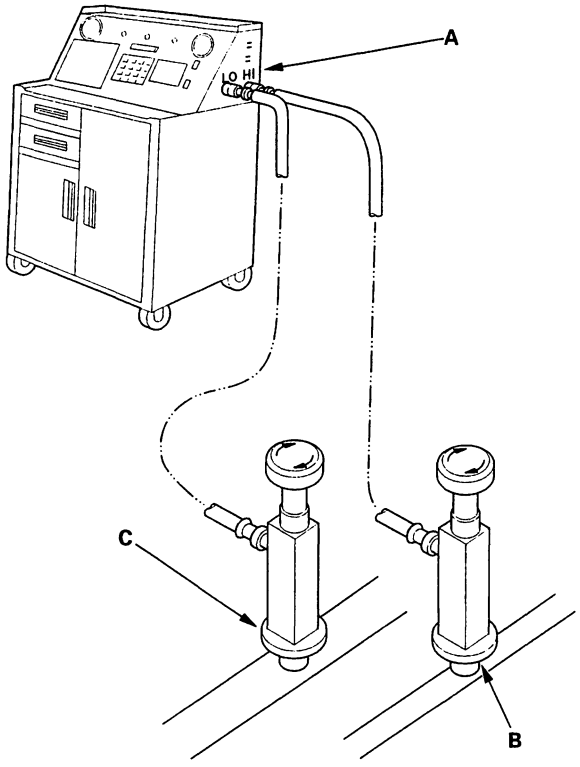

3. If the low-pressure does not reach more than 93.3 kPa (700 mm Hg, 27.6 in.Hg) in 15 minutes, there is probably a leak in the system. Partially charge the system, and check for leaks.

System Charging

⚠CAUTION

- Air conditioning refrigerant or lubricant vapor can irritate your eyes, nose, or throat.
- Be careful when connecting service equipment.
- Do not breathe refrigerant or vapor.

Use only service equipment that is U.L.-listed and is certified to meet the requirements of SAE J2210 to remove HFC-134a (R-134a) from the air conditioning system.

If accidental system discharge occurs, ventilate work area before resuming service.

Additional health and safety information may be obtained from the refrigerant and lubricant manufacturers.

1. Connect a R-134a refrigerant recovery/recycling/charging station (A) to the high-pressure service port (B) and the low-pressure service port (C), as shown, following the equipment manufacturer's instructions.

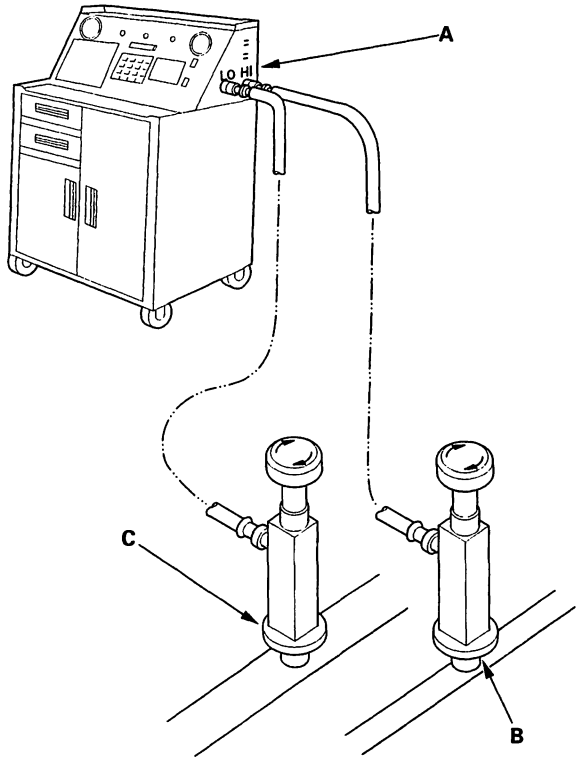

2. Evacuate the system (see page 21-55).
3. Add the same amount of new refrigerant oil to the system that was removed during recovery. Use only DENSO ND-OIL 8 refrigerant oil.
4. Charge the system with the specified amount of R-134a refrigerant. Do not overcharge the system; the compressor will be damaged.

   Select the appropriate units of measure for your refrigerant charging station.

   Refrigerant capacity:
   600 to 650 g
   0.60 to 0.65 kg
   1.3 to 1.4 lbs
   21.2 to 22.9 oz
5. Check for refrigerant leaks (see page 21-57).
6. Check for system performance (see page 21-44).

BACK

Refrigerant Leak Test

Special Tool Required
Leak detector, Honda Tool and Equipment YGK-H-10PM, commercially available

⚠ WARNING

- Compressed air mixed with R-134a froms a combustible vapor.
- The vapor can burn or explode causing serious injury.
- Never use compressed air to pressure test R-134a service equipment or vehicle air conditioning system.

⚠ CAUTION

- Air conditioning refrigerant or lubricant vapor can irritate your eyes, nose, or throat.
- Be careful when connecting service equipment.
- Do not breathe refrigerant or vapor.

Use only service equipment that is U.L.-listed and is certiified to meet the requirements of SAE J2210 to remove HFC-134a (R-134a) from the air conditioning system.

If accidental system discharge occurs, ventilate work area before resuming service.

R-134a service equipment or vehicle air conditioning systems should not be pressure tested or leak tested with compressed air.

Additional health and safety information may be obtained from the refrigerant and lulbricant manufacturers.

1. Connect a R-134a refrigerant recovery/recycling/ charging station (A) to the high-pressure service port (B) and the low-pressure service port (C), as shown, following the equipment manufacturer's instructions.

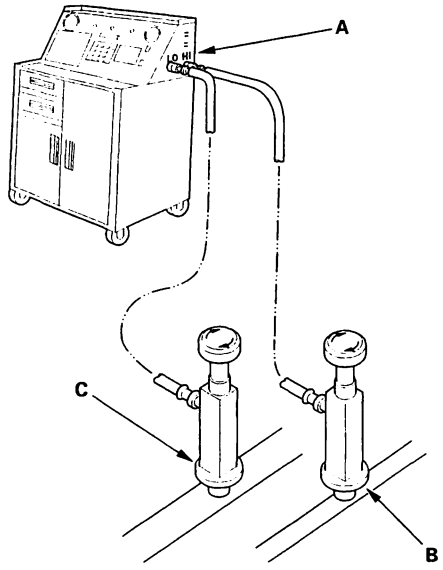

2. Open high pressure valve to charge the system to the specified capacity, then close the supply valve, and remove the charging system couplers.

   Select the appropriate units of measure for your refrigerant charging station.

   Refrigerant capacity:
   600 to 650 g
   0.60 to 0.65 kg
   1.3 to 1.4 lbs
   21.2 to 22.9 oz

3. Check the system for leaks using a R-134a refrigerant leak detector with an accuracy of 14 g (0.5 oz) per year or better.

4. If you find leaks that require the system to be opened (to repair or replace hoses, fittings, etc.), recover the system.

5. After checking and repairing leaks, the system must be evacuated.

SUPPLEMENTAL RESTRAINT SYSTEM (SRS) (If electrical maintenance is required)

The Accord Sedan/Coupe (L4) SRS includes a driver's airbag in the steering wheel hub, a passenger's airbag in the dashboard above the glove box, seat belt tensioners ('01-02 models) in the front seat belt retractors, and side airbags ('00-02 models) in the front seat-backs. Information necessary to safely service the SRS is included in this Service Manual. Items marked with an asterisk (*) on the contents page include or are located near SRS components. Servicing, disassembling, or replacing these items will require special precautions and tools, and should be done only by an authorized Honda dealer.

- To avoid rendering the SRS inoperative, which could lead to personal injury or death in the event of a severe frontal collision, all SRS service work must be performed by an authorized Honda dealer.
- Improper service procedures, including incorrect removal and installation of the SRS, could lead to personal injury caused by unintentional deployment of the airbags and side airbags.
- Do not bump the SRS unit. Otherwise, the system may fail in a collision, or the airbags may deploy when the ignition switch is ON (II).
- SRS electrical connectors are identified by yellow color coding. Related components are located in the steering column, front console, dashboard, dashboard lower panel, in the dashboard above the glove box, in the front seats, and around the floor. Do not use electrical test equipment on these circuits.

BACK

Body Electrical

Body Electrical
Special Tools 22-2
General Troubleshooting Information 22-3
Relay and Control Unit Locations 22-7
Connectors and Harnesses 22-11
Fuse/Relay boxes 22-43
Power Distribution 22-46
Ground Distribution 22-49
Battery 22-51
Relays 22-52
***Ignition Switch**
Test 22-55
Replacement 22-56
***Gauges**
Component Location Index 22-57
Circuit Diagram 22-60
Gauge Assembly Replacement 22-68
VSS Replacement 22-68
VSS Circuit Troubleshooting 22-69
Maintenance Required Indicator Reset Procedure 22-72
Safety Indicator System
Component Location Index 22-73
Circuit Diagram 22-74
Safety Indicator Input Test ... 22-76
Brake Light Failure Sensor Test 22-78
Lights-on, Key-in, Seat Belt Reminder, Key Light Timer, Engine Oil Pressure Indicator Systems
Circuit Diagram 22-79
Control Unit Input Test 22-80
Exterior Lights
Component Location Index 22-82
Circuit Diagram 22-84
Back-up Lights Circuit Diagram 22-90
Brake Lights Circuit Diagram 22-91
Automatic Lights Off Feature Circuit Diagram 22-92
Control Unit Input Test 22-93
Combination Light Switch Test/Replacement 22-95
DRL Control Unit Input Test 22-96
Headlight Replacement 22-98
Taillight Replacement 22-100
High Mount Brake Light Replacement 22-102
License Plate Light Replacement 22-103
Rear Side Marker Light Replacement 22-103
***Turn Signal/Hazard Flasher**
Component Location Index 22-104
Circuit Diagram 22-105
Turn Signal/Hazard Relay Input Test 22-106
Hazard Warning Switch Test 22-107
Interior Lights
Component Location Index 22-108
Circuit Diagram 22-109
Spotlight Test 22-110
Trunk light Test 22-111
Latch Switch Test 22-111
Dash Lights Brightness Control
Circuit Diagram 22-112
Control Unit Input Test 22-113
Controller Test 22-114
Entry Light Control System
Component Location Index 22-115
Circuit Diagram 22-116
Control Unit Input Test 22-117
Ignition Key Switch Test 22-120
Ignition Key Light Test 22-120
Ceiling Light Test 22-121
***Stereo Sound System**
Component Location Index 22-122
Circuit Diagram 22-123
Audio Unit Removal 22-124
Audio Unit Terminal ID 22-124
Speaker Replacement 22-125
Window Antenna Test 22-126
Window Antenna Repair 22-126
Window Antenna Coil Test 22-127
Clock
Circuit Diagram 22-128
Replacement 22-129
***Horns**
Component Location Index 22-130
Circuit Diagram 22-131
Horn Test/Replacement 22-131
Accessory Power Socket
Circuit Diagram 22-132
Test/Replacement 22-133
Multiplex Control System
Component Location Index 22-134
Circuit Diagram 22-135
System Descriptions 22-136
Troubleshooting 22-137
Power and Ground Test 22-141
Power Mirrors
Component Location Index 22-145
Circuit Diagram 22-146
Function Test 22-148
Power Mirror Switch Test 22-149
Power Mirror Actuator Test 22-150
Power Mirror Actuator Replacement 22-151
Moonroof
Component Location Index 22-155
Circuit Diagram 22-156
Switch Test 22-157
Motor Test 22-157
Rear Window Defogger
Component Location Index 22-158
Circuit Diagram 22-159
Function Test 22-160
Defogger Wire Repair 22-160
Power Windows
Component Location Index 22-161
Circuit Diagram 22-162
Control Unit Input Test 22-174
Master Switch Replacement 22-179
Passenger's Window Switch Replacement 22-179
Driver's Window Motor Test 22-180
Passenger's Window Motor Test 22-180
Wiper/Washer
Component Location Index 22-181
Circuit Diagram 22-182
Control Unit Input Test 22-184
Wiper/Washer Switch Test/Replacement 22-187
Wiper Motor Test 22-188
Wiper Motor Replacement ... 22-188
Washer Motor Test 22-189
Washer Reservoir Replacement 22-190
Washer Level Switch Test (Canada) 22-190
Washer Tube Replacement 22-191
Power Seat
Component Location Index 22-192
Circuit Diagram 22-193
Switch Test 22-195
Motor Test 22-197
Seat Heaters—Canada
Component Location Index 22-199
Circuit Diagram 22-200
Switch Test 22-201
Heater Test 22-201
Immobilizer System
Component Location Index 22-202
Circuit Diagram 22-203
System Description 22-204
Troubleshooting 22-206
Immobilizer Receiver Unit Replacement 22-207
Keyless Entry/Security Alarm System
Component Location Index 22-208
Circuit Diagram 22-210
System Descriptions 22-215
Control Unit Input Test 22-216
Front Door Lock Actuator Test 22-225
Rear Door Lock Actuator Test 22-225
Driver's Door Lock Knob Switch Test 22-226
Passenger's Door Lock Knob Switch Test 22-226
Door Key Cylinder Switch Test 22-227
Door Lock Switch Test 22-227
Trunk Lid Opener/Latch Switch Test 22-228
Trunk Key Cylinder Switch Test 22-228
Security Indicator Test 22-229
Hood Switch Test 22-229
Transmitter Test 22-230
Transmitter Programming ... 22-230
Power Door Locks
Component Location Index 22-231
Circuit Diagram 22-232

Special Tools

Ref. No.	Tool Number	Description	Qty
①	07LAJ-PT3020A	Test Harness	1
②	07WAZ-001010A	MPCS Short Switch	1

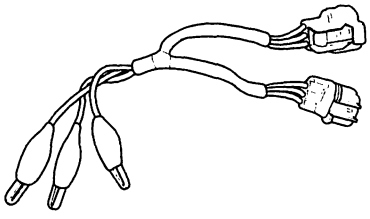

①

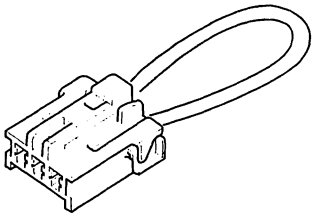

②

BACK

General Troubleshooting Information

Tips and Precautions

Before Troubleshooting

1. Check applicable fuses in the appropriate fuse/relay box.

2. Check the battery for damage, state of charge, and clean and tight connections.

   NOTICE
   - Do not quick-charge a battery unless the battery ground cable has been disconnected, otherwise you will damage the alternator diodes.
   - Do not attempt to crank the engine with the battery ground cable loosely connected or you will severely damage the wiring.

3. Check the alternator belt tension.

Handling Connectors

- Make sure the connectors are clean and have no loose wire terminals.
- Make sure multiple cavity connectors are packed with grease (except watertight connectors).
- All connectors have push-down release type locks (A).

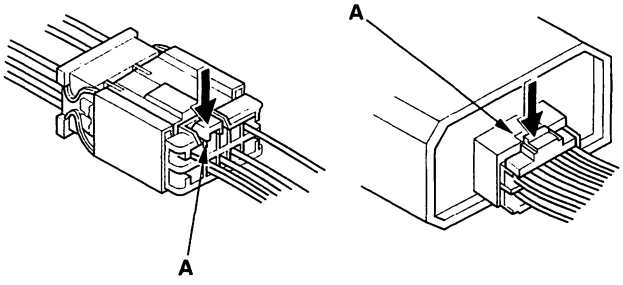

- Some connectors have a clip on their side used to attach them to a mount bracket on the body or on another component. This clip has a pull type lock.
- Some mounted connectors cannot be disconnected unless you first release the lock and remove the connector from its mount bracket (A).

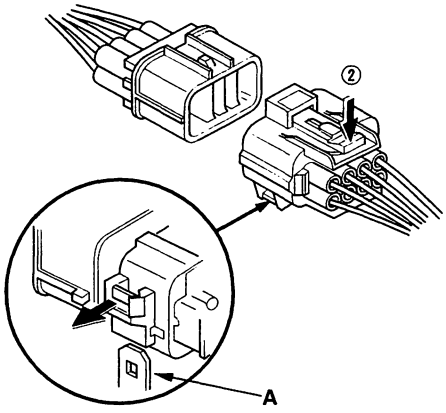

- Never try to disconnect connectors by pulling on their wires; pull on the connector halves instead.
- Always reinstall plastic covers.

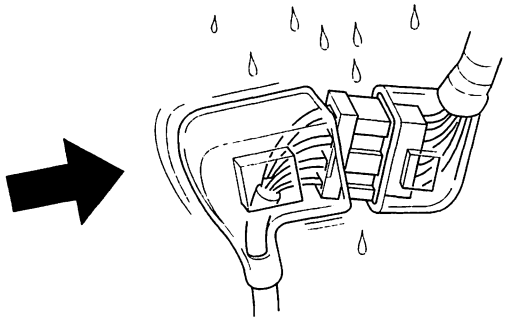

- Before connecting connectors, make sure the terminals (A) are in place and not bent.

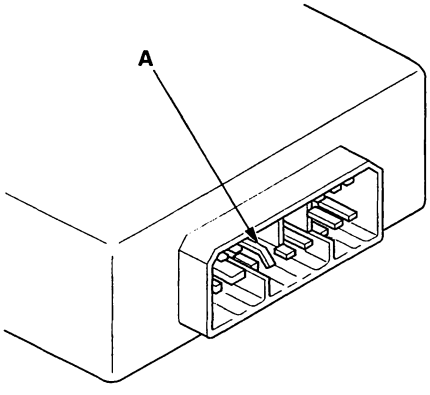

(cont'd)

General Troubleshooting Information (cont'd)

- Check for loose retainer (A) and rubber seals (B).

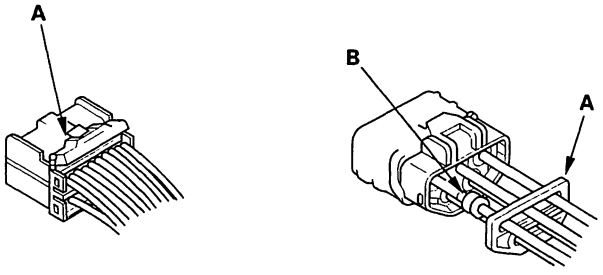

- The backs of some connectors are packed with grease. Add grease if necessary. If the grease is contaminated, replace it.

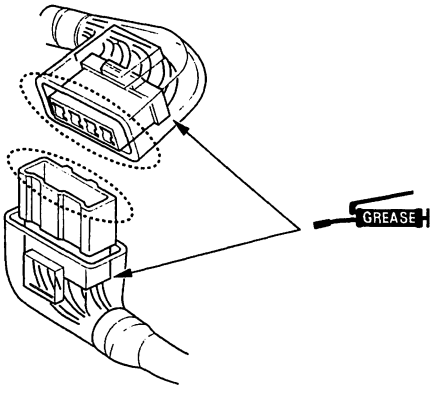

- Insert the connector all the way and make sure it is securely locked.
- Position wires so that the open end of the cover faces down.

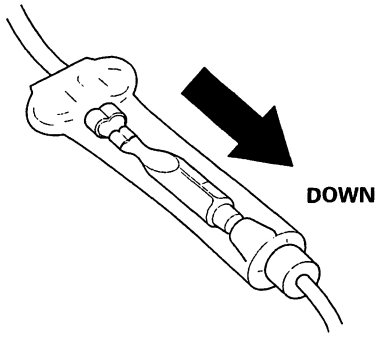

Handling Wires and Harnesses

- Secure wires and wire harnesses to the frame with their respective wire ties at the designated locations.
- Remove clips carefully; don't damage their locks (A).

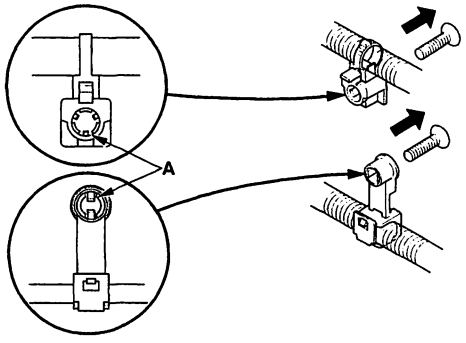

- Slip pliers (A) under the clip base and through the hole at an angle, then squeeze the expansion tabs to release the clip.

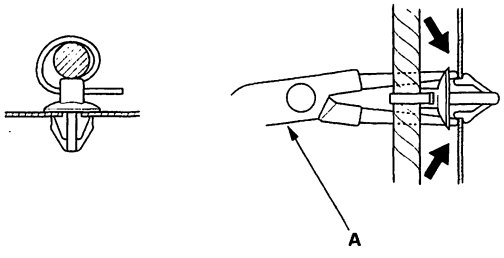

- After installing harness clips, make sure the harness doesn't interfere with any moving parts.
- Keep wire harnesses away from exhaust pipes and other hot parts, from sharp edges of brackets and holes, and from exposed screws and bolts.
- Seat grommets in their grooves properly (A). Do not leave grommets distorted (B).

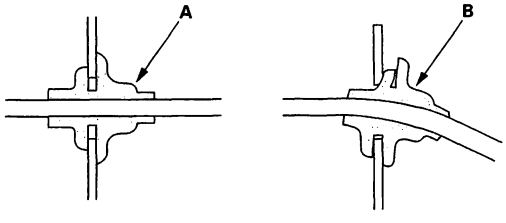

BACK

Testing and Repairs

- Do not use wires or harnesses with broken insulation. Replace them or repair them by wrapping the break with electrical tape.
- After installing parts, make sure that no wires are pinched under them.
- When using electrical test equipment, follow the manufacturer's instructions and those described in this manual.
- If possible, insert the probe of the tester from the wire side (except waterproof connector).

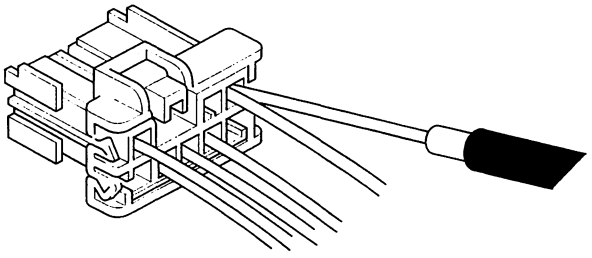

- Use a probe with a tapered tip.

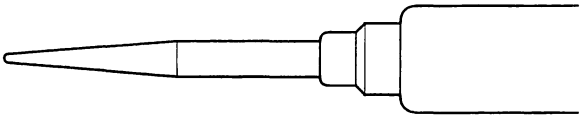

- Refer to the instructions in the Honda Terminal Kit for identification and replacement of connector terminals.

(cont'd)

General Troubleshooting Information (cont'd)

Five-step Troubleshooting

1. Verify The Complaint
   Turn on all the components in the problem circuit to verify the customer complaint. Note the symptoms. Do not begin disassembly or testing until you have narrowed down the problem area.

2. Analyze The Schematic
   Look up the schematic for the problem circuit. Determine how the circuit is supposed to work by tracing the current paths from the power feed through the circuit components to ground. If several circuits fail at the same time, the fuse or ground is a likely cause.

   Based on the symptoms and your understanding of the circuit operation, identify one or more possible causes of the problem.

3. Isolate The Problem By Testing The Circuit
   Make circuit tests to check the diagnosis you made in step 2. Keep in mind that a logical, simple procedure is the key to efficient troubleshooting. Test for the most likely cause of failure first. Try to make tests at points that are easily accessible.

4. Fix The Problem
   Once the specific problem is identified, make the repair. Be sure to use proper tools and safe procedures.

5. Make Sure The Circuit Works
   Turn on all components in the repaired circuit in all modes to make sure you've fixed the entire problem. If the problem was a blown fuse, be sure to test all of the circuits on the fuse. Make sure no new problems turn up and the original problem does not recur.

Wire Color Codes

The following abbreviations are used to identify wire colors in the circuit schematics:

WHT	White
YEL	Yellow
BLK	Black
BLU	Blue
GRN	Green
RED	Red
ORN	Orange
PNK	Pink
BRN	Brown
GRY	Gray
PUR	Purple
LT BLU	Light Blue
LT GRN	Light Green

The wire insulation has one color or one color with another color stripe. The second color is the stripe.

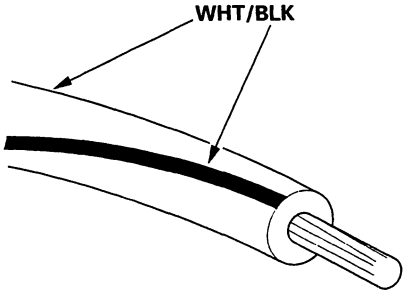

BACK

Relay and Control Unit Locations

Engine Compartment

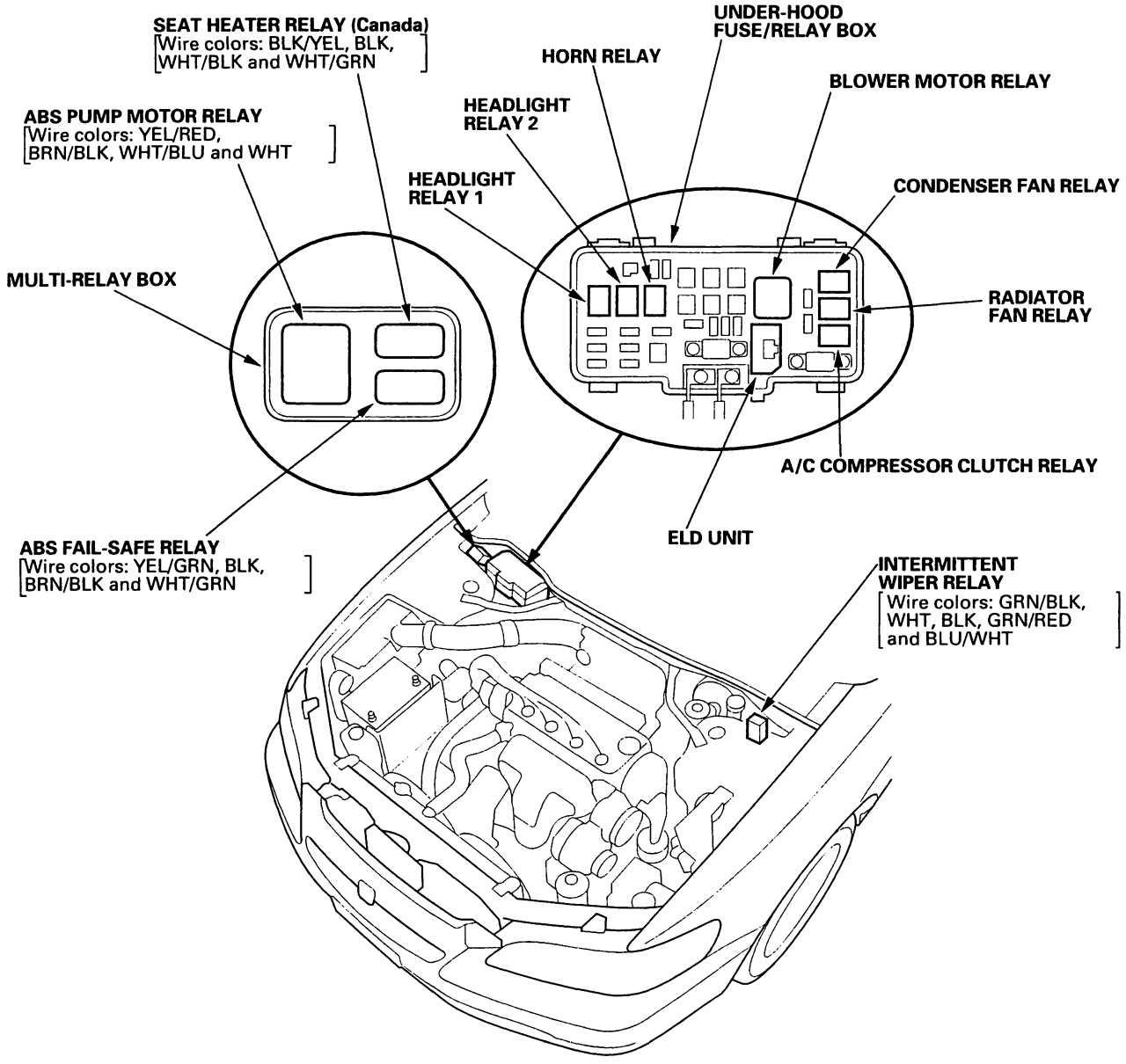

Relay and Control Unit Locations

Dashboard

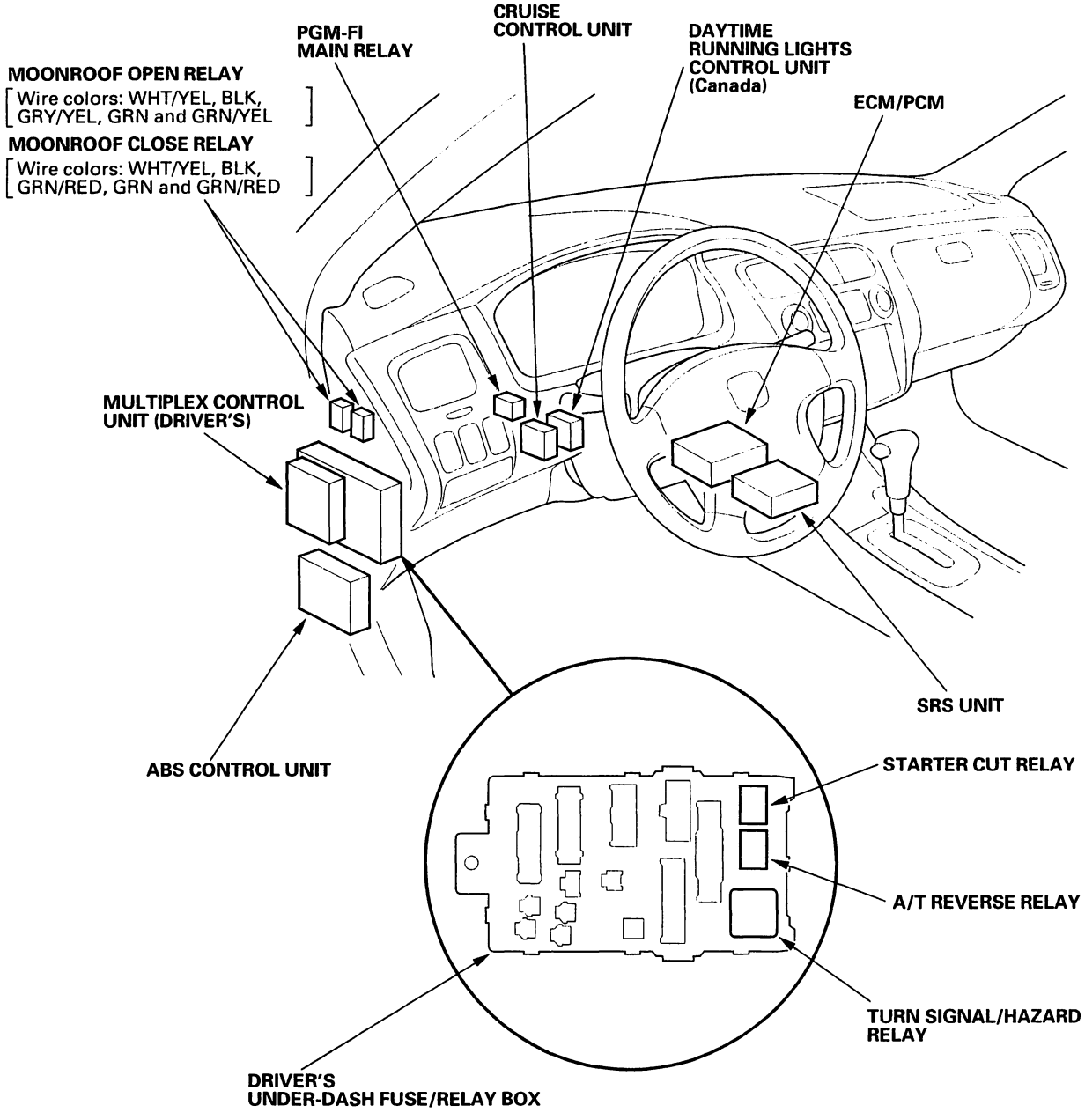

BACK

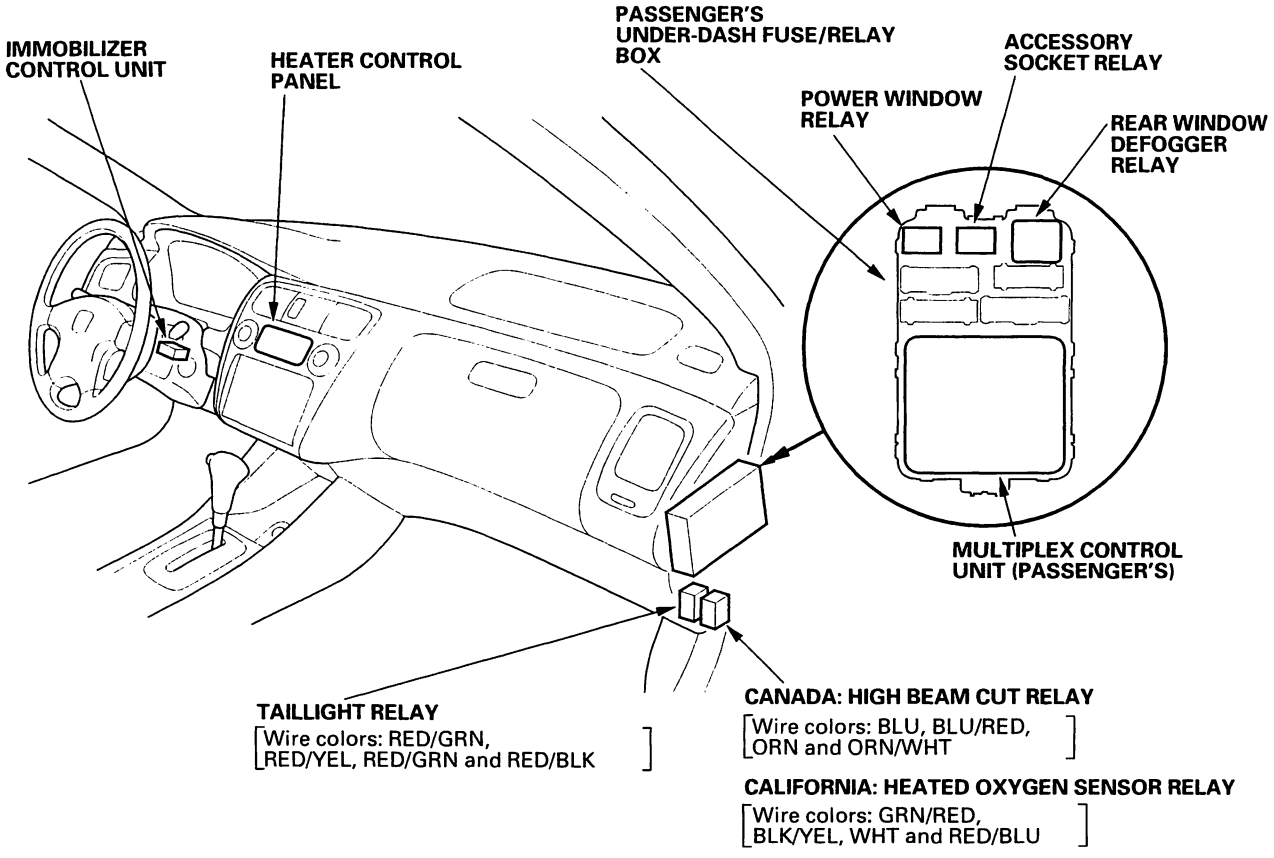
IMMOBILIZER CONTROL UNIT
HEATER CONTROL PANEL
PASSENGER'S UNDER-DASH FUSE/RELAY BOX
ACCESSORY SOCKET RELAY
POWER WINDOW RELAY
REAR WINDOW DEFOGGER RELAY
MULTIPLEX CONTROL UNIT (PASSENGER'S)
TAILLIGHT RELAY
[Wire colors: RED/GRN, RED/YEL, RED/GRN and RED/BLK]
CANADA: HIGH BEAM CUT RELAY
[Wire colors: BLU, BLU/RED, ORN and ORN/WHT]
CALIFORNIA: HEATED OXYGEN SENSOR RELAY
[Wire colors: GRN/RED, BLK/YEL, WHT and RED/BLU]

Relay and Control Unit Locations

Door and Seat

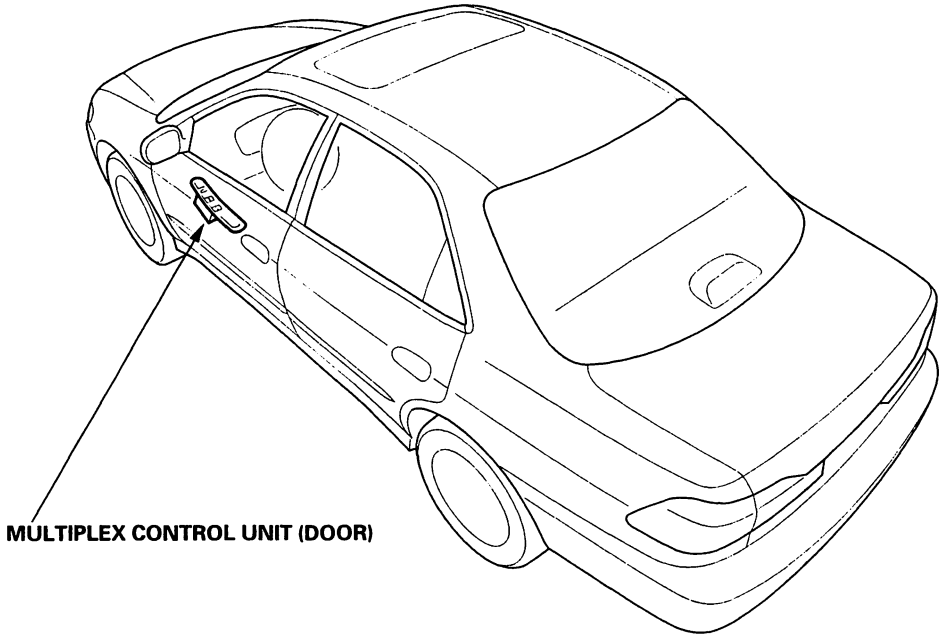

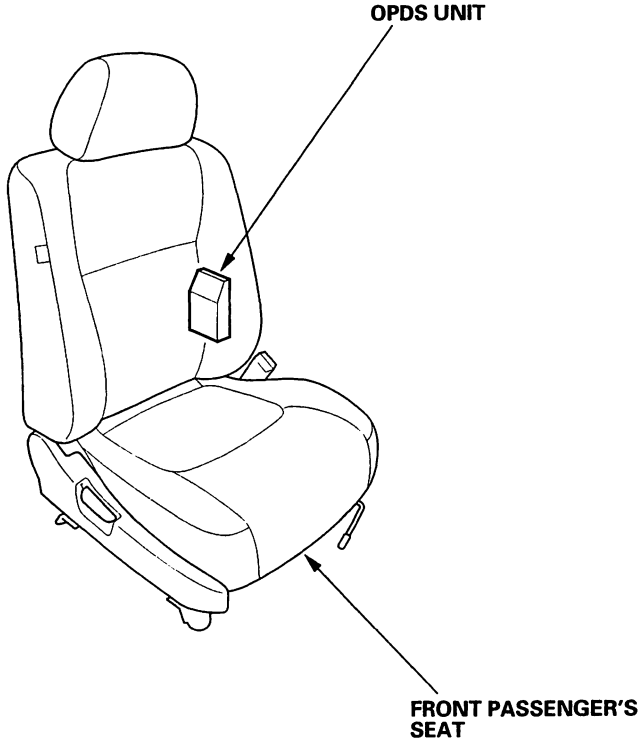

BACK

Connector Index

Identification numbers have been assigned to in-line connectors. The number is preceded by the letter "C" for connectors, "G" for ground terminals or "T" for non-ground terminals.

Harness	Location			
	Engine Compartment	Dashboard	Others (Floor, Door, Trunk, and Roof)	Notes
Starter cable	T1, T2 and (+)			(see page 22-12)
Battery ground cable	T3 G1 and (−)			(see page 22-12)
Engine ground cable	T4 G2			(see page 22-12)
Engine wire harness	C101 and C102 T101 and T102 G101			(see page 22-14)
Right engine compartment wire harness	C101 and C102 G201 and G202	C201 through C204		(see page 22-16)
Left engine compartment wire harness	G301 through G303	C301 and C302 G304 and G305		(see page 22-18)
Dashboard wire harness B (left branch)		C301, C401, C402 and C404 G401		(see page 22-20)
Dashboard wire harness B (right branch)		C201 through C203 and C403		(see page 22-20)
Dashboard wire harness A		C204, C302 and C401 G501 and G502	C501 through C505 and C582 G503 and G504	(see page 22-22)
Left side wire harness			C501 and C551 through C557 G551 and G552	(see page 22-24)
Right side wire harness			C581 through C586 and C851 G581	(see page 22-26)
Rear wire harness			C554 and C601 G601	(see page 22-28)
Moonroof wire harness			C502	(see page 22-30)
Roof wire harness				(see page 22-30)
Driver's power seat wire harness			C551	(see page 22-31)
Driver's door wire harness			C631 and C632	(see page 22-32)
Passenger's door wire harness				(see page 22-34)
Left rear door wire harness			C553	(see page 22-36)
Right rear door wire harness			C581	(see page 22-37)
Ignition switch lead				(see page 22-38)
Clutch switch sub-harness (M/T)		C404		(see page 22-38)
SRS main harness		C503	C556, C557, C583 and C 584 G801	(see page 22-39)
SRS floor harness (Sedan)			C505 and C851	(see page 22-39)
OPDS wire harness (with side airbags)			C851	(see page 22-42)
Rear window defogger wire harness				(see page 22-42)

Connector to Harness Index

Starter Cable

Connector or Terminal	Ref	Cavities	Location	Connects to	Notes
T1	2		Right side of engine compartment	Under-hood fuse/relay box	
T2	3		Right side of engine compartment	Starter motor	
(+)			Battery	Battery positive terminal	

Battery Ground Cable

Connector or Terminal	Ref	Cavities	Location	Connects to	Notes
T3	6		Right side of engine compartment	Transmission housing	
G1	1		Right side of engine compartment	Body ground via battery ground cables	
(−)			Battery	Battery negative terminal	

Engine Ground Cable

Connector or Terminal	Ref	Cavities	Location	Connects to	Notes
T4	4		Middle of engine compartment	Cylinder head cover	
G2	5		Left side of engine compartment	Body ground via engine ground cable	

BACK

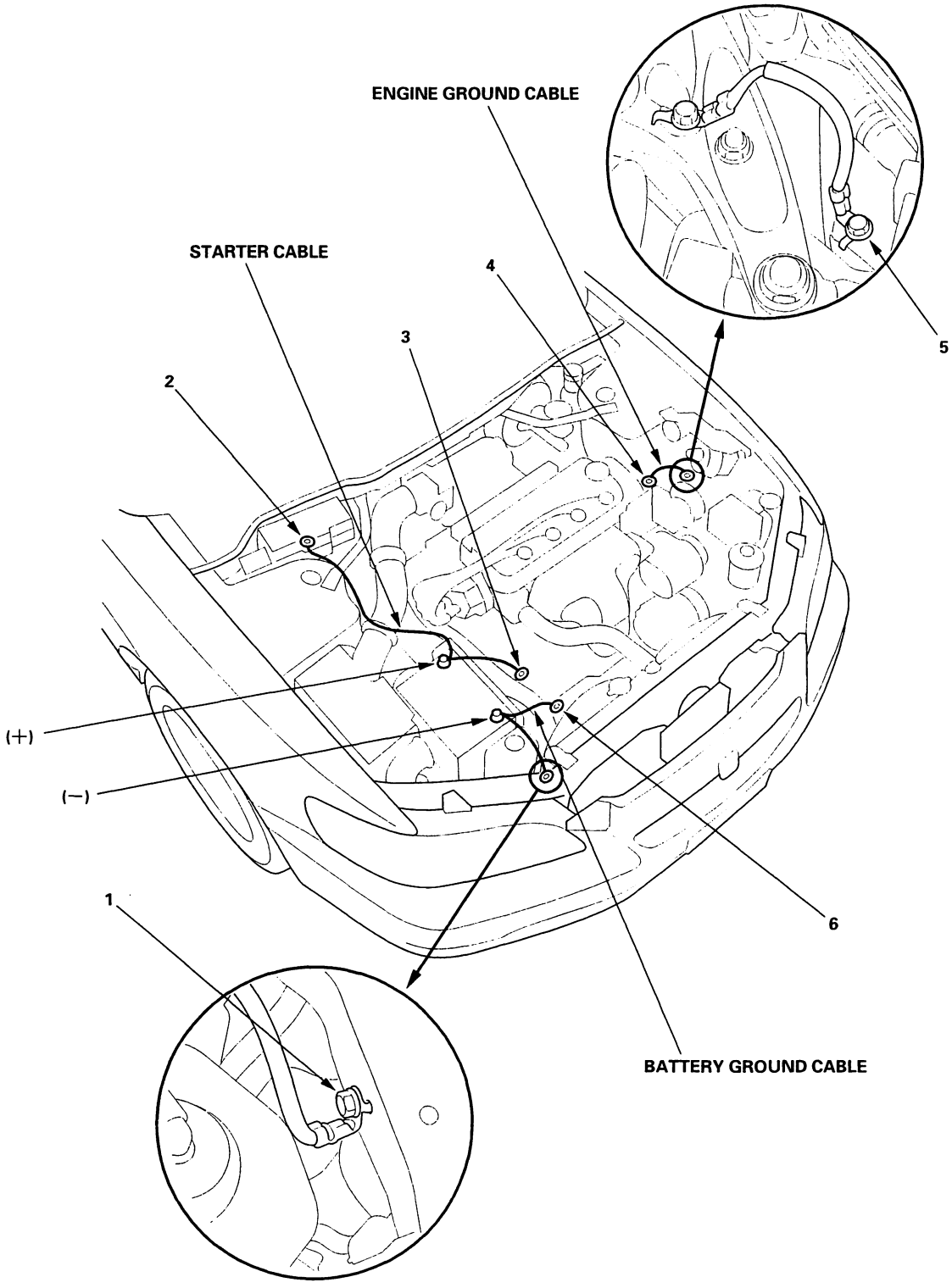
ENGINE GROUND CABLE
STARTER CABLE
4
3
2
5
(+)
(−)
1
6
BATTERY GROUND CABLE

Connector to Harness Index (cont'd)

Engine Wire Harness

Connector or Terminal	Ref	Cavities	Location	Connects to	Notes
Alternator	23	4	Left side of engine compartment		
A/T clutch pressure control valve A	36	2	Under the battery		
A/T clutch pressure control valve B	35	2	Under the battery		
Transmission range switch (A/T gear position switch)	42	10	Right side of engine compartment		
Back-up light switch connector A (+)	32	1	Right side of engine compartment		M/T
Back-up light switch connector B (−)	31	1	Right side of engine compartment		M/T
Countershaft speed sensor	41	2	Right side of engine compartment		A/T
Distributor	39	4	Right side of engine compartment		
Coolant temperature gauge sending unit	38	1	Right side of engine compartment		* 1
Engine coolant temperature (ECT) sensor	37	2	Right side of engine compartment		
EVAP canister purge valve (EVAP purge control solenoid valve)	14	2	Middle of engine		
Exhaust gas recirculation (EGR) valve	9	6	Middle of engine		
Idle air control (IAC) valve	10	3	Middle of engine		
Intake air temperature (IAT) sensor	15	2	Middle of engine		
C103 (Junction connector)	12	14	Middle of engine		
Knock sensor	13	1	Middle of engine		
Torpue converter clutch solenoid valve (Lock-up control solenoid valve) and shift control solenoid valve A	27	2	Right side of engine compartment		A/T
Mainshaft speed sensor	34	2	Under the battery		A/T
MAP sensor	8	3	Middle of engine		
Fuel injector No. 1	17	2	Middle of engine		
Fuel injector No. 2	19	2	Middle of engine		
Fuel injector No. 3	20	2	Middle of engine		
Fuel injector No. 4	21	2	Middle of engine		
Engine oil pressure switch	11	1	Middle of engine		
PCM/ECM connector B	4	25	Under middle of dash		
PCM/ECM connector C	5	31	Under middle of dash		
PCM/ECM connector D	6	16	Under middle of dash		
Primary heated oxygen sensor (Primary HO2S)	26	4	Middle of engine		
Radiator fan switch	40	2	Right side of engine compartment		
Second clutch pressure switch	43	1	Right side of engine compartment		A/T
Shift control solenoid valve B	28	2	Right side of engine compartment		A/T
Shift control solenoid valve C	30	2	Right side of engine compartment		A/T
Starter solenoid	29	1	Right side of engine compartment		
TDC/CKP sensor	18	4	Left side of engine compartment		
Throttle position (TP) sensor	7	3	Middle of engine		
Third clutch pressure switch	33	1	Under the battery		A/T
Vehicle speed sensor (VSS)	44	3	Right side of engine compartment		M/T
VTEC pressure switch	25	2	Right side of engine compartment		
VTEC solenoid valve	24	1	Right side of engine compartment		
C101	2	10	Under the under-hood fuse/relay box	Right engine compartment wire harness (see page 22-16)	
C102	3	14	Under the under-hood fuse/relay box	Right engine compartment wire harness (see page 22-16)	A/T
C102	3	8	Under the under-hood fuse/relay box	Right engine compartment wire harness (see page 22-16)	* 2 (M/T)
C102	3	10	Under the under-hood fuse/relay box	Right engine compartment wire harness (see page 22-16)	* 3 (M/T)
T101	1		Under-hood fuse/relay box		
T102	22		Alternator		
G101	16		Middle of engine compartment	Engine ground via engine wire harness	

* 1: '98-99 models
* 2: '98-99 models, '00-02 model (except California)
* 3: '00-02 model (California)

BACK

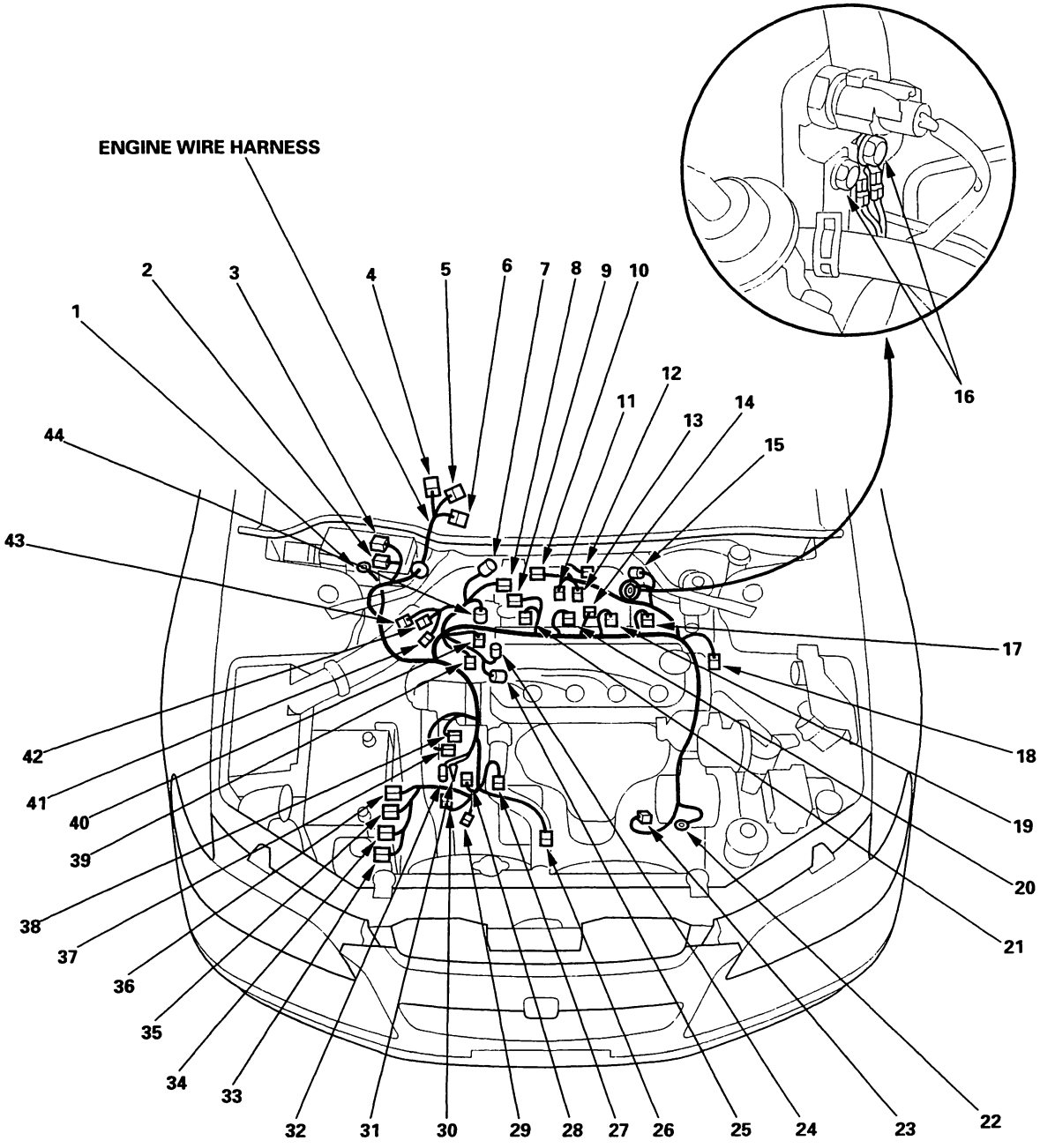
ENGINE WIRE HARNESS
1
2
3
4
5
6
7
8
9
10
11
12
13
14
15
16
17
18
19
20
21
22
23
24
25
26
27
28
29
30
31
32
33
34
35
36
37
38
39
40
41
42
43
44

Connector to Harness Index (cont'd)

Right Engine Compartment Wire Harness

Connector or Terminal	Ref	Cavities	Location	Connects to	Notes
ABS fail-safe relay	7	4	Right side of engine compartment		
ABS pump motor relay	6	4	Right side of engine compartment		
ABS right front wheel sensor	34	2	Right side of engine compartment		
A/C compressor clutch	23	1	Left side of engine compartment		
Condenser fan motor	22	2	Middle of engine compartment		
Diode (Lighting)	1	2	Behind right kick panel		Canada
ELD unit	13	3	Into under-hood fuse/relay box		
Engine mount control solenoid valve	20	2	Right side of engine compartment		A/T
Heated oxygen sensor relay	2	4	Behind right kick panel		California
High beam cut relay	2	4	Behind right kick panel		Canada
Left horn	24	1	Behind middle of front bumper		
Passenger's under-dash fuse/relay box connector C (see page 22-45)	4	18	Behind right kick panel		
Passenger's under-dash fuse/relay box connector D (see page 22-45)	5	3	Behind right kick panel		
Radiator fan motor	27	2	Middle of engine compartment		
Right front parking light	29	2	Behind right headlight		
Right front side marker light	32	3	Behind right of front bumper		
Right headlight (High beam)	28	2	Behind right headlight		
Right headlight (Low beam)	30	2	Behind right headlight		
Right horn	26	1	Behind middle of front bumper		
Seat heater relay	8	4	Right side of engine compartment		Canada
Secondary heated oxygen sensor (Secondary HO2S)	21	4	Right side of engine compartment		
Security hood switch	25	2	Under hood latch		
Taillight relay	3	4	Behind right kick panel		
Test tachometer connector	33	2	Right side of engine compartment		
Under-hood fuse/relay box connector A (see page 22-43)	12	18	Right side of engine compartment		
Under-hood fuse/relay box connector B (see page 22-43)	11	7	Right side of engine compartment		
Under-hood fuse/relay box connector C (see page 22-43)	10	3	Right side of engine compartment		
Under-hood fuse/relay box connector D (see page 22-43)	9	16	Right side of engine compartment		
C101	19	10	Right side of engine compartment	Engine wire harness (see page 22-14)	
C102	18	14	Right side of engine compartment	Engine wire harness (see page 22-14)	A/T
C102	18	8	Right side of engine compartment	Engine wire harness (see page 22-14)	* 1 (M/T)
C102	18	10	Right side of engine compartment	Engine wire harness (see page 22-14)	* 2 (M/T)
C201	14	16	Under right side of dash	Dashboard wire harness B (see page 22-20)	
C202	15	7	Under right side of dash	Dashboard wire harness B (see page 22-20)	
C203	17	5	Under right side of dash	Dashboard wire harness B (see page 22-20)	
C204	16	22	Under right side of dash	Dashboard wire harness A (see page 22-22)	
G201	31		Right side of engine compartment	Body ground via right engine compartment wire harness	
G202	35		Right side of engine compartment	Body ground via right engine compartment wire harness	

* 1: '98-99 models, '00-02 model (except California)
* 2: '00-02 model (California)

BACK

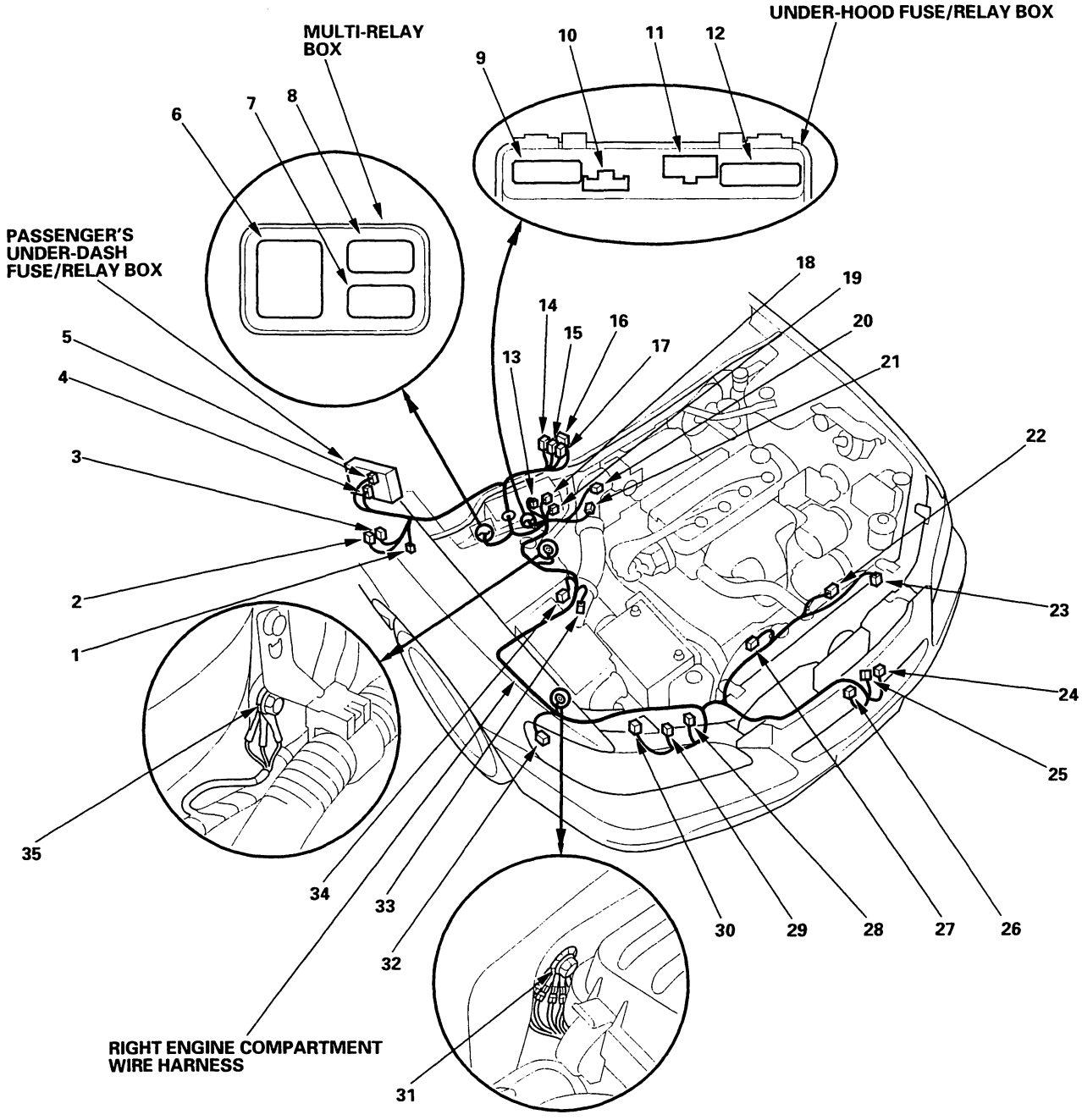
UNDER-HOOD FUSE/RELAY BOX
MULTI-RELAY BOX
PASSENGER'S UNDER-DASH FUSE/RELAY BOX
RIGHT ENGINE COMPARTMENT WIRE HARNESS
1
2
3
4
5
6
7
8
9
10
11
12
13
14
15
16
17
18
19
20
21
22
23
24
25
26
27
28
29
30
31
32
33
34
35

Connector to Harness Index (cont'd)

Left Engine Compartment Wire Harness

Connector or Terminal	Ref	Cavities	Location	Connects to	Notes
ABS control unit connector A	12	12	Behind left kick panel		
ABS control unit connector B	13	22	Behind left kick panel		
ABS left front wheel sensor	14	2	Left side of engine compartment		
ABS modulator unit	22	10	Left side of engine compartment		
ABS pump motor	21	2	Left side of engine compartment		
Brake fluid level switch connector A (+)	5	1	Left side of engine compartment		
Brake fluid level switch connector B (−)	6	1	Left side of engine compartment		
Cruise control actuator	15	4	Left side of engine compartment		
Driver's under-dash fuse/relay box connector C (see page 22-44)	10	5	Behind left kick panel		
Driver's under-dash fuse/relay box connector E (see page 22-44)	11	20	Behind left kick panel		
Intermittent wiper relay	4	6	Left side of engine compartment		
Left front parking light	24	2	Behind left headlight		
Left front side marker light	16	3	Behind left of front bumper		
Left headlight (High beam)	25	2	Behind left headlight		
Left headlight (Low beam)	23	2	Behind left headlight		
Power steering pressure (PSP) switch	26	2	Left side of engine compartment		
Washer level switch	17	2	Behind left of front bumper		Canada
Windshield washer motor	18	2	Behind left of front bumper		
Windshield wiper motor	7	5	Left rear of engine compartment		
C301	8	20	Under left side of dash	Dashboard wire harness B (see page 22-20)	
C302	9	8	Under left side of dash	Dashboard wire harness A (see page 22-22)	
G301	20		Left side of engine compartment	Body ground via left engine compartment wire harness	
G302	1		Left side of engine compartment	Body ground via left engine compartment wire harness	
G303	19		Left side of engine compartment	Body ground via left engine compartment wire harness	
G304	3		Behind left kick panel	Body ground via left engine compartment wire harness	
G305	2		Behind left kick panel	Body ground via left engine compartment wire harness	

BACK

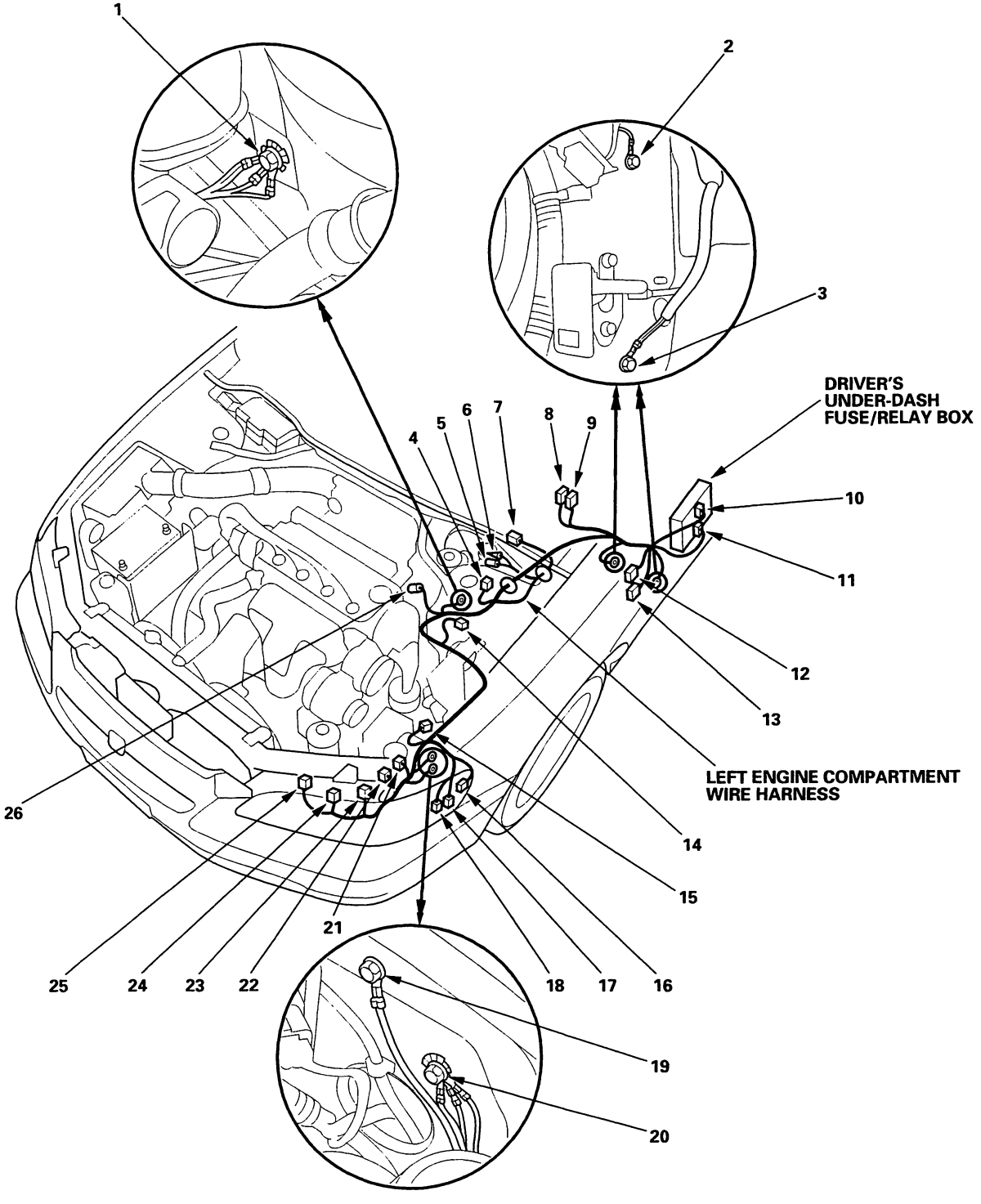
1
2
3
DRIVER'S UNDER-DASH FUSE/RELAY BOX
10
11
12
13
LEFT ENGINE COMPARTMENT WIRE HARNESS
14
15
16
17
18
19
20
21
22
23
24
25
26
4
5
6
7
8
9

Connector to Harness Index (cont'd)

Dashboard Wire Harness B (Left Branch)

Connector or Terminal	Ref	Cavities	Location	Connects to	Notes
Brake switch	6	2	Under left side of dash		
Brake switch	6	4	Under left side of dash		CRUISE
Cable reel	14	4	Under left side of dash		
Clutch interlock switch (Without clutch wire harness)	5	2	Under left side of dash		* 1 (M/T)
Clutch switch (Without clutch wire harness)	17	3	Under left side of dash		* 1 (M/T)
Combination light switch	13	14	In the steering column covers		
Data link connector (DLC)	18	16	Under left side of dash		
Daytime running lights control unit	15	14	Under left side of dash		
Driver's under-dash fuse/relay box connector O (see page 22-44)	1	20	Behind left kick panel		
Driver's under-dash fuse/relay box connector P (see page 22-44)	3	7	Behind left kick panel		
Driver's under-dash fuse/relay box connector Q (see page 22-44)	2	22	Behind left kick panel		
Ignition switch	12	7	In the steering column covers		
Immobilizer control unit	11	5	Under left side of dash		
Intermittent dwell time controller	10	2	In the steering column covers		
PGM-FI main relay	7	7	Under left side of dash		
Windshield wiper/washer switch	9	8	In the steering column covers		
C301	8	20	Under left side of dash	Left engine compartment wire harness (see page 22-18)	
C401	16	22	Under left side of dash	Dashboard wire harness A (see page 22-22)	
C402	4	8	Under left side of dash	Security system wire harness (Optional)	Canada
C402	4	4	Under left side of dash	Security system wire harness (Optional)	USA
C404 (with clutch wire harness)	20	10	Under left side of dash	Clutch wire harness (see page 22-38)	M/T
G401	19		Behind left kick panel	Body ground via dashboard wire harness B	

* 1: '98-99 models

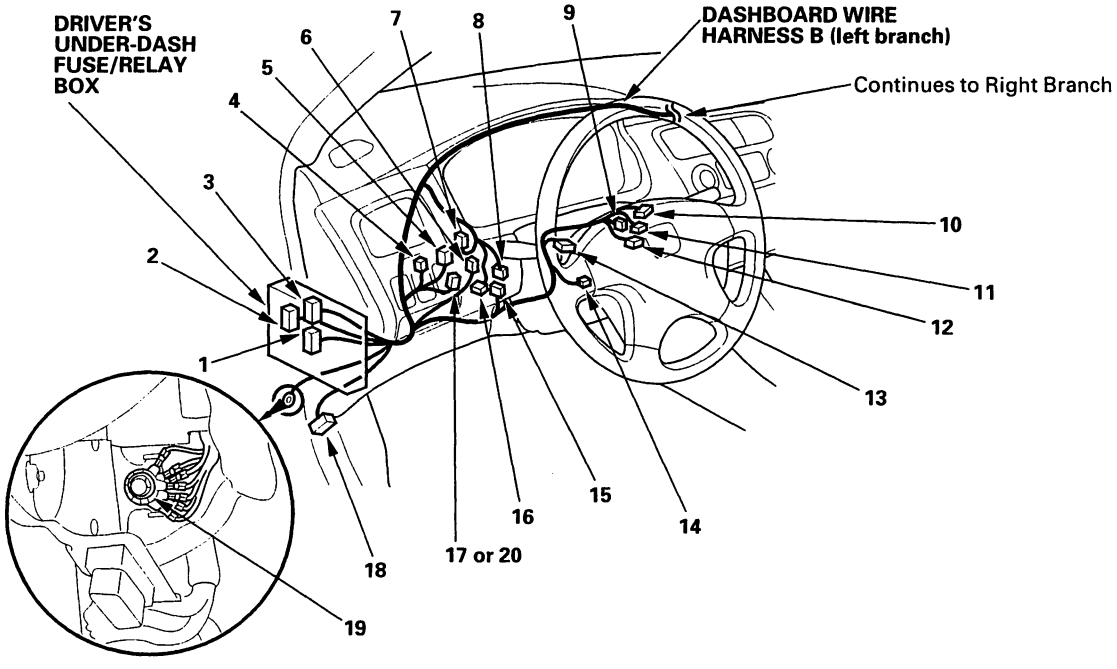

BACK

Dashboard Wire Harness B (Right Branch)

Connector or Terminal	Ref	Cavities	Location	Connects to	Notes
Air mix control motor	14	7	Under right side of dash		
Blower motor	10	2	Under right side of dash		
Blower resistor	11	5	Under right side of dash		
Evaporator temperature sensor	4	2	Under middle of dash		
Heater fan switch	2	7	Under middle of dash		
Heater control panel	3	22	Under middle of dash		
Mode control motor	1	7	Under middle of dash		
Passenger's under-dash fuse/relay box connector J (see page 22-45)	8	16	Behind right kick panel		
Passenger's under-dash fuse/relay box connector K (see page 22-45)	9	16	Behind right kick panel		
Recirculation control motor	5	7	Under middle of dash		
C201	6	16	Under right side of dash	Right engine compartment wire harness (see page 22-16)	
C202	13	7	Under right side of dash	Right engine compartment wire harness (see page 22-16)	
C203	12	5	Under right side of dash	Right engine compartment wire harness (see page 22-16)	
C403	7	2	Under right side of dash	Security system wire harness (Optional)	

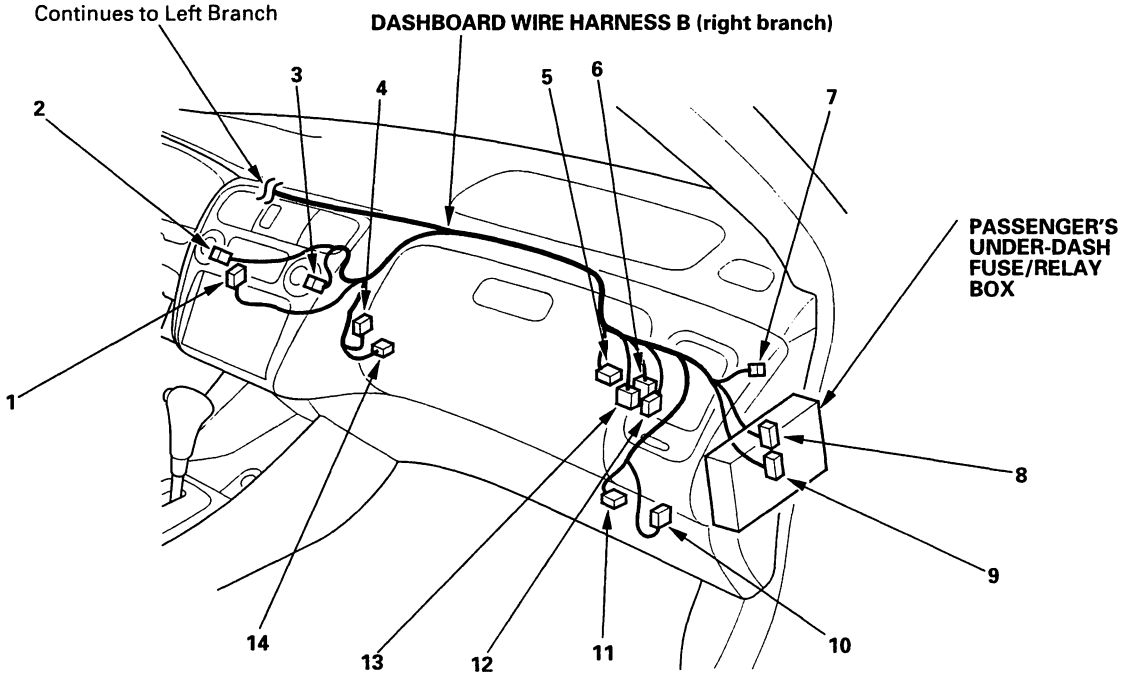

Connector to Harness Index (cont'd)

Dashboard Wire Harness A

Connector or Terminal	Ref	Cavities	Location	Connects to	Notes
Accessory socket	23	2	Behind middle of dash		
A/T gear position console light/parking pin switch	26	4	Behind console panel		
Audio unit	11	20	Behind audio unit		
Clock	10	5	Behind middle of dash		
Cruise control unit	31	14	Behind left side of dash		
Cruise control main switch	2	5	Behind instrument panel		
Driver's seat heater switch	25	6	Behind middle of dash		
Driver's under-dash fuse/relay box connector I (see page 22-44)	37	18	Behind left kick panel		
Driver's under-dash fuse/relay box connector K (see page 22-44)	38	18	Behind left kick panel		
ECM/PCM connector A	22	32	Behind middle of dash		
Gauge assembly connector A	6	14	Behind gauges		
Gauge assembly connector B	5	22	Behind gauges		
Gauge assembly connector C	7	16	Behind gauges		
Glove box light	21	2	Behind glove box		
Hazard warning switch	9	10	Behind middle of dash		
Left tweeter	4	2	Behind instrument panel		
Moonroof switch	3	6	Behind instrument panel		
Multiplex control unit (driver's) connector B	40	22	Behind left kick panel		
Multiplex control unit (passenger's) connector B	17	22	Behind right kick panel		
Parking brake switch	30	1	Behind center console		
Passenger's seat heater switch	24	6	Behind middle of dash		
Passenger's under-dash fuse/relay box connector H (see page 22-45)	15	18	Behind right kick panel		
Passenger's under-dash fuse/relay box connector I (see page 22-45)	16	18	Behind right kick panel		
Right tweeter	14	2	Behind instrument panel		
Shift lock solenoid	28	2	Behind console panel		A/T
SRS memory erase signal (MES) connector	39	2	Behind left kick panel		'01-02 models
SRS unit	27	8	Middle of floor		* 1
C204	20	22	Behind right side of dash	Right engine compartment wire harness (see page 22-16)	
C302	32	8	Behind left side of dash	Left engine compartment wire harness (see page 22-18)	
C401	33	22	Behind left side of dash	Dashboard wire harness B (see page 22-20)	
C501	35	18	Behind left kick panel	Left side wire harness (see page 22-24)	* 2
C501	35	20	Behind left kick panel	Left side wire harness (see page 22-24)	* 3
C502	1	7	Behind instrument panel	Moonroof wire harness (see page 22-30)	
C503	8	3	Under middle of dash	SRS main harness (see page 22-39)	'98-99 models
C503	8	2	Under middle of dash	SRS main harness (see page 22-39)	'00-02 Sedan
C503	8	8	Under middle of dash	SRS main harness (see page 22-39)	'00-02 Coupe
C504	34	2	Behind left kick panel	Security system wire harness (Optional)	USA
C505	29	6	Middle of floor	SRS floor harness (see page 22-39)	* 4
C582	19	16	Behind right kick panel	Right side wire harness (see page 22-27).	'00 Coupe
C582	19	6	Behind right kick panel	Right side wire harness (see page 22-26).	'01-02 models
G501	12		Under middle of dash	Body ground via dashboard wire harness A	
G502	13		Under middle of dash	Body ground via dashboard wire harness A	
G503	36		Behind left kick panel	Body ground via dashboard wire harness A	
G504	18		Behind right kick panel	Body ground via dashboard wire harness A	

* 1: '00-02 Sedan, '01-02 Coupe
* 2: All '98-99 models, '00-02 Coupe, '00-02 Sedan without seat heater
* 3: '00-02 Sedan with seat heater
* 4: '00 Sedan with side airbags

BACK

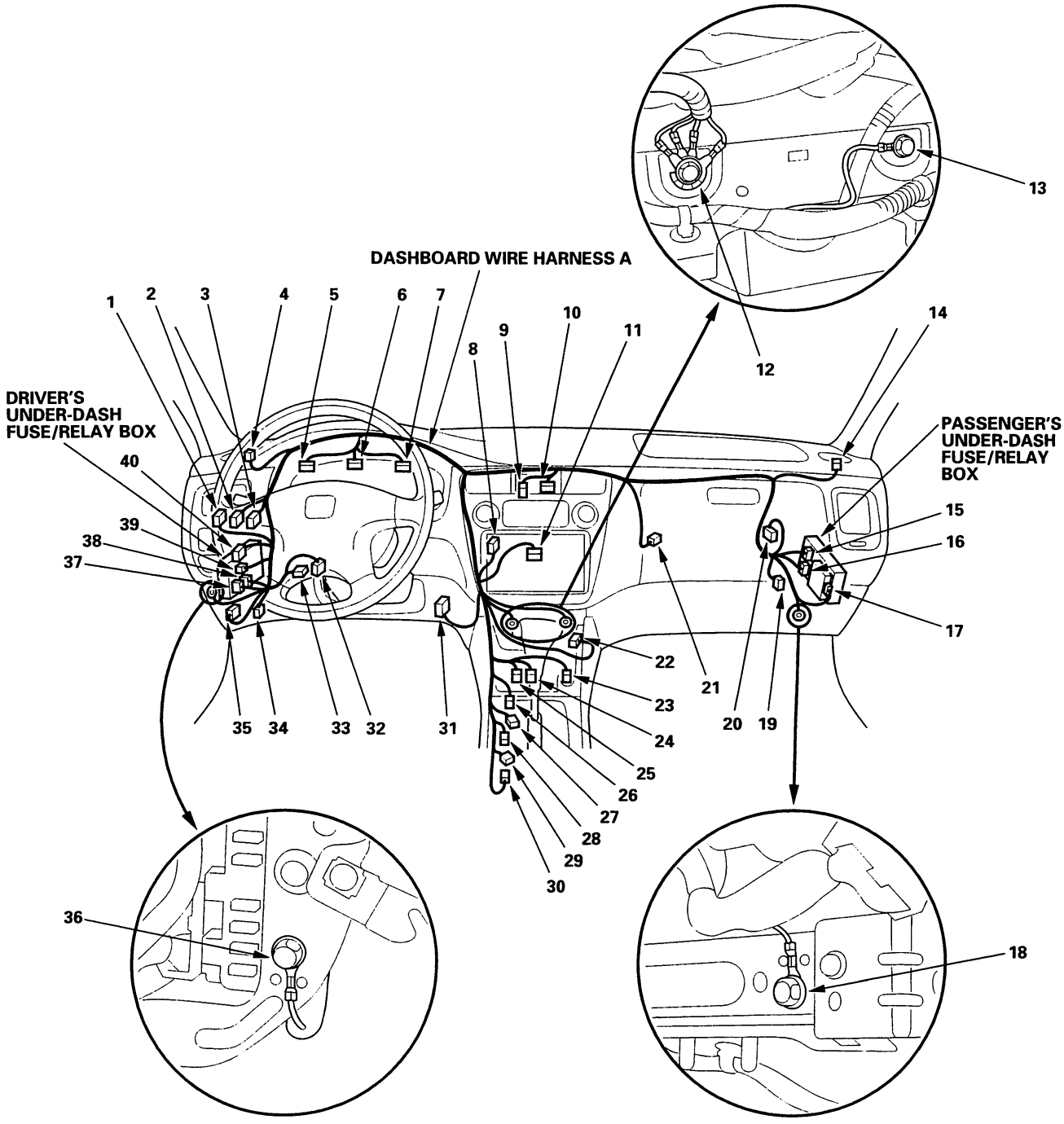
DASHBOARD WIRE HARNESS A
DRIVER'S UNDER-DASH FUSE/RELAY BOX
PASSENGER'S UNDER-DASH FUSE/RELAY BOX
1
2
3
4
5
6
7
8
9
10
11
12
13
14
15
16
17
18
19
20
21
22
23
24
25
26
27
28
29
30
31
32
33
34
35
36
37
38
39
40

Connector to Harness Index (cont'd)

Left Side Wire Harness (Sedan)

Connector or Terminal	Ref	Cavities	Location	Connects to	Notes
ABS left rear wheel sensor	12	2	Under left side of trunk		
Driver's door switch	23	1	Left B-pillar		
Driver's seat belt switch	6	2	Under driver's seat		'98-99 models
Driver's seat belt switch	6	3	Under driver's seat		* 1
Driver's side airbag inflator	20	2	Under driver's seat		'01-02 model
Driver's side impact sensor	24	2	Under driver's seat		'01-02 models
Driver's side seat belt tensioner	21	2	Left B-pillar		'01-02 models
Driver's under-dash fuse/relay box connector A (see page 22-44)	2	10	Behind left kick panel		
Driver's under-dash fuse/relay box connector B (see page 22-44)	3	14	Behind left kick panel		
EVAP bypass solenoid valve	10	2	Left side of trunk		
EVAP control canister vent shut solenoid valve	9	2	Left side of trunk		
Fuel pump/Fuel gauge sending unit	18	5	Fuel tank		
Fuel tank pressure sensor	11	3	Left side of trunk		
High mount brake light	16	2	Middle of rear shelf		
Left rear door switch	13	1	Left quarter panel		
Left rear speaker	15	2	Left quarter panel		
Trunk light	17	2	Middle of rear shelf		
C501	1	18	Behind left kick panel	Dashboard wire harness A (see page 22-22)	* 2
C501	1	20	Behind left kick panel	Dashboard wire harness A (see page 22-22)	* 3
C551	5	10	Under driver's seat	Driver's power seat wire harness (see page 22-31)	8-way
C551	5	4	Under driver's seat	Driver's power seat wire harness (see page 22-31)	2-way
C553	22	10	Left B-pillar	Left rear door wire harness C (see page 22-36)	
C554	19	12	Left quarter panel	Rear wire harness (see page 22-28)	
C555	4	2	Under left side of dash	Security system wire harness (Optional)	
C556	7	4	Under center console	SRS main harness (see page 22-39).	'01-02 models
C557	8	4	Under center console	SRS main harness (see page 22-39).	'01-02 models
G551	25		Under driver's seat	Body ground via left side wire harness	
G552	14		Left side of trunk	Body ground via left side wire harness	

* 1: '00-02 models without 8-way power seat
* 2: All '98-99 models, '00-02 model without seat heater
* 3: '00-02 model with seat heater

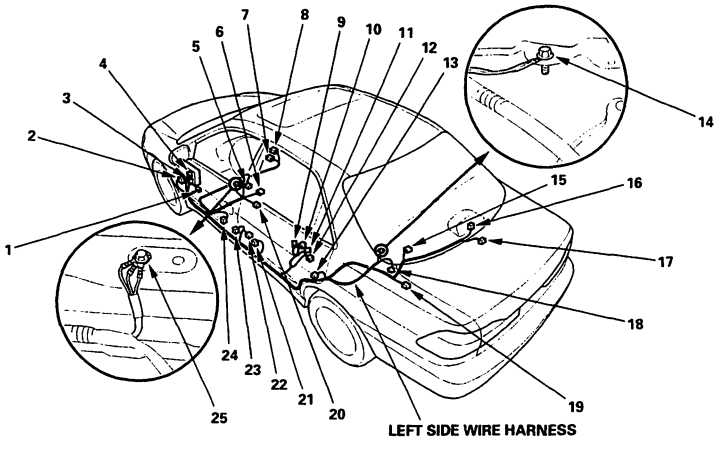

BACK

Left Side Wire Harness (Coupe)

Connector or Terminal	Ref	Cavities	Location	Connects to	Notes
ABS left rear wheel sensor	17	2	Under left side of trunk		
Driver's door switch	20	1	Left B-pillar		
Driver's seat belt switch	5	2	Under driver's seat		'98-99 models
Driver's seat belt switch	21	3	Under driver's seat		'00-02 models
Driver's side airbag inflator	5	2	Under driver's seat		'00-02 models
Driver's side impact sensor	19	2	Under driver's seat		'00-02 models
Driver's under-dash fuse/relay box connector A (see page 22-44)	2	10	Behind left kick panel		
Driver's under-dash fuse/relay box connector B (see page 22-44)	3	14	Behind left kick panel		
EVAP bypass solenoid valve	9	2	Left side of trunk		
EVAP control canister vent shut solenoid valve	8	2	Left side of trunk		
Fuel pump/Fuel gauge sending unit	14	5	Fuel tank		
Fuel tank pressure sensor	10	3	Left side of trunk		
High mount brake light	12	2	Middle of rear shelf		
Left rear speaker	15	2	Left quarter panel		
Left side seat belt tensioner	18	2	Left B-pillar		'01-02 models
Trunk light	13	2	Middle of rear shelf		
C501	1	18	Behind left kick panel	Dashboard wire harness A (see page 22-22)	
C551	22	10	Under driver's seat	Driver's power seat wire harness (see page 22-31)	8-way
C551	22	4	Under driver's seat	Driver's power seat wire harness (see page 22-31)	2-way
C554	16	12	Left quarter panel	Rear wire harness (see page 22-29)	
C555	4	2	Under left side of dash	Security system wire harness (Optical)	
C556	6	4	Under center console	SRS main harness (see page 22-39)	
C557	7	4	Under center console	SRS main harness (see page 22-39)	'01-02 models
G551	23		Under driver's seat	Body ground via left side wire harness	
G552	11		Left side of trunk	Body ground via left side wire harness	

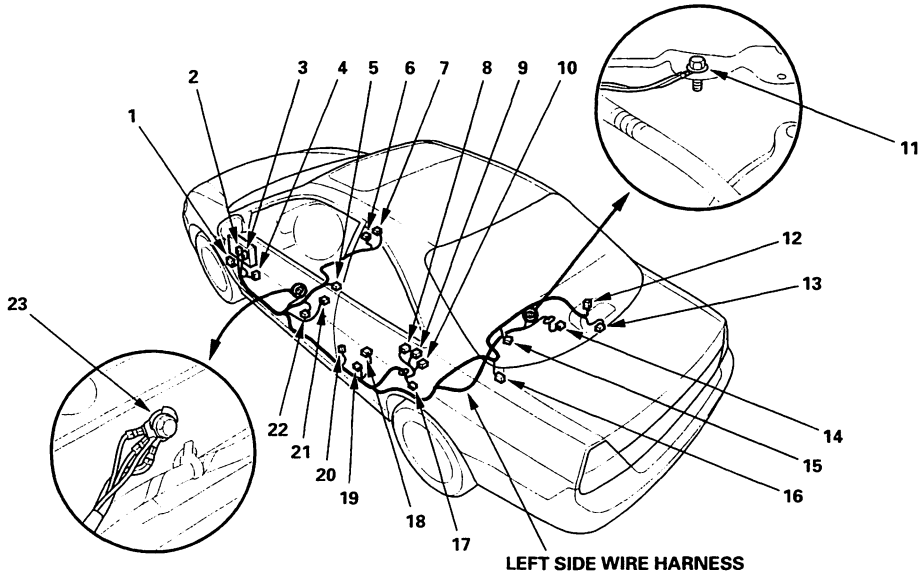

BACK

Connector to Harness Index (cont'd)

Right Side Wire Harness (Sedan)

Connector or Terminal	Ref	Cavities	Location	Connects to	Notes
ABS right rear wheel sensor	16	2	Under right side of rear seat		
Front passenger's side airbag inflator	2	2	Under passenger's seat		* 4
Passenger's door switch	13	1	Right B-pillar		
Passenger's seat belt switch	4	3	Under passenger's seat		* 1
Passenger's seat heater	3	3	Under passenger's seat		* 2
Passenger's seat heater	3	4	Under passenger's seat		* 3
Passenger's side impact sensor	11	2	Under passenger's seat		* 4
Passenger's under-dash fuse/relay box connector A (see page 22-45)	7	20	Behind right kick panel		
Passenger's under-dash fuse/relay box connector G (see page 22-45)	8	3	Behind right kick panel		Canada
Right rear door switch	15	1	Right quarter panel		
Right rear speaker	17	2	Right quarter panel		
Right side seat belt tensioner	14	2	Right B-pillar		* 4
Window antenna coil connector A	18	1	Middle of rear shelf		
C581	1	10	Right side of floor	Right rear door wire harness (see page 22-37)	
C582	9	6	Behind right kick panel	Dashboard wire harness A (see page 22-22)	* 4
C583	5	4		SRS main harness (see page 22-39)	* 4
C584	6	4		SRS main harness (see page 22-39)	* 4
C851	12	4		OPDS wire harness (see page 22-42)	* 4
G581	10		Under passenger's seat	Body ground via right side wire harness	

* 1: '00-02 model without seat heater
* 2: '98-99 model
* 3: '00-02 model with seat heater
* 4: '00-02 models

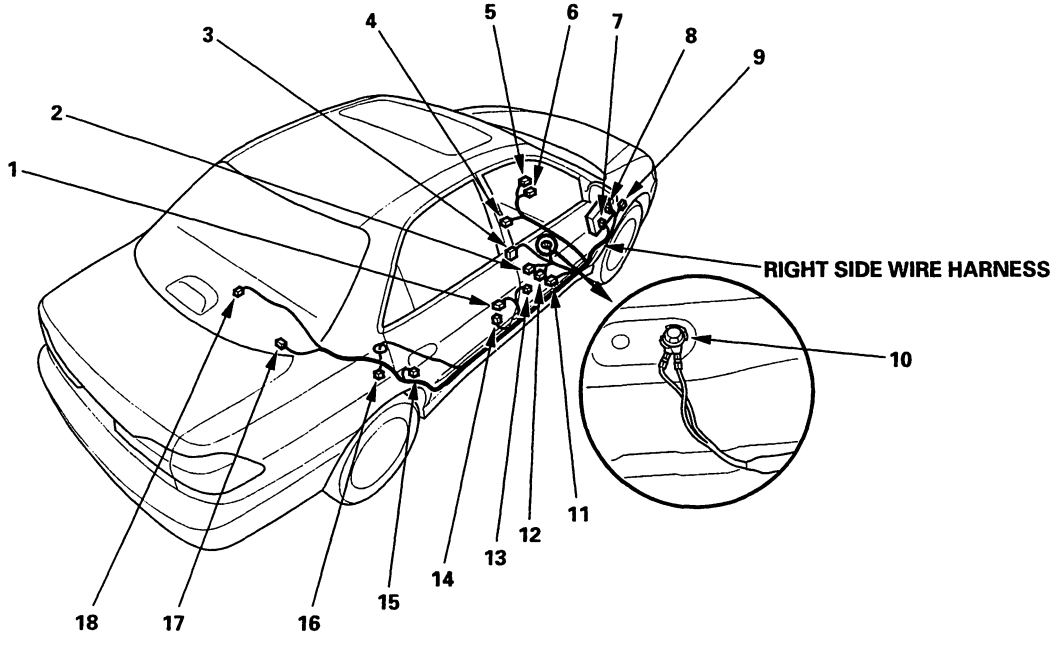

BACK

Right Side Wire Harness (Coupe)

Connector or Terminal	Ref	Cavities	Location	Connects to	Notes
ABS right rear wheel sensor	16	2	Under right side of rear seat		
Passenger's door switch	13	1	Right B-pillar		
Passenger's seat belt switch	12	3	Under passenger's seat		* 1
Passenger's seat heater	10	3	Under passenger's seat		* 2
Passenger's seat heater	10	4	Under passenger's seat		* 3
Passenger's side airbag inflator	15	2	Under passenger's seat		* 5
Passenger's side impact sensor	14	2	Under passenger's seat		
Passenger's seat belt tensioner	9	2	Right B-piller		* 5
Passenger's under-dash fuse/relay box connector A (see page 22-45)	5	20	Behind right kick panel		
Passenger's under-dash fuse/relay box connector G (see page 22-45)	6	3	Behind right kick panel		Canada
Right rear speaker	17	2	Right quarter panel		
Window antenna coil connector A	18	1	Middle of rear shelf		
C582	7	16	Behind right kick panel	Dashboard wire harnessA (see page 22-22)	* 4
C582	7	6	Behind right kick panel	Dashboard wire harnessA (see page 22-22)	* 5
C583	2	4		SRS main harness (see page 22-39)	* 6
C584	3	4		SRS main harness (see page 22-39)	* 6
C585 (Connects to C586)	4	1	Under passenger's seat		* 6
C586 (Connects to C585)	8	1	Under passenger's seat		* 6
C851	11	4		OPDS wire harness (see page 22-42)	* 6
G581	1		Under passenger's seat	Body ground via right side wire harness	

* 1: '00-02 model without seat heater
* 2: '98-99 models
* 3: '00-02 model with seat heater
* 4: '00 model
* 5: '01-02 models
* 6: '00-02 models

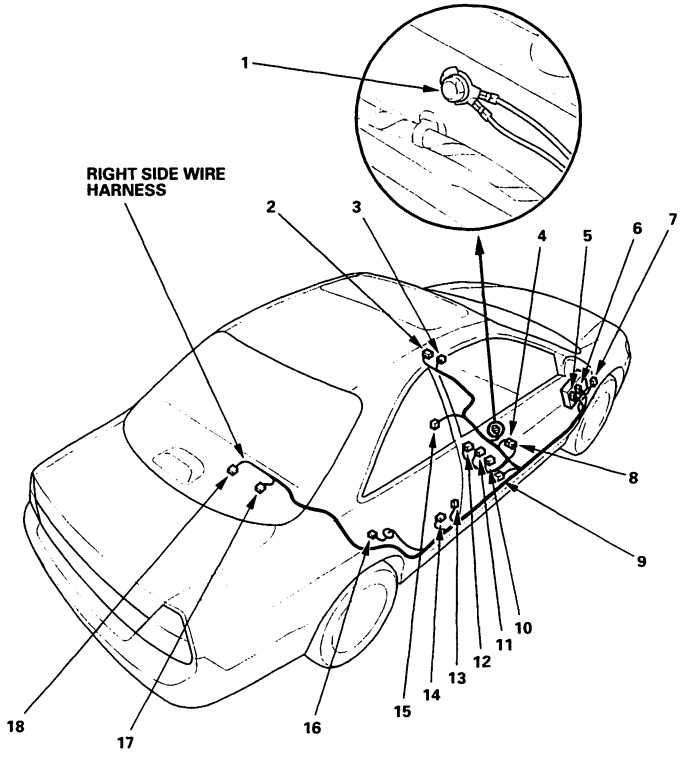

Connector to Harness Index (cont'd)

Rear Wire Harness (Sedan)

Connector or Terminal	Ref	Cavities	Location	Connects to	Notes
Brake light failure sensor	15	6	Left side of trunk		
Left back-up light	13	3	Left side of trunk lid		
Left inner taillight	12	2	Left side of trunk lid		
Left rear turn signal light	17	2	Left side of trunk		
Left taillight	16	4	Left side of trunk		
License plate light	9	2	Middle of trunk		
Right back-up light	5	3	Right side of trunk lid		
Right inner taillight	6	2	Right side of trunk lid		
Right rear turn signal light	3	2	Right side of trunk		
Right taillight	4	4	Right side of trunk		
Trailer lighting connector	2	6	Left side of trunk		
Trunk actuator	7	6	Right side of trunk		Security
Trunk key cylinder switch	8	2	Middle of trunk		Security
Trunk latch switch	10	2	Middle of trunk		
C554	1	12	Left side of rear shelf	Left side wire harness (see page 22-24)	
C601	11	1	Middle of trunk	Security system wire harness (Optional)	
G601	14		Left side of trunk	Body ground via rear wire harness	

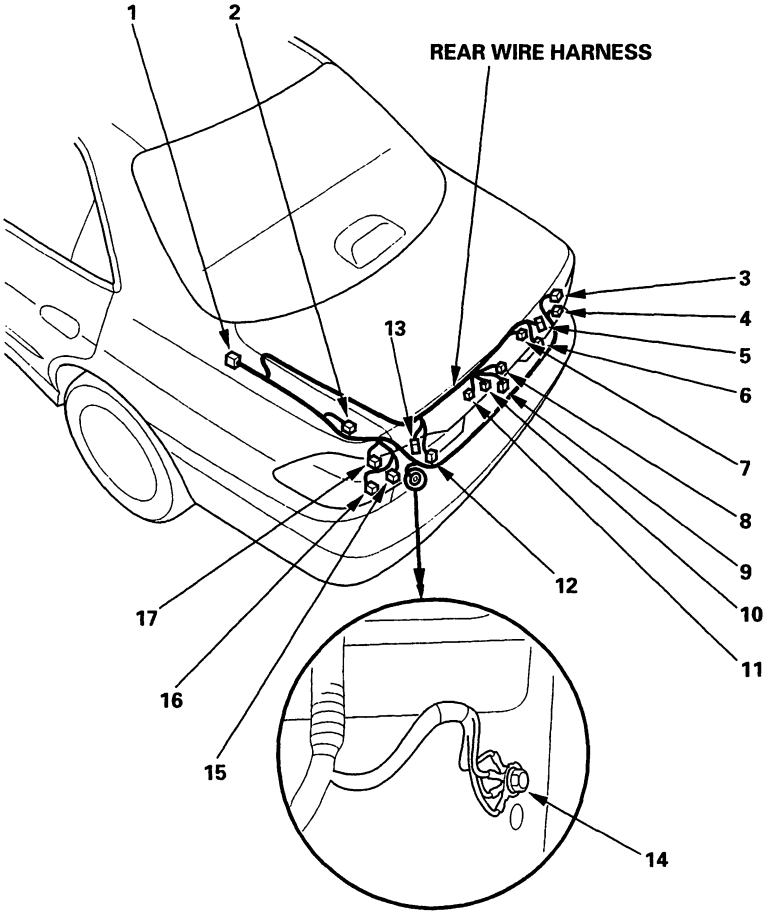

BACK

Rear Wire Harness (Coupe)

Connector or Terminal	Ref	Cavities	Location	Connects to	Notes
Brake light failure sensor	16	6	Left side of trunk		
Left back-up light	4	2	Left side of trunk lid		
Left inner taillight	3	3	Left side of trunk lid		
Left rear side marker light	18	2	Left side of trunk		
Left taillight	2	6	Left side of trunk		
License plate light	12	2	Middle of trunk		
License plate light	13	2	Middle of trunk		* 1
Right back-up light	11	2	Right side of trunk lid		
Right inner taillight	10	3	Right side of trunk lid		
Right rear side marker light	8	2	Right side of trunk		
Right taillight	9	6	Right side of trunk		
Trailer lighting connector	17	6	Left side of trunk		
Trunk actuator	6	6	Middle of trunk		Security
Trunk key cylinder switch	7	2	Middle of trunk		Security
Trunk latch switch (Without keyless entry/security alarm system)	14	2	Middle of trunk		
C554	1	12	Left side of rear shelf	Left side wire harness (see page 22-24)	
C601	5	1	Middle of trunk	Security system wire harness (Optional)	
G601	15		Left side of trunk	Body ground via rear wire harness	

* 1: '01-02 models

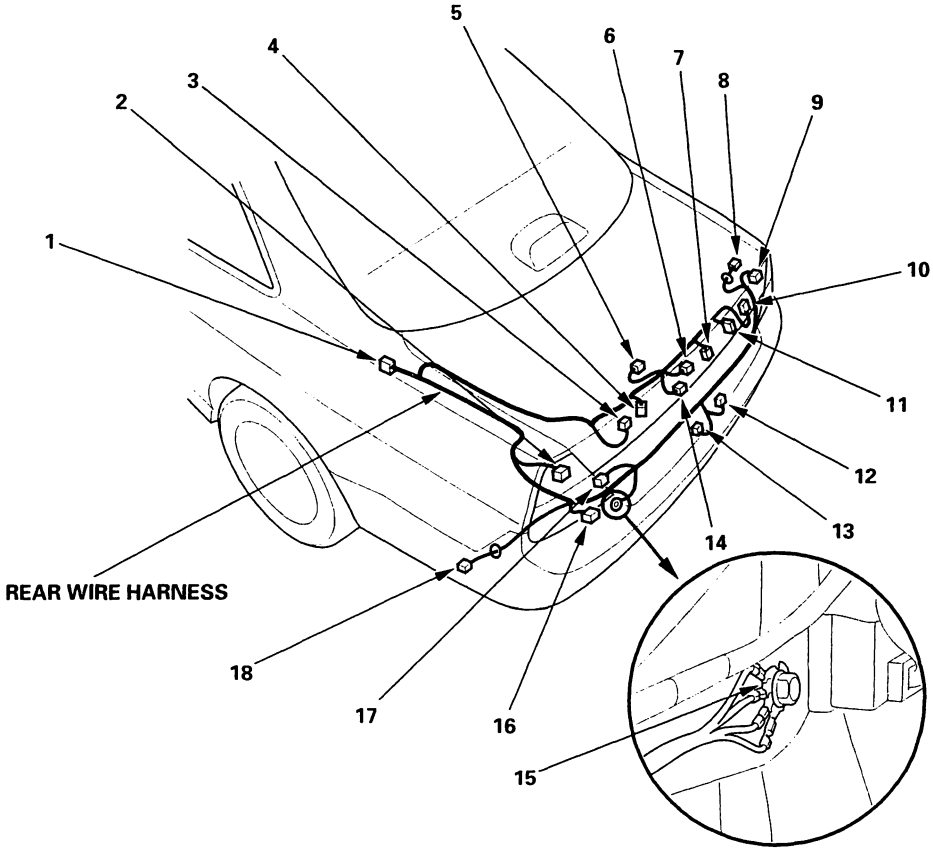

Connector to Harness Index (cont'd)

Moonroof Wire Harness

Connector or Terminal	Ref	Cavities	Location	Connects to	Notes
Moonroof close relay	8	5	Behind left kick panel		
Moonroof motor	1	2	Roof area		
Moonroof open relay	9	5	Behind left kick panel		
Moonroof position switch	2	4	Roof area		
C502	7	7	Behind left kick panel	Dashboard wire harness A (see page 22-22)	

Roof Wire Harness

Connector or Terminal	Ref	Cavities	Location	Connects to	Notes
Ceiling light	3	3	Roof area		
Driver's vanity mirror light	5	2	Roof area		
Passenger's under-dash fuse/relay box connector B (see page 22-45)	10	4	Behind right kick panel		
Passenger's vanity mirror light	4	2	Roof area		
Spotlight	6	3	Roof area		

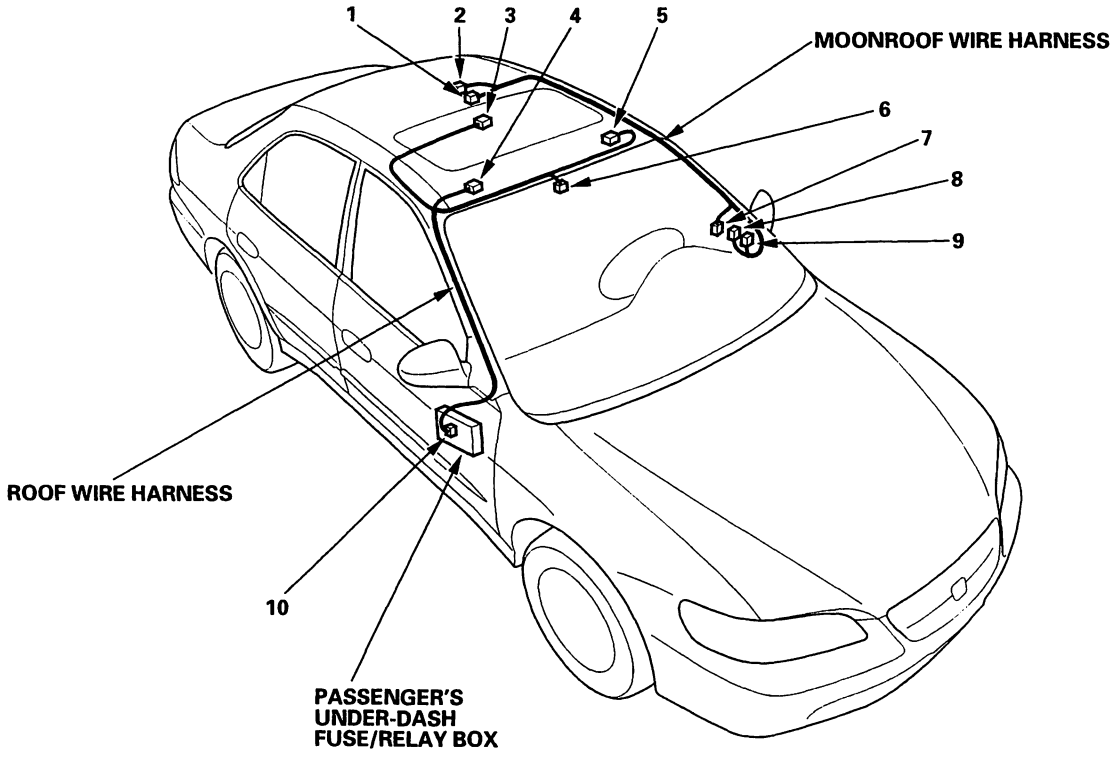

BACK

Driver's Power Seat Wire Harness (8-way adjustable)

Connector or Terminal	Ref	Cavities	Location	Connects to	Notes
Driver's power seat switch connector A	9	6	Left side of driver's seat		
Driver's power seat switch connector B	11	6	Left side of driver's seat		
Driver's recline motor	12	2	Under driver's seat		
Driver's seat belt switch	5	2	Under driver's seat		* 1
Driver's seat belt switch	5	3	Under driver's seat		* 2
Driver's seat heater	3	3	Under driver's seat		* 3
Driver's seat heater	3	4	Under driver's seat		* 4
Power seat front up-down motor	4	2	Under driver's seat		
Power seat rear up-down motor	2	2	Under driver's seat		
Power seat slide motor	1	2	Under driver's seat		
C551	10	10	Left side of driver's seat	Left side wire harness (see page 22-24)	

* 1: '98-99 models
* 2: '00-02 models
* 3: '98-99 models (Canada)
* 4: '00-02 models (Canada)

Driver's Power Seat Wire Harness (2-way adjustable)

Connector or Terminal	Ref	Cavities	Location	Connects to	Notes
Driver's power seat up-down motor	6	2	Under driver's seat		
Driver's power seat up-down switch	8	5	Left side of driver's seat		
C551	7	4	Under driver's seat	Left side wire harness (see page 22-24)	

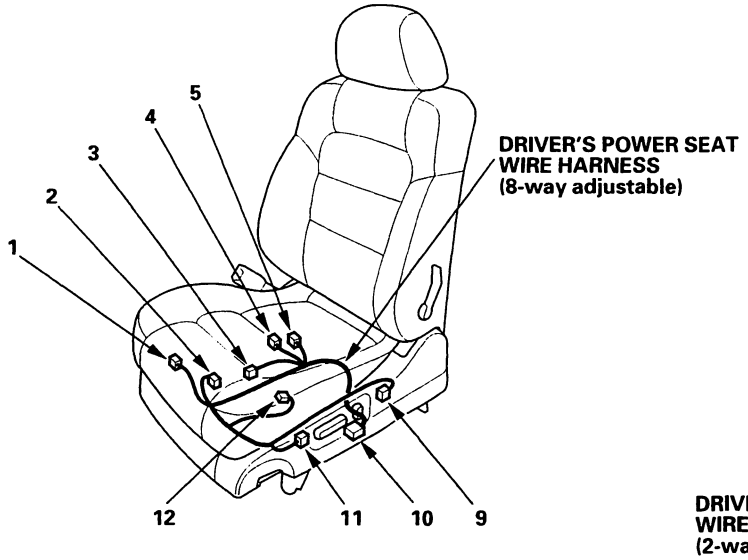

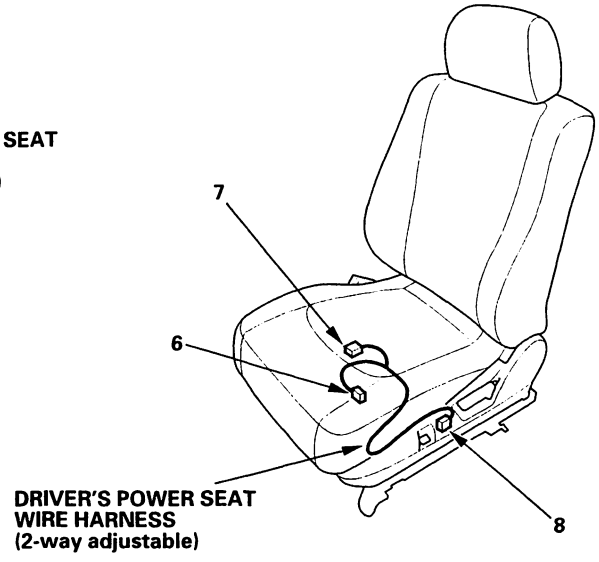

Connector to Harness Index (cont'd)

Driver's Door Wire Harness (Sedan)

Connector or Terminal	Ref	Cavities	Location	Connects to	Notes
Driver's door courtesy light	16	2	Driver's door		
Driver's door key cylinder switch	3	3	Driver's door		
Driver's door lock actuator	1	2	Driver's door		
Driver's door lock knob switch	2	3	Driver's door		
Driver's door lock switch	6	3	Driver's door		
Driver's door speaker	11	2	Driver's door		
Driver's power window motor	14	4	Driver's door		
Driver's under-dash fuse/relay box connector F (see page 22-44)	8	6	Behind left kick panel		Canada
Driver's under-dash fuse/relay box connector G (see page 22-44)	9	18	Behind left kick panel		
Left power mirror	7	6	Driver's door		Canada
Left power mirror	7	3	Driver's door		USA
Multiplex control unit (door) connector A	15	20	Driver's door		
Multiplex control unit (door) connector B	5	2	Driver's door		
Power mirror switch	12	10	Driver's door		
Security indicator light	4	2	Driver's door		
C631	10	2	Driver's door	Security system wire harness (Optional)	USA
C631	10	3	Driver's door	Security system wire harness (Optional)	Canada
C632	13	2	Driver's door	Security system wire harness (Optional)	Canada

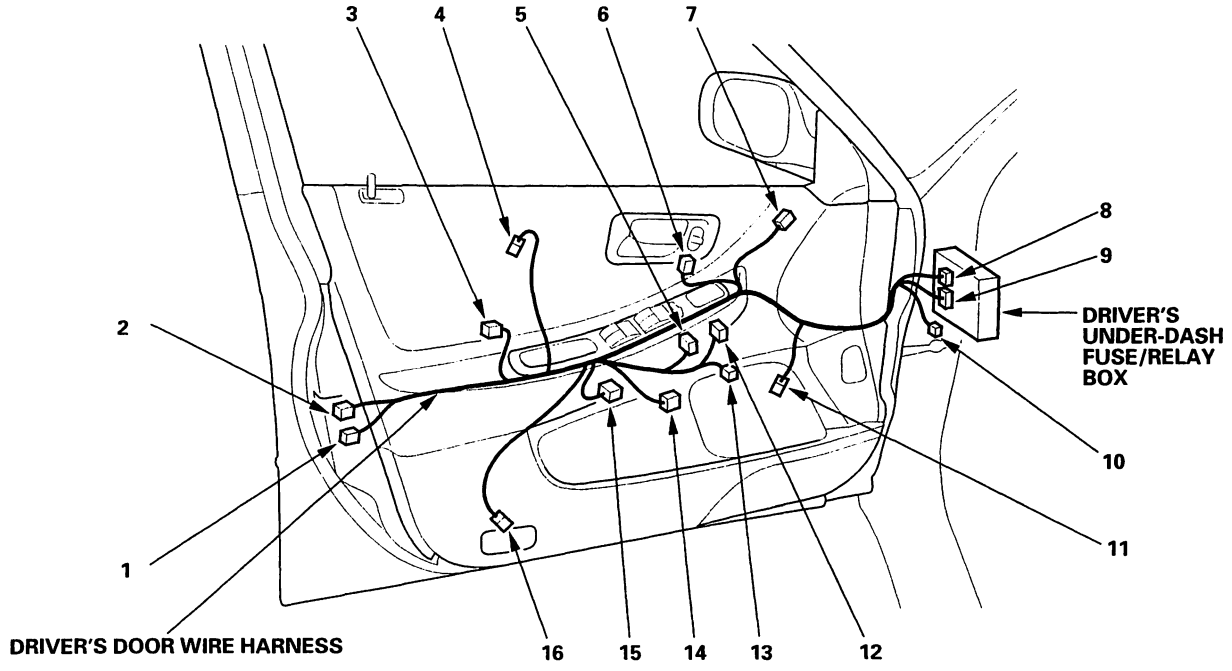

BACK

Driver's Door Wire Harness (Coupe)

Connector or Terminal	Ref	Cavities	Location	Connects to	Notes
Driver's door courtesy light	13	2	Driver's door		
Driver's door key cylinder switch	16	3	Driver's door		
Driver's door lock actuator	14	2	Driver's door		
Driver's door lock knob switch	15	3	Driver's door		
Driver's door lock switch	4	3	Driver's door		
Driver's door speaker	10	2	Driver's door		
Driver's power window motor	6	4	Driver's door		
Driver's under-dash fuse/relay box connector F (see page 22-44)	7	6	Behind left kick panel		Canada
Driver's under-dash fuse/relay box connector G (see page 22-44)	8	18	Behind left kick panel		
Left power mirror	5	6	Driver's door		Canada
Left power mirror	5	3	Driver's door		USA
Multiplex control unit (door) connector A	2	20	Driver's door		
Multiplex control unit (door) connector B	3	2	Driver's door		
Power mirror switch	11	10	Driver's door		
Security indicator light	1	2	Driver's door		
C631	9	2	Driver's door	Security system wire harness (Optional)	USA
C631	9	3	Driver's door	Security system wire harness (Optional)	Canada
C632	12	2	Driver's door	Security system wire harness (Optional)	Canada

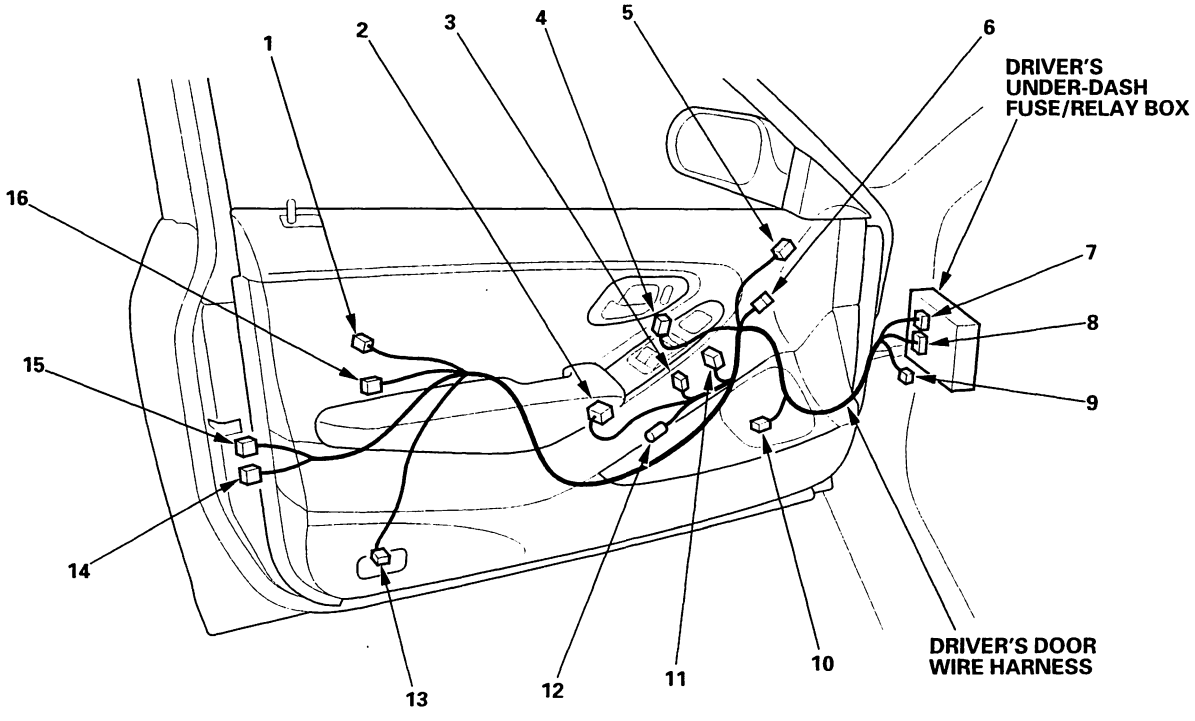

Connector to Harness Index (cont'd)

Passenger's Door Wire Harness (Sedan)

Connector or Terminal	Ref	Cavities	Location	Connects to	Notes
Passenger's door courtesy light	9	2	Passenger's door		
Passenger's door key cylinder switch	6	3	Passenger's door		
Passenger's door lock actuator	8	2	Passenger's door		
Passenger's door lock knob switch	7	3	Passenger's door		Security
Passenger's door lock switch	4	3	Passenger's door		
Passenger's door speaker	11	2	Passenger's door		
Passenger's power window motor	10	2	Passenger's door		
Passenger's power window switch	5	6	Passenger's door		
Passenger's under-dash fuse/relay box connector E (see page 22-45)	1	2	Behind left kick panel		Canada
Passenger's under-dash fuse/relay box connector F (see page 22-45)	2	20	Behind left kick panel		
Right power mirror	3	6	Passenger's door		Canada
Right power mirror	3	3	Passenger's door		USA

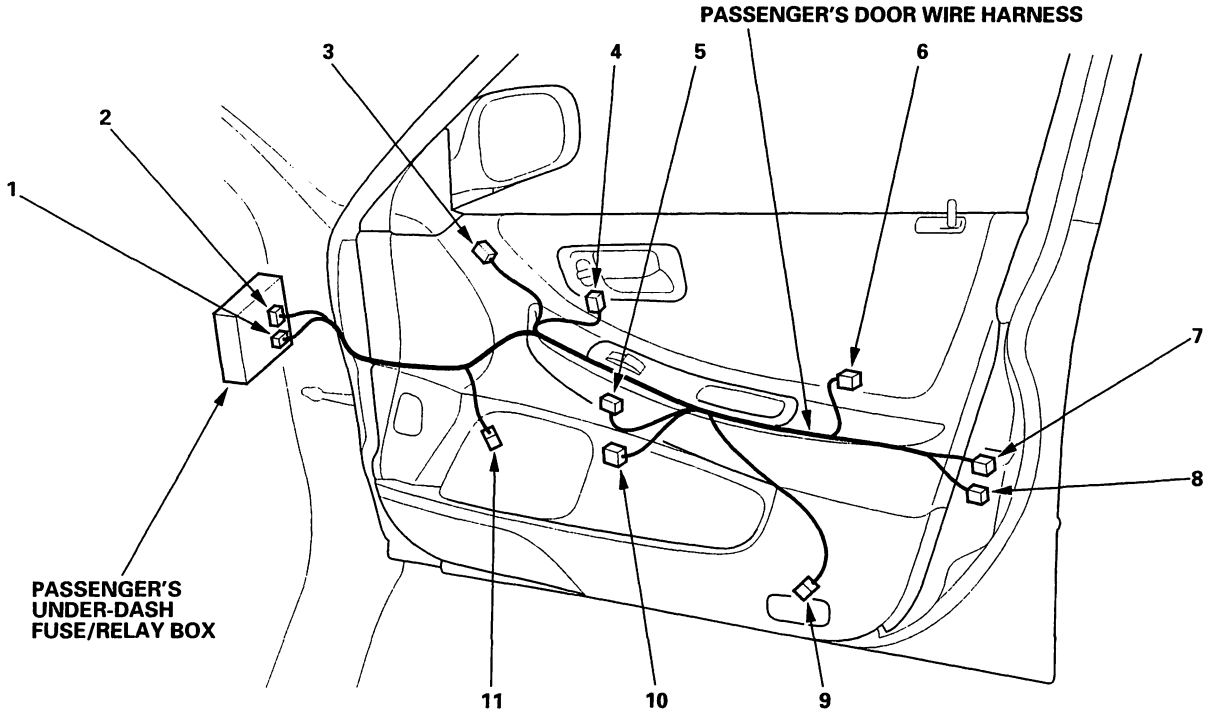

BACK

Passenger's Door Wire Harness (Coupe)

Connector or Terminal	Ref	Cavities	Location	Connects to	Notes
Passenger's door courtesy light	9	2	Passenger's door		
Passenger's door key cylinder switch	6	3	Passenger's door		
Passenger's door lock actuator	8	2	Passenger's door		
Passenger's door lock knob switch	7	3	Passenger's door		
Passenger's door lock switch	4	3	Passenger's door		
Passenger's door speaker	11	2	Passenger's door		
Passenger's power window motor	10	2	Passenger's door		
Passenger's power window switch	5	6	Passenger's door		
Passenger's under-dash fuse/relay box connector E (see page 22-45)	1	2	Behind right kick panel		Canada
Passenger's under-dash fuse/relay box connector F (see page 22-45)	2	20	Behind right kick panel		
Right power mirror	3	6	Passenger's door		Canada
Right power mirror	3	3	Passenger's door		USA

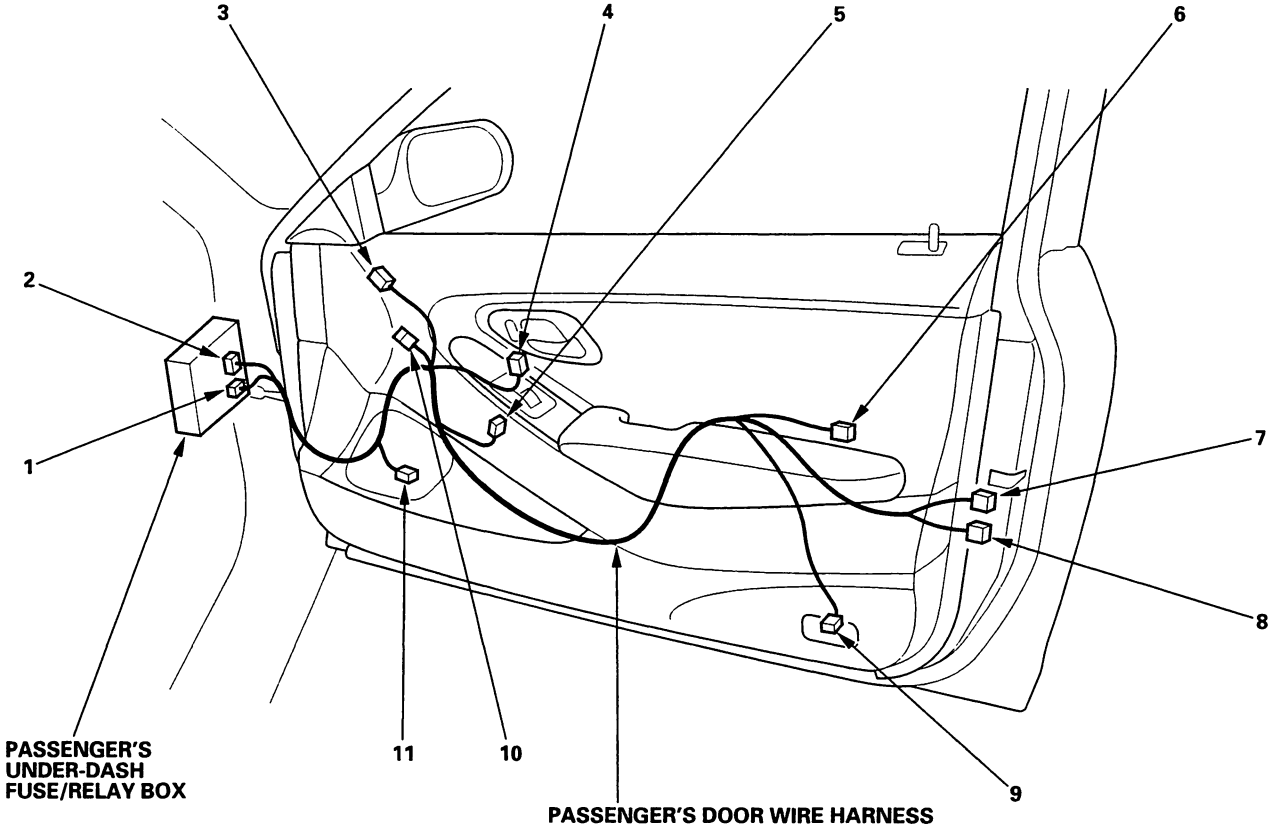

Connector to Harness Index (cont'd)

Left Rear Door Wire Harness (Sedan)

Connector or Terminal	Ref	Cavities	Location	Connects to	Notes
Left rear door courtesy light	4	2	Left rear door		
Left rear door lock actuator	5	2	Left rear door		
Left rear door lock knob switch	6	3	Left rear door		Security
Left rear power window motor	3	2	Left rear door		
Left rear power window switch	1	6	Left rear door		
C553	2	10	Left rear door	Left side wire harness (see page 22-24)	

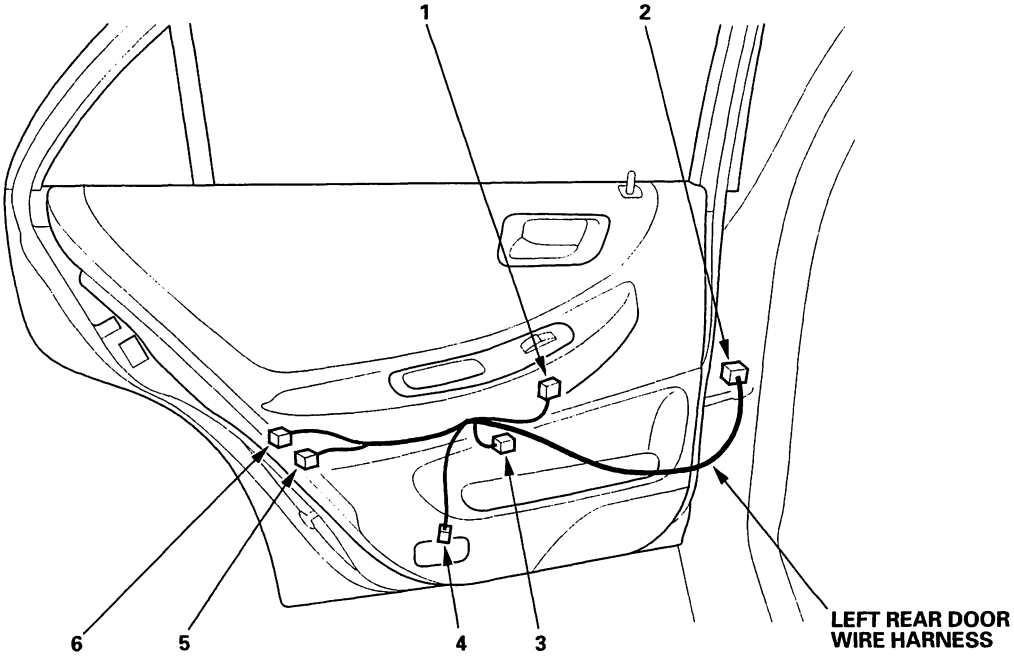

BACK

Right Rear Door Wire Harness (Sedan)

Connector or Terminal	Ref	Cavities	Location	Connects to	Notes
Right rear door courtesy light	5	2	Right rear door		
Right rear door lock actuator	4	2	Right rear door		
Right rear door lock knob switch	3	3	Right rear door		Security
Right rear power window motor	6	2	Right rear door		
Right rear power window switch	2	6	Right rear door		
C581	1	10	Right rear door	Right side wire harness (see page 22-26)	

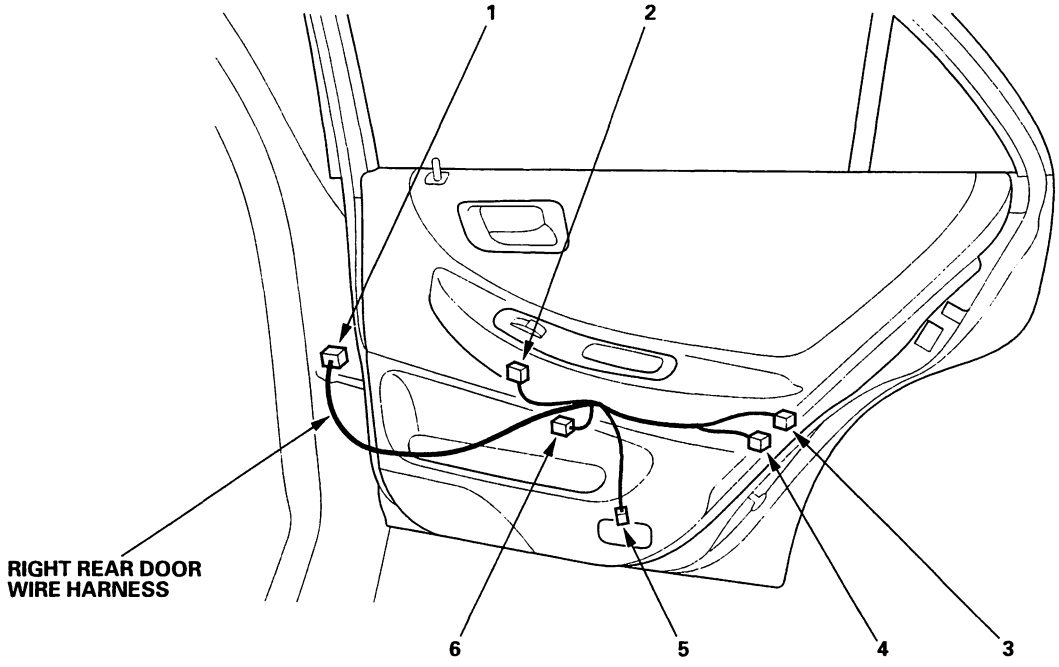

Connector to Harness Index (cont'd)

Ignition Switch Lead

Connector or Terminal	Ref	Cavities	Location	Connects to	Notes
Driver's under-dash fuse/relay box connector M (see page 22-44)	1	6	Behind left kick panel		

Clutch Switch Sub-Harness (M/T)

Connector or Terminal	Ref	Cavities	Location	Connects to	Notes
Clutch interlock switch	2	2	Under left side of dash		
Clutch switch	3	3	Under left side of dash		
C404	4	10	Under left side of dash	Dashboard wire harness B (see page 22-20)	

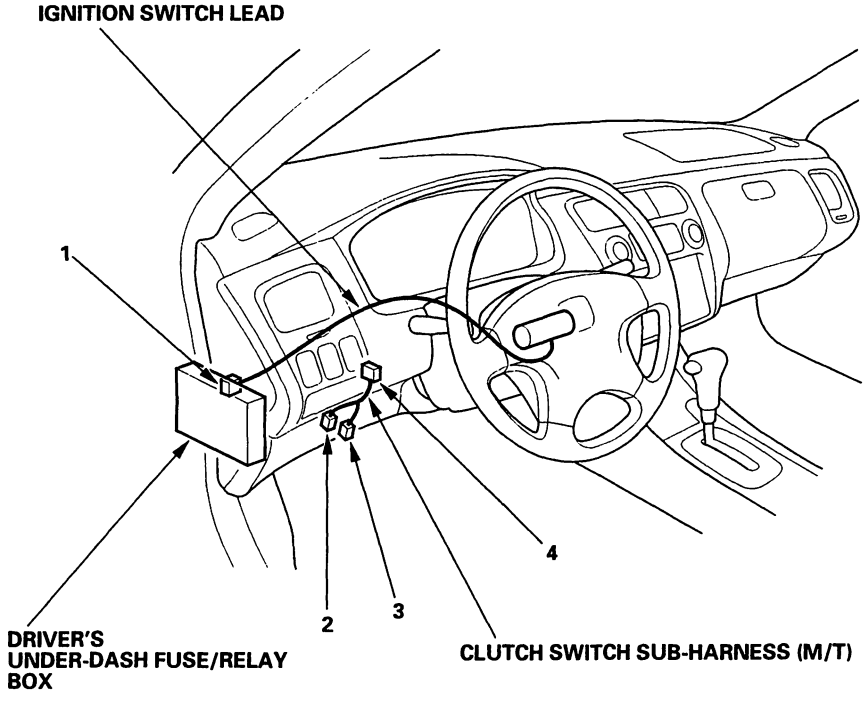

BACK

SRS Main Harness ('98-99 models)

Connector or Terminal	Ref	Cavities	Location	Connects to	Notes
Cable reel	5	2	Under left side of dash		
Driver's under-dash fuse/relay box connector N (see page 22-44)	7	2	Behind left kick panel		
Front passenger's airbag assembly	1	2	Behind glove box		
SRS memory erase signal (MES) connector	6	2	Under left side of dash		
SRS unit	4	18	Middle of floor		
C503	2	3	Under middle of dash	Dashboard wire harness A (see page 22-22)	
G801	3		Middle of floor	Body ground via SRS main harness	

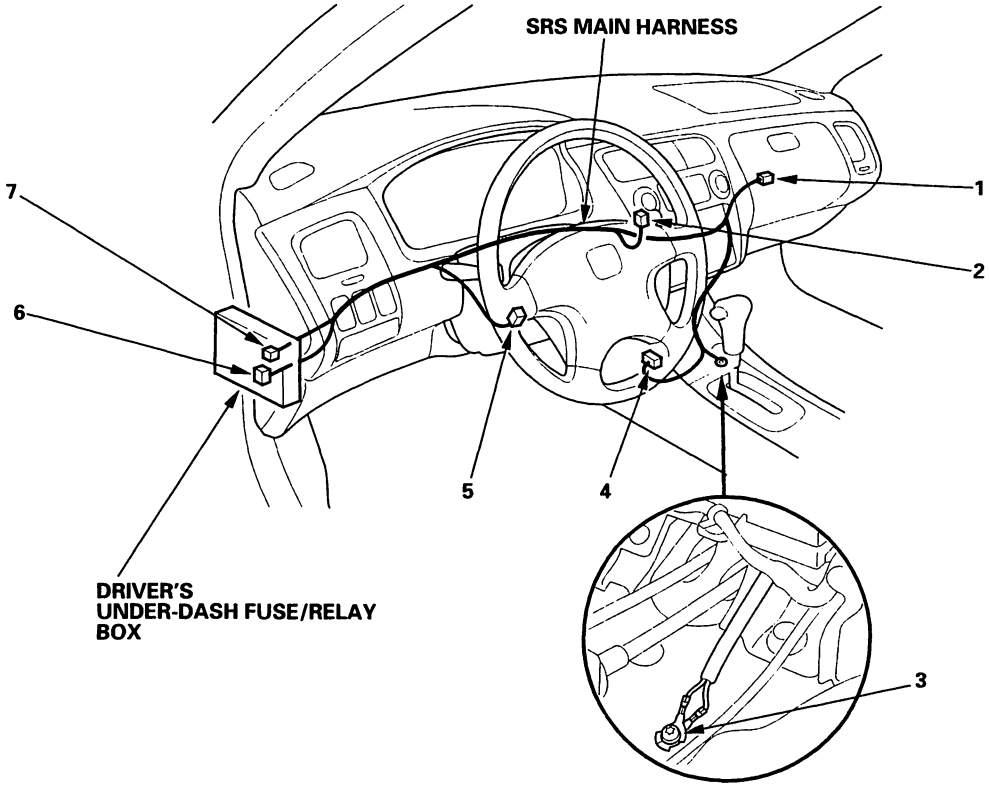

(cont'd)

Connector to Harness Index (cont'd)

SRS Main Harness ('00 Sedan)

Connector or Terminal	Ref	Cavities	Location	Connects to	Notes
Cable reel	13	2	Under left side of dash		
Driver's under-dash fuse/relay box connector N (see page 22-44)	11	2	Behind left kick panel		
Front passenger's airbag assembly	15	4	Behind glove box		
SRS memory erase signal (MES) connector	12	2	Behind left kick panel		
SRS unit	10	18	Middle of floor		
C503	14	2	Under middle of dash	Dashboard wire harness A (see page 22-22)	
G801	1		Middle of floor	Body ground via SRS main harness	

SRS Floor Harness ('00 Sedan with Side Airbags)

Connector or Terminal	Ref	Cavities	Location	Connects to	Notes
Driver's side airbag inflator	6	2	Under driver's seat		
Driver's side impact sensor	7	2	Left side of floor		
Front passenger's seat belt switch	5	3	Under front passenger's seat		
Front passenger's side airbag inflator	3	2	Under front passenger's seat		
Front passenger's side impact sensor	2	2	Right side of floor		
SRS unit	9	14	Middle of floor		
C505	8	6	Under middle of dash	Dashboard wire harness A (see page 22-22)	
C851	4	4	Under front passenger's seat	OPDS wire harness (see page 22-42)	

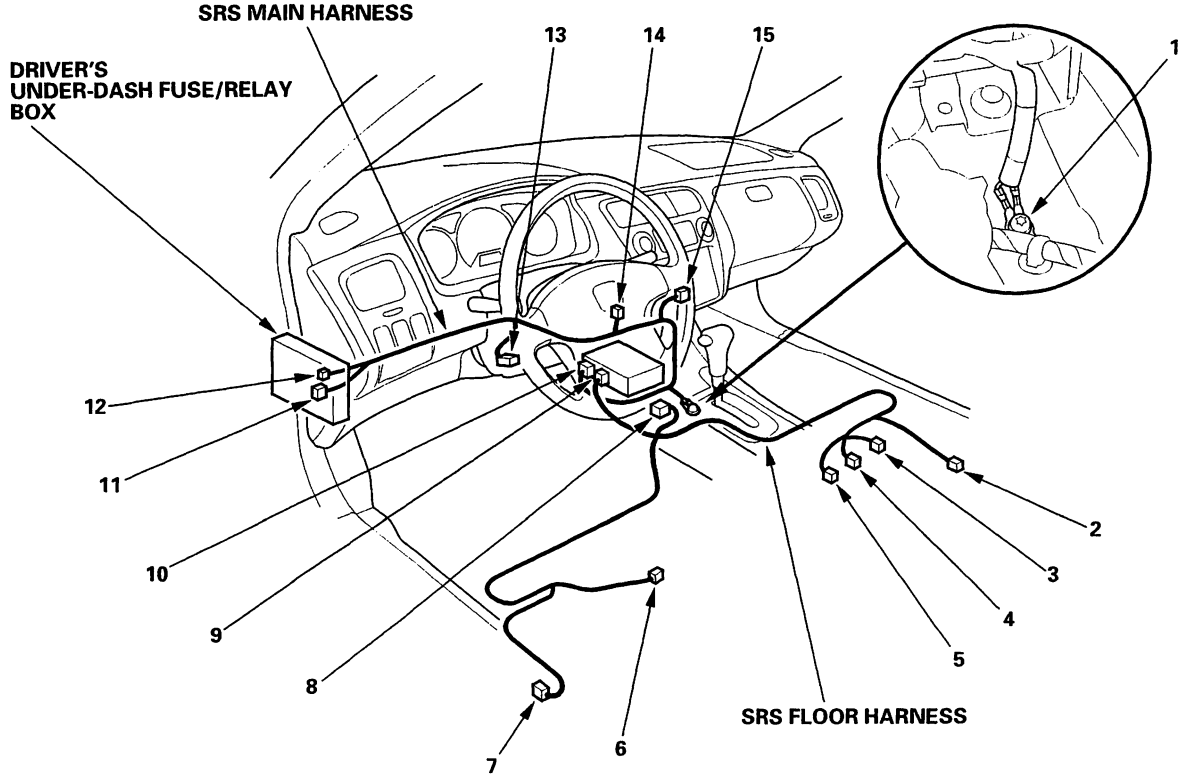

BACK

SRS Main Harness ('00-02 Coupe, '01-02 Sedan)

Connector or Terminal	Ref	Cavities	Location	Connects to	Notes
Cable reel	11	2	Under left side of dash		* 1
Cable reel	11	4	Under left side of dash		* 2
Driver's under-dash fuse/relay box connector N (see page 22-44)	12	2	Behind left kick panel		
Front passenger's airbag assembly	2	4	Behind glove box		
SRS memory erase signal (MES) connector	13	2	Behind left kick panel		* 1
SRS unit	8	8	Middle of floor		* 1
SRS unit	9	14	Middle of floor		
SRS unit	10	18	Middle of floor		
C503	1	8	Under middle of dash	Dashboard wire harness A (see page 22-22)	* 1
C556	6	4	Middle of floor	Left side wire harness (see page 22-25)	
C557	7	4	Middle of floor	Left side wire harness (see page 22-24)	* 3
C583	3	4	Middle of floor	Right side wire harness (see page 22-27)	
C584	4	4	Middle of floor	Right side wire harness (see page 22-27)	
G801	5		Middle of floor	Body ground via SRS main harness	

* 1: '00 Coupe
* 2: '01-02 models
* 3: With seat belt tensioner

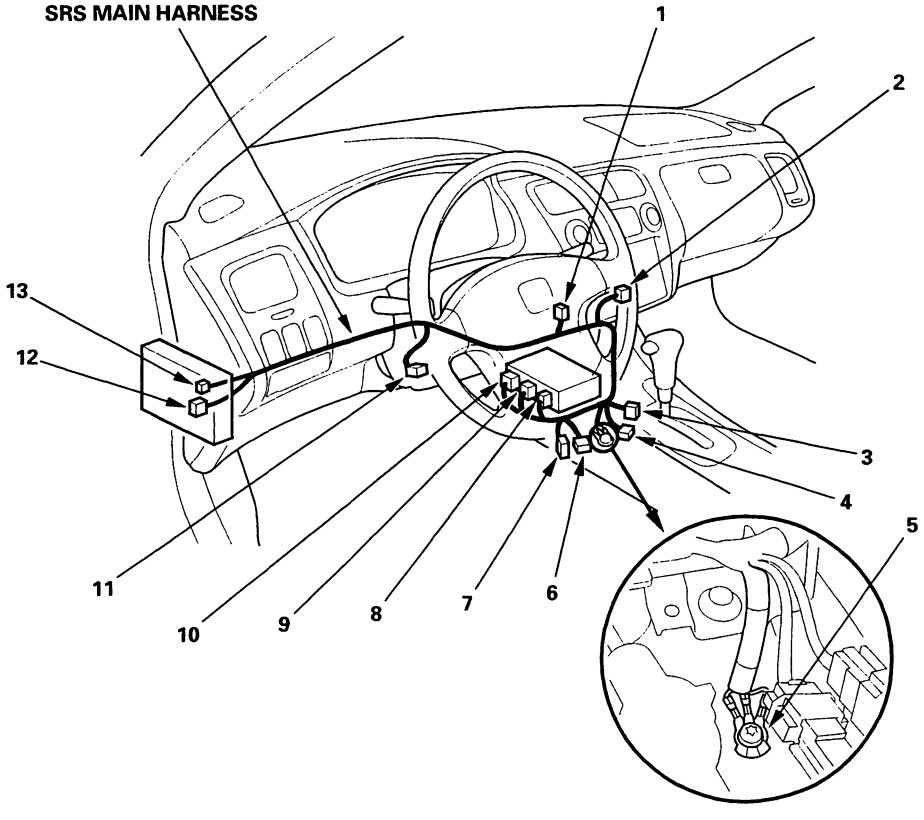

Connector to Harness Index (cont'd)

OPDS Wire Harness (With Side Airbags)

Connector or Terminal	Ref	Cavities	Location	Connects to	Notes
OPDS unit	1	8	Left side of front passenger's seat		
C851	2	4	Under front passenger's seat	SRS floor harness (see page 22-39)	'00 Sedan
C851	2	4	Under front passenger's seat	Right side wire harness (see page 22-26)	Coupe
C851	2	4	Under front passenger's seat	Right side wire harness (see page 22-26)	'01-02 Sedan

Rear Window Defogger Wire Harness

Connector or Terminal	Ref	Cavities	Location	Connects to	Notes
Rear window defogger connector A (+)	3	1	Right C-pillar		
Rear window defogger connector B (−)	1	1	Left C-pillar		
Window antenna coil	2	2	Middle of rear shelf		

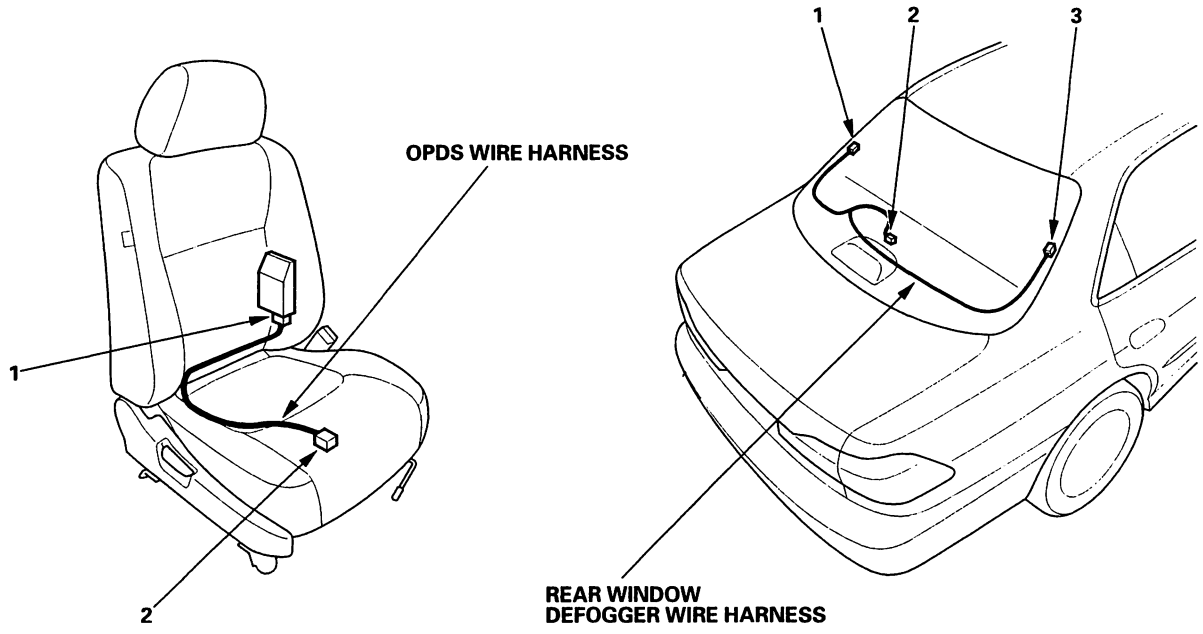

BACK

Connector to Fuse/Relay Box Index

Under-hood Fuse/Relay Box

Socket	Ref	Terminal	Connects to
A	15	18	Right engine compartment wire harness (see page 22-16)
A/C compressor clutch relay	3	4	
B	14	7	Right engine compartment wire harness (see page 22-16)
Blower motor relay	11	4	
C	13	3	Right engine compartment wire harness (see page 22-16)
Condenser fan relay	1	4	
D	12	16	Right engine compartment wire harness (see page 22-16)
Diode	9	2	Not used
ELD Unit	4	3	Right engine compartment wire harness (see page 22-16)
Horn relay	10	4	
Headlight relay 1	7	4	
Headlight relay 2	8	4	
Radiator fan relay	2	4	
T1	6		Battery positive cable (see page 22-12)
T101	5		Engine wire harness (see page 22-14)

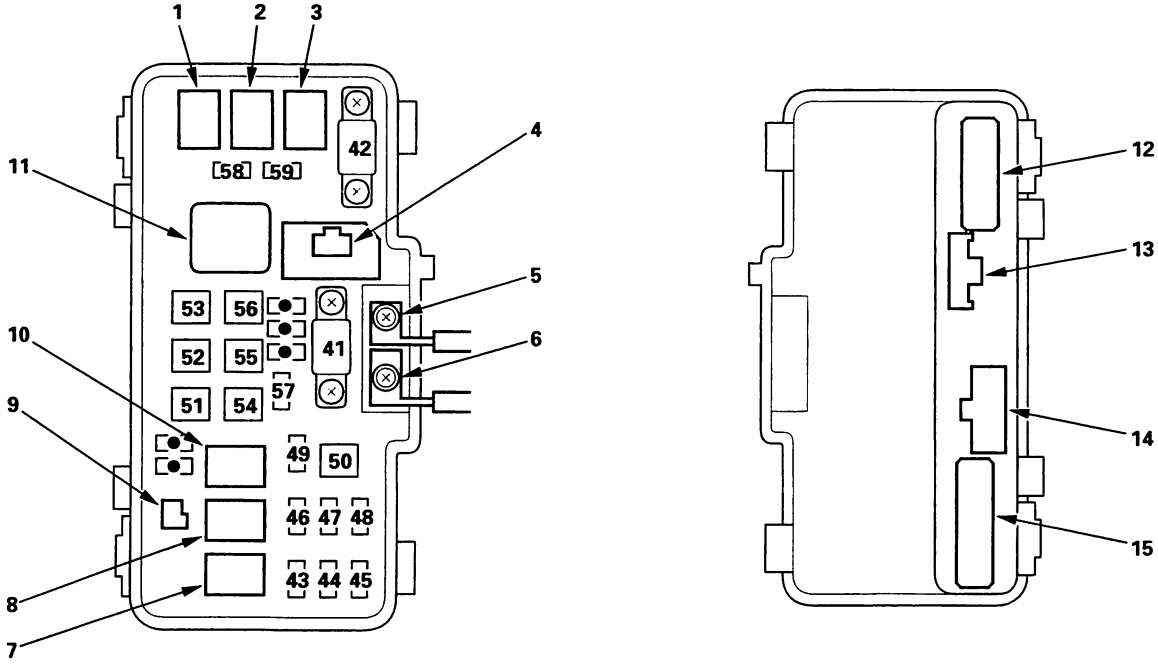

Connector to Fuse/Relay Box Index (cont'd)

Driver's Under-dash Fuse/Relay Box

Socket	Ref	Terminal	Connects to
A	11	10	Left side wire harness (see page 22-24)
B	3	14	Left side wire harness (see page 22-24)
C	10	5	Left engine compartment wire harness (see page 22-18)
D	7	——	Not used
Diode	1	——	
Diode	2	——	
E	4	20	Left engine compartment wire harness (see page 22-18)
F	9	6	Driver's door wire harness (see page 22-32)
G	8	18	Driver's door wire harness (see page 22-32)
H	5	6	Not used
I	13	18	Dashboard wire harness A (see page 22-22)
J	12	2	Service check connector
K	14	18	Dashboard wire harness A (see page 22-22)
L	23	——	Not used
M	15	6	Ignition switch lead (see page 22-38)
Multiplex control unit connector A	6	24	(Plugs directly into the fuse box)
N	22	2	SRS main harness (see page 22-39)
O	21	20	Dashboard wire harness B (see page 22-20)
P	16	7	Dashboard wire harness B (see page 22-20)
Q	17	22	Dashboard wire harness B (see page 22-20)
R	26	1	Optional connector
Reverse relay	19	4	
S	27	1	Optional connector
Starter cut relay	18	4	
T	24	1	Optional connector
Turn signal/hazard relay	20	4	
U	25	1	Optional connector

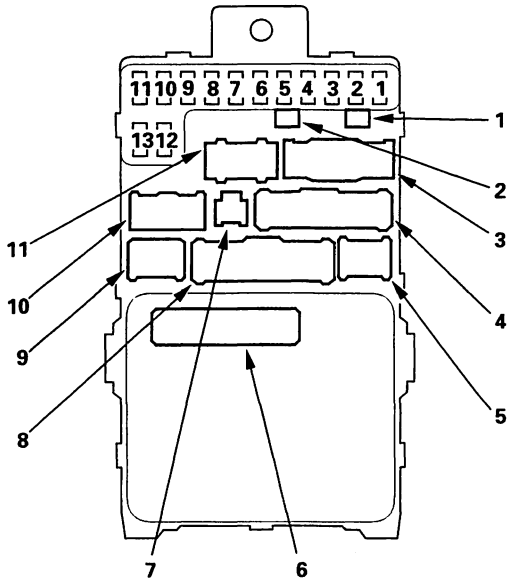

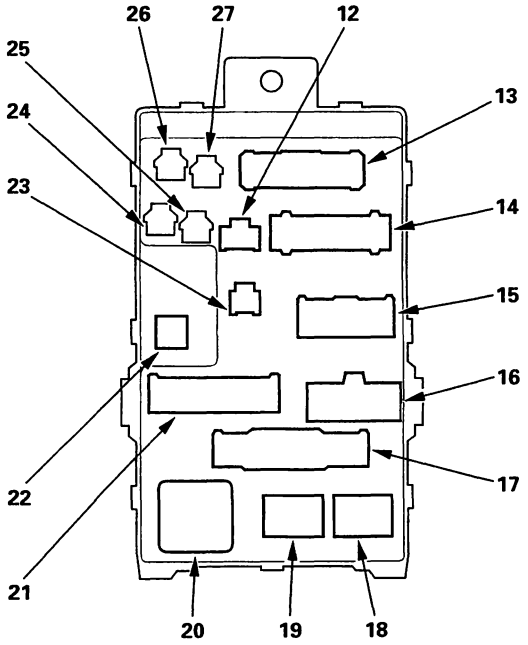

BACK

Passenger's Under-dash Fuse/Relay Box

Socket	Ref	Terminal	Connects to
A	10	20	Right side wire harness (see page 22-26)
Accessory relay	15	4	
B	4	4	Roof wire harness (see page 22-30)
C	9	18	Right engine compartment wire harness (see page 22-16)
D	5	3	Right engine compartment wire harness (see page 22-16)
Diode	1	——	Not used
Diode	2	——	
Diode	3	——	
E	8	2	Passenger's door wire harness (see page 22-34)
F	7	20	Passenger's door wire harness (see page 22-34)
G	6	3	Right side wire harness (see page 22-26)
H	18	18	Dashboard wire harness A (see page 22-22)
I	12	18	Dashboard wire harness A (see page 22-22)
J	17	16	Dashboard wire harness B (see page 22-20)
K	13	16	Dashboard wire harness B (see page 22-20)
Multiplex control unit connector A	11	24	(Plugs directly into the fuse box)
Power window relay	14	4	
Rear window defogger relay	16	4	

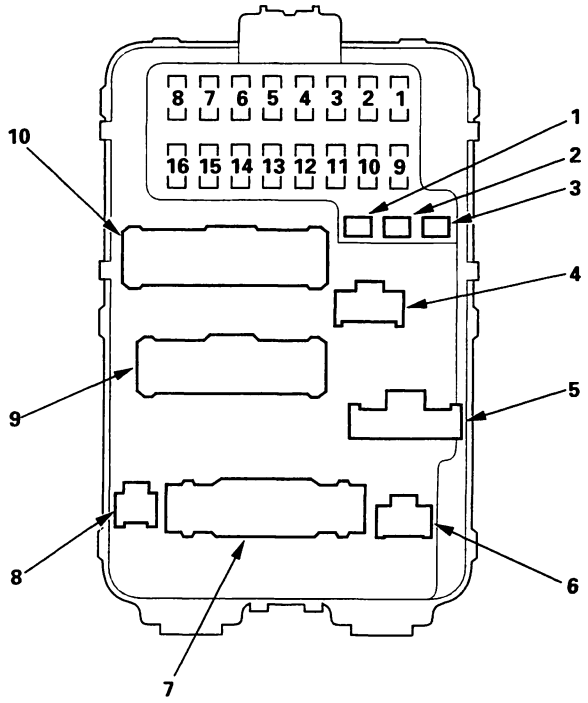

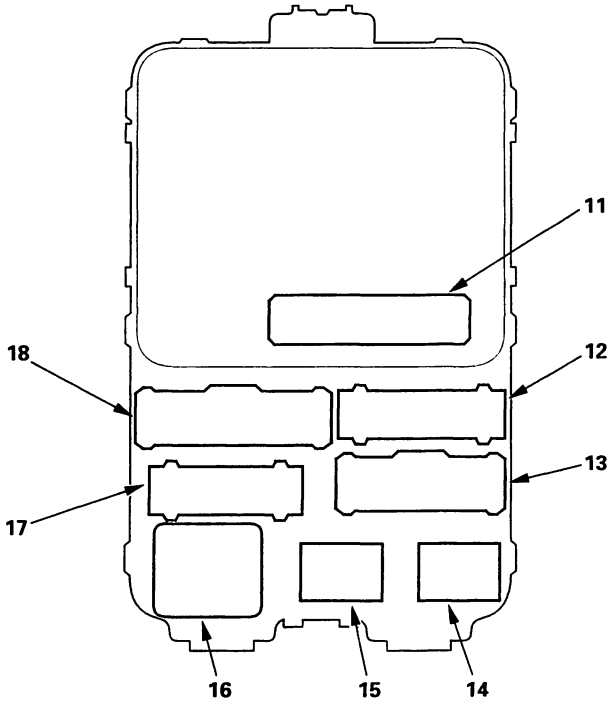

Power Distribution

Fuse to Components Index

Under-hood Fuse/Relay Box

Fuse Number	Amps	Wire Color	Component(s) or Circuit(s) Protected
41	100A	———	Battery, Power distribution
42	50A	WHT	Ignition switch (BAT)
43	20A	RED/GRN	Right headlight, Daytime running lights control unit (Canada)
44	———	———	Not used
45	20A	RED/YEL	Left headlight, Daytime running lights control unit (Canada), High beam indicator, High beam cut relay (Canada)
46	15A	WHT/GRN	PGM-FI main relay, Data link connector (DLC)
47	20A	WHT/YEL	Ignition key light and key interlock solenoid, ABS control unit (BLS), Cruise control unit, ECM/PCM, Horn relay, High mount brake light, Brake failure sensor, Trailer lighting connector
		Fuse/relay box socket	Multiplex control unit (driver's)
48	20A	WHT/GRN	ABS control unit
49	15A	WHT/GRN	Turn signal/hazard relay
50	30A	WHT	ABS pump motor No. 14 fuse (in passenger's under-dash fuse/relay box)
51	40A	WHT/BLU	No. 1 fuse (in passenger's under-dash fuse/relay box), Power window relay
52	———	———	Not used
53	40A	WHT/GRN	Rear window defogger relay
54	40A	YEL	No. 9, 10, 11, 12 and 13 fuses (in passenger's under-dash fuse/relay box)
55	40A	YEL/GRN	No. 2, 3, 4, 5 and 6 fuses (in passenger's under-dash fuse/relay box)
56	40A	YEL/BLK	Blower motor
57	20A	BLU/BLK	Radiator fan motor
58	20A	BLU/YEL	Condenser fan motor
		RED	A/C compressor clutch
59	20A	WHT/GRN	Driver's and front passenger's seat heaters (Canada)

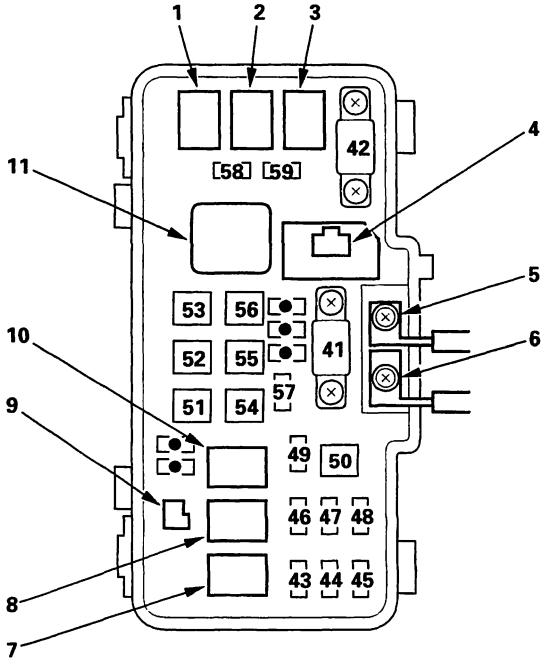

BACK

Driver's Under-dash Fuse/Relay Box

Fuse Number	Amps	Wire Color	Component(s) or Circuit(s) Protected
1	15A	RED/WHT	PGM-FI main relay
		RED/BLU (or GRN)	SRS unit (VA)
2	10A	BLK/WHT (or GRN)	SRS unit (VB)
3	7.5A	BLK/YEL	Heater control panel, Recirculation control motor, Rear window defogger relay, Seat heaters (Canada)
4	7.5A	YEL/BLK	ABS control unit, Power mirror actuators, Power mirror defoggers (Canada)
		Fuse/relay box socket	Optional connector
5	7.5A	YEL/RED	Daytime running lights control unit (Canada)
6	15A	BLK/YEL	Alternator, Cruise control unit, Cruise main switch indicator, ECM/PCM, ELD unit, Engine mount control solenoid valve (A/T), Evaporative emission bypass solenoid valve, Evaporative emission purge control solenoid valve, Gauge assembly, Heated oxygen sensor relay, Primary and secondary heated oxygen sensors, Vehicle speed sensor (VSS) (M/T), Vent shut solenoid valve
7	7.5A	YEL/GRN	Multiplex control unit (driver's) (All '98-99 models and '00 Sedan), OPDS unit (with side airbags), Windshield washer motor (All '98-99 models and '00-02 Sedan)
8	7.5A	YEL/BLK	Accessory socket relay
		Fuse/relay box socket	Optional connector
9	7.5A	YEL	Back-up lights, Brake failure sensor, Clock, DRL indicator light (Canada), Gauge assembly, Multiplex control unit (passenger's), Shift lock solenoid, Trailer lighting connector
		Fuse/relay box socket	Multiplex control unit (driver's)
10	7.5A	YEL/RED	Turn signal/hazard relay
11	15A	BLK/YEL	Ignition coil
12	30A	GRN/BLK	Windshield wiper intermittent relay, Windshield wiper motor, Windshield washer motor ('00-02 Coupe), Multiplex control unit (driver's) ('00-02 Coupe)
13	7.5A	BLU/ORN	ECM/PCM, PGM-FI main relay

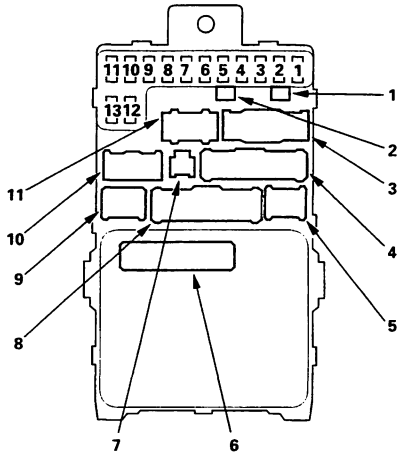

(cont'd)

Fuse to Components Index (cont'd)

Passenger's Under-dash Fuse/Relay Box

Fuse Number	Amps	Wire Color	Component(s) or Circuit(s) Protected
1	30A	GRN	Moonroof motor
2	20A	RED	Power seat up-down motor (2-way adjustable), Power seat rear up-down motor, Recline motor (8-way adjustable)
3	———	———	No used
4	20A	BLU	Power seat front up-down motor, Slide motor (8-way adjustable)
5	———	———	Not used
6	10A	RED/BLU	Daytime running lights control unit (Canada)
	20A	RED/BLU	Heated oxygen sensor (California)
7	20A	WHT/YEL	Moonroof open relay, Moonroof close relay, Left rear power window motor (Sedan), Multiplex control unit (passenger's)
8	20A	BLU/BLK	Passenger's power window motor
9	20A	WHT/GRN	Audio unit
		WHT/RED	Audio unit, Accessory socket
10	10A (Sedan) 15A (Coupe)	RED/GRN	Heater control panel, A/T gear position console light, Driver's seat heater switch light (Canada), Audio unit, Gauge lights, Cruise main switch light Moonroof switch light, Clock, Hazard warning switch light, Glove box light Vanity mirror lights, Front parking lights, Front side marker lights, Rear side marker lights, License plate light(s), Taillights, Trailer lighting connector
		Fuse/relay box socket	Multiplex control unit (driver's)
11	7.5A	WHT/BLU	Courtesy lights, Trunk light, Ceiling light, Spotlights
12	20A	Fuse/relay box socket	Multiplex control unit (passenger's)
13	7.5A	WHT/YEL	ECM/PCM, Heater control panel, Security indicator, Multiplex control unit (door), Gauge assembly, Clock
		Fuse/relay box socket	Multiplex control unit (driver's), Multiplex control unit (passenger's)
14	7.5A	GRN	ABS control unit
15	20A	GRN/WHT	Multiplex control unit (door), Driver's power window
16	20A	WHT/BLK	Right rear power window motor (Sedan)

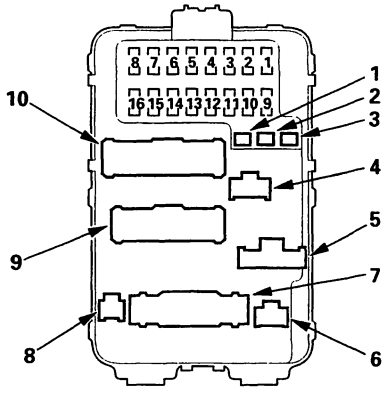

BACK

Ground Distribution

Ground to Components Index

Ground	Component or circuit grounded
G1	Battery, Transmission housing
G2	Engine block
G101	ECM/PCM (PG1 and PG2 are BLK; LG1 and LG2 are BRN/BRK), Idle air control solenoid valve, Radiator fan switch, PGM-FI main relay, EGR control solenoid valve, Shift control solenoid valve assembly (A/T), Vehicle speed sensor (M/T), A/T gear position switch
	Shielding between the ECM/PCM (all have braided wires) CKP/TDC sensor, CYP sensor, Primary and secondary heated oxygen sensors, Knock sensor, Mainshaft speed sensor (A/T), Countershaft speed sensor (A/T), VTEC pressure switch, Data link connector (DLC), Immobilizer control unit
G201	Condenser fan motor, Radiator fan motor, Right headlight (low beam), Right front parking light, Right front side marker light, Right front turn signal light, Hood switch (security)
G202	Seat heater relay (Canada), Blower motor relay, ELD unit, ABS fail-safe relay
G301	Washer level switch (Canada), Windshield washer motor, Left headlight (low beam), Left front parking light, Left front side marker light, Left front turn signal light
G302	Brake fluid level switch, Windshield wiper motor, Intermittent wiper relay, Power steering pressure switch, Cruise control actuator
G303	ABS pump motor
G304	ABS control unit (2 wires)
G305	ABS control unit (2 wires)
G401	Multiplex control unit (driver's), Turn signal/hazard relay, Power window master switch, Driver's door key cylinder switch, Driver's door lock switch, Driver's door lock knob switch, Ignition key switch, Daytime running lights control unit (Canada), Clutch switch (M/T), Data link connector (DLC), Combination light switches, Heater control panel (2 wires), Windshield wiper/washer switch
G501	Moonroof switch, Moonroof open relay, Moonroof close relay, Driver's seat heater switch (Canada), Front passenger's seat heater switch (Canada), Glove box light, Clock, Audio unit, Accessory socket, Gauge assembly, Cruise control unit, Cruise main switch, OPDS unit ('00 Sedan with side airbags), Fuel gauge sending unit ('00 Coupe), Front passenger's seat belt switch ('00 Sedan), Memory erase signal (MES) connector ('01-02 models), Park pin switch
G502	Audio unit
G503	Multiplex control unit (driver's)
G504	Multiplex control unit (passenger's)
G551	Power mirror switch, Left power mirror defogger (Canada), Driver's power window motor, Power window master switch (2 wires), High mount brake light, Driver's seat belt switch, Left rear door lock knob switch, Driver's power seat switch (2 wires), Driver's seat heater (Canada)
G552	Fuel pump (FP), Fuel gauge sending unit (All '98-99 models and '00-02 Sedan)
G581	Multiplex control unit (passenger's), Power window relay, Accessory relay, Vanity mirror lights, Spotlight, Passenger's door key cylinder switch, Passenger's door lock switch, Passenger's door lock knob switch, Front passenger's seat heater (Canada), Right power mirror defogger (Canada), Right rear door lock knob switch, OPDS unit (Coupe with side airbags, '01-02 Sedan with side airbags), Front Passenger's seat belt switch ('00 Coupe, '01-02 models)
G601	Taillights (right, left), License plate light, Trunk latch switch, Trunk key cylinder switch (security), Trunk actuator (security), Brake failure sensor, Trailer lighting connector
G801	SRS unit (2 wires), Memory erase signal (MES) connector ('00 model)

Under-dash Fuse/Relay Box

Removal and Installation

SRS components are located in this area. Review the SRS component locations, precautions, and procedures in the SRS section before performing repairs or service (see page 23-28).

Removal

1. Make sure you have the anti-theft code for the radio, then write down the frequencies for the radio's preset buttons.

2. Disconnect the battery negative cable, then disconnect the positive cable, and wait at least three minutes.

3. Remove the driver's dashboard lower cover (see page 20-84) or the passenger's dashboard lower cover (see page 20-85).

4. Remove the door sill molding, left or right kick panel (see page 20-74) and fuse box cover (see page 20-84).

5. Remove the mounting bolt, and pull the driver's under-dash fuse/relay box (A) or passenger's under-dash fuse/relay box (B) away from the body.

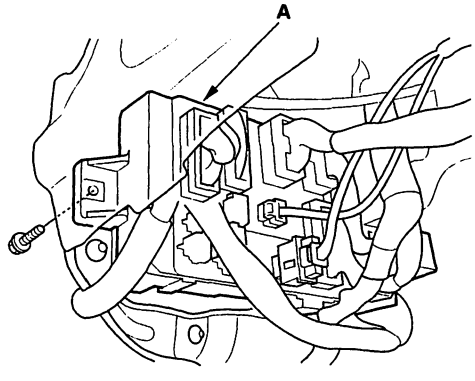

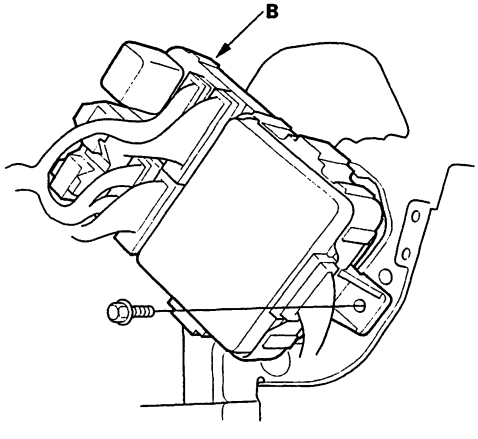

6. Disconnect the driver's or passenger's under-dash fuse/relay box connectors, and remove the driver's or passenger's under-dash fuse/relay box.

   NOTE: The SRS main harness connector is a springloaded lock type (see page 23-28).

Installation

1. Connect the connectors to the driver's or passenger's under-dash fuse/relay box, then install the driver's or passenger's under-dash fuse/relay box in the reverse order of removal.

2. Install the left or right kick panel and access panel, and the door sill molding.

3. Install the dashboard lower cover.

4. Connect both the negative cable and positive cable to the battery, enter the anti-theft code for the radio, then enter the customer's radio station presets.

5. Confirm that all systems work properly.

BACK

Battery Test

⚠ WARNING

A battery can explode if you do not follow the proper procedure, causing serious injury to anyone nearby. Follow all procedures carefully and keep sparks and open flames away from the battery.

Use either a JCI or Bear ARBST tester, and follow the manufacturer's procedures. If you don't have one of these computerized tester, follow this conventional test procedure:

1. Be sure the temperature of the electrolyte is between 70°F (21°C) and 100°F (38°C).

2. Inspect the battery case for cracks or leaks.

   - If the case is damaged, replace the battery. ■
   - If the case looks OK, go to step 3.

3. Check the indicator EYE.

   - If the EYE indicates the battery is charged, go to step 4.
   - If the EYE indicates a low charge, go to step 7.

4. Apply a 300 amp load for 15 seconds to remove the surface charge.

5. Wait 15 seconds, then apply a test load of 280 amps for 15 seconds.

6. Record battery voltage.

   - If voltage is above 9.6 volts, the battery is OK. ■
   - If voltage is below 9.6 volts, go to step 7.

7. Charge the battery on High (40 amps) until the EYE shows the battery is charged, plus an additional 30 minutes. If the battery charge is very low, it may be necessary to bypass the charger's polarity protection circuitry.

   - If the EYE indicates the battery is charged within 3 hours, the battery is OK. ■
   - If the EYE indicates the battery is not charged within 3 hours, replace the battery. ■

Power Relay Test

Use this chart to identify the type of relay, then do the test listed for it.
NOTE (see page 22-106) for the turn signal/hazard relay input test.

Relay	Test
ABS fail-safe relay	Normally-open type A
Accessory socket relay	
A/C compressor clutch relay	
Condenser fan relay	
Headlight relay 1	
Headlight relay 2	
Heated oxygen sensor relay (California)	
High beam cut relay	
Horn relay	
Power window relay	
Radiator fan relay	
Reverse relay	
Seat heater relay	
Starter cut relay	
Taillight relay	
ABS pump motor relay	Normally-open type B
Blower motor relay, type 1	
Blower motor relay, type 2	
Rear window defogger relay	
Windshield wiper intermittent relay	Five-terminal type A
Moonroof open and close relays	Five-terminal type B

Normally-open type A:

Check for continuity between the terminals.

- There should be continuity between the No. 1 and No. 2 terminals when power and ground are connected to the No. 3 and No. 4 terminals.
- There should be no continuity between the No. 1 and No. 2 terminals when power is disconnected.

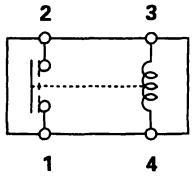

type 1:

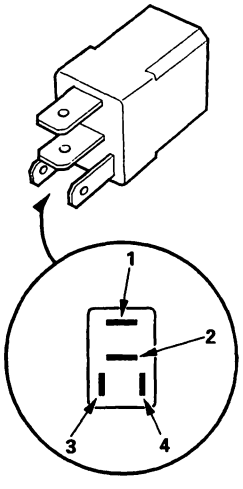

type 2:

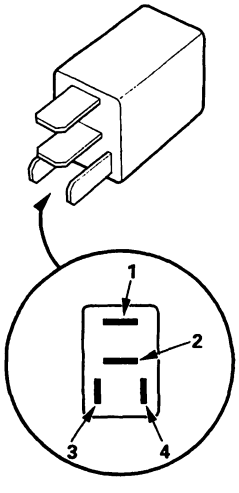

BACK

Normally-open type B:

Check for continuity between the terminals.

- There should be continuity between the No. 1 and No. 3 terminals when power and ground are connected to the No. 2 and No. 4 terminals.
- There should be no continuity between the No. 1 and No. 3 terminals when power is disconnected.

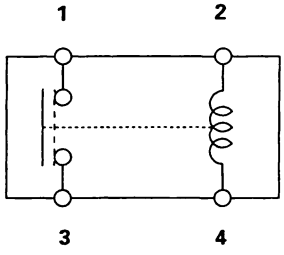

Rear window defogger relay

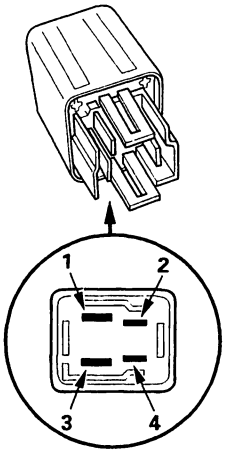

ABS pump motor relay

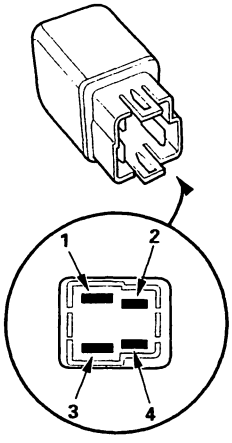

Blower motor relay, type 1:

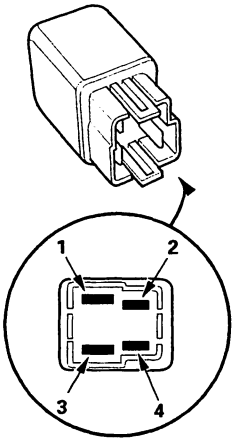

Blower motor relay, type 2:

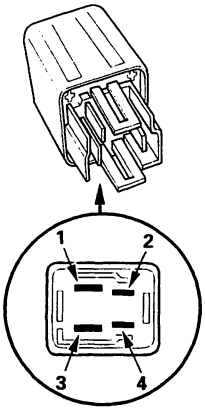

(cont'd)

Power Relay Test (cont'd)

Five-terminal type A:

Check for continuity between the terminals.

- There should be continuity between the No. 1 and No. 2 terminals when power and ground are connected to the No. 3 and No. 5 terminals.
- There should be continuity between the No. 2 and No. 4 terminals when power is disconnected.

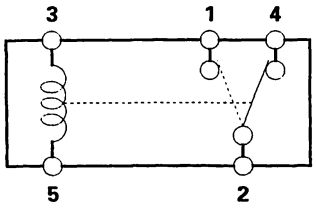

Windshield wiper intermittent relay

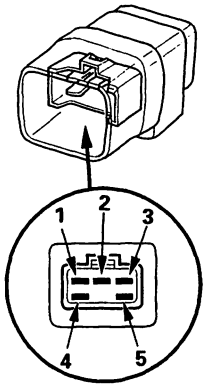

Five-terminal type B:

Check for continuity between the terminals.

- There should be continuity between the No. 1 and No. 2 terminals when power and ground are connected to the No. 3 and No. 5 terminals.
- There should be continuity between the No. 1 and No. 4 terminals when power is disconnected.

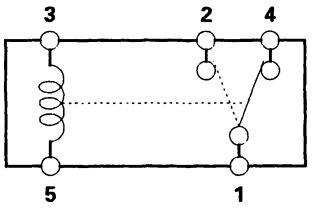

Moonroof open and close relays

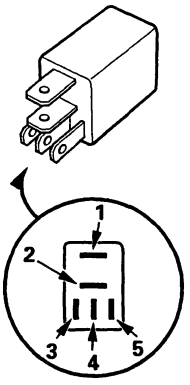

BACK

Ignition Switch

Test

SRS components are located in this area. Review the SRS component locations, precautions, and procedures in the SRS section before performing repairs or service (see page 23-28).

1. Make sure you have the anti-theft code for the radio, then write down the frequencies for the radio's preset buttons.
2. Disconnect the battery negative cable.
3. Remove the dashboard lower cover (see page 20-84).
4. Disconnect the 6P connector from the driver's under-dash fuse/relay box.

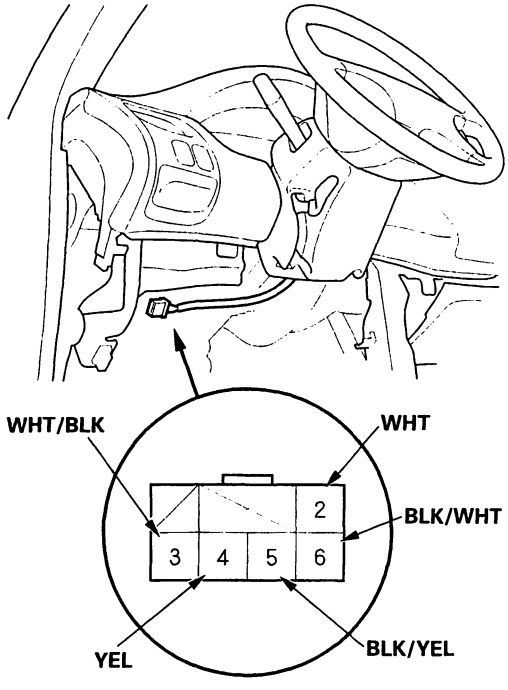

Wire side of female terminals

5. Check for continuity between the terminals in each switch position according to the table.

Terminal / Position	3 WHT/BLK (ACC)	2 WHT (BAT)	5 BLK/YEL (IG1)	4 YEL (IG2)	6 BLK/WHT (ST)
O (LOCK)					
I (ACC)	○——	——○			
II (ON)	○——	——○	——○	——○	
III (START)		○——	——○	——	——○

6. If the continuity checks do not agree with the table, replace the electrical switch.
7. After reconnecting the battery, enter the anti-theft code for the radio, then enter the customer's radio station presets.

Ignition Switch

Replacement

SRS components are located in this area. Review the SRS components locations, precautions, and procedures in the SRS section before performing repairs of service (see page 23-28).

1. Make sure you have the anti-theft code for the radio, then write down the frequencies for the radio's preset buttons.

2. Disconnect the battery negative cable.

3. Remove the steering column covers (see page 17-25).

4. Insert the ignition key, and turn it to "0".

5. Remove the 3 screws (A), and replace the electrical switch (B).

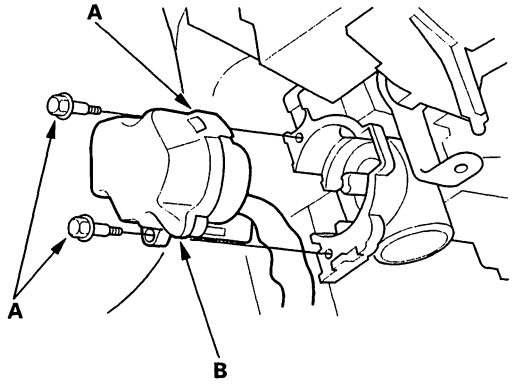

6. Install the switch in the reverse order of removal.

7. After reconnecting the battery, enter the anti-theft code for the radio, then enter the customer's radio station presets.

BACK

Component Location Index

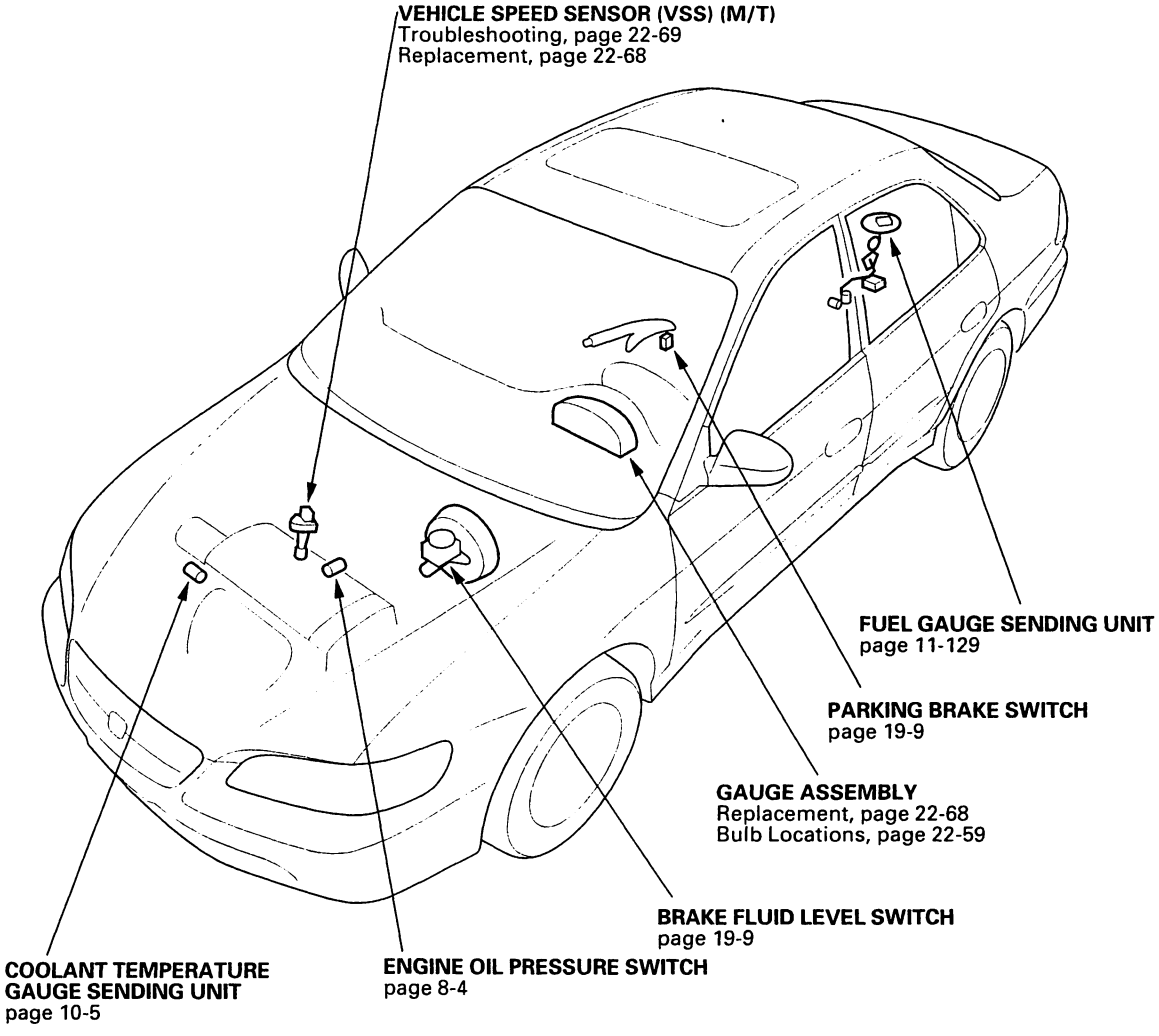

(cont'd)

Component Location Index (cont'd)

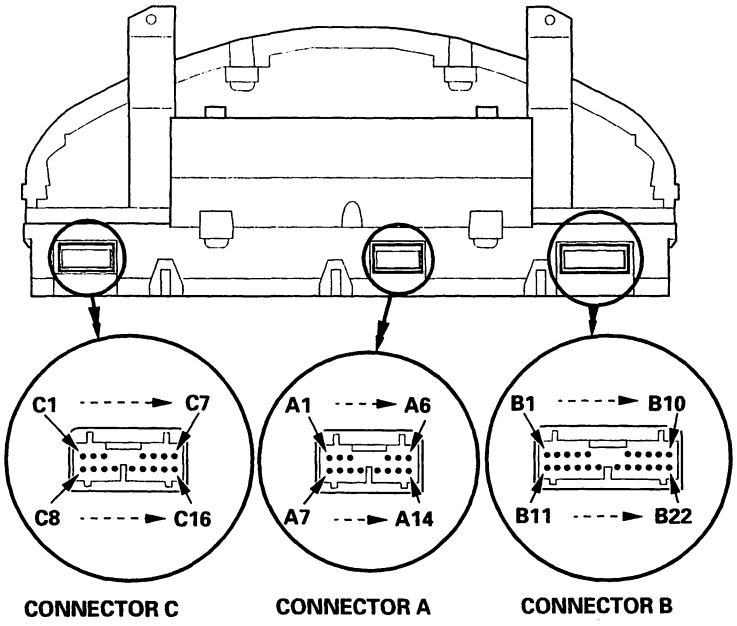

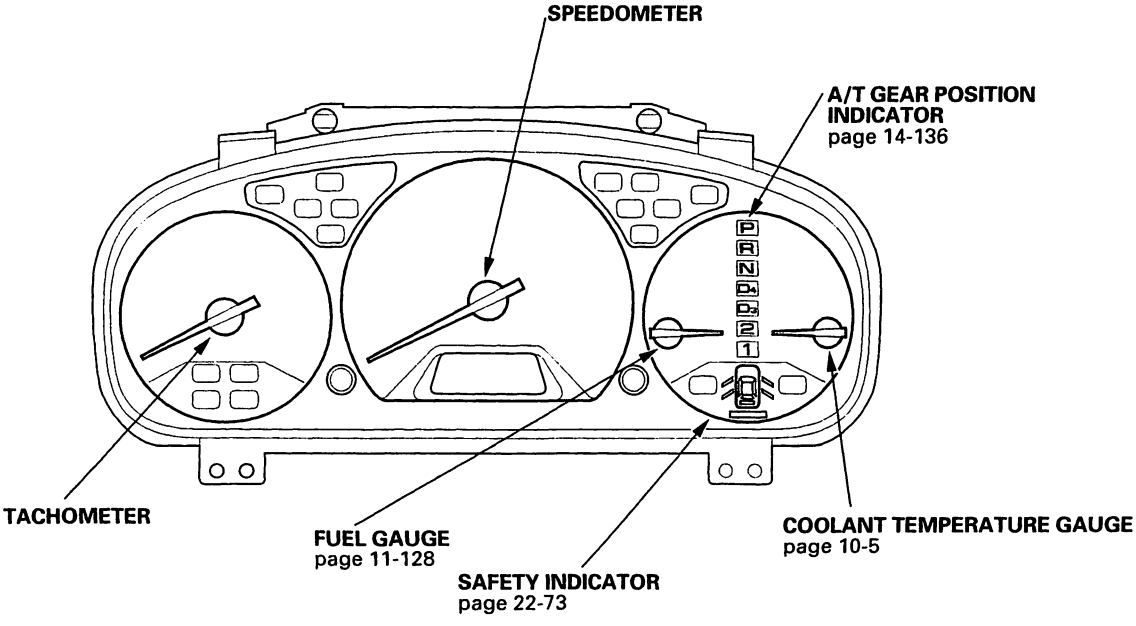

BACK

Gauge Bulb Replacement

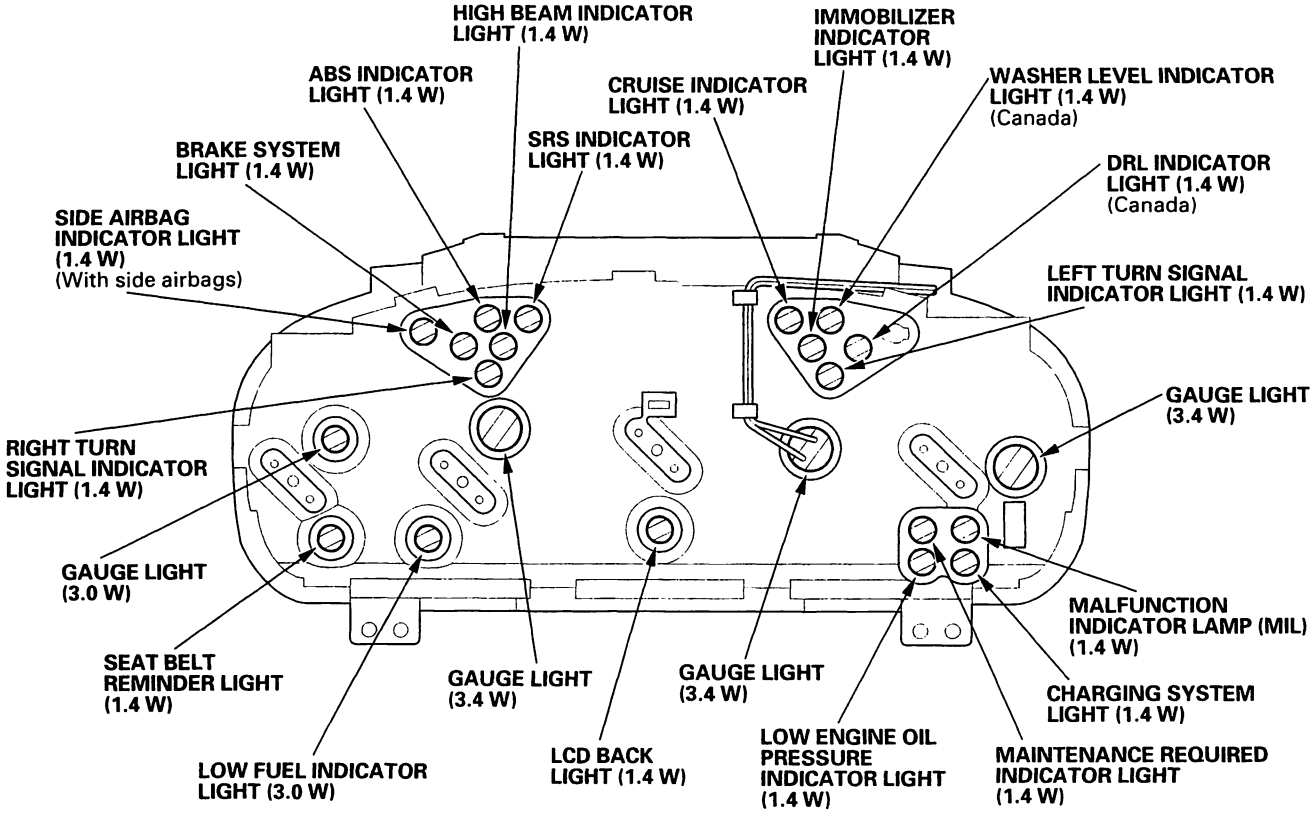

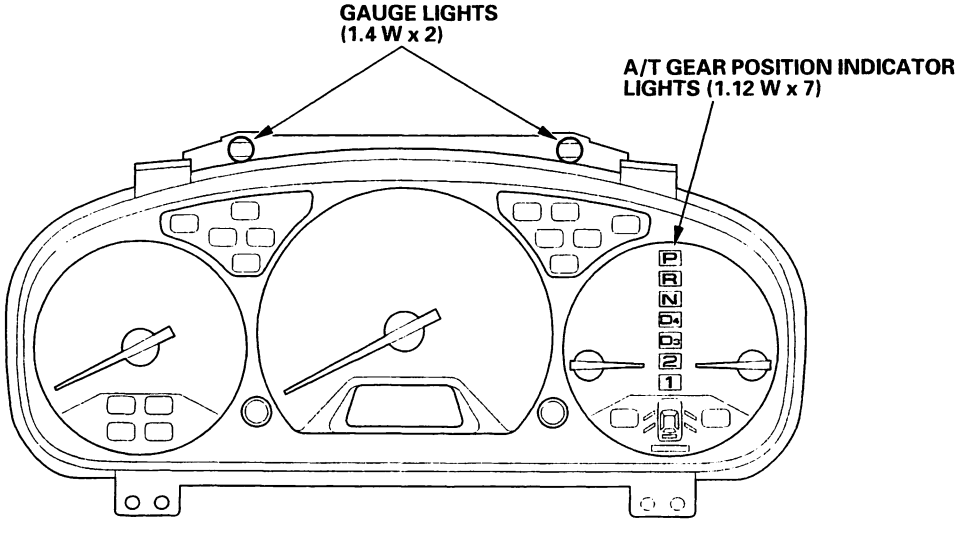

Circuit Diagram

'98-99 models

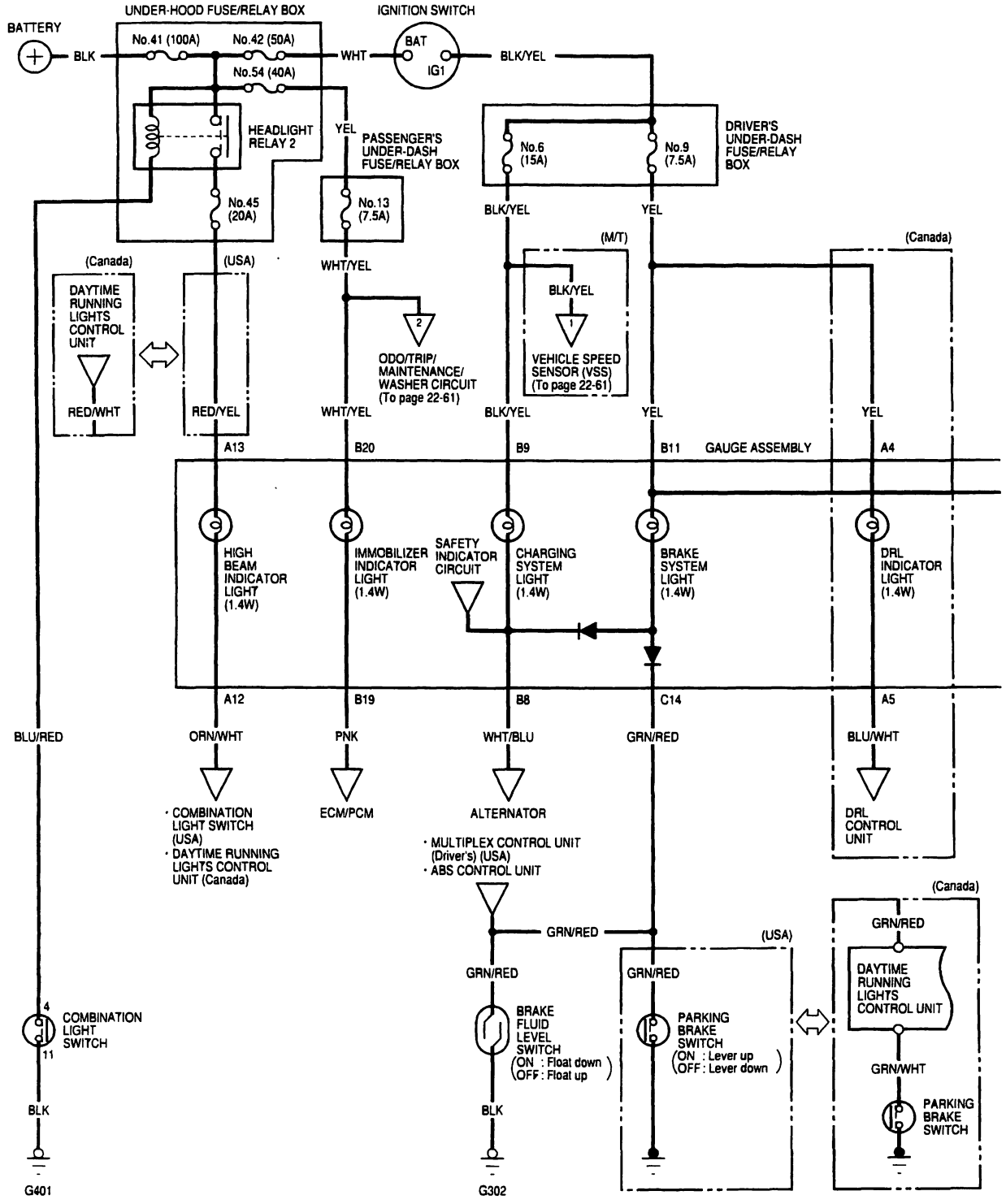

BACK

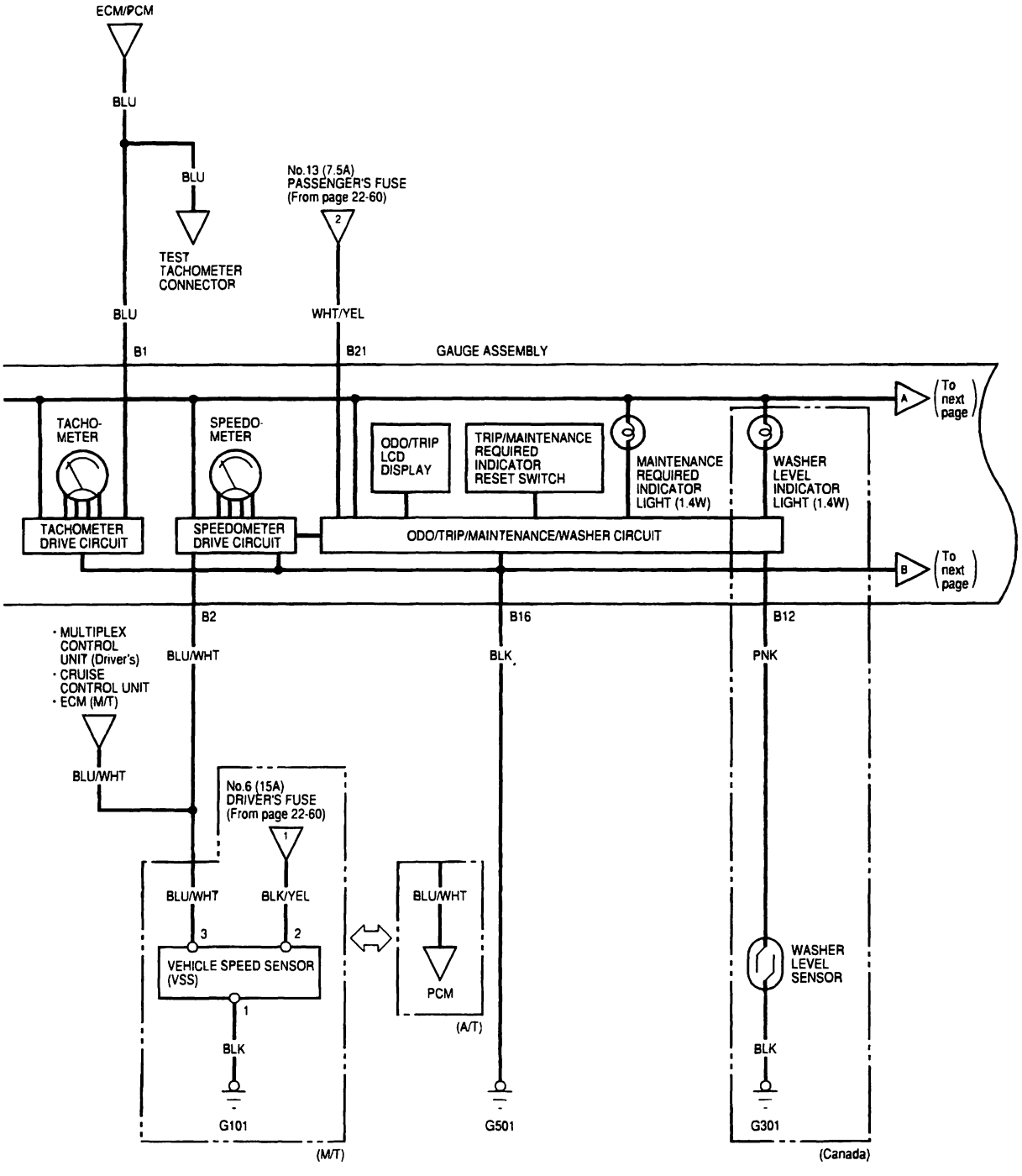
ECM/PCM
BLU
BLU
TEST TACHOMETER CONNECTOR
No.13 (7.5A) PASSENGER'S FUSE (From page 22-60)
2
BLU
WHT/YEL
B1
B21
GAUGE ASSEMBLY
A
To next page
TACHO-METER
SPEEDO-METER
ODO/TRIP LCD DISPLAY
TRIP/MAINTENANCE REQUIRED INDICATOR RESET SWITCH
MAINTENANCE REQUIRED INDICATOR LIGHT (1.4W)
WASHER LEVEL INDICATOR LIGHT (1.4W)
TACHOMETER DRIVE CIRCUIT
SPEEDOMETER DRIVE CIRCUIT
ODO/TRIP/MAINTENANCE/WASHER CIRCUIT
B
To next page
B2
B16
B12
· MULTIPLEX CONTROL UNIT (Driver's)
· CRUISE CONTROL UNIT
· ECM (M/T)
BLU/WHT
BLK
PNK
BLU/WHT
No.6 (15A) DRIVER'S FUSE (From page 22-60)
1
BLU/WHT
BLK/YEL
3
2
VEHICLE SPEED SENSOR (VSS)
1
BLK
G101
(M/T)
BLU/WHT
PCM
(A/T)
G501
WASHER LEVEL SENSOR
BLK
G301
(Canada)

(cont'd)

BACK

Circuit Diagram (cont'd)

'98-99 models

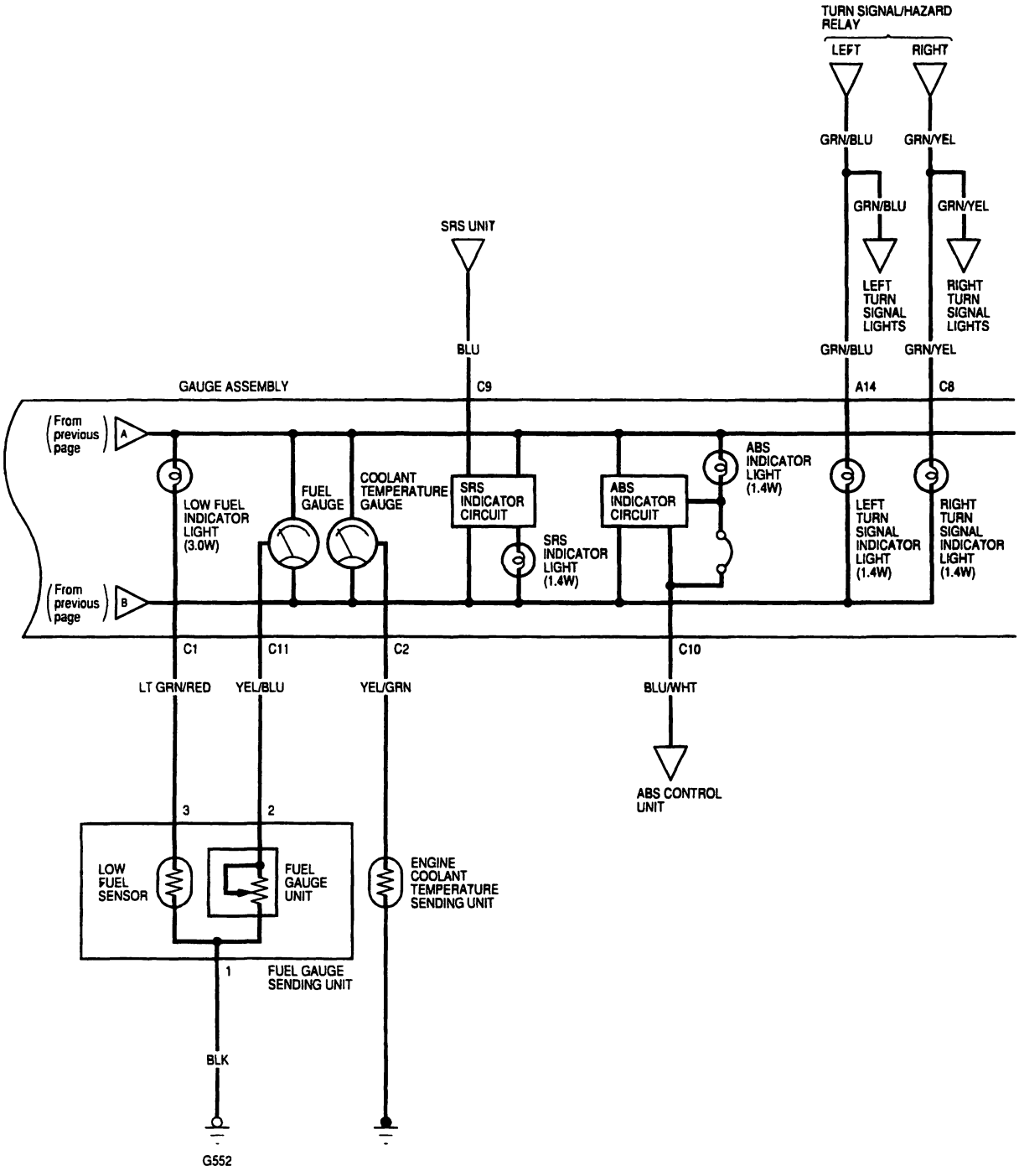

BACK

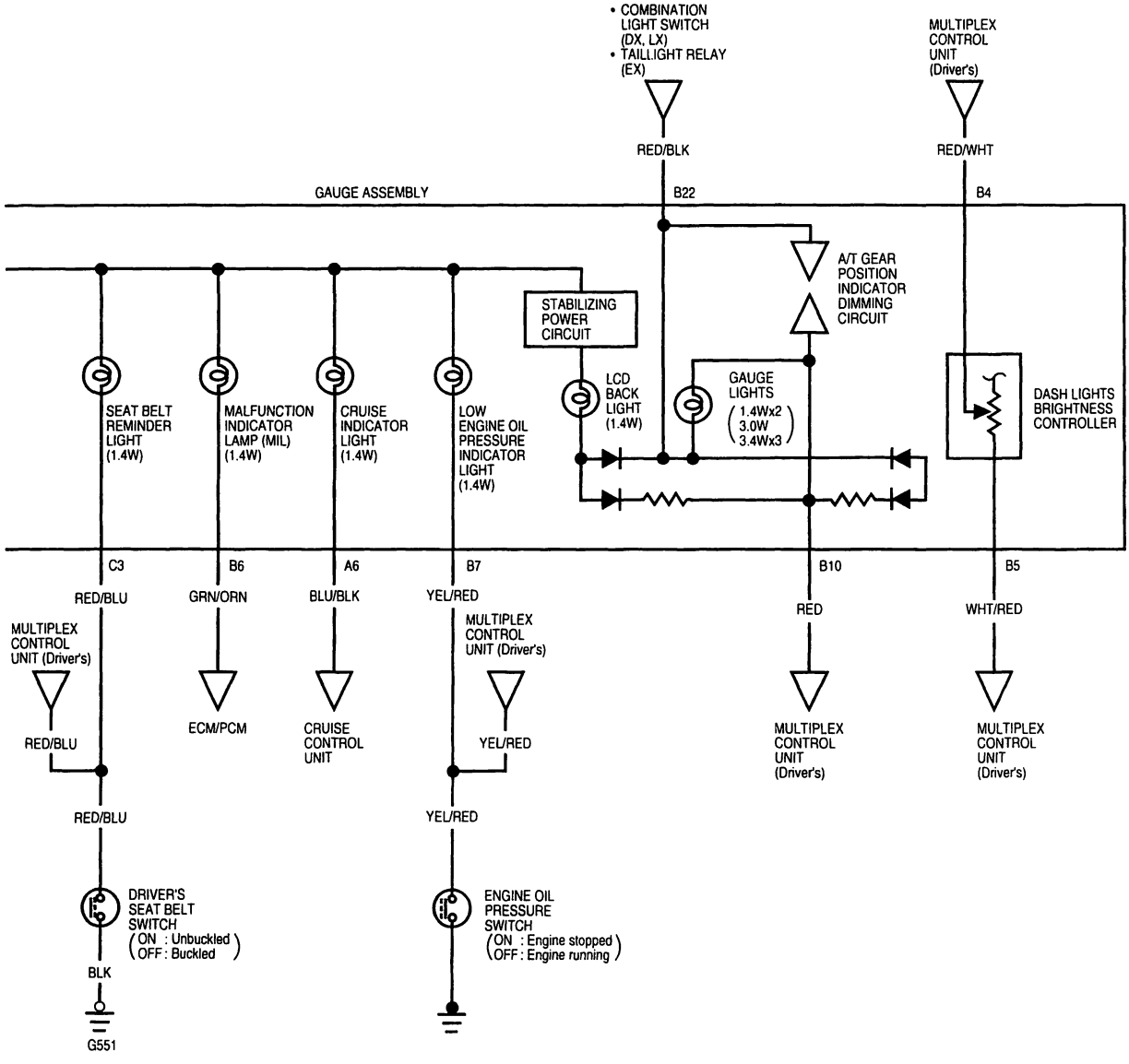
• COMBINATION LIGHT SWITCH (DX, LX)
• TAILLIGHT RELAY (EX)
MULTIPLEX CONTROL UNIT (Driver's)
RED/BLK
RED/WHT
GAUGE ASSEMBLY
B22
B4
A/T GEAR POSITION INDICATOR DIMMING CIRCUIT
STABILIZING POWER CIRCUIT
SEAT BELT REMINDER LIGHT (1.4W)
MALFUNCTION INDICATOR LAMP (MIL) (1.4W)
CRUISE INDICATOR LIGHT (1.4W)
LOW ENGINE OIL PRESSURE INDICATOR LIGHT (1.4W)
LCD BACK LIGHT (1.4W)
GAUGE LIGHTS (1.4Wx2 3.0W 3.4Wx3)
DASH LIGHTS BRIGHTNESS CONTROLLER
C3
B6
A6
B7
B10
B5
RED/BLU
GRN/ORN
BLU/BLK
YEL/RED
RED
WHT/RED
MULTIPLEX CONTROL UNIT (Driver's)
MULTIPLEX CONTROL UNIT (Driver's)
ECM/PCM
CRUISE CONTROL UNIT
MULTIPLEX CONTROL UNIT (Driver's)
MULTIPLEX CONTROL UNIT (Driver's)
RED/BLU
YEL/RED
RED/BLU
YEL/RED
DRIVER'S SEAT BELT SWITCH (ON : Unbuckled OFF : Buckled)
ENGINE OIL PRESSURE SWITCH (ON : Engine stopped OFF : Engine running)
BLK
G551

Circuit Diagram (cont'd)

'00-02 models

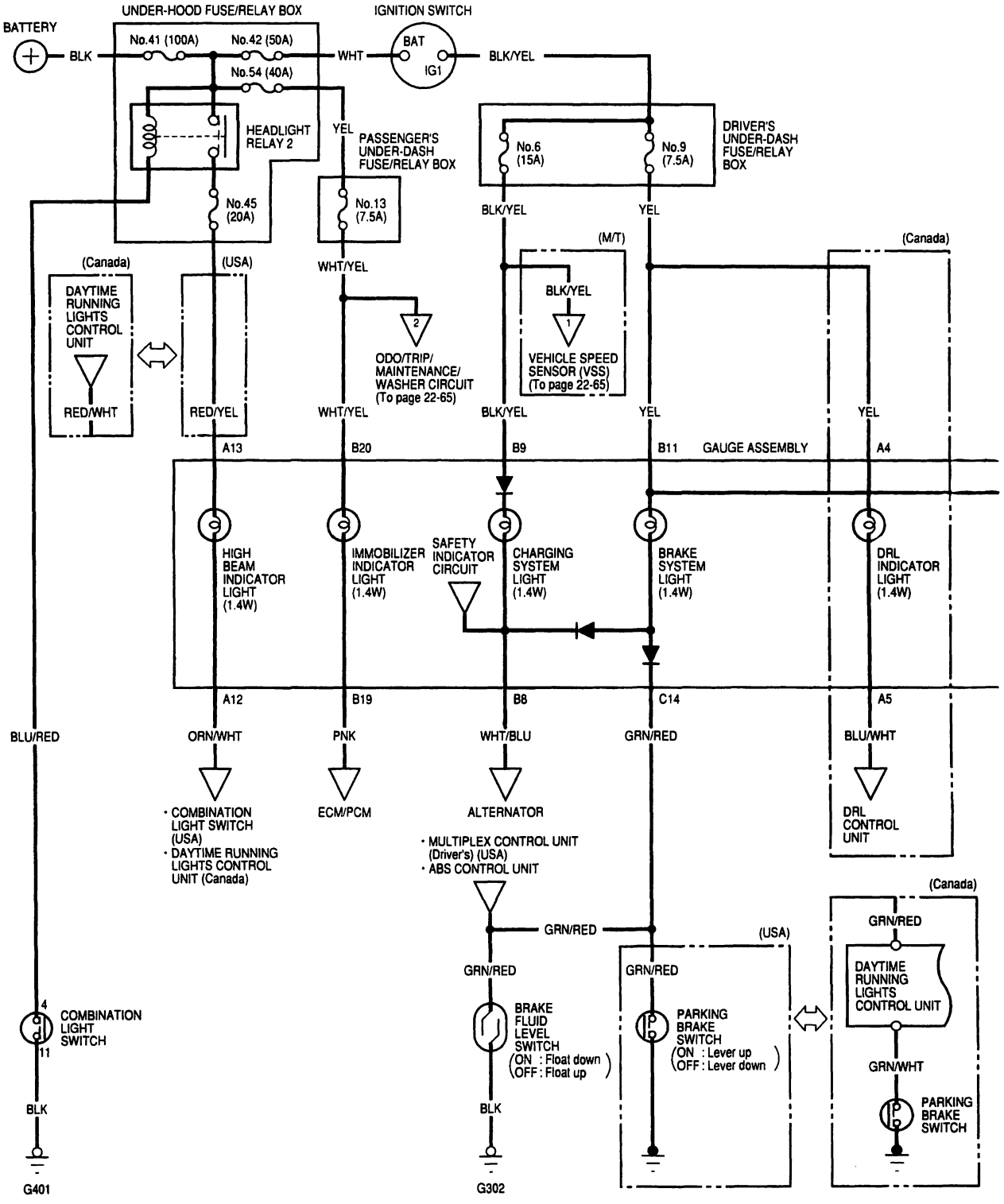

BACK

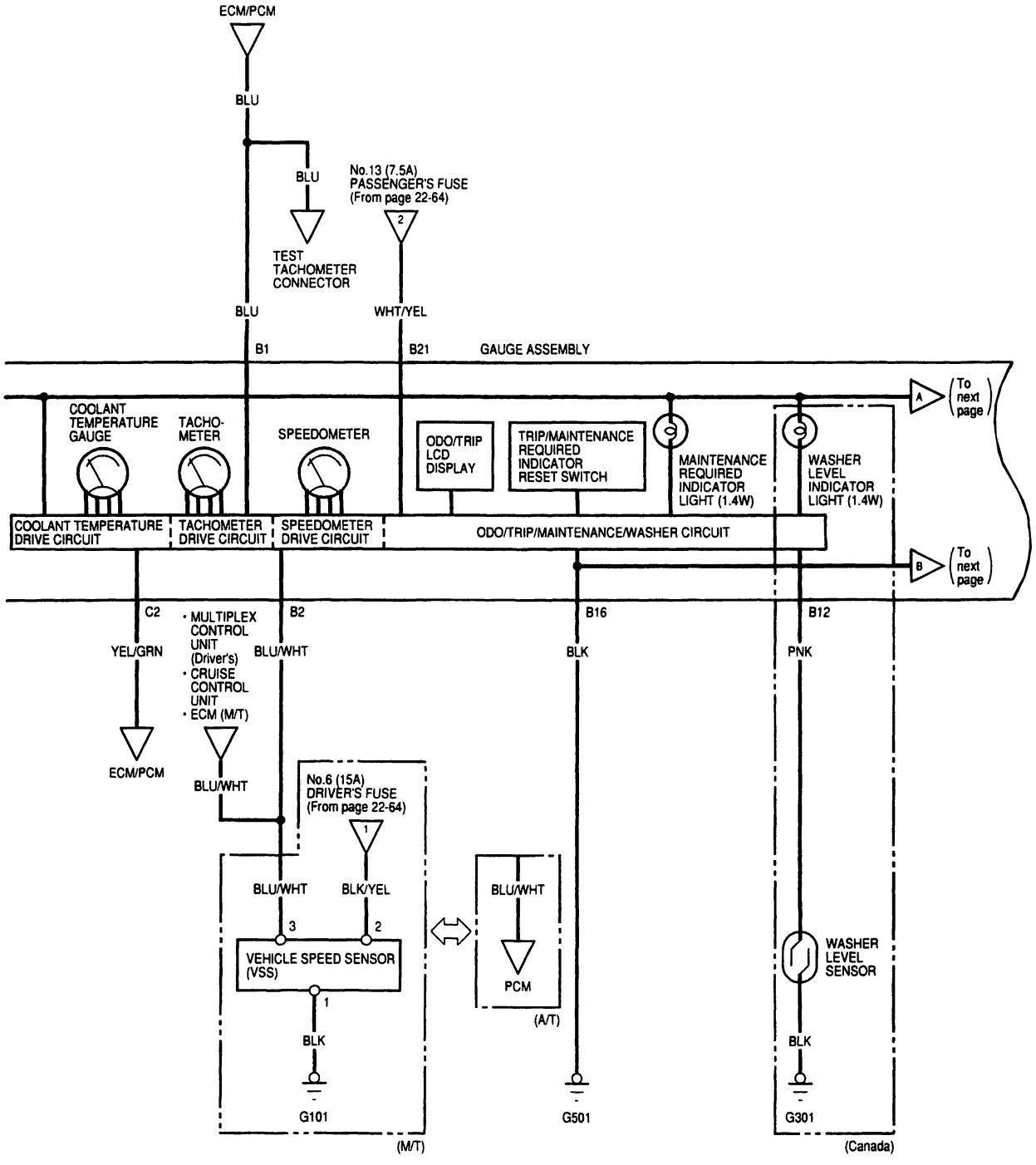
ECM/PCM
BLU
BLU
No.13 (7.5A)
PASSENGER'S FUSE
(From page 22-64)
2
TEST
TACHOMETER
CONNECTOR
BLU
WHT/YEL
B1
B21
GAUGE ASSEMBLY
A
(To next page)
COOLANT TEMPERATURE GAUGE
TACHO-METER
SPEEDOMETER
ODO/TRIP LCD DISPLAY
TRIP/MAINTENANCE REQUIRED INDICATOR RESET SWITCH
MAINTENANCE REQUIRED INDICATOR LIGHT (1.4W)
WASHER LEVEL INDICATOR LIGHT (1.4W)
COOLANT TEMPERATURE DRIVE CIRCUIT
TACHOMETER DRIVE CIRCUIT
SPEEDOMETER DRIVE CIRCUIT
ODO/TRIP/MAINTENANCE/WASHER CIRCUIT
B
(To next page)
C2
B2
B16
B12
YEL/GRN
• MULTIPLEX CONTROL UNIT (Driver's)
• CRUISE CONTROL UNIT
• ECM (M/T)
BLU/WHT
BLK
PNK
ECM/PCM
BLU/WHT
No.6 (15A)
DRIVER'S FUSE
(From page 22-64)
1
BLU/WHT
BLK/YEL
3
2
VEHICLE SPEED SENSOR (VSS)
1
BLK
G101
(M/T)
BLU/WHT
PCM
(A/T)
G501
WASHER LEVEL SENSOR
BLK
G301
(Canada)

(cont'd)

BACK

Circuit Diagram (cont'd)

'00-02 models

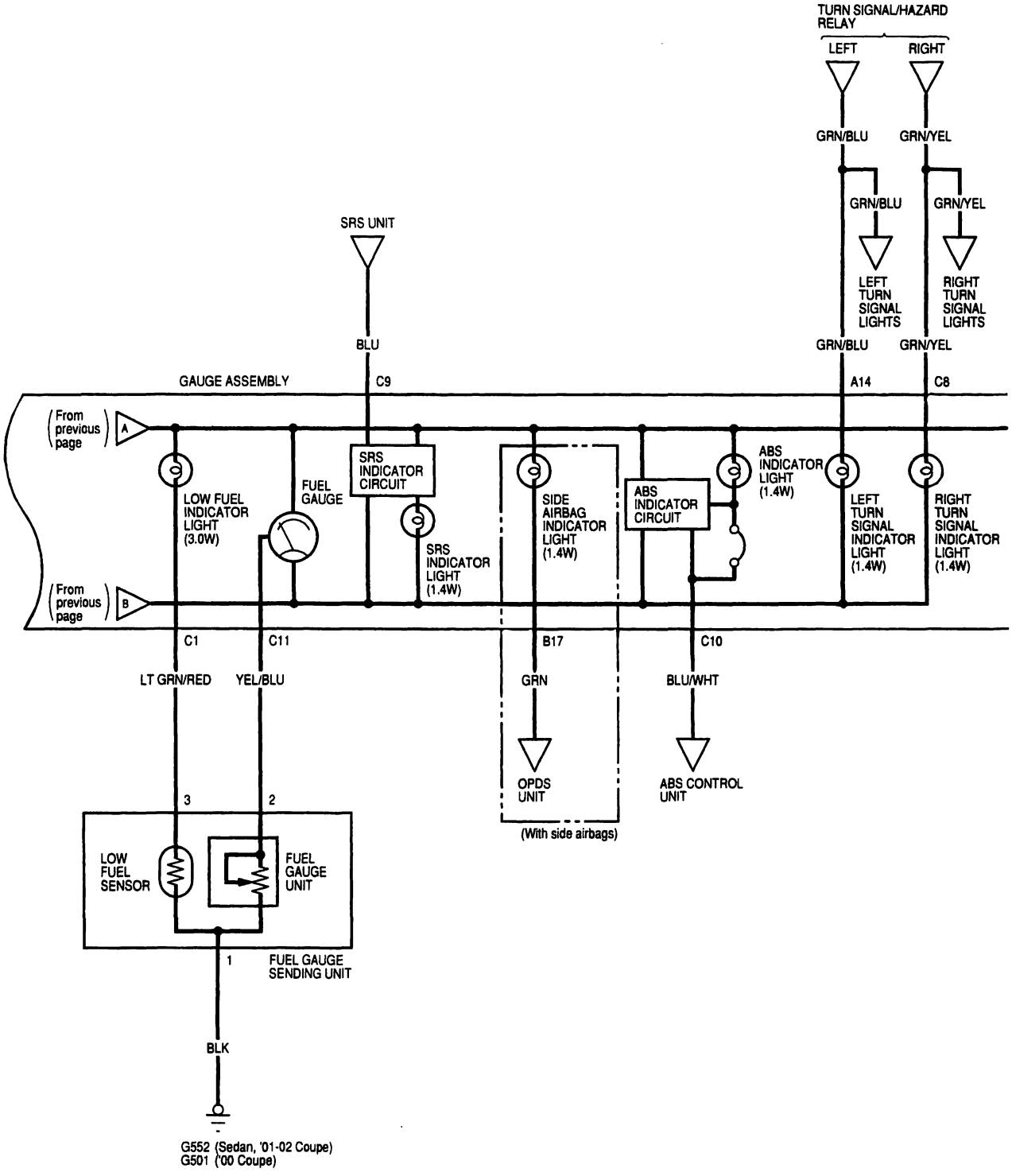

BACK

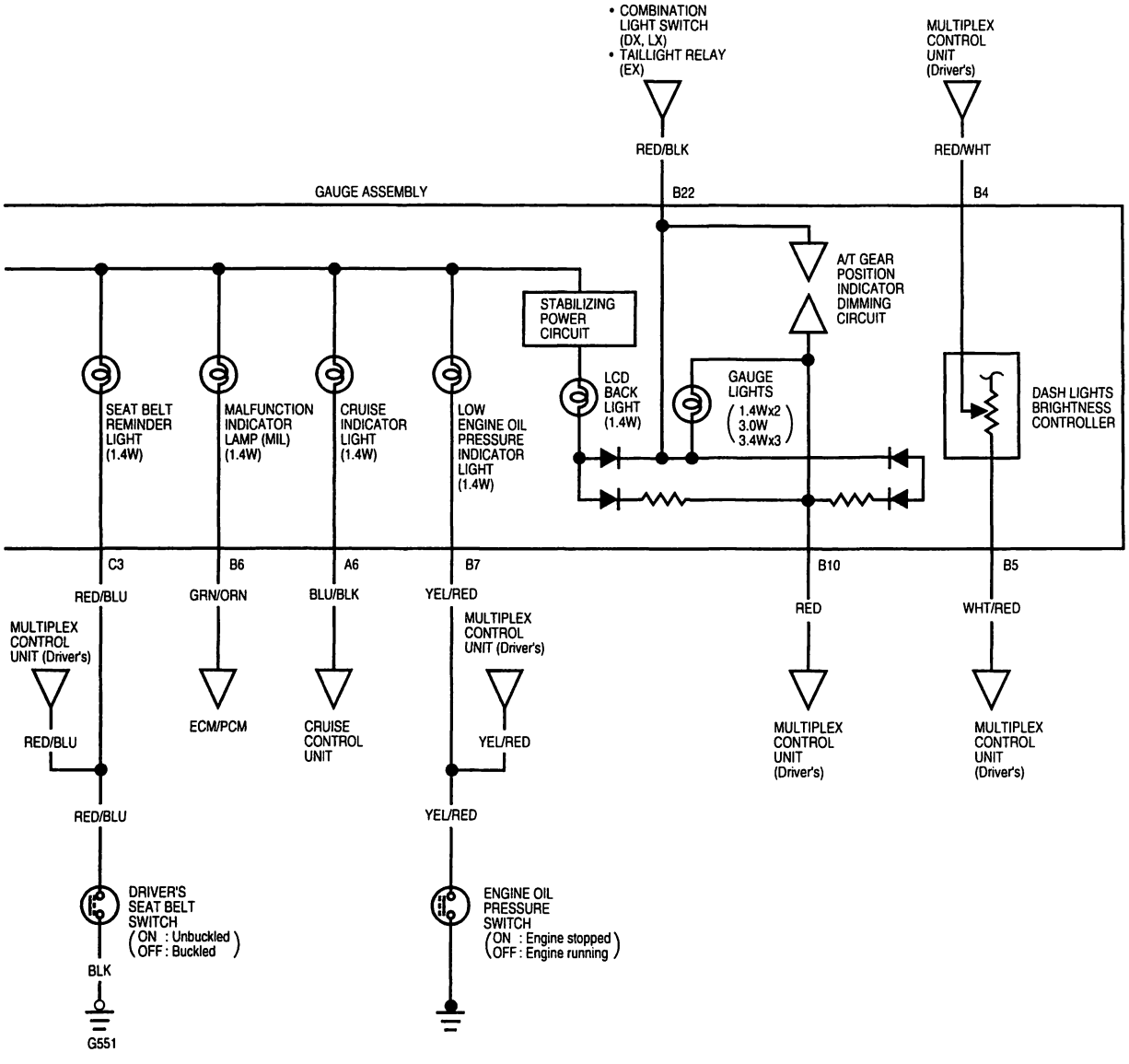
• COMBINATION LIGHT SWITCH (DX, LX)
• TAILLIGHT RELAY (EX)
MULTIPLEX CONTROL UNIT (Driver's)
RED/BLK
RED/WHT
GAUGE ASSEMBLY
B22
B4
A/T GEAR POSITION INDICATOR DIMMING CIRCUIT
STABILIZING POWER CIRCUIT
SEAT BELT REMINDER LIGHT (1.4W)
MALFUNCTION INDICATOR LAMP (MIL) (1.4W)
CRUISE INDICATOR LIGHT (1.4W)
LOW ENGINE OIL PRESSURE INDICATOR LIGHT (1.4W)
LCD BACK LIGHT (1.4W)
GAUGE LIGHTS (1.4Wx2 3.0W 3.4Wx3)
DASH LIGHTS BRIGHTNESS CONTROLLER
C3
B6
A6
B7
B10
B5
RED/BLU
GRN/ORN
BLU/BLK
YEL/RED
RED
WHT/RED
MULTIPLEX CONTROL UNIT (Driver's)
ECM/PCM
CRUISE CONTROL UNIT
MULTIPLEX CONTROL UNIT (Driver's)
MULTIPLEX CONTROL UNIT (Driver's)
MULTIPLEX CONTROL UNIT (Driver's)
RED/BLU
YEL/RED
RED/BLU
YEL/RED
DRIVER'S SEAT BELT SWITCH (ON : Unbuckled OFF : Buckled)
ENGINE OIL PRESSURE SWITCH (ON : Engine stopped OFF : Engine running)
BLK
G551

Gauge Assembly Replacement

1. Remove the instrument panel (see page 20-84).
2. Remove the screws (A) from the gauge assembly (B), and spread a protective cloth (C) on the upper column cover.

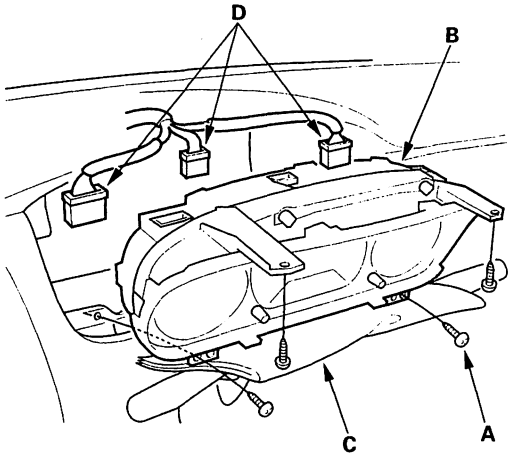

3. Disconnect the connectors (D), and remove the gauge assembly.
4. Install in the reverse order of removal.

VSS Replacement (M/T)

1. Disconnect the 3P connector (A) from the VSS (vehicle speed sensor) (B).

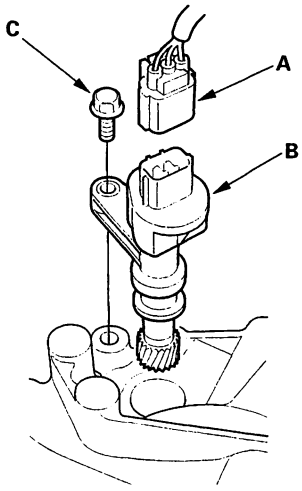

2. Remove the mounting bolt (C), then remove the VSS.
3. Install in the reverse order of removal.

BACK

Vehicle Speed Signal Circuit Troubleshooting (M/T)

Special Tools Required:
Test harness 07LAJ-PT3020A

Before testing, inspect the No. 6 (15A) fuse in the driver's under-dash fuse/relay box.

1. Disconnect the 3P connector from the VSS (vehicle speed sensor) (A).

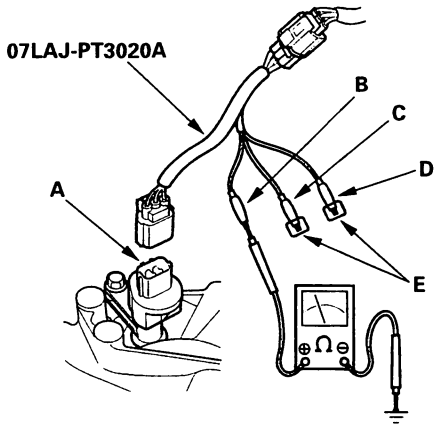

2. Connect the test harness only to the engine wire harness.

3. Connect the RED test harness clip (B) to the positive probe of an ohmmeter. Cover the white (C) and green (D) test harness with protective tape (E).

4. Check for continuity between the RED test harness clip and body ground.

   Is there continuity?

   YES – Go to step 5.

   NO – Repair open in the BLK wire between the VSS and G101.■

5. Connect the WHT test harness clip (C) to the positive probe of a voltmeter, and connect the RED test harness clip (B) to the negative probe.

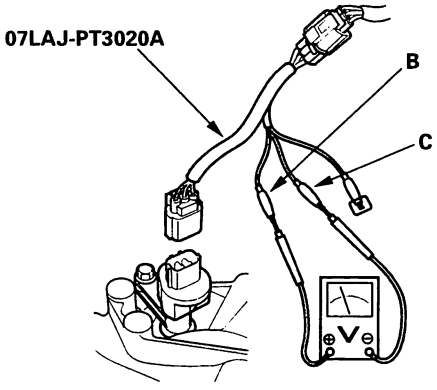

6. Turn the ignition switch ON (II).

   Is there battery voltage?

   YES – Go to step 7.

   NO – Repair open in the BLK/YEL wire between the VSS and the driver's under-dash fuse/relay box.■

7. Disconnect the WHT test harness clip (C).

8. Connect the GRN test harness clip (D) to the positive probe of a voltmeter.

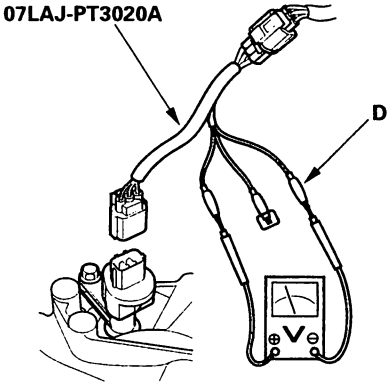

   Is there 5 V or more?

   YES – Go to step 9.

   NO – Repair short in the BLU/WHT wire between the VSS and the ECM, cruise control unit, or the driver's multiplex control unit.■

(cont'd)

Vehicle Speed Signal Circuit Troubleshooting (M/T) (cont'd)

9. Turn the ignition switch OFF.

10. Connect the other test harness connector (A) to the VSS (B).

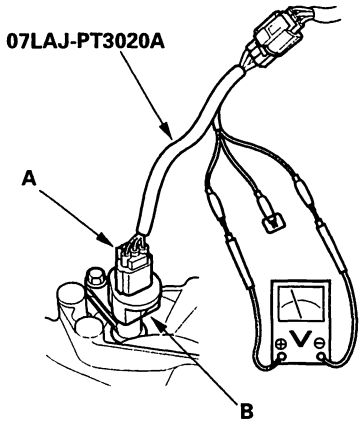

11. Raise the front of the vehicle, and make sure it is securely supported.

12. Put the vehicle in neutral with the ignition switch ON (II).

13. Slowly rotate 1 wheel with the other wheel blocked.

    Does voltage pulse from 0 to approx. 5 V or more?

    YES—Go to step 14.

    NO—Replace the VSS.■

14. Disconnect the 22P connector "B" from the gauge assembly.

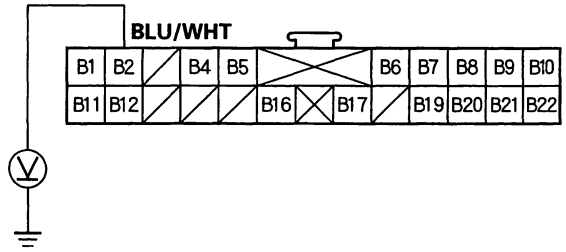

Wire side of female terminals

15. Touch a probe to the BLU/WHT wire, and connect it to body ground through a voltmeter.

16. Slowly rotate one wheel with the other wheel blocked.

    Does the meter indicate pulsing voltage?

    YES—Replace the speedometer.■

    NO—Repair open in the BLU/WHT wire between the VSS and the speedometer.■

BACK

Vehicle Speed Signal Circuit Troubleshooting (A/T)

Before Testing:
- Check to see if diagnostic trouble code P0720 (9) is indicated. If it is, troubleshoot the DTC (see page 14-75).
- Inspect the No. 9 (7.5A) fuse in the driver's under-dash fuse/relay box.
- Check for continuity between the B16 terminal and body ground (G501).

1. Raise the vehicle, and make sure it is securely supported.

2. Disconnect the 22P connector from the gauge assembly.

3. Connect the B2 terminal to the positive probe of a voltmeter, and connect the negative probe to body ground. To prevent damage to the gauge assembly, lay the gauge assembly on a shop rag.

DASHBOARD WIRE HARNESS 22P CONNECTOR B

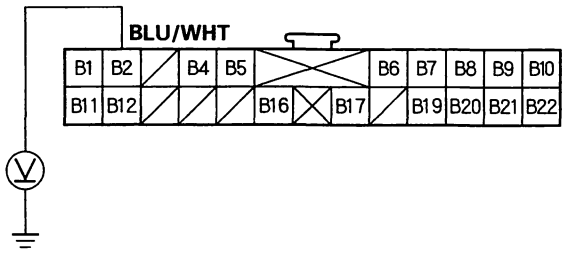

Wire side of female terminals

4. Put the vehicle in neutral with the ignition switch ON (II).

5. Slowly rotate (over 3 mph (2 km/h)) 1 wheel with the other wheel blocked.

   Does voltage pulse from 0 to about 5 V or more?

   YES—Replace the gauge assembly.■

   NO—Go to step 6.

6. Connect the No. 9 terminal of the 32P PCM connector to the positive probe of a voltmeter, and connect the negative probe to body ground.

PCM 32P CONNECTOR (Connected)

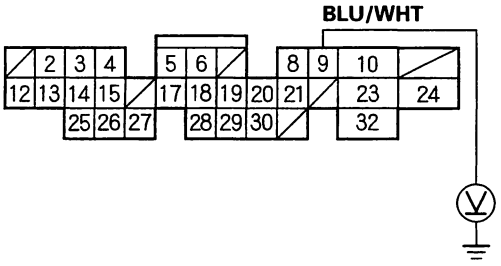

Wire side of female terminals

7. Put the vehicle in neutral with the ignition switch ON (II).

8. Slowly rotate (over 3 mph (2 km/h)) 1 wheel with the other wheel blocked.

   Does voltage pulse from 0 to about 5 V or more?

   YES—Repair open in the BLU/WHT wire between the PCM and the gauge assembly.■
   NO—Check for loose connections at the PCM connector. If necessary; substitute a known-good PCM, and recheck.■

BACK

Maintenance Required Indicator Reset Procedure

How to Reset:

Push the select switch and reset switch at the same time, turn the ignition switch ON (II), and hold them more than 10 seconds.

Blinking Pattern:

Miles (km)	Maintenance Reminder Light
At 5,900 (9,440) to 6,100 (9,760)	Blinks for 10 seconds when the ignition switch is turned ON (II).
At 7,400 (11,840) to 7,600 (12,160)	Comes on and stays on while the ignition switch is ON (II).

BACK

Component Location Index

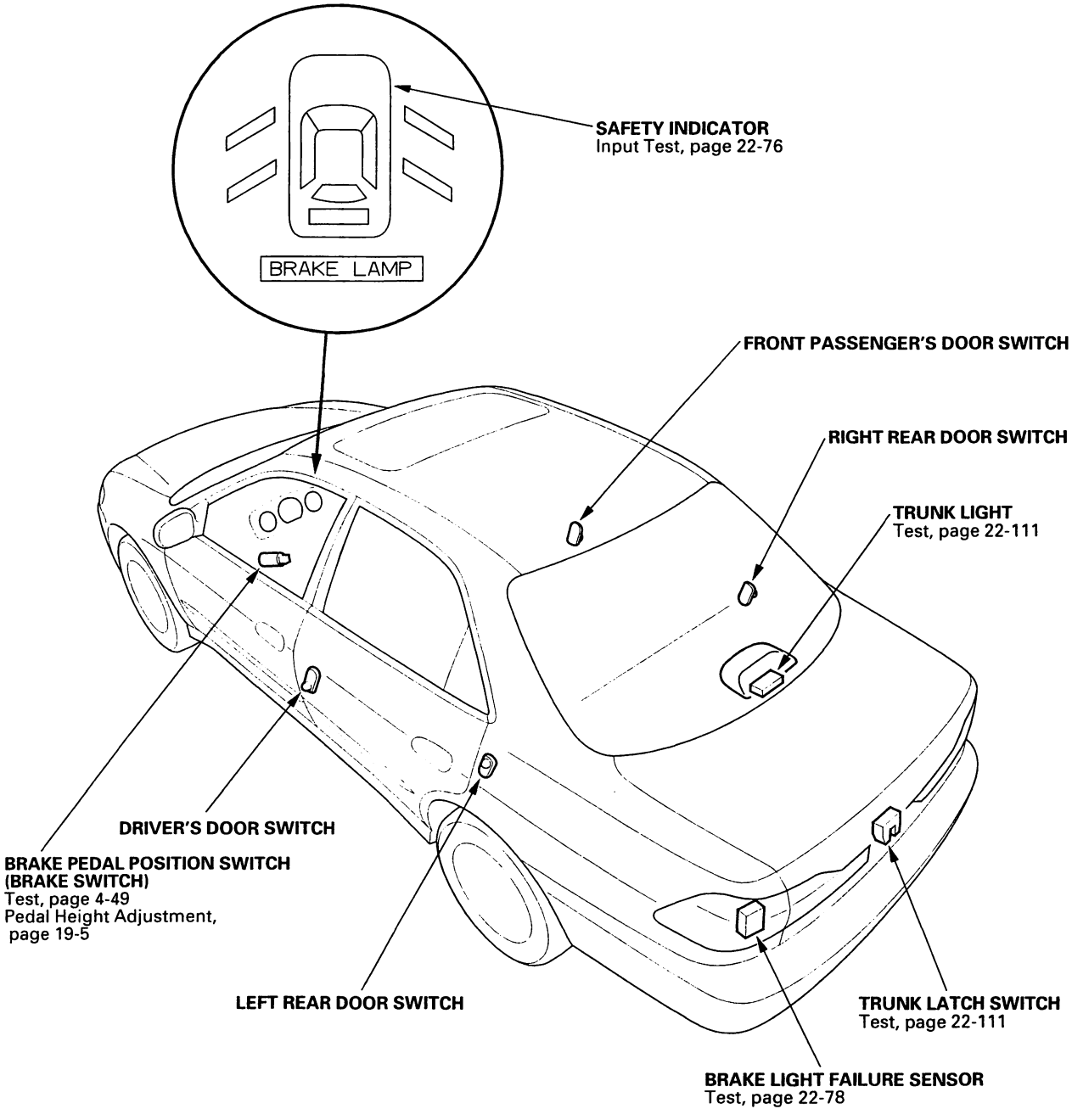

Safety Indicator System

Circuit Diagram

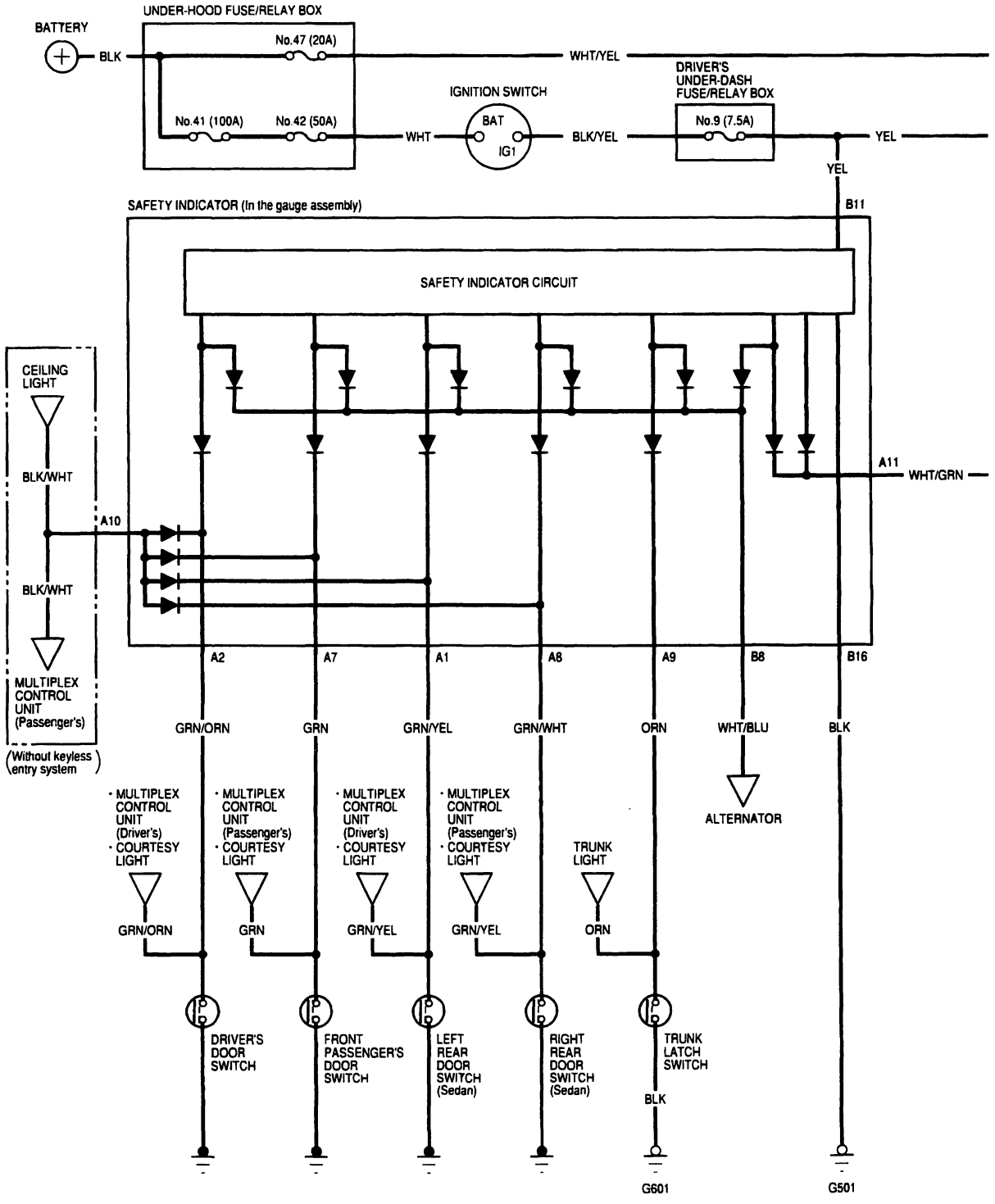

BACK

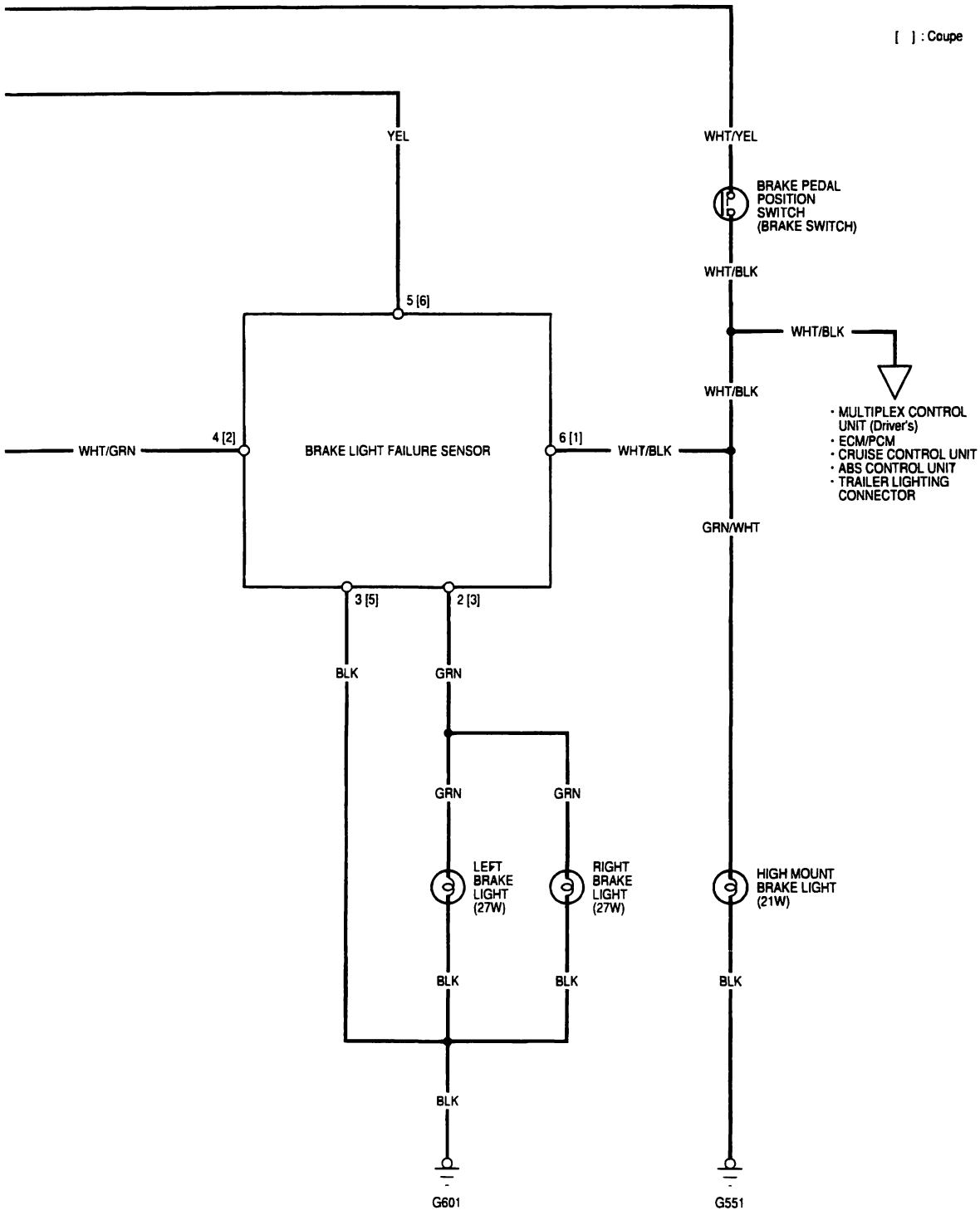
[ ] : Coupe
YEL
WHT/YEL
BRAKE PEDAL POSITION SWITCH (BRAKE SWITCH)
WHT/BLK
5 [6]
WHT/BLK
WHT/BLK
· MULTIPLEX CONTROL UNIT (Driver's)
· ECM/PCM
· CRUISE CONTROL UNIT
· ABS CONTROL UNIT
· TRAILER LIGHTING CONNECTOR
WHT/GRN
4 [2]
BRAKE LIGHT FAILURE SENSOR
6 [1]
WHT/BLK
GRN/WHT
3 [5]
2 [3]
BLK
GRN
GRN
GRN
LEFT BRAKE LIGHT (27W)
RIGHT BRAKE LIGHT (27W)
HIGH MOUNT BRAKE LIGHT (21W)
BLK
BLK
BLK
BLK
G601
G551

Safety Indicator Input Test

SRS components are located in this area. Review the SRS component locations, precautions, and procedures in the SRS section before performing repairs or service (see page 23-28).

1. Remove the gauge assembly (A) from the dashboard (see page 22-68), and disconnect the 22P connector (B) and the 14P connector (C) from the gauge assembly.

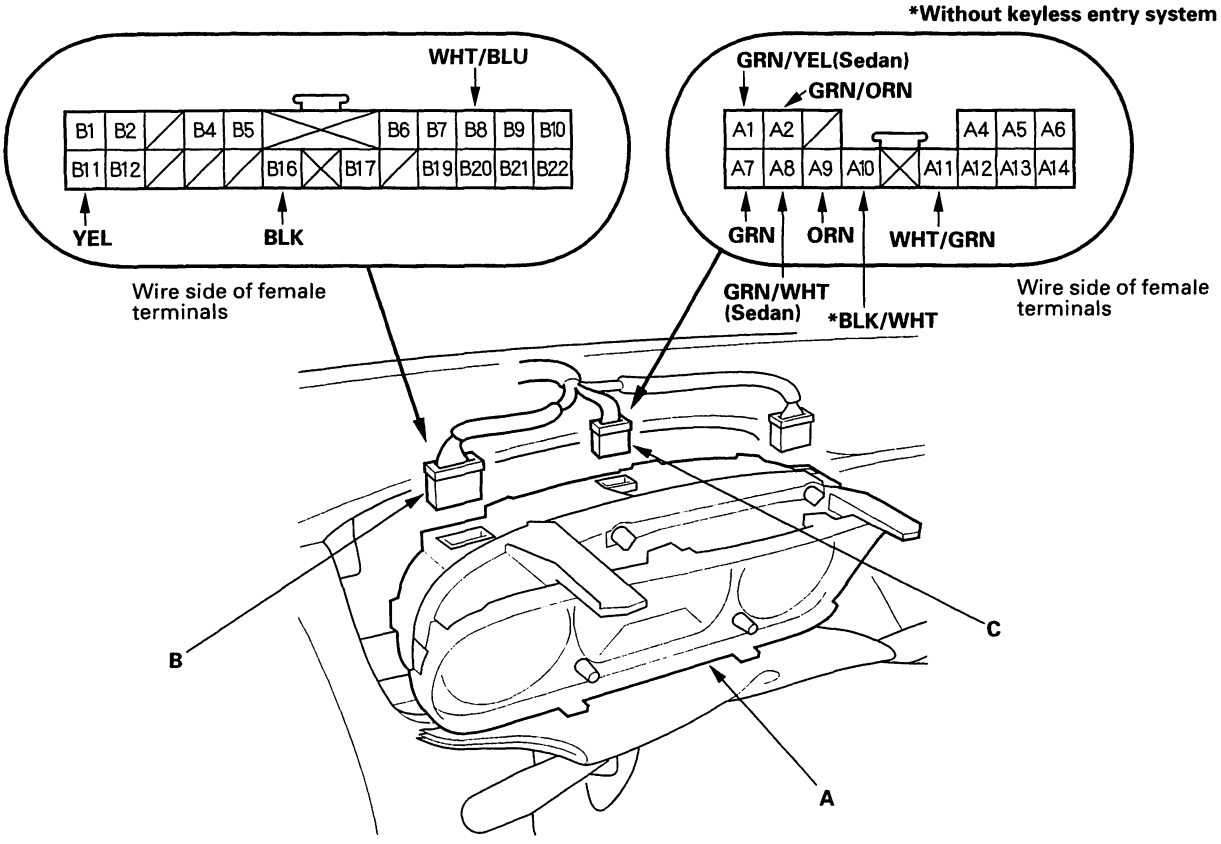

2. Inspect the connector and socket terminals to be sure they are all making good contact.

   - If the terminals are bent, loose or corroded, repair them as necessary, and recheck the system.
   - If the terminals look OK, go to step 3.

3. Make these input tests at the connectors.

   - If any test indicates a problem, find and correct the cause, then recheck the system.
   - If all the input tests prove OK, the printed circuit board must be faulty; replace it.

BACK

Cavity	Wire	Test condition	Test: Desired result	Possible cause if result is not obtained
B16	BLK	Under all conditions	Check for continuity to ground: There should be continuity.	• Poor ground (G501) • An open in the wire
B11	YEL	Ignition switch ON (II)	Check for voltage to ground: There should be battery voltage.	• Blown No. 9 (7.5 A) fuse in the driver's under-dash fuse/relay box • An open in the wire
A11	WHT/GRN	Ignition switch ON (II) and brakes applied	Check for continuity to ground: There should be continuity.	• Blown brake light bulbs • Faulty sensor • A short to ground in the wire
A10	BLK/WHT	Ceiling light switch in middle position (Without keyless entry system)	Connect to ground: The ceiling light should come on.	• Faulty ceiling light • An open in the wire • Blown No. 11 (7.5 A) fuse in the passenger's under-dash fuse/ relay box • Blown ceiling light bulb
A9	ORN	Trunk lid open	Check for continuity to ground: There should be continuity. NOTE: Before testing, remove No. 11 (7.5 A) fuse from the passenger's under-dash fuse/ relay box.	• Faulty trunk latch switch • An open in the wire
A7	GRN	Front passenger's door open		• Faulty front passenger's door switch • An open in the wire
A2	GRN/ORN	Driver's door open		• Faulty driver's door switch • An open in the wire
A1	GRN/YEL	Left rear door open (Sedan)		• Faulty left rear door switch • An open in the wire
A8	GRN/WHT	Right rear door open (Sedan)		• Faulty right rear door switch • An open in the wire
B8	WHT/BLU	Engine running	Check for voltage to ground: There should be battery voltage.	• Faulty charging system • An open in the wire

Brake Light Failure Sensor Test

1. First make sure the brake lights come on when the brake pedal is pressed.

   - If all the brake lights come on, go to step 2.
   - If one of the brake lights does not come on, check whether the bulb is blown. If the bulb is OK, go to step 2.
   - If none of the brake lights come on, check the brake light circuit (see page 22-91).

2. Open the trunk lid, and remove the left trunk side trim (see page 20-78).

   Sedan:

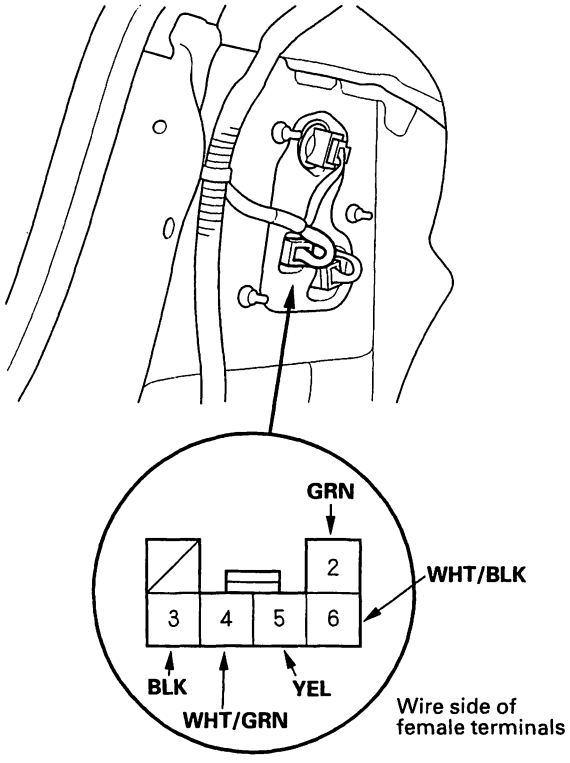

   Coupe:

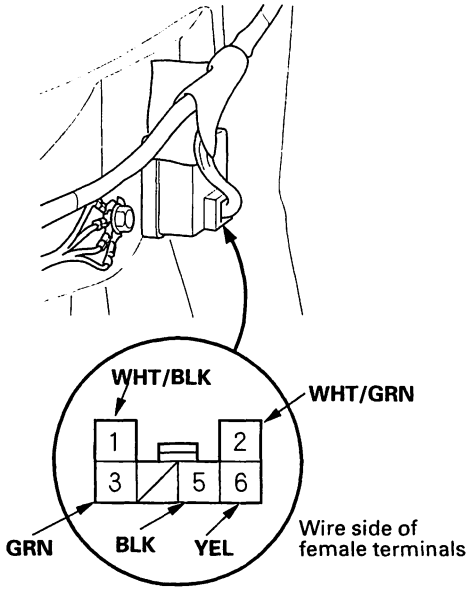

3. Make sure the BRAKE LAMP light in the safety indicator does not come on and stay on when the 6P connector is disconnected and the engine is running. If the BRAKE LAMP light in the safety indicator comes on and stays on, check for:

   - a short to body ground in the WHT/GRN wire between the safety indicator and the No. 4 (Sedan) or 2 (Coupe) terminal of the failure sensor.
   - a faulty safety indicator circuit (printed circuit board) in the gauge assembly.

4. Reconnect the 6P connector. Make sure the BRAKE LAMP light in the safety indicator comes on and goes off when the No. 3 (Sedan) or 5 (Coupe) terminal of the 6P connector is grounded, the brake pedal is pressed, and the engine is running.

   - If the BRAKE LAMP light does not go off, replace the failure sensor.
   - If the BRAKE LAMP light goes off, check for:
     - a poor ground (G601).
     - an open in the BLK wire.

BACK

Circuit Diagram

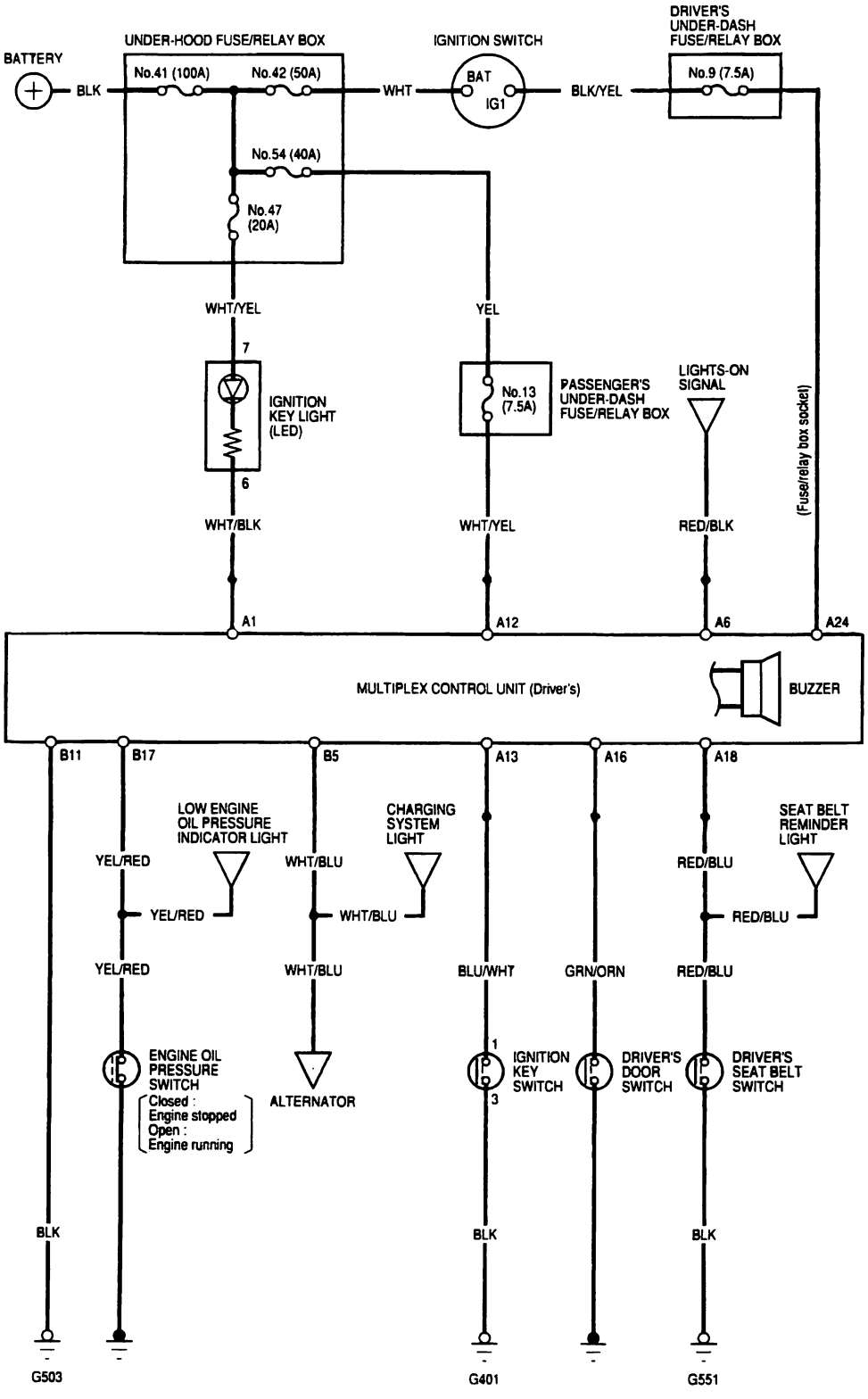

Control Unit Input Test

1. Before testing these systems, troubleshoot the multiplex control system (see page 22-137).

Multiplex Control Unit, Driver's:

2. Remove the driver's multiplex control unit from the driver's under-dash fuse/relay box.

3. Inspect the connector and socket terminals to be sure they are all making good contact.

   - If the terminals are bent, loose or corroded, repair them as necessary, and recheck the system.
   - If the terminals look OK, go to step 4.

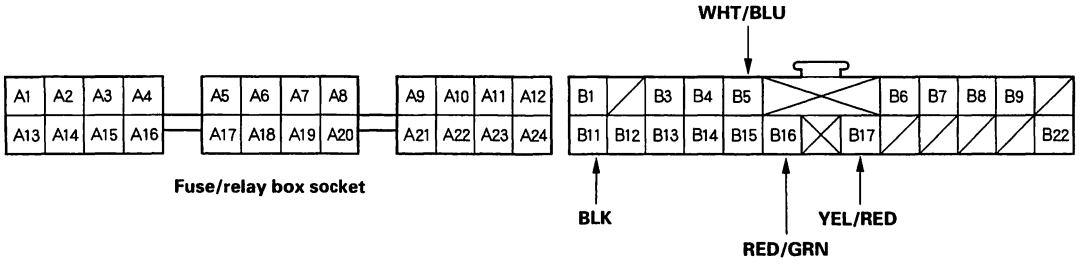

Wire side of female terminals

4. Make these input tests at the connector and fuse/relay box socket.

   - If any test indicates a problem, find and correct the cause, then recheck the system.
   - If all the input tests prove OK, the control unit must be faulty; replace it.

Lights-on Reminder:

Cavity	Wire	Test condition	Test: Desired result	Possible cause if result is not obtained
B11	BLK	Under all conditions	Check for continuity to ground: There should be continuity.	• Poor ground (G503) • An open in the wire
A6	Fuse/relay box socket	Combination light switch ON Jump battery voltage to B16 (RED/GRN) on automatic lights off feature only	Check for voltage to ground: There should be battery voltage.	• Blown No. 10 (10 or 15A) fuse in the passenger's under-dash fuse/relay box • Faulty combination light switch • An open in the wire
A16	Fuse/relay box socket	Driver's door open	Check for voltage to ground: There should be 1 V or less.	• Faulty driver's door switch • An open in the wire

Seat Belt Reminder:

Cavity	Wire	Test condition	Test: Desired result	Possible cause if result is not obtained
B11	BLK	Under all conditions	Check for continuity to ground: There should be continuity.	• Poor ground (G503) • An open in the wire
A24	Fuse/relay box socket	Ignition switch ON (II)	Check for voltage to ground: There should be battery voltage.	• Blown No. 9 (7.5A) fuse in the driver's under-dash fuse/relay box • Faulty driver's under-dash fuse/relay box
A18	Fuse/relay box socket	Driver's seat belt is not buckled.	Check for continuity to ground: There should be continuity.	• Faulty seat belt switch • Poor ground (G551) • An open in the wire

Engine Oil Pressure Indicator Flasher:

Cavity	Wire	Test condition	Test: Desired result	Possible cause if result is not obtained
B11	BLK	Under all conditions	Check for continuity to ground: There should be continuity.	• Poor ground (G503) • An open in the wire
A24	Fuse/relay box socket	Ignition switch ON (II)	Check for voltage to ground: There should be battery voltage.	• Blown No. 9 (7.5A) fuse in the driver's under-dash fuse/relay box • Faulty driver's under-dash fuse/ relay box
B5	WHT/BLU	Engine running	Check for voltage to ground: There should be battery voltage.	• Faulty charging system • An open in the wire
B17	YEL/RED	Ignition switch OFF	Check for continuity to ground: There should be continuity.	• Faulty engine oil pressure switch • An open in the wire
		Ignition switch ON (II)	Check light operation. If the light does not come on, attach the YEL/RED terminal to ground: Light should come on as the ignition switch is turned ON (II).	• Blown bulb • An open in the wire
		Start the engine.	Check for voltage to ground: There should be battery voltage.	• Insufficient oil • Improper lubrication • Faulty engine oil pressure switch • A short in the wire

Key Light Timer:

Cavity	Wire	Test condition	Test: Desired result	Possible cause if result is not obtained
B11	BLK	Under all conditions	Check for continuity to ground: There should be continuity	• Poor ground (G503) • An open in the wire
A12	Fuse/relay box socket	Under all conditions	Check for voltage to ground: There should be battery voltage.	• Blown No. 13 (7.5A) fuse in the passenger's under-dash fuse/ relay box • An open in the wire
A1	Fuse/relay box socket	Under all conditions	Attach to ground: Ignition key light should come on.	• Blown No. 47 (20A) fuse in the under-hood fuse/relay box • An open in the wire
A16	Fuse/relay box socket	Driver's door open	Check for voltage to ground: There should be 1V or less.	• Faulty driver's door switch • An open in the wire

Key-in Reminder:

Cavity	Wire	Test condition	Test: Desired result	Possible cause if result is not obtained
B11	BLK	Under all conditions	Check for continuity to ground: There should be continuity.	• Poor ground (G503) • An open in the wire
A24	Fuse/relay box socket	Ignition switch ON (II)	Check for voltage to ground: There should be battery voltage.	• Blown No. 9 (7.5A) fuse in the driver's under-dash fuse/relay box • Faulty driver's under-dash fuse/ relay box
A16	Fuse/relay box socket	Driver's door open	Check for voltage to ground: There should be 1 V or less.	• Faulty driver's door switch • An open in the wire
A13	Fuse/relay box socket	Ignition key is inserted into the ignition switch.	Check for voltage to ground: There should be 1 V or less.	• Faulty ignition key switch • Poor ground (G401) • An open in the wire

Component Location Index

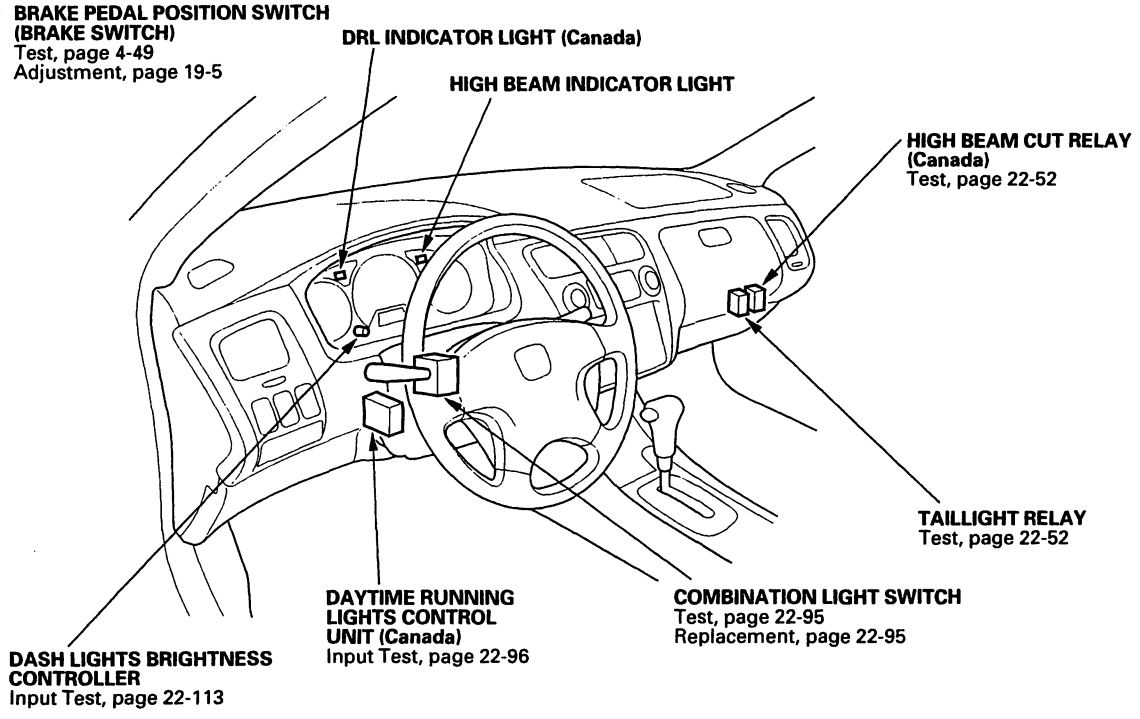

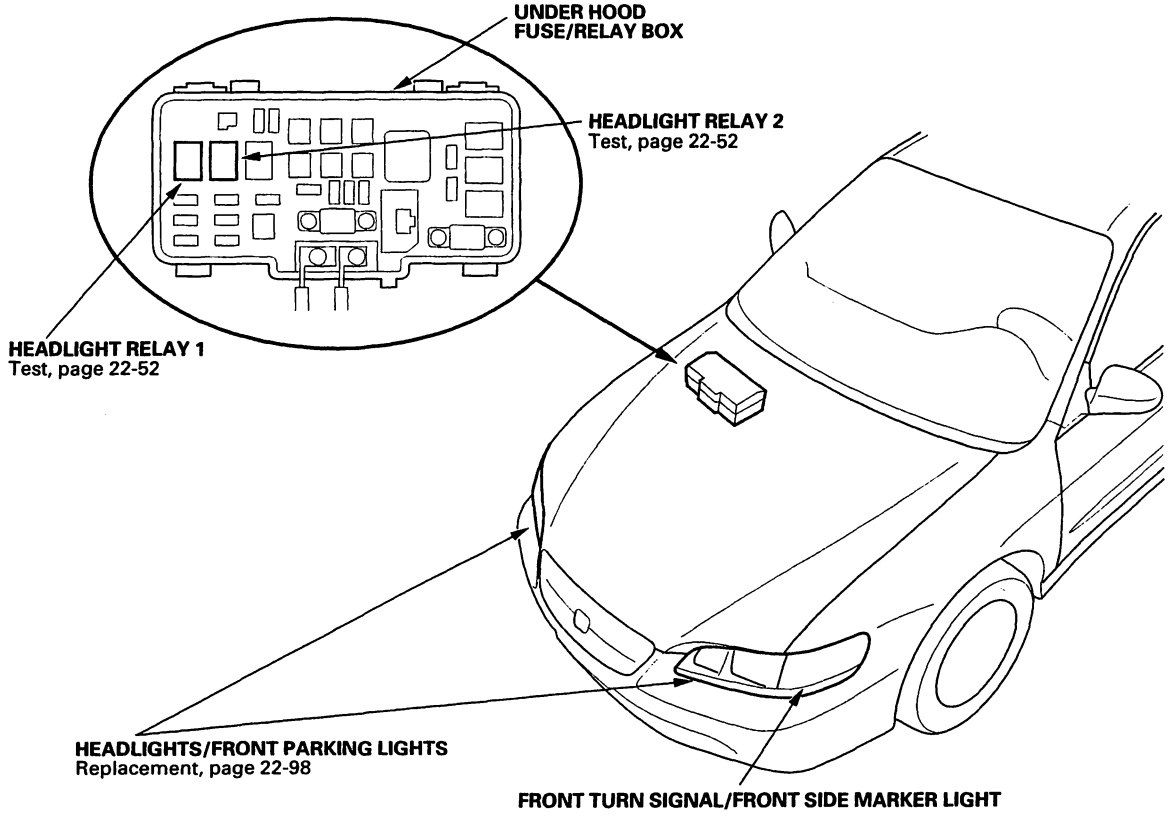

BACK

Sedan:

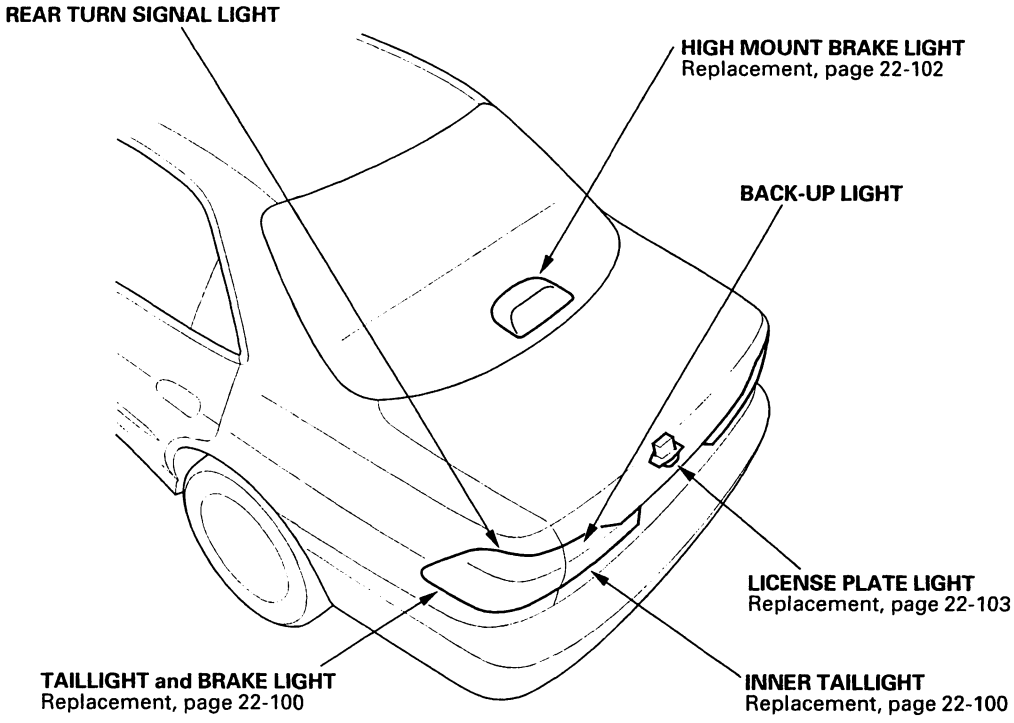
REAR TURN SIGNAL LIGHT
HIGH MOUNT BRAKE LIGHT
Replacement, page 22-102
BACK-UP LIGHT
LICENSE PLATE LIGHT
Replacement, page 22-103
TAILLIGHT and BRAKE LIGHT
Replacement, page 22-100
INNER TAILLIGHT
Replacement, page 22-100

Coupe:

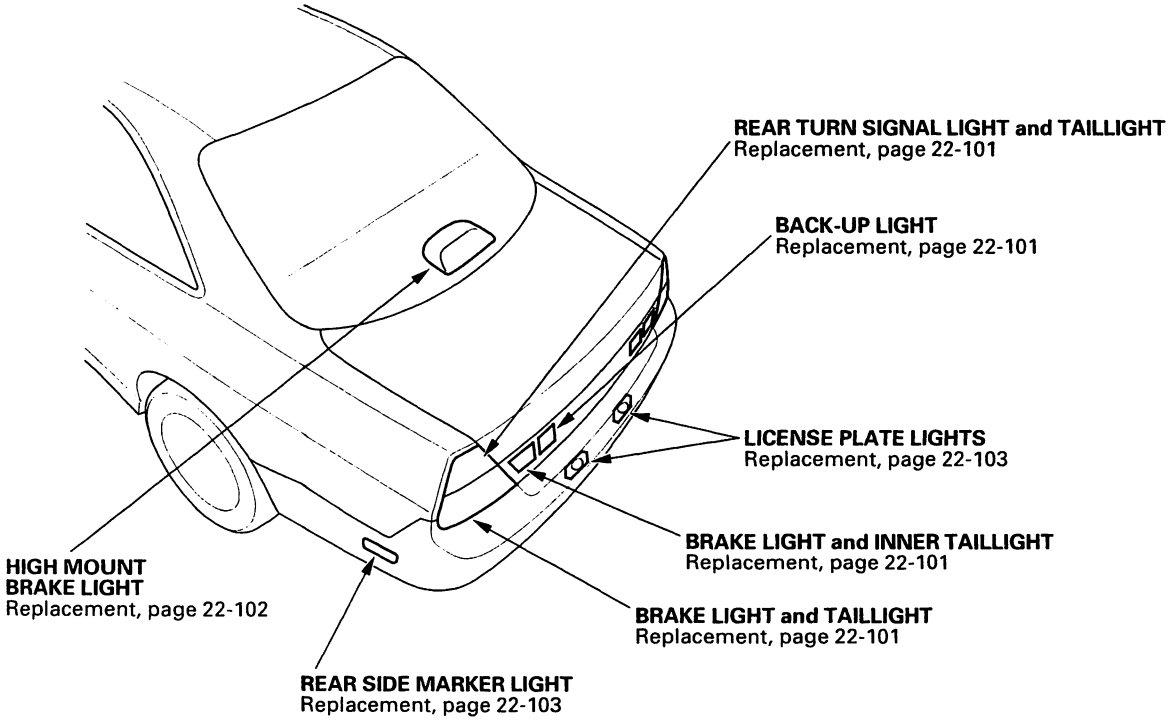
REAR TURN SIGNAL LIGHT and TAILLIGHT
Replacement, page 22-101
BACK-UP LIGHT
Replacement, page 22-101
LICENSE PLATE LIGHTS
Replacement, page 22-103
BRAKE LIGHT and INNER TAILLIGHT
Replacement, page 22-101
HIGH MOUNT
BRAKE LIGHT
Replacement, page 22-102
BRAKE LIGHT and TAILLIGHT
Replacement, page 22-101
REAR SIDE MARKER LIGHT
Replacement, page 22-103

Circuit Diagram - USA with Automatic Lights-off Feature

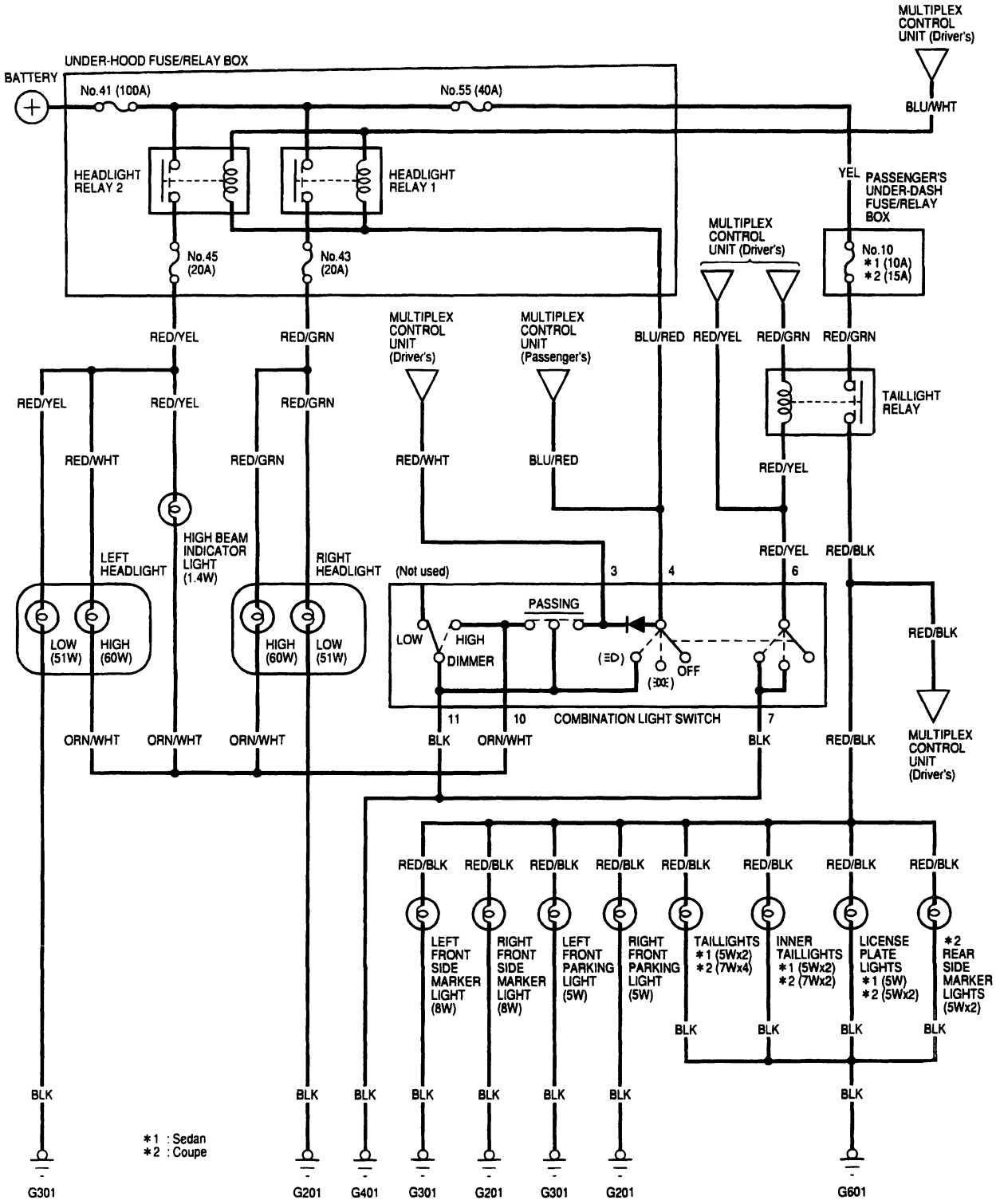

BACK

Circuit Diagram - USA without Automatic Lights-off Feature

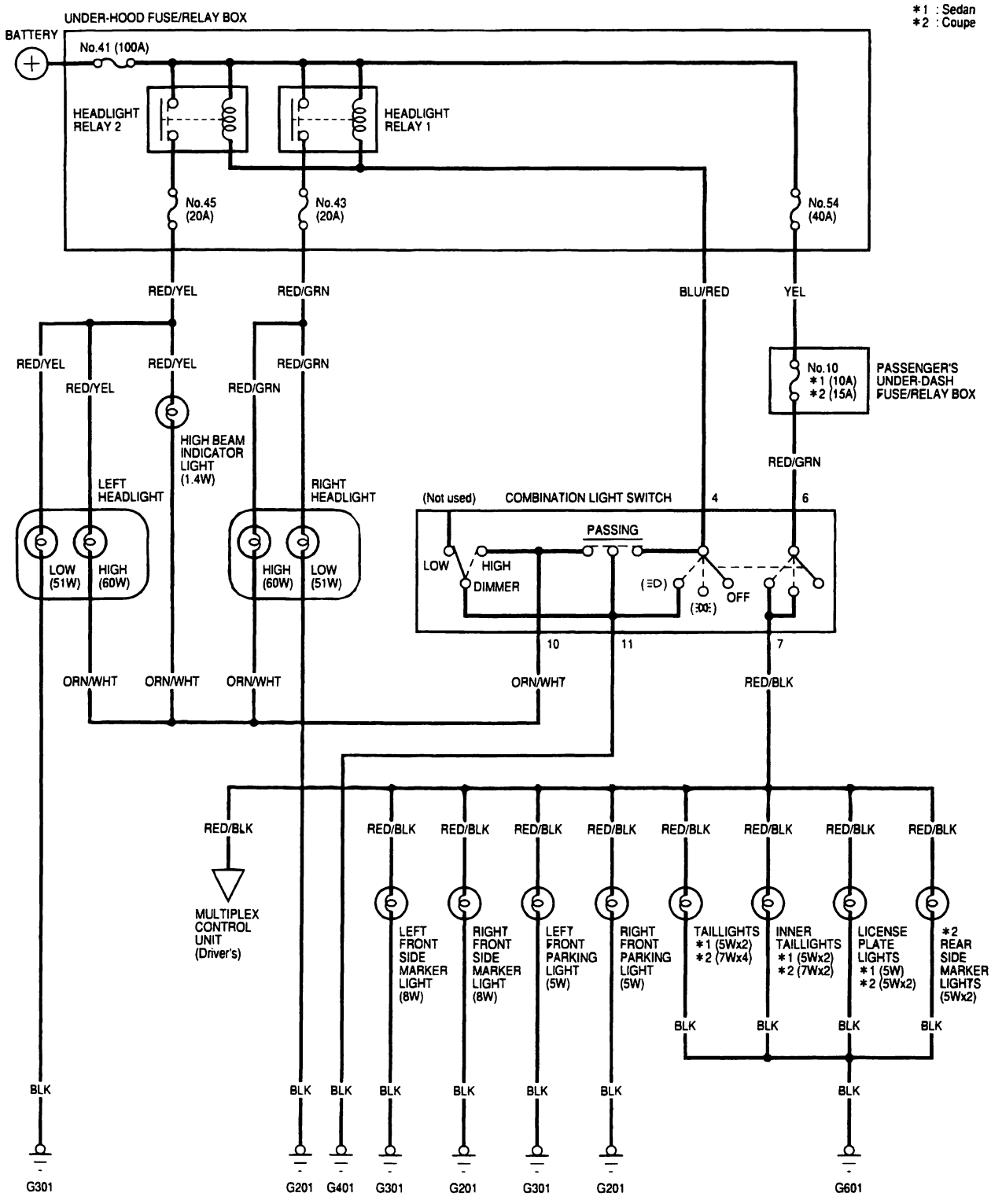

BACK

Circuit Diagram - Canada with Automatic Lights-off Feature

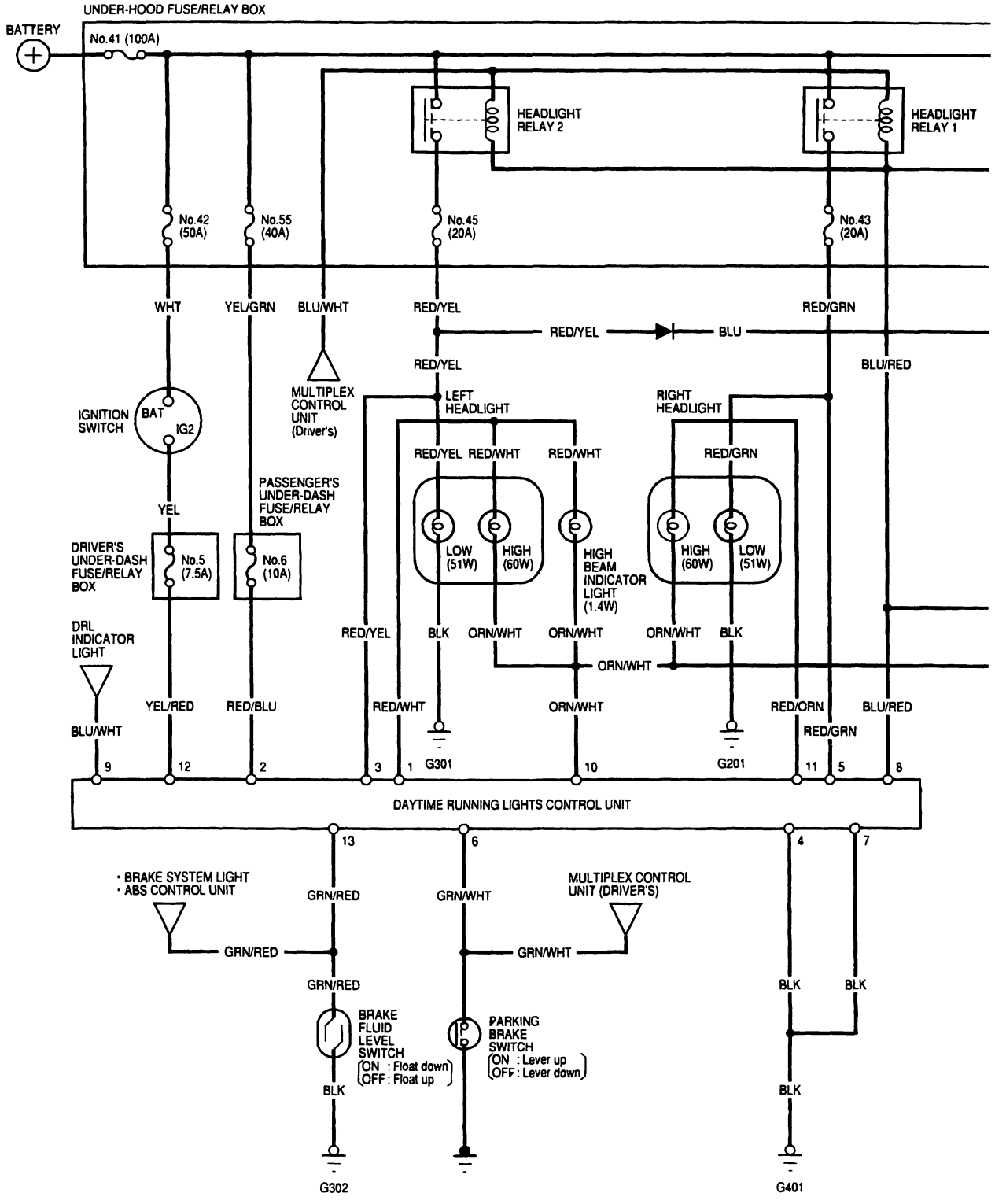

BACK

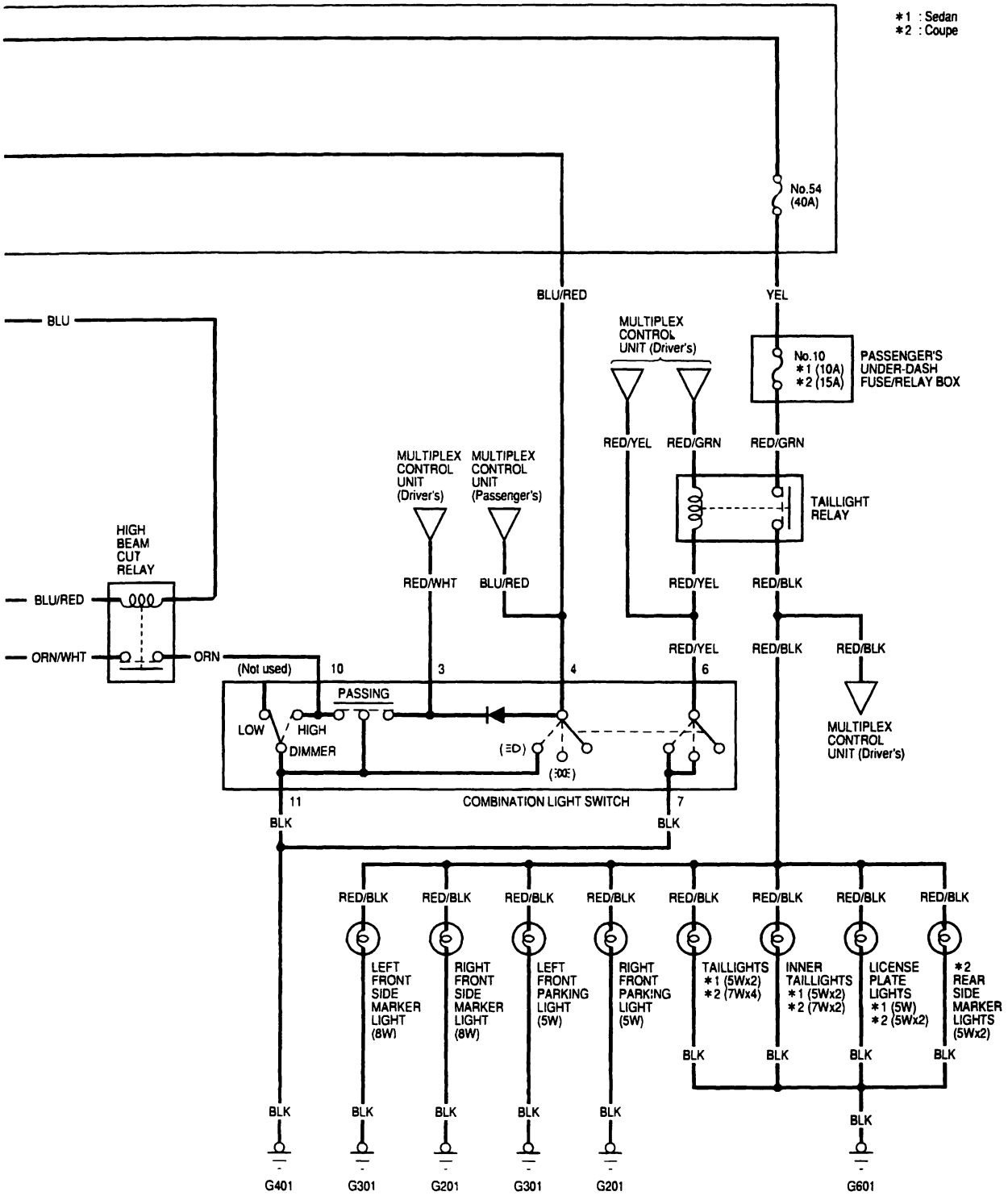
*1 : Sedan
*2 : Coupe
No.54
(40A)
BLU/RED
YEL
BLU
MULTIPLEX
CONTROL
UNIT (Driver's)
No.10
*1 (10A)
*2 (15A)
PASSENGER'S
UNDER-DASH
FUSE/RELAY BOX
RED/YEL
RED/GRN
RED/GRN
MULTIPLEX
CONTROL
UNIT
(Driver's)
MULTIPLEX
CONTROL
UNIT
(Passenger's)
TAILLIGHT
RELAY
HIGH
BEAM
CUT
RELAY
RED/WHT
BLU/RED
RED/YEL
RED/BLK
BLU/RED
ORN/WHT
ORN
(Not used)
10
3
4
6
RED/YEL
RED/BLK
RED/BLK
PASSING
LOW
HIGH
DIMMER
MULTIPLEX
CONTROL
UNIT (Driver's)
11
COMBINATION LIGHT SWITCH
7
BLK
BLK
RED/BLK
LEFT
FRONT
SIDE
MARKER
LIGHT
(8W)
RIGHT
FRONT
SIDE
MARKER
LIGHT
(8W)
LEFT
FRONT
PARKING
LIGHT
(5W)
RIGHT
FRONT
PARKING
LIGHT
(5W)
TAILLIGHTS
*1 (5Wx2)
*2 (7Wx4)
INNER
TAILLIGHTS
*1 (5Wx2)
*2 (7Wx2)
LICENSE
PLATE
LIGHTS
*1 (5W)
*2 (5Wx2)
*2
REAR
SIDE
MARKER
LIGHTS
(5Wx2)
BLK
G401
G301
G201
G301
G201
G601

BACK

Circuit Diagram - Canada without Automatic Lights-off Feature

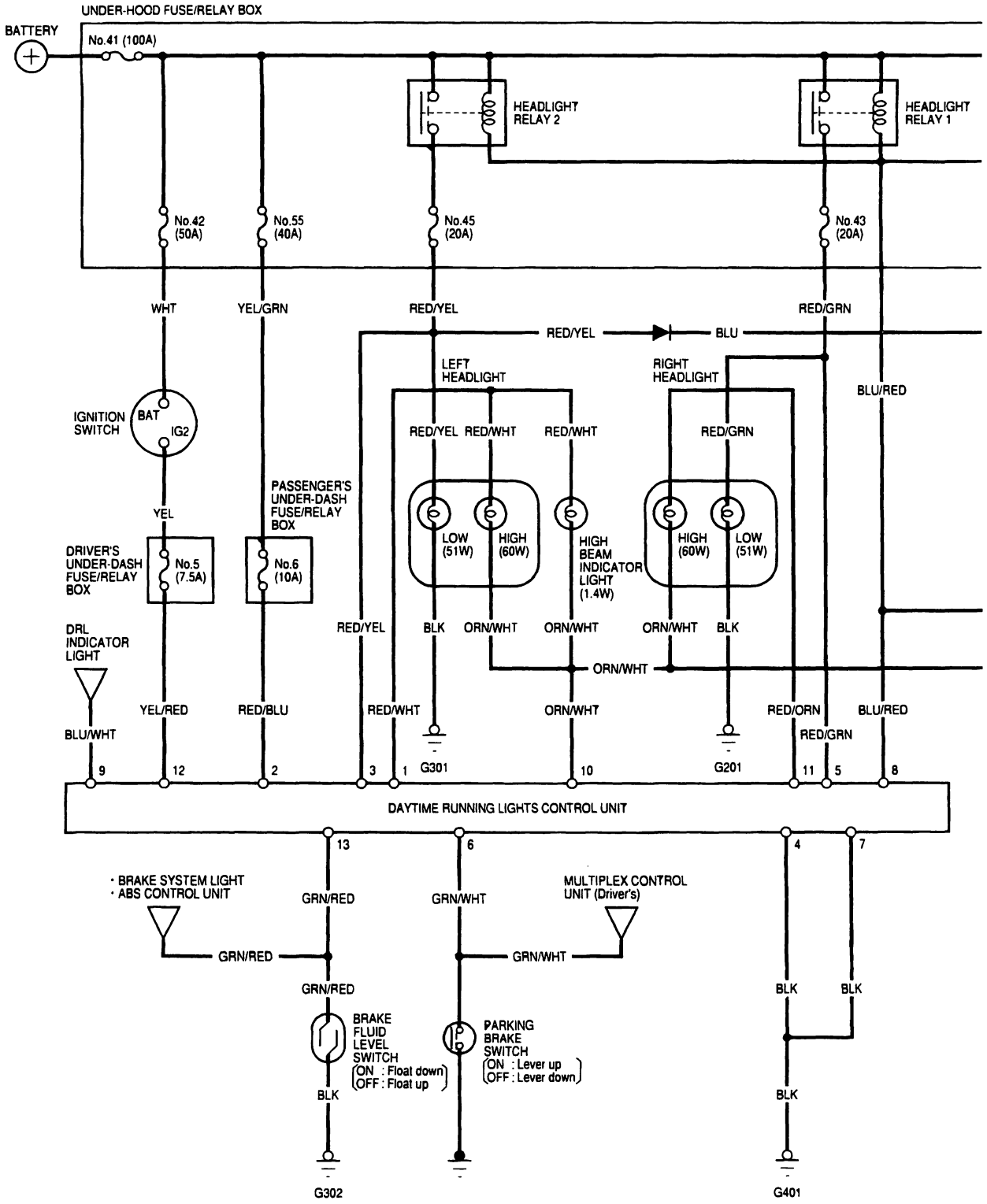

BACK

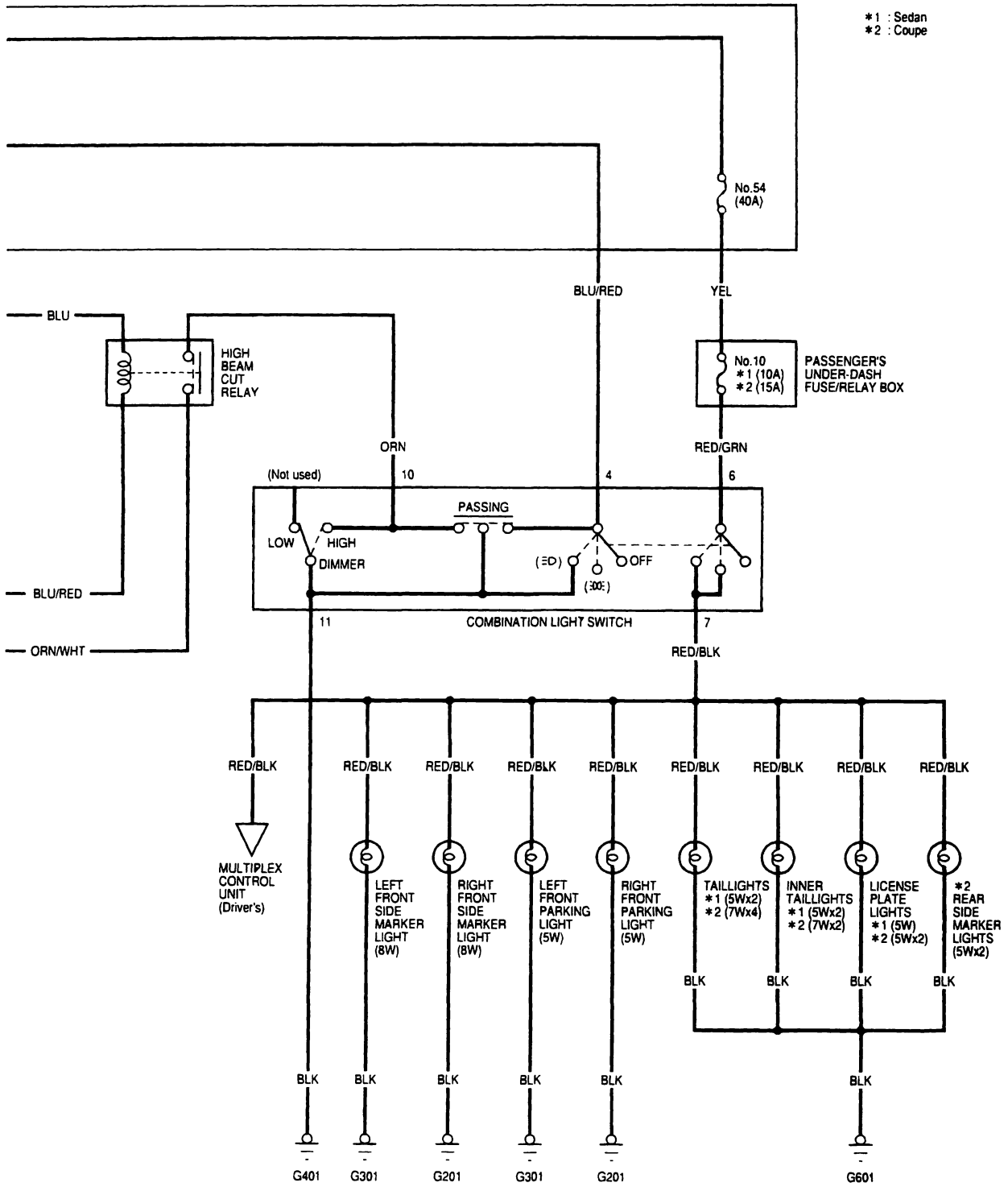
*1 : Sedan
*2 : Coupe
No.54
(40A)
BLU/RED
YEL
BLU
HIGH
BEAM
CUT
RELAY
No.10
*1 (10A)
*2 (15A)
PASSENGER'S
UNDER-DASH
FUSE/RELAY BOX
ORN
RED/GRN
(Not used)
10
4
6
PASSING
LOW
HIGH
DIMMER
OFF
BLU/RED
ORN/WHT
11
COMBINATION LIGHT SWITCH
7
RED/BLK
MULTIPLEX
CONTROL
UNIT
(Driver's)
LEFT
FRONT
SIDE
MARKER
LIGHT
(8W)
RIGHT
FRONT
SIDE
MARKER
LIGHT
(8W)
LEFT
FRONT
PARKING
LIGHT
(5W)
RIGHT
FRONT
PARKING
LIGHT
(5W)
TAILLIGHTS
*1 (5Wx2)
*2 (7Wx4)
INNER
TAILLIGHTS
*1 (5Wx2)
*2 (7Wx2)
LICENSE
PLATE
LIGHTS
*1 (5W)
*2 (5Wx2)
*2
REAR
SIDE
MARKER
LIGHTS
(5Wx2)
BLK
G401
G301
G201
G301
G201
G601

Circuit Diagram - Back-up Lights

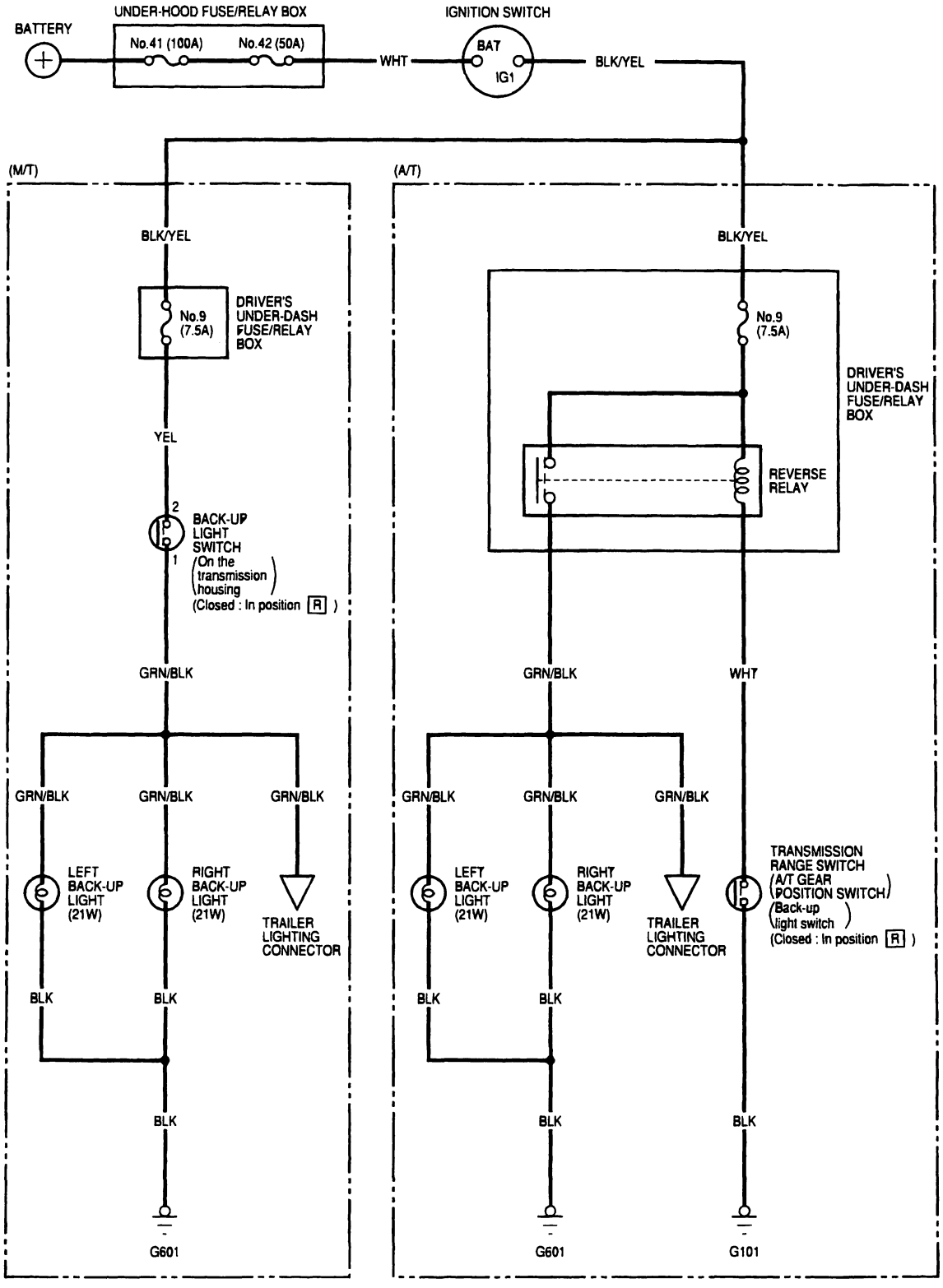

BACK

Circuit Diagram - Brake Lights

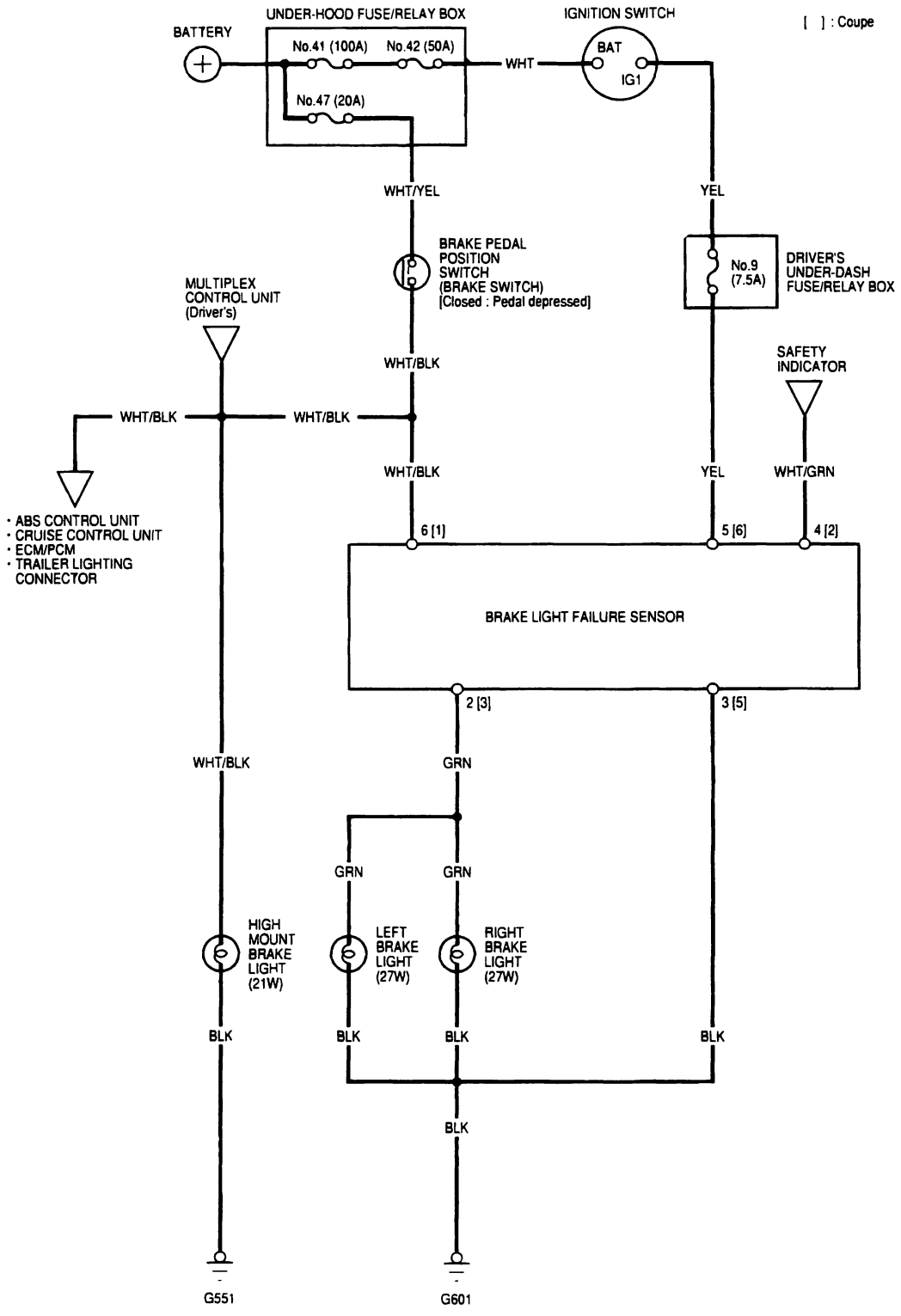

Circuit Diagram - Auto-off Headlights

Automatic Light Off Feature

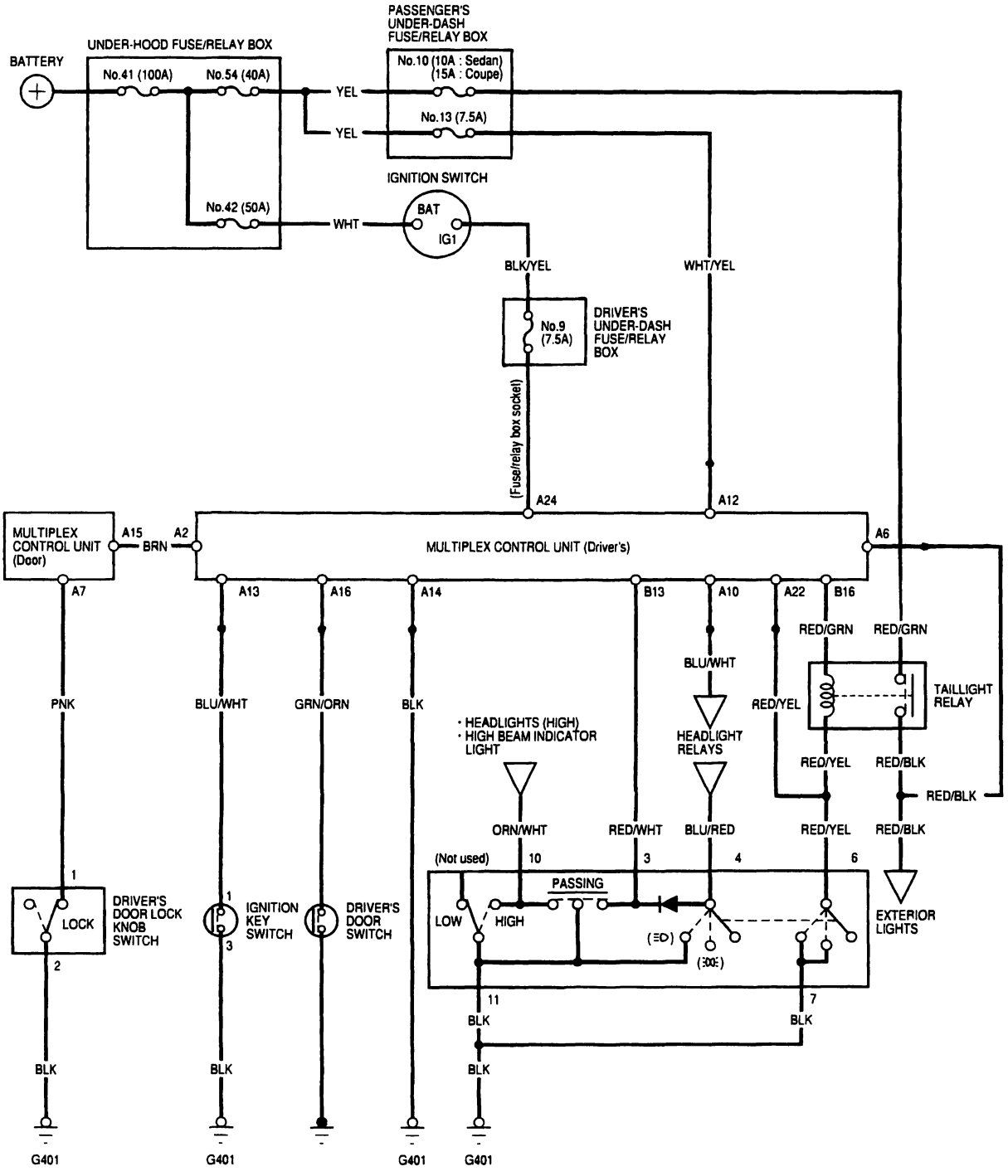

BACK

Control Unit Input Test

1. Before testing exterior light control functions, troubleshoot the multiplex control system (see page 22-137).

Multiplex Control Unit, Driver's:

2. Remove the driver's multiplex control unit from the driver's under-dash fuse/relay box.

3. Inspect the connector and socket terminals to be sure they are all making good contact.
   - If the terminals are bent, loose or corroded, repair them as necessary, and recheck the system.
   - If the terminals look OK, go to step 4.

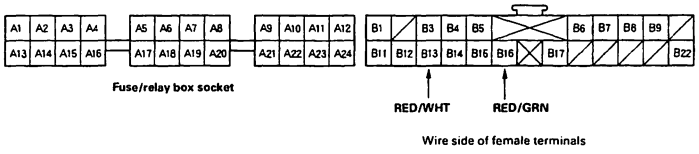

4. Make these input tests at the connector or fuse/relay box socket.
   - If any test indicates a problem, find and correct the cause, then recheck the system.
   - If all the input tests prove OK, go to step 5.

Cavity	Wire	Test condition	Test: Desired result	Possible cause if result is not obtained
A24	Fuse/relay box socket	Ignition switch ON (II)	Check for voltage to ground: There should be battery voltage.	• Blown No. 9 (7.5A) fuse in the driver's under-dash fuse/relay box • An open in the wire • Faulty driver's under-dash fuse/relay box
A12		Under all conditions	Check for voltage to ground: There should be battery voltage.	• Blown No. 13 (7.5A) fuse in the passenger's under-dash fuse/relay box • An open in the wire
A13		Ignition key is in the ignition switch	Check for voltage to ground: There should be 1 V or less.	• Faulty ignition switch • An open in the wire • Poor ground (G401)
A16		Driver's door open	Check for voltage to ground: There should be less than 1 V.	• Faulty driver's door switch • An open in the wire
A14		Under all conditions	Check for continuity to ground: There should be continuity.	• Poor ground (G401) • An open in the wire
A10		Combination light switch (ON) and jump battery voltage to A10	The headlights should come on.	• Poor ground (G401) • An open in the wire • Faulty headlight relay • Faulty combination light switch
A22		Combination light switch (ON)	Check for continuity to ground: There should be continuity.	• Poor ground (G401) • An open in the wire • Faulty combination light switch
A6		Combination light switch (ON) and Jump battery voltage to B16 (RED/GRN)	Check for voltage to ground: There should be battery voltage.	• Blown No. 10 (10 or 15A) fuse in the passenger's under-dash fuse/relay box • Faulty combination light switch • Faulty taillight relay. • An open in the wire.
B16	RED/GRN	Combination light switch (ON)	Check for continuity to ground: There should be 75 Ω resistance.	• Poor ground (G401) • An open in the wire • Faulty combination light switch • Faulty taillight relay
B13	RED/WHT	Passing switch ON	Check for continuity to ground: there should be continuity.	• Poor ground (G401) • An open in the wire • Faulty combination light switch

(cont'd)

Control Unit Input Test (cont'd)

Multiplex Control Unit, Door:

5. Remove the driver's door panel, and disconnect the 20P connector from the door multiplex control unit.

6. Inspect the connector and socket terminals to be sure they are all making good contact.

   - If the terminals are bent, loose or corroded, repair them as necessary, and recheck the system.
   - If the terminals look OK, go to step 7.

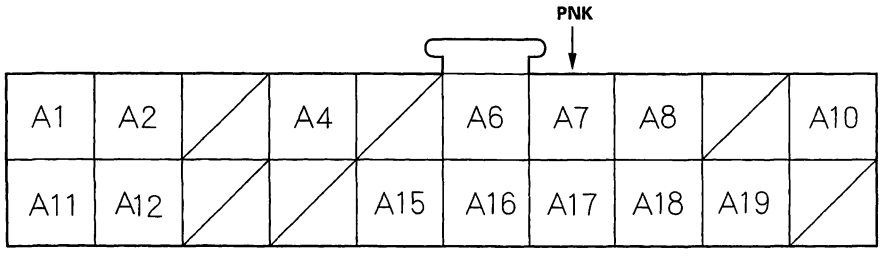

Wire side of female terminals

7. Reconnect the connectors to the unit, and make this input test.

   - If a test indicates a problem, find and correct the cause, then recheck the system.
   - If all the input tests prove OK, go to step 8.

Cavit	Wire	Test condition	Test: Desired result	Possible cause if result is not obtained
A7	PNK	Driver's door lock knob locked	Check for voltage to ground: There should be less than 1 V.	• Faulty driver's door lock actuator • Poor ground (G401) • An open in the wire

8. If all the input tests prove OK, one of the control units must be faulty. Substitute a known-good control unit for the one that is most likely at fault, then recheck the system. If the system works properly, the original control unit is faulty; replace it. If there is still a malfunction, substitute a known-good control unit for the next most likely unit to be at fault, and recheck. If the system works properly, the original unit is faulty; replace it.

BACK

Combination Light Switch Test/Replacement

1. Remove the dashboard lower cover (see page 20-84) and steering column covers (see page 17-25).
2. Disconnect the 14P connector (A) from the combination light switch (B).
3. Remove the two screws (C), then pull out the switch (B).
4. Inspect the connector terminals to be sure they are all making good contact.
   - If the terminals are bent, loose or corroded, repair them as necessary, and recheck the system.
   - If the terminals look OK, check for continuity between them in each switch position according to the tables.
     - If there is no continuity, replace the switch.

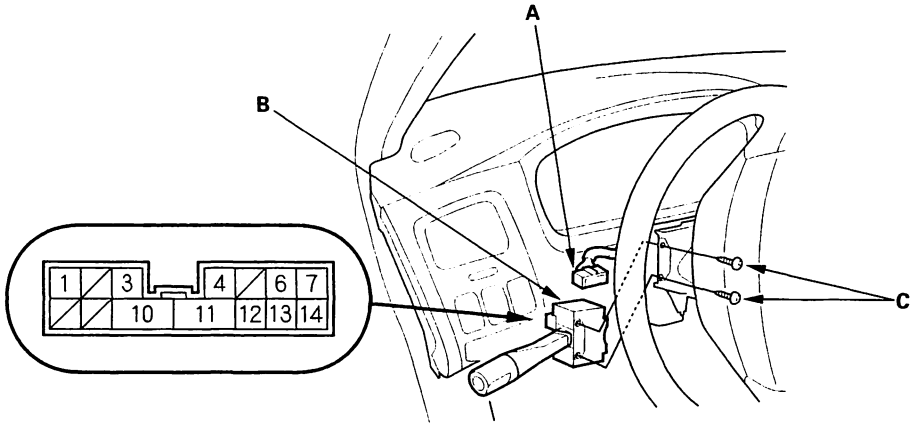

Light switch:

Position \ Terminal			3 (*)	4	11	10	6	7
Headlight switch	OFF							
	≡D						○——	——○
	≡D	LOW	○——	——○	——○		○——	——○
	≡D	HIGH	○——	——○	——○	○——○	○——	——○
Passing switch	OFF							
	ON		○——	——○	——○	——○		

*: With auto-off headlight feature

Turn signal switch:

Position \ Terminal	12	13	14
LEFT	○——	——○	
NEUTRAL			
RIGHT		○——	——○

Daytime Running Lights Control Unit Input Test (Canada)

1. Remove the driver's dashboard lower cover (see page 20-84).
2. Disconnect the 14P connector (A) from the control unit (B).
3. Inspect the connector and socket terminals to be sure they are all making good contact.
   - If the terminals are bent, loose, or corroded, repair them as necessary, and recheck the system.
   - If the terminals look OK, go to step 4.

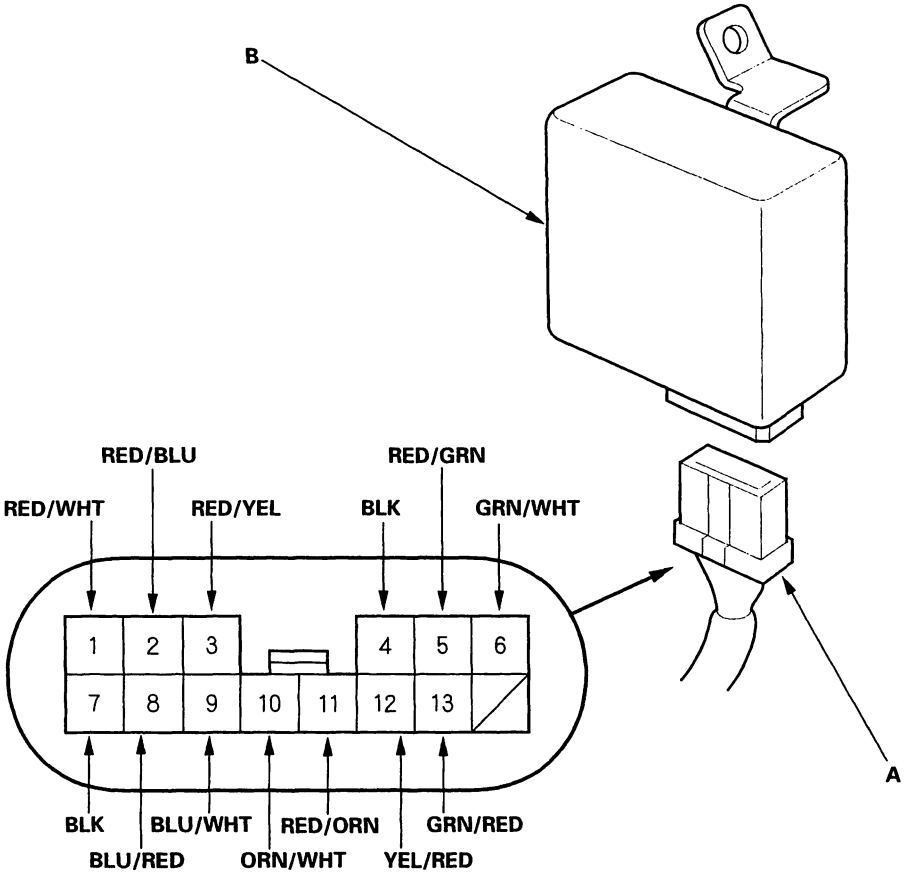

Wire side of female terminals

4. Make these input tests at the disconnected connector.
   - If any test indicates a problem, find and correct the cause, then recheck the system.
   - If all the input tests prove OK, the control unit must be faulty; replace it.

BACK

Cavity	Wire	Test condition	Test: Desired result	Possible cause if result is not obtained
1 11 10	RED/WHT RED/ORN ORN/WHT	Under all conditions	Check for continuity between each terminals: There should be continuity.	• Blown headlight bulb (High beam) • Blown high beam indicator light. • An open in the wire
2	RED/BLU	Under all conditions	Check for voltage to ground: There should be battery voltage.	• Blown No. 55 (40 A) fuse in the under-hood fuse/relay box • Blown No. 6 (10 A) fuse in the passenger's under-dash fuse/relay box • An open in the wire
4 7	BLK	Under all conditions	Check for continuity to ground: There should be continuity.	• Poor ground (G401) • An open in the wire
6	GRN/WHT	Parking brake lever up	Check for continuity to ground: There should be continuity.	• Faulty parking brake switch • An open in the wire
8	BLU/RED	With automatic lights OFF: Combination light switch ON(≡D)	Check for continuity to ground: There should be continuity.	• Faulty combination light switch • Faulty headlight relay 1 and 2 • An open in the wire
		Without automatic lights OFF: Under all conditions	Check for voltage to ground: There should be battery voltage.	• Faulty headlight relay 1 and 2 • An open in the wire
9	BLU/WHT	Ignition switch ON (II)	Connect to ground: The indicator light should come on.	• Faulty DRL indicator light • An open in the wire
3	RED/YEL	Combination light switch ON (≡D)	Check for voltage to ground: There should be battery voltage.	• Blown No. 45 (20 A) fuse in the under-hood fuse/relay box • Faulty combination light switch • Faulty headlight relay 2 • An open in the wire
5	RED/GRN	Combination light switch ON (≡D)	Check for voltage to ground: There should be battery voltage.	• Blown No. 43 (20 A) fuse in the under-hood fuse/relay box • Faulty combination light switch • Faulty headlight relay 1 • An open in the wire
12	YEL/RED	Ignition switch ON (II)	Check for voltage to ground: There should be battery voltage.	• Blown No. 5 (7.5 A) fuse in the driver's under-dash fuse/relay box • An open in the wire
13	GRN/RED	Brake fluid reservoir float in down position	Check for continuity to ground: There should be continuity.	• Faulty brake fluid level switch • An open in the wire

Headlight Replacement

1. Remove the front bumper (Coupe (see page 20-140), Sedan (see page 20-142)).

2. Disconnect the connectors (A).

3. Remove the 5 mounting bolts (B), then remove the headlight assembly (C).

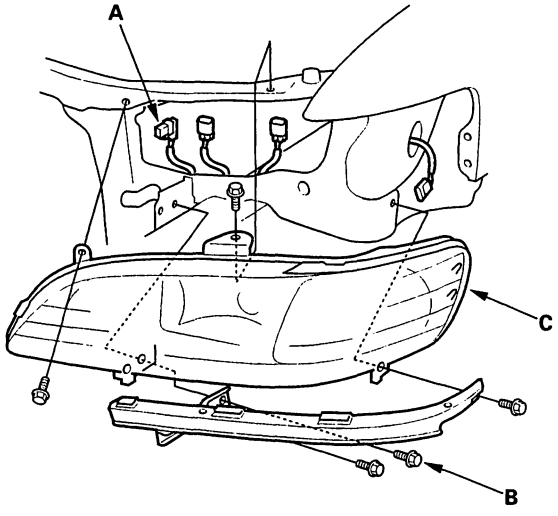

HEADLIGHT: 60/51 W
FRONT PARKING LIGHT: 5 W

4. Install the headlight in the reverse order of removal.

5. After replacement, adjust the headlights to local requirements.

Headlight Adjustment

Before adjusting the headlights:
- Park the vehicle on level ground.
- Make sure the fuel tank is full.
- The driver or someone who weight the same should sit in the driver's seat.
- Load the trunk with the items you usually carry.
- Push down on the front and rear bumpers several times to make sure the vehicle is sitting normally.

'98-00 models:

1. Open the hood.

2. Check the horizontal adjustment indicator.
   The "0" mark (A) on the horizontal adjustment indicator gear should be aligned with the mark (B) on the horizontal indicator.

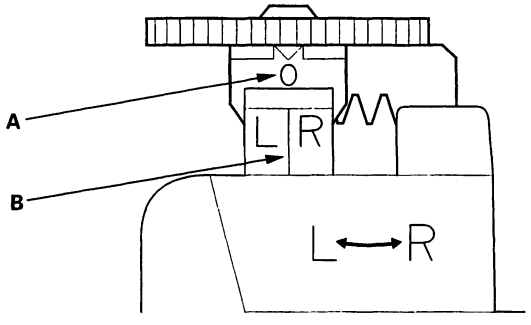

3. Check the vertical adjustment indicator. The bubble (A) should be centered underneath the longest scribe mark (the "0" mark) on the gauge.

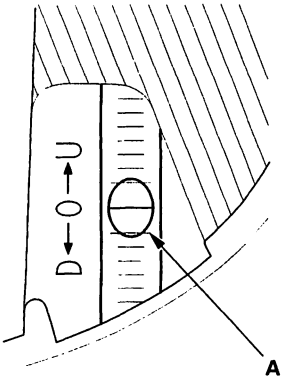

4. If either indicator is not aligned with its "0" mark as described above, adjust it to "0" with a Phillips screwdriver.

BACK

5. Adjust the headlights to local requirements by turning the adjusters.

6. After headlight assembly replacement, it may be necessary to readjust the horizontal indicator gear (A).

   - First install the headlight, and adjust its horizontal and vertical aimings according to local requirements.
   - Then check that the arrow on the horizontal indicator gear is aligned with the mark on the horizontal indicator.

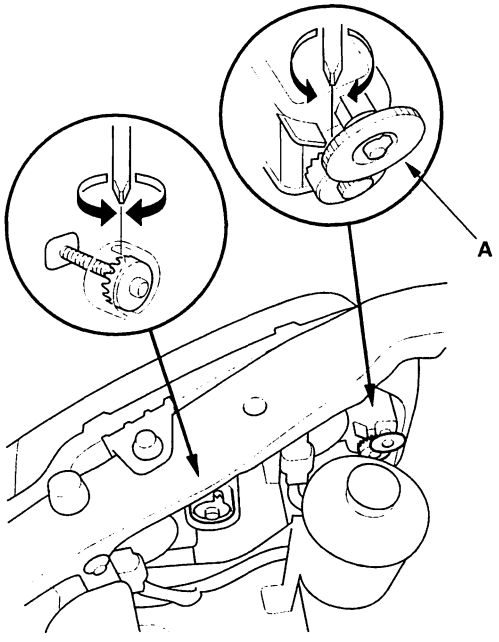

'01-02 models:

1. Clean the outer lens so that you can see the center of the headlights (A).

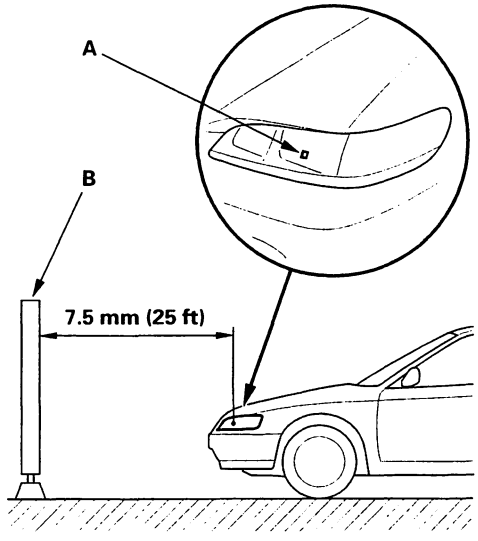

2. Align the center of the headlights to 7.5 m (25 ft) from the wall or a screen (B), and park the vehicle.

3. Turn the low beams on.

4. Measure the height of the headlights (A) and the lights should reflect 52 mm (2.1 in.) below headlight height (B).

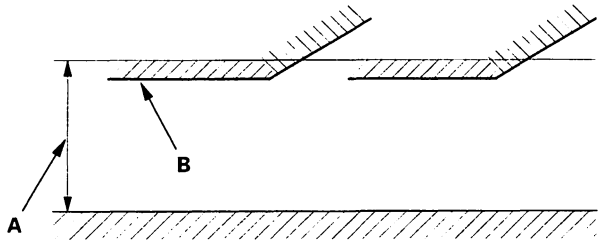

(cont'd)

Headlight Adjustment (cont'd)

5. If necessary, adjust the headlights to local requirements by turning the vertical adjuster.

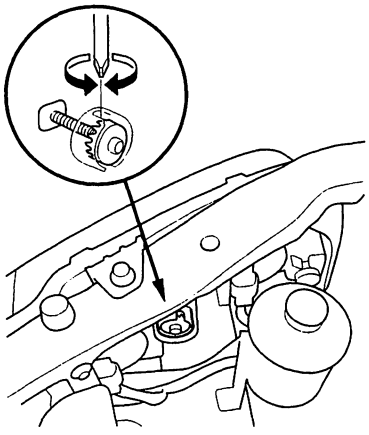

Taillight Replacement - Sedan

Taillights

1. Open the trunk lid and pull back the trunk side trim (see page 20-78).

2. Disconnect the connectors from the taillight.

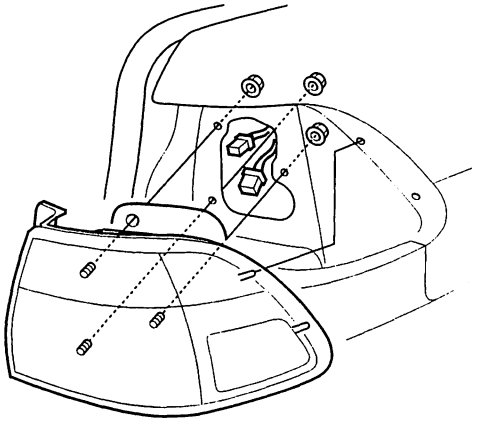

3. Remove the three mounting nuts, then pull out the taillight.

4. Install the taillight, and note these items:

   - Inspect the gasket; replace it if it is distorted or stays compressed.
   - After installing the taillights, run water over them to make sure they do not leak.

BRAKE/TAILLIGHT BULB: 21/5 W
TURN SIGNAL LIGHT BULB: 21 W

BACK

Taillight Replacement - Coupe

Inner Taillights

1. Open the trunk lid.

2. Disconnect the connectors (A) from the inner taillight.

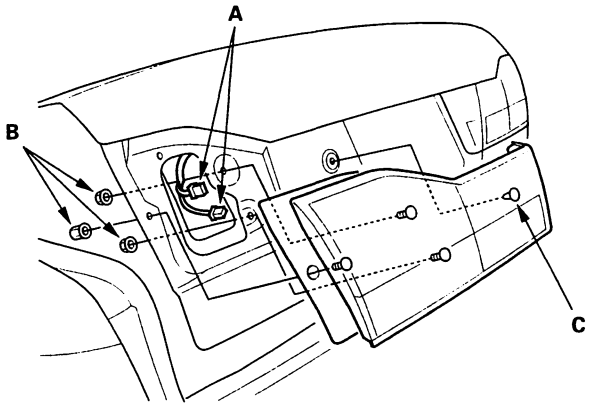

3. Remove the three mounting nuts (B) and a clip (C), then pull out the inner taillight.

TAILLIGHT BULB:	**5 W**
BACK-UP LIGHT BULB:	**21 W**

Taillights

1. Open the trunk lid and pull back the trunk side trim (see page 20-78).

2. Disconnect the 6P connector (A) from the taillight (B).

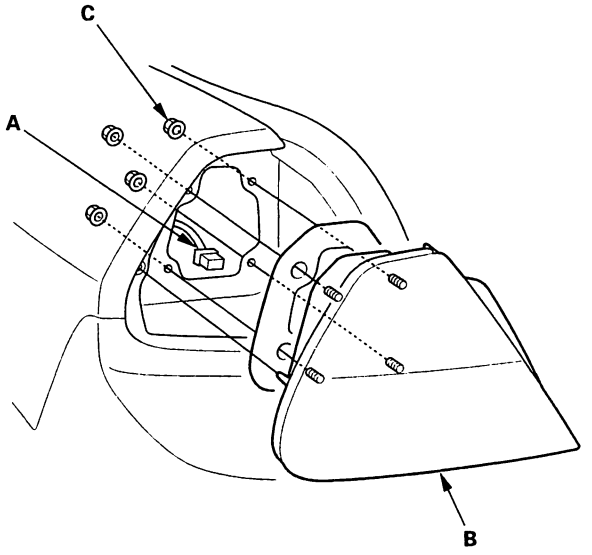

3. Remove the four mounting nuts (C), then pull out the taillight (B).

NOTE:
- Inspect the gasket: replace it if it is distorted or stays compressed.
- After installing the taillights, run water over them to make sure they do not leak.

TURN SIGNAL/TAILLIGHT BULB:	**27/7 W**
BRAKE/TAILLIGHT BULB:	**27/7 W**

(cont'd)

Taillight Replacement - Coupe (cont'd)

Inner Taillights

1. Open the trunk lid.
2. Remove the screw (D) and taillight lid cover (E).

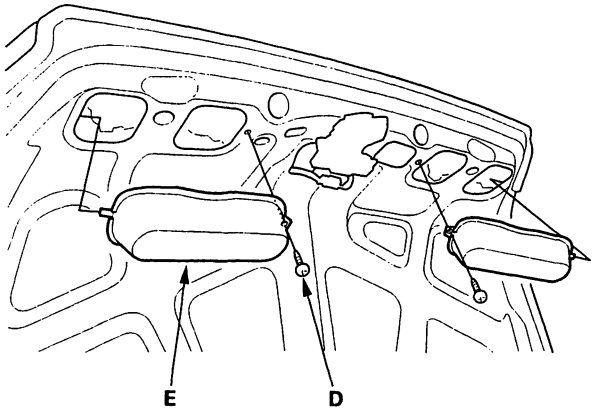

3. Disconnect the connectors from the inner taillight (F).
4. Remove the mounting nuts then pull out the inner taillight (F).

BRAKE/TAILLIGHT BULB: 27/7 W
BACK-UP LIGHT BULB: 21W

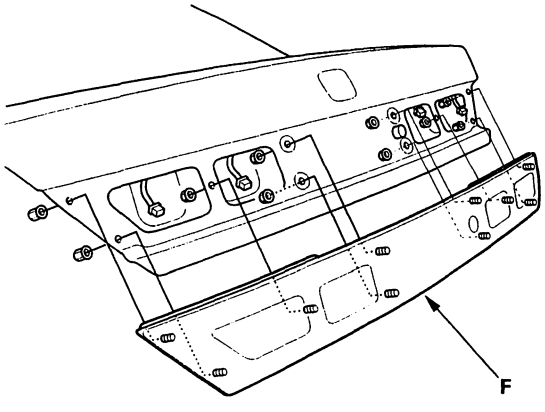

High Mount Brake Light Replacement

1. Push the light rearward to release the clips.

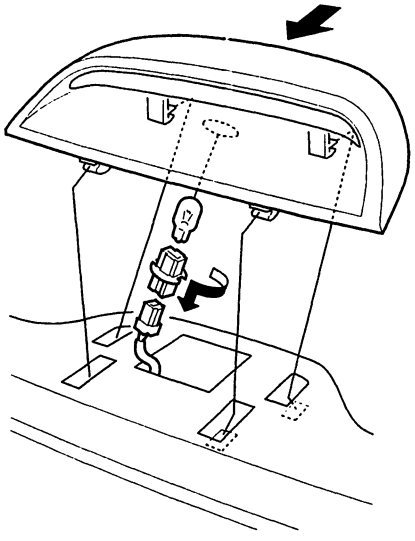

2. Pull the light out, then disconnect the 2P connector from the light.
3. Clean the rear window glass, and install the light in the reverse order of removal.

HIGH MOUNT BRAKE LIGHT BULB: 21 W

BACK

License Plate Light Replacement

Sedan

1. Pull the license plate light assembly (A) out, and disconnect the 2P connector (B) from the light.

LICENSE PLATE LIGHT BULB: 5 W

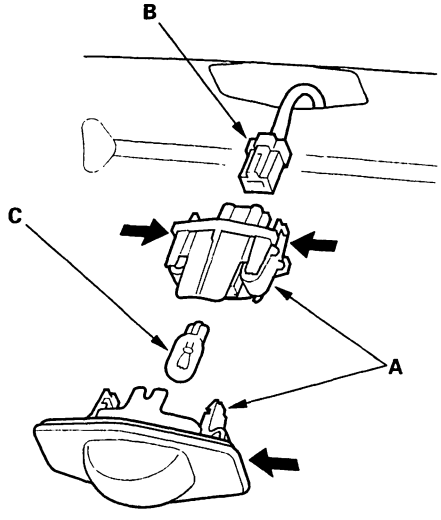

2. Take the lens off, then replace the bulb (C).

Coupe

1. Pull the license plate light assembly (A) out, and disconnect the 2P connector (B) from the light.

LICENSE PLATE LIGHT BULB: 5 W

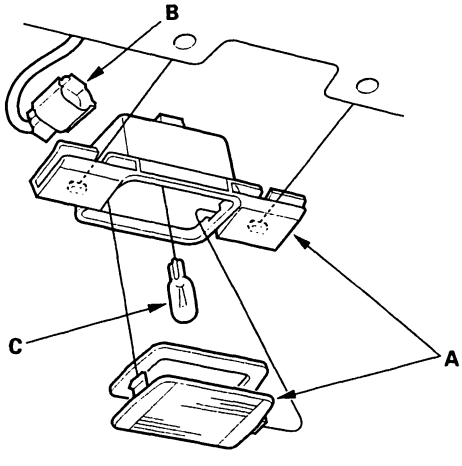

2. Take the lens off, then replace the bulb (C).

Rear Side Marker Light Replacement - Coupe

1. Remove the screw from the rear side marker light assembly (A).

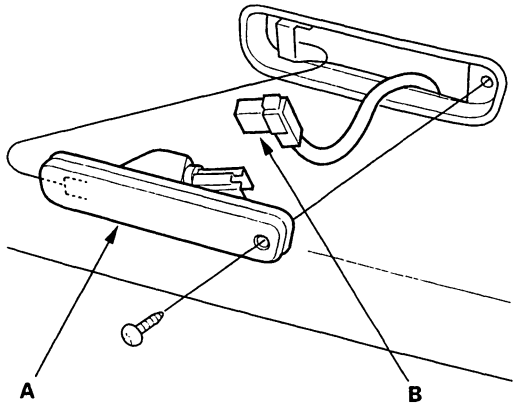

2. Carefully pry the light (A) out of the rear bumper, and disconnect the 2P connector (B) from the light. Be careful not to damage the rear bumper.

3. Remove the bulb socket (A) by turning it 45° counterclockwise, then replace the bulb (B).

REAR SIDE MARKER LIGHT BULB: 5 W

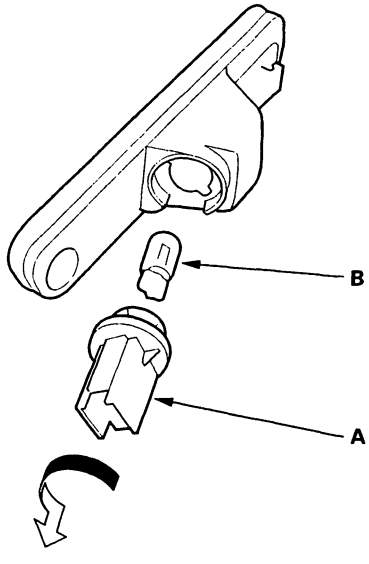

Turn Signal/Hazard Flasher

Component Location Index

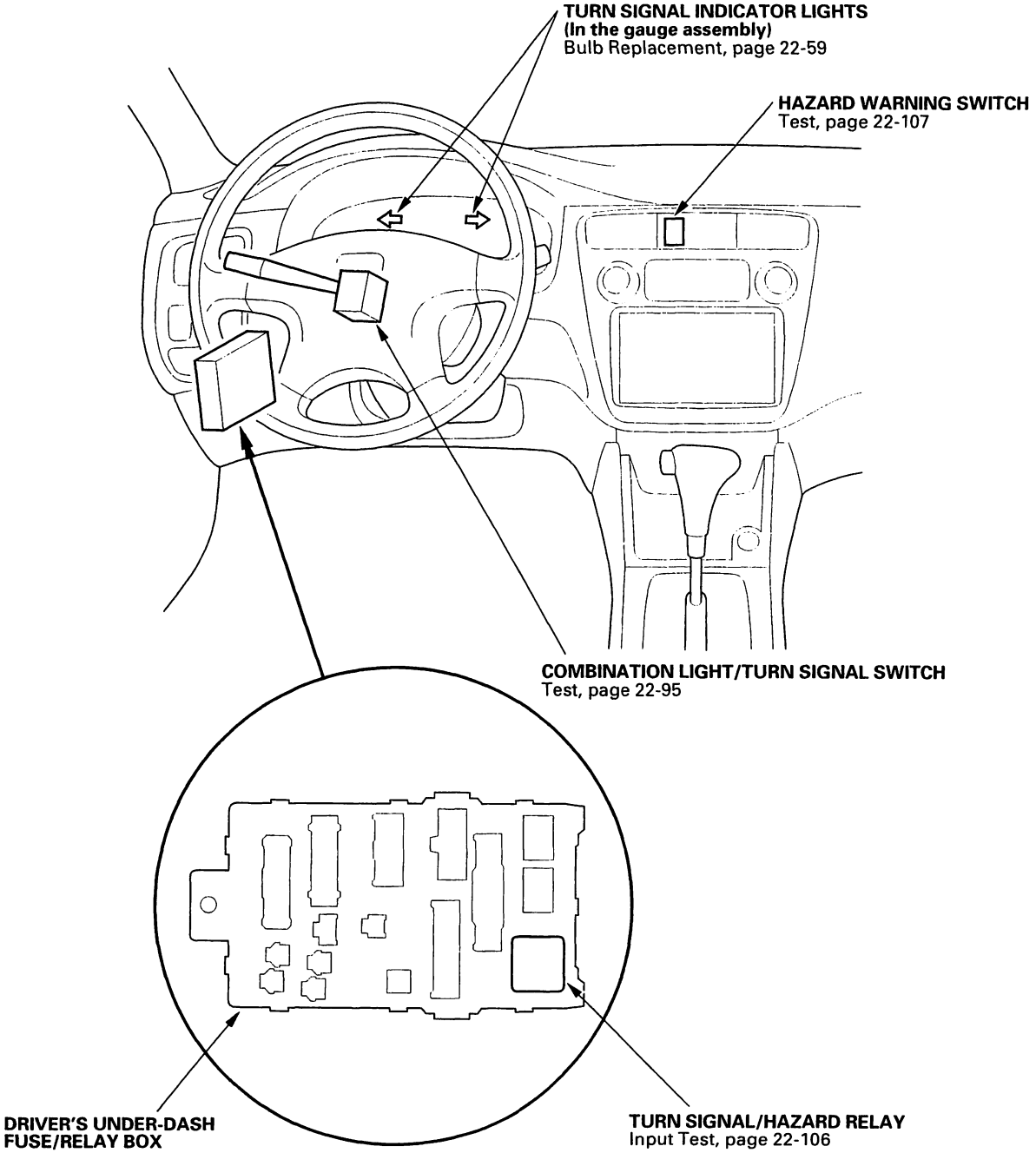

BACK

Circuit Diagram

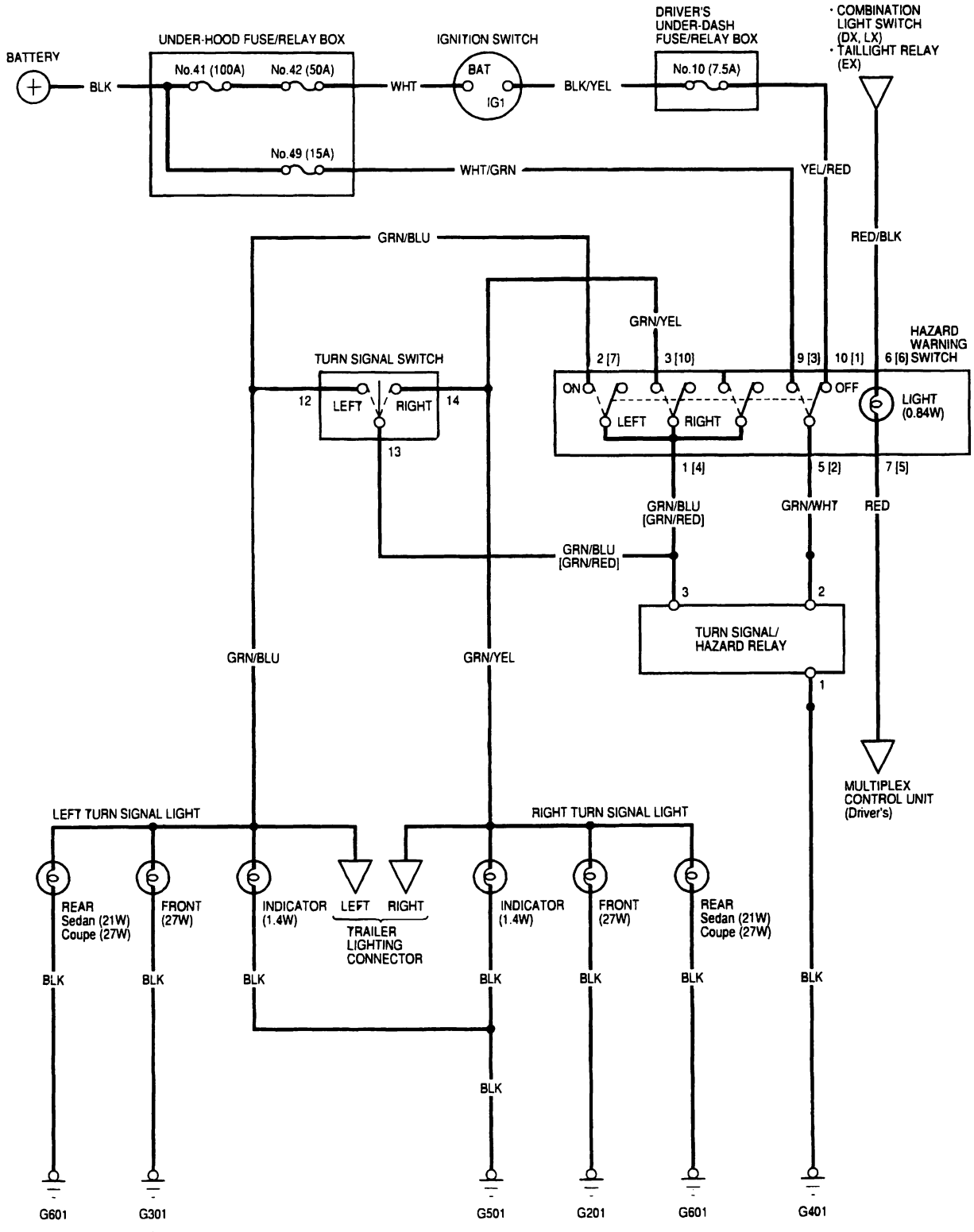

Turn Signal/Hazard Relay Input Test

1. Remove the turn signal/hazard relay (A) from the driver's under-dash fuse/relay box (B).

2. Inspect the relay and fuse/relay box socket terminals to be sure they are all making good contact.

   - If the terminals are bent, loose, or corroded, repair them as necessary, and recheck the system.
   - If the terminals look OK, go to step 3.

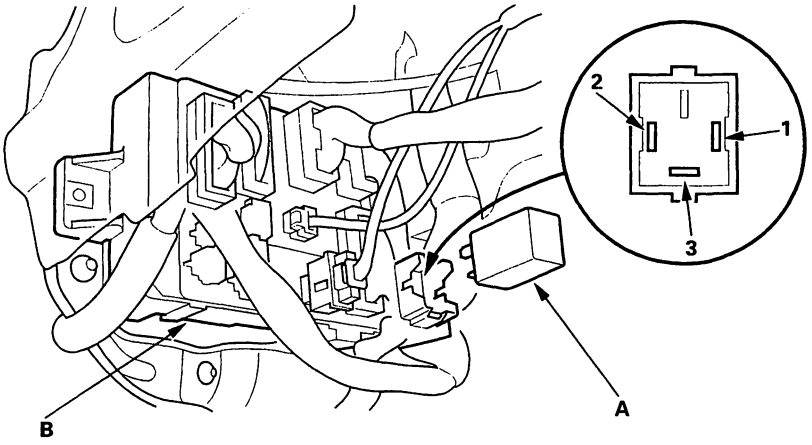

3. Make these input tests at the fuse/relay box.

   - If any test indicates a problem, find and correct the cause, then recheck the system.
   - If all the input tests prove OK, the turn signal/hazard relay must be faulty; replace it.

Cavity	Test condition	Test: Desired result	Possible cause if result is not obtained
1	Under all conditions	Check for continuity to ground: There should be continuity.	• Poor ground (G401) • An open in the wire
2	Ignition switch ON (II)	Check for voltage to ground: There should be battery voltage.	• Blown No. 10 (7.5 A) fuse in the driver's under-dash fuse/relay box • An open in the wire • Faulty hazard warning switch
	Hazard warning switch	Check for voltage to ground: There should be battery voltage.	• Blown No. 49 (15 A) fuse in the under-hood fuse/relay box • An open in the wire • Faulty hazard warning switch
3	Hazard warning switch ON; connect the No. 2 terminal to the No. 3 terminal.	Hazard lights should come on.	• Poor ground (G201, G301, G501, G601) • Faulty hazard warning switch • An open in the wire
	Ignition switch ON (II) and turn signal switch in Right or Left; connect the No. 2 terminal to the No. 3 terminal.	Right or left turn signal lights should come on.	• Faulty turn signal switch

BACK

Hazard Warning Switch Test

1. Carefully pry the clock (A) out of the center panel (B).

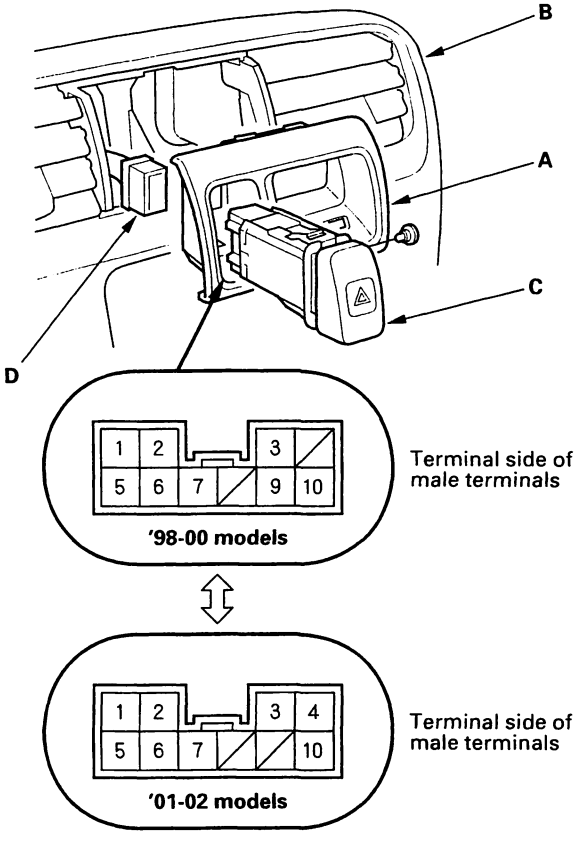

2. Pull the hazard warning switch (C) out from the clock.

3. Disconnect the 10P connector (D) from the hazard warning switch.

4. Check for continuity between the terminals in each switch position according to the table.

Terminal / Position	6 [6]		7 [5]	1 [4]	2 [7]	10 [1]	9 [3]	3 [10]	5 [2]
OFF	○	⊗	○			○			○
ON	○	⊗	○	○	○			○	
							○		○

[ ] : '01-02 models

Component Location Index

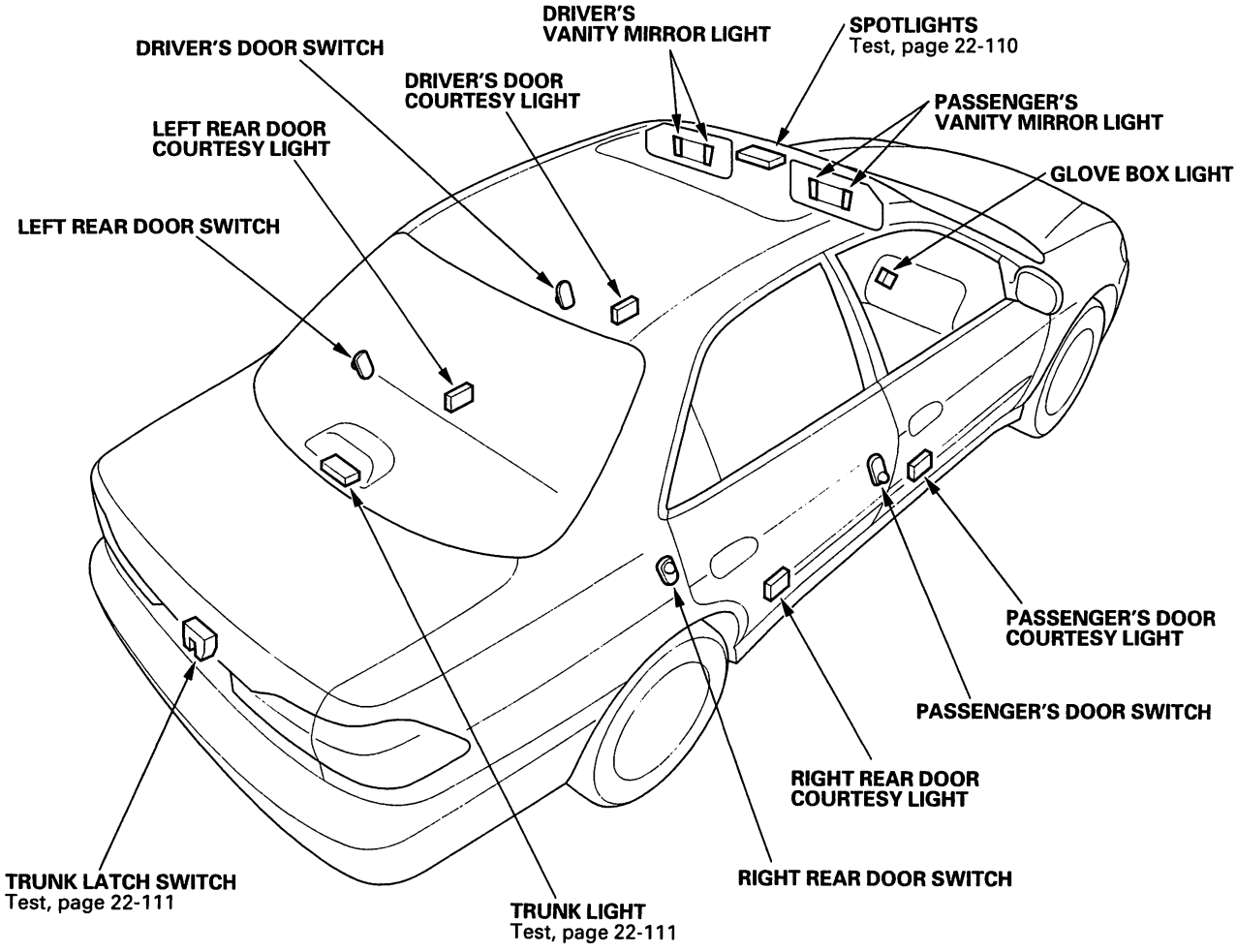

BACK

Circuit Diagram

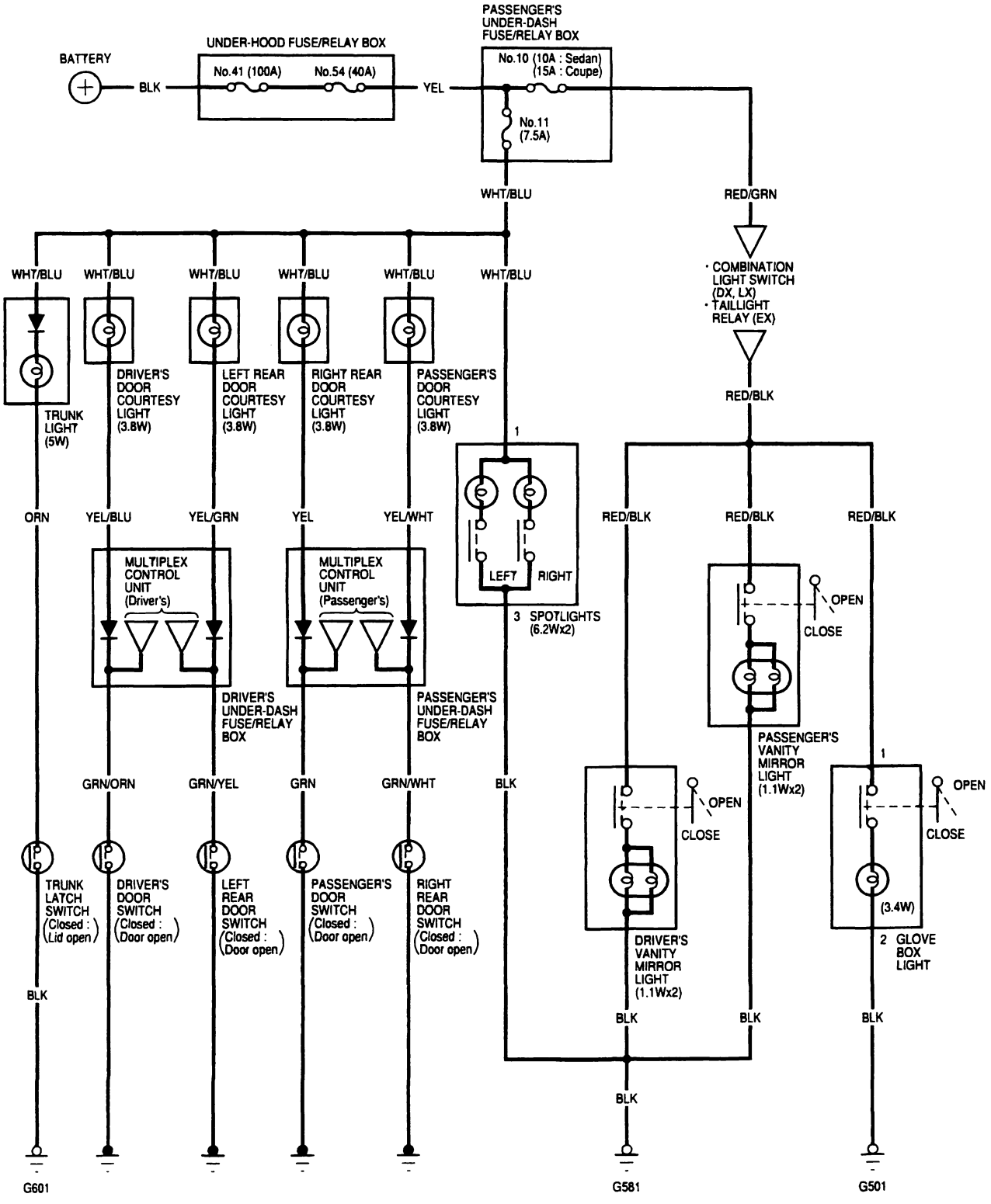

BACK

Spotlight Test

1. Carefully pry off the lens (A) with a small screwdriver.

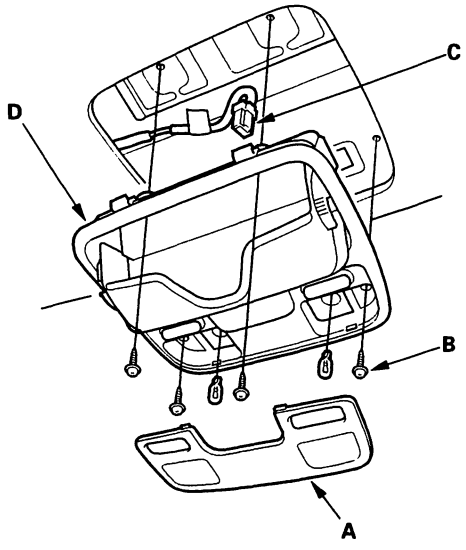

2. Remove the four mounting screws (B).

3. Disconnect the 3P connector (C) from the housing (D).

4. Check for continuity between the terminals in each switch position according to the table.

Position \ Terminal		1		3
LEFT	ON	○	—⊗—	○
	OFF			
RIGHT	ON	○	—⊗—	○
	OFF			

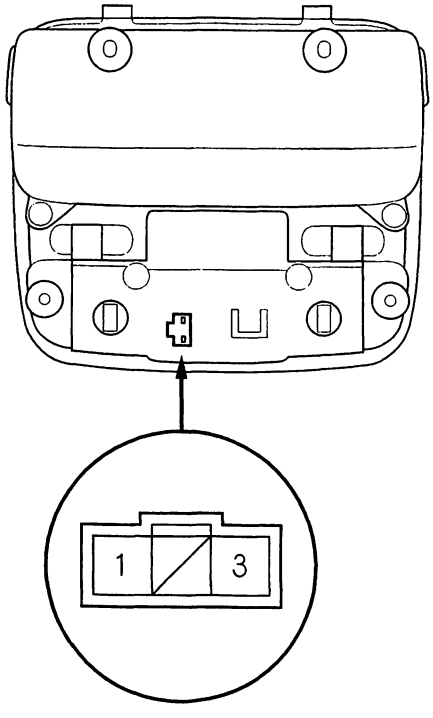

BACK

Trunk Light Test

1. Open the trunk lid.
2. Pry out the trunk light assembly.
3. Disconnect the 2P connector (A) from the housing (B).

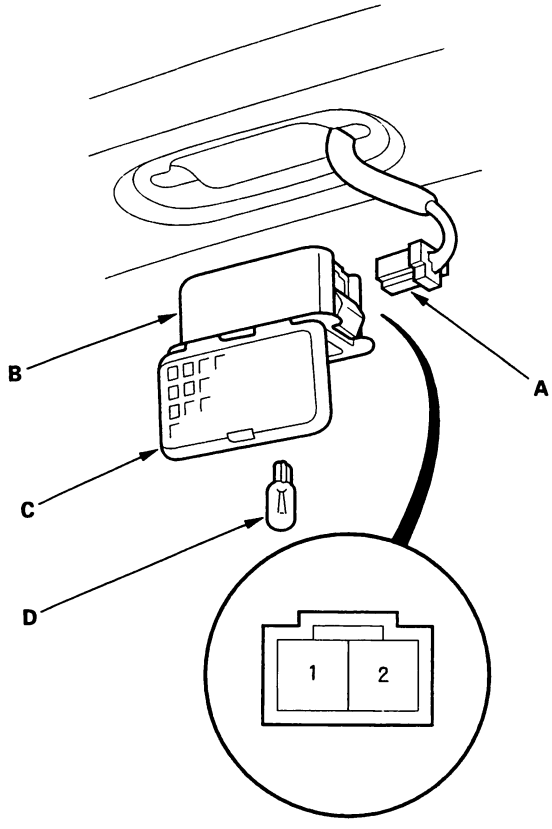

4. Open the trunk light cover (C).
5. Make sure that the bulb (D) is OK. Check for continuity between the No. 1 and No. 2 terminals.
6. If there is no continuity replace the trunk light assembly.

Trunk Lid Latch Switch Test

1. Open the trunk lid.
2. Disconnect the 2P connector (without keyless entry/security alarm system), or 6P connector (with keyless entry/security alarm system) from the trunk latch.

Without Keyless Entry/ Security Alarm System:

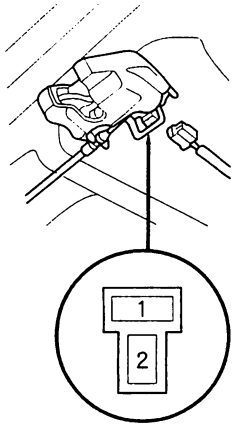

With Keyless Entry/ Security Alarm System:

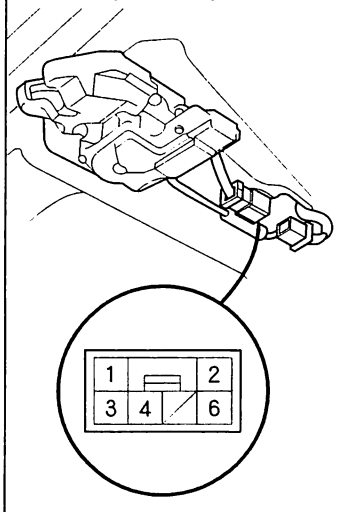

Terminal side of male terminals

3. Check for continuity between the terminals in each switch position according to the table.

Without Keyless Entry/Security Alarm System

Terminal / Position	1	2
OPEN	○	○
CLOSED		

With Keyless Entry/Security Alarm System

Terminal / Position	1	6
OPEN	○	○
CLOSED		

4. If the continuity is not as specified, replace the trunk lid latch switch.

BACK

Dash Lights Brightness Controller

Circuit Diagram

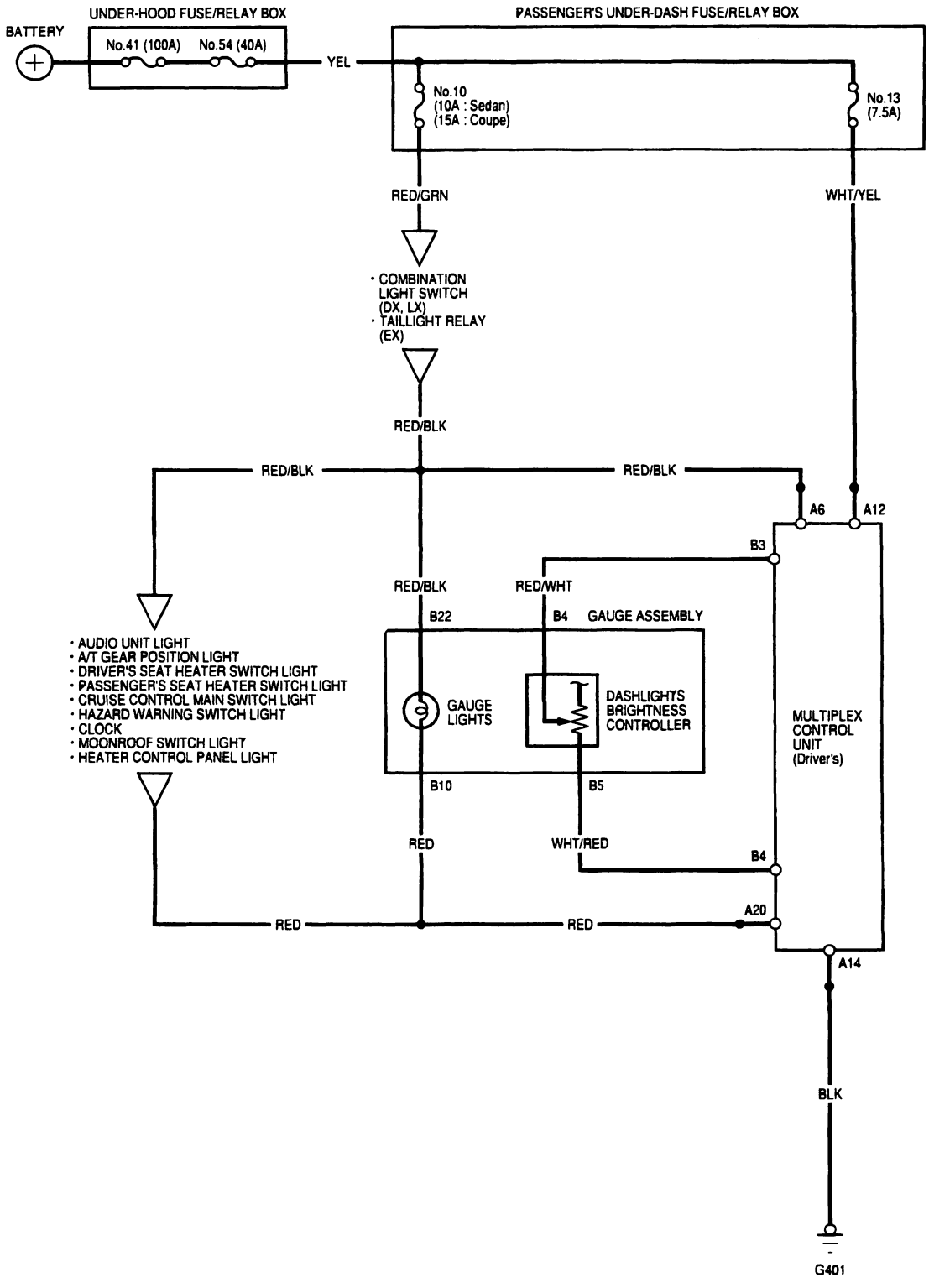

BACK

Control Unit Input Test

1. Before testing dash light brightness control functions, troubleshoot the multiplex control system (see page 22-137).

Multiplex Control Unit, Driver's:

2. Remove the driver's multiplex control unit from the driver's under-dash fuse/relay box.

3. Inspect all connector and socket terminals to be sure they are making good contact.

   - If the terminals are bent, loose or corroded, repair them as necessary, and recheck the system.
   - If the terminals look OK, go to step 4.

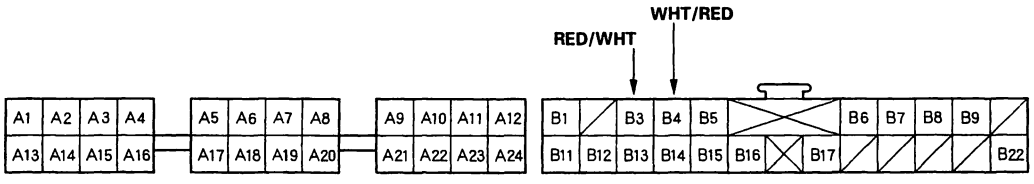

Fuse/relay box socket Wire side of female terminals

4. With the control unit still disconnected, make these input tests at the connector and fuse/relay box socket.

   - If any test indicates a problem, find and correct the cause, then recheck the system.
   - If all the input tests prove OK, the control unit must be faulty; replace it.

Cavity	Wire	Test condition	Test: Desired result	Possible cause if result is not obtained
A6	Fuse/relay box socket	Combination light switch ON (≡DOE) or (≡D) (Jump battery voltage to B16 (RED/GRN) on automatic headlights off feature only)	Check for voltage to ground: There should be battery voltage.	• Blown No. 10 (10 or 15A) fuse in the passenger's under-dash fuse/relay box • Faulty combination light switch • Faulty taillight relay • An open in the wire
A12		Under all conditions	Check for voltage to ground: There should be battery voltage.	• Blown No. 13 (7.5A) fuse in the passenger's under-dash fuse/relay box • An open in the wire
A14		Under all conditions	Check for continuity to ground: There should be continuity.	• Poor ground (G401) • An open in the wire
A20	RED	Combination light switch ON (≡DOE) or (≡D) (Jump battery voltage to B16 (RED/GRN) on automatic headlights off feature only)	Attach to ground: Dash lights should come on full bright.	• An open in the wire
B3 · B4	RED/WHT and WHT/RED	Adjusting dial rotated	Check for resistance between the B3 and B4 terminals: There should be 0 – 20 kΩ at all times.	• Faulty dash light brightness controller • An open in the wire

Dash Lights Brightness Controller

Controller Test

1. Remove the gauge assembly (A) (see page 22-68).

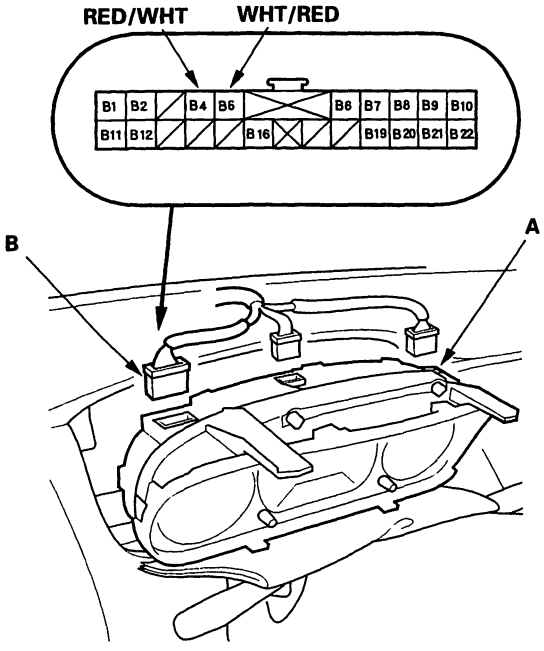

2. Disconnect the 22P connector (B).

3. Measure resistance between the B4 and B5 terminals while rotating the adjusting dial. Resistance should vary from 0 to 20,000 ohms as the dial is rotated.

BACK

Entry Light Control System

Component Location Index

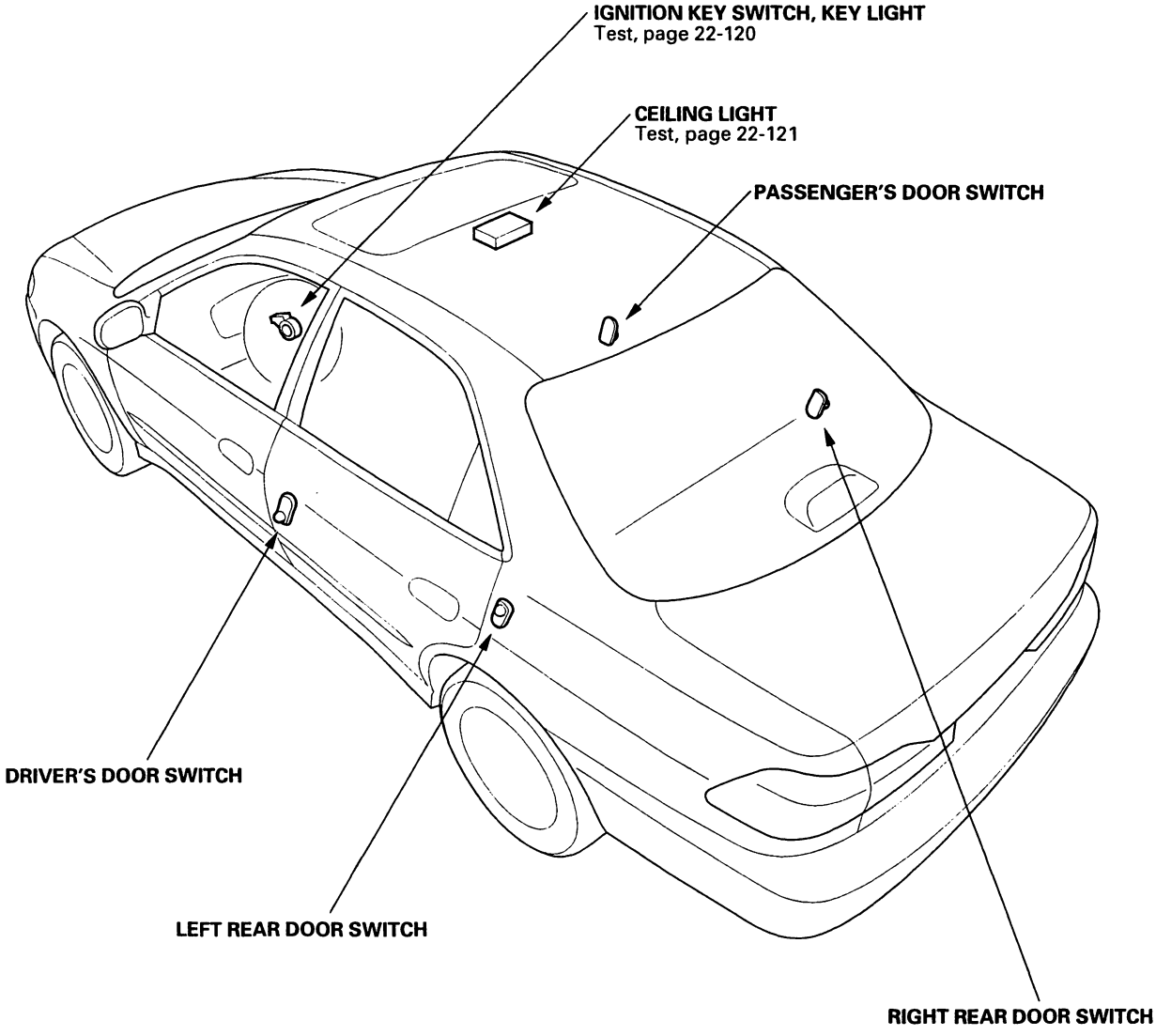

Entry Light Control System

Circuit Diagram

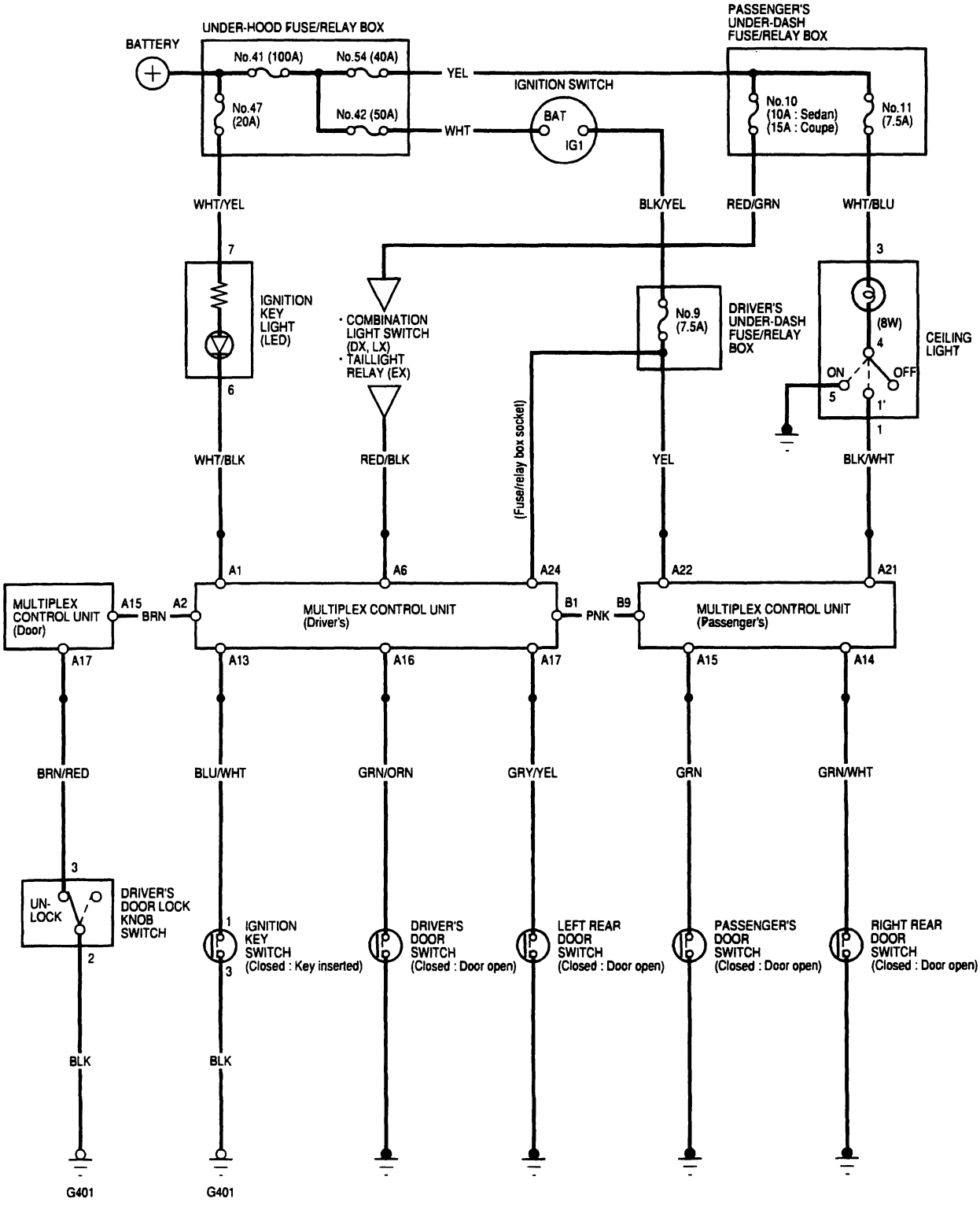

BACK

Control Unit Input Test

1. Before testing the entry light control functions, troubleshoot the multiplex control system (see page 22-137).

Multiplex Control Unit, Driver's:

2. Remove the driver's multiplex control unit from the driver's under-dash fuse/relay box, and disconnect its connector.

3. Inspect all connector and socket terminals to be sure they are making good contact.

   - If the terminals are bent, loose or corroded, repair them as necessary, and recheck the system.
   - If all terminals look OK, go to step 4.

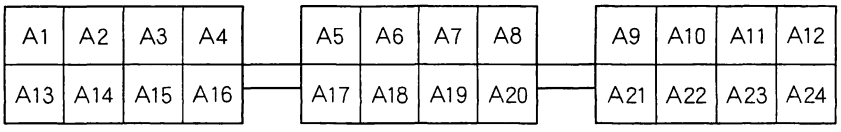

Fuse/relay box socket

4. With the driver's unit still disconnected, make these input tests at the fuse/relay box socket.

   - If any test indicates a problem, find and correct the cause, then recheck the system.
   - If all the input tests prove OK, go to step 5.

Cavity	Wire	Test condition	Test: Desired result	Possible cause if result is not obtained
A1	Fuse/relay box socket	Under all conditions	Attach to ground: The ignition key light should come on.	• Blown No. 47 (20A) fuse in the under-hood fuse/relay box • Blown LED • An open in the wire
A6		Combination light switch ON (Jump battery voltage to B16 (RED/GRN) on automatic headlights off feature only)	Check for voltage to ground: There should be battery voltage.	• Blown No. 10 (10 or 15A) fuse in the passenger's under-dash fuse/relay box • An open in the wire • Faulty combination light switch
A24		Ignition switch ON (II)	Check for voltage to ground: There should be battery voltage.	• Blown No. 9 (7.5A) fuse in the driver's under-dash fuse/relay box • Faulty driver's under-dash fuse/relay box
A13		Ignition key is inserted into the ignition switch	Check for continuity to ground: There should be continuity	• Faulty ignition key switch • Poor ground (G401) • An open in the wire
A16		Driver's door opened	Check for voltage to ground: There should be less than 1V.	• Faulty driver's door switch • An open in the wire
A17		Left rear door opened	Check for voltage to ground: There should be less than 1V.	• Faulty left rear door switch • An open in the wire

(cont'd)

Control Unit Input Test (cont'd)

Multiplex Control Unit, Passenger's:

5. Remove the passenger's multiplex control unit from the passenger's under-dash fuse/relay box, and disconnect its connector.

6. Inspect all connector and socket terminals to be sure they are making good contact.

   - If the terminals are bent, loose or corroded, repair them as necessary, and recheck the system.
   - If the terminals look OK, go to step 7.

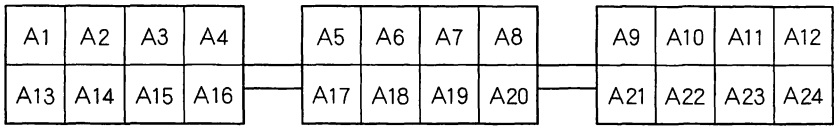

Fuse/relay box socket

7. With the passenger's multiplex control unit still disconnected, make these input tests at the fuse/relay box socket.

   - If any test indicates a problem, find and correct the cause, then recheck the system.
   - If all the input tests prove OK, go to step 8.

Cavity	Wire	Test condition	Test: Desired result	Possible cause if result is not obtained
A22	Fuse/relay box socket	Ignition switch ON (II)	Check for voltage to ground: There should be battery voltage.	• Blown No. 9 (7.5A) fuse in the driver's under-dash fuse/relay box • An open in the wire
A21		Ceiling light switch in the middle position	Connect to ground: Ceiling light should come on.	• Blown No. 11 (7.5A) fuse in the passenger's under-dash fuse/relay box • Faulty ceiling light • An open in the wire
A15		Passenger's door opened	Check for voltage to ground: There should be less than 1 V.	• Faulty passenger's door switch • An open in the wire
A14		Right rear door opened	Check for voltage to ground: There should be less than 1 V.	• Faulty right rear door switch • An open in the wire

BACK

Multiplex Control Unit, Door:

8. Remove the driver's door panel, and disconnect the 20P connector from the door multiplex control unit.

9. Inspect all connector and socket terminals to be sure they are making good contact.

   - If the terminals are bent, loose or corroded, repair them as necessary, and recheck the system.
   - If the terminals look OK, go to step 10.

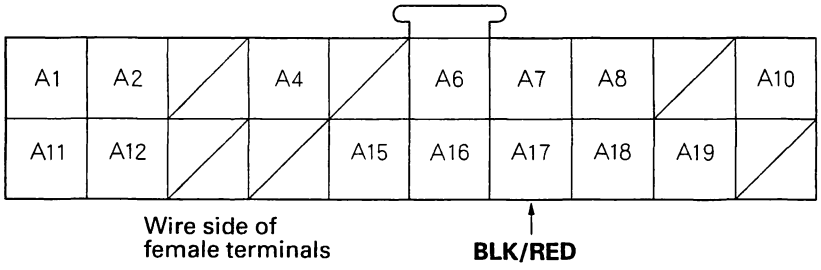

10. Reconnect the connectors to the door multiplex control unit, and make these input tests at the connector.

    - If any test indicates a problem, find and correct the cause, then recheck the system.
    - If all the input tests prove OK, go to step 11.

Cavity	Wire	Test condition	Test: Desired result	Possible cause if result is not obtained
A17	BLK/RED	Driver's door lock knob unlocked	Check for voltage to ground: There should be less than 1 V.	• Faulty driver's door lock actuator • Poor ground (G401) • An open in the wire

11. If all the input tests prove OK, one of the control units must be faulty. Substitute a known-good control unit for the one that is most likely at fault, then recheck the system. If the system works properly, the original control unit is faulty; replace it. If there is still a malfunction, substitute a known-good control unit for the next most likely unit to be at fault, and recheck. If the system works properly, the original unit is faulty; replace it.

Ignition Key Switch Test

NOTE: For more key-in beeper information, refer to the circuit diagram (see page 22-79) and input test (see page 22-80).

When the ignition key is not removed, the key-in beeper in the driver's multiplex control unit senses ground through the closed ignition key switch. When you open the driver's door, the beeper circuit senses ground through the closed door switch.

1. Remove the steering column upper and lower covers (see page 17-25).
2. Disconnect the 7P connector.

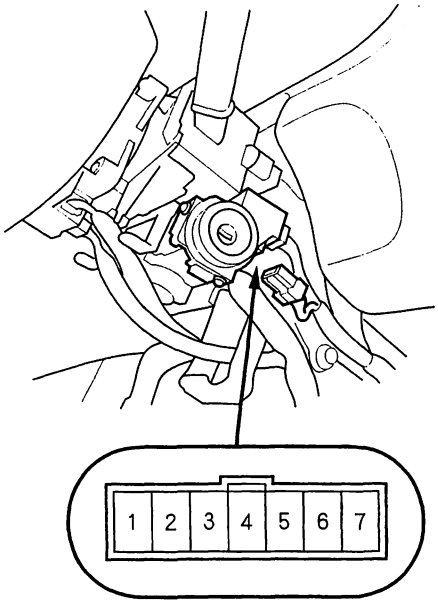

3. Check for continuity between terminals No. 1 and No. 3.
   - There should be continuity with the key in the ignition switch.
   - There should be no continuity with the key removed.
4. If continuity is not as specified, replace the ignition key switch.

Ignition Key Light Test

1. Remove the steering column upper and lower covers (see page 17-25).
2. Disconnect the 7P connector.

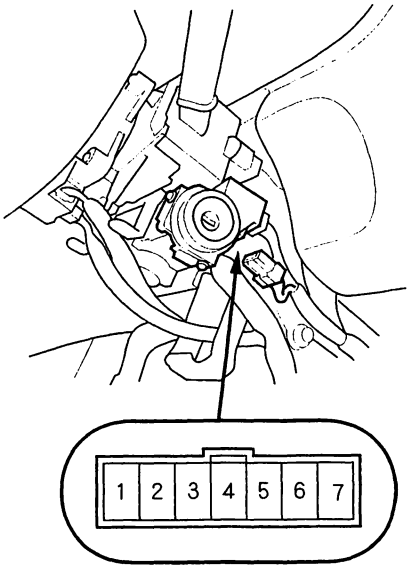

3. The LED should come on when power is connected to terminal No. 7, and ground is connected to terminal No. 6.
4. If the LED does not come on, replace the ignition key switch.

BACK

Ceiling Light Test

1. Turn the light switch OFF.
2. Carefully pry off the lens (A) with a small screwdriver.

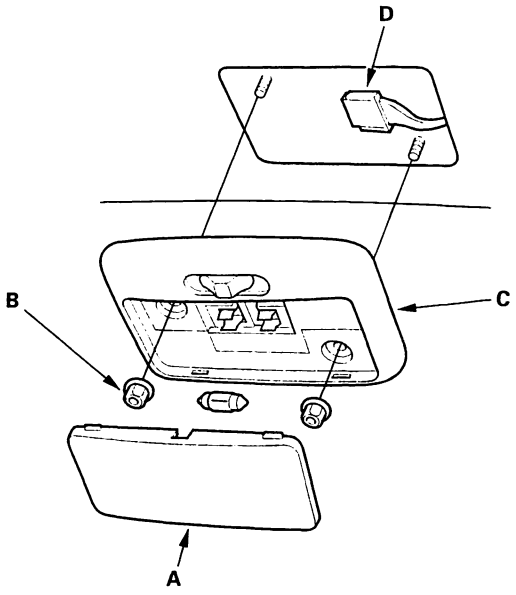

3. Remove the two mounting nuts (B) and the housing (C).
4. Disconnect the 3P connector (D) from the housing.
5. Check for continuity between the terminals in each switch position according to the table.

Terminal / Position	5	1 or 1'	4		3
OFF			○	⊗	○
MIDDLE		○	○	⊗	○
ON	○		○	⊗	○

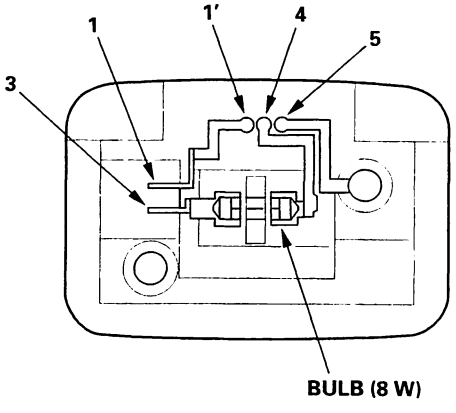

6. If the continuity is not as specified, replace the ceiling light.

Component Location Index

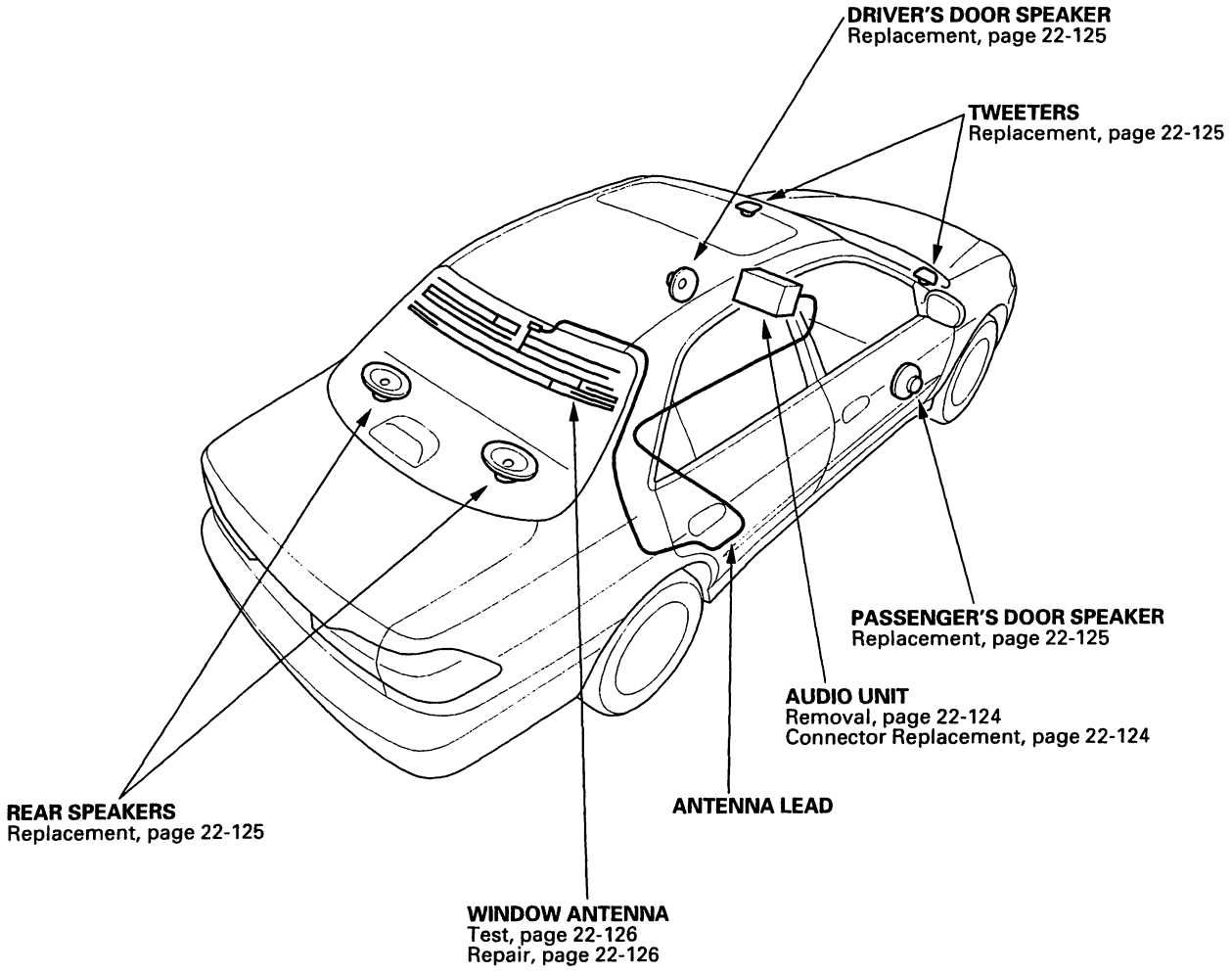

BACK

Circuit Diagram

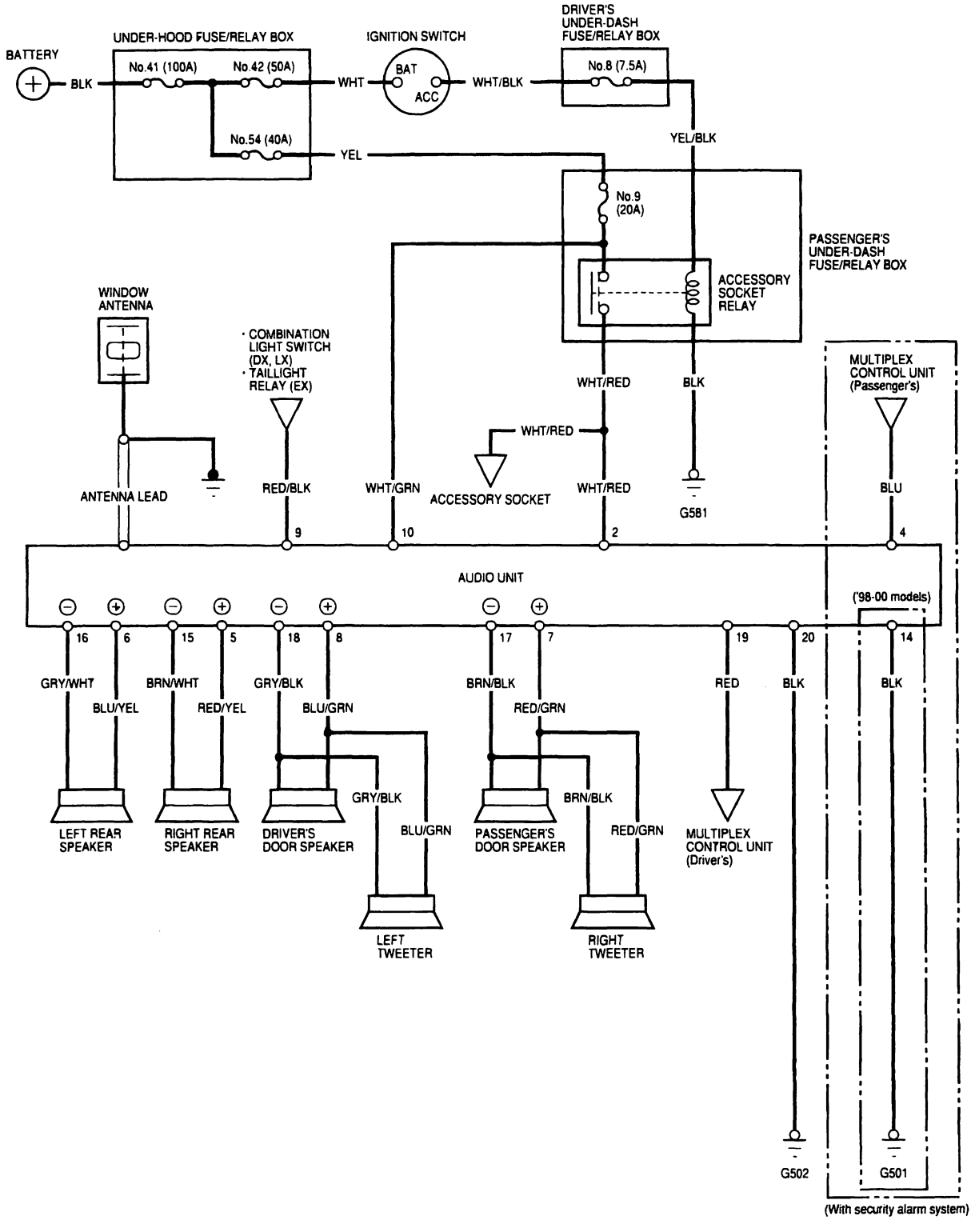

Audio Unit Removal/Installation

SRS components are located in this area. Review the SRS component locations, precautions and procedures in the SRS section before performing repairs or service (see page 23-28).

NOTE:
- Put on gloves to protect your hands.
- Take care not to scratch the dashboard and related parts.

1. Make sure you have the anti-theft code for the radio, then write down the frequencies for the radio's preset buttons.

2. Disconnect the negative cable from the battery.

3. Remove the center panel (see page 20-86).

4. Remove the bolts, disconnect the audio unit connectors (A) and the antenna lead (B), then remove the audio unit .

Fastener Locations

▶: Bolt, 4

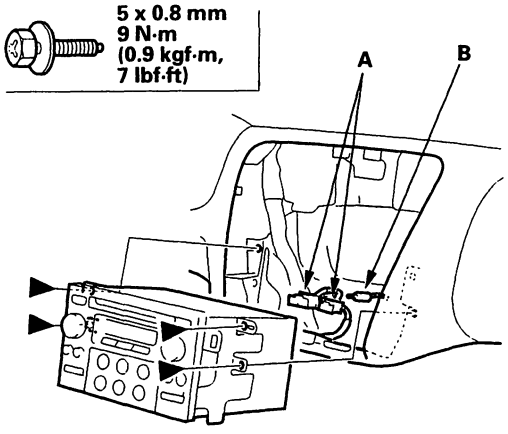

5. Install in the reverse order of removal, and note these items:

   - Make sure the audio unit connectors are plugged in properly, and the antenna lead is connected properly.
   - Enter the anti-theft code for the radio, then enter the customer's radio station presets.

Audio Unit Connector Replacement

When replacing an audio unit connector, match the wires to the cavities as listed in the following table. Cavities 1, 3, 11, 12, and 13 are not used.

Cavity	Wire	Connects to
2	WHT/RED	ACC (Main stereo power supply)
4	BLU	Security in
5	RED/YEL	Right rear speaker (+)
6	BLU/YEL	Left rear speaker (+)
7	RED/GRN	Front passenger's speaker (+) Right tweeter (+)
8	BLU/GRN	Driver's door speaker (+) Left tweeter (+)
9	RED/BLK	Lights-on signal
10	WHT/GRN	Constant power
14 *	BLK	Security out
15	BRN/WHT	Right rear speaker (−)
16	GRY/WHT	Left rear speaker (−)
17	BRN/BLK	Front passenger's door speaker (−) Right tweeter (−)
18	GRY/BLK	Driver's door speaker (−) Left tweeter (−)
19	RED	Multiplex control unit, driver's
20	BLK	Ground (G502)

* : '98-00 models

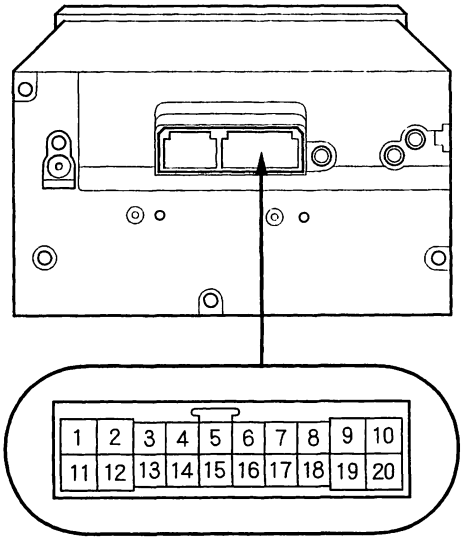

BACK

Speaker Replacement

Door

1. Remove the front door panel (see page 20-8).
2. Remove the three screws (A), then disconnect the 2P (B) connector from the speaker (C).

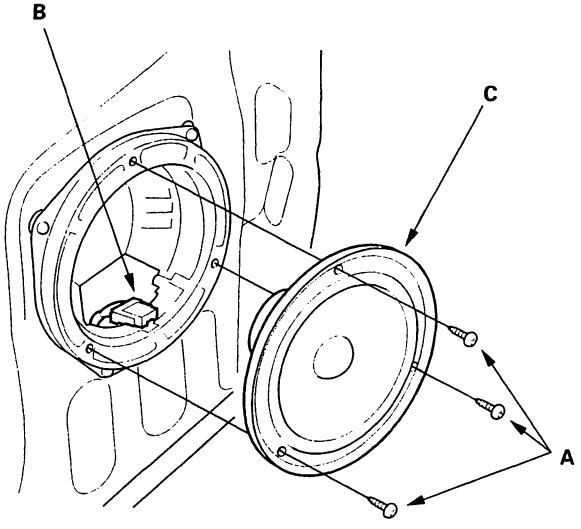

Tweeter

Carefully pry the tweeter (A) out of the dashboard, then disconnect the 2P connector (B) from the tweeter.

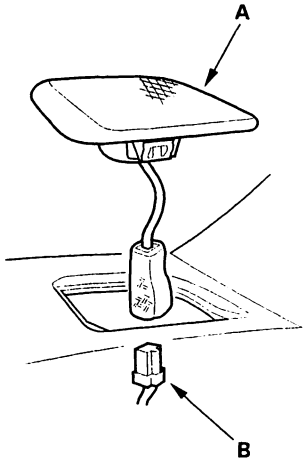

Rear

1. Remove the two screws from the trunk side, then remove the speaker cover (A).

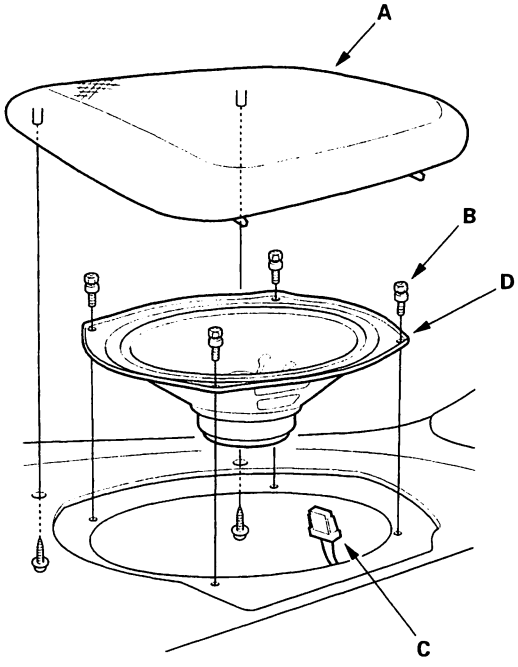

2. Remove the four screws (B), disconnect the 2P connector (C) from the speaker (D), and remove the speaker.

Window Antenna Test

1. Wrap aluminum foil (A) around the tip of the tester probe (B) as shown.

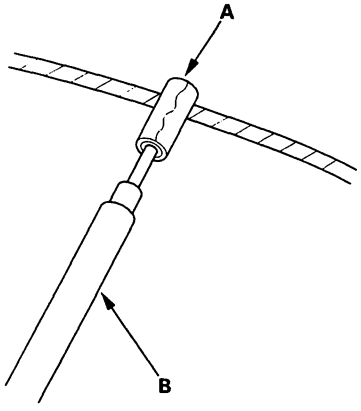

2. Touch 1 tester probe to the window antenna terminal (A) hear, and move the other tester probe along the antenna wires to check that continuity exists. Repair if continuity does not exist.

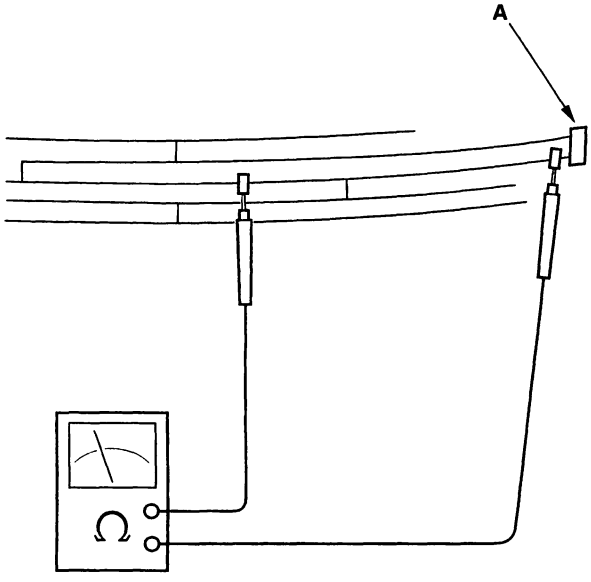

Window Antenna Repair

NOTE: To make an effective repair, the broken section must be no longer than 1 inch.

1. Lightly rub the area around the broken section (A) with fine steel wool, then clean it with alcohol.

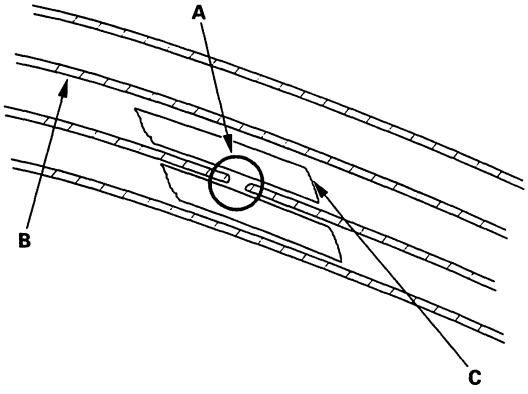

2. Carefully mask above and below the broken portion of the window antenna wire (B) with cellophane tape (C).

3. Mix the silver conductive paint thoroughly. Using a small brush, apply a heavy coat of paint (A) extending about 1/8" on both sides of the break. Allow 30 minutes to dry.

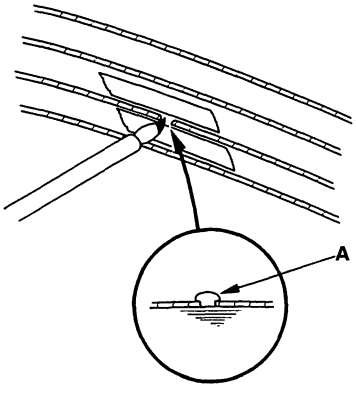

4. Check for continuity in the repaired wire.

5. Apply a second coat of paint in the same way. Let it dry 3 hours before removing the tape.

BACK

Window Antenna Coil Test

1. Remove the rear shelf, Coupe (see page 20-59), Sedan (see page 20-77).

2. Disconnect the connectors (A, B) from the window antenna coil (C).

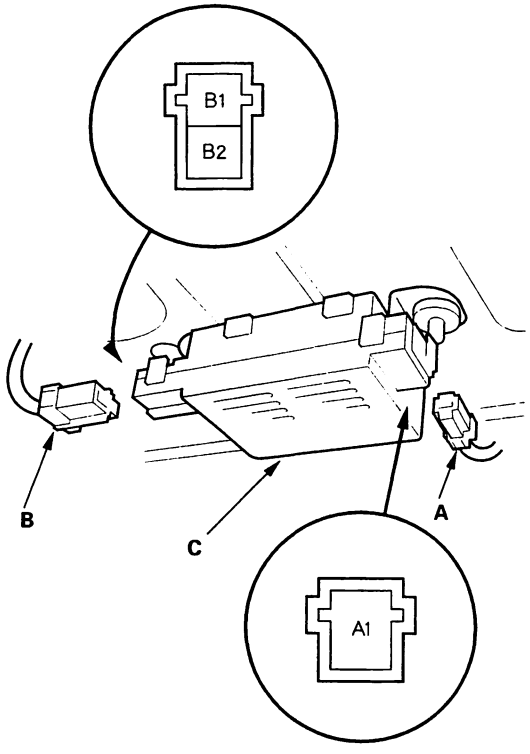

3. Check for continuity between terminal B2 and body ground and between terminals A1 and B1. If there is no continuity, replace the window antenna coil.

Clock

Circuit Diagram

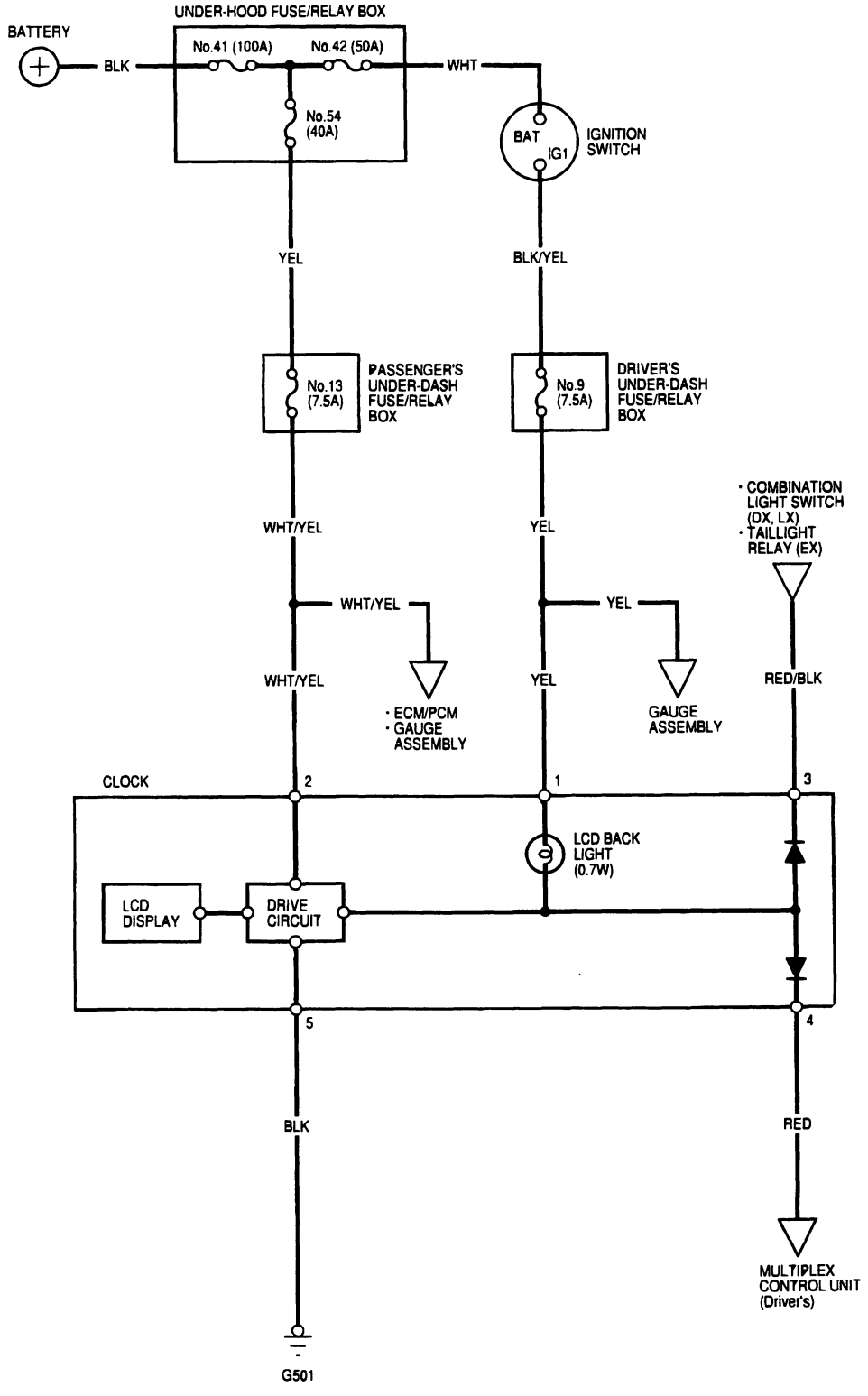

BACK

Replacement

1. Remove the clock (A) from the center panel (B).

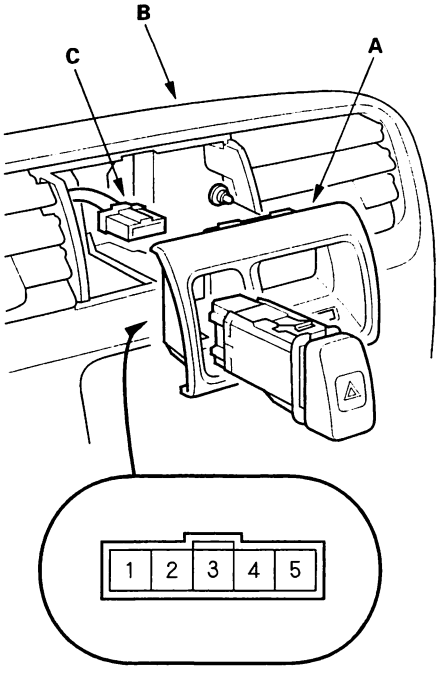

2. Disconnect the 5P connector (C) from the clock.

3. Remove the clock.

Terminals

Cavity	Wire	Connect to
1	YEL	IG1 (Main clock power supply)
2	WHT/ YEL	Constant power
3	RED/ BLK	Lights-on signal
4	RED	Multiplex control unit, driver's
5	BLK	Ground (G501)

Component Location Index

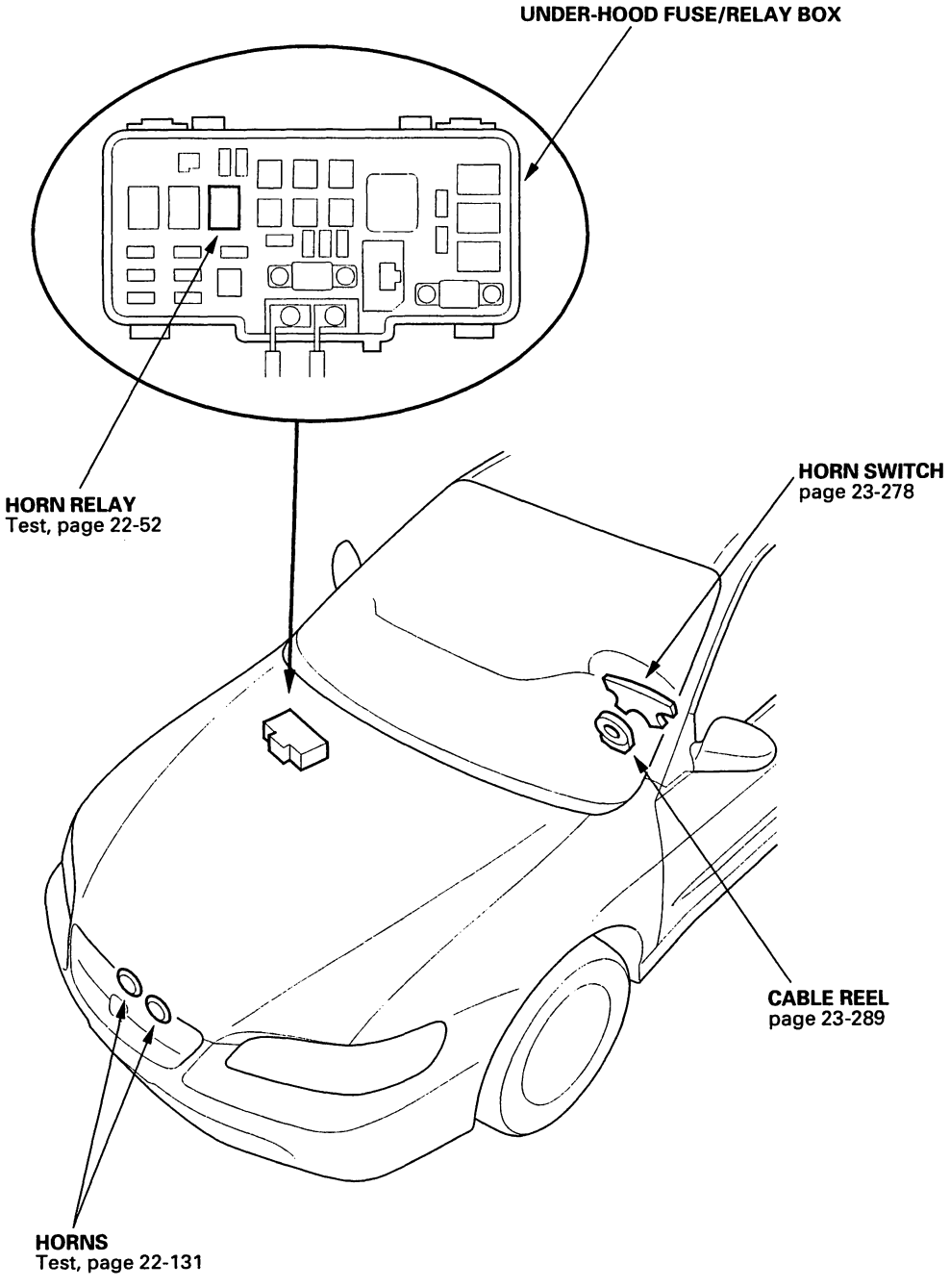

BACK

Circuit Diagram

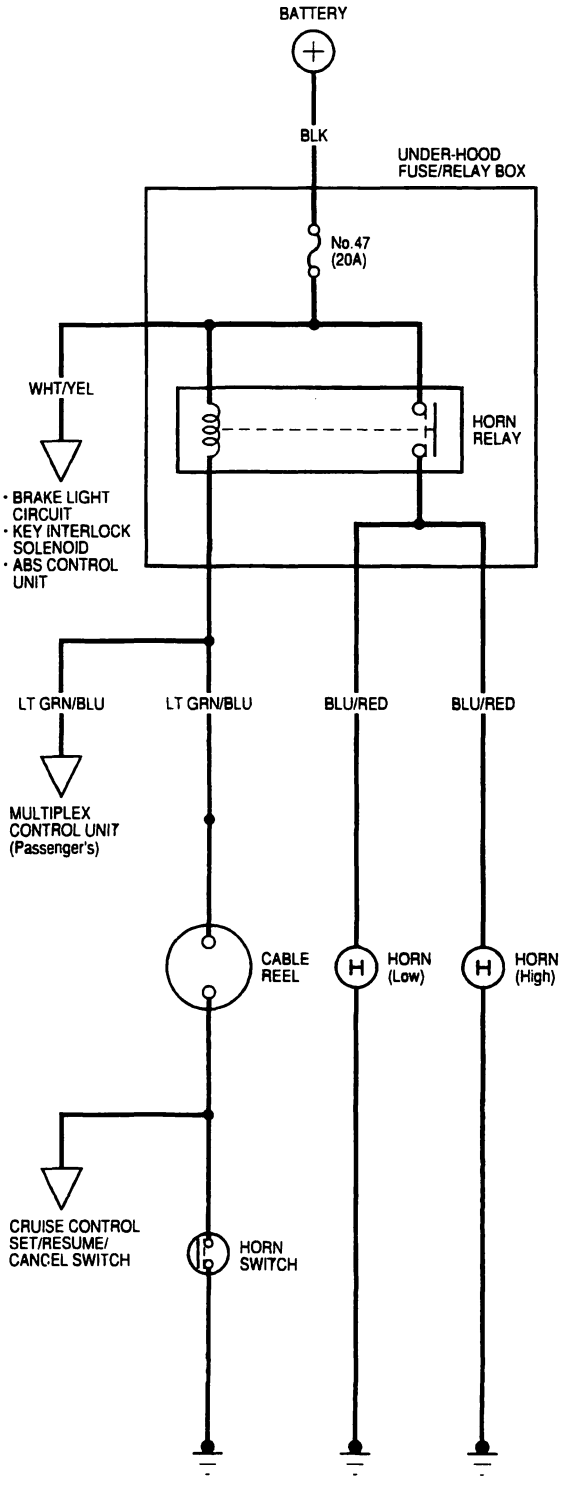

Horn Test/Replacement

1. Open the hood.
2. Remove the horn cover (A).

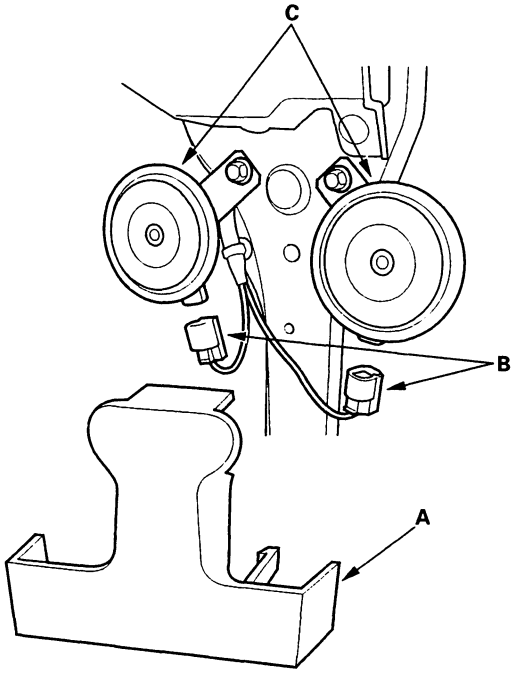

3. Disconnect the 1P connector (B), and remove the horn (C).
4. Test the horn by connecting battery power to the terminal (A) and grounding the bracket (B). The horn should sound.

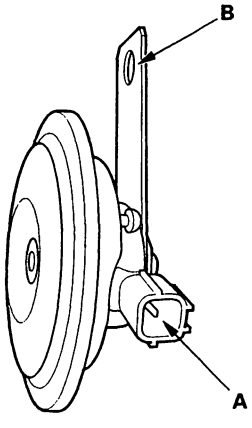

5. If it fails to sound, replace it.

Accessory Power Socket

Circuit Diagram

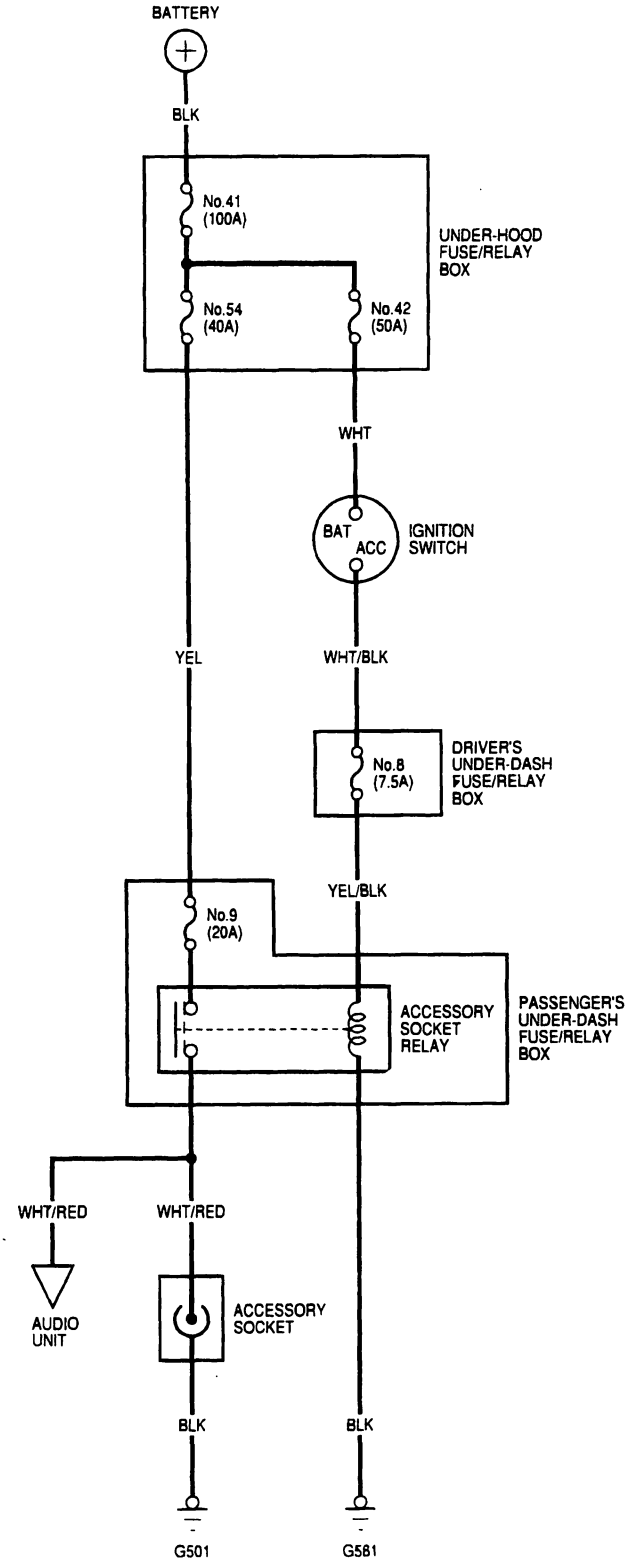

BACK

Test/Replacement

1. Remove the center console (see page 20-83).

2. Disconnect the 2P connector.

3. Inspect the connector terminals to be sure they are all making good contact.

   - If the terminals are bent, loose or corroded, repair them as necessary, and recheck the system.
   - If the terminals look OK, go to step 4.

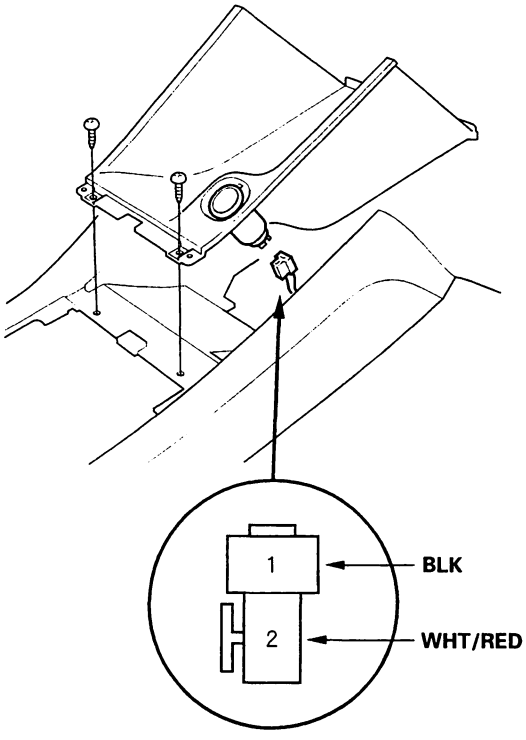

4. Turn the ignition switch ACC (I), and check for voltage between the No. 1 and No. 2 terminals.

   - There should be battery voltage.
   - If there is no battery voltage, check for:
     - blown No. 8 (7.5 A) fuse in the driver's under-dash fuse/relay box.
     - faulty accessory socket relay.
     - poor ground (G501, G581).
     - an open in the wire.
     - blown No.9 (20 A) in the passenger's under-dash fuse/relay box.

5. Remove the housing (A) and socket (B).

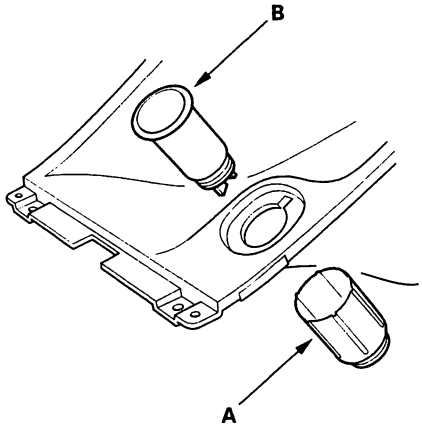

Multiplex Control System

Component Location Index

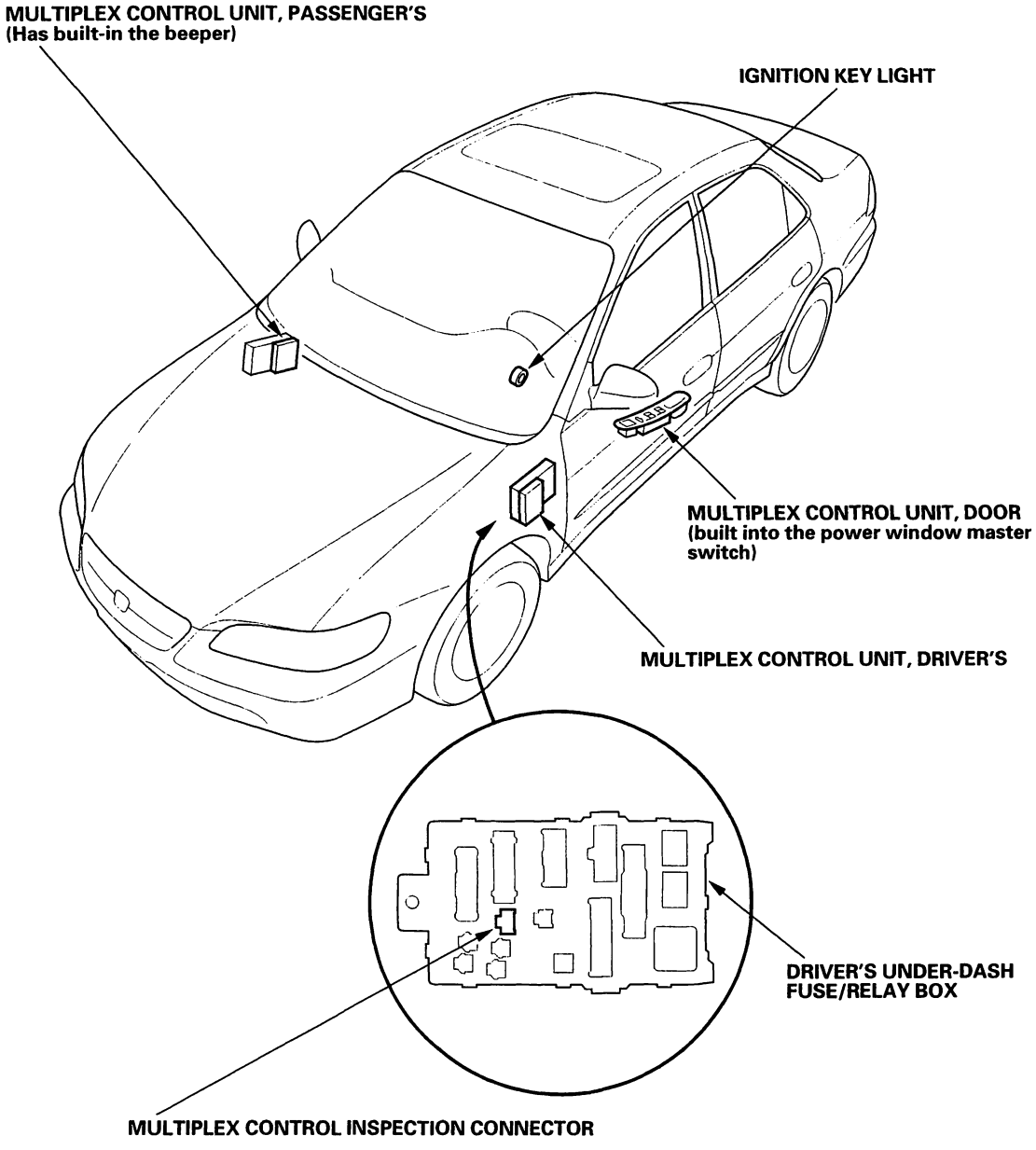

BACK

Circuit Diagram (Power, Ground, Communication Lines)

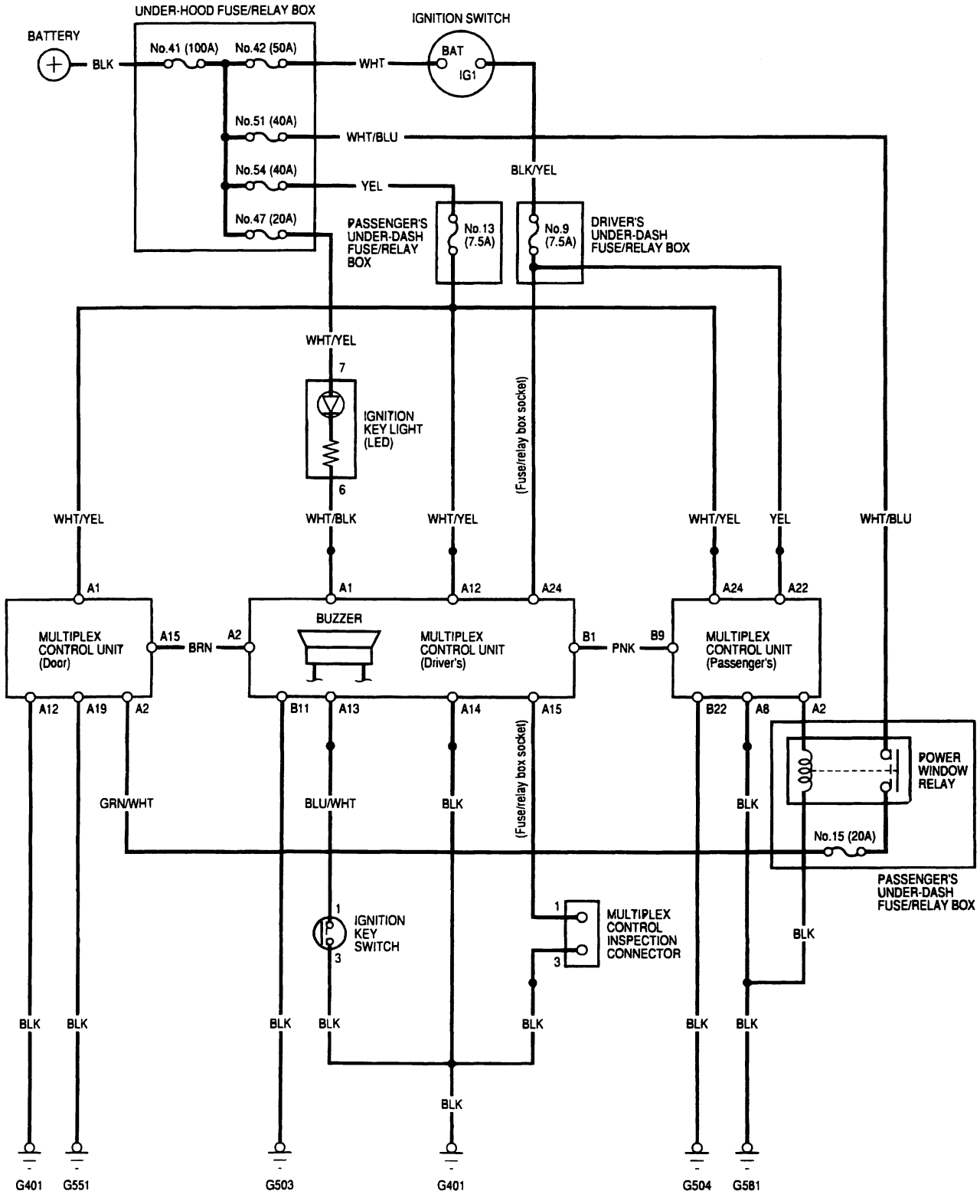

BACK

Multiplex Control System

System Description

The multiplex Control System has four internal functions:

- Multiplexing (send multiple signals over shared wires)
- Wake up/sleep (runs at full power only on demand to reduce battery draw)
- Fail-safe (fixes or ignores faulty signals)
- Self-diagnosis (Mode 1 for the system, Mode 2 for input lines)

The system controls the function of the following circuits

- Engine Oil Pressure Indicator
- Seat Belt Reminder
- Lights-on Reminder
- Key-in Reminder
- Key Light Timer
- Dash Lights Brightness Control
- Entry Light Control (EX, SE) (ignition key light and ceiling light)
- Automatic Lights-off (EX)
- Power Door Locks
- Power Window (including key-off timer operation)
- Wiper/Washer (including speed responsive intermittent wiper)
- Keyless Entry/Security Alarm (EX, SE)
- Interlock system (see page 14-144).

Multiplex Communication

To reduce the number of wire harnesses, digital signals are sent via shared multiplex communication lines rather than sending normal electrical signals through individual wires.

- The input signals from each switch are converted to digital signals at the central processing unit (CPU). The digital signals are sent from the transmitter unit to the receiver unit as serial signals.
- The transmitted signal is converted to a switch signal at the receiver unit, and it operates the related component.
- There are exclusive communication lines between each of the multiplex control units:
  - Door ↔ Driver's (between the door and the driver's multiplex control units) Wire color: BRN
  - Driver's ↔ Passenger's (between the driver's and the passenger's multiplex control units) Wire color: PNK

The control units always communicate via these lines when the system is operating, and they stop communicating when the system is OFF.

Wake-up and Sleep

The multiplex control system has "wake-up" and "sleep" functions to decrease parasitic draw on the battery when the ignition switch is OFF.

- In the sleep mode, the multiplex control unit stops the functions (communication and CPU control) when it is not necessary for the system to operate.
- As soon as any operation is requested (for example, door is unlocked), the related control unit in the sleep mode immediately wakes up and begins to function. This control unit also sends a wake-up signal to the other control units via the communication lines.
- When the ignition switch is turned OFF, and driver's or front passenger's door opened, there is about a 10 second delay before the control units go from the wake-up mode to the sleep mode.
- If any door is open, the sleep mode will not function.
- If a key is in the ignition switch, the sleep mode will not function.
- When in sleep mode, the current draw is reduced from 70 – 80 mA to less than 10 mA.

Fail-safe

To prevent improper operation, the multiplex control system has a fail-safe function. In the fail-safe mode, the output signal is fixed when any part of the system malfunctions (for example, a faulty control unit or communication line).
Each control unit has a hardware fail-safe function that fixes the output signal when there is any CPU malfunction, and a software fail-safe function that ignores the signal from the malfunctioning control unit and allows the system to operate normally.

BACK

Troubleshooting

Special Tools Required:
SCS Service Connector 07WAZ-001010A

1. Check the No. 9 (7.5A) fuse in the driver's under-dash fuse/relay box, and the No. 13 (7.5A) fuse in the passenger's under-dash fuse/relay box.

   Is the fuses OK?

   YES—Go to step 2.

   NO—Find and repair the cause of the blown fuse.■

2. Connect the special tool to the multiplex control inspection connector (A).

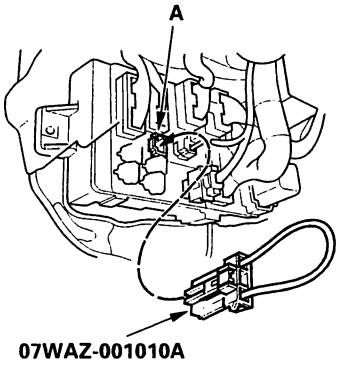

3. Turn the ignition switch ON (II).
   If the driver's seat belt is unbuckled, the seat belt reminder will beep five times.

4. Check self-diagnosis function Mode 1 for a diagnostic trouble code (DTC). After about 5 seconds, the ignition key light should come on and the beeper should beep for 2 seconds, then go off for 0.2 seconds, then blink and beep for 0.2 seconds. This means that you are in Mode 1 of the self-diagnosis function.

   - If the system enters Mode 1, go to step 5.
   - If the system does not enter Mode 1, see if the SCS circuit is working properly. Go to step 6.

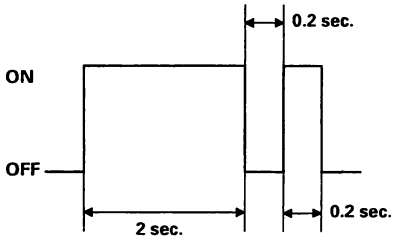

5. About 1 second after you go into self-diagnosis Mode 1, the ignition key light and beeper indicate the DTC, and repeat it every 3 seconds. If there is a code, it will blink/beep, pause, then repeat the code as long as the ignition switch is ON (II). If there is more than one DTC, the system will indicate them in ascending order, beginning from the DTC with the lowest numerical value.

   Does the ignition key light blink and the beeper beep?

   YES—There is a DTC. Count the blinks/beeps to find your DTC in the table, then go to step 9 and check the communication lines.

DTC	Cause
1	The driver's unit is not able to receive signals from the door unit.
2	The driver's unit is not able to receive signals from the passenger's unit.
3	Malfunction in the driver's unit.
4	Signals from each unit do not match. (LX and EX control units are not interchangable)
5	The passenger's unit is not able to receive signals from the other units.
6	The door unit is not able to receive signals from the other units.

   NO—If the system goes into Mode 1 as described in step 4, and there is not repeating DTC. Go to step 11.

6. Remove the special tool from the SCS connector.

7. Check for continuity between the No. 1 terminal of the inspection connector and the A15 terminal in the driver's multiplex control unit.

   Is there continuity?

   YES—Go to step 8.

   NO—Replace the driver's under-dash fuse/relay box, and recheck for DTC's.■

(cont'd)

Troubleshooting (cont'd)

8. Check for continuity between the No. 3 terminal of the inspection connector and body ground G401.

   Is there continuity?

   YES—If there is still no Mode 1 confirmation, replace the driver's multiplex control unit and try again. After replacing the driver's multiplex control unit the system confirms Mode 1 and there are no codes, go to step 12.

   NO—Repair open in the wire, and recheck for DTC's.■

9. With the ignition switch OFF, check for continuity according to the table.

Communication Line	Wire	Continuity
Door unit to Driver's unit	BRN	YES
Driver's unit to Passenger's unit	PNK	YES

   Is there continuity?

   YES—Go to step 10.

   NO—Check for an open in the wire.■

10. Turn the ignition switch ON (II), and check for voltage between the communication line and ground.

Communication Line	Wire	Voltage
Door unit to Driver's unit	BRN	3.5—9.5
Driver's unit to Passenger's unit	PNK	3.0—10.0

   Does the voltage match the table?

   YES—Communication lines are OK. Go to step 11.

   NO—Repair the line according to the following.■
   - If the voltage is too high:
     - Check for a short to another wire with voltage.
     - Check for poor contact in the connectors at each control unit connector to the wire.
   - If the voltage is too low:
     - Check for a short to ground or to another wire.
     - Check for poor connections at each control unit connector to the wire.
     - Faulty circuit in one of the multiplex control units connected to the wire.
   - If any one or all the control units are completely inoperative, perform the multiplex control unit input test (see page 22-141).

11. Shift to the sleep mode:
    - Turn the ignition switch OFF and remove the key.
    - Remove the special tool from the SCS connector.
    - Cancel the key-off operation timer in the power window system by opening and closing one of the doors.
    - Make sure that the exterior lights are off. If you do not operate any switches related to the multiplex control units within 1 minute after meeting the above conditions, the system function shifts to the sleep mode. (All of the switches must be turned OFF except door lock knob switches). Go to step 12.

12. Confirm the sleep mode:
    - Check for voltage to ground on the BRN wire and PNK wire. There should battery voltage in the sleep mode.
    - Check the parasitic draw at the battery while shifting to the sleep mode. Amperage should change from about 70 to 80 mA to less than 20 mA.
    - If the vehicle does not go into the sleep mode, carefully perform Mode 2 test (see step 14), and check for faulty input for example a key cylinder switch keeping the system awake.

13. Confirm the wake up mode.
    - When any switch in the multiplex system is turned on, it wakes up its related control unit which, in turns wakes up the other units. After one minute it will return to sleep mode again If the switch is returned to the original position.
    - When the ignition switch is turned ON (II), all of the multiplex control units wake up at the same time without "talking" to each other through the communication lines.

    If the wake up mode is confirmed on the first switch tested, and there is no problem with any other switch operation, the system is working correctly. Go to step 14.

    After confirming a problem in sleep mode, look in the following tables for the switch most closely related to the problem you may be having. Operate that switch and see if its control units wake up. Also use Mode 2 step 14 to confirm switch inputs.

    NOTE: If any control unit is faulty and will not wake up, several functions (locks, windows, etc.) of the system will malfunction at the same time.

BACK

In each table below, the control unit is followed by a list of the switches and input signals that can wake it up.

Multiplex Control Unit, Passenger's: No. 9 (7.5A) driver's fuse No. 13 (7.5A) passenger's fuse
Communication lines (BRN, PNK)
Front passenger's door lock knob switch (LOCK) Front passenger's key cylinder switch (LOCK) Front passenger's door lock knob switch (UNLOCK)* Front passenger's key cylinder switch (UNLOCK) Front passenger's door lock switch (LOCK/UNLOCK) Front passenger's door switch (OPEN) Right rear door switch (OPEN) Right rear door lock knob switch (UNLOCK)* Keyless transmitter (LOCK) Keyless transmitter (UNLOCK) Keyless transmitter (TRUNK) Security input for the radio. Test by disconnecting and reconnecting the radio connector. *When testing the passenger's door lock knobs, be sure all other passenger lock knobs are in the locked position.

Multiplex Control Unit, Driver's: No. 9 (7.5A) driver's fuse No. 13 (7.5A) passenger's fuse
Communication lines (BRN, PNK)
Combination switch Driver's door switch (OPEN) Left rear door switch (OPEN) Left rear door lock knob switch (UNLOCK) Trunk latch switch (OPEN) Trunk key cylinder switch(UNLOCK) Engine hood switch (OPEN)

Multiplex Control Unit, Door: No. 9 (7.5A) driver's fuse No. 13 (7.5A) passenger's fuse
Communication lines (BRN, PNK)
Driver's door lock knob switch (LOCK) Driver's door key cylinder switch (LOCK) Driver's door lock knob switch (UNLOCK) Driver's door key cylinder switch (UNLOCK) Driver's door lock switch (LOCK/UNLOCK)

14. With the system in Mode 1, and the ignition switch still in the ON (II) position, disconnect the special tool from the multiplex control inspectin connector for about 5 to 10 seconds, then reconnect it. The ignition key light should come on and the beeper should beep for 2 seconds, then blink and beep twice more at 0.2 second intervals. This means the system has gone from Mode 1 to Mode 2. Go to step 15.

Mode 2:

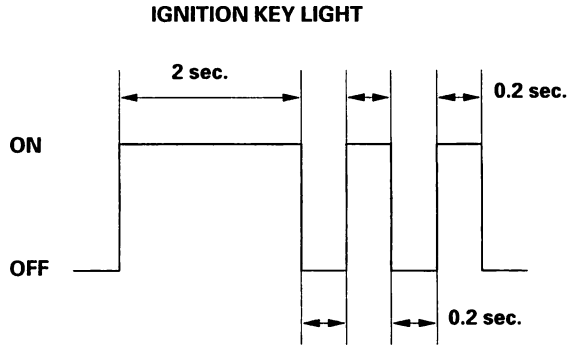

NOTE: To cancel Mode 2, disconnect the SCS service connector from the multiplex control inspection connector for 10 seconds or more, or turn the ignition switch OFF.

15. Look in the following tables for the switch most closely related to the problem. Test all the switches in the following order, otherwise the test results maybe inaccurate. While still in Mode 2, operate that switch to test the wire, switch, and its control unit input. If the circuit is OK, the ignition key light should blink once and the beeper should beep once. If the circuit is faulty, there will be no indication.

Does the ignition key light blink and beeper beep?

YES – The circuit is OK. Test the other switches.
NO – Go to step 16.

In each of the following tables, the control unit is followed by list of circuits that it can check in Mode 2.

A second key is necessary to test the key cylinder switches. If only one key is available, cut a second key from a non-immobilizer type key blank for the test.

(cont'd)

Troubleshooting (cont'd)

Multiplex Control Unit, Passenger's
Test all the switches in the following order, otherwise the test results maybe inaccurate: Front passenger's door lock knob switch (LOCK) Front passenger's key cylinder switch (LOCK) Front passenger's door lock knob switch (UNLOCK)* Front passenger's key cylinder switch (UNLOCK) Front passenger's door lock switch (UNLOCK/LOCK) Right rear door lock knob switch (UNLOCK)* Front passenger's door switch (OPEN) Right rear door switch (OPEN) Keyless transmitter (LOCK) Keyless transmitter (UNLOCK) Keyless transmitter (TRUNK) Security input for the radio. Test by disconnecting and reconnecting the radio connector. *When testing the passenger's door lock knobs, be sure all other passenger lock knobs are in the locked position.

Multiplex Control Unit, Driver's
Dash lights brightness controller (ROTATE) Driver's door switch (OPEN) Left rear door switch (OPEN) Left rear door lock knob switch (UNLOCK) Trunk latch switch (OPEN) Trunk key cylinder switch (UNLOCK) Driver's seat belt switch (BUCKLED) Windsheild wiper/washer switch (except MIST switch) Brake pedal position switch (Brake switch) (PRESSED) Parking brake switch (ON) Hood switch (OPEN) Headlight or combination switch (ON)

Multiplex Control Unit, Door
Test all the switches in the following order, otherwise the test results maybe inaccurate: Driver's door lock knob switch (LOCK) Driver's key cylinder switch (LOCK) Driver's door lock knob switch (UNLOCK) Driver's key cylinder switch (UNLOCK) Driver's door lock switch (LOCK/UNLOCK) Power window master switch (not the passenger's switches)

The key cylinder switches should only beep/flash when turned to LOCK or UNLOCK. If they beep/flash when returning to the center position, the switch is defective or misaligned. Adjust or replace the affected key cylinder switch.

16. Check 2 or 3 more circuits listed for that control unit.

    Does the ignition key light blink and the beeper beep for each additional circuit?

    YES—The additional circuits are OK. Repair the short or open in the circuit that failed the test in the proceeding step. Refer to the test(s) for that individual system.■

    NO—Multiple failed circuits can mean that the control unit has failed, but without triggering a DTC. Test a few more circuits. If they also fail, substitute a known-good control unit, then recheck. If the sytem works properly, the original control unit is faulty; replace it. If there is still a malfunction, substitute a known-good control unit for the next most likely faulty control unit, then recheck. If the sytem works properly, that control unit is faulty; replace it.■

BACK

Multiplex Control Unit Input Test

NOTE: If the multiplex control unit is replaced, never use a multiplex control unit other than the one which is manufactured by the original multiplex control unit maker. Using other multiplex control units, manufactured by a non-original maker could cause a malfunction of communication among the multiplex control unit.

Door Unit:

1. Remove the driver's door panel, and disconnect the connectors from the door multiplex control unit.

2. Inspect the connector and socket terminals to be sure they are all making good contact.

   - If the terminals are bent, loose or corroded, repair them as necessary, and recheck the system.
   - If the terminals look OK, go to step 3.

3. Make the following input tests at connector A.

   - If a test indicates a problem, find and correct the cause, then recheck the system.
   - If all the input tests prove OK, go to step 4.

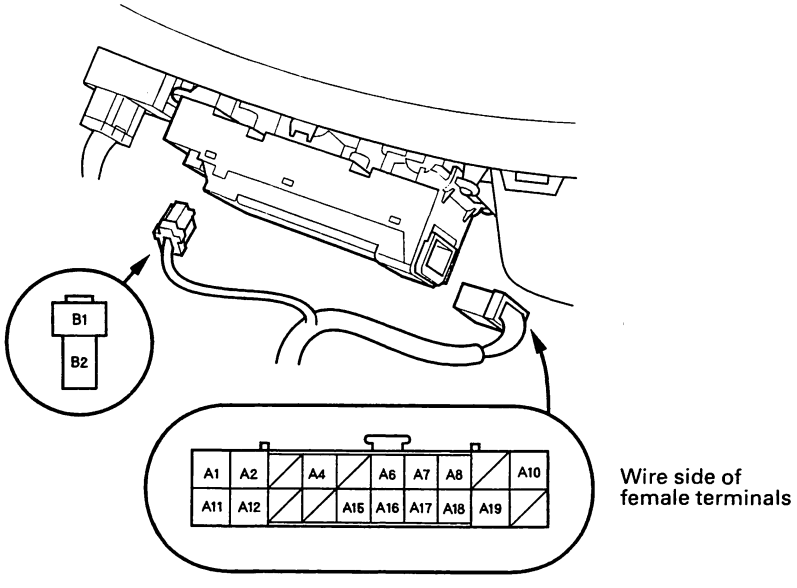

(cont'd)

Multiplex Control Unit Input Test (cont'd)

Cavity	Wire	Test condition	Test: Desired result	Possible cause if result is not obtained
A1	WHT/YEL	Under all conditions	Check for voltage to ground: There should be battery voltage.	• Blown No. 13 (7.5A) fuse in the passenger's under-dash fuse/ relay box • An open in the wire
A2	GRN/WHT	Ignition switch ON (II)	Check for voltage to ground: There should be battery voltage.	• Blown No. 15 (20A) fuse in the passenger's under-dash fuse/ relay box • Blown No. 54 (40A) fuse in the underhood fuse/relay box • An open in the wire
A12	BLK	Under all conditions	Check for continuity go ground: There should be continuity.	• Poor ground (G401) • An open in the wire
A19	BLK	Under all conditions	Check for continuity to ground: There should be continuity.	• Poor ground (G551) • An open in the wire

BACK

Passenger's Unit:

4. Remove the passenger's multiplex control unit from the passenger's under-dash fuse/relay box.

5. Inspect the connector and socket terminals to be sure they are all making good contact.

   - If the terminals are bent, loose or corroded, repair them as necessary, and recheck the system.
   - If the terminals look OK, go to step 6.

6. Make the following input tests at connector B and the fuse/relay box socket.

   - If a test indicates a problem, find and correct the cause, then recheck the system.
   - If all the input tests prove OK, go to step 7.

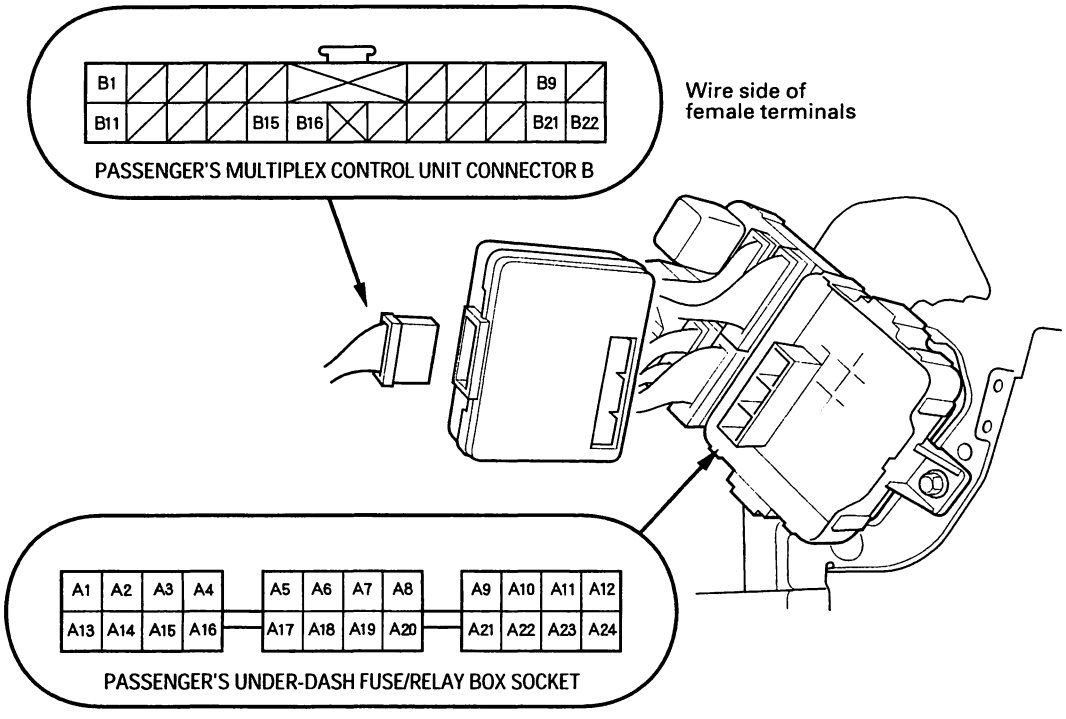

Cavity	Wire	Test condition	Test: Desired result	Possible cause if result is not obtained
A24	Fuse/relay box socket	Under all conditions	Check for voltage to ground: There should be battery voltage.	• Blown No. 13 (7.5A) fuse in the passenger's under-dash fuse/relay box • Blown No. 54 (40A) fuse in the under-hood fuse/relay box • An open in the wire
A8		Under all conditions	Check for continuity to ground: There should be continuity.	• Poor ground (G581) • An open in the wire
A22		Ignition switch ON (II)	Check for voltage to ground: There should be battery voltage.	• Blown No. 9 (7.5A) fuse in the driver's under-dash fuse/relay box • Blown No. 42 (50A) fuse in the under-hood fuse/relay box • An open in the wire
B22	BLK	Under all conditions	Check for continuity to ground: There should be continuity.	• Poor ground (G504) • An open in the wire

(cont'd)

Multiplex Control Unit Input Test (cont'd)

Driver's Unit:

7. Remove the driver's multiplex control unit from the driver's under-dash fuse/relay box.
8. Inspect the connector and socket terminals to be sure they are all making good contact.

   - If the terminals are bent, loose or corroded, repair them as necessary, and recheck the system.
   - If the terminals look OK, go to step 9.

9. Make the following input tests at connector B and the fuse/relay box socket.

   - If a test indicates a problem, find and correct the cause, then recheck the system.
   - If all the input tests prove OK, troubleshoot the Multiplex Control System (see page 22-137).

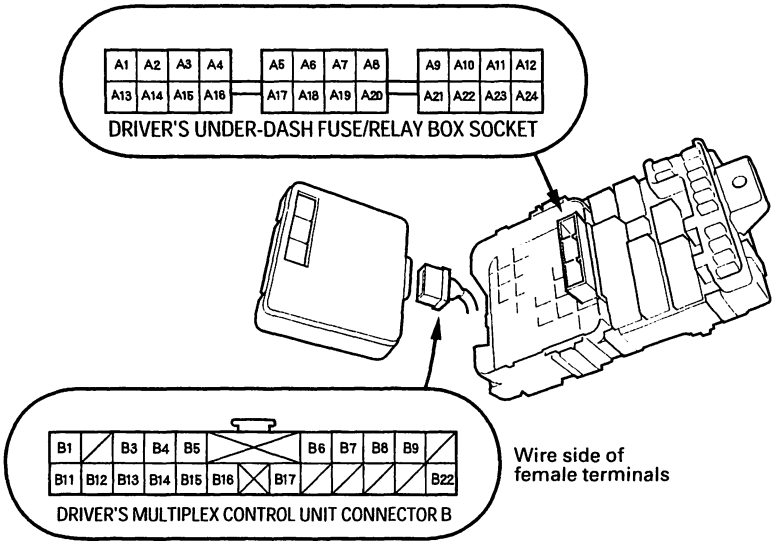

Cavity	Wire	Test condition	Test: Desired result	Possible cause if result is not obtained
A12	Fuse/relay box socket	Under all conditions	Check for voltage to ground: There should be battery voltage.	• Blown No. 13 (7.5A) fuse in the passenger's under-dash fuse/relay box • Blown No. 54 (40A) fuse in the under-hood fuse/relay box • An open in the wire
A14		Under all conditions	Check for continuity to ground: There should be continuity.	• Poor ground (G401) • An open in the wire
A24		Ignition switch ON (II)	Check for voltage to ground: There should be battery voltage.	• Blown No. 9 (7.5A) fuse in the driver's under-dash fuse/relay box • Blown No. 42 (50A) fuse in the under-hood fuse/relay box • An open in the wire
A13		Ignition key is inserted into the ignition switch	Check for continuity to ground: There should be continuity.	• Faulty ignition key switch • An open in the wire • Poor ground (G401)
A1		Under all conditions	Attach to ground: Ignition key light should come on.	• Blown No. 47 (20A) fuse in the under-hood fuse/relay box • Blown LED • An open in the wire
A15		Short the multiplex control inspection connector terminals.	Check for continuity to ground: There should be continuity.	• Poor ground (G401) • An open in the wire • Faulty driver's fuse/relay box
B11	BLK	Under all conditions	Check for continuity to ground: There should be continuity.	• Poor ground (G503) • An open in the wire

BACK

Component Location Index

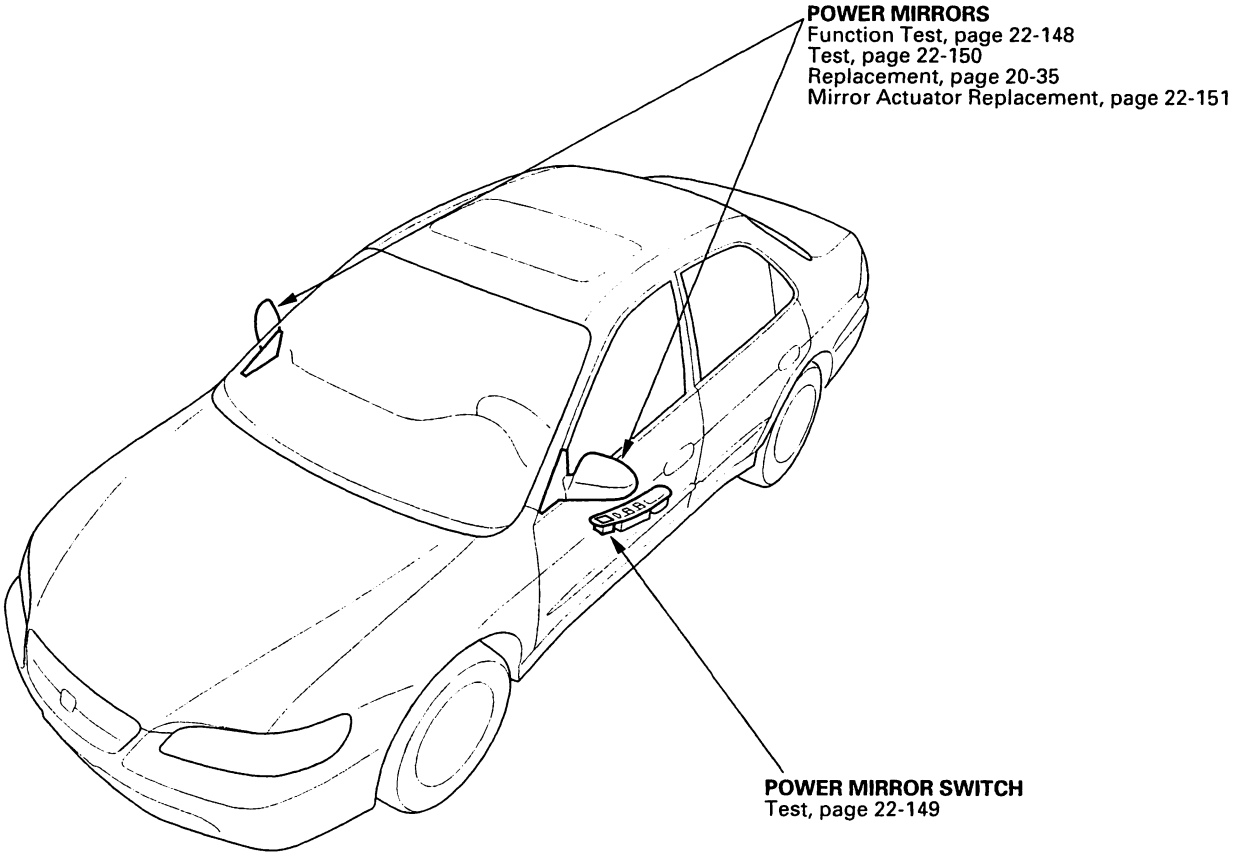

Circuit Diagram - USA without Defogger

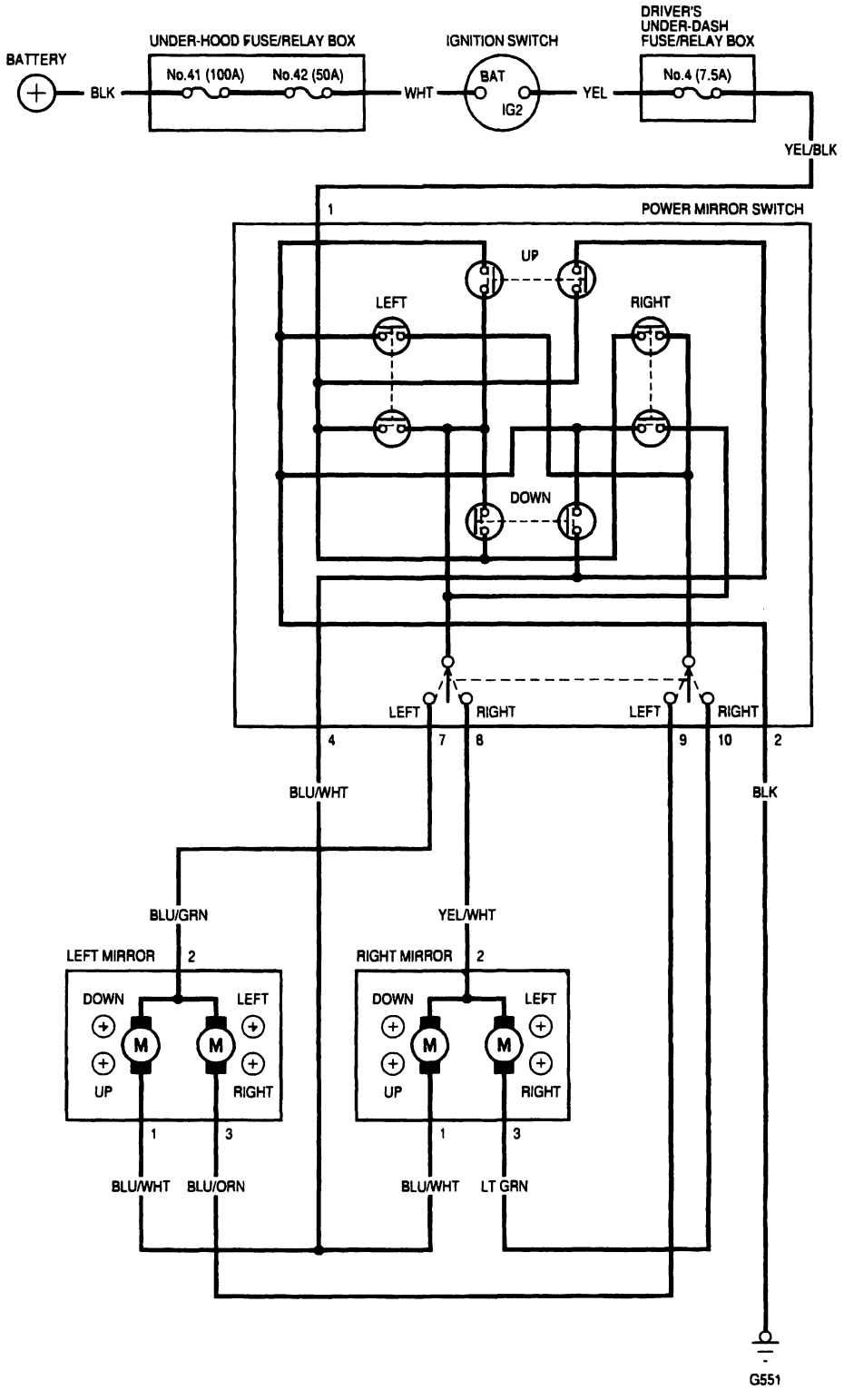

BACK

Circuit Diagram - Canada with Defogger

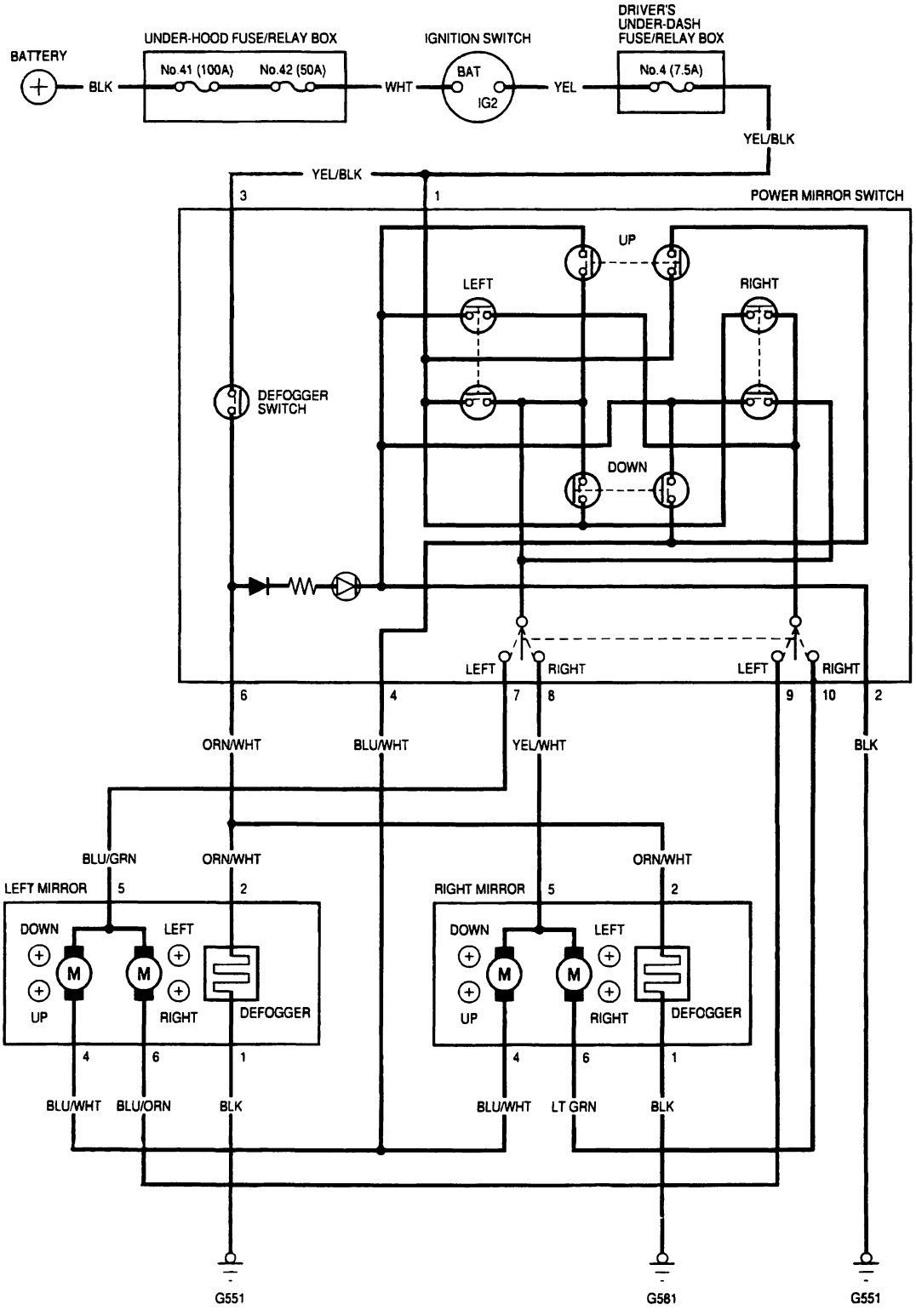

Function Test

1. Remove the driver's door panel (see page 20-8).

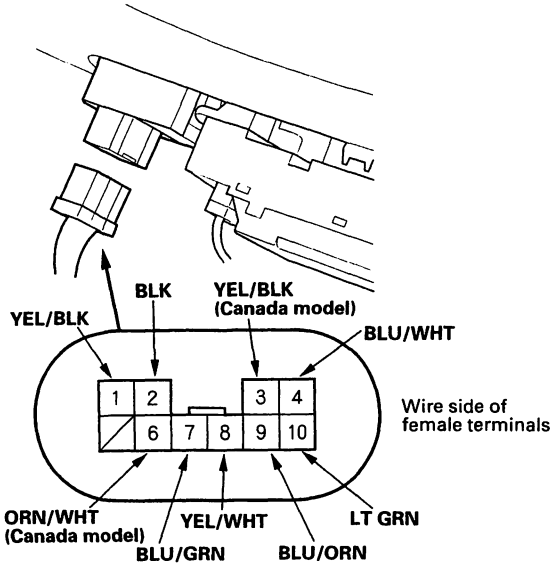

2. Disconnect the 10P connector from the power mirror switch.

3. Choose the appropriate test based on the symptom:

   - Both mirrors don't work, go to step 4.
   - Left mirror doesn't work, go to step 6.
   - Right mirror doesn't work, go to step 7.
   - Defogger doesn't work (Canada), go to step 8.

Both mirrors

4. Check for voltage between the No. 1 terminal and body ground with the ignition switch ON (II). There should be battery voltage.

   - If there is no battery voltage, check for:
     - blown No. 4 (7.5 A) fuse in the driver's under-dash fuse/relay box.
     - an open in the YEL/BLK wire.
   - If there is battery voltage, go to step 5.

5. Check for continuity between the No. 2 terminal and body ground.
   There should be continuity.

   - If there is no continuity, check for:
     - an open in the BLK wire.
     - poor ground (G551).
   - If there is continuity, check both mirrors individually as described in the next column.

Left mirror

6. Connect the No. 1 terminal to the No. 7 terminal, and the No. 4 (or No. 9) terminal to body ground with jumper wires. The left mirror should tilt down (or swing left) with the ignition switch ON (II).

   - If the mirror does not tilt down (or does not swing left), check for an open in the BLU/WHT (or BLU/ORN) wire between the left mirror and the 10P connector. If the wire is OK, check the left mirror actuator.
   - If the mirror neither tilts down nor swings left, repair the BLU/GRN wire.
   - If the mirror works properly, check the mirror switch.

Right mirror

7. Connect the No. 1 terminal to the No. 8 terminal, and the No. 4 (or No. 10) terminal to body ground with jumper wires. The right mirror should tilt down (or swing left) with the ignition switch ON (II).

   - If the mirror does not tilt down (or does not swing left), check for an open in the BLU/WHT (or LT GRN) wire between the right mirror and the 10P connector. If the wire is OK, check the right mirror actuator.
   - If the mirror neither tilts down nor swings left, repair the YEL/WHT wire.
   - If the mirror works properly, check the mirror switch.

Defogger (Canada)

8. Connect the No. 3 and No. 6 terminals with a jumper wire, and check for voltage between the No. 3 terminal and body ground. There should be battery voltage and both mirrors should warm up with the ignition switch ON (II).

   - If there is no voltage or neither warms up, check for:
     - an open in the YEL/BLK and ORN/WHT wires.
     - blown No. 4 (7.5 A) in the driver's under-dash fuse/relay box.
     - poor ground (G551, G581).
   - If only one fails to warm up, check its defogger.
   - If both fail to warm up, check the defogger switch.

BACK

Power Mirror and Mirror Defogger Switch Test

1. Remove the driver's door panel (see page 20-8).
2. Disconnect the 10P connector (A) from the power mirror switch (B).

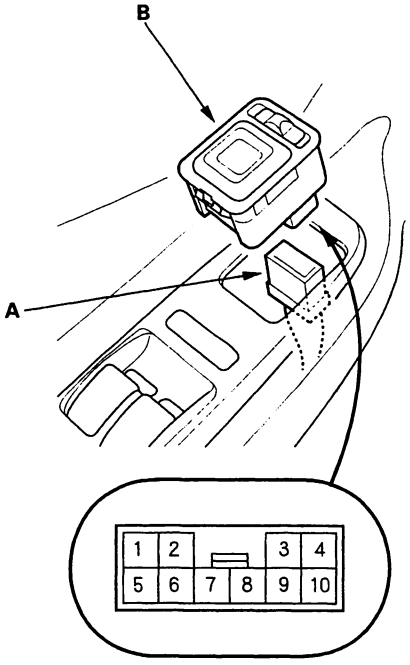

3. Check for continuity between the terminals in each switch position according to the table.

Mirror Switch:

	Terminal / Position	1	2	4	7	8	9	10
L	UP	○	○	○	○			
L	DOWN	○	○	○	○			
L	LEFT	○	○		○		○	
L	RIGHT	○	○		○		○	
R	UP	○	○	○		○		
R	DOWN	○	○	○		○		
R	LEFT	○	○			○		○
R	RIGHT	○	○			○		○

Defogger Switch (Canada):

Terminal / Position	3	6
ON	○	○
OFF		

4. If the continuity is not as specified, replace the power mirror switch.

Power Mirror Actuator Test

1. Remove the door panel (see page 20-8).
2. Disconnect the 3P or 6P connector (A) from the power mirror (B).

USA:

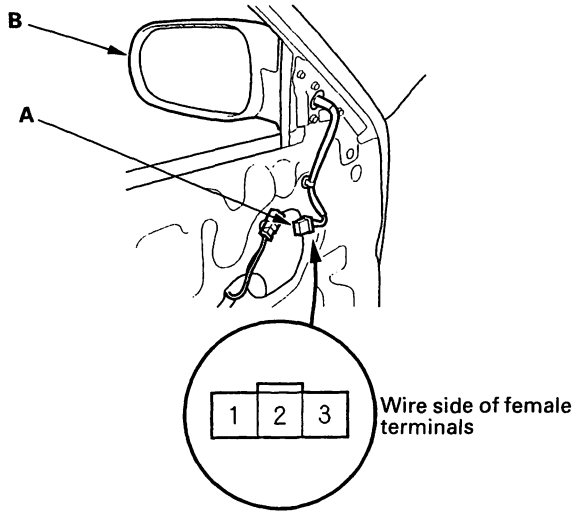

Canada:

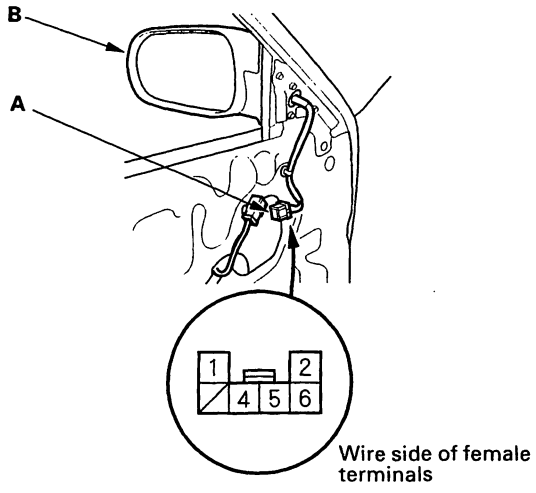

3. Check actuator operation by connecting power and ground according to the table.

Terminal / Position	1 (4)	2 (5)	3 (6)
TILT UP	⊕	⊖	
TILT DOWN	⊖	⊕	
SWING LEFT		⊕	⊖
SWING RIGHT			⊕

( ): Canada

Defogger Test (Canada)

4. Check for continuity between the No. 1 and No. 2 terminals of the 6P connector. There should be continuity.
5. If the mirror fails to work properly, replace the mirror actuator.

BACK

Power Mirror Actuator Replacement - Sedan

1. Remove the power mirror from the door (see page 20-35), and disconnect the 6P or 3P connector.

2. Cut the wire harness (A) with wire cutters.

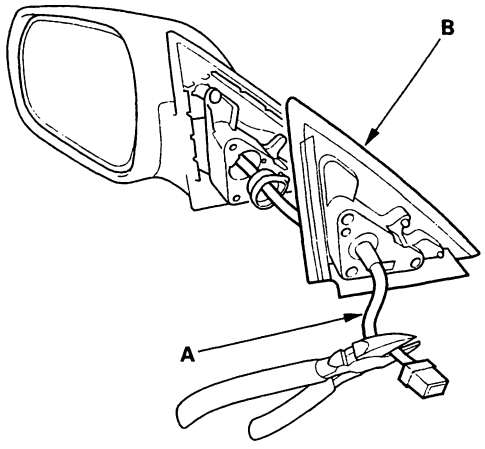

3. Remove the seat base (B).

4. Protect the mirror housing with shop towel (A).

5. Insert the screwdriver (B) along holder ramp (C), and placing flat blade underneath adapter ear (D) at end of ramp. Be careful not to damage the mirror housing.

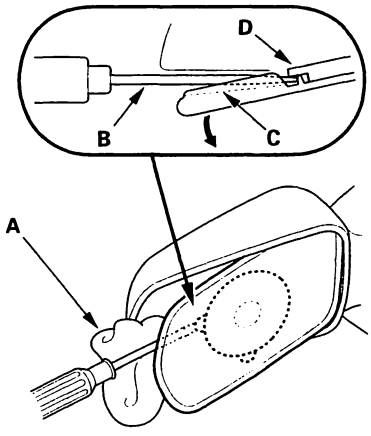

6. Pry off holder (A) from the housing (B).

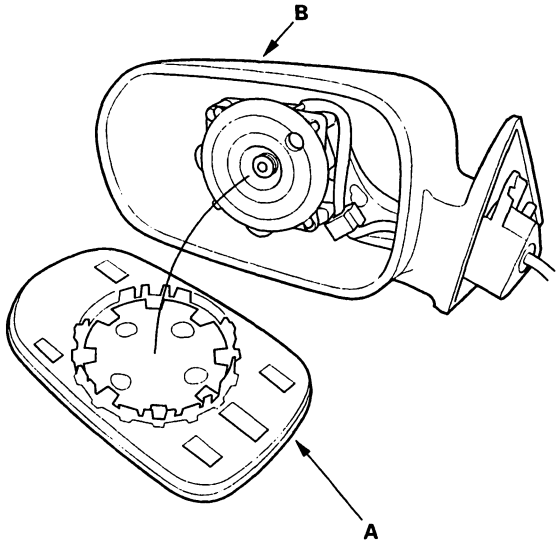

7. Remove the three screws (A) and the actuator (B) from the housing.

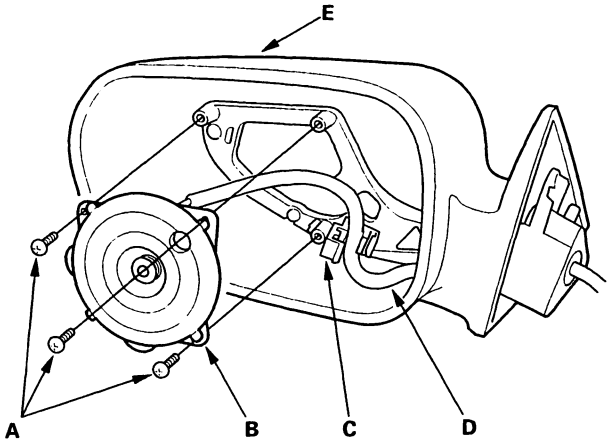

8. Prying the wire clip (C) with a screwdriver (E).

9. Pull the wire (D) from the housing.

(cont'd)

Power Mirror Actuator Replacement - Sedan (cont'd)

10. Install in the reverse of removal. Replace the seat base and three screws with new one.

11. Insert the terminals into the connector in the original arrangement as shown below.

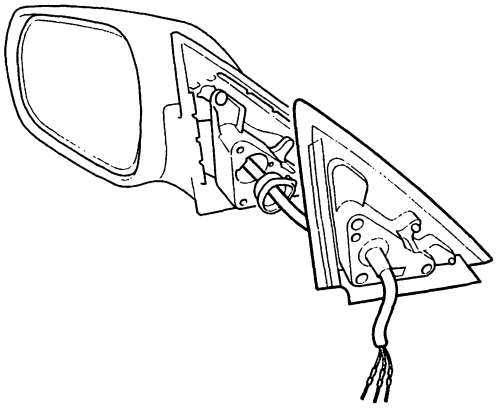

USA:
'98-00 models

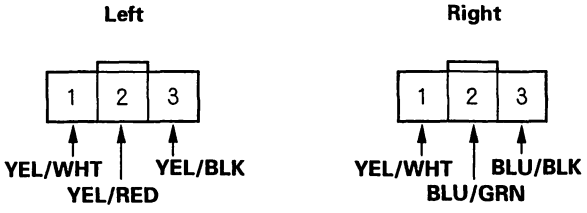

View from wire side

'01-02 models:

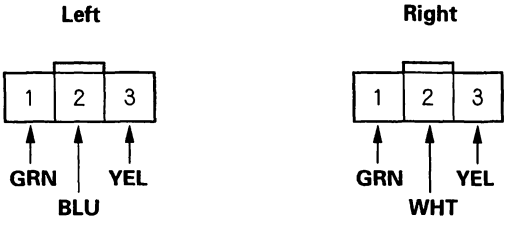

View from wire side

Canada:
'98-00 models

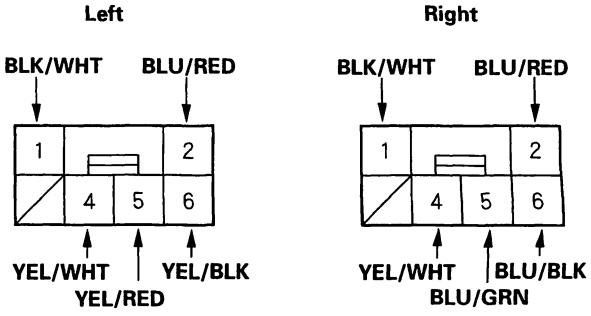

View from wire side

'01-02 models:

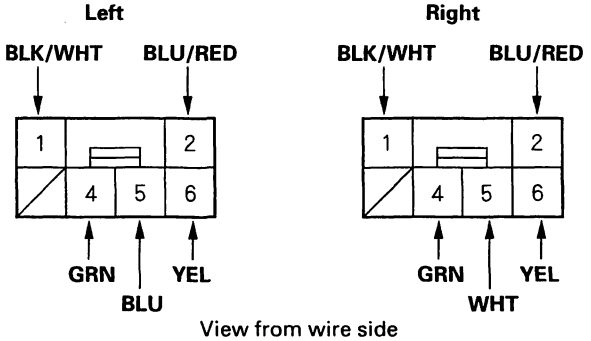

View from wire side

12. Operate the power mirror to check that the actuator works smoothly.

BACK

Power Mirror Actuator Replacement - Coupe

1. Remove the power mirror from the door (see page 20-35), and disconnect the connector.

2. Cut the wire harness with wire cutters.

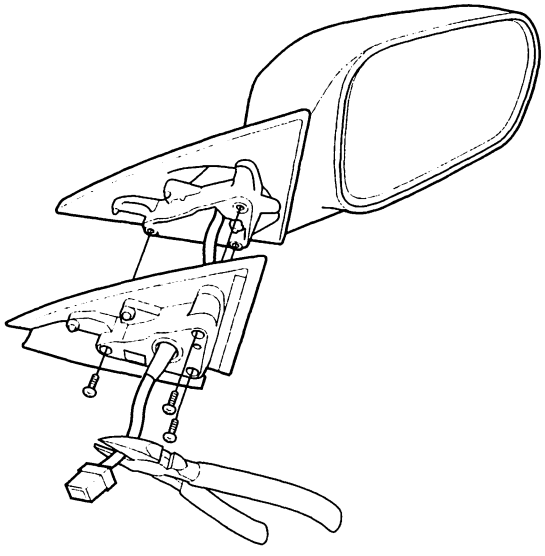

3. Record the terminal locations and wire colors.

4. Remove the mirror holder (A) from the mirror housing (B). Gently pull it out by hand.

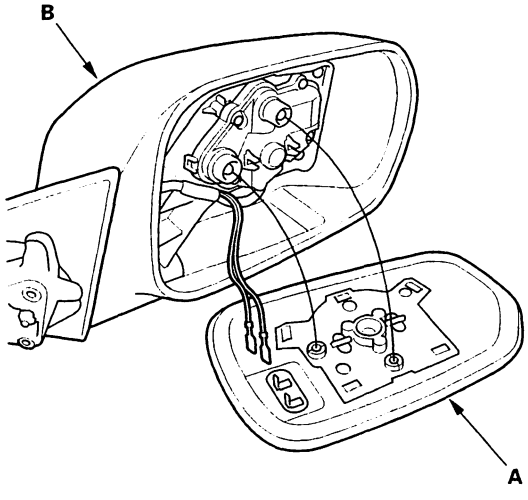

5. Remove the 3 screws (A) and the actuator (B).

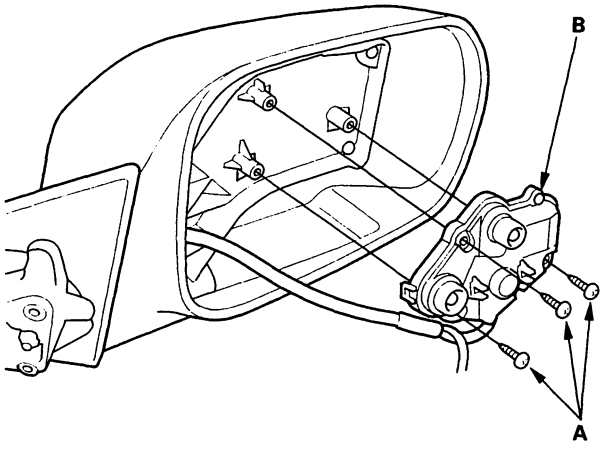

6. Route the wire harness (A) of the new actuator through the hole in the bracket (B).

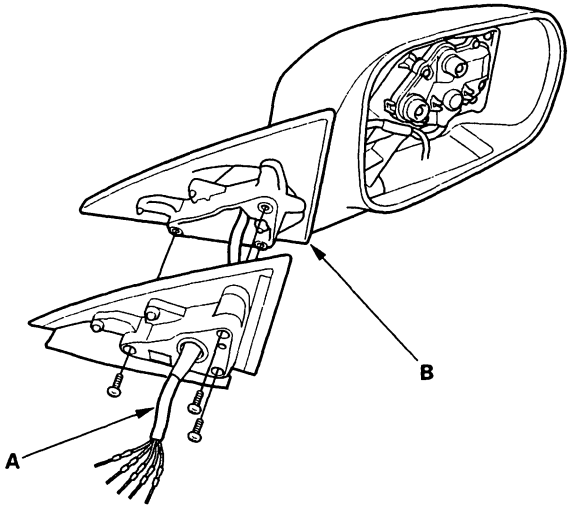

(cont'd)

Power Mirror Actuator Replacement - Coupe (cont'd)

7. Insert the terminals into the connector in the original arrangement as shown below.

USA:

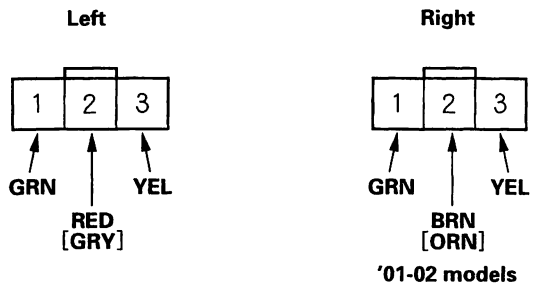

View from wire side

Canada:

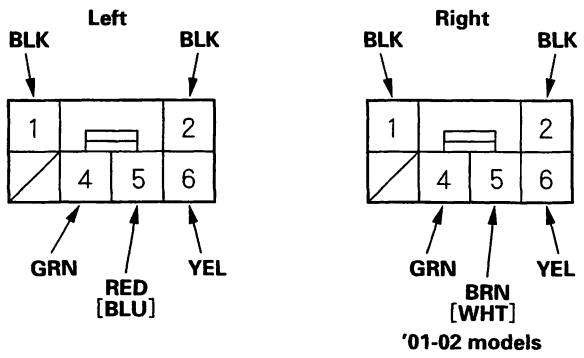

View from wire side

8. Apply tape to seal the intersection of the wire harness.

9. Reassemble in the reverse order of disassembly. Be careful not to break the mirror when reinstalling it to the actuator.

10. Reinstall the mirror assembly to the door.

11. Operate the power mirror to ensure smooth operation.

BACK

Component Location Index

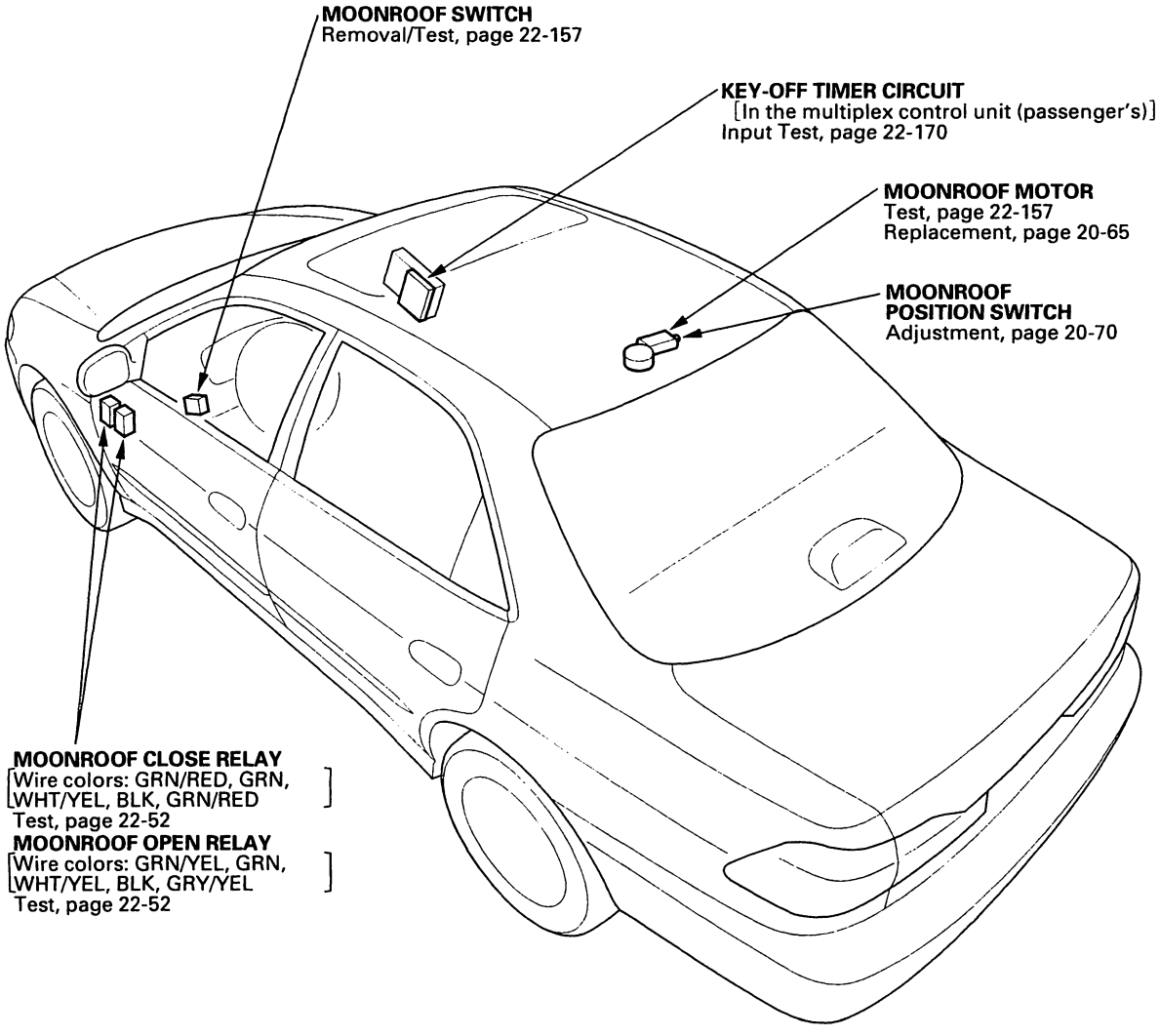

Moonroof

Circuit Diagram

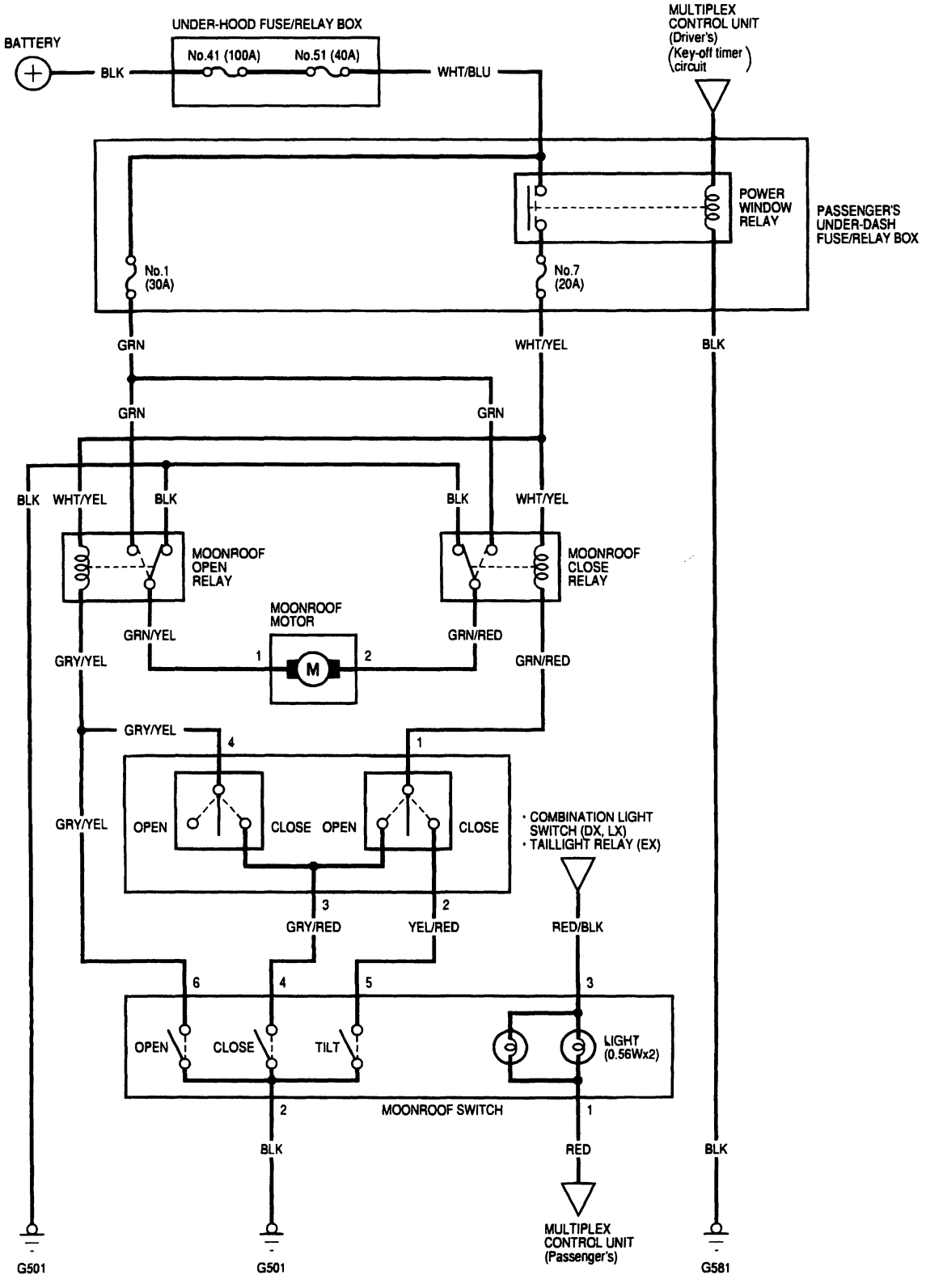

BACK

Switch Test

NOTE: The moonroof can still be operated for about 10 minutes after the ignition switch is turned from the "II" to the "I" or "O" positions, as long as neither of the doors have been opened. This provides a convenience to parked occupants while offering a degree of security against unwanted or accidental moonroof operation.

1. Remove the driver's dashboard lower cover (see page 20-84).

2. Carefully pry out the switch from the dashboard, and disconnect its connector.

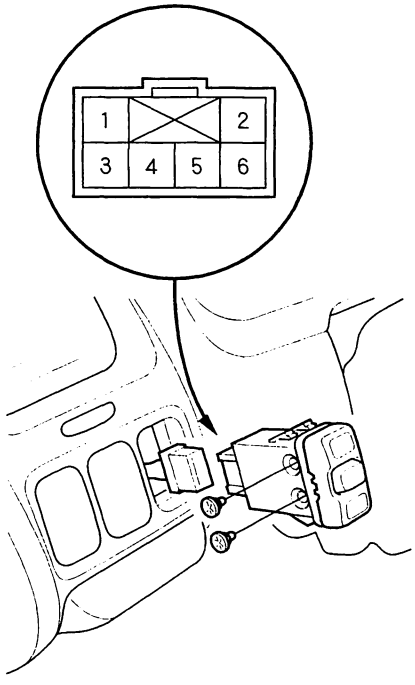

3. Check for continuity between the terminals in each switch position according to the table.

Terminal / Position	1		3	2	4	5	6
CLOSE				○—○			
TILT	○—	—○		○—	——	—○	
OPEN				○—	——	——	—○

4. If the continuity is not as specified, replace the switch.

Motor Test

1. Remove the headliner (see page 20-79).

2. Disconnect the 2P connector from the moonroof motor.

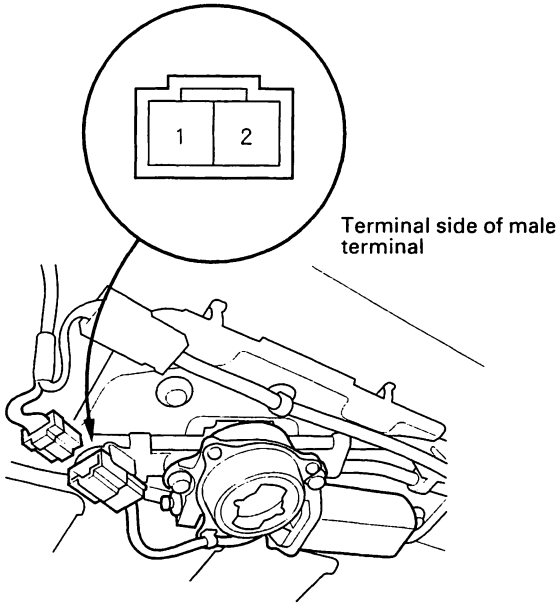

3. Check the motor by connecting power and ground according to the table.

Terminal / Position	1	2
OPEN	⊕	⊖
CLOSE	⊖	⊕

4. If the motor does not run, replace it.

   NOTE: See closing force check (see page 20-71) for motor clutch test.

Rear Window Defogger

Component Location Index

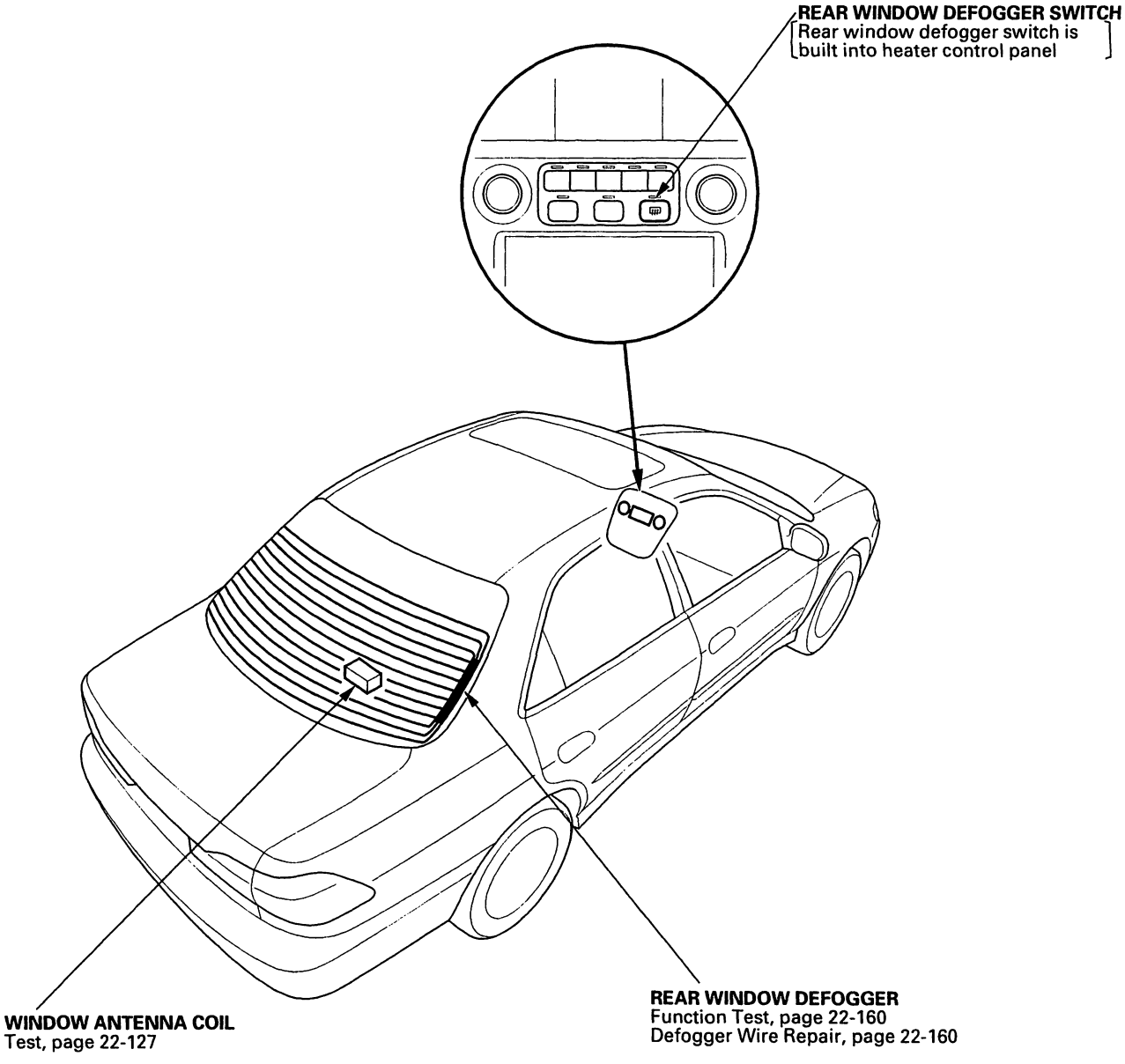

BACK

Circuit Diagram

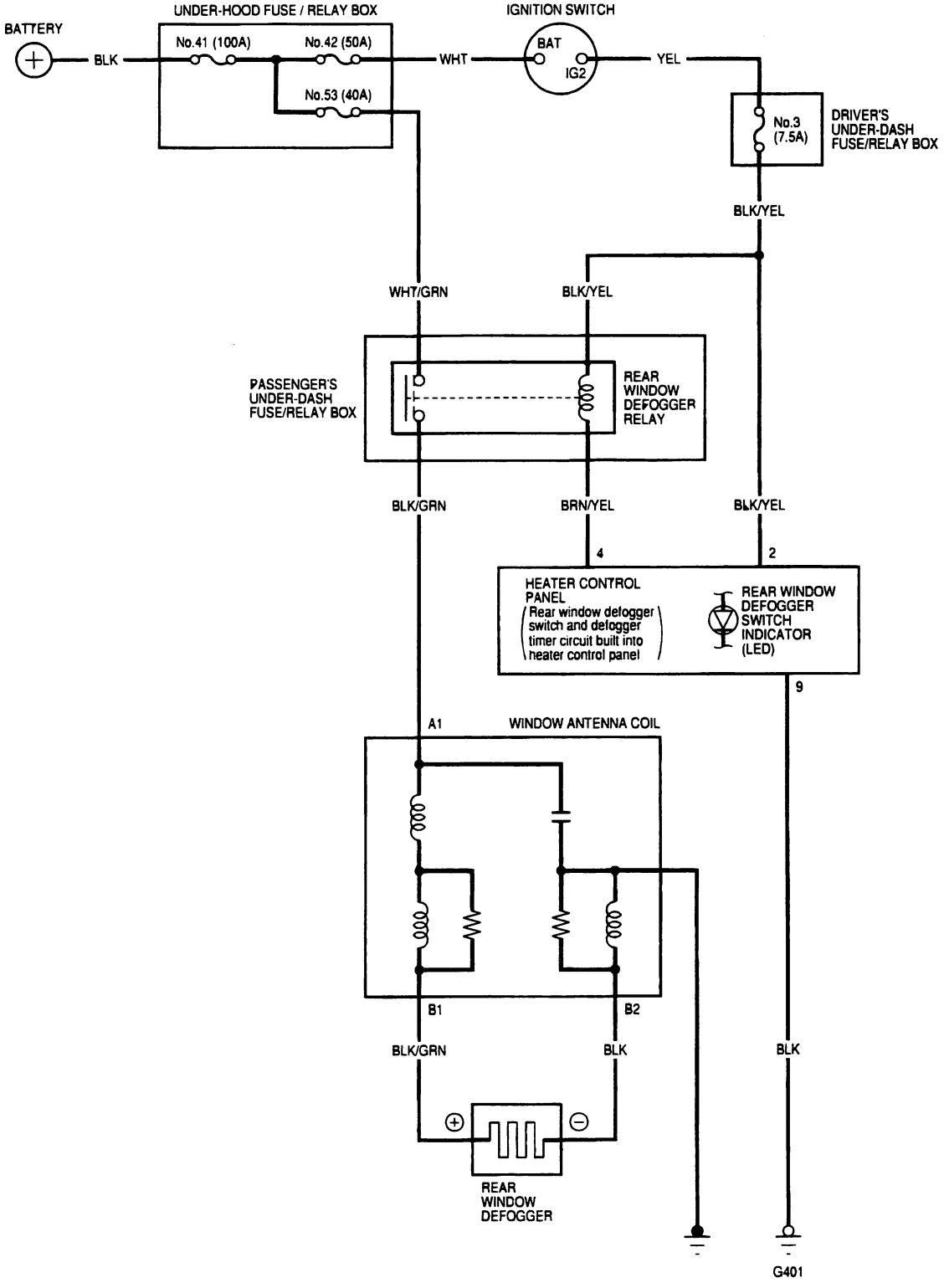

BACK

Rear Window Defogger

Function Test

NOTE: Be careful not to scratch or damage the defogger wires with the tester probe.

1. Check for voltage between the positive terminal (A) and body ground with the ignition switch and defogger switch ON.
   There should be battery voltage.

   - If there is no voltage, check for:
     - faulty defogger relay.
     - faulty window antenna coil
     - an open in the BLK/GRN wire.
   - If there is battery voltage, go to step 2.

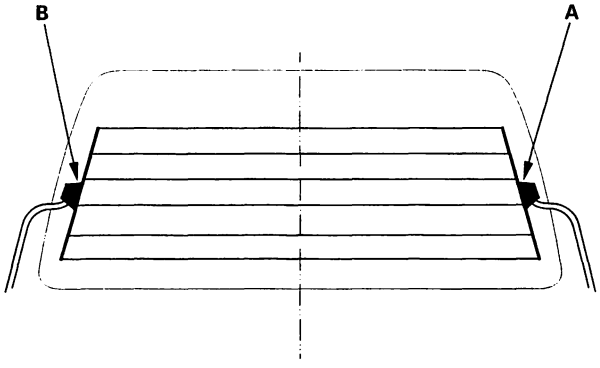

2. Check for voltage between the positive terminal and the negative terminal (B) and body ground.
   If there is no voltage, check for an open in the defogger ground wire.

3. Touch the voltmeter positive probe to the halfway point of each defogger wire, and the negative probe to the negative terminal.
   There should be approximately 6 V with the ignition switch and the defogger switch ON.

   - If the voltage is as specified, the defogger wire is OK.
   - If the voltage is not as specified, repair the defogger wire.
     - If it is more than 6 V, there is a break in the negative half of the wire.
     - If it is less than 6 V, there is a break in the positive half of the wire.

Defogger Wire Repair

NOTE: To make an effective repair, the broken section must be no longer than one inch.

1. Lightly rub the area around the broken section (A) with fine steel wool, then clean it with alcohol.

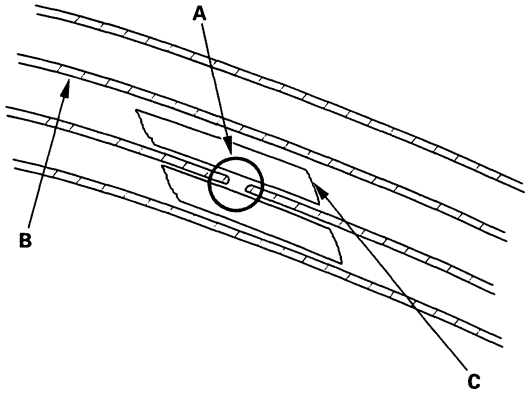

2. Carefully mask above and below the broken portion of the defogger wire (B) with cellophane tape (C).

3. Mix the silver conductive paint thoroughly. Using a small brush, apply a heavy coat of (A) paint extending about 1/8″ on both sides of the break. Allow 25 minutes to dry.

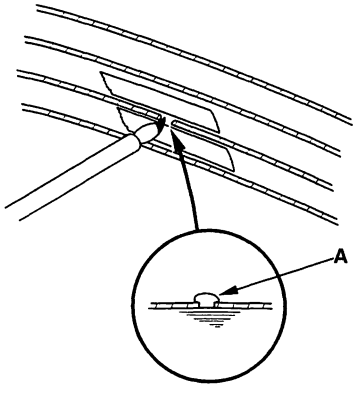

4. Check for continuity in the repaired wire.

5. Apply a second coat of paint in the same way. Let it dry 3 hours before removing the tape.

BACK

Component Location Index

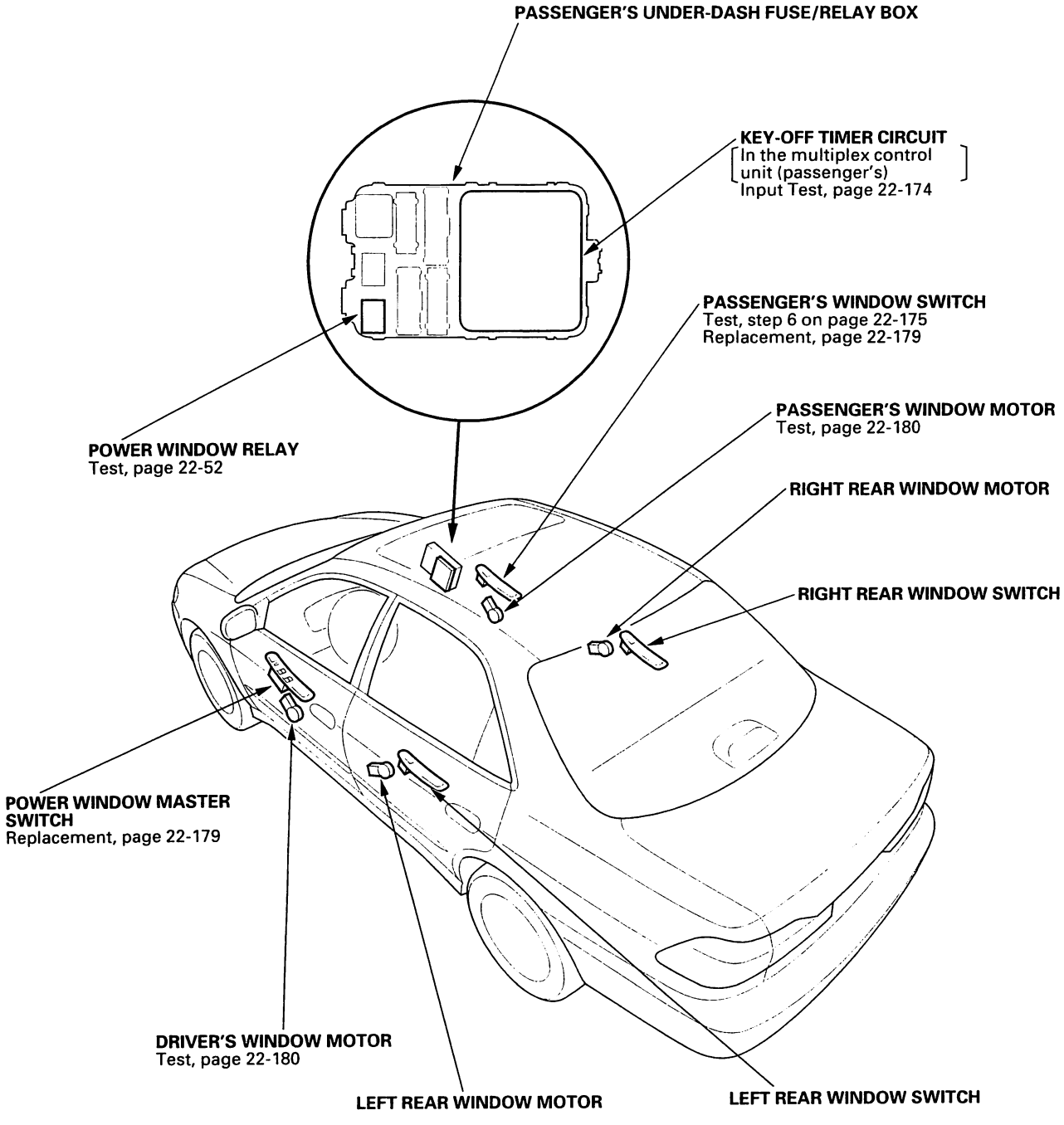

Circuit Diagram - Sedan

'98-99 models

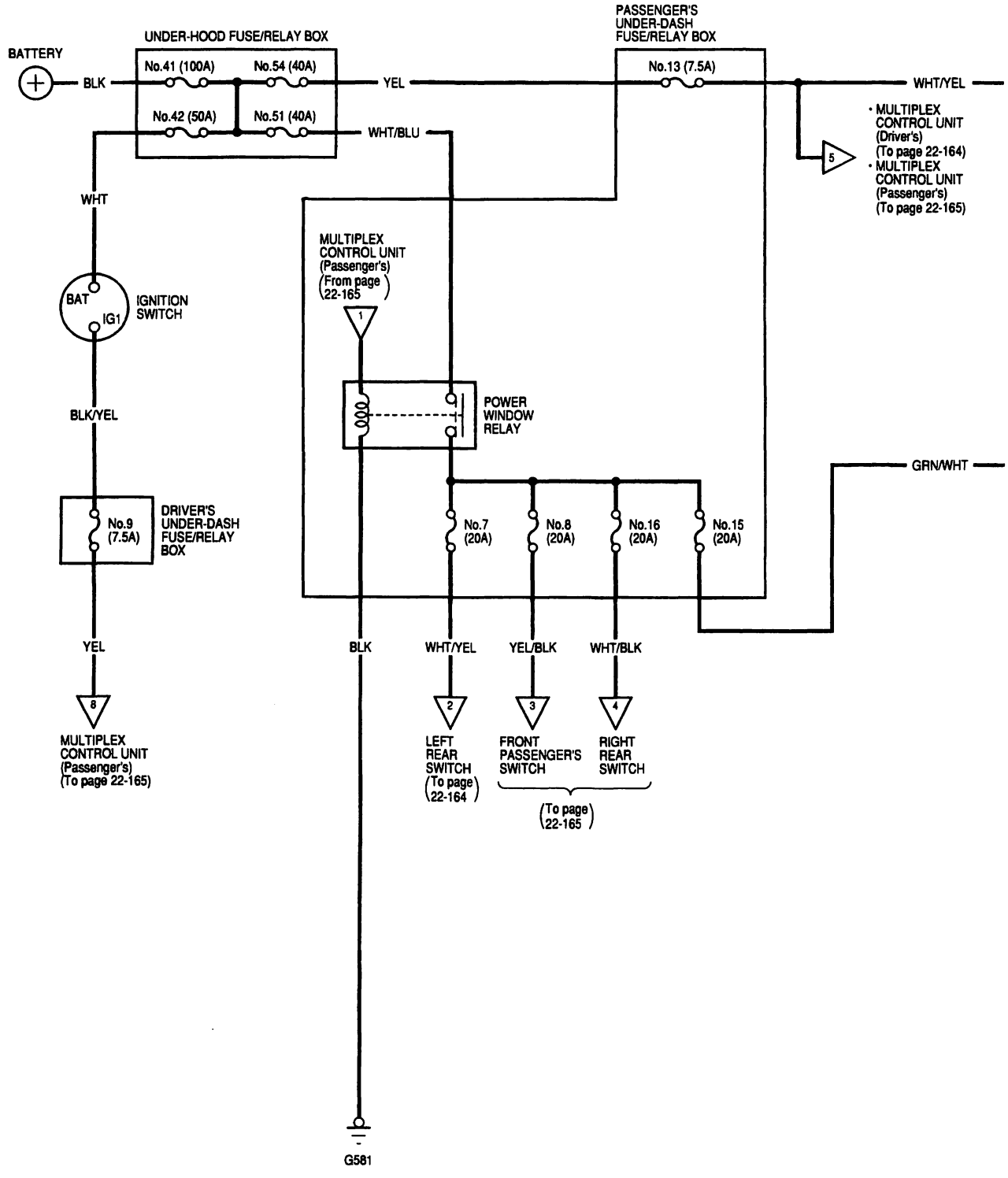

BACK

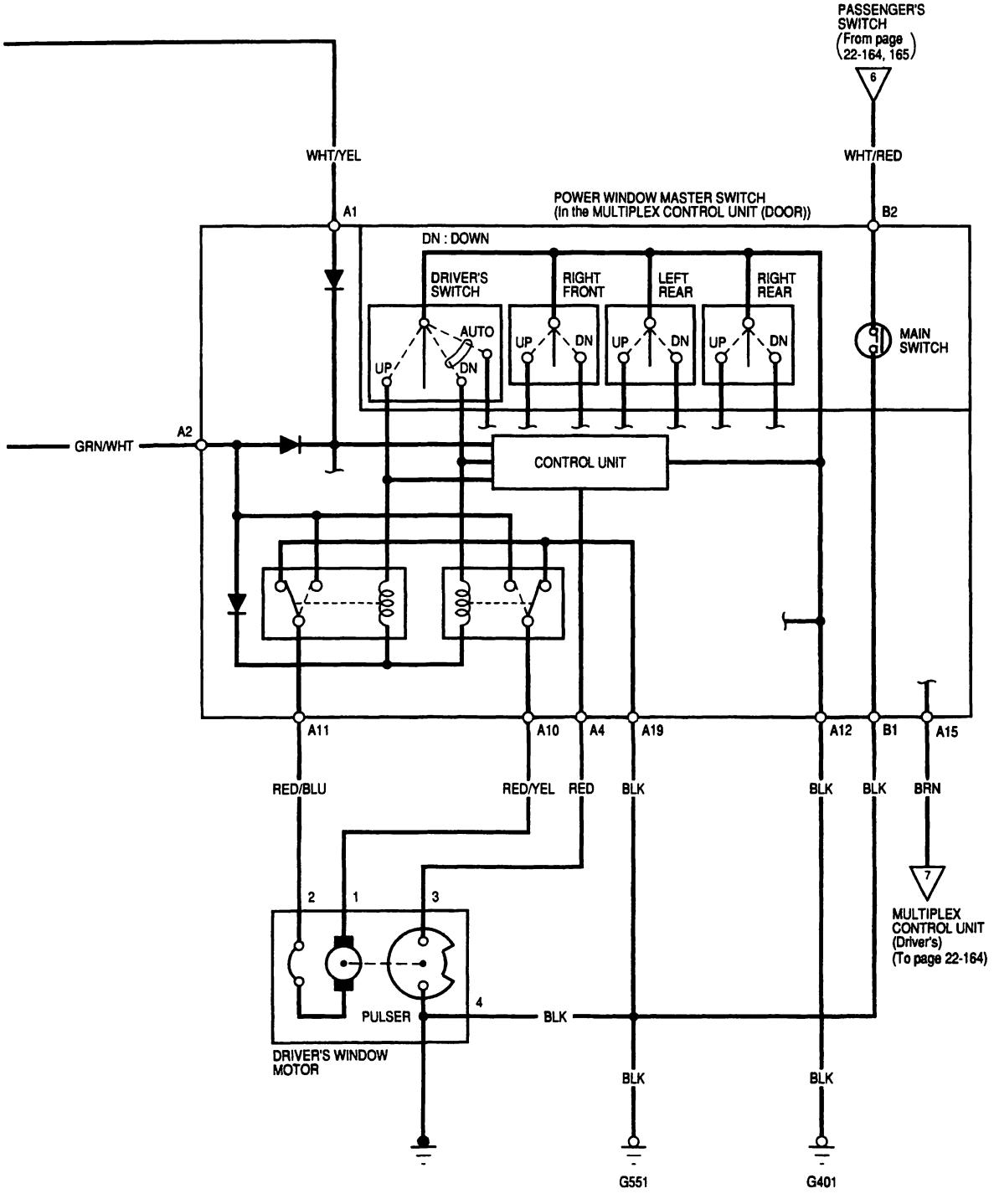
PASSENGER'S SWITCH (From page 22-164, 165)
6
WHT/YEL
WHT/RED
POWER WINDOW MASTER SWITCH (In the MULTIPLEX CONTROL UNIT (DOOR))
A1
B2
DN : DOWN
DRIVER'S SWITCH
RIGHT FRONT
LEFT REAR
RIGHT REAR
AUTO
UP
DN
MAIN SWITCH
GRN/WHT
A2
CONTROL UNIT
A11
A10
A4
A19
A12
B1
A15
RED/BLU
RED/YEL
RED
BLK
BRN
7
MULTIPLEX CONTROL UNIT (Driver's) (To page 22-164)
2
1
3
4
PULSER
DRIVER'S WINDOW MOTOR
G551
G401

(cont'd)

BACK

Circuit Diagram - Sedan (cont'd)

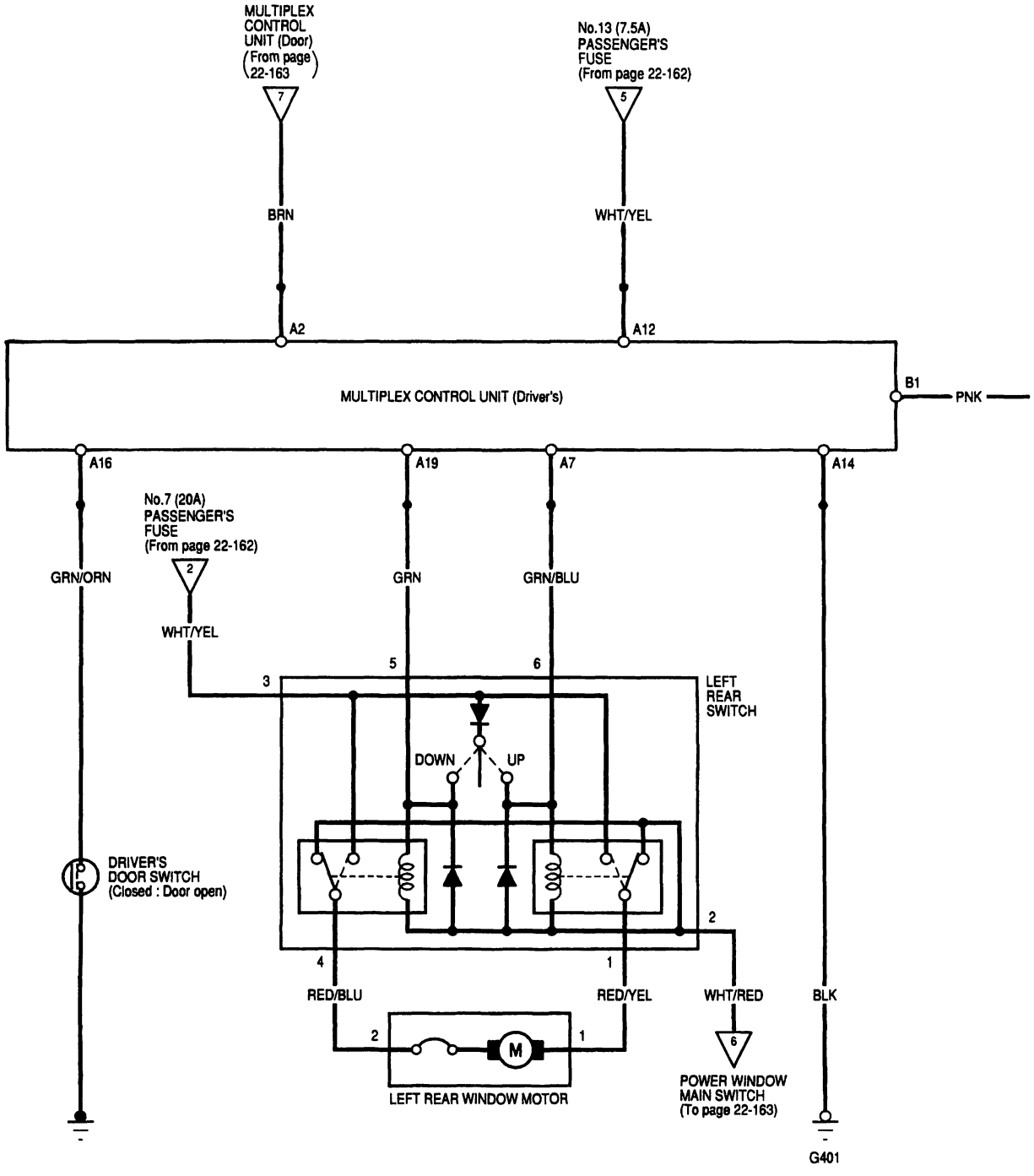

BACK

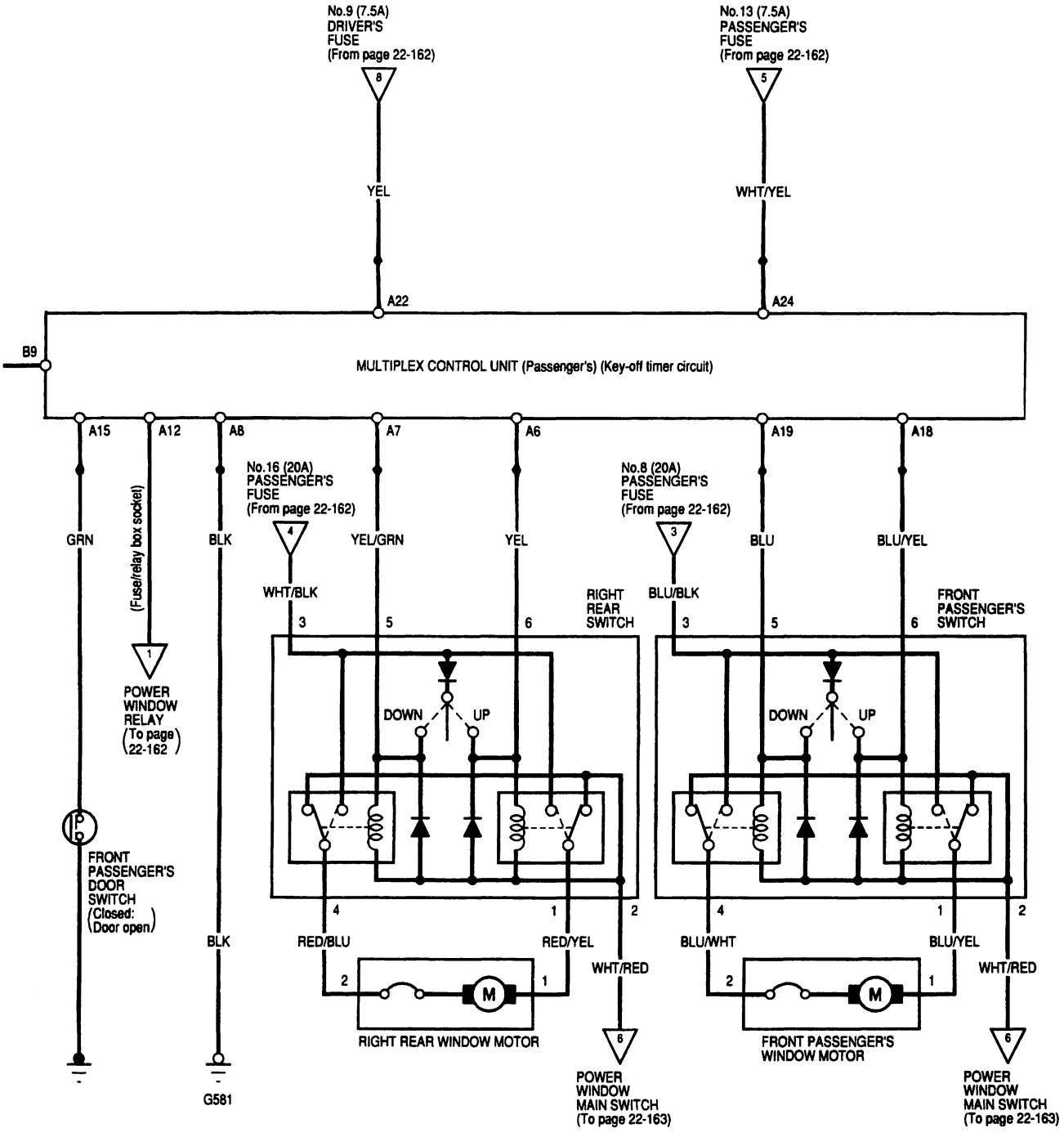
No.9 (7.5A)
DRIVER'S
FUSE
(From page 22-162)
No.13 (7.5A)
PASSENGER'S
FUSE
(From page 22-162)
YEL
WHT/YEL
A22
A24
B9
MULTIPLEX CONTROL UNIT (Passenger's) (Key-off timer circuit)
A15
A12
A8
A7
A6
A19
A18
No.16 (20A)
PASSENGER'S
FUSE
(From page 22-162)
No.8 (20A)
PASSENGER'S
FUSE
(From page 22-162)
GRN
(Fuse/relay box socket)
BLK
YEL/GRN
YEL
BLU
BLU/YEL
WHT/BLK
RIGHT
REAR
SWITCH
BLU/BLK
FRONT
PASSENGER'S
SWITCH
POWER
WINDOW
RELAY
(To page
22-162)
DOWN
UP
FRONT
PASSENGER'S
DOOR
SWITCH
(Closed:
Door open)
RED/BLU
RED/YEL
WHT/RED
BLU/WHT
BLU/YEL
RIGHT REAR WINDOW MOTOR
FRONT PASSENGER'S
WINDOW MOTOR
POWER
WINDOW
MAIN SWITCH
(To page 22-163)
G581

Circuit Diagram - Sedan (cont'd)

'00-02 models

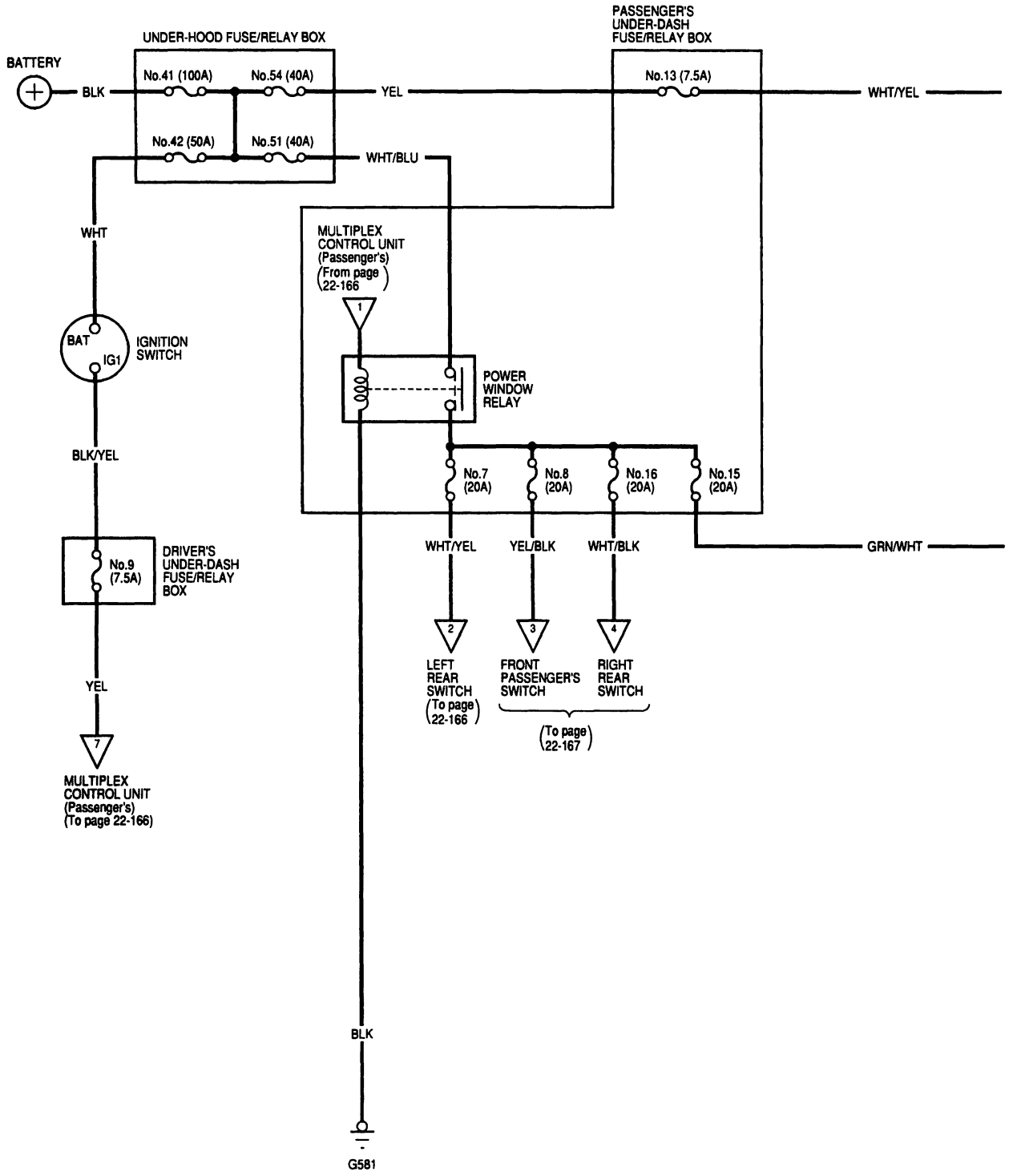

BACK

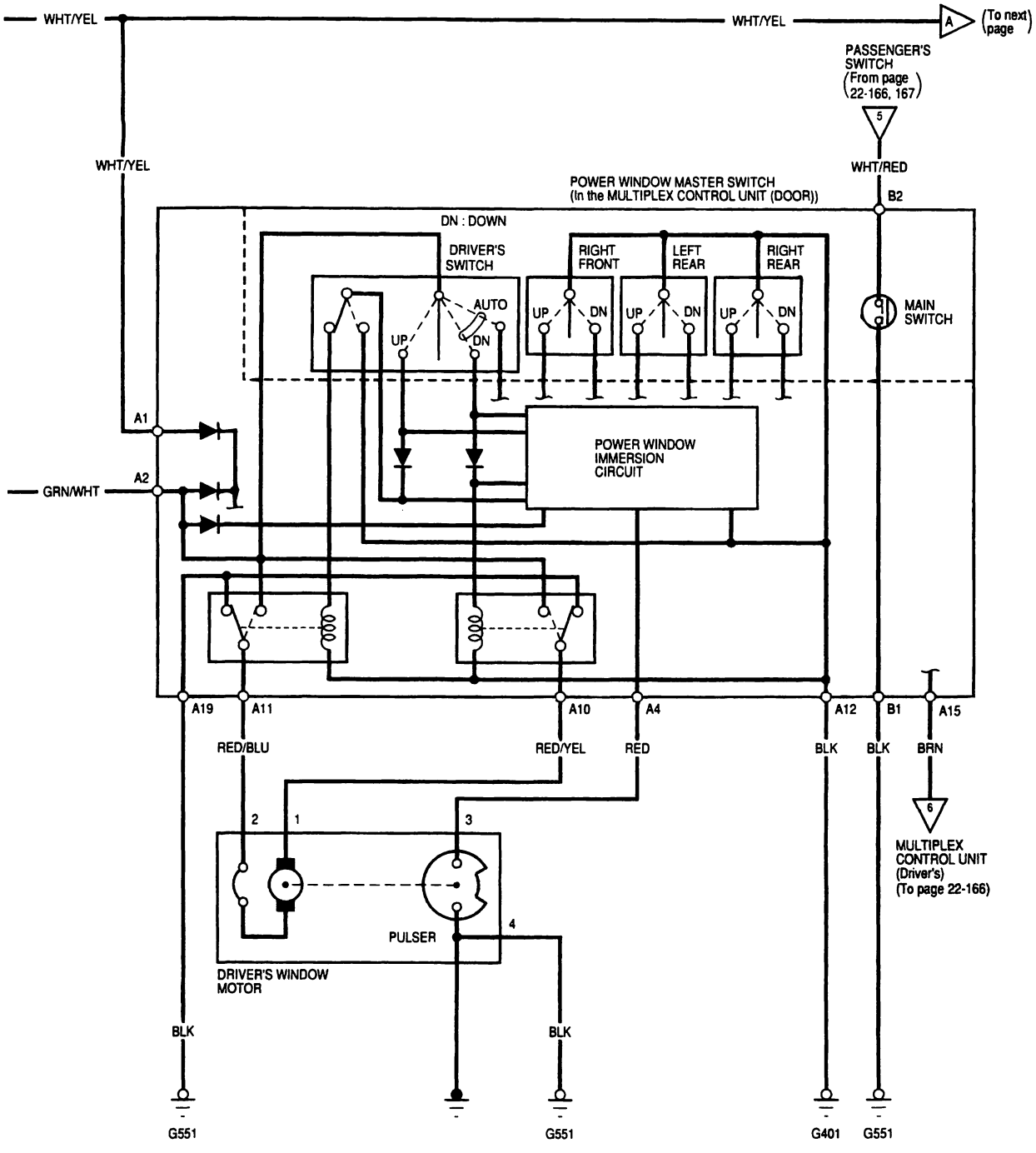
WHT/YEL
WHT/YEL
A
(To next page)
PASSENGER'S SWITCH
(From page 22-166, 167)
5
WHT/RED
WHT/YEL
POWER WINDOW MASTER SWITCH
(In the MULTIPLEX CONTROL UNIT (DOOR))
B2
DN : DOWN
DRIVER'S SWITCH
RIGHT FRONT
LEFT REAR
RIGHT REAR
AUTO
UP
DN
MAIN SWITCH
A1
A2
GRN/WHT
POWER WINDOW IMMERSION CIRCUIT
A19
A11
A10
A4
A12
B1
A15
RED/BLU
RED/YEL
RED
BLK
BLK
BRN
6
MULTIPLEX CONTROL UNIT
(Driver's)
(To page 22-166)
2
1
3
4
PULSER
DRIVER'S WINDOW MOTOR
BLK
BLK
G551
G551
G401
G551

(cont'd)

BACK

Circuit Diagram - Sedan (cont'd)

[ ] : '01-02 models

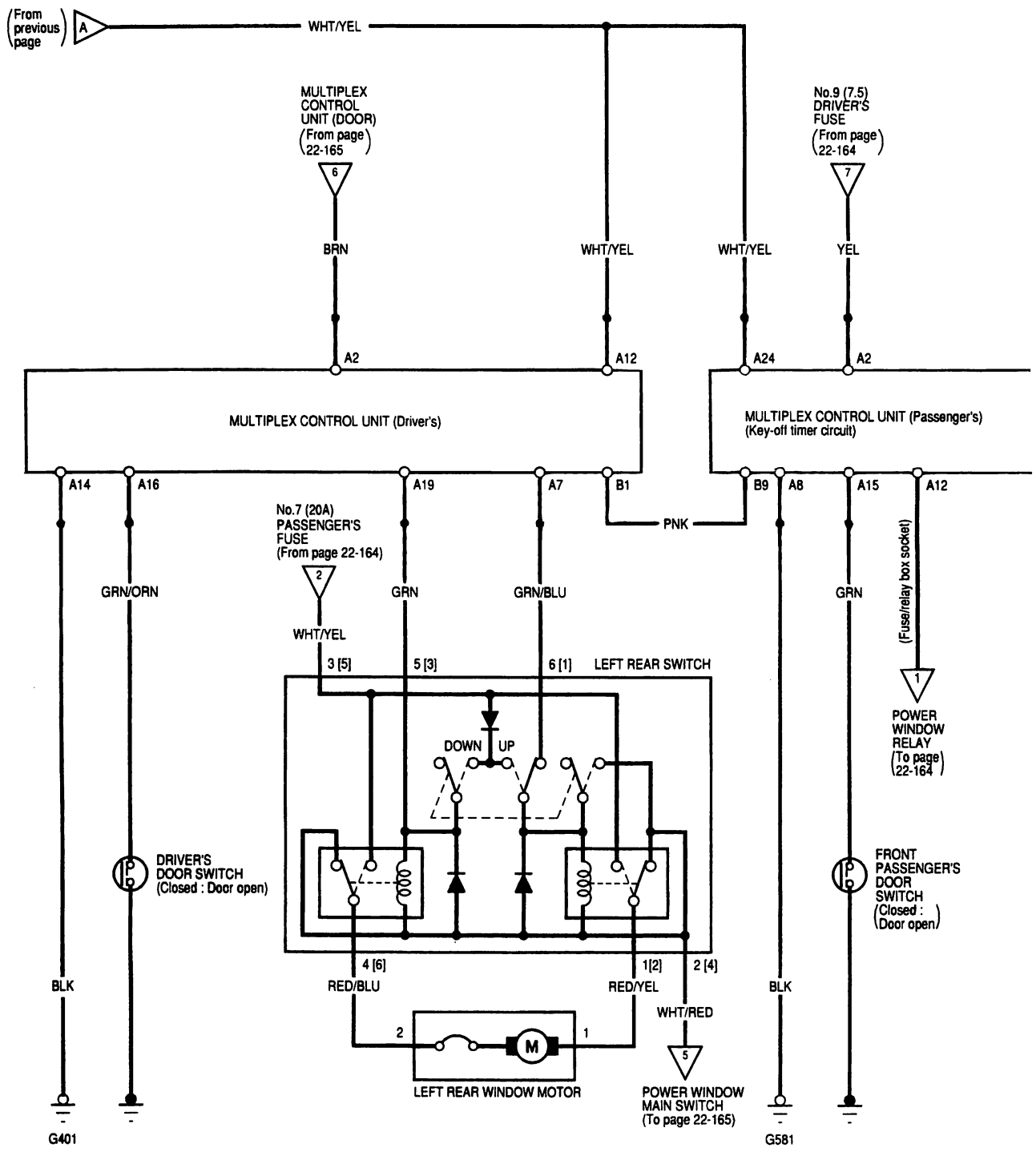

BACK

[ ] : '01-02 models

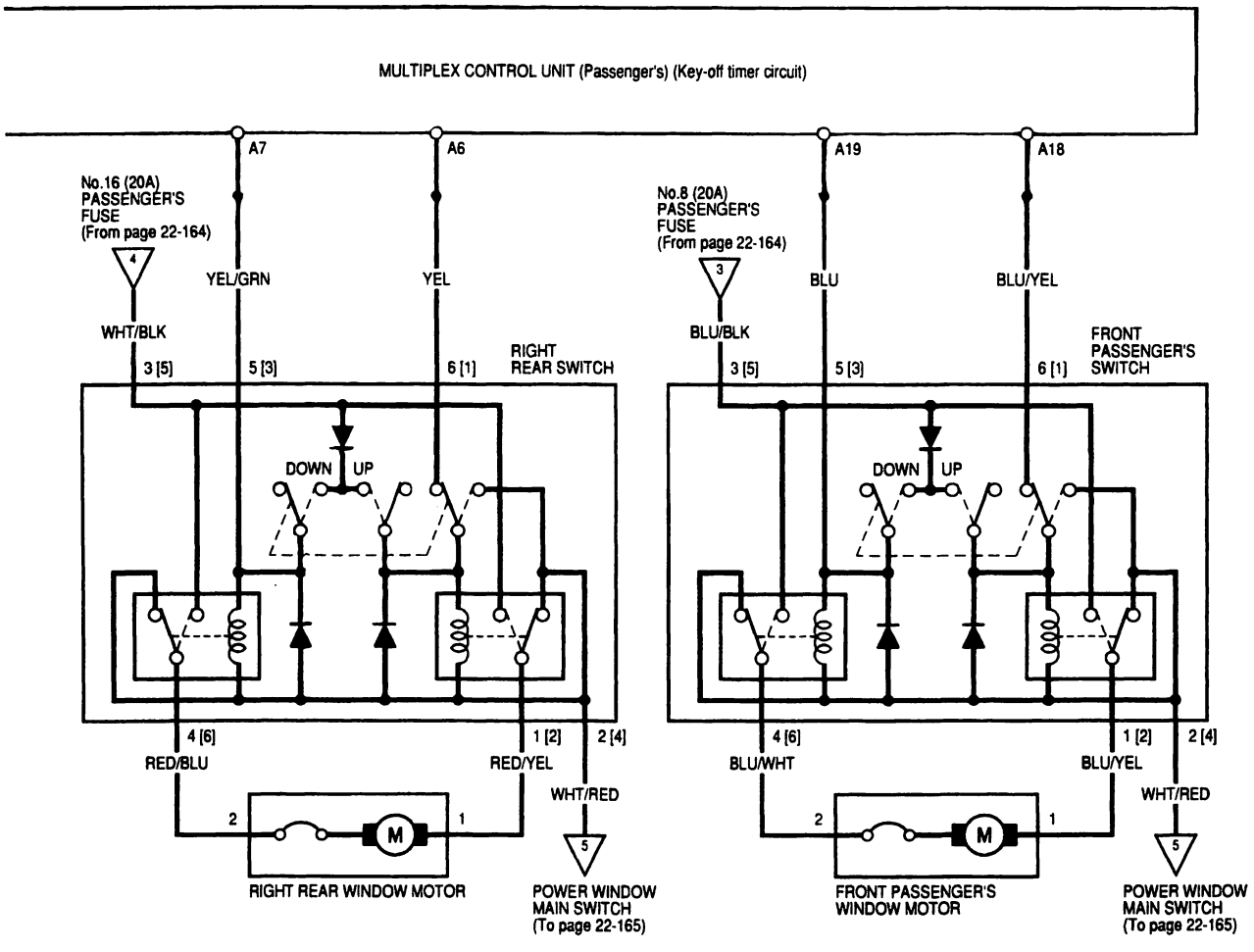

BACK

Circuit Diagram - Coupe

'98-99 models

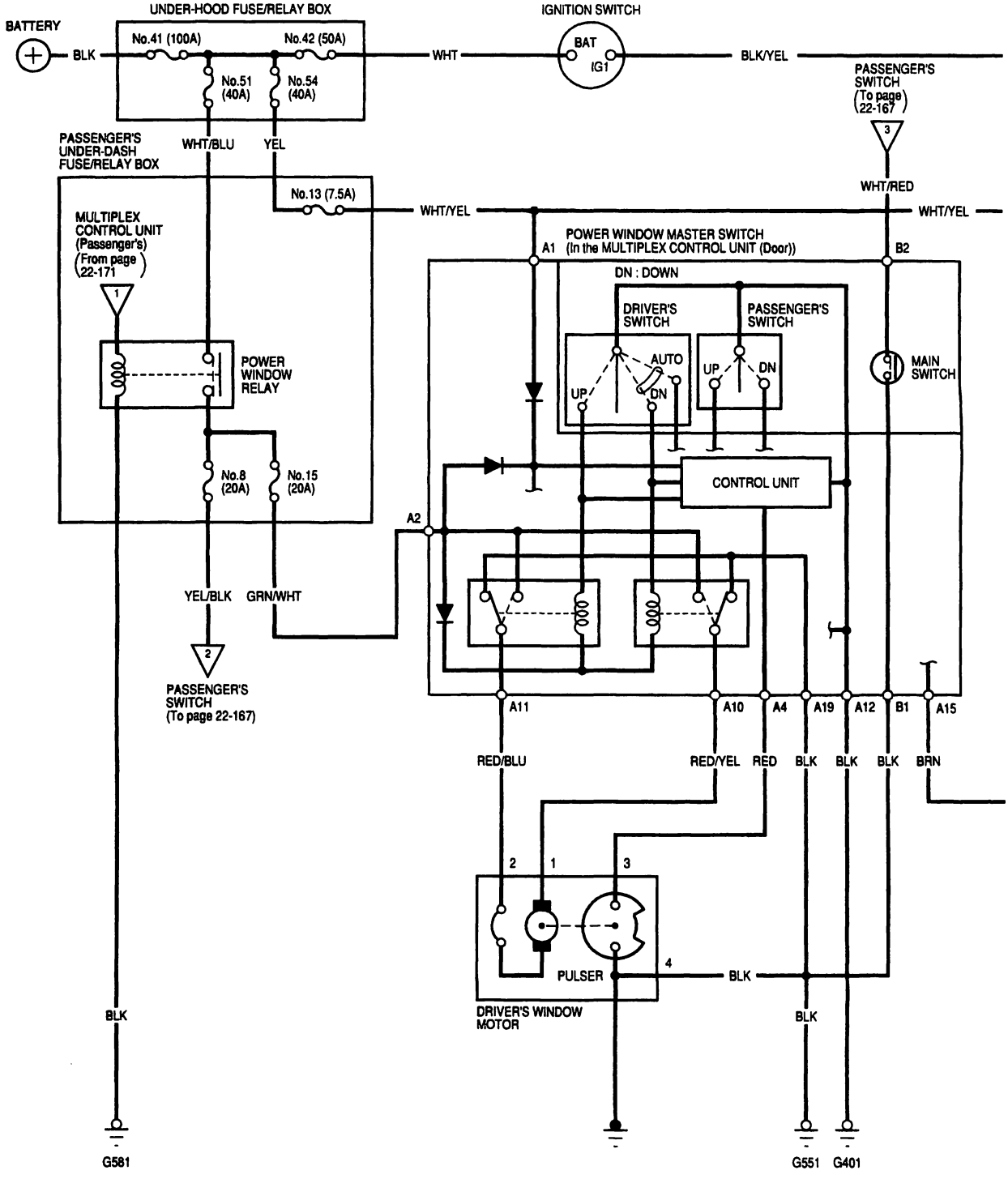

BACK

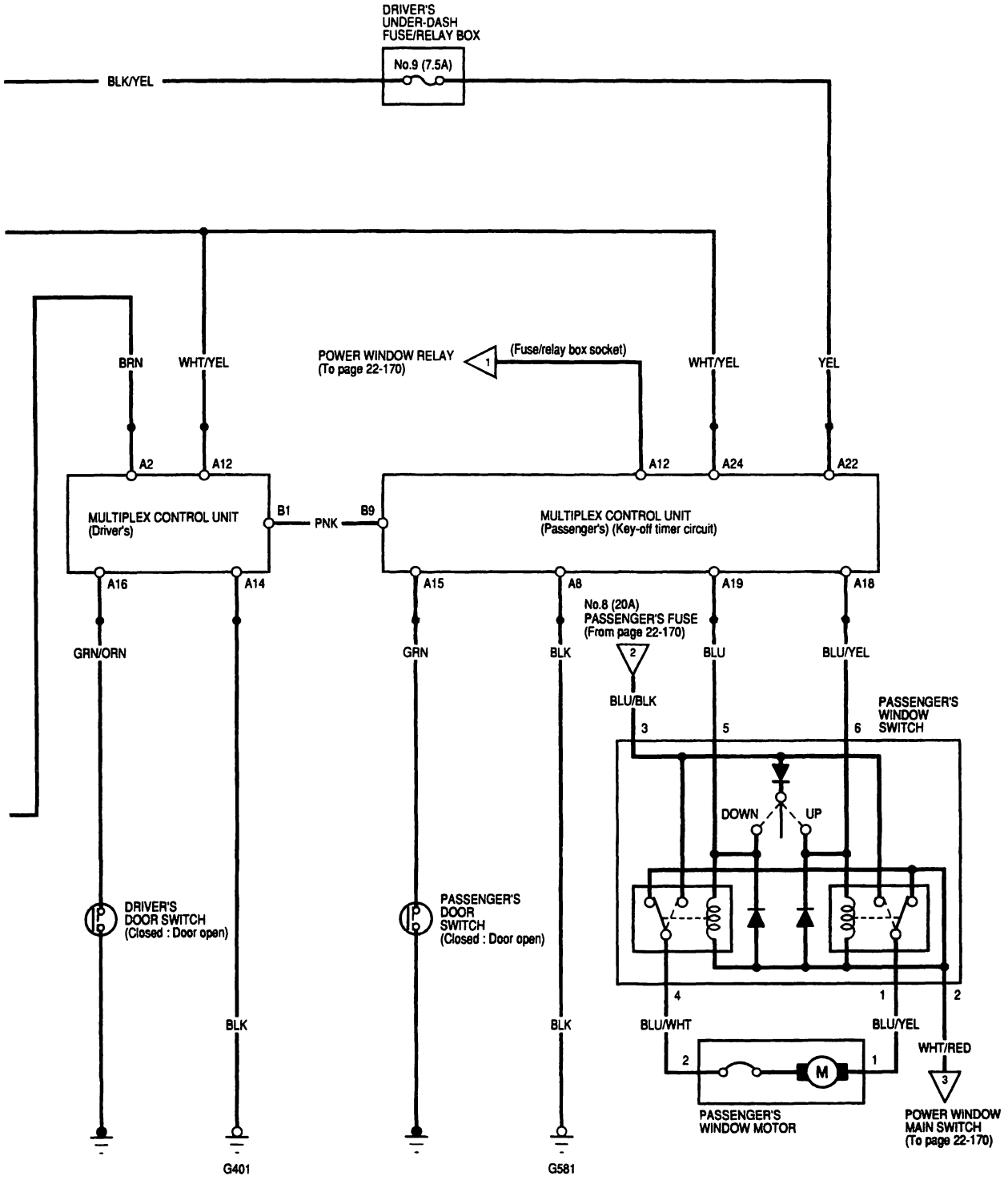
DRIVER'S
UNDER-DASH
FUSE/RELAY BOX
No.9 (7.5A)
BLK/YEL
BRN
WHT/YEL
POWER WINDOW RELAY
(To page 22-170)
(Fuse/relay box socket)
WHT/YEL
YEL
A2
A12
A12
A24
A22
MULTIPLEX CONTROL UNIT
(Driver's)
B1
PNK
B9
MULTIPLEX CONTROL UNIT
(Passenger's) (Key-off timer circuit)
A16
A14
A15
A8
A19
A18
No.8 (20A)
PASSENGER'S FUSE
(From page 22-170)
GRN/ORN
GRN
BLK
BLU
BLU/YEL
BLU/BLK
PASSENGER'S
WINDOW
SWITCH
DOWN
UP
DRIVER'S
DOOR SWITCH
(Closed : Door open)
PASSENGER'S
DOOR
SWITCH
(Closed : Door open)
BLK
BLK
BLU/WHT
BLU/YEL
WHT/RED
PASSENGER'S
WINDOW MOTOR
POWER WINDOW
MAIN SWITCH
(To page 22-170)
G401
G581

Circuit Diagram - Coupe (cont'd)

'00-02 models

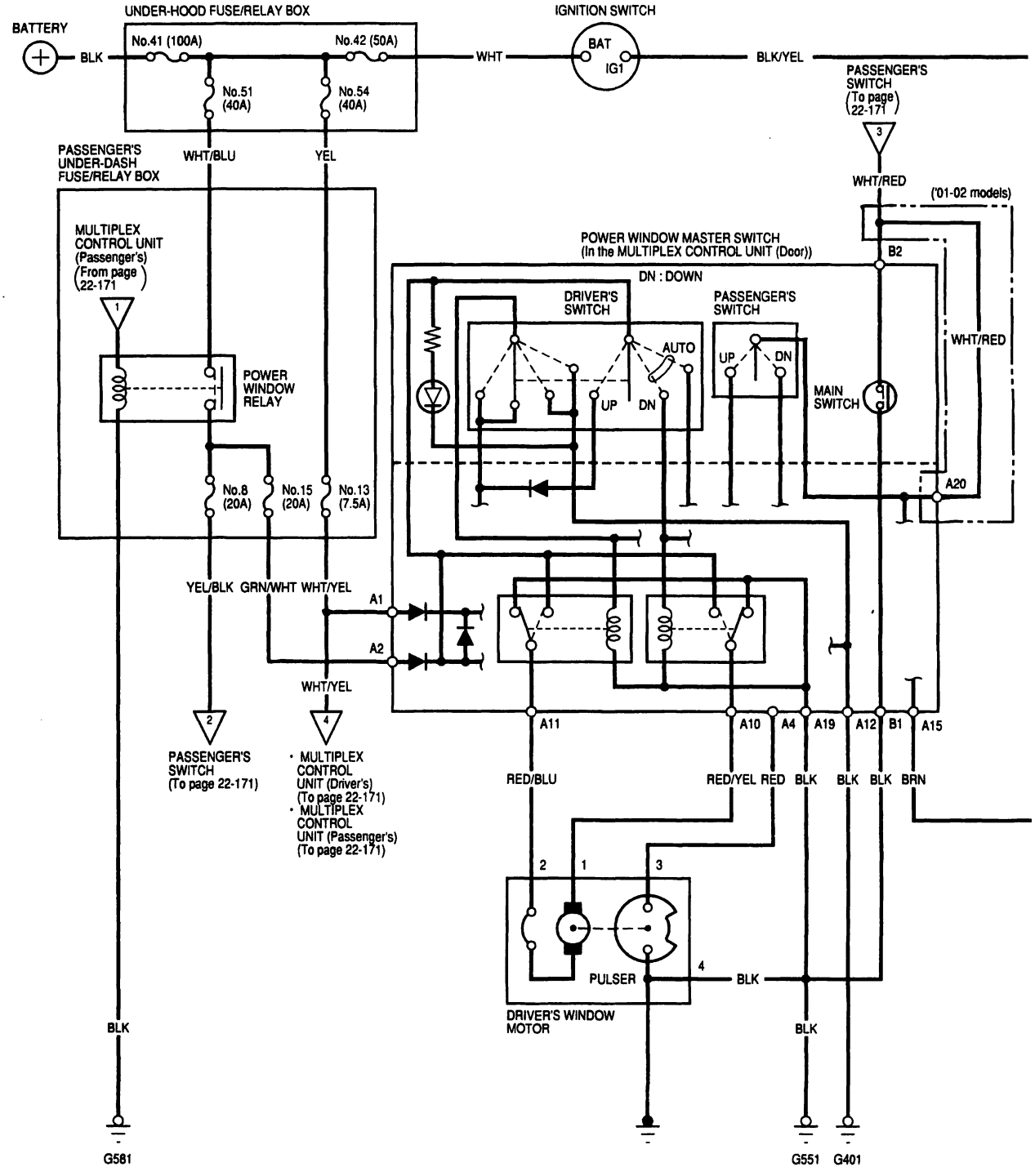

BACK

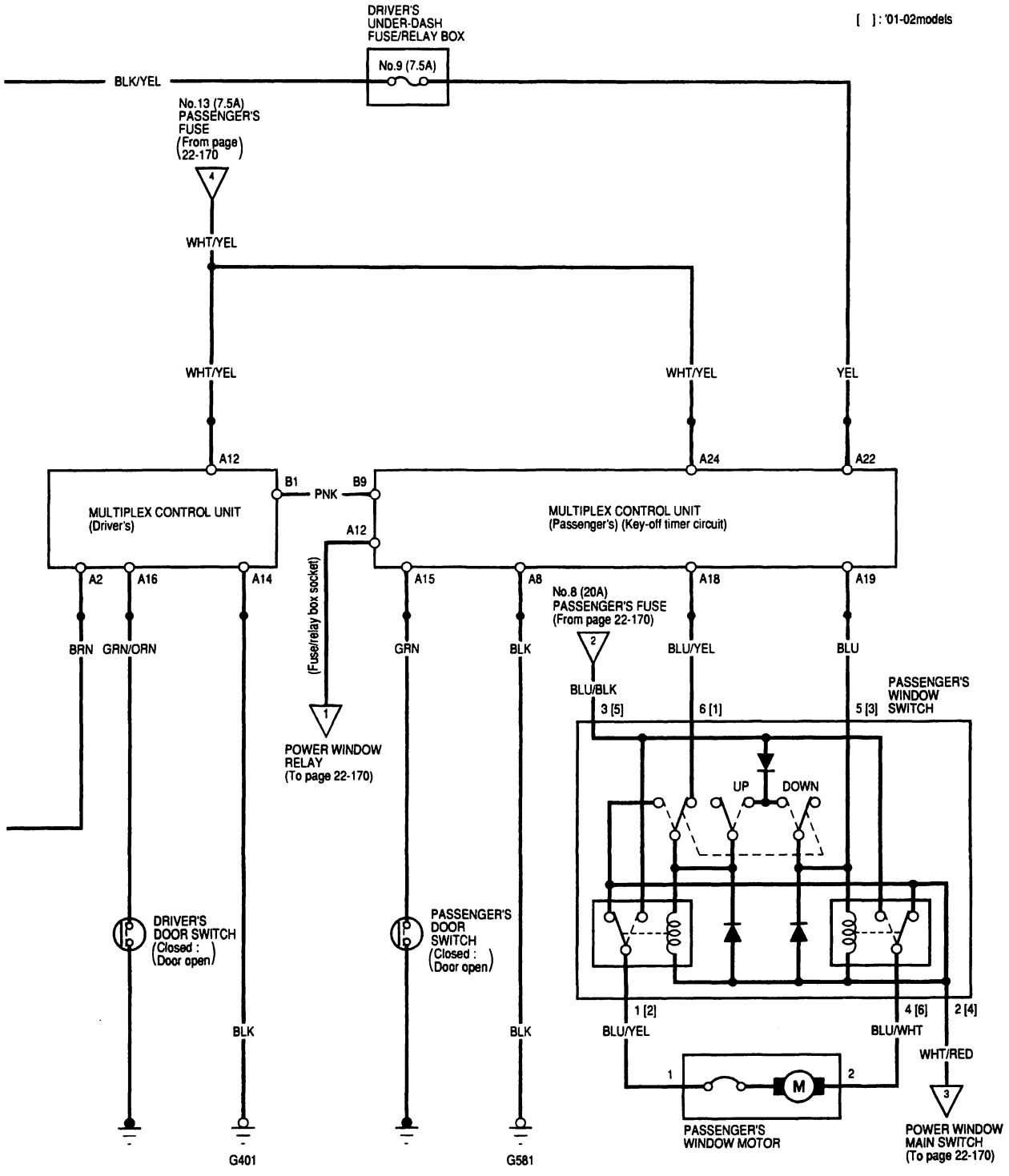
DRIVER'S UNDER-DASH FUSE/RELAY BOX
[ ] : '01-02models
No.9 (7.5A)
BLK/YEL
No.13 (7.5A) PASSENGER'S FUSE (From page 22-170)
4
WHT/YEL
WHT/YEL
WHT/YEL
YEL
A12
A24
A22
B1
PNK
B9
MULTIPLEX CONTROL UNIT (Driver's)
MULTIPLEX CONTROL UNIT (Passenger's) (Key-off timer circuit)
A12
(Fuse/relay box socket)
1
POWER WINDOW RELAY (To page 22-170)
A2
A16
A14
A15
A8
A18
A19
No.8 (20A) PASSENGER'S FUSE (From page 22-170)
2
BRN
GRN/ORN
GRN
BLK
BLU/YEL
BLU
BLU/BLK
3 [5]
6 [1]
5 [3]
PASSENGER'S WINDOW SWITCH
UP
DOWN
DRIVER'S DOOR SWITCH (Closed : Door open)
PASSENGER'S DOOR SWITCH (Closed : Door open)
1 [2]
4 [6]
2 [4]
BLK
BLK
BLU/YEL
BLU/WHT
WHT/RED
1
2
M
3
PASSENGER'S WINDOW MOTOR
POWER WINDOW MAIN SWITCH (To page 22-170)
G401
G581

Control Unit Input Test

1. Before testing the power window control functions, troubleshoot the multiplex control system (see page 22-137).

Driver's Multiplex Control Unit:

2. Remove the driver's multiplex control unit from the driver's under-dash fuse/relay box, and disconnect its connector.

3. Inspect all connector and socket terminals to be sure they are all making good contact.
   - If the terminals are bent, loose or corroded, repair them as necessary, and recheck the system.
   - If the terminals look OK, go to step 4.

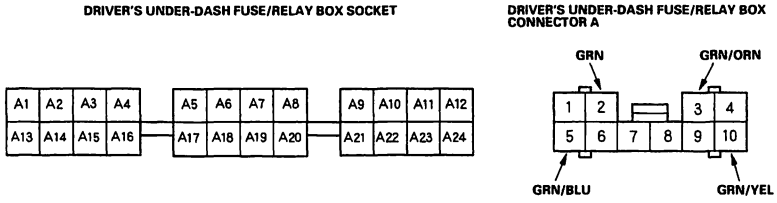

4. With the driver's multiplex control unit still disconnected, make these input tests at the driver's under-dash fuse/relay box socket.
   - If any test indicates a problem, find and correct the cause, then recheck the system.
   - If all the input tests prove OK, go to step 5.

Cavity	Wire	Test condition	Test: Desired result	Possible cause if result is not obtained
A12	Fuse/relay box socket	Under all conditions	Check for voltage to ground: There should be battery voltage.	• Blown No. 13 (7.5A) fuse in the passenger's under-dash fuse/relay box • An open in the wire
A14			Check for continuity to ground: There should be continuity.	• Poor ground (G401) • An open in the wire

5. Reconnect the driver's multiplex control unit to the driver's under-dash fuse/relay box, and perform the following input tests at Connector A on the back of the driver's under-dash fuse/relay box.
   For driver's under-dash fuse/relay box connector socket location (see page 22-46).
   - If any test indicates a problem, find and correct the cause then recheck the system.
   - If all the input tests prove OK, go to step 6.

Cavity	Wire	Test condition	Test: Desired result	Possible cause if result is not obtained
A2	GRN	Jump A2 to battery voltage	Check the left rear window motor operation: The window should go down.	• An open in the wire • Faulty window switch • Blown No. 7 (20A) fuse in the passenger's under-dash fuse/relay box
A3	GRN/ORN	Driver's door open	Check for voltage to ground: There should be 1 V or less.	• Faulty driver's door switch • An open in the wire (no voltage drop) • Short to ground (voltage remains less than 1V)
		Driver's door closed	Check for voltage to ground: There should be 5 V or more.	
A5	GRN/BLU	Jump A5 to battery voltage	Check the left rear window motor operation: The window should go up.	• An open in the wire • Faulty window switch • Blown No. 7 (20A) fuse in the passenger's under-dash fuse/relay box
A10	GRN/YEL	Left rear door open	Check for voltage to ground: There should be 1 V or less.	• Faulty left rear door switch • An open in the wire (no voltage drop) • Short to ground (voltage remains less than 1V)
		Left rear door closed	Check for voltage to ground: There should be 5 V or more.	

BACK

Multiplex Control Unit, Passenger's:

6. Remove the passenger's multiplex control unit from the passenger's under-dash fuse/relay box, and disconnect its connector.

7. Inspect the connector and socket terminals to be sure they are all making good contact.

   - If the terminals are bent, loose or corroded, repair them as necessary, and recheck the system.
   - If the terminals look OK, go to step 8.

FUSE/RELAY BOX SOCKET

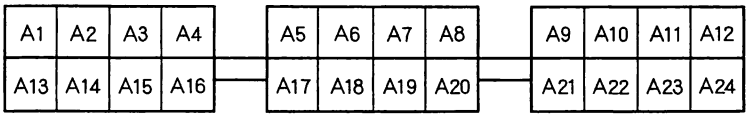

PASSENGER'S UNDER-DASH FUSE/RELAY BOX CONNECTOR A

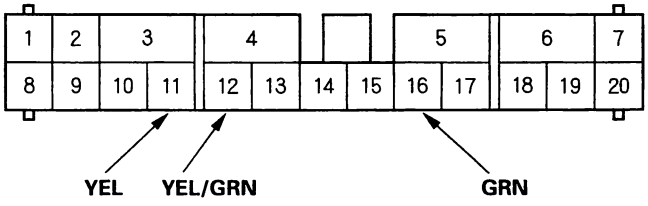

Wire side of female terminals

PASSENGER'S UNDER-DASH FUSE/RELAY BOX CONNECTOR F

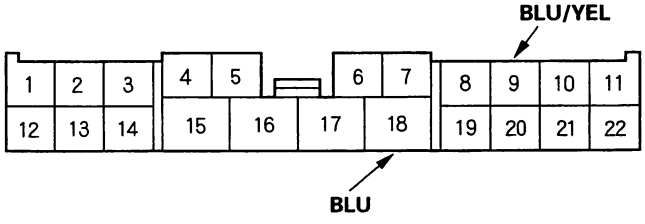

Wire side of female terminels

(cont'd)

Control Unit Input Test (cont'd)

8. With the passenger's multiplex control unit still disconnected, make these input tests at the passenger's under-dash fuse/relay box socket.

   - If any test indicates a problem, find and correct the cause, then recheck the system.
   - If all the input tests prove OK, go to step 9.

Cavity	Wire	Test condition	Test: Desired result	Possible cause if result is not obtained
A24	Fuse/relay box socket	Under all conditions	Check for voltage to ground: There should be battery voltage.	• Blown No. 13 (7.5A) fuse in the passenger's under-dash fuse/relay box • Faulty passenger's fuse/relay box
A12	Fuse/relay box socket	Under all conditions	Check for continuity to ground: There should be continuity	• Faulty power window relay Poor ground (G581) • An open in the wire
A8	Fuse/relay box socket	Under all conditions	Check for continuity to ground: There should be continuity.	• Poor ground (G581) • Faulty driver's under-dash fuse/relay box

9. Reconnect the passenger's multiplex control unit to the passenger's under-dash fuse/relay box, and perform the following input tests at the appropriate connectors on the passenger's under-dash fuse/relay box. For passenger's under-dash fuse/relay box connector socket location (see page 22-45).

   - If any test indicates a problem, find and correct the cause, then recheck the system.
   - If all the input tests prove OK, go to step 10.

Cavity	Wire	Test condition	Test: Desired result	Possible cause if result is not obtained
A16	GRN	Front passenger's door open	Check for voltage to ground: There should be 1 V or less.	• Faulty front passenger's door switch • An open in the wire (voltage stays high) • Short to ground (voltage stays low)
		Front passenger's door closed	Check for voltage to ground: There should be 5 V or more.	
F18	BLU	Jump F18 to battery voltage	Check the front passenger's window motor operation: The window should go down.	• Faulty front passenger switch • An open in the wire • Faulty window motor
F9	BLU/YEL	Jump F9 to battery voltage	Check the front passenger's window motor operation: The window should go up.	• Faulty front passenger switch • An open in the wire • Faulty window motor
A12	YEL/GRN	Jump A12 to battery voltage	Check the right rear window motor operation: The window should go down.	• Faulty right rear switch • An open in the wire • Faulty window motor
A11	YEL	Jump A11 to battery voltage	Check the right rear window motor operation: The window should go up.	• Faulty right rear switch • An open in the wire • Faulty window motor

BACK

Multiplex Control Unit, Door:

10. Remove the door multiplex control unit from the driver's door, and disconnect its connectors.

11. Inspect the connector and socket terminals to be sure they are all making good contact.

    - If the terminals are bent, loose or corroded, repair them as necessary, and recheck the system.
    - If the terminals look OK, go to step 12.

MULTIPLEX CONTROL UNIT, DOOR CONNECTOR A

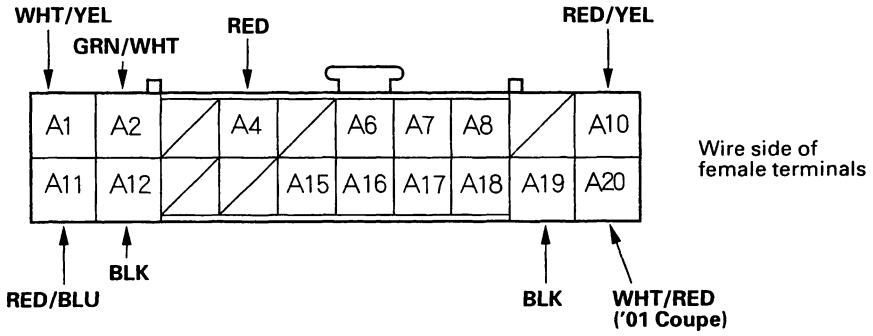

MULTIPLEX CONTROL UNIT, DOOR CONNECTOR B

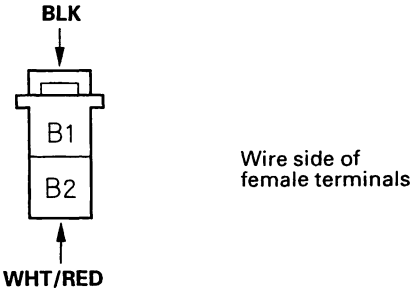

(cont'd)

Control Unit Input Test (cont'd)

12. With the door multiplex control unit still disconnected, make these input tests at the connectors.

- If any test indicates a problem, find and correct the cause, then recheck the system.
- If all the input test prove OK, go to step 13.

Cavity	Wire	Test condition	Test: Desired result	Possible cause if result is not obtained
A1	WHT/YEL	Under all conditions	Check for voltage to ground: There should be battery voltage.	• Blown No. 13 (7.5A) fuse in the passenger's under-dash fuse/ relay box • An open in the wire
A2	GRN/WHT	Ignition switch ON (II)	Check for voltage to ground: There should be battery voltage.	• Blown No. 15 (20A) fuse in the passenger's under-dash fuse/ relay box • An open in the wire
A12 A19 B1	BLK	Under all conditions	Check for continuity to ground: There should be continuity.	• Poor ground (G401, G551) • An open in the wire
A11 A10	RED/BLU RED/YEL	Connect the A10 terminal to the A 12 terminal, and the A11 terminal to the A1 terminal.	Check the driver's window motor operation: The window should go up. NOTE: If the window is up, jump A11 to A12, and A10 to A1; the window should go down.	• Blown No. 13 (7.5A) fuse in the passenger's under-dash fuse/ relay box • Faulty driver's window motor • An open in the wire
A20	WHT/RED	Operating any passenger's switch with ignition switch ON (II)	Check for voltage to ground: There should be battery voltage.	• Faulty passenger's switch • An open in the wire

13. Reconnect the door multiplex control unit and perform the following input test.

- If any test indicates a problem, find and correct the cause, then recheck the system.
- If all the input tests prove OK, go to step 14.

Cavity	Wire	Test condition	Test: Desired result	Possible cause if result is not obtained
A4	RED	While operating the driver's window switch with the ignition switch ON (II)	Check for the voltage on the A4 and A12 terminals: Approx. 6 V should be indicated as the driver's window motor runs.	• Faulty pulser • Faulty driver's window motor • An open in the wire • A short to ground in the wire
B2	WHT/RED	Operating any passenger's switch with master main switch OFF, and the ignition switch ON (II)	Check for voltage to ground: There should be battery voltage.	• Poor ground (G401, G551) • Faulty passenger's switch • An open in the wire

14. If all the input tests prove OK, one of the control units must be faulty. Substitute a known-good control unit for the one that is most likely at fault, then check the system. If the system works properly, the original control unit is faulty; replace it. If there is still a malfunction, substitute a known-good control unit for the next most likely unit to be at fault, and recheck. If the system works properly, the original unit is faulty; replace it.

BACK

Master Switch Replacement

1. Remove the screw and master switch assembly from the door panel.

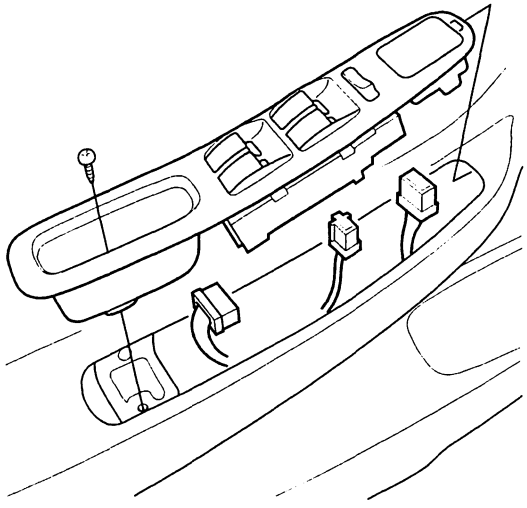

2. Remove the four mounting screws, then remove the master switch from the panel.

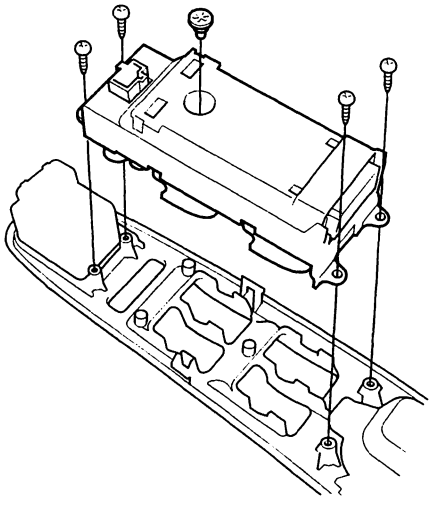

Passenger's Switch Replacement

1. Remove the screw and passenger's switch assembly from the door panel.

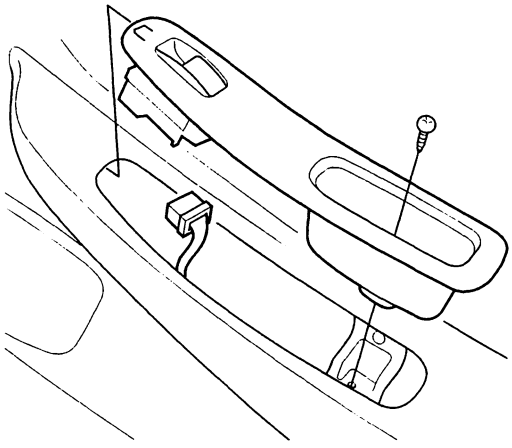

2. Remove the three mounting screws, then remove the passenger's switch from the panel.

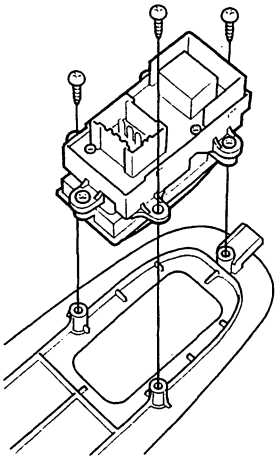

Driver's Window Motor Test

Motor Test:

1. Remove the driver's door panel (see page 20-8).
2. Disconnect the 4P connector from the window motor.

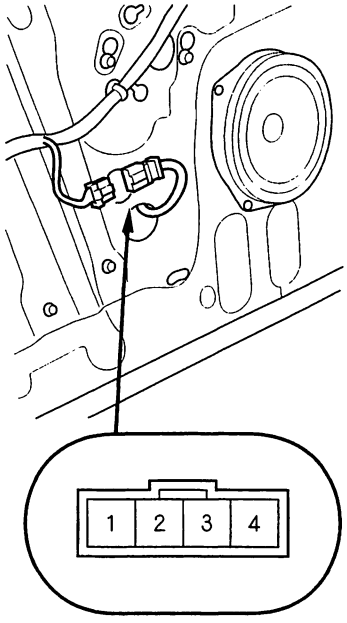

Terminal side of male terminals

3. Test the motor in each direction by connecting battery power and ground according to the table. When the motor stops running, disconnect one lead immediately.

Terminal / Direction	1	2
UP	⊕	⊖
DOWN	⊖	⊕

4. If the motor does not run or fails to run smoothly, replace it.

Pulser Test:

5. Connect the test leads of an analog ohmmeter to the No. 3 and No. 4 terminals.
6. Run the motor by connecting power and ground to the No. 1 and No. 2 terminals. The ohmmeter needle should move back and forth alternately.

Passenger's Window Motor Test

1. Remove the passenger's door panel (see page 20-8).
2. Disconnect the 2P connector from the window motor.

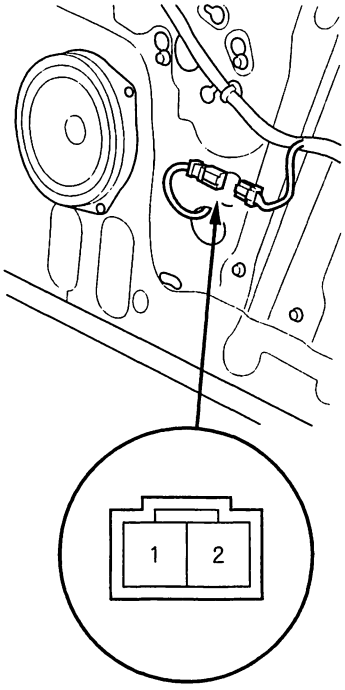

Terminal side of male terminals

3. Check window motor operation by connecting power and ground according to the table. When the motor stops running, disconnect one lead immediately.

Terminal / Direction	1	2
UP	⊕	⊖
DOWN	⊖	⊕

4. If the motor does not run or fails to run smoothly, replace it.

BACK

Component Location Index

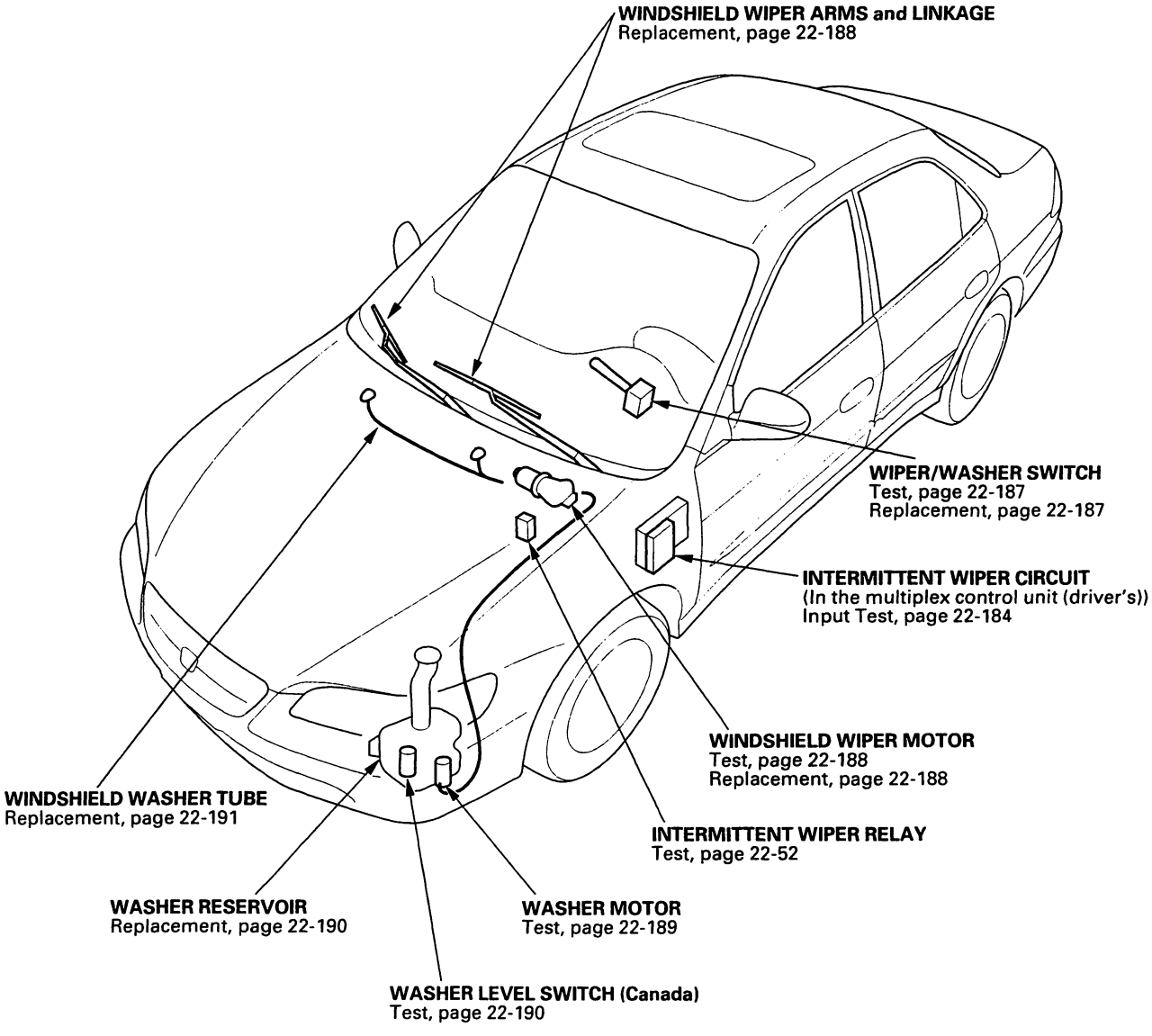

Circuit Diagram

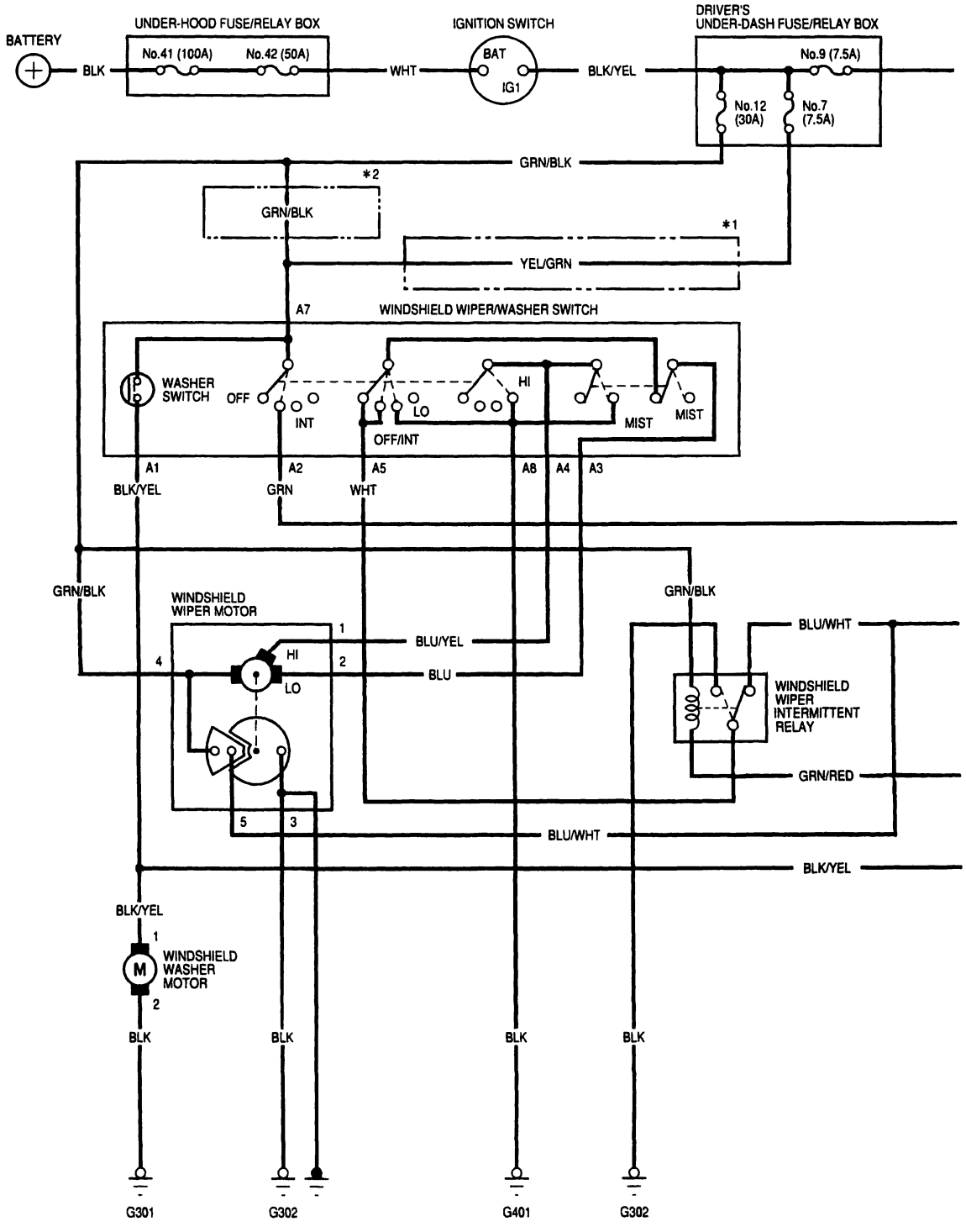

*1 : All '98-99 models, '00-02 Sedan
*2 : '00-02 Coupe

BACK

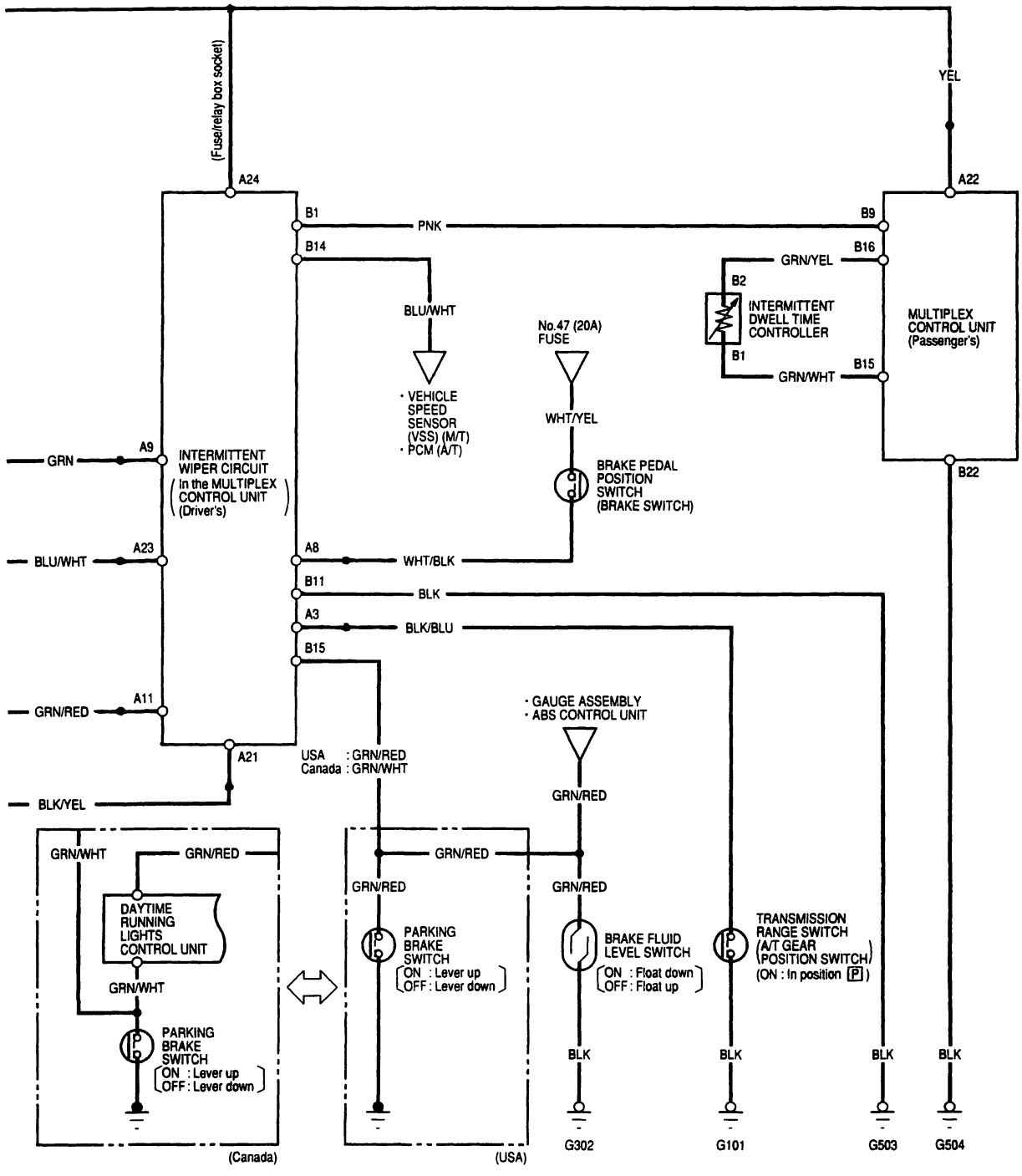
(Fuse/relay box socket)
A24
YEL
A22
B1
PNK
B9
B14
B16
GRN/YEL
B2
INTERMITTENT DWELL TIME CONTROLLER
B1
B15
GRN/WHT
MULTIPLEX CONTROL UNIT (Passenger's)
BLU/WHT
No.47 (20A) FUSE
· VEHICLE SPEED SENSOR (VSS) (M/T)
· PCM (A/T)
WHT/YEL
GRN
A9
INTERMITTENT WIPER CIRCUIT (In the MULTIPLEX CONTROL UNIT (Driver's))
BRAKE PEDAL POSITION SWITCH (BRAKE SWITCH)
B22
BLU/WHT
A23
A8
WHT/BLK
B11
BLK
A3
BLK/BLU
B15
GRN/RED
A11
· GAUGE ASSEMBLY
· ABS CONTROL UNIT
A21
USA : GRN/RED
Canada : GRN/WHT
BLK/YEL
GRN/RED
GRN/WHT
GRN/RED
GRN/RED
GRN/RED
GRN/RED
DAYTIME RUNNING LIGHTS CONTROL UNIT
PARKING BRAKE SWITCH (ON : Lever up / OFF : Lever down)
BRAKE FLUID LEVEL SWITCH (ON : Float down / OFF : Float up)
TRANSMISSION RANGE SWITCH (A/T GEAR POSITION SWITCH) (ON : In position P)
GRN/WHT
PARKING BRAKE SWITCH (ON : Lever up / OFF : Lever down)
BLK
BLK
BLK
BLK
G302
G101
G503
G504
(Canada)
(USA)

Control Unit Input Test

1. Before testing the wiper/washer control functions, troubleshoot the multiplex control system (see page 22-137).

Multiplex Control Unit, Driver's:

2. Remove the driver's multiplex control unit from the driver's under-dash fuse/relay box, and disconnect its connector.

3. Inspect all connector and socket terminals to be sure they are making good contact.
   - If the terminals are bent, loose or corroded, repair them as necessary, and recheck the system.
   - If the terminals look OK, go to step 4.

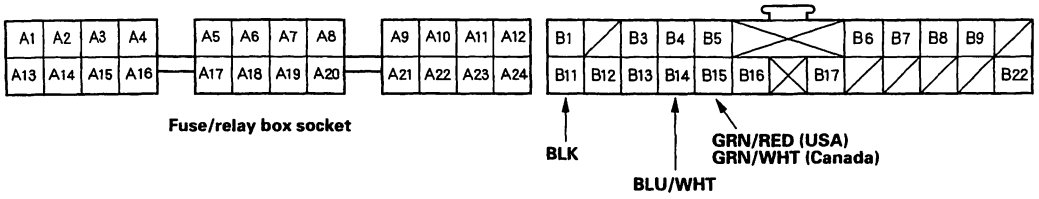

Wire side of female terminals

4. With the driver's unit still disconnected, make these input tests at the connector and fuse/relay box socket.
   - If any test indicates a problem, find and correct the cause, then recheck the system.
   - If all the input tests prove OK, go to step 5.

Cavity	Wire	Test condition	Test: Desired result	Possible cause if result is not obtained
A9	Fuse/relay box socket	Ignition switch ON (II) and wiper switch at INT	Check for voltage to ground: There should be battery voltage.	• Blown No. 7 (7.5A) [No. 12 (30A)] fuse in the driver's under-dash fuse/relay box • Faulty wiper switch • An open in the wire
A8		Brake pedal pushed	Check for voltage to ground: There should be battery voltage.	• Blown No. 47 (20A) fuse in the under-hood fuse/relay box • An open in the wire
A11		Ignition switch ON (II)	Check for voltage to ground: There should be battery voltage.	• Blown No. 12 (30A) fuse in the driver's under-dash fuse/relay box • Faulty intermittent wiper relay • An open in the wire
A21		Ignition switch ON (II) and washer switch ON	Check for voltage to ground: There should be battery voltage.	• Blown No. 7 (7.5A) [No. 12 (30A)] fuse in the driver's under-dash fuse/relay box • Faulty washer switch • An open in the wire
A23		Ignition switch ON (II)	Check for voltage to ground: There should be battery voltage.	• Blown No. 12 (30A) fuse in the driver's under-dash fuse/relay box • An open in the wire
A3		Shift lever in P	Check for voltage to ground: There should be less than 1 V.	• Faulty A/T gear position switch • Poor ground (G101) • An open in the wire
A24		Ignition switch ON (II)	Check for voltage to ground: There should be battery voltage.	• Blown No. 9 (7.5A) fuse in the driver's under-dash fuse/relay box • An open in the wire

[ ] : '00-02 Coupe

BACK

Cavity	Wire	Test condition	Test: Desired result	Possible cause if result is not obtained
B11	BLK	Under all conditions	Check for continuity to ground: There should be continuity.	• Poor ground (G503) • An open in the wire
B15	GRN/RED (USA) GRN/WHT (Canada)	Parking brake lever up	Check for continuity to ground: There should be continuity.	• Faulty parking brake switch • An open in the wire

5. Reconnect the connector to the driver's unit, and make this input test at the connector.

- If the test indicates a problem, find and correct the cause, then recheck the system.
- If the test proves OK, go to step 6.

Cavity	Wire	Test condition	Test: Desired result	Possible cause if result is not obtained
B14	BLU/WHT	Ignition switch ON (II) and rotate one front wheel slowly with other wheel blocked	Check for voltage to ground: There should be 0 to approx. 5 V or more.	• Faulty vehicle speed sensor (M/T) or PCM (A/T) • An open in the wire (voltage stays high) • Short to ground (voltage stays low)

(cont'd)

Control Unit Input Test (cont'd)

Multiplex Control Unit, Passenger's:

6. Remove the passenger's under-dash fuse/relay box (see page 22-50).

7. Remove the passenger's multiplex control unit from the passenger's under-dash fuse/relay box, and disconnect its connector.

8. Inspect the connector and socket terminals to be sure they are all making good contact.

   - If the terminals are bent, loose or corroded, repair them as necessary, and recheck the system.
   - If the terminals look OK, go to step 9.

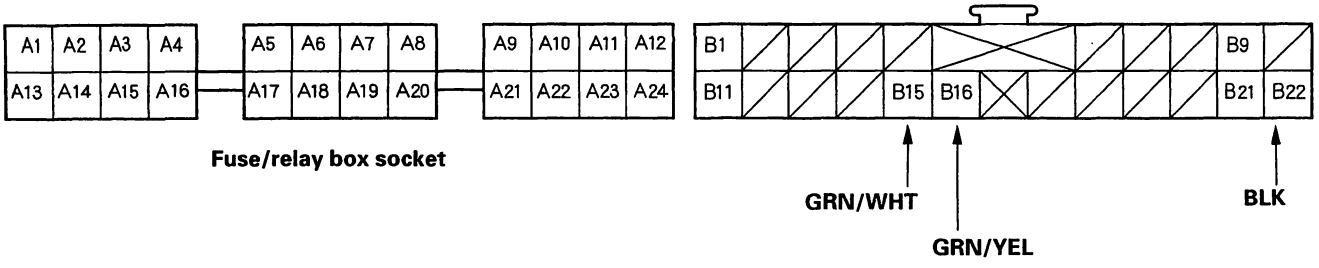

Wire side of female terminals

9. With the passenger's unit still disconnected, make these input tests at the connector and fuse/relay box socket.

   - If a test indicates a problem, find and correct the cause, then recheck the system.
   - If all the input tests prove OK, the control unit must be faulty; replace it.

Cavity	Wire	Test condition	Test: Desired result	Possible cause if result is not obtained
B22	BLK	Under all conditions	Check for continuity to ground: There should be continuity	• Poor ground (G504) • An open in the wire
A22	Fuse/relay box socket	Ignition switch ON (II)	Check for voltage to ground: There should be battery voltage.	• Blown No. 9 (7.5A) fuse in the driver's under-dash fuse/relay box • An open in the wire
B16 B15	GRN/YEL GRN/WHT	Intermittent dwell time control ring turned	Check for resistance between the terminals: It should vary from 0 to 30 kΩ as the ring is turned.	• Faulty intermittent dwell time controller • An open in the wire

BACK

Wiper/Washer Switch Test/Replacement

1. Remove the dashboard lower cover (see page 20-84) and steering column covers (see page 17-25).
2. Disconnect the connectors (A) from the wiper/washer switch (B).
3. Remove the two screws (C), then pull out the switch (B).
4. Inspect the connector terminals to be sure they are all making good contact.
   - If the terminals are bent, loose or corroded, repair them as necessary, and recheck the system.
   - If the terminals look OK, check for continuity between them in each switch position according to the tables.
     - If there is no continuity, replace the switch.

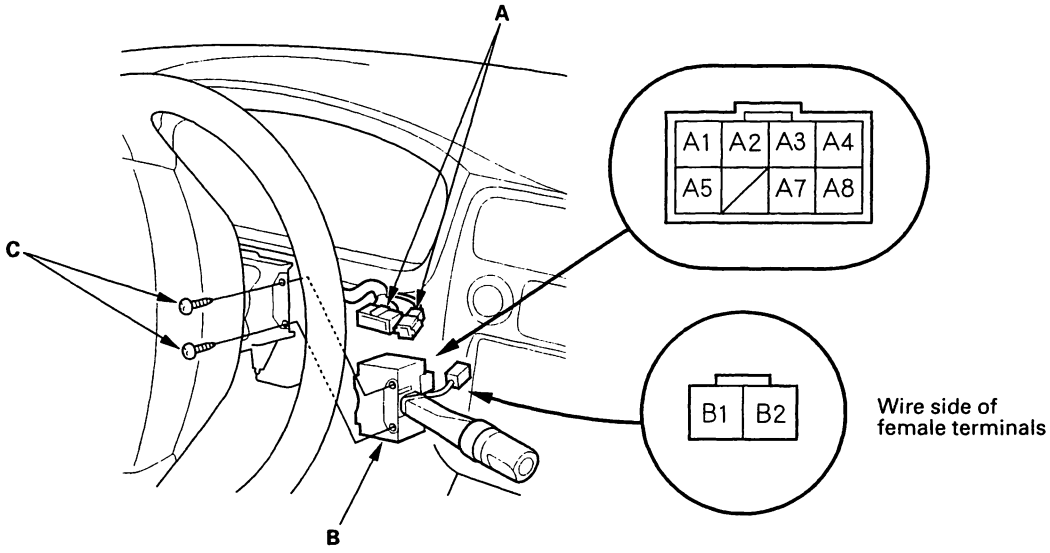

Terminal / Position	A1	A2	A3	A4	A5	A7	A8	B1		B2
OFF			○		○					
INT		○				○				
			○		○					
LO			○				○			
HI				○			○			
Mist switch ON				○			○			
Washer switch ON	○					○				
Intermittent dwell time controller turned								○	0—30kΩ	○

Wiper Motor Test

1. Open the hood, and remove the cap nuts and the wiper arms.

   NOTE: Carefully remove the wiper arms, so that they do not touch the hood.

2. Remove the windshield wiper arms (see page 22-188).

3. Disconnect the connector from the wiper motor.

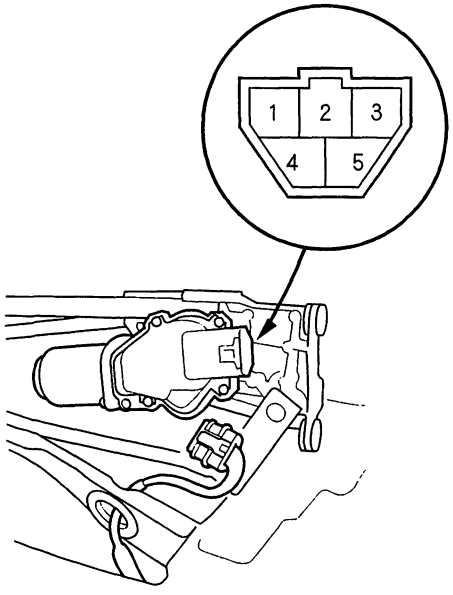

4. Test the motor by connecting battery power and ground according to the table.
   If the motor does not run or fails to run smoothly, replace it.

Terminal / Position	1	2	4
LOW SPEED		⊖	⊕
HIGH SPEED	⊖		⊕

5. Connect an analog voltmeter between the No. 5 (+) and No. 3 (−) terminals, and run the motor at low or high speed. The voltmeter should indicate 0 V and 4 V or less alternately.

Wiper Motor Replacement

1. Remove the nuts (A) and remove the windshield wiper arms (B).

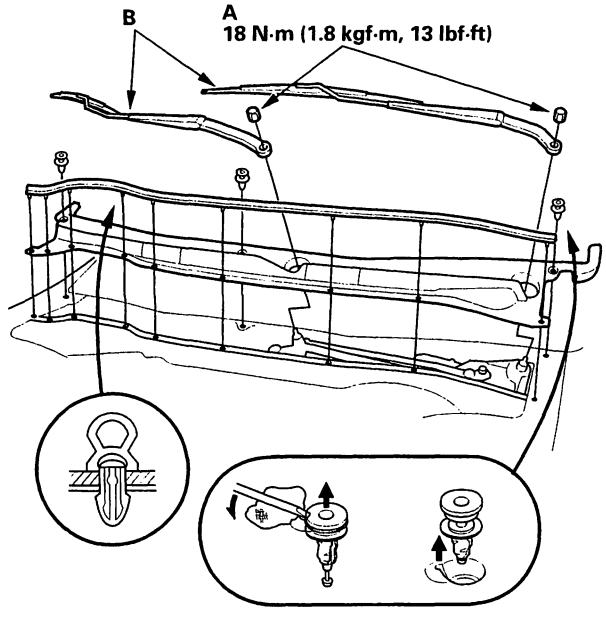

Remove and replace the clips.

2. Remove the hood seal and cowl cover.

3. Remove the bolt (A) and windshield wiper linkage assembly (B).

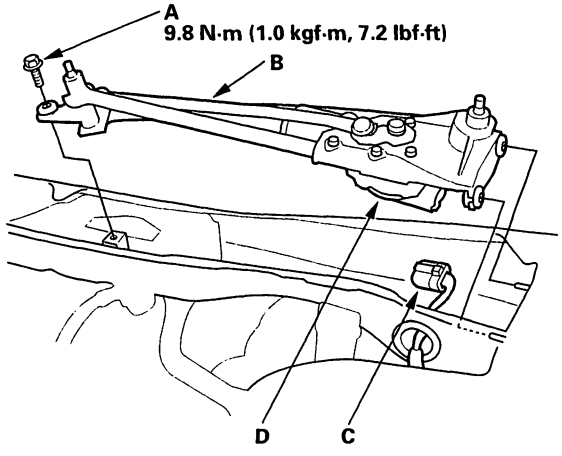

4. Disconnect the connector (C) from the wiper motor (D).

BACK

5. Scribe a line (A) across the link and windshield wiper linkage to show the original adjustment. Separate the windshield wiper linkage (B) from the wiper motor (C).

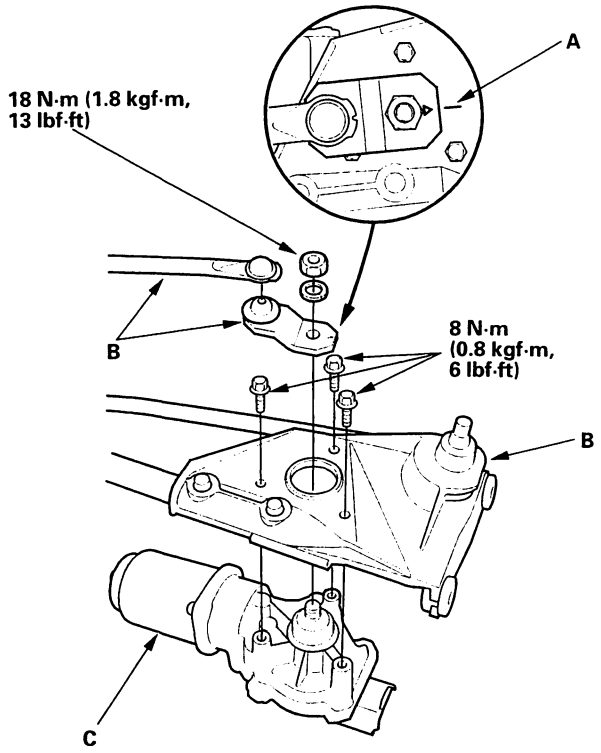

6. Install the motor in the reverse order of removal, and note these items:

- Grease the moving parts.
- Before reinstalling the wiper arms, turn the wiper switch ON, then OFF to return the wiper shafts to the park position.
- If necessary, replace any damaged clips.
- Check the wiper motor operation.

Washer Motor Test

1. Remove the left inner fender (see page 20-167).

2. Disconnect the connector from the washer motor.

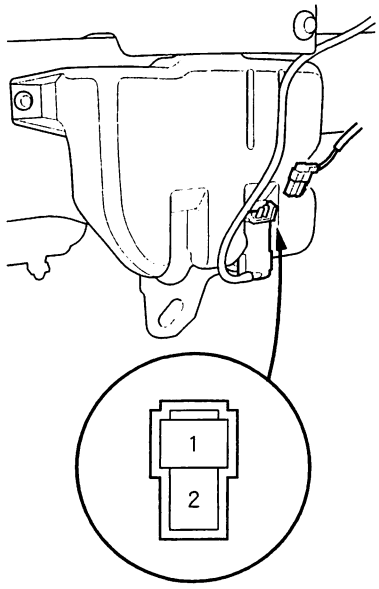

3. Test the washer motor by connecting battery power and ground according to the table.

- If the motor fails to run smoothly, replace it.
- If the motor runs smoothly, but little or no washer fluid is pumped, check for a disconnected or blocked washer hose, or a clogged pump outlet in the motor.

Terminal / Battery	1	2
Connected	⊕	⊖

Washer Reservoir Replacement

1. Pull away the left inner fender (see page 20-167).

2. Disconnect the washer tube(s) (A) and washer motor connector (B).

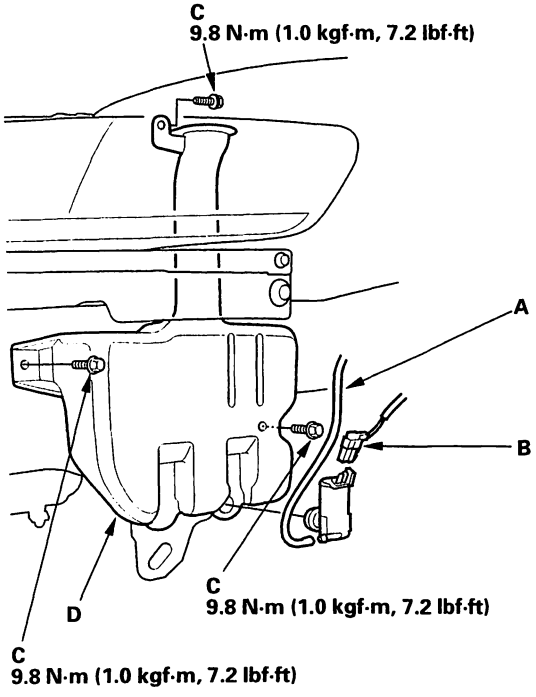

3. Remove the three bolts (C) and washer reservoir (D).

4. Install the reservoir in the reverse order of removal. Check the washer motor operation.

Washer Fluid Level Switch Test (Canada)

1. Remove the left inner fender (see page 20-167).

2. Disconnect the switch 2P connector (A).

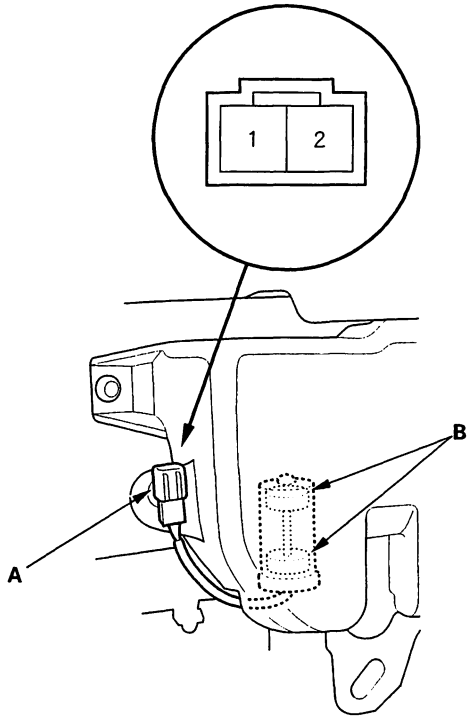

3. Check for continuity between the terminals in each float (B) position according to the table.

Terminal / Position	1	2
FLOAT UP		
FLOAT DOWN	○	○

BACK

Washer Tube Replacement

1. Remove the left inner fender (see page 20-167).
2. Remove the windshield washer nozzles and clips, then remove the tube.

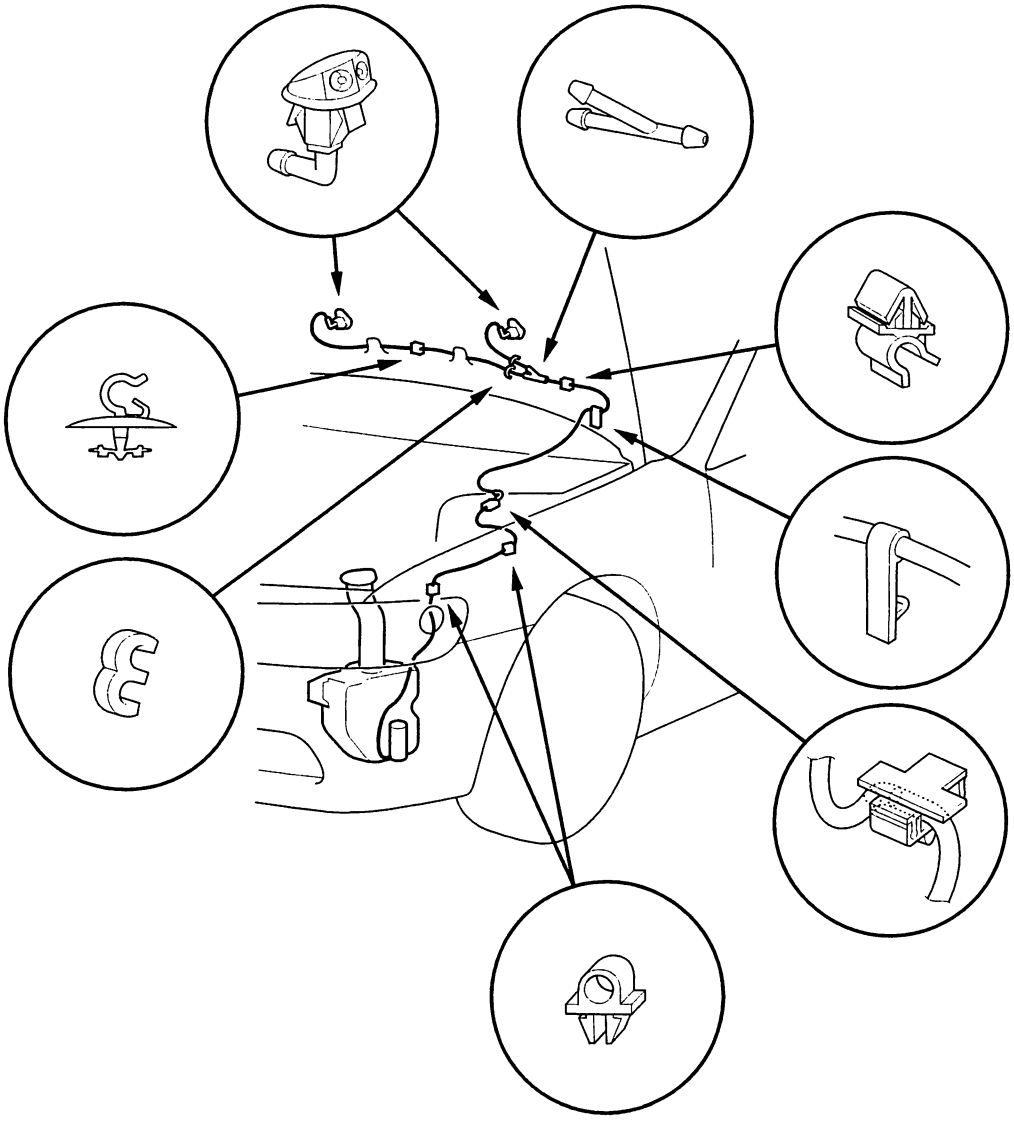

3. Install in the reverse order of removal. Take care not to pinch the washer tube. Check the windshield washer operation.

Component Location Index

8-way Adjustable:

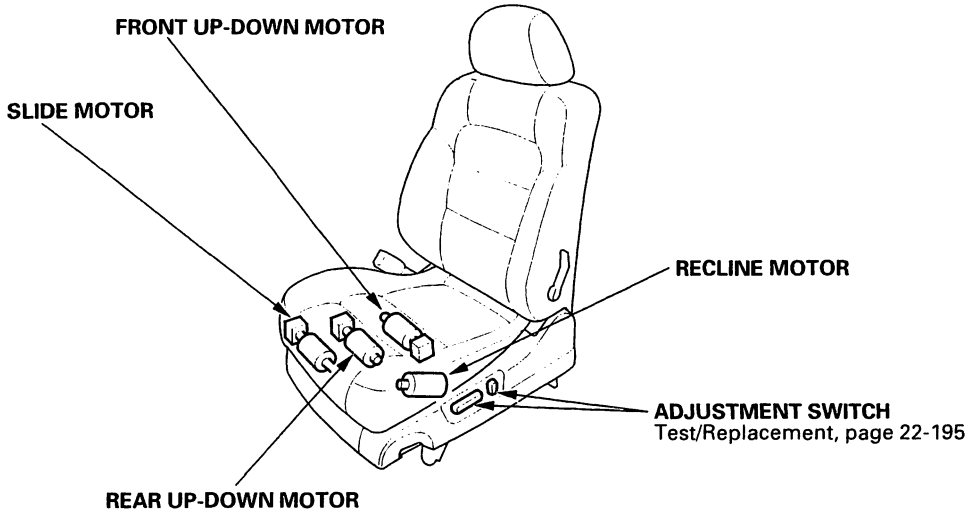

2-way Adjustable:

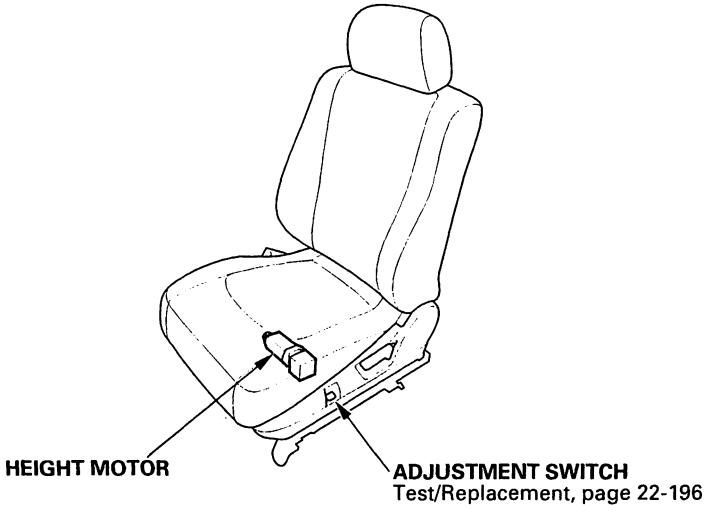

BACK

Circuit Diagram - 8-way Adjustable

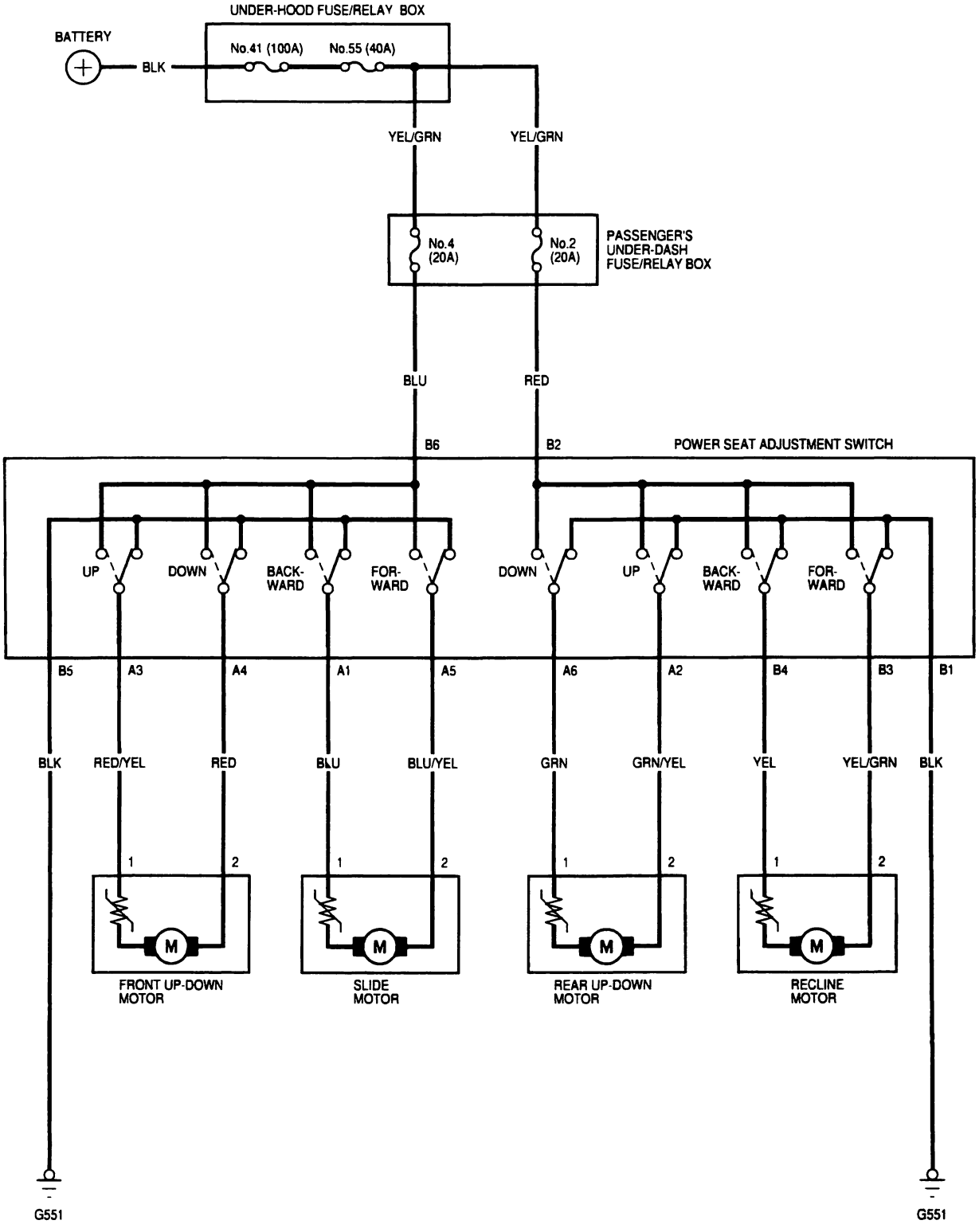

Circuit Diagram - 2-way Adjustable

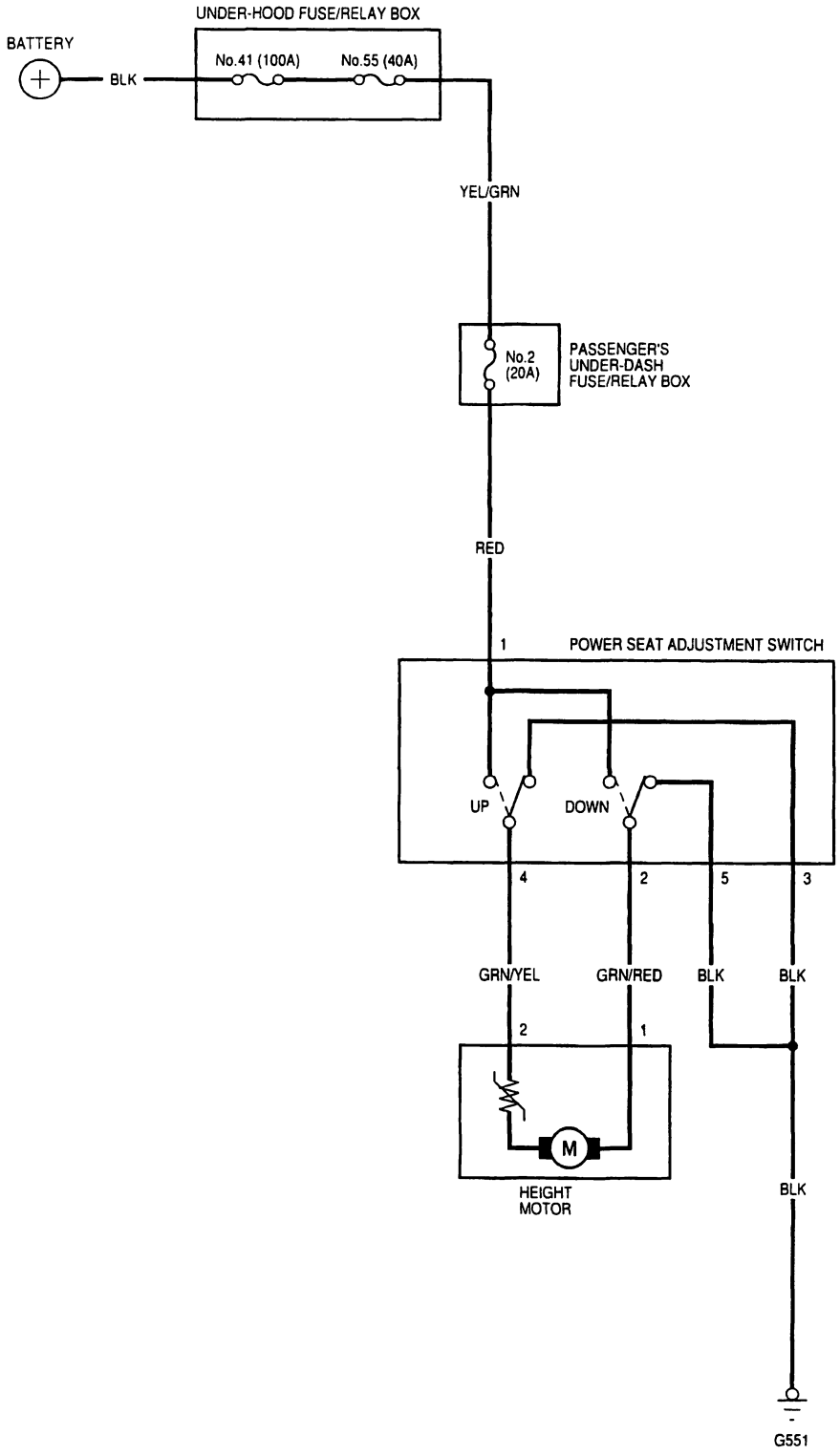

BACK

Switch Test - 8-way Adjustable

1. Remove the adjustment switch cover (A) from the driver's seat by removing the three screws (B), and pulling off the adjustment switch knobs (C).

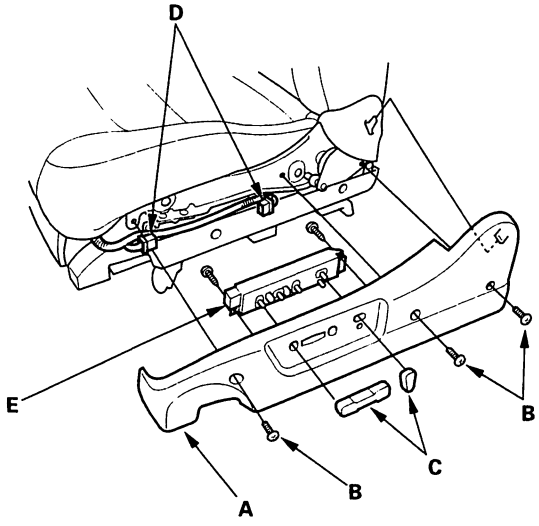

2. Disconnect the 6P connectors (D) from the adjustment switch (E), then remove the switch from the cover by removing its two mounting screws.

3. Reinstall the adjustment switch knobs.

4. Check for continuity between the terminals in each switch position according to the table.

Position \ Terminal		A1	A2	A3	A4	A5	A6	B1	B2	B3	B4	B5	B6
SLIDE SWITCH	FOR WARD	○				○						○	○
	BACK WARD	○				○						○	○
RECLINE SWITCH	FOR WARD							○	○	○	○		
	BACK WARD							○	○	○	○		
FRONT UP-DOWN SWITCH	UP			○	○							○	○
	DOWN			○	○							○	○
REAR UP-DOWN SWITCH	UP		○				○	○	○				
	DOWN		○				○	○	○				

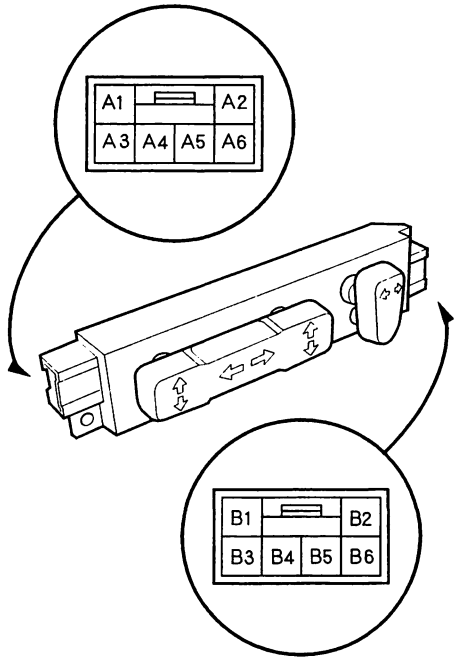

5. If the continuity is not as specified, replace the switch.

Switch Test - 2-way Adjustable

1. Remove the adjustment switch cover (A) from the driver's seat by removing the two screws (B) and the recline knob (C).

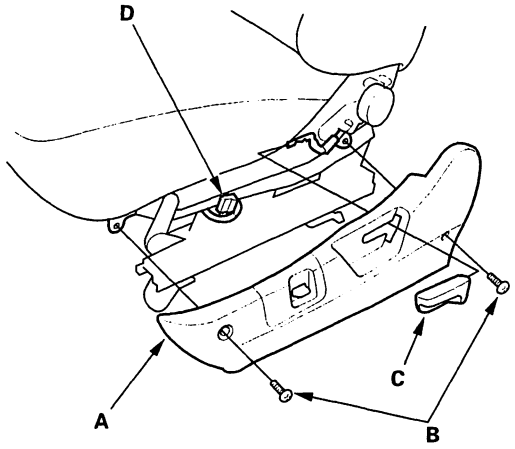

2. Disconnect the 5P connector (D) from the adjustment switch, then remove the switch from the cover by removing its two mounting screws.

3. Check for continuity between the terminals in each switch position according to the table.

Terminal / Position	1	2	3	4	5
UP	○	○		○	○
DOWN	○	○	○	○	

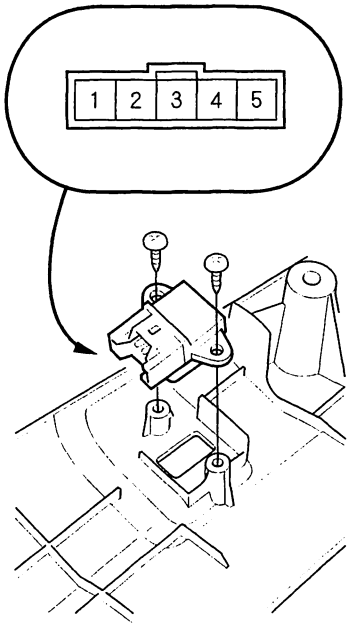

4. If the continuity is not as specified, replace the switch.

BACK

Motor Test - 8-way Adjustable

1. Remove the driver's seat (see page 20-98).

2. Disconnect the 6P connectors from the adjustment switch.

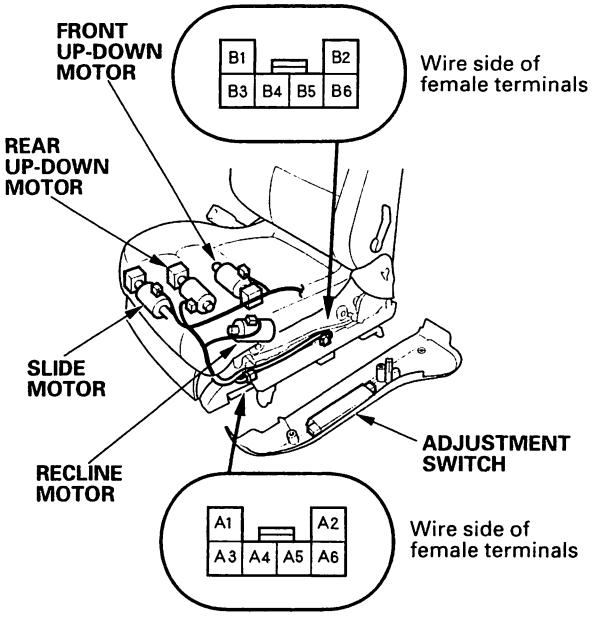

3. Test the motor. When the motor stops running, disconnect battery power immediately.

Recline motor:

Terminal / Position	B3	B4
Forward	⊕	⊖
Backward	⊖	⊕

Slide motor:

Terminal / Position	A1	A5
Forward	⊖	⊕
Backward	⊕	⊖

Front up-down motor:

Terminal / Position	A3	A4
UP	⊕	⊖
DOWN	⊖	⊕

Rear up-down motor:

Terminal / Position	A2	A6
UP	⊕	⊖
DOWN	⊖	⊕

4. If the motor does not run or fails to run smoothly, check for an open in the power seat wire harness between the 6P connector and the 2P connectors. If the harness is OK, replace the motor (see page 20-122).

Motor Test - 2-way Adjustable

1. Remove the driver's seat (see page 20-99).

2. Disconnect the 5P connector from the adjustment switch. When the motor stops running, disconnect battery power immediately.

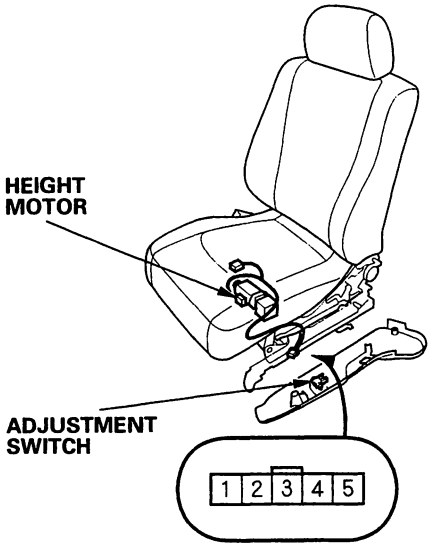

Wire side of female terminals

3. Test the motor:

Terminal / Position	2	4
UP	⊖	⊕
DOWN	⊕	⊖

4. If the motor does not run or fails to run smoothly, check for an open in the power seat wire harness between the 5P connector and 2P connectors. If the harness is OK, replace the motor (see page 22-115).

BACK

Seat Heaters - Canada

Component Location Index

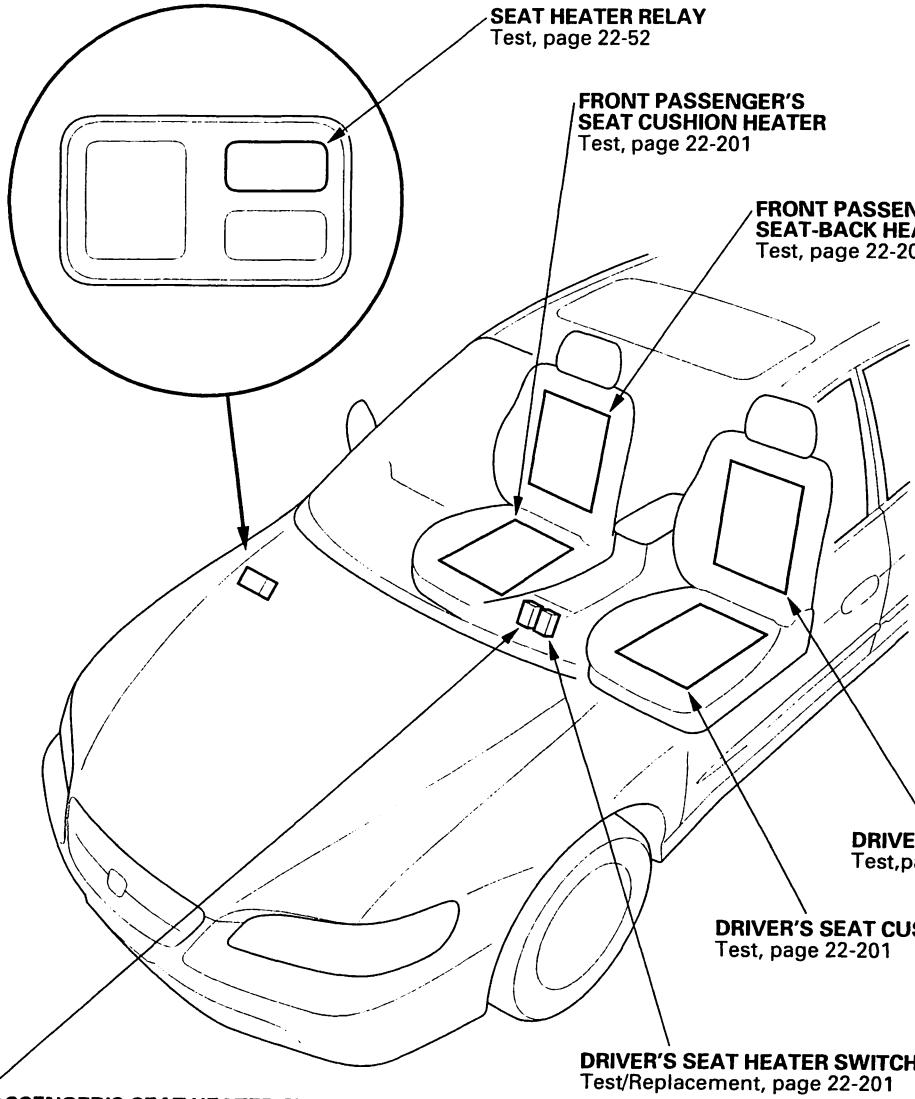

Seat Heaters - Canada

Circuit Diagram

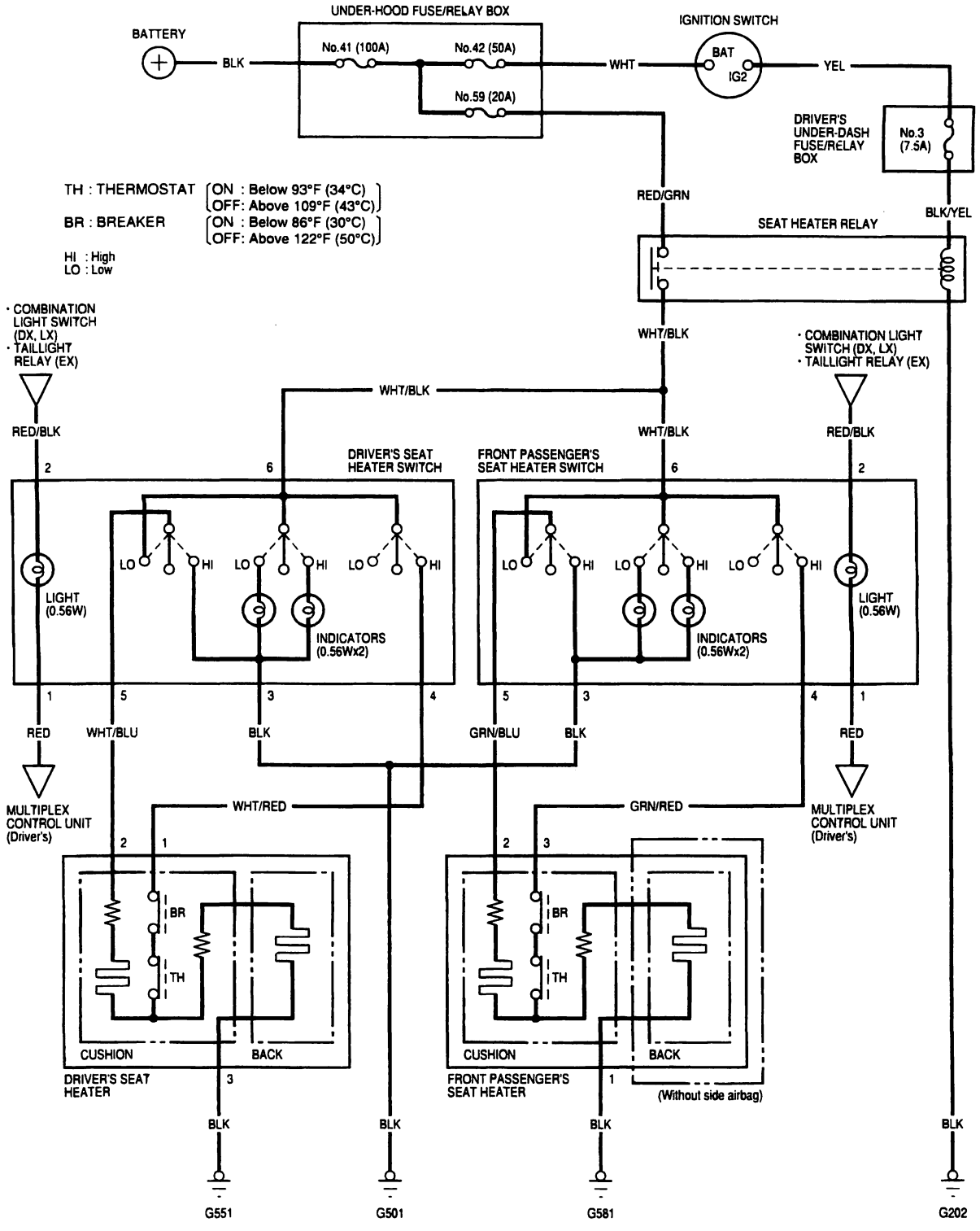

BACK

Switch Test

1. Remove the center console (see page 20-83).
2. Disconnect the 6P connector (A) from the switch (B), and remove the switch from the console tray.

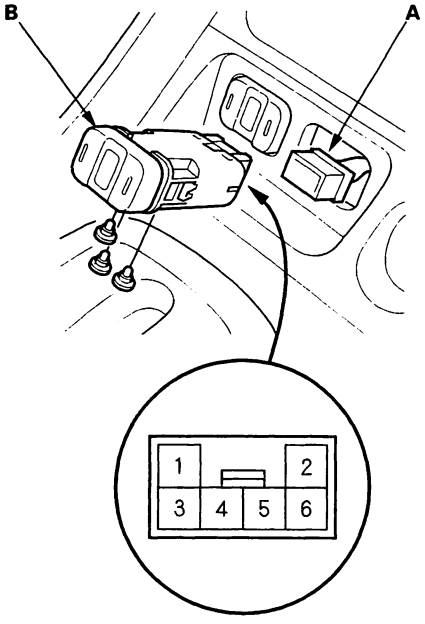

3. Check for continuity between the terminals in each switch position according to the table.

Position \ Terminal		1		2	3		6	4	5
ON	HIGH	○	⊖	○	○	⊖	○	○	○
	LOW	○	⊖	○	○	⊖	○		○
OFF		○	⊖	○					

4. If the continuity is not as specified, replace the switch.

Seat Heater Test

1. Carefully remove the driver's and passenger's seat (see page 20-99).
2. Check for continuity in the driver's seat heater between the No. 1 and No. 2 terminals, and No. 1 and No. 3 terminals.
   There should be continuity.

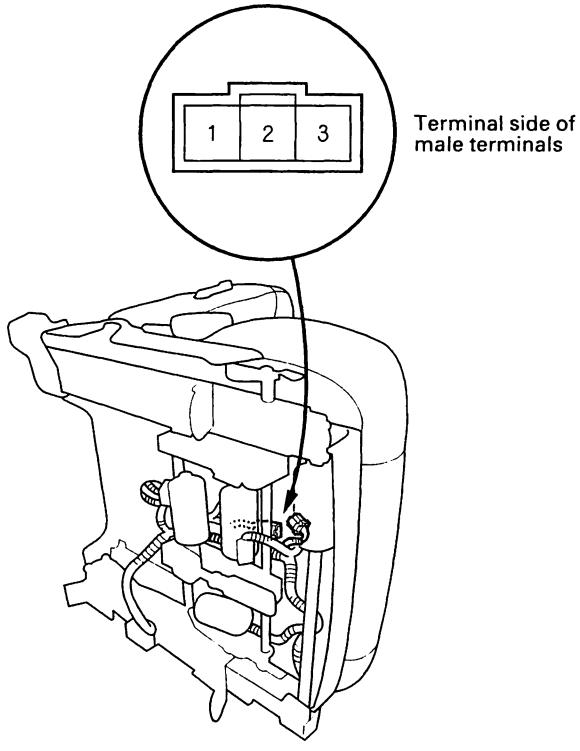

3. Check for continuity in the passenger's seat heater between the No. 3 the No. 2 terminals, and No. 3 and No. 1 terminals. There should be continuity.
4. If the continuity is not as specified, replace the heater.

Component Location Index

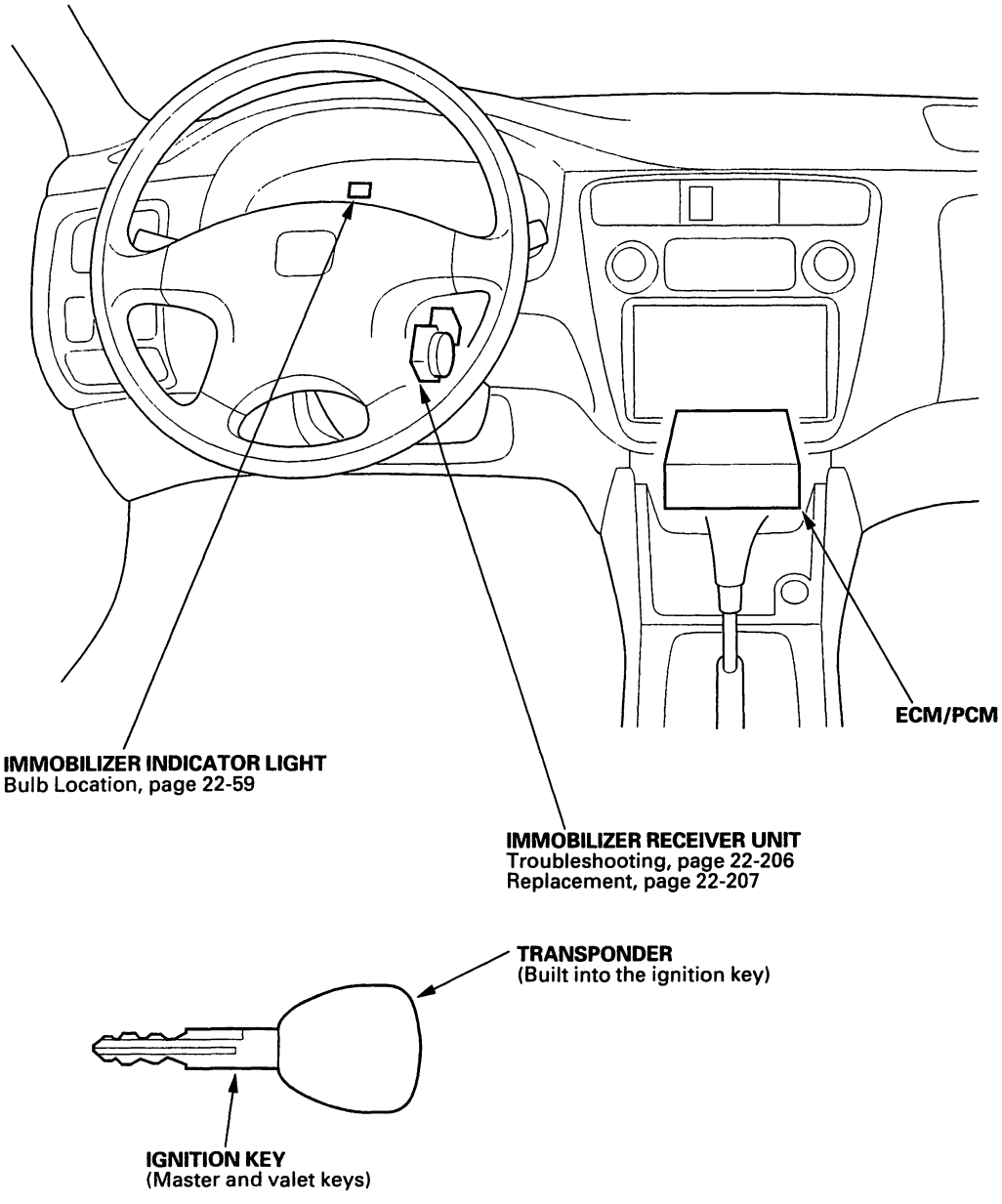

BACK

Circuit Diagram

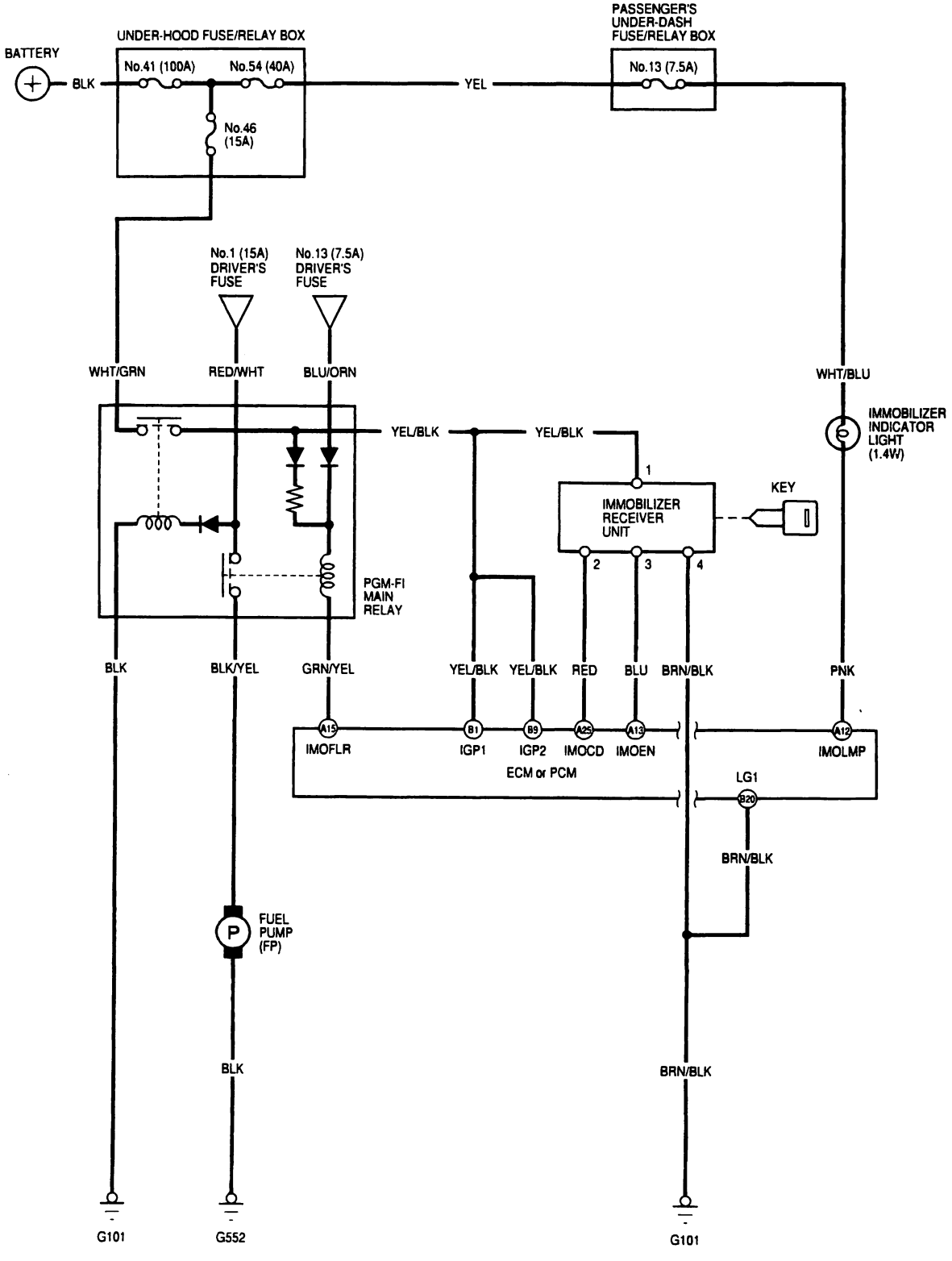

BACK

Immobilizer System

System Description

The vehicle is equipped with an immobilizer system that will disable the vehicle unless the proper ignition key is used. This system consists of a transponder located in the ignition key, an immobilizer receiver unit, an indicator light, and the ECM/PCM.
The vehicle has two kinds of keys.

- The black master key for:
  - ignition switch.
  - door locks.
  - trunk lock.
  - glove box.
  - trunk handle.
  - rear seat and pass through.
- The gray valet key for:
  - ignition switch.
  - door locks.

When the key is inserted in the ignition and turned to the (II) position, the immobilizer unit sends power to the transponder in the ignition key. The transponder then sends a coded signal back through the immobilizer unit to the ECM/PCM.

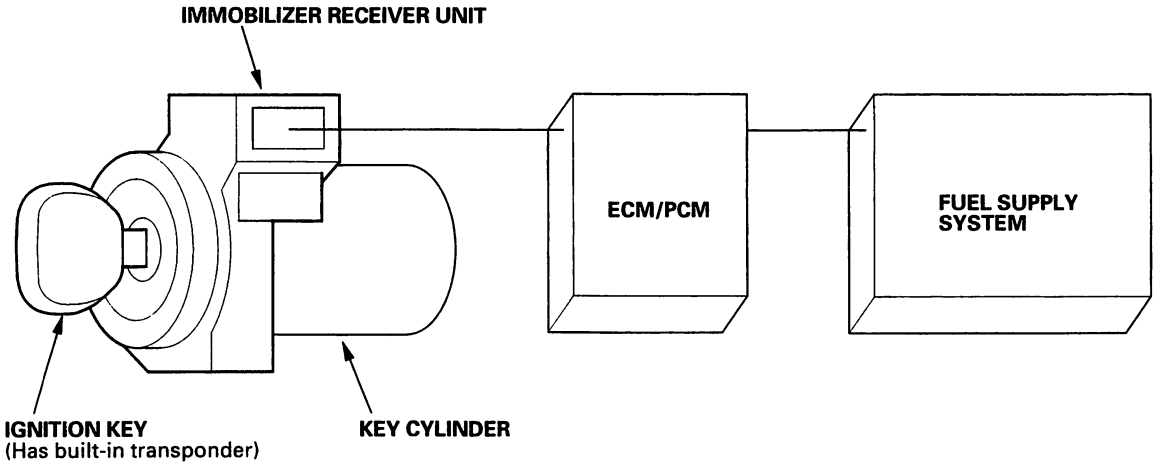

- The immobilizer system can store up to six key codes.
- If it is necessary to rewrite the ECM/PCM to learn a new key, the dealer needs the customer's vehicle, all its master keys and valet keys, and the Honda PGM Tester equipped with an immobilizer program card. Any key that is not learned during rewriting will no longer start the engine.
- If the customer has lost his key, and cannot start the engine, contact Honda Customer Relations.

BACK

- If the proper key has been used, the ECM/PCM will energize the fuel supply system. The immobilizer indicator light in the gauge assembly will simultaneously come on for about 2 seconds, then go off, indicating that the immobilizer unit has recognized the code sent by the transponder.
- If the wrong key has been used and the code was not received or recognized by the ECM/PCM, the indicator light will come on for about 2 seconds, then it will continue blinking until the ignition switch is turned OFF.
- If the ignition switch is turned OFF, the indicator will blink for about 5 seconds to signal that the ECM/PCM has been set correctly, then the indicator will go off.

Problems and Replacement Parts:

Problem	Part set	PGM-Tester required ?
① Master or valet key has been lost or additional master or valet key is required.	Blank key	YES
② All master and valet keys have been lost.	Blank key (2), valet key	YES
③ Immobilizer receiver unit does not work.	Immobilizer receiver unit	NO
④ ECM/PCM does not work.	ECM/PCM	YES
⑤ Ignition switch does not work.	Ignition switch with immobilizer receiver unit Master key	YES

Troubleshooting

Follow this procedure if the vehicle does not start after rewriting the ECM/PCM with the PGM-Tester.

Note these items before troubleshooting:

- Due to the action of the immobilizer system, the engine takes slightly more time to start than engines of vehicle without an immobilizer system.
- When the system is normal, and the proper key is inserted, the indicator light comes on for 2 seconds, then it will go off.
- If the indicator starts to blink after 2 seconds, or if the engine does not start, repeat the starting procedure. If the engine still does not start troubleshoot the system.
- If all the transponder and immobilizer unit tests are OK, check the ECM/PCM (see page 11-3). If the ECM/PCM is faulty, substitute a known-good ECM/PCM, and recheck (see page 11-5).

1. Using a scan tool, check for a Diagnostic Trouble Code (DTC) (see page 11-3).

   Is DTC P1607 indicated?

   YES—Replace the ECM/PCM (see page 11-5).■

   NO—Go to step 2.

2. Turn the ignition switch ON (II) with the proper key.

3. Check to see if the immobilizer indicator light comes on.

   Does the indicator light blink?

   YES—Go to step 4.

   NO—Check for these problems:

   - An open in the PNK wire between the gauge assembly and ECM/PCM.
   - A faulty immobilizer indicator light.■

4. Disconnect the 5P connector (A) from the immobilizer receiver unit (B).

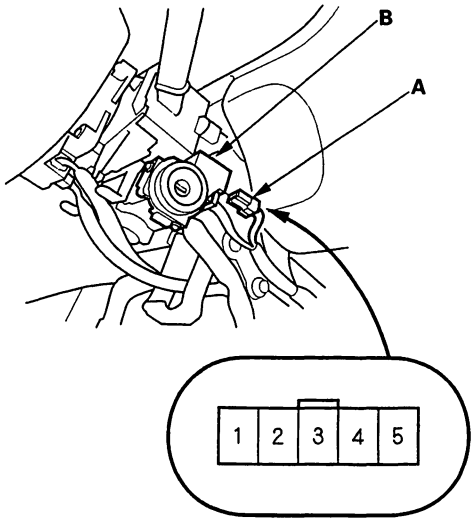

Wire side of female terminals

5. Check for voltage between the No.1 terminal and body ground.

   Is there battery voltage?

   YES—Go to step 6.

   NO—Check for these problems:

   - A blown fuse No. 1 (15A) in the driver's under-dash fuse/relay box.
   - A blown No. 46 (15A) fuse in the under-hood fuse/relay box.
   - An open in the YEL/BLK wire between the PGM-FI main relay and the immobilizer receiver unit.■

6. Check for continuity between the No. 4 terminal and body ground.

   Is there continuity?

   YES—Go to step 7.

   NO—Repair open in the BLK wire between the immobilizer receiver unit and G101.■

BACK

7. Check for continuity between the No. 2 terminal and the ECM/PCM.

   Is there continuity?

   YES – Go to step 8.

   NO – Repair open in the RED wire between the immobilizer receiver unit and ECM/PCM.

8. Check for continuity between the No. 3 terminal and ECM/PCM.

   Is there continuity?

   YES – Replace the immobilizer receiver unit (see page 22-207). ■

   NO – Repair open in the BLU wire between the immobilizer receiver unit and ECM/PCM. ■

Immobilizer Receiver Unit Replacement

1. Remove the driver's dashboard lower cover and steering column covers (see page 17-25).

2. Disconnect the 5P and 7P connectors (A) from the immobilizer receiver unit (B).

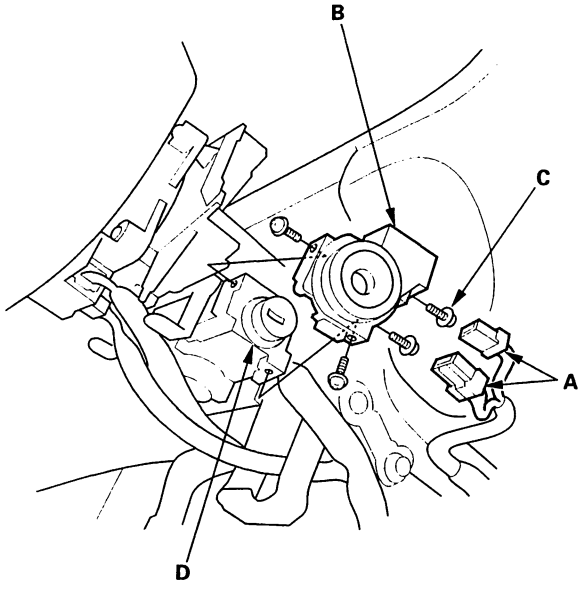

3. Remove the 2 screws (C) and the immobilizer receiver unit from the ignition key cylinder (D).

4. Install in the reverse order of removal.

5. After replacement, check the immobilizer system.

Component Location Index

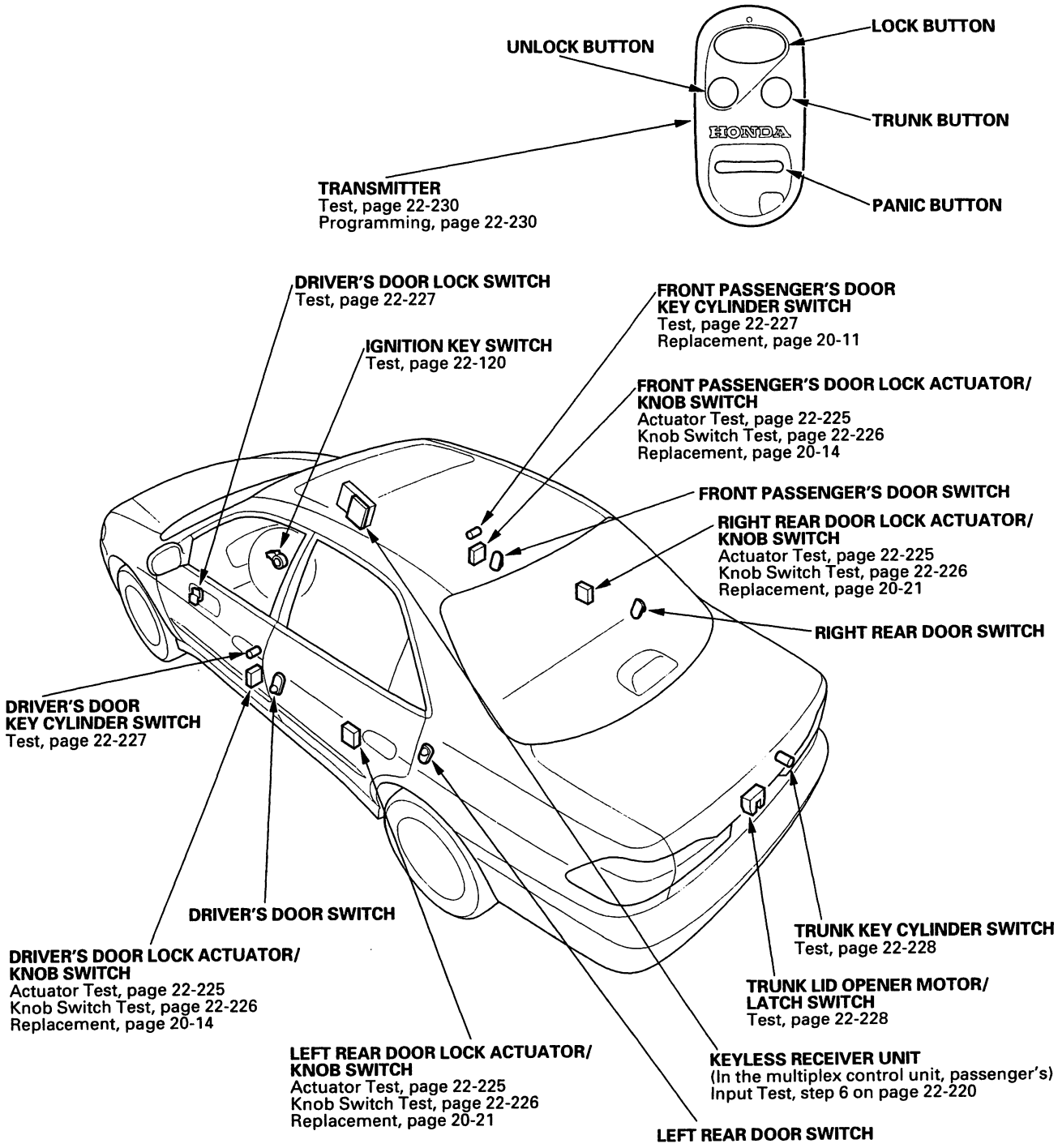

BACK

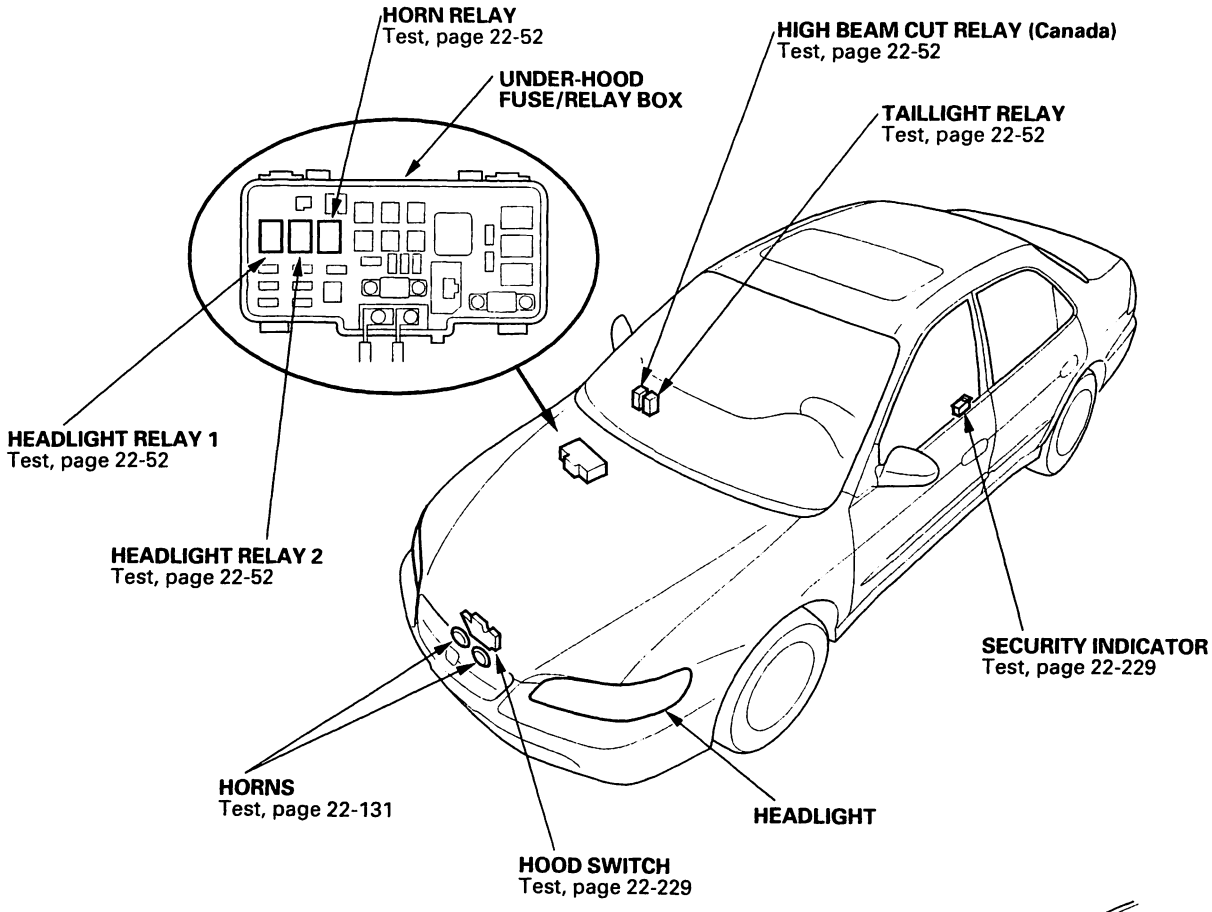
HORN RELAY
Test, page 22-52
UNDER-HOOD FUSE/RELAY BOX
HIGH BEAM CUT RELAY (Canada)
Test, page 22-52
TAILLIGHT RELAY
Test, page 22-52
HEADLIGHT RELAY 1
Test, page 22-52
HEADLIGHT RELAY 2
Test, page 22-52
SECURITY INDICATOR
Test, page 22-229
HORNS
Test, page 22-131
HEADLIGHT
HOOD SWITCH
Test, page 22-229

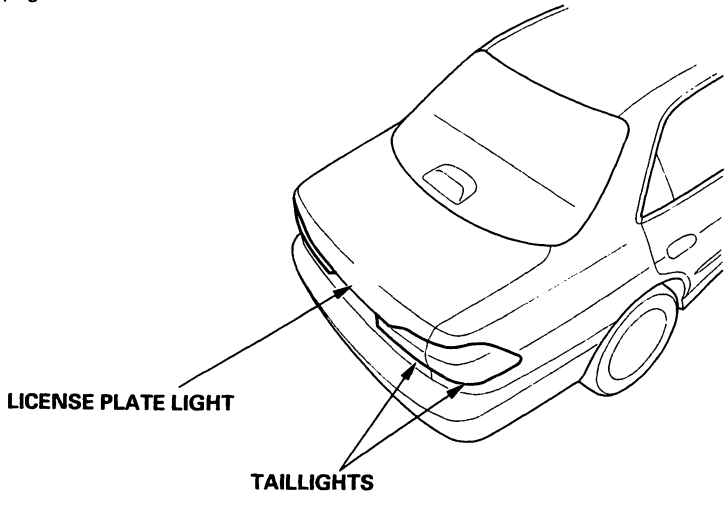
LICENSE PLATE LIGHT
TAILLIGHTS

Keyless Entry/Security Alarm System

Circuit Diagram

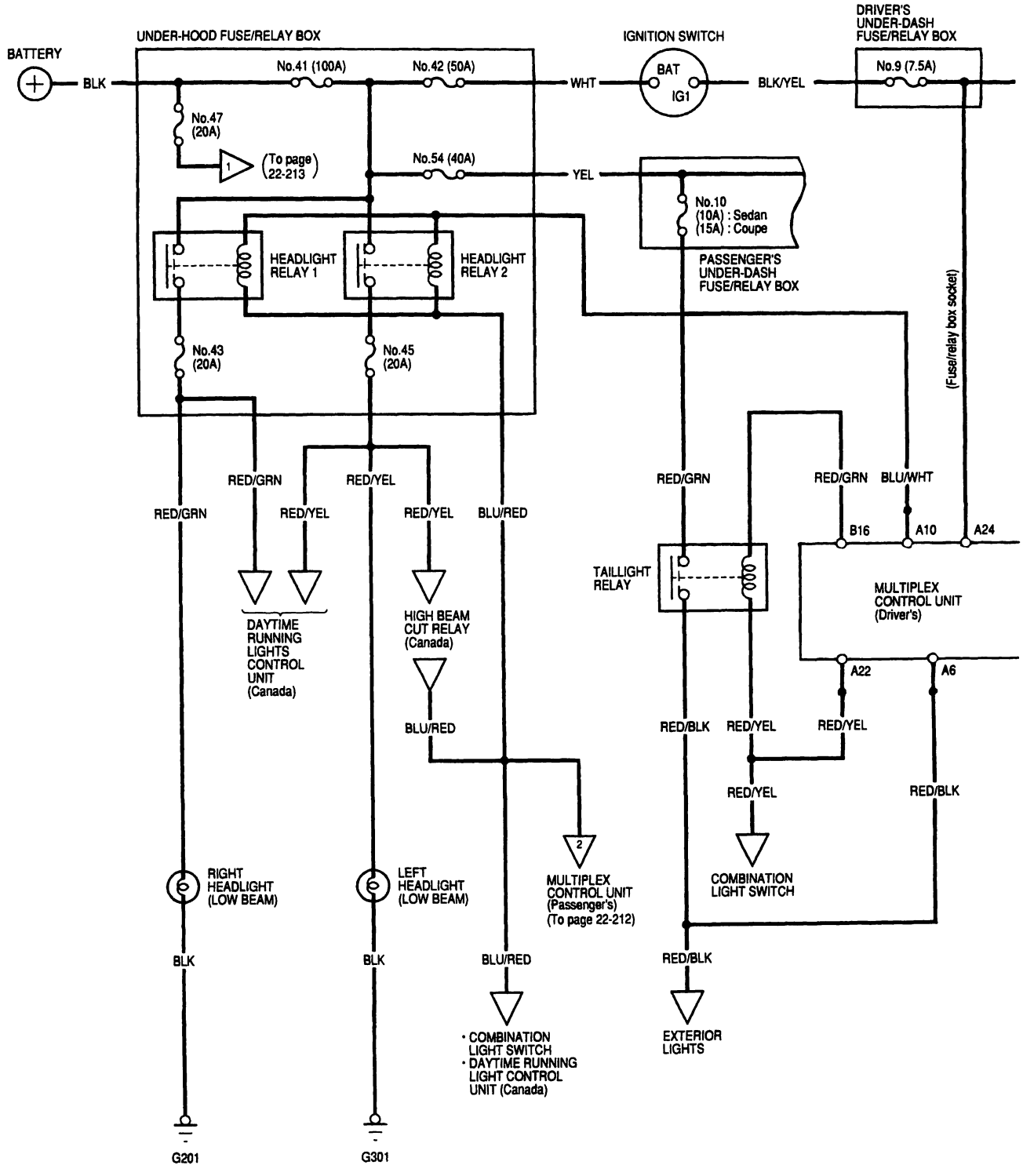

BACK

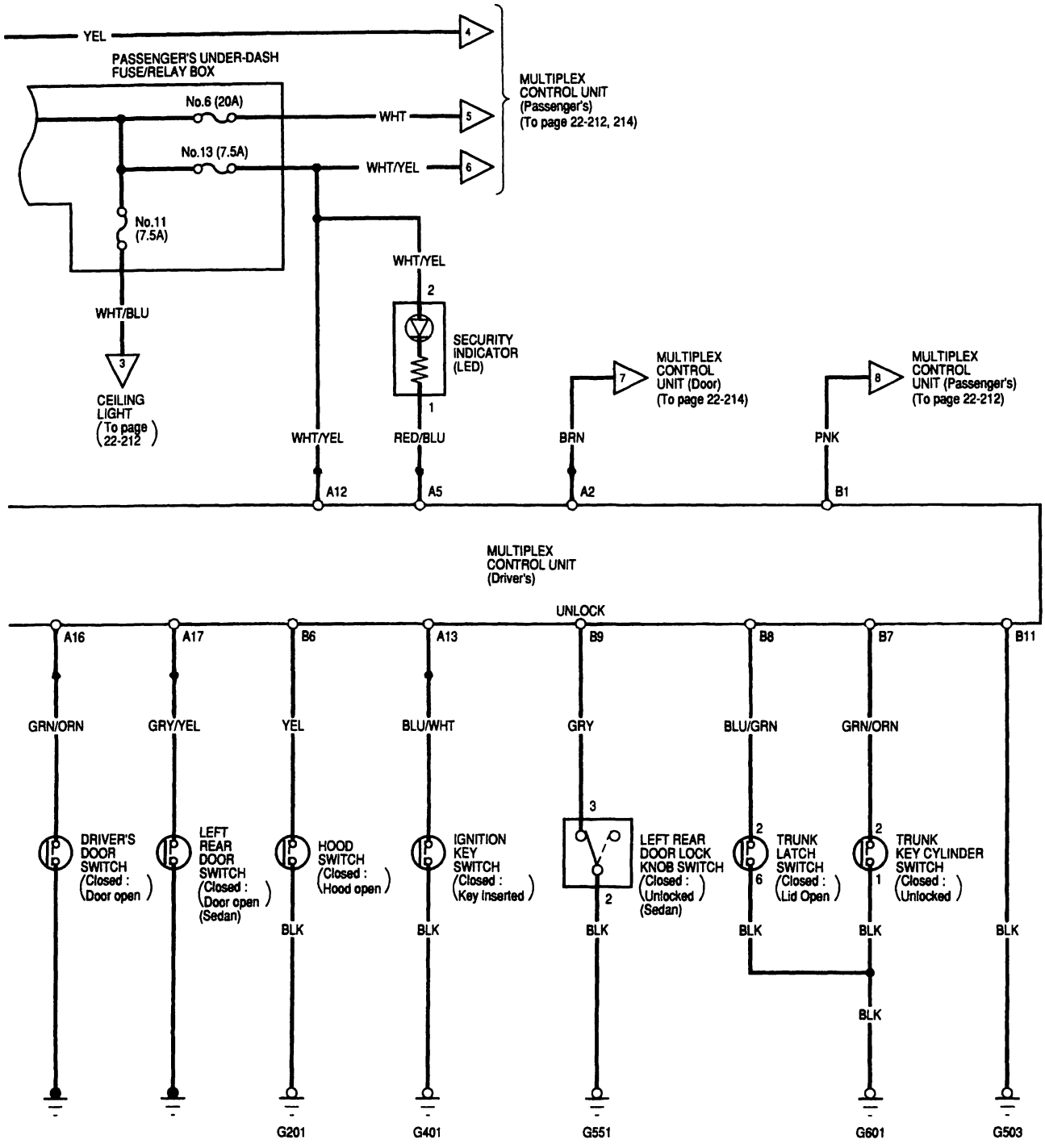
YEL
PASSENGER'S UNDER-DASH FUSE/RELAY BOX
No.6 (20A)
No.13 (7.5A)
No.11 (7.5A)
WHT
WHT/YEL
MULTIPLEX CONTROL UNIT (Passenger's) (To page 22-212, 214)
WHT/BLU
CEILING LIGHT (To page 22-212)
SECURITY INDICATOR (LED)
MULTIPLEX CONTROL UNIT (Door) (To page 22-214)
MULTIPLEX CONTROL UNIT (Passenger's) (To page 22-212)
WHT/YEL
RED/BLU
BRN
PNK
A12
A5
A2
B1
MULTIPLEX CONTROL UNIT (Driver's)
UNLOCK
A16
A17
B6
A13
B9
B8
B7
B11
GRN/ORN
GRY/YEL
YEL
BLU/WHT
GRY
BLU/GRN
GRN/ORN
DRIVER'S DOOR SWITCH (Closed : Door open)
LEFT REAR DOOR SWITCH (Closed : Door open (Sedan))
HOOD SWITCH (Closed : Hood open)
IGNITION KEY SWITCH (Closed : Key inserted)
LEFT REAR DOOR LOCK KNOB SWITCH (Closed : Unlocked (Sedan))
TRUNK LATCH SWITCH (Closed : Lid Open)
TRUNK KEY CYLINDER SWITCH (Closed : Unlocked)
BLK
G201
G401
G551
G601
G503

(cont'd)

Circuit Diagram (cont'd)

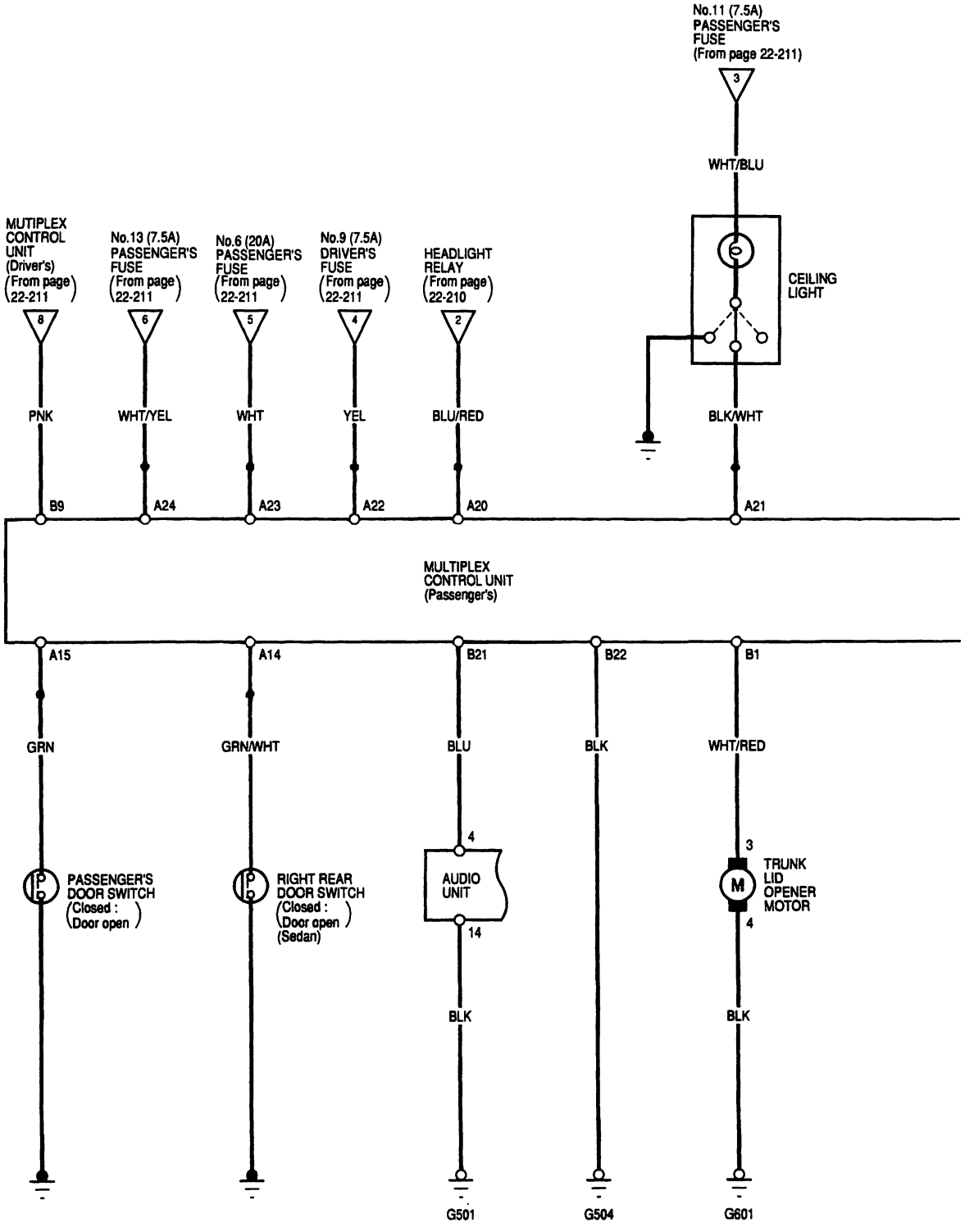

BACK

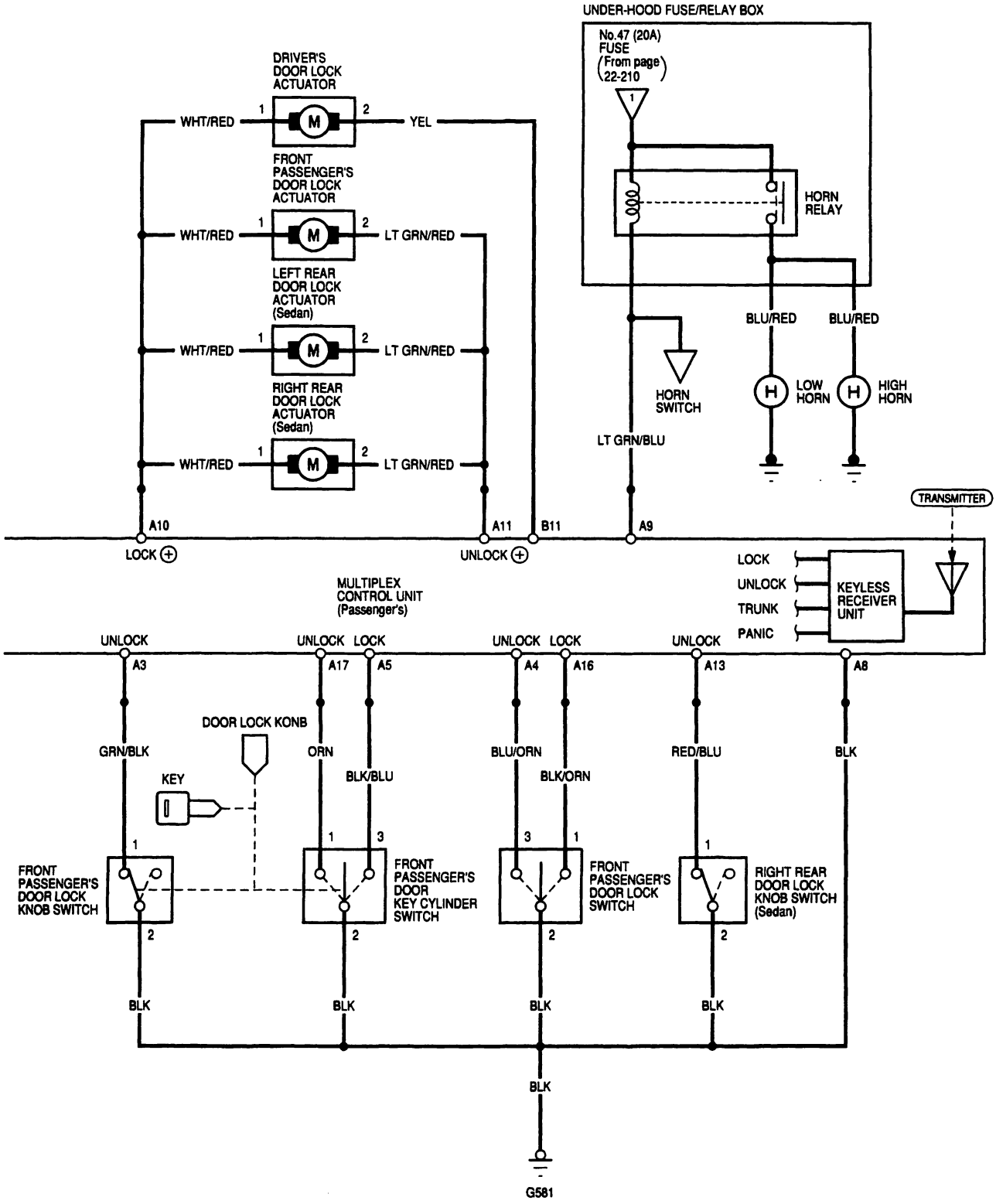
UNDER-HOOD FUSE/RELAY BOX
No.47 (20A) FUSE (From page 22-210)
HORN RELAY
DRIVER'S DOOR LOCK ACTUATOR
FRONT PASSENGER'S DOOR LOCK ACTUATOR
LEFT REAR DOOR LOCK ACTUATOR (Sedan)
RIGHT REAR DOOR LOCK ACTUATOR (Sedan)
WHT/RED
YEL
LT GRN/RED
BLU/RED
HORN SWITCH
LT GRN/BLU
LOW HORN
HIGH HORN
TRANSMITTER
A10
A11
B11
A9
LOCK
UNLOCK
MULTIPLEX CONTROL UNIT (Passenger's)
KEYLESS RECEIVER UNIT
TRUNK
PANIC
A3
A17
A5
A4
A16
A13
A8
DOOR LOCK KONB
KEY
GRN/BLK
ORN
BLK/BLU
BLU/ORN
BLK/ORN
RED/BLU
BLK
FRONT PASSENGER'S DOOR LOCK KNOB SWITCH
FRONT PASSENGER'S DOOR KEY CYLINDER SWITCH
FRONT PASSENGER'S DOOR LOCK SWITCH
RIGHT REAR DOOR LOCK KNOB SWITCH (Sedan)
G581

(cont'd)

BACK

Circuit Diagram (cont'd)

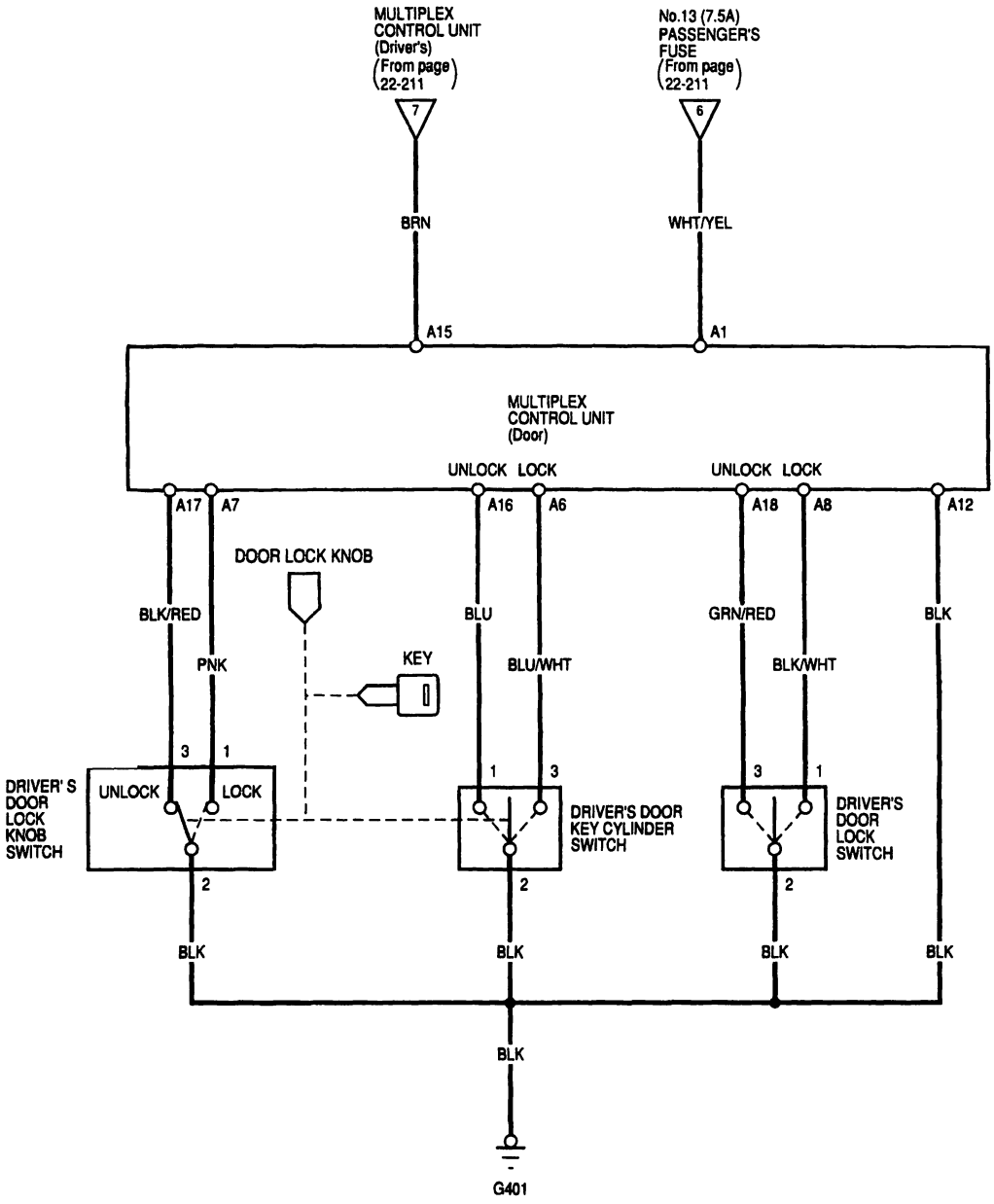

BACK

System Description

Security Alarm System

The security alarm system is armed automatically after the doors, hood, and trunk lid are closed and locked. For the system to arm, the ignition switch must be off, the key must be removed, and the security control unit must receive signals that the doors, hood, and trunk lid are closed and locked. The alarm can be disarmed at any time by unlocking either door with the key or the remote transmitter.

When everything is closed and locked, the only control unit inputs that are grounded, and have 0 volts, are the driver's door lock knob switch, and the audio unit. In other words, all of the other switches are open, including the key cylinder switches, and they have about 10 volts. Ten seconds after the doors are locked with the key or the lock knob (with the door open), or immediately after the doors are locked with the LOCK button on the remote transmitter, the security system arms, and the security indicator on the door panel flashes. If the security indicator does not flash, the system is not arming. Check the doors, hood, and trunk to see if they are closed. A beep to confirm the security alarm system is armed will sound if the LOCK button is pressed a second time within 5 seconds.

If one of the switches is misadjusted or there is a short in the system, the system will not arm. As long as the control unit continues to receive a ground signal, it senses that the vehicle is not closed and locked, and the system will not arm. Conversely, a switch that is slightly misadjusted can sound an alarm for no apparent reason. In this case, a significant change in outside temperature, the vibration of a passing truck, or someone bumping into the vehicle could cause the alarm to sound.

If anything is opened or improperly unlocked after the system is armed, the control unit receives a ground signal from that switch, and the 10 volts reference drops to 0 volts. If the radio is disconnected, the input loses its ground, and the input voltage goes to 10 volts. The system sounds the alarm when any of these things occur:

- A door is forced open
- A door is unlocked without using the key or the remote transmitter
- The hood is opened
- The trunk is opened without using the transmitter
- The audio unit is disconnected
- The panic mode is activated

When the system sounds the alarm, the security horn sounds and the exterior lights flash for 2 minutes. The alarm can be stopped at any time by unlocking either door with the key or by pushing any button on the remote transmitter.

Panic Mode

The panic mode allows the security system to sound the alarm with the remote transmitter in order to attract attention. When the PANIC button is pressed and held for 2 seconds, the alarm will sound and the exterior lights will flash for about 30 seconds.

The panic mode can be canceled at anytime by pressing any button on the remote transmitter or by turning the ignition switch ON (II). The panic mode will not function if the ignition switch is ON (II).

(cont'd)

System Description (cont'd)

Keyless Entry System

The security alarm system is integrated with the keyless entry system. The keyless entry system allows you to lock and unlock the vehicle with the remote transmitter. When you push the LOCK button, all doors lock. When you push the UNLOCK button once, only the driver's door unlocks. The remaining doors unlock when you push the button a second time.

The ceiling light, if its switch is in the center position, will come on when you press the UNLOCK button. If you do not open a door, the light will go off in about 30 seconds, the doors will automatically relock, and the security system will rearm. If you relock the doors with the remote transmitter within 30 seconds, the light will go off immediately.

You cannot lock the doors with the remote transmitter if a door is not fully closed, or if the key is in the ignition switch. If the doors will lock and unlock but the Security System will not arm make sure the trunk and hood are closed. If the doors will unlock, but not lock, the system may think a door is open. Check the door switches, the dome light operation, and the safety indicator.

To open the trunk, push the Trunk Release button and hold it for about 2 seconds. The trunk will not open if the key is in the ignition switch. If the doors lock and unlock normally, but the trunk opener is inoperative or erratic, the problem could be a wrong remote or passenger multiplex control unit. 1998-99 remotes and control units are different than 2000-02 control units. Multiplex control units are also different for trim level and body style (coupe and sedan).

If a third keyless/security transmitter has been added, the trunk release button must be pushed twice on that transmitter to open the trunk.

The system will signal you when the doors lock and unlock by flashing the parking lights, side marker lights, and taillights: once when they lock, and twice when they unlock. Push the LOCK button twice within 5 seconds and the horn will confirm the car is locked with one short beep. If the lights do not flash, make sure the doors the hood and the trunk are closed and locked. Check that the security indicator blinks. If the Security Alarm System does not arm, see multiplex mode and input tests.

BACK

Control Unit Input Test

1. Before testing the keyless entry/security control functions, troubleshoot the multiplex control system with mode 1 and mode 2 tests (see page 22-137).

Multiplex Control Unit, Driver's:

2. Remove the driver's multiplex control unit from the driver's under-dash fuse/relay box.

3. Inspect the connector and socket terminals to be sure they are all making good contact.

   - If the terminals are bent, loose or corroded, repair them as necessary, and recheck the system.
   - If the terminals look OK, go to step 4.

FUSE/RELAY BOX SOCKET

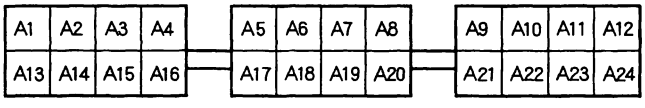

MULTIPLEX CONTROL UNIT, DRIVER'S CONNECTOR B

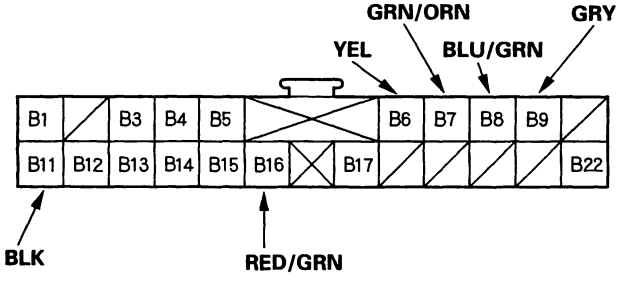

Wire side of female terminals

DRIVER'S UNDER-DASH FUSE/RELAY BOX CONNECTOR A

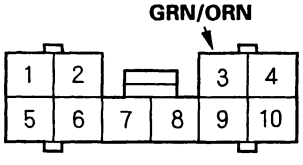

Wire side of female terminals

DRIVER'S UNDER-DASH FUSE/RELAY BOX CONNECTOR O

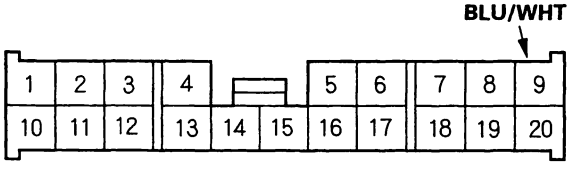

Wire side of female terminals

(cont'd)

Control Unit Input Test (cont'd)

4. With the driver's multiplex control unit still disconnected, make these input tests at the connector and driver's under-dash fuse/relay box sockets.

   - If any test indicates a problem, find and correct the cause, then recheck the system.
   - If all the input tests prove OK go to step 5.

Cavity	Wire	Test condition	Test: Desired result	Possible cause if result is not obtained
B11	BLK	Under all conditions	Check for continuity to ground: There should be continuity.	• Poor ground (G503) • An open in the wire
A12	Fuse/relay box socket	Under all conditions	Check for voltage to ground: There should be battery voltage.	• Blown No. 13 (7.5A) fuse in the passenger's under-dash fuse/relay box • An open in the wire
A24		Ignition switch ON (II)	Check for voltage to ground: There should be battery voltage.	• Blown No. 9 (7.5A) fuse in the driver's under-dash fuse/relay box • An open in the wire
A10		Headlight switch ON (≣D) and jump A10 to battery voltage	The headlights should come on.	• Poor ground (G401) • Faulty headlight relay 1 or 2 • An open in the wire • Faulty combination light switch
A5		Under all conditions	Attach to ground: The security indicator should come on.	• Blown No. 13 (7.5A) fuse in the passenger's under-dash fuse/relay box • Faulty security indicator • An open in the wire
A22		Combination light switch ON	Check for continuity to ground: There should be continuity.	• Poor ground (G401) • Faulty combination light switch • An open in the wire
		Combination light switch OFF	Check for continuity to ground: There should be no continuity.	
B16	RED/GRN	Combination light switch OFF	Check for continuity to ground: There should be no continuity.	• Faulty taillight relay • Faulty combination light switch • An open in the wire
		Combination light switch ON and jump B16 to battery voltage	The taillights should come on.	

BACK

5. Reconnect the driver's multiplex control unit to the fuse/relay box, and perform the following input tests at the appropriate connectors on the back of the fuse/relay box.

   - If any test indicates a problem, find and correct the cause, then recheck the system.
   - If all the input tests prove OK, go to step 6.

Cavity	Wire	Test condition	Test: Desired result	Possible cause if result is not obtained
O9	BLU/WHT	Ignition key is in the ignition switch	Check for voltage to ground: There should be 1 V or less.	• Poor ground (G401) • Faulty Ignition key switch • An open in the wire
		Ignition key is out of the ignition switch	Check for voltage to ground: There should be 5 V or more.	
A3	GRN/ORN	Driver's door open	Check for voltage to ground: There should be 1 V or less.	• Faulty driver's door switch • An open in the wire
		Driver's door closed	Check for voltage to ground: There should be 5 V or more.	
B6	YEL	Hood open	Check for voltage to ground: There should be 1 V or less.	• Faulty hood switch • Poor ground (G201) • An open in the wire
		Hood closed	Check for voltage to ground: There should be 5 V or more.	
B7	GRN/ORN	Trunk key cylinder switch in unlock	Check for voltage to ground: There should be 1 V or less.	• Faulty trunk key cylinder switch • Poor ground (G601) • An open in the wire
		Trunk key cylinder switch in neutral	Check for voltage to ground: There should be 5 V or more.	
B8	BLU/GRN	Trunk lid open	Check for voltage to ground: There should be 1 V or less.	• Faulty trunk latch switch • Poor ground (G601) • An open in the wire
		Trunk lid closed	Check for voltage to ground: There should be 5 V or more.	
B9	GRY	Left rear door lock knob unlocked	Check for voltage to ground: There should be 1 V or less.	• Faulty left rear door lock actuator • Poor ground (G551) • An open in the wire
		Left rear door lock knob locked	Check for voltage to ground: There should be 5 V or more.	

(cont'd)

Control Unit Input Test (cont'd)

Multiplex Control Unit, Passenger's:

6. Remove the passenger's multiplex control unit from the passenger's under-dash fuse/relay box, and disconnect its connector.

7. Inspect the connector and socket terminals to be sure they are all making good contact.

   - If the terminals are bent, loose or corroded, repair them as necessary, and recheck the system.
   - If the terminals look OK, go to step 8.

FUSE/RELAY BOX SOCKET

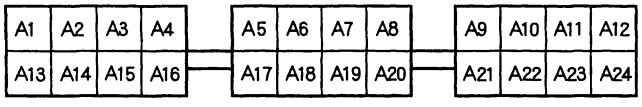

MULTIPLEX CONTROL UNIT, PASSENGER'S CONNECTOR B

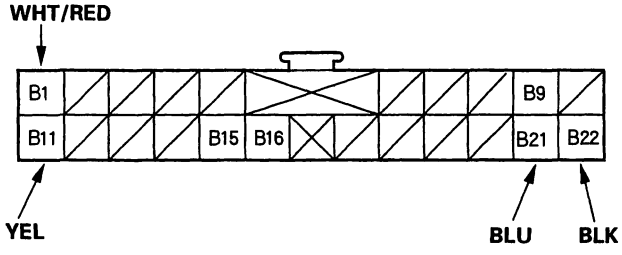

Wire side of female terminals

PASSENGER'S UNDER-DASH FUSE/RELAY BOX CONNECTOR A

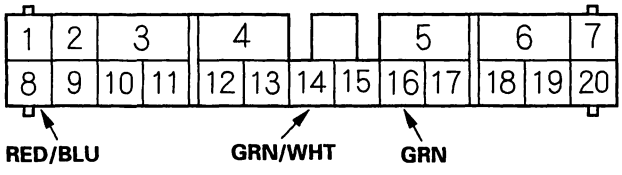

Wire side of female terminals

PASSENGER'S UNDER-DASH FUSE/RELAY BOX CONNECTOR F

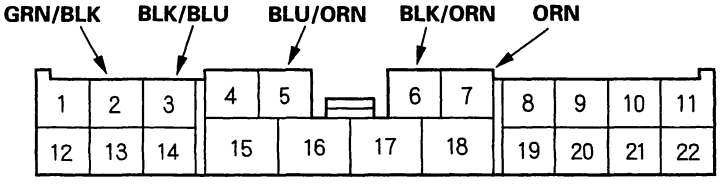

Wire side of female terminals

BACK

8. With the passenger's multiplex control unit still disconnected, make these input tests at the connectors and the passenger's under-dash fuse/relay box sockets.

   - If any test indicates a problem, find and correct the cause, then recheck the system.
   - If all the input tests prove OK, go to step 9.

Cavity	Wire	Test condition	Test: Desired result	Possible cause if result is not obtained
A8	Fuse/relay box socket	Under all conditions	Check for continuity to ground: There should be continuity.	• Poor ground (G581) • An open in the wire
A9		Under all conditions	Attach to ground: Horn should sound.	• Blown No. 47 (20A) fuse in the under-hood fuse/relay box • Faulty horn relay • Faulty horn • An open in the wire
A20		Under all conditions	Attach to ground: Headlights should come on.	• Faulty headlight relay • An open in the wire
A21		Ceiling light switch in the middle position	Attach to ground: Ceiling light should come on.	• Blown No. 11 (7.5A) fuse in the passenger's under-dash fuse/relay box • Faulty ceiling light • An open in the wire
A22		Ignition switch ON (II)	Check for voltage to ground: There should be battery voltage.	• Blown No. 9 (7.5A) fuse in the driver's under-dash fuse/relay box • An open in the wire
A23		Under all conditions	Check for voltage to ground: There should be battery voltage.	• Blown No. 6 (20A) fuse in the passenger's under-dash fuse/relay box • An open in the wire
A24		Under all conditions	Check for voltage to ground: There should be battery voltage.	• Blown No. 13 (7.5A) fuse in the passenger's under-dash fuse/relay box • An open in the wire
B22	BLK	Under all conditions	Check for continuity to ground: There should be continuity.	• Poor ground (G504) • An open in the wire
A10	Fuse/relay box socket	Jump A10 to battery voltage, then jump B11 to body ground.	Check driver's door lock operation: The door should lock.	• Faulty driver's under-dash fuse/relay box • An open in the wire • Faulty driver's actuator
B11	YEL			
A11	Fuse/relay box socket	Jump A10 to battery voltage and A11 to body ground.	All passenger doors should lock.	• Faulty driver's under-dash fuse/relay box • An open in the wire • Faulty passenger's actuator
B1	WHT/RED	Connect the B1 terminal to the A24 terminal momentarily.	Check trunk opener operation: Trunk lid should open.	• Poor ground (G601) • Faulty trunk opener solenoid • An open in the wire

(cont'd)

Control Unit Input Test (cont'd)

9. Reconnect the passenger's multiplex control unit to the passenger's under-dash fuse/relay box, and perform the following input tests at the appropriate connectors on the passenger's under-dash fuse/relay box (see connector views page 22-218). For passenger's under-dash fuse/relay box connector socket location (see page 22-46).

   NOTE: All passenger lock knobs must be in the locked position, then unlocked and locked one at a time, or the test results will not be correct.

   - If any test indicates a problem, find and correct the cause, then recheck the system.
   - If all the input tests prove OK, go to step 10.

Cavity	Wire	Test condition	Test: Desired result	Possible cause if result is not obtained
F2	GRN/BLK	Front passenger's door lock knob unlocked	Check for voltage to ground: There shoudl be 1 V or less.	• Poor ground (G581) • Faulty front passenger's door lock actuator • An open in the wire
		Front passenger's door lock knob locked	Check for voltage to ground: There should be 5 V or more.	
F5	BLU/ORN	Front passenger's door lock switch in UNLOCK	Check for voltage to ground: There should be less than 1 V.	• Poor ground (G581) • Faulty front passenger's door lock switch • An open in the wire
		Front passenger's door lock switch in the neutral position	Check for voltage to ground: There should be 5 V or more.	
F6	BLK/ORN	Front passenger's door lock switch in LOCK	Check for voltage to ground: There should be 1 V or less.	
		Front passenger's door lock switch in the neutral position	Check for voltage to ground: There should be 5 V or more.	
F3	BLK/BLU	Front passenger's door lock key cylinder locked	Check for voltage to ground: There should be 1 V or less.	• Poor ground (G581) • Faulty front passenger's door lock key cylinder switch • An open in the wire
		Front passenger's door lock key cylinder the neutral position	Check for voltage to ground: There should be 5 V or more.	
F7	ORN	Front passenger's door lock key cylinder unlocked	Check for voltage to ground: There should be 1 V or less.	
		Front passenger's door lock key cylinder the neutral position	Check for voltage to ground: There should be 5 V or more.	
A14	GRN/WHT	Right rear door opened	Check for voltage to ground: There should be 1 V or less.	• Faulty right rear door switch • An open in the wire
		Right rear door closed	Check for voltage to ground: There should be 5 V or more.	
A16	GRN	Front passenger's door opened	Check for voltage to ground: There should be 1 V or less.	• Faulty front passenger's door switch • An open in the wire
		Front passenger's door closed	Check for voltage to ground: There should be 5 V or more.	
A8	RED/BLU	Right rear door lock knob unlocked	Check for voltage to ground: There shoudl be 1 V or less.	• Poor ground (G581) • Faulty right rear door lock switch • An open in the wire
		Right rear door lock knob locked	Check for voltage to ground: There should be 5 V or more.	
B21	BLU	Under all conditions	Check for voltage to ground: There shoudl be 1 V or less.	• An open in the wire • Poor ground (G501) • Faulty connections at the audio unit • Faulty audio unit

BACK

Multiplex Control Unit, Door:

10. Remove the driver's multiplex control door unit, and disconnect its connector.

11. Inspect all the connector and socket terminals to be sure they are making good contact.

    - If the terminals are bent, loose or corroded, repair them as necessary, and recheck the system.
    - If the terminals look OK, go to step 12.

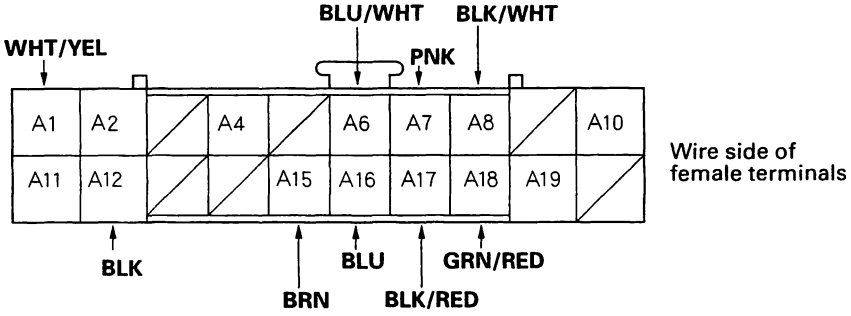

12. With the door unit still disconnected, make these input tests at the connector.

    - If any test indicates a problem, find and correct the cause, then recheck the system.
    - If all the input tests prove OK, go to step 13.

Cavity	Wire	Test condition	Test: Desired result	Possible cause if result is not obtained
A12	BLK	Under all conditions	Check for continuity to ground: There should be continuity.	• Poor ground (G401) • An open in the wire
A1	WHT/YEL	Under all conditions	Check for voltage to ground: There shoudl be battery volltage.	• Blown No. 13 (7.5A) fuse in the passenger's under-dash fuse/ relay box • An open in the wire

(cont'd)

Control Unit Input Test (cont'd)

13. Reconnect the connectors to the door multiplex control unit, make these input tests at the connector.

    - If any test indicates a problem, find and correct the cause, then recheck the system.
    - If all the input tests prove OK, go to step 14.

Cavity	Wire	Test condition	Test: Desired result	Possible cause if result is not obtained
A6	BLU/WHT	Driver's door key cylinder switch in LOCK	Check for voltage to ground: There should be less than 1 V.	• Faulty driver's door key cylinder switch • Poor ground (G401) • An open in the wire
		Driver's door key cylinder switch in neutral	Check for voltage to ground: There should be 5 V or more.	
A16	BLU	Driver's door key cylinder switch in UNLOCK	Check for voltage to ground: There should be less than 1 V.	
		Driver's door key cylinder switch in neutral	Check for voltage to ground: There should be 5 V or more.	
A7	PNK	Driver's door lock knob locked	Check for voltage to ground: There should be less than 1 V.	• Faulty driver's door lock actuator • Poor ground (G401) • An open in the wire
		Driver's door lock knob unlocked	Check for voltage to ground: There should be 5 V or more.	
A17	BLK/RED	Driver's door lock knob unlocked	Check for voltage to ground: There should be less than 1 V.	
		Driver's door lock knob locked	Check for voltage to ground: There should be 5 V or more.	
A8	BLK/WHT	Driver's door lock switch in LOCK	Check for voltage to ground: There should be less than 1 V.	• Faulty driver's door lock switch • Poor ground (G401) • An open in the wire
		Driver's door lock switch in neutral	Check for voltage to ground: There should be 5 V or more.	
A18	GRN/RED	Driver's door lock switch in LOCK	Check for voltage to ground: There should be less than 1 V.	
		Driver's door lock switch in neutral	Check for voltage to ground: There should be 5 V or more.	

14. If all the input tests prove OK, one of the control units must be faulty. Substitute a known-good control unit for the one that is most likely at fault, then recheck the system. If the system works properly, the original control unit is faulty; replace it. If there is still a malfunction, substitute a known-good control unit for the next most likely unit to be at fault, and recheck. If the system works properly, the original unit is faulty; replace it.

BACK

Front Door Lock Actuator Test

1. Remove the front door panel (see page 20-8).
2. Disconnect the 2P connector from the actuator.

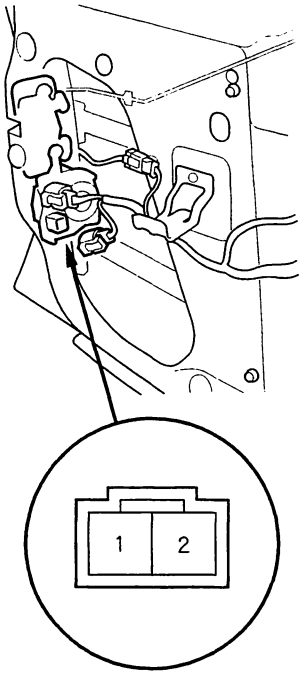

3. Check actuator operation by connecting power and ground according to the table. To prevent damage to the actuator, apply battery voltage only momentarily.

Terminal / Position	1	2
LOCK	⊕	⊖
UNLOCK	⊖	⊕

4. If the actuator does not operate as specified, replace it.

Rear Door Lock Actuator Test

1. Remove the rear door panel (see page 20-8).
2. Disconnect the 2P connector from the actuator.

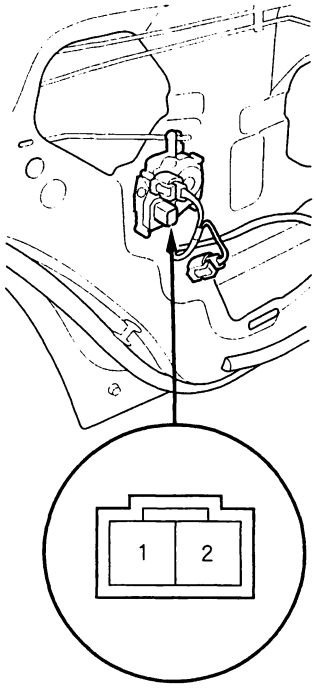

3. Check actuator operation by connecting power and ground according to the table. To prevent damage to the actuator, apply battery voltage only momentarily.

Terminal / Position	1	2
LOCK	⊕	⊖
UNLOCK	⊖	⊕

4. If the actuator does not operate as specified, replace it.

Driver's Door Lock Knob Switch Test

1. Remove the driver's door panel (see page 20-8).
2. Disconnect the 3P connector from the actuator.

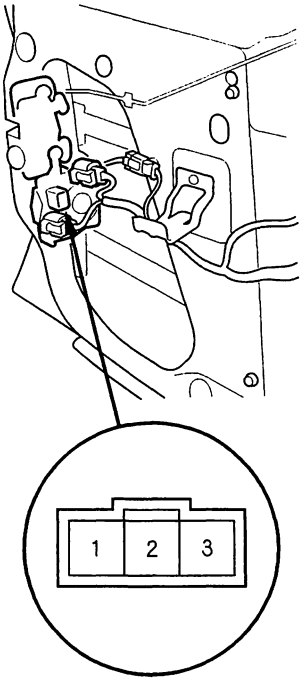

3. Check for continuity between the terminals in each knob switch position according to the table.

Terminal / Position	1	2	3
LOCK	○	○	
UNLOCK		○	○

4. If the continuity is not as specified, replace the lock knob switch.

Passenger's Door Lock Knob Switch Test

1. Remove the passenger's door panel (see page 20-8).
2. Disconnect the 3P connector from the actuator.

- **FRONT PASSENGER'S:**
- **RIGHT REAR:**

LEFT REAR:

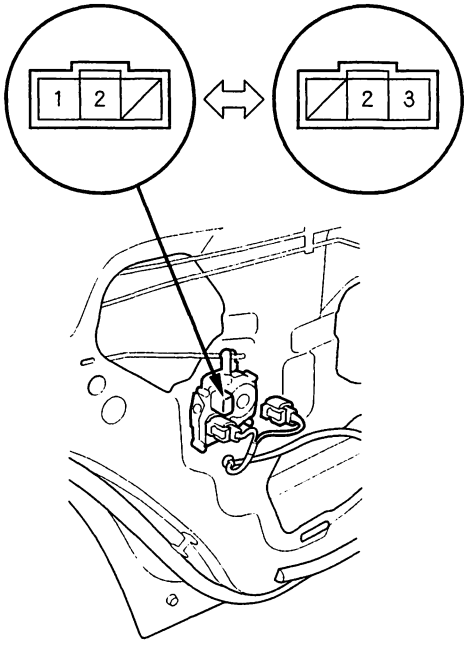

3. Check for continuity between the terminals in each knob switch position according to the table.

- **FRONT PASSENGER'S:**
- **RIGHT REAR:**

Terminal / Position	1	2
LOCK		
UNLOCK	○	○

LEFT REAR:

Terminal / Position	2	3
LOCK		
UNLOCK	○	○

4. If the continuity is not as specified, replace the lock knob switch.

BACK

Door Key Cylinder Switch Test

1. Remove the front door panel (see page 20-8).
2. Disconnect the 3P connector from the key cylinder switch.

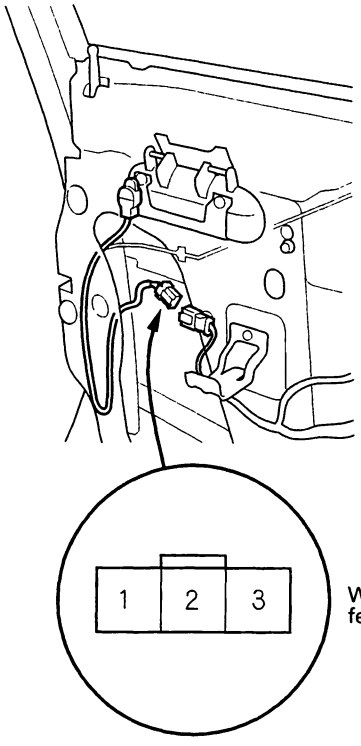

Wire side of female terminals

3. Check for continuity between the terminal in each switch position according to the table.

Terminal / Position	1	2	3
LOCK		○	○
OFF			
UNLOCK	○	○	

4. If the continuity is not as specified, replace the switch.

Door Lock Switch Test

1. Remove the front door inner handle (see page 20-8).
2. Remove the two screws, then remove the door lock switch .

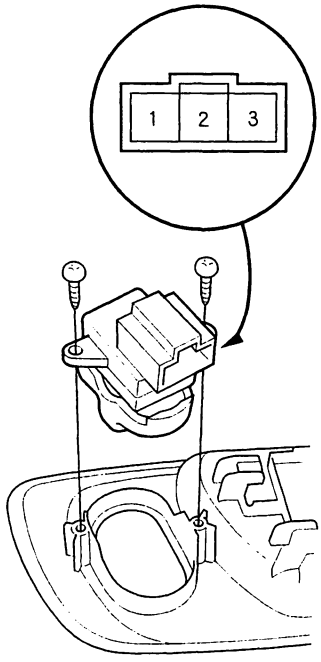

3. Check for continuity between the terminals in each switch position according to the table.

Terminal / Position	1	2	3
LOCK	○	○	
OFF			
UNLOCK		○	○

4. If the continuity is not as specified, replace the switch.

Trunk Lid Opener Motor/Latch Switch Test

1. Open the trunk lid.
2. Disconnect the 6P connector from the trunk latch.

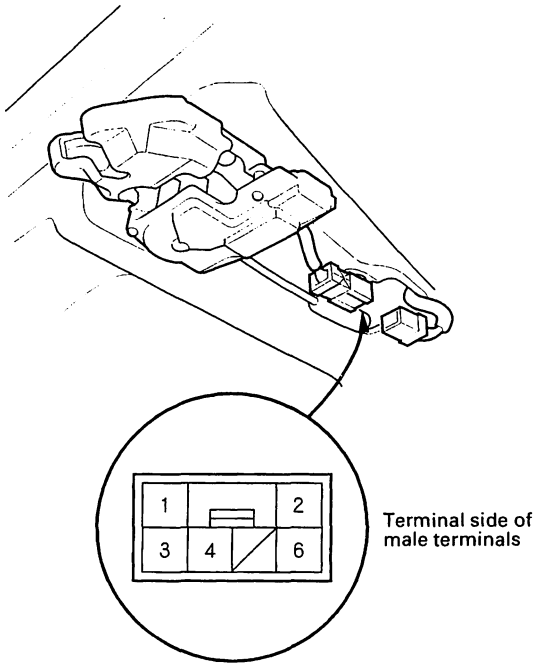

3. Check actuator operation by connecting power and ground according to the table. To prevent damage to the actuator, apply battery voltage only momentarily.

Terminal / Position	3	4
UNLOCK	⊕	⊖

4. Check for continuity between the terminals in each trunk lid position according to the table.

Terminal / Position	2	6
Open	○	○
Closed		

5. If the motor does not operate as specified or the continuity is not as specified, replace the opener motor/latch switch.

Trunk Key Cylinder Switch Test

1. Open the trunk lid.
2. Disconnect the 2P connector from the trunk key cylinder switch.

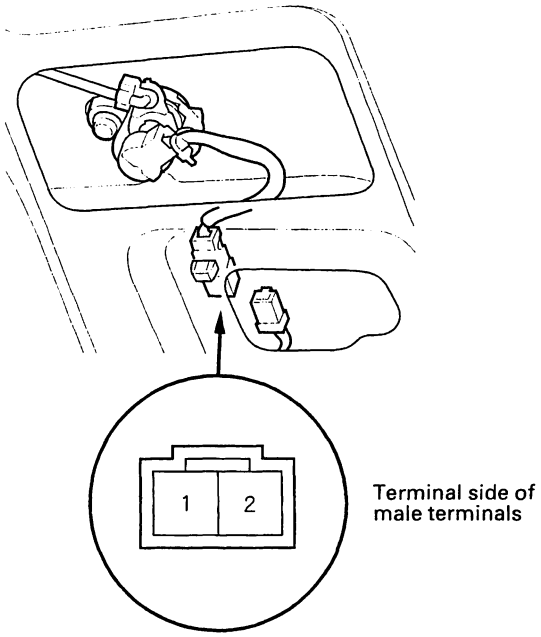

3. Check for continuity between the terminals in each switch position according to the table.

Terminal / Position	1	2
LOCK		
UNLOCK	○	○

4. If the continuity is not as specified, replace the trunk key cylinder switch.

BACK

Security Indicator Test

1. Remove the driver's door panel (see page 20-8).
2. Disconnect the 2P connector from the security indicator.

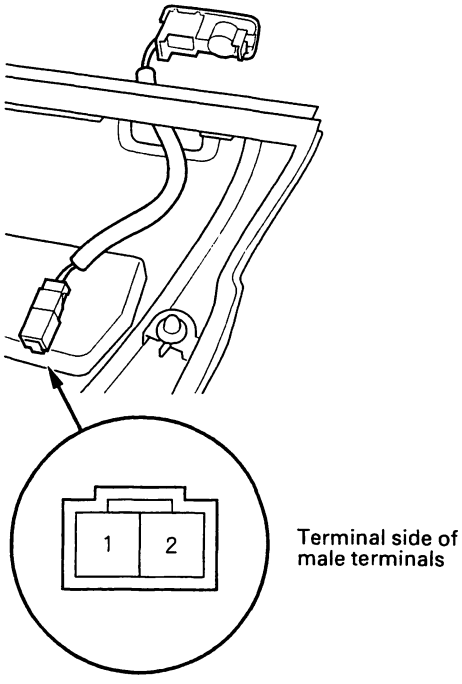

3. The LED should come on when power is connected the No. 2 terminal and ground is connected to the No. 1 terminal.
4. If the LED does not come on, replace it.

Hood Switch Test

1. Open the hood.
2. Disconnect the 2P connector from the hood switch.

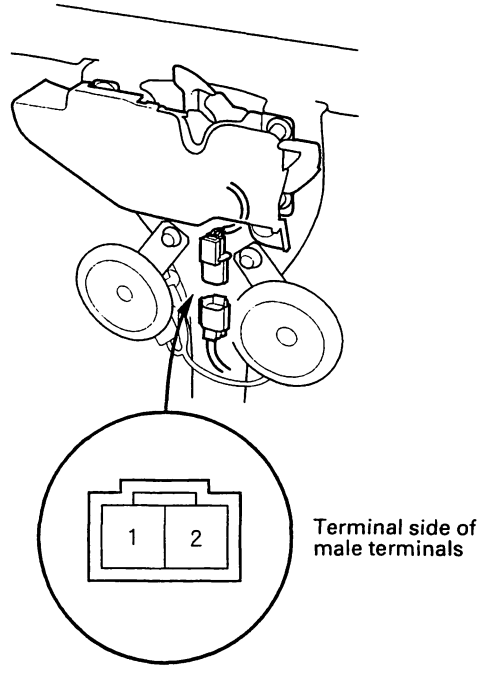

3. Check for continuity between the terminals in each switch position according to the table.

Terminal / Position	1	2
Hood open (Lever released)	○	○
Hood closed (Lever pushed down)		

4. If the continuity is not as specified, replace the hood switch.

Transmitter Test

NOTE:
- If the doors unlock or lock with the transmitter, but the LED on the transmitter does not come on, the LED is faulty; replace the transmitter.
- If any door is open, you cannot lock or unlock the door with the transmitter.
- If you unlocked the doors with the transmitter, but do not open any of the doors within 30 seconds, the doors relock automatically.
- The doors do not lock or unlock with the transmitter if the ignition key is inserted in the ignition switch.

1. Press the lock or unlock button 5 or 6 times to reset the transmitter.
   - If the locks work, the transmitter is OK.■
   - If the locks don't work, go to step 2.
2. Open the transmitter and check for water damage.
   - If you find any water damage, replace the transmitter.■
   - If there is no water damage, go to step 3.
3. Replace the transmitter battery (A) with a new one, and try to lock and unlock the doors with the transmitter by pressing the lock or unlock button 5 or 6 times.
   - If the doors lock and unlock, the transmitter is OK.■
   - If the doors don't lock and unlock, go to step 4.

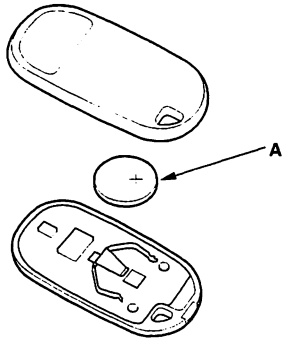

4. Reprogram the transmitter, then try to lock and unlock the doors (see page 22-227).
   - If the doors lock and unlock, the transmitter is OK.■
   - If the doors don't lock and unlock, replace the tra nsmitter.■

   NOTE: The transmitters for LX models and EX models are different and are not interchangeable.

Transmitter Programming

Storing transmitter codes:
The codes of up to three transmitters can be read into the keyless receiver unit memory. (If a fourth code is stored, the code which was input first will be erased.)

NOTE: It is important to maintain the time limits between the steps.

1. Turn the ignition switch ON (II).
2. Within 1 to 4 sec., push the transmitter lock or unlock button with the transmitter aimed at the keyless receiver unit behind the glove box.
3. Within 1 to 4 sec., turn the ignition switch OFF.
4. Within 1 to 4 sec., turn the ignition switch ON (II).
5. Within 1 to 4 sec., push the transmitter lock or unlock button with the transmitter aimed at the keyless receiver unit behind the glove box.
6. Within 1 to 4 sec., turn the ignition switch OFF.
7. Within 4 sec., turn the ignition switch ON (II).
8. Within 1 to 4 sec., push the transmitter lock or unlock button with the transmitter aimed at the keyless receiver unit behind the glove box.
9. Within 1 to 4 sec., turn the ignition switch OFF.
10. Within 4 sec., turn the ignition switch ON (II).
11. Within 1 to 4 sec., push the transmitter lock or unlock button with the transmitter aimed at the keyless receiver unit behind the glove box.
12. Confirm you can hear the sound of the door lock actuators. Within 1 to 4 sec., push the transmitter lock or unlock button again.
13. Within 15 sec., aim the remaining transmitters at the keyless receiver unit (up to two additional ones) whose codes you want to store at the receiver, and press the transmitter lock or unlock buttons.
    Confirm that you can hear the sound of the door lock actuators after each transmitter code is stored.
14. Turn the ignition switch OFF, and pull out the key.
15. Confirm proper operation of the transmitters.

BACK

Component Location Index

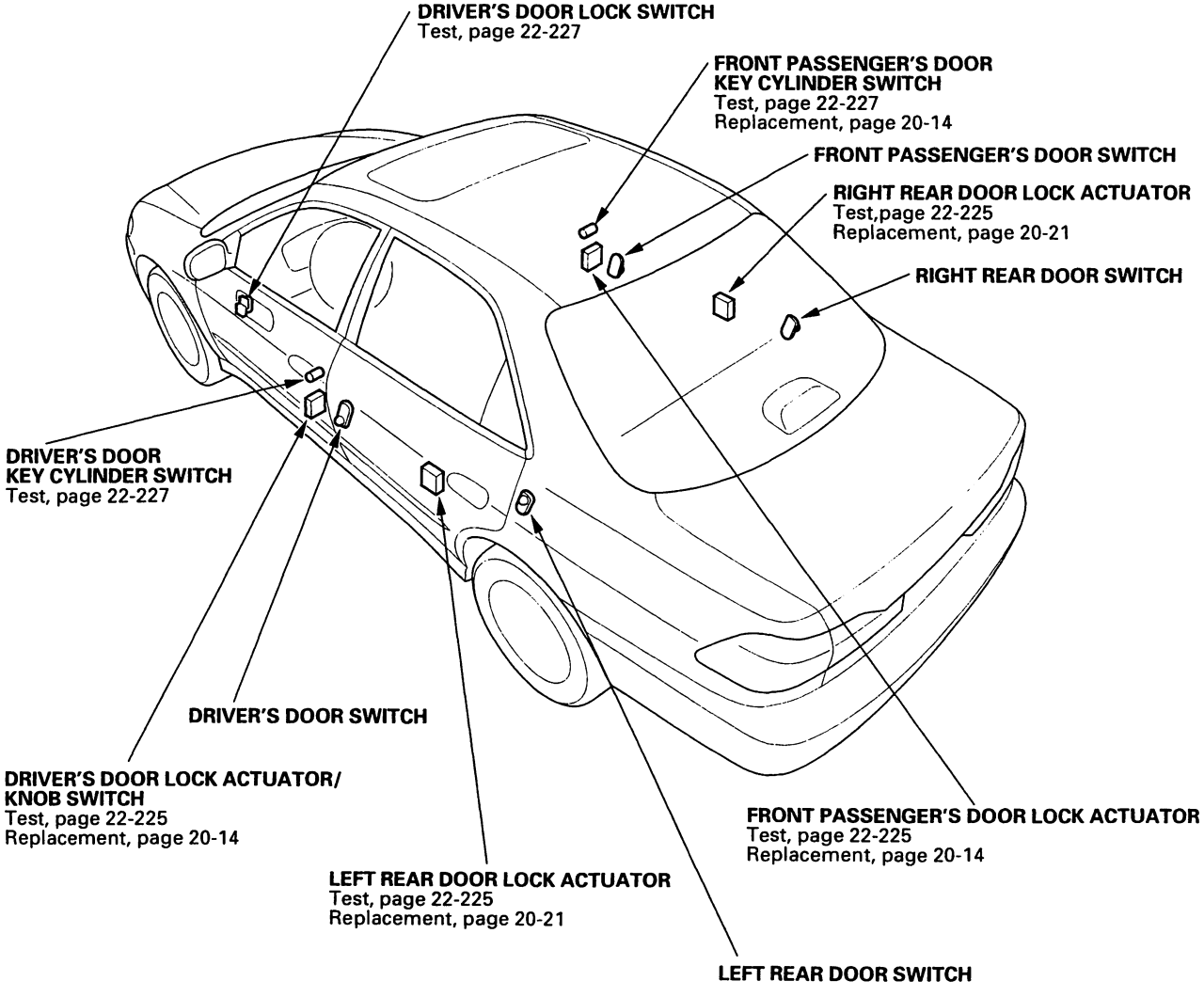

Power Door Locks

Circuit Diagram

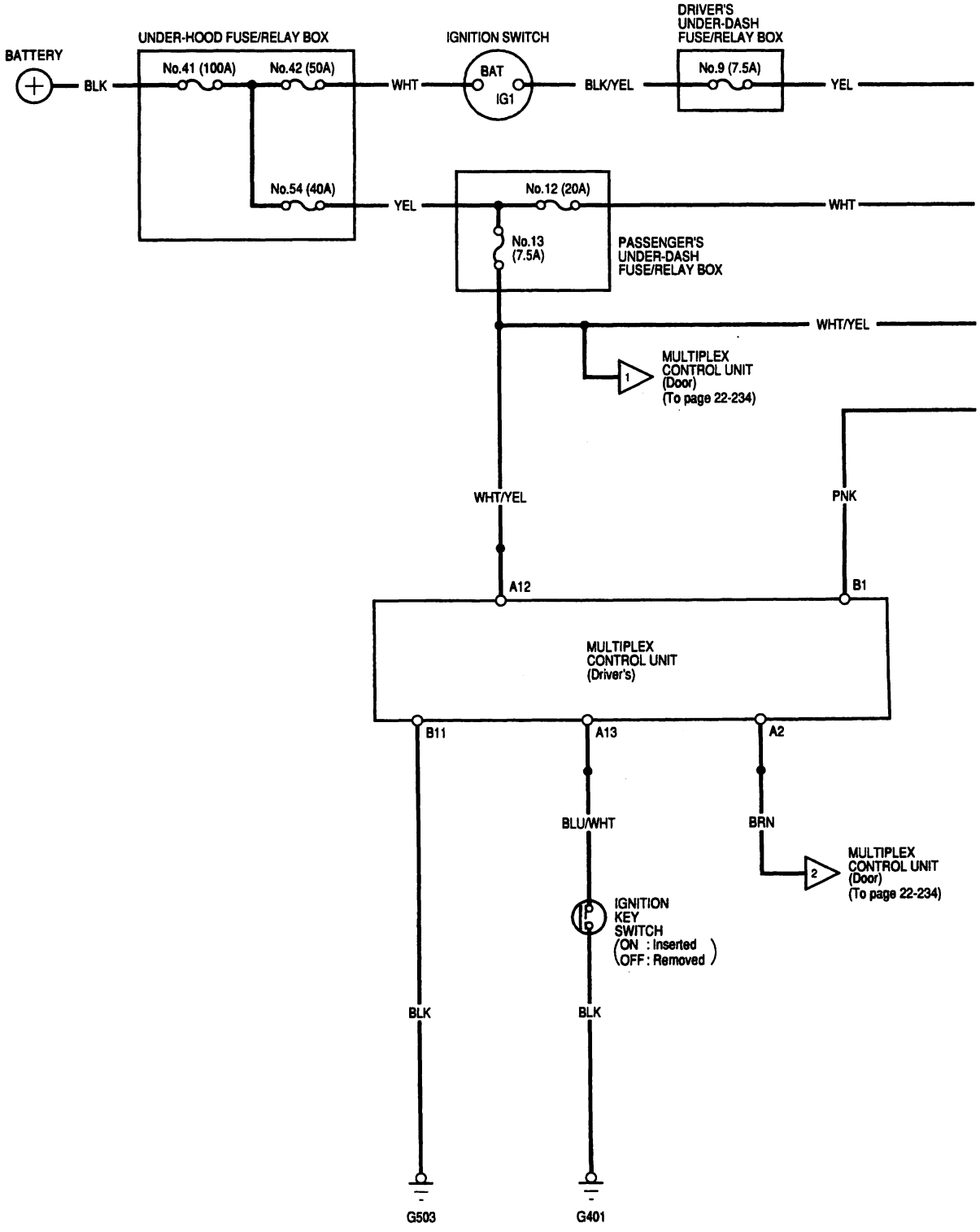

BACK

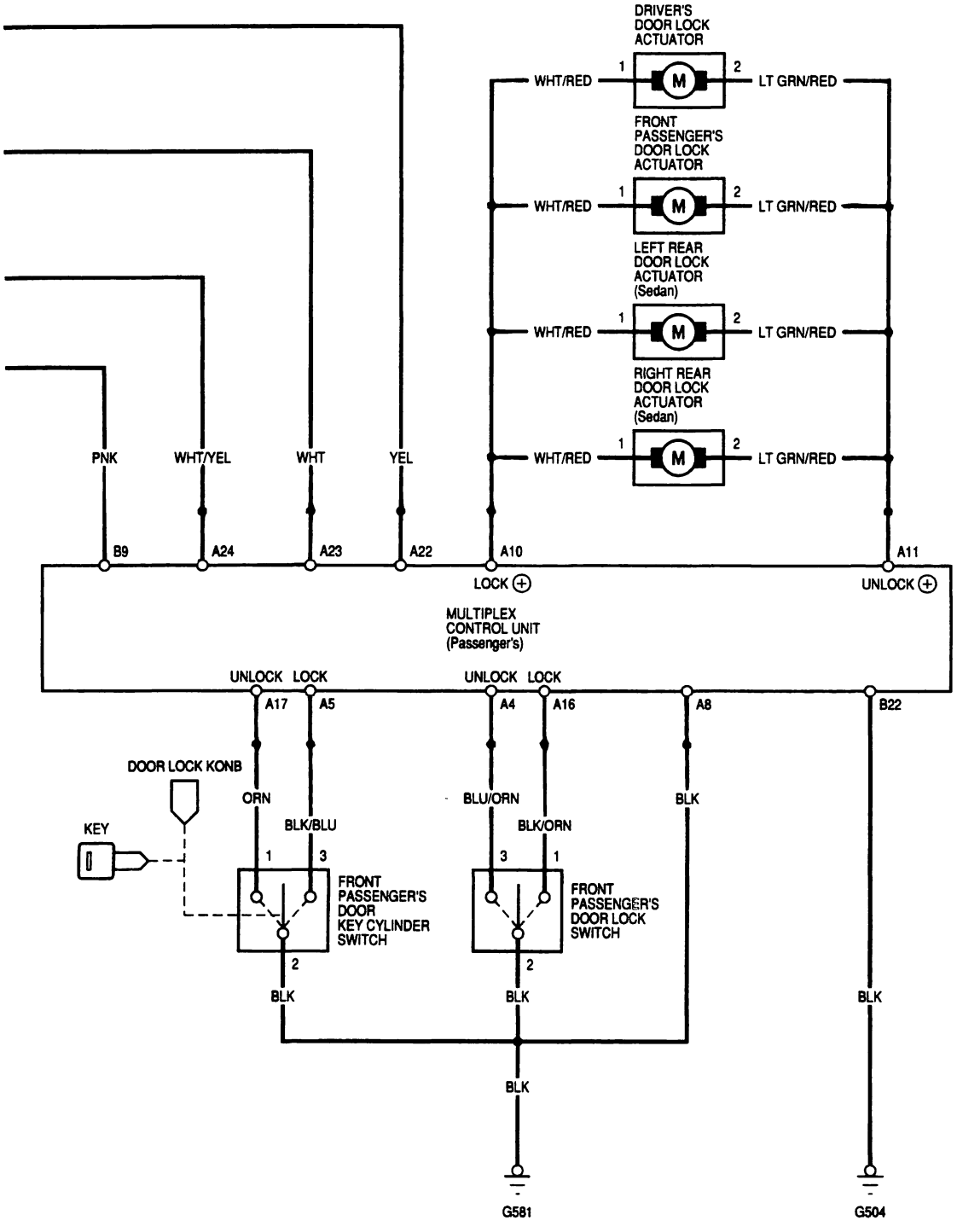
DRIVER'S DOOR LOCK ACTUATOR
WHT/RED
LT GRN/RED
FRONT PASSENGER'S DOOR LOCK ACTUATOR
WHT/RED
LT GRN/RED
LEFT REAR DOOR LOCK ACTUATOR (Sedan)
WHT/RED
LT GRN/RED
RIGHT REAR DOOR LOCK ACTUATOR (Sedan)
WHT/RED
LT GRN/RED
PNK
WHT/YEL
WHT
YEL
B9
A24
A23
A22
A10
A11
LOCK
UNLOCK
MULTIPLEX CONTROL UNIT (Passenger's)
UNLOCK LOCK
UNLOCK LOCK
A17
A5
A4
A16
A8
B22
DOOR LOCK KONB
KEY
ORN
BLK/BLU
BLU/ORN
BLK/ORN
BLK
FRONT PASSENGER'S DOOR KEY CYLINDER SWITCH
FRONT PASSENGER'S DOOR LOCK SWITCH
BLK
BLK
BLK
BLK
G581
G504

(cont'd)

BACK

Circuit Diagram (cont'd)

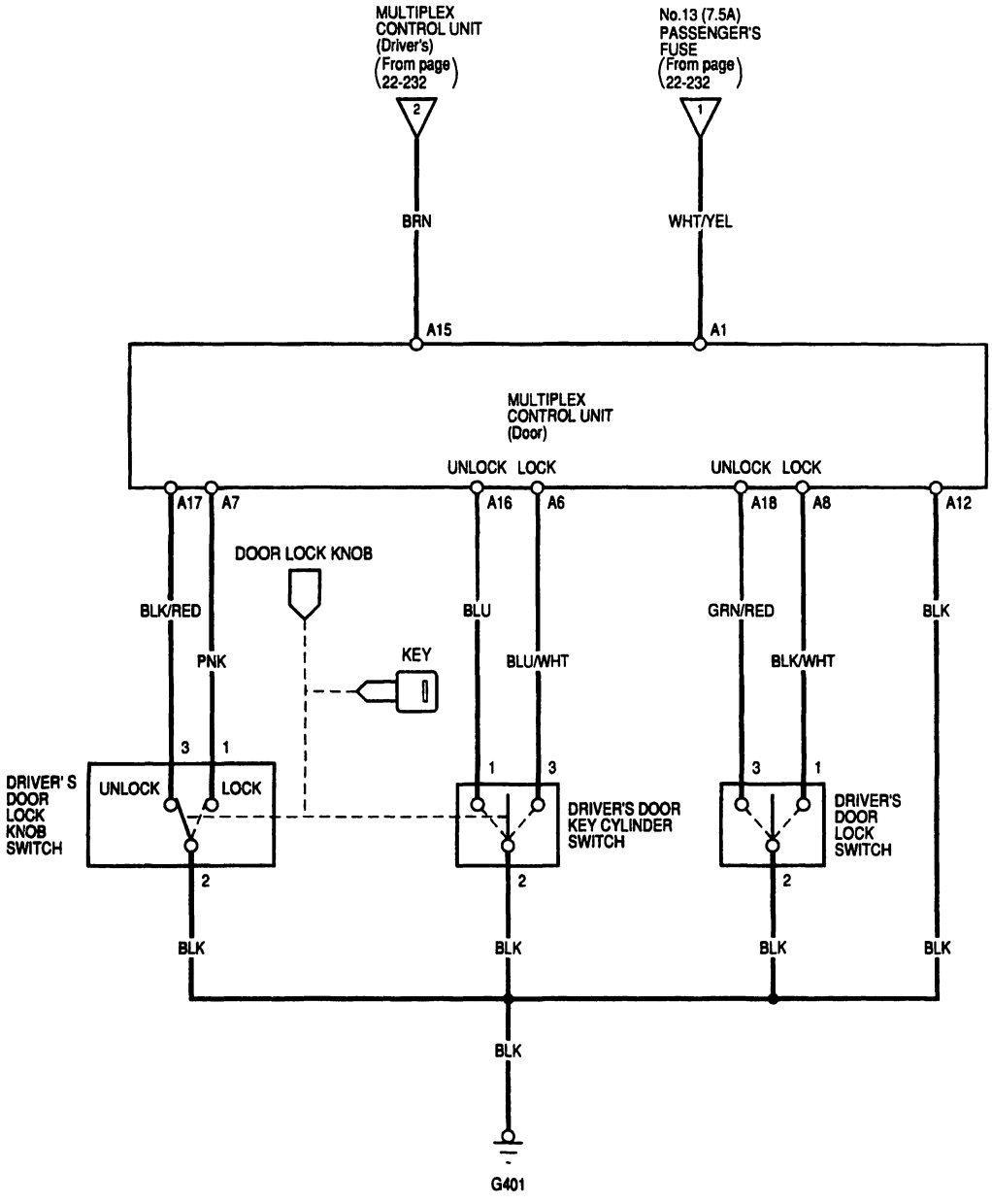

BACK

Restraints

Restraints

Special Tools 23-2

Seat Belts

Component Location Index
-Coupe 23-3
-Sedan 23-4
Front Seat Belt Replacement
-Coupe 23-5
-Sedan 23-7
Rear Seat Belt Replacement
-Coupe 23-12
-Sedan 23-15
Inspection 23-17
Child Seat Tether Anchor Installation
-'98-99 models 23-19
Child Seat Anchor Plate Removal/Installation
-'00 model Coupe 23-20
-'01-02 models Coupe 23-21
-'00-02 models Sedan 23-22

SRS (Supplemental Restraint System)

Component Location Index 23-23
Precautions and Procedures 23-28
General Troubleshooting Information 23-41
SRS Unit Identification 23-47
DTC Troubleshooting Index 23-48
Symptom Troubleshooting Index 23-61
System Description 23-62
Circuit Diagram 23-67
DTC Troubleshooting 23-74
SRS Indicator Light Circuit Troubleshooting 23-242
Component Replacement/
Inspection After Deployment 23-277
Driver's Airbag Replacement 23-278
Front Passenger's Airbag Replacement 23-280
Side Airbag Replacement 23-282
Airbag Disposal 23-283
Cable Reel Replacement 23-289
SRS Unit Replacement 23-295
Side Impact Sensor Replacement 23-297
OPDS Unit Replacement 23-300

Special Tools

Ref.No.	Tool Number	Description	Qty
①*1	07HAZ-SG00500	Deployment Tool	1
②	07PAZ-0010100	SCS Service Connector	1
③	07SAZ-TB4011A	SRS Inflator Simulator	1
④	07TAZ-SZ5011A	SRS Simulator Lead C	1
⑤*2	07TAZ-001020A	Backprobe Adapter, 17 mm	2
⑥	07XAZ-S1A0100	SRS Test Box 4P	1
⑦	07XAZ-S1A0200	SRS Simulator Lead E	1
⑧	07XAZ-SZ30100	SRS Simulator Lead F	1
⑨	07YAZ-S3AA100	SRS Simulator Lead H	1

*1: Included in SRS Tool Set 07MAZ-SM5000B
*2: Use with the stacking patch cords from T/N 07SAZ-001000A, Backprobe Set.

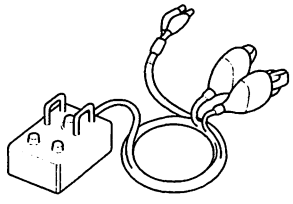
①

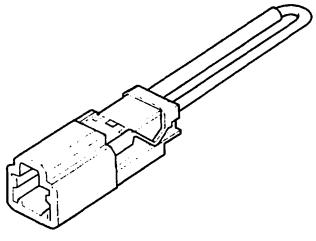
②

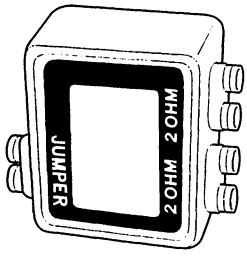

③

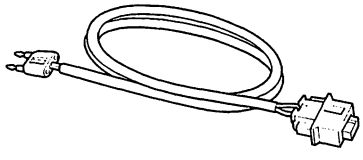
④

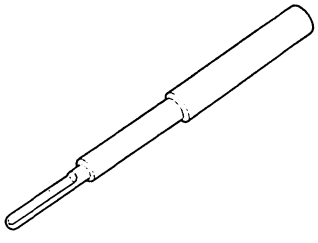
⑤

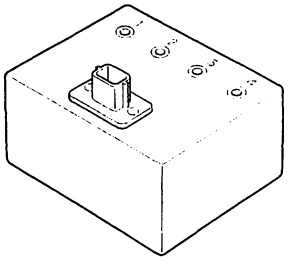
⑥

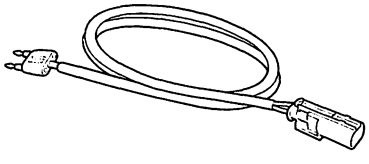
⑦

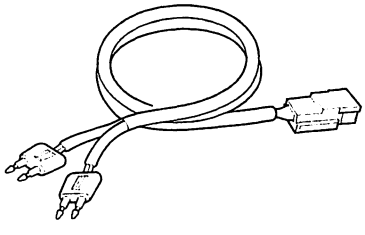
⑧

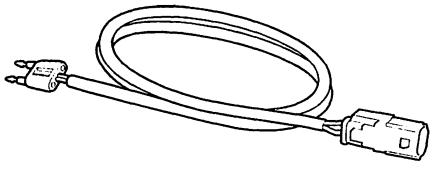
⑨

BACK

Component Location Index - Coupe

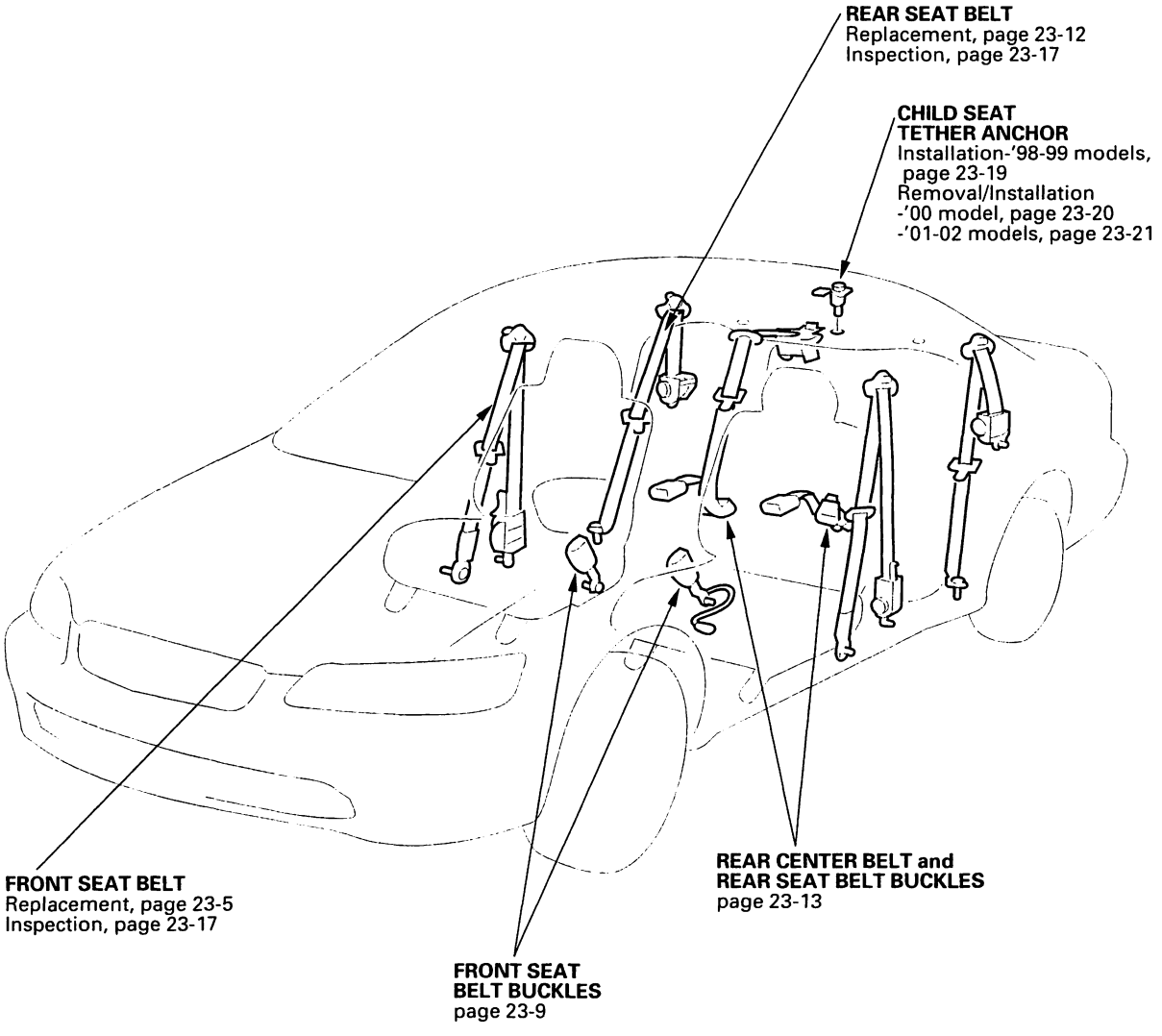

Component Location Index - Sedan

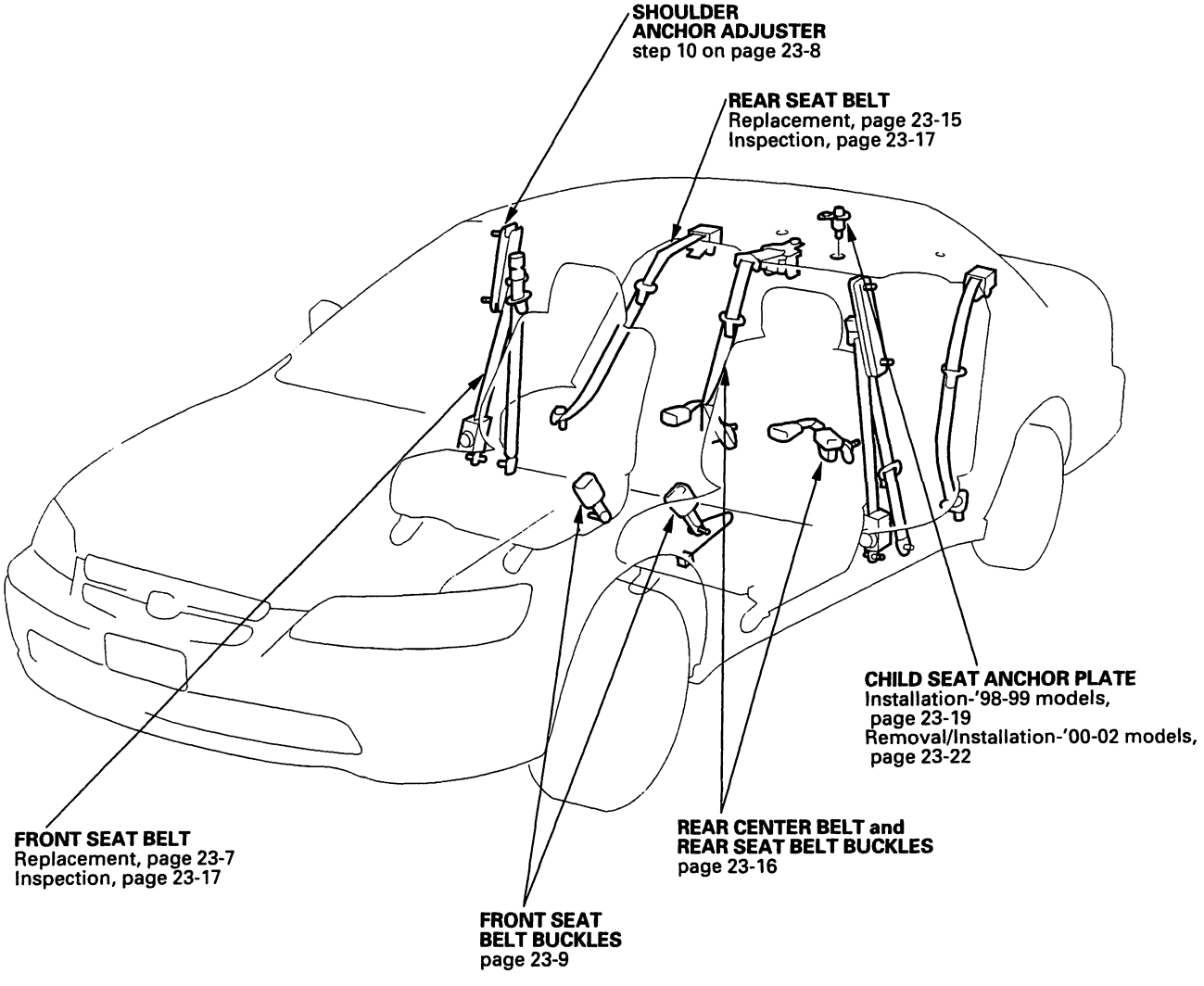

BACK

Front Seat Belt Replacement - Coupe

'01-02 models: SRS components are located in this area. Review the SRS component locations (see page 23-23), and precations and procedures (see page 23-28) in the SRS section before preforming repairs or service.

NOTE: Check the front seat belts for damage, and replace them if necessary. Be careful not to damage them during removal and installation.

Front Seat Belt

1. '01-02 models: Make sure you have the anti-theft code for the radio, then write down the frequencies for the preset buttons.

2. Slide the front seat forward fully.

3. '01-02 models: Disconnect the negative battery cable, and wait at least 3 minutes before beginning work.

4. Remove these items (see page 20-128):

   - Rear seat-backs
   - Rear seat cushion

5. Remove these items (see page 20-76):

   - Rear bulkhead cover
   - Rear side trim panel

6. Remove the side trim (see page 20-74).

7. Remove the middle cross-member gusset (A):

   –1 Detach the clips, and pull back the carpet (B).
   –2 Remove the bolts (C, D) and nut, then remove the gusset.

Fastener Locations

C ▶ : Bolt, 4

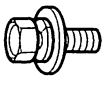

10 x 1.25 mm
38 N·m
(3.9 kgf·m, 2.8 lbf·ft)

D ▶ : Bolt, 2

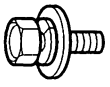

8 x 1.25 mm
22 N·m
(2.2 kgf·m, 16 lbf·ft)

● : Nut, 1

8 x 1.25 mm
22 N·m
(2.2 kgf·m, 16 lbf·ft)

▷ : Clip, 2

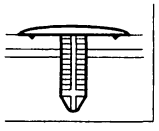

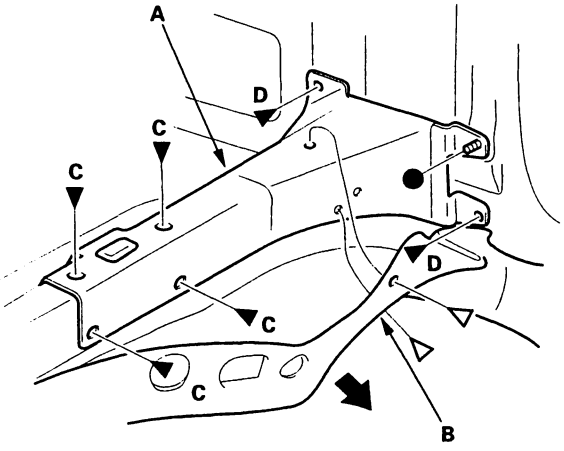

(cont'd)

Front Seat Belt Replacement - Coupe (cont'd)

8. Remove the upper anchor cap (A) and lower anchor cap (B).

9. Remove the bolts, then remove the seat belt guide (A).

Fastener Locations

▶ : Bolt, 2

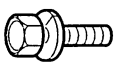

6 x 1.0 mm
9.8 N·m (1.0 kgf·m, 7.2 lbf·ft)

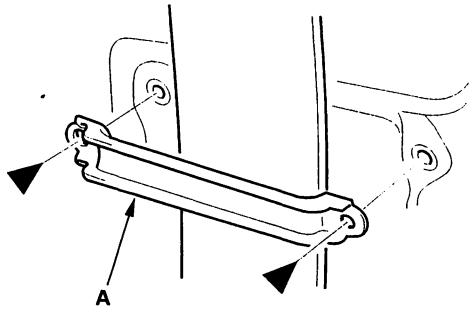

10. Disconnect the seat belt tensioner connector (A) ('01-02 models). Remove the upper anchor bolt (B) and lower anchor bolt (C), the retractor mounting bolt (D), and the retractor bolt (E). Remove the front seat belt (F) and retractor (G).

'98-00 models (without tensioner):

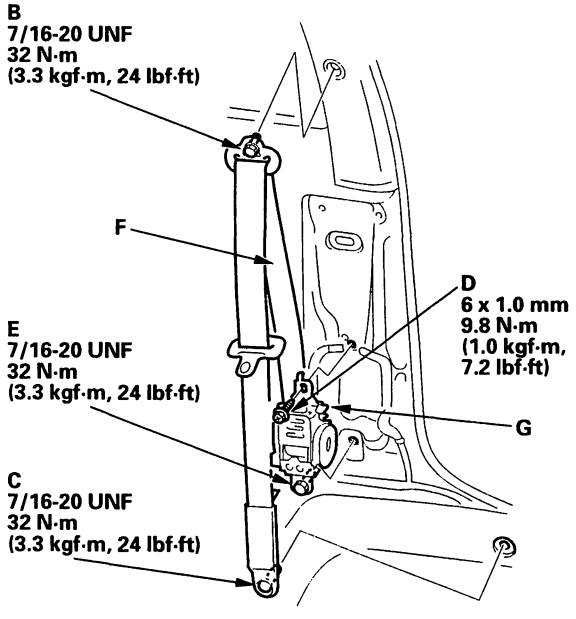

'01-02 models (with tensioner):

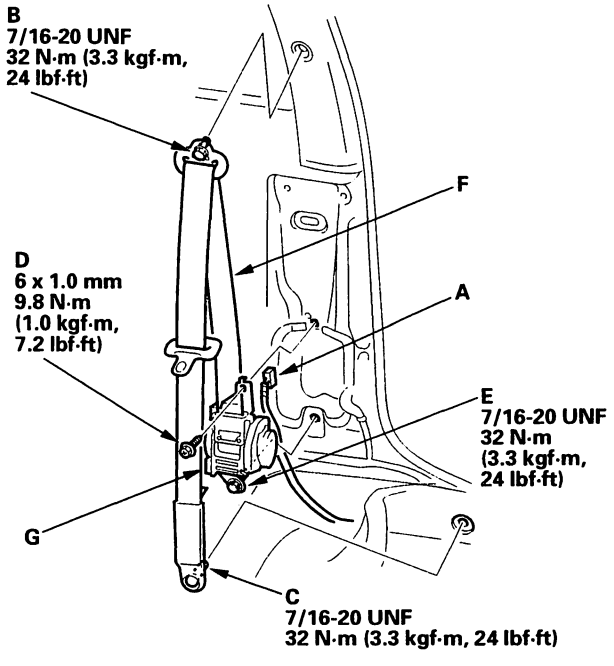

BACK

11. Install the seat belt and retractor in the reverse order of removal, and note these items:

    - Check that the retractor locking mechanism functions (see page 23-17).
    - Assemble the washers, collar and bushing on the upper and lower anchor bolts as shown.
    - Before installing the anchor bolts, make sure there are no twists or kinks in the front seat belt.

    '01-02 models:
    - Make sure the seat belt tensioner connector is plugged in properly.
    - Reconnect the negative cable to the battery.
    - Enter the anti-theft code for the radio, then enter the customer's radio station presets.

Upper anchor bolt construction:

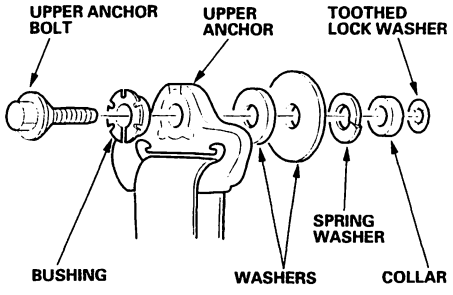

Lower anchor bolt construction:

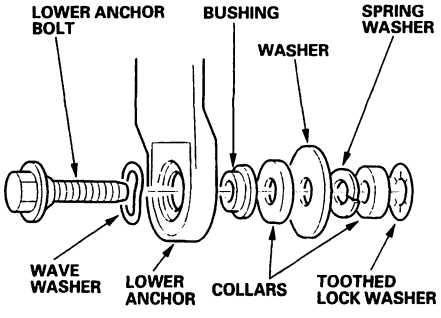

Retractor bolt construction:

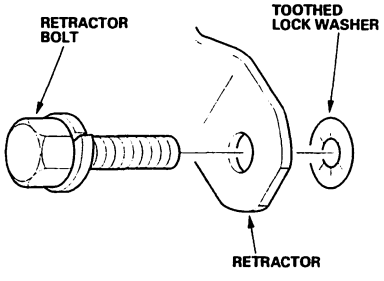

Front Seat Belt Replacement - Sedan

'01-02 models: SRS components are located in this area. Review the SRS component locations (see page 23-23), and precations and procedures (see page 23-28) in the SRS section before preforming repairs or service.

NOTE: Check the front seat belts for damage, and replace them if necessary. Be careful not to damage them during removal and installation.

Front Seat Belt

1. '01-02 models: Make sure you have the anti-theft code for the radio, then write down the frequencies for the preset buttons.

2. Slide the front seat forward fully.

3. '01-02 models: Disconnect the negative battery cable, and wait at least 3 minutes before beginning work.

4. Remove the rear seat cushion (see page 20-129).

5. Remove these items (see page 20-75):

    - Front side trim
    - Rear side trim
    - Center pillar lower trim panel

6. Remove the upper anchor cover (A), and pull the lower anchor cover (B) back.

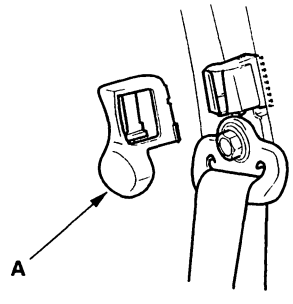

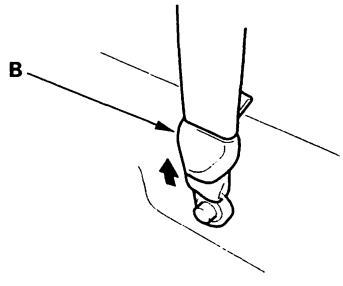

(cont'd)

Front Seat Belt Replacement - Sedan (cont'd)

7. Disconnect the seat belt tensioner connector (A), ('01-02 models). Remove the upper anchor bolt (B) and lower anchor bolt (C), the retractor mounting ET screw (D), the retractor bolt (E), and remove the front seat belt (F) and retractor (G).

'98-00 models (without tensioner):

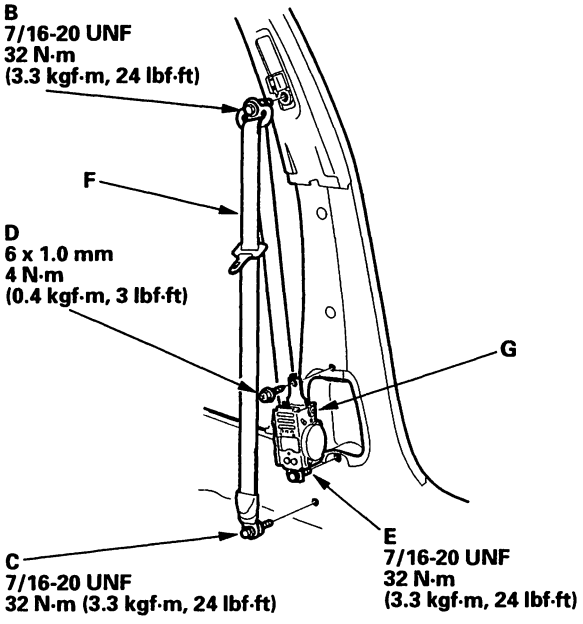

'01-02 models (with tensioner):

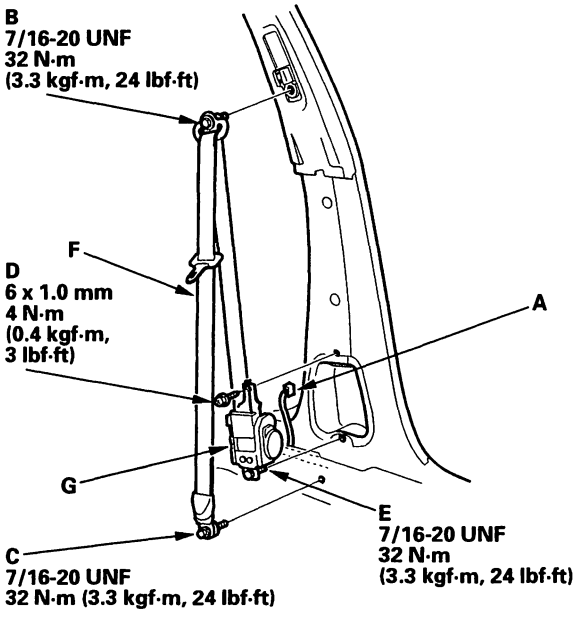

8. Remove the front and rear door trim as necessary (see page 20-75).

9. Remove the center pillar upper trim (see page 20-75).

10. Remove the shoulder anchor adjuster (A).

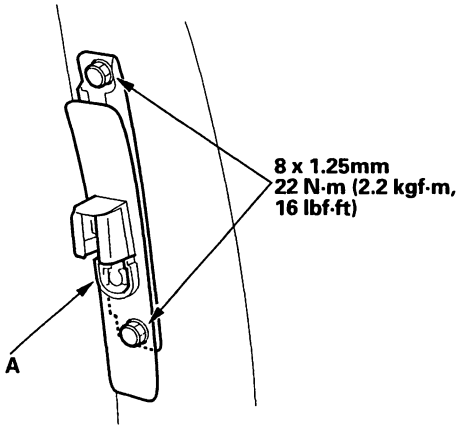

11. Install the seat belt and retractor in the reverse order of removal, and note these items:

- Apply liquid thread lock to the upper anchor bolt before reinstallation.
- If the threads on the retractor mounting ET screw are worn out, use an oversized ET screw (P/N 90133-SZ4-0030)made specifically for this application.
- Check that the retractor locking mechanism functions as described (see page 23-17).
- Assemble the washers, collar and bushing on the upper and lower anchor bolts as shown.
- Before installing the anchor bolts, make sure there are no twists or kinks in the front seat belt.

'01-02 models:

- Make sure the seat belt tensioner connector is plugged in properly.
- Reconnect the negative cable to the battery.
- Enter the anti-theft code for the radio, then enter the customer's radio station presets.

BACK

Upper anchor bolt construction:

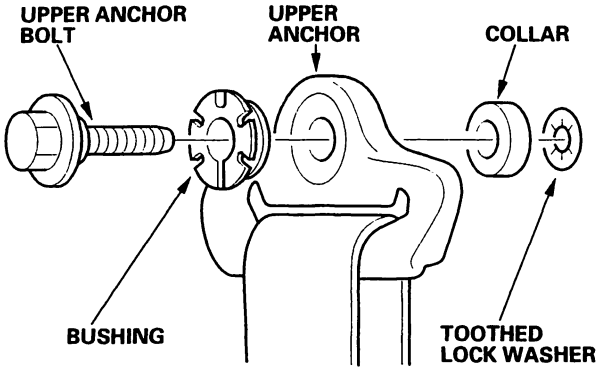

Lower anchor bolt construction:

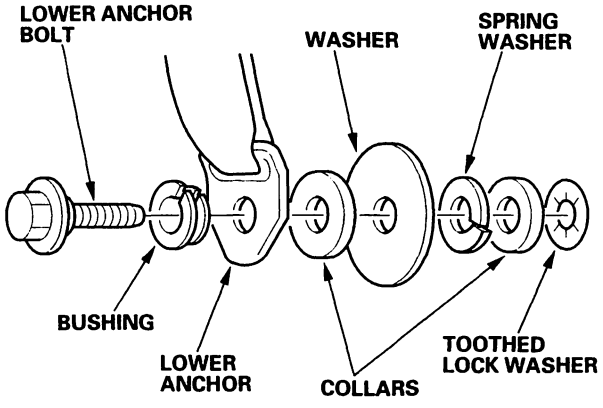

Retractor bolt construction:

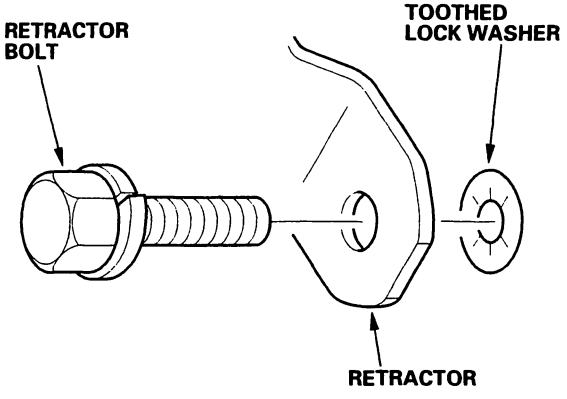

Seat Belt Buckle

1. Remove the front seat (see page 20-99).

2. Remove the following parts from the front seat:

   - Manual seat: center cover (see page 20-104)
   - Manual height adjustable seat: center cover (see page 20-108)
   - 8-way power seat: center cover (see page 20-114)
   - 2-way power height adjustable seat: Bracket cover (see page 20-110)

3. On a driver's seat and '00-02 models passenger's seat with side airbag, disconnect and/or detach the seat belt switch connector and clip (A) and harness clips (B).

   Manual seat:

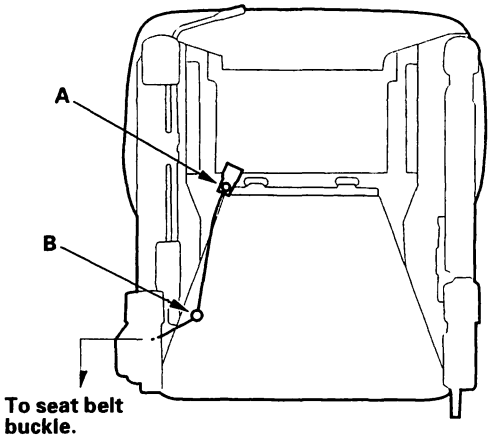

   Manual height adjustable seat:

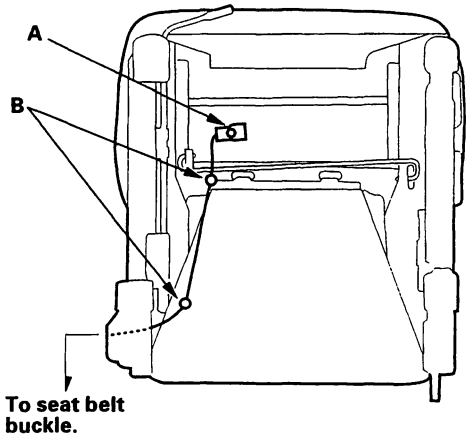

(cont'd)

Front Seat Belt Replacement - Sedan (cont'd)

2-way power seat ('98-99 models):

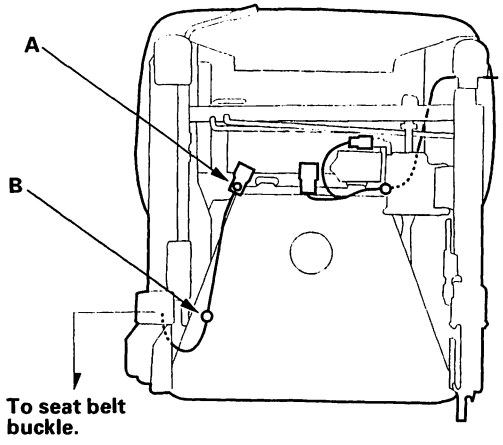

2-way power seat ('00 model):

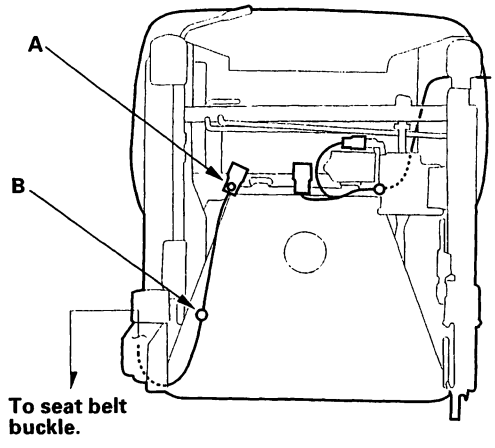

2-way power seat ('01-02 models):

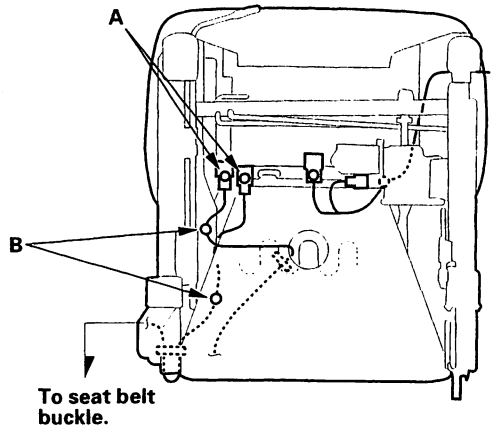

8-way power seat:

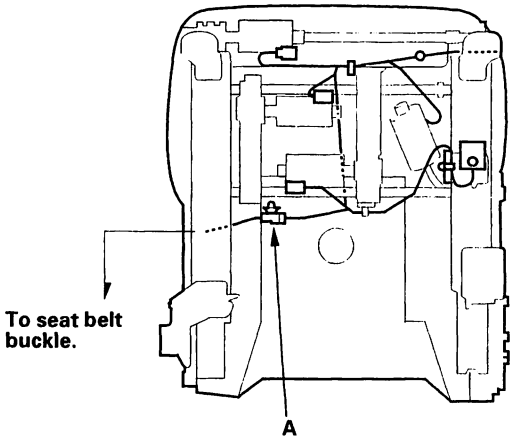

BACK

4. Remove the center anchor bolt (A), and remove the seat belt buckle (B).

   NOTE: The 2-way power seat is shown, the manual seat, and the manual height adjustable seat are similar.

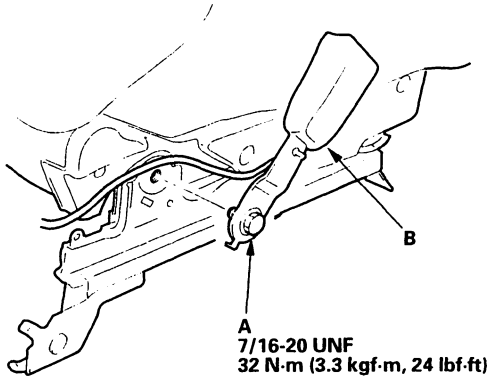

5. On a driver's seat and '00-02 models passenger's seat with side airbag, remove the seat belt switch harness (A):

   - Without manual seat and without 2-way power seat ('00-02 models): Adjust the seat cushion to its maximum height, and remove the harness.
   - With manual seat: Remove the seat cushion mounting bolts (B) from the inner seat track (C), then pull the inner seat track down away from the seat cushion, and remove the harness.
     Take care not to damage the hinge bracket (D).

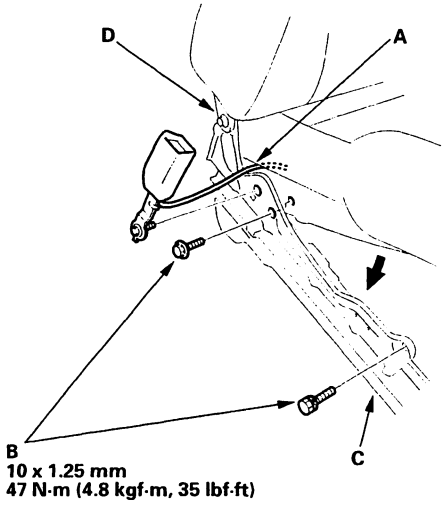

6. Install the seat belt buckle in the reverse order of removal. Assemble the washers on the center anchor bolt as shown.

   Center anchor bolt installation:

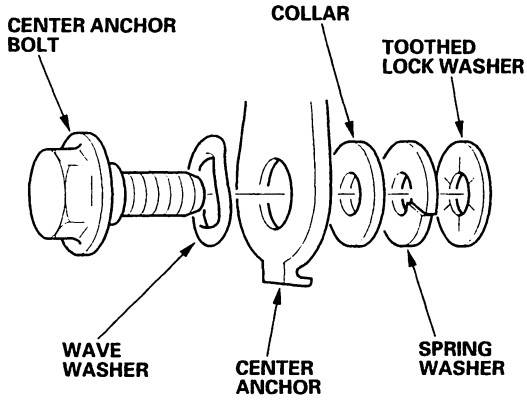

Rear Seat Belt Replacement - Coupe

Check the rear seat belts for damage, and replace them if necessary. Be careful not to damage them during removal and installation.

Rear Seat Belt

1. Slide the front seat forward fully.
2. Remove these items (see page 20-128):
   - Rear seat-backs
   - Rear seat cushion
3. Remove these items (see page 20-76):
   - Rear bulkhead cover
   - Rear side trim panel
4. Remove the side trim (see page 20-74).
5. Remove the upper anchor cap (A).

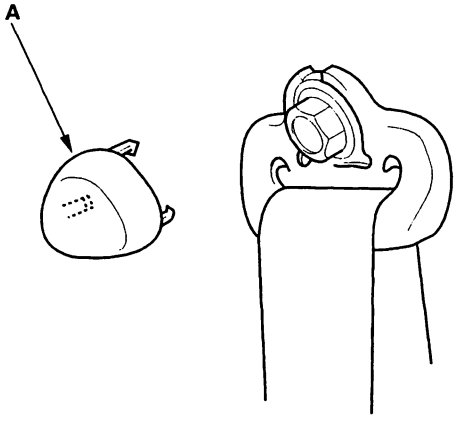

6. Remove the upper anchor bolt (A) and lower anchor bolt (B), and the retractor bolt (C). Remove the rear seat belt (D) and retractor (E).

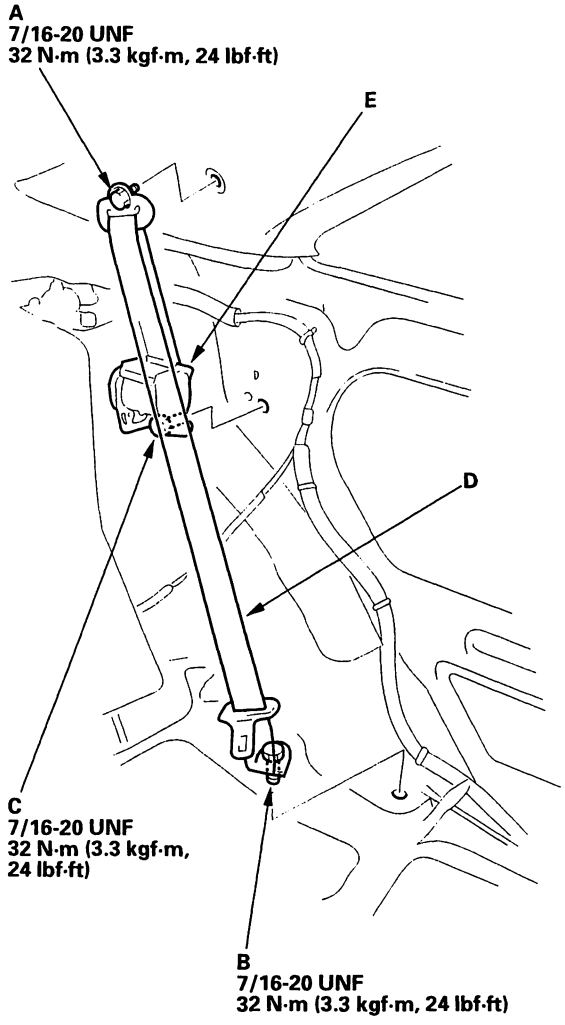

BACK

7. Install the seat belt and retractor in the reverse order of removal, and note these items:

   - Check that the retractor locking mechanism functions (see page 23-17).
   - Assemble the washers, collar and bushing on the upper anchor bolt as shown.
   - Before installing the anchor bolts, make sure there are no twists or kinks in the rear seat belt.

Upper anchor bolt installation:

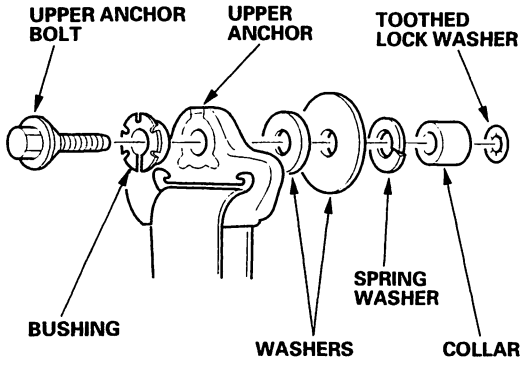

Lower anchor bolt installation:

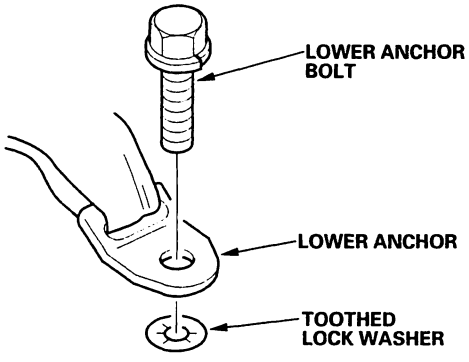

Retractor bolt installation:

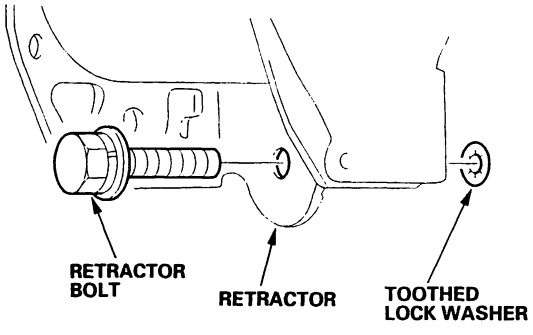

Center Belt and Seat Belt Buckles

1. Slide the front seat forward fully.

2. Remove these items (see page 20-128):

   - Rear seat-backs
   - Rear seat cushion

3. Remove these items (see page 20-76):

   - Rear bulkhead cover
   - Rear side trim panel
   - High mount brake light
   - Lock cylinder trim
   - Center belt cover
   - Rear shelf

4. Remove the side trim, both sides as necessary (see page 20-74).

5. Remove the center anchor bolts (A), and remove the seat belt buckles (B).

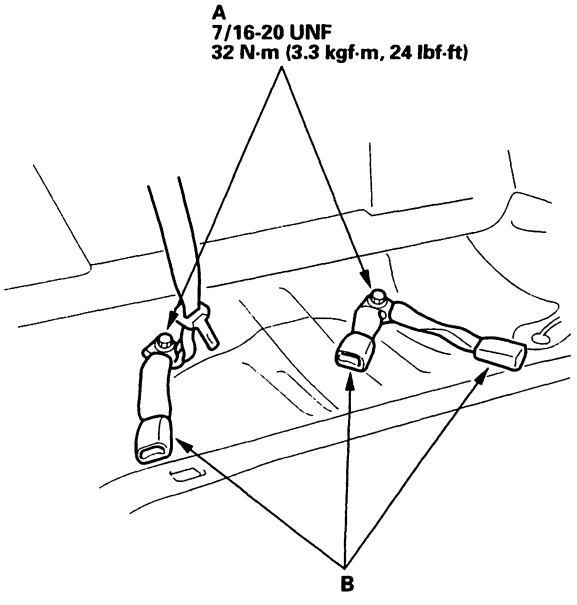

(cont'd)

Rear Seat Belt Replacement - Coupe (cont'd)

6. Remove the retractor mounting ET screw (A) and the retractor bolt (B). Remove the center belt (C) and retractor (D).

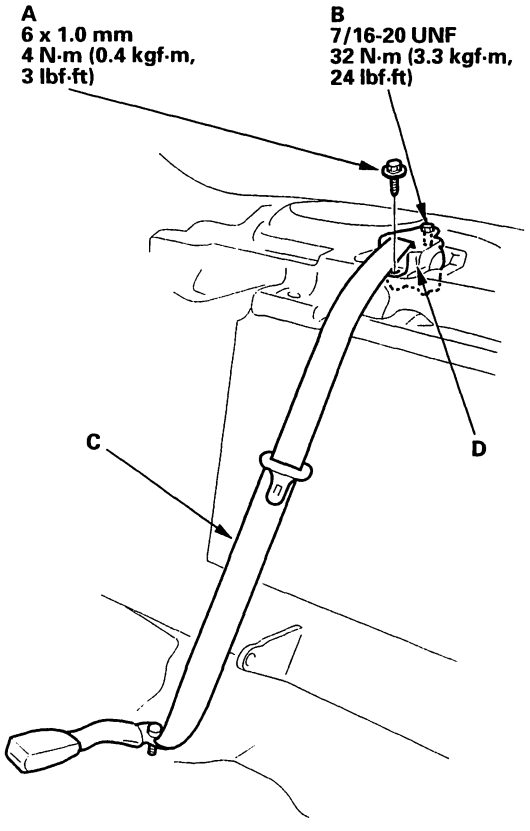

7. Remove the protector (A).

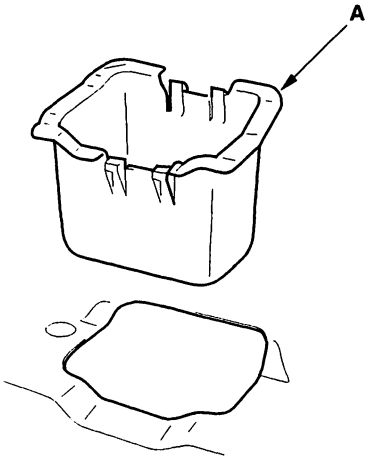

8. Install the seat belt and retractor in the reverse order of removal, and note these items:

- Check that the retractor locking mechanism functions (see page 23-17).
- Assemble the washers on the center anchor bolt as shown.
- Before installing the center anchor bolt, make sure there are no twists or kinks in the center belt.

Center anchor bolt installation:

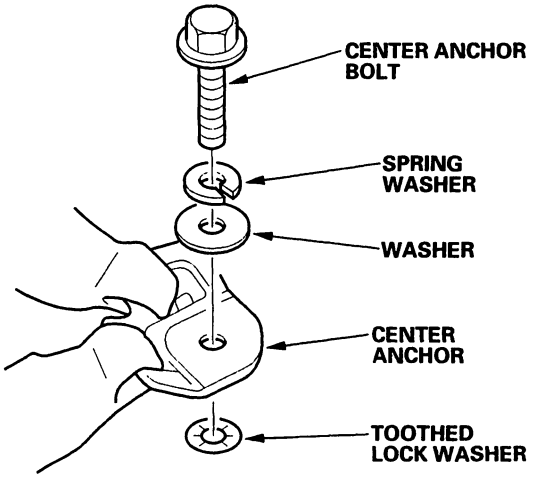

Retractor bolt installation:

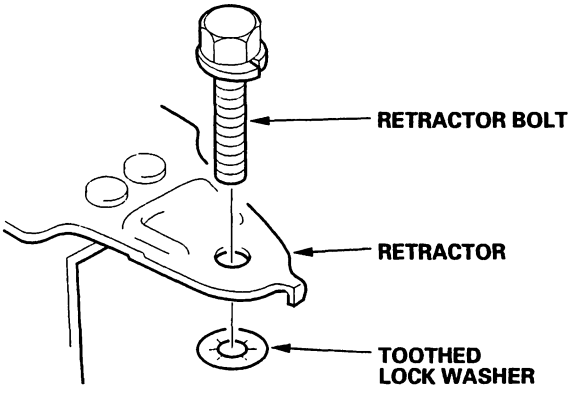

BACK

Rear Seat Belt Replacement - Sedan

NOTE: Check the rear seat belts for damage, and replace them if necessary. Be careful not to damage them during removal and installation.

Rear Seat Belt

1. Remove these items (see page 20-129):

   - Rear seat cushion
   - Rear seat side bolster, both sides

2. Remove these items (see page 20-77):

   - Rear door trim
   - Rear pillar trim, both sides
   - Rear bulkhead cover
   - Center belt cover
   - High mount brake light
   - Lock cylinder trim
   - Rear shelf

3. Remove the center anchor bolt of the center belt.

4. Remove the lower anchor bolt (A), the retractor mounting ET screw (B), the retractor bolt (C), and remove the rear seat belt (D) and retractor (E).

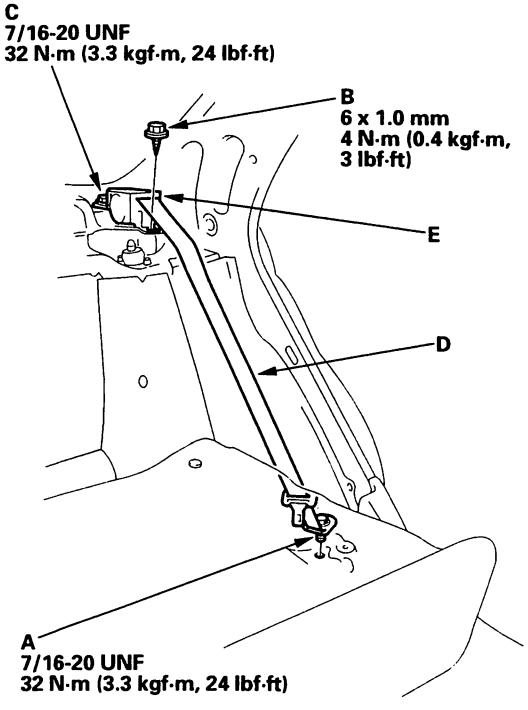

Lower anchor bolt construction:

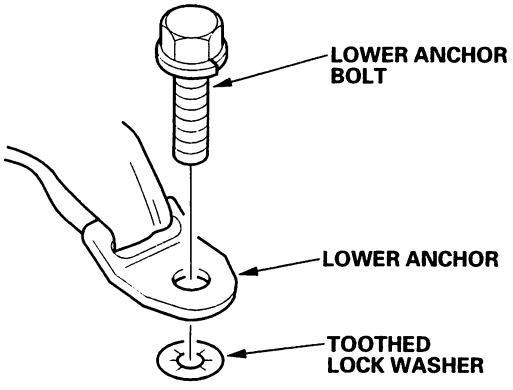

Retractor bolt construction:

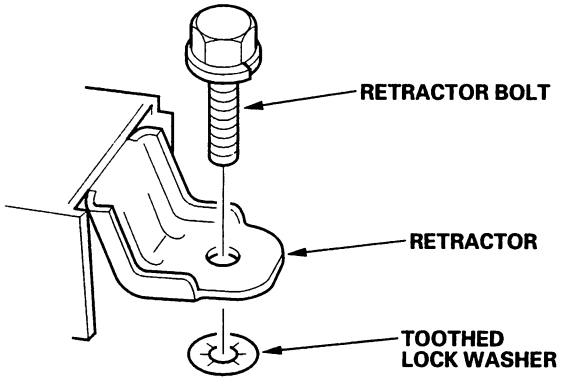

5. Install the seat belt and retractor in the reverse order of removal, and note these items:

   - If the threads on the retractor mounting ET screw are worn out, use an oversized ET screw (P/N 90133-SZ4-0030) made specifically for this application.
   - Check that the retractor locking mechanism functions as described (see page 23-17).
   - Before installing the anchor bolt, make sure there are no twists or kinks in the rear seat belt.

(cont'd)

Rear Seat Belt Replacement - Sedan (cont'd)

Center Belt and Seat Belt Buckles

1. Remove the rear seat cushion and rear seat side bolster, both sides (see page 20-129).

2. Remove the center anchor bolts (A), and remove the seat belt buckles (B).

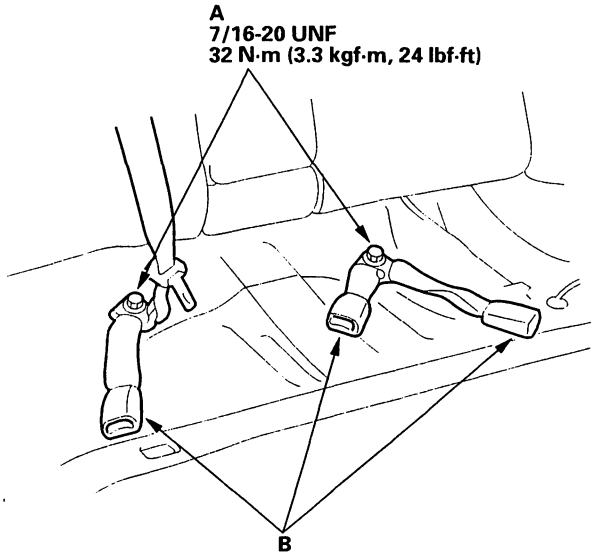

3. Remove these items (see page 20-77):

- Rear door trim, both sides as necessary
- Rear pillar trim, both sides
- Rear bulkhead cover
- High mount brake light
- Lock cylinder trim
- Center belt cover
- Rear shelf

4. Remove the retractor mounting ET screw (A), and the retractor bolt (B), then remove the center belt (C) and retractor (D).

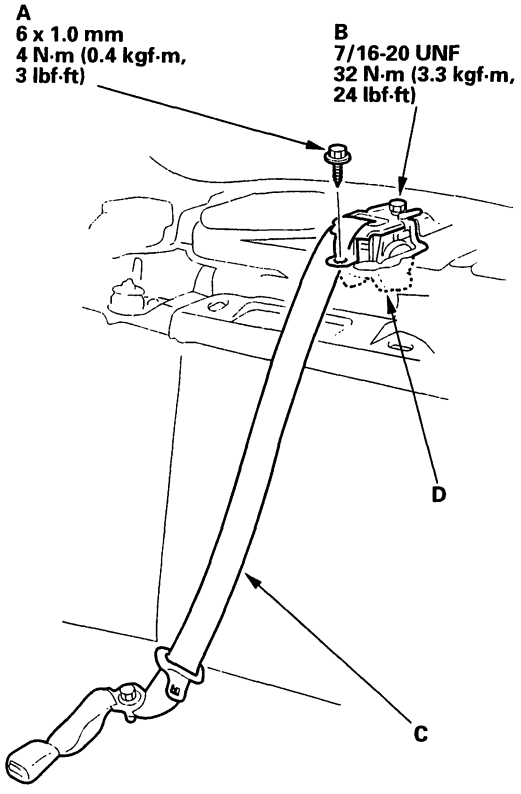

5. Remove the protector (A).

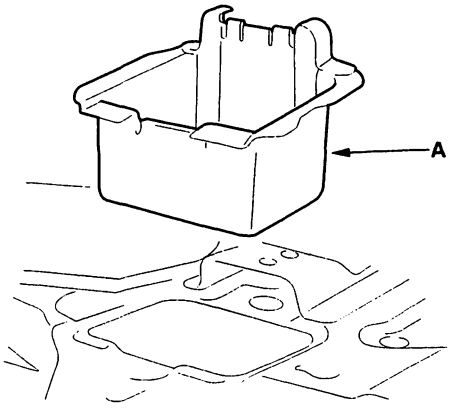

BACK

6. Install the seat belt and retractor in the reverse order of removal, and note these items:

   - If the threads on the retractor mounting ET screw are worn out, use an oversized ET screw (P/N 90133-SZ4-0030) made specifically for this application.
   - Check that the retractor locking mechanism functions properly (see step 1 on page 23-17).
   - Assemble the washers on the center anchor bolt as shown.
   - Before installing the center anchor bolt, make sure there are no twists or kinks in the center belt.

Center anchor bolt construction:

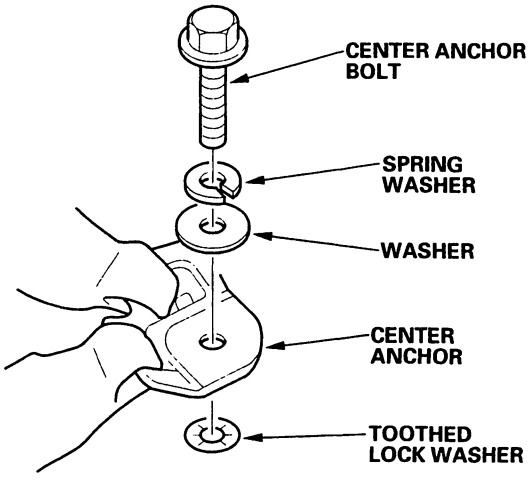

Retractor bolt construction:

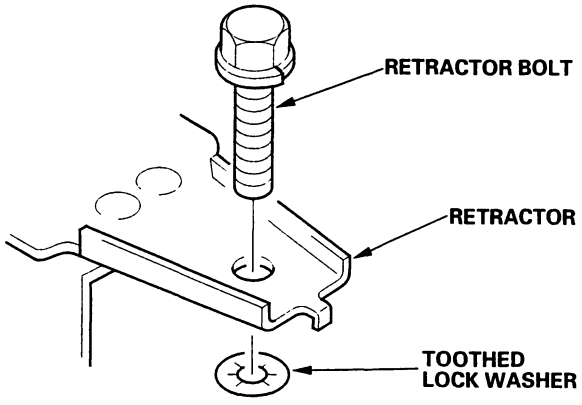

Inspection

Retractor

'01-02 models: SRS components are located in this area. Review the SRS component locations (see page 23-23), and precations and procedures (see page 23-28) in the SRS section before preforming repairs or service.

1. Before installing the retractor, check that the seat belt can be pulled out freely.

2. Make sure the seat belt does not lock when the retractor (A) is leaned slowly up to 15° from the mounted position. The seat belt should lock when the retractor is leaned over 40°. Do not attempt to disassemble the retractor.

Coupe:

Front: ***: Mounted Position**

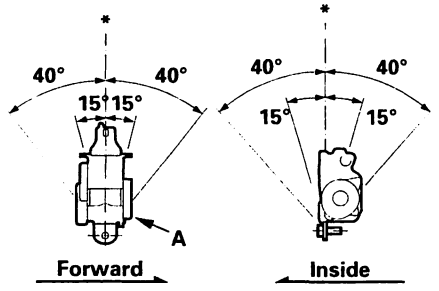

Rear:

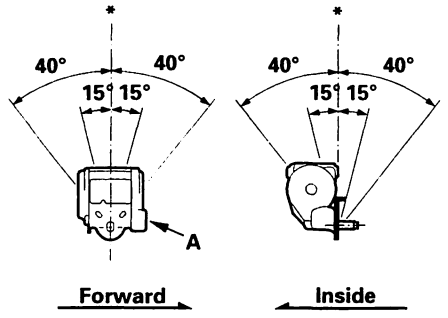

Rear center:

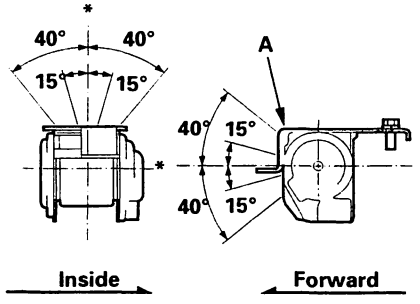

(cont'd)

Inspection (cont'd)

Sedan:

Front:

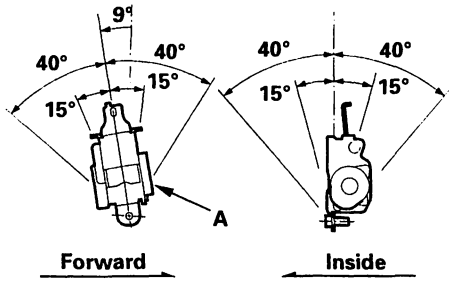

Rear:

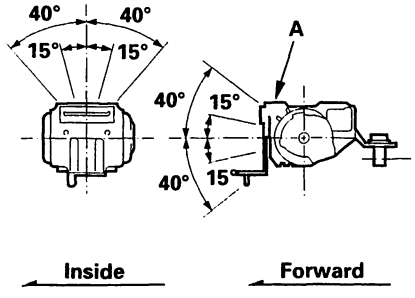

Rear Center:

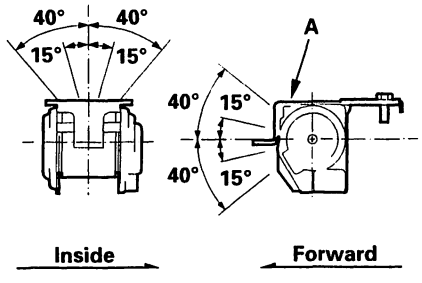

3. Replace the seat belt with a new one if there is any abnormality.

In-vehicle

1. Check that the seat belt is not twisted or caught on anything.

2. After installing the anchors, check for free movement on the anchor bolts. If necessary, remove the anchor bolts and check that the washers and other parts are not damaged or improperly installed.

3. Check the seat belts for damage or discoloration. Clean with a shop towel if necessary. Use only soap and water to clean.

   NOTE: Dirt build-up in the metal loops of the upper anchors can cause the seat belts to retract slowly. Wipe the inside of the loops with a clean cloth dampened in isopropyl alcohol.

4. Check that the seat belt does not lock when pulled out slowly. The seat belt is designed to lock only during a sudden stop or impact.

5. Make sure that the seat belt will retract automatically when released.

6. For each passenger's seat belt, check the seat belt retractor locking mechanism ALR (automatic locking retractor). This function is for securing child seats.
   - 1 Pull the seat belt all the way out to engage the ALR. The seat belt should retract with a ratcheting sound, but not extend. This is normal.
   - 2 To disengage the ALR, release the seat belt and allow it to fully retract, then pull the seat belt out part-way. The seat belt should retract and extend normally.

7. Replace the seat belt with a new one if there is any abnormality.

BACK

Child Seat Tether Anchor Installation - '98-99 Models

Coupe:

Attachment points are provided for a rear seat mounted child restraint system which uses a top tether. The attachment points are located on the rear shelf, just behind the rear seat-back.

NOTE:
- Do not remove the toothed washer (E) from the child seat anchor plate. Use the child seat anchor plate with the toothed washer attached to it.
- When installing a child seat on the rear seat, follow the instructions of the manufacturer of the child seat.
- Additional anchor plates are available.
- Make sure the rear seat-backs are locked firmly when installing a child seat.

The rear shelf (A) is perforated at each attachment point (B). Use a razor blade or sharp knife to carefully cut a 1 inch diameter circle at the attachment point, then cut the rear shelf along the perforations to make a hole. When using a child seat with a top tether, install the child seat anchor plates (C) securely.

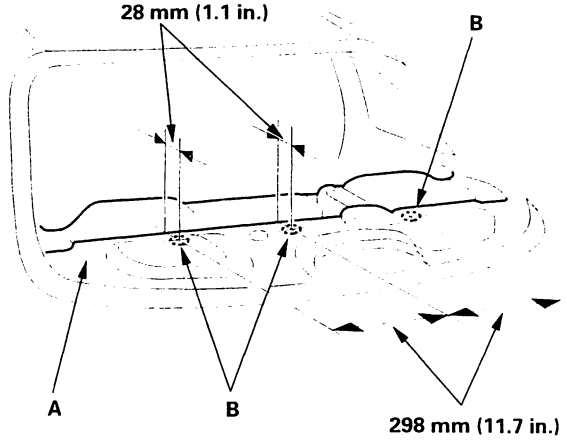

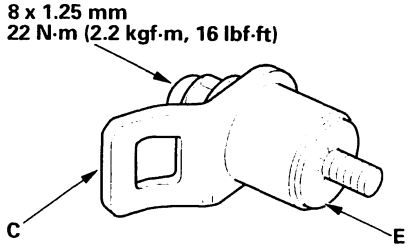

Sedan:

Attachment points are provided for a rear seat mounted child restraint system which uses a top tether. The attachment points are located on the rear shelf, just behind the rear seat-back. When using a child seat with a top tether, install the child seat anchor plates securely.

NOTE:
- Do not remove the toothed washer from the child seat anchor plate. Use the child seat anchor plate with the toothed washer attached to it.
- When installing a child seat on the rear seat, follow the instructions of the manufacturer of the child seat.
- Additional anchor plates are available.
- Make sure the rear seat-backs is locked firmly when installing a child seat.

1. On a Canada model, remove the plug (A) from the attachment point (B) on the rear shelf then go to step 4. On a U.S. model, go tc step 2.

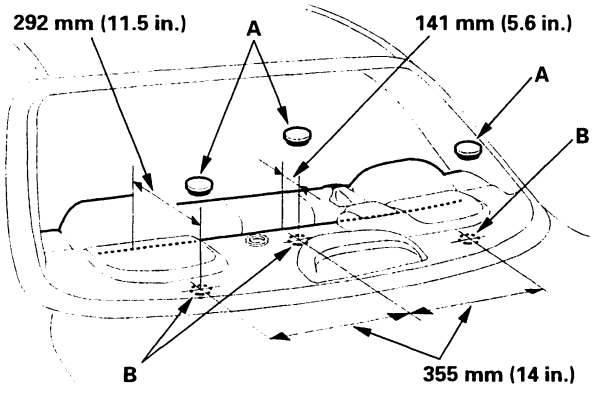

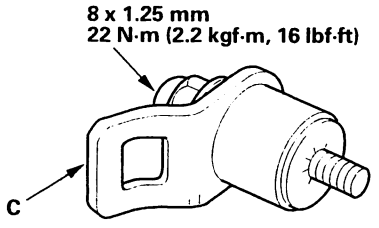

2. From inside the trunk, select one of the three attachment points (weldnuts) and poke an awl through it to make a marker hole in the rear shelf fabric.

3. From inside the vehicle, use a sharp knife to cut a 22 mm (7/8 in.) diamater hole in the rear shelf fabric and pad at the marker hole.

4. Install the child seat anchor plate (C). Torque the bolt to 22 N·m (2.2 kgf·m, 16 lbf·ft).

Child Seat Tether Anchor Removal/Installation - '00 model Coupe

1. Remove the middle child seat tether anchor cover (A) and both side child seat tether anchor covers (B) from the attachment points (C) on the rear shelf (D).

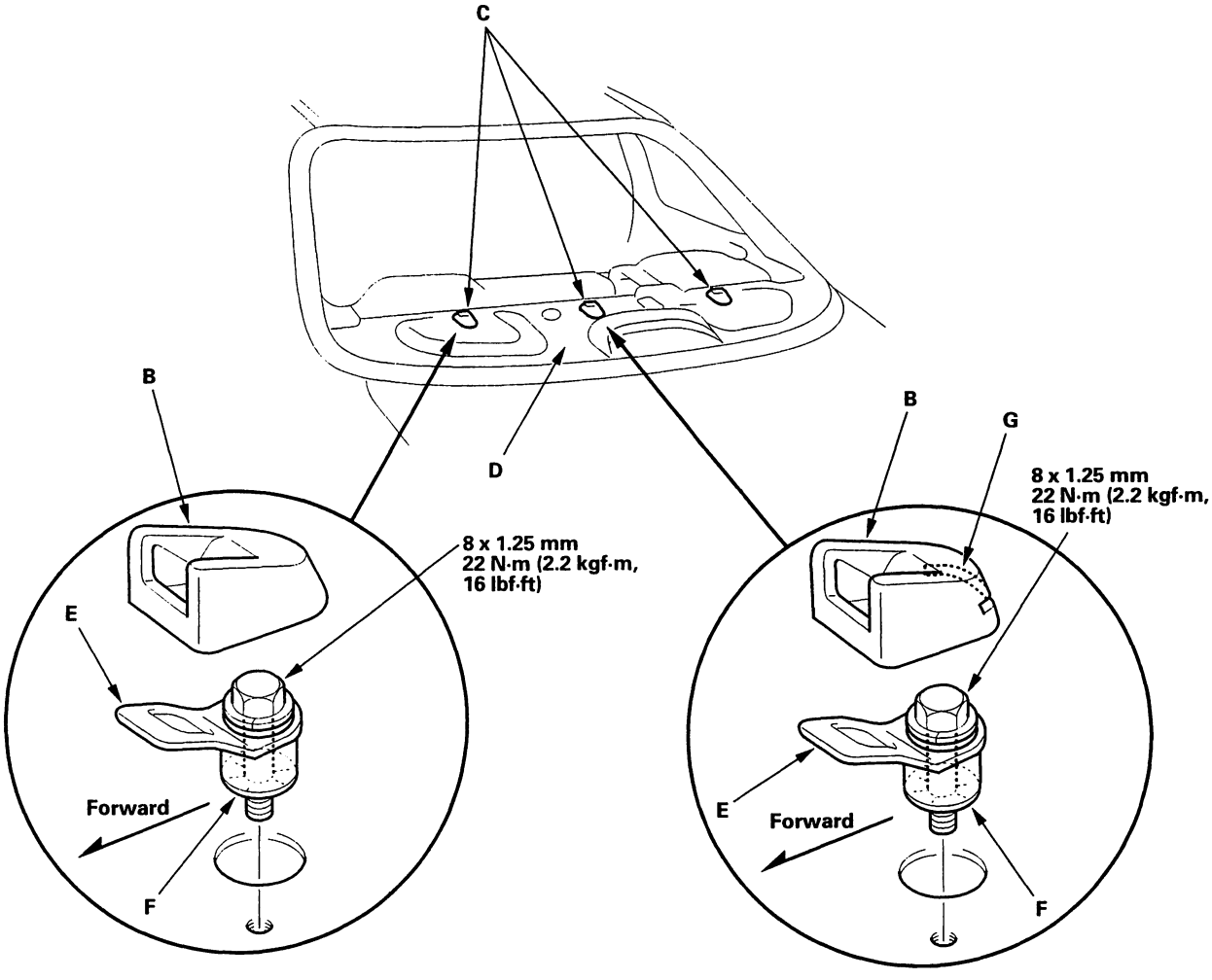

2. Remove the child seat tether anchors (E). Do not remove the toothed washer (F) from the tether anchor.

3. Install the child seat tether anchors in the reverse order of removal. When installing the middle and both side covers on each child seat tether anchor, the one with a slot (G) goes in the middle.

BACK

Child Seat Tether Anchor Removal/Installation '01-02 models Coupe

1. Remove the rear shelf (see page 20-76).

2. Remove the middle child seat tether anchor (A) and both side child seat tether anchors (B). Do not remove the toothed washer (C) from the tether anchor.

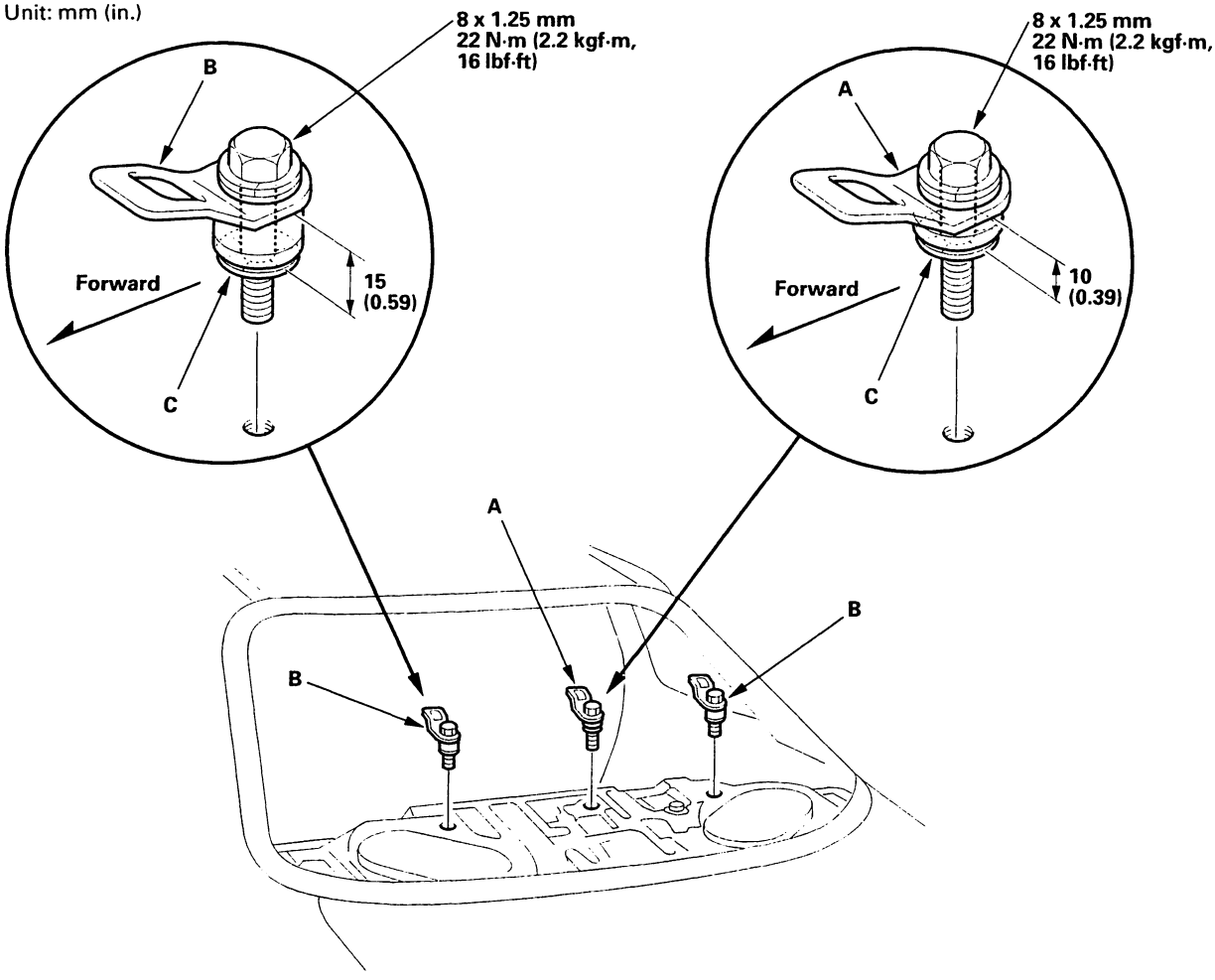

3. Install the child seat tether anchors in the reverse order of removal. When installing the middle and both side tether anchors on the body, the one with a shorter spacer goes in the middle.

Child Seat Tether Anchor Removal/Installation - '00-02 models Sedan

1. '00 model: Remove the child seat tether anchor covers (A) from the attachment points (B) on the rear shelf (C).

Unit: mm (in.)

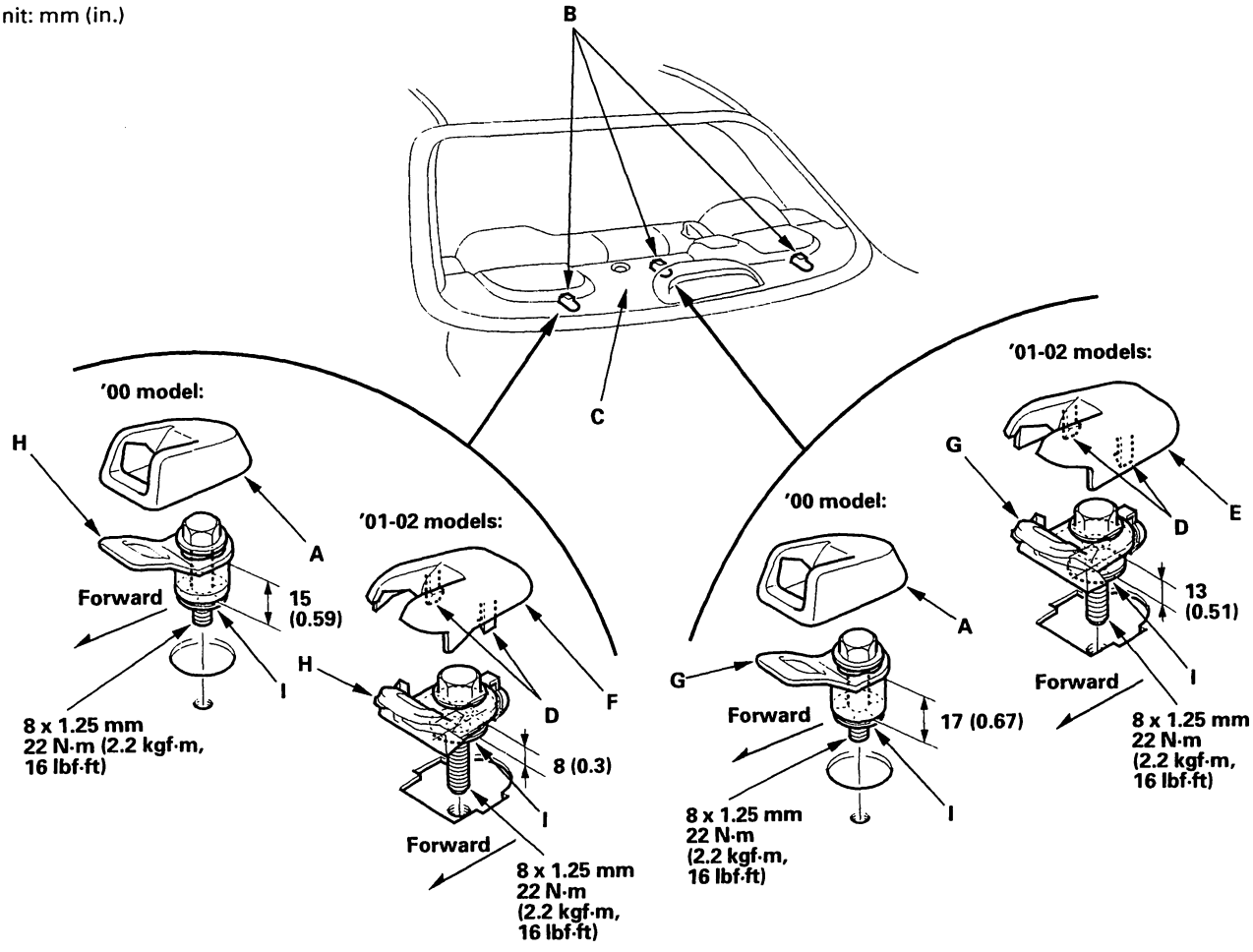

2. '01-02 models: Release the hooks (D), and remove the middle child seat tether anchor upper cover (E) and both side child seat tether anchor upper covers (F) from the attachment points (B) on the rear shelf (C).

3. Remove the middle child seat tether anchor (G) and both side child seat tether anchors (H). Do not remove the toothed washer (I) from the tether anchor.

4. Install the child seat tether anchors in the reverse order of removal. When installing the middle and both side tether anchors on the rear shelf, the one with a shorter spacer goes in the middle.

BACK

Component Location Index

'98-00 Models (without side airbags)

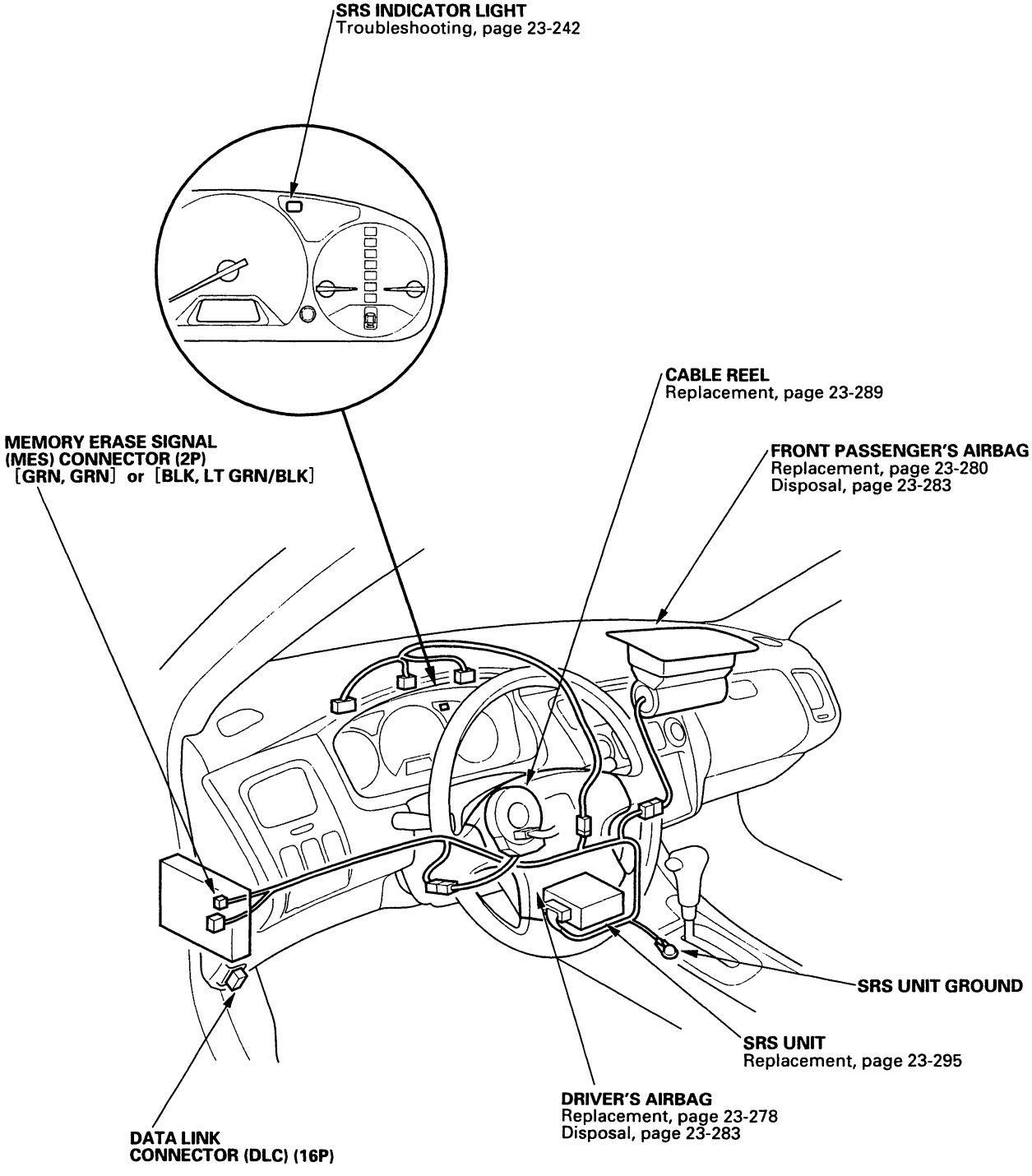

Component Location Index (cont'd)

'00 Model-Sedan (with side airbags)

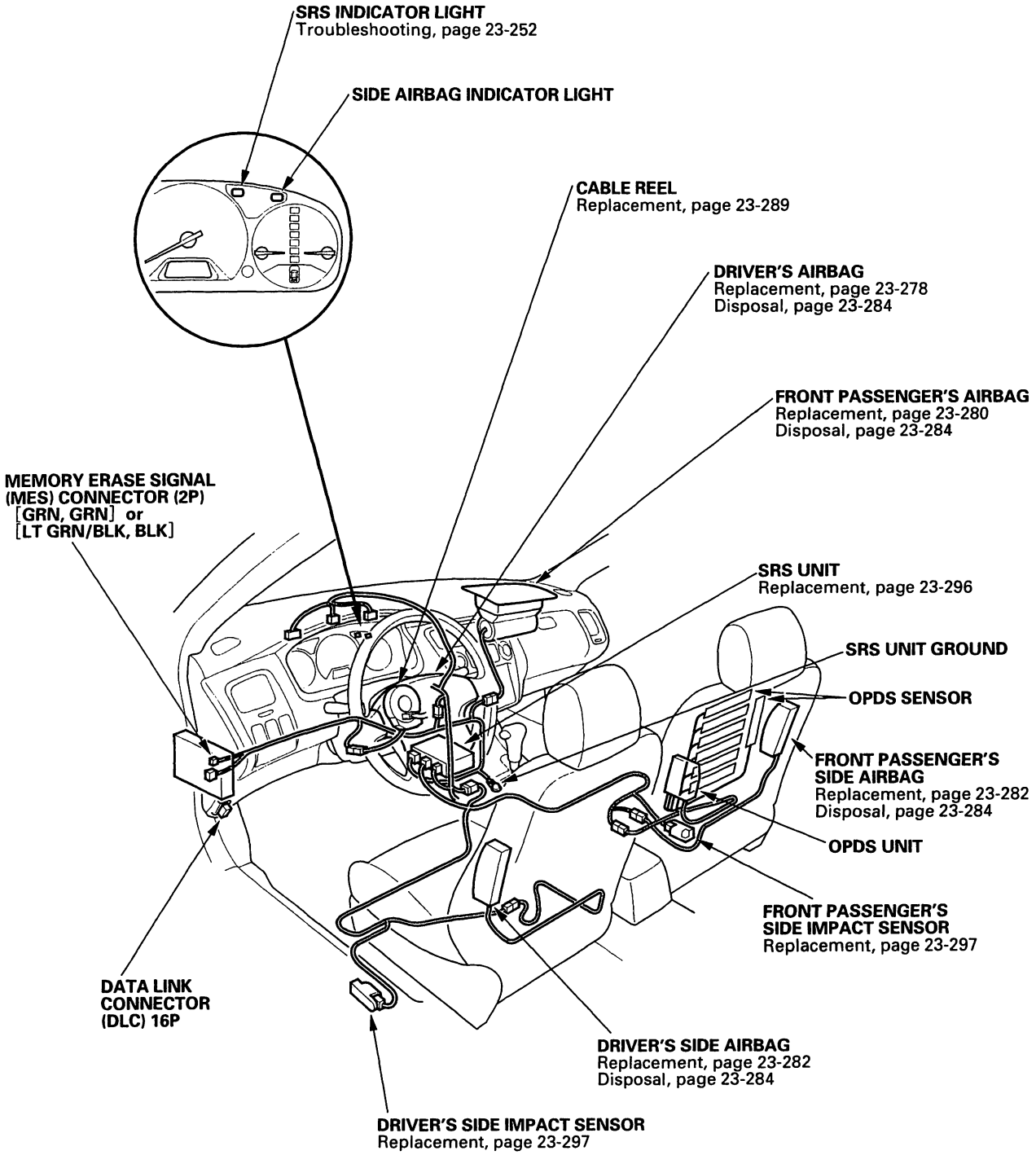

BACK

'00 Model-Coupe (with side airbags)

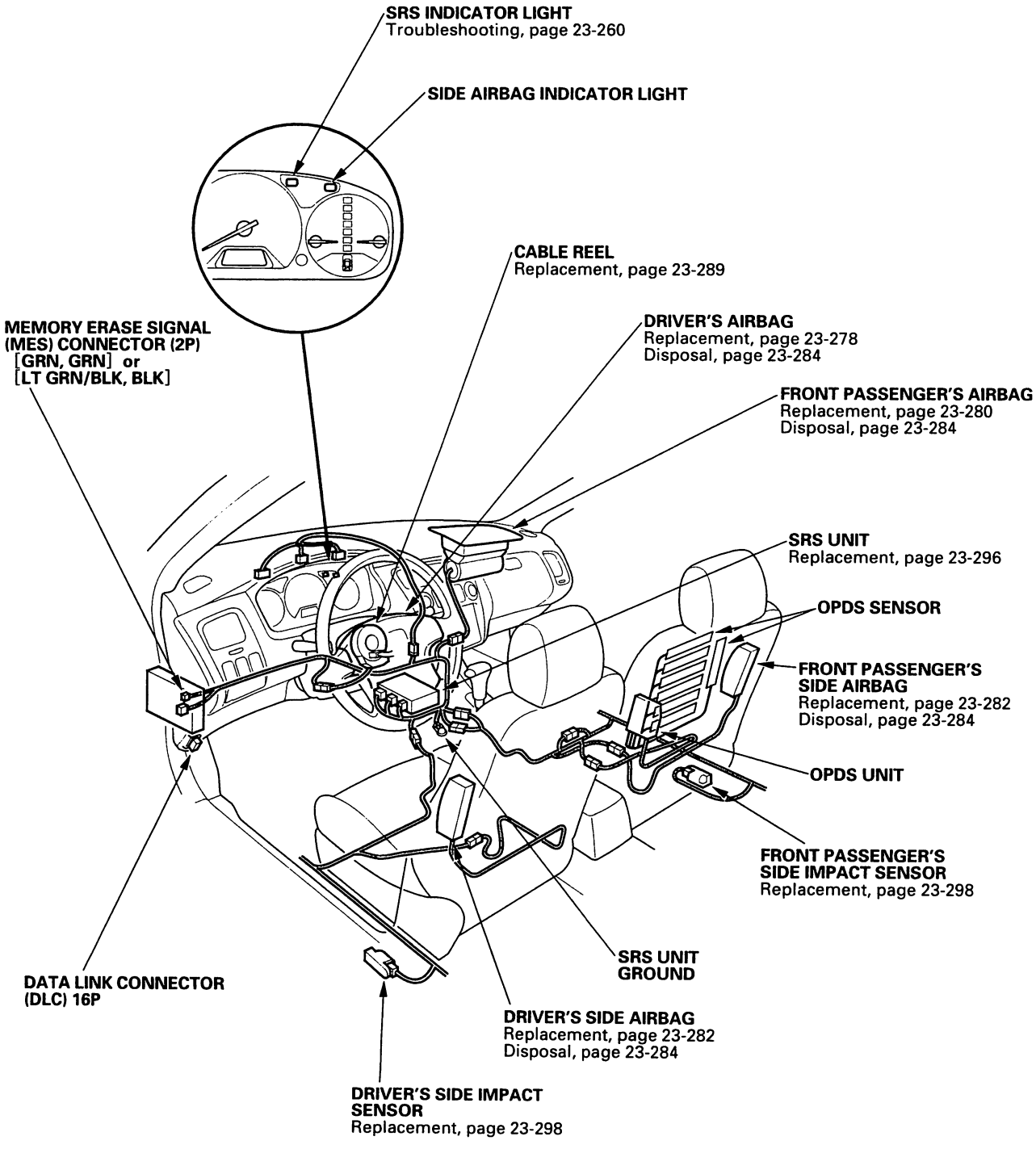

Component Location Index (cont'd)

'01-02 Models (with side airbag)

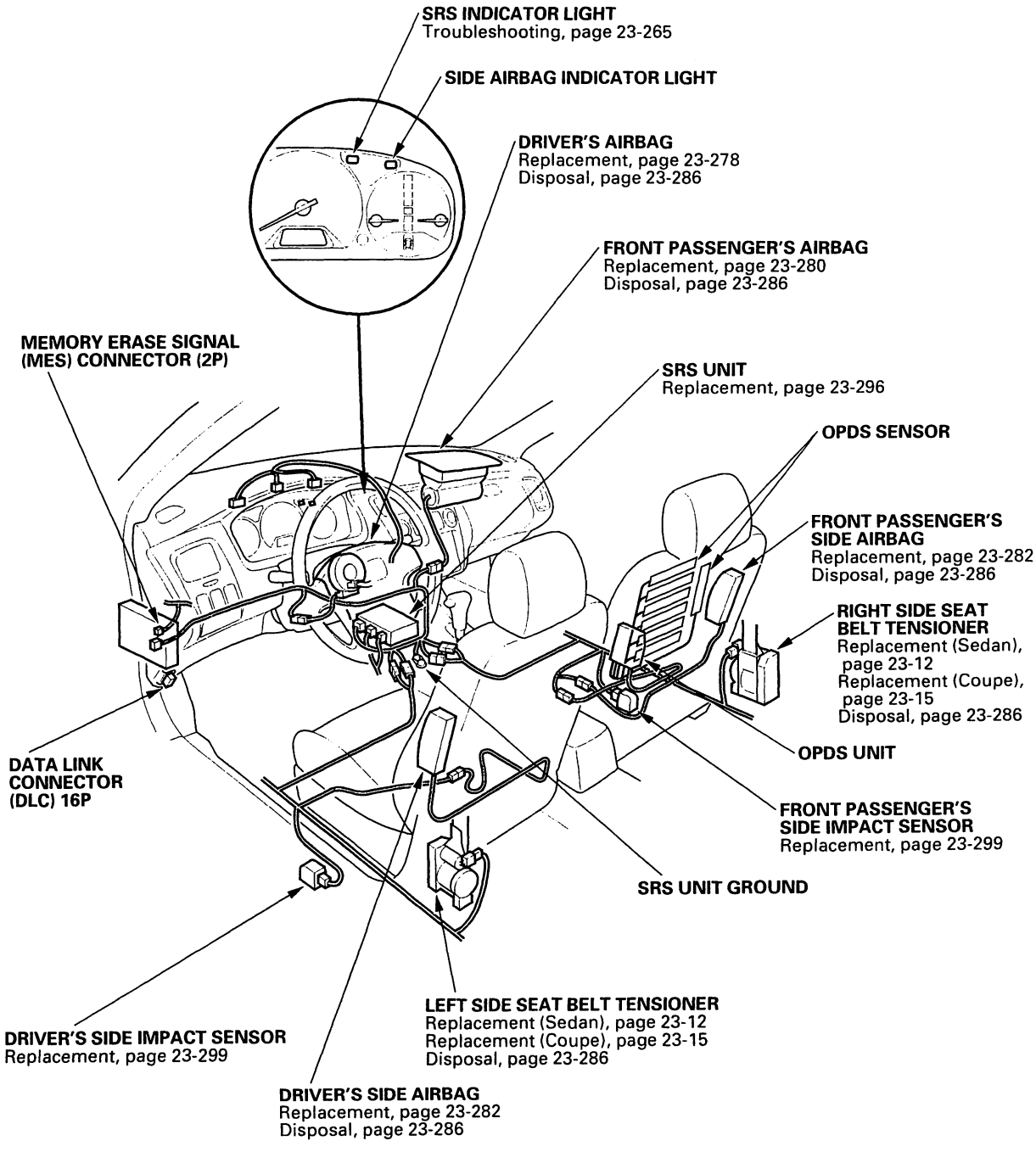

BACK

'01-02 Models (without side airbag)

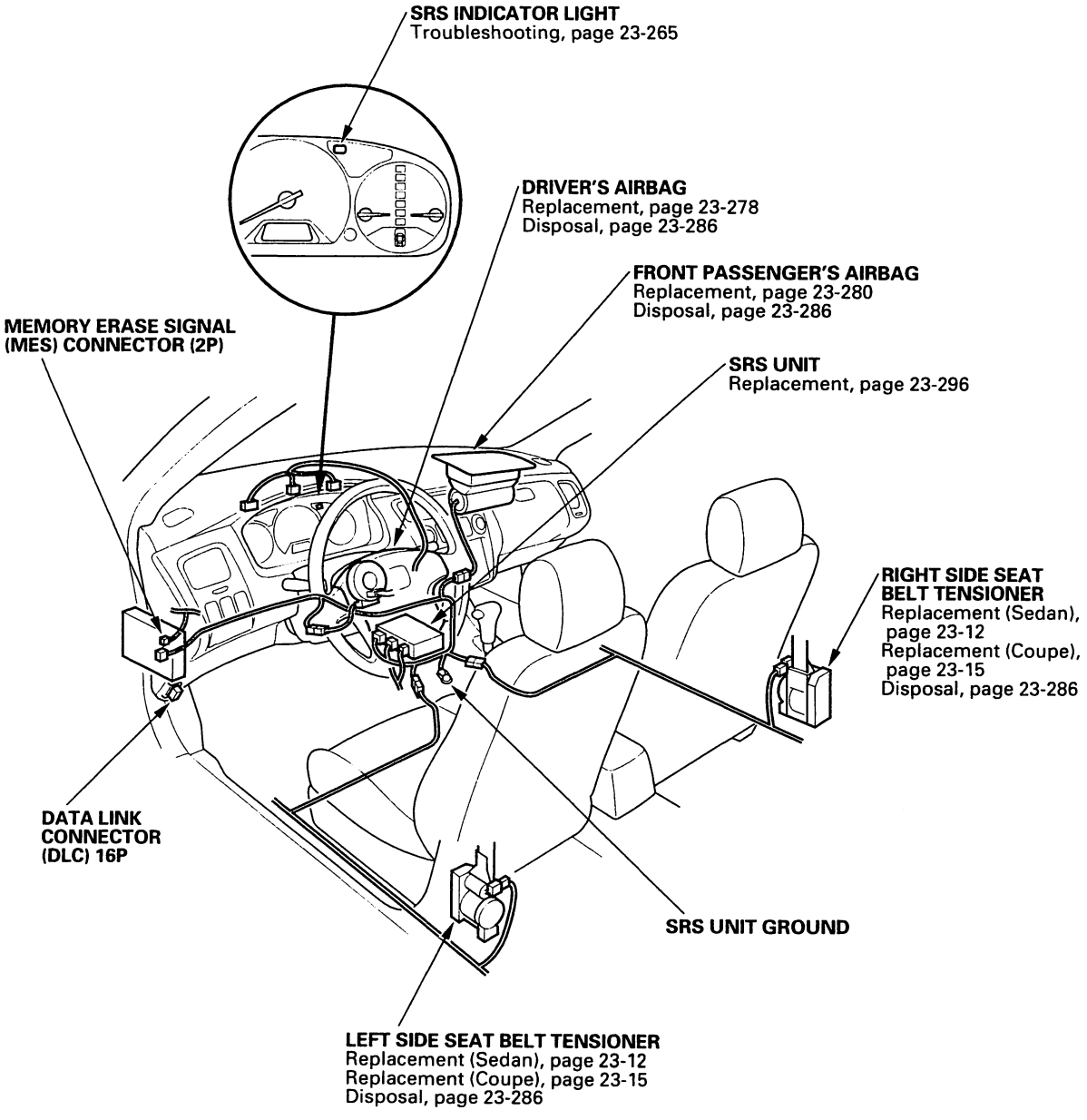

Precautions and Procedures

General Precautions

Please read the following precautions carefully before performing airbag system service. Observe the instructions described in this manual, or the airbags could accidentally deploy and cause damage or injuries.

- Except when performing electrical inspections, always turn the ignition switch OFF and disconnect the negative cable from the battery, and wait at least 3 minutes before beginning work.

  NOTE: The contents in the memory is not erased even if the ignition switch is turned OFF or the battery cables are disconnected from the battery.

- Use the replacement parts which are manufactured to the same standards as the original parts and quality. Do not install used SRS parts from another vehicle. Use only new parts when making SRS repairs.

- Carefully inspect any SRS part before you install it. Do not install any part that shows signs of being dropped or improperly handled, such as dents, cracks, or deformation.

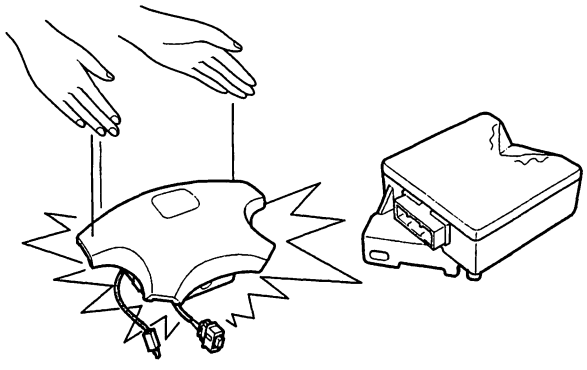

- Before removing any of the SRS parts (including the disconnection of the connectors), always disconnect the SRS connector.

- Use only a digital multimeter to check the system. If it is not a Honda multimeter, make sure its output is 10 mA (0.01 A) or less when switched to the lowest value in the ohmmeter range. A tester with a higher output could cause accidental deployment and possible injury.

- Do not put objects on the front passenger's airbag.

- The original radio has a coded theft protection circuit. Be sure to get the customer's radio code and write down the frequencies for the radio's preset stations before disconnecting the battery cable.

- Before returning the vehicle to the customer, enter the radio code, then enter the customer's radio station presets, and set the clock.

Airbag Handling and Storage

Do not disassemble an airbag. It has no serviceable parts. Once an airbag has been deployed, it cannot be repaired or reused.

For temporary storage of the airbag during service, please observe the following precautions.

- Store the removed airbag with the pad surface up. Never put anything on the removed airbag.

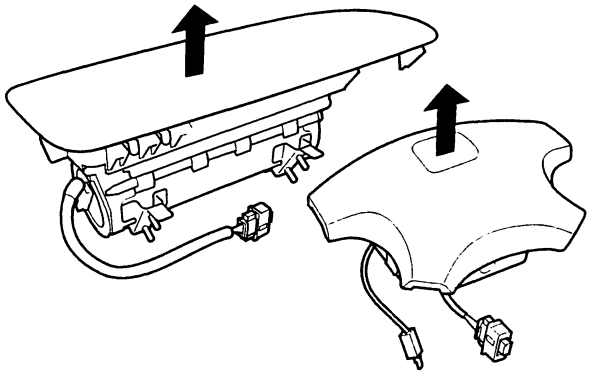

- Keep free from any oil, grease, detergent, or water to prevent damage to the airbag assembly.

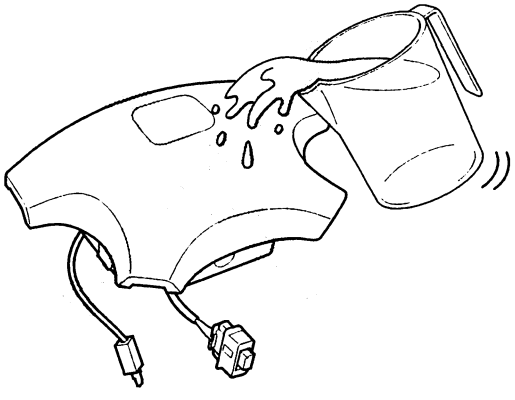

- Store the removed airbag on a secure, flat surface away from any high heat source (exceeding 200° F/ 93° C).

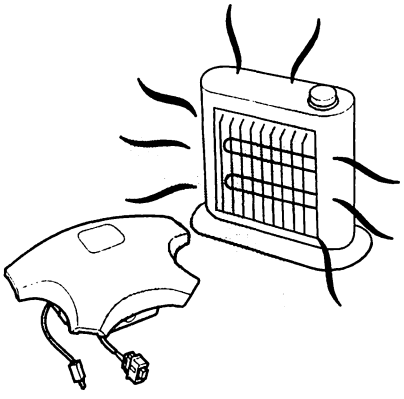

- Never perform electrical inspections to the airbags, such as measuring resistance.
- Do not position yourself in front of the airbag assembly during removal, inspection, or replacement.

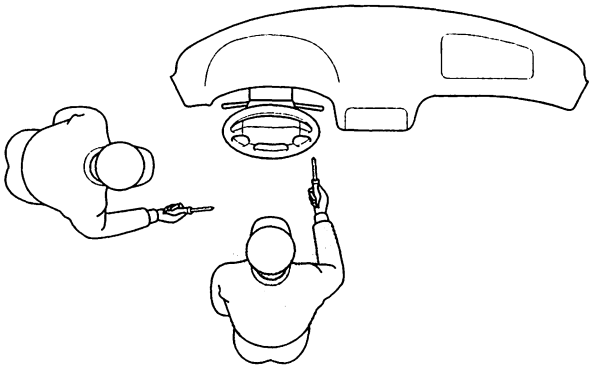

- Refer to the scrapping procedures for disposal of the damaged airbag.

(cont'd)

Precautions and Procedures (cont'd)

SRS Unit-'98-01 models and Side Impact Sensors-'00-02 models with Side Airbags

- Be careful not to bump or impact the SRS unit or the side impact sensors whenever the ignition switch is ON (II), or at least for three minutes after the ignition switch is turned OFF.

- During installation or replacement, be careful not to bump (by impact wrench, hammer, etc.) the area around the SRS unit and the side impact sensor. The airbags could accidentally deploy and cause damage or injury.

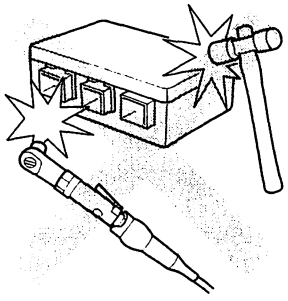

- After a collision in which any airbags or seat belt tensioners ('01-02 models) were deployed, replace the SRS unit and other related components.
  After a collision in which the side airbag was deployed, replace the side impact sensor on the deployed side and the SRS unit. After a collision in which the airbags or the side airbags did not deploy, inspect for any damage or any deformation on the SRS unit and the side impact sensors . If there is any damage, replace the SRS unit and/or the side impact sensors.

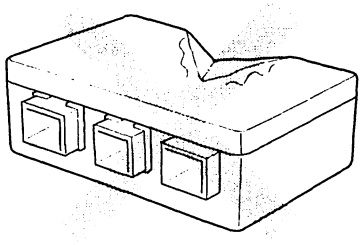

- Do not disassemble the SRS unit or the side impact sensors.

- Turn the ignition switch OFF, disconnect the battery negative cable, and wait at least 3 minutes before beginning installation or replacement of the SRS unit, or disconnecting the connectors from the SRS unit.

- Be sure the SRS unit and side impact sensors are installed securely, with the mounting bolts torqued to 9.8 N·m (1.0 kgf·m, 7.2 lbf·ft)

- Do not spill water or oil on the SRS unit or the side impact sensors, and keep them away from dust.

- Store the SRS unit and the side impact sensors in a cool (less than 104°F/40°C) and dry (less than 80% relative humidity, no moisture) area.

BACK

Steering-related Precautions

Cable Reel Alignment

- Misalignment of the cable reel could cause an open in the wiring, making the SRS system and the horns inoperative. Center the cable reel whenever the following is performed (see step 6 on page 23-291).

  - Installation of the steering wheel
  - Installation of the cable reel
  - Installation of the steering column
  - Other steering-related adjustment or installation

- Do not disassemble the cable reel.

- Do not apply grease to the cable reel.

- If the cable reel shows any signs of damage, replace it with a new one. For example, it does not rotate smoothly.

(cont'd)

Precautions and Procedures (cont'd)

Wiring Precautions

SRS wiring can be identified by special yellow outer covering (except the SRS indicator light circuit). Observe the instructions described in this section.

- Never attempt to modify, splice, or repair SRS wiring. If there is an open or damage in SRS wiring, replace the harness.

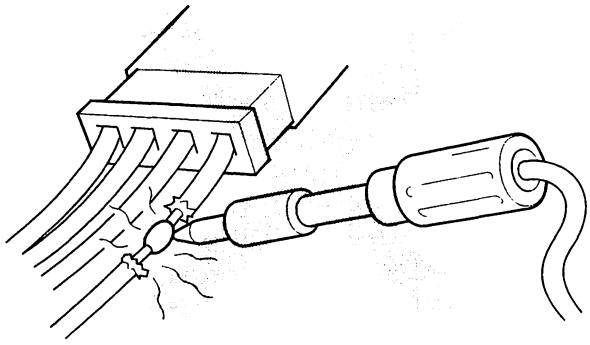

- Be sure to install the harness wires so they do not get pinched or interfere with other parts.

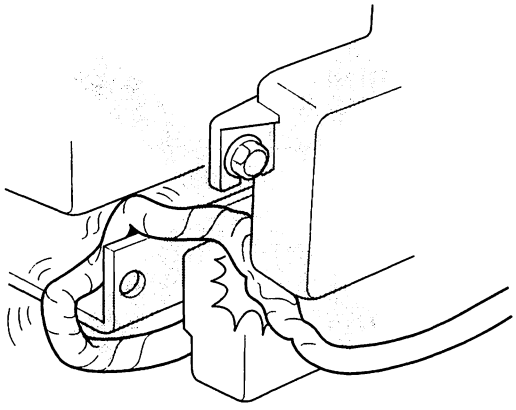

- Make sure all SRS ground locations are clean, and grounds are securely fastened for optimum metal-to-metal contact. Poor grounding can cause intermittent problems that are difficult to diagnose.

Precautions for Electrical Inspections

- When using electrical test equipment, insert the probe of the tester into the wire side of the connector. Do not insert the probe of the tester into the terminal side of the connector, and do not tamper with the connector.

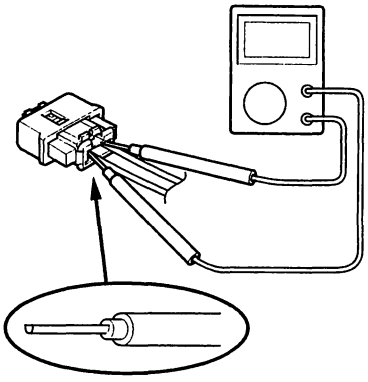

- Use a U-shaped probe. Do not insert the probe forcibly.

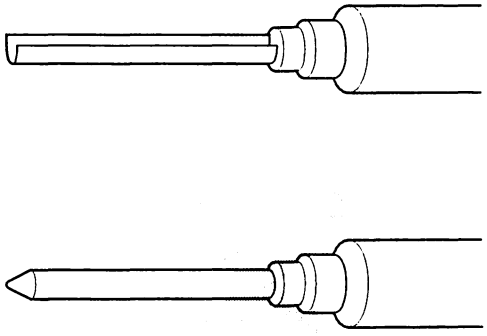

- Use specified service connectors in troubleshooting. Using improper tools could cause an error in inspection due to poor metal-to-metal contact.

BACK

Spring-loaded Lock Connector

Some SRS system connectors have a spring-loaded lock.

Front Airbag Connectors:

Disconnecting
To release the lock, pull the spring-loaded sleeve (A) toward the stop (B) while holding the opposite half of the connector. Then pull the connector halves apart. Be sure to pull on the sleeve and not on the connector half.

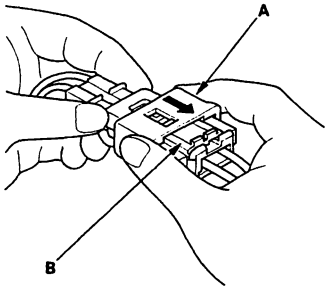

Connecting

1. To reconnect, hold the pawl-side connector half, and press on the back of the sleeve-side connector half in the direction shown. As the two connector halves are pressed together, the sleeve (A) is pushed back by the pawl (C). Do not touch the sleeve.

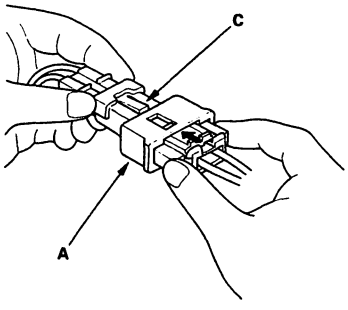

2. When the connector halves are completely connected, the pawl is released, and the spring-loaded sleeve locks the connector.

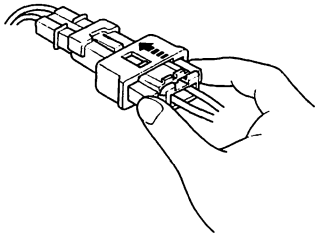

Side Airbag Connector:

Disconnecting
To release the lock, pull the spring-loaded sleeve (A) and the slider (B) while holding the opposite half of the connector. Then pull the connector halves apart. Be sure to pull on the sleeve and not on the connector half.

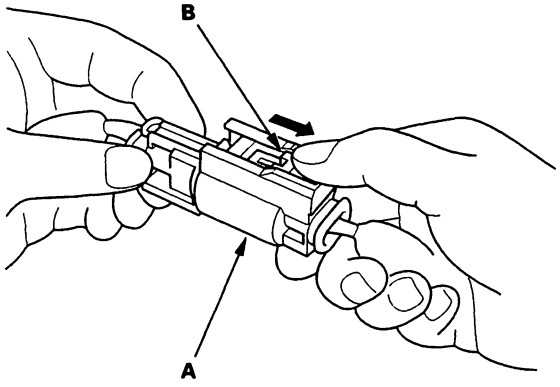

Connecting
Hold both connector halves, and press them firmly together until the projection (C) of the sleeve-side connector clicks.

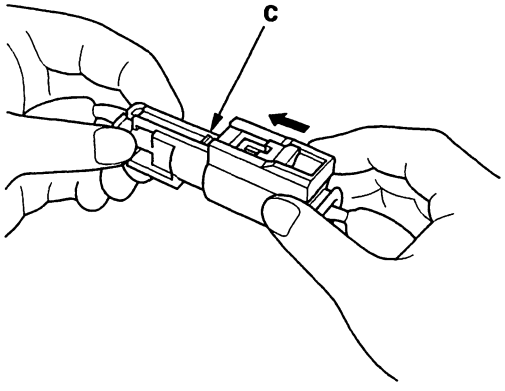

(cont'd)

Precautions and Procedures (cont'd)

Backprobing Spring-loaded Lock Connectors

When checking voltage or resistance on this type of connector the first time, you must remove the retainer to insert the tester probe from the wire side.

NOTE: It is not necessary to reinstall the removed retainer; the terminals will stay locked in the connector housing.

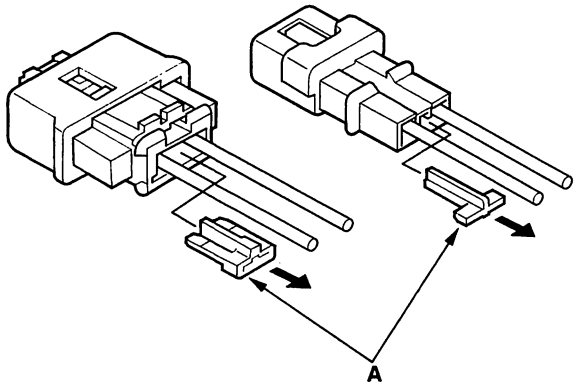

To remove the retainer (A), insert a flat-tip screwdriver (B) between the connector body and the retainer, then carefully pry out the retainer. Take care not to break the connector.

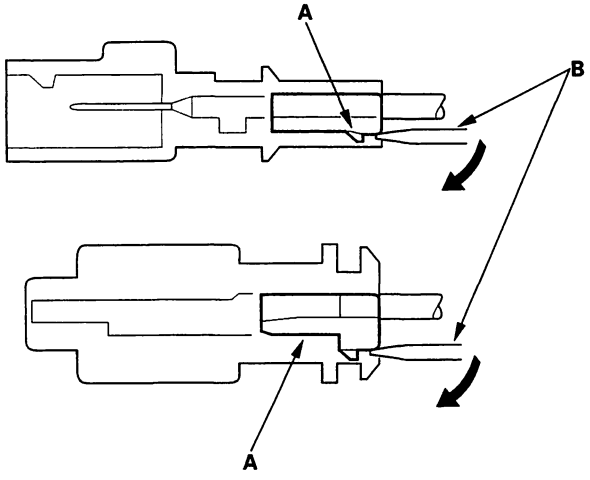

Seats with Side Airbags

Seats with side airbags have a "SIDE AIRBAG" label on the seat-back. Because the component parts (seat-back cover, cushion, etc.) of seats with and without airbags are different, make sure you install only the correct replacement parts.

Because the seats are made by more than one manufacturer, make sure you replace any seat components (seat-back cover, frame, etc.) with the correct parts. The name of the seat manufacturer is indicated on the seat-back.

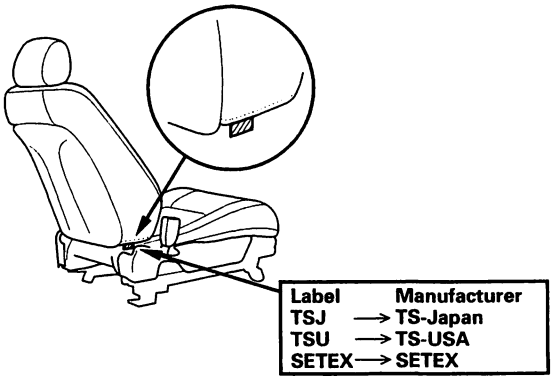

The manufacturer name is also on the seat-back frame and the seat-back pad. Confirm the name when you exchange these parts.

- When cleaning, do not saturate the seat with liquid, and do not spray steam on the seat.
- Do not repair torn or frayed seat-back covers. Replace the seat-back cover.
- After a collision in which the side airbag was deployed, replace the seat-back cover and the side airbag with new parts. If the seat-back cushion is split, it must be replaced. If the seat-back frame is deformed, it must be replaced.
- Never put after market accessories on the seat (covers, pads, seat heaters, etc.).

BACK

Disconnecting the Airbag Connectors

'98-99 Models

Before removing the airbag or SRS related devices (the SRS unit and the cable reel), disconnecting connectors from SRS related devices, or removing the dashboard or the steering column, disconnect the airbag connectors from the airbags to prevent accidental deployment.
Turn the ignition switch OFF and disconnect the negative cable from the battery, and wait at least 3 minutes before beginning the following procedures.

- Before disconnecting the SRS main harness (A) from the SRS unit, disconnect both airbags (C, D).
- Before disconnecting the cable reel 2P connector (B), disconnect the driver's airbag 2P connector (C).

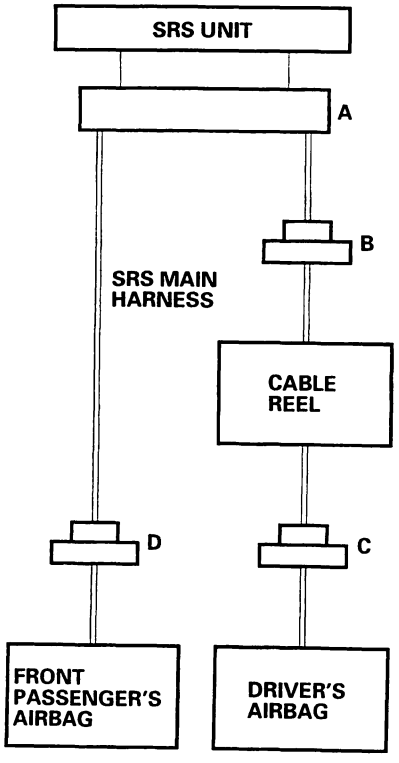

Disconnect the negative battery cable, and wait at least 3 minutes.

Driver's Airbag:

Remove the access panel from the steering wheel, then disconnect the driver's airbag 2P connector (A) and cable reel 2P connector (B).

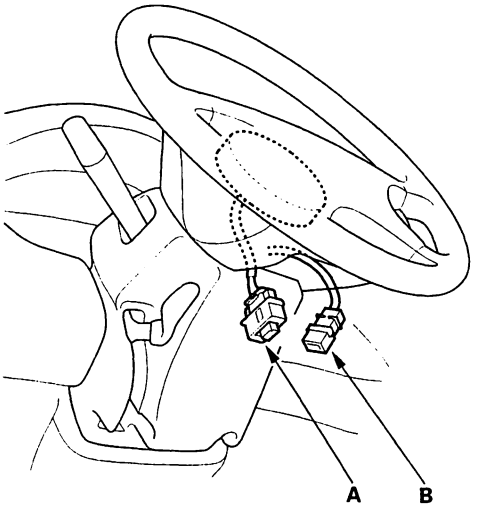

Front Passenger's Airbag:

Remove the glove box, then disconnect the front passenger's airbag 2P connector (A) and SRS main harness 2P connector (B).

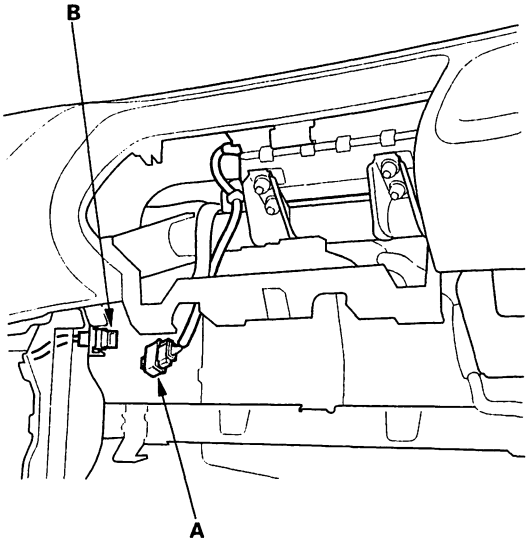

(cont'd)

Precautions and Procedures (cont'd)

Disconnecting the Airbag Connectors and Side Airbag Connectors

'00 Model-Sedan

Before removing a front airbag, side airbag or other SRS related devices (the SRS unit, the cable reel and the side impact sensors), disconnecting connectors from related devices, or removing the dashboard or the steering column, disconnect the airbag connectors or the side airbag connectors to prevent accidental deployment.
Turn the ignition switch OFF and disconnect the negative cable from the battery, and wait at least 3 minutes before beginning the following procedures.

- Before disconnecting SRS unit connector A (18P) (A) from the SRS unit, disconnect the driver's airbag 2P connector (C) and front passenger's airbag 4P connentor (D).
- Before disconnecting SRS unit connector B (14P) (E) from the SRS unit, disconnect both side airbag 2P connectors (F, G).
- Before disconnecting the cable reel 2P connector (B), disconnect the driver's airbag 2P connector (C).

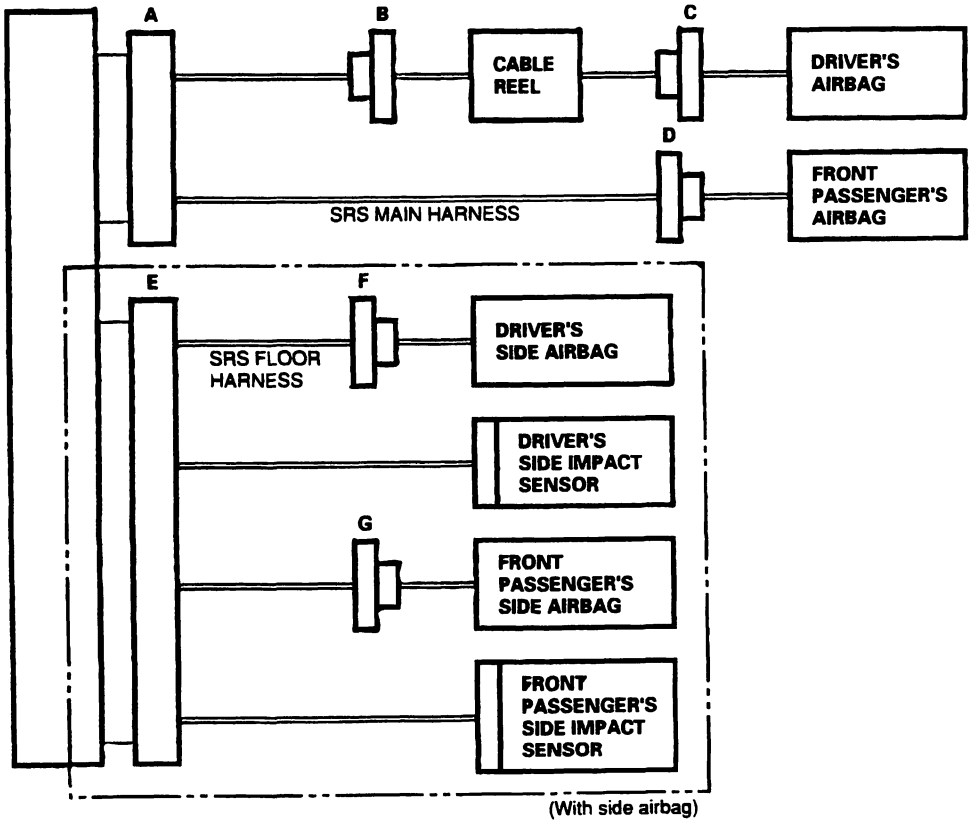

BACK

Disconnecting the Airbag Connectors and Side Airbag Connectors

'00 Model-Coupe

Before removing a front airbag, side airbag or other SRS related devices (the SRS unit, the cable reel and the side impact sensors), disconnecting connectors from related devices, or removing the dashboard or the steering column, disconnect the airbag connectors or the side airbag connectors to prevent accidental deployment.
Turn the ignition switch OFF and disconnect the negative cable from the battery, and wait at least 3 minutes before beginning the following procedures.

- Before disconnecting SRS unit connector A (18P) (A) from the SRS unit, disconnect the driver's airbag 2P connector (C) and the front passenger's airbag 4P connector (D).
- Before disconnecting SRS unit connector B (14P) (E) from the SRS unit, disconnect both side airbag 2P connectors (G, I).
- Before disconnecting the cable reel 2P connector (B), disconnect the driver's airbag 2P connector (C).
- Before disconnecting the left side wire harness 4P connector C556 (F), disconnect the driver's side airbag 2P connector (G).
- Before disconnecting the right side wire harness 4P connector C584 (H), disconnect the front passenger's side airbag 2P connector (I).

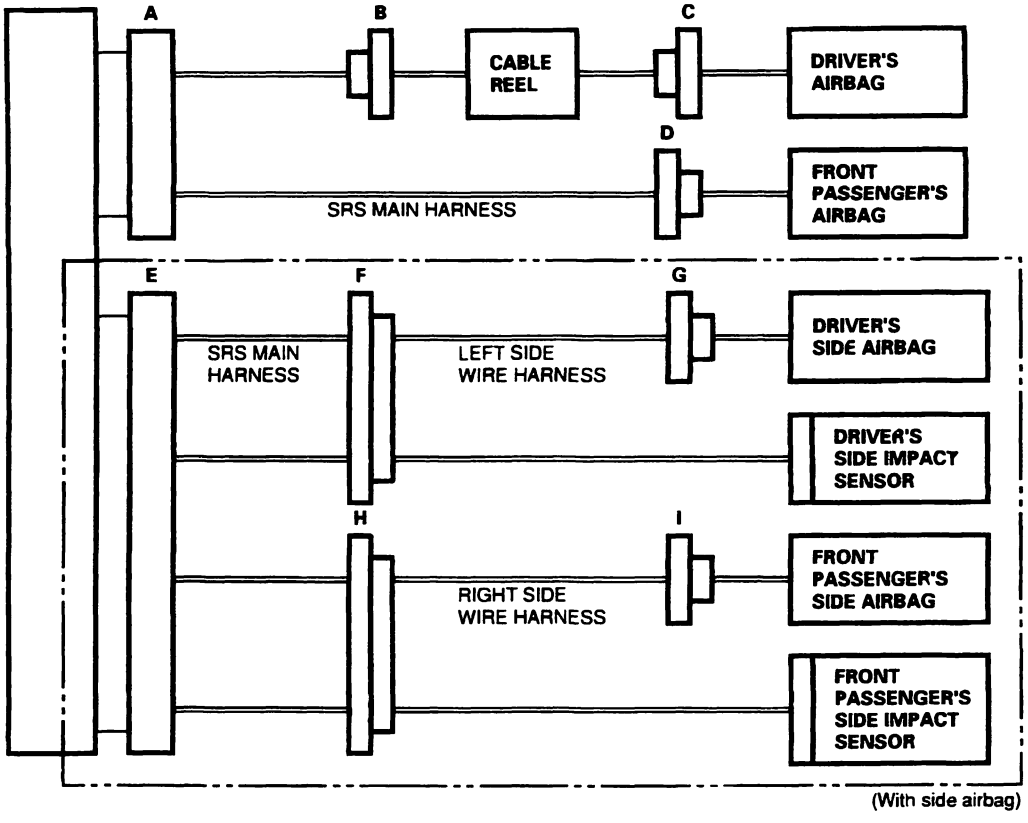

(cont'd)

Precautions and Procedures (cont'd)

Disconnecting the Airbag Connectors and Side Airbag Connectors

'00 Model

1. Disconnect the negative battery cable, and wait at least 3 minutes.

Driver's Airbag

2. Remove the access panel from the steering wheel, then disconnect the driver's airbag 2P connector (A) and cable reel 2P connector (B).

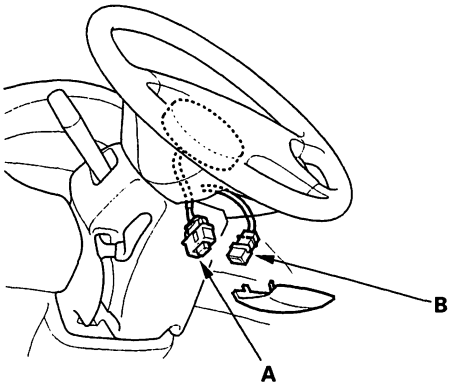

Front Passenger's Airbag

3. Remove the glove box, then disconnect the front passenger's airbag 4P connector (A) and SRS main harness 4P connector (B).

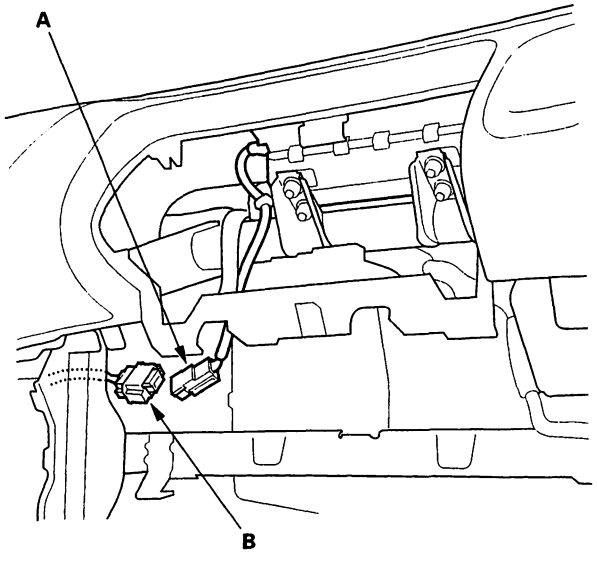

Side Airbag

4. Disconnect the side airbag 2P connector (A) from the SRS floor harness 2P connectors (B) or both side wire harness 2P connectors (B).

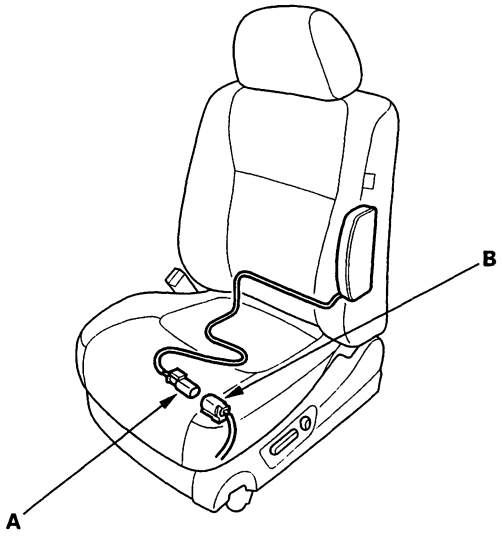

BACK

Disconnecting the Airbag Connectors, Side Airbag Connectors, and Seat Belt Tensioner Connectors

'01-02 Models

Before removing a front airbag, side airbag, or other SRS related devices (the SRS unit, the cable reel, the side impact sensor and the seat belt tensioner connector), disconnecting connectors from related devices, or removing the dashboard or the steering column, disconnect the airbag connectors or the side airbag connectors to prevent accidental deployment.
Turn the ignition switch OFF and disconnect the negative cable from the battery, and wait at least 3 minutes before beginning the following procedures.

- Before disconnecting SRS unit connector A (18P) (A) from the SRS unit, disconnect the driver's airbag 4P connector (C), front passenger's airbag 4P connector (D), and both seat belt tensioner 2P connectors (F, H).
- Before disconnecting SRS unit connector B (14P) (I) from the SRS unit, disconnect both side airbag 2P connectors (K, M).
- Before disconnecting the cable reel 4P connector (B), disconnect the driver's airbag 4P connector (C).
- Before disconnecting the driver's side wire harness 4P connector C557 (E), disconnect the left side seat belt tensioner 2P connector (F).
- Before disconnecting the passenger's side wire harness 4P connector C583 (Coupe) or C584 (Sedan) (G), disconnect the right side seat belt tensioner 2P connector (H).
- Before disconnecting the driver's side wire harness 4P connector (J), disconnect the driver's side airbag 2P connector (K).
- Before disconnecting the passenger's side wire harness 4P connector (L), disconnect the front passenger's side airbag 2P connector (M).

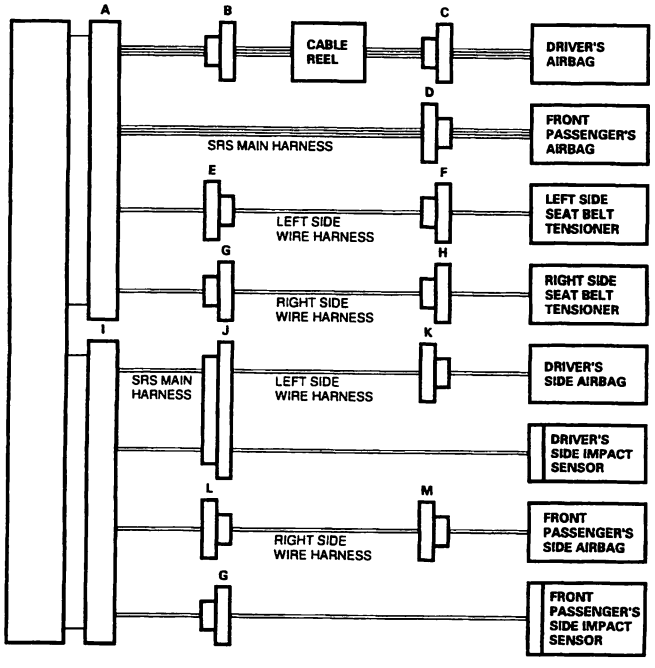

(cont'd)

Precautions and Procedures (cont'd)

Disconnecting the Airbag Connectors and Side Airbag Connectors

'01-02 Models

1. Disconnect the battery negative cable, and wait at least 3 minutes.

Driver's Airbag

2. Remove the access panel from the steering wheel, then disconnect the driver's airbag 4P connector (A) and cable reel 4P connector (B).

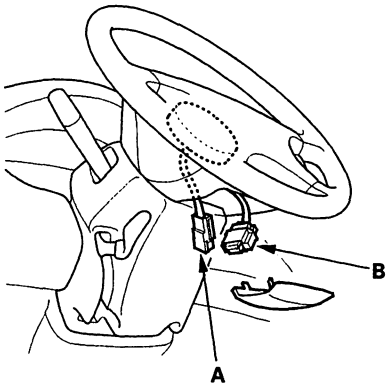

Front Passenger's Airbag

3. Remove the glove box, then disconnect the front passenger's airbag 4P connector (A) and SRS main harness 4P connector (B).

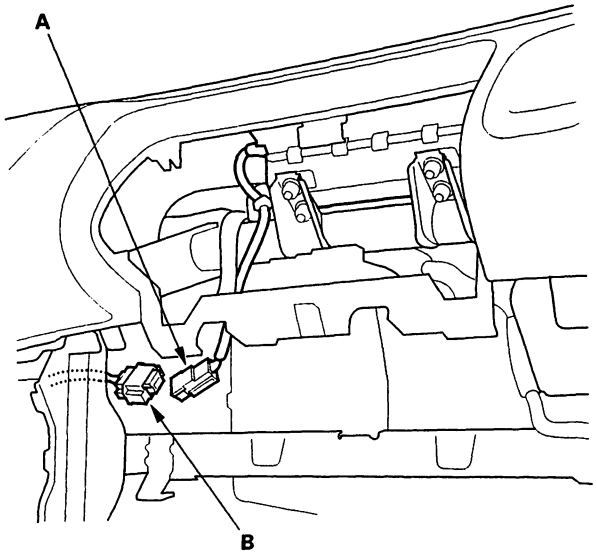

Side Airbag

4. Disconnect the side airbag 2P connector (A) from the SRS floor harness 2P connector (B) or both side wire harness 2P connectors (B).

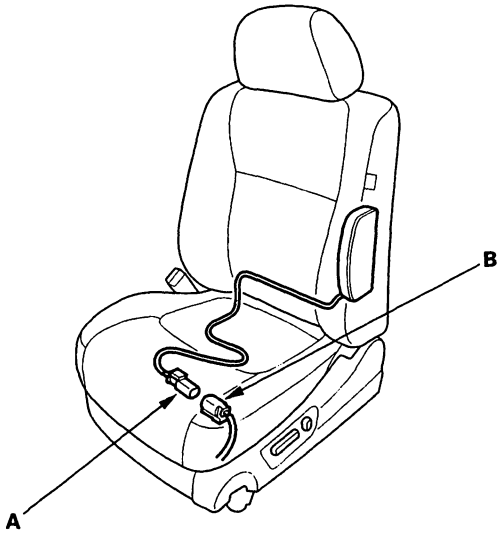

Seat Belt Tensioner

5. Disconnect both seat belt tensioner 2P connectors (A) from the side wire harness 2P connectors (B).

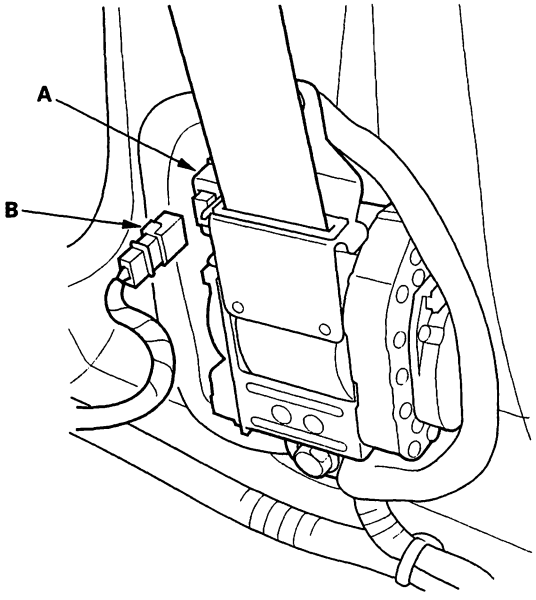

BACK

General Troubleshooting Information

DTC (Diagnostic Trouble Codes)

The self-diagnostic function of the SRS system allows it to locate the causes of system problems and then store this information in memory. For easier troubleshooting, this data can be retrieved via a data link circuit.

- When you turn the ignition switch ON (II), the SRS indicator will come on. If it goes off after 6 seconds, the system is normal.
- If there is an abnormality, the system locates and defines the problem, stores this information in memory, and turns the SRS indicator light on. The data will remain in the memory even when the ignition switch is turned off or if the battery is disconnected.
- When you connect the Honda PGM Tester to the 16P Data Link Connector (DLC) to short the SCS terminal, and turn the ignition switch ON (II), the SRS indicator light will indicate the diagnostic trouble code (DTC) by the number of blinks.
- After reading and recording the DTC, proceed with the troubleshooting procedure for the code indicated.

Precautions

- Use only a digital multimeter to check the system. If it's not a Honda multimeter, make sure it's output is 10 mA (0.01 A) or less when switched to the smallest value in the ohmmeter range. A tester with a higher output could damage the airbag circuit or cause accidental airbag deployment and possible injury.
- Whenever the ignition switch is ON (II), or has been turned OFF for less than 3 minutes, be careful not to bump the SRS unit; the airbags could accidentally deploy and cause damage or injuries.
- Before you remove the SRS main harness, disconnect the driver's airbag connector and the front passenger's airbag connector.
- Before you remove the SRS main harness or SRS floor harness, disconnect the driver's side airbag connector and the front passenger's side airbag connector (on model with side airbags).
- Make sure the battery is sufficiently charged. If the battery is dead or low, the measured values won't be correct.
- Do not touch a tester probe to the terminals in the SRS unit or harness connectors, and do not connect the terminals with a jumper wire. Use only the backprobe set to backprobe spring-loaded lock type connectors (see step 1 on page 23-33).

Reading the DTC

When the SRS indicator light is on, read the DTC using either of the following methods:

Honda PGM Tester "SRS" Menu Method

Connect the Honda PGM Tester (A) to the 16P DLC (B), and follow the Tester's prompts in the "SRS" menu. If the Tester indicates no DTC, DTC 9-1, or DTC 9-2, double-check by selecting "SCS" on the display, and watching the SRS indicator light.

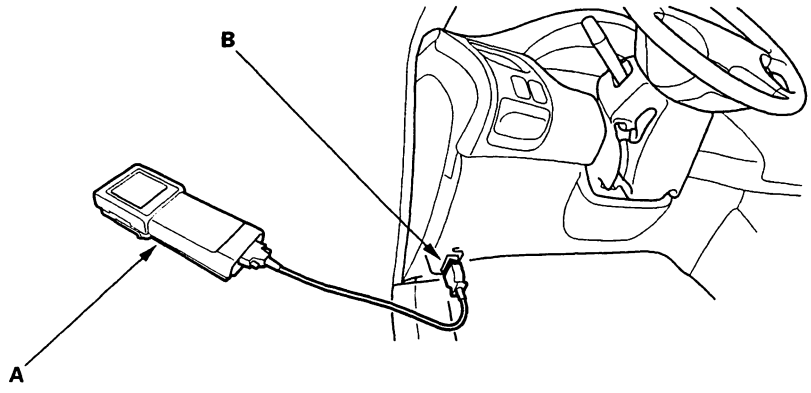

(cont'd)

General Troubleshooting Information (cont'd)

Honda PGM Tester "SCS" Menu Method (retrieving the flash codes) -'98-99 Models
The SRS indicator light (A) indicates the DTC by the number of blinks when the Honda PGM Tester (C) is connected to the DLC (B).

1. Make sure the ignition switch is OFF.
2. Connect the Honda PGM Tester (C) to the DLC (16P)(B), and follow the Tester's prompts in the"SCS"menu (see the Honda PGM Tester Operator's Manual).

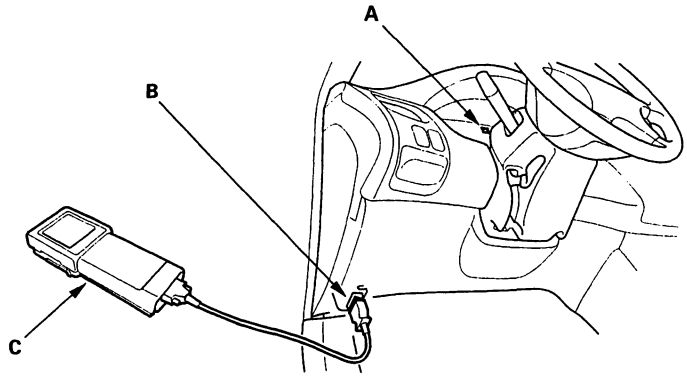

3. Turn the ignition switch ON (II). The SRS indicator light (A) comes on for about 6 seconds, and then goes off. Then it will blink to indicate the DTCs (see the table below).

- The DTC consists of a main code and a sub-code.
- Including the most recent problem, up to 3 different malfunctions can be indicated.
- In case of a continuous failure, the DTC will be indicated repeatedly (see example 1 below).
- In case of an intermittent failure, the SRS indicator light will indicate the DTC one time, then it will stay on (see example 2 below).
- If a continuous and an intermittent failure occur at the same time, both DTCs will be indicated as continuous failures.
- When the system is normal (no DTCs), the SRS indicator light will stay on (see example 3).

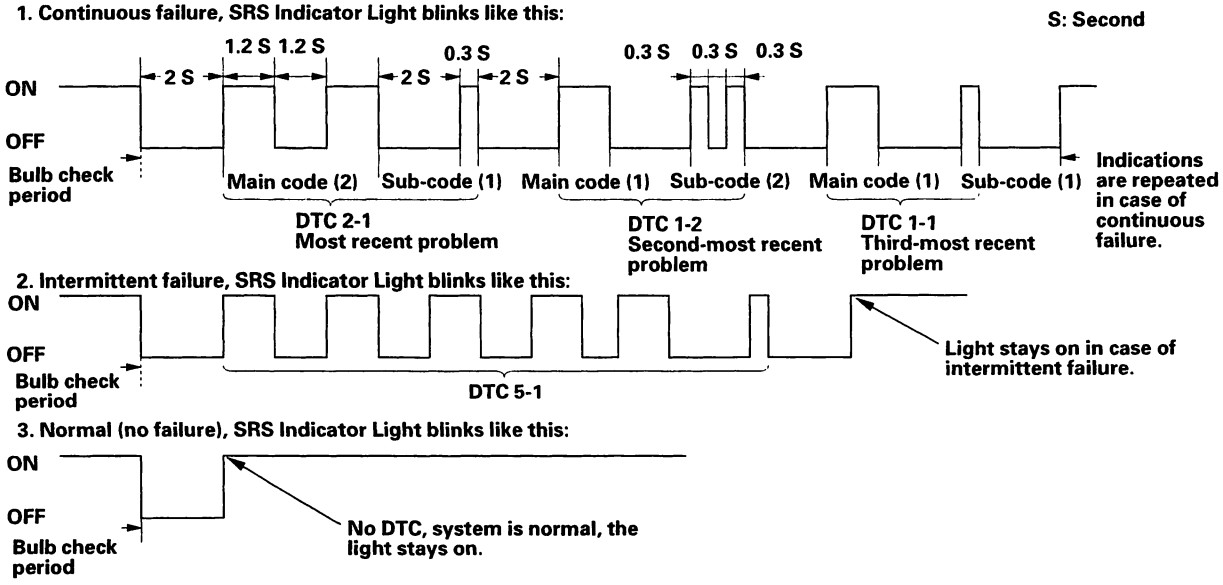

4. Read the DTC (proceed with the troubleshooting procedure for this DTC).
5. Turn the ignition switch OFF, and wait for 10 seconds.
6. Disconnect the Honda PGM Tester from the DLC (16P).

BACK

Honda PGM Tester "SCS" Menu Method (retrieving the flash codes) -'00-02 Models

The SRS indicator light (A) indicates the DTC by the number of blinks when the Honda PGM Tester (C) is connected to the DLC (16P) (B).

1. Make sure the ignition switch is OFF.
2. Connect the Honda PGM Tester (C) to the DLC (16P) (B), and follow the Tester's prompts in the "SCS" menu (see the Honda PGM Tester Operator's Manual).

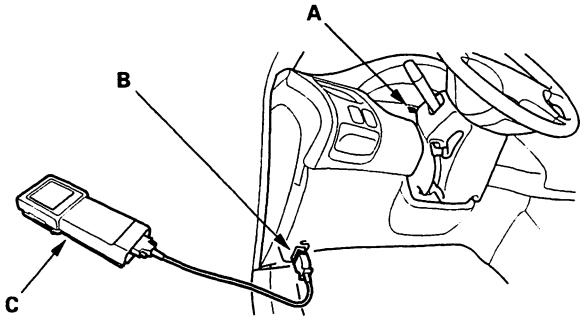

3. Turn the ignition switch ON (II). The SRS indicator light (A) comes on for about 6 seconds, and then goes off. Then it will blink to indicate the DTCs (see the table below).
4. Read the DTC (proceed with the troubleshooting procedure for this DTC).
5. Turn the ignition switch OFF, and wait for 10 seconds.
6. Disconnect the Honda PGM Tester (C) from the DLC (16P) (B).

Patterns of DTC Indications:

The DTC consists of a main code and sub-code.

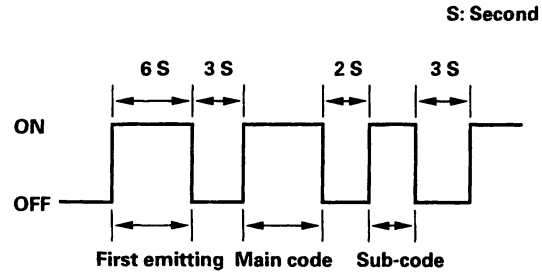

Reading the main code:

In case of 1 ~ 10
Count the number of the blinks.

Example:

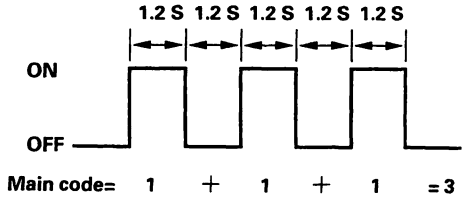

In case of 11 ~ 15
Four continuous blinks count as ten.
Add any further blink together as shown.

Example:

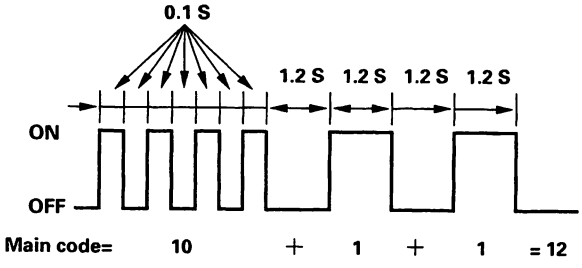

Reading the sub code:

Count the number of the blinks.

Example:

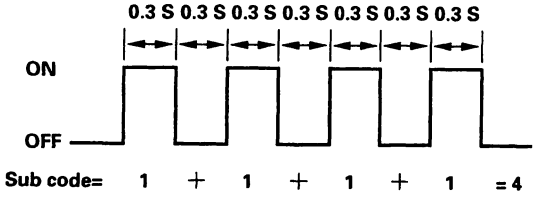

In case of main code is '3', sub code is '4', record a DTC 3-4.

(cont'd)

General Troubleshooting Information (cont'd)

- Including the most recent problem, up to three different malfunctions can be indicated (see example 1 below).
- In case of a continuous failure, the DTC will be indicated repeatedly (see example 1 below).
- In case of an intermittent failure, the SRS indicator light will indicate the DTC one time, then it will stay on (see example 2 below).
- If both a continuous and an intermittent failure occur, both DTCs will be indicated as continuous failures.
- When the system is normal (no DTCs), the SRS indicator light will stay on (see example 3).
- If the SRS indicator light comes on continuously without a DTC, there may be a problem with the system.
- If the SRS indicator light does not come on, always check for an open or a short to ground in the SCS circuit before troubleshooting the system.

Example of the DTC Indications:

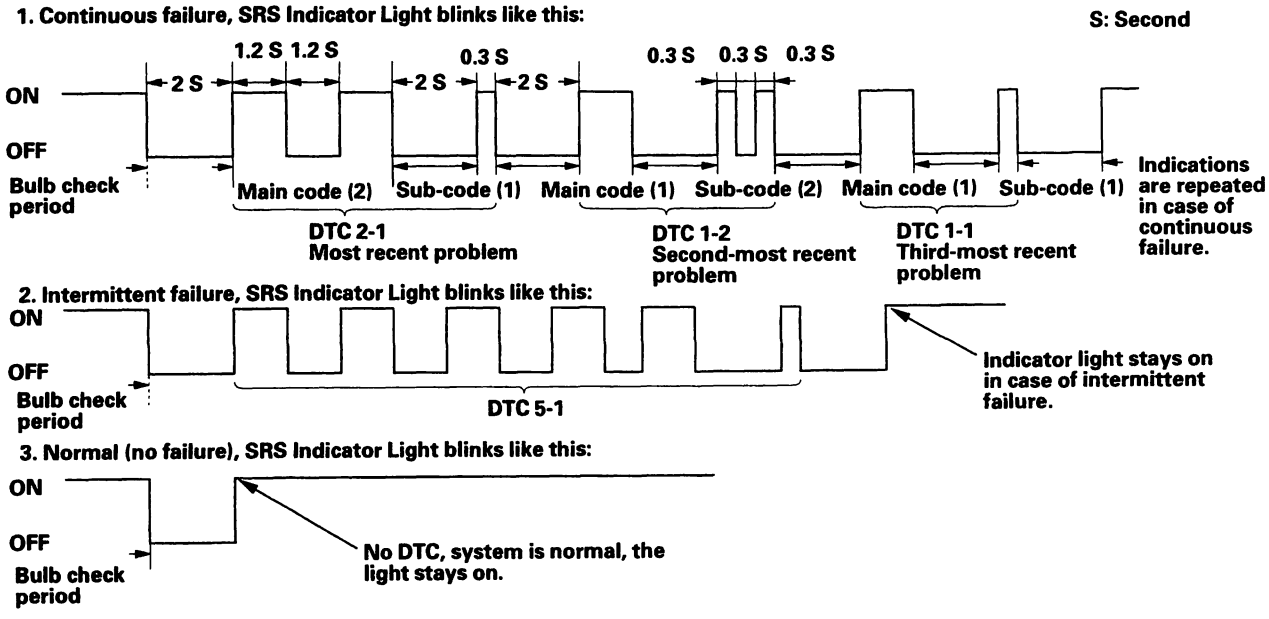

BACK

Erasing the DTC Memory

Special Tools Required
SCS Service Connector 07PAZ-0010100

To erase the DTC(s) from the SRS unit, use a Honda PGM Tester (see the Honda PGM Tester SRS Vehicle System Supplement) or the following procedure.

1. Make sure the ignition switch is OFF.

2. Connect the SCS service connector (A) to the MES connector (2P)(B). Do not use a jumper wire.

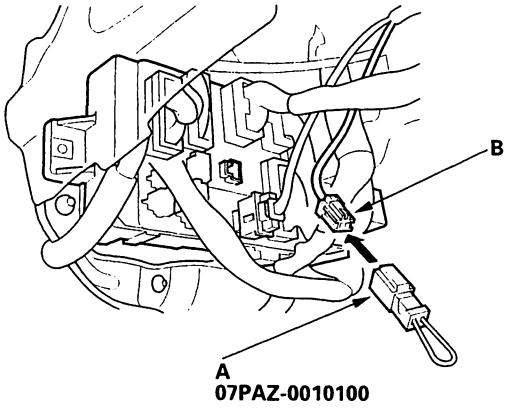

3. Turn the ignition switch ON (II).

4. The SRS indicator light will come on for about 6 seconds, and then go off. Remove the SCS service connector from the MES connector (2P) within 4 seconds after the light goes off.

5. The SRS indicator light will come on again. Reconnect the SCS service connector to the MES connector (2P) within 4 seconds after the light comes on.

6. When the SRS indicator light goes off, remove the SCS service connector from the MES connector (2 P) within 4 seconds.

7. The SRS indicator light will blink two times indicating that the memory has been erased.

8. Turn the ignition switch OFF, and wait for 10 seconds.

9. Turn the ignition switch ON (II) again. The SRS is OK if the SRS indicator light comes on for 6 seconds, and then goes off.

Troubleshooting Intermittent Failures

If there was a malfunction, but it doesn't recur, it will be stored in the memory as an intermittent failure, and the SRS indicator light will come on.

After checking the DTC, troubleshoot as follows:

1. Read the DTC (see "Reading the DTC").

2. Erase the DTC memory (see "Erasing the DTC Memory").

3. With the shift lever in Park or neutral, start the engine, and let the engine idle.

4. The SRS indicator light will come on for about 6 seconds and then go off.

5. Shake the wire harness and the connectors, take a test drive (quick acceleration, quick braking, cornering), turn the steering wheel fully left and right, and hold it there for 5 to 10 seconds. If the problem recurs, the SRS indicator light will come on.

6. If you can't duplicate the intermittent failure, the system is OK at this time.

(cont'd)

General Troubleshooting Information (cont'd)

Initializing the OPDS (Occupant Position Detection System) Unit-'00-02 Models with side airbags

When a seat-back cover, seat-back cushion, and/or OPDS unit is replaced with a new one, initialize the OPDS by following the procedure below.

1. Set the seat-back in the normal position, and make sure there is nothing on the front passenger's seat.
2. Make sure the front passenger's seat is dry. If it is not dry, start the engine, and turn on the air conditioning system for 30 minutes to dry any moisture from it.
3. Turn the ignition switch OFF.
4. Connect the Honda PGM Tester (A) to the DLC (16P) (B), and follow the Tester's prompts in the "SCS" menu (see the Honda PGM Tester Operator's Manual).
5. Connect the SCS service connector (C) to the MES connector (2P) (D). Do not use a jumper wire.

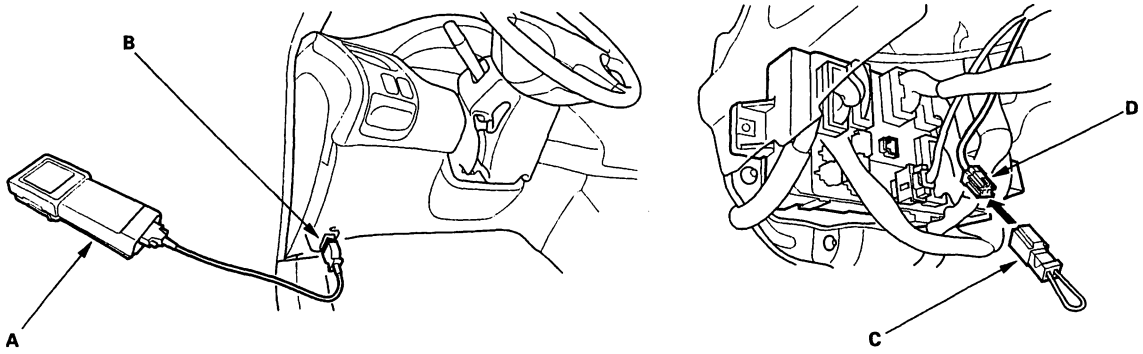

6. Turn the ignition switch ON (II).
7. The SRS indicator light comes on for about 6 seconds and goes off. Remove the SCS service connector from the MES connector within 4 seconds after the SRS indicator light went off.
8. The SRS indicator light comes on again. Reconnect the SCS service connector to the MES connector within 4 seconds after the SRS indicator light comes on.
9. The SRS indicator light goes off. Remove the SCS service connector from the MES connector within 4 seconds.
10. Watch the SRS indicator light.
    - If the indicator light blinks two times and then stays on, the OPDS is initialized, but the DTCs need to be erased. Go to step 11, then erase the DTCs.
    - If the indicator light blinks two times and then goes off, the OPDS unit is initialized. Go to step 11.
    - If the indicator light stays on without first blinking, the OPDS is not initialized. Read the DTC, and go to the appropriate page in the DTC Troubleshooting Index.
11. Turn the ignition switch off, and disconnect the PGM Tester.

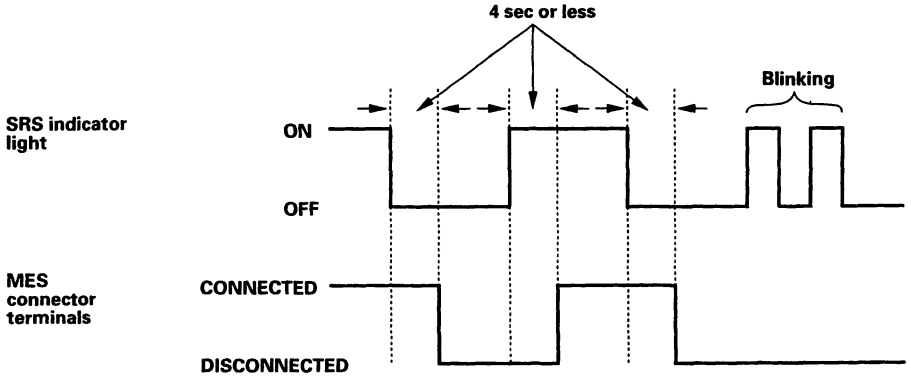

BACK

SRS Unit Identification

'98-02 Models

The troubleshooting procedures are different for each type of SRS unit. Identify the SRS unit in the vehicle using the chart below, then follow the proper flow chart in the following pages. The identification mark is at the end of the model number on the SRS unit.

MAKER	IDENTIFICATION MARK	NOTE
NEC	M1	'98-02 Models
KEIHIN	M2	'99 Model
SIEMENS	M3	'98-02 Models

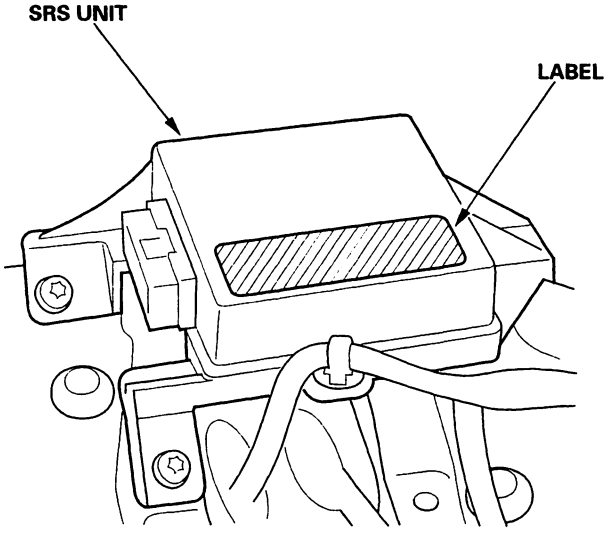

DTC Troubleshooting Index

'98-99 Models

NEC (M1) SRS unit

DTC	Detection Item	Notes
1-1	Open in driver's airbag inflator	(see page 23-74)
1-2	Increased resistance in driver's airbag inflator	(see page 23-74)
1-3	Short to another wire or decreased resistance in driver's airbag inflator	(see page 23-76)
1-4	Short to power in driver's airbag inflator	(see page 23-78)
1-5	Short to ground in driver's airbag inflator	(see page 23-80)
2-1	Open in front passenger's airbag inflator	(see page 23-82)
2-2	Increased resistance in front passenger's airbag inflator	(see page 23-82)
2-3	Short to another wire or decreased resistance in front passenger's airbag inflator	(see page 23-83)
2-4	Short to power in front passenger's airbag inflator	(see page 23-85)
2-5	Short to ground in front passenger's airbag inflator	(see page 23-86)
5-1	Internal failure of SRS unit NOTE: Before troubleshooting DTCs 5-1 through 8-2, check battery/system voltage. If voltage is low, repair the charging system before troubleshooting the DTCs.	(see page 23-106)
5-4		
6-1		
6-2		
6-3		
6-4		
7-1		
7-2		
7-3		
8-1		
8-2		
8-6	Internal failure of SRS unit or two failures at a time	(see page 23-89)
9-1	Internal failure of the SRS unit. If intermittent, it could mean internal failure of the unit or a faulty indicator light circuit. Refer to Troubleshooting Intermittent Failures (see page 23-45).	(see page 23-106)
9-2	Internal failure of the SRS unit. If intermittent, it could mean internal failure of the power supply (VB line). Refer to Troubleshooting Intermittent Failures (see page 23-45).	
10-1	SRS airbag deployed (SRS unit must be replaced)	(see page 23-88)

BACK

'99 Model

KEIHIN (M2) SRS unit

DTC	Detection Item	Notes
1-1	Open in driver's airbag inflator	(see page 23-74)
1-2	Increased resistance in driver's airbag inflator	(see page 23-74)
1-3	Short to another wire or decreased resistance in driver's airbag inflator	(see page 23-76)
1-4	Short to power in driver's airbag inflator	(see page 23-78)
1-5	Short to ground in driver's airbag inflator	(see page 23-80)
2-1	Open in front passenger's airbag inflator	(see page 23-82)
2-2	Increased resistance in front passenger's airbag inflator	(see page 23-82)
2-3	Short to another wire or decreased resistance in front passenger's airbag inflator	(see page 23-83)
2-4	Short to power in front passenger's airbag inflator	(see page 23-85)
2-5	Short to ground in front passenger's airbag inflator	(see page 23-86)
5-1	Internal failure of SRS unit NOTE: Before troubleshooting DTCs 5-1 through 8-6, check battery/system voltage. If voltage is low, repair the charging system before troubleshooting the DTCs.	(see page 23-106)
5-2		
5-3		
5-4		
6-1		
6-2		
6-3		
6-4		
7-1		
7-2		
7-3		
8-1		
8-2		
8-5		
8-6		
9-1	Internal failure of the SRS unit. If intermittent, it could mean internal failure of the unit or a faulty indicator light circuit. Refer to Troubleshooting Intermittent Failures (see page 23-45).	(see page 23-106)
9-2	Internal failure of the SRS unit. If intermittent, it could mean internal failure of the power supply (VB line). Refer to Troubleshooting Intermittent Failures (see page 23-45).	
10-1	SRS airbag deployed (SRS unit must be replaced)	(see page 23-88)

(cont'd)

DTC Troubleshooting Index (cont'd)

'98-99 Models

SIEMENS (M3) SRS unit

DTC	Detection Item	Notes
1-1	Open or increased resistance in driver's airbag inflator	(see page 23-74)
1-3	Short to another wire or decreased resistance in driver's airbag inflator	(see page 23-76)
1-4	Short to power in driver's airbag inflator	(see page 23-78)
1-5	Short to ground in driver's airbag inflator	(see page 23-80)
2-1	Open or increased resistance in front passenger's airbag inflator	(see page 23-82)
2-3	Short to another wire or decreased resistance in front passenger's airbag inflator	(see page 23-83)
2-4	Short to power in front passenger's airbag inflator	(see page 23-85)
2-5	Short to ground in front passenger's airbag inflator	(see page 23-86)
5-1	Internal failure of SRS unit NOTE: Before troubleshooting DTCs 5-1 through 8-6, check battery/system voltage. If voltage is low, repair the charging system before troubleshooting the DTCs.	(see page 23-106)
5-4		
6-3		
6-4		
7-1		
7-2		
7-3		
8-1		
8-2		
8-6		
9-1	Internal failure of the SRS unit. If intermittent, it could mean internal failure of the unit or a faulty indicator light circuit. Refer to Troubleshooting Intermittent Failures (see page 23-45).	(see page 23-106)
9-2	Internal failure of the SRS unit. If intermittent, it could mean internal failure of the power supply (VB line). Refer to Troubleshooting Intermittent Failures (see page 23-45).	
10-1	SRS airbag deployed (SRS unit must be replaced)	(see page 23-88)

BACK

'00 Model-Sedan-without side airbags

NEC (M1) SRS unit

DTC	Detection Item	Notes
1-1	Open in driver's airbag inflator	(see page 23-92)
1-2	Increased resistance in driver's airbag inflator	(see page 23-92)
1-3	Short to another wire or decreased resistance in driver's airbag inflator	(see page 23-94)
1-4	Short to power in driver's airbag inflator	(see page 23-96)
1-5	Short to ground in driver's airbag inflator	(see page 23-98)
2-1	Open in front passenger's airbag inflator	(see page 23-100)
2-2	Increased resistance in front passenger's airbag inflator	(see page 23-100)
2-3	Short to another wire or decreased resistance in front passenger's airbag inflator	(see page 23-101)
2-4	Short to power in front passenger's airbag inflator	(see page 23-103)
2-5	Short to ground in front passenger's airbag inflator	(see page 23-104)
5-1	Internal failure of SRS unit NOTE: Before troubleshooting DTCs 5-1 through 8-6, check battery/system voltage. If voltage is low, repair the charging system before troubleshooting the DTCs.	(see page 23-106)
5-2		
5-4		
5-5		
5-8		
6-1		
6-2		
6-3		
6-4		
7-1		
7-2		
7-3		
8-1		
8-2		
8-5		
8-6		
9-1	Internal failure of the SRS unit. If intermittent, it could mean internal failure of the unit or a faulty indicator light circuit. Refer to Troubleshooting Intermittent Failures (see page 23-45).	(see page 23-106)
9-2	Internal failure of the SRS unit. If intermittent, it could mean internal failure of the power supply (VB line). Refer to Troubleshooting Intermittent Failures (see page 23-45).	
9-3	Faulty driver's seat belt buckle switch	(see page 23-204)
9-4	Faulty front passenger's seat belt buckle switch	(see page 23-208)
10-1	Airbags deployed (SRS unit must be replaced)	(see page 23-106)

(cont'd)

DTC Troubleshooting Index (cont'd)

'00 Model-Sedan-with side airbags

SIEMENS (M3) SRS unit

DTC	Detection Item	Notes
1-1	Open or increased resistance in driver's airbag inflator	(see page 23-92)
1-3	Short to another wire or decreased resistance in driver's airbag inflator	(see page 23-94)
1-4	Short to power in driver's airbag inflator	(see page 23-96)
1-5	Short to ground in driver's airbag inflator	(see page 23-98)
2-1	Open or increased resistance in front passenger's airbag inflator	(see page 23-100)
2-3	Short to another wire or decreased resistance in front passenger's airbag inflator	(see page 23-101)
2-4	Short to power in front passenger's airbag inflator	(see page 23-103)
2-5	Short to ground in front passenger's airbag inflator	(see page 23-104)
5-1	Internal failure of SRS unit NOTE: Before troubleshooting DTCs 5-1 through 8-8, check battery/system voltage. If voltage is low, repair the charging system before troubleshooting the DTCs.	(see page 23-106)
5-2		
5-4		
5-8		
6-3		
6-4		
6-7		
6-8		
7-1		
7-2		
7-3		
8-1		
8-2		
8-3		
8-4		
8-5		
8-6		
8-7		
8-8		
9-1	Internal failure of the SRS unit. If intermittent, it could mean internal failure of the unit or a faulty indicator light circuit. Refer to Troubleshooting Intermittent Failures (see page 23-45).	(see page 23-106)
9-2	Internal failure of the SRS unit. If intermittent, it could mean internal failure of the power supply (VB line). Refer to Troubleshooting Intermittent Failures (see page 23-45).	
9-3	Faulty driver's seat belt buckle switch	(see page 23-204)
9-4	Faulty front passenger's seat belt buckle switch	(see page 23-208)

BACK

SIEMENS (M3) SRS unit

DTC	Detection Item	Notes
10-1	Airbags deployed	(see page 23-106)
10-2	Driver's side airbag deployed	
10-3	Airbags and driver's side airbag deployed	
10-4	Front passenger's side airbag deployed	
10-5	Airbags and front passenger's side airbag deployed	
10-6	Driver's and front passenger's side airbag deployed	
10-7	Airbags and driver's and front passenger's side airbags deployed	
11-1	Open or increased resistance in driver's side airbag inflator	(see page 23-108)
11-3	Short to another wire or decreased resistance in driver's side airbag inflator	(see page 23-109)
11-4	Short to power in driver's side airbag inflator	(see page 23-111)
11-5	Short to ground in driver's side airbag inflator	(see page 23-112)
12-1	Open or increased resistance in front passenger's side airbag inflator	(see page 23-114)
12-3	Short to another wire or decreased resistance in front passenger's side airbag inflator	(see page 23-115)
12-4	Short to power in front passenger's side airbag inflator	(see page 23-117)
12-5	Short to ground in front passenger's side airbag inflator	(see page 23-118)
13-1	Internal failure of the driver's side impact sensor	(see page 23-107)
13-2		
13-3	No signal from the driver's side impact sensor	(see page 23-120)
13-4	Faulty power supply to the driver's side impact sensor	(see page 23-122)
14-1	Internal failure of the front passenger's side impact sensor	(see page 23-107)
14-2		
14-3	No signal from the front passenger's side impact sensor	(see page 23-124)
14-4	Faulty power supply to the front passenger's side impact sensor	(see page 23-126)
15-1	Faulty OPDS unit or OPDS system not initialized	(see page 23-128)
15-2	Faulty side airbag indicator light circuit	(see page 23-133)
15-3	Faulty OPDS sensor	(see page 23-138)

DTC Troubleshooting Index (cont'd)

'00 Model-Coupe-without side airbags

NEC (M1) SRS unit

DTC	Detection Item	Notes
1-1	Open in driver's airbag inflator	(see page 23-92)
1-2	Increased resistance in driver's airbag inflator	(see page 23-92)
1-3	Short to another wire or decreased resistance in driver's airbag inflator	(see page 23-94)
1-4	Short to power in driver's airbag inflator	(see page 23-96)
1-5	Short to ground in driver's airbag inflator	(see page 23-98)
2-1	Open in front passenger's airbag inflator	(see page 23-100)
2-2	Increased resistance in front passenger's airbag inflator	(see page 23-100)
2-3	Short to another wire or decreased resistance in front passenger's airbag inflator	(see page 23-101)
2-4	Short to power in front passenger's airbag inflator	(see page 23-103)
2-5	Short to ground in front passenger's airbag inflator	(see page 23-104)
5-1	Internal failure of SRS unit NOTE: Before troubleshooting DTCs 5-1 through 8-6, check battery/system voltage. If voltage is low, repair the charging system before troubleshooting the DTCs.	(see page 23-106)
5-2		
5-4		
5-5		
5-8		
6-1		
6-2		
6-3		
6-4		
7-1		
7-2		
7-3		
8-1		
8-2		
8-5		
8-6		
9-1	Internal failure of the SRS unit. If intermittent, it could mean internal failure of the unit or a faulty indicator light circuit. Refer to Troubleshooting Intermittent Failures (see page 23-45).	(see page 23-106)
9-2	Internal failure of the SRS unit. If intermittent, it could mean internal failure of the power supply (VB line). Refer to Troubleshooting Intermittent Failures (see page 23-45).	
9-3	Faulty driver's seat belt buckle switch	(see page 23-204)
9-4	Faulty front passenger's seat belt buckle switch	(see page 23-208)
10-1	Airbags deployed (SRS unit must be replaced)	(see page 23-106)

BACK

'00 Model-Coupe-with side airbags

SIEMENS (M3) SRS unit

DTC	Detection Item	Notes
1-1	Open or increased resistance in driver's airbag inflator	(see page 23-92)
1-3	Short to another wire or decreased resistance in driver's airbag inflator	(see page 23-94)
1-4	Short to power in driver's airbag inflator	(see page 23-96)
1-5	Short to ground in driver's airbag inflator	(see page 23-98)
2-1	Open or increased resistance in front passenger's airbag inflator	(see page 23-100)
2-3	Short to another wire or decreased resistance in front passenger's airbag inflator	(see page 23-101)
2-4	Short to power in front passenger's airbag inflator	(see page 23-103)
2-5	Short to ground in front passenger's airbag inflator	(see page 23-104)
5-1	Internal failure of SRS unit NOTE: Before troubleshooting DTCs 5-1 through 8-8, check battery/system voltage. If voltage is low, repair the charging system before troubleshooting the DTCs.	(see page 23-106)
5-2		
5-4		
5-8		
6-3		
6-4		
6-7		
6-8		
7-1		
7-2		
7-3		
8-1		
8-2		
8-3		
8-4		
8-5		
8-6		
8-7		
8-8		
9-1	Internal failure of the SRS unit. If intermittent, it could mean internal failure of the unit or a faulty indicator light circuit. Refer to Troubleshooting Intermittent Failures (see page 23-45).	(see page 23-106)
9-2	Internal failure of the SRS unit. If intermittent, it could mean internal failure of the power supply (VB line). Refer to Troubleshooting Intermittent Failures (see page 23-45).	
9-3	Faulty driver's seat belt buckle switch	(see page 23-204)
9-4	Faulty front passenger's seat belt buckle switch	(see page 23-208)

(cont'd)

DTC Troubleshooting Index (cont'd)

SIEMENS (M3) SRS unit

DTC	Detection Item	Notes
10-1	Airbags deployed	(see page 23-106)
10-2	Driver's side airbag deployed	
10-3	Airbags and driver's side airbag deployed	
10-4	Front passenger's side airbag deployed	
10-5	Airbags and front passenger's side airbag deployed	
10-6	Driver's and front passenger's side airbag deployed	
10-7	Airbags and driver's and front passenger's side airbags deployed	
11-1	Open or increased resistance in driver's side airbag inflator	(see page 23-139)
11-3	Short to another wire or decreased resistance in driver's side airbag inflator	(see page 23-141)
11-4	Short to power in driver's side airbag inflator	(see page 23-143)
11-5	Short to ground in driver's side airbag inflator	(see page 23-145)
12-1	Open or increased resistance in front passenger's side airbag inflator	(see page 23-147)
12-3	Short to another wire or decreased resistance in front passenger's side airbag inflator	(see page 23-149)
12-4	Short to power in front passenger's side airbag inflator	(see page 23-151)
12-5	Short to ground in front passenger's side airbag inflator	(see page 23-153)
13-1	Internal failure of the driver's side impact sensor	(see page 23-107)
13-2		
13-3	No signal from the driver's side impact sensor	(see page 23-155)
13-4	Faulty power supply to the driver's side impact sensor	(see page 23-157)
14-1	Internal failure of the front passenger's side impact sensor	(see page 23-107)
14-2		
14-3	No signal from the front passenger's side impact sensor	(see page 23-159)
14-4	Faulty power supply to the front passenger's side impact sensor	(see page 23-161)
15-1	Faulty OPDS unit or OPDS system not initialized	(see page 23-163)
15-2	Faulty side airbag indicator light circuit	(see page 23-168)
15-3	Faulty OPDS sensor	(see page 23-173)

BACK

'01-02 Models-Sedan-without side airbags

NEC (M1) SRS unit

DTC	Detection Item	Notes
1-1	Open in driver's airbag inflator	(see page 23-174)
1-2	Increased resistance in driver's airbag inflator	(see page 23-174)
1-3	Short to another wire or decresed resistance in driver's airbag inflator	(see page 23-176)
1-4	Short to power in driver's airbag inflator	(see page 23-178)
1-5	Short to ground in driver's airbag inflator	(see page 23-180)
2-1	Open in front passenger's airbag inflator	(see page 23-182)
2-2	Increased resistance in front passenger's airbag inflator	(see page 23-182)
2-3	Short to another wire or decreased resistance in front passenger's airbag inflator	(see page 23-183)
2-4	Short to power in front passenger's airbag inflator	(see page 23-185)
2-5	Short to ground in front passenger's airbag inflator	(see page 23-186)
3-1	Open in left side seat belt tensioner	(see page 23-188)
3-2	Increased resistance in left side seat belt tensioner	(see page 23-188)
3-3	Short to another wire or decreased resistance in left side seat belt tensioner	(see page 23-190)
3-4	Short to power in left side seat belt tensioner	(see page 23-192)
3-5	Short to ground in left side seat belt tensioner	(see page 23-194)
4-1	Open in right side seat belt tensioner	(see page 23-196)
4-2	Increased resistance in right side seat belt tensioner	(see page 23-196)
4-3	Short to another wire or decreased resistance in left side seat belt tensioner	(see page 23-197)
4-4	Short to power in left side seat belt tensioner	(see page 23-199)
4-5	Short to ground in right side seat belt tensioner	(see page 23-200)
5-1	Internal failure of SRS unit NOTE: Before troubleshooting DTCs 5-1 through 8-6, check battery/ system voltage. If voltage is low, repair the charging system before troublshooting the DTCs.	(see page 23-202)
5-2		
5-3		
5-4		
5-5		
6-1		
6-2		
6-3		
6-4		
7-1		
7-2		
7-3		
8-1		
8-2		
8-3		
8-4		
8-5		
8-6		
9-1	Internal failure of the SRS unit. If intermittent, it could mean internal failure of the unit or a faulty indicator light circuit. Refer to Troubleshooting Intermittent Failures (see page 23-45).	(see page 23-202)
9-2	Internal failure of the SRS unit. If intermittent, it could mean internal failure of the power supply (VB line). Refer to troubleshooting Intermittent Failures (see page 23-45).	
9-3	Faulty driver's seat belt buckle switch	(see page 23-204)
9-4	Faulty front passenger's seat belt buckle switch	(see page 23-208)
10-1	Seat belt tensioners (and airbag (s)) deployed	(see page 23-202)

(cont'd)

DTC Troubleshooting Index (cont'd)

'01-02 Models

SIEMENS (M3) SRS unit

DTC	Detection Item	Notes
1-1	Open or increased resistance in driver's airbag inflator	(see page 23-174)
1-3	Short to another wire or decreased resistance in driver's airbag inflator	(see page 23-176)
1-4	Short to power in driver's airbag inflator	(see page 23-178)
1-5	Short to ground in driver's airbag inflator	(see page 23-180)
2-1	Open or increased resistance in front passenger's airbag inflator	(see page 23-182)
2-3	Short to another wire or decreased resistance in front passenger's airbag inflator	(see page 23-183)
2-4	Short to power in front passenger's airbag inflator	(see page 23-185)
2-5	Short to ground in front passenger's airbag inflator	(see page 23-186)
3-1	Open or increased resistance in left side seat belt tensioner	(see page 23-188)
3-3	Short to another wire or decreased resistance in left side seat belt tensioner	(see page 23-190)
3-4	Short to power in left side seat belt tensioner	(see page 23-192)
3-5	Short to ground in left side seat belt tensioner	(see page 23-194)
4-1	Open or increased resistance in right side seat belt tensioner	(see page 23-196)
4-3	Short to another wire or decreased resistance in left side seat belt tensioner	(see page 23-197)
4-4	Short to power in left side seat belt tensioner	(see page 23-199)
4-5	Short to ground in left side seat belt tensioner	(see page 23-200)
5-1	Internal failure of SRS unit NOTE: Before trobleshooting DTCs 5-1 through 8-8, check battery/ system voltage. If voltage is low, repair the charging system before troubleshooting the DTCs.	(see page 23-202)
5-2		
5-4		
5-8		
6-3		
6-4		
6-7		
6-8		
7-1		
7-2		
7-3		
8-1		
8-2		
8-3		
8-4		
8-5		
8-6		
8-7		
8-8		

BACK

DTC	Detection Item	Notes
9-1	Internal failure of the SRS unit. If intermittent, it could mean internal failure of the unit or a faulty indicator light circuit. Refer to Troubleshooting Intermittent Failures (see page 23-45).	(see page 23-202)
9-2	Internal failure of the SRS unit. If intermittent, it could mean internal failure of the power supply (VB line).Refer to Troubleshooting Intermittent Failures (see page 23-45).	
9-3	Faulty driver's seat belt buckle switch	(see page 23-204)
9-4	Faulty front passenger's seat belt buckle switch	(see page 23-208)
10-1	Seat belt tensioners (and airbag(s)) deployed	(see page 23-202)
10-2	Driver's side airbag deployed	
10-3	Seat belt tensioners (and airbag(s)) and driver's side airbag deployed	
10-4	Front passenger's side airbag deployed	
10-5	Seat belt tensioners (and airbag(s)) and front passenger's side airbag deployed	
10-6	Driver's and front passenger's side airbags deployed	
10-7	Seat belt tensioners (and airbag(s)) and driver's and front passenger's side airbags deployed	
11-1	Open or increased resistance in driver's side airbag inflator	(see page 23-211)
11-3	Short to another wire or decreased resistance in driver's side airbag inflator	(see page 23-212)
11-4	Short to power in driver's side airbag inflator	(see page 23-214)
11-5	Short to ground in driver's side airbag inflator	(see page 23-216)
12-1	Open or increased resistance in front passenger's side airbag inflator	(see page 23-218)
12-3	Short to another wire or decreased resistance in front passenger's side airbag inflator	(see page 23-220)
12-4	Short to power in front passenger's side airbag inflator	(see page 23-222)
12-5	Short to ground in front passenger's side airbag inflator	(see page 23-224)
13-1	Faulty driver's side impact sensor	(see page 23-203)
13-2		
13-3	No signal from the driver's side impact sensor	(see page 23-226)
13-4	Faulty power supply to the driver's side impact sensor	(see page 23-227)
14-1	Faulty front passenger's side impact sensor	(see page 23-203)
14-2		
14-3	No signal from the front passenger's side impact sensor	(see page 23-229)
14-4	Faulty power supply to the front passenger's side impact sensor	(see page 23-230)
15-1	Faulty OPDS unit or OPDS system not initialized	(see page 23-232)
15-2	Faulty side airbag indicator light circuit	(see page 23-236)
15-3	Faulty OPDS sensor	(see page 23-241)

Symptom Troubleshooting Index

'98-99 Models

Symptom	Diagnostic procedure	Also check for
SRS indicator light doesn't come on	SRS Indicator Light Troubleshooting (see page 23-242)	
The SRS indicator light stays on when in "SCS" menu method	SRS Indicator Light Troubleshooting (see step 1 on page 23-244)	Inability to retrieve DTCs with the PGM Tester. Retrieve the flash codes with the SCS mode (see page 23-42).
The SRS indicator light comes on for the bulb check, goes off, then comes back on after self-diagnosis, but no DTCs are stored (NEC SRS unit only)	SRS Indicator Light Troubleshooting (see step 1 on page 23-248)	

'00 Model-Sedan

Symptom	Diagnostic procedure	Also check for
SRS indicator light doesn't come on	SRS Indicator Light Troubleshooting (see page 23-252)	
The SRS indicator light stays on when in "SCS" menu method	SRS Indicator Light Troubleshooting (see step 1 on page 23-254)	Inability to retrieve DTCs with the PGM Tester. Retrieve the flash codes with the SCS mode (see page 23-43).
The SRS indicator light comes on for the bulb check, goes off, then comes back on after self-diagnosis, but no DTCs are stored (NEC SRS unit only)	SRS Indicator Light Troubleshooting (see page 23-257)	

'00 Model-Coupe

Symptom	Diagnostic procedure	Also check for
SRS indicator light doesn't come on	SRS Indicator Light Troubleshooting (see page 23-260)	
The SRS indicator light stays on when in "SCS" menu method	SRS Indicator Light Troubleshooting (see step 1 on page 23-262)	Inability to retrieve DTCs with the PGM Tester. Retrieve the flash codes with the SCS mode (see page 23-43).
The SRS indicator light comes on for the bulb check, goes off, then comes back on after self-diagnosis, but no DTCs are stored (NEC SRS unit only)	SRS Indicator Light Troubleshooting (see page 23-257)	

BACK

'01-02 Models

Symptom	Diagnostic procedure	Also check for
SRS indicator light doesn't come on	SRS Indicator Light Troubleshooting (see page 23-265)	
The SRS indicator light stays on when in "SCS" menu method	SRS Indicator Light Troubleshooting (see step 1 on page 23-268)	Inability to retrieve DTCs with the PGM Tester. Retrieve the flash codes with the SCS mode (see page 23-43).
The SRS indicator light comes on for the bulb check, goes off, then comes back on after self-diagnosis, but no DTCs are stored (NEC SRS unit only).	SRS Indicator Light Troubleshooting (see page 23-265)	

'00-02 Models

Symptom	Diagnostic procedure	Also check for
Side airbag indicator light stays on after bulb check	• Make sure nothing is on the front passenger's seat • Make sure the front passenger's seat isn't wet. If the seat is wet, start the engine, and turn on the air conditioning system for 30 minutes to dry any moisture from the seat. • If the side airbag indicator light stays on after the ignition switch is turned ON (II), initialize the OPDS unit (see page 23-46). – If the side airbag indicator light operates normally, the system is OK. – If the side airbag indicator light stays on, replace the OPDS sensor (see section 20). The sensor is part of the seatback pad.	

System Description

'98-99 Models

SRS Components
The SRS is a safety device which, when used in conjunction with the seat belt, is designed to help protect the driver and front passenger in a frontal impact exceeding a certain set limit. The system consists of the SRS unit, including safing sensor and impact sensor (A), the cable reel (B), the driver's airbag (C) and the front passenger's airbag (D).

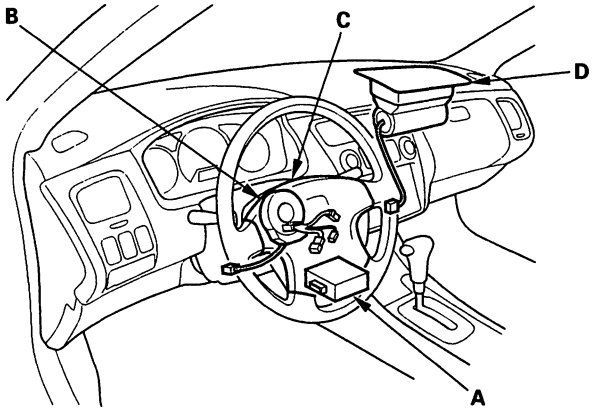

SRS Operation
The main circuit in the SRS unit senses and judges the force of impact and, if necessary, ignites the inflator charges. If battery voltage is too low or power is disconnected due to the impact, the voltage regulator and the back-up power circuit respectively will keep voltage at a constant level.
For the SRS to operate:
(1) The impact sensor must activate, and send electric signals to the microprocessor.
(2) The microprocessor must compute the signals, and must send signals to the airbag inflators.
(3) The inflators must ignite and deploy the airbags.

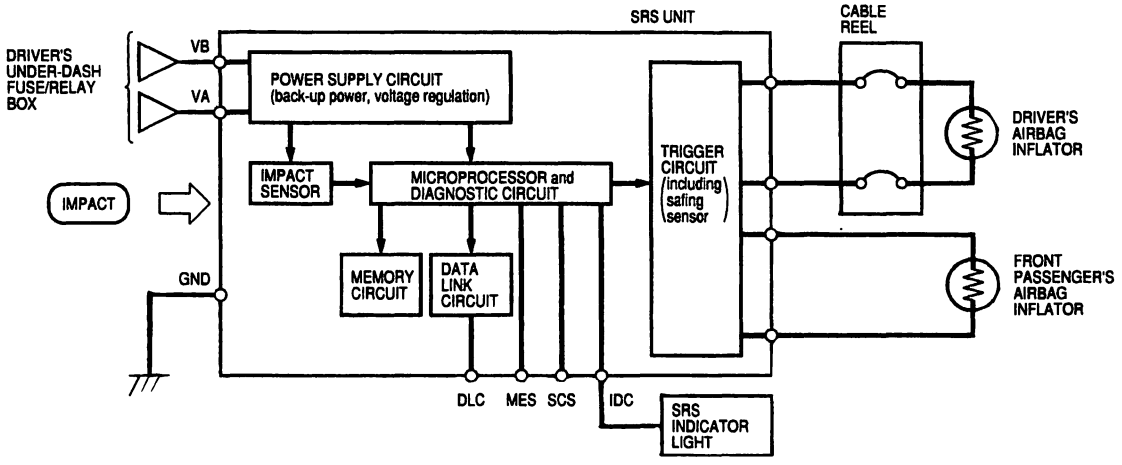

Self-diagnosis System
A self-diagnosis circuit is built into the SRS unit; when the ignition switch is turned ON (II), the SRS indicator light comes on and goes off after about 6 seconds if the system is operating normally.
If the light does not come on, or does not go off after 6 seconds, or if it comes on while driving, it indicates an abnormality in the system. The system must be inspected and repaired as soon as possible.

For better serviceability, the memory will store the cause of the malfunction, and the data link circuit passes on the information from the memory to the Data Link Connector (DLC). This information can be read with the Honda PGM Tester connected to the DLC (16P).

BACK

'00 Model

SRS Components

Airbags
The SRS is a safety device which, when used with the seat belt, is designed to help protect the driver and front passenger in a frontal impact exceeding a certain set limit. The system consists of the SRS unit, including safing sensor and impact sensor (A), the cable reel (B), the driver's airbag (C) and the front passenger's airbag (D).

Side Airbags
Some models are equipped with side airbags (E) which located in each front seat-back. They help protect the upper torso of the driver or front seat passenger during a moderate to severe side impact. Side impact sensors (F) in each door sill and in the SRS unit detect such an impact and instantly inflate the driver's or the passenger's side airbag. Only one side airbag will deploy during a side impact. If the impact is on the passenger's side, the passenger's side airbag will deploy even if there is no passenger.

OPDS
The side airbag system includes an Occupant Position Detection System (OPDS). This system consists of sensors (G) and an OPDS unit (H) in the front passenger's seat-back. The OPDS unit sends occupant height and position data to the SRS unit. If the SRS unit determines that the front passenger is of small stature (for example, a child) and the front passenger is leaning into the side airbag deployment path, it will automatically disable the airbag. The SRS unit will also disable the airbag when the OPDS detects certain objects on the seat. When the side airbag is disabled, the Side Airbag indicator light on the instrument panel alerts the driver that the passenger's side airbag will not deploy in a side impact. When the object is removed, or the passenger sits upright, the Side Airbag indicator light will go off, alerting the driver that the side airbag will deploy in a side impact.

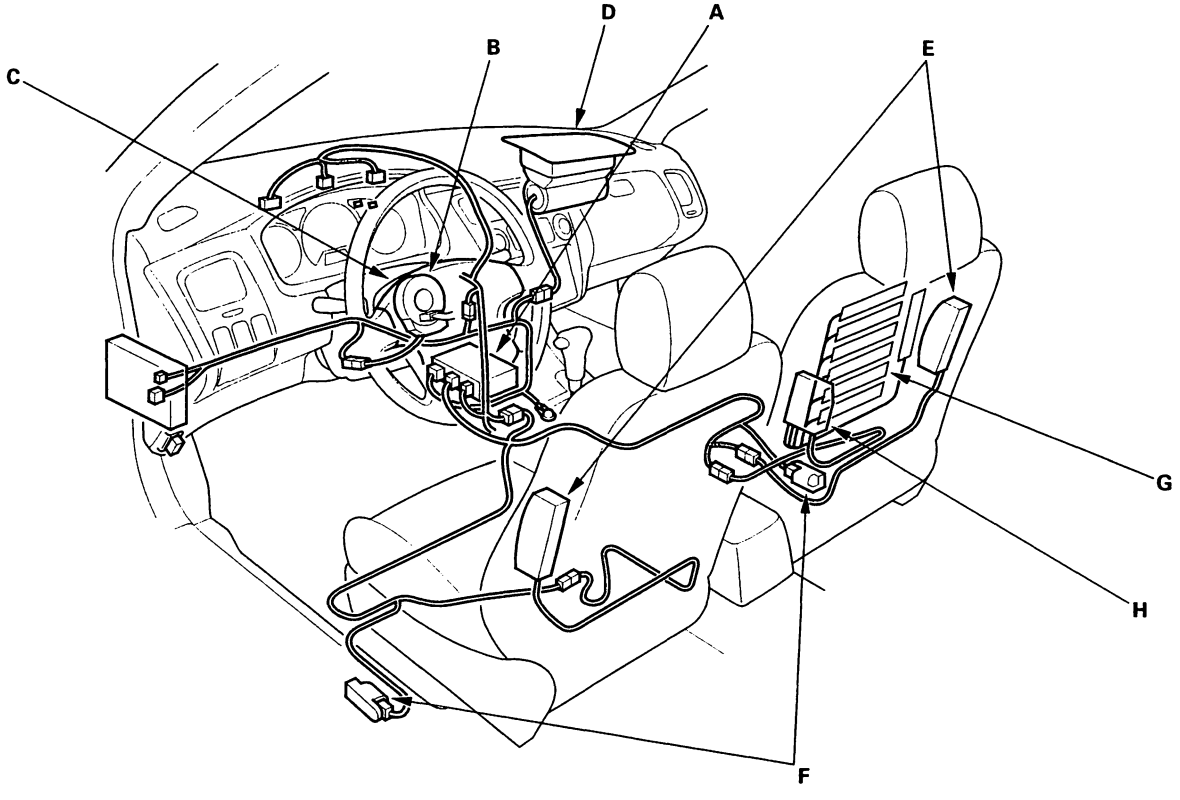

(cont'd)

System Description (cont'd)

SRS Operation

The main circuit in the SRS unit senses and judges the force of impact and, if necessary, ignites the inflator charges. If battery voltage is too low or power is disconnected due to the impact, the voltage regulator and the back-up power circuit, respectively, will keep voltage at a constant level.

For the SRS to operate:

Driver's and Front Passenger's Airbag(s)

(1) The frontal impact sensor must activate, and send electric signals to the microprocessor.
(2) The microprocessor must compute the signals, and depending on the severity of the collision and whether the seat belt buckle switch is ON or OFF, it sends the appropriate signals to the airbag inflator(s).
(3) The inflators that received signals must ignite and deploy the airbags.

Side Airbag(s)

(1) The side impact sensors must activate, and send electric signals to the microprocessor.
(2) The microprocessor must compute the signals and send them to the side airbag inflator(s). However, the microprocessor cuts off the signals to the front passenger's side airbag if the SRS unit determines that the front passenger's head is in the deployment path of the side airbag.
(3) The inflator that received the signal must ignite and deploy the side airbag.

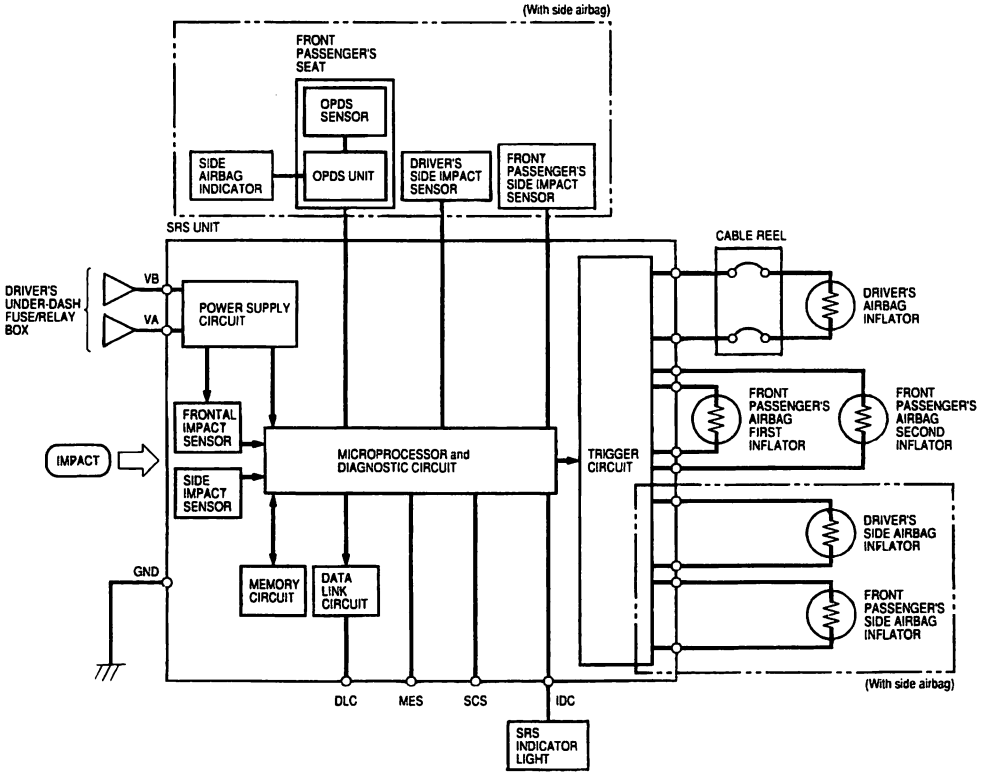

Self-diagnosis System

A self-diagnosis circuit is built into the SRS unit; when the ignition switch is turned ON (II), the SRS indicator light comes on and goes off after about 6 seconds if the system is operating normally.
If the light does not come on, or does not go off after 6 seconds, or if it comes on while driving, it indicates an abnormality in the system. The system must be inspected and repaired as soon as possible.

For better serviceability, the SRS unit memory stores a DTC that relates to the cause of the malfunction, and the unit is connected to the Data Link Connector (DLC). This information can be read with the Honda PGM Tester when it is connected to the DLC (16P).

BACK

'01-02 Models
SRS Components

Airbags
The SRS is a safety device which, when used with the seat belt, is designed to help protect the driver and front passenger in a frontal impact exceeding a certain set limit. The system consists of the SRS unit, including safing sensor and impact sensor (A), the cable reel (B), the driver's airbag (C), the front passenger's airbag (D), side airbags (E), and seat belt tensioners (I).

Side Airbags
The side airbags (E) are in each front seat-back. They help protect the upper torso of the driver or front seat passenger during a moderate to severe side impact. Side impact sensors (F) in each door sill and in the SRS unit detect such an impact and instantly inflate the driver's or the passenger's side airbag. Only one side airbag will deploy during a side impact. If the impact is on the passenger's side, the passenger's side airbag will deploy even if there is no passenger.

Seat Belt Tensioner
The seat belt tensioner (I) is linked with the SRS airbags to further increase the effectiveness of the seat belt. In a front-end collision, the tensioner instantly retracts the belt firmly to secure the occupants in their seats.

OPDS
The side airbag system includes an Occupant Position Detection System (OPDS). This system consists of sensors (G) and an OPDS unit (H) in the front passenger's seat-back. The OPDS unit sends occupant height and position data to the SRS unit. If the SRS unit determines that the front passenger is of small stature (for example, a child) and the front passenger is leaning into the side airbag deployment path, it will automatically disable the airbag. The SRS unit will also disable the airbag when the OPDS detects certain objects on the seat. When the side airbag is disabled, the Side Airbag indicator light on the instrument panel alerts the driver that the passenger's side airbag will not deploy in a side impact. When the object is removed, or the passenger sits upright, the Side Airbag indicator light will go off, alerting the driver that the side airbag will deploy in a side impact.

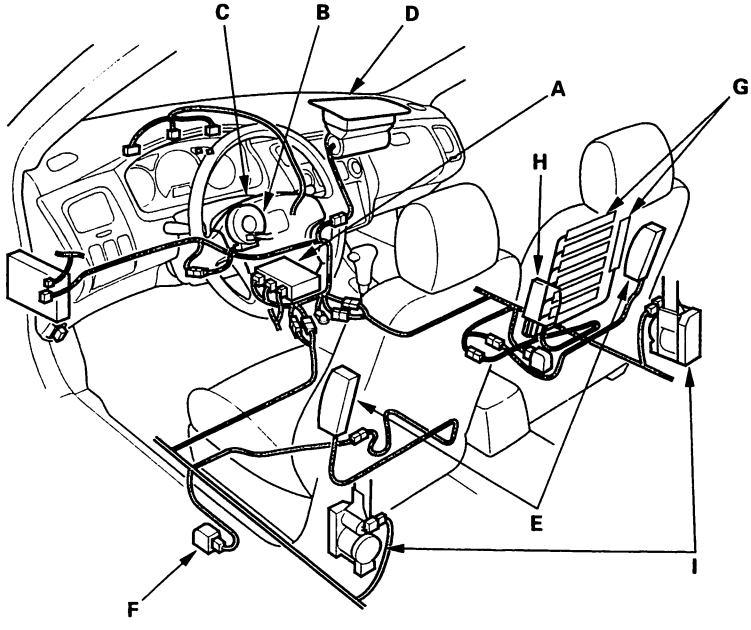

(cont'd)

System Description (cont'd)

SRS Operation

The main circuit in the SRS unit senses and judges the force of impact and, if necessary, ignites the inflator charges. If battery voltage is too low or power is disconnected due to the impact, the voltage regulator and the back-up power circuit, respectively, will keep voltage at a constant level.

For the SRS to operate:

Driver's and Front Passenger's Airbag(s)

(1) The frontal impact sensor must activate, and send electric signals to the microprocessor.
(2) The microprocessor must compute the signals, and depending on the severity of the collision and whether the seat belt buckle switch is ON or OFF, it sends the appropriate signals to the airbag inflators.
(3) The inflators that received signals must ignite and deploy the airbag(s).

Side Airbag(s)

(1) The side impact sensors must activate, and send electric signals to the microprocessor.
(2) The microprocessor must compute the signals and send them to the side airbag inflator(s). However, the microprocessor cuts off the signals to the front passenger's side airbag if the SRS unit determines that the front passenger's head is in the deployment path of the side airbag.
(3) The inflator that received the signal must ignite and deploy the side airbag(s).

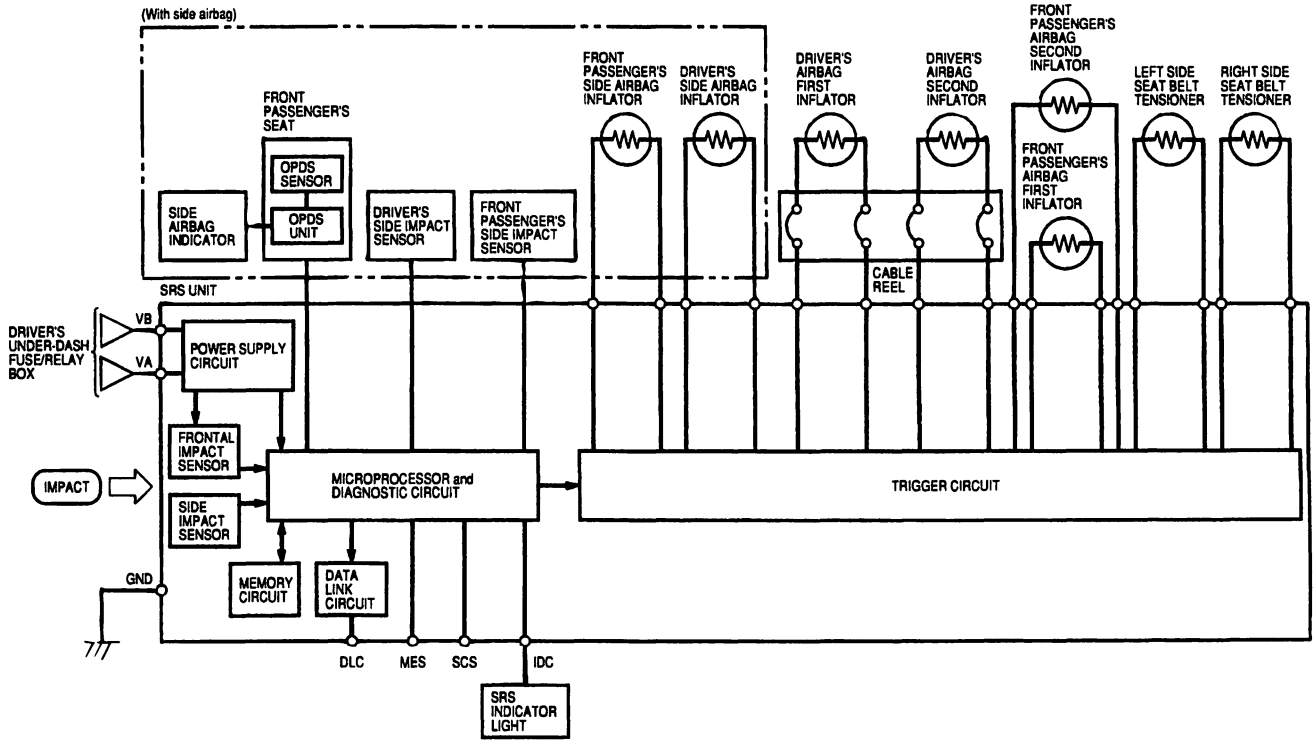

Self-diagnosis System

A self-diagnosis circuit is built into the SRS unit; when the ignition switch is turned ON (II), the SRS indicator light comes on and goes off after about 6 seconds if the system is operating normally.
If the light does not come on, or does not go off after 6 seconds, or if it comes on while driving, it indicates an abnormality in the system. The system must be inspected and repaired as soon as possible.

For better serviceability, the SRS unit memory stores a DTC that relates to the cause of the malfunction, and the unit is connected to the Data Link Connector (DLC). This information can be read with the Honda PGM Tester when it is connected to the DLC (16P).

BACK

Circuit Diagram

'98-99 Models

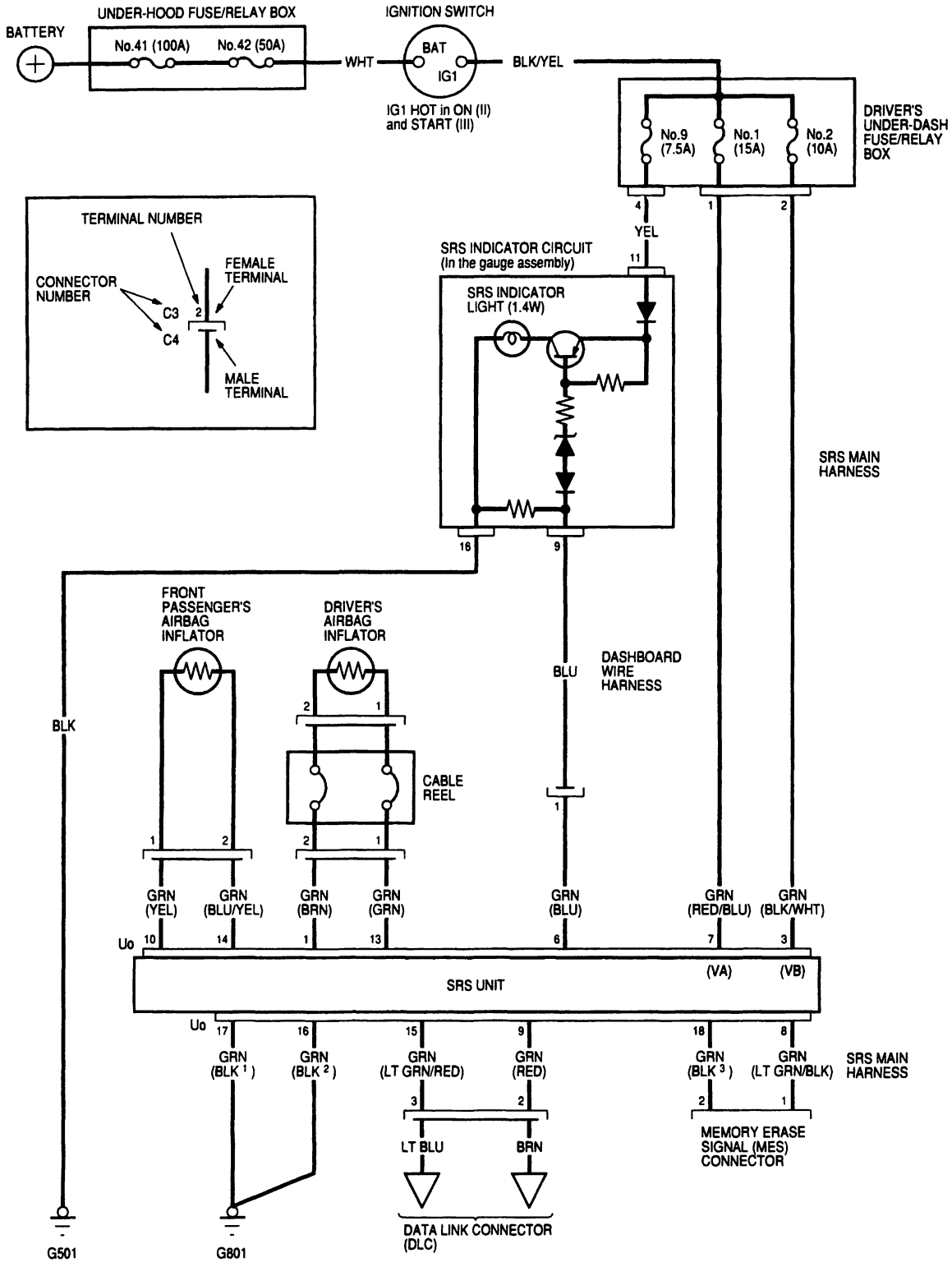

BACK

Circuit Diagram (cont'd)

'00 Model-Sedan

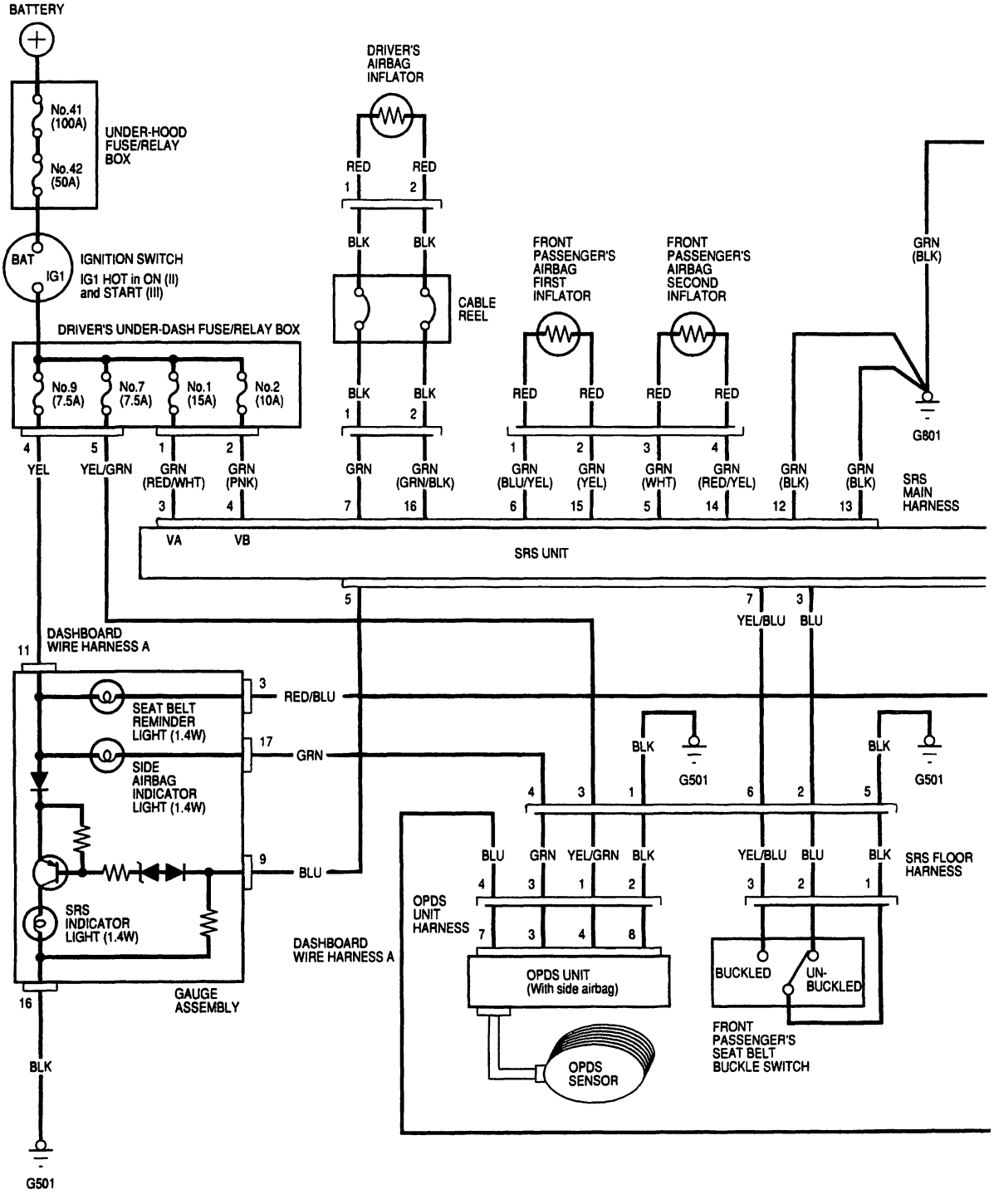

BACK

1 : With heated seat
2 : Without heated seat

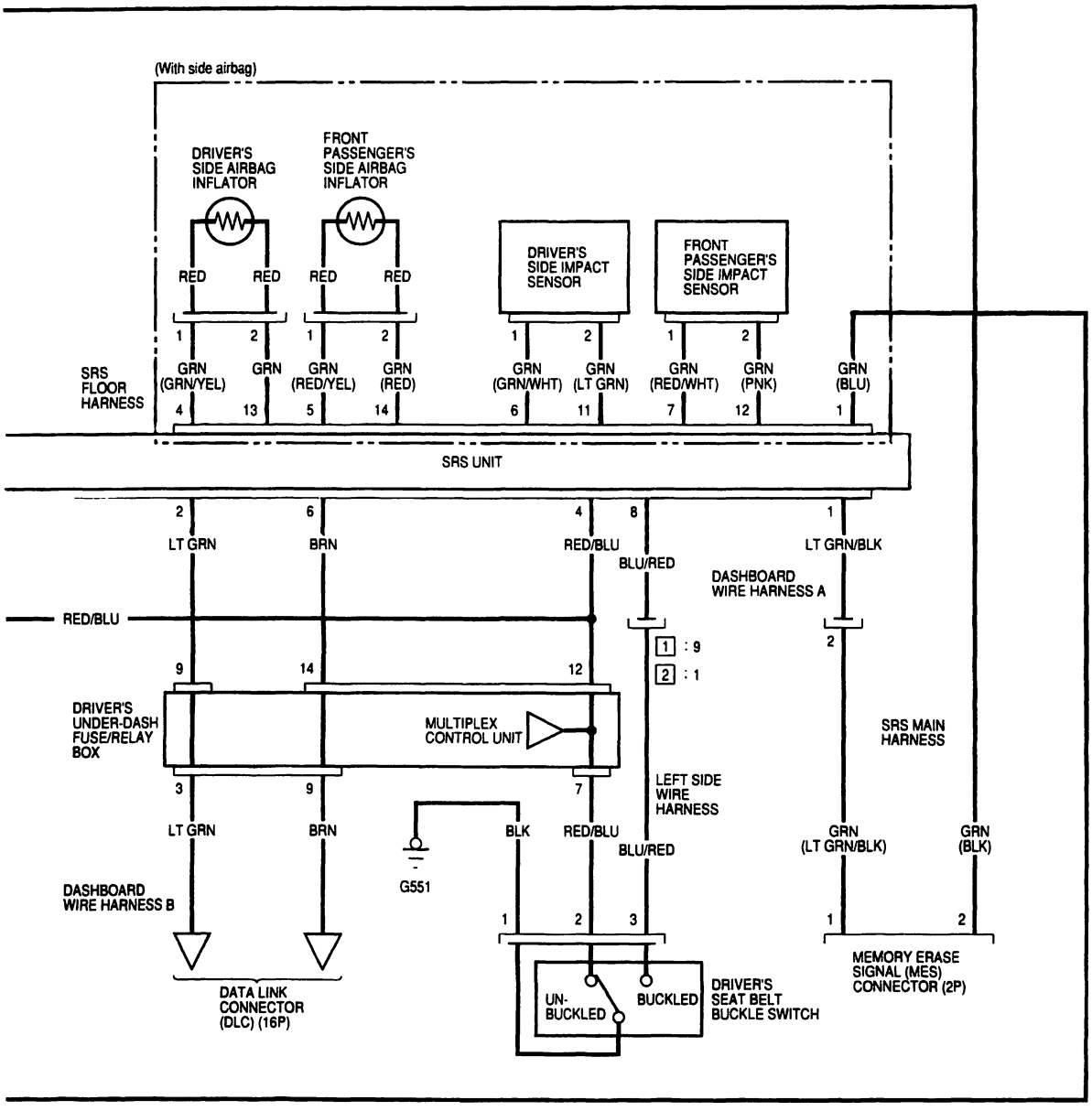

Circuit Diagram (cont'd)

'00 Model-Coupe

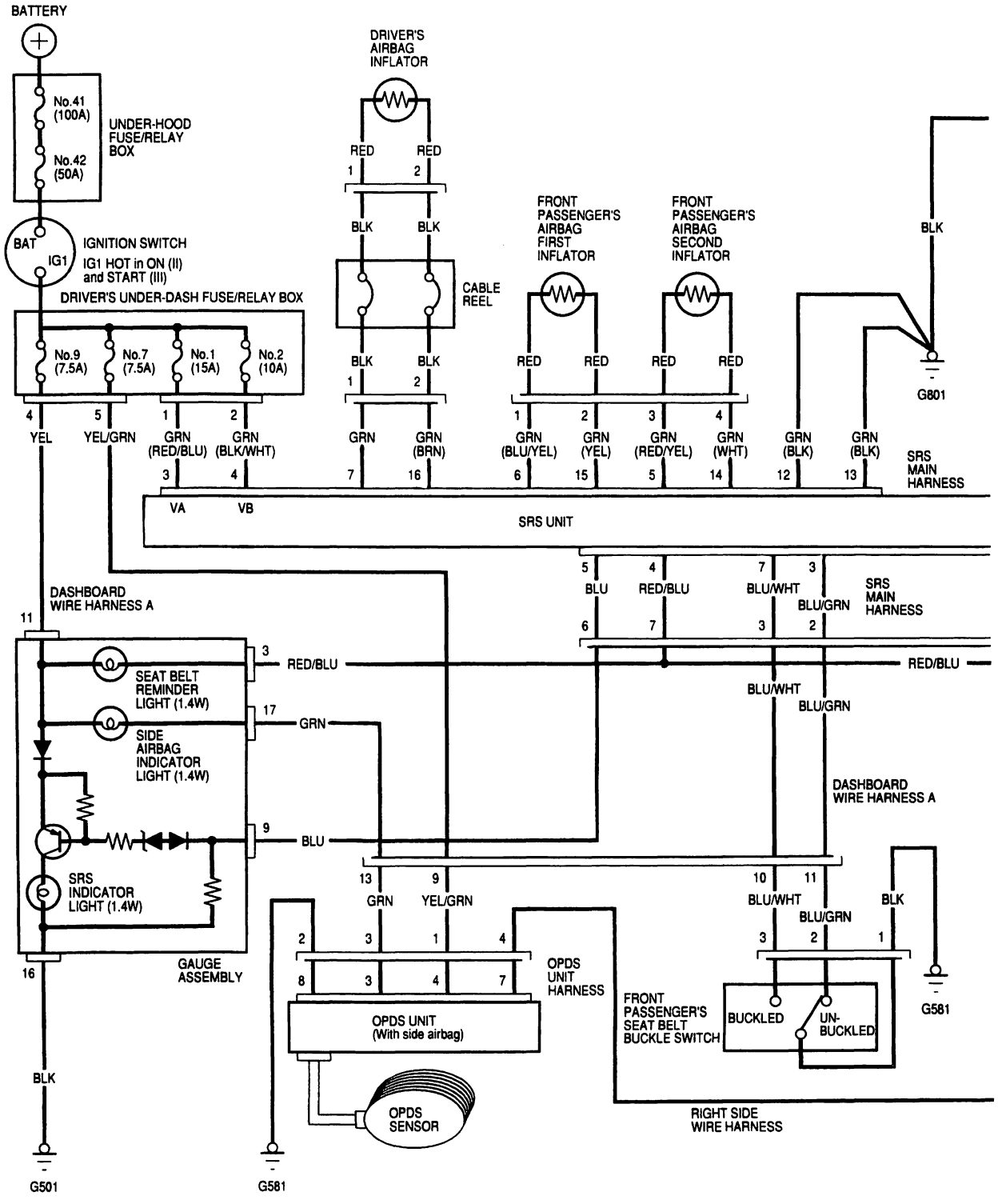

BACK

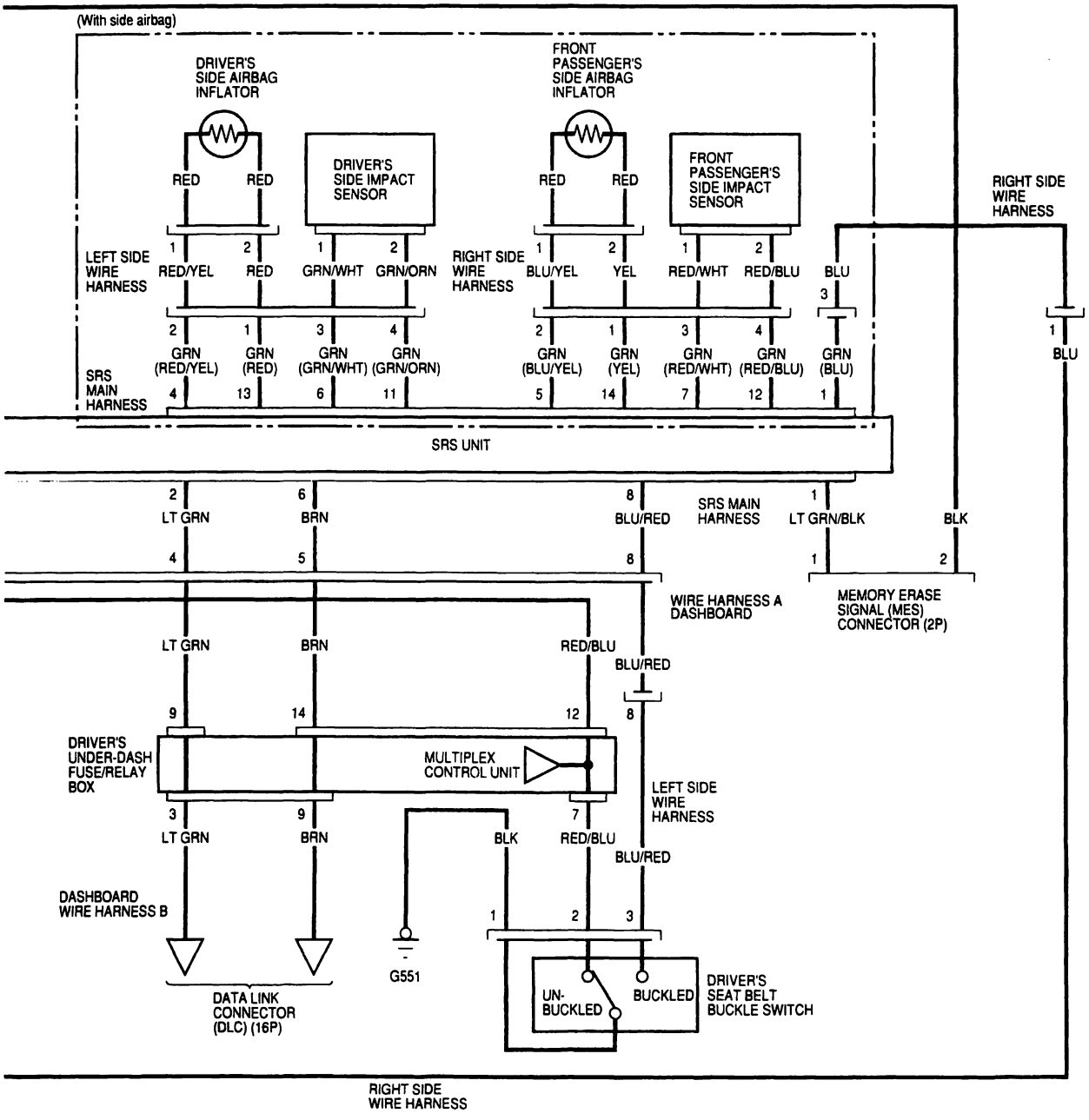
(With side airbag)
DRIVER'S SIDE AIRBAG INFLATOR
FRONT PASSENGER'S SIDE AIRBAG INFLATOR
DRIVER'S SIDE IMPACT SENSOR
FRONT PASSENGER'S SIDE IMPACT SENSOR
RIGHT SIDE WIRE HARNESS
RED
RED
RED
RED
LEFT SIDE WIRE HARNESS
RED/YEL
RED
GRN/WHT
GRN/ORN
RIGHT SIDE WIRE HARNESS
BLU/YEL
YEL
RED/WHT
RED/BLU
BLU
GRN (RED/YEL)
GRN (RED)
GRN (GRN/WHT)
GRN (GRN/ORN)
GRN (BLU/YEL)
GRN (YEL)
GRN (RED/WHT)
GRN (RED/BLU)
GRN (BLU)
BLU
SRS MAIN HARNESS
SRS UNIT
LT GRN
BRN
BLU/RED
SRS MAIN HARNESS
LT GRN/BLK
BLK
WIRE HARNESS A DASHBOARD
MEMORY ERASE SIGNAL (MES) CONNECTOR (2P)
LT GRN
BRN
RED/BLU
BLU/RED
DRIVER'S UNDER-DASH FUSE/RELAY BOX
MULTIPLEX CONTROL UNIT
LEFT SIDE WIRE HARNESS
LT GRN
BRN
BLK
RED/BLU
BLU/RED
DASHBOARD WIRE HARNESS B
G551
DATA LINK CONNECTOR (DLC) (16P)
UN-BUCKLED
BUCKLED
DRIVER'S SEAT BELT BUCKLE SWITCH
RIGHT SIDE WIRE HARNESS

BACK

Circuit Diagram (cont'd)

'01-02 Models

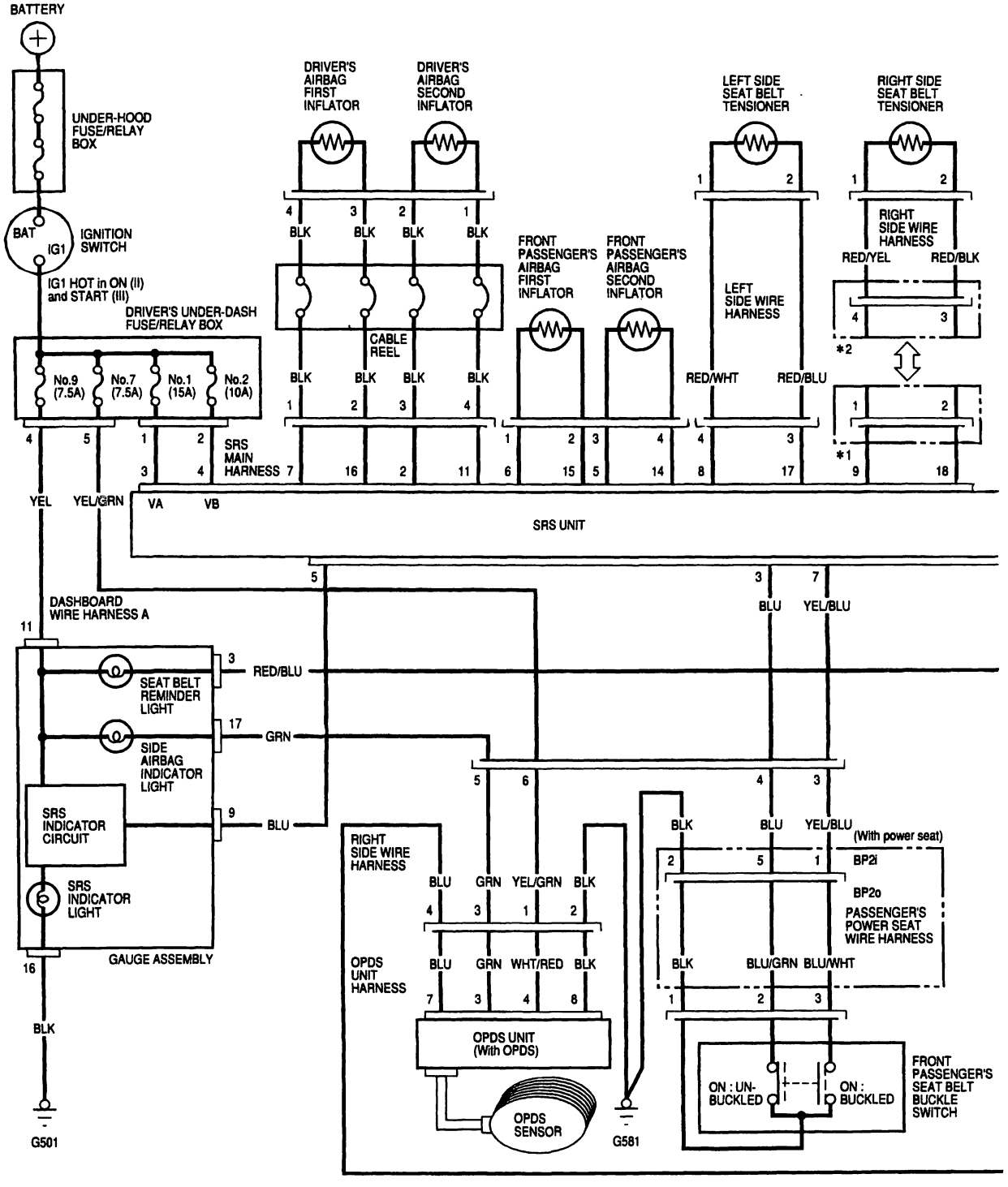

BACK

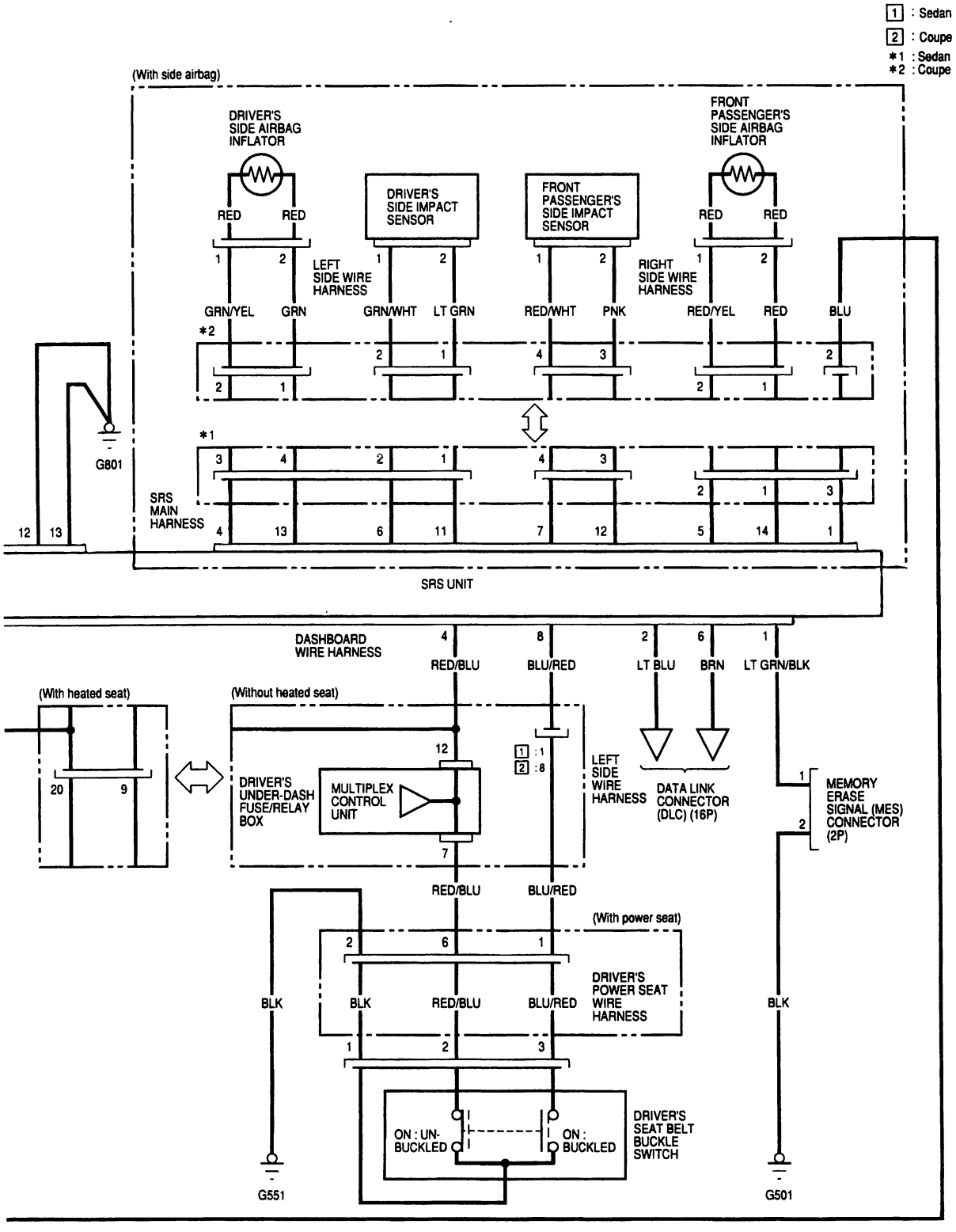
1 : Sedan
2 : Coupe
*1 : Sedan
*2 : Coupe
(With side airbag)
DRIVER'S SIDE AIRBAG INFLATOR
FRONT PASSENGER'S SIDE AIRBAG INFLATOR
DRIVER'S SIDE IMPACT SENSOR
FRONT PASSENGER'S SIDE IMPACT SENSOR
RED
RED
LEFT SIDE WIRE HARNESS
RIGHT SIDE WIRE HARNESS
GRN/YEL
GRN
GRN/WHT
LT GRN
RED/WHT
PNK
RED/YEL
RED
BLU
*2
*1
G801
SRS MAIN HARNESS
SRS UNIT
DASHBOARD WIRE HARNESS
RED/BLU
BLU/RED
LT BLU
BRN
LT GRN/BLK
(With heated seat)
(Without heated seat)
DRIVER'S UNDER-DASH FUSE/RELAY BOX
MULTIPLEX CONTROL UNIT
LEFT SIDE WIRE HARNESS
DATA LINK CONNECTOR (DLC) (16P)
MEMORY ERASE SIGNAL (MES) CONNECTOR (2P)
(With power seat)
DRIVER'S POWER SEAT WIRE HARNESS
BLK
ON : UN-BUCKLED
ON : BUCKLED
DRIVER'S SEAT BELT BUCKLE SWITCH
G551
G501

BACK

DTC Troubleshooting - '98-99 Models

DTC 1-1: Open in driver's airbag inflator

DTC 1-2: Increased resistance in driver's airbag inflator

1. Erase the DTC memory (see page 23-45).

2. Turn the ignition switch ON (II), and check that the SRS indicator light comes on for about 6 seconds and then goes off.

   Does the SRS indicator light stay on?

   YES—Go to step 3.

   NO—Intermittent failure, system is OK at this time. Go to Troubleshooting Intermittent Failures (see page 23-45).

3. Turn the ignition switch OFF. Disconnect the battery negative cable, and wait for 3 minutes.

4. Disconnect the driver's airbag 2P connector from the cable reel 2P connector (A).

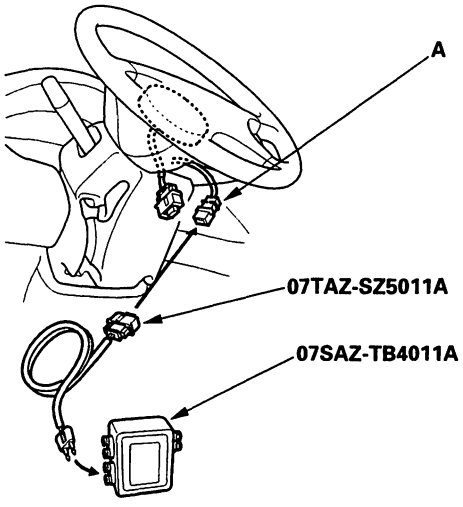

5. Connect the special tool (2 Ω connector) to the cable reel connector.

6. Reconnect the battery negative cable.

7. Erase the DTC memory.

8. Read the DTC.

   Is DTC 1-1 or DTC 1-2 indicated?

   YES—Go to step 9.

   NO—Open or increased resistance in the driver's airbag inflator; replace the driver's airbag (see page 23-278).■

9. Disconnect the battery negative cable, and wait for 3 minutes.

10. Disconnect the cable reel 2P connector from the SRS main harness 2P connector (A).

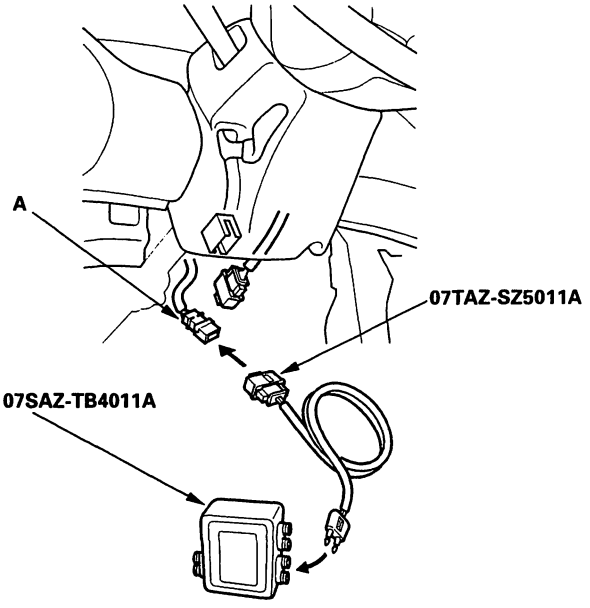

11. Connect the special tool (2 Ω connector) to the SRS main harness 2P connector.

12. Reconnect the battery negative cable.

13. Erase the DTC memory.

BACK

14. Read the DTC.

Is DTC 1-1 or DTC 1-2 indicated?

YES—Go to step 15.

NO—Open or increased resistance in the cable reel; replace the cable reel (see page 23-289).■

15. Disconnect the battery negative cable, and wait for 3 minutes.

16. Disconnect the front passenger's airbag 2P connector (A).

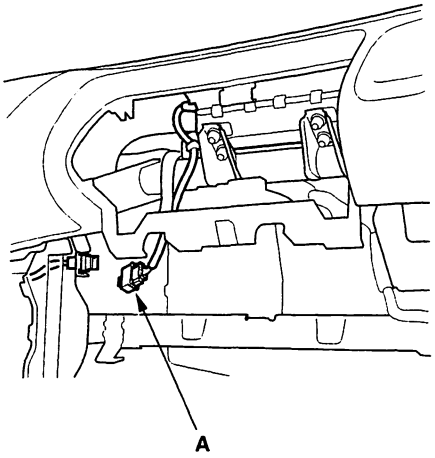

17. Disconnect the SRS main harness 18P connector (A) from the SRS unit.

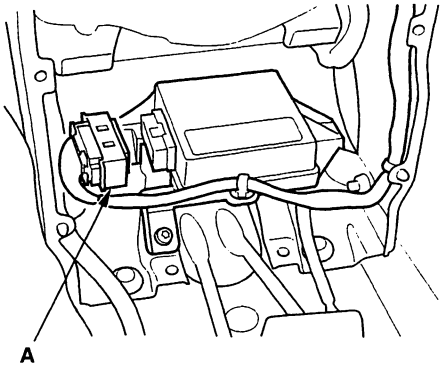

18. Check resistance between the No. 1 terminal and the No. 13 terminal of the SRS main harness 18P connector. There should be 2.0—3.0 Ω.

SRS MAIN HARNESS 18P CONNECTOR

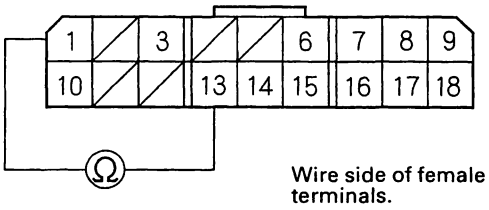

Is the resistance as specified?

YES—Faulty SRS unit or poor contact at the SRS main harness 18P connector and the SRS unit. Check the connection between the SRS main harness 18P connector and the SRS unit. If the connection is OK, replace the SRS unit (see page 23-295).■

NO—Open or increased resistance in the SRS main harness; replace the SRS main harness.■

DTC Troubleshooting - '98-99 Models (cont'd)

DTC 1-3: Short to another wire or decreased resistance in driver's airbag inflator.

1. Erase the DTC memory (see page 23-45).

2. Turn the ignition switch ON (II), and check that the SRS indicator light comes on for about 6 seconds and then goes off.

   Does the SRS indicator light stay on?

   YES—Go to step 3.

   NO—Intermittent failure, system is OK at this time. Go to Troubleshooting Intermittent Failures (see page 23-45).

3. Turn the ignition switch OFF. Disconnect the battery negative cable, and wait for 3 minutes.

4. Disconnect the driver's airbag 2P connector from the cable reel 2P connector (A).

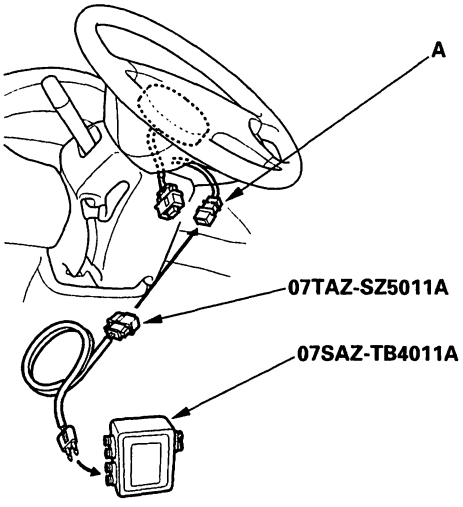

5. Connect the special tool (2 Ω connector) to the cable reel 2P connector.

6. Reconnect the battery negative cable.

7. Erase the DTC memory.

8. Read the DTC.

   Is DTC 1-3 indicated?

   YES—Go to step 9.

   NO—Short in the driver's airbag; replace the driver's airbag (see page 23-278).■

9. Disconnect the battery negative cable, and wait for 3 minutes.

10. Disconnect the cable reel 2P connector from the SRS main harness 2P connector (A).

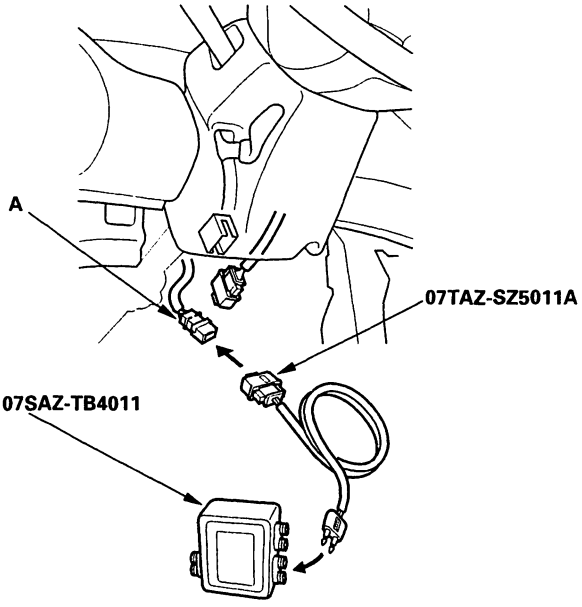

11. Connect the special tool (2 Ω connector) to the SRS main harness 2P connector.

12. Reconnect the battery negative cable.

13. Erase the DTC memory.

14. Read the DTC.

    Is DTC 1-3 indicated?

    YES—Go to step 15.

    NO—Short in the cable reel; replace the cable reel (see page 23-289).■

BACK

15. Disconnect the battery negative cable, and wait for 3 minutes.

16. Disconnect the front passenger's airbag 2P connector (A) from the SRS main harness 2P connector (B).

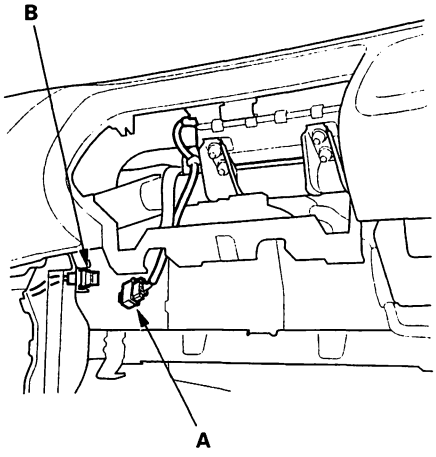

17. Disconnect the special tool from the SRS main harness 2P connector.

18. Disconnect the SRS main harness 18P connector (A) from the SRS unit.

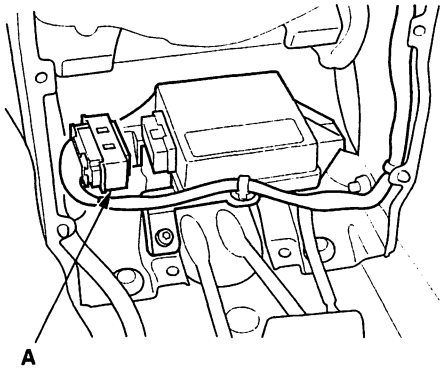

19. Check resistance between the No. 1 terminal and the No. 13 terminal of the SRS main harness 18P connector. There should be 1 MΩ or more.

SRS MAIN HARNESS 18P CONNECTOR

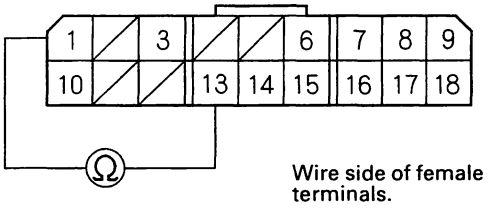

Is the resistance as specified?

YES—Faulty SRS unit; replace the SRS unit (see page 23-295). ■

NO—Short in the SRS main harness; replace the SRS main harness. ■

DTC Troubleshooting - '98-99 Models (cont'd)

DTC 1-4: Short to power in driver's airbag inflator

1. Erase the DTC memory (see page 23-45).

2. Turn the ignition switch ON (II), and check that the SRS indicator light comes on for about 6 seconds and then goes off.

   Does the SRS indicator light stay on?

   YES – Go to step 3.

   NO – Intermittent failure, system is OK at this time. Go to Troubleshooting Intermittent Failures (see page 23-45).

3. Turn the ignition switch OFF. Disconnect the battery negative cable, and wait for 3 minutes.

4. Disconnect the driver's airbag 2P connector from the cable reel 2P connector (A).

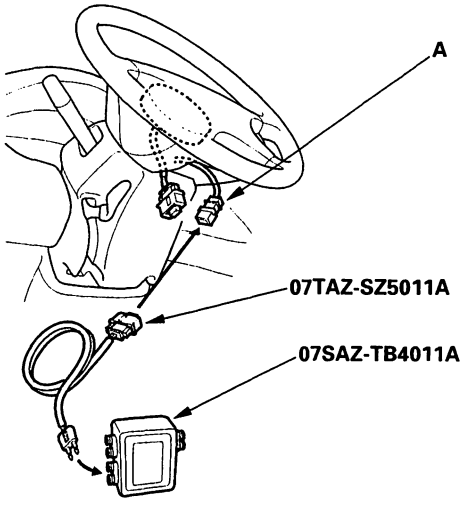

5. Connect the special tool (2 Ω connector) to the cable reel 2P connector.

6. Reconnect the battery negative cable.

7. Erase the DTC memory.

8. Read the DTC.

   Is DTC 1-4 indicated?

   YES – Go to step 9.

   NO – Short to power in the driver's airbag; replace the driver's airbag (see page 23-278). ■

9. Disconnect the battery negative cable, and wait for 3 minutes.

10. Disconnect the cable reel 2P connector from the SRS main harness 2P connector (A).

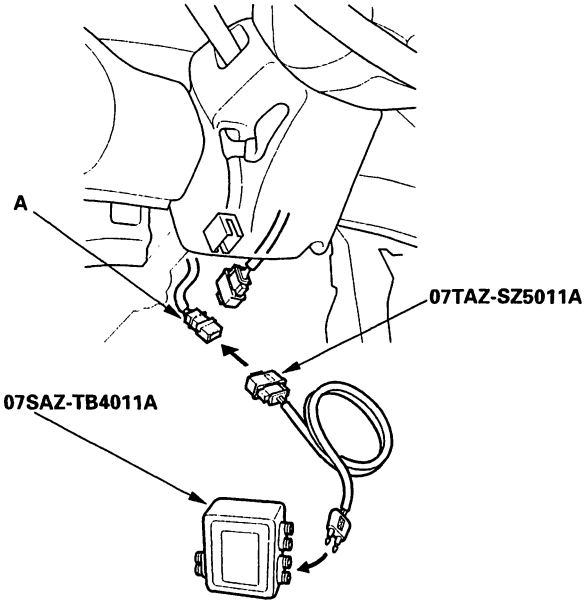

11. Connect the special tool (2 Ω connector) to the SRS main harness 2P connector.

12. Reconnect the battery negative cable.

13. Erase the DTC memory.

BACK

14. Read the DTC.

    Is DTC 1-4 indicated?

    YES – Go to step 15.

    NO – Short to power in the cable reel; replace the cable reel (see page 23-289). ■

15. Disconnect the battery negative cable, and wait for 3 minutes.

16. Disconnect the front passenger's airbag 2P connector (A) from the SRS main harness 2P connector (B).

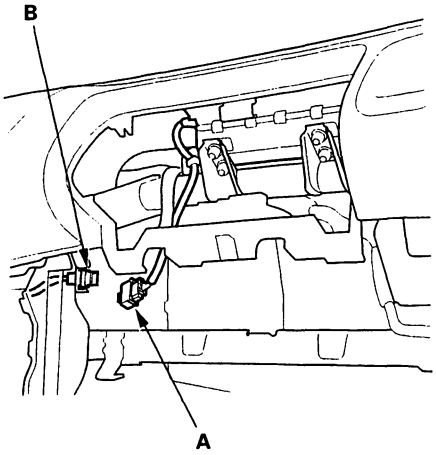

17. Disconnect the SRS main harness 18P connector (A) from the SRS unit.

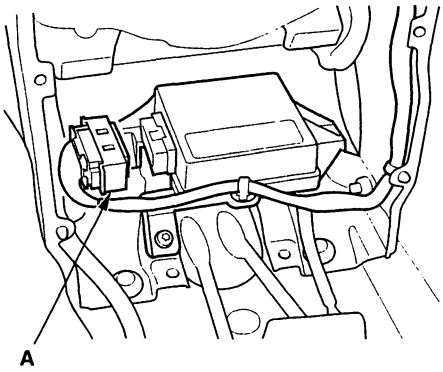

18. Reconnect the battery negative cable.

19. Turn the ignition switch ON (II).

20. Check for voltage between the No. 1 terminal of the SRS main harness 18P connector and body ground, and between the No. 13 terminal and body ground. There should be 0.5 V or less.

SRS MAIN HARNESS 18P CONNECTOR

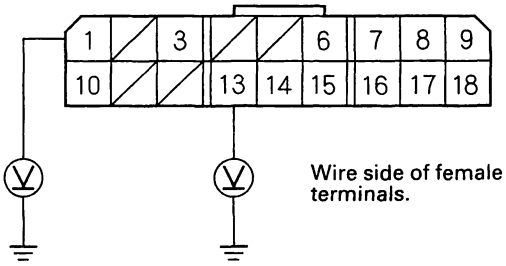

Is the voltage as specified?

YES – Faulty SRS unit; replace the SRS unit (see page 23-295). ■

NO – Short to power in the SRS main harness; replace the SRS main harness. ■

DTC Troubleshooting - '98-99 Models (cont'd)

DTC 1-5: Short to ground in driver's airbag inflator

1. Erase the DTC memory (see page 23-45).

2. Turn the ignition switch ON (II), and check that the SRS indicator light comes on for about 6 seconds and then goes off.

   Does the SRS indicator light stay on?

   YES—Go to step 3.

   NO—Intermittent failure, system is OK at this time. Go to Troubleshooting Intermittent Failures (see page 23-45).

3. Turn the ignition switch OFF. Disconnect the battery negative cable, and wait for 3 minutes.

4. Disconnect the driver's airbag 2P connector from the cable reel 2P connector (A).

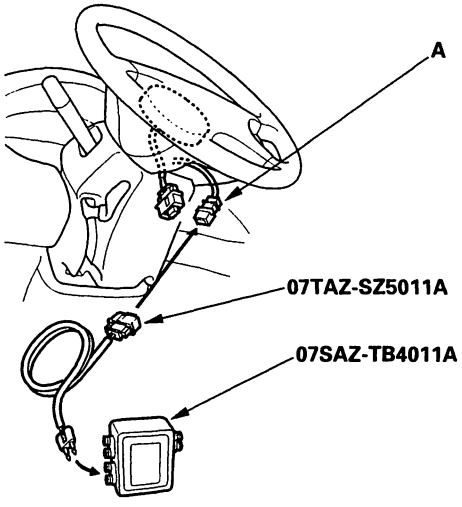

5. Connect the special tool (2 Ω connector) to the cable reel 2P connector.

6. Reconnect the battery negative cable.

7. Erase the DTC memory.

8. Read the DTC.

   Is DTC 1-5 indicated?

   YES—Go to step 9.

   NO—Short to ground in the driver's airbag inflator; replace the driver's airbag (see page 23-278). ■

9. Disconnect the battery negative cable, and wait for 3 minutes.

10. Disconnect the SRS main harness 2P connector from the cable reel 2P connector (A).

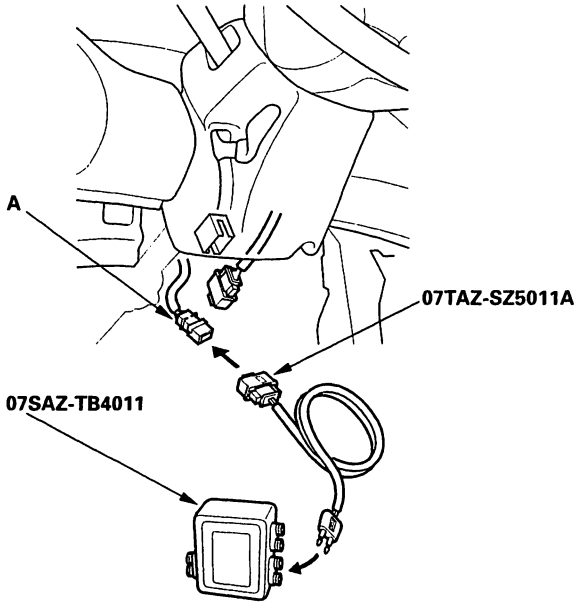

11. Connect the special tool (2 Ω connector) to the SRS main harness 2P connector.

12. Reconnect the battery negative cable.

13. Erase the DTC memory.

BACK

14. Read the DTC.

Is DTC 1-5 indicated?

YES – Go to step 15.

NO – Short to ground in the cable reel; replace the cable reel (see page 23-289). ■

15. Disconnect the battery negative cable, and wait for 3 minutes.

16. Disconnect the front passenger's airbag 2P connector (A) from the SRS main harness 2P connector (B).

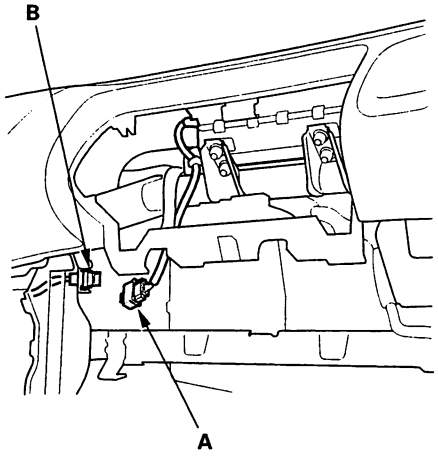

17. Disconnect the SRS main harness 18P connector (A) from the SRS unit.

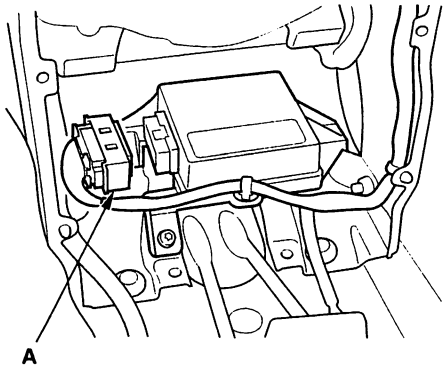

18. Check resistance between the No. 1 terminal of the SRS main harness 18P connector and body ground, and between the No. 13 terminal and body ground. There should be 1 MΩ or more.

SRS MAIN HARNESS 18P CONNECTOR

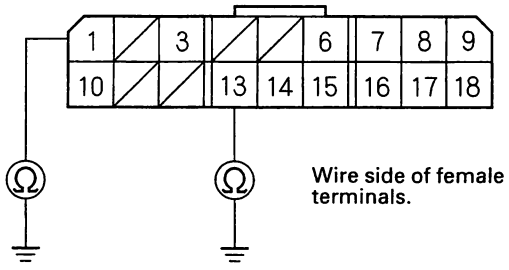

Is the resistance as specified?

YES – Faulty SRS unit; replace the SRS unit (see page 23-295). ■

NO – Short to ground in the SRS main harness; replace the SRS main harness. ■

DTC Troubleshooting - '98-99 Models (cont'd)

DTC 2-1: Open in passenger's airbag inflator

DTC 2-2: Increased resistance in passenger's airbag inflator

1. Erase the DTC memory (see page 23-45).

2. Turn the ignition switch ON (II), and check that the SRS indicator light comes on for about 6 seconds and then goes off.

   Does the SRS indicator light stay on?

   YES – Go to step 3.

   NO – Intermittent failure, system is OK at this time. Go to Troubleshooting Intermittent Failures (see page 23-45).

3. Turn the ignition switch OFF. Disconnect the battery negative cable, and wait for 3 minutes.

4. Disconnect the front passenger's airbag 2P connector from the SRS main harness 2P connector (A).

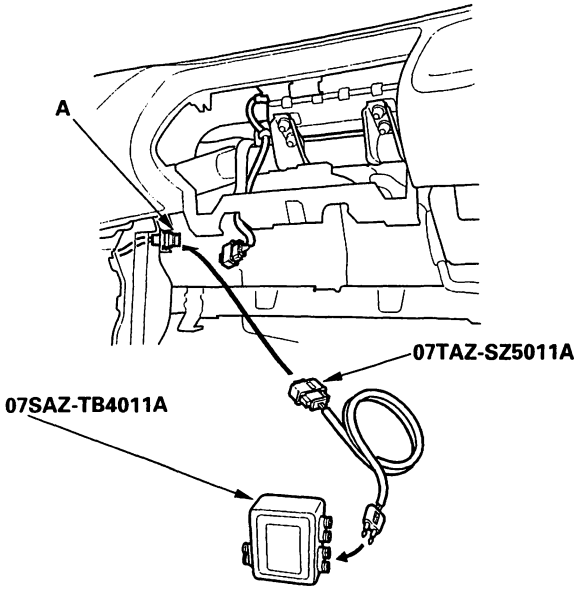

5. Connect the special tool (2 Ω connector) to the SRS main harness 2P connector.

6. Reconnect the battery negative cable.

7. Erase the DTC memory.

8. Read the DTC.

   Is DTC 2-1 or 2-2 indicated?

   YES – Go to step 9.

   NO – Open or increased resistance in the front passenger's airbag inflator; replace the front passenger's airbag (see page 23-280). ■

9. Disconnect the battery negative cable, and wait for 3 minutes.

10. Disconnect the driver's airbag 2P connector (A) from the cable reel 2P connector (B).

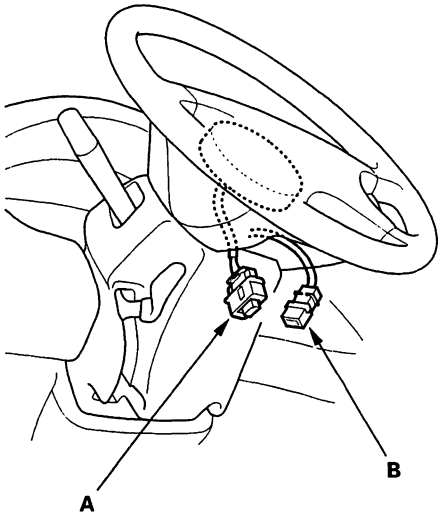

BACK

11. Disconnect the SRS main harness 18P connector (A) from the SRS unit.

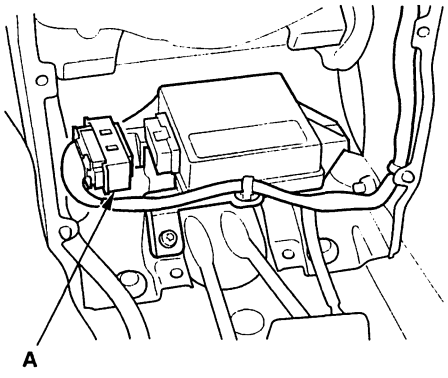

12. Check resistance between the No. 10 and No. 14 terminals of the SRS main harness 18P connector. There should be 2.0 – 3.0 Ω.

SRS MAIN HARNESS 18P CONNECTOR

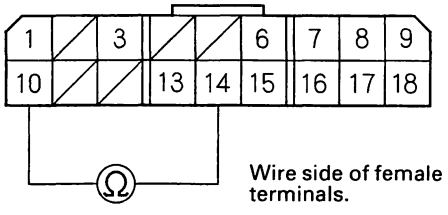

Is the resistance as specified?

YES – Faulty SRS unit or poor contact at the SRS unit connector; check the connection between the SRS main harness 18P connector and the SRS unit. If the connector is OK, replace the SRS unit (see page 23-295). ■

NO – Open or increased resistance in the SRS main harness; replace the SRS main harness. ■

DTC 2-3: Short to another wire or decreased resistance in passenger's airbag inflator.

1. Erase the DTC memory (see page 23-45).

2. Turn the ignition switch ON (II), and check that the SRS indicator light comes on for about 6 seconds and then goes off.

   Does the SRS indicator light stay on?

   YES – Go to step 3.

   NO – Intermittent failure, system is OK at this time. Go to Troubleshooting Intermittent Failures (see page 23-45).

3. Turn the ignition switch OFF. Disconnect the battery negative cable, and wait for 3 minutes.

4. Disconnect the front passenger's airbag 2P connector from the SRS main harness 2P connector (A).

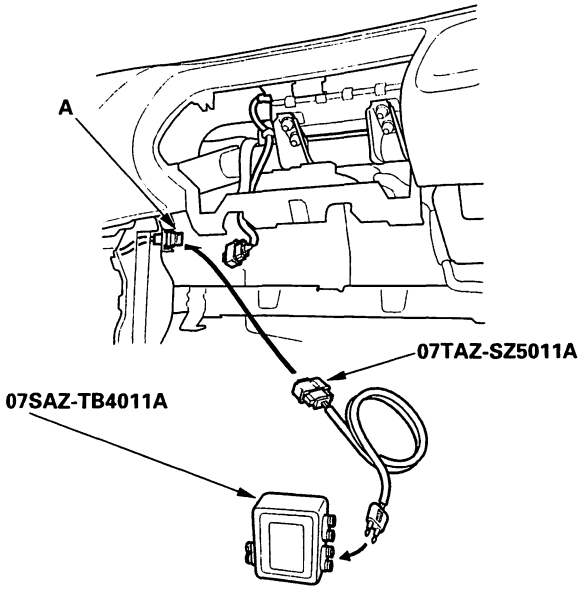

5. Connect the special tool (2 Ω connector) to the SRS main harness 2P connector.

(cont'd)

DTC Troubleshooting - '98-99 Models (cont'd)

6. Reconnect the battery negative cable.

7. Erase the DTC memory.

8. Read the DTC.

   Is DTC 2-3 indicated?

   YES—Go to step 9.

   NO—Short in the front passenger's airbag inflator; replace the front passenger's airbag (see page 23-280).■

9. Disconnect the battery negative cable, and wait for 3 minutes.

10. Disconnect the driver's airbag 2P connector (A) from the cable reel 2P connector (B).

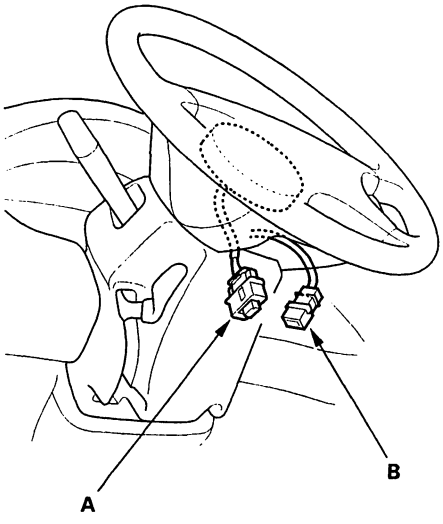

11. Disconnect the special tool from the SRS main harness 2P connector.

12. Disconnect the SRS main harness 18P connector (A) from the SRS unit.

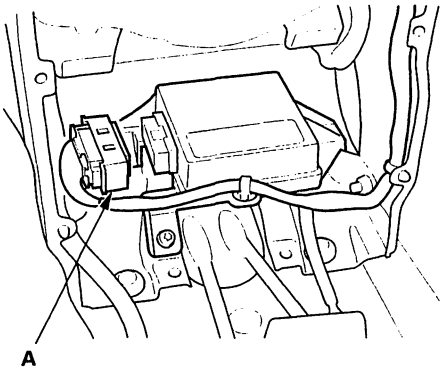

13. Check resistance between the No. 10 and No. 14 terminals of the SRS main harness 18P connector. There should be 1 MΩ or more.

SRS MAIN HARNESS 18P CONNECTOR

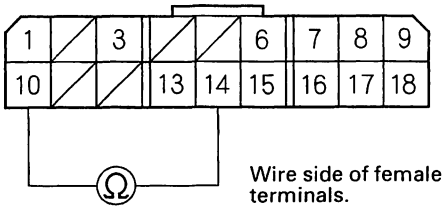

Is the resistance as specified?

YES—Faulty SRS unit; replace the SRS unit (see page 23-295).■

NO—Short in the SRS main harness; replace the SRS main harness.■

BACK

DTC 2-4: Short to power in passenger's airbag inflator

1. Erase the DTC memory (see page 23-45).

2. Turn the ignition switch ON (II), and check that the SRS indicator light comes on for about 6 seconds and then goes off.

   Does the SRS indicator light stay on?

   YES – Go to step 3.

   NO – Intermittent failure, system is OK at this time. Go to Troubleshooting Intermittent Failures (see page 23-45).

3. Turn the ignition switch OFF. Disconnect the battery negative cable, and wait for 3 minutes.

4. Disconnect the front passenger's airbag 2P connector from the SRS main harness 2P connector (A).

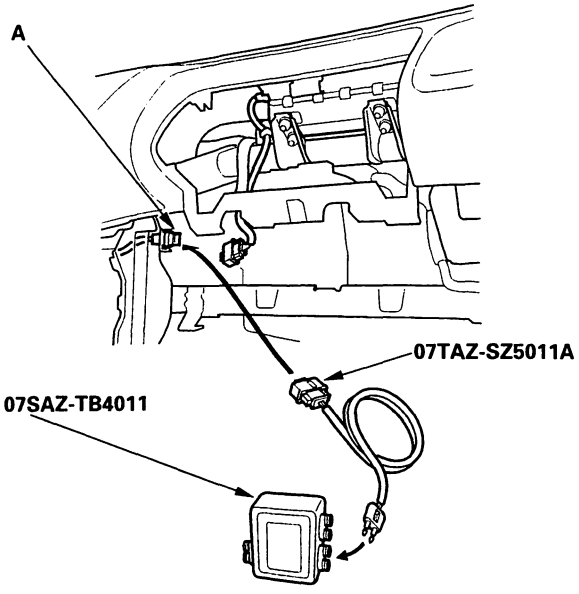

5. Connect the special tool (2 Ω connector) to the SRS main harness 2P connector.

6. Reconnect the battery negative cable.

7. Erase the DTC memory.

8. Read the DTC.

   Is DTC 2-4 indicated?

   YES – Go to step 9.

   NO – Short to power in the front passenger's airbag inflator; replace the front passenger's airbag (see page 23-280). ■

9. Disconnect the battery negative cable, and wait for 3 minutes.

10. Disconnect the driver's airbag 2P connector (A) from the cable reel 2P connector (B), and disconnect the special tool from the SRS main harness 2P connector.

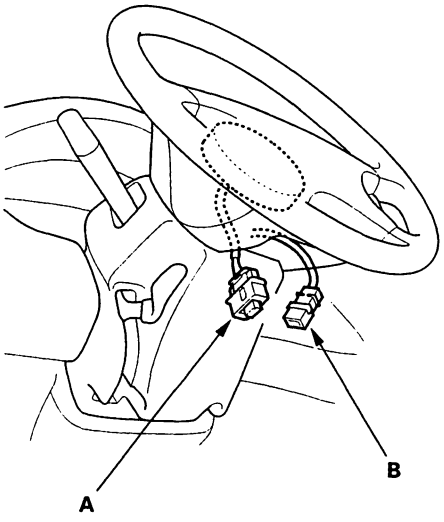

(cont'd)

DTC Troubleshooting - '98-99 Models (cont'd)

11. Disconnect the SRS main harness 18P connector (A) from the SRS unit.

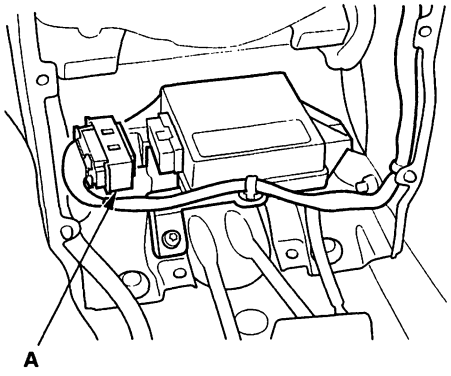

12. Reconnect the battery negative cable.

13. Turn the ignition switch ON (II).

14. Check for voltage between the No. 10 terminal of the SRS main harness 18P connector and body ground, and between the No. 14 terminal and body ground. There should be 0.5 V or less.

SRS MAIN HARNESS 18P CONNECTOR

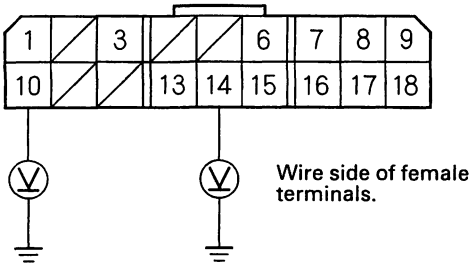

Is the voltage as specified?

YES—Faulty SRS unit; replace the SRS unit (see page 23-295).■

NO—Short to power in the SRS main harness; replace the SRS main harness.■

DTC 2-5: Short to ground in passenger's airbag inflator

1. Erase the DTC memory (see page 23-45).

2. Turn the ignition switch ON (II), and check that the SRS indicator light comes on for about 6 seconds and then goes off.

   Does the SRS indicator light stay on?

   YES—Go to step 3.

   NO—Intermittent failure, system is OK at this time. Go to Troubleshooting Intermittent Failures (see page 23-45).

3. Turn the ignition switch OFF. Disconnect the battery negative cable, and wait for 3 minutes.

4. Disconnect the front passenger's airbag 2P connector from the SRS main harness 2P connector (A).

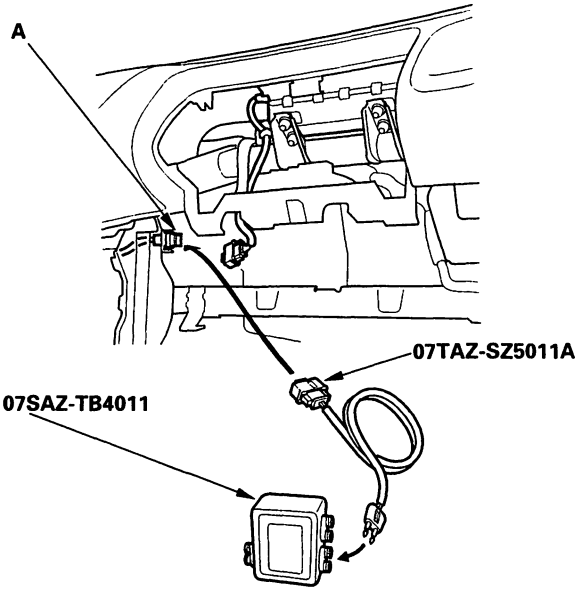

5. Connect the special tool (2 Ω connector) to the SRS main harness 2P connector.

BACK

6. Reconnect the battery negative cable.

7. Erase the DTC memory.

8. Read the DTC.

   Is DTC 2-5 indicated?

   YES – Go to step 9.

   NO – Short to ground in the passenger's airbag inflator; replace the passenger's airbag (see page 23-280). ■

9. Disconnect the battery negative cable, and wait for 3 minutes.

10. Disconnect the driver's airbag 2P connector (A) from the cable reel 2P connector (B), and disconnect the special tool from the SRS main harness 2P connector.

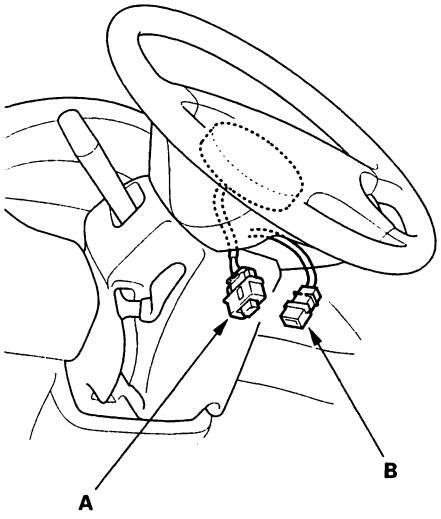

11. Disconnect the SRS main harness 18P connector (A) from the SRS unit.

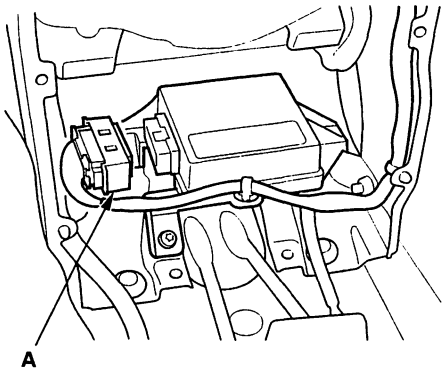

12. Check resistance between the No. 10 terminal of the SRS main harness 18P connector and body ground,and between the No. 14 terminal and body ground.There should be 1 M Ω or more.

SRS MAIN HARNESS 18P CONNECTOR

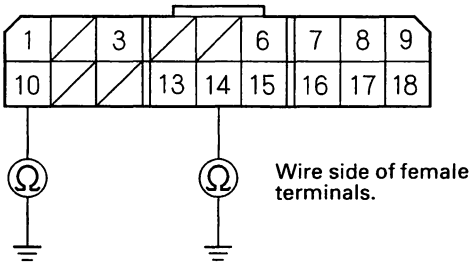

Is the resistance as specified?

YES – Faulty SRS unit; replace the SRS unit (see page 23-295). ■

NO – Short to ground in the SRS main harness; replace the SRS main harness. ■

DTC Troubleshooting - '98-99 Models (cont'd)

DTC 5-1, 5-2, 5-3, 5-4, 5-8, 6-1, 6-2, 6-3, 6-4, 6-7, 6-8, 7-1, 7-2, 7-3, 8-1, 8-2, 8-5, 8-6, 9-1, 9-2: Internal Failure of the SRS unit

Note: Before Troubleshooting any of these DTCs, check batterysystem voltage. If the voltage is low, repair the charging system before troubleshooting the SRS.If the battery/system voltage is now OK, ask the customer if the battery ever went dead.

1. Erase the DTC memory (see page 23-45).

2. Turn the ignition switch ON (II), and check that the SRS indicator light comes on for about 6 seconds and then goes off.

   Does the SRS indicator light stay on?

   YES—Replace the SRS unit (see page 23-295).■

   NO—Intermittent failure, system is OK at this time. Go to Troubleshooting Intermittent Failures (see page 23-45).

DTC 10-1: Airbags deployed

The SRS unit must be replaced after any airbags have deployed (see page 23-295).

BACK

DTC 8-6: Internal Failure of SRS unit, or two Failures at a time

Besides indicating an abnormality in the SRS unit, DTC 8-6 may also indicate that two problems equivalent to DTC 1-1 and 2-4, 1-4 and 2-1, or 1-4 and 2-4 occurred at the same time. Proceed in the order shown below.

1. Erase the DTC memory (see page 23-45).

2. Turn the ignition switch ON (II), and check that the SRS indicator light comes on for about 6 seconds and then goes off.

   Does the SRS indicator light stay on?

   YES – Go to step 3.

   NO – Intermittent failure, system is OK at this time. Go to Troubleshooting Intermittent Failures (see page 23-45).

3. Turn the ignition switch OFF. Disconnect the battery negative cable, and wait for 3 minutes.

4. Disconnect the driver's airbag and front passenger's airbag connectors (A).

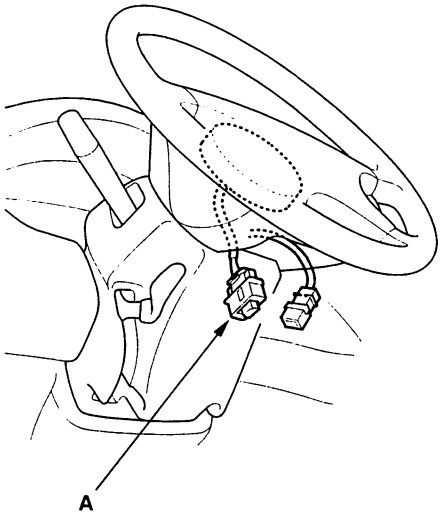

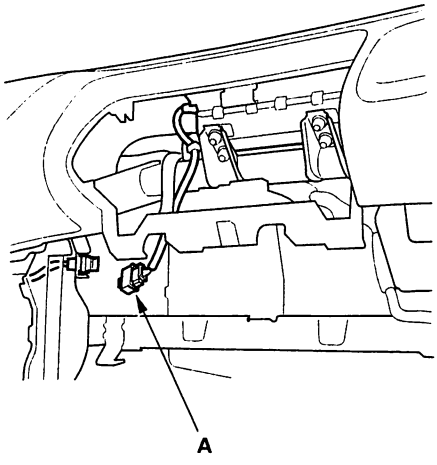

(cont'd)

DTC Troubleshooting - '98-99 Models (cont'd)

5. Disconnect the SRS main harness 18P connector (A) from the SRS unit (B).

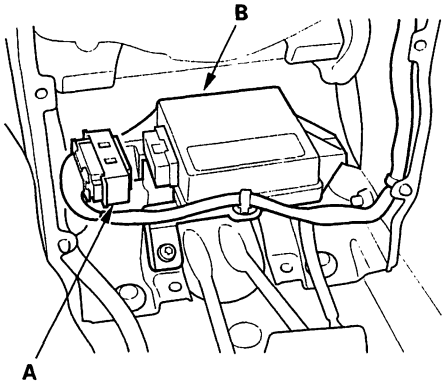

6. Reconnect the battery negative cable.

7. Turn the ignition switch ON (II).

8. Check for voltage between the No. 10 terminal of the SRS main harness 18P connector and body ground, and between the No. 14 terminal and body ground. There should be 0.5 V or less.

SRS MAIN HARNESS 18P CONNECTOR

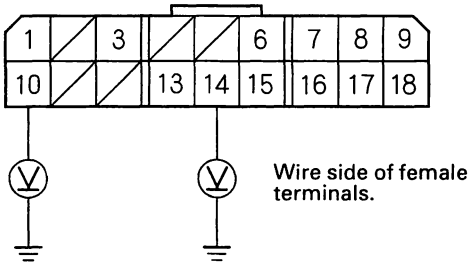

Is the voltage as specified?

YES—Go to step 9.

NO—Short to power in the SRS main harness; replace the SRS main harness.■

9. Check for voltage between the No. 1 terminal of the SRS main harness 18P connector and body ground, and between the No. 13 terminal and body ground. There should be 0.5 V or less.

SRS MAIN HARNESS 18P CONNECTOR

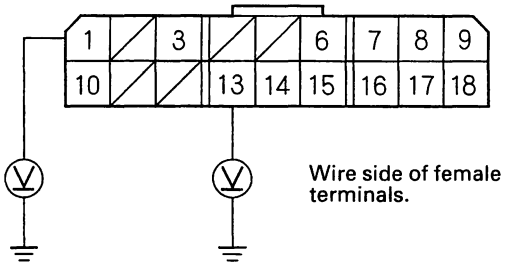

Is the voltage as specified?

YES—Faulty SRS unit; replace the SRS unit (see page 23-295).■

NO—Go to step 10.

10. Turn the ignition switch OFF.

BACK

11. Disconnect the cable reel 2P connector (A) from the SRS main harness 2P connector (B).

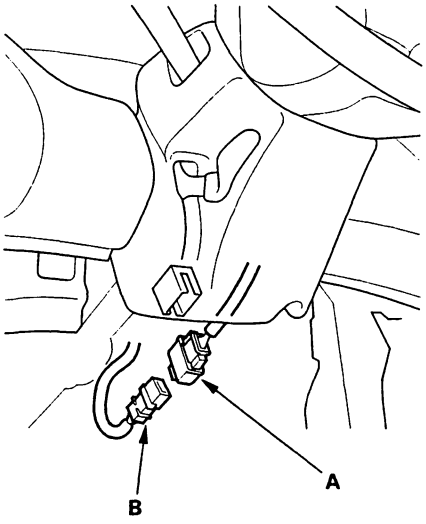

12. Turn the ignition switch ON (II).

13. Check for voltage between the No. 1 terminal of the SRS main harness 18P connector and body ground, and between No. 13 terminal and body ground. There should be 0.5 V or less.

SRS MAIN HARNESS 18P CONNECTOR

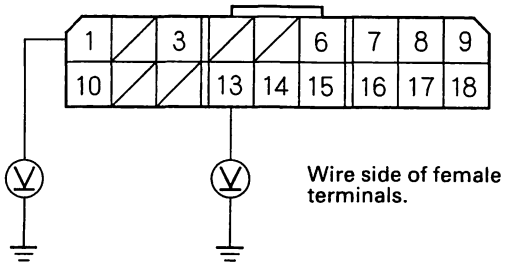

Is the voltage as specified?

YES—Short to power in the cable reel; replace the cable reel (see page 23-289). ■

NO—Short to power in the SRS main harness; replace the SRS main harness. ■

DTC Troubleshooting - '00 Model

DTC 1-1: Open in driver's airbag inflator

DTC 1-2: Increased resistance in driver's airbag inflator

1. Erase the DTC memory (see page 23-45).

2. Turn the ignition switch ON (II), and check that the SRS indicator light comes on for about 6 seconds and then goes off.

   Does the SRS indicator light stay on?

   YES – Go to step 3.

   NO – Intermittent failure, system is OK at this time. Go to Troubleshooting Intermittent Failures (see page 23-45).

3. Turn the ignition switch OFF. Disconnect the battery negative cable, and wait for 3 minutes.

4. Disconnect the driver's airbag 2P connector from the cable reel 2P connector (A).

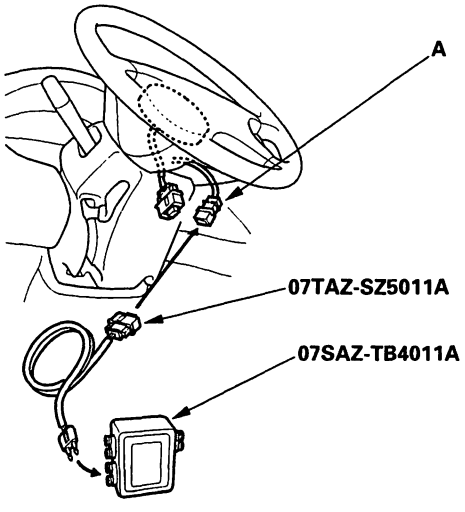

5. Connect the special tool (2 Ω connector) to the cable reel connector.

6. Reconnect the battery negative cable.

7. Erase the DTC memory.

8. Read the DTC.

   Is DTC 1-1 or DTC 1-2 indicated?

   YES – Go to step 9.

   NO – Open or increased resistance in the driver's airbag inflator; replace the driver's airbag assembly (see page 23-278). ■

9. Disconnect the battery negative cable, and wait for 3 minutes.

10. Disconnect the cable reel 2P connector from the SRS main harness 2P connector (A).

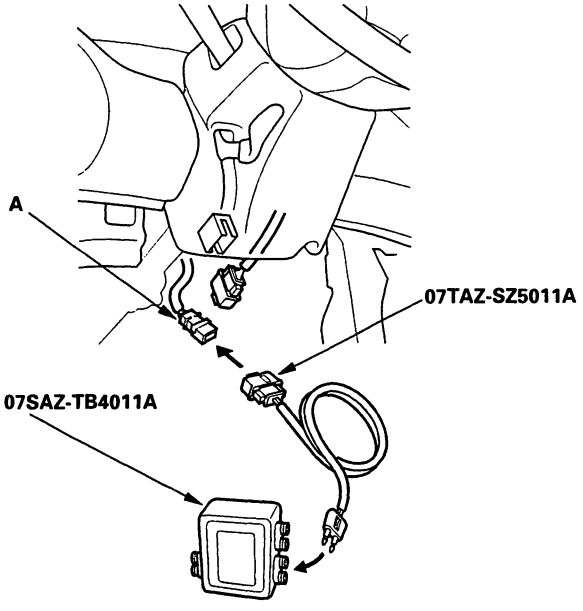

11. Connect the special tool (2 Ω connector) to the SRS main harness 2P connector.

12. Reconnect the battery negative cable.

13. Erase the DTC memory.

BACK

14. Read the DTC.

Is DTC 1-1 or DTC 1-2 indicated?

YES – Go to step 15.

NO – Open or increased resistance in the cable reel; replace the cable reel (see page 23-289).■

15. Disconnect the battery negative cable, and wait for 3 minutes.

16. Disconnect the front passenger's airbag 4P connector (A).

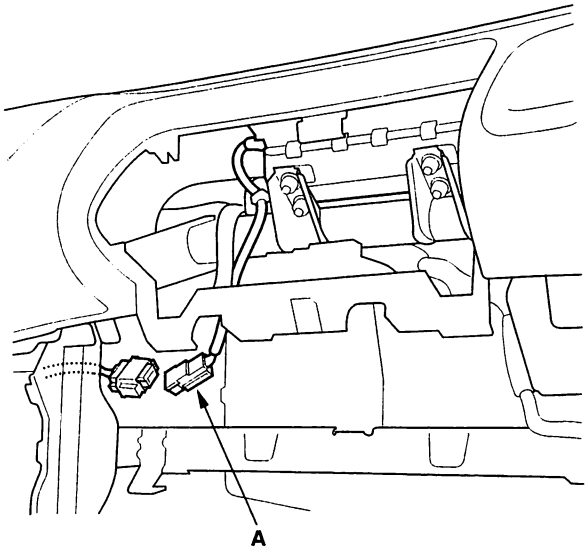

17. Disconnect SRS unit connector A (18P) from the SRS unit.

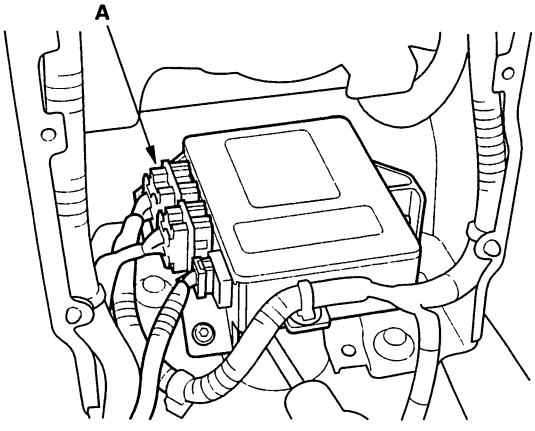

18. Check resistance between the No. 7 terminal and the No. 16 terminal of SRS unit connector A (18P). There should be 2.0 – 3.0 Ω.

SRS UNIT CONNECTOR A (18P)

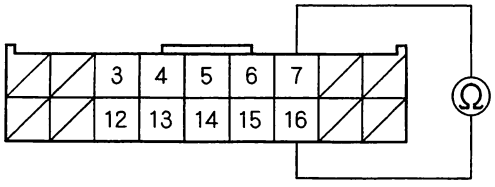

Wire side of female terminals

Is the resistance as specified?

YES – Faulty SRS unit or poor contact at SRS unit connector A (18P) and the SRS unit. Check the connection between the connector and the SRS unit. If the connection is OK, replace the SRS unit (see page 23-296).■

NO – Open or increased resistance in the SRS main harness; replace the SRS main harness.■

DTC Troubleshooting - '00 Model (cont'd)

DTC 1-3: Short to another wire or decreased resistance in driver's airbag inflator

1. Erase the DTC memory (see page 23-45).

2. Turn the ignition switch ON (II), and check that the SRS indicator light comes on for about 6 seconds and then goes off.

   Does the SRS indicator light stay on?

   YES—Go to step 3.

   NO—Intermittent failure, system is OK at this time. Go to Troubleshooting Intermittent Failures (see page 23-45).

3. Turn the ignition switch OFF. Disconnect the battery negative cable, and wait for 3 minutes.

4. Disconnect the driver's airbag 2P connector from the cable reel 2P connector (A).

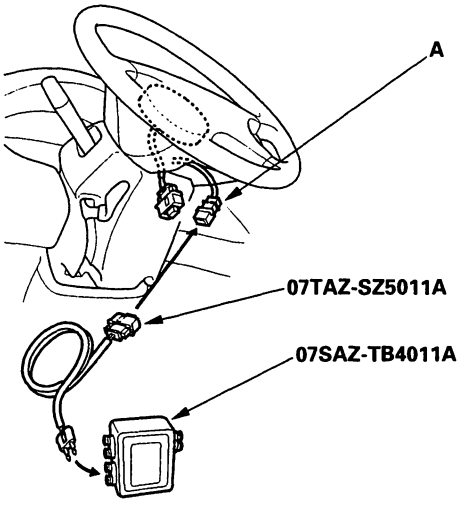

5. Connect the special tool (2 Ω connector) to the cable reel 2P connector.

6. Reconnect the battery negative cable.

7. Erase the DTC memory.

8. Read the DTC.

   Is DTC 1-3 indicated?

   YES—Go to step 9.

   NO—Short in the driver's airbag; replace the driver's airbag (see page 23-278).■

9. Disconnect the battery negative cable, and wait for 3 minutes.

10. Disconnect the cable reel 2P connector from the SRS main harness 2P connector (A).

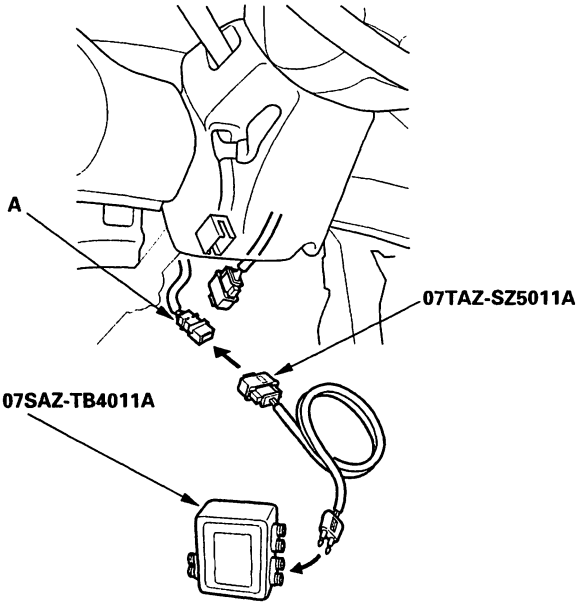

11. Connect the special tool (2 Ω connector) to the SRS main harness 2P connector.

12. Reconnect the battery negative cable.

13. Erase the DTC memory.

14. Read the DTC.

    Is DTC 1-3 indicated?

    YES—Go to step 15.

    NO—Short in the cable reel; replace the cable reel (see page 23-289).■

BACK

15. Disconnect the battery negative cable, and wait for 3 minutes.

16. Disconnect the front passenger's airbag 4P connector (A) from the SRS main harness 4P connector (B).

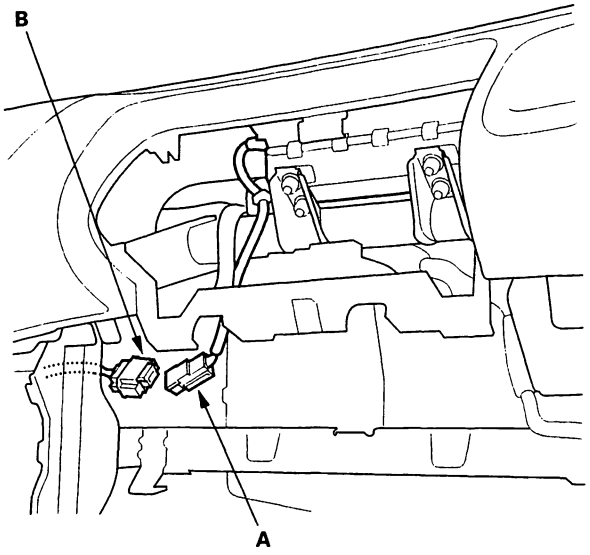

17. Disconnect the special tool from the SRS main harness 2P connector.

18. Disconnect SRS unit connector A (18P) from the SRS unit.

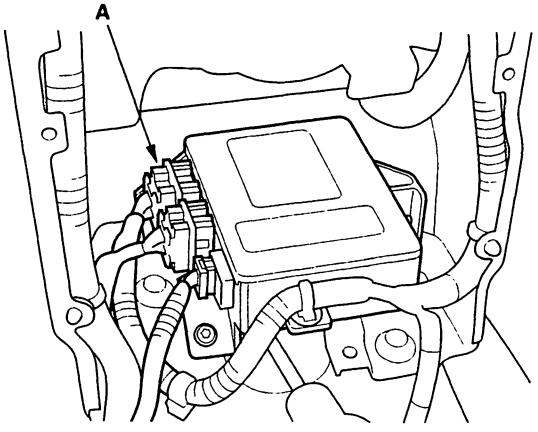

19. Check resistance between the No. 7 terminal and the No. 16 terminal of SRS unit connector A (18P). There should be 1 MΩ or more.

SRS UNIT CONNECTOR A (18P)

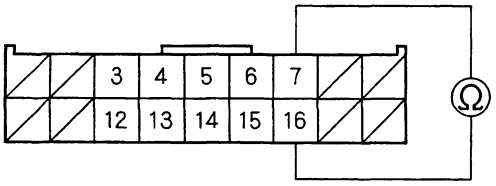

Wire side of female terminals

Is the resistance as specified?

YES—Faulty SRS unit; replace the SRS unit (see page 23-296).■

NO—Short in the SRS main harness; replace the SRS main harness.■

DTC Troubleshooting - '00 Model (cont'd)

DTC 1-4: Short to power in driver's airbag inflator

1. Erase the DTC memory (see page 23-45).

2. Turn the ignition switch ON (II), and check that the SRS indicator light comes on for about 6 seconds and then goes off.

   Does the SRS indicator light stay on?

   YES – Go to step 3.

   NO – Intermittent failure, system is OK at this time. Go to Troubleshooting Intermittent Failures (see page 23-45).

3. Turn the ignition switch OFF. Disconnect the battery negative cable, and wait for 3 minutes.

4. Disconnect the driver's airbag 2P connector from the cable reel 2P connector (A).

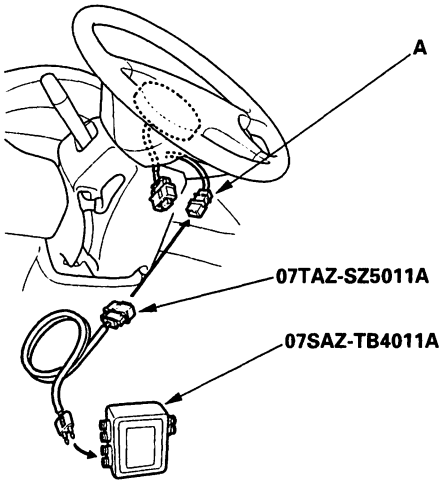

5. Connect the special tool (2 Ω connector) to the cable reel 2P connector.

6. Reconnect the battery negative cable.

7. Erase the DTC memory.

8. Read the DTC.

   Is DTC 1-4 indicated?

   YES – Go to step 9.

   NO – Short to power in the driver's airbag; replace the driver's airbag (see page 23-278). ■

9. Disconnect the battery negative cable, and wait for 3 minutes.

10. Disconnect the cable reel 2P connector from the SRS main harness 2P connector (A).

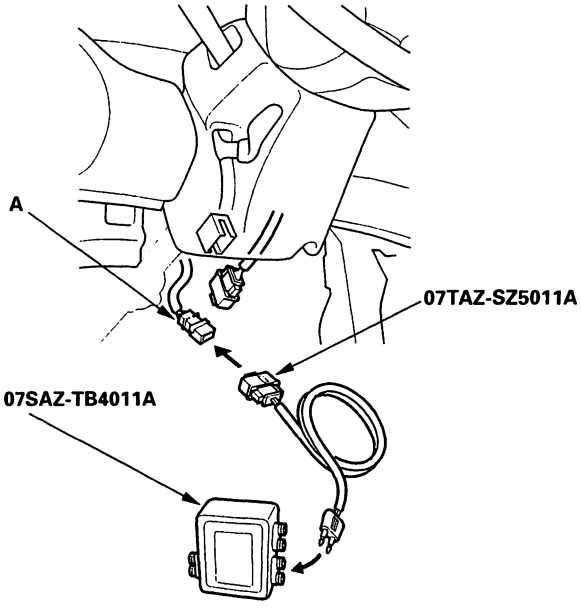

11. Connect the special tool (2 Ω connector) to the SRS main harness 2P connector.

12. Reconnect the battery negative cable.

13. Erase the DTC memory.

BACK

14. Read the DTC.

Is DTC 1-4 indicated?

YES—Go to step 15.

NO—Short to power in the cable reel; replace the cable reel (see page 23-289).■

15. Disconnect the battery negative cable, and wait for 3 minutes.

16. Disconnect the front passenger's airbag 4P connector (A) from the SRS main harness 4P connector (B), and disconnect the special tool from the SRS main harness 2P connector.

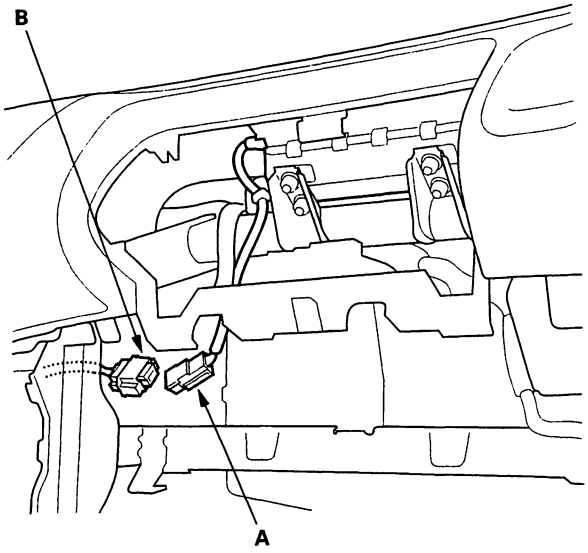

17. Disconnect SRS unit connector A (18P) from the SRS unit.

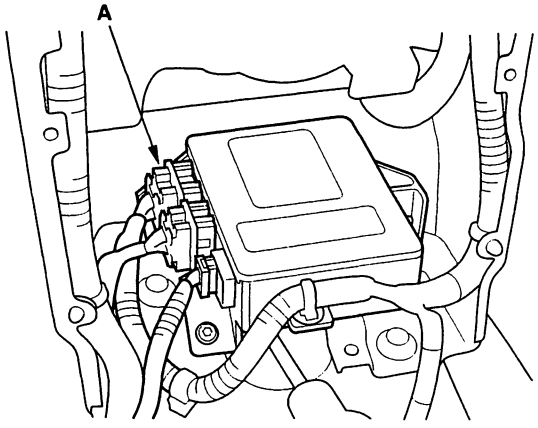

18. Reconnect the battery negative cable.

19. Turn the ignition switch ON (II).

20. Check for voltage between the No. 7 terminal of SRS unit connector A (18P) and body ground, and between the No. 16 terminal and body ground. There should be 0.5 V or less.

SRS UNIT CONNECTOR A (18P)

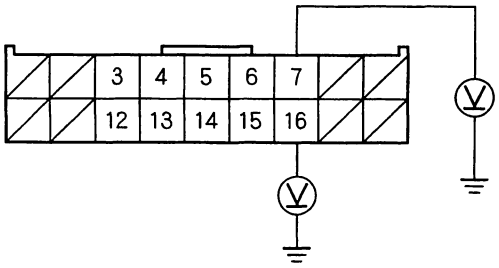

Wire side of female terminals

Is the voltage as specified?

YES—Faulty SRS unit; replace the SRS unit (see page 23-296).■

NO—Short to power in the SRS main harness; replace the SRS main harness.■

DTC Troubleshooting - '00 Model (cont'd)

DTC 1-5: Short to ground in driver's airbag inflator

1. Erase the DTC memory (see page 23-45).

2. Turn the ignition switch ON (II), and check that the SRS indicator light comes on for about 6 seconds and then goes off.

   Does the SRS indicator light stay on?

   YES – Go to step 3.

   NO – Intermittent failure, system is OK at this time. Go to Troubleshooting Intermittent Failures (see page 23-45).

3. Turn the ignition switch OFF. Disconnect the battery negative cable, and wait for 3 minutes.

4. Disconnect the driver's airbag 2P connector from the cable reel 2P connector (A).

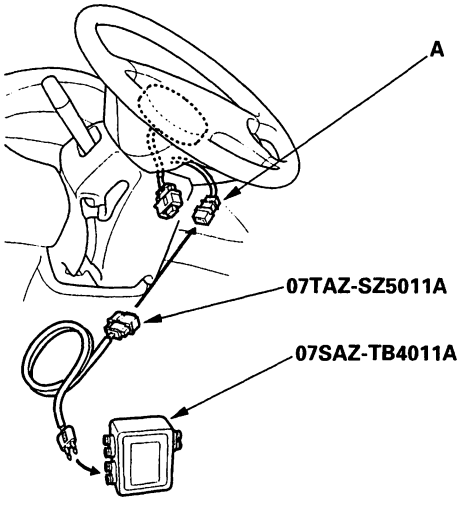

5. Connect the special tool (2 Ω connector) to the cable reel 2P connector.

6. Reconnect the battery negative cable.

7. Erase the DTC memory.

8. Read the DTC.

   Is DTC 1-5 indicated?

   YES – Go to step 9.

   NO – Short to ground in the driver's airbag inflator; replace the driver's airbag (see page 23-278). ■

9. Disconnect the battery negative cable, and wait for 3 minutes.

10. Disconnect the SRS main harness 2P connector from the cable reel 2P connector (A).

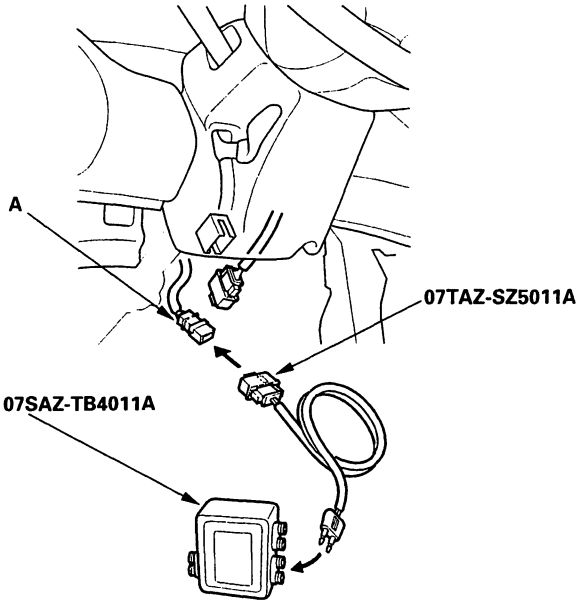

11. Connect the special tool (2 Ω connector) to the SRS main harness 2P connector.

12. Reconnect the battery negative cable.

13. Erase the DTC memory.

BACK

14. Read the DTC.

Is DTC 1-5 indicated?

YES – Go to step 15.

NO – Short to ground in the cable reel; replace the cable reel (see page 23-289). ■

15. Disconnect the battery negative cable, and wait for 3 minutes.

16. Disconnect the front passenger's airbag 4P connector (A) from the SRS main harness 4P connector (B), and disconnect the special tool from the SRS main harness 2P connector.

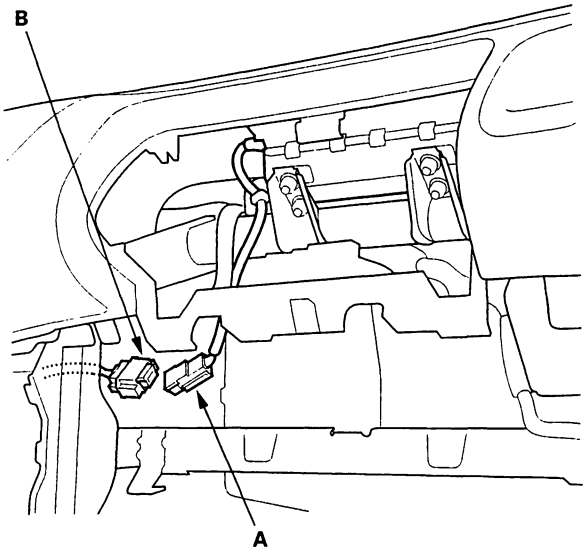

17. Disconnect SRS unit connector A (18P) from the SRS unit.

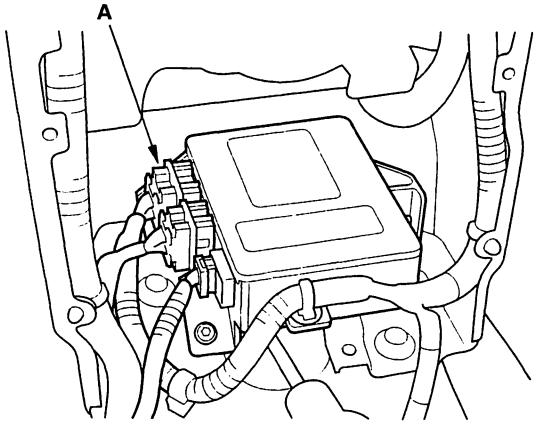

18. Check resistance between the No. 7 terminal of SRS unit connector A (18P) and body ground, and between the No. 16 terminal and body ground. There should be 1 MΩ or more.

SRS UNIT CONNECTOR A (18P)

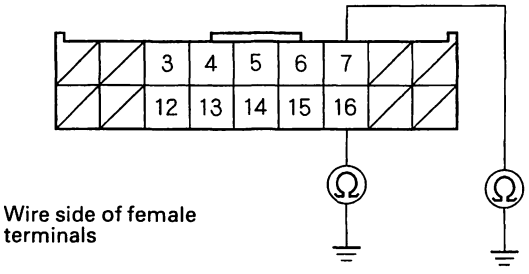

Is the resistance as specified?

YES – Faulty SRS unit; replace the SRS unit (see page 23-296). ■

NO – Short to ground in the SRS main harness; replace the SRS main harness. ■

DTC Troubleshooting - '00 Model (cont'd)

DTC 2-1: Open in passenger's airbag inflator

DTC 2-2: Increased resistance in passenger's airbag inflator

1. Erase the DTC memory (see page 23-45).

2. Turn the ignition switch ON (II), and check that the SRS indicator light comes on for about 6 seconds and then goes off.

   Does the SRS indicator light stay on?

   YES—Go to step 3.

   NO—Intermittent failure, system is OK at this time. Go to Troubleshooting Intermittent Failures (see page 23-45).

3. Turn the ignition switch OFF. Disconnect the battery negative cable, and wait for 3 minutes.

4. Disconnect the front passenger's airbag 4P connector from the SRS main harness 4P connector (A).

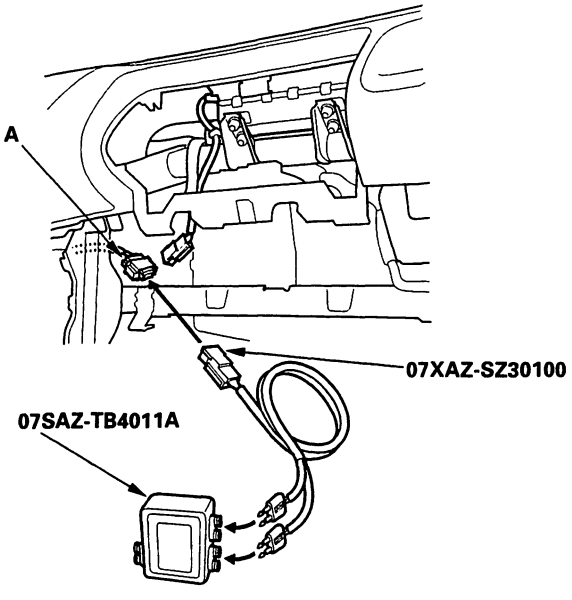

5. Connect the special tool (2 Ω connector) to the SRS main harness 2P connector.

6. Reconnect the battery negative cable.

7. Erase the DTC memory.

8. Read the DTC.

   Is DTC 2-1 or 2-2 indicated?

   YES—Go to step 9.

   NO—Open or increased resistance in the front passenger's airbag inflator; replace the front passenger's airbag (see page 23-280).■

9. Disconnect the battery negative cable, and wait for 3 minutes.

10. Disconnect the driver's airbag 2P connector (A) from the cable reel 2P connector (B).

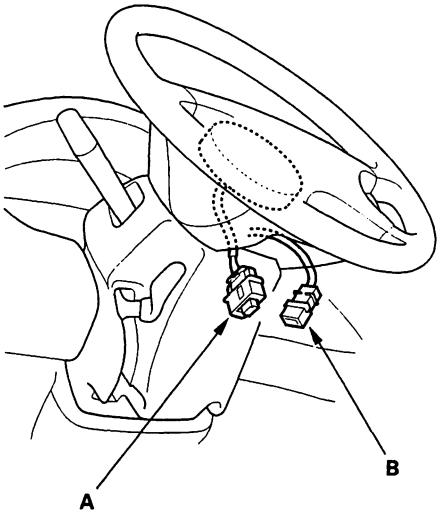

BACK

11. Disconnect SRS unit connector A (18P) from the SRS unit.

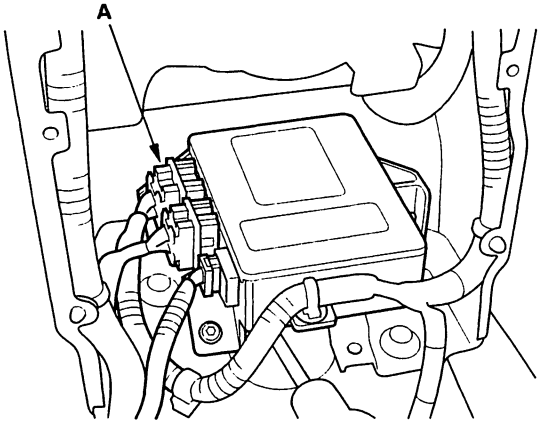

12. Check resistance between the No. 6 and No. 15 terminals and between the No. 5 and No. 14 terminals of SRS unit connector A (18P). There should be 2.0–3.0 Ω.

SRS UNIT CONNECTOR A (18P)

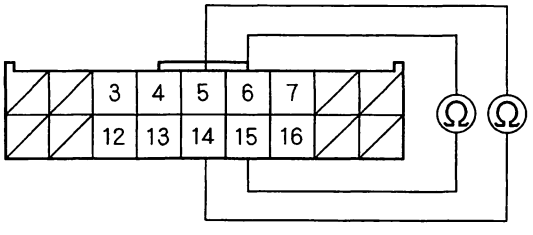

Wire side of female terminals

Is the resistance as specified?

YES—Faulty SRS unit or poor contact at the SRS unit connector; check the connection between the SRS main harness 18P connector and the SRS unit. If the connector is OK, replace the SRS unit (see page 23-296).■

NO—Open or increased resistance in the SRS main harness; replace the SRS main harness.■

DTC 2-3: Short to another wire or decreased resistance in passenger's airbag inflator.

1. Erase the DTC memory (see page 23-45).

2. Turn the ignition switch ON (II), and check that the SRS indicator light comes on for about 6 seconds and then goes off.

   Does the SRS indicator light stay on?

   YES—Go to step 3.

   NO—Intermittent failure, system is OK at this time. Go to Troubleshooting Intermittent Failures (see page 23-45).

3. Turn the ignition switch OFF. Disconnect the battery negative cable, and wait for 3 minutes.

4. Disconnect the front passenger's airbag 4P connector from the SRS main harness 4P connector (A).

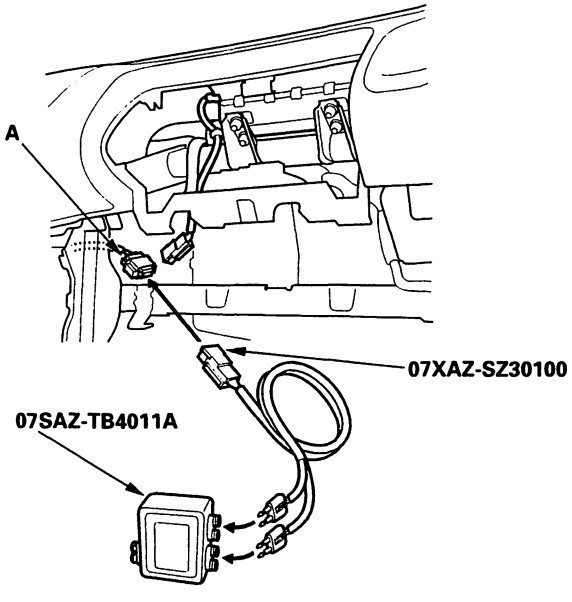

5. Connect the special tool (2 Ω connectors) to the SRS main harness 2P connector.

(cont'd)

DTC Troubleshooting - '00 Model (cont'd)

6. Reconnect the battery negative cable.

7. Erase the DTC memory.

8. Read the DTC.

   Is DTC 2-3 indicated?

   YES—Go to step 9.

   NO—Short in the front passenger's airbag inflator; replace the front passenger's airbag (see page 23-280).■

9. Disconnect the battery negative cable, and wait for 3 minutes.

10. Disconnect the driver's airbag 2P connector (A) from the cable reel 2P connector (B).

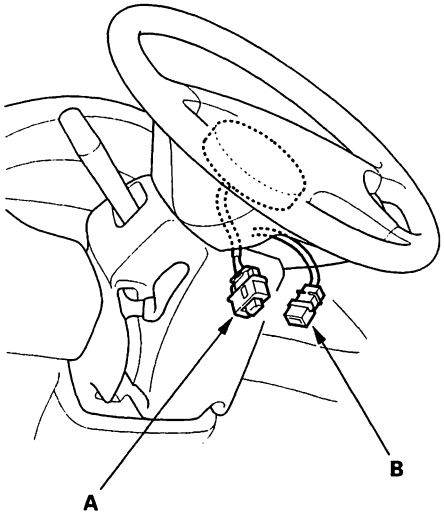

11. Disconnect the special tool from the SRS main harness 2P connector.

12. Disconnect SRS unit connector A (18P) from the SRS unit.

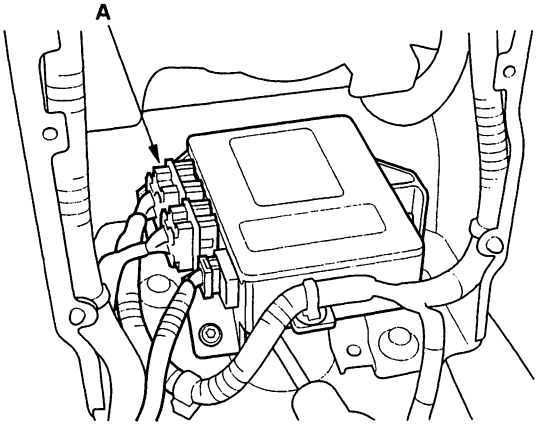

13. Check resistance between the No. 6 and No. 15 terminals and between the No. 5 and No. 14 terminals of the SRS main harness 18P connector. There should be 1 MΩ or more.

SRS MAIN HARNESS 18P CONNECTOR

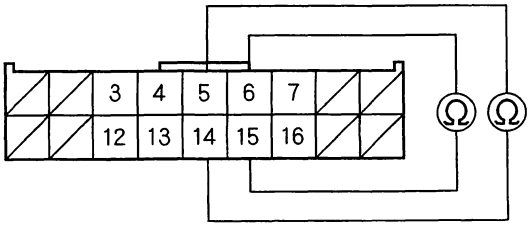

Wire side of female terminals.

Is the resistance as specified?

YES—Faulty SRS unit; replace the SRS unit (see page 23-296).■

NO—Short in the SRS main harness; replace the SRS main harness.■

BACK

DTC 2-4: Short to power in passenger's airbag inflator

1. Erase the DTC memory (see page 23-45).

2. Turn the ignition switch ON (II), and check that the SRS indicator light comes on for about 6 seconds and then goes off.

   Does the SRS indicator light stay on?

   YES – Go to step 3.

   NO – Intermittent failure, system is OK at this time. Go to Troubleshooting Intermittent Failures (see page 23-45).

3. Turn the ignition switch OFF. Disconnect the battery negative cable, and wait for 3 minutes.

4. Disconnect the front passenger's airbag 4P connector from the SRS main harness 4P connector (A).

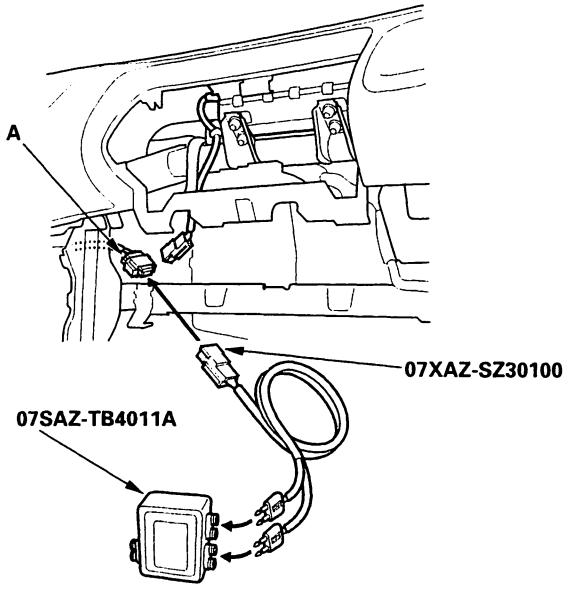

5. Connect the special tool (2 Ω connector) to the SRS main harness 2P connector.

6. Reconnect the battery negative cable.

7. Erase the DTC memory.

8. Read the DTC.

   Is DTC 2-4 indicated?

   YES – Go to step 9.

   NO – Short to power in the front passenger's airbag inflator; replace the front passenger's airbag (see page 23-280). ■

9. Disconnect the battery negative cable, and wait for 3 minutes.

10. Disconnect the driver's airbag 2P connector (A) from the cable reel 2P connector (B), and disconnect the special tool from the SRS main harness 4P connector.

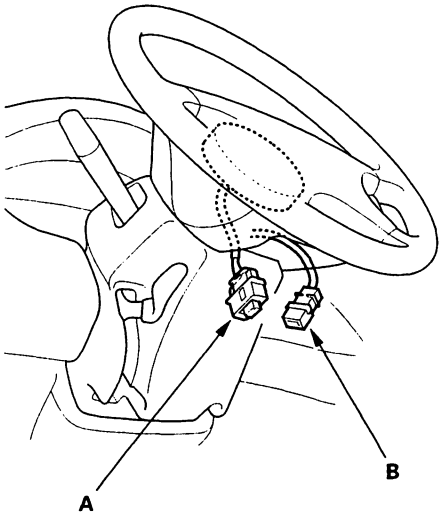

(cont'd)

DTC Troubleshooting - '00 Model (cont'd)

11. Disconnect SRS unit connector A (18P) from the SRS unit.

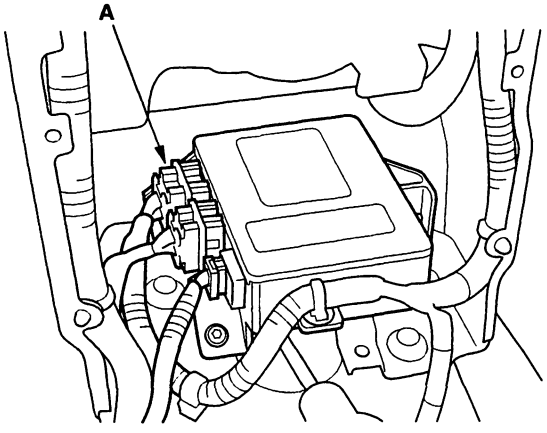

12. Reconnect the battery negative cable.

13. Turn the ignition switch ON (II).

14. Check for voltage between the No. 6 terminal of SRS unit connector A (18P) and body ground, between the No. 15 terminal and body ground, between the No. 5 terminal and body ground, and between the No. 14 terminal and body ground. There should be 0.5 V or less.

SRS UNIT CONNECTOR A (18P)

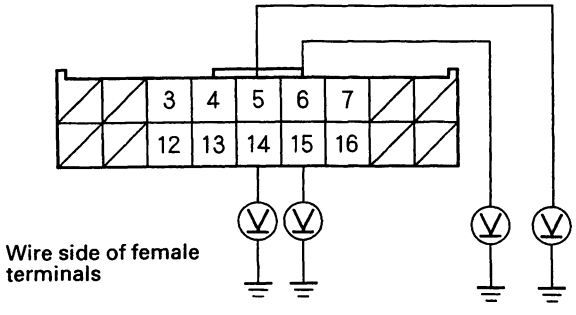

Is the voltage as specified?

YES—Faulty SRS unit; replace the SRS unit (see page 23-296).■

NO—Short to power in the SRS main harness; replace the SRS main harness.■

DTC 2-5: Short to ground in passenger's airbag inflator

1. Erase the DTC memory (see page 23-45).

2. Turn the ignition switch ON (II),and check that the SRS indicator light comes on for about 6 seconds and then goes off.

   Does the SRS indicator light stay on?

   YES—Go to step 3.

   NO—Intermittent failure, system is OK at this time. Go to Troubleshooting Intermittent Failures (see page 23-45).

3. Turn the ignition switch OFF. Disconnect the battery negative cable, and wait for 3 minutes.

4. Disconnect the front passenger's airbag 4P connector from the SRS main harness 4P connector (A).

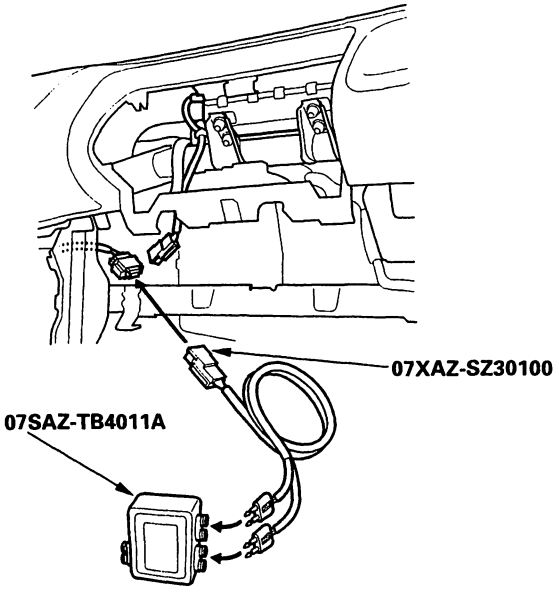

5. Connect the special tool (2 Ω connectors) to the SRS main harness 2P connector.

BACK

6. Reconnect the battery negative cable.

7. Erase the DTC memory.

8. Read the DTC.

   Is DTC 2-5 indicated?

   YES – Go to step 9.

   NO – Short to ground in the passenger's airbag inflator; replace the passenger's airbag (see page 23-280). ■

9. Disconnect the battery negative cable, and wait for 3 minutes.

10. Disconnect the driver's airbag 2P connector (A) from the cable reel 2P connector (B), and disconnect the special tool from the SRS main harness 2P connector.

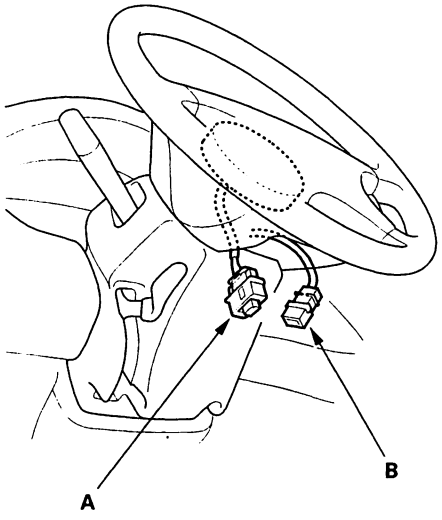

11. Disconnect SRS unit connector A (18P) from the SRS unit.

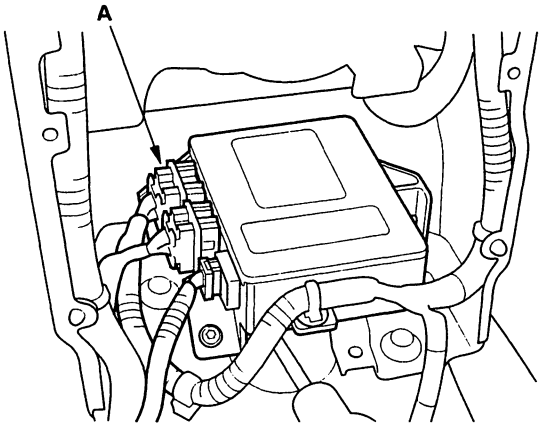

12. Check resistance between the No. 6 terminal of SRS unit connector A (18P) and body ground, between the No. 15 terminal and body ground, between the No. 5 terminal and body ground, and between No. 14 terminal and body ground. There should be 1 MΩ or more.

SRS UNIT CONNECTOR A (18P)

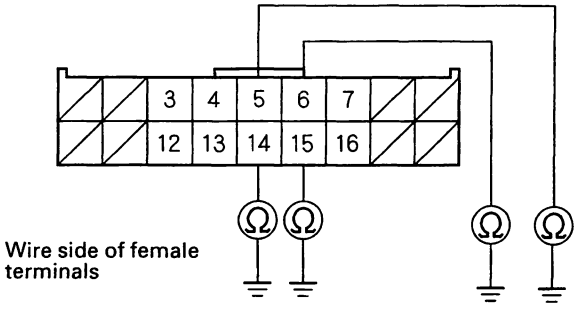

Is the resistance as specified?

YES – Faulty SRS unit; replace the SRS unit (see page 23-296). ■

NO – Short to ground in the SRS main harness; replace the SRS main harness. ■

DTC Troubleshooting - '00 Model (cont'd)

DTC 5-1, 5-2, 5-4, 5-5, 5-8, 6-1, 6-2, 6-3, 6-4, 6-7, 6-8, 7-1, 7-2, 7-3, 8-1 to 8-8, 9-1, 9-2: Internal Failure of the SRS unit

Note: Before Troubleshooting any of these DTCs, check the battery/system voltage. If the voltage is low, repair the charging system before troubleshooting the SRS. If the battery/system voltage is now OK, ask the customer if the battery ever went dead.

1. Erase the DTC memory (see page 23-45).

2. Turn the ignition switch ON (II), and check that the SRS indicator light comes on for about 6 seconds and then goes off.

   Does the SRS indicator light stay on?

   YES—Replace the SRS unit (see page 23-296).■

   NO—Intermittent failure, system is OK at this time. Go to Troubleshooting Intermittent Failures (see page 23-45).

DTC 10-1, 10-2, 10-3, 10-4, 10-5, 10-6, 10-7: Airbags, side airbags and/or seat belt tensioners deployed

The SRS unit must be replaced after any airbags have deployed (see page 23-296).

BACK

DTC 13-1, 13-2: Internal Failure of the driver's side impact sensor

1. Erase the DTC memory (see page 23-45).

2. Turn the ignition switch ON (II), and check that the SRS indicator light comes on for about 6 seconds and then goes off.

   Does the SRS indicator light stay on?

   YES – Replace the driver's side impact sensor (Sedan) (see page 23-297) (Coupe) (see page 23-298). ■

   NO – Intermittent failure, system is OK at this time. Go to Troubleshooting Intermittent Failures (see page 23-45).

DTC 14-1, 14-2: Internal Failure of the front passenger's side impact sensor

1. Erase the DTC memory (see page 23-45).

2. Turn the ignition switch ON (II), and check that the SRS indicator light comes on for about 6 seconds and then goes off.

   Does the SRS indicator light stay on?

   YES – Replace the front passenger's side impact sensor (Sedan) (see page 23-297) (Coupe) (see page 23-298). ■

   NO – Intermittent failure, system is OK at this time. Go to Troubleshooting Intermittent Failures (see page 23-45).

DTC Troubleshooting - '00 Sedan with Side Airbags

DTC 11-1: Open or increased resistance in driver's side airbag inflator

1. Erase the DTC memory (see page 23-45).

2. Turn the ignition switch ON (II), and check that the SRS indicator light comes on for about 6 seconds and then goes off.

   Does the SRS indicator light stay on?

   YES—Go to step 3.

   NO—Intermittent failure, system is OK at this time. Go to Troubleshooting Intermittent Failures (see page 23-45).

3. Turn the ignition switch OFF. Disconnect the battery negative cable, and wait for 3 minutes.

4. Disconnect the SRS floor harness 2P connector (A) from the driver's side airbag (B).

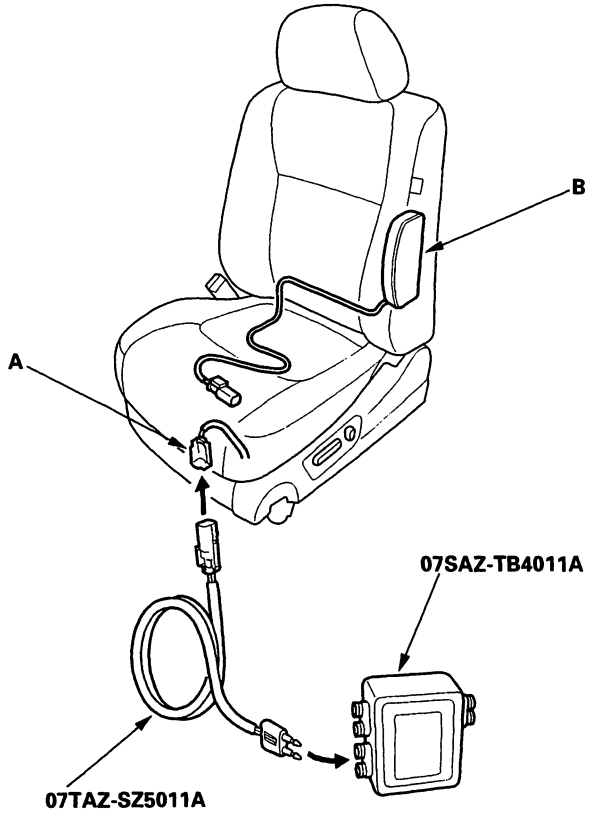

5. Connect the special tool (2 Ω connector) to the SRS floor harness 2P connector.

6. Reconnect the battery negative cable.

7. Erase the DTC memory.

8. Read the DTC.

   Is DTC 11-1 indicated?

   YES—Go to step 9.

   NO—Open or increased resistance in the driver's side airbag inflator; replace the driver's side airbag (see page 23-282).■

9. Disconnect the battery negative cable, and wait for 3 minutes.

10. Disconnect the SRS floor harness 2P connector (A) from the front passenger's side airbag (B).

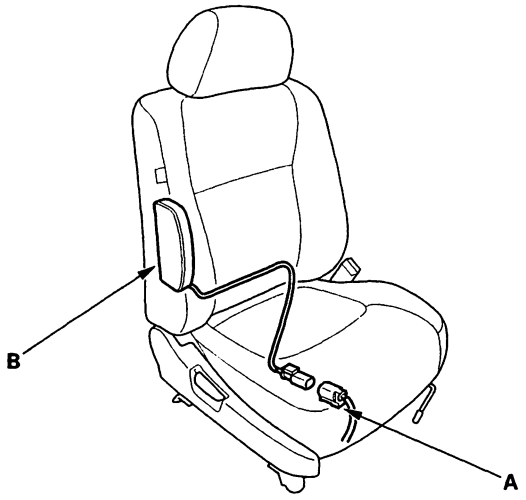

11. Disconnect SRS unit connector B (14P) from the SRS unit. Do not disconnect the special tool from the SRS floor harness 2P connector.

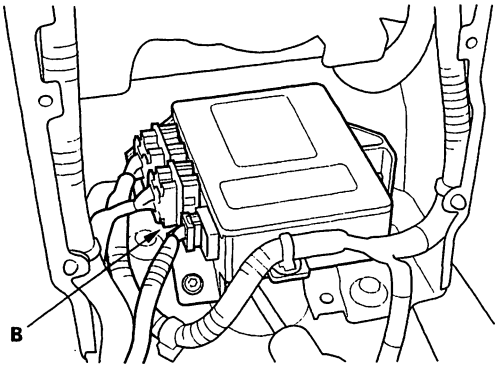

BACK

12. Check resistance between the No. 4 and No. 13 terminals of SRS unit connector B(14P). There should be 2.0 – 3.0 Ω.

SRS UNIT CONNECTOR B (14P)

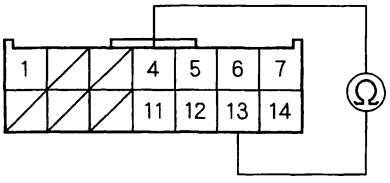

Wire side of female terminals

Is the resistance as specified?

YES – Faulty SRS unit or poor contact at SRS unit connector B (14P) and the SRS unit; check the connection. If the connector is OK, replace the SRS unit (see page 23-296). ■

NO – Open or increased resistance in the SRS floor harness; replace the SRS floor harness. ■

DTC 11-3: Short to another wire or decreased resistance in driver's side airbag inflator

1. Erase the DTC memory (see page 23-45).

2. Turn the ignition switch ON (II), and check that the SRS indicator light comes on for about 6 seconds and then goes off.

   Does the SRS indicator light stay on?

   YES – Go to step 3.

   NO – Intermittent failure, system is OK at this time. Go to Troubleshooting Intermittent Failures (see page 23-45).

3. Disconnect the battery negative cable, and wait for 3 minutes.

4. Disconnect the SRS floor harness 2P connector (A) from the driver's side airbag (B).

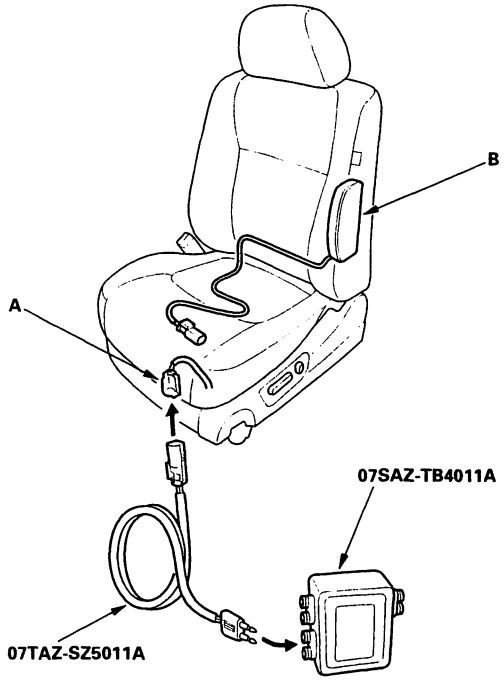

5. Connect the special tool (2 Ω connector) to the SRS floor harness 2P connector.

6. Reconnect the battery negative cable.

7. Erase the DTC memory.

(cont'd)

DTC Troubleshooting - '00 Sedan with Side Airbags (cont'd)

8. Read the DTC.

   Is DTC 11-3 indicated?

   YES—Go to step 9.

   NO—Short to another wire in the driver's side airbag inflator; replace the driver's side airbag (see page 23-282). ■

9. Disconnect the battery negative cable, and wait for 3 minutes.

10. Disconnect the SRS floor harness 2P connector (A) from the front passenger's side airbag (B).

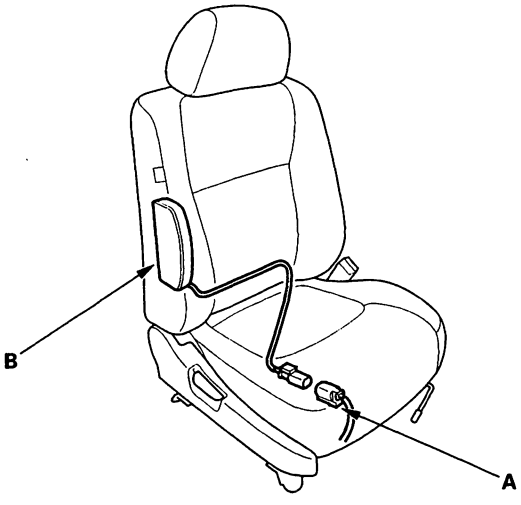

11. Disconnect the special tool from the SRS floor harness 2P connector.

12. Disconnect SRS unit connector B (14P) from the SRS unit.

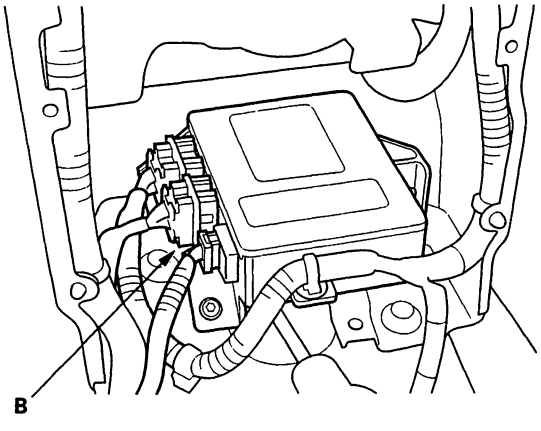

13. Check resistance between the No. 4 and No. 13 terminals of SRS unit connector B (14P). There should be 1 MΩ or more.

SRS UNIT CONNECTOR B (14P)

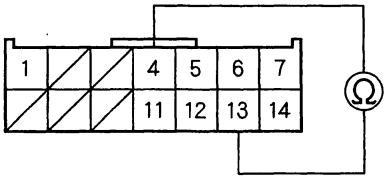

Wire side of female terminals

Is the resistance as specified?

YES—Faulty SRS unit; replace the SRS unit (see page 23-296). ■

NO—Short to another wire in the SRS floor harness; replace the SRS floor harness. ■

BACK

DTC 11-4: Short to power in driver's side airbag inflator

1. Erase the DTC memory (see page 23-45).

2. Turn the ignition switch ON (II), and check that the SRS indicator light comes on for about 6 seconds and then goes off.

   Does the SRS indicator light stay on?

   YES – Go to step 3.

   NO – Intermittent failure, system is OK at this time. Go to Troubleshooting Intermittent Failures (see page 23-45).

3. Turn the ignition switch OFF. Disconnect the battery negative cable, and wait for 3 minutes.

4. Disconnect the SRS floor harness 2P connector (A) from the driver's side airbag (B).

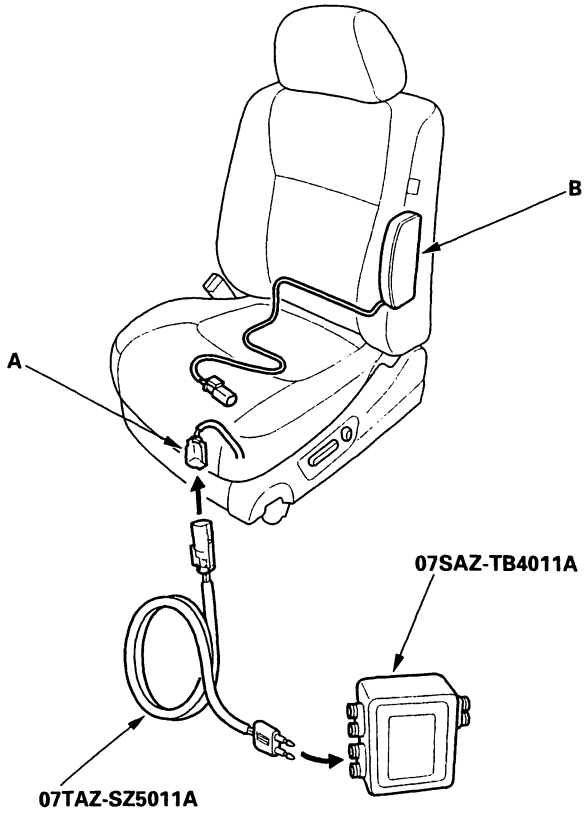

5. Connect the special tool (2 Ω connector) to the SRS floor harness 2P connector.

6. Reconnect the battery negative cable.

7. Erase the DTC memory.

8. Read the DTC.

   Is DTC 11-4 indicated?

   YES – Go to step 9.

   NO – Short to power in the driver's side airbag inflator; replace the driver's side airbag (see page 23-282). ■

9. Disconnect the battery negative cable, and wait for 3 minutes. ■

10. Disconnect the SRS floor harness 2P connector (A) from the front passenger's side airbag (B), and disconnect the special tool from the SRS floor harness 2P connector.

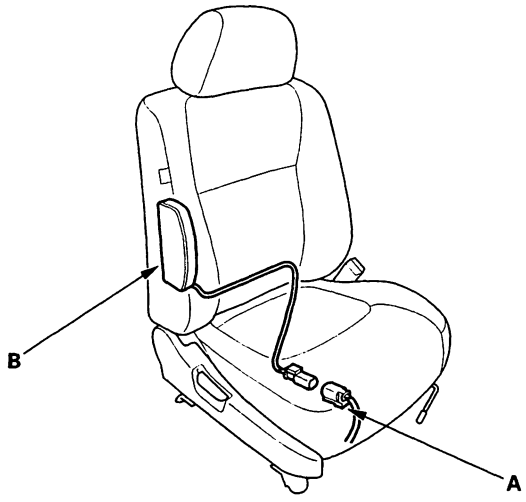

(cont'd)

DTC Troubleshooting - '00 Sedan with Side Airbags (cont'd)

11. Disconnect SRS unit connector B (14P) from the SRS unit.

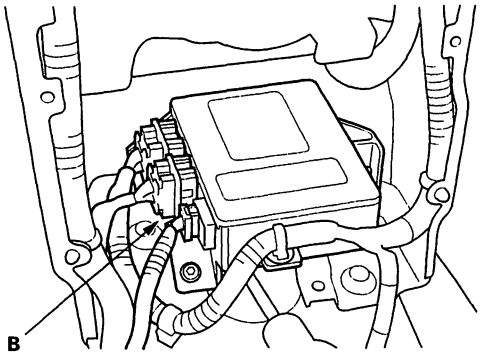

12. Check resistance between the No. 13 and No. 6 terminals of SRS unit connector B (14P), and between the No. 13 and No. 7 terminals. There should be 1 MΩ or more.

SRS UNIT CONNECTOR B (14P)

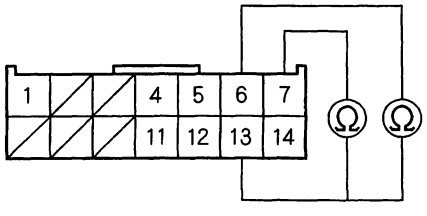

Wire side of female terminals

Is the resistance as specified?

YES—Faulty SRS unit; replace the SRS unit (see page 23-296).■

NO—Short to power in the SRS floor harness; replace the SRS floor harness.■

DTC 11-5: Short to ground in driver's side airbag inflator

1. Erase the DTC memory (see page 23-45).

2. Turn the ignition switch ON (II), and check that the SRS indicator light comes on for about 6 seconds and then goes off.

   Does the SRS indicator light stay on?

   YES—Go to step 3.

   NO—Intermittent failure, system is OK at this time. Go to Troubleshooting Intermittent Failures (see page 23-45).

3. Turn the ignition switch OFF. Disconnect the battery negative cable, and wait for 3 minutes.

4. Disconnect the SRS floor harness 2P connector (A) from the driver's side airbag (B).

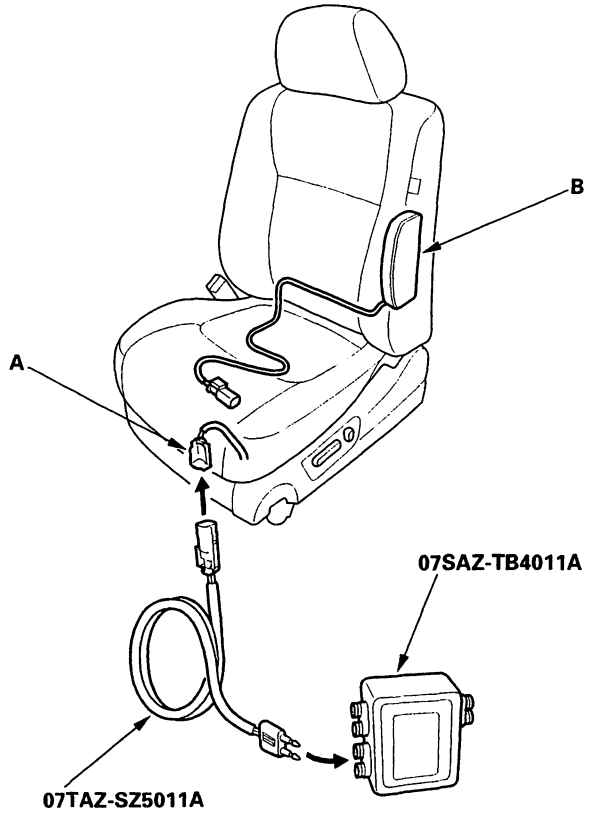

5. Connect the special tool (2 Ω connector) to the SRS floor harness 2P connector.

BACK

6. Reconnect the battery negative cable.

7. Erase the DTC memory.

8. Read the DTC.

   Is DTC 11-5 indicated?

   YES – Go to step 9.

   NO – Short to ground in the driver's side airbag inflator; replace the driver's side airbag (see page 23-282). ■

9. Disconnect the battery negative cable, and wait for 3 minutes.

10. Disconnect the SRS floor harness 2P connector (A) from the front passenger's side airbag (B), and disconnect the special tool from the SRS floor harness 2P connector.

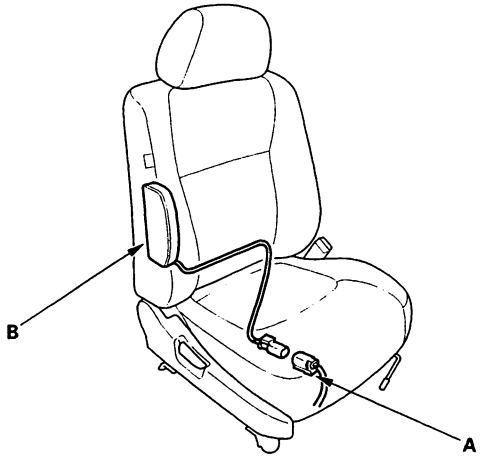

11. Disconnect SRS unit connector B (14P) from the SRS unit.

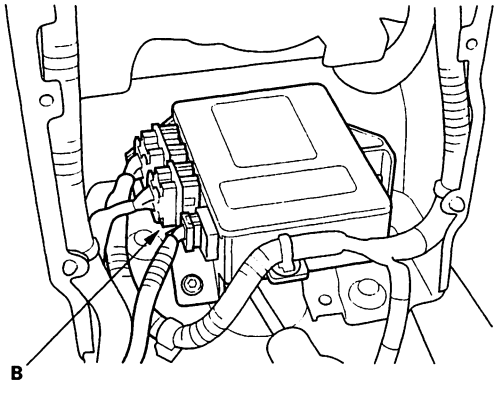

12. Check resistance between the No. 13 and No. 11 terminals of SRS unit connector B (14P), between the No. 13 and No. 12 terminals, and between the No. 13 terminal and body ground.
    There should be 1 MΩ or more.

SRS UNIT CONNECTOR B (14P)

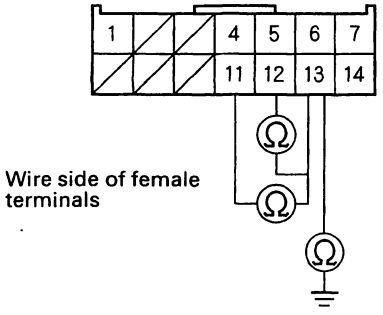

Is the resistance as specified?

YES – Faulty SRS unit; replace the SRS unit (see page 23-296). ■

NO – Short to ground in the SRS floor harness; replace the SRS floor harness. ■

DTC Troubleshooting - '00 Sedan with Side Airbags (cont'd)

DTC 12-1: Open or increased resistance in front passenger's side airbag inflator.

1. Erase the DTC memory (see page 23-45).

2. Turn the ignition switch ON (II), and check that the SRS indicator light comes on for about 6 seconds and then goes off.

   Does the SRS indicator light stay on?

   YES – Go to step 3.

   NO – Intermittent failure, system is OK at this time. Go to Troubleshooting Intermittent Failures (see page 23-45).

3. Turn the ignition switch OFF. Disconnect the battery negative cable, and wait for 3 minutes.

4. Disconnect the SRS floor harness 2P connector (A) from the front passenger's side airbag (B).

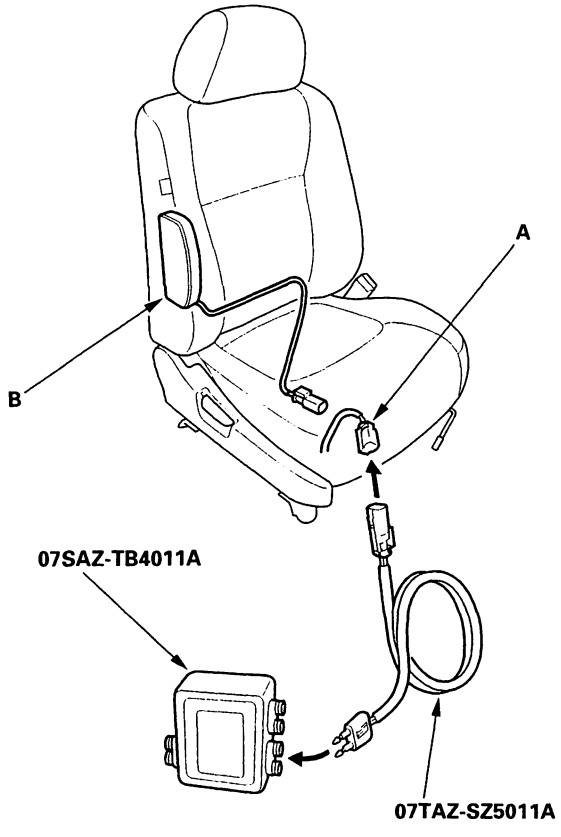

5. Connect the special tool (2 Ω connector) to the SRS floor harness 2P connector.

6. Reconnect the battery negative cable.

7. Erase the DTC memory.

8. Read the DTC.

   Is DTC 12-1 indicated?

   YES – Go to step 9.

   NO – Open or increased resistance in the front passenger's side airbag inflator, replace the front passenger's side airbag (see page 23-282). ■

9. Disconnect the battery negative cable, and wait for 3 minutes.

10. Disconnect the SRS floor harness 2P connector (A) from the driver's side airbag (B).

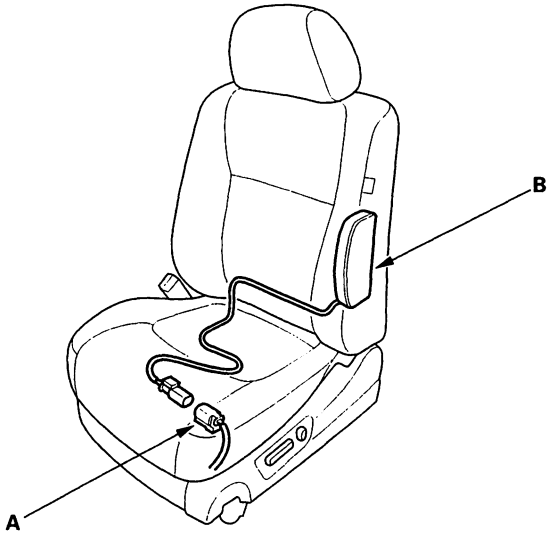

BACK

11. Disconnect SRS unit connector B (14P) from the SRS unit. Do not disconnect the special tool from the SRS floor harness 2P connector.

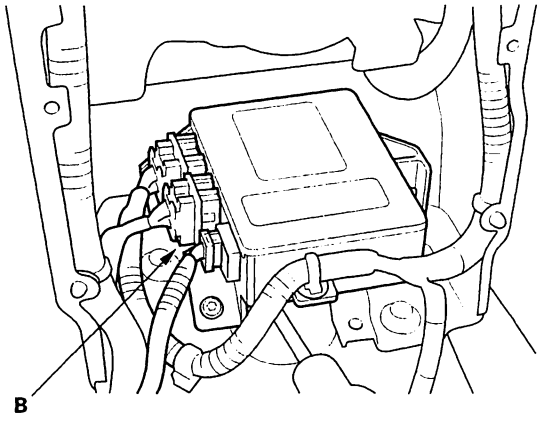

12. Check resistance between the No. 5 and No. 14 terminals of SRS unit connector B (14P). There should be 2.0 – 3.0 Ω.

SRS UNIT CONNECTOR B (14P)

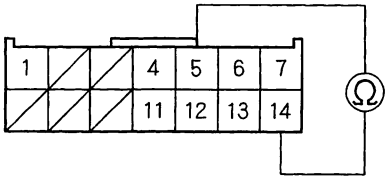

Wire side of female terminals

Is the resistance as specified?

YES – Faulty SRS unit or poor contact at SRS unit connector B (14P) and the SRS unit; check the connection. If the connector is OK, replace the SRS unit (see page 23-296). ■

NO – Open or increased resistance in the SRS floor harness; replace the SRS floor harness. ■

DTC 12-3: Short to another wire or decreased resistance in front passenger's side airbag inflator.

1. Erase the DTC memory (see page 23-45).

2. Turn the ignition switch ON (II), and check that the SRS indicator light comes on for about 6 seconds and then goes off.

   Does the SRS indicator light stay on?

   YES – Go to step 3.

   NO – Intermittent failure, system is OK at this time. Go to Troubleshooting Intermittent Failures (see page 23-45).

3. Turn the ignition switch OFF. Disconnect the battery negative cable, and wait for 3 minutes.

4. Disconnect the SRS floor harness 2P connector (A) from the passenger's side airbag (B).

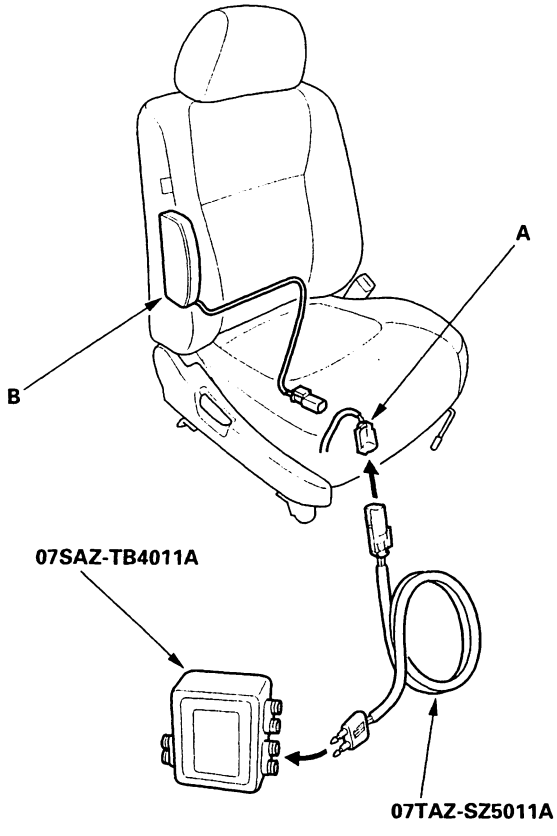

5. Connect the special tool (2 Ω connector) to the SRS floor harness 2P connector.

(cont'd)

DTC Troubleshooting - '00 Sedan with Side Airbags (cont'd)

6. Reconnect the battery negative cable.

7. Erase the DTC memory.

8. Read the DTC.

   Is DTC 12-3 indicated?

   YES – Go to step 9

   NO – Short to another wire in the front passenger's side airbag inflator; replace the front passenger's side airbag (see page 23-282). ■

9. Disconnect the battery negative cable, and wait for 3 minutes.

10. Disconnect the SRS floor harness 2P connector (A) from the driver's side airbag (B).

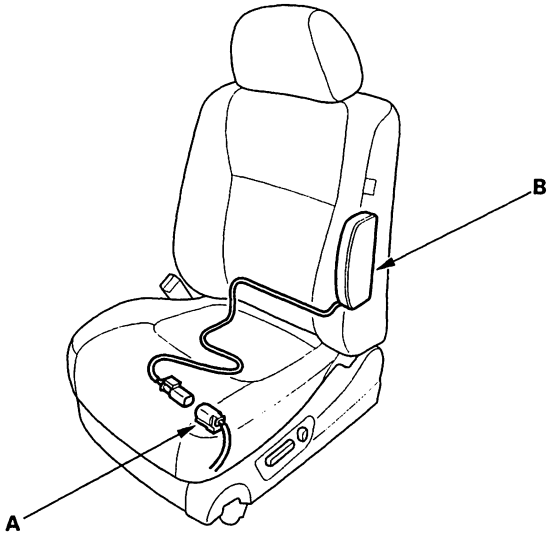

11. Disconnect the special tool from the SRS floor harness 2P connector.

12. Disconnect SRS unit connector B (14P) from the SRS unit.

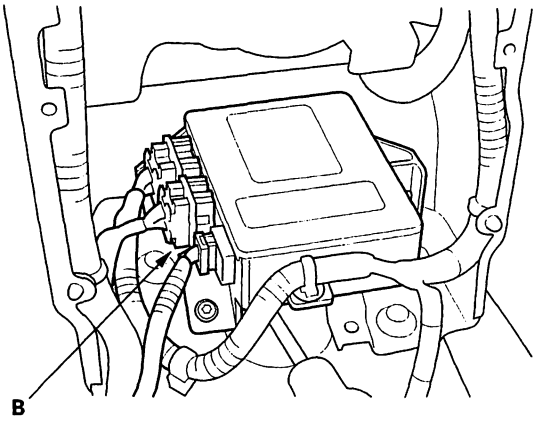

13. Check resistance between the No. 5 and No. 14 terminals of SRS unit connector B (14P). There should be 1 MΩ or more.

SRS UNIT CONNECTOR B (14P)

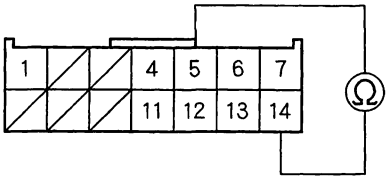

Wire side of female terminals

Is the resistance as specified?

YES – Faulty SRS unit; replace the SRS unit (see page 23-296). ■

NO – Short to another wire in the SRS floor harness; replace the SRS floor harness. ■

BACK

DTC 12-4: Short to power in front passenger's side airbag inflator

1. Erase the DTC memory (see page 23-45).

2. Turn the ignition switch ON (II), and check that the SRS indicator light comes on for about 6 seconds and then goes off.

   Does the SRS indicator light stay on?

   YES – Go to step 3.

   NO – Intermittent failure, system is OK at this time. Go to Troubleshooting Intermittent Failures (see page 23-45).

3. Turn the ignition switch OFF. Disconnect the battery negative cable, and wait for 3 minutes.

4. Disconnect the SRS floor harness 2P connector (A) from the front passenger's side airbag (B).

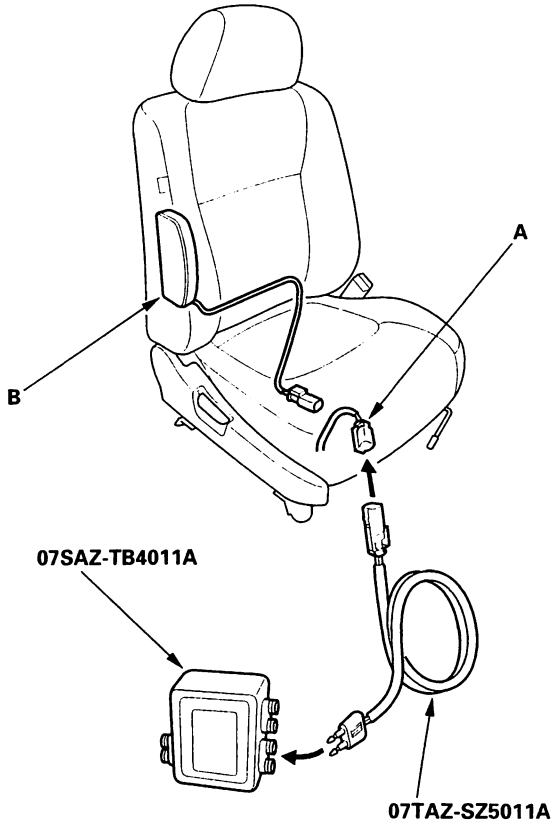

5. Connect the special tool (2 Ω connector) to the SRS floor harness 2P connector.

6. Reconnect the battery negative cable.

7. Erase the DTC memory.

8. Read the DTC.

   Is DTC 12-4 indicated?

   YES – Go to step 9.

   NO – Short to power in the front passenger's side airbag inflator; replace the front passenger's side airbag (see page 23-282). ■

9. Disconnect the battery negative cable, and wait for 3 minutes.

10. Disconnect the SRS floor harness 2P connector (A) from the front driver's side airbag (B).

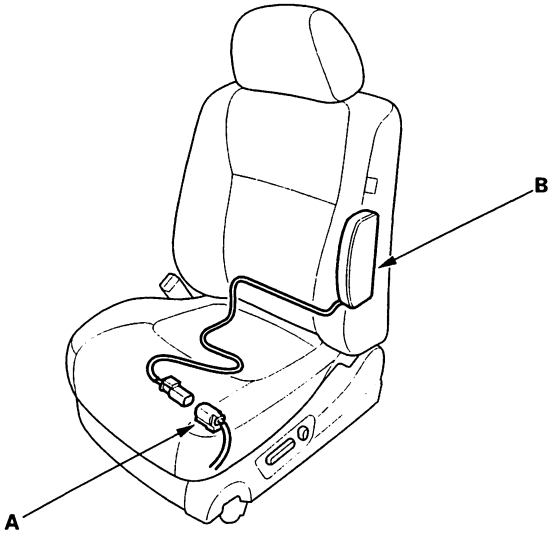

11. Disconnect SRS unit connector B (14P) from the SRS unit.

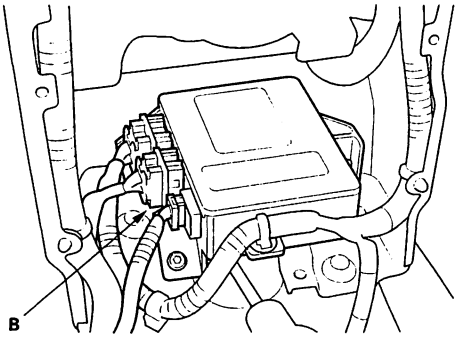

(cont'd)

DTC Troubleshooting - '00 Sedan with Side Airbags (cont'd)

12. Check resistance between the No. 14 and No. 6 terminals of SRS unit connector B (14P), and between the No. 14 and No. 7 terminals. There should be 1 MΩ or more.

SRS UNIT CONNECTOR B (14P)

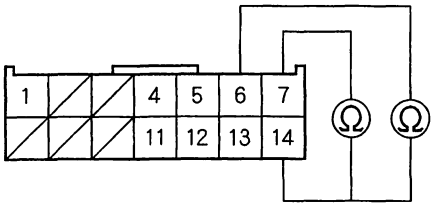

Wire side of female terminals

Is the resistance as specified?

YES—Faulty SRS unit; replace the SRS unit (see page 23-296).■

NO—Short to power in the SRS floor harness; replace the SRS floor harness.■

DTC 12-5: Short to ground in front passenger's side airbag inflator

1. Erase the DTC memory (see page 23-45).

2. Turn the ignition switch ON (II), and check that the SRS indicator light comes on for about 6 seconds and then goes off.

   Does the SRS indicator light stay on?

   YES—Go to step 3.

   NO—Intermittent failure, system is OK at this time. Go to Troubleshooting Intermittent Failures (see page 23-45).

3. Turn the ignition switch OFF. Disconnect the battery negative cable, and wait for 3 minutes.

4. Disconnect the SRS floor harness 2P connector (A) from the front passenger's side airbag (B).

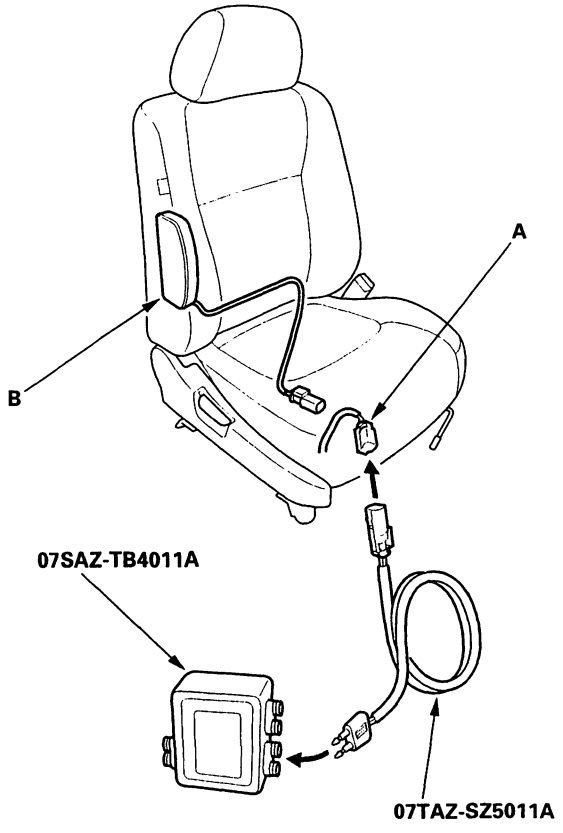

5. Connect the special tool (2 Ω connector) to the SRS floor harness 2P connector.

BACK

6. Reconnect the battery negative cable.

7. Erase the DTC memory.

8. Read the DTC.

   Is DTC 12-5 indicated?

   YES – Go to step 9.

   NO – Short to ground in the front passenger's side airbag inflator, replace the front passenger's side airbag (see page 23-282). ■

9. Disconnect the battery negative cable, and wait for 3 minutes.

10. Disconnect the SRS floor harness 2P connector (A) from the driver's side airbag (B).

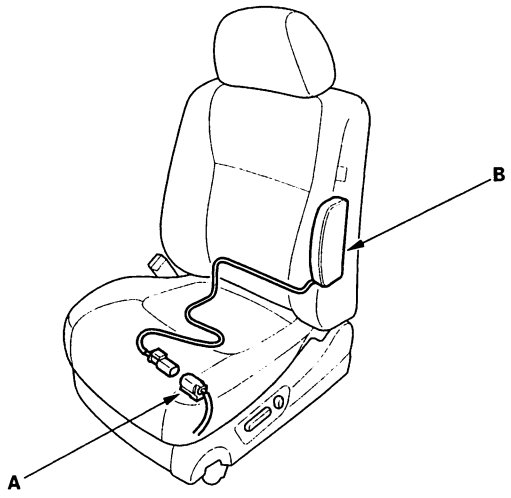

11. Disconnect SRS unit connector B (14P) from the SRS unit.

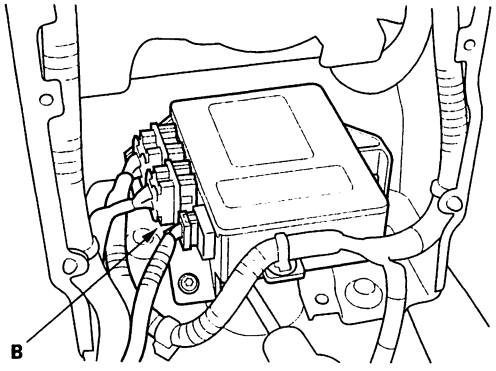

12. Check resistance between the No. 14 and No. 11 terminals of SRS unit connector B (14P), between the No. 14 and No. 12 terminals, and between the No. 14 terminal and body ground.
    There should be 1 MΩ or more.

SRS UNIT CONNECTOR B (14P)

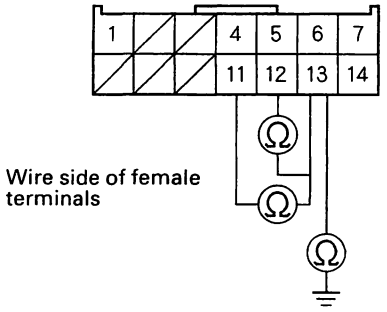

Is the resistance as specified?

YES – Faulty SRS unit; replace the SRS unit (see page 23-296). ■

NO – Short to ground in the SRS floor harness; replace the SRS floor harness. ■

DTC Troubleshooting - '00 Sedan with Side Airbags (cont'd)

DTC 13-3: No signal from the driver's side impact sensor

1. Erase the DTC memory (see page 23-45).

2. Turn the ignition switch ON (II), and check that the SRS indicator light comes on for about six seconds and then goes off.

   Does the SRS indicator light stay on?

   YES—Go to step 3.

   NO—Intermittent failure, system is OK at this time. Go to Troubleshooting Intermittent Failures (see page 23-45).

3. Turn the ignition switch OFF. Disconnect the negative battery cable, and wait for 3 minutes.

4. Disconnect the SRS floor harness 2P connector (A) from the driver's side airbag (B).

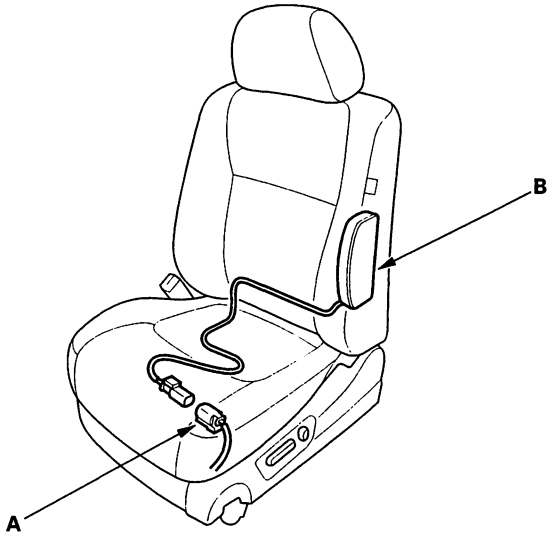

5. Check the connection at the SRS floor harness 2P connector and the driver's side impact sensor.

   Is the connection OK?

   YES—Go to step 6.

   NO—Poor contact at the SRS floor harness 2P connector; reconnect or replace SRS floor harness.■

6. Disconnect the SRS floor harness 2P connector (A) from the front passenger's side airbag (B).

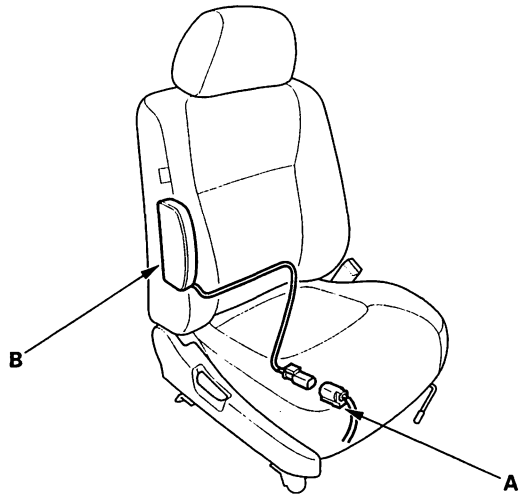

7. Disconnect the SRS floor harness 2P connector (A) from the driver's side impact sensor (B).

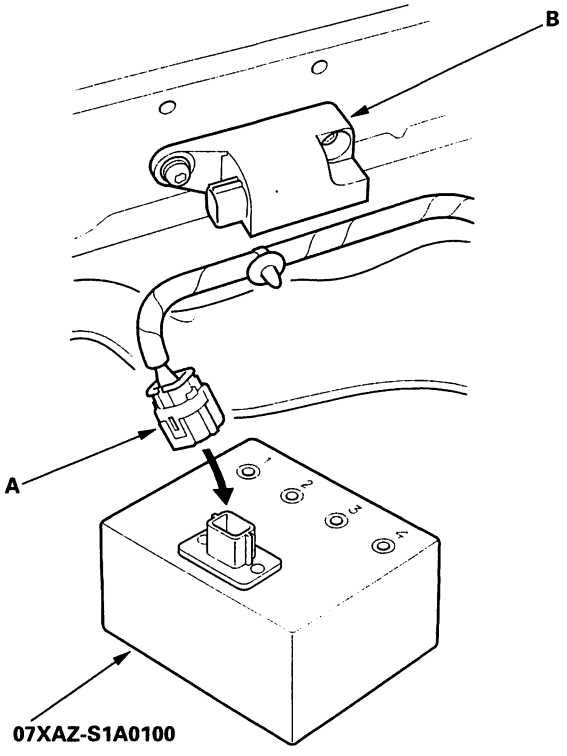

8. Connect the special tool to the SRS floor harness 2P connector.

BACK

9. Disconnect SRS unit connector B (14P) from the SRS unit.

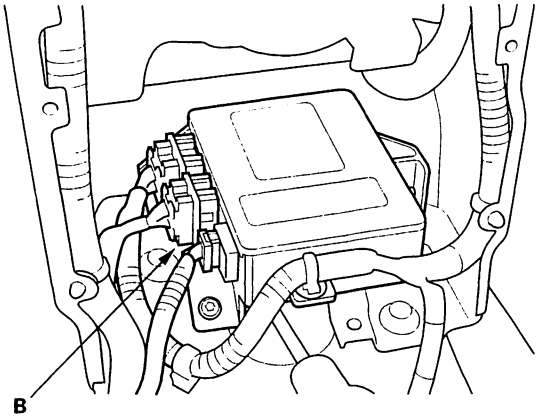

10. Check resistance between the No. 6 terminal of SRS unit connector B (14P) and the No. 2 terminal of the special tool. There should be 0 – 1.0 Ω.

SRS UNIT CONNECTOR B (14P)

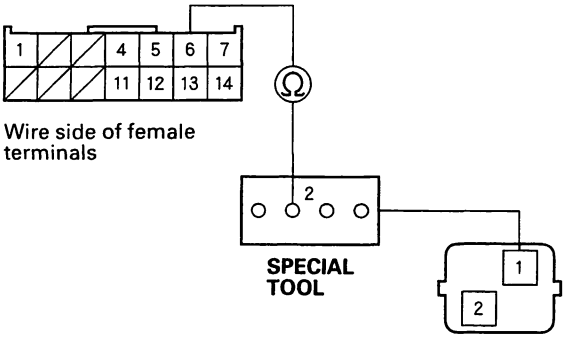

Is the resistance as specified?

YES – Go to step 11.

NO – Open in the SRS floor harness; replace the SRS floor harness. ■

11. Check resistance between the No. 11 terminal of SRS unit connector B (14P) and the No. 3 terminal of the special tool. There should be 0 – 1.0 Ω.

SRS UNIT CONNECTOR B (14P)

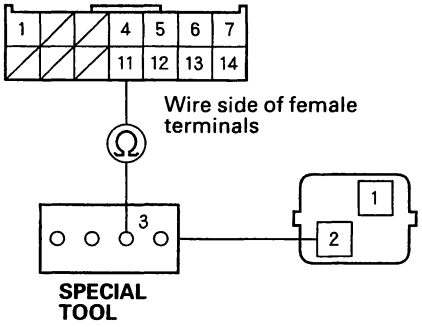

Is the resistance as specified?

YES – Faulty driver's side impact sensor or SRS unit; replace the driver's side impact sensor (see page 23-297). If the problem is still present, replace the SRS unit (see page 23-296). ■

NO – Open in the SRS floor harness; replace the SRS floor harness. ■

DTC Troubleshooting - '00 Sedan with Side Airbags (cont'd)

DTC 13-4: Faulty power supply to the driver's side impact sensor.

1. Erase the DTC memory (see page 23-45).

2. Turn the ignition switch ON (II), and check that the SRS indicator light comes on for about 6 seconds and then goes off.

   Does the SRS indicator light stay on?

   YES – Go to step 3.

   NO – Intermittent failure, system is OK at this time. Go to Troubleshooting Intermittent Failures (see page 23-45).

3. Turn the ignition switch OFF. Disconnect the negative battery cable, and wait for 3 minutes.

4. Disconnect the SRS floor harness 2P connectors (A) from the driver's and front passenger's side airbags (B).

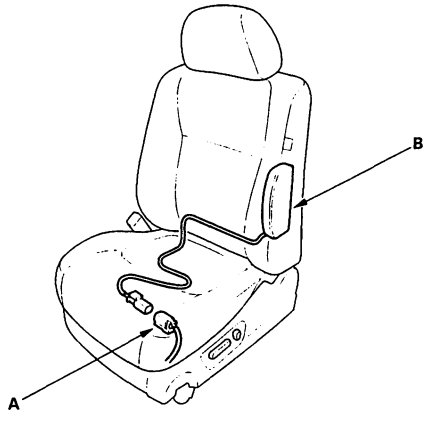

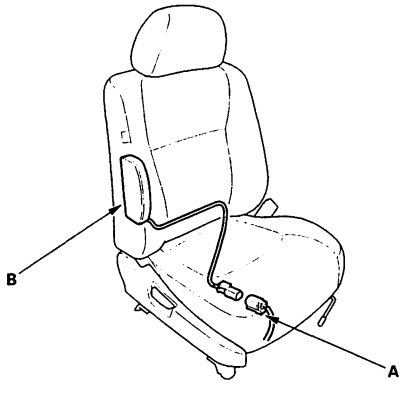

5. Disconnect the SRS floor harness 2P connector (A) from the driver's side impact sensor (B).

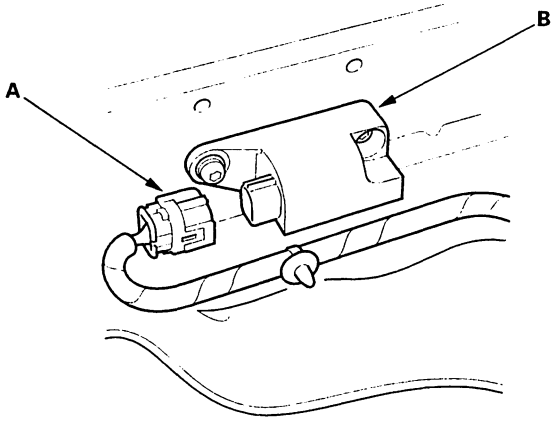

6. Disconnect SRS unit connector B (14P) from the SRS unit.

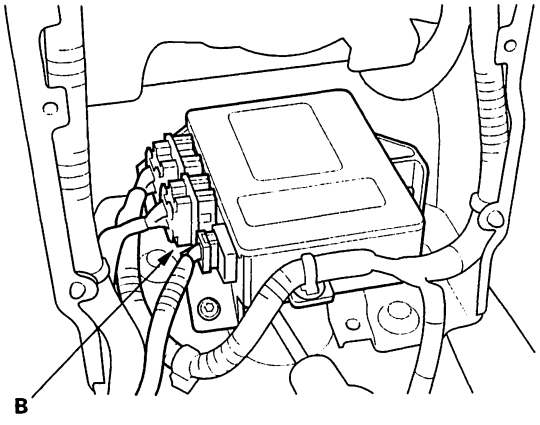

BACK

7. Check resistance between the No. 6 terminal of SRS unit connector B (14P) and body ground. There should be 1 MΩ or more.

SRS UNIT CONNECTOR B (14P)

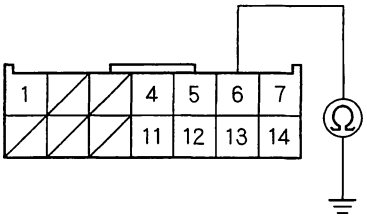

Wire side of female terminals

Is the resistance as specified?

YES – Go to step 8.

NO – Short to ground in the SRS floor harness; replace the SRS floor harness. ■

8. Check resistance between the No. 6 and No. 11 terminals of SRS unit connector B (14P). There should be 1 MΩ or more.

SRS UNIT CONNECTOR B (14P)

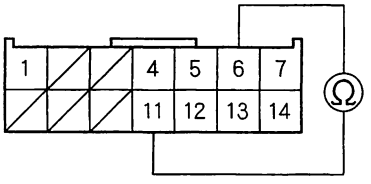

Wire side of female terminals

Is the resistance as specified?

YES – Faulty driver's side impact sensor or SRS unit; replace the driver's side impact sensor (see page 23-297). If the problem is still present, replace the SRS unit (see page 23-296). ■

NO – Short to another wire in the SRS floor harness; replace the SRS floor harness. ■

DTC Troubleshooting - '00 Sedan with Side Airbags (cont'd)

DTC 14-3: No signal from the front passenger's side impact sensor.

1. Erase the DTC memory (see page 23-45).

2. Turn the ignition switch ON (II), and check that the SRS indicator light comes on for about 6 seconds and then goes off.

   Does the SRS indicator light stay on?

   YES—Go to step 3.

   NO—Intermittent failure, system is OK at this time. Go to Troubleshooting Intermittent Failures (see page 23-45).

3. Turn the ignition switch OFF. Disconnect the negative battery cable, and wait for 3 minutes.

4. Disconnect the SRS floor harness 2P connector (A) from the front passenger's side airbag (B).

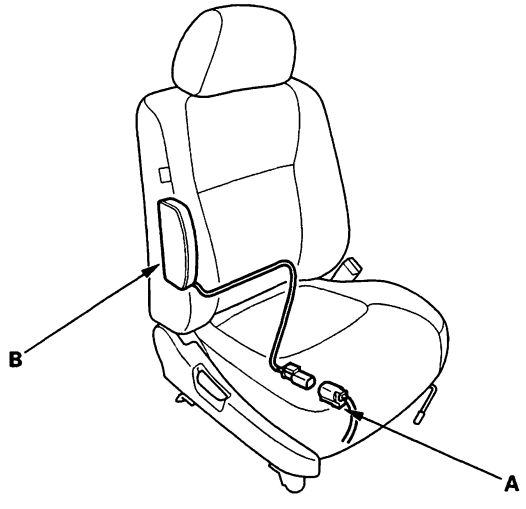

5. Check the connection at the SRS floor harness 2P connector and the front passenger's side impact sensor.

   Is the connection OK?

   YES—Go to step 6.

   NO—Poor contact at the SRS floor harness 2P connector; reconnect or replace SRS floor harness.■

6. Disconnect the SRS floor harness 2P connector (A) from the driver's side airbag (B).

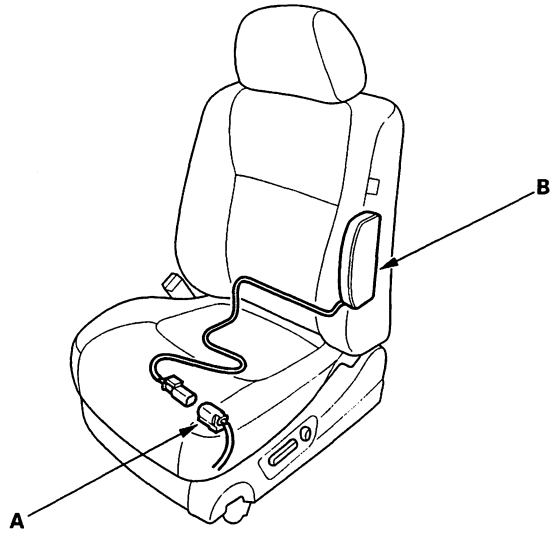

7. Disconnect the SRS floor harness 2P connector (A) from the front passenger's side impact sensor (B).

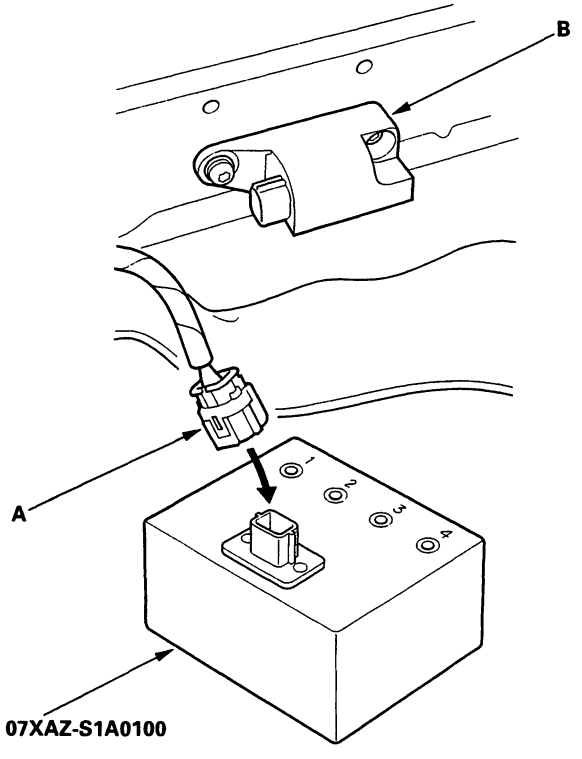

8. Connect the SRS floor harness 2P connector to the special tool.

BACK

9. Disconnect SRS unit connector B (14P) from the SRS unit.

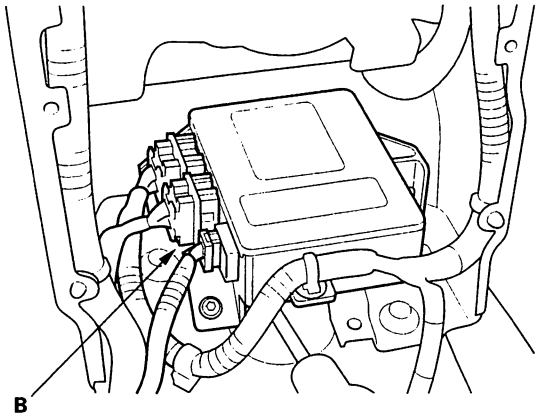

10. Check resistance between the No. 7 terminal of SRS unit connector B (14P) and the No. 2 terminal of the special tool. There should be 0 – 1.0 Ω.

SRS UNIT CONNECTOR B (14P)

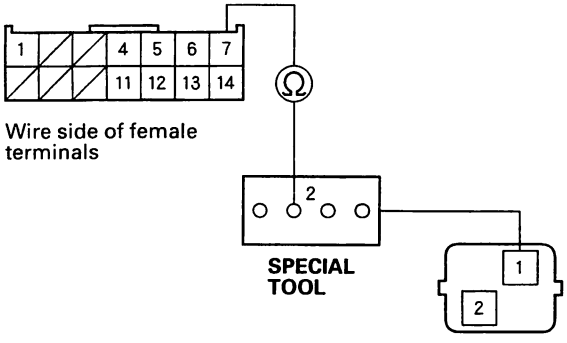

Is the resistance as specified?

YES – Go to step 11.

NO – Open in the SRS floor harness; replace the SRS floor harness. ■

11. Check resistance between the No. 12 terminal of SRS unit connector B (14P) and the No. 3 terminal of the special tool. There should be 0 – 1.0 Ω.

SRS UNIT CONNECTOR B (14P)

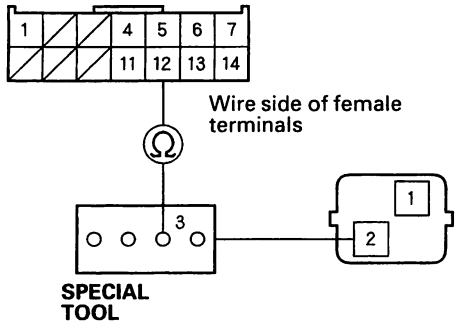

Is the resistance as specified?

YES – Faulty front passenger's side impact sensor or SRS unit; replace the front passenger's side impact sensor (see page 23-297). If the problem is still present, replace the SRS unit (see page 23-296). ■

NO – Open in the SRS floor harness; replace the SRS floor harness. ■

DTC Troubleshooting - '00 Sedan with Side Airbags (cont'd)

DTC 14-4: Faulty power supply to the front passenger's side impact sensor

1. Erase the DTC memory (see page 23-45).

2. Turn the ignition switch ON (II), and check that the SRS indicator light comes on for about 6 seconds and then goes off.

   Does the SRS indicator light stay on?

   YES—Go to step 3.

   NO—Intermittent failure, system is OK at this time. Go to Troubleshooting Intermittent Failures (see page 23-45).

3. Turn the ignition switch OFF. Disconnect the negative battery cable, and wait for 3 minutes.

4. Disconnect the SRS floor harness 2P connectors from the driver's and front passenger's side airbags.

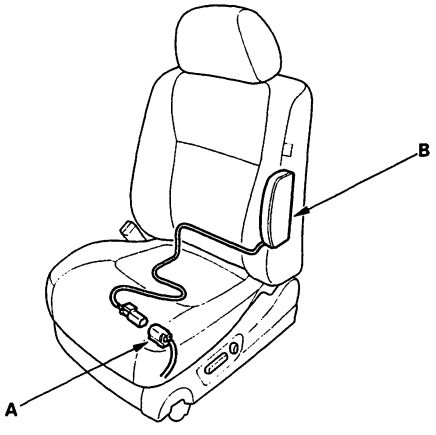

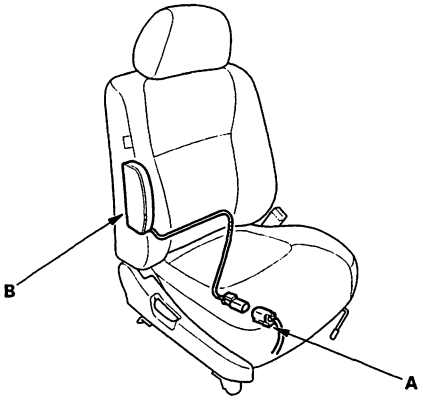

5. Disconnect the SRS floor harness 2P connector (A) from the front passenger's side impact sensor (B).

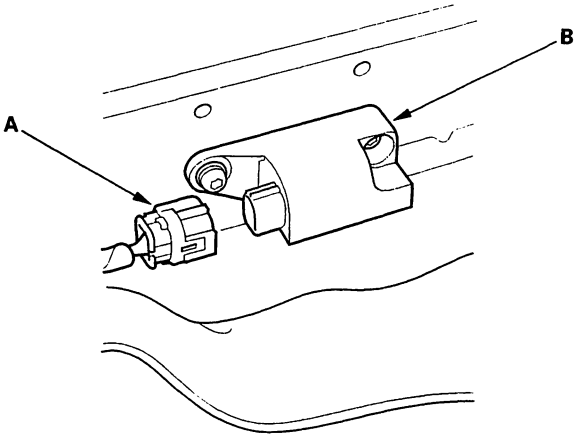

6. Disconnect SRS unit connector B (14P) from the SRS unit.

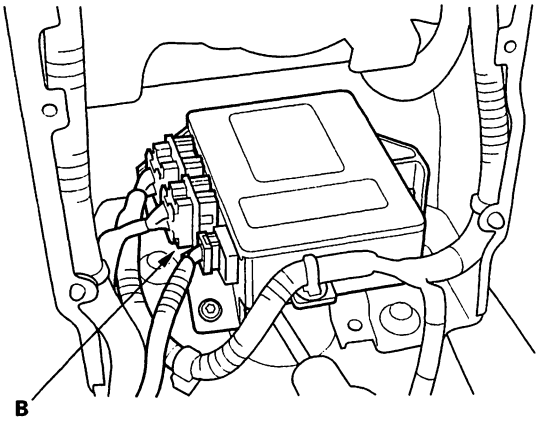

BACK

7. Check resistance between the No. 7 terminal of SRS unit connector B (14P) and body ground. There should be 1 MΩ or more.

SRS UNIT CONNECTOR B (14P)

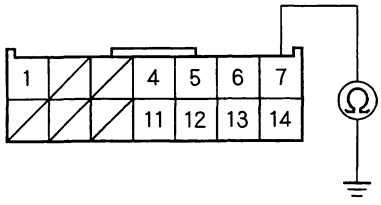

Wire side of female terminals

Is the resistance as specified?

YES — Go to step 8.

NO — Short to ground in the SRS floor harness; replace the SRS floor harness. ■

8. Check resistance between the No. 7 and No. 12 terminals of SRS unit connector B (14P). There should be 1 M Ω or more.

SRS UNIT CONNECTOR B (14P)

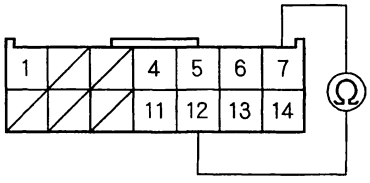

Wire side of female terminals

Is the resistance as specified?

YES — Faulty front passenger's side impact sensor or SRS unit; replace the front passenger's side impact sensor (see page 23-297). If the problem is still present, replace the SRS unit (see page 23-296). ■

NO — Short to another wire in the SRS floor harness; replace the SRS floor harness. ■

DTC Troubleshooting - '00 Sedan with Side Airbags (cont'd)

DTC 15-1: Faulty OPDS unit

1. Make sure nothing is on the front passenger's seat.
2. Initialize the OPDS unit (see page 23-46).
3. Erase the DTC memory (see page 23-45).
4. Read the DTC.

   Is DTC 15-1 indicated?

   YES—Go to step 5.

   NO—Intermittent failure, system is OK at this time. Go to Troubleshooting Intermittent Failures (see page 23-45).

5. Check the No. 7 (7.5A) fuse in the driver's under-dash fuse/relay box.

   Is the fuse OK?

   YES—Go to step 6.

   NO—Go to step 13.

6. Disconnect OPDS unit connector D (8P) from the OPDS unit (B).

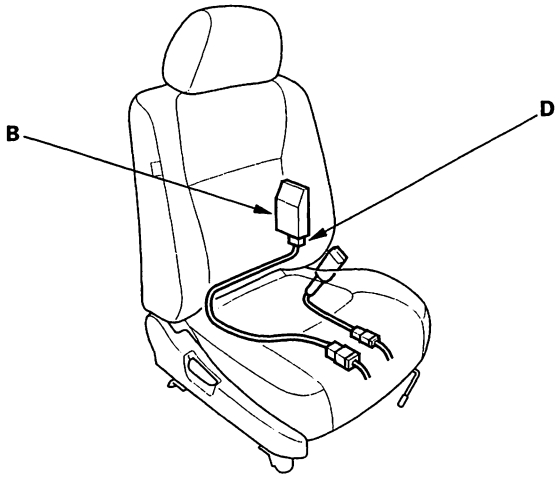

7. Turn the ignition switch ON (II).
8. Check for voltage between the No. 4 terminal of OPDS unit connector D (8P) and body ground. There should be battery voltage.

OPDS UNIT CONNECTOR D (8P)

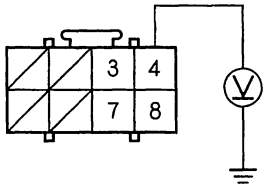

Wire side of female terminals

Is there battery voltage?

YES—Go to step 28.

NO—Go to step 9.

9. Turn the ignition switch OFF.
10. Disconnect the SRS floor harness 6P connector C505 (A) from the dashboard wire harness A 6P connector (B).

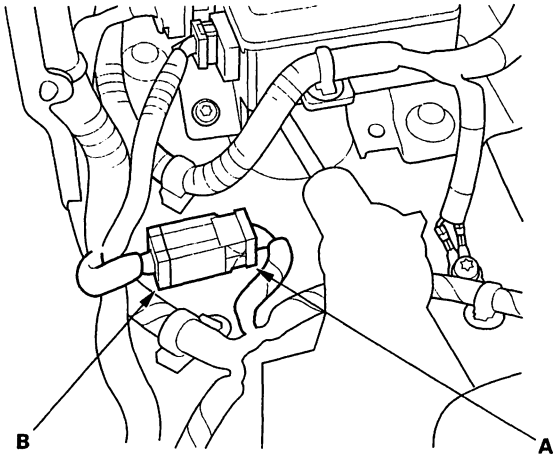

11. Turn the ignition switch ON (II).

BACK

12. Check for voltage between the No. 3 terminal of the dashboard wire harness 6P connector C505 and body ground. There should be battery voltage.

DASHBOARD WIRE HARNESS 6P CONNECTOR C505

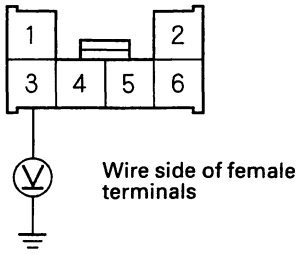

Is there battery voltage?

YES—Open in the SRS floor harness or OPDS unit harness; if the OPDS unit harness is OK, replace the SRS floor harness.■

NO—Open in dashboard wire harness A; replace dashboard wire harness A.

13. Replace the No. 7 (7.5A) fuse in the driver's under-dash fuse/relay box.■

14. Turn the ignition switch ON (II) for 30 seconds, then turn it OFF.

15. Check the No. 7 (7.5A) fuse in driver's under-dash fuse/relay box.

Is the fuse OK?

YES—Finished.■

NO—Go to step 16.

16. Replace the No. 7 (7.5 A) fuse in the driver's under-dash fuse/relay box.

17. Disconnect dashboard wire harness connector I (18P) from the driver's under-dash fuse/relay box.

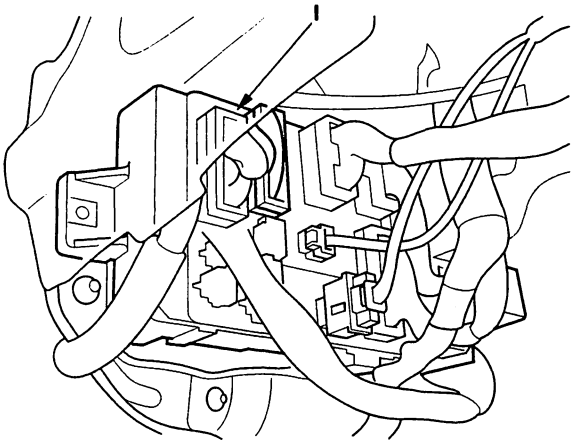

18. Turn the ignition switch ON (II) for 30 seconds, then turn it off.

19. Check the No. 7 (7.5A) fuse in driver's under-dash fuse/relay box.

Is the fuse OK?

YES—Go to step 20.

NO—Short to ground in the No. 7 (7.5A) fuse circuit; refer to section 22 and continue troubleshooting.■

20. Disconnect the SRS floor harness 6P connector C505 (A) from the dashboard wire harness A 6P connector (B).

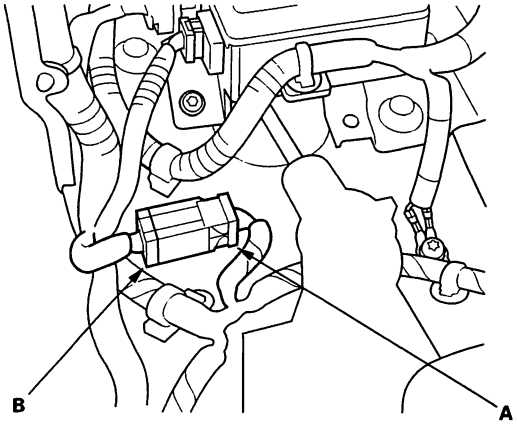

(cont'd)

DTC Troubleshooting - '00 Sedan with Side Airbags (cont'd)

21. Connect the dashboard wire harness 18P connector to the driver's under-dash fuse/relay box.

22. Turn ignition switch ON (II) for 30 seconds, then turn it OFF.

23. Check the No. 7 (7.5A) fuse in driver's under-dash fuse/relay box.

    Is the fuse OK?

    YES—Go to step 24.

    NO—Short to ground in dashboard wire harness A; replace dashboard wire harness A.■

24. Disconnect the OPDS unit harness 8P connector (A) from the OPDS unit (B).

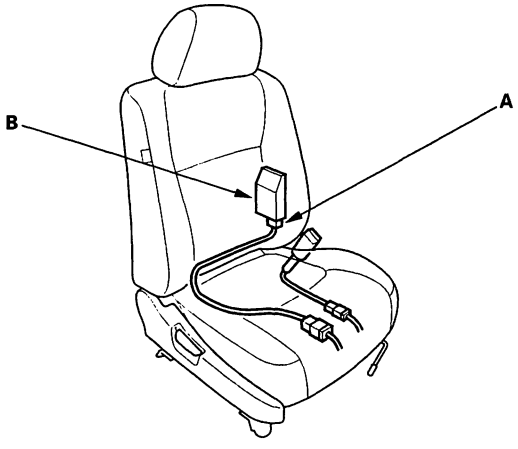

25. Reconnect the SRS floor harness 6P connector C505 (A) to the dashboard wire harness A 6P connector (B).

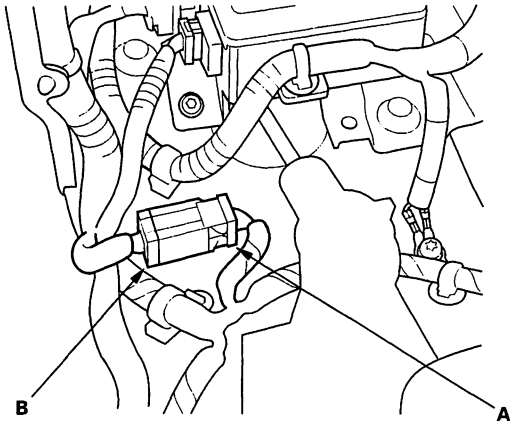

26. Turn the ignition switch ON (II) for 30 seconds. Then turn it OFF.

27. Check the No. 7 (7.5 A) fuse in the driver's under-dash fuse/relay box.

    Is the fuse OK?

    YES—Faulty OPDS unit; replace the OPDS unit (see page 23-300).■

    NO—Short to ground in the SRS floor harness or OPDS unit harness; if the OPDS unit harness is OK, replace the SRS floor harness.■

28. Turn the ignition switch OFF.

29. Check resistance between the No. 8 terminal of OPDS unit connector D (8P) and body ground. There should be 0—1.0 Ω.

OPDS UNIT CONNECTOR D (8P)

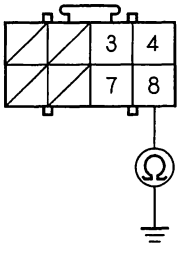

Wire side of female terminals

Is the resistance as specified?

YES—Go to step 30.

NO—Open in the SRS floor harness or OPDS unit harness; if OPDS unit harness is OK, replace the SRS floor harness.■

BACK

30. Disconnect the side airbag connectors (A).

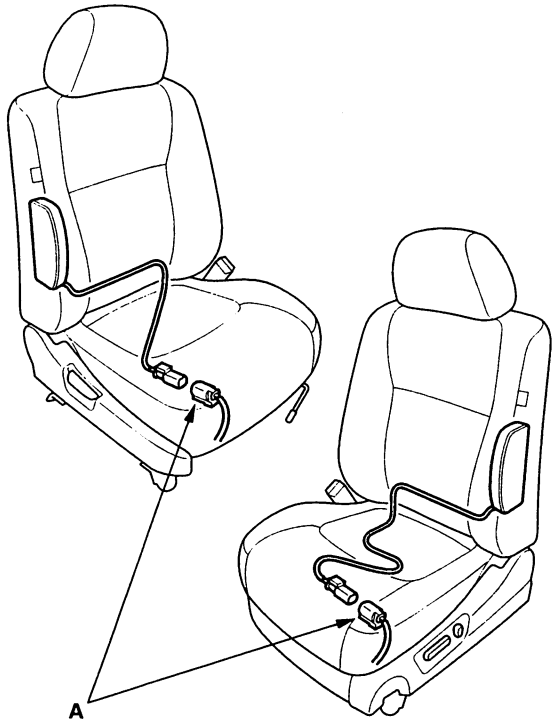

31. Disconnect SRS unit connector B (14P) from the SRS unit.

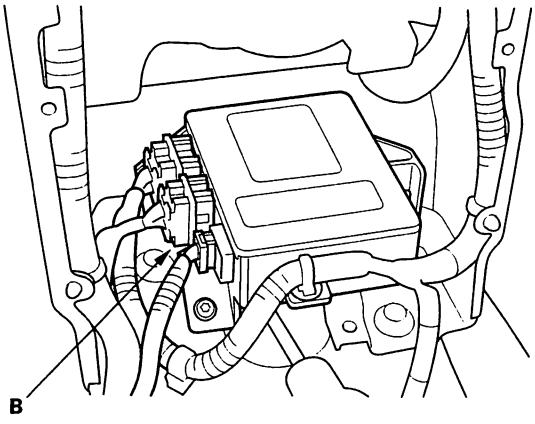

32. Check resistance between the No. 1 terminal of SRS unit connector B (14P) and body ground. There should be 1 MΩ or more.

SRS UNIT CONNECTOR B (14P)

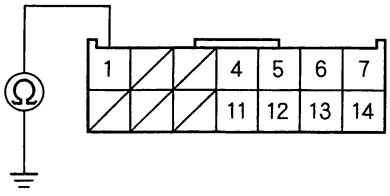

Wire side of female terminals

Is the resistance as specified?

YES – Go to step 33.

NO – Short to ground in the SRS floor harness or the OPDS unit harness; if the OPDS unit harness is OK, replace the SRS floor harness. ■

33. Check resistance between the No. 1 terminal of SRS unit connector B (14P) and No. 7 terminal of OPDS unit connector D (8P). There should be 0 – 1.0 Ω.

SRS UNIT CONNECTOR B (14P)

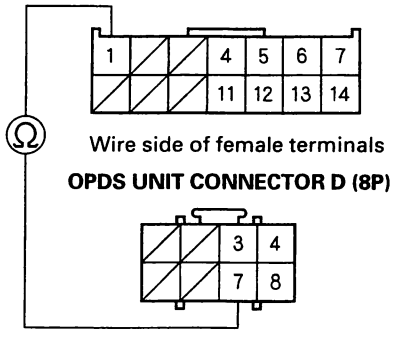

Wire side of female terminals

OPDS UNIT CONNECTOR D (8P)

Wire side of female terminals

Is the resistance as specified?

YES – Go to step 34.

NO – Open in the SRS floor harness or the OPDS unit harness; if the OPDS unit harness is OK, replace the SRS floor harness. ■

(cont'd)

DTC Troubleshooting - '00 Sedan with Side Airbags (cont'd)

34. Turn the ignition switch ON (II).

35. Check for voltage between the No. 1 terminal of SRS unit connector B (14P) and body ground. There should be 0.5 V or less.

SRS UNIT CONNECTOR B (14P)

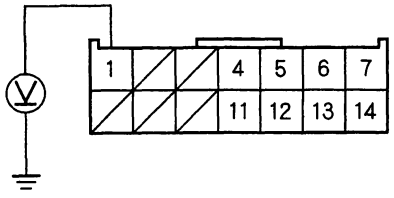

Wire side of female terminals

Is the voltage as specified?

YES—Go to step 36.

NO—Short to power in the SRS floor harness or OPDS unit harness; if the OPDS unit harness is OK, replace the SRS floor harness.■

36. Turn the ignition switch OFF.

37. Install a known-good OPDS unit.

38. Reconnect all connectors.

39. Initialize the OPDS unit.

40. Erase the DTC memory.

41. Read the DTC.

Is DTC 15-1 indicated?

YES—Go to step 42.

NO—Finished.■

42. Turn the ignition switch ON (II), and check that the side airbag indicator light comes on for about 5 seconds, and then goes off.

Does the side airbag indicator stay on?

YES—Faulty OPDS unit or SRS unit; replace the OPDS unit (see page 23-300). If the problem is still present, replace the SRS unit (see page 23-296).■

NO—Faulty side airbag indicator light circuit; Go to troubleshooting DTC 15-2.■

BACK

DTC 15-2: Faulty side airbag indicator light circuit.

1. Make sure nothing is on the front passenger's seat.

2. Erase the DTC memory (see page 23-45).

3. Turn the ignition switch ON (II), and check that the SRS indicator light comes on for about 6 seconds and then goes off.

   Does the SRS indicator light stay on?

   YES – Go to step 4.

   NO – Intermittent failure, system is OK at this time. Go to Troubleshooting Intermittent Failures (see page 23-45).

4. Turn the ignition switch ON (II), and check that the side airbag indicator light comes on.

   Does the side airbag indicator light come on?

   YES – Go to step 5.

   NO – Go to step 6.

5. Make sure the side airbag indicator light comes on for 5 seconds and then goes off.

   Does the side airbag indicator light go off?

   YES – Faulty OPDS unit or SRS unit; replace the OPDS unit (see page 23-300). If the problem is still present, replace the SRS unit (see page 23-296). ■

   NO – Go to step 36.

6. Turn the ignition switch OFF.

7. Check the No. 9 (7.5A) fuse in the driver's under-dash fuse/relay box.

   Is the fuse OK?

   YES – Go to step 8.

   NO – Short to ground in the No. 9 (7.5 A) fuse circuit; refer to section 22 and continue troubleshooting. ■

8. Check for a blown side airbag indicator bulb.

   Is the side airbag indicator bulb OK?

   YES – Go to step 9.

   NO – Blown side airbag indicator bulb; replace the bulb. ■

9. Disconnect OPDS unit connector D (8P) from the OPDS unit (B).

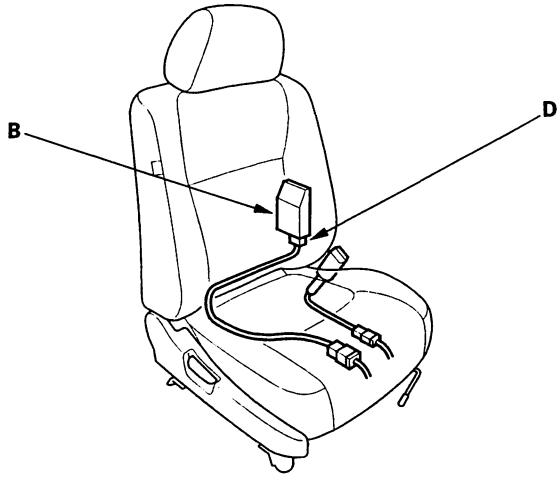

10. Turn the ignition switch ON (II).

11. Check for voltage between No. 3 terminal of OPDS unit connector D (8P) and body ground. There should be battery voltage.

OPDS UNIT CONNECTOR D (8P)

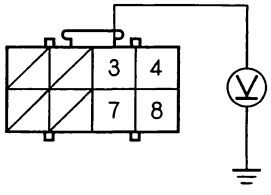

Wire side of female terminals

Is there battery voltage?

YES – Go to step 12.

NO – Go to step 24.

(cont'd)

DTC Troubleshooting - '00 Sedan with Side Airbags (cont'd)

12. Turn the ignition switch OFF.

13. Disconnect the dashboard wire harness connector I (18P) from the driver's under-dash fuse/relay box.

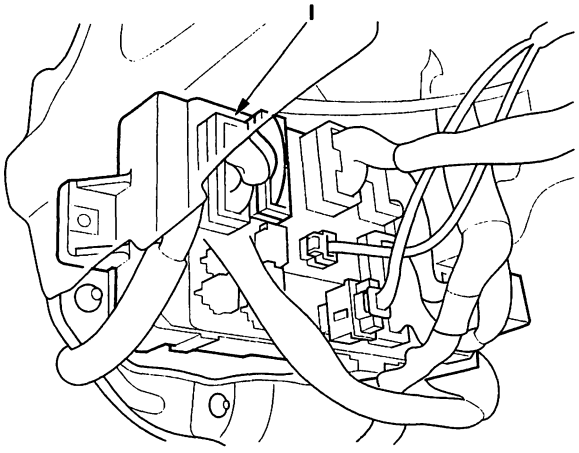

14. Turn the ignition switch ON (II).

15. Check for voltage between the No. 3 terminal of OPDS unit connector D (8P) and body ground. There should be 0.5 V or less.

OPDS UNIT CONNECTOR D (8P)

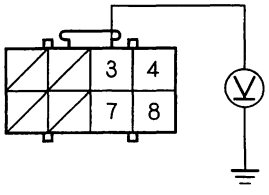

Wire side of female terminals

Is the voltage as specified?

YES – Faulty OPDS unit; replace the OPDS unit (see page 23-300).

NO – Go to step 16.

16. Turn the ignition switch OFF.

17. Disconnect gauge assembly connector B (22P) from the gauge assembly.

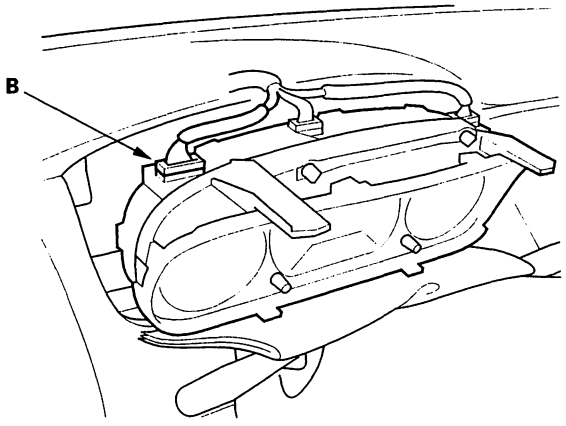

18. Turn the ignition switch ON (II).

19. Check for voltage between the No. 3 terminal of OPDS unit connector D (8P) and body ground. There should be 0.5 V or less.

OPDS UNIT CONNECTOR D (8P)

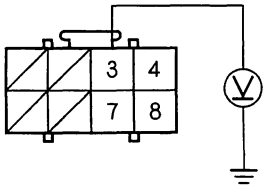

Wire side of female terminals

Is the voltage as specified?

YES – Short to power in the gauge assembly; replace the gauge assembly. ■

NO – Go to step 20.

BACK

20. Turn the ignition switch OFF.

21. Disconnect the SRS floor harness 6P connector C505 (A) from the dashboard wire harness A 6P connector (B).

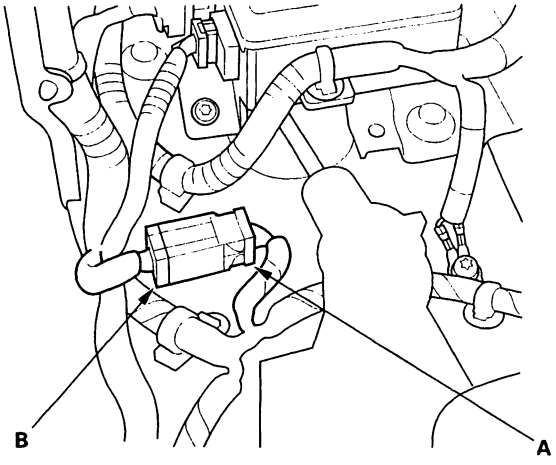

22. Turn the ignition switch ON (II).

23. Check for voltage between the No. 3 terminal of OPDS unit connector D (8P) and body ground. There should be 0.5 V or less.

OPDS UNIT CONNECTOR D (8P)

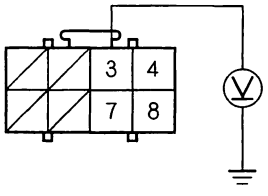

Wire side of female terminals

Is the voltage as specified?

YES – Short to power in dashboard wire harness A; replace dashboard wire harness A. ■

NO – Short to power in the SRS floor harness or the OPDS unit harness; if the OPDS unit harness is OK, replace the SRS floor harness. ■

24. Turn the ignition switch OFF.

25. Backprobe the No. 17 terminal of gauge assembly connector B (22P). Do not disconnect the connector from the gauge assembly.

26. Turn the ignition switch ON (II).

27. Check for voltage between the No. 17 terminal of gauge assembly connector B (22P) and body ground. There should be battery voltage.

GAUGE ASSEMBLY CONNECTOR B (22P)

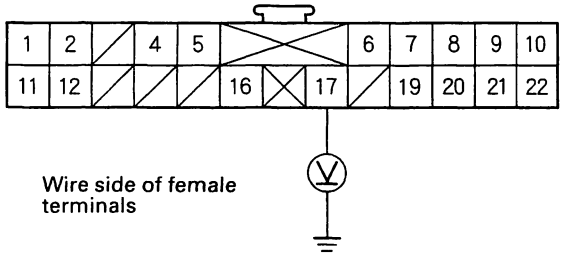

Wire side of female terminals

Is there battery voltage?

YES – Go to step 28.

NO – Go to step 32.

28. Turn the ignition switch OFF.

29. Disconnect the SRS floor harness 6P connector C505 (A) from the dashboard wire harness A 6P connector (B).

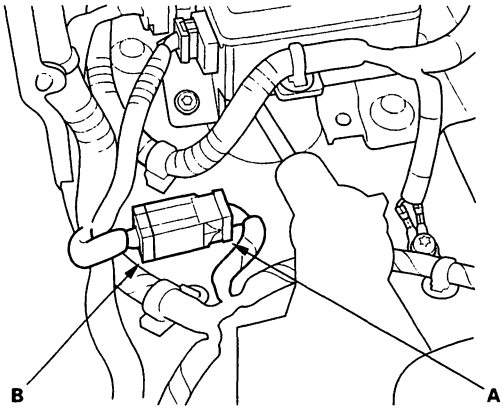

30. Turn the ignition switch ON (II).

(cont'd)

DTC Troubleshooting - '00 Sedan with Side Airbags (cont'd)

31. Check for voltage between the No. 4 terminal of the dashboard wire harness A 6P connector (C851) and body ground. There should be battery voltage.

DASHBOARD WIRE HARNESS A 6P CONNECTOR (C851)

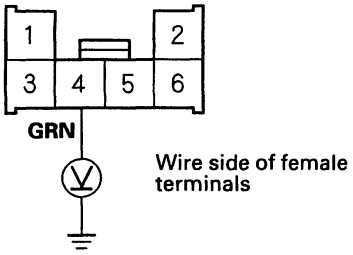

Is there battery voltage?

YES—Poor contact at the dashboard wire harness A 6P and SRS floor harness 6P connectors or an open in the SRS floor harness. Check the connection between the dashboard wire harness A 6P and SRS floor harness 6P connectors; if the connection is OK, replace the SRS floor harness.■

NO—Poor contact at gauge assembly connector B (22P) or an open in dashboard wire harness A. Check the connector; if the connection is OK, replace Tdashboard wire harness A.■

32. Turn the ignition switch OFF.

33. Disconnect gauge assembly connector B (22P) from the gauge assembly.

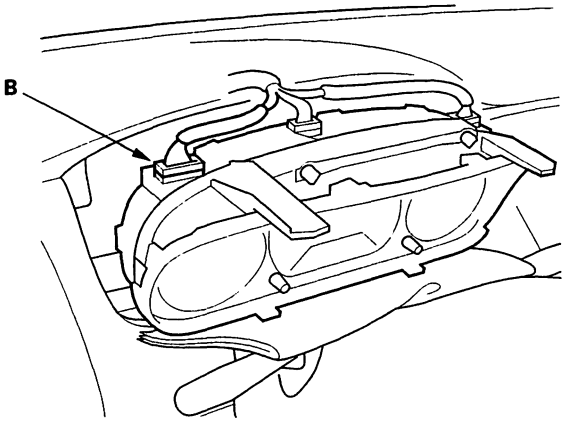

34. Turn the ignition switch ON (II).

35. Check for voltage between the No. 11 terminal of gauge assembly connector B (22P) and body ground. There should be battery voltage.

GAUGE ASSEMBLY CONNECTOR B (22P)

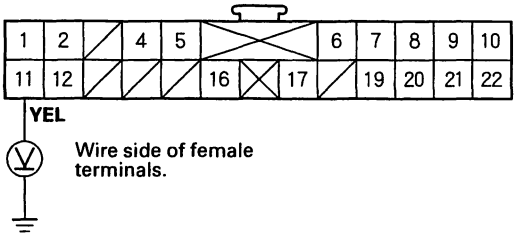

Is there battery voltage?

YES—Faulty side airbag indicator light circuit; replace the gauge assembly.■

NO—Open in dashboard wire harness A; replace dashboard wire harness A.■

36. Turn the ignition switch OFF.

37. Disconnect the OPDS unit harness 8P connector (A) from the OPDS unit (B).

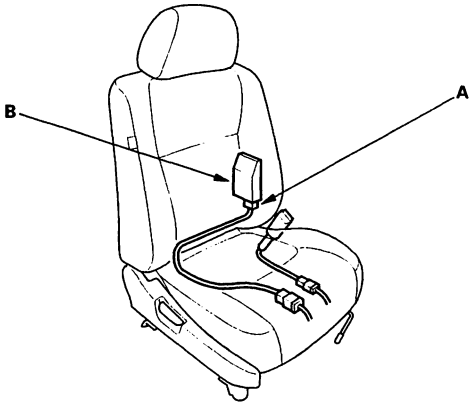

38. Turn the ignition switch ON (II).

Does the side airbag indicator light stay off?

YES—Faulty OPDS unit; replace the OPDS unit (see page 23-300).■

NO—Go to step 39.

BACK

39. Turn the ignition switch OFF.

40. Disconnect the SRS floor harness 6P connector C505 (A) from the dashboard wire harness A 6P connector (B).

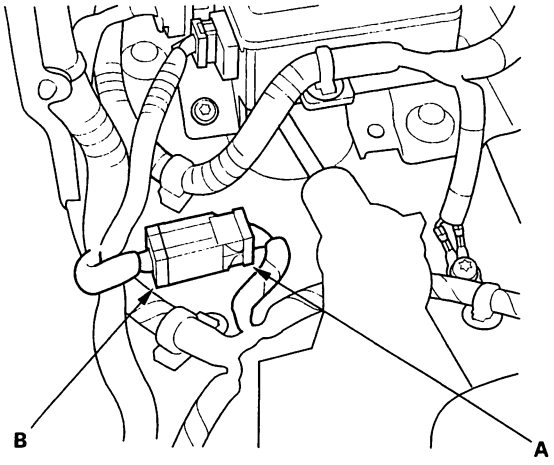

41. Turn the ignition switch ON (II).

Does the side airbag indicator light stay off?

YES – Short to ground in the SRS floor harness or the OPDS unit harness; if the OPDS unit harness is OK, replace the SRS floor harness. ■

NO – Go to step 42.

42. Turn the ignition switch OFF.

43. Disconnect gauge assembly connector B (22P) from the gauge assembly.

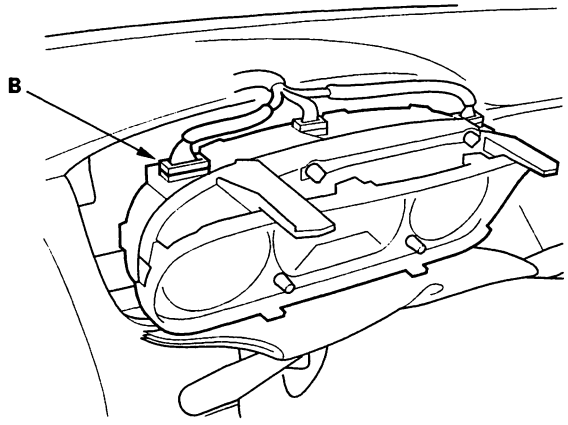

44. Turn the ignition switch ON (II).

Does the side airbag indicator light stay off?

YES – Short to ground in dashboard wire harness A; replace dashboard wire harness A. ■

NO – Short to ground in the gauge assembly; replace the gauge assembly. ■

DTC Troubleshooting - '00 Sedan with Side Airbags (cont'd)

DTC 15-3: Faulty OPDS sensor

1. Erase the DTC memory (see page 23-45).

2. Turn the ignition switch ON (II), and check that the SRS indicator light comes on for about 6 seconds and then goes off.

   Does the SRS indicator light stay on?

   YES—Go to step 3.

   NO—Intermittent failure, system is OK at this time. Go to Troubleshooting Intermittent Failures (see page 23-45).

NOTE: Aftermarket devices (fluorescent map lights, laptop computers, etc.) used near the front passenger's seat-back can interfere with the seat-back sensors and cause a false DTC 15-3. If one of these devices was used, erase the DTC, operate the device near the seat-back, and recheck for DTCs. If DTC 15-3 is reset, erase it, and do not use the device near the seat-back.

3. Check the connection at the OPDS sensor harness connector and the OPDS unit connector.

   Are the connections OK?

   YES—Go to step 4.

   NO—Reconnect the OPDS sensor harness connector, and clear the DTC.■

4. Replace the OPDS sensor/seat back foam (see page 20-98), and reinitialize the OPDS system (see page 23-46).

5. Erase the DTC memory.

6. Read the DTC.

   Is DTC 15-3 indicated?

   YES—Go to step 7.

   NO—The system is OK.■

7. Replace the OPDS unit (see page 23-300), and reinitialize the OPDS unit (see page 23-46).

8. Erase the DTC memory.

9. Read the DTC.

   Is 15-3 indicated?

   YES—Replace the SRS unit.■

   NO—The system is OK.■

BACK

DTC Troubleshooting - '00 Coupe with Side Airbags

DTC 11-1: Open or increased resistance in driver's side airbag inflator

1. Erase the DTC memory (see page 23-45).

2. Turn the ignition switch ON (II), and check that the SRS indicator light comes on for about 6 seconds and then goes off.

   Does the SRS indicator light stay on?

   YES – Go to step 3.

   NO – Intermittent failure, system is OK at this time. Go to Troubleshooting Intermittent Failures (see page 23-45).

3. Turn the ignition switch OFF. Disconnect the battery negative cable, and wait for 3 minutes.

4. Disconnect the left side wire harness 2P connector from the driver's side airbag.

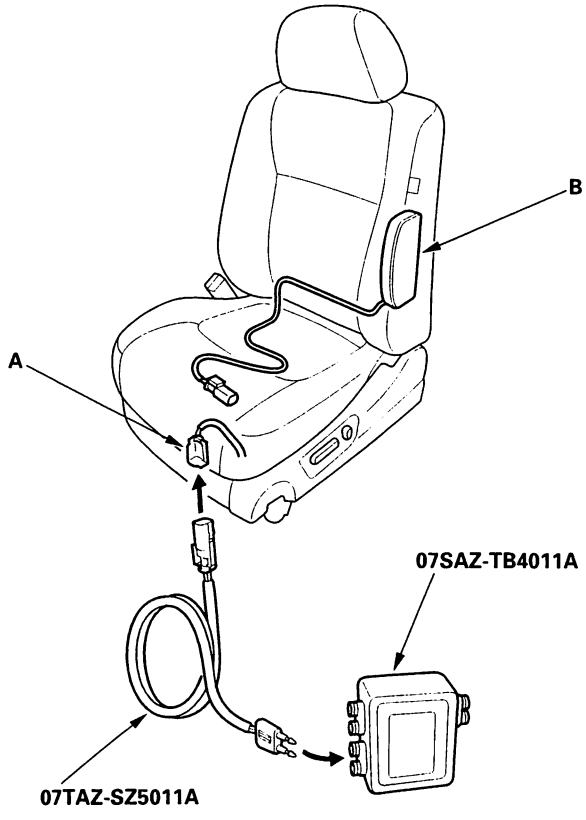

5. Connect the special tool (2 Ω connector) to the left side wire harness 2P connector.

6. Reconnect the battery negative cable.

7. Erase the DTC memory.

8. Read the DTC.

   Is DTC 11-1 indicated?

   YES – Go to step 9.

   NO – Open or increased resistance in the driver's side airbag inflator, replace the driver's side airbag. (see page 23-282). ■

9. Disconnect the left side wire harness 4P connector C556 (A) from the SRS main harness 4P connector (B).

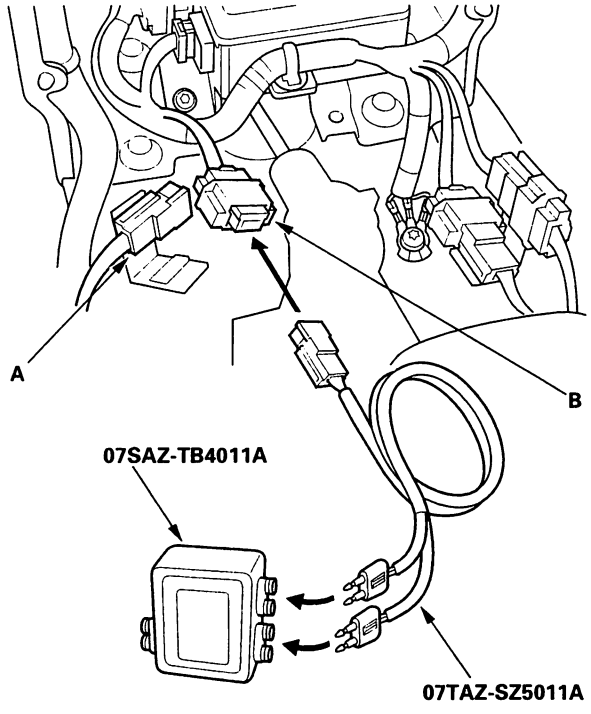

10. Connect the special tool (2 Ω connectors) to the SRS main harness 4P connector.

11. Erase the DTC memory.

12. Read the DTC.

    Is DTC 11-1 indicated?

    YES – Go to step 13.

    NO – Open or increased resistance in the left side wire harness; replace the left side wire harness. ■

(cont'd)

DTC Troubleshooting - '00 Coupe with Side Airbags (cont'd)

13. Disconnect the battery negative cable, and wait for 3 minutes.

14. Disconnect the right side wire harness 2P connector (A) from the front passenger's side airbag (B).

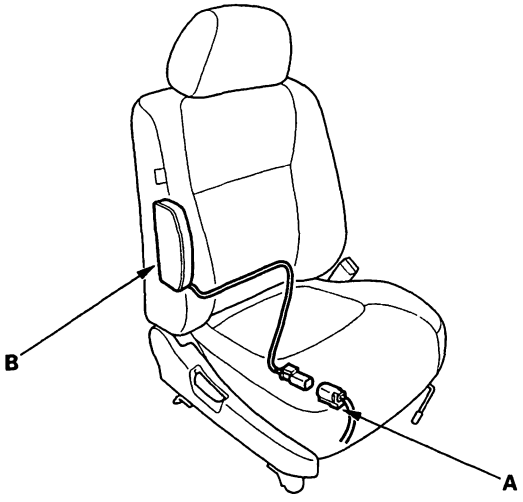

15. Disconnect SRS unit connector B (14P) from the SRS unit. Do not disconnect the special tool from the SRS main harness 4P connector.

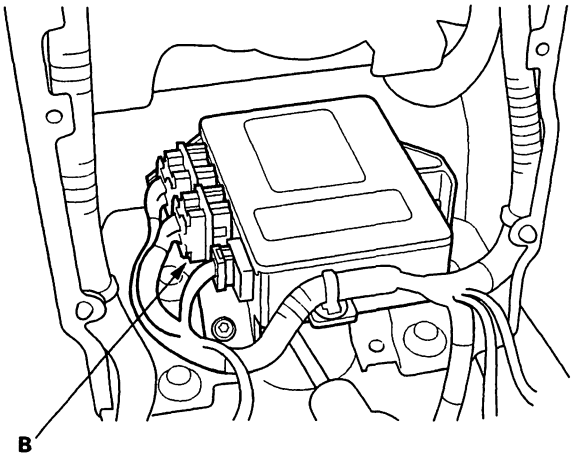

16. Check resistance between the No. 4 and No. 13 terminals of SRS unit connector B (14P). There should be 2.0—3.0 Ω.

SRS UNIT CONNECTOR B (14P)

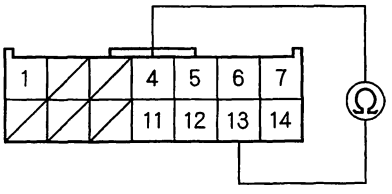

Wire side of female terminals

Is the resistance as specified?

YES—Faulty SRS unit or poor contact at SRS unit connector B (14P) and the SRS unit; check the connection. If the connector is OK, replace the SRS unit (see page 23-296).■

NO—Open or increased resistance in the SRS main harness; replace the SRS main harness.■

BACK

DTC 11-3: Short to another wire or decreased resistance in driver's side airbag inflator

1. Erase the DTC memory (see page 23-45).

2. Turn the ignition switch ON (II), and check that the SRS indicator light comes on for about 6 seconds and then goes off.

   Does the SRS indicator light stay on?

   YES – Go to step 3.

   NO – Intermittent failure, system is OK at this time. Go to Troubleshooting Intermittent Failures (see page 23-45).

3. Turn the ignition switch OFF. Disconnect the battery negative cable, and wait for 3 minutes.

4. Disconnect the left side wire harness 2P connector from the driver's side airbag.

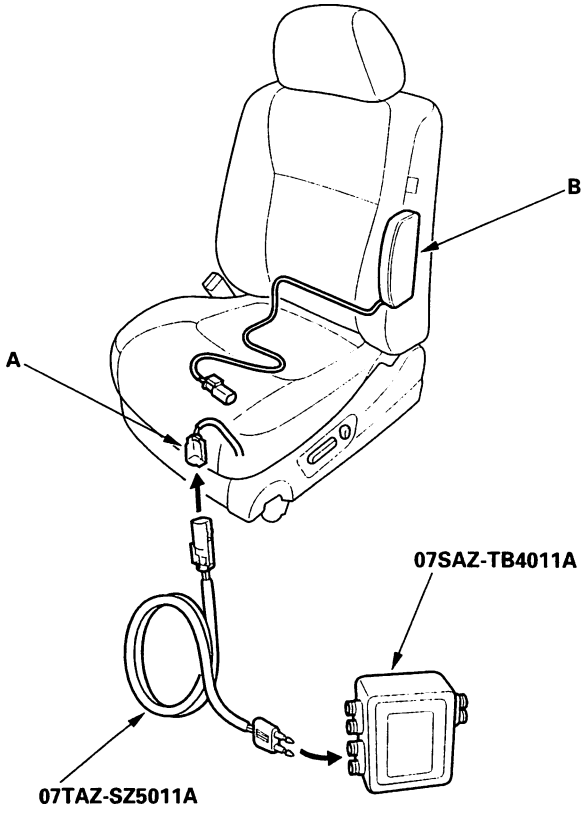

5. Connect the special tool (2 Ω connector) to the left side wire harness 2P connector.

6. Reconnect the battery negative cable.

7. Erase the DTC memory.

8. Read the DTC.

   Is DTC 11-3 indicated?

   YES – Go to step 9.

   NO – Short to another wire in the driver's side airbag inflator; replace the driver's side airbag (see page 23-282). ■

9. Disconnect the left side wire harness 4P connector C556 (A) from the SRS main harness 4P connector (B).

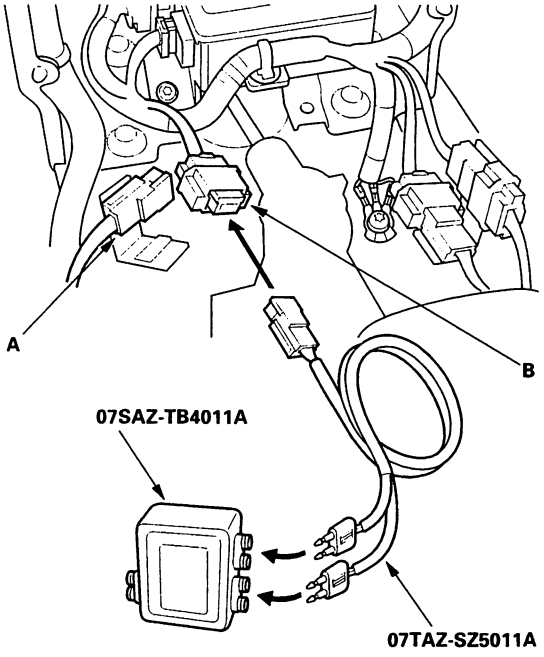

10. Connect the special tool (2 Ω connectors) to the SRS main harness 4P connector.

11. Erase the DTC memory.

12. Read the DTC.

    Is DTC 11-3 indicated?

    YES – Go to step 13.

    NO – Short to another wire or decreased resistance in the left side wire harness; replace the left side wire harness. ■

(cont'd)

DTC Troubleshooting - '00 Coupe with Side Airbags (cont'd)

13. Disconnect the battery negative cable, and wait for 3 minutes.

14. Disconnect the right side wire harness 2P connector (A) from the front passenger's side airbag (B).

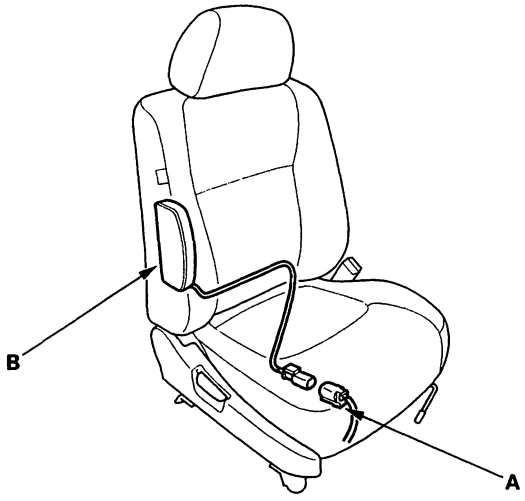

15. Disconnect the special tool from the SRS main harness 4P connector.

16. Disconnect SRS unit connector B (14P) from the SRS unit.

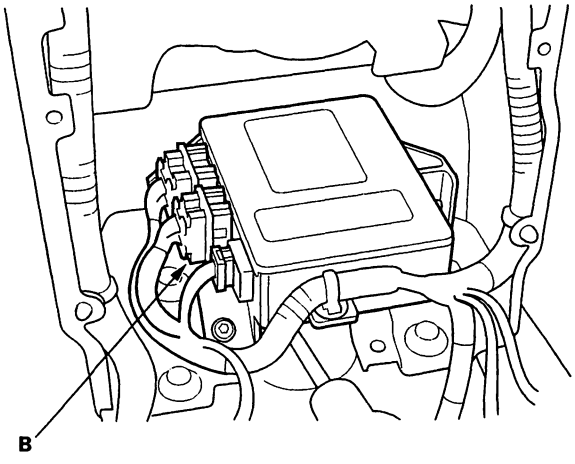

17. Check resistance between No. 4 and No. 13 terminals of SRS unit connector B (14P). There should be 1 MΩ or more.

SRS UNIT CONNECTOR B (14P)

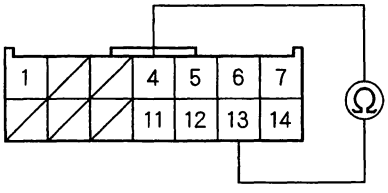

Wire side of female terminals

Is the resistance as specified?

YES—Faulty SRS unit; replace the SRS unit (see page 23-296). ■

NO—Short to another wire in the SRS main harness; replace the SRS main harness. ■

BACK

DTC 11-4: Short to power in driver's side airbag inflator

1. Erase the DTC memory (see page 23-45).

2. Turn the ignition switch ON (II), and check that the SRS indicator light comes on for about 6 seconds and then goes off.

   Does the SRS indicator light stay on?

   YES – Go to step 3.

   NO – Intermittent failure, system is OK at this time. Go to Troubleshooting Intermittent Failures (see page 23-45).

3. Turn the ignition switch OFF. Disconnect the battery negative cable, and wait for 3 minutes.

4. Disconnect the left side wire harness 2P connector from the driver's side airbag.

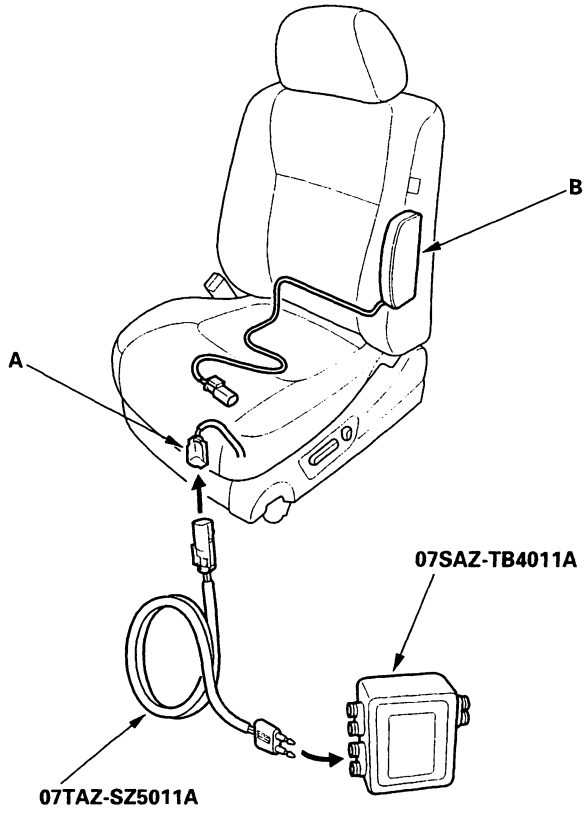

5. Connect the special tool (2 Ω connector) to the left side wire harness 2P connector.

6. Reconnect the battery negative cable.

7. Erase the DTC memory.

8. Read the DTC.

   Is DTC 11-4 indicated?

   YES – Go to step 9.

   NO – Short to power in the driver's side airbag inflator; replace the driver's side airbag (see page 23-282). ■

9. Disconnect the left side wire harness 4P connector C556 (A) from the SRS main harness 4P connector (B).

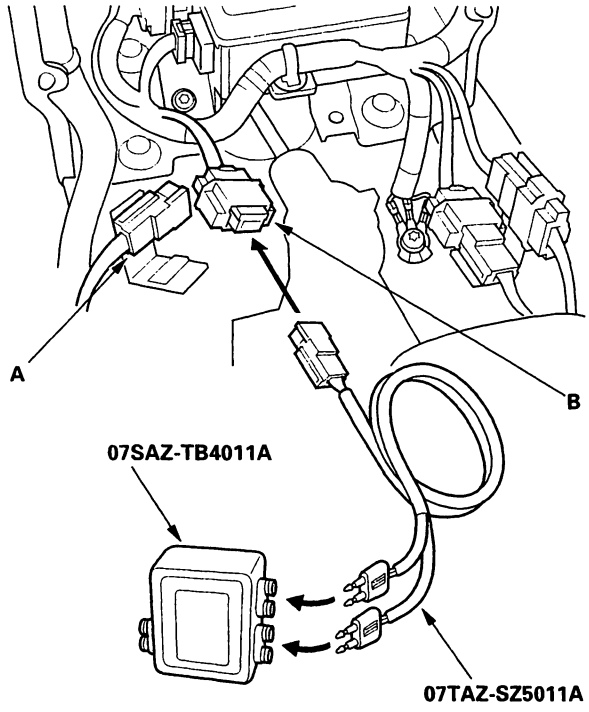

10. Connect the special tool (2 Ω connectors) to the SRS main harness 4P connector.

11. Erase the DTC memory.

12. Read the DTC.

    Is DTC 11-4 indicated?

    YES – Go to step 13.

    NO – Short to power in the left side wire harness; replace the left side wire harness. ■

(cont'd)

DTC Troubleshooting - '00 Coupe with Side Airbags (cont'd)

13. Disconnect the battery negative cable, and wait for 3 minutes.

14. Disconnect the right side wire harness 2P connector (A) from the front passenger's side airbag (B).

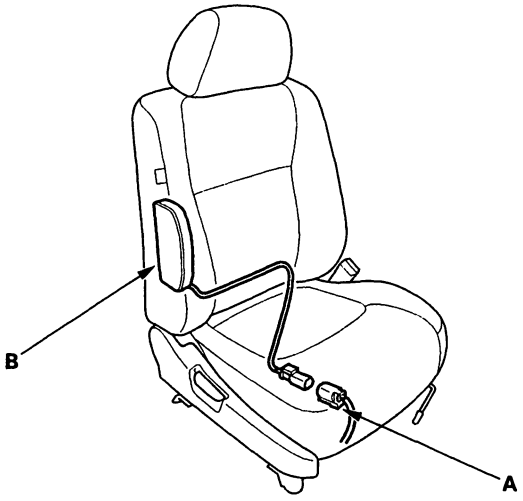

15. Disconnect SRS unit connector B (14P) from the SRS unit.

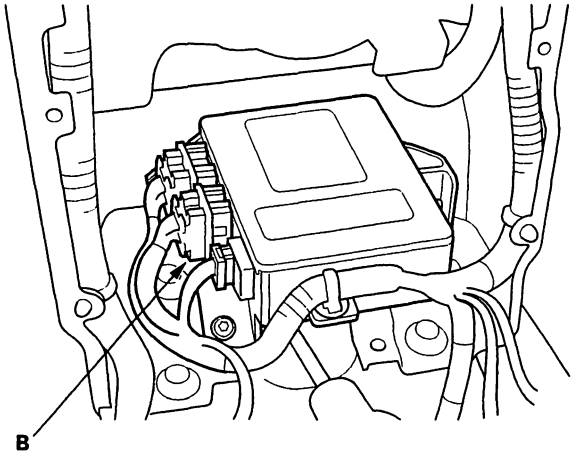

16. Check resistance between the No. 13 and No. 6 terminals of SRS unit connector B (14P), and between the No. 13 and No. 7 terminals. There should be 1 MΩ or more.

SRS UNIT CONNECTOR B (14P)

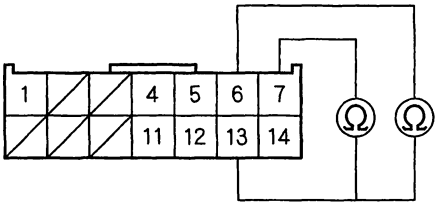

Wire side of female terminals

Is the resistance as specified?

YES—Faulty SRS unit; replace the SRS unit (see page 23-296).■

NO—Short to power in the SRS main harness; replace the SRS main harness.■

BACK

DTC 11-5: Short to ground in driver's side airbag inflator

1. Erase the DTC memory (see page 23-45).

2. Turn the ignition switch ON (II), and check that the SRS indicator light comes on for about 6 seconds and then goes off.

   Does the SRS indicator light stay on?

   YES – Go to step 3.

   NO – Intermittent failure, system is OK at this time. Go to Troubleshooting Intermittent Failures (see page 23-45).

3. Turn the ignition switch OFF. Disconnect the battery negative cable, and wait for 3 minutes.

4. Disconnect the left side wire harness 2P connector (A) from the driver's side airbag (B).

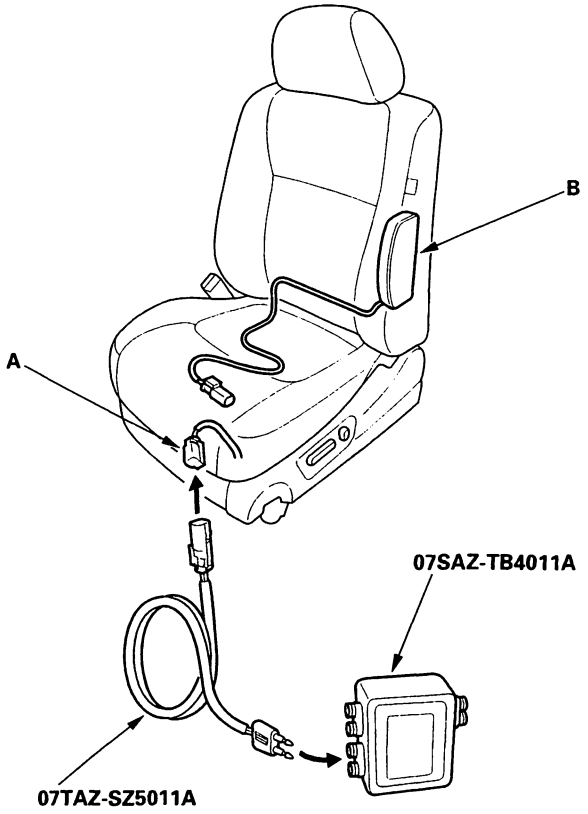

5. Connect the special tool (2 Ω connector) to the left side wire harness 2P connector.

6. Reconnect the battery negative cable.

7. Erase the DTC memory.

8. Read the DTC.

   Is DTC 11-5 indicated?

   YES – Go to step 9.

   NO – Short to ground in the driver's side airbag inflator; replace the driver's side airbag (see page 23-282). ■

9. Disconnect the left side wire harness 4P connector C556 (A) from the SRS main harness 4P connector (B).

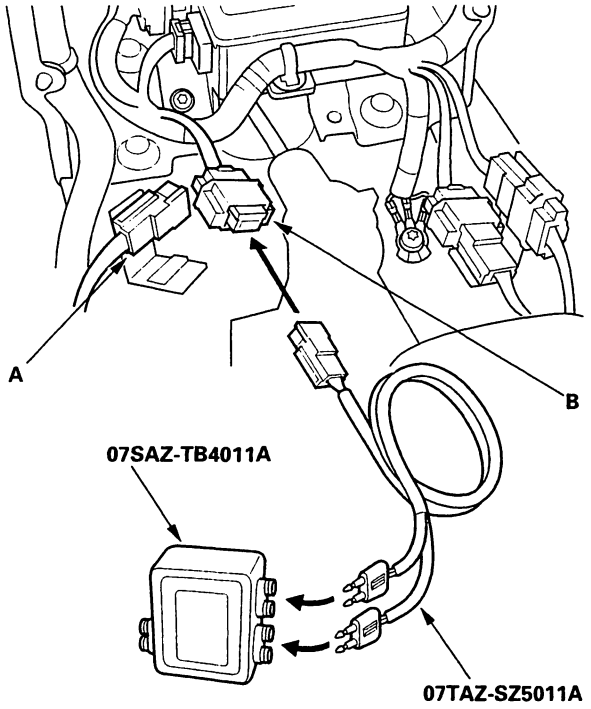

10. Connect the special tool (2 Ω connectors) to the SRS main harness 4P connector.

11. Erace the DTC memory.

12. Read the DTC.

    Is DTC 11-5 indicated?

    YES – Go to step 13.

    NO – Short to ground in the left side wire harness; replace the left side wire harness. ■

(cont'd)

DTC Troubleshooting - '00 Coupe with Side Airbags (cont'd)

13. Disconnect the battery negative cable, and wait for 3 minutes.

14. Disconnect the right side wire harness 2P connector (A) from the front passenger's side airbag (B).

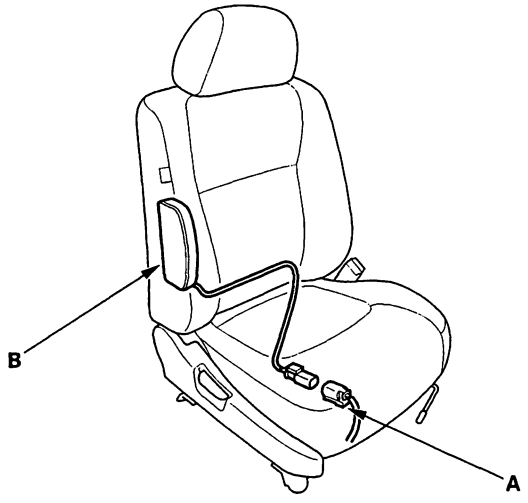

15. Disconnect SRS unit connector B (14P) from the SRS unit.

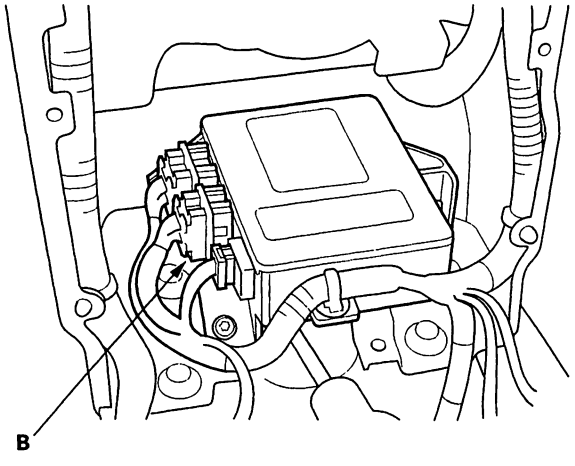

16. Check resistance between the No. 13 and No. 11 terminals of SRS unit connector B (14P), between the No. 13 and No. 12 terminals, and between the No. 13 terminal and body ground. There should be 1 MΩ or more.

SRS UNIT CONNECTOR B (14P)

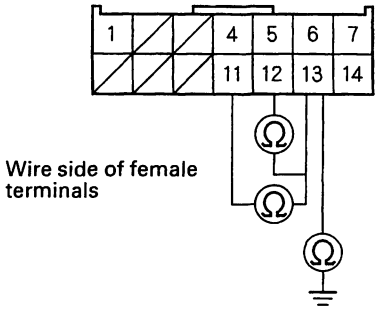

Is this resistance as specified?

YES—Faulty SRS unit; replace the SRS unit (see page 23-296).■

NO—Short to ground in the SRS main harness; replace the SRS main harness.■

BACK

DTC 12-1: Open or increased resistance in front passenger's side airbag inflator

1. Erase the DTC memory (see page 23-45).

2. Turn the ignition switch ON (II), and check that the SRS indicator light comes on for about 6 seconds and then goes off.

   Does the SRS indicator light stay on?

   YES – Go to step 3.

   NO – Intermittent failure, system is OK at this time. Go to Troubleshooting Intermittent Failures (see page 23-45).

3. Turn the ignition switch OFF. Disconnect the battery negative cable, and wait for 3 minutes.

4. Disconnect the right side wire harness 2P connector (A) from the front passenger's side airbag (B).

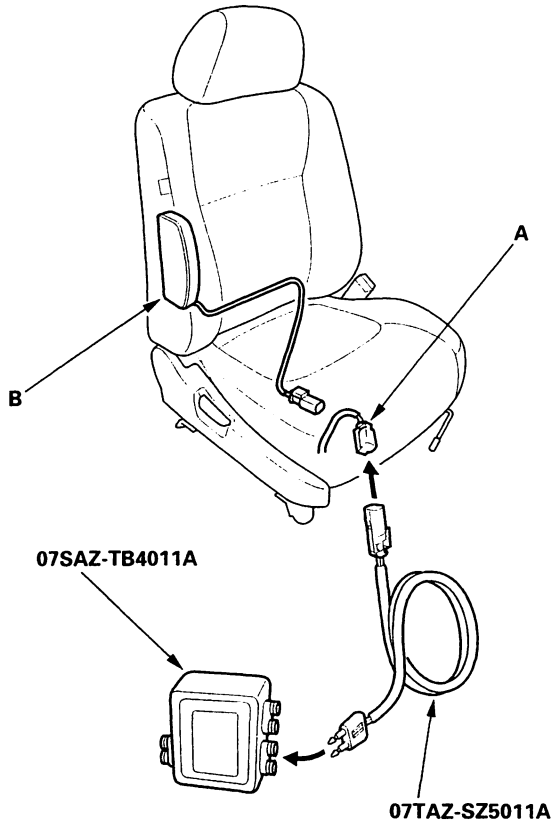

5. Connect the special tool (2 Ω connector) to the right side wire harness 2P connector.

6. Reconnect the battery negative cable.

7. Erase the DTC memory.

8. Read the DTC.

   Is DTC 12-1 indicated?

   YES – Go to step 9.

   NO – Open or increased resistance in the front passenger's side airbag inflator; replace the front passenger's side airbag. (see page 23-282). ■

9. Disconnect the right side wire harness 4P connector C584 (A) from the SRS main harness 4P connector (B).

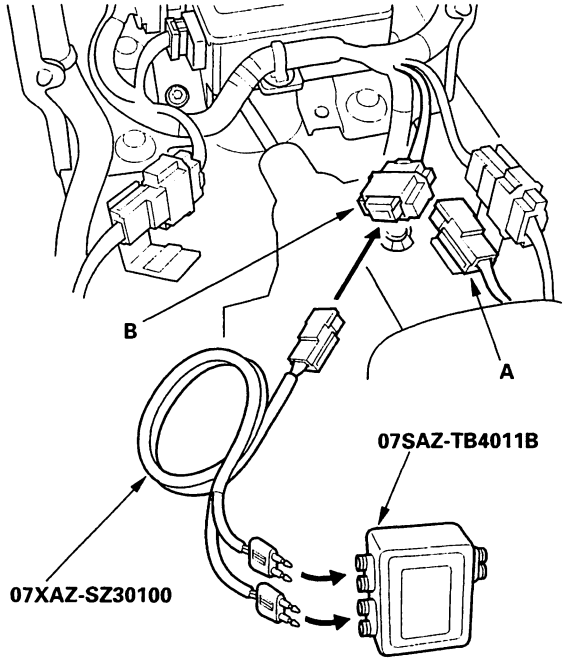

10. Connect the special tool (2 Ω connectors) to the SRS main harness 4P connector.

11. Erase the DTC memory.

12. Read the DTC.

    Is DTC 12-1 indicated?

    YES – Go to step 13.

    NO – Open or increased resistance in the right side wire harness; replace the right side wire harness. ■

(cont'd)

DTC Troubleshooting - '00 Coupe with Side Airbags (cont'd)

13. Disconnect the battery negative cable, and wait for 3 minutes.

14. Disconnect the left side wire harness 2P connector (A) from the driver's side airbag (B).

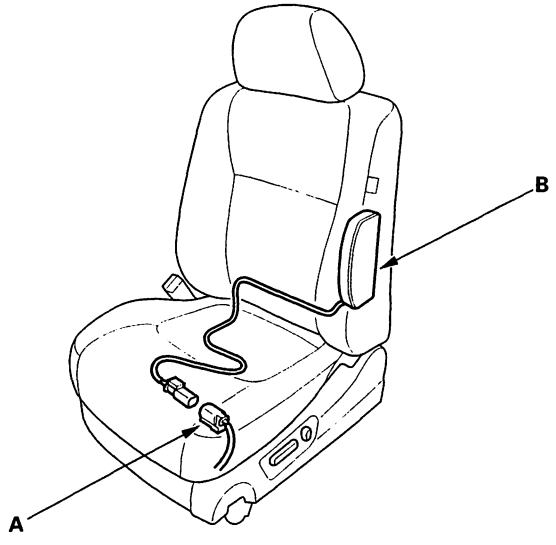

15. Disconnect SRS unit connector B (14P) from the SRS unit. Do not disconnect the special tool from the SRS main harness 4P connector.

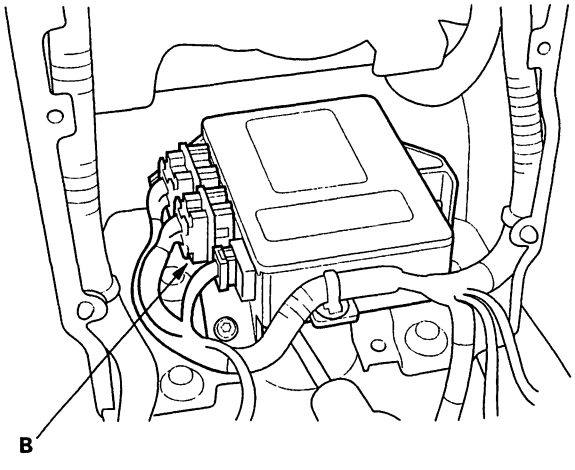

16. Check resistance between the No. 5 and No. 14 terminals of SRS unit connector B (14P). There should be 2.0—3.0 Ω.

SRS UNIT CONNECTOR B (14P)

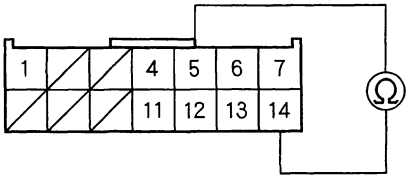

Wire side of female terminals

Is the resistance as specified?

YES—Faulty SRS unit or poor contact at SRS unit connector B (14P) and the SRS unit; check the connection. If the connector is OK, replace the SRS unit (see page 23-296).■

NO—Open or increased resistance in the SRS main harness; replace the SRS main harness.■

BACK

DTC 12-3: Short to another wire or decreased resistance in front passenger's side airbag inflator

1. Erase the DTC memory (see page 23-45).

2. Turn the ignition switch ON (II), and check that the SRS indicator light comes on for about 6 seconds and then goes off.

   Does the SRS indicator light stay on?

   YES – Go to step 3.

   NO – Intermittent failure, system is OK at this time. Go to Troubleshooting Intermittent Failures (see page 23-45).

3. Turn the ignition switch OFF. Disconnect the battery negative cable, and wait for 3 minutes.

4. Disconnect the right side wire harness 2P connector (A) from the front passenger's side airbag (B).

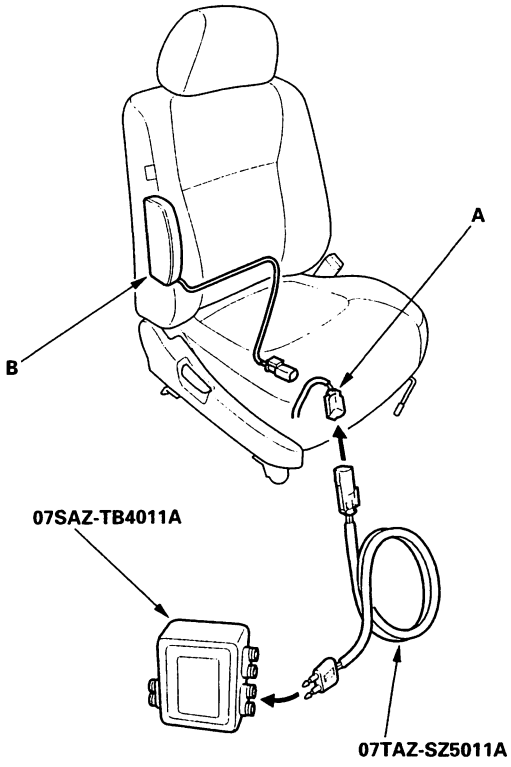

5. Connect the special tool (2 Ω connector) to the right side wire harness 2P connector.

6. Reconnect the battery negative cable.

7. Erase the DTC memory.

8. Read the DTC.

   Is DTC 12-3 indicated?

   YES – Go to step 9.

   NO – Short to another wire in the front passenger's side airbag inflator; replace the front passenger's side airbag (see page 23-282). ■

9. Disconnect the right side wire harness 4P connector C584 (A) from the SRS main harness 4P connector (B).

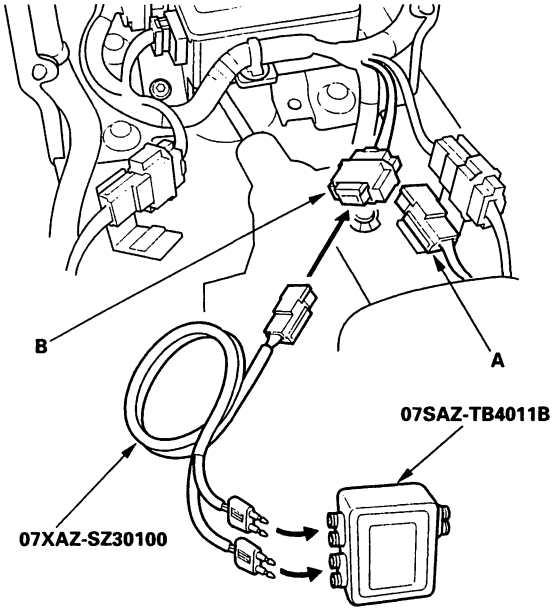

10. Connect the special tool (2 Ω connectors) to the SRS main harness 4P connector.

11. Erase the DTC memory.

12. Read the DTC.

    Is DTC 12-3 indicated?

    YES – Go to step 13.

    NO – Short to another wire or decreased resistance in the right side wire harness; replace the right side wire harness. ■

(cont'd)

DTC Troubleshooting - '00 Coupe with Side Airbags (cont'd)

13. Disconnect the battery negative cable, and wait for 3 minutes.

14. Disconnect the left side wire harness 2P connector (A) from the driver's side airbag (B).

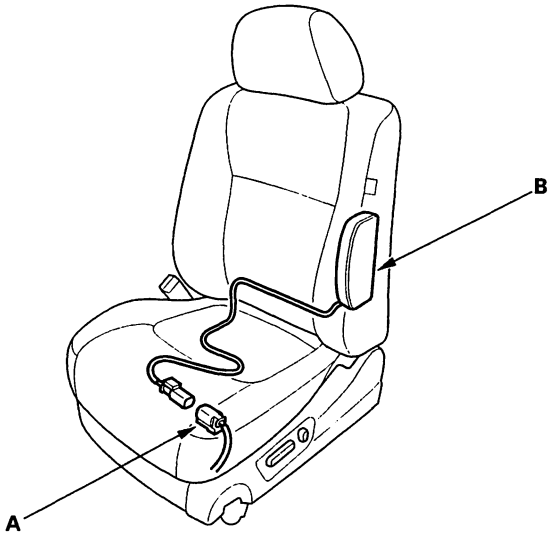

15. Disconnect the special tool from the SRS main harness 4P connector.

16. Disconnect SRS unit connector B (14P) from the SRS unit.

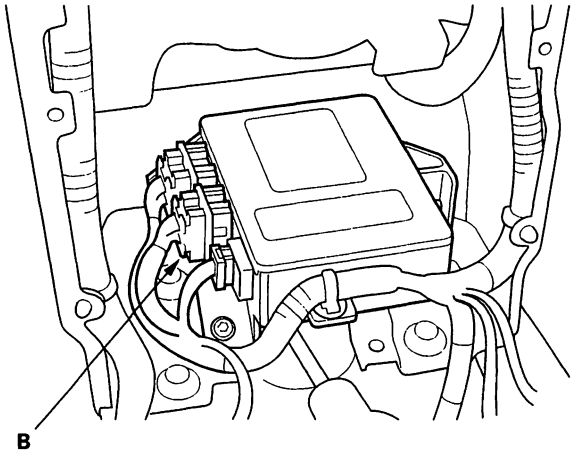

17. Check resistance between the No. 5 and No. 14 terminals of SRS unit connector B (14P). There should be 1 MΩ or more.

SRS UNIT CONNECTOR B (14P)

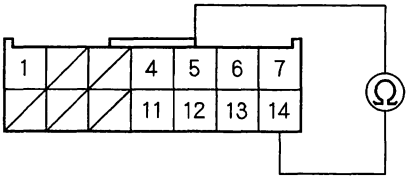

Wire side of female terminals

Is the resistance as specified?

YES—Faulty SRS unit; replace the SRS unit (see page 23-296).■

NO—Short to another wire in the SRS main harness; replace the SRS main harness.■

BACK

DTC 12-4: Short to power in front passenger's side airbag inflator

1. Erase the DTC memory (see page 23-45).

2. Turn the ignition switch ON (II), and check that the SRS indicator light comes on for about 6 seconds and then goes off.

   Does the SRS indicator light stay on?

   YES – Go to step 3.

   NO – Intermittent failure, system is OK at this time. Go to Troubleshooting Intermittent Failures (see page 23-45).

3. Disconnect the battery negative cable, and wait for 3 minutes.

4. Disconnect the right side wire harness 2P connector from the front passenger's side airbag.

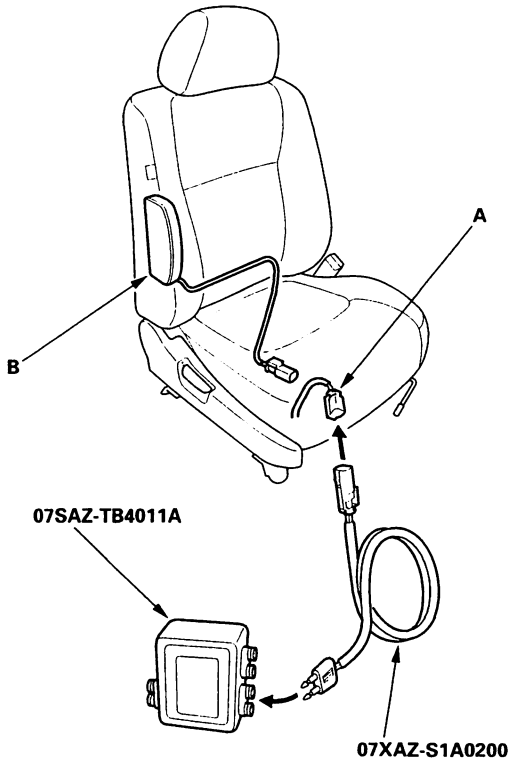

5. Connect the special tool (2 Ω connector) to the right side wire harness 2P connector.

6. Reconnect the battery negative cable.

7. Erase the DTC memory.

8. Read the DTC.

   Is DTC 12-4 indicated?

   YES – Go to step 9.

   NO – Short to power in the front passenger's side airbag inflator; replace the front passenger's side airbag (see page 23-282). ■

9. Disconnect the right side wire harness 4P connector C584 (A) from the SRS main harness 4P connector (B).

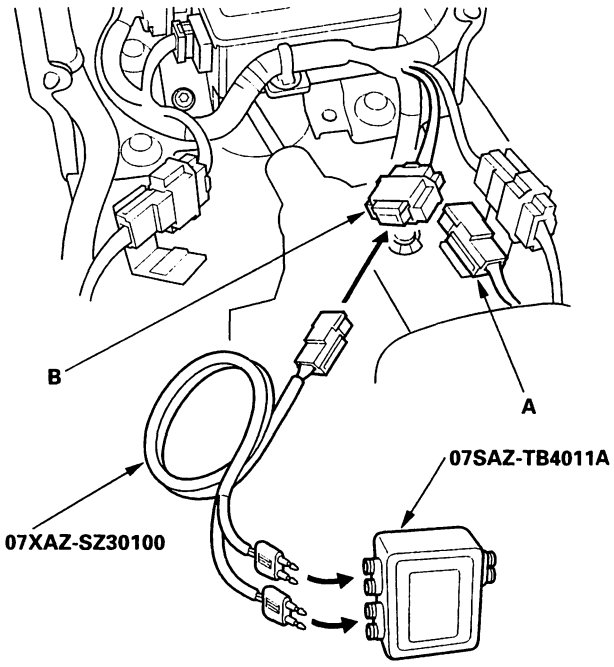

10. Connect the special tool (2 Ω connectors) to the SRS main harness 4P connector.

11. Erase the DTC memory.

12. Read the DTC.

    Is DTC 12-4 indicated?

    YES – Go to step 13.

    NO – Short to power in the right side wire harness; replace the right side wire harness. ■

(cont'd)

DTC Troubleshooting - '00 Coupe with Side Airbags (cont'd)

13. Disconnect the battery negative cable, and wait for 3 minutes.

14. Disconnect the left side wire harness 2P connector from the driver's side airbag.

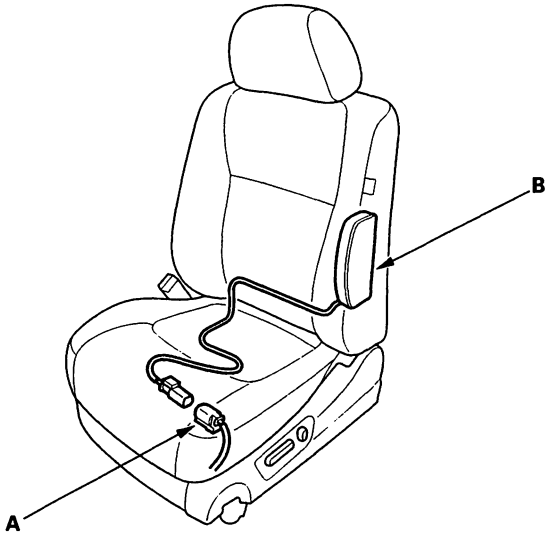

15. Disconnect SRS unit connector B (14P) from the SRS unit.

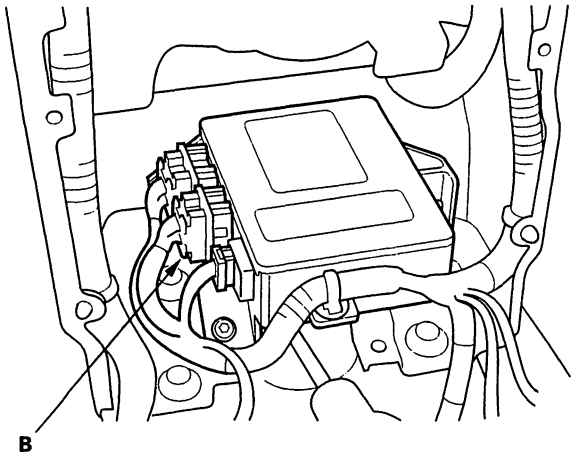

16. Check resistance between the No. 14 and No. 6 terminals of SRS unit connector B (14P), and between the No. 14 and No. 7 terminals. There should be 1 MΩ or more.

SRS UNIT CONNECTOR B (14P)

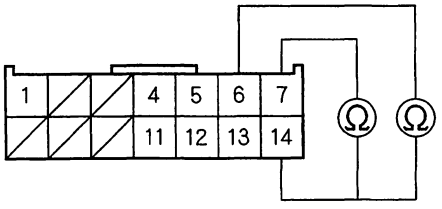

Wire side of female terminals

Is the resistance as specified?

YES—Faulty SRS unit; replace the SRS unit (see page 23-296).■

NO—Short to power in the SRS main harness; replace the SRS main harness.■

BACK

DTC 12-5: Short to ground in front passenger's side airbag inflator

1. Erase the DTC memory (see page 23-45).

2. Turn the ignition switch ON (II), and check that the SRS indicator light comes on for about 6 seconds and then goes off.

   Does the SRS indicator light stay on?

   YES – Go to step 3.

   NO – Intermittent failure, system is OK at this time. Go to Troubleshooting Intermittent Failures (see page 23-45).

3. Turn the ignition switch OFF. Disconnect the battery negative cable, and wait for 3 minutes.

4. Disconnect the right side wire harness 2P connector (A) from the front passenger's side airbag (B).

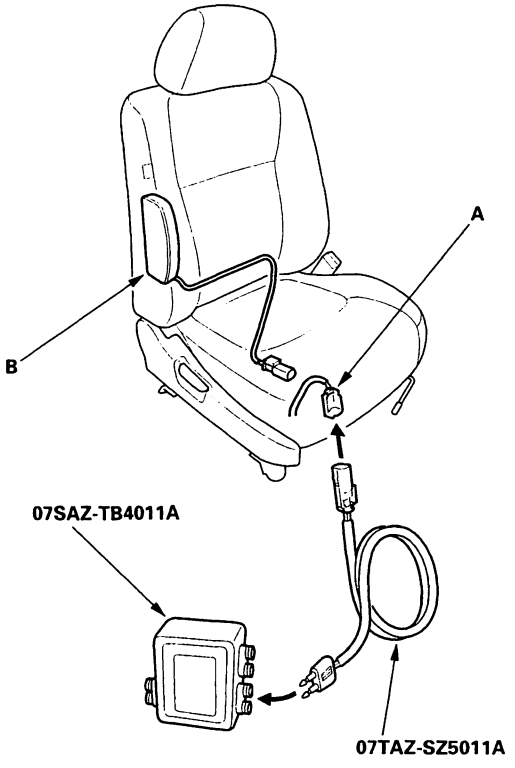

5. Connect the special tool (2 Ω connector) to the right side wire harness 2P connector.

6. Reconnect the battery negative cable.

7. Erase the DTC memory.

8. Read the DTC.

   Is DTC 12-5 indicated?

   YES – Go to step 9.

   NO – Short to ground in the front passenger's side airbag inflator; replace the front passenger's side airbag (see page 23-282).■

9. Disconnect the right side wire harness 4P connector C584 (A) from the SRS main harness 4P connector (B).

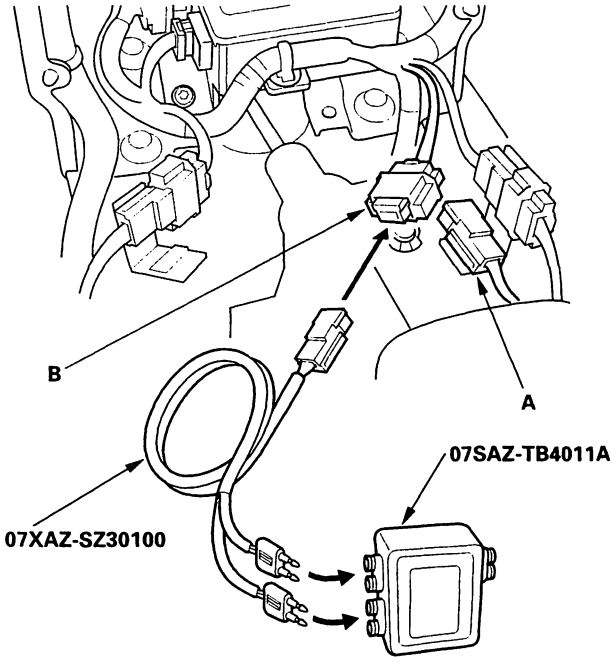

10. Connect the special tool (2 Ω connectors) to the SRS main harness 4P connector.

11. Erase the DTC memory.

12. Read the DTC.

    Is DTC 12-5 indicated?

    YES – Go to step 13.

    NO – Short to ground in the right side wire harness; replace the right side wire harness.■

(cont'd)

DTC Troubleshooting - '00 Coupe with Side Airbags (cont'd)

13. Disconnect the battery negative cable, and wait for 3 minutes.

14. Disconnect the left side wire harness 2P connector from the driver's side airbag.

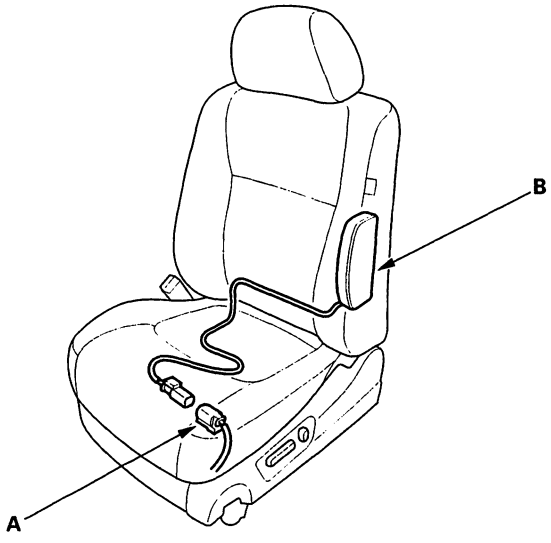

15. Disconnect SRS unit connector B (14P) from the SRS unit.

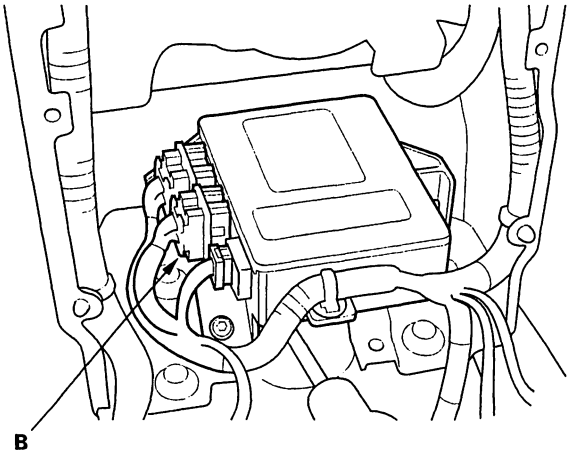

16. Check resistance between the No. 14 and No. 11 terminals of SRS unit connector B (14P), between the No. 14 and No. 12 terminals, and between the No. 14 terminal and body ground. There should be 1 MΩ or more.

SRS UNIT CONNECTOR B (14P)

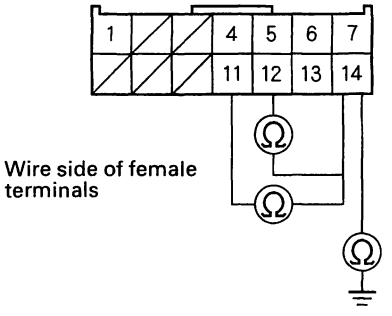

Is the resistance as specified?

YES – Faulty SRS unit; replace the SRS unit (see page 23-296). ■

NO – Short to ground in the SRS main harness; replace the SRS main harness. ■

BACK

DTC 13-3: No signal from the driver's side impact sensor

1. Erase the DTC memory (see page 23-45).

2. Turn the ignition switch ON (II), and check that the SRS indicator light comes on for about 6 seconds and then goes off.

   Does the SRS indicator light stay on?

   YES – Go to step 3.

   NO – Intermittent failure, system is OK at this time. Go to Troubleshooting Intermittent Failures (see page 23-45).

3. Turn the ignition switch OFF. Disconnect the negative battery cable, and wait for 3 minutes.

4. Disconnect the left side wire harness 2P connector from the driver's side airbag.

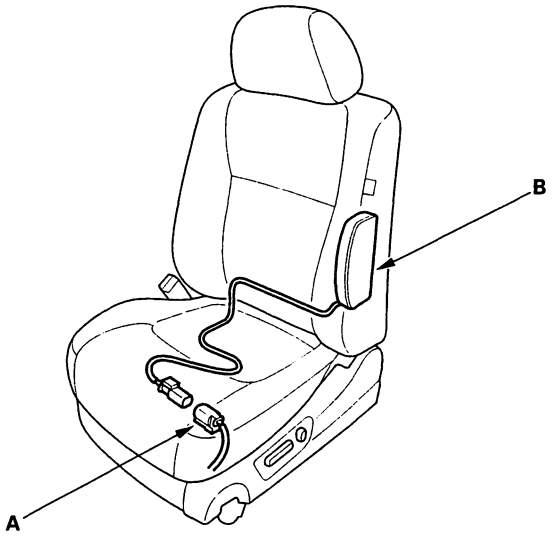

5. Check the connection at the left side wire harness 2P connector and the driver's side impact sensor.

   Is the connection OK?

   YES – Go to step 6.

   NO – Poor contact at the left side wire harness 2P connector; reconnect or replace the left side wire harness. ■

6. Disconnect the right side wire harness 2P connector from the front passenger's airbag.

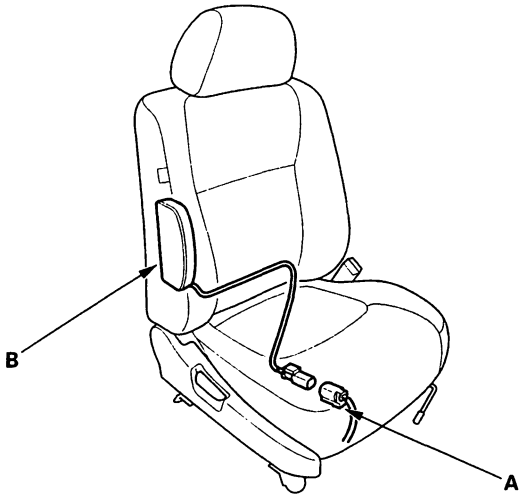

7. Disconnect the left side wire harness 2P connect (A) from the driver's side impact sensor (B).

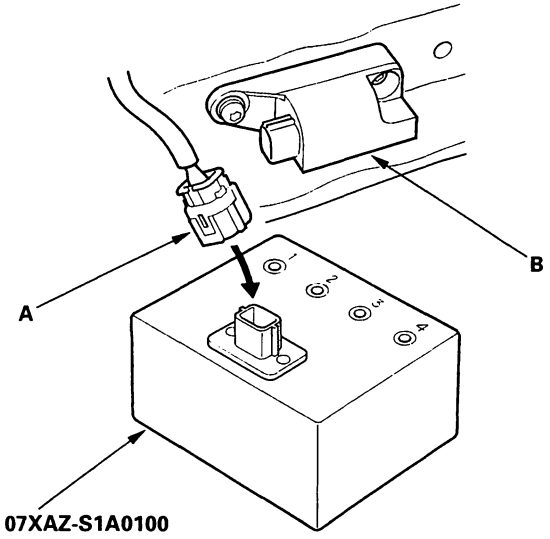

8. Connect the special tool to the left side wire harness 2P connector.

(cont'd)

DTC Troubleshooting - '00 Coupe with Side Airbags (cont'd)

9. Disconnect SRS unit connector B (14P) from the SRS unit.

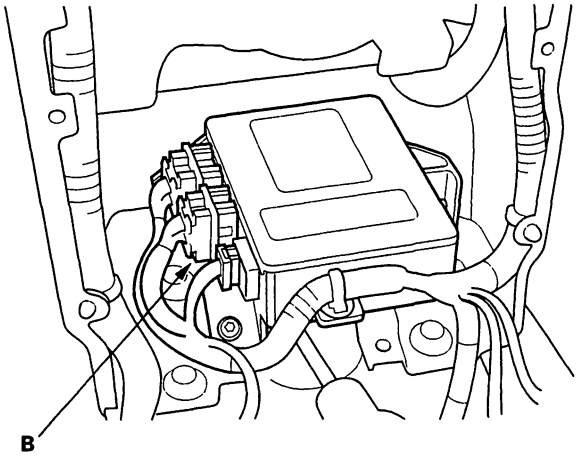

10. Check resistance between the No. 6 terminal of SRS unit connector B (14P) and the No. 2 terminal of the special tool. There should be 0—1.0 Ω.

SRS UNIT CONNECTOR B (14P)

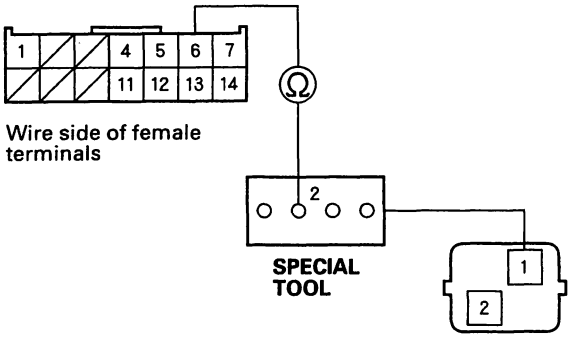

Is the resistance as specified?

YES—Go to step 11.

NO—Open in the SRS main harness or in the left side wire harness; replace the faulty harness.■

11. Check resistance between the No. 11 terminal of SRS unit connector B (14P) and the No. 3 terminal of the special tool. There should be 0—1.0 Ω.

SRS UNIT CONNECTOR B (14P)

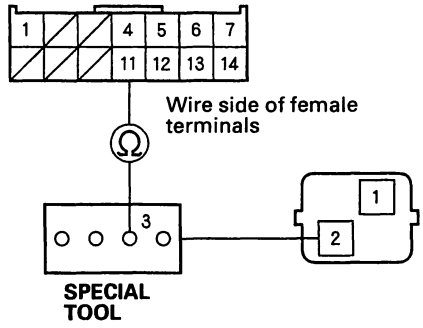

Is the resistance as specified?

YES—Faulty driver's side impact sensor or SRS unit; replace the driver's side impact sensor (see page 23-298). If the problem is still present, replace the SRS unit (see page 23-296).■

NO—Open between the SRS main harness and the left side wire harness; replace the harness.■

BACK

DTC 13-4: Faulty power supply to the driver's side impact sensor

1. Erase the DTC memory (see page 23-45).

2. Turn the ignition switch ON (II), and check that the SRS indicator light comes on for about 6 seconds and then goes off.

   Does the SRS indicator light stay on?

   YES – Go to step 3.

   NO – Intermittent failure, system is OK at this time. Go to Troubleshooting Intermittent Failures (see page 23-45).

3. Turn the ignition switch OFF. Disconnect the negative battery cable, and wait for 3 minutes.

4. Disconnect the side wire harness 2P connectors from the driver's and front passenger's side airbags.

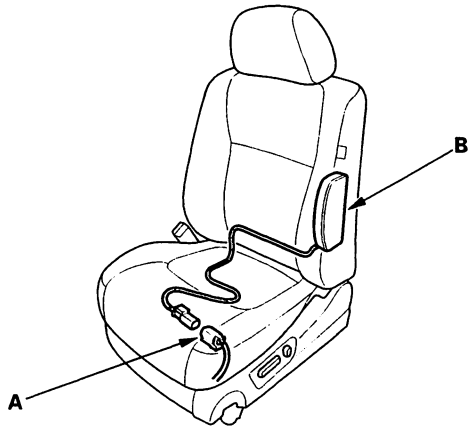

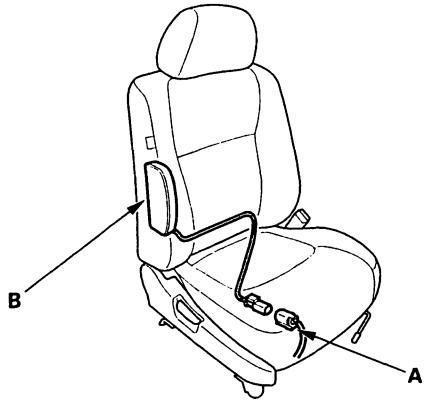

5. Disconnect the left side wire harness 2P connector (A) from the driver's side impact sensor (B).

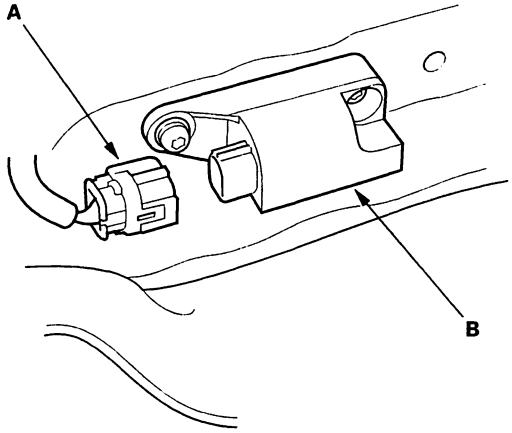

6. Disconnect SRS unit connector B (14P) from the SRS unit.

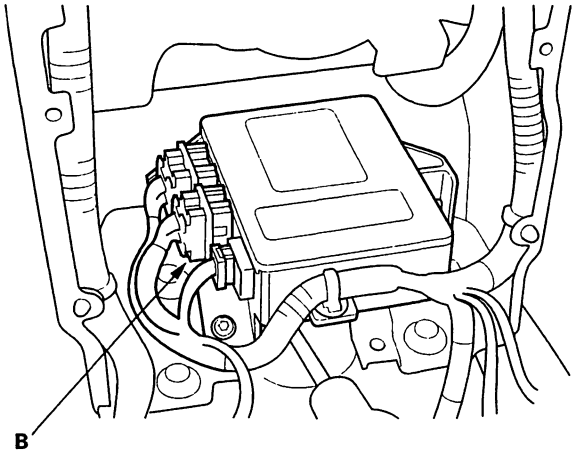

(cont'd)

DTC Troubleshooting - '00 Coupe with Side Airbags (cont'd)

7. Check resistance between the No. 6 terminal of SRS unit connector B (14P) and body ground. There should be 1 MΩ or more.

SRS UNIT CONNECTOR B (14P)

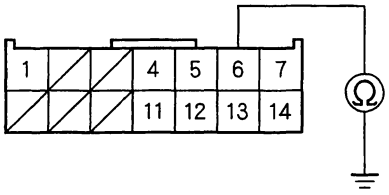

Wire side of female terminals

Is the resistance as specified?

YES—Go to step 8.

NO—Short to ground in the SRS main harness or in the left side wire harness; replace the faulty harness.■

8. Check resistance between the No. 6 and No. 11 terminals of SRS unit connector B (14P). There should be 1 MΩ or more.

SRS UNIT CONNECTOR B (14P)

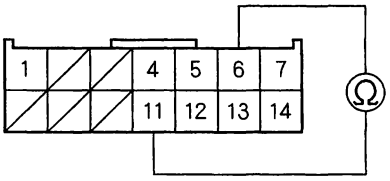

Wire side of female terminals

Is the resistance as specified?

YES—Faulty driver's side impact sensor or SRS unit; replace the driver's side impact sensor (see page 23-298). If the problem is still present, replace the SRS unit (see page 23-296).■

NO—Short to another wire in the SRS main harness or in the left side wire harness; replace the faulty harness.■

BACK

DTC 14-3: No signal from the front passenger's side impact sensor

1. Erase the DTC memory (see page 23-45).

2. Turn the ignition switch ON (II), and check that the SRS indicator light comes on for about 6 seconds and then goes off.

   Does the SRS indicator light stay on?

   YES – Go to step 3.

   NO – Intermittent failure, system is OK at this time. Go to Troubleshooting Intermittent Failures (see page 23-45).

3. Turn the ignition switch OFF. Disconnect the negative battery cable, and wait for 3 minutes.

4. Disconnect the right side wire harness 2P connector (A) from the front passenger's side airbag (B).

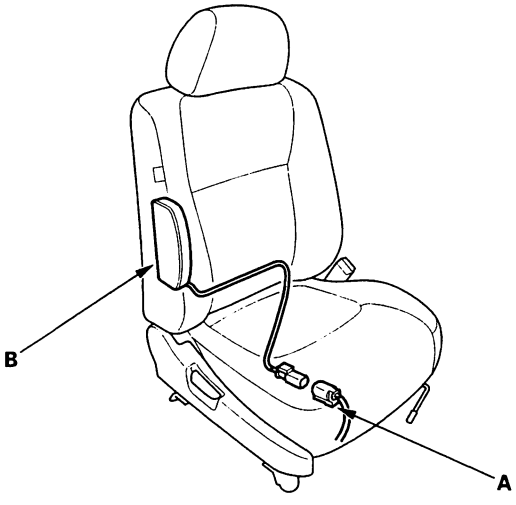

5. Check the connection at the right side wire harness 2P connector and the front passenger's side impact sensor.

   Is the connection OK?

   YES – Go to step 6.

   NO – Poor contact at the right side wire harness 2P connector; reconnect or replace the right side wire harness. ■

6. Disconnect the left side wire harness 2P connector (A) from the driver's side airbag (B).

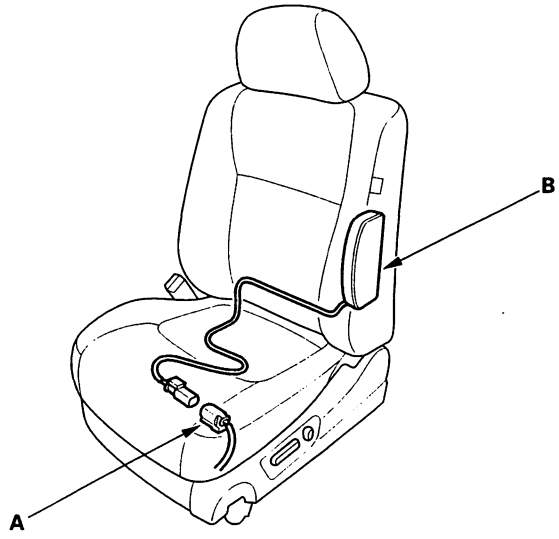

7. Disconnect the right side wire harness 2P connector (A) from the front passenger's side impact sensor (B).

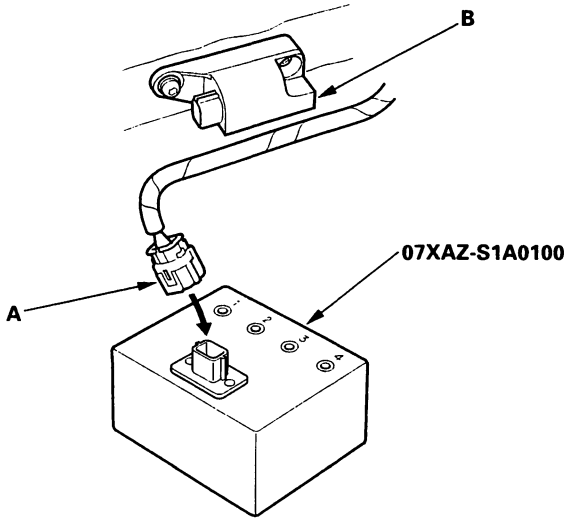

8. Connect the special tool to the left side wire harness 2P connector.

(cont'd)

DTC Troubleshooting - '00 Coupe with Side Airbags (cont'd)

9. Disconnect SRS unit connector B (14P) from the SRS unit.

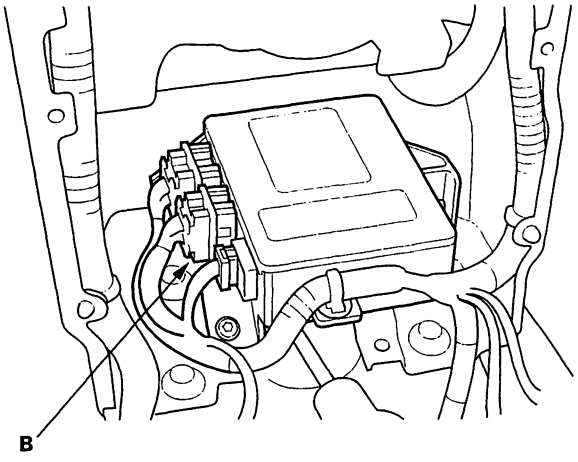

10. Check resistance between the No. 7 terminal of SRS unit connector B (14P) and the No. 2 terminal of the special tool. There should be 0—1.0 Ω.

SRS UNIT CONNECTOR B (14P)

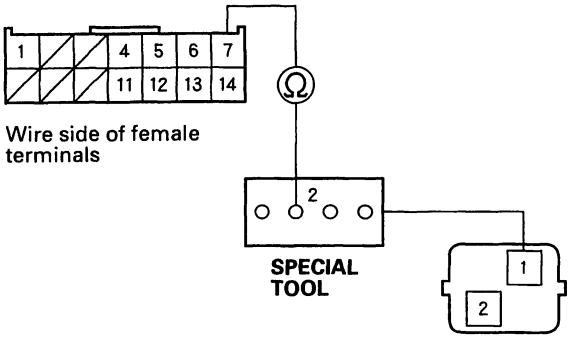

Is the resistance as specified?

YES—Go to step 11.

NO—Open in the SRS main harness or in the right side wire harness; replace the faulty harness.■

11. Check resistance between the No. 12 terminal of SRS unit connector B (14P) and the No. 3 terminal of the special tool. There should be 0-1.0 Ω.

SRS UNIT CONNECTOR B (14P)

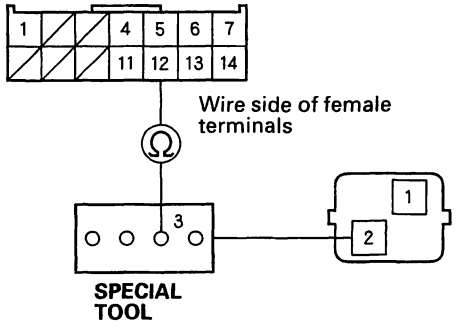

Is the resistance as specified?

YES—Faulty front passenger's side impact sensor or SRS unit; replace the front passenger's side impact sensor (see page 23-298). If the problem is still present, replace the SRS unit (see page 23-296). ■

NO—Open in the SRS main harness or in the right side wire harness; replace the faulty harness.■

BACK

DTC 14-4: Faulty power supply to the front passenger's side impact sensor

1. Erase the DTC memory (see page 23-45).

2. Turn the ignition switch ON (II), and check that the SRS indicator light comes on for about 6 seconds and then goes off.

   Does the SRS indicator light stay on?

   YES – Go to step 3.

   NO – Intermittent failure, system is OK at this time. Go to Troubleshooting Intermittent Failures (see page 23-45).

3. Turn the ignition switch OFF. Disconnect the negative battery cable, and wait for 3 minutes.

4. Disconnect the side wire harness 2P connector (A) from the driver's and front passenger's side airbags (B).

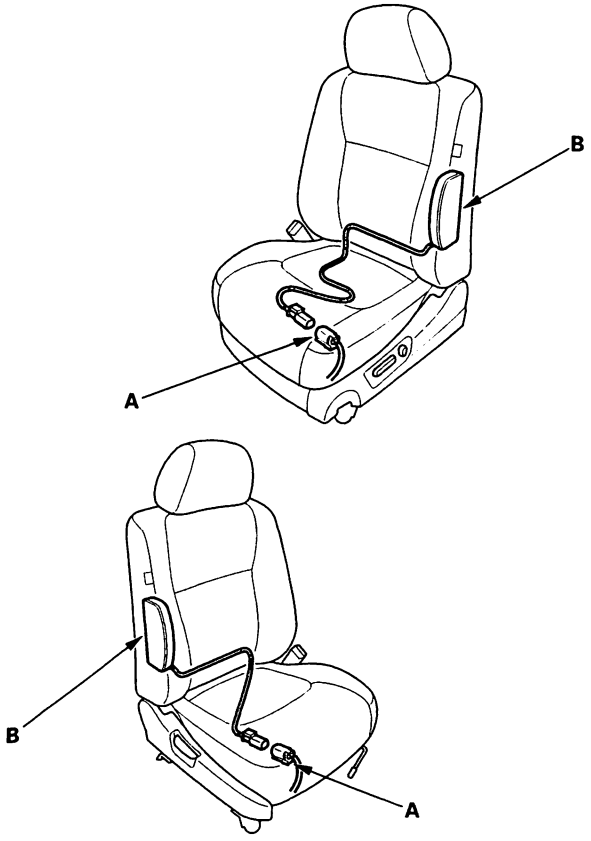

5. Disconnect the right side wire harness 2P connector (A) from the front passenger's side impact sensor (B).

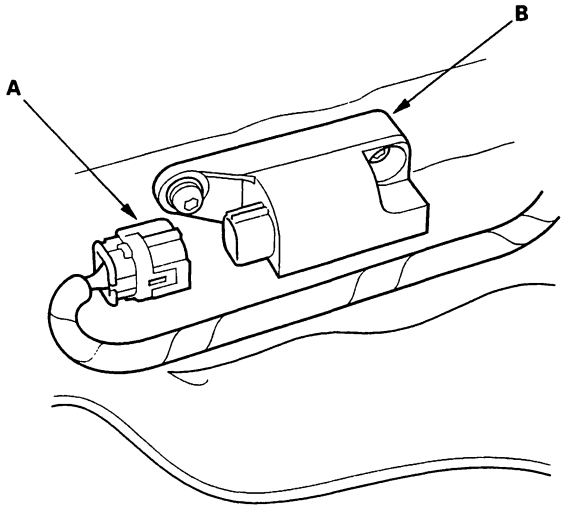

6. Disconnect SRS unit connector B (14P) from the SRS unit.

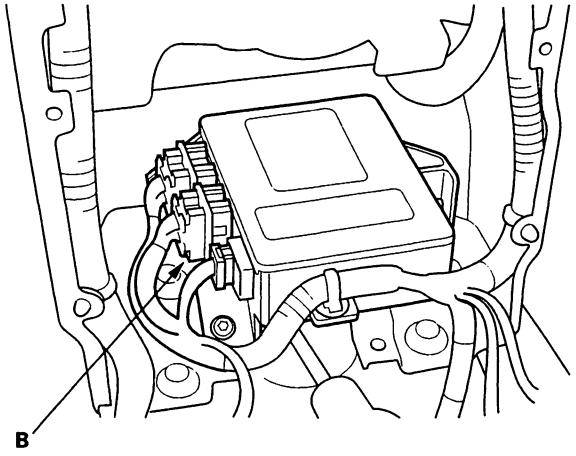

(cont'd)

DTC Troubleshooting - '00 Coupe with Side Airbags (cont'd)

7. Check resistance between the No. 7 terminal of SRS unit connector B (14P) and body ground. There should be 1 MΩ or more.

SRS UNIT CONNECTOR B (14P)

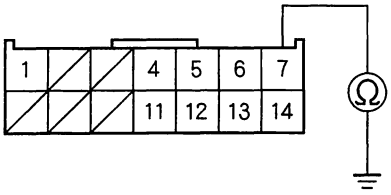

Wire side of female terminals

Is the resistance as specified?

YES—Go to step 8.

NO—Short to ground in the SRS main harness or in the right side wire harness; replace the faulty harness.■

8. Check resistance between the No. 7 and No. 12 terminals of SRS unit connector B (14P). There should be 1 MΩ or more.

SRS UNIT CONNECTOR B (14P)

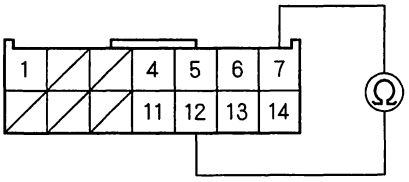

Wire side of female terminals

Is the resistance as specified?

YES—Faulty front passenger's side impact sensor or SRS unit; replace the front passenger's side impact sensor (see page 23-298). If the problem is still present, replace the SRS unit (see page 23-296). ■

NO—Short to another wire in the SRS main harness or in the right side wire harness; replace the faulty harness.■

BACK

DTC 15-1: Faulty OPDS unit

1. Make sure nothing is on the front passenger's seat.

2. Initialize the OPDS unit (see page 23-46).

3. Erase the DTC memory (see page 23-45).

4. Read the DTC.

   Is DTC 15-1 indicated?

   YES – Go to step 5.

   NO – Intermittent failure, system is OK at this time. Go to Troubleshooting Intermittent Failures (see page 23-45).

5. Check the No. 7 (7.5 A) fuse in the driver's under-dash fuse/relay box.

   Is the fuse OK?

   YES – Go to step 6.

   NO – Go to step 13.

6. Disconnect OPDS unit connector D (8P) from the OPDS unit (B).

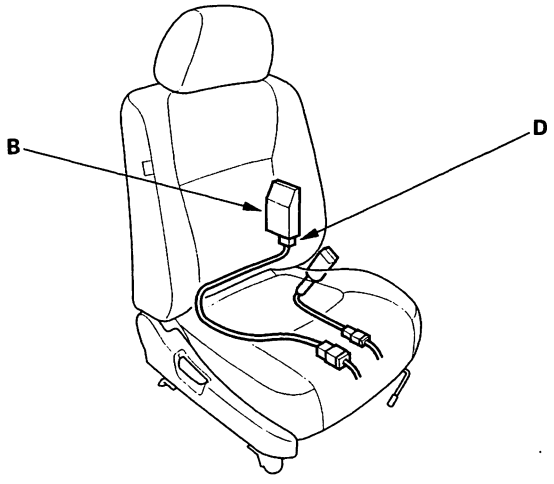

7. Turn the ignition switch ON (II).

8. Check for voltage between the No. 4 terminal of OPDS unit connector D (8P) and body ground. There should be battery voltage.

OPDS UNIT CONNECTOR D (8P)

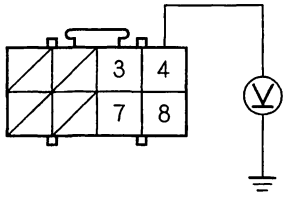

Wire side of female terminals

   Is there battery voltage?

   YES – Go to step 28.

   NO – Go to step 9.

9. Turn the ignition switch OFF.

10. Disconnect the right side wire harness 16P connector C582 (A) from the dashboard wire harness A 16P connector (B).

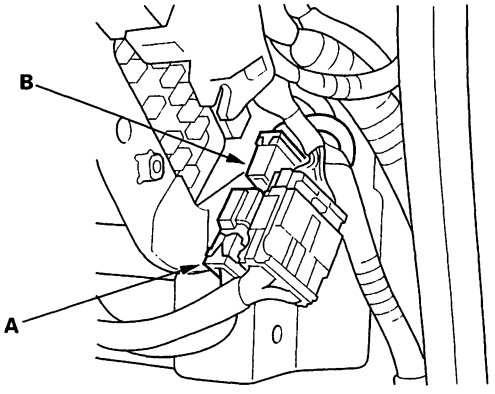

11. Turn the ignition switch ON (II).

(cont'd)

DTC Troubleshooting - '00 Coupe with Side Airbags (cont'd)

12. Check for voltage between the No. 9 terminal of the dashboard wire harness A 16P connector C582 and body ground. There should be battery voltage.

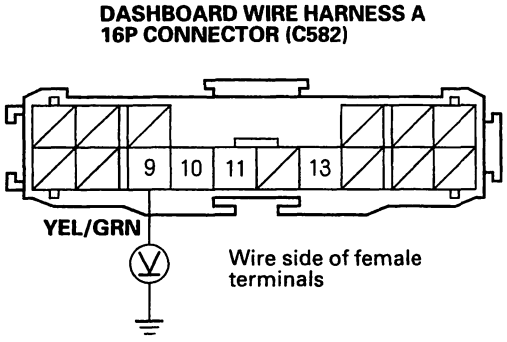

Is there battery voltage?

YES—Open in the right side wire harness or OPDS unit harness: if the OPDS unit harness is OK, replace the SRS floor harness.■

NO—Open in dashboard wire harness A: replace dashboard wire harness A.■

13. Replace the No. 7 (7.5A) fuse in the driver's under-dash fuse/relay box.

14. Turn the ignition switch ON (II) for 30 seconds, then turn it OFF.

15. Check the No. 7 (7.5A) fuse in driver's under-dash fuse/relay box.

Is the fuse OK?

YES—Finished.■

NO—Go to step 16.

16. Replace the No. 7 (7.5A) fuse in the driver's under-dash fuse/relay box.■

17. Disconnect the dashboard wire harness connector I (18P) from the driver's under-dash fuse/relay box.

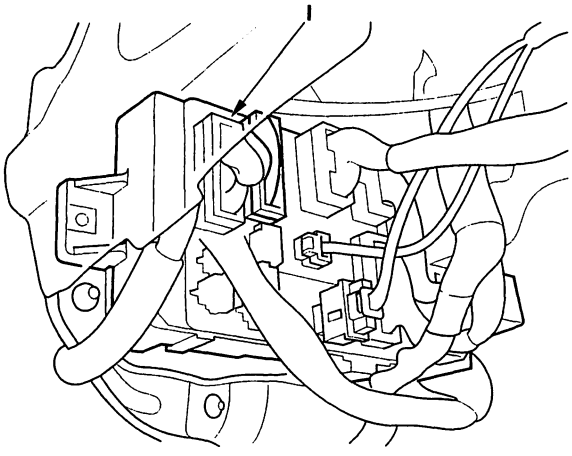

18. Turn the ignition switch ON (II) for 30 seconds, then turn it off.

19. Check the No. 7 (7.5A) fuse in the driver's under-dash fuse/relay box.

Is the fuse OK?

YES—Go to step 20.

NO—Short to ground in the No. 7 (7.5A) circuit; refer to section 22 and continue troubleshooting.■

20. Disconnect the right side wire harness 16P connector C582 (A) from the dashboard wire harness A 16P connector (B).

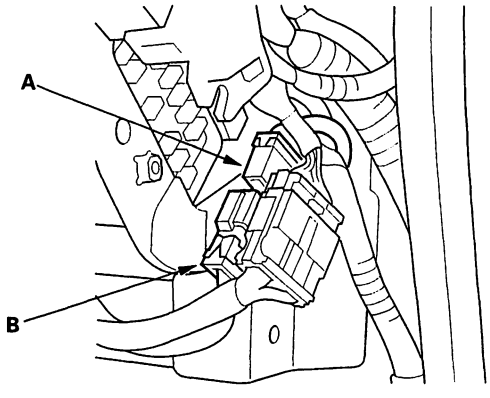

BACK

21. Connect dashboard wire harness connector I (18P) to the driver's under-dash fuse/relay box.

22. Turn ignition switch ON (II) for 30 seconds, then turn it OFF.

23. Check the No. 7 (7.5A) fuse in the driver's under-dash fuse/relay box.

    Is the fuse OK?

    YES—Go to step 24.

    NO—Short to ground in dashboard wire harness A; replace dashboad wire harness A. ■

24. Disconnect OPDS unit connector D (8P) from the OPDS unit (B).

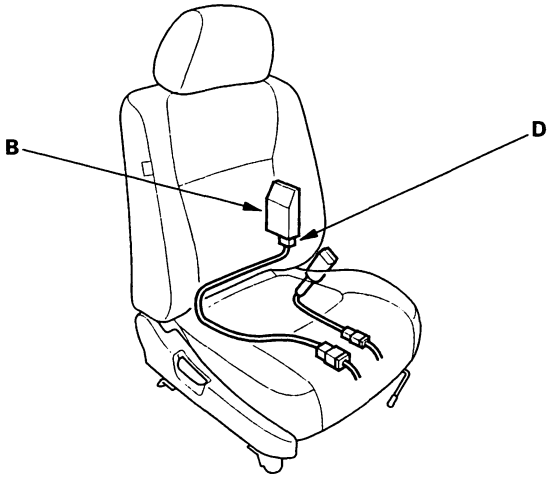

25. Reconnect the right side wire harness 16P connector C582 (A) to the dashboard wire harness A 16P connector (B).

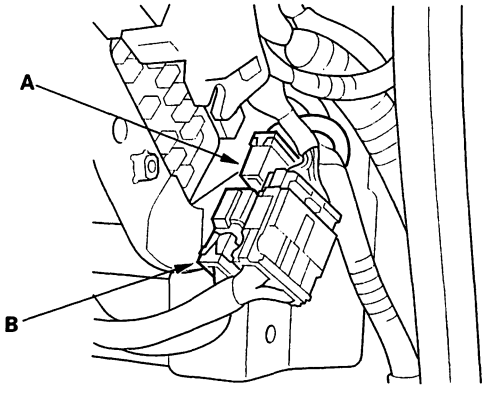

26. Turn the ignition switch ON (II) for 30 seconds, then turn it OFF.

27. Check the No. 7 (7.5A) fuse in the driver's under-dash fuse/relay box.

    Is the fuse OK?

    YES—Faulty OPDS unit; replace the OPDS unit (see page 23-300). ■

    NO—Short to ground in the right side wire harness or OPDS unit harness; If the OPDS unit harness is OK, replace the right side wire harness. ■

28. Turn the ignition switch OFF.

29. Check resistance between the No. 8 terminal of OPDS unit connector D (8P) and body ground. There should be 0—1.0 Ω.

OPDS UNIT CONNECTOR D (8P)

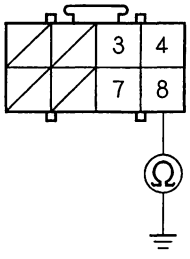

Wire side of female terminals

Is the resistance as specified?

YES—Go to step 30.

NO—Open in the right side wire harness or OPDS unit harness; if the OPDS unit harness is OK, replace the right side wire harness. ■

(cont'd)

DTC Troubleshooting - '00 Coupe with Side Airbags (cont'd)

30. Disconnect the side airbag connectors (A).

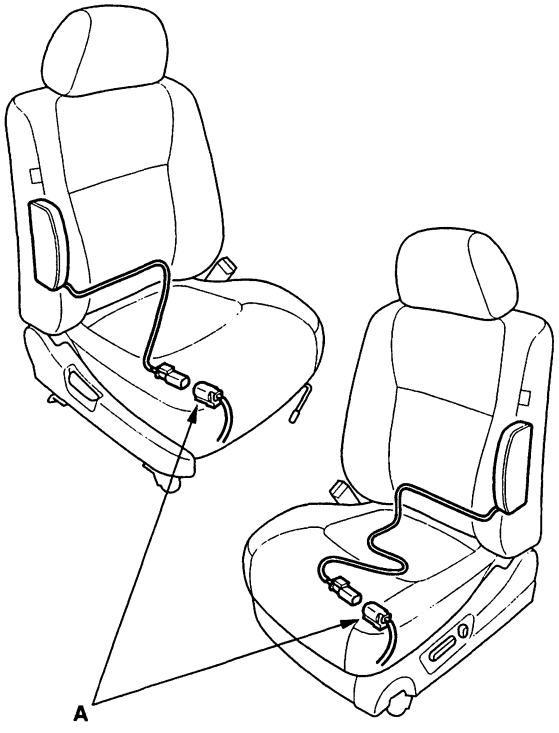

31. Disconnect SRS unit connector B (14P) from the SRS unit.

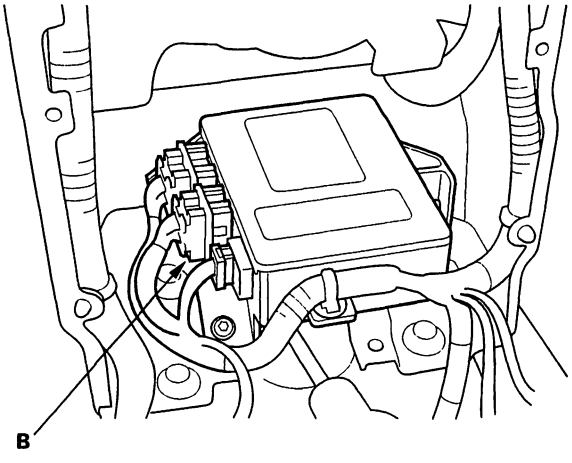

32. Check resistance between the No. 1 terminal of SRS unit connector B (14P) and body ground. There should be 1 MΩ or more.

SRS UNIT CONNECTOR B (14P)

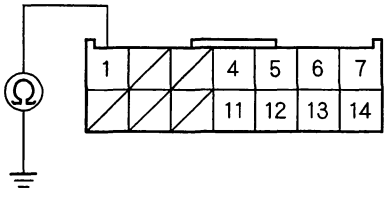

Wire side of female terminals

Is the resistance as specified?

YES—Go to step 33.

NO—Short to ground in the SRS main harness or in the OPDS unit harness; replace the faulty harness.■

33. Check resistance between the No. 1 terminal of SRS unit connector B (14P) and the No. 7 terminal of the OPDS unit connector D (8P). There should be 0—1.0 Ω.

SRS UNIT CONNECTOR B (14P)

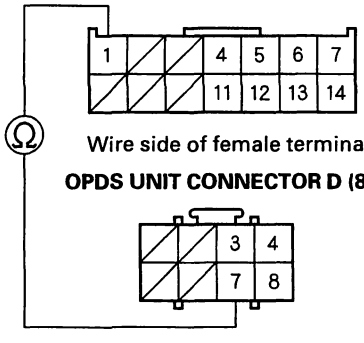

Wire side of female terminals

OPDS UNIT CONNECTOR D (8P)

Wire side of female terminals

Is the resistance as specified?

YES—Go to step 34.

NO—Open in the SRS main harness and the OPDS unit harness; replace the faulty harness.■

BACK

34. Turn the ignition switch ON (II).

35. Check for voltage between the No. 1 terminal of SRS unit connector B (14P) and body ground. There should be 0.5 V or less.

SRS UNIT CONNECTOR B (14P)

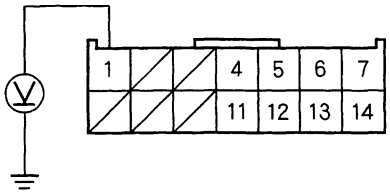

Wire side of female terminals

Is the voltage as specified?

YES – Go to step 36.

NO – Short to power in the SRS main harness or in the OPDS unit harness; replace the faulty harness. ■

36. Turn the ignition switch OFF.

37. Install a known-good OPDS unit.

38. Reconnect all connectors.

39. Initialize the OPDS unit.

40. Erase the DTC memory.

41. Read the DTC.

Is DTC 15-1 indicated?

YES – Go to step 42.

NO – Finished. ■

42. Turn the ignition switch ON (II), and check that the side airbag indicator light comes on for about 5 seconds, and then goes off.

Does the side airbag ingicator stay on?

YES – Faulty OPDS unit or SRS unit; replace the OPDS unit (see page 23-300). If the problem is still present, replace the SRS unit (see page 23-296). ■

NO – Faulty side airbag indicator light circuit; go to troubleshooting DTC 15-2. ■

DTC Troubleshooting - '00 Coupe with Side Airbags (cont'd)

DTC 15-2: Faulty side airbag indicator light circuit

1. Erace the DTC memory (see page 23-45).

2. Turn the ignition switch ON (II), and check that the SRS indicator light comes on for about 6 seconds and then goes off.

   Does the SRS indicator light stay on?

   YES – Go to step 3.

   NO – Intermittent failure, system is OK at this time. Go to troubleshooting Intermittent Failures (see page 23-45).

3. Make sure nothing is on the front passenger's seat.

4. Turn the ignition switch ON (II), and check that the side airbag indicator light comes on.

   Does the side airbag indicator light come on?

   YES – Go to step 5.

   NO – Go to step 6.

5. Make sure the side airbag indicator light comes on for 5 seconds and then goes off.

   Does the side airbag indicator light go off?

   YES – Faulty OPDS unit or SRS unit; replace the OPDS unit. If the problem is still present, replace the SRS unit. ■

   NO – Go to step 36.

6. Turn the ignition switch OFF.

7. Check the No. 9 (7.5A) fuse in the driver's under-dash fuse/relay box.

   Is the fuse OK?

   YES – Go to step 8.

   NO – Short to No. 9 (7.5A) fuse related circuit; refer to section 22 and continue troubleshooting. ■

8. Check for a blown side airbag indicator bulb.

   Is the side airbag indicator bulb OK?

   YES – Go to step 9.

   NO – Blown side airbag indicator bulb; replace the bulb. ■

9. Disconnect OPDS unit connector D (8P) from the OPDS unit (B).

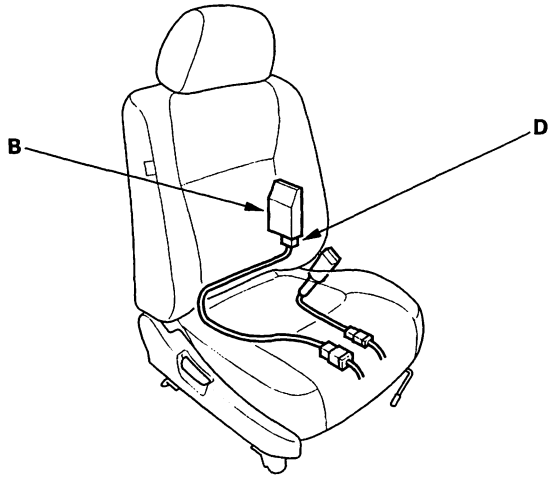

10. Turn the ignition switch ON (II).

11. Check for voltage between the No. 3 terminal of OPDS unit connector D (8P) and body ground. There should be battery voltage.

OPDS UNIT CONNECTOR D (8P)

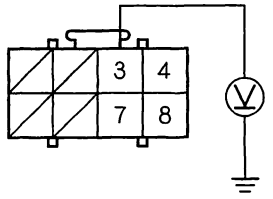

Wire side of female terminals

Is there battery voltage?

YES – Go to step 12.

NO – Go to step 24.

BACK

12. Turn the ignition switch OFF.

13. Disconnect dashboard wire harness A 18P connector I (18P) from the driver's under-dash fuse/ relay box.

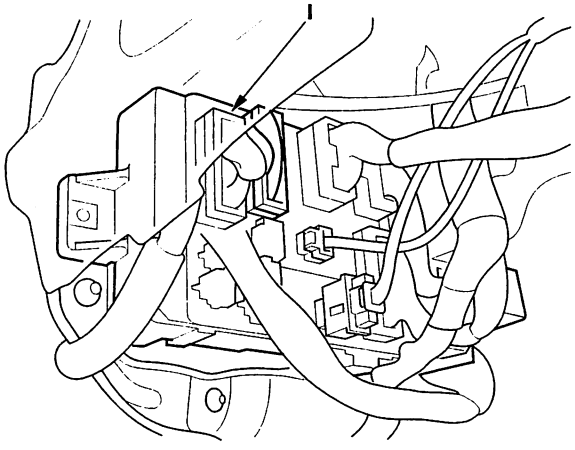

14. Turn the ignition switch ON (II).

15. Check for voltage between the No. 3 terminal of OPDS unit connector D (8P) and body ground. There should be 0.5 V or less.

OPDS UNIT CONNECTOR D (8P)

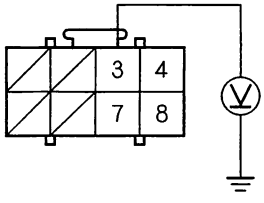

Wire side of female terminals

Is the voltage as specified?

YES – Faulty OPDS unit; replace the OPDS unit (see page 23-300). ■

NO – Go to step 16.

16. Turn the ignition switch OFF.

17. Disconnect gauge assembly connector B (22P) from the gauge assembly.

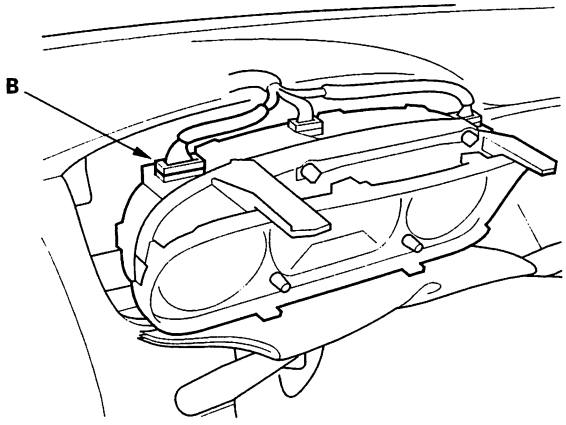

18. Turn the ignition switch ON (II).

19. Check for voltage between the No. 3 terminal of the OPDS unit connector D (8P) and body ground. There should be 0.5 V or less.

OPDS UNIT CONNECTOR D (8P)

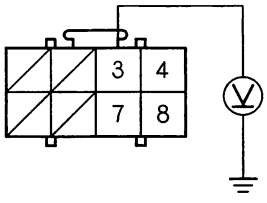

Wire side of female terminals

Is the voltage as specified?

YES – Short to power in the gauge assembly; replace the gauge assembly. ■

NO – Go to step 20.

(cont'd)

DTC Troubleshooting - '00 Coupe with Side Airbags (cont'd)

20. Turn the ignition switch OFF.

21. Disconnect the right side wire harness 16P connector C582 (A) from the dashboard wire harness A 16P connector (B).

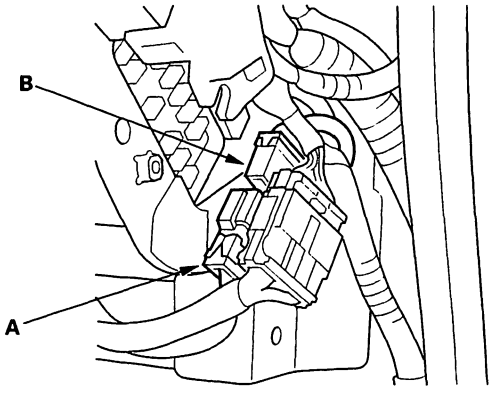

22. Turn the ignition switch ON (II).

23. Check for voltage between the No. 3 terminal of OPDS unit connector D (8P) and body ground. There should be 0.5 V or less.

OPDS UNIT CONNECTOR D (8P)

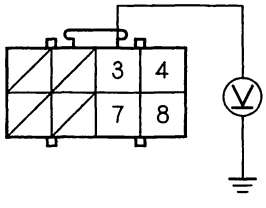

Wire side of female terminals

Is the voltage as specified?

YES—Short to power in dashboard wire harness A; replace dashboard wire harness A.■

NO—Short to power in the right side wire harness or the OPDS unit harness; if the OPDS unit harness is OK, replace the right side wire harness.■

24. Turn the ignition switch OFF.

25. Backprobe the No. 17 terminal of gauge assembly connector B (22P). Do not disconnect the connector from the gauge assembly.

26. Turn the ignition switch ON (II).

27. Check for voltage at the No. 17 terminal of gauge assembly connector B (22P) and body ground. There should be battery voltage.

GAUGE ASSEMBLY CONNECTOR B (22P)

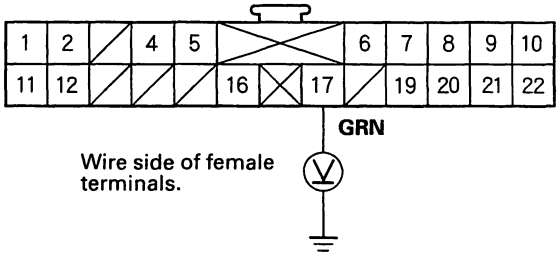

Is there battery voltage?

YES—Go to step 28.

NO—Go to step 32.

28. Turn the ignition switch OFF.

29. Disconnect the right side wire harness 16P connector C582 (A) from the dashboard wire harness A 16P connector (B).

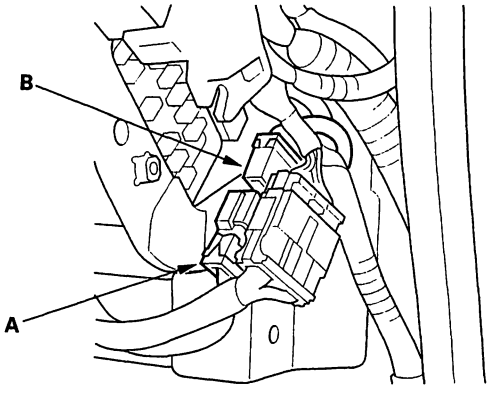

BACK

30. Turn the ignition switch ON (II).

31. Check for voltage between the No. 13 terminal of the dashboard wire harness A 16P connector (C582) and body ground. There should be battery voltage.

DASHBOARD WIRE HARNESS A 16P CONNECTOR (C582)

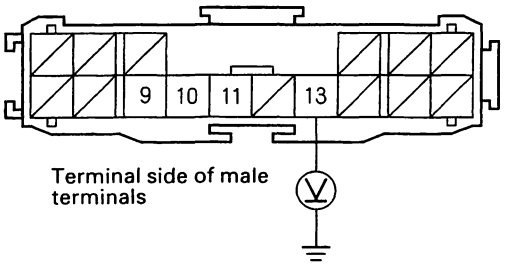

Is there battery voltage?

YES—Poor contact at the dashboard wire harness A 16P and right side wire harness 16P connectors or an open in the right side wire harness. Check the connection between the dashboard wire harness A 16P and right side wire harness 16P connectors; if the connection is OK, replace the right side wire harness.■

NO—Poor contact at gauge assembly connector B (22P) or an open in the dashboard wire harness A. Check gauge assembly connector B (22P) and the gauge assembly; if the connection is OK, replace dashboard wire harness A.■

32. Turn the ignition switch OFF.

33. Disconnect gauge assembly connector B (22P) from the gauge assembly.

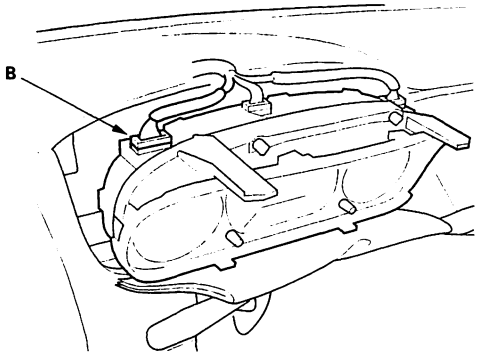

34. Turn the ignition switch ON (II).

35. Check for voltage between the No. 11 terminal of gauge assembly connector B (22P) and body ground. There should be battery voltage.

GAUGE ASSEMBLY CONNECTOR B (22P)

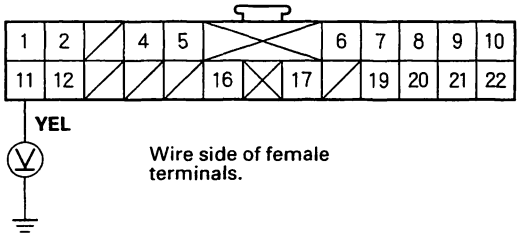

Is there battery voltage?

YES—Faulty side airbag indicator light circuit; replace the gauge assembly.■

NO—Open in dashboard wire harness A; replace dashboard wire harness A.■

36. Turn the ignition switch OFF.

37. Disconnect OPDS unit connector D (8P) from the OPDS unit (B).

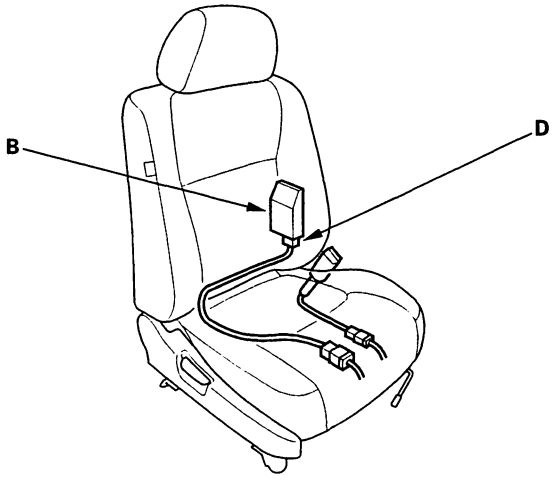

(cont'd)

DTC Troubleshooting - '00 Coupe with Side Airbags (cont'd)

38. Turn the ignition switch ON (II).

    Does the side airbag indicator light stay off?

    YES—Faulty OPDS unit; replace the OPDS unit.■

    NO—Go to step 39.

39. Turn the ignition switch OFF.

40. Disconnect the right side wire harness 16P connector C582 (A) from the dashboard wire harness A 16P connector (B).

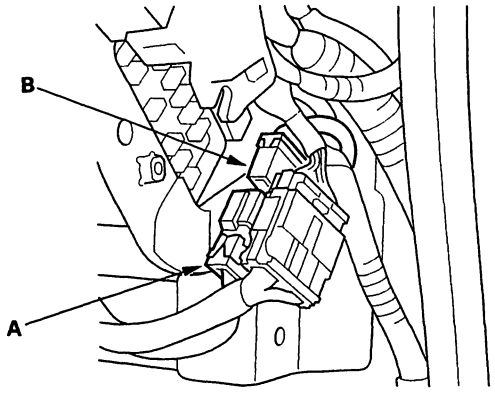

41. Turn the ignition switch ON (II).

    Does the side airbag indicator light stay off?

    YES—Short to ground in the right side wire harness or the OPDS unit harness; if the OPDS unit harness is OK, replace the right side wire harness.■

    NO—Go to step 42.

42. Turn the ignition switch OFF.

43. Disconnect gauge assembly connector B (22P) from the gauge assembly.

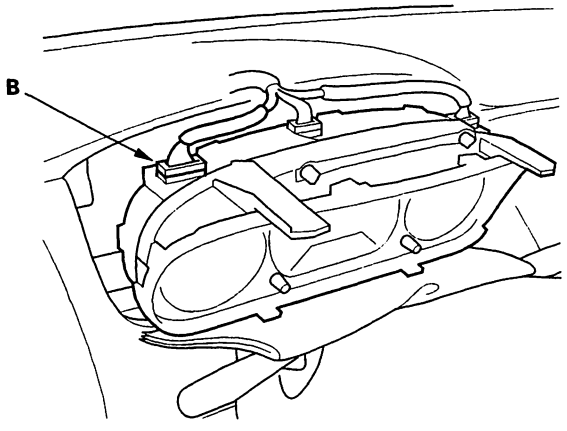

44. Turn the ignition switch ON (II).

    Does the side airbag indicator light stay off?

    YES—Short to ground in dashboard wire harness A; replace dashboard wire harness A.■

    NO—Short to ground in the gauge assembly; replace the gauge assembly.■

BACK

DTC 15-3: Faulty OPDS sensor

1. Erase the DTC memory (see page 23-45).

2. Turn the ignition switch ON (II), and check that the SRS indicator light comes on for about 6 seconds and then goes off.

   Does the SRS indicator light stay on?

   YES – Go to step 3.

   NO – Intermittent failure, system is OK at this time. Go to Troubleshooting Intermittent Failures (see page 23-45).
   NOTE: Aftermarket devices (fluorescent map lights, laptop computers, etc.) used near the front passenger's seat-back can interfere with the seat-back sensors and cause a false DTC 15-3. If one of these devices was used, erase the DTC, operate the device near the seat-back, and recheck for DTCs. If DTC 15-3 is reset, erase it, and do not use the device near the seat-back.

3. Check the connection at the OPDS sensor harness connector and the OPDS unit connector.

   Are the connections OK?

   YES – Go to step 4.

   NO – Reconnect the OPDS sensor harness connector, and clear the DTC. ■

4. Replace the OPDS sensor/seat back foam (see page 20-97), and reinitialize the OPDS unit (see page 23-46).

5. Erase the DTC memory.

6. Read the DTC.

   Is DTC 15-3 indicated?

   YES – Go to step 7.

   NO – The system is OK. ■

7. Replace the OPDS unit (see page 23-300), and reinitialize the OPDS unit (see page 23-46).

8. Erase the DTC memory.

9. Read the DTC.

   Is 15-3 indicated?

   YES – Replace the SRS unit. ■

   NO – The system is OK. ■

DTC Troubleshooting - '01-02 Models

DTC 1-1: Open in driver's airbag inflator

DTC 1-2: Increased resistance in driver's airbag inflator

1. Erase the DTC memory (see page 23-45).

2. Turn the ignition switch ON (II), and check that the SRS indicator light comes on for about 6 seconds and then goes off.

   Does the SRS indicator light stay on?

   YES—Go to step 3.

   NO—Intermittent failure, system is OK at this time. Go to Troubleshooting Intermittent Failures (see page 23-45).

3. Turn the ignition switch OFF. Disconnect the battery negative cable, and wait for 3 minutes.

4. Disconnect the driver's airbag 4P connector from the cable reel 4P connector (A).

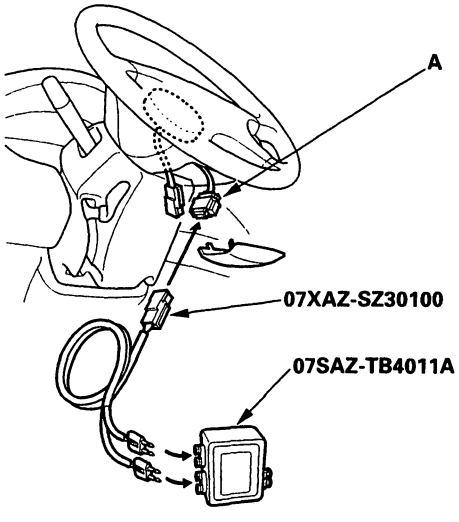

5. Connect the special tool (2 Ω connectors) to the cable reel 4P connector.

6. Reconnect the battery negative cable.

7. Erase the DTC memory.

8. Read the DTC.

   Is DTC 1-1 or DTC 1-2 indicated?

   YES—Go to step 9.

   NO—Open or increased resistance in the driver's airbag inflator; replace the driver's airbag (see page 23-278). ■

9. Disconnect the battery negative cable, and wait for 3 minutes.

BACK

10. Disconnect the front passenger's airbag 4P connector (A) from the SRS main harness 4P connector (B).

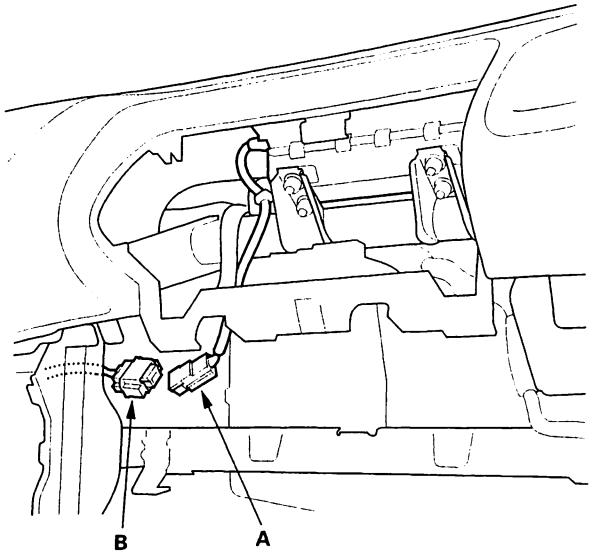

11. Disconnect both seat belt tensioner 2P connectors (A) from the side wire harness 2P connectors (B).

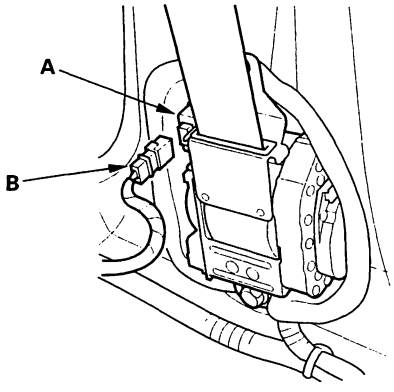

12. Disconnect SRS unit connector A (18P) from the SRS unit.

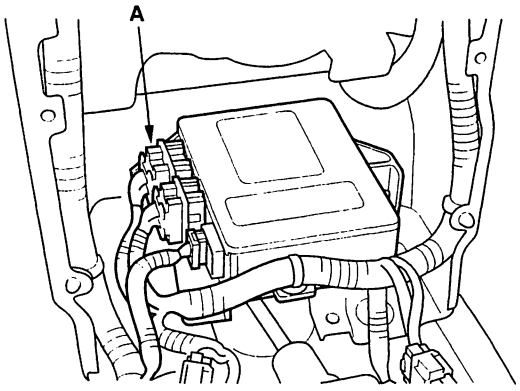

13. Check resistance between the No. 7 and the No. 16 terminals and between the No. 2 and the No. 11 terminals of SRS connector A (18P). There should be 2.0–3.0 Ω.

SRS UNIT CONNECTOR A (18P)

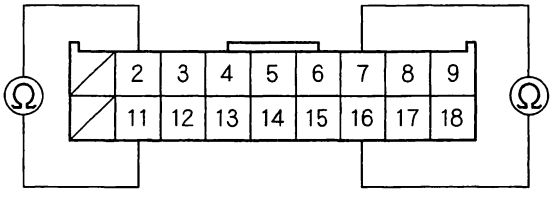

Wire side of female terminals

Is the resistance as specified?

YES – Faulty SRS unit or poor contact at SRS unit connector A (18P) and the SRS unit. Check the connection. If the connection is OK, replace the SRS unit (see page 23-296). ■

NO – Open or increased resistance in the SRS main harness or cable reel; replace the SRS main harness or cable reel (see page 23-292). ■

DTC Troubleshooting - '01-02 Models (cont'd)

DTC 1-3: Short to another wire or decreased resistance in driver's airbag inflator

1. Erase the DTC memory (see page 23-45).

2. Turn the ignition switch ON (II), and check that the SRS indicator light comes on for about 6 seconds and then goes off.

   Does the SRS indicator light stay on?

   YES—Go to step 3.

   NO—Intermittent failure, system is OK at this time. Go to Troubleshooting Intermittent Failures (see page 23-45).

3. Turn the ignition switch OFF. Disconnect the battery negative cable, and wait for 3 minutes.

4. Disconnect the driver's airbag 4P connector from the cable reel 4P connector (A).

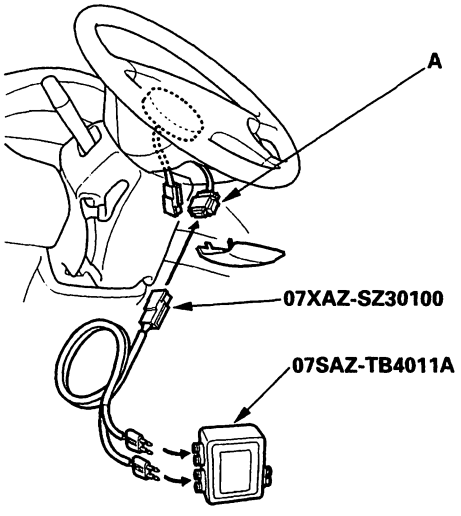

5. Connect the special tool (2 Ω connectors) to the cable reel 4P connector.

6. Reconnect the battery negative cable.

7. Erase the DTC memory.

8. Read the DTC.

   Is DTC 1-3 indicated?

   YES—Go to step 9.

   NO—Short in the driver's airbag; replace the driver's airbag (see page 23-278).■

9. Disconnect the battery negative cable, and wait for 3 minutes.

BACK

10. Disconnect the front passenger's airbag 4P connector (A) from the SRS main harness 4P connector (B).

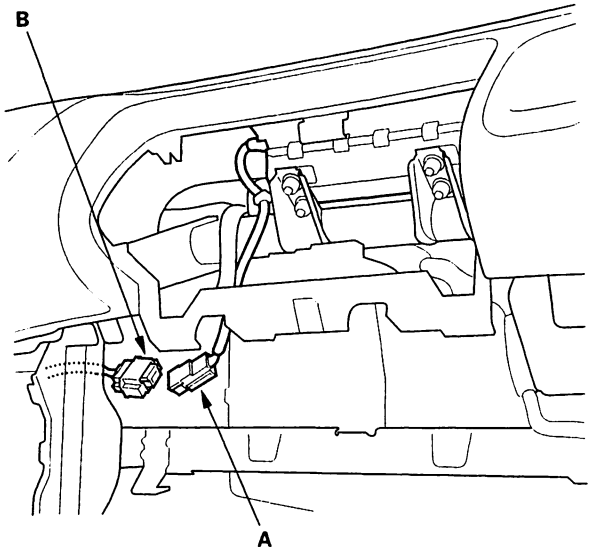

11. Disconnect both seat belt tensioner 2P connectors (A) from the side wire harness 2P connectors (B).

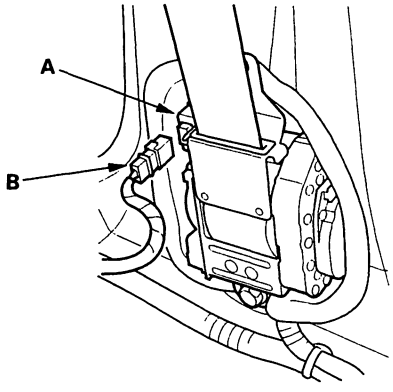

12. Disconnect the special tool from the cable reel 4P connector.

13. Disconnect SRS unit connector A (18P) from the SRS unit.

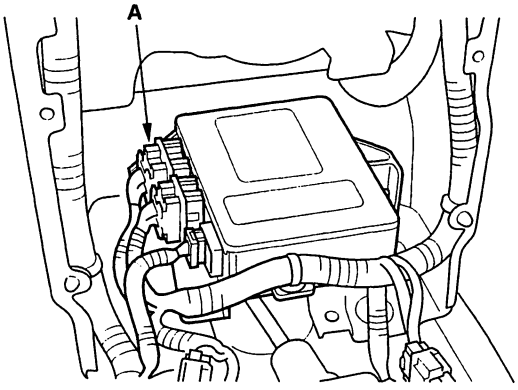

14. Check resistance between the No. 7 and the No. 16 terminals and between the No. 2 and No. 11 terminals of SRS unit connector A (18P). There should be 1 M Ω or more.

SRS UNIT CONNECTOR A (18P)

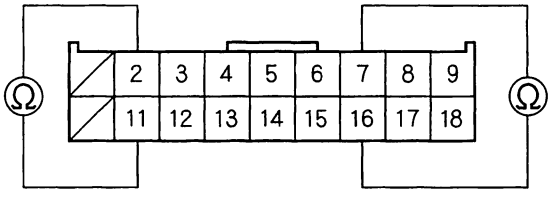

Wire side of female terminals

Is the resistance as specified?

YES—Faulty SRS unit; replace the SRS unit (see page 23-296).■

NO—Short in the SRS main harness or cable reel; replace the SRS main harness or cable reel (see page 23-292).■

DTC Troubleshooting - '01-02 Models (cont'd)

DTC 1-4: Short to power in driver's airbag inflator

1. Erase the DTC memory (see page 23-45).

2. Turn the ignition switch ON (II), and check that the SRS indicator light comes on for about 6 seconds and then goes off.

   Does the SRS indicator light stay on?

   YES – Go to step 3.

   NO – Intermittent failure, system is OK at this time. Go to Troubleshooting Intermittent Failures (see page 23-45).

3. Turn the ignition switch OFF. Disconnect the battery negative cable, and wait for 3 minutes.

4. Disconnect the driver's airbag 4P connector from the cable reel 4P connector (A).

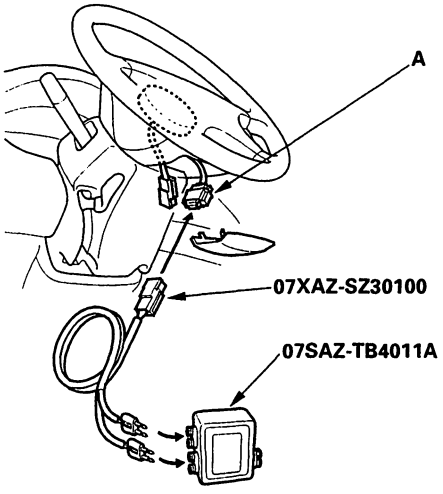

5. Connect the special tool (2 Ω connectors) to the cable reel 4P connector.

6. Reconnect the battery negative cable.

7. Erase the DTC memory.

8. Read the DTC.

   Is DTC 1-4 indicated?

   YES – Go to step 9.

   NO – Short to power in the driver's airbag; replace the driver's airbag (see page 23-278). ■

9. Disconnect the battery negative cable, and wait for 3 minutes.

BACK

10. Disconnect the front passenger's airbag 4P connector (A) from the SRS main harness 4P connector (B), and disconnect the special tool from the cable reel 4P connector.

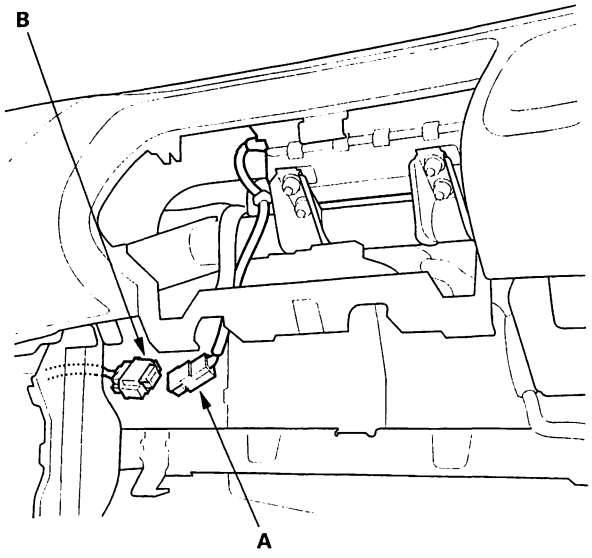

11. Disconnect both seat belt tensioner 2P connectors (A) from the side wire harness 2P connectors (B).

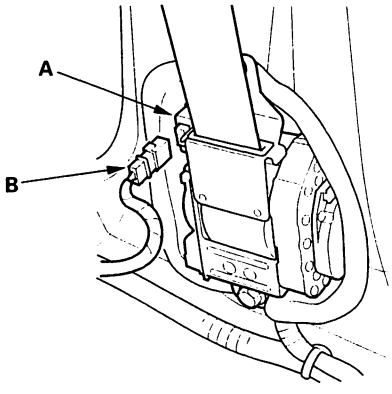

12. Disconnect SRS unit connector A (18P) from the SRS unit.

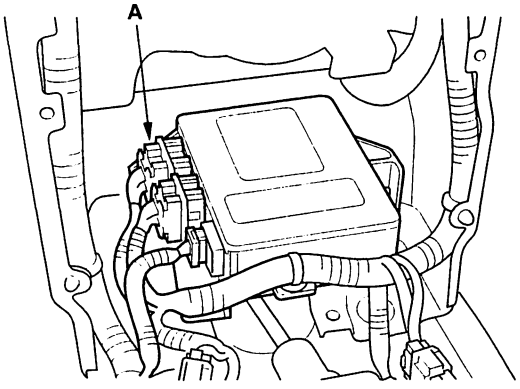

13. Reconnect the battery negative cable.

14. Turn the ignition switch ON (II).

15. Check for voltage between the No. 7 terminal of SRS unit connector A (18P) and body ground, between the No. 16 terminal and body ground, between the No. 2 terminal and body ground, and between the No. 11 terminal and body ground. There should be 0.5 V or less.

SRS UNIT CONNECTOR A (18P)

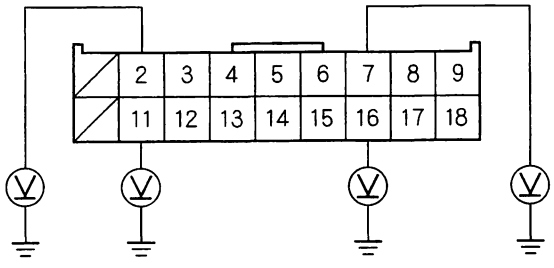

Wire side of female terminals

Is the voltage as specified?

YES – Faulty SRS unit; replace the SRS unit (see page 23-296). ■

NO – Short to power in the SRS main harness or cable reel; replace the SRS main harness or cable reel (see page 23-292). ■

DTC Troubleshooting - '01-02 Models (cont'd)

DTC 1-5: Short to ground in driver's airbag inflator

1. Erase the DTC memory (see page 23-45).

2. Turn the ignition switch ON (II), and check that the SRS indicator light comes on for about 6 seconds and then goes off.

   Does the SRS indicator light stay on?

   YES—Go to step 3.

   NO—Intermittent failure, system is OK at this time. Go to Troubleshooting Intermittent Failures (see page 23-45).

3. Turn the ignition switch OFF. Disconnect the battery negative cable, and wait for 3 minutes.

4. Disconnect the driver's airbag 2P connector from the cable reel 2P connector (A).

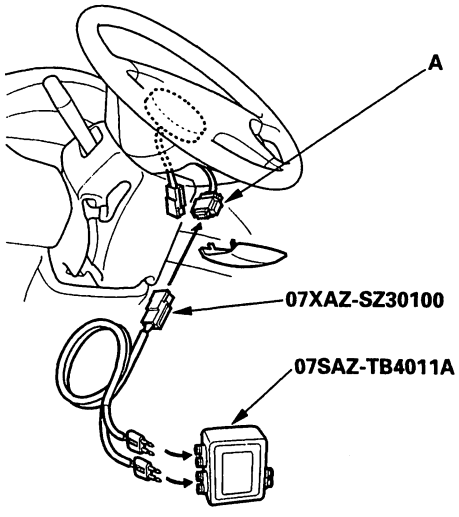

5. Connect the special tool (2 Ω connectors) to the cable reel 4P connector.

6. Reconnect the battery negative cable.

7. Erase the DTC memory.

8. Read the DTC.

   Is DTC 1-5 indicated?

   YES—Go to step 9.

   NO—Short to ground in the driver's airbag inflator; replace the driver's airbag (see page 23-278). ■

9. Disconnect the battery negative cable, and wait for 3 minutes.

BACK

10. Disconnect the front passenger's airbag 4P connector (A) from the SRS main harness 4P connector (B), and disconnect the special tool from the cable reel 4P connector.

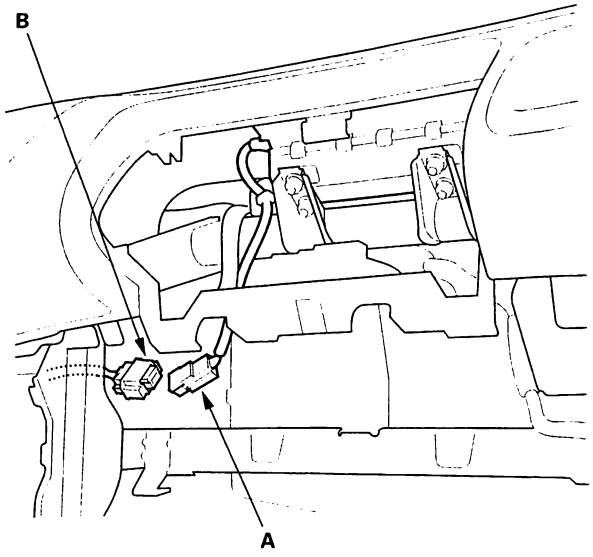

11. Disconnect both belt tensioner 2P connectors (A) from the side wire harness 2P connectors (B).

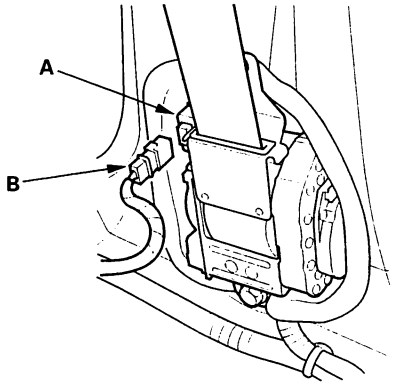

12. Disconnect SRS unit connector A (18P) from the SRS unit.

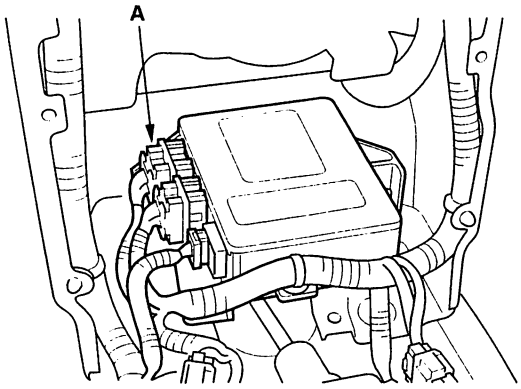

13. Check resistance between the No. 7 terminal of SRS unit connector A (18P) and body ground, between the No. 16 terminal and body ground, between the No. 2 terminal and body ground, and between the No. 11 terminal and body ground. There should be 1 MΩ or more.

SRS UNIT CONNECTOR A (18P)

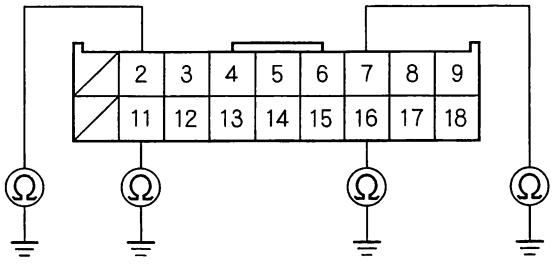

Wire side of female terminals

Is the resistance as specified?

YES – Faulty SRS unit; replace the SRS unit (see page 23-296). ■

NO – Short to ground in the SRS main harness or cable reel; replace the SRS main harness or cable reel (see page 23-292). ■

DTC Troubleshooting - '01-02 Models (cont'd)

DTC 2-1: Open in passenger's airbag inflator

DTC 2-2: Increased resistance in passenger's airbag inflator

1. Erase the DTC memory (see page 23-45).

2. Turn the ignition switch ON (II), and check that the SRS indicator light comes on for about 6 seconds and then goes off.

   Does the SRS indicator light stay on?

   YES – Go to step 3.

   NO – Intermittent failure, system is OK at this time. Go to Troubleshooting Intermittent Failures (see page 23-45).

3. Turn the ignition switch OFF. Disconnect the battery negative cable, and wait for 3 minutes.

4. Disconnect the front passenger's airbag 4P connector from the SRS main harness 4P connector (A).

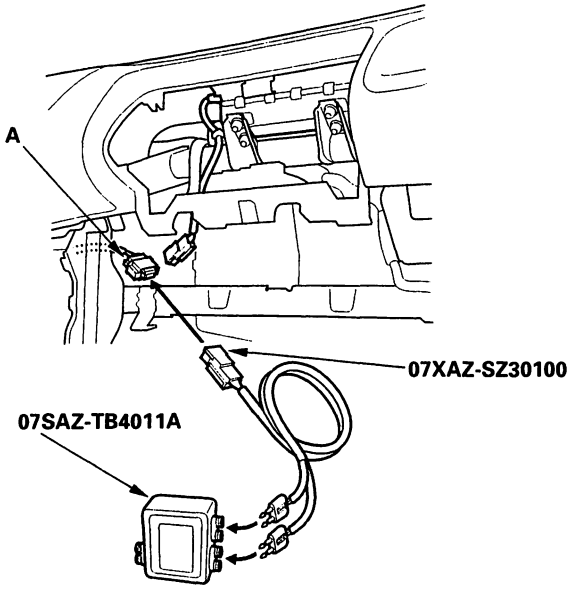

5. Connect the special tool (2 Ω connectors) to the SRS main harness 2P connector.

6. Reconnect the battery negative cable.

7. Erase the DTC memory.

8. Read the DTC.

   Is DTC 2-1 or 2-2 indicated?

   YES – Go to step 9.

   NO – Open or increased resistance in the front passenger's airbag inflator; replace the front passenger's airbag (see page 23-280). ■

9. Disconnect the battery negative cable, and wait for 3 minutes.

10. Disconnect the driver's airbag 4P connector (A) from the cable reel 4P connector (B).

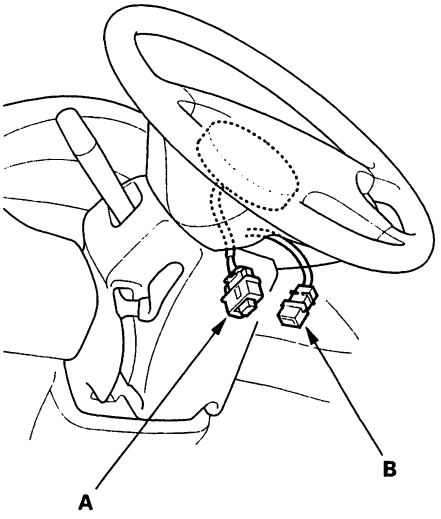

11. Disconnect both seat belt tensioner 2P connectors (A) from the side wire harness 2P connectors (B).

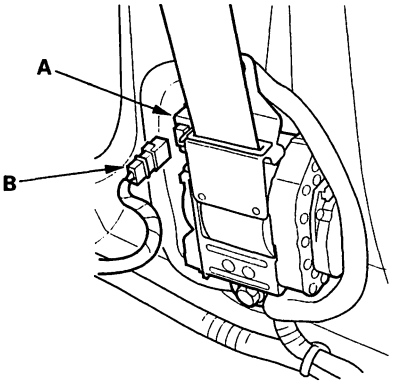

BACK

12. Disconnect SRS unit connector A (18P) from the SRS unit.

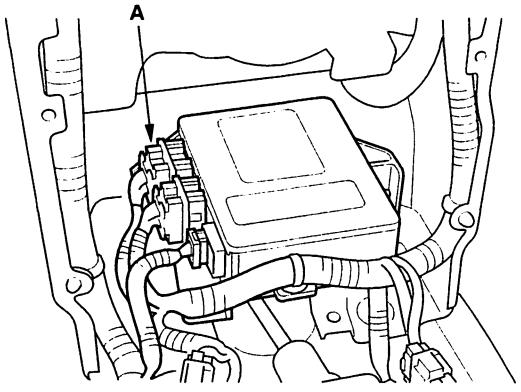

13. Check resistance between the No. 6 and No. 15 terminals and between the No. 5 and No. 14 terminals of SRS unit connector A (18P). There should be 2.0 – 3.0 Ω.

SRS UNIT CONNECTOR A (18P)

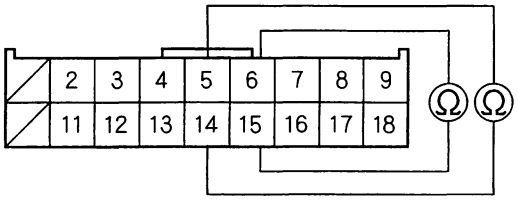

Wire side of female terminals

Is the resistance as specified?

YES – Faulty SRS unit or poor contact at the SRS unit connector; check the connection between the SRS main harness 18P connector and the SRS unit. If the connector is OK, replace the SRS unit (see page 23-296). ■

NO – Open or increased resistance in the SRS main harness; replace the SRS main harness. ■

DTC 2-3: Short to another wire or decreased resistance in passenger's airbag inflator

1. Erase the DTC memory (see page 23-45).

2. Turn the ignition switch ON (II), and check that the SRS indicator light comes on for about 6 seconds and then goes off.

   Does the SRS indicator light stay on?

   YES – Go to step 3.

   NO – Intermittent failure, system is OK at this time. Go to Troubleshooting Intermittent Failures (see page 23-45).

3. Turn the ignition switch OFF. Disconnect the battery negative cable, and wait for 3 minutes.

4. Disconnect the front passenger's airbag 4P connector from the SRS main harness 4P connector (A).

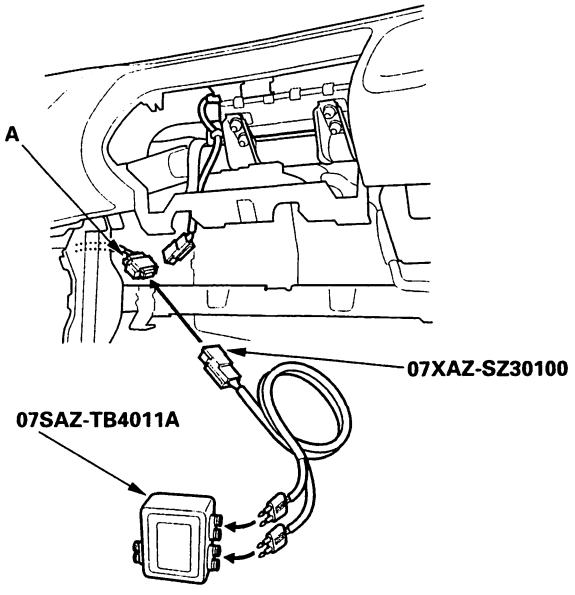

5. Connect the special tool (2 Ω connectors) to the SRS main harness 2P connector.

(cont'd)

DTC Troubleshooting - '01-02 Models (cont'd)

6. Reconnect the battery negative cable.

7. Erase the DTC memory.

8. Read the DTC.

   Is DTC 2-3 indicated?

   YES—Go to step 9.

   NO—Short in the front passenger's airbag inflator; replace the front passenger's airbag (see page 23-280).■

9. Disconnect the battery negative cable, and wait for 3 minutes.

10. Disconnect the driver's airbag 4P connector (A) from the cable reel 4P connector (B).

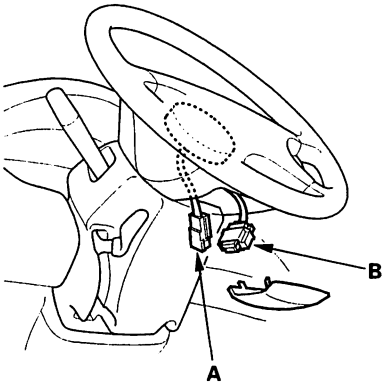

11. Disconnect both seat belt tensioner 2P connectors (A) from the side wire harness 2P connectors (B).

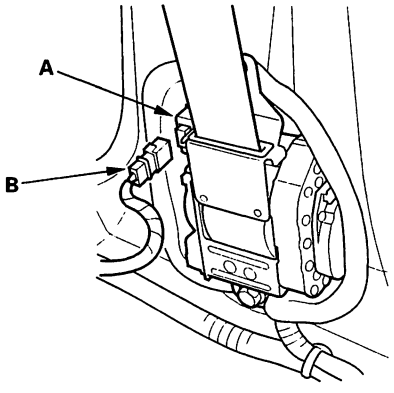

12. Disconnect the special tool from the SRS main harness 2P connector.

13. Disconnect SRS unit connector A (18P) from the SRS unit.

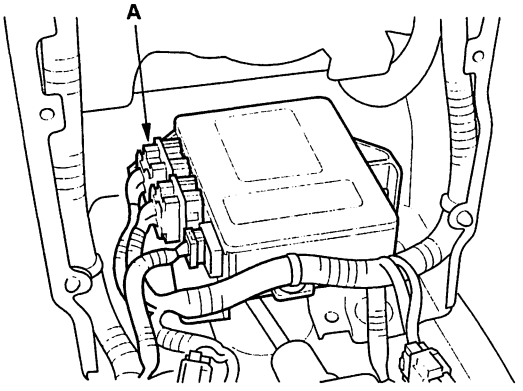

14. Check resistance between the No. 6 and No. 15 terminals and between the No. 5 and No. 14 terminals of SRS unit connector A (18P). There should be 1 MΩ or more.

SRS UNIT CONNECTOR A (18P)

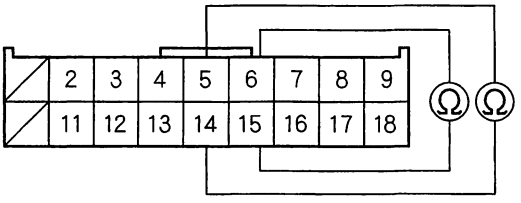

Wire side of female terminals

Is the resistance as specified?

YES—Faulty SRS unit; replace the SRS unit (see page 23-296).■

NO—Short in the SRS main harness; replace the SRS main harness.■

BACK

DTC 2-4: Short to power in passenger's airbag inflator

1. Erase the DTC memory (see page 23-45).

2. Turn the ignition switch ON (II), and check that the SRS indicator light comes on for about 6 seconds and then goes off.

   Does the SRS indicator light stay on?

   YES – Go to step 3.

   NO – Intermittent failure, system is OK at this time. Go to Troubleshooting Intermittent Failures (see page 23-45).

3. Turn the ignition switch OFF. Disconnect the battery negative cable, and wait for 3 minutes.

4. Disconnect the front passenger's airbag 4P connector from the SRS main harness 4P connector (A).

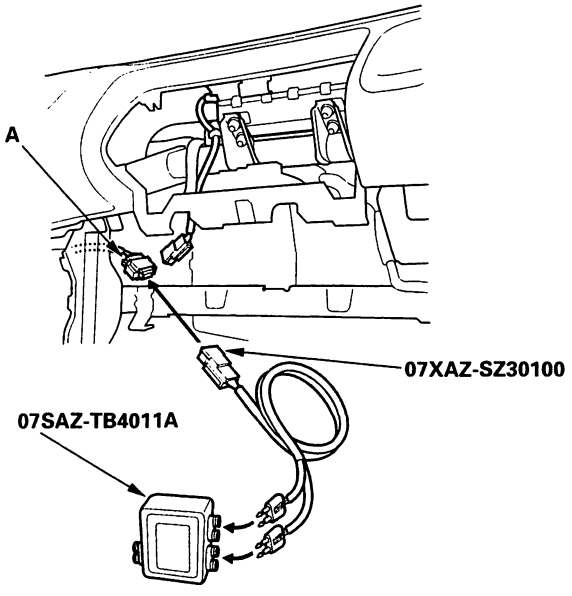

5. Connect the special tool (2 Ω connectors) to the SRS main harness 2P connector.

6. Reconnect the battery negative cable.

7. Erase the DTC memory.

8. Read the DTC.

   Is DTC 2-4 indicated?

   YES – Go to step 9.

   NO – Short to power in the front passenger's airbag inflator; replace the front passenger's airbag (see page 23-280). ■

9. Disconnect the battery negative cable, and wait for 3 minutes.

10. Disconnect the driver's airbag 4P connector (A) from the cable reel 4P connector (B), and disconnect the special tool from the SRS main harness 4P connector.

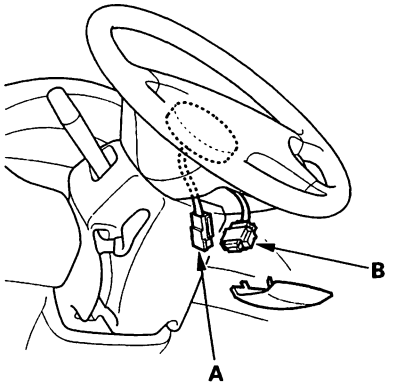

11. Disconnect both seat belt tensioner 2P connectors (A) from the side wire harness 2P connectors (B).

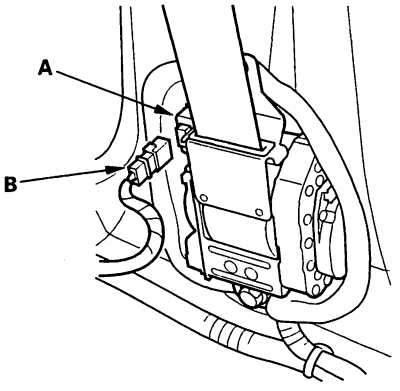

(cont'd)

DTC Troubleshooting - '01-02 Models (cont'd)

12. Disconnect SRS unit connector A (18P) from the SRS unit.

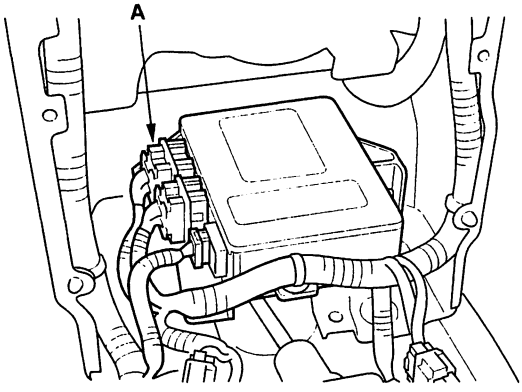

13. Reconnect the battery negative cable.

14. Turn the ignition switch ON (II).

15. Check for voltage between the No. 6 terminal of SRS unit connector A (18P) and body ground, between the No. 15 terminal and body ground, between the No. 5 terminal and body ground, and between the No. 14 terminal and body ground. There should be 0.5 V or less.

SRS UNIT CONNECTOR A (18P)

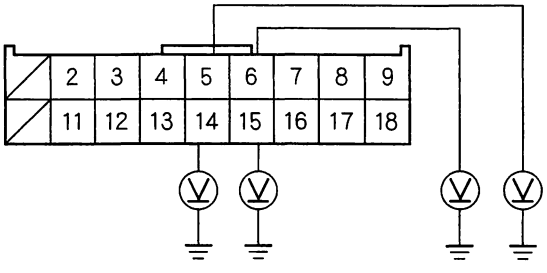

Wire side of female terminals

Is the voltage as specified?

YES—Faulty SRS unit; replace the SRS unit (see page 23-296).■

NO—Short to power in the SRS main harness; replace the SRS main harness.■

DTC 2-5: Short to ground in passenger's airbag inflator

1. Erase the DTC memory (see page 23-45).

2. Turn the ignition switch ON (II), and check that the SRS indicator light comes on for about 6 seconds and then goes off.

   Does the SRS indicator light stay on?

   YES—Go to step 3.

   NO—Intermittent failure, system is OK at this time. Go to Troubleshooting Intermittent Failures (see page 23-45).

3. Turn the ignition switch OFF. Disconnect the battery negative cable, and wait for 3 minutes.

4. Disconnect the front passenger's airbag 4P connector from the SRS main harness 4P connector (A).

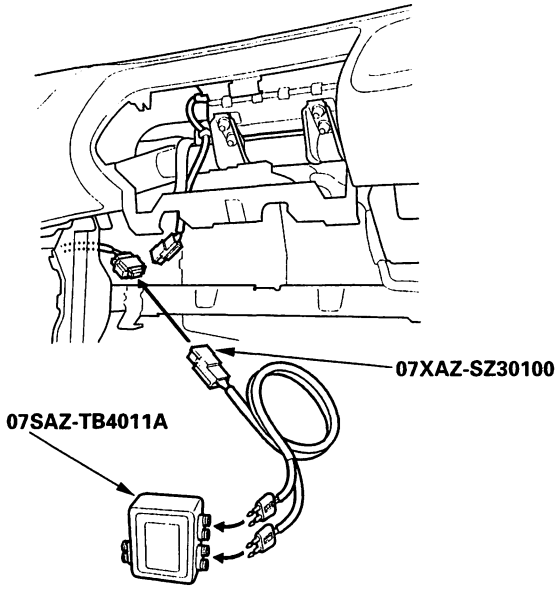

5. Connect the special tool (2 Ω connectors) to the SRS main harness 2P connector.

BACK

6. Reconnect the battery negative cable.

7. Erase the DTC memory.

8. Read the DTC.

   Is DTC 2-5 indicated?

   YES—Go to step 9.

   NO—Short to ground in the passenger's airbag inflator; replace the passenger's airbag (see page 23-280).■

9. Disconnect the battery negative cable, and wait for 3 minutes.

10. Disconnect the driver's airbag 4P connector (A) from the cable reel 4P connector (B), and disconnect the special tool from the SRS main harness 4P connector.

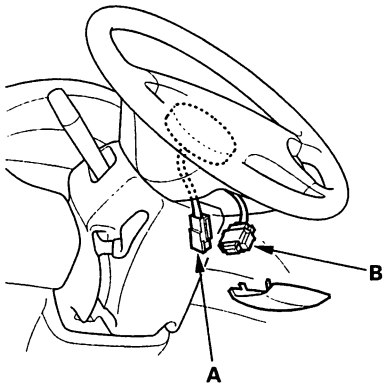

11. Disconnect both seat belt tensioner 2P connectors (A) from the side wire harness 2P connectors (B).

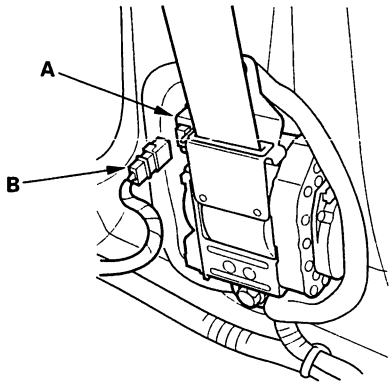

12. Disconnect SRS unit connector A (18P) from the SRS unit.

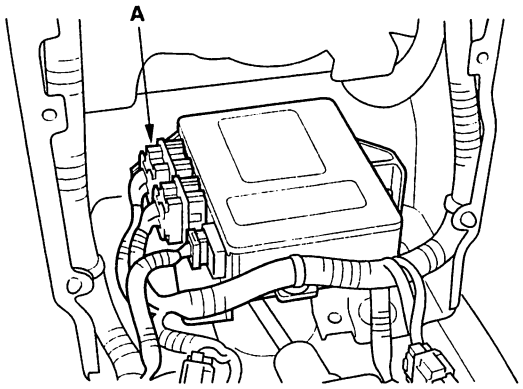

13. Check resistance between the No. 6 terminal of SRS unit connector A (18P) and body ground, between the No. 15 terminal and body ground, between the No. 5 terminal and body ground, and between No. 14 terminal and body ground. There should be 1 MΩ or more.

SRS UNIT CONNECTOR A (18P)

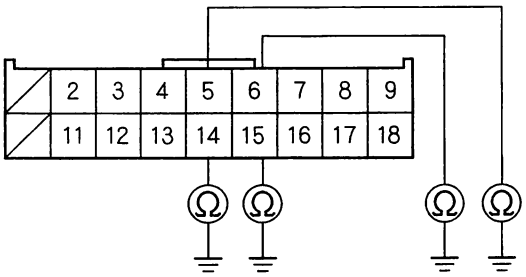

Wire side of female terminals

Is the resistance as specified?

YES—Faulty SRS unit; replace the SRS unit (see page 23-296).■

NO—Short to ground in the SRS main harness; replace the SRS main harness.■

DTC Troubleshooting - '01-02 Models (cont'd)

DTC 3-1: Open in left side seat belt tensioner

DTC 3-2: Increased resistance in left side seat belt tensioner

1. Erase the DTC memory (see page 23-45).

2. Turn the ignition switch ON (II), and check that the SRS indicator light comes on for about 6 seconds and then goes off.

   Does the SRS indicator light stay on?

   YES—Go to step 3.

   NO—Intermittent failure, system is OK at this time. Go to Troubleshooting Intermittent Failures (see page 23-45).

3. Turn the ignition switch OFF. Disconnect the battery negative cable, and wait for 3 minutes.

4. Disconnect the left side seat belt tensioner 2P connector from the left side wire harness 2P connector (A).

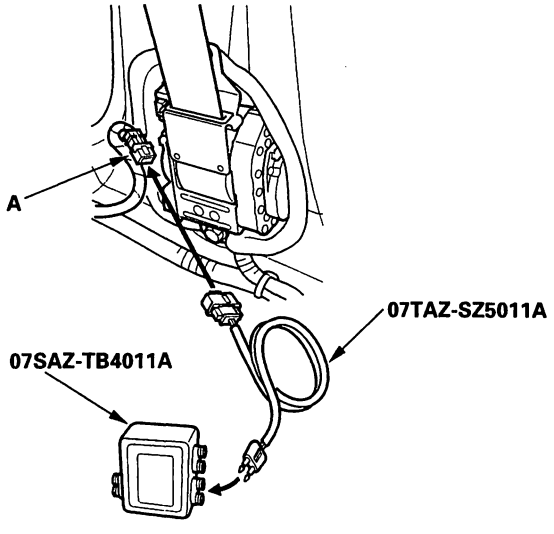

5. Connect the special tool (2 Ω connector) to the left side wire harness 2P connector.

6. Reconnect the battery negative cable.

7. Erase the DTC memory.

8. Read the DTC.

   Is DTC 3-1 or DTC 3-2 indicated?

   YES—Go to step 9.

   NO—Open or increased resistance in left side seat belt tensioner; replace the left side seat belt (see page 23-4).■

9. Disconnect the battery negative cable, and wait for 3 minutes.

10. Disconnect the left side wire harness 4P connector C557 (A) from the SRS main harness 4P connector.

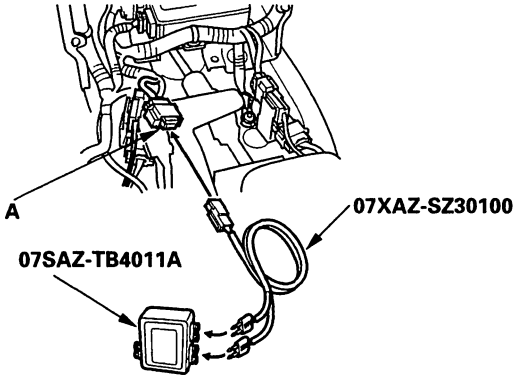

11. Connect the special tool (2 Ω connectors) to the SRS main harness 4P connector.

12. Reconnect the battery negative cable.

13. Erase the DTC memory.

14. Read the DTC.

    Is DTC 3-1 or DTC 3-2 indicated?

    YES—Go to step 15.

    NO—Open or increased resistance in left side wire harness; replace the left side wire harness.■

15. Disconnect the battery negative cable, and wait for 3 minutes.

BACK

16. Disconnect the driver's airbag connector (A), front passenger's airbag connector (B), and right side seat belt tensioner connector (C).

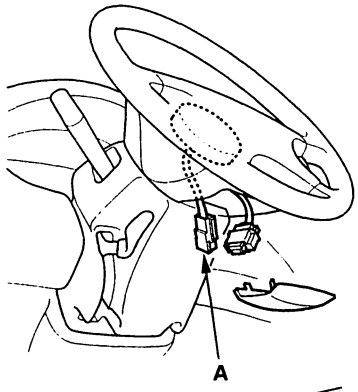

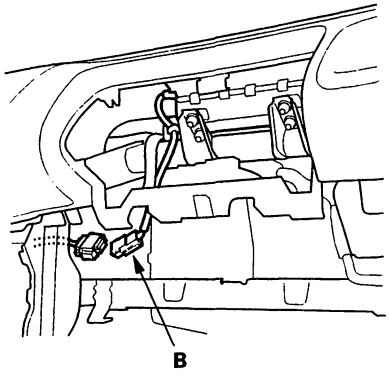

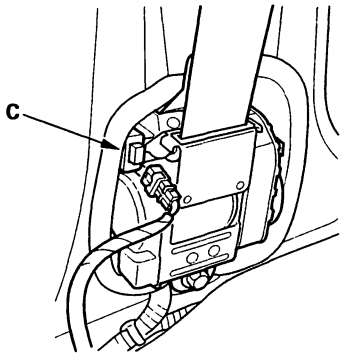

17. Disconnect SRS unit connector A (18P) from the SRS unit.

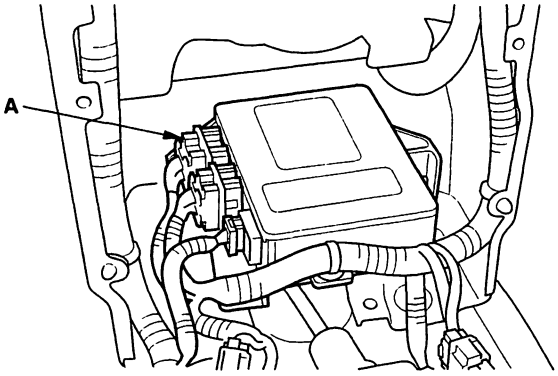

18. Check resistance between the No. 8 terminal and the No. 17 terminal of SRS unit connector A (18P). There should be 2.0–3.0 Ω.

SRS UNIT CONNECTOR A (18P)

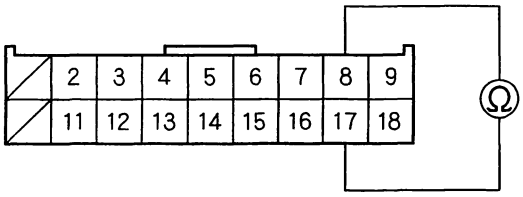

Wire side of female terminals

Is the resistance as specified?

YES—Faulty SRS unit or poor contact at SRS unit connector A (18P) and at the SRS unit. Check the connection. If the connection is OK, replace the SRS unit (see page 23-296).■

NO—Open or increased resistance in the SRS main harness; replace the SRS main harness.■

DTC Troubleshooting - '01-02 Models (cont'd)

DTC 3-3: Short to another wire or decreased resistance in left side seat belt tensioner

1. Erase the DTC memory (see page 23-45).

2. Turn the ignition switch ON (II), and check that the SRS indicator light comes on for about 6 seconds and then goes off.

   Does the SRS indicator light stay on?

   YES – Go to step 3.

   NO – Intermittent failure, system is OK at this time. Go to Troubleshooting Intermittent Failures (see page 23-45).

3. Turn the ignition switch OFF. Disconnect the battery negative cable, and wait for 3 minutes.

4. Disconnect the left side seat belt tensioner 2P connector from the left side wire harness 2P connector (A).

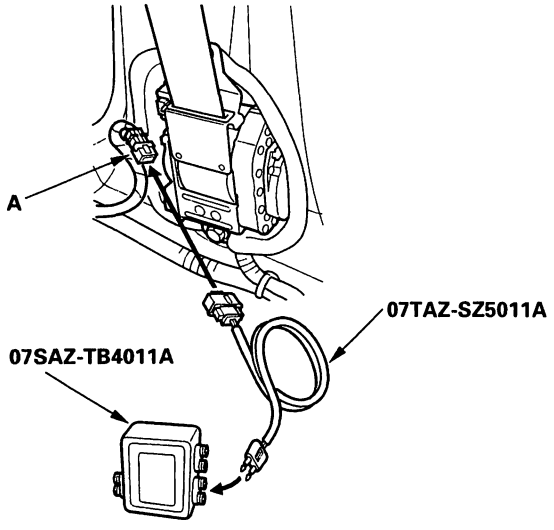

5. Connect the special tool (2 Ω connector) to the left side wire harness 2P connector.

6. Reconnect the battery negative cable.

7. Erase the DTC memory.

8. Read the DTC.

   Is DTC 3-3 indicated?

   YES – Go to step 9.

   NO – Short in the left side seat belt tensioner; replace the left side seat belt (see page 23-4). ■

9. Disconnect the battery negative cable, and wait for 3 minutes.

10. Disconnect the left side wire harness 4P connector C557 (A) from the SRS main harness 4P connector.

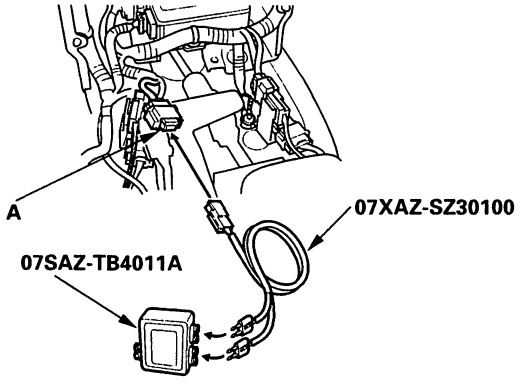

11. Connect the special tool (2 Ω connectors) to the SRS main harness 4P connector.

12. Reconnect the battery negative cable.

13. Erase the DTC memory.

14. Read the DTC.

    Is DTC 3-3 indicated?

    YES – Go to step 15.

    NO – Short in left side wire harness; replace the left side wire harness. ■

15. Disconnect the battery negative cable, and wait for 3 minutes.

BACK

16. Disconnect the driver's airbag connector (A), front passenger's airbag connector (B), and right side seat belt tensioner connector (C).

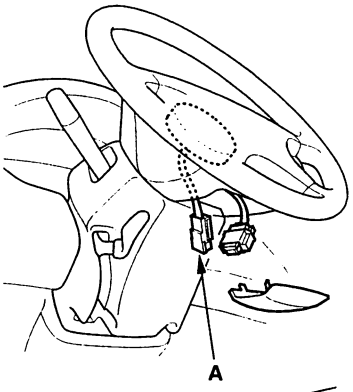

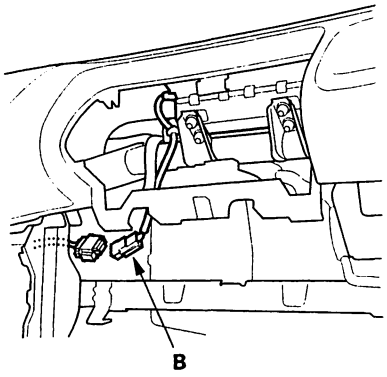

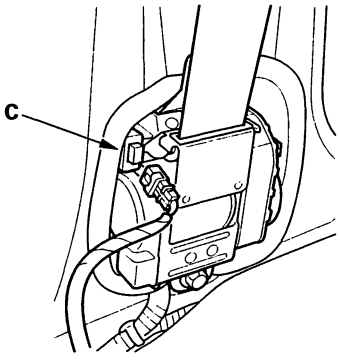

17. Disconnect SRS unit connector A (18P) from the SRS unit.

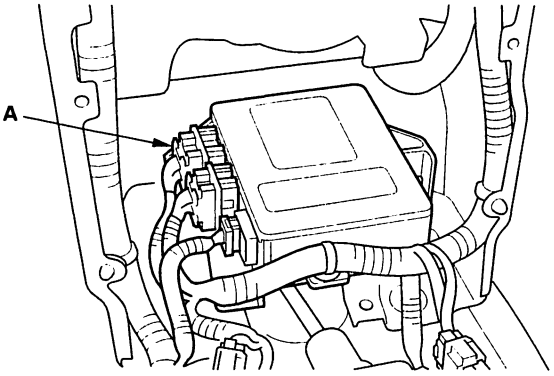

18. Disconnect the special tool from the SRS main harness 4P connector.

19. Check resistance between the No. 8 terminal and the No. 17 terminal of SRS unit connector A (18P). There should be 1 M Ω or more.

SRS UNIT CONNECTOR A (18P)

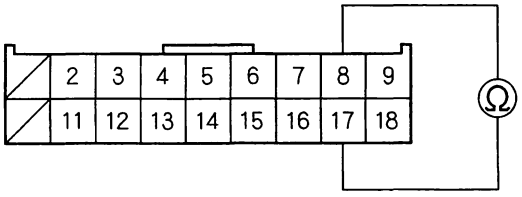

Wire side of female terminals

Is the resistance as specified?

YES – Faulty SRS unit; replace the SRS unit (see page 23-296). ■

NO – Short in the SRS main harness; replace the SRS main harness. ■

DTC Troubleshooting - '01-02 Models (cont'd)

DTC 3-4: Short to power in left side seat belt tensioner

1. Erase the DTC memory (see page 23-45).

2. Turn the ignition switch ON (II), and check that the SRS indicator light comes on for about 6 seconds and then goes off.

   Does the SRS indicator light stay on?

   YES – Go to step 3.

   NO – Intermittent failure, system is OK at this time. Go to Troubleshooting Intermittent Failures (see page 23-45).

3. Turn the ignition switch OFF. Disconnect the battery negative cable, and wait for 3 minutes.

4. Disconnect the left side seat belt tensioner 2P connector from the left side wire harness 2P connector (A).

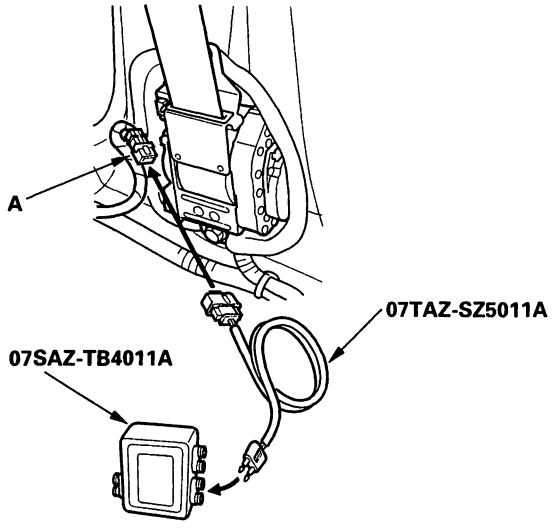

5. Connect the special tool (2 Ω connector) to the left side wire harness 2P connector.

6. Reconnect the battery negative cable.

7. Erase the DTC memory.

8. Read the DTC.

   Is DTC 3-4 indicated?

   YES – Go to step 9.

   NO – Short to power in left side seat belt tensioner; replace the left side seat belt (see page 23-4). ■

9. Disconnect the battery negative cable, and wait for 3 minutes.

10. Disconnect the left side wire harness 4P connector C557 (A) from the SRS main harness 4P connector.

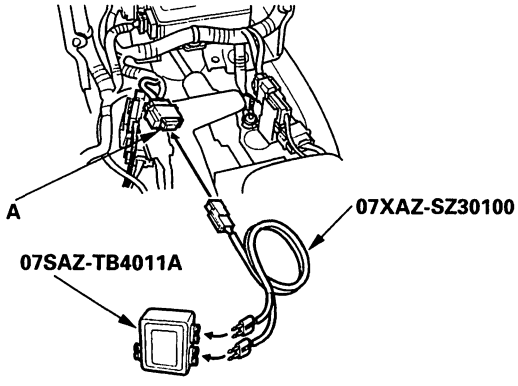

11. Connect the special tool (2 Ω connectors) to the SRS main harness 4P connector.

12. Reconnect the battery negative cable.

13. Erase the DTC memory.

14. Read the DTC.

    Is DTC 3-4 indicated?

    YES – Go to step 15.

    NO – Short to power in left side wire harness; replace the left side wire harness. ■

15. Disconnect the battery negative cable, and wait for 3 minutes.

BACK

16. Disconnect the driver's airbag connector (A), front passenger's airbag connector (B), and right side seat belt tensioner connector (C).

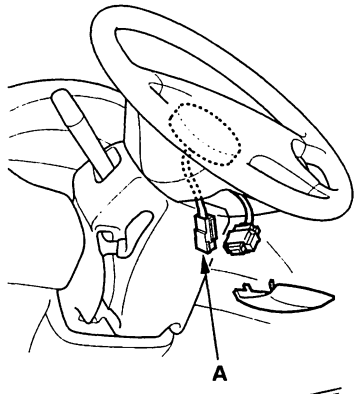

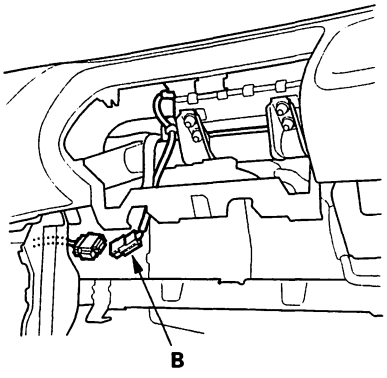

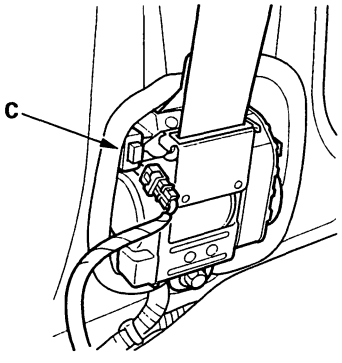

17. Disconnect SRS unit connector A (18P) from the SRS unit.

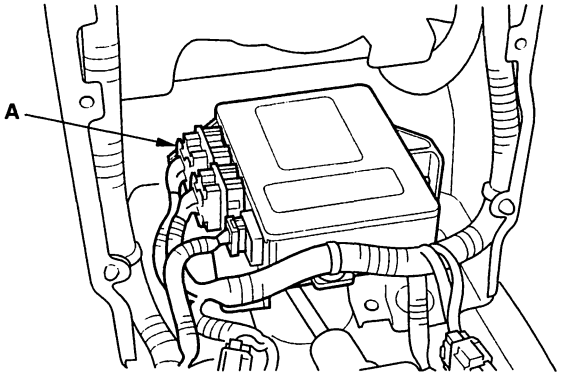

18. Disconnect the special tool from the SRS main harness 4P connector.

19. Reconnect the battery negative cable.

20. Turn the ignition switch ON (II).

21. Check for voltage between the No. 8 terminal of SRS unit connector A (18P) and body ground, and between the No. 17 terminal and body ground. There should be 0.5 V or less.

SRS UNIT CONNECTOR A (18P)

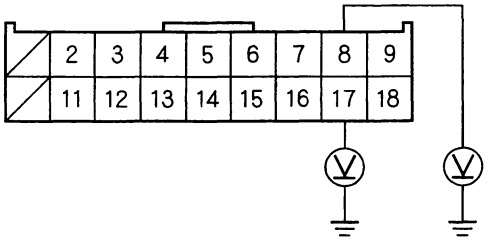

Wire side of female terminals

Is the voltage as specified?

YES—Faulty SRS unit; replace the SRS unit (see page 23-296).■

NO—Short to power in SRS main harness; replace the SRS main harness.■

DTC Troubleshooting - '01-02 Models (cont'd)

DTC 3-5: Short to ground in left side seat belt tensioner

1. Erase the DTC memory (see page 23-45).

2. Turn the ignition switch ON (II), and check that the SRS indicator light comes on for about 6 seconds and then goes off.

   Does the SRS indicator light stay on?

   YES – Go to step 3.

   NO – Intermittent failure, system is OK at this time. Go to Troubleshooting Intermittent Failures (see page 23-45).

3. Turn the ignition switch OFF. Disconnect the battery negative cable, and wait for 3 minutes.

4. Disconnect the left side seat belt tensioner 2P connector from the left side wire harness 2P connector (A).

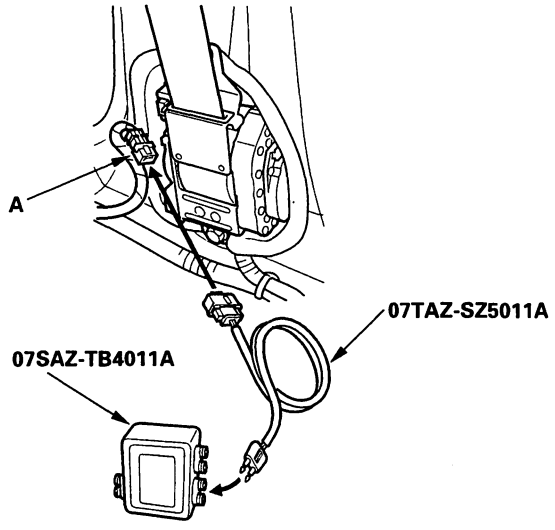

5. Connect the special tool (2 Ω connector) to the left side wire harness 2P connector.

6. Reconnect the battery negative cable.

7. Erase the DTC memory.

8. Read the DTC.

   Is DTC 3-5 indicated?

   YES – Go to step 9.

   NO – Short to ground in left side seat belt tensioner; replace the left side seat belt (see page 23-4). ■

9. Disconnect the battery negative cable, and wait for 3 minutes.

10. Disconnect the left side wire harness 4P connector C557 (A) from the SRS main harness 4P connector.

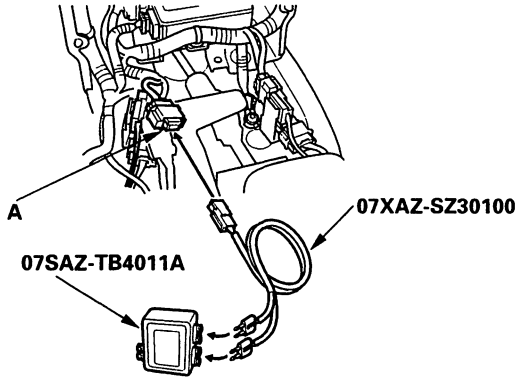

11. Connect the special tool (2 Ω connectors) to the SRS main harness 4P connector.

12. Reconnect the battery negative cable.

13. Erase the DTC memory.

14. Read the DTC.

    Is DTC 3-5 indicated?

    YES – Go to step 15.

    NO – Short to ground in the left side wire harness; replace the left side wire harness. ■

15. Disconnect the battery negative cable, and wait for 3 minutes.

BACK

16. Disconnect the driver's airbag connector (A), front passenger's airbag connector (B), and right side seat belt tensioner connector (C).

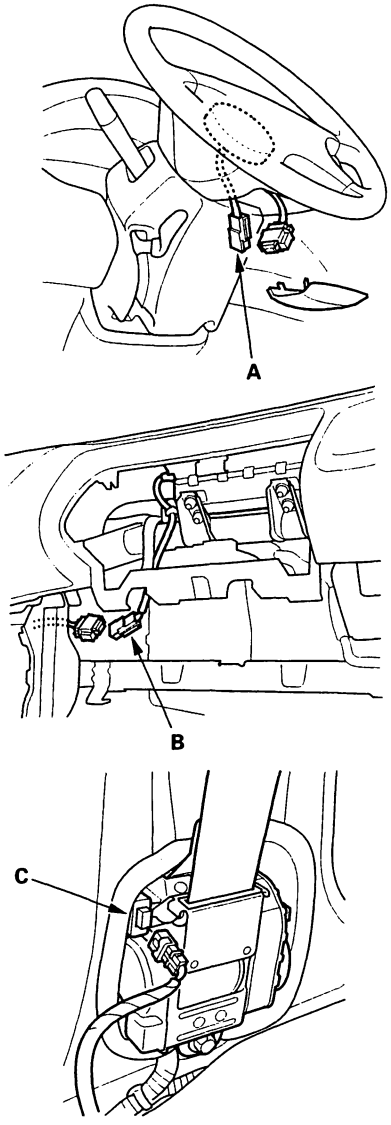

17. Disconnect SRS unit connector A (18P) from the SRS unit.

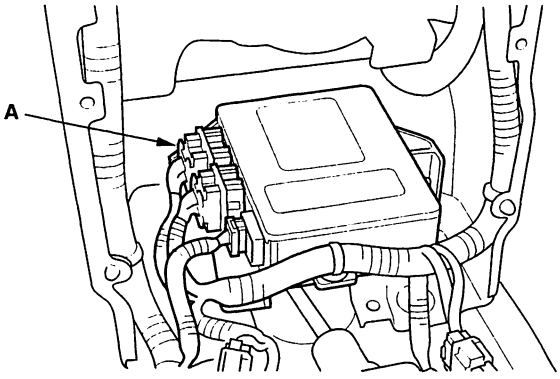

18. Disconnect the special tool from the SRS main harness 4P connector.

19. Check resistance between the No. 8 terminal of SRS unit connector A (18P) and body ground, and between the No. 17 terminal and body ground. There should be 1 M Ω or more.

SRS UNIT CONNECTOR A (18P)

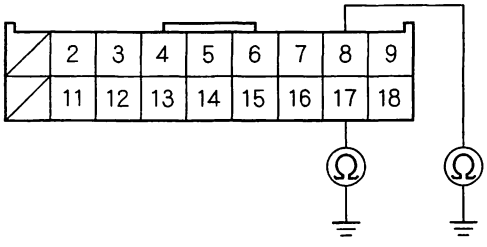

Wire side of female terminals

Is the resistance as specified?

YES – Faulty SRS unit; replace the SRS unit (see page 23-296). ■

NO – Short to ground in SRS main harness; replace the SRS main harness. ■

DTC Troubleshooting - '01-02 Models (cont'd)

DTC 4-1: Open in right side seat belt tensioner
DTC 4-2: Increased resistance in right side seat belt tensioner

1. Erase the DTC memory (see page 23-45).

2. Turn the ignition switch ON (II), and check that the SRS indicator light comes on for about 6 seconds and then goes off.

   Does the SRS indicator light stay on?

   YES—Go to step 3.

   NO—Intermittent failure, system is OK at this time. Go to Troubleshooting Intermittent Failures (see page 23-45).

3. Turn the ignition switch OFF. Disconnect the battery negative cable, and wait for 3 minutes.

4. Disconnect the right side seat belt tensioner 2P connector from the right side wire harness 2P connector (A).

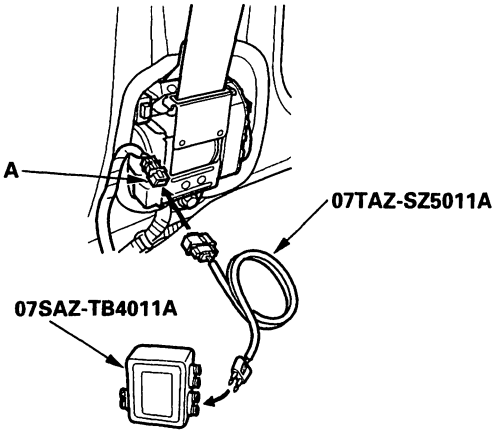

5. Connect the special tool (2 Ω connector) to the right side wire harness 2P connector.

6. Reconnect the battery negative cable.

7. Erase the DTC memory.

8. Read the DTC.

   Is DTC 4-1 or DTC 4-2 indicated?

   YES—Go to step 9.

   NO—Open or increased resistance in right side seat belt tensioner; replace the right side seat belt (see page 23-4).■

9. Disconnect the battery negative cable, and wait for 3 minutes.

10. Disconnect the driver's airbag connector (A), front passenger's airbag connector (B), and left side seat belt tensioner connector (C).

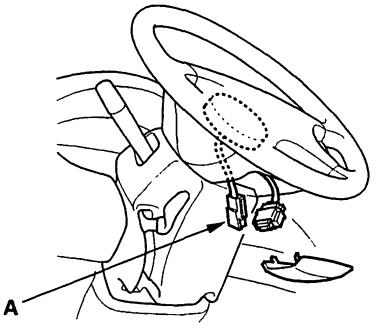

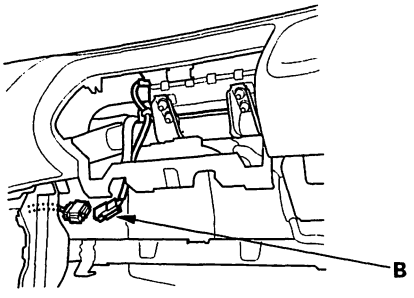

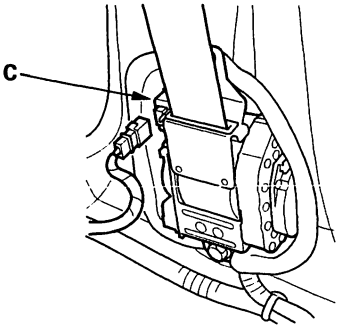

BACK

11. Disconnect SRS unit connector A (18P) from the SRS unit.

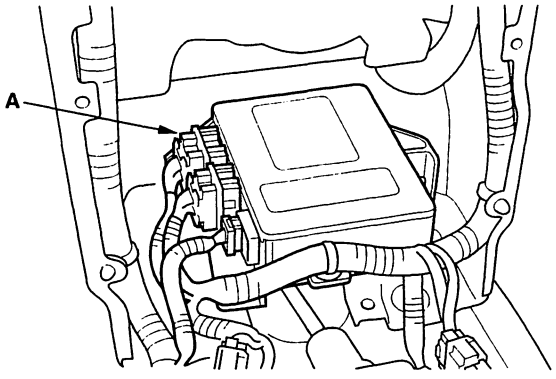

12. Check resistance between the No. 9 terminal and the No. 18 terminal of SRS unit connector A (18P). There should be 2.0–3.0 Ω.

SRS UNIT CONNECTOR A (18P)

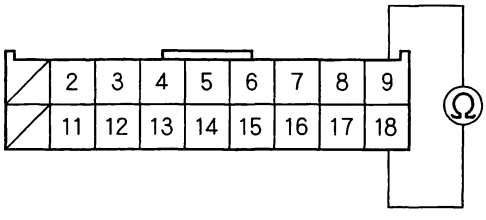

Wire side of female terminals

Is the resistance as specified?

YES—Faulty SRS unit or poor contact at the SRS unit connector. Check the connection between the SRS main harness 18P connector and the SRS unit. If the connection is OK, replace the SRS unit (see page 23-296).■

NO—Open or increased resistance in the SRS main harness or right side wire harness; replace the faulty harness.■

DTC 4-3: Short to another wire or decreased resistance in right side seat belt tensioner

1. Erase the DTC memory (see page 23-45).

2. Turn the ignition switch ON (II), and check that the SRS indicator light comes on for about 6 seconds and then goes off.

   Does the SRS indicator light stay on?

   YES—Go to step 3.

   NO—Intermittent failure, system is OK at this time. Go to Troubleshooting Intermittent Failures (see page 23-45).

3. Turn the ignition switch OFF. Disconnect the battery negative cable, and wait for 3 minutes.

4. Disconnect the right side seat belt tensioner 2P connector from the right side wire harness 2P connector (A).

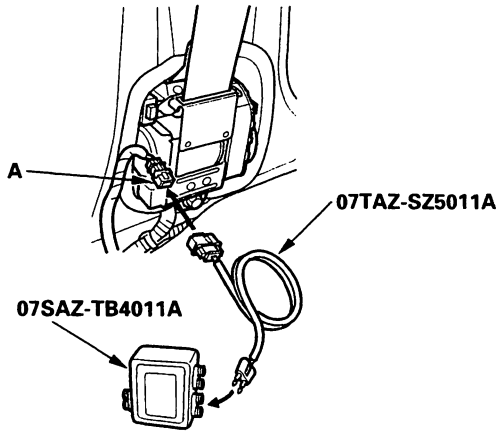

5. Connect the special tool (2 Ω connector) to the right side wire harness 2P connector.

6. Reconnect the battery negative cable.

7. Erase the DTC memory.

(cont'd)

DTC Troubleshooting - '01-02 Models (cont'd)

8. Read the DTC.

   Is DTC 4-3 indicated?

   YES—Go to step 9.

   NO—Short in the right side seat belt tensioner; replace the right side seat belt (see page 23-4).■

9. Disconnect the battery negative cable, and wait for 3 minutes.

10. Disconnect the driver's airbag connector (A), front passenger's airbag connector (B), and left side seat belt tensioner connector (C).

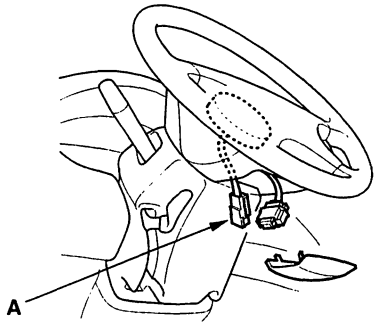

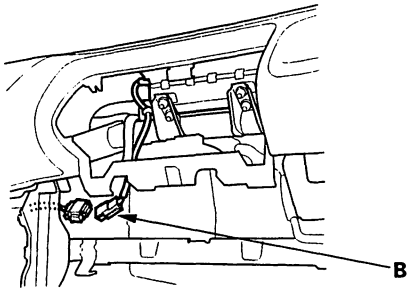

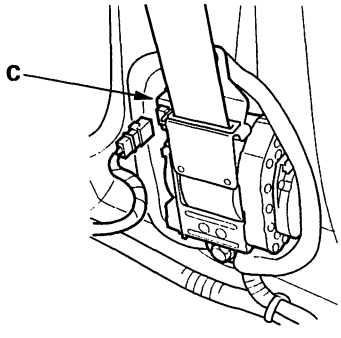

11. Disconnect SRS unit connector A (18P) from the SRS unit.

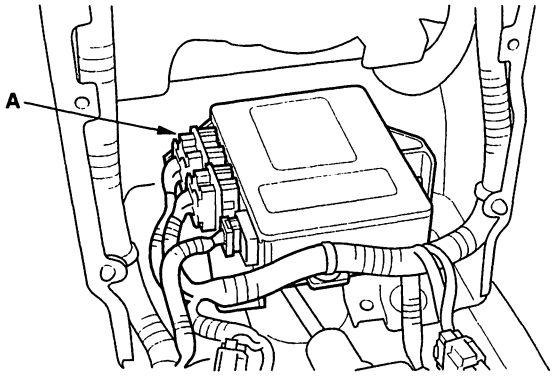

12. Disconnect the special tool (2 Ω) from the right side wire harness 2P connector.

13. Check resistance between the No. 9 terminal and the No. 18 terminal of SRS unit connector A (18P). There should be 1 MΩ or more.

SRS UNIT CONNECTOR A (18P)

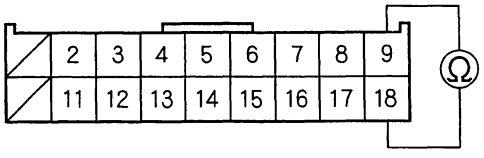

Wire side of female terminals

Is the resistance as specified?

YES—Faulty SRS unit; replace the SRS unit (see page 23-296).■

NO—Short in the SRS main harness or the right side wire harness; replace the faulty harness.■

BACK

DTC 4-4: Short to power in right side seat belt tensioner

1. Erase the DTC memory (see page 23-45).

2. Turn the ignition switch ON (II), and check that the SRS indicator light comes on for about 6 seconds and then goes off.

   Does the SRS indicator light stay on?

   YES – Go to step 3.

   NO – Intermittent failure, system is OK at this time. Go to Troubleshooting Intermittent Failures (see page 23-45).

3. Turn the ignition switch OFF. Disconnect the battery negative cable, and wait for 3 minutes.

4. Disconnect the right side seat belt tensioner 2P connector from the right side wire harness 2P connector (A).

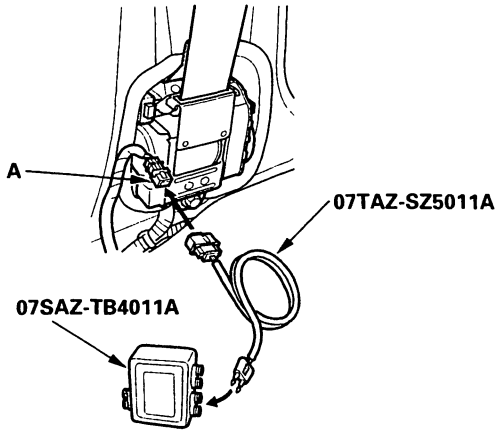

5. Connect the special tool (2 Ω connector) to the right side wire harness 2P connector.

6. Reconnect the battery negative cable.

7. Erase the DTC memory.

8. Read the DTC.

   Is DTC 4-4 indicated?

   YES – Go to step 9.

   NO – Short to power in the right side seat belt tensioner; replace the right side seat belt (see page 23-4). ■

9. Disconnect the battery negative cable, and wait for 3 minutes.

10. Disconnect the driver's airbag connector (A), front passenger's airbag connector (B), and left side seat belt tensioner connector (C).

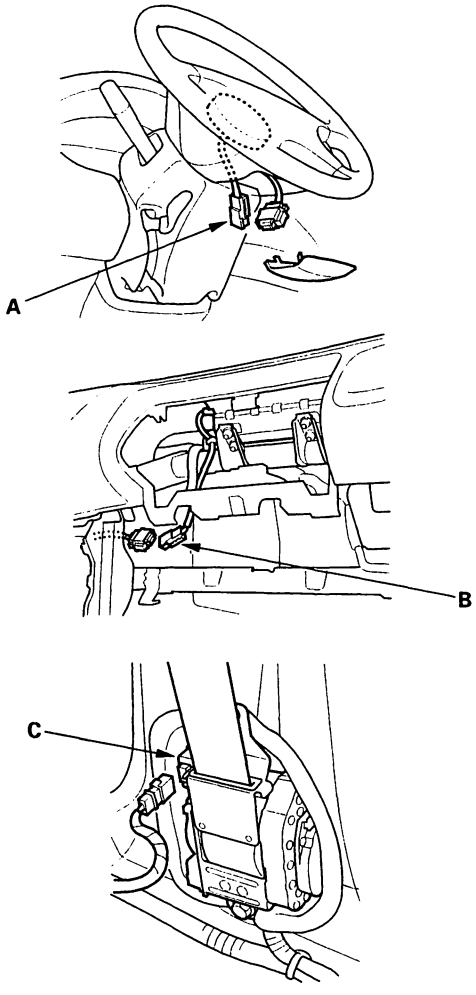

(cont'd)

DTC Troubleshooting - '01-02 Models (cont'd)

11. Disconnect SRS unit connector A (18P) from the SRS unit.

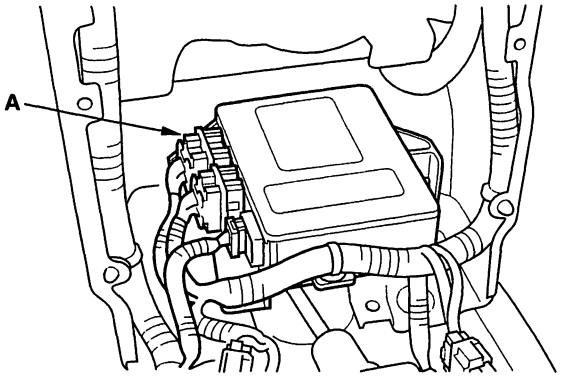

12. Disconnect the special tool from the right side wire harness 2P connector.

13. Reconnect the battery negative cable.

14. Turn the ignition switch ON (II).

15. Check for voltage between the No. 9 terminal of SRS unit connector A (18P) and body ground, and between the No. 18 terminal and body ground. There should be 0.5 V or less.

SRS UNIT CONNECTOR A (18P)

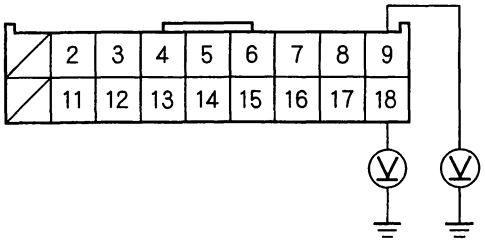

Wire side of female terminals

Is the voltage as specified?

YES—Faulty SRS unit; replace the SRS unit (see page 23-296).■

NO—Short to power in the SRS main harness or the right side wire harness; replace the faulty harness.■

DTC 4-5: Short to ground in right side seat belt tensioner

1. Erase the DTC memory (see page 23-45).

2. Turn the ignition switch ON (II), and check that the SRS indicator light comes on for about 6 seconds and then goes off.

   Does the SRS indicator light stay on?

   YES—Go to step 3.

   NO—Intermittent failure, system is OK at this time. Go to Troubleshooting Intermittent Failures (see page 23-45).

3. Turn the ignition switch OFF. Disconnect the battery negative cable, and wait for 3 minutes.

4. Disconnect the right side seat belt tensioner 2P connector from the right side wire harness 2P connector (A).

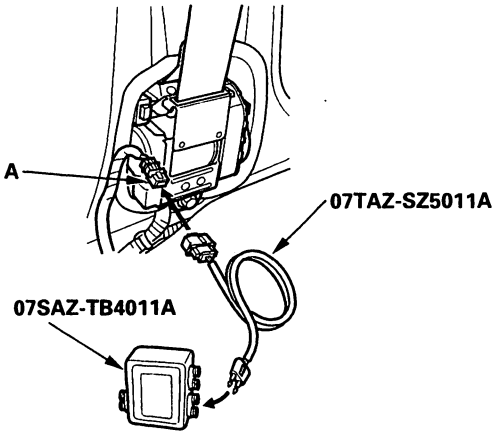

5. Connect the special tool (2 Ω connector) to the right side wire harness 2P connector.

6. Reconnect the battery negative cable.

7. Erase the DTC memory.

BACK

8. Read the DTC.

   Is DTC 4-5 indicated?

   YES – Go to step 9.

   NO – Short to ground in right side seat belt tensioner; replace the right side seat belt (see page 23-4). ■

9. Disconnect the battery negative cable, and wait for 3 minutes.

10. Disconnect the driver's airbag connector (A), front passenger's airbag connector (B), and left side seat belt tensioner connector (C).

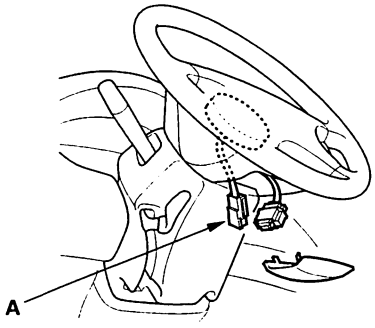

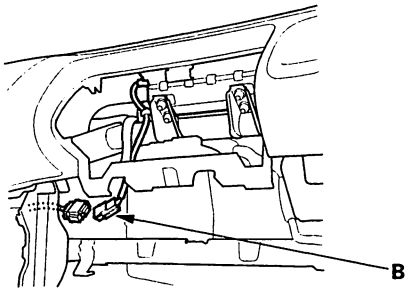

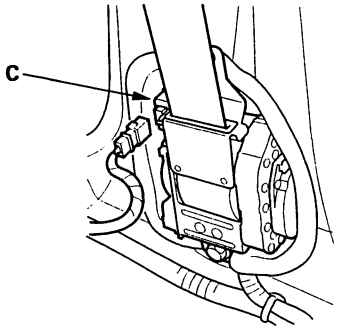

11. Disconnect SRS unit connector A (18P) from the SRS unit.

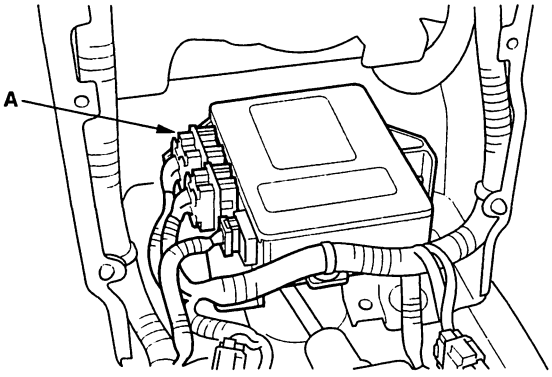

12. Disconnect the special tool from the right side wire harness 2P connector.

13. Check resistance between the No. 9 terminal of SRS unit connector A (18P) and body ground, and between the No. 18 terminal and body ground. There should be 1 MΩ or more.

SRS UNIT CONNECTOR A (18P)

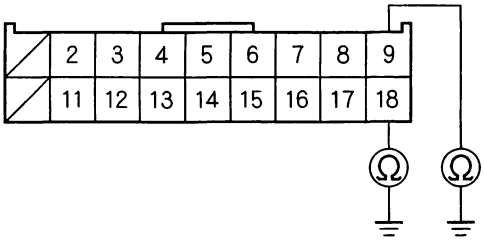

Wire side of female terminals

Is the resistance as specified?

YES – Faulty SRS unit; replace the SRS unit (see page 23-296). ■

NO – Short to ground in the SRS main harness or the right side wire harness; replace the faulty harness. ■

DTC Troubleshooting - '01-02 Models (cont'd)

DTC 5-1, 5-2, 5-4, 5-8, 6-1, 6-2, 6-3, 6-4, 6-7, 6-8, 7-1, 7-2, 7-3, 8-1, 8-2, 8-3, 8-4, 8-5, 8-6, 8-7, 8-8, 9-1, 9-2: Internal Failure of the SRS unit

Note: Before troubleshooting any of these DTCs, check the battery/system voltage. If the voltage is low, repair the charging system before troubleshooting the SRS. If the battery/system voltage is now OK, ask the customer if the battery ever went dead.

1. Erase the DTC memory (see page 23-45).

2. Turn the ignition switch ON (II), and check that the SRS indicator light comes on for about 6 seconds and then goes off.

   Does the SRS indicator light stay on?

   YES—Replace the SRS unit (see page 23-296).■

   NO—Intermittent failure, system is OK at this time. Go to Troubleshooting Intermittent Failures (see page 23-45).

DTC 10-1, 10-2, 10-3, 10-4, 10-5, 10-6, 10-7: Airbags, side airbags and/or seat belt tensioners deployed

The SRS unit must be replaced after any airbags have deployed (see page 23-296).

BACK

DTC 13-1, 13-2: Internal Failure of the driver's side impact sensor

1. Erase the DTC memory (see page 23-45).

2. Turn the ignition switch ON (II), and check that the SRS indicator light comes on for about 6 seconds and then goes off.

   Does the SRS indicator light stay on?

   YES – Replace the SRS unit (see page 23-299). ■

   NO – Intermittent failure, system is OK at this time. Go to Troubleshooting Intermittent Failures (see page 23-45).

DTC 14-1, 14-2: Internal Failure of the front passenger's side impact sensor

1. Erase the DTC memory (see page 23-45).

2. Turn the ignition switch ON (II), and check that the SRS indicator light comes on for about 6 seconds and then goes off.

   Does the SRS indicator light stay on?

   YES – Replace the SRS unit (see page 23-299). ■

   NO – Intermittent failure, system is OK at this time. Go to Troubleshooting Intermittent Failures (see page 23-45).

DTC Troubleshooting - '00-02 Models

DTC 9-3: Faulty driver's seat belt buckle switch

1. Erase the DTC memory (see page 23-45).

2. Turn the ignition switch ON (II), then buckle and unbuckle the driver's seat belt several times.

3. Read the DTC.

   Is DTC 9-3 indicated?

   YES—Go to step 4.

   NO—Intermittent failure, system is OK at this time. Go to Troubleshooting Intermittent Failures (see page 23-45).

4. Check the No. 9 (7.5A) fuse in the driver's under-dash fuse/relay box.

   Is the fuse blown?

   YES—Go to step 5.

   NO—Go to step 6.

5. Replace the No. 9 (7.5A) fuse in the under-dash fuse/relay box, and turn the ignition switch ON (II) for 30 seconds.

   Did the fuse blow-out again?

   YES—Locate and repair the short to ground on the No. 9 fuse circuit, and clear the DTC.■

   NO—Go to step 6.

6. Turn the ignition switch OFF.

7. Disconnect the driver's power seat wire harness 3P connector (with power seat) or left side wire harness 3P connector (without power seat) (A) from the driver's seat belt buckle switch 3P connector (B).

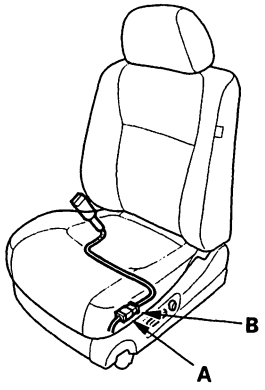

8. Buckle the driver's seat belt.

   Check resistance between the No. 1 and No. 3 terminals of the driver's seat belt buckle switch 3P connector. There should be 0—1 Ω.

   Check resistance between the No. 1 and No. 2 terminals of the same connector. There should be 1 MΩ or more.

DRIVER'S SEAT BELT BUCKLE SWITCH 3P CONNECTOR

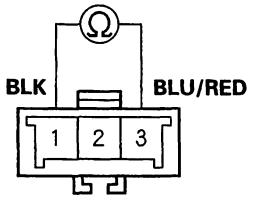

Terminal side of male terminals

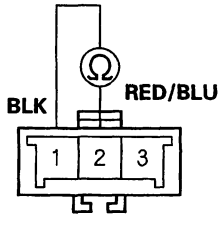

Terminal side of male terminals

Are the resistance readings as specified?

YES—Go to step 9.

NO—Replace the driver's seat belt buckle assembly, and clear the DTC.■

BACK

9. Unbuckle the driver's seat belt.

   Check resistance between the No. 1 and No. 2 terminals of the driver's seat belt buckle switch 3P connector. There should be 0 – 1 Ω.

   Check resistance between the No. 1 and No. 3 terminals of the same connector. There should be 1 MΩ or more.

   DRIVER'S SEAT BELT BUCKLE SWITCH 3P CONNECTOR

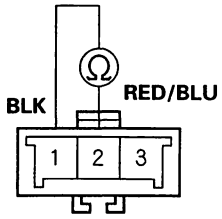

Terminal side of male terminals

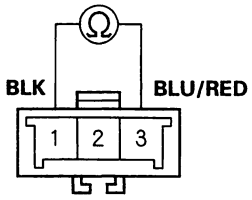

Terminal side of male terminals

Are the resistance readings as specified?

YES – Go to step 10.

NO – Replace the driver's seat belt buckle assembly, and clear the DTC. ■

10. Check resistance between the No. 1 terminal of the driver's seat wire harness 3P connector and body ground. There should be 0 – 1 Ω.

    DRIVER'S SEAT WIRE HARNESS 3P CONNECTOR

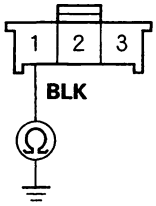

Wire side of female terminals

Is the resistance as specified?

YES – Go to step 11.

NO – Open in the driver's seat wire harness or poor ground connection at G551. If G551 is OK, replace the faulty harness. ■

11. Turn the ignition switch ON (II).

    Does the seat belt reminder stay on?

    YES – Go to step 16.

    NO – Go to step 12.

(cont'd)

DTC Troubleshooting - '00-02 Models (cont'd)

12. Connect No. 2 terminal of the driver's seat wire harness 3P connector to body ground with a jumper wire.

DRIVER'S SEAT WIRE HARNESS 3P CONNECTOR

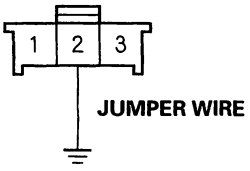

Wire side of female terminals

Does the seat belt reminder come on?

YES—Go to step 13.

NO—Open in the driver's seat wire harness, driver's under-dash fuse/relay box, or dashboard wire harness A. Isolate the faulty harness, and replace the harness or component as necessary. ■

13. Turn the ignition switch OFF, and disconnect the negative cable from the battery.

14. Disconnect all SRS unit connectors from the SRS unit, and reconnect the battery.

15. Connect the No. 4 terminal of SRS unit connector C (8P) to body ground with a jumper wire. Turn the ignition switch ON (II).

SRS UNIT CONNECTOR C (8P)

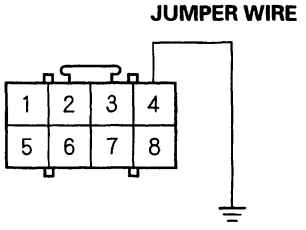

Wire side of female terminals

Does the seat belt reminder come on?

YES—Disconnect the jumper wire, then go to step 18.

NO—Open in dashboard wire harness A. Replace dashboard wire harness A. ■

16. Turn the ignition switch OFF, and disconnect the negative cable from the battery.

17. Disconnect SRS unit connector C (8P), reconnect the battery, and turn the ignition switch ON (II).

Does the seat belt reminder come on?

YES—Short to ground in the dashboard wire harness A, driver's under-dash fuse/relay box (without heated seat), driver's multiplex control unit (without heated seat), left side wire harness, driver's power seat wire harness (with power seat), or gauge assembly/circuit board. Replace the faulty harness or component. ■

NO—Replace the SRS unit (see page 23-296). ■

BACK

18. Turn the ignition switch OFF.

19. Check resistance between the No. 3 terminal of the driver's seat wire harness 3P connector and body ground. There should be 1 MΩ or more.

DRIVER'S SEAT WIRE HARNESS 3P CONNECTOR

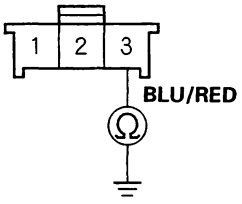

Wire side of female terminals

Is the resistance as specified?

YES – Go to step 20.

NO – Short to ground in dashboard wire harness A, left side wire harness, or driver's seat wire harness. Replace the faulty harness. ■

20. Check resistance between the No. 8 terminal of the dashboard wire harness A 8P connector and the No. 3 terminal of the driver's power seat wire harness 3P connector (with power seat) or left side wire harness 3P connector (without power seat). There should be 0 – 1 Ω.

DRIVER'S POWER SEAT WIRE HARNESS 3P CONNECTOR

SRS UNIT CONNECTOR C (8P)

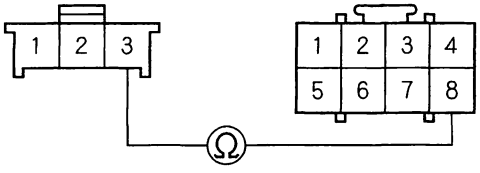

Wire side of female terminals

Is the resistance as specified?

YES – Replace the SRS unit. ■

NO – Open in the dashboard wire harness A, left side wire harness or driver's power seat wire harness (with power seat). Replace the faulty harness. ■

DTC Troubleshooting - '00-02 Models (cont'd)

DTC 9-4: Faulty front passenger's seat belt buckle switch

1. Erase the DTC memory (see page 23-45).

2. Turn the ignition switch ON (II), then buckle and unbuckle the front passenger's seat belt several times.

3. Read the DTC.

   Is DTC 9-4 indicated?

   YES—Go to step 4.

   NO—Intermittent failure, system is OK at this time. Go to Troubleshooting Intermittent Failures (see page 23-45).

4. Turn the ignition switch OFF.

5. Disconnect the front passenger's seat belt buckle switch 3P connector (A) from the passenger's power seat wire harness 3P connector (B).

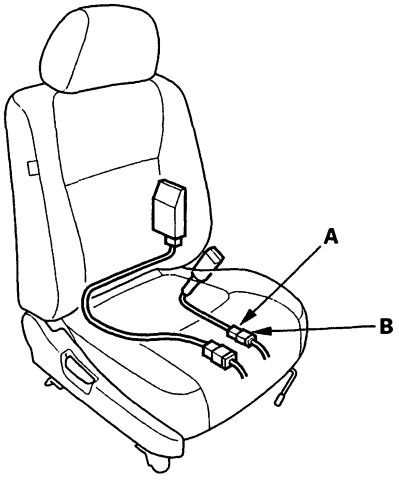

6. Buckle the front passenger's seat belt.

   Check resistance between the No. 1 and No. 3 terminals of the front passenger's seat belt buckle switch 3P connector. There should be 0-1 Ω.

   Check resistance between the No. 1 and No. 2 terminals of the same connector. There should be 1 MΩ or more.

FRONT PASSENGER'S SEAT BELT BUCKLE SWITCH 3P CONNECTOR

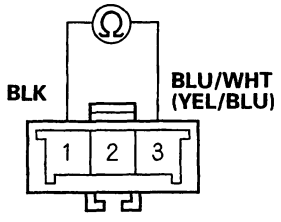

Terminal side of male terminals

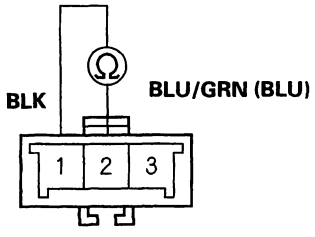

Terminal side of male terminals

Are the resistance readings as specified?

YES—Go to step 7.

NO—Replace the front passenger's seat belt buckle assembly, and clear the DTC (see page 23-9). ■

BACK

7. Unbuckle the front passenger's seat belt.

   Check resistance between the No. 1 and No. 2 terminals of the front passenger's seat belt buckle switch 3P connector. There should be 0 – 1 Ω.

   Check resistance between the No. 1 and No. 3 terminals of the same connector. There should be 1 MΩ or more.

FRONT PASSENGER'S SEAT BELT BUCKLE SWITCH 3P CONNECTOR

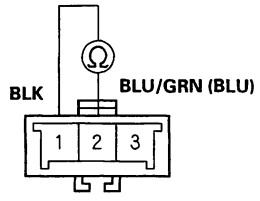

Terminal side of male terminals

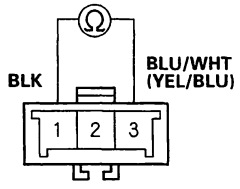

Terminal side of male terminals

Are the resistance readings as specified?

YES – Go to step 8.

NO – Replace the front passenger's seat belt buckle assembly (see page 23-9), and clear the DTC. ■

8. Check resistance between the No. 1 terminal of the passenger's power seat wire harness 3P connector (with power seat) or right side wire harness 3P connector (without power seat) and body ground. There should be 0 – 1 Ω.

PASSENGER'S POWER SEAT WIRE HARNESS 3P CONNECTOR OR RIGHT SIDE WIRE HARNESS 3P CONNECTOR

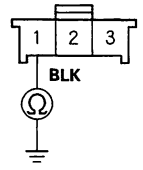

Wire side of female terminals

Is the resistance reading as specified?

YES – Go to step 9.

NO – Open in the passenger's power seat wire harness (with power seat), open in the right side wire harness, or poor ground connection at G581. If G581 is OK, replace the faulty harness. ■

9. Disconnect the negative cable from the battery. Disconnect the dashboard wire harness A 8P connector from the SRS unit.

10. Check resistance between the No. 2 terminal of the passenger's power seat wire harness 3P connector (with power seat) or right side wire harness 3P connector (without power seat) and body ground. There should be 1 MΩ or more.

PASSENGER'S POWER SEAT WIRE HARNESS 3P CONNECTOR OR RIGHT SIDE WIRE HARNESS 3P CONNECTOR

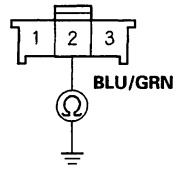

Wire side of female terminals

Is the resistance reading as specified?

YES – Go to step 11.

NO – Short to ground in dashboard wire harness A, right side wire harness, or passenger's power seat wire harness (with power seat). Replace the faulty harness. ■

(cont'd)

DTC Troubleshooting - '00-02 Models (cont'd)

11. Check resistance between the No. 3 terminal of the passenger's seat wire harness 3P connector and body ground. There should be 1 MΩ or more.

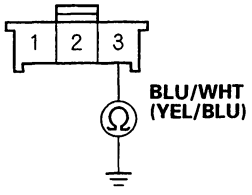

Wire side of female terminals

Is the resistance reading as specified?

YES – Go to step 12.

NO – Short to ground in the dashboard wire harness A, right side wire harness or passenger's power seat wire harness (with power seat). Isolate the faulty harness, and replace as necessary. ■

12. Check resistance between the No. 7 terminal of SRS unit connector C (8P) and the No. 3 terminal of the passenger's seat wire harness 3P connector. There should be 0 – 1 Ω.

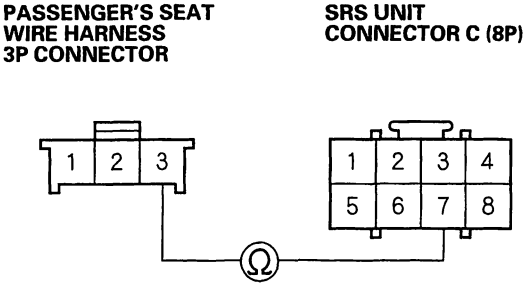

Wire side of female terminals

Is the resistance reading as specified?

YES – Go to step 13.

NO – Open in the dashboard wire harness A, right side wire harness, or passenger's seat wire harness. Isolate the faulty harness, and replace as necessary. ■

13. Check resistance between the No. 3 terminal of SRS unit connector C (8P) and the No. 2 terminal of the passenger's seat wire harness 3P connector. There should be 0 – 1 Ω.

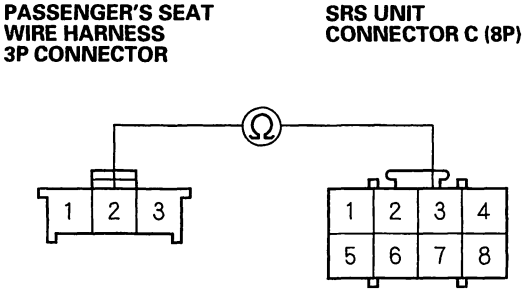

Wire side of female terminals

Is the resistance as specified?

YES – Replace the SRS unit. ■

NO – Open in the dashboard wire harness A, right side wire harness, or passenger's seat wire harness. Isolate the faulty harness, and replace as necessary. ■

BACK

DTC 11-1: Open or increased resistance in driver's side airbag inflator

1. Erase the DTC memory (see page 23-45).

2. Turn the ignition switch ON (II), and check that the SRS indicator light comes on for about 6 seconds and then goes off.

   Does the SRS indicator light stay on?

   YES—Go to step 3.

   NO—Intermittent failure, system is OK at this time. Go to Troubleshooting Intermittent Failures (see page 23-45).

3. Turn the ignition switch OFF. Disconnect the battery negative cable, and wait for 3 minutes.

4. Disconnect the left side wire harness 2P connector (A) from the driver's side airbag (B).

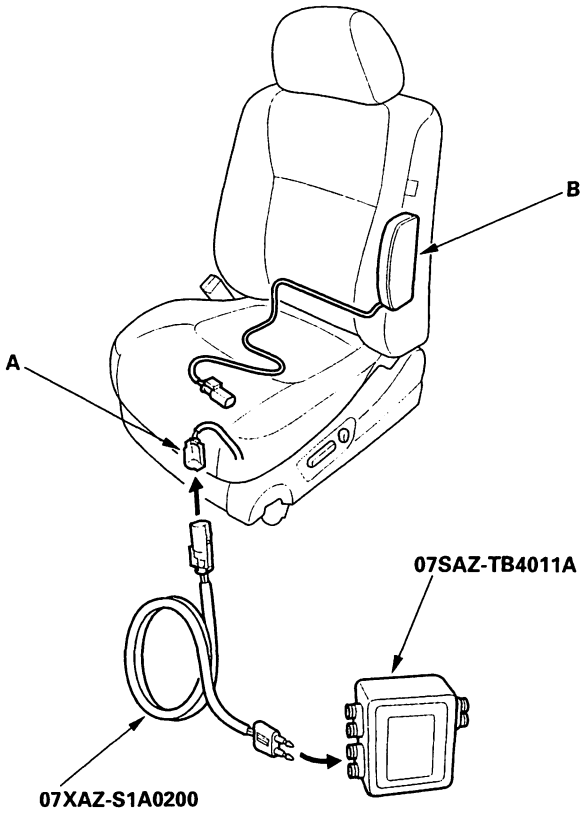

5. Connect the special tool (2 Ω connector) to the left side wire harness 2P connector.

6. Reconnect the battery negative cable.

7. Erase the DTC memory.

8. Read the DTC.

   Is DTC 11-1 indicated?

   YES—Go to step 9.

   NO—Open or increased resistance in the driver's side airbag inflator; replace the driver's side airbag (see page 23-282). ■

9. Disconnect the battery negative cable, and wait for 3 minutes.

10. Disconnect the right side wire harness 2P connector (A) from the front passenger's side airbag (B).

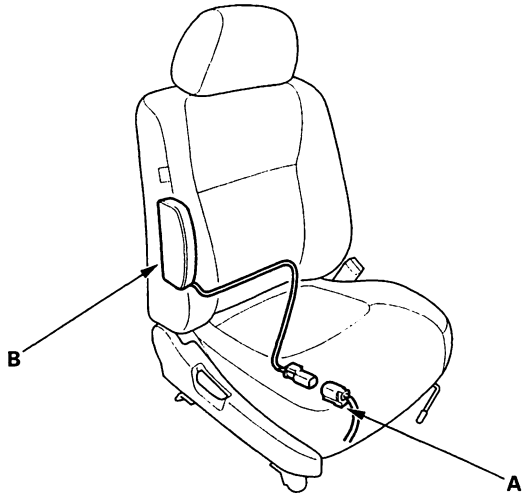

(cont'd)

DTC Troubleshooting - '01-02 Models with Side Airbags (cont'd)

11. Disconnect SRS unit connector B (14P) from the SRS unit. Do not disconnect the special tool from the left side wire harness 2P connector.

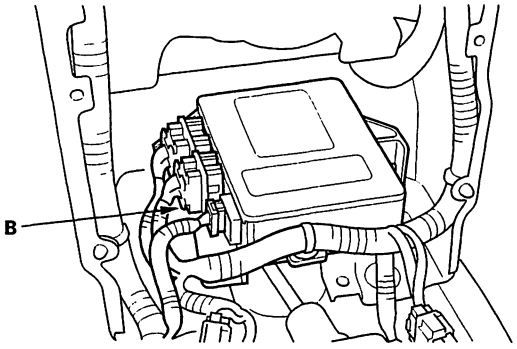

12. Check resistance between the No. 4 and No. 13 terminals of SRS connector B (14P). There should be 2.0–3.0 Ω.

SRS UNIT CONNECTOR B (14P)

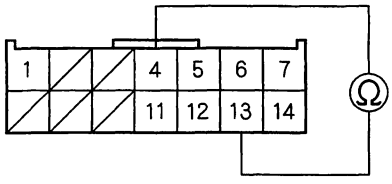

Wire side of female terminals

Is the resistance as specified?

YES—Faulty SRS unit or poor contact at the SRS main harness 14P connector and the SRS unit; check the connection at the SRS main harness 14P connector and SRS unit. If the connector is OK, replace the SRS unit (see page 23-296).■

NO—Open or increased resistance in the SRS main harness or left side wire harness; replace the faulty harness.■

DTC 11-3: Short to another wire or decreased resistance in driver's side airbag inflator

1. Erase the DTC memory (see page 23-45).

2. Turn the ignition switch ON (II), and check that the SRS indicator light comes on for about 6 seconds and then goes off.

   Does the SRS indicator light stay on?

   YES—Go to step 3.

   NO—Intermittent failure, system is OK at this time. Go to Troubleshooting Intermittent Failures (see page 23-45).

3. Turn the ignition switch OFF. Disconnect the battery negative cable, and wait for 3 minutes.

4. Disconnect the left side wire harness 2P connector (A) from the driver's side airbag (B).

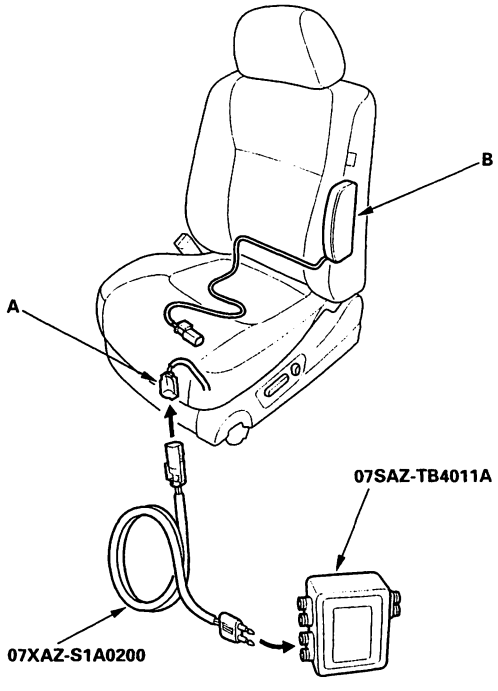

5. Connect the special tool (2 Ω connector) to the left side wire harness 2P connector.

6. Reconnect the battery negative cable.

7. Erase the DTC memory.

BACK

8. Read the DTC.

   Is DTC 11-3 indicated?

   YES – Go to step 9.

   NO – Short to another wire in the driver's side airbag inflator; replace the driver's side airbag (see page 23-282). ■

9. Disconnect the battery negative cable, and wait for 3 minutes.

10. Disconnect the right side wire harness 2P connector (A) from the front passenger's side airbag (B).

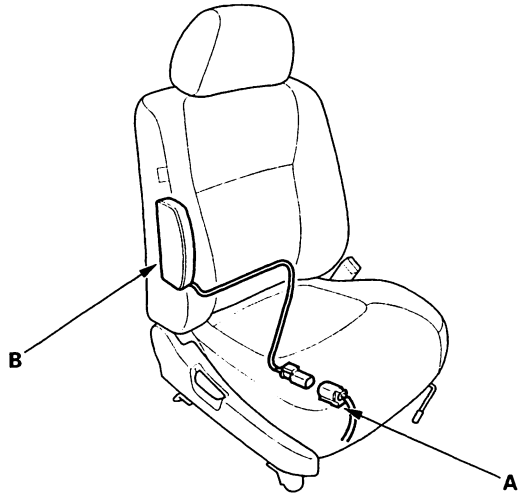

11. Disconnect the special tool from the left side wire harness 2P connector.

12. Disconnect SRS unit connector B (14P) from the SRS unit.

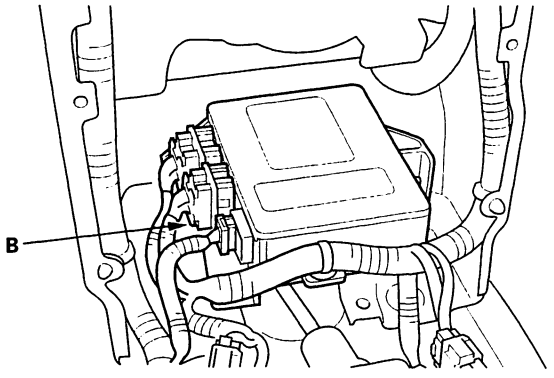

13. Check resistance between the No. 4 and No. 13 terminals of SRS unit connector B (14P). There should be 1 MΩ or more.

SRS UNIT CONNECTOR B (14P)

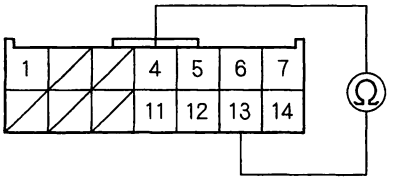

Wire side of female terminals

Is the resistance as specified?

YES – Faulty SRS unit; replace the SRS unit (see page 23-296). ■

NO – Short to another wire in the SRS main harness or left side wire harness; replace the faulty harness. ■

DTC Troubleshooting - '01-02 Models with Side Airbags (cont'd)

DTC 11-4: Short to power in driver's side airbag inflator

1. Erase the DTC memory (see page 23-45).

2. Turn the ignition switch ON (II), and check that the SRS indicator light comes on for about 6 seconds and then goes off.

   Does the SRS indicator light stay on?

   YES – Go to step 3.

   NO – Intermittent failure, system is OK at this time. Go to Troubleshooting Intermittent Failures (see page 23-45).

3. Turn the ignition switch OFF. Disconnect the battery negative cable, and wait for 3 minutes.

4. Disconnect the left side wire harness 2P connector (A) from the driver's side airbag (B).

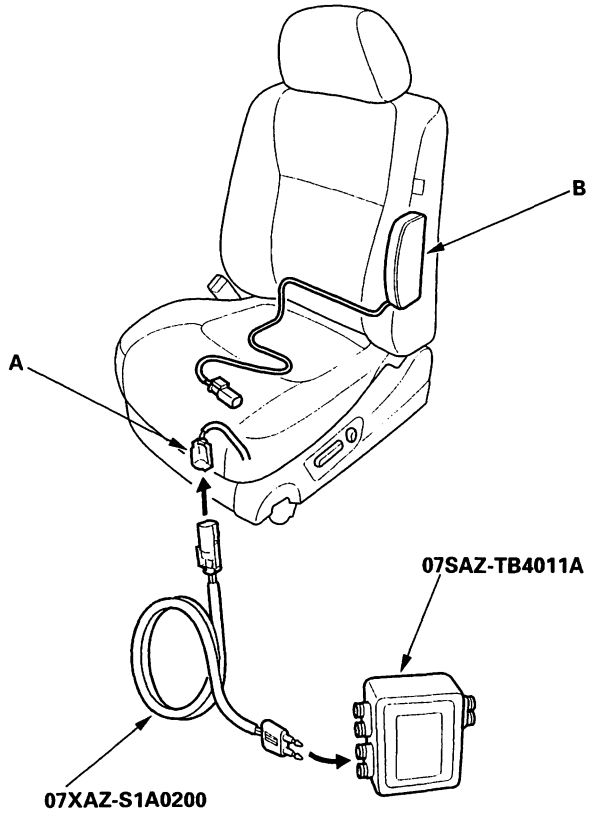

5. Connect the special tool (2 Ω connector) to the left side wire harness 2P connector.

6. Reconnect the battery negative cable.

7. Erase the DTC memory.

8. Read the DTC.

   Is DTC 11-4 indicated?

   YES – Go to step 9.

   NO – Short to power in the driver's side airbag inflator; replace the driver's side airbag (see page 23-282). ■

9. Disconnect the battery negative cable, and wait for 3 minutes. ■

10. Disconnect the right side wire harness 2P connector (A) from the front passenger's side airbag (B), and disconnect the special tool from the left side wire harness 2P connector.

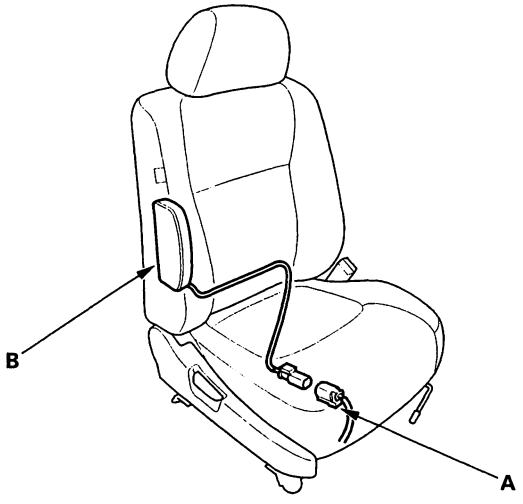

BACK

11. Disconnect SRS unit connector B (14P) from the SRS unit.

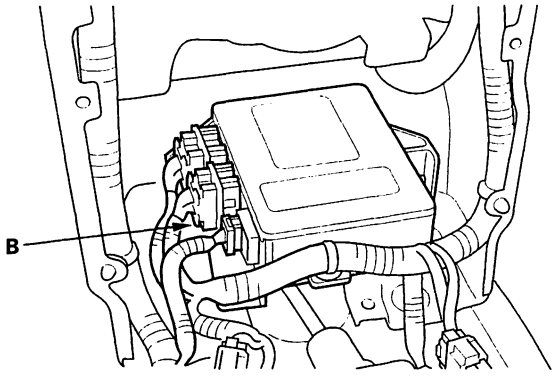

12. Check resistance between the No. 13 and No. 6 terminals of SRS unit connector B (14P), and between the No. 13 and No. 7 terminals. There should be 1 MΩ or more.

SRS UNIT CONNECTOR B (14P)

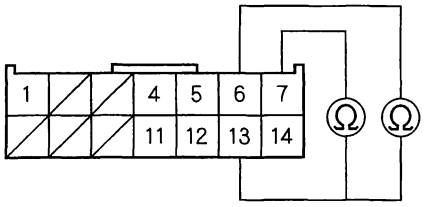

Wire side of female terminals

Is the resistance as specified?

YES – Faulty SRS unit; replace the SRS unit (see page 23-296). ■

NO – Short to power in the SRS main harness or left side wire harness; replace the faulty harness. ■

DTC Troubleshooting - '01-02 Models with Side Airbags (cont'd)

DTC 11-5: Short to ground in driver's side airbag inflator

1. Erase the DTC memory (see page 23-45).

2. Turn the ignition switch ON (II), and check that the SRS indicator light comes on for about 6 seconds and then goes off.

   Does the SRS indicator light stay on?

   YES—Go to step 3.

   NO—Intermittent failure, system is OK at this time. Go to Troubleshooting Intermittent Failures (see page 23-45).

3. Disconnect the battery negative cable, and wait for 3 minutes.

4. Disconnect the left side wire harness 2P connector (A) from the driver's side airbag (B).

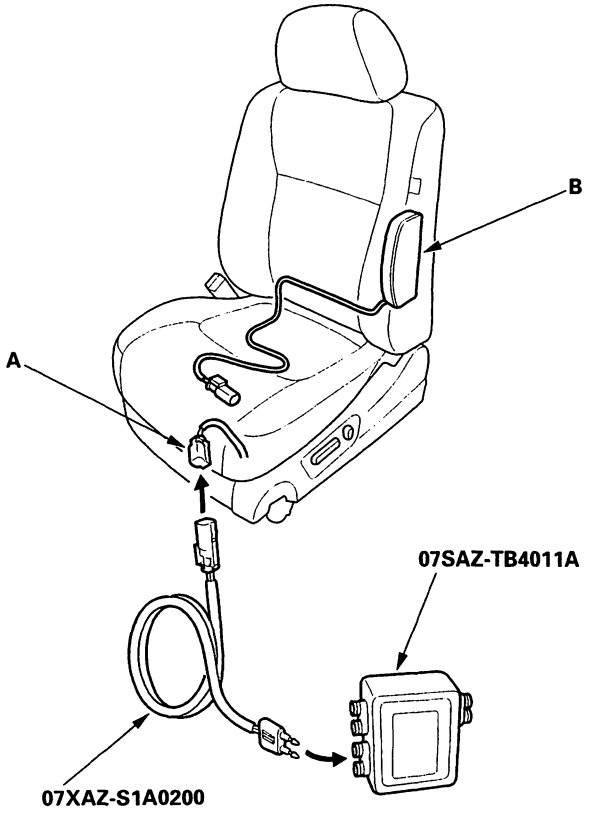

5. Connect the special tool (2 Ω connector) to the left side wire harness 2P connector.

6. Reconnect the battery negative cable.

7. Erase the DTC memory.

8. Read the DTC.

   Is DTC 11-5 indicated?

   YES—Go to step 9.

   NO—Short to ground in the driver's side airbag inflator; replace the driver's side airbag (see page 23-282).■

9. Disconnect the battery negative cable, and wait for 3 minutes.

10. Disconnect the right side wire harness 2P connector (A) from the front passenger's side airbag (B), and disconnect the special tool from the left side wire harness 2P connector.

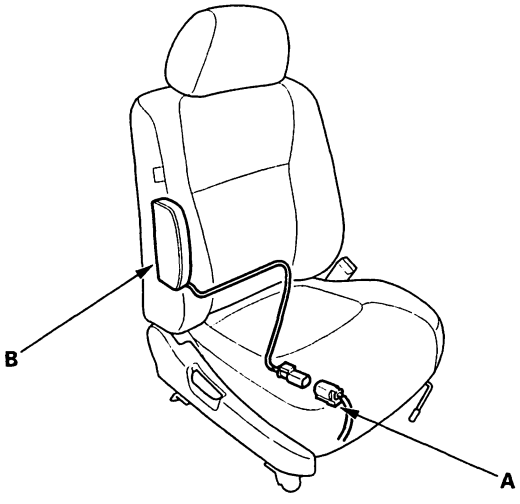

BACK

11. Disconnect SRS unit connector B (14P) from the SRS unit.

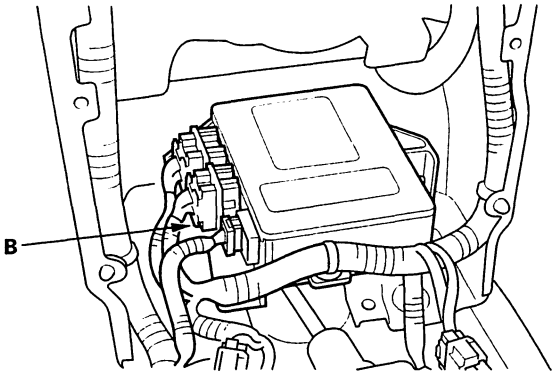

12. Check resistance between the No. 13 and No. 11 terminals of SRS unit connector B (14P), between the No. 13 and No. 12 terminals, and between the No. 13 terminal and body ground. There should be 1 MΩ or more.

SRS UNIT CONNECTOR B (14P)

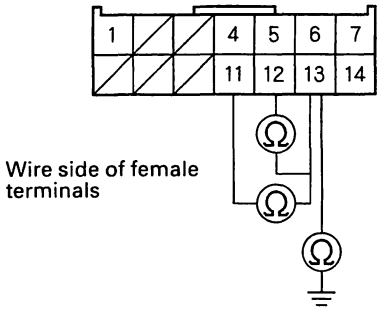

Is the resistance as specified?

YES – Faulty SRS unit; replace the SRS unit (see page 23-296).■

NO – Short to ground in the SRS main harness or the left side wire harness; replace the faulty harness.■

DTC Troubleshooting - '01-02 Models with Side Airbags (cont'd)

DTC 12-1: Open or increased resistance in front passenger's side airbag inflator

1. Erase the DTC memory (see page 23-45).

2. Turn the ignition switch ON (II), and check that the SRS indicator light comes on for about 6 seconds and then goes off.

   Does the SRS indicator light stay on?

   YES—Go to step 3.

   NO—Intermittent failure, system is OK at this time. Go to Troubleshooting Intermittent Failures (see page 23-45).

3. Turn the ignition switch OFF. Disconnect the battery negative cable, and wait for 3 minutes.

4. Disconnect the right side wire harness 2P connector (A) from the front passenger's side airbag (B).

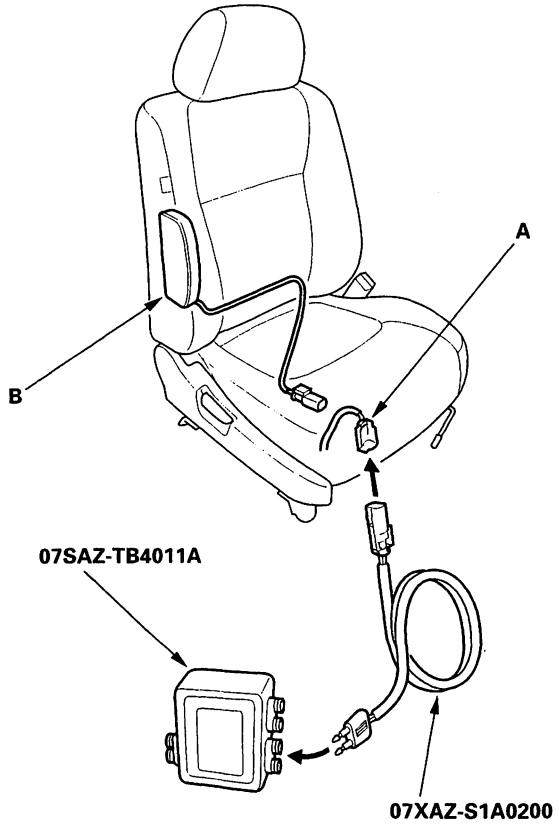

5. Connect the special tool (2 Ω connector) to the right side wire harness 2P connector.

6. Reconnect the battery negative cable.

7. Erase the DTC memory.

8. Read the DTC.

   Is DTC 12-1 indicated?

   YES—Go to step 9.

   NO—Open or increased resistance in the front passenger's side airbag inflator; replace the front passenger's side airbag (see page 23-282).■

9. Disconnect the battery negative cable, and wait for 3 minutes.

10. Disconnect the right side wire harness 4P connector C583 (A) from the SRS main harness 4P connector (B).

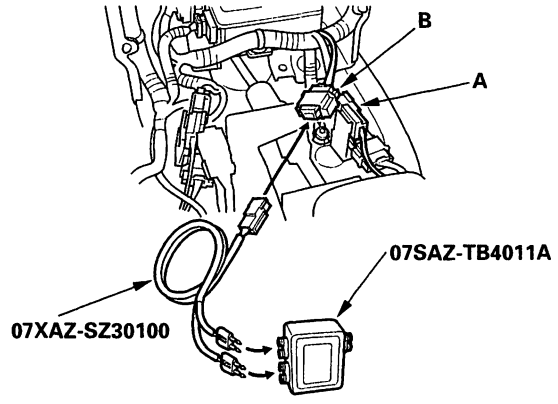

11. Connect the special tool (2 Ω connectors) to the SRS main harness 4P connector.

12. Reconnect the battery negative cable.

13. Erase the DTC memory.

14. Read the DTC.

    Is DTC 12-1 indicated?

    YES—Go to step 15.

    NO—Open or increased resistance in the right side wire harness; replace the right side wire harness.■

15. Disconnect the battery negative cable, and wait for 3 minutes.

BACK

16. Disconnect the left side wire harness 2P connector (A) from the driver's side airbag (B).

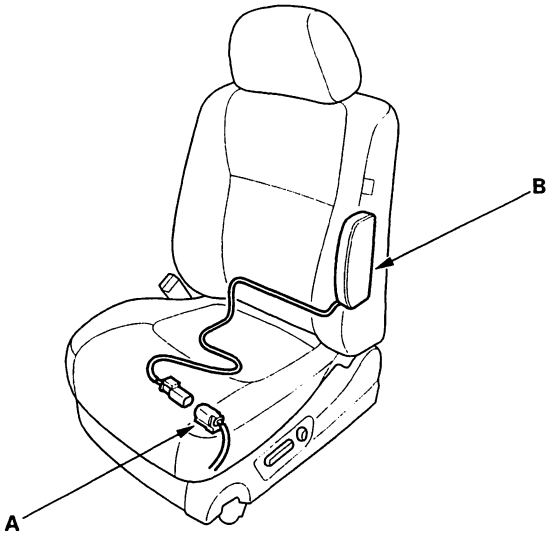

17. Disconnect SRS unit connector B (14P) from the SRS unit. Do not disconnect the special tool from the SRS main harness 4P connector.

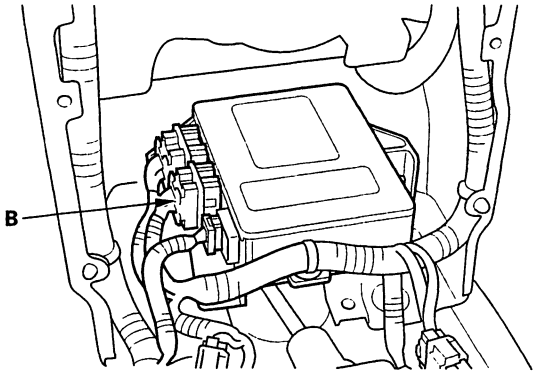

18. Check resistance between the No. 5 and No. 14 terminals of SRS unit connector B (14P). There should be 2.0 – 3.0 Ω.

SRS UNIT CONNECTOR B (14P)

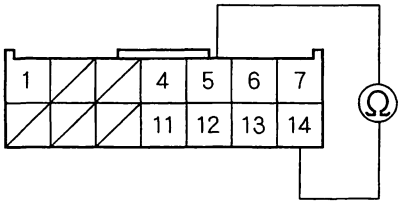

Wire side of female terminals

Is the resistance as specified?

YES – Faulty SRS unit or poor contact at SRS unit connector B (14P) and at the SRS unit. Check the connection. If the connection is OK, replace the SRS unit (see page 23-296). ■

NO – Open or increased resistance in the SRS main harness; replace the SRS main harness. ■

DTC Troubleshooting - '01-02 Models with Side Airbags (cont'd)

DTC 12-3: Short to another wire or decreased resistance in front passenger's side airbag inflator

1. Erase the DTC memory (see page 23-45).

2. Turn the ignition switch ON (II), and check that the SRS indicator light comes on for about 6 seconds and then goes off.

   Does the SRS indicator light stay on?

   YES—Go to step 3.

   NO—Intermittent failure, system is OK at this time. Go to Troubleshooting Intermittent Failures (see page 23-45).

3. Turn the ignition switch OFF. Disconnect the battery negative cable, and wait for 3 minutes.

4. Disconnect the right side wire harness 2P connector (A) from the front passenger's side airbag (B).

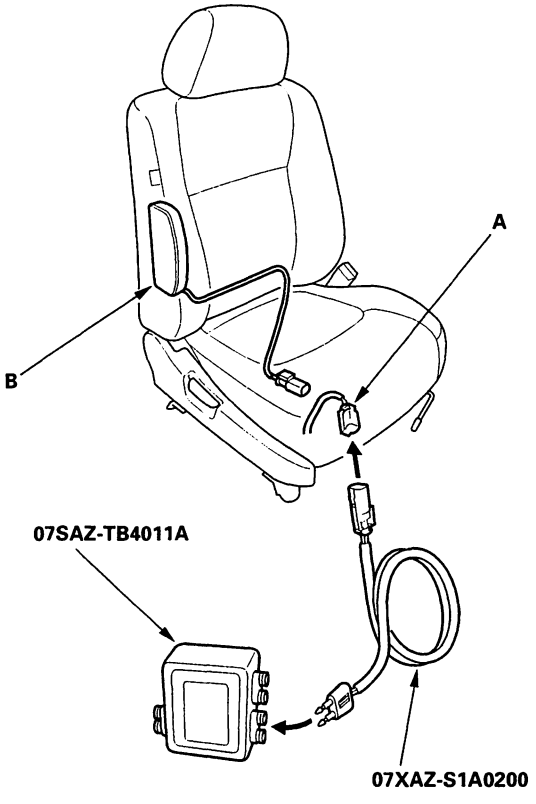

5. Connect the special tool (2 Ω connector) to the right side wire harness 2P connector.

6. Reconnect the battery negative cable.

7. Erase the DTC memory.

8. Read the DTC.

   Is DTC 12-3 indicated?

   YES—Go to step 9.

   NO—Short to another wire in the front passenger's side airbag inflator; replace the front passenger's side airbag (see page 23-282).■

9. Disconnect the battery negative cable, and wait for 3 minutes.

10. Disconnect the right side wire harness 4P connector C583 (A) from the SRS main harness 4P connector (B).

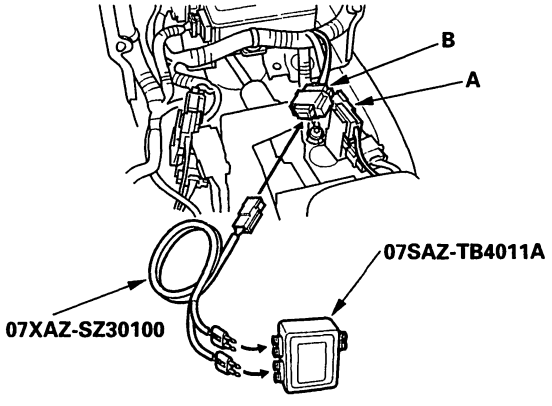

11. Connect the special tool (2 Ω connectors) to the SRS main harness 4P connector.

12. Reconnect the battery negative cable.

13. Erase the DTC memory.

14. Read the DTC.

    Is DTC 12-3 indicated?

    YES—Go to step 15.

    NO—Short in the right side wire harness; replace the right side wire harness.■

15. Disconnect the battery negative cable, and wait for 3 minutes.

BACK

16. Disconnect the left side wire harness 2P connector (A) from the driver's side airbag (B).

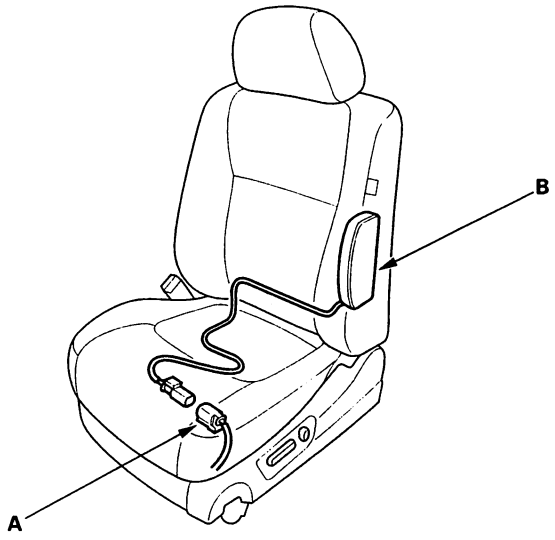

17. Disconnect SRS unit connector B (14P) from the SRS unit.

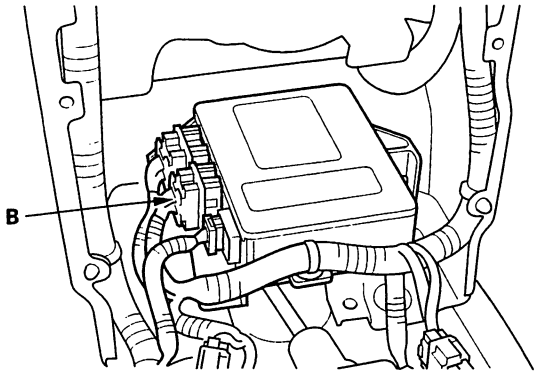

18. Disconnect the special tool from the SRS main harness 4P connector.

19. Check resistance between the No. 5 and No. 14 terminals of SRS unit connector B (14P). There should be 1 MΩ or more.

SRS UNIT CONNECTOR B (14P)

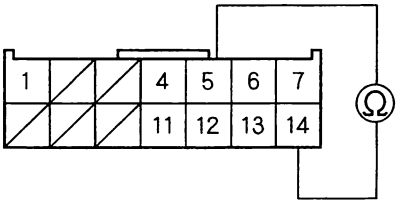

Wire side of female terminals

Is the resistance as specified?

YES – Faulty SRS unit; replace the SRS unit (see page 23-296). ■

NO – Short to another wire in the SRS main harness; replace the SRS main harness. ■

DTC Troubleshooting - '01-02 Models with Side Airbags (cont'd)

DTC 12-4: Short to power in front passenger's side airbag inflator

1. Erase the DTC memory (see page 23-45).

2. Turn the ignition switch ON (II), and check that the SRS indicator light comes on for about 6 seconds and then goes off.

   Does the SRS indicator light stay on?

   YES – Go to step 3.

   NO – Intermittent failure, system is OK at this time. Go to Troubleshooting Intermittent Failures (see page 23-45).

3. Turn the ignition switch OFF. Disconnect the battery negative cable, and wait for 3 minutes.

4. Disconnect the right side wire harness 2P connector (A) from the front passenger's side airbag (B).

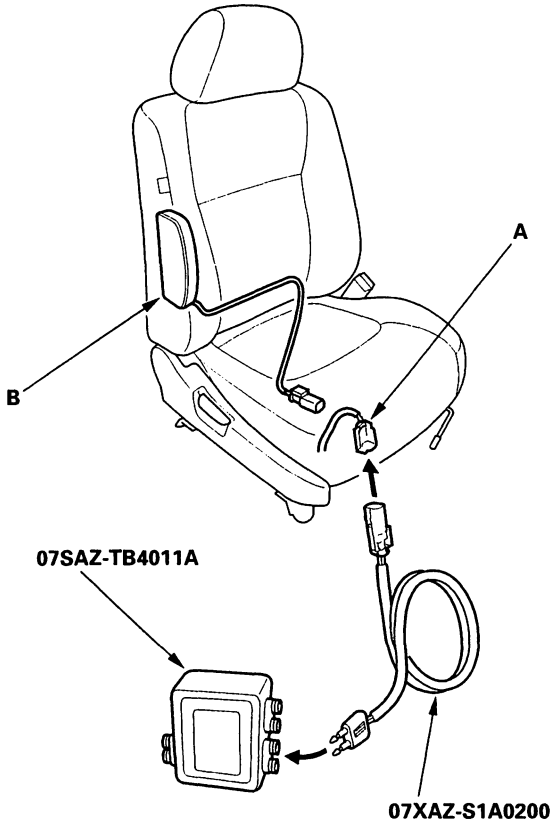

5. Connect the special tool (2 Ω connector) to the right side wire harness 2P connector.

6. Reconnect the battery negative cable.

7. Erase the DTC memory.

8. Read the DTC.

   Is DTC 12-4 indicated?

   YES – Go to step 9.

   NO – Short to power in the front passenger's side airbag inflator; replace the front passenger's side airbag (see page 23-282).■

9. Disconnect the battery negative cable, and wait for 3 minutes.

10. Disconnect the right side wire harness 4P connector C583 (A) from the SRS main harness 4P connector (B).

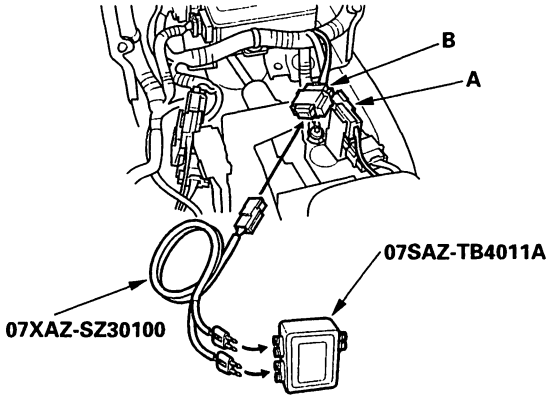

11. Connect the special tool (2 Ω connectors) to the SRS main harness 4P connector.

12. Reconnect the battery negative cable.

13. Erase the DTC memory.

14. Read the DTC.

    Is DTC 12-4 indicated?

    YES – Go to step 15.

    NO – Short to power in the right side wire harness; replace the right side wire harness.■

15. Disconnect the battery negative cable, and wait for 3 minutes.

BACK

16. Disconnect the left side wire harness 2P connector (A) from the driver's side airbag (B).

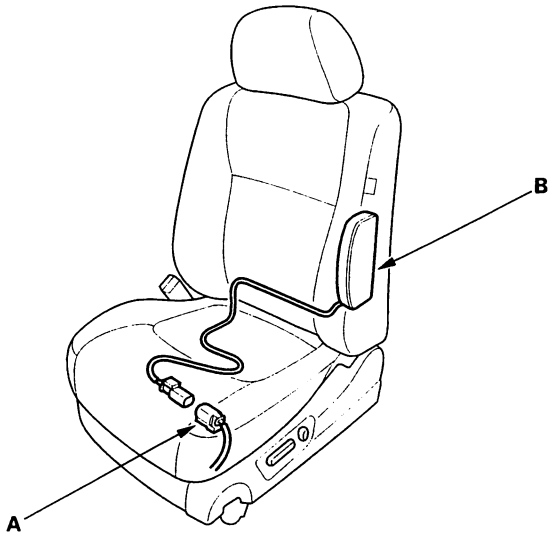

17. Disconnect SRS unit connector B (14P) from the SRS unit.

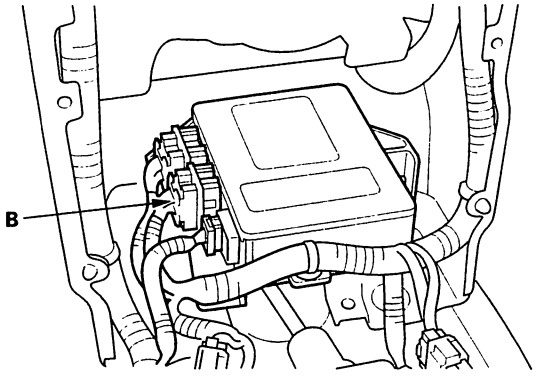

18. Check resistance between the No. 14 and No. 6 terminals of SRS unit connector B (14P), and between the No. 14 and No. 7 terminals. There should be 1 MΩ or more.

SRS UNIT CONNECTOR B (14P)

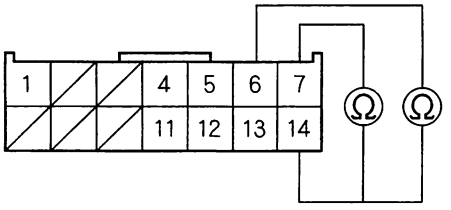

Wire side of female terminals

Is the resistance as specified?

YES—Faulty SRS unit; replace the SRS unit (see page 23-296).■

NO—Short to power in the SRS main harness; replace the SRS main harness.■

DTC Troubleshooting - '01-02 Models with Side Airbags (cont'd)

DTC 12-5: Short to ground in front passenger's side airbag inflator

1. Erase the DTC memory (see page 23-45).

2. Turn the ignition switch ON (II), and check that the SRS indicator light comes on for about 6 seconds and then goes off.

   Does the SRS indicator light stay on?

   YES—Go to step 3.

   NO—Intermittent failure, system is OK at this time. Go to Troubleshooting Intermittent Failures (see page 23-45).

3. Turn the ignition switch OFF. Disconnect the battery negative cable, and wait for 3 minutes.

4. Disconnect the right side wire harness 2P connector (A) from the front passenger's side airbag (B).

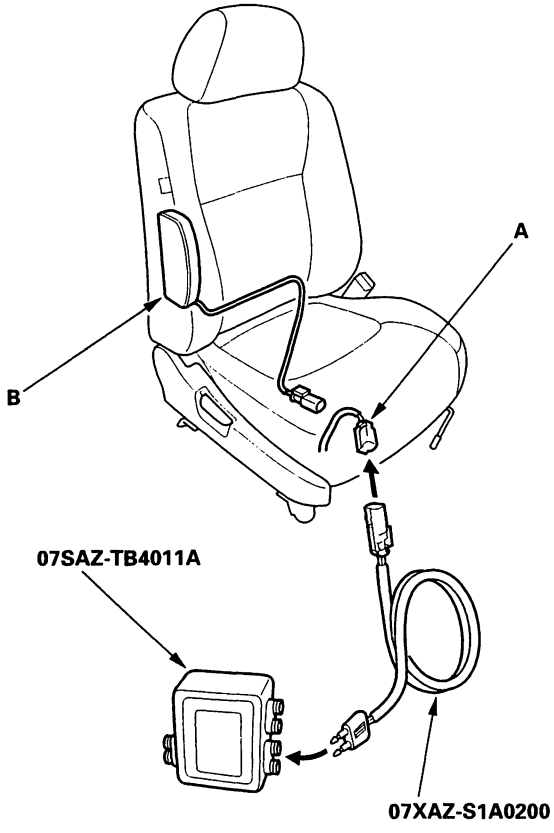

5. Connect the special tool (2 Ω connector) to the right side wire harness 2P connector.

6. Reconnect the battery negative cable.

7. Erase the DTC memory.

8. Read the DTC.

   Is DTC 12-5 indicated?

   YES—Go to step 9.

   NO—Short to ground in the front passenger's side airbag inflator; replace the front passenger's side airbag (see page 23-282).■

9. Disconnect the battery negative cable, and wait for 3 minutes.

10. Disconnect the right side wire harness 4P connector C583 (A) from the SRS main harness 4P connector (B).

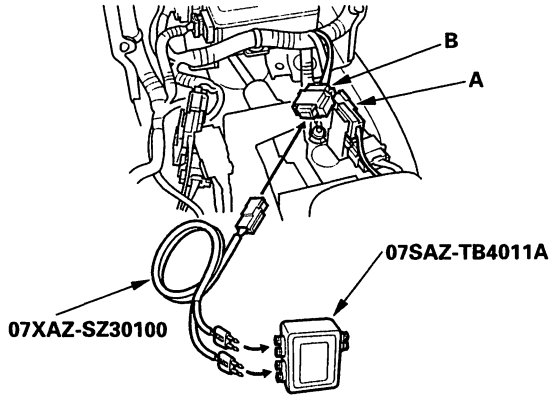

11. Connect the special tool (2 Ω connectors) to the SRS main harness 4P connector.

12. Reconnect the battery negative cable.

13. Erase the DTC memory.

14. Read the DTC.

    Is DTC 12-5 indicated?

    YES—Go to step 15.

    NO—Short to ground in the right side wire harness; replace the right side wire harness.■

15. Disconnect the battery negative cable, and wait for 3 minutes.

BACK

16. Disconnect the left side wire harness 2P connector (A) from the driver's side airbag (B).

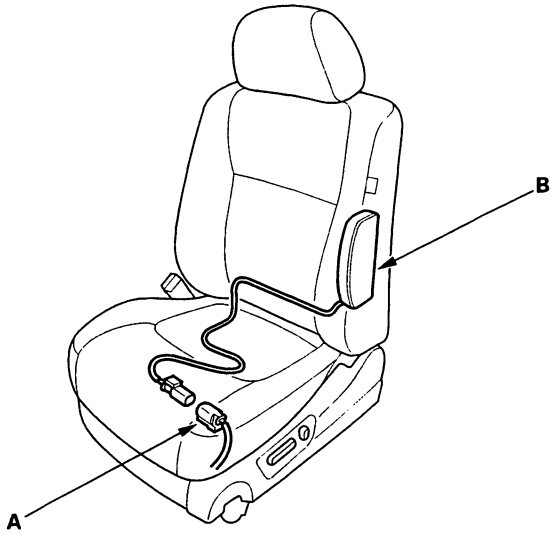

17. Disconnect SRS unit connector B(14P) from the SRS unit.

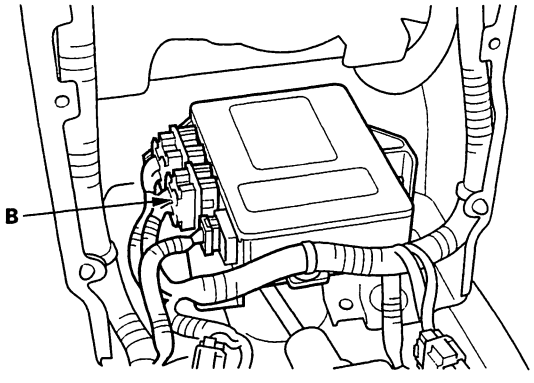

18. Check resistance between the No. 14 and No. 11 terminals of SRS unit connector B (14P), between the No. 14 and No. 12 terminals, and between the No. 14 terminal and body ground. There should be 1 MΩ or more.

SRS UNIT CONNECTOR B (14P)

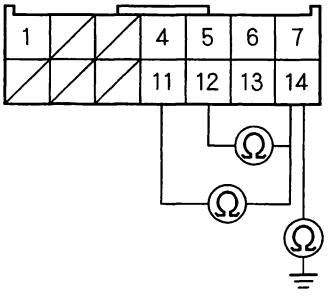

Wire side of female terminals

Is the resistance as specified?

YES—Faulty SRS unit; replace the SRS unit (see page 23-296).■

NO—Short to ground in the SRS main harness; replace the SRS main harness.■

DTC Troubleshooting - '01-02 Models with Side Airbags (cont'd)

DTC 13-3: No signal from the driver's side impact sensor

1. Erase the DTC memory (see page 23-45).

2. Turn the ignition switch ON (II), and check that the SRS indicator light comes on for about 6 seconds and then goes off.

   Does the SRS indicator light stay on?

   YES—Go to step 3.

   NO—Intermittent failure, system is OK at this time. Go to Troubleshooting Intermittent Failures (see page 23-45).

3. Turn the ignition switch OFF. Disconnect the battery negative cable, and wait for 3 minutes.

4. Check the connection between the left side wire harness 2P connector and the driver's side impact sensor.

   Is the connection OK?

   YES—Go to step 5.

   NO—Poor contact between the left side wire harness 2P connector and the driver's side impact sensor; reconnect or replace the driver's side impact sensor.■

5. Disconnect the driver's side airbag and front passenger's side airbag 2P connectors (A).

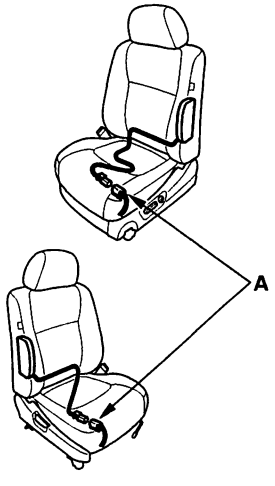

6. Disconnect the left side wire harness 2P connector (A) from the driver's side impact sensor (B).

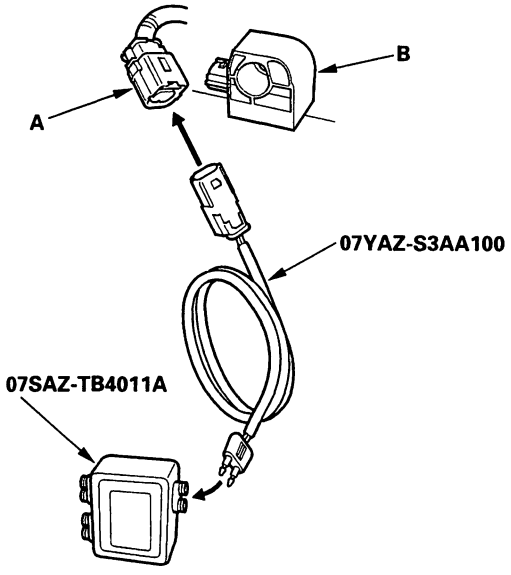

7. Connect the special tool (jumper connector) to the left side wire harness 2P connector.

8. Disconnect SRS unit connector B (14P) from the SRS unit.

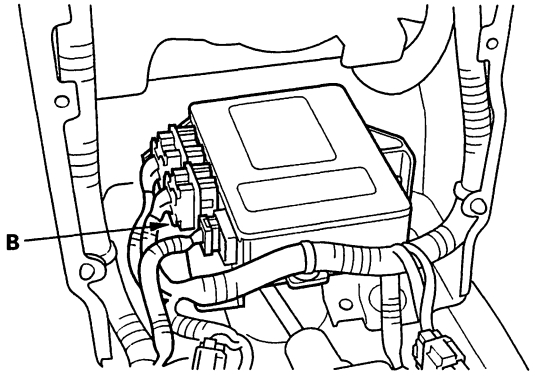

BACK

9. Check resistance between the No. 6 and No. 11 terminals of SRS unit connector B (14P). There should be 0 – 1.0 Ω.

SRS UNIT CONNECTOR B (14P)

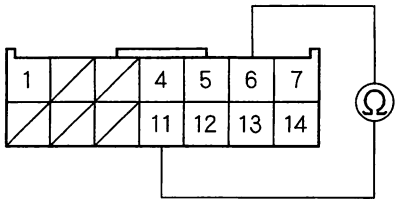

Wire side of female terminals

Is the resistance as specified?

YES – Faulty driver's side impact sensor or SRS unit; replace the driver's side impact sensor (see page 23-299). If the problem is still present, replace the SRS unit (see page 23-296). ■

NO – Open in the SRS main harness or left side wire harness; replace the faulty harness. ■

DTC 13-4: Faulty power supply to the driver's side impact sensor

1. Erase the DTC memory (see page 23-45).

2. Turn the ignition switch ON (II), and check that the SRS indicator light comes on for about 6 seconds and then goes off.

   Does the SRS indicator light stay on?

   YES – Go to step 3.

   NO – Intermittent failure, system is OK at this time. Go to Troubleshooting Intermittent Failures (see page 23-45).

3. Turn the ignition switch OFF. Disconnect the battery negative cable, and wait for 3 minutes.

4. Disconnect the driver's side airbag and front passenger's side airbag 2P connectors (A).

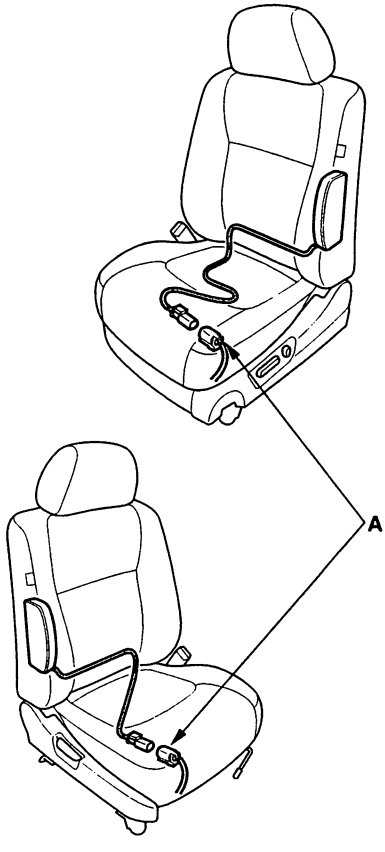

(cont'd)

DTC Troubleshooting - '01-02 Models with Side Airbags (cont'd)

5. Disconnect the left side wire harness 2P connector (A) from the driver's side impact sensor (B).

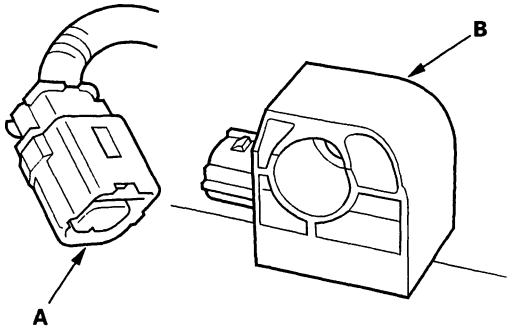

6. Disconnect SRS unit connector B (14P) from the SRS unit.

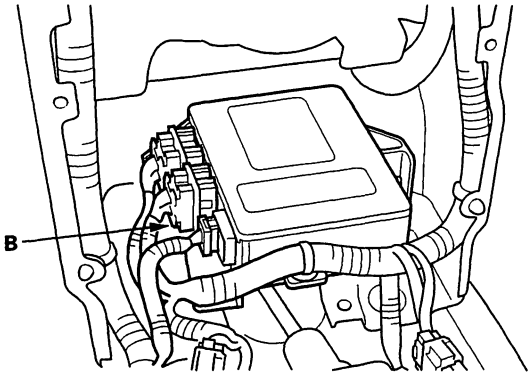

7. Check resistance between the No. 6 terminal of SRS unit connector B (14P) and body ground. There should be 1 MΩ or more.

SRS UNIT CONNECTOR B (14P)

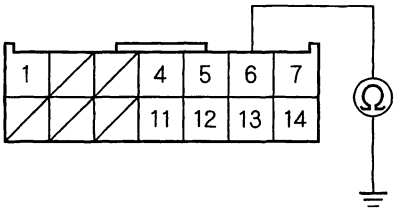

Wire side of female terminals

Is the resistance as specified?

YES—Go to step 8.

NO—Short to ground in the SRS main harness or left side wire harness; replace the faulty harness.■

8. Check resistance between the No. 6 and No. 11 terminals of SRS unit connector B (14P). There should be 1 MΩ or more.

SRS UNIT CONNECTOR B (14P)

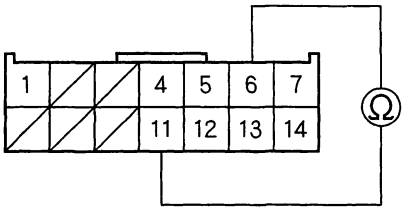

Wire side of female terminals

Is the resistance as specified?

YES—Faulty driver's side impact sensor or SRS unit; replace the driver's side impact sensor (see page 23-299). If the problem is still present, replace the SRS unit (see page 23-296).■

NO—Short in the SRS main harness or left side wire harness; replace the faulty harness.■

BACK

DTC 14-3: No signals from the front passenger's side impact sensor

1. Erase the DTC memory (see page 23-45).

2. Turn the ignition switch ON (II), and check that the SRS indicator light comes on for about 6 seconds and then goes off.

   Does the SRS indicator light stay on?

   YES – Go to step 3.

   NO – Intermittent failure, system is OK at this time. Go to Troubleshooting Intermittent Failures (see page 23-45).

3. Turn the ignition switch OFF. Disconnect the battery negative cable, and wait for 3 minutes.

4. Check the connection between the right side wire harness 2P connector and the front passenger's side impact sensor.

   Is the connection OK?

   YES – Go to step 5.

   NO – Poor contact between the right side wire harness 2P connector and the front passenger's side impact sensor; reconnect or replace the sensor (see page 23-299). ■

5. Disconnect the driver's side airbag and front passenger's side airbag 2P connectors (A).

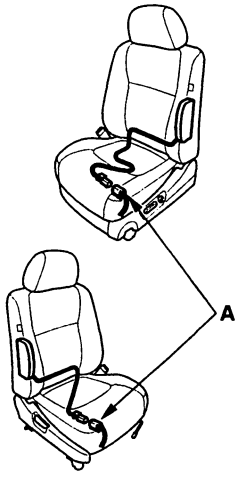

6. Disconnect the right side wire harness 2P connector (A) from the front passenger's side impact sensor (B).

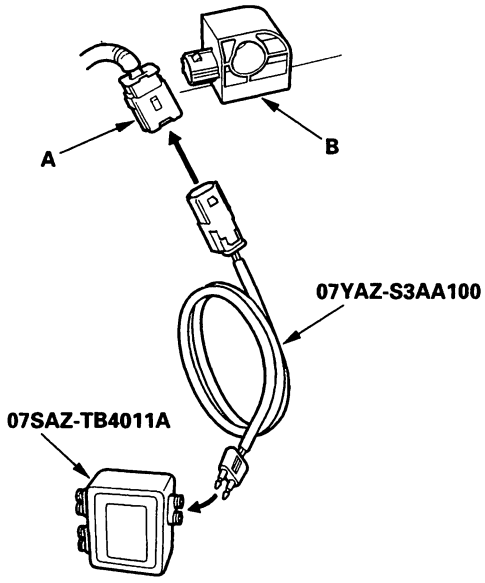

7. Connect the special tool (jumper connector) to the right side wire harness 2P connector.

8. Disconnect SRS unit connector B (14P) from the SRS unit.

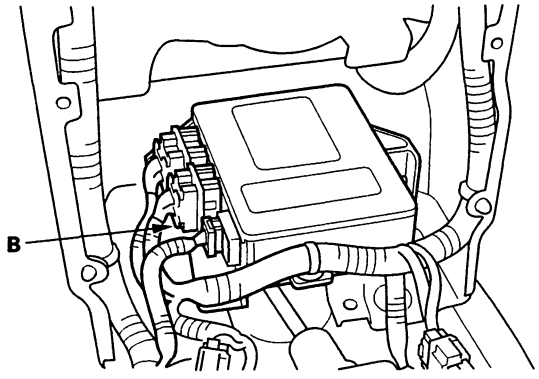

(cont'd)

DTC Troubleshooting - '01-02 Models with Side Airbags (cont'd)

9. Check resistance between the No. 7 and No. 12 terminals of SRS unit connector B (14P). There should be 0 – 1.0 Ω.

SRS UNIT CONNECTOR B (14P)

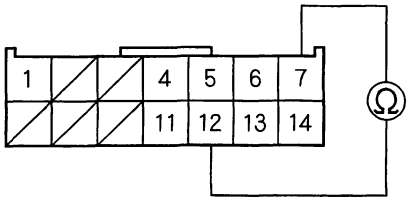

Wire side of female terminals

Is the resistance as specified?

YES – Faulty front passenger's side impact sensor or SRS unit; replace the front passenger's side impact sensor (see page 23-299). If the problem is still present, replace the SRS unit (see page 23-296). ■

NO – Open in the right side wire harness or SRS main harness; replace the faulty harness. ■

DTC 14-4: Faulty power supply to the front passenger's side impact sensor

1. Erase the DTC memory (see page 23-45).

2. Turn the ignition switch ON (II), and check that the SRS indicator light comes on for about 6 seconds and then goes off.

   Does the SRS indicator light stay on?

   YES – Go to step 3.

   NO – Intermittent failure, system is OK at this time. Go to Troubleshooting Intermittent Failures (see page 23-45).

3. Turn the ignition switch OFF. Disconnect the battery negative cable, and wait for 3 minutes.

4. Disconnect the driver's side airbag and front passenger's side airbag 2P connectors (A).

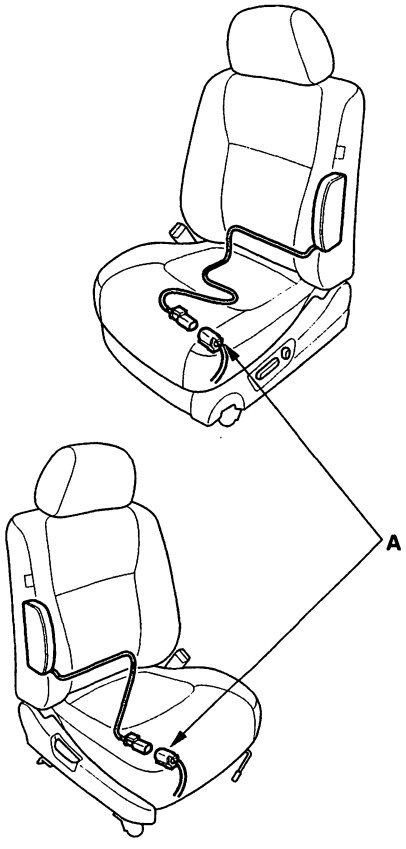

BACK

5. Disconnect the right side wire harness 2P connector (A) from the front passenger's side impact sensor (B).

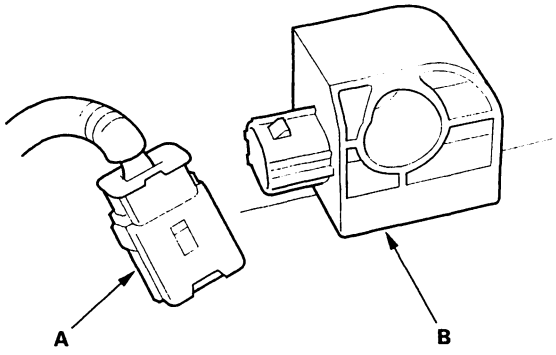

6. Disconnect SRS unit connector B (14P) from the SRS unit.

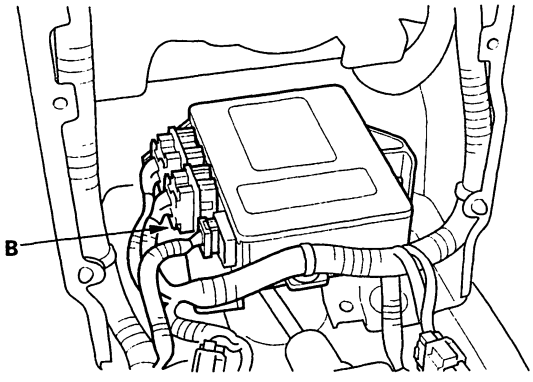

7. Check resistance between the No. 7 terminal of SRS unit connector B (14P) and body ground. There should be 1 MΩ or more.

SRS UNIT CONNECTOR B (14P)

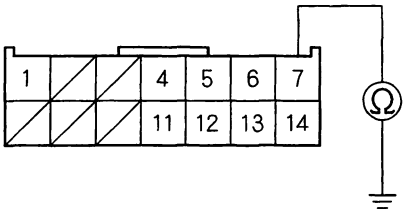

Wire side of female terminals

Is the resistance as specified?

YES – Go to step 8.

NO – Short to ground in the SRS main harness or right side wire harness; replace the faulty harness. ■

8. Check resistance between the No. 7 and No. 12 terminals of SRS unit connector B (14P). There should be 1 MΩ or more.

SRS UNIT CONNECTOR B (14P)

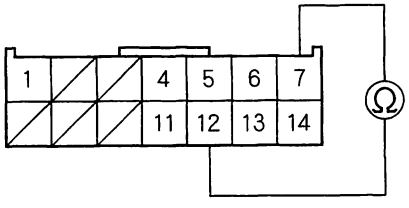

Wire side of female terminals

Is the resistance as specified?

YES – Faulty front passenger's side impact sensor or SRS unit; replace the front passenger's side impact sensor (see page 23-299). If the problem is still present, replace the SRS unit (see page 23-296). ■

NO – Short in the SRS main harness or right side wire harness; replace the faulty harness. ■

DTC Troubleshooting - '01-02 Models with Side Airbags (cont'd)

DTC 15-1: Faulty OPDS unit

1. Make sure nothing is on the front passenger's seat.
2. Initialize the OPDS unit (see page 23-46).
3. Erase the DTC memory (see page 23-45).
4. Read the DTC.

   Is DTC 15-1 indicated?

   YES—Go to step 5.

   NO—Intermittent failure, system is OK at this time. Go to Troubleshooting Intermittent Failures (see page 23-45).

5. Check the No. 7 (7.5A) fuse in the driver's under-dash fuse/relay box.

   Is the fuse OK?

   YES—Go to step 6.

   NO—Go to step 13.

6. Disconnect OPDS unit connector D (8P) from the OPDS unit (B).

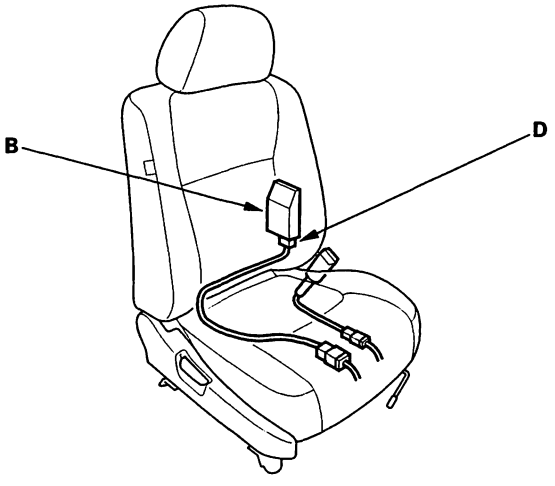

7. Turn the ignition switch ON (II).
8. Check for voltage between the No. 4 terminal of OPDS unit connector D (8P) and body ground. There should be battery voltage.

OPDS UNIT CONNECTOR D (8P)

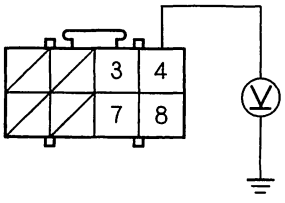

Wire side of female terminals

Is there battery voltage?

YES—Go to step 20.

NO—Go to step 9.

9. Turn the ignition switch OFF.
10. Disconnect the right side wire harness 6P connector C582 (A) from the dashboard wire harness A 6P connector (B).

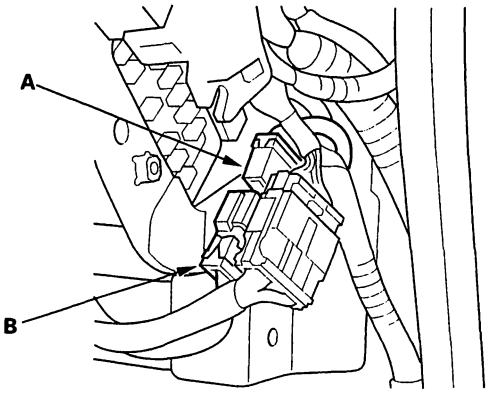

11. Turn the ignition switch ON (II).

BACK

12. Check for voltage between the No. 6 terminal of the dashboard wire harness A 6P connector (C582) and body ground. There should be battery voltage.

DASHBOARD WIRE HARNESS A 6P CONNECTOR (C582)

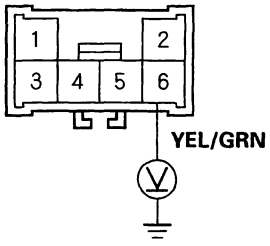

Wire side of female terminals

Is there battery voltage?

YES – Open in the right side wire harness or OPDS unit harness; if the OPDS unit harness is OK, replace the right side wire harness. ■

NO – Open in dashboard wire harness A; replace dashboard wire harness A. ■

13. Replace the No. 7 (7.5A) fuse in the driver's under-dash fuse/relay box.

14. Turn the ignition switch ON (II) for 30 seconds, then turn it OFF.

15. Check the No. 7 (7.5A) fuse in driver's under-dash fuse/relay box.

Is the fuse OK?

YES – Intermittent failure, system is OK at this time. Go to Troubleshooting Intermittent Failures (see page 23-45).

NO – Go to step 16.

16. Replace the No. 7 (7.5A) fuse in the driver's under-dash fuse/relay box.

17. Disconnect OPDS unit connector D (8P) from the OPDS unit (B).

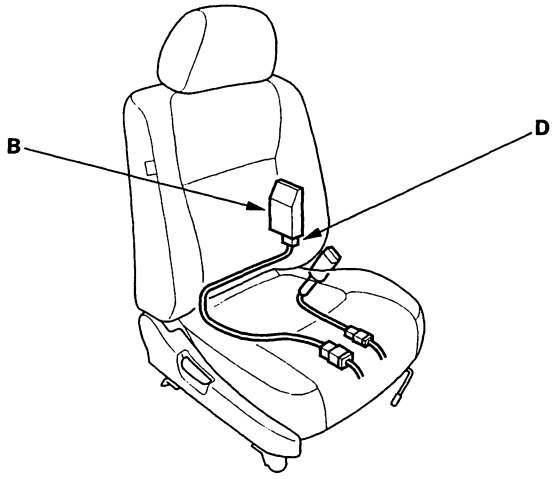

18. Turn the ignition switch ON (II) for 30 seconds, then turn it off.

19. Check the No. 7 (7.5A) fuse in the driver's under-dash fuse/relay box.

Is the fuse OK?

YES – Short to ground in the OPDS unit; replace the OPDS unit (see page 23-300). ■

NO – Short to ground in the No. 7 (7.5A) circuit; refer to section 22 and continue troubleshooting. ■

20. Turn the ignition switch OFF.

(cont'd)

DTC Troubleshooting - '01-02 Models with Side Airbags (cont'd)

21. Check resistance between the No. 8 terminal of OPDS unit D (8P) connector and body ground. There should be 0 – 1.0 Ω.

OPDS UNIT CONNECTOR D (8P)

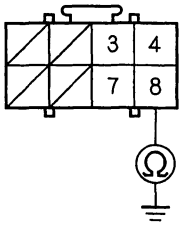

Wire side of female terminals

Is the resistance as specified?

YES – Go to step 22.

NO – Open in the right side wire harness or OPDS unit harness, or poor ground (G581). If G581 is OK, replace the faulty harness. ■

22. Disconnect the battery negative cable, and wait for 3 minutes.

23. Disconnect the side airbag connectors (A).

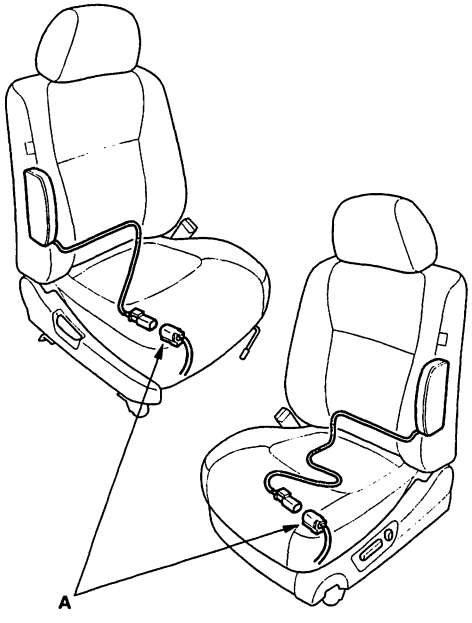

24. Disconnect SRS unit connector B (14P) from the SRS unit.

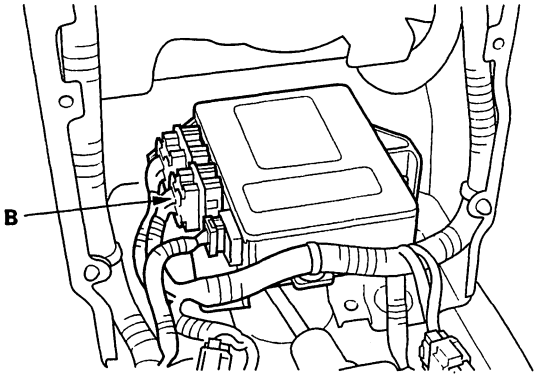

25. Check resistance between the No. 1 terminal of SRS unit connector B (14P) and body ground. There should be 1 MΩ or more.

SRS UNIT CONNECTOR B (14P)

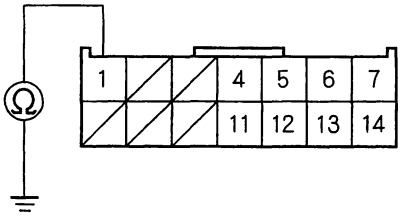

Wire side of female terminals

Is the resistance as specified?

YES – Go to step 26.

NO – Short to ground in the SRS main harness, in the right side wire harness, or in the OPDS unit harness; replace the faulty harness. ■

BACK

26. Check resistance between the No. 1 terminal of SRS unit connector B (14P) and the No. 7 terminal of OPDS unit connector D (8P). There should be 0 – 1.0 Ω.

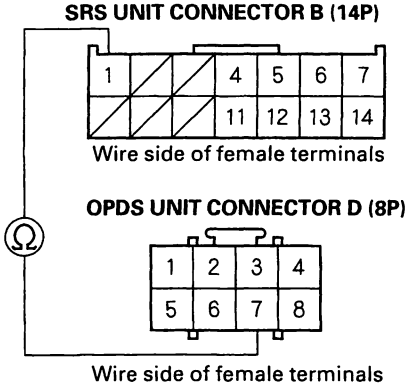

Is the resistance as specified?

YES – Go to step 27.

NO – Open in the SRS main harness, in the right side wire harness or in the OPDS unit harness; replace the faulty harness. ■

27. Disconnect the SRS main harness 2P connector N from the driver's under-dash fuse/relay box.

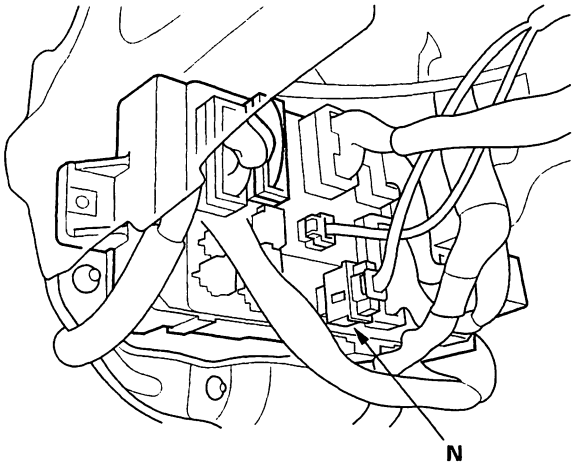

28. Reconnect the negative battery cable.

29. Turn the ignition switch ON (II).

30. Check for voltage between the No. 1 terminal of SRS unit connector B (14P) and body ground. There should be 0.5 V or less.

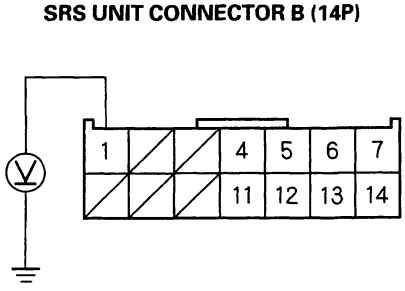

Is the voltage as specified?

YES – Faulty OPDS unit or SRS unit. Replace the OPDS unit (see page 23-300). If the problem is still present, replace the SRS unit (see page 23-296). ■

NO – Short to power in the SRS main harness, in the right side wire harness or in the OPDS unit harness; replace the faulty harness. ■

DTC Troubleshooting - '01-02 Models with Side Airbags (cont'd)

DTC 15-2: Faulty side airbag indicator light circuit

1. Erase the DTC memory (see page 23-45).

2. Turn the ignition switch ON (II), and check that the SRS indicator light comes on for about 6 seconds and then goes off.

   Does the SRS indicator light stay on?

   YES—Go to step 3.

   NO—Intermittent failure, system is OK at this time. Go to Troubleshooting Intermittent Failures (see page 23-45).

3. Make sure nothing is on the front passenger's seat.

4. Turn the ignition switch ON (II), and check that the side airbag indicator light comes on.

   Does the side airbag indicator light come on?

   YES—Go to step 5.

   NO—Go to step 6.

5. Make sure the side airbag indicator light comes on for 5 seconds and then goes off.

   Does the side airbag indicator light go off?

   YES—Faulty OPDS unit or SRS unit; replace the OPDS unit (see page 23-300).If the problem is still present, replace the SRS unit (see page 23-296).■

   NO—Go to step 36.

6. Turn the ignition switch OFF.

7. Check the No. 9 (7.5A) fuse in the driver's under-dash fuse/relay box.

   Is the fuse OK?

   YES—Go to step 8.

   NO—Short to ground in the No. 9 (7.5A) fuse circuit; refer to section 22, and continue troubleshooting.■

8. Check for a blown side airbag indicator bulb.

   Is the side airbag indicator bulb OK?

   YES—Go to step 9.

   NO—Blown side airbag indicator bulb; replace the bulb.■

9. Disconnect OPDS unit connector D (8P) from the OPDS unit (B).

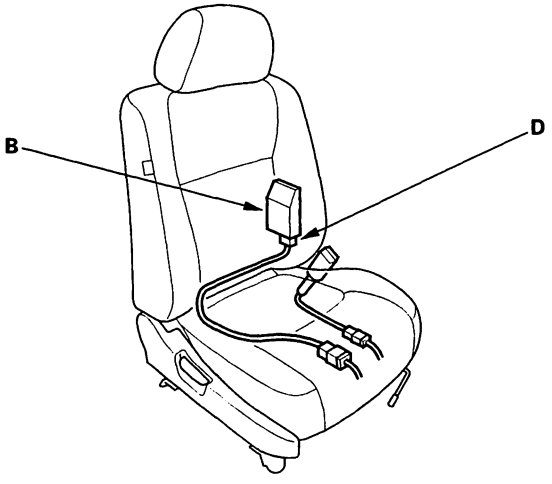

10. Turn the ignition switch ON (II).

11. Check for voltage between the No. 3 terminal of OPDS unit connector D (8P) and body ground. There should be battery voltage.

OPDS UNIT CONNECTOR D (8P)

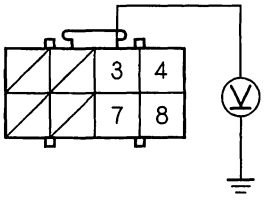

Wire side of female terminals

Is there battery voltage?

YES—Go to step 12.

NO—Go to step 24.

BACK

12. Turn the ignition switch OFF.

13. Disconnect dashboard wire harness connector I (18P) from the driver's under-dash fuse/relay box.

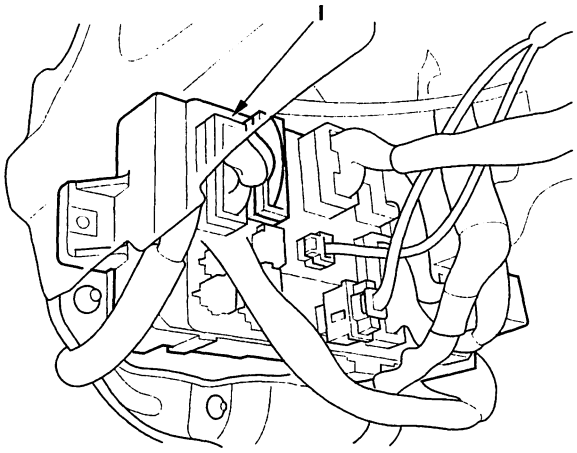

14. Turn the ignition switch ON (II).

15. Check for voltage between the No. 3 terminal of OPDS unit connector D (8P) and body ground. There should be 0.5 V or less.

OPDS UNIT CONNECTOR D (8P)

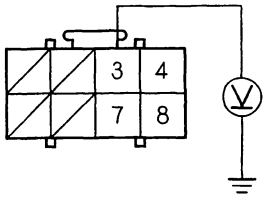

Wire side of female terminals

Is the voltage as specified?

YES – Faulty OPDS unit; replace the OPDS unit (see page 23-300). ■

NO – Go to step 16.

16. Turn the ignition switch OFF.

17. Disconnect gauge assembly connector B (22P) from the gauge assembly.

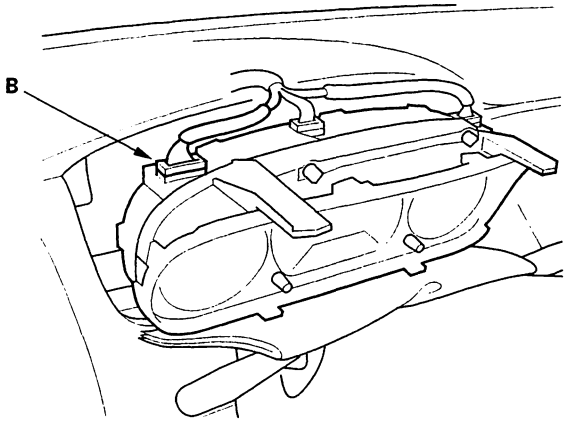

18. Turn the ignition switch ON (II).

19. Check for voltage between the No. 3 terminal of OPDS unit connector D (8P) and body ground. There should be 0.5 V or less.

OPDS UNIT CONNECTOR D (8P)

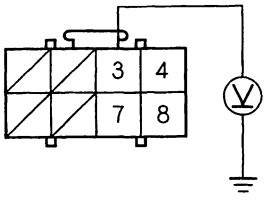

Wire side of female terminals

Is the voltage as specified?

YES – Short to power in the gauge assembly; replace the gauge assembly. ■

NO – Go to step 20.

(cont'd)

DTC Troubleshooting - '01-02 Models with Side Airbags (cont'd)

20. Turn the ignition switch OFF.

21. Disconnect the right side wire harness 6P connector C582 (A) from the dashboard wire harness A 6P connector (B).

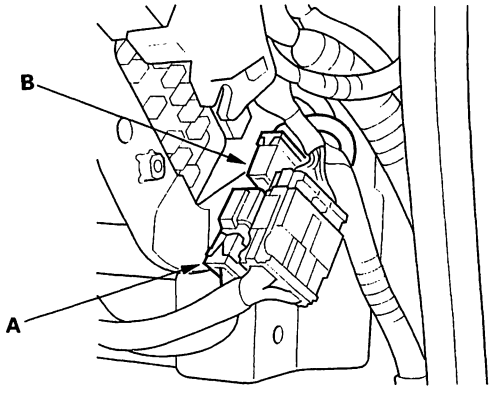

22. Turn the ignition switch ON (II).

23. Check for voltage between the No. 3 terminal of OPDS unit connector D (8P) and body ground. There should be 0.5 V or less.

OPDS UNIT CONNECTOR D (8P)

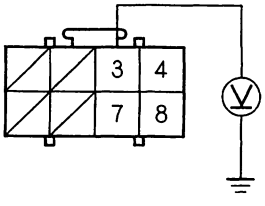

Wire side of female terminals

Is the voltage as specified?

YES – Short to power in dashboard wire harness A; replace dashboard wire harness A. ■

NO – Short to power in the right side wire harness or the OPDS unit harness; if the OPDS unit harness is OK, replace the right side wire harness. ■

24. Turn the ignition switch OFF.

25. Backprobe the No. 17 terminal of gauge assembly connector B (22P). Do not disconnect gauge assembly connector B (22P) from the gauge assembly.

26. Turn the ignition switch ON (II).

27. Check for voltage between the No. 17 terminal of gauge assembly connector B (22P) and body ground. There should be battery voltage.

GAUGE ASSEMBLY CONNECTOR B (22P)

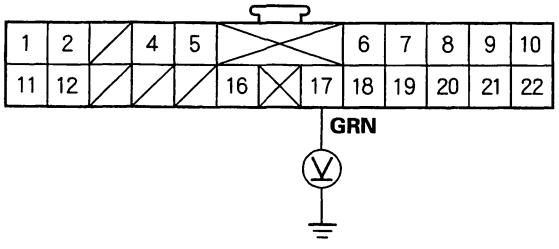

Wire side of female terminals

Is there battery voltage?

YES – Go to step 28.

NO – Go to step 32.

28. Turn the ignition switch OFF.

29. Disconnect the right side wire harness 6P connector C582 (A) from the dashboard wire harness A 6P connector (B).

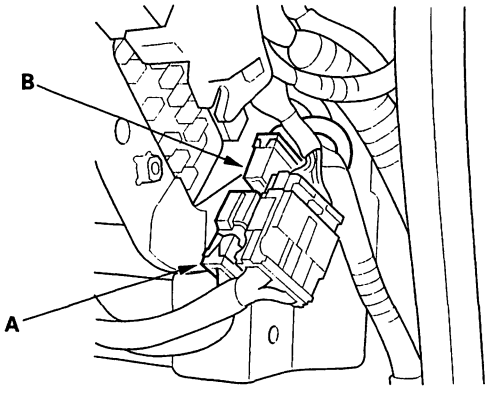

BACK

30. Turn the ignition switch ON (II).

31. Check for voltage between the No. 5 terminal of the dashboard wire harness A 6P connector (C582) and body ground. There should be battery voltage.

DASHBOARD WIRE HARNESS A 6P CONNECTOR (C582)

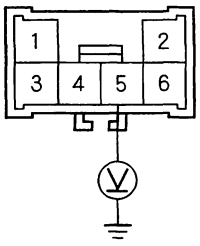

Terminal side of male terminals

Is there battery voltage?

YES—Poor contact at the dashboard wire harness A 6P connector and right side wire harness 6P connector or an open in the right side wire harness. Check the connection between the dashboard wire harness A 6P connector and right side wire harness 6P connector; if the connection is OK, replace the right side wire harness.■

NO—Poor contact at the dashboard wire harness A 22P connector and gauge assembly connector C (22P), or an open in dashboard wire harness A. Check gauge assembly connector B (22P) and gauge assembly connections; if the connections are OK, replace dashboard wire harness A.■

32. Turn the ignition switch OFF.

33. Disconnect gauge assembly connector B (22P) from the gauge assembly.

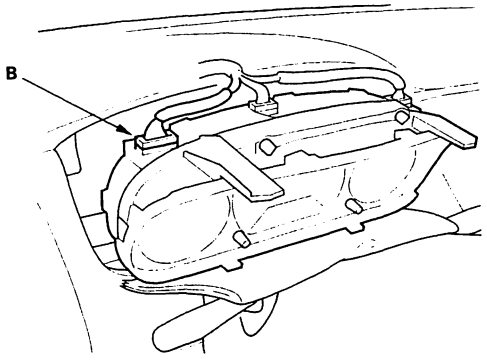

34. Turn the ignition switch ON (II).

35. Check for voltage between the No. 11 terminal of gauge assembly connector B (22P) and body ground. There should be battery voltage.

GAUGE ASSEMBLY CONNECTOR B (22P)

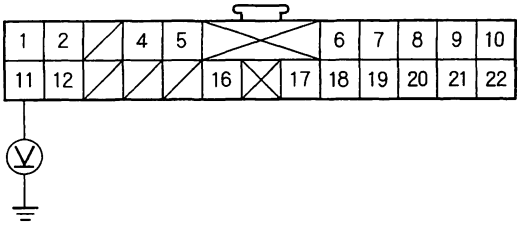

Wire side of female terminals

Is there battery voltage?

YES—Faulty side airbag indicator light circuit; replace the gauge assembly.■

NO—Open in dashboard wire harness A; replace dashboard wire harness A.■

(cont'd)

DTC Troubleshooting - '01-02 Models with Side Airbags (cont'd)

36. Turn the ignition switch OFF.

37. Disconnect OPDS unit connector D (8P) from the OPDS unit (B).

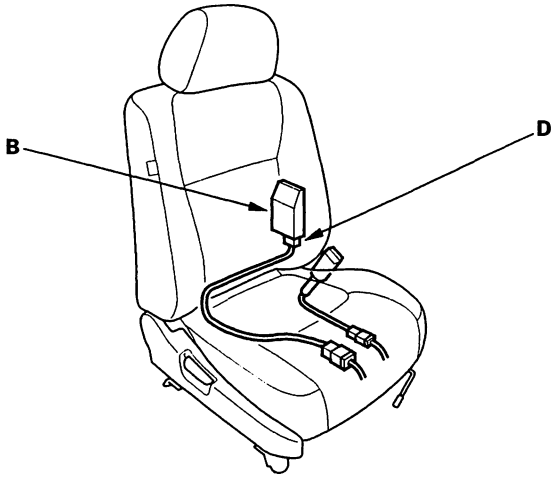

38. Turn the ignition switch ON (II).

    Does the side airbag indicator light stay off?

    YES—Go to step 39.

    NO—Faulty OPDS unit; replace the OPDS unit (see page 23-300).■

39. Turn the ignition switch OFF.

40. Disconnect gauge assembly connector B (22P) from the gauge assembly.

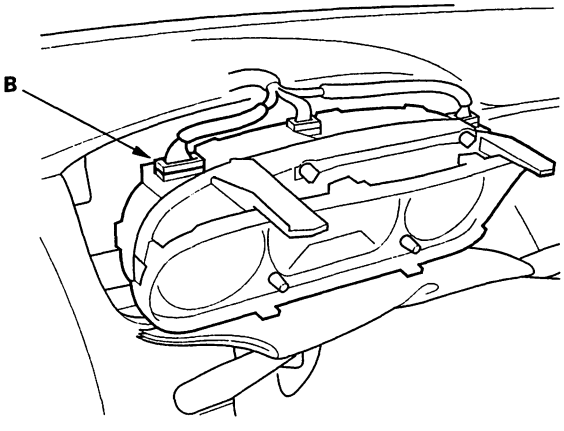

41. Check resistance between the No. 17 terminal of gauge assembly connector B (22P) and body ground. There should 1 MΩ or more.

GAUGE ASSEMBLY CONNECTOR B (22P)

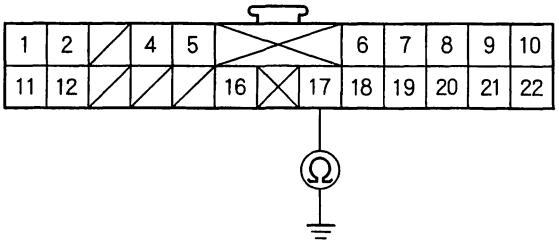

Wire side of female terminals

Is the resistance as specified?

YES—Short to ground in the side airbag indicator light circuit; replace the gauge assembly.■

NO—Short to ground in dashboard wire harness A, right side wire harness, or OPDS unit harness; replace the faulty harness.■

BACK

DTC 15-3: Faulty OPDS sensor

1. Erase the DTC memory (see page 23-45).

2. Turn the ignition switch ON (II), and check that the SRS indicator light comes on for about 6 seconds, and then goes off.

   Does the SRS indicator light stay on?

   YES—Go to step 3.

   NO—Intermittent failure, system is OK at this time. Go to Troubleshooting Intermittent Failures (see page 23-45).

NOTE: Aftermarket devices (fluorescent map lights, laptop computers, etc.) used near the front passenger's seat-back can interfere with the seat-back sensors and cause a false DTC 15-3. If one of these devices was used, erase the DTC, operate the device near the seat-back, and recheck for DTCs. If DTC 15-3 is reset, erase it, and do not use the device near the seat-back.

3. Check the connection at the OPDS sensor harness connector and the OPDS unit connector.

   Are the connections OK?

   YES—Go to step 4.

   NO—Reconnect the OPDS sensor harness connector, and clear the DTC.■

4. Replace the OPDS sensor/seat back foam (Sedan) (see page 20-98), (Coupe) (see page 20-97), and reinitialize the OPDS system (see page 23-46).

5. Erase the DTC memory.

6. Read the DTC.

   Is DTC 15-3 indicated?

   YES—Go to step 7.

   NO—The system is OK.■

7. Replace the OPDS unit (see page 23-300), and reinitialize the OPDS system.

8. Erase the DTC memory.

9. Read the DTC.

   Is DTC 15-3 indicated?

   YES—Replace the SRS unit.■

   NO—The system is OK.■

SRS Indicator Light Circuit Troubleshooting - '98-99 Models

The SRS Indicator Light Doesn't Come On

1. Turn the ignition switch ON (II), and check to see if the other indicator lights come on (brake system, etc).

   Do the other indicator lights come on?

   YES—Go to step 5.

   NO—Go to step 2.

2. Check the No. 9 (7.5A) fuse in the driver's under-dash fuse/relay box.

   Is the fuse OK?

   YES—Go to step 4.

   NO—Go to step 3.

3. Replace the No. 9 (7.5A) fuse, and check to see if the SRS indicator light comes on.

   Does the SRS indicator light come on?

   YES—The system is OK.■

   NO—Go to step 4.

4. Check for an open in the wire harness between fuse No. 9 (7.5A) and the gauge assembly, and repair. Check that the SRS indicator light comes on.

   Does the SRS indicator light come on?

   YES—The system is OK.■

   NO—Go to step 5.

5. Turn the ignition switch OFF.

6. Remove the gauge assembly.

7. Check for a blown SRS indicator bulb.

   Is the SRS indicator bulb OK?

   YES—Go to step 9.

   NO—Go to step 8.

8. Replace the bulb, and reconnect the gauge assembly connectors. Then turn the ignition switch ON (II).

   Does the SRS indicator light come on?

   YES—The system is OK.■

   NO—Go to step 9.

9. Turn the ignition switch OFF, and disconnect gauge assembly connector C (16P) from the gauge assembly.

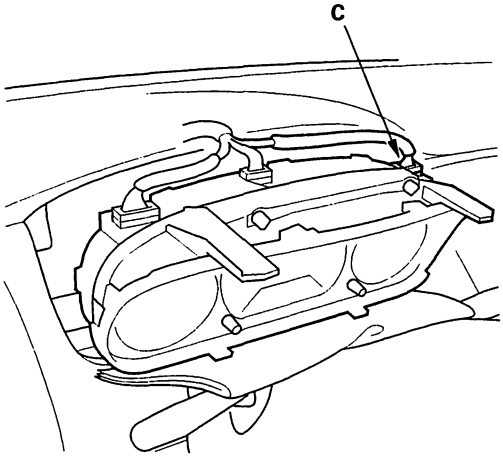

10. Connect a voltmeter between the No. 9 terminal of the 16P connector and body ground.

GAUGE ASSEMBLY CONNECTOR C (16P)

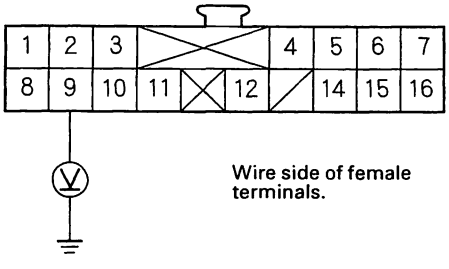

BACK

11. Turn the ignition switch ON (II), and measure voltage.

    Is there 8.5 V or less within the first 6 seconds after turning the ignition switch ON (II)?

    YES – Faulty SRS indicator light circuit in the gauge assembly; replace the SRS indicator circuit board in the gauge assembly. ■

    NO – Go to step 12.

12. Turn the ignition switch OFF.

13. Disconnect the dashboard wire harness 3P connector C503 (A) from the SRS main harness.

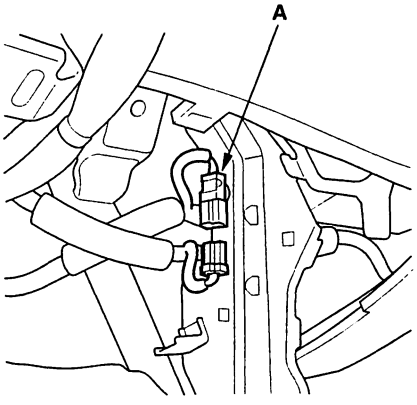

14. Connect a voltmeter between the No. 1 terminal of the dashboard wire harness 3P connector (C503) and body ground.

DASHBOARD WIRE HARNESS 3P CONNECTOR (C503)

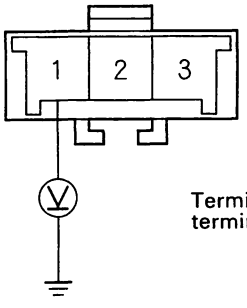

Terminal side of male terminals

15. Turn the ignition switch ON (II), and measure voltage.

    Is there 8.5 V or more within the first 6 seconds after turning the ignition switch ON (II)?

    YES – Short to power in the BLU wire of the dashboard wire harness; repair the harness. ■

    NO – Go to step 16.

16. Turn the ignition switch OFF.

17. Disconnect the battery negative cable, and wait 3 minutes.

18. Disconnect the driver's and front passenger's airbag connectors (A).

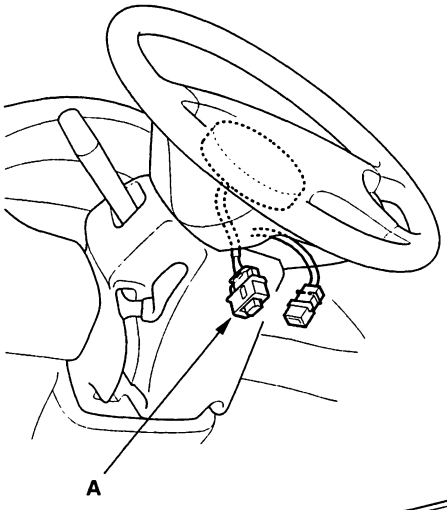

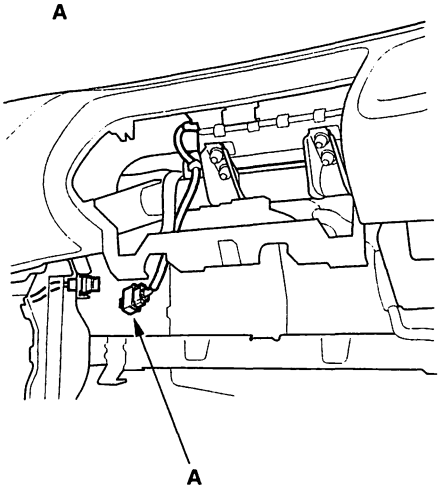

(cont'd)

SRS Indicator Light Circuit Troubleshooting - '98-99 Models (cont'd)

19. Disconnect the SRS main harness 18P connector (A) from the SRS unit.

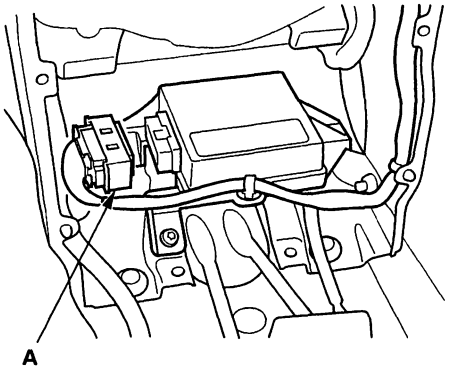

20. Connect a voltmeter between the No. 6 terminal of the SRS main harness 18P connector and ground.

SRS MAIN HARNESS 18P CONNECTOR

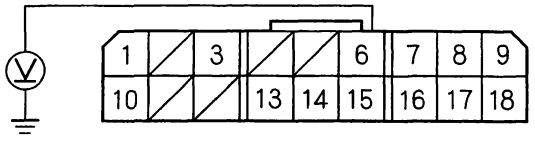

Wire side of female terminals

21. Turn the ignition switch ON (II), and measure voltage. There should be 0.5 V or less.

Is the voltage as specified?

YES—Faulty SRS unit; replace the unit (see page 23-295).■

NO—Short to power in the BLU wire of the SRS main harness; replace the harness.■

The "SRS" Indicator Light Stays On When In "SCS" Menu Method

NOTE:
- Inability to retrieve DTCs with the PGM Tester. Retrieve the flash codes with the SCS mode (see page 23-42).
- A new SRS unit must sense the entire system is OK before completing its initial self-test. The most common cause of an incomplete self-test is the failure to replace all deployed parts after a collision, in particular, and seat belt tensioners.
- An incomplete self-test prevents the PGM Tester from retrieving DTCs, although flash codes are available in the Tester's SCS mode.

1. Erase the DTC memory (see page 23-45).

2. Turn the ignition switch ON (II), and check the SRS indicator light.

   Does the SRS indicator light stay on?

   YES—Go to step 3.

   NO—Intermittent failure, system is OK at this time. Recheck for an intermittent failure (see page 23-45).

3. Turn the ignition switch OFF.

4. Check for blown No. 2 (10 A) fuse in the driver's under-dash fuse/relay box.

   Is the fuse OK?

   YES—Go to step 5.

   NO—Replace the No. 2 (10A) fuse, and recheck the system.■

5. Disconnect the battery negative cable, and wait for 3 minutes.

BACK

6. Disconnect the driver's and front passenger's airbag connectors (A).

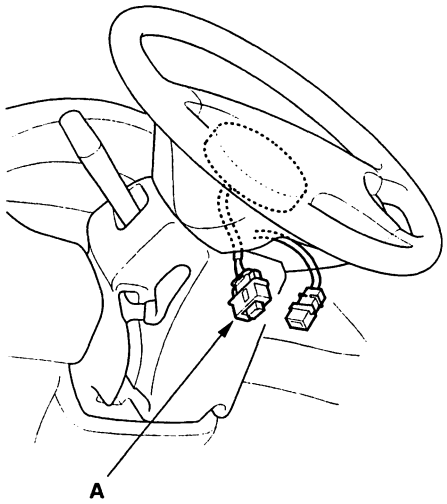

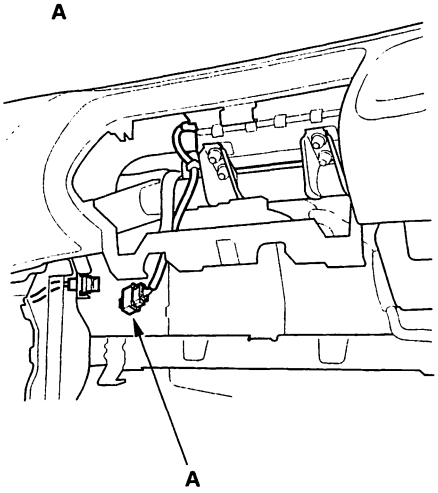

7. Disconnect the SRS main harness 18P connector (A) from the SRS unit.

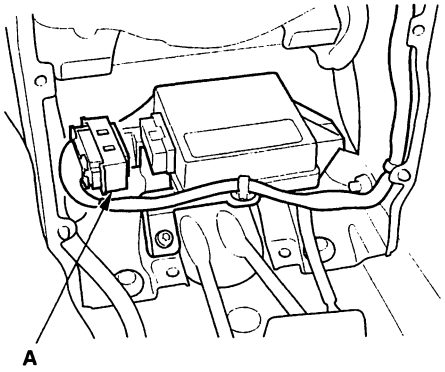

8. Reconnect the battery negative cable.

9. Connect a voltmeter between the No. 3 terminal of the SRS main harness 18P connector and body ground.

SRS MAIN HARNESS 18P CONNECTOR

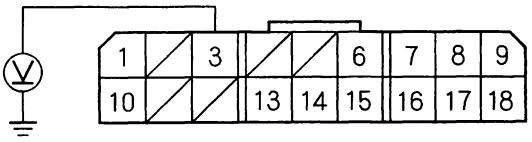

Wire side of female terminals.

10. Turn the ignition switch ON (II).

Is there battery voltage?

YES – Go to step 11.

NO – Open in the SRS main harness (VB line); replace the harness. ■

11. Connect the SRS main harness 18P connector terminals No. 6 and No. 3 with a jumper wire and backprobe adapters.

SRS MAIN HARNESS 18P CONNECTOR

JUMPER WIRE

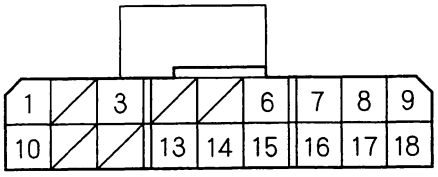

Wire side of female terminals.

Does the SRS indicator light go off?

YES – Faulty SRS unit, or poor contact at the SRS main harness 18P connector; check the connector. If the connector is OK, replace the SRS unit (see page 23-295). ■

NO – Go to step 12.

(cont'd)

SRS Indicator Light Circuit Troubleshooting - '98-99 Models (cont'd)

12. Check the No. 2 (10A) fuse in the driver's under-dash fuse/relay box.

    Is the fuse blown?

    YES – Go to step 13.

    NO – Go to step 16.

13. Turn the ignition switch OFF.

14. Disconnect gauge assembly connector C (16P) from the gauge assembly.

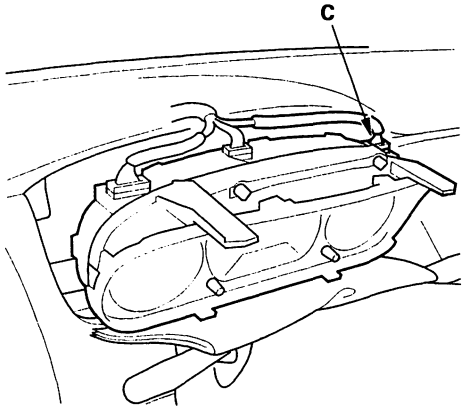

15. Check resistance between the No.9 terminal of gauge assembly connector C (16P) and ground. There should be 1 MΩ or more.

GAUGE ASSEMBLY CONNECTOR C (16P)

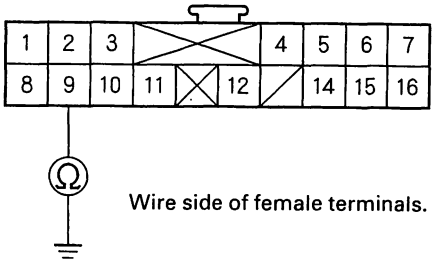

Is the resistance as specified?

YES – Short to ground in the gauge assembly; replace the gauge assembly. ■

NO – Go to step 23.

16. Turn the ignition switch OFF.

17. Remove the gauge assembly. Do not disconnect the connector from the gauge assembly.

18. Turn the ignition switch ON (II).

19. Connect the No. 9 terminal of gauge assembly connector C (16P) and No. 11 terminal of gauge assembly connector B (22P) with a jumper wire.

GAUGE ASSEMBLY CONNECTOR C (16P)

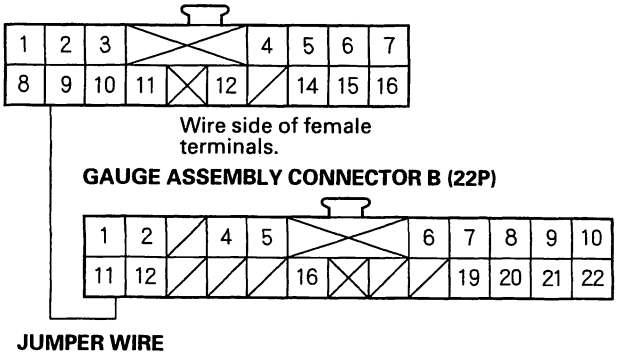

Does the SRS indicator light go off?

YES – Go to step 20.

NO – Faulty SRS indicator light circuit in the gauge assembly; replace the SRS printed circuit board in the gauge assembly. ■

20. Turn the ignition switch OFF.

21. Disconnect gauge assembly connector C (16P) from the gauge assembly.

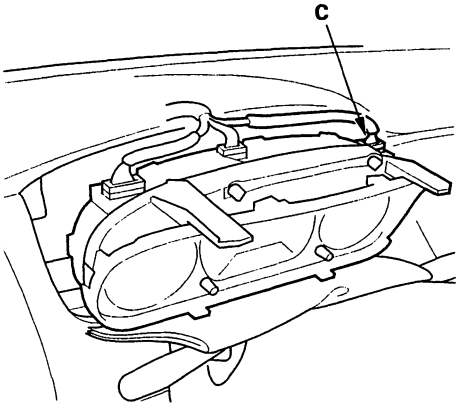

BACK

22. Check resistance between the No. 6 terminal of the SRS main harness 18P connector and No. 9 terminal of gauge assembly connector C (16P). There should be 0 – 1.0 Ω.

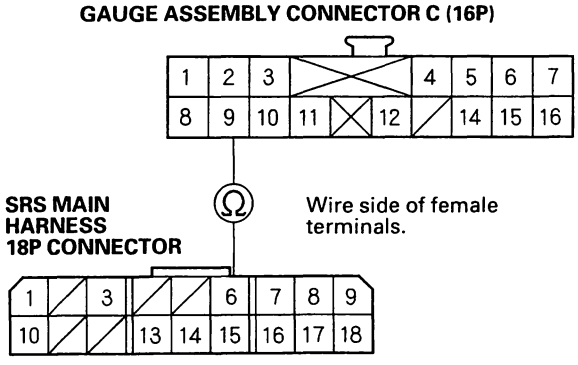

Is the resistance as specified?

YES – Go to step 25.

NO – Go to step 28.

23. Disconnect the SRS main harness 3P connector C503 (A) from the dashboard wire harness.

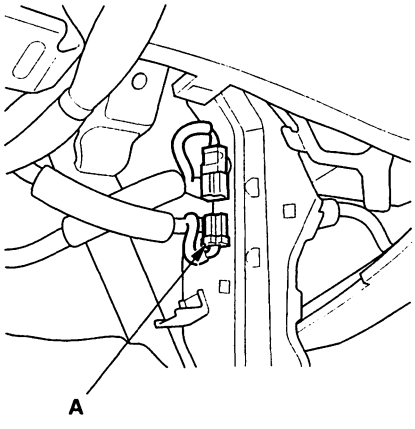

24. Check resistance betweeen the No. 1 terminal of the SRS main harness 3P connector C503 and ground. There should be 1 MΩ or more.

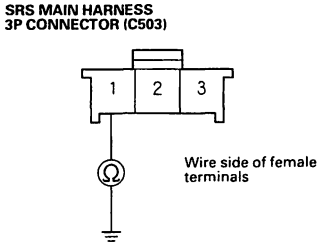

Is the resistance as specified?

YES – Short to ground in the dashboard wire harness; repair the dashboard wire harness. ■

NO – Short to ground in the SRS main harness; replace the SRS main harness. ■

25. Reconnect the SRS main harness 18P connector to the SRS unit.

26. Connect a voltmeter between the No. 9 terminal of gauge assembly connector C (16P) and ground.

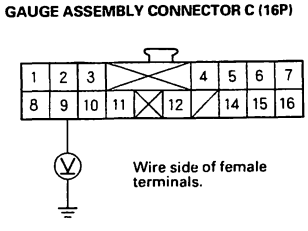

27. Turn the ignition switch ON (II), wait for 6 seconds, then measure voltage.

Is there 8.5 V or more?

YES – The problem corrected itself after disconnecting and connecting the connectors. Be sure all terminals make good contact, and recheck the system for an intermittent failure (see page 23-45). ■

NO – Poor contact at the SRS main harness 18P connector; check the connector.
If the connector is OK, substitute a known-good SRS unit, and recheck.
If the connector is damaged, replace the SRS main harness. ■

(cont'd)

SRS Indicator Light Circuit Troubleshooting - '98-99 Models (cont'd)

28. Disconnect the SRS main harness 3P connector (A) from the dashboard wire harness.

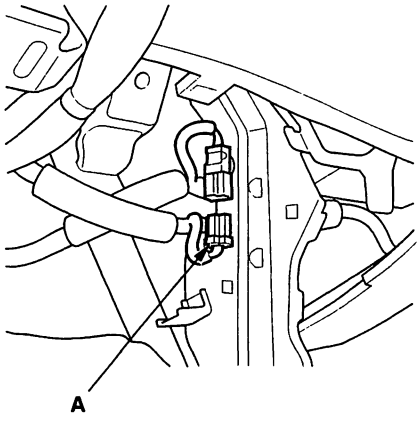

29. Check resistance between the No. 6 terminal of the SRS main harness 18P connector and the No. 1 terminal of the SRS main harness 3P connector; there should be 0 – 1.0 Ω.

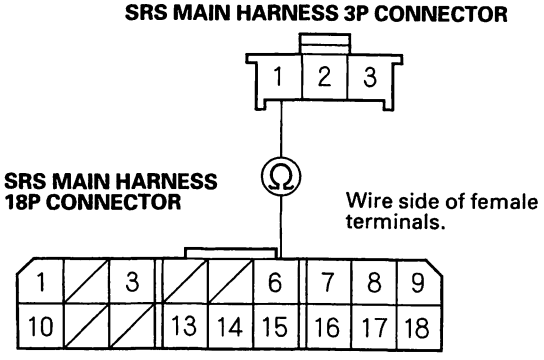

Is the resistance as specified?

YES – Open in the BLU wire of the dashboard wire harness; repair the dashboard wire harness. ■

NO – Open in the SRS main harness; replace the SRS main harness. ■

The SRS Indicator Light Comes On for the Bulb Check, Goes Off, then Comes Back On After Self – Diagnosis, but no DTCs are stored (NEC SRS unit only)

1. Erase the DTC memory (see page 23-45).

2. Turn the ignition switch ON (II), and check that the SRS indicator light comes on for about 6 seconds and then goes off.

   Does the SRS indicator light come on?

   YES – Go to step 3.

   NO – Intermittent failure, system is OK at this time. Go to Troubleshooting Intermittent Failures (see page 23-45).

3. Check for blown No. 1 (15A) fuse in the driver's under-dash fuse/relay box.

   Is the fuse OK?

   YES – Go to step 12.

   NO – Go to step 4.

4. Replace the fuse. Turn the ignition switch ON (II), and check that the fuse doesn't blow.

   Is the fuse OK?

   YES – Intermittent failure, system is OK at this time. Go to Troubleshooting Intermittent Failures (see page 23-45). ■

   NO – Go to step 5.

5. Turn the ignition switch OFF.

6. Disconnect the battery negative cable, and wait for 3 minutes.

BACK

7. Disconnect the driver's and front passenger's airbag connectors (A).

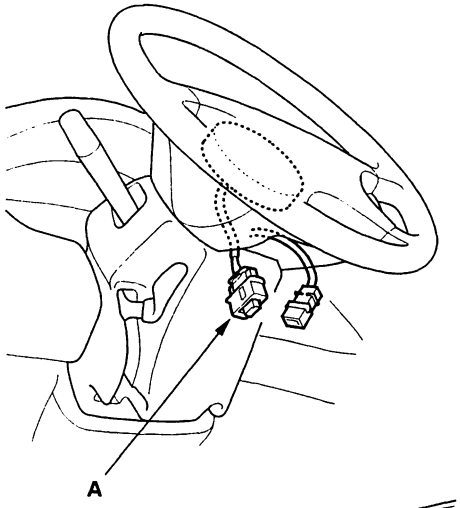

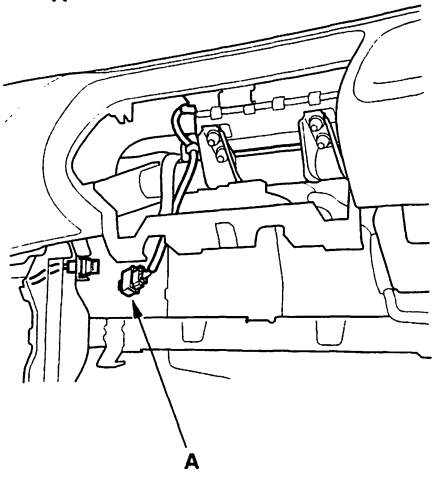

8. Disconnect the SRS main harness 18P connector (A) from the SRS unit.

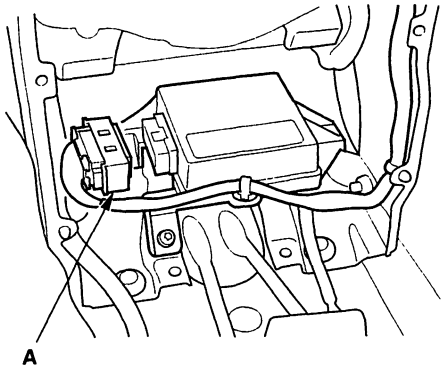

9. Check resistance between the No. 7 terminal of the SRS main harness 18P connector and body ground. There should be 1 MΩ or more.

SRS MAIN HARNESS 18P CONNECTOR

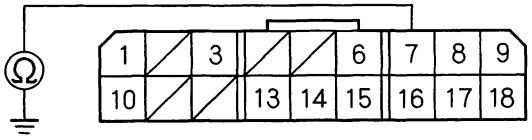

Wire side of female terminals

Is the resistance as specified?

YES—Faulty SRS unit; replace the SRS unit (see page 23-295).■

NO—Go to step 10.

10. Disconnect the SRS main harness 2P connector (A) from the driver's under-dash fuse/relay box.

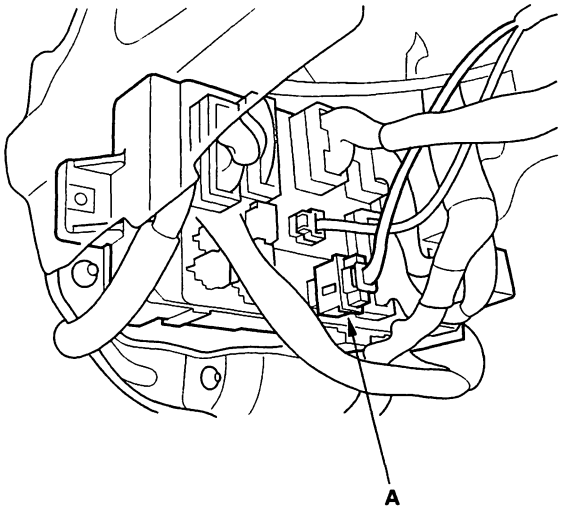

(cont'd)

SRS Indicator Light Circuit Troubleshooting - '98-99 Models (cont'd)

11. Check resistance between the No. 7 terminal of the SRS main harness 18P connector and ground. There should be 1.0 M Ω or more.

SRS MAIN HARNESS 18P CONNECTOR

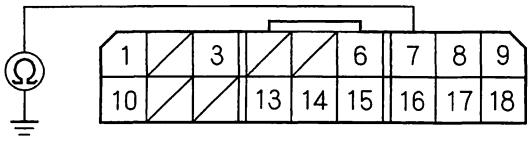

Wire side of female terminals

Is the resistance as specified?

YES—Short to ground in the driver's under-dash fuse/relay box; replace the driver's under-dash fuse/relay box.■

NO—Short to ground in the SRS main harness; replace the SRS main harness.■

12. Disconnect the battery negative cable, and wait for 3 minutes.

13. Disconnect the driver's airbag and front passenger's airbag connectors (A).

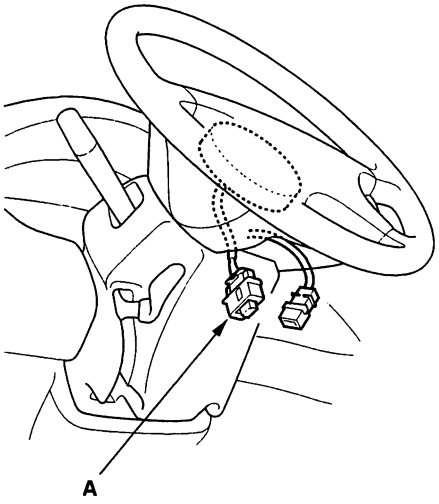

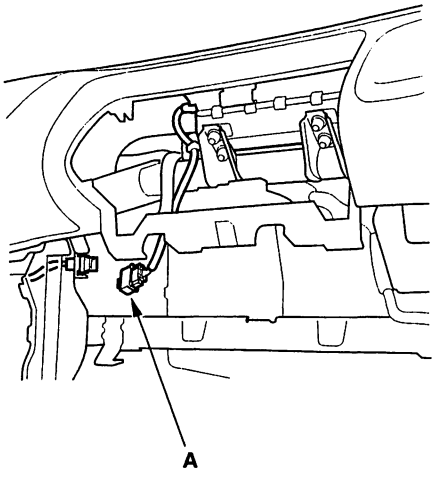

BACK

14. Disconnect the SRS main harness 18P connector (A) from the SRS unit.

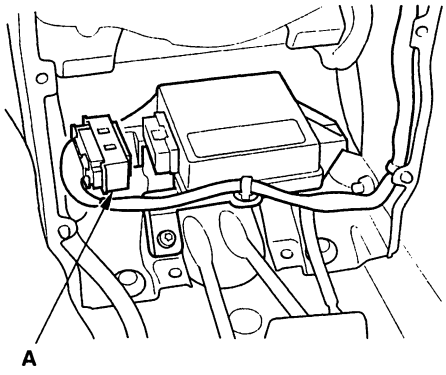

15. Reconnect the battery negative cable.

16. Connect a voltmeter between the No. 7 terminal of the SRS main harness 18P connector and ground.

SRS MAIN HARNESS 18P CONNECTOR

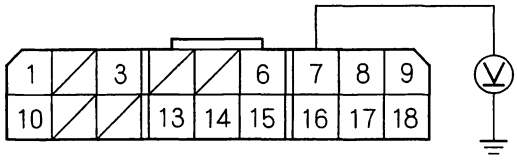

Wire side of female terminals.

17. Turn the ignition switch ON (II), and measure voltage.

Is there battery voltage?

YES – Poor contact at the SRS main harness 18P connector; check the connector.
If the connector is OK, substitute a known-good SRS unit, and recheck.
If the connector is damaged, replace the SRS main harness. ■

NO – Go to step 18.

18. Turn the ignition switch OFF.

19. Disconnect the SRS main harness 2P connector (A) from the driver's under-dash fuse/relay box.

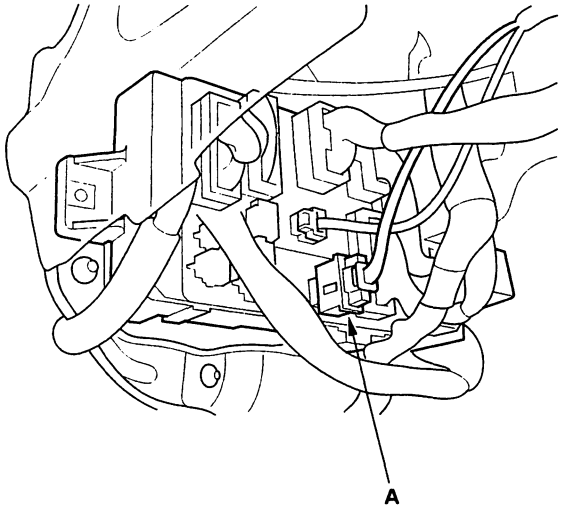

20. Check resistance between the No. 1 terminal of the SRS main harness 2P connector and No. 7 terminal of the SRS main harness 18P connector. There should be 0 – 1.0 Ω.

SRS MAIN HARNESS 2P CONNECTOR

SRS MAIN HARNESS 18P CONNECTOR

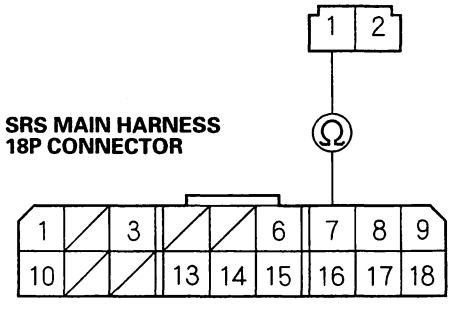

Wire side of female terminals.

Is the resistance as specified?

YES – Poor contact at the SRS main harness 2P connector; check the connector.
If the connector is OK, substitute a known-good under-dash fuse/relay box, and recheck.
If the connector is damaged, replace the SRS main harness. ■

NO – Open in the SRS main harness, replace the SRS main harness. ■

SRS Indicator Light Circuit Troubleshooting - '00 Sedan

The SRS Indicator Light Doesn't Come On

1. Turn the ignition switch ON (II), and check to see if the other indicator lights come on (brake system, etc).

   Do the other indicator lights come on?

   YES—Go to step 5.

   NO—Go to step 2.

2. Turn the ignition switch OFF, and check the No. 9 (7.5A) fuse in the driver's under-dash fuse/relay box.

   Is the fuse OK?

   YES—Go to step 14.

   NO—Go to step 3.

3. Replace the No. 9 (7.5A) fuse, and check to see if the SRS indicator light comes on.

   Does the SRS indicator light come on?

   YES—The system is OK.■

   NO—Go to step 4.

4. Check for a short to ground between fuse No. 9 (7.5A) and the gauge assembly, and repair. Check to see if the SRS indicator light comes on.

   Does the SRS indicator light come on?

   YES—The system is OK.■

   NO—Short to ground in the gauge assembly; replace the circuit board in the gauge assembly.■

5. Turn the ignition switch OFF.

6. Remove the gauge assembly.

7. Check for a blown SRS indicator bulb.

   Is the SRS indicator bulb OK?

   YES—Go to step 8.

   NO—Blown SRS indicator bulb; replace the bulb.■

8. Disconnect gauge assembly connector C (16P) from the gauge assembly.

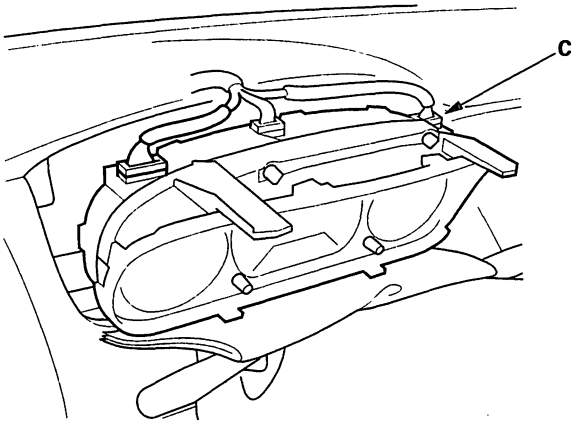

9. Connect a voltmeter between the No. 9 terminal of gauge assembly connector C (16P) and body ground.

GAUGE ASSEMBLY CONNECTOR C (16P)

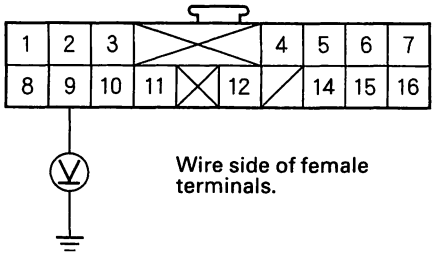

10. Turn the ignition switch ON (II), and measure voltage.

    Is there 8.5 V or less within the first 6 seconds after turning the ignition switch ON (II)?

    YES—Faulty SRS indicator light circuit in the gauge assembly; replace the SRS indicator circuit board in the gauge assembly.■

    NO—Go to step 11.

11. Turn the ignition switch OFF.

BACK

12. Disconnect SRS unit connector C (8P) from the SRS unit.

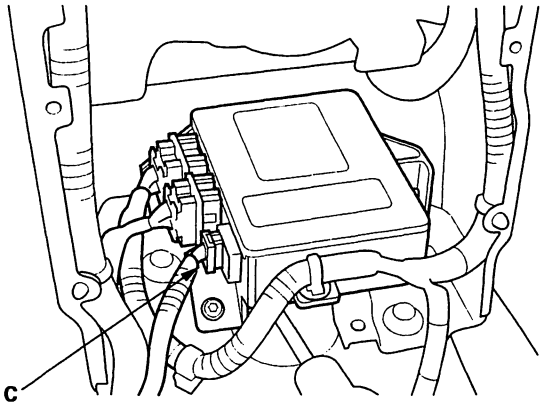

13. Connect a voltmeter between the No. 5 terminal of SRS unit connector C (8P) and body ground. Turn the ignition switch ON (II), and measure voltage. There should be 0.5 V or less.

SRS UNIT CONNECTOR C (8P)

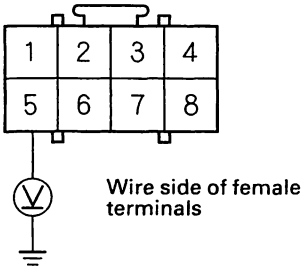

Is voltage as specified?

YES – Faulty SRS unit; replace the SRS unit (see page 23-296). ■

NO – Short to power in the BLU wire of dashboard wire harness A; replace dashboard wire harness A. ■

14. Disconnect gauge assembly connector B (22P) from the gauge assembly.

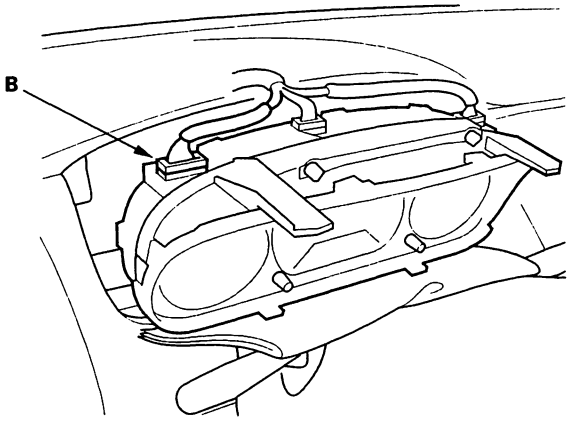

15. Connect a voltmeter between the No. 11 terminal of gauge assembly connector B (22P) and body ground. Turn the ignition switch ON (II), and measure voltage. There should be battery voltage.

GAUGE ASSEMBLY CONNECTOR B (22P)

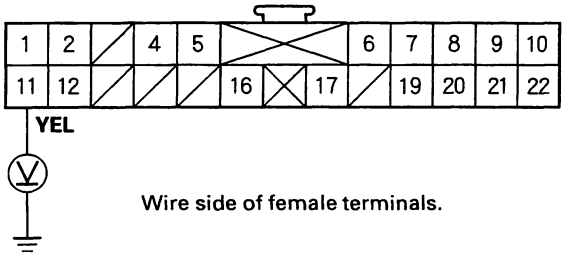

Is the voltage as specified?

YES – Go to step 16.

NO – Open in dashboard wire harness A; repair or replace dashboard wire harness A. ■

(cont'd)

SRS Indicator Light Circuit Troubleshooting - '00 Sedan (cont'd)

16. Turn the ignition switch OFF. Check resistance between the No. 16 terminal of gauge assembly connector B (22P) and body ground. There should be 0 – 1.0 Ω.

GAUGE ASSEMBLY CONNECTOR B (22P)

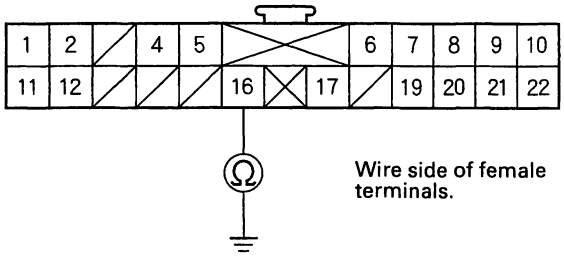

Is the resistance as specified?

YES – Faulty SRS indicator light circuit in the gauge assembly; replace the SRS indicator circuit board in the gauge assembly. ■

NO – Open in dashboard wire harness A or bad body ground; check the body ground connection. If it is OK, repair or replace dashboard wire harness A. ■

The SRS Indicator Light Stays On When In "SCS" Menu Method

NOTE:
- Inability to retrieve DTCs with the PGM Tester. Retrieve the flash codes with the SCS mode (see page 23-43).
- A new SRS unit must sense the entire system is OK before completing its initial self-test. The most common cause of an incomplete self-test is the failure to replace all deployed parts after a collision, in particular, the seat belt tensioners.
- An incomplete self-test prevents the PGM Tester from retrieving DTCs, although flash codes are available in the Tester's SCS mode.

1. Check for a blown No. 2 (10A) fuse in the driver's under-dash fuse/relay box.

   Is the fuse OK?

   YES – Go to step 2.

   NO – Replace the No. 2 fuse. Turn the ignition switch ON (II), and check for a blown No. 2 fuse. If the fuse is blown; replace the SRS main harness. If the fuse is OK; replace the SRS unit. ■

2. Disconnect the driver's airbag 2P connector (A) and front passenger's airbag 4P connector (B).

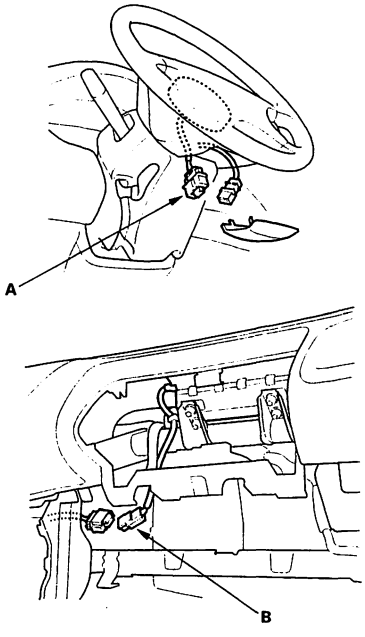

BACK

3. Disconnect SRS unit connector A (18P) from the SRS unit.

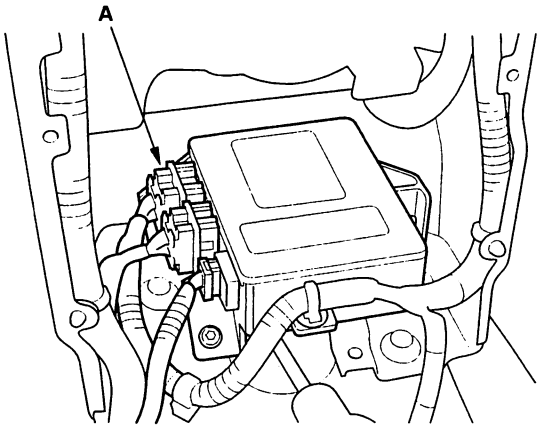

4. Connect a voltmeter between the No. 4 terminal of SRS unit connector A (18P) and body ground.

SRS UNIT CONNECTOR A (18P)

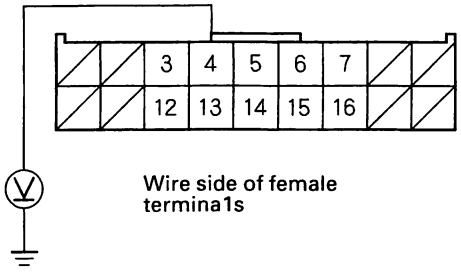

5. Turn the ignition switch ON (II).

Is there battery voltage?

YES – Go to step 6.

NO – Open in the SRS main harness (VB line); replace the SRS main harness. ■

6. Turn the ignition switch OFF. Disconnect SRS unit connector C (8P) from the SRS unit.

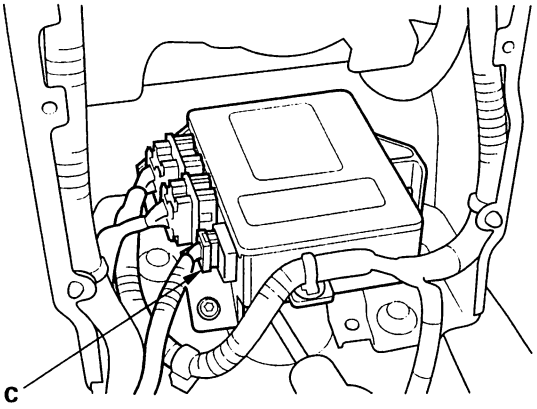

7. Connect a jumper wire between the No. 4 terminal of SRS unit connector A (18P) and the No. 5 terminal of SRS unit connector C (8P). Turn the ignition switch ON (II).

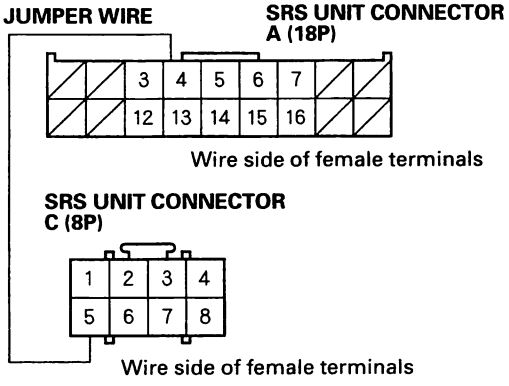

Does the SRS indicator light go off?

YES – Faulty SRS unit, poor contact at the SRS main harness 18P connector, or poor contact at the dashboard wire harness A 8P connector; check the connectors. If the connectors are OK, replace the SRS unit (see page 23-296). ■

NO – Go to step 8.

(cont'd)

SRS Indicator Light Circuit Troubleshooting - '00 Sedan (cont'd)

8. Turn the ignition switch OFF. Check the No. 2 (10 A) fuse in the driver's under-dash fuse/relay box.

   Is the fuse blown?

   YES—Go to step 9.

   NO—Go to step 11.

9. Disconnect gauge assembly connector C (16P) from the gauge assembly.

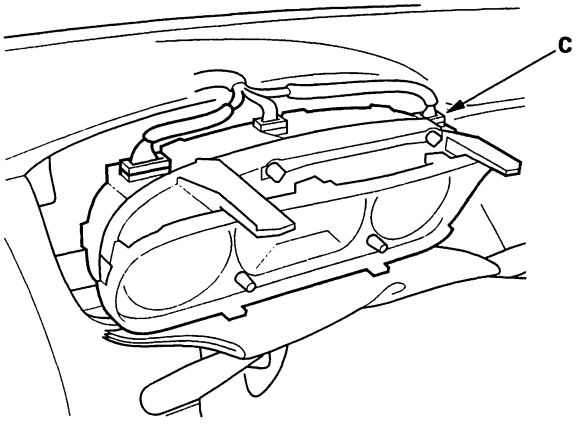

10. Check resistance between the No. 5 terminal of SRS unit connector C (8P) and body ground. There should be 1 MΩ or more.

SRS UNIT CONNECTOR C (8P)

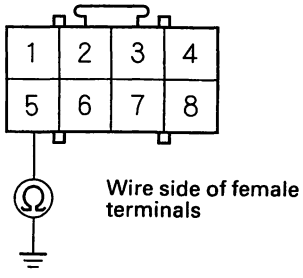

Is the resistance as specified?

YES—Short to ground in the gauge assembly; replace the gauge assembly.■

NO—Short to ground in dashboard wire harness A; repair or replace dashboard wire harness A.■

11. Disconnect gauge assembly connector C (16P) from the gauge assembly.

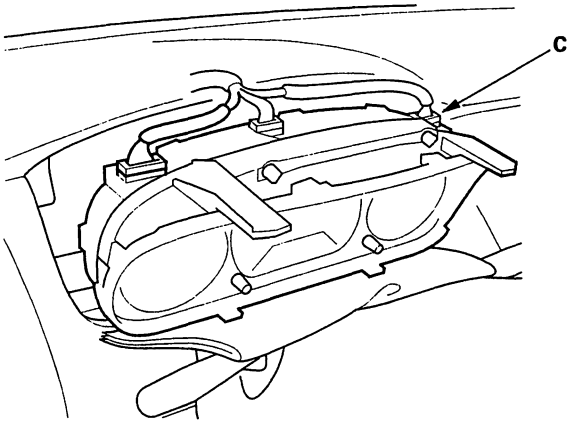

12. Check resistance between the No. 5 terminal of SRS unit connector C (8P) and the No. 9 terminal of gauge assembly connector C (16P). There should be 0—1.0 Ω.

GAUGE ASSEMBLY CONNECTOR C (16P)

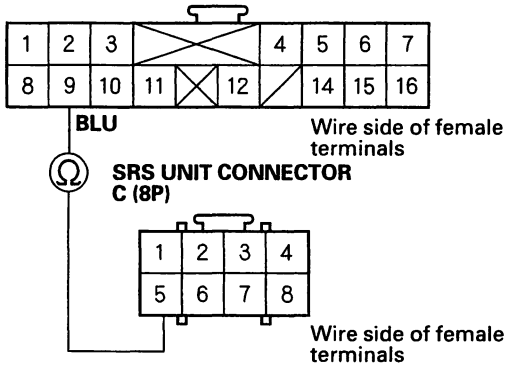

Is the resistance as specified?

YES—Faulty SRS indicator light circuit in the gauge assembly; replace the SRS indicator circuit board in the gauge assembly.■

NO—Open in dashboard wire harness A; replace dashboard wire harness A.■

BACK

SRS Indicator Light Circuit Troubleshooting - '00 Model without Side Airbags

The SRS Indicator Light Comes On for the Bulb Check, Goes Off, then Comes Back On After Self-Diagnosis, but no DTCs are stored (NEC SRS unit only)

1. Erase the DTC memory (see page 23-45).

2. Turn the ignition switch ON (II), and check that the SRS indicator light comes on for about 6 seconds and then goes off.

   Does the SRS indicator light come on?

   YES – Go to step 3.

   NO – Intermittent failure, system is OK at this time. Go to Troubleshooting Intermittent Failures (see page 23-45).

3. Check for a blown No. 1 (15A) fuse in the driver's under-dash fuse/relay box.

   Is the fuse OK?

   YES – Go to step 11.

   NO – Go to step 4.

4. Replace the fuse. Turn the ignition switch ON (II), and check that the fuse doesn't blow.

   Is the fuse OK?

   YES – Intermittent failure, system is OK this time. Go to Troubleshooting Intermittent failures (see page 23-45).

   NO – Go to step 5.

5. Turn the ignition switch OFF.

6. Disconnect the battery negative cable, and wait for 3 minutes.

7. Disconnect the driver's and front passenger's airbag connectors.

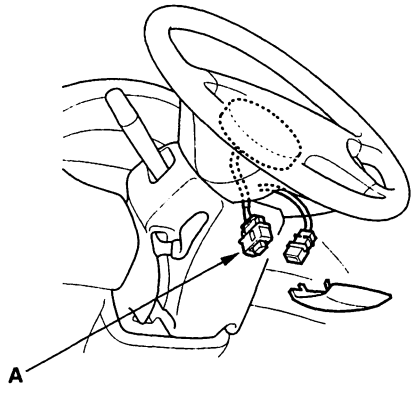

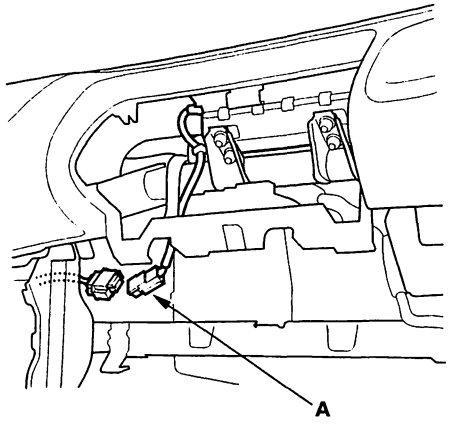

8. Disconnect SRS unit connector A (18P) from the SRS unit.

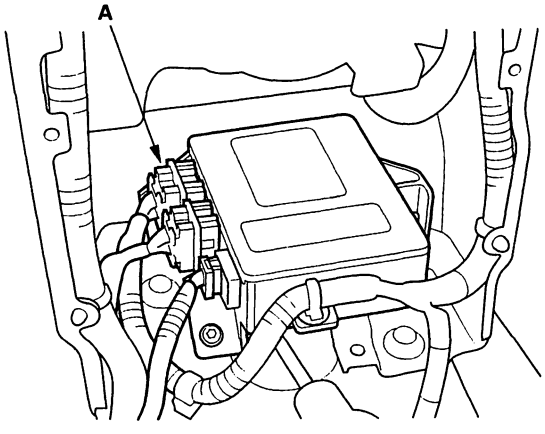

(cont'd)

SRS Indicator Light Circuit Troubleshooting - '00 Model without Side Airbags (cont'd)

9. Disconnect SRS main harness 2P connector N from the driver's under-dash fuse/relay box.

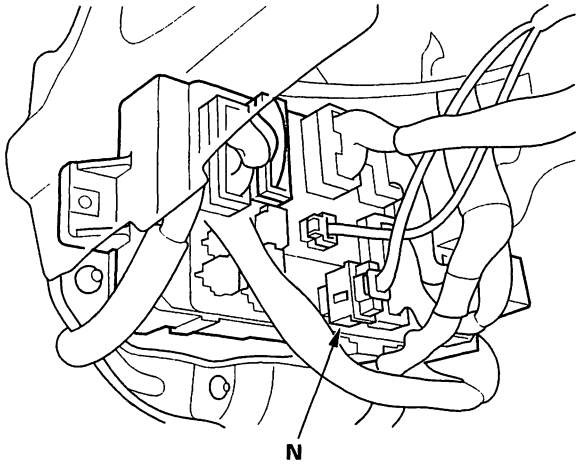

10. Check resistance between the No. 3 terminal of SRS unit connector A (18P) and body ground. There should be 1 MΩ or more.

SRS UNIT CONNECTOR A (18P)

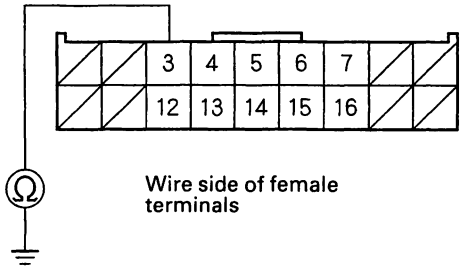

Is the resistance as specified?

YES—Short to ground in the No. 1 (15A) fuse circuit, or faulty SRS unit; check the No. 1 (15 A) fuse circuit. If the circuit is OK, replace the SRS unit (see page 23-296).■

NO—Short to ground in the SRS main harness; replace the harness.■

11. Disconnect the battery negative cable, and wait for 3 minutes.

12. Disconnect the driver's airbag and front passenger's airbag connectors (A).

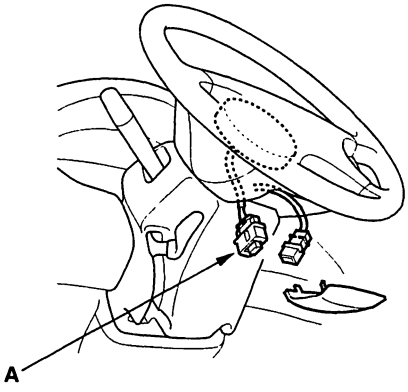

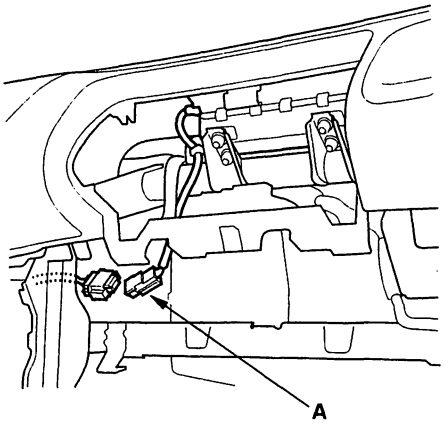

BACK

13. Disconnect SRS unit connector A (18P) from the SRS unit.

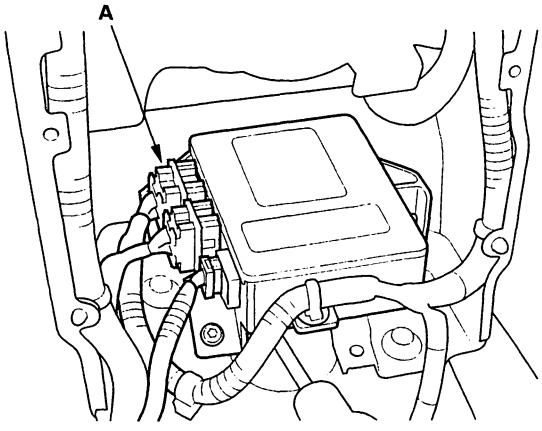

14. Reconnect the battery negative cable.

15. Connect a voltmeter between the No. 3 terminal of SRS unit connector A (18P) and body ground.

SRS UNIT CONNECTOR A (18P)

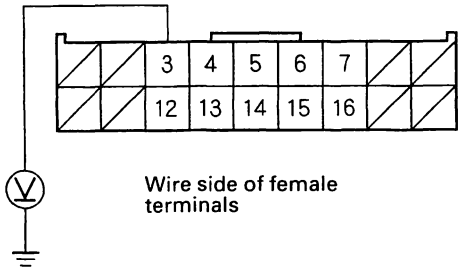

16. Turn the ignition switch ON (II), and measure voltage.

Is there battery voltage?

YES – Poor contact at the SRS main harness 18P connector, or faulty SRS unit; check the connector. If the connector is OK, replace the SRS unit (see page 23-296). ■

NO – Poor contact at the SRS main harness 2P connector, or open in the SRS main harness; check the connector. If the connector is OK, replace the SRS main harness. ■

SRS Indicator Light Circuit Troubleshooting - '00 Coupe

The SRS Indicator Light Doesn't Come On

1. Turn the ignition switch ON (II), and check to see if the other indicator lights come on (brake system, etc).

   Do the other indicator lights come on?

   YES—Go to step 5.

   NO—Go to step 2.

2. Turn the ignition switch OFF, and check the No. 9 (7.5 A) fuse in the driver's under-dash fuse/relay box.

   Is the fuse OK?

   YES—Go to step 14.

   NO—Go to step 3.

3. Replace the No. 9 (7.5A) fuse, and check to see if the SRS indicator light comes on.

   Does the SRS indicator light come on?

   YES—The system is OK.■

   NO—Go to step 4.

4. Check for a short to ground in the wire harness between fuse No. 9 (7.5A) and the gauge assembly, and repair. Check to see if the SRS indicator light comes on.

   Does the SRS indicator light come on?

   YES—The system is OK.■

   NO—Short to ground in the gauge assembly; replace the circuit board in the gauge assembly.■

5. Turn the ignition switch OFF.

6. Remove the gauge assembly.

7. Check for a blown SRS indicator bulb.

   Is the SRS indicator bulb OK?

   YES—Go to step 8.

   NO—Blown SRS indicator bulb; replace the bulb.■

8. Disconnect gauge assembly connector C (16P) from the gauge assembly.

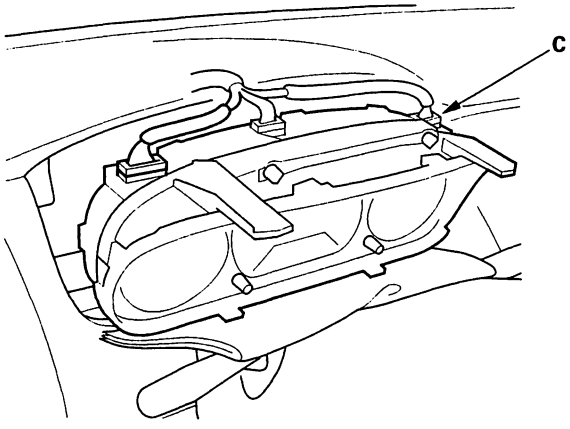

9. Connect a voltmeter between the No. 9 terminal of gauge assembly connector C (16P) and body ground.

GAUGE ASSEMBLY CONNECTOR C (16P)

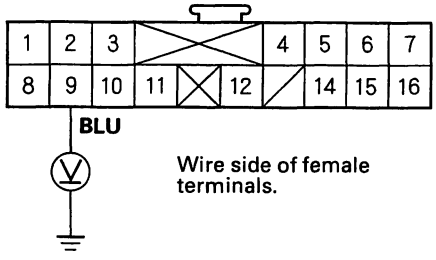

10. Turn the ignition switch ON (II), and measure voltage.

    Is there 8.5 V or less within the first 6 seconds after turning the ignition switch ON (II)?

    YES—Faulty SRS indicator light circuit in the gauge assembly; replace the SRS indicator circuit board in the gauge assembly.■

    NO—Go to step 11.

11. Turn the ignition switch OFF.

BACK

12. Disconnect SRS unit connector C (8P) from the SRS unit.

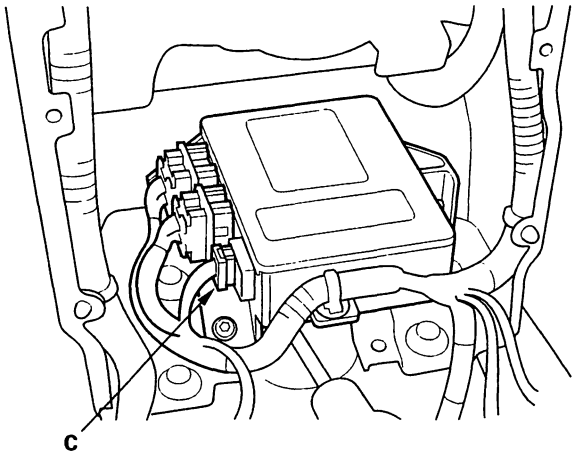

13. Connect a voltmeter between the No. 5 terminal of SRS unit connector C (8P) and body ground. Turn the ignition switch ON (II), and measure voltage. There should be 0.5 V or less.

SRS UNIT CONNECTOR C (8P)

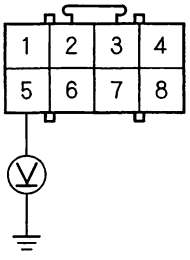

Wire side of female terminals

Is the voltage as specified?

YES—Faulty SRS unit; replace the SRS unit (see page 23-296).

NO—Short to power in the BLU wire of dashboard wire harness A or the SRS main harness; replace dashboard wire harness A or the SRS main harness.

14. Disconnect gauge assembly connector B (22P) from the gauge assembly.

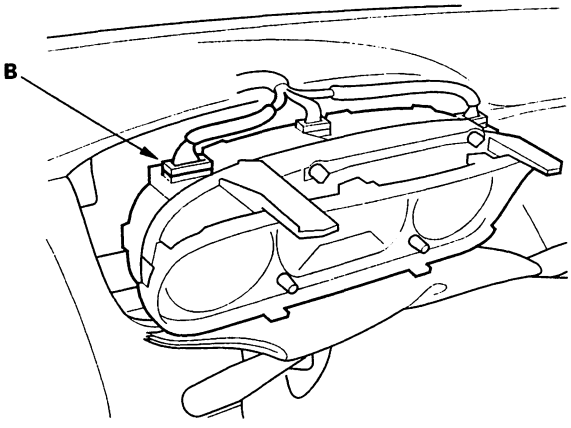

15. Connect a voltmeter between the No. 11 terminal of gauge assembly connector B (22P) and body ground. Turn the ignition switch ON (II), and measure voltage. There should be battery voltage.

GAUGE ASSEMBLY CONNECTOR B (22P)

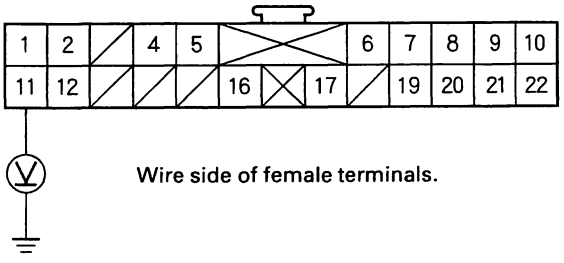

Wire side of female terminals.

Is the voltage as specified?

YES—Go to step 16.

NO—Open in dashboard wire harness A; repair or replace dashboard wire harness A.■

(cont'd)

SRS Indicator Light Circuit Troubleshooting - '00 Coupe (cont'd)

16. Turn the ignition switch OFF. Check resistance between the No. 16 terminal of gauge assembly connector B (22P) and body ground. There should be 0 – 1.0 Ω.

GAUGE ASSEMBLY CONNECTOR B (22P)

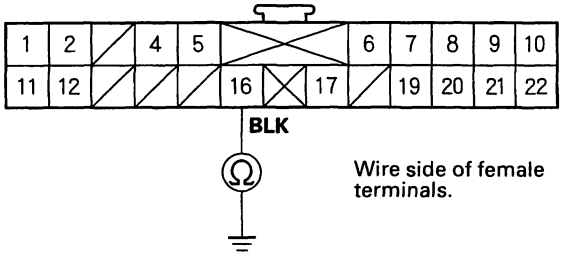

Is the resistance as specified?

YES – Faulty SRS indicator light circuit in the gauge assembly; replace the SRS indicator circuit board in the gauge assembly. ■

NO – Open in dashboard wire harness A or body ground; check the body ground connection. If it is OK, repair or replace dashboard wire harness A. ■

The SRS Indicator Light Stays On When In "SCS" Menu Method

NOTE:
- Inability to retrieve DTCs with the PGM Tester. Retrieve the flash codes with the SCS mode (see page 23-43).
- A new SRS unit must sense the entire system is OK before completing its initial self-test. The most common cause of an incomplete self-test is the failure to replace all deployed parts after a collision, in particular, and seat belt tensioners.
- An incomplete self-test prevents the PGM Tester from retrieving DTCs, although flash codes are available in the Tester's SCS mode.

1. Check for a blown No. 2 (10A) fuse in the driver's u nder-dash fuse/relay box.

   Is the fuse OK?

   YES – Go to step 2.

   NO – Replace the No. 2 fuse. Turn the ignition switch ON (II), and check for a blown No. 2 fuse. If the fuse is blown; replace the SRS main harness. If the fuse is OK; replace the SRS unit. ■

2. Disconnect the driver's airbag 2P connector (A) and front passenger's airbag 4P connector (B).

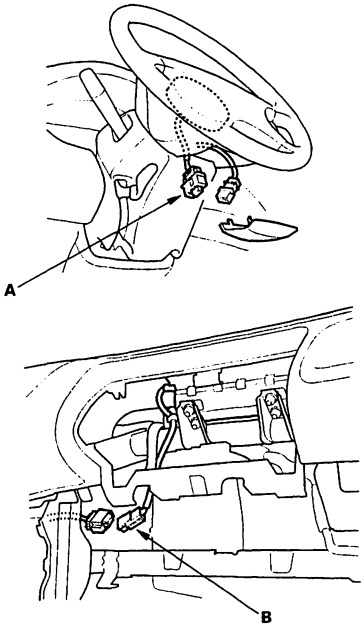

BACK

3. Disconnect SRS unit connector A (18P) from the SRS unit.

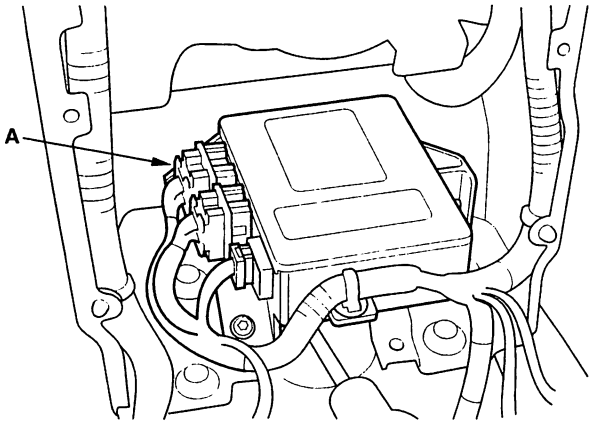

4. Connect a voltmeter between the No. 4 terminal of SRS unit connector A (18P) and body ground.

SRS UNIT CONNECTOR A (18P)

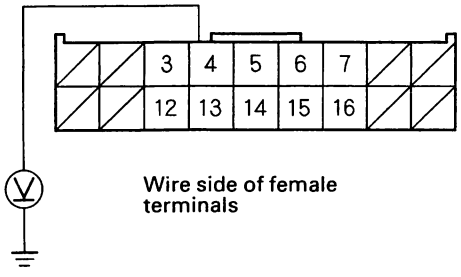

5. Turn the ignition switch ON (II).

Is there battery voltage?

YES – Go to step 6.

NO – Open in the SRS main harness (VB line); replace the SRS main harness. ■

6. Turn the ignition switch OFF. Disconnect SRS unit connector C (8P) from the SRS unit.

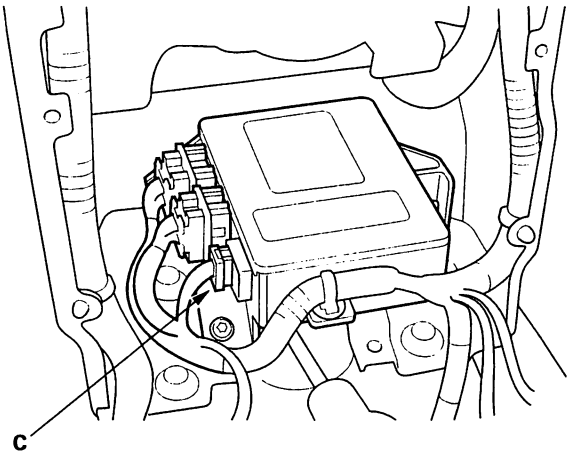

7. Connect the No. 4 terminal of SRS unit connector A (18P) and the No. 5 terminal of SRS unit connector C (8P) with a jumper wire and backprobe adapters. Turn the ignition switch ON (II).

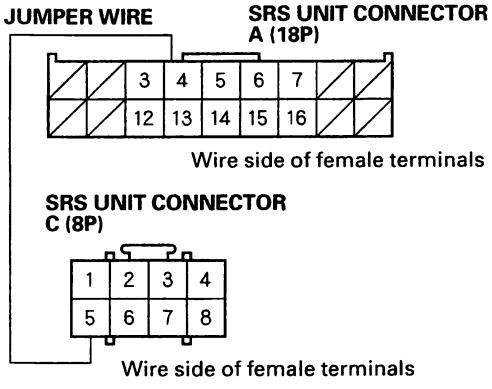

Does the SRS indicator light go off?

YES – Faulty SRS unit, poor contact at SRS unit connector A (18P), or poor contact at SRS unit connector C (8P); check the connectors. If the connectors are OK, replace the SRS unit (see page 23-296). ■

NO – Go to step 8.

(cont'd)

SRS Indicator Light Circuit Troubleshooting - '00 Coupe (cont'd)

8. Turn the ignition switch OFF. Check the No. 2 (10 A) fuse in the driver's under-dash fuse/relay box.

   Is the fuse blown?

   YES – Go to step 9.

   NO – Go to step 11.

9. Disconnect gauge assembly connector C (16P) from the gauge assembly.

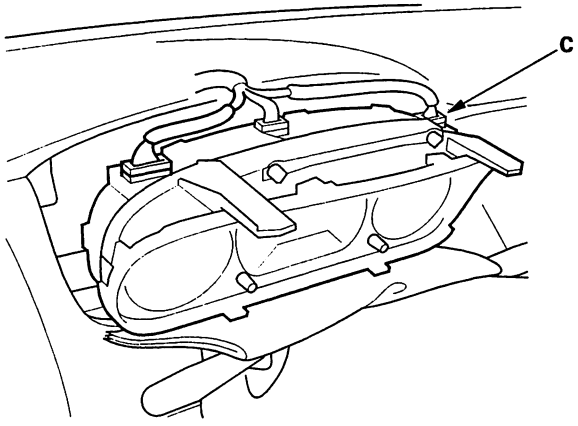

10. Check resistance between the No. 5 terminal of SRS unit connector C (8P) and body ground. There should be 1 MΩ or more.

SRS UNIT CONNECTOR C (8P)

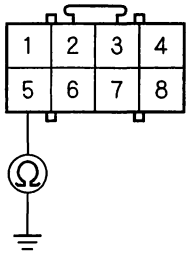

Wire side of female terminals

Is the resistance as specified?

YES – Short to ground in the gauge assembly; replace the gauge assembly. ■

NO – Short to ground in the BLU wire of dashboard wire harness A or the SRS main harness; replace the dashboard wire harness or the SRS main harness. ■

11. Disconnect gauge assembly connector C (16P) from the gauge assembly.

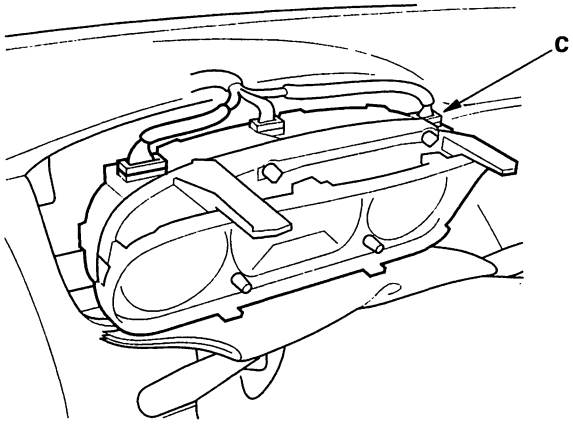

12. Check resistance between the No. 5 terminal of SRS unit connector C (8P) and the No. 9 terminal of gauge assembly connector C (16P). There should be 0 – 1.0 Ω.

GAUGE ASSEMBLY CONNECTOR C (16P)

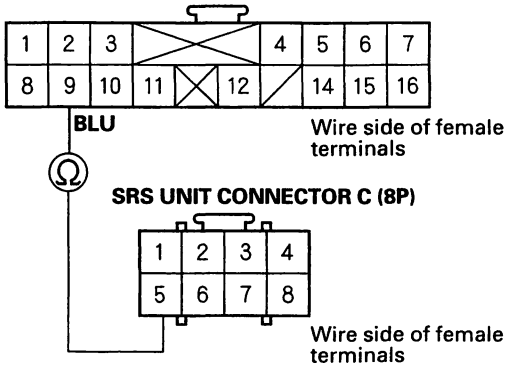

Is the resistance as specified?

YES – Faulty SRS indicator light circuit in the gauge assembly; replace the SRS indicator circuit board in the gauge assembly. ■

NO – Open in the BLU wire of dashboard wire harness A or the SRS main harness; replace dashboard wire harness A or the SRS main harness. ■

BACK

SRS Indicator Light Circuit Troubleshooting - '01-02 Models

The SRS Indicator Light Doesn't Come On

1. Turn the ignition switch ON (II), and check to see if the other indicator lights come on (brake system, etc).

   Do the other indicator lights come on?

   YES – Go to step 2.

   NO – Go to step 9.

2. Turn the ignition switch OFF, then disconnect gauge assembly connector B (22P) from the gauge assembly.

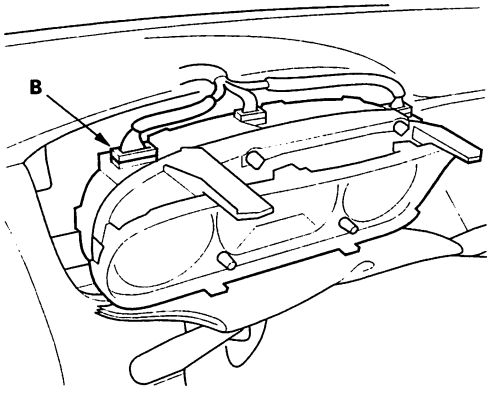

3. Check resistance between the No. 16 terminal of gauge assembly connector B (22P) and body ground. There should be 0 – 1.0 Ω.

GAUGE ASSEMBLY CONNECTOR B (22P)

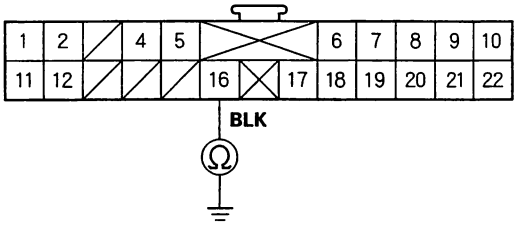

Wire side of female terminals

Is resistance as specified?

YES – Go to step 4.

NO – Open in the BLK wire of dashboard wire harness A, or faulty body ground terminal. If the body ground terminal is OK, replace dashboard wire harness A. ■

4. Disconnect gauge assembly connector C (16P) from the gauge assembly.

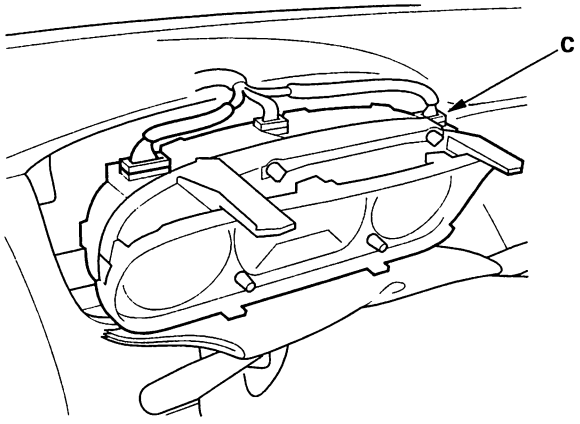

5. Check for voltage between the No. 9 terminal of gauge assembly connector C (16P) and body ground for 6 seconds after turning the ignition switch ON (II). There should be 8.5 V or less.

GAUGE ASSEMBLY CONNECTOR C (16P)

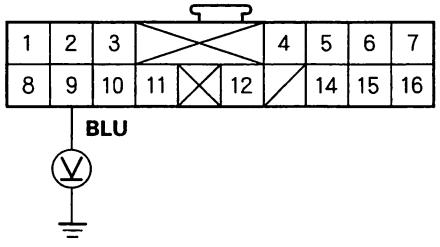

Wire side of female terminals

Is voltage as specified?

YES – Blown SRS indicator bulb or faulty SRS indicator light circuit in the gauge assembly. Check for a blown SRS indicator bulb. If the SRS indicator bulb is OK, replace the gauge assembly. ■

NO – Go to step 6.

6. Turn the ignition switch OFF.

(cont'd)

SRS Indicator Light Circuit Troubleshooting - '01-02 Models (cont'd)

7. Disconnect SRS unit connector C (8P) from the SRS unit.

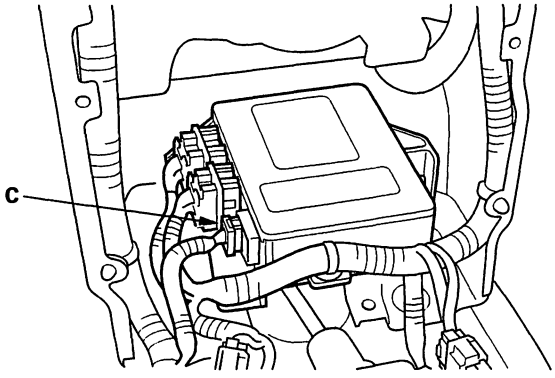

8. Connect a voltmeter between the No. 9 terminal of gauge assembly connector C (16P) and body ground. Turn the ignition switch ON (II), and measure voltage. There should be 0.5 V or less.

GAUGE ASSEMBLY CONNECTOR C (16P)

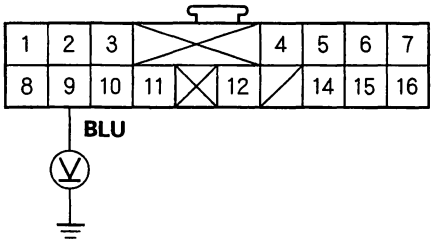

Wire side of female terminals

Is the voltage as specified?

YES—Faulty SRS unit; replace the SRS unit.■

NO—Short to power in the BLU wire of dashboard wire harness A; replace dashboard wire harness A. ■

9. Turn the ignition switch OFF. Check the No. 9 (7.5A) fuse in the driver's under-dash fuse/relay box.

Is the fuse blown?

YES—Go to step 12.

NO—Go to step 10.

10. Disconnect gauge assmbly connector B (22P) from the gauge assembly.

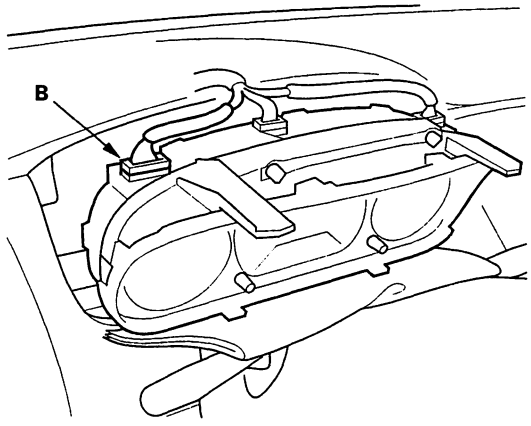

BACK

11. Connect a voltmeter between the No. 11 terminal of gauge assembly connector B (22P) and body ground. Turn the ignition switch ON (II), and measure voltage. There should be battery voltage.

GAUGE ASSEMBLY CONNECTOR B (22P)

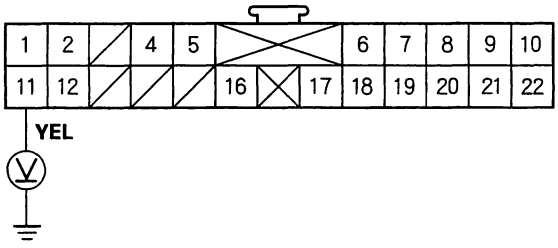

Wire side of female terminals

Is there battery voltage?

YES—Faulty SRS indicator light circuit in the gauge assembly, or poor contact at gauge assembly connector B (22P) and the gauge assembly; if the connection is OK, replace the gauge assembly.■

NO—Open in the driver's under-dash fuse/relay box No. 9 (7.5 A) fuse line, open in the YEL wire of dashboard wire harness A. If the driver's under-dash fuse/relay box is OK, replace dashboard wire harness A.■

12. Replace the No. 9 (7.5A) fuse, and check to see if the SRS indicator light comes on.

Does the SRS indicator light come on?

YES—The system is OK at this time.■

NO—Short to ground in the driver's under-dash fuse/relay box No. 9 (7.5A) fuse line; refer to the "Electrical" section, then continue troubleshooting.■

(cont'd)

SRS Indicator Light Circuit Troubleshooting - '01-02 Models (cont'd)

The SRS Indicator Light Stays On When In "SCS" Menu Method

NOTE:
- Inability to retrieve DTCs with the PGM Tester. Retrieve the flash codes with the SCS mode (see page 23-43).
- A new SRS unit must sense the entire system is OK before completing its initial self-test. The most common cause of an incomplete self-test is the failure to replace all deployed parts after a collision, in particular, and seat belt tensioners.
- An incomplete self-test prevents the PGM Tester from retrieving DTCs, although flash codes are available in the Tester's SCS mode.

1. Erase the DTC memory (see page 23-45).

   Does the SRS indicator light go off while the DTC memory is being erased?

   YES—Go to step 42.

   NO—Go to step 2.

2. Check the No. 2 (10A) fuse in the driver's under-dash fuse/relay box.

   Is the fuse OK?

   YES—Go to step 19.

   NO—Go to step 3.

3. Replace the No. 2 (10A) fuse in the driver's under-dash fuse/relay box.

4. Turn the ignition switch ON (II), and wait for 30 seconds. Then turn the ignition switch OFF.

5. Check the No. 2 (10A) fuse in the driver's under-dash fuse/relay box.

   Is the fuse OK?

   YES—The system is OK at this time.■

   NO—Go to step 6.

6. Replace the No. 2 (10A) fuse in the driver's under-dash fuse/relay box.

7. Disconnect the battery negative cable, and wait for 3 minutes.

8. Disconnect the driver's airbag 4P connector.

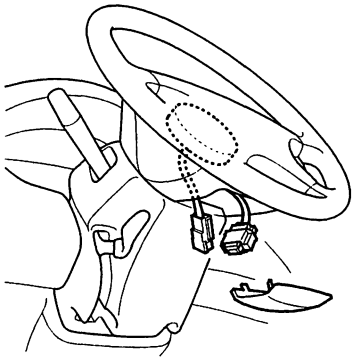

9. Disconnect the front passenger's airbag 4P connector.

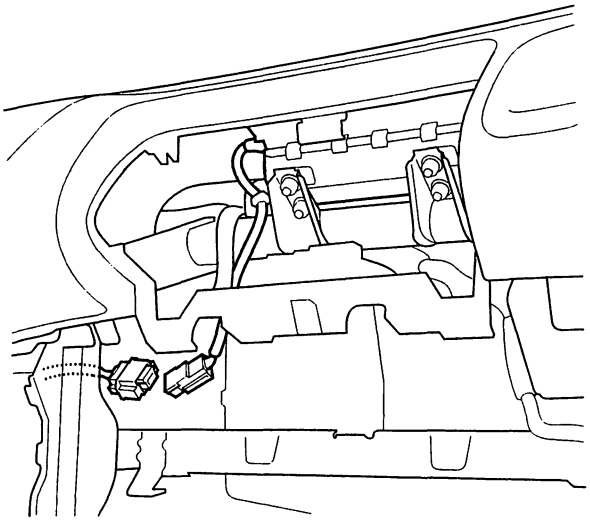

BACK

10. Disconnect both seat belt tensioner 2P connectors.

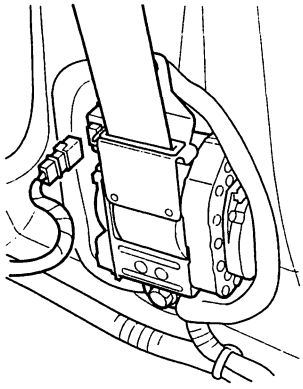

11. Disconnect SRS unit connector A (18P) from the SRS unit.

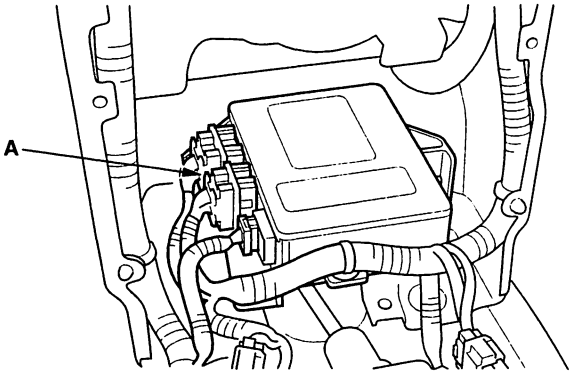

12. Reconnect the negative battery cable.

13. Turn the ignition switch ON (II) and wait for 30 seconds. Then turn the ignition switch OFF.

14. Check the No. 2 (10A) fuse in the driver's under-dash fuse/relay box.

    Is the fuse OK?

    YES – Short to ground in the SRS unit; replace the SRS unit (see page 23-296). ■

    NO – Go to step 15.

15. Replace the No. 2 (10A) fuse in the driver's under-dash fuse/relay box.

16. Disconnect SRS main harness 2P connector N from the driver's under-dash fuse/relay box.

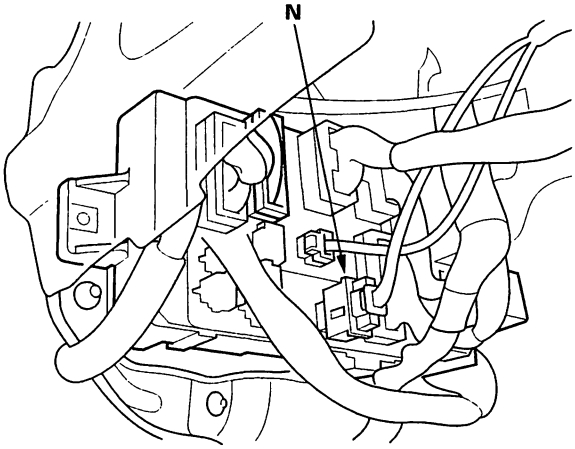

17. Turn the ignition switch ON (II) and wait for 30 seconds. Then turn the ignition switch OFF.

18. Check the No. 2 (10A) fuse in the driver's under-dash fuse/relay box.

    Is the fuse OK?

    YES – Short to ground in dashboard wire harness A; replace dashboard wire harness A. ■

    NO – Short to ground in the driver's under-dash fuse/relay box No. 2 (10A) fuse line; replace the driver's under-dash fuse/relay box. ■

(cont'd)

SRS Indicator Light Circuit Troubleshooting - '01-02 Models (cont'd)

19. Disconnect the battery negative cable, and wait for 3 minutes.

20. Disconnect the driver's airbag 4P connector (A).

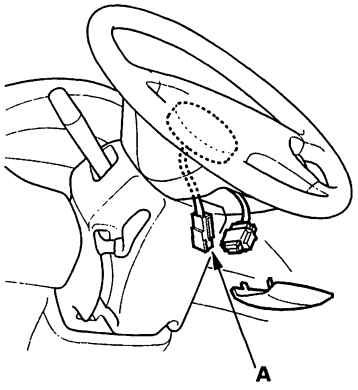

21. Disconnect the front passenger's 4P connector (A).

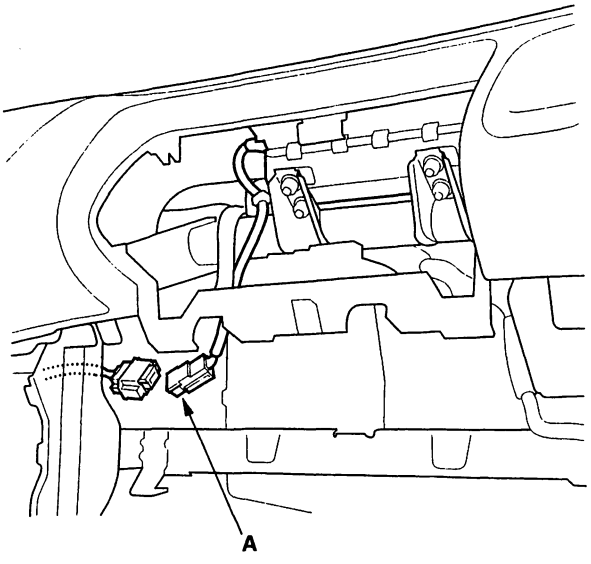

22. Disconnect both seat belt tensioner 2P connectors (A).

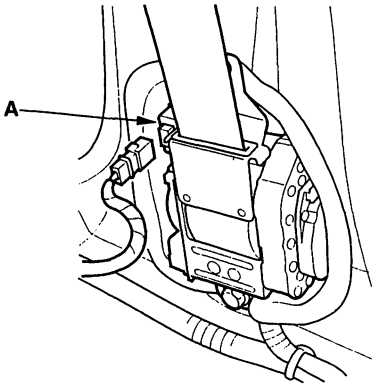

23. Disconnect SRS unit connector A (18P) from the SRS unit.

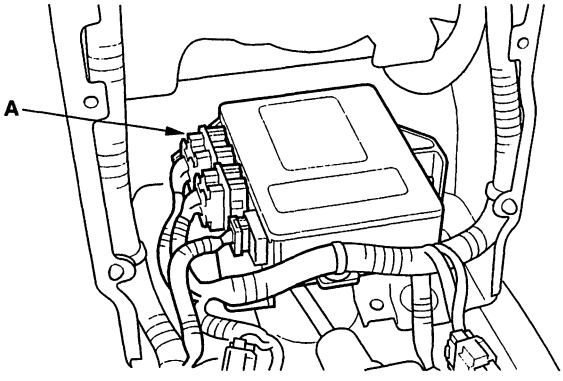

BACK

24. Reconnect the battery negative cable.

25. Connect a voltmeter between the No. 4 terminal of SRS unit connector A (18P) and body ground. Turn the ignition switch ON (II), and measure voltage. There should be battery voltage.

SRS UNIT CONNECTOR A (18P)

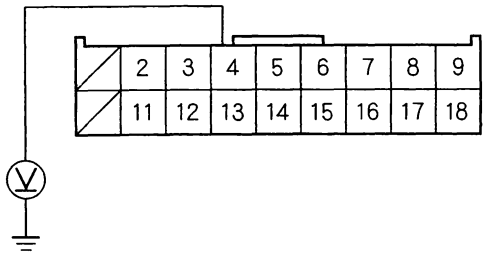

Wire side of female terminals

Is there battery voltage?

YES – Go to step 29.

NO – Go to step 26.

26. Turn the ignition switch OFF.

27. Disconnect SRS main harness 2P connector N from the under-dash fuse/relay box.

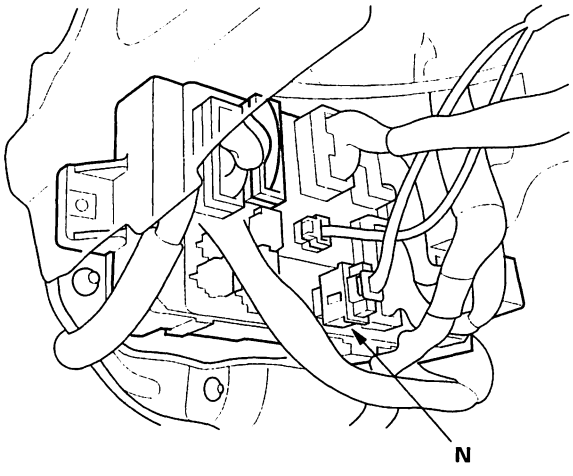

28. Check resistance between the No. 4 terminal of SRS unit connector A (18P) and the No. 2 terminal of SRS main harness 2P connector N. There should be 0-1.0 Ω.

SRS MAIN HARNESS 2P CONNECTOR N

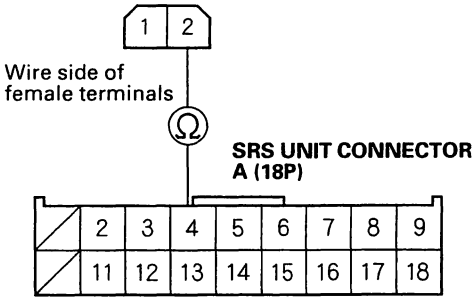

Wire side of female terminals

Is the resistance as specified?

YES – Open in the driver's under-dash fuse/relay box, or poor contact at the SRS main harness 2P connector; check the connection. If the connection is OK, replace the driver's under-dash fuse/relay box. ■

NO – Open in the SRS main harness; replace the SRS main harness. ■

29. Turn the ignition switch OFF.

30. Disconnect SRS unit connector C (8P) from the SRS unit.

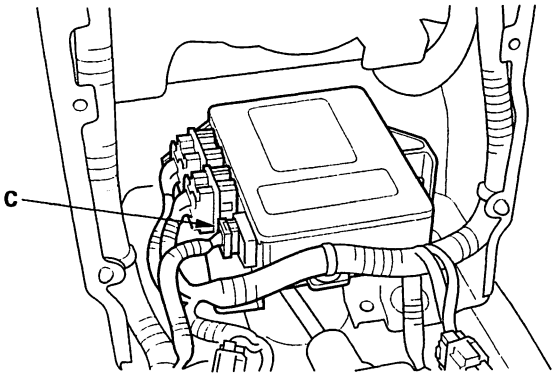

(cont'd)

SRS Indicator Light Circuit Troubleshooting - '01-02 Models (cont'd)

31. Connect the No. 4 terminal of SRS unit connector A (18P) and the No. 5 terminal of SRS unit connector C (8P) with a jumper wire.

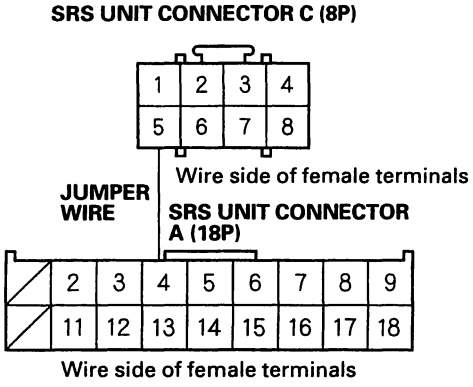

32. Turn the ignition switch ON (II).

33. Check the SRS indicator light.

Does the SRS indicator light go off?

YES—Faulty SRS unit; replace the SRS unit (see page 23-296).■

NO—Go to step 34.

34. Turn the ignition switch OFF.

35. Disconnect the jumper wire between the No. 4 terminal of SRS unit connector A (18P) and the No. 5 terminal of SRS unit connector C (8P).

36. Check the No. 2 (10 A) fuse in the driver's under-dash fuse/relay box.

Is the fuse OK?

YES—Go to step 40.

NO—Go to step 37.

37. Replace the No. 2 (10A) fuse in the driver's under-dash fuse/relay box.

38. Disconnect gauge assembly connector C (16P) from the gauge assembly.

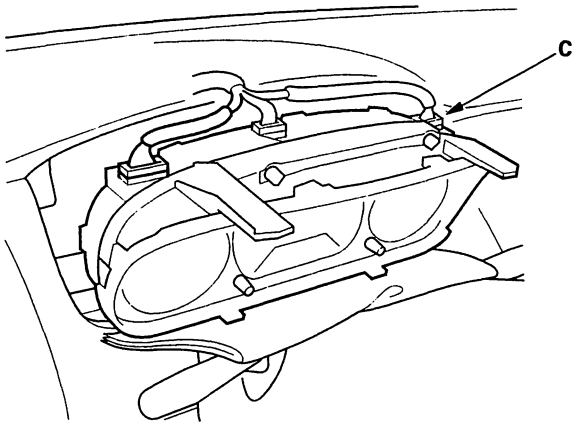

39. Check resistance between the No. 5 terminal of SRS unit connector C (8P) and body ground. There should be 1 MΩ or more.

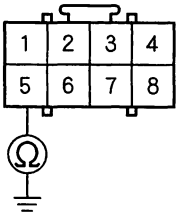

Is the resistance as specified?

YES—Faulty SRS indicator light circuit in the gauge assembly; replace the gauge assembly.■

NO—Short to ground in dashboard wire harness A; replace dashboard wire harness A.■

BACK

40. Disconnect gauge assembly connector B (22P) from the gauge assembly.

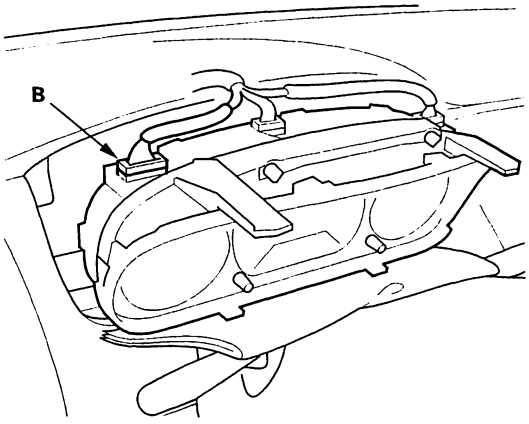

41. Check resistance between the No. 9 terminal of gauge assembly connector B (22P) and the No. 5 terminal of SRS uint connector C (8P). There should be 1 Ω or less.

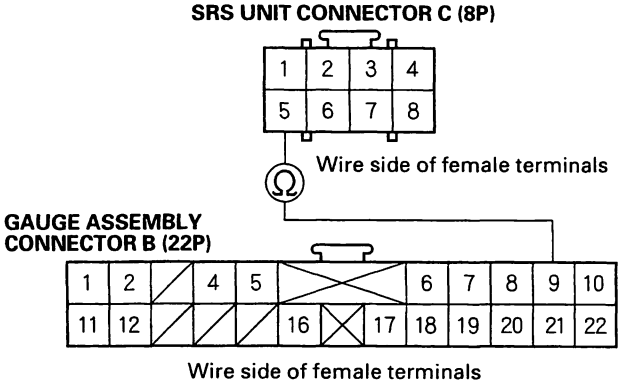

Is the resistance as specified?

YES—Faulty SRS indicator light circuit in the gauge assembly or poor contact at gauge assembly connector B (22P). Check the connection. If the connection is OK, replace the gauge assembly. ■

NO—Open in dashboard wire harness A; replace dashboard wire harness A. ■

42. Disconnect SRS unit connector C (8P) from the SRS unit.

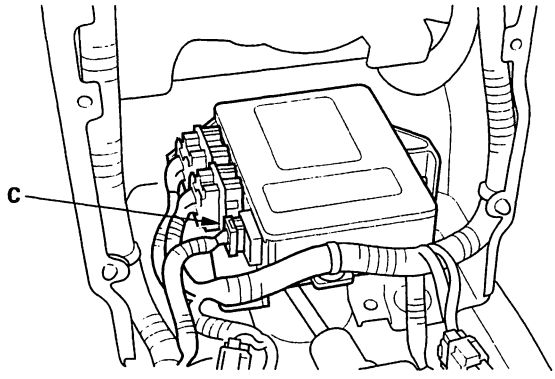

43. Connect the Honda PGM Tester (A) to the Data Link Connector (16 P) (B) and follow the Tester's prompts in the "SCS" menu.

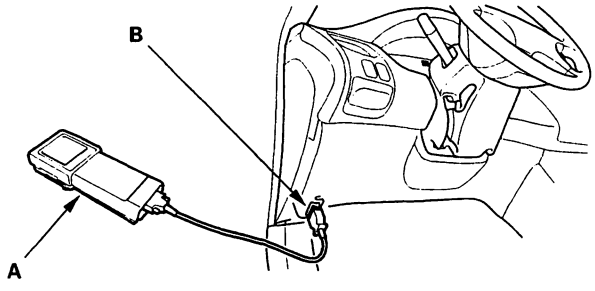

(cont'd)

SRS Indicator Light Circuit Troubleshooting - '01-02 Models (cont'd)

44. Check resistance between the No. 6 terminal of SRS unit connector C (8P) and body ground. There should be 0 – 1.0 Ω.

SRS UNIT CONNECTOR C (8P)

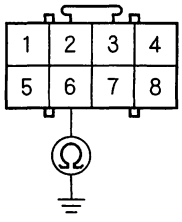

Wire side of female terminals

Is the resistance as specified?

YES – Faulty SRS unit, or poor contact at the dashboard wire harness A 8P connector; check the connection at the dashboard wire harness A 8P connector and the SRS unit. If the connection is OK, replace the SRS unit (see page 23-296). ■

NO – Open in the SCS line between the No. 6 terminal of the dashboard wire harness A 8P connector and the No. 9 terminal (brown wire) of the Data Link Connector (DLC) (16P), or open between the No. 4 terminal of the Data Link Connector (DLC) (16P) and body ground; refer to the "Electrical" section, then continue troubleshooting. ■

The SRS Indicator Light Comes On for the Bulb Check, Goes Off, then Comes Back On After Self-Diagnosis, but no DTCs are stored (NEC SRS unit only)

1. Erase the DTC memory (see page 23-45).

2. Turn the ignition switch ON (II), and check that the SRS indicator light comes on for about 6 seconds and then goes off.

   Does the SRS indicator light come on?

   YES – Go to step 3.

   NO – Intermittent failure, system is OK at this time. Go to Troubleshooting Intermittent Failures (see page 23-45).

3. Check for a blown No. 1 (15A) fuse in the driver's under-dash fuse/relay box.

   Is the fuse OK?

   YES – Go to step 11.

   NO – Go to step 4.

4. Replace the fuse. Turn the ignition switch ON (II), and check that the fuse doesn't blow.

   Is the fuse OK?

   YES – The problem is gone. Test-drive the vehicle, and see Troubleshooting Intermittent Failures (see page 23-45).

   NO – Go to step 5.

5. Turn the ignition switch OFF.

6. Disconnect the battery negative cable, and wait for 3 minutes.

BACK

7. Disconnect the driver's airbag, front passenger's airbag, and seat belt tensioner connectors (A).

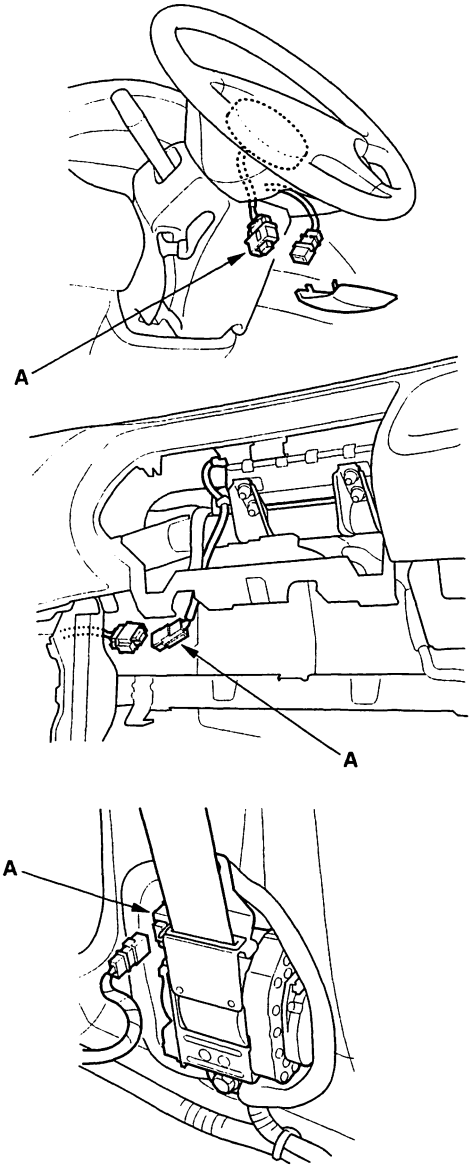

8. Disconnect SRS unit connector A (18P) from the SRS unit.

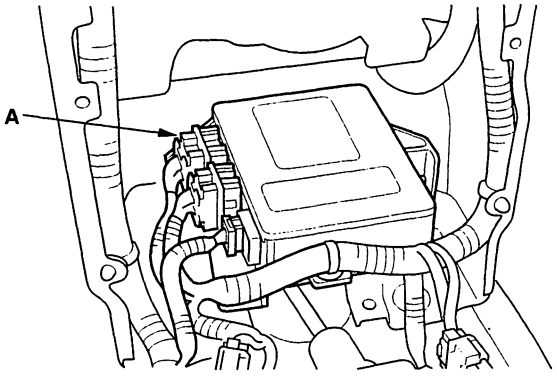

9. Disconnect SRS main harness 2P connector N from the driver's under-dash fuse/relay box.

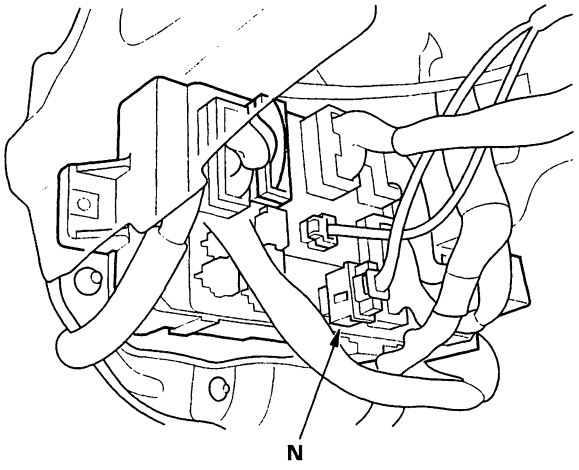

(cont'd)

SRS Indicator Light Circuit Troubleshooting - '01-02 Models (cont'd)

10. Check resistance between the No. 3 terminal of SRS unit connector A (18) and body ground. There should be 1 MΩ or more.

SRS UNIT CONNECTOR A (18P)

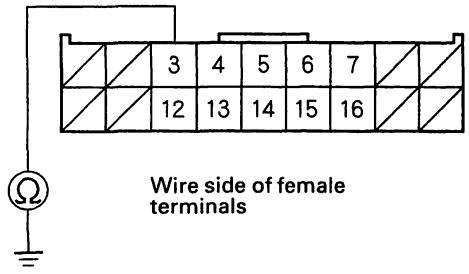

Is the resistance as specified?

YES—Short to ground in the No. 1 (15A) fuse circuit, or faulty SRS unit; check the No. 1 fuse circuit. If the circuit is OK, replace the SRS unit (see page 23-296).■

NO—Short to ground in the SRS main harness; replace the harness.■

11. Disconnect the battery negative cable, and wait for 3 minutes.

12. Disconnect the driver's airbag, front passenger's airbag, and seat belt tensioner connectors (A).

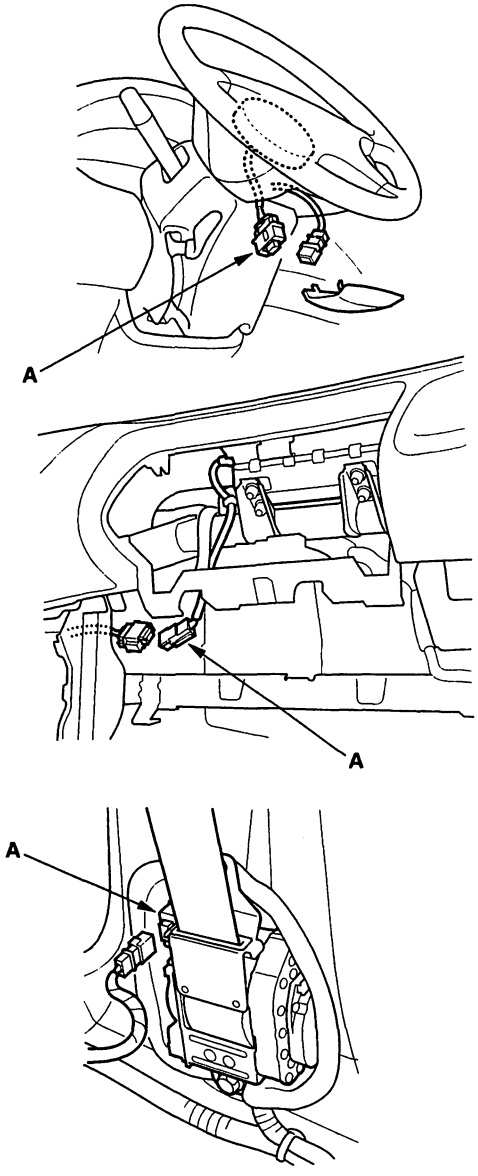

BACK

13. Disconnect SRS unit connector A (18P) from the SRS unit.

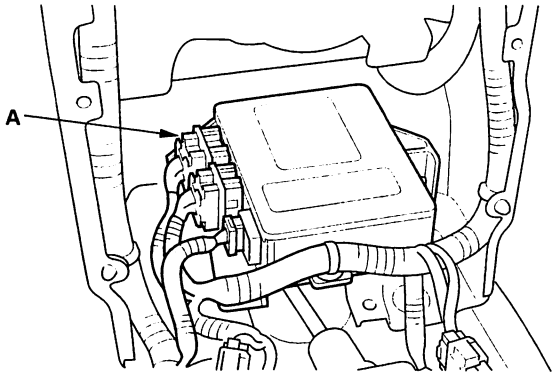

14. Reconnect the battery negative cable.

15. Connect a voltmeter between the No. 3 terminal of SRS unit connector A (18P) and body ground.

SRS UNIT CONNECTOR A (18P)

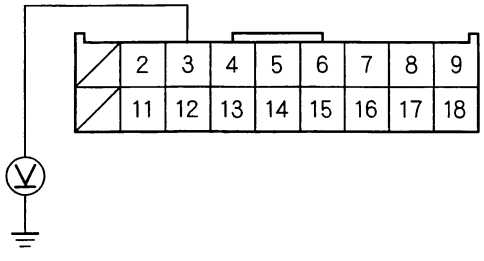

Wire side of female terminals

16. Turn the ignition switch ON (II), and measure voltage.

Is there battery voltage?

YES – Poor contact at SRS unit connector A (18P) or faulty SRS unit; check the connector. If the connector is OK, replace the SRS unit (see page 23-296). ■

NO – Poor contact at SRS main harness 2P connector N or open in the SRS main harness; check the connector. If the connector is OK, replace the SRS main harness. ■

Component Replacement/ Inspection After Deployment

NOTE: Before doing any SRS repairs, use the PGM Tester SRS menu method to check for DTCs; refer to the DTC Troubleshooting Index for the less obvious deployed parts (seat belt tensioners, OPDS sensor, side airbag sensors, etc.)

'98-00 Models:
After a collision where the frontal airbags deployed, replace these items:
- SRS unit
- Deployed airbag(s)

'01-02 Models:
After a collision where the seat belt tensioners deployed, replace these items:
- Seat belt tensioners
- SRS unit

After a collision where the front airbag(s) deployed, replace these items:
- SRS unit
- Deployed airbag(s)
- Seat belt tensioners

'00-02 Models:
After a collision where the side airbag(s) deployed, replace these items:
- SRS unit
- Deployed side airbag(s)
- Side impact sensor(s) for side(s) deployed

'98-02 Models:
During the repair process, inspect these areas:
- Inspect all the SRS wire harnesses. Replace, don't repair, any damaged harnesses.
- Inspect the cable reel for heat damage. If there is any damage, replace the cable reel.

After the vehicle is completely repaired, turn the ignition switch ON (II). If the SRS indicator comes on for about 6 seconds and then goes off, the SRS airbag system is OK. If the indicator does not function properly, use the PGM Tester SRS Menu Method to read the DTC (s). If this doesn't retrieve any codes, use the Tester's SCS menu method. If the SCS method doesn't work, you may need to install a known-good SRS unit to read the DTC(s). If you still cannot retrieve a code, go to SRS Indicator Circuit Troubleshooting.

Driver's Airbag Replacement

Removal

1. Disconnect the battery negative cable, and wait at least 3 minutes before beginning work.

2. Remove the access panel (A) from the steering wheel, then disconnect the connector between the cable reel 2P (or 4P) connector (B) and driver's airbag 2P (or 4P) connector (C).

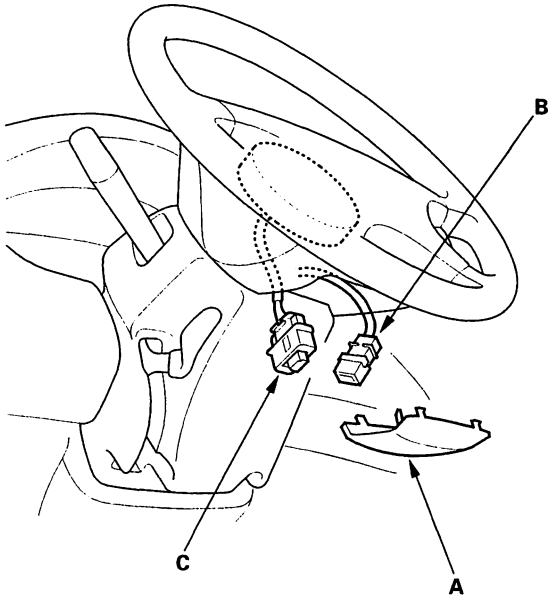

3. Remove the covers (A, B) from the steering wheel, then remove the two Torx bolts (C) using a Torx T30 bit. Remove the driver's airbag (D).

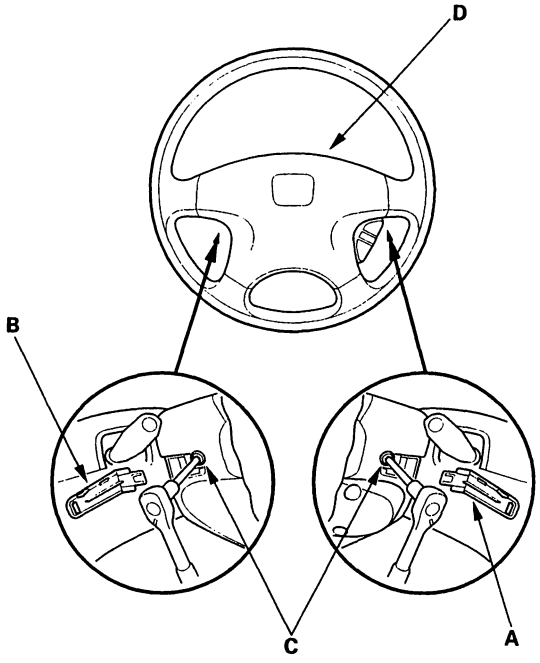

4. Disconnect the horn connector from the steering wheel.

BACK

Installation

1. Place the new driver's airbag (A) in the steering wheel, and secure it with new Torx bolts (B). Install the covers (C).

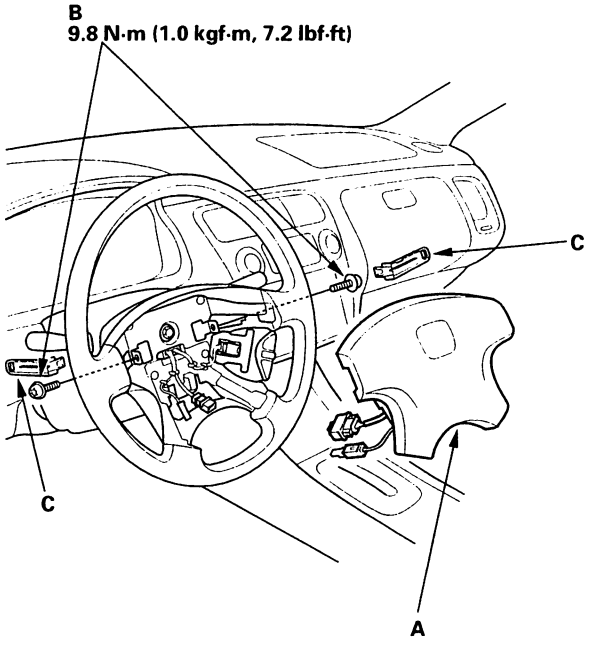

2. Connect the cable reel 2P (or 4P) connector (A) to the driver's airbag 2P (or 4P) connector (B), then install the access panel (C) on the steering wheel.

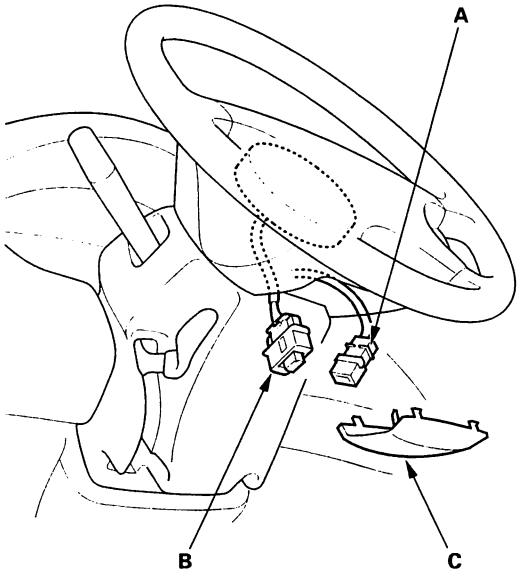

3. Connect the battery negative cable.

4. After installing the airbag, confirm proper system operation:

   - Turn the ignition switch ON (II); the SRS indicator light should come on for about 6 seconds and then go off.
   - Make sure both horn buttons work.

Front Passenger's Airbag Replacement

Removal

1. Disconnect the battery negative cable, and wait at least 3 minutes before beginning work.

2. Remove the glove box (see page 20-87), then disconnect the connector between the SRS main harness 2P (or 4P) connector (A) and front passenger's airbag 2P (or 4P) connector (B). Then remove the harness clamp (C).

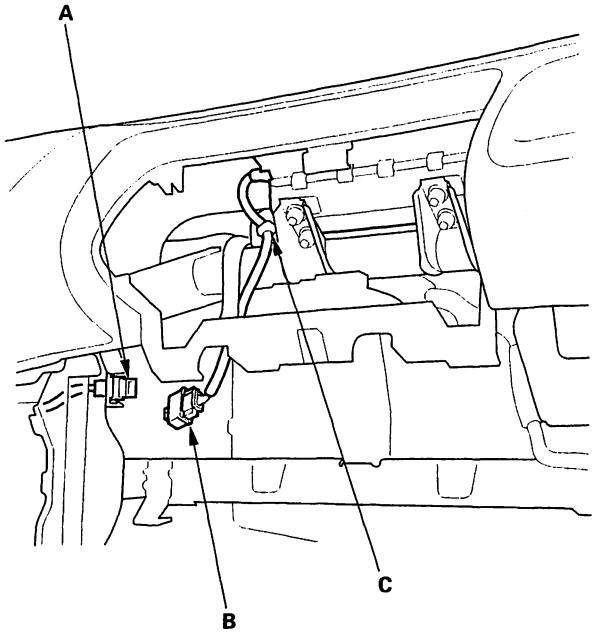

3. Remove the four mounting nuts (A) from the bracket. Cover the lid and dashboard with a cloth, and pry carefully with a screwdriver to lift the front passenger's airbag (B) out of the dashboard.

   NOTE: The airbag lid has pawls on its side that attach it to the dashboard.

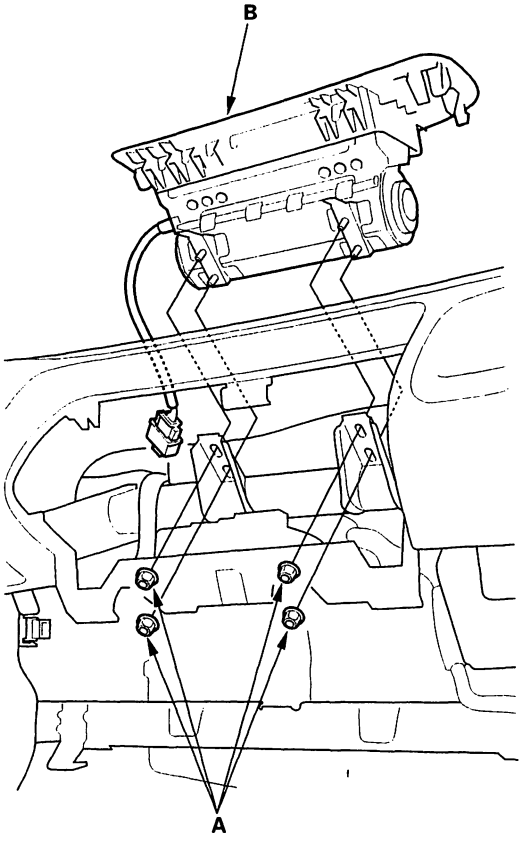

BACK

Installation

1. Place the new front passenger's airbag (A) into the dashboard. Tighten the front passenger's airbag mounting nuts (B), and install the harness clip (C).

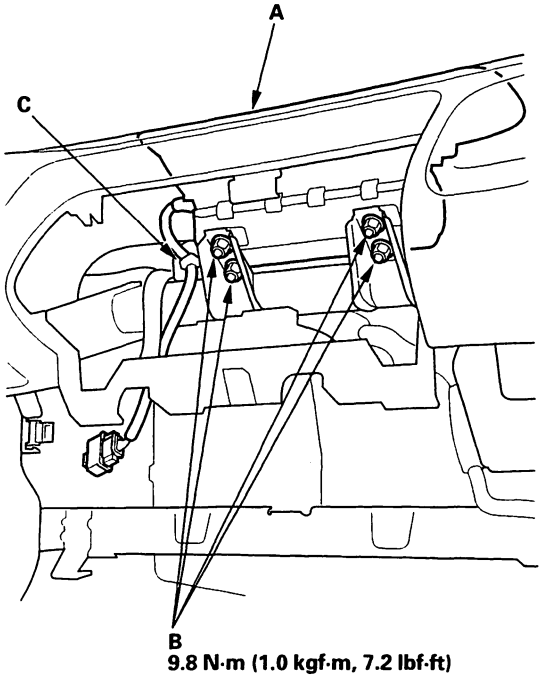

2. Connect the front passenger's airbag 2P (or 4P) connector (A) to the SRS main harness 2P (or 4P) connector (B).
   Attach the front passenger's airbag connector to the connector holder (C), then reinstall the glove box.

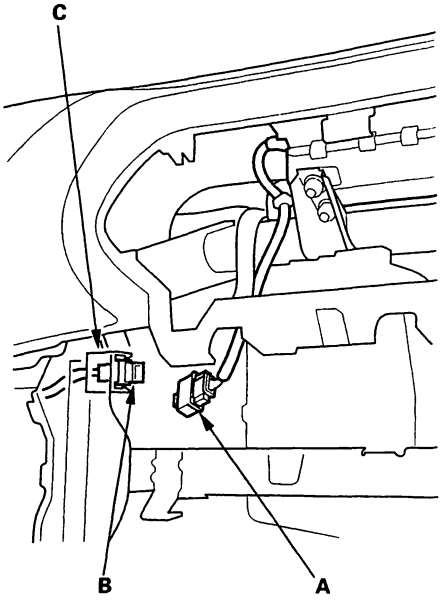

3. Reconnect the battery negative cable.

4. After installing the airbag, confirm proper system operation: Turn the ignition switch ON (II); the SRS indicator light should come on for about 6 seconds and then go off.

Side Airbag Replacement

NOTE: Review the seat replacement procedure in the body section before performing repairs or service.

Removal

1. Disconnect the battery negative cable, and wait at least 3 minutes before beginning work.

2. Disconnect the side airbag harness 2P connector (A).

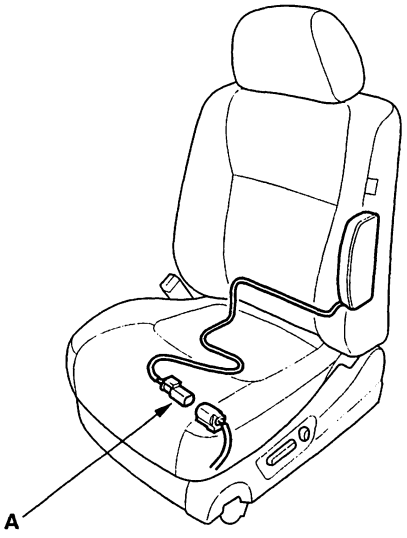

3. Remove the seat assembly (Sedan) (see page 20-98), (Coupe) (see page 20-97), and seat-back cover (Sedan) (see page 20-98), (Coupe) (see page 20-97).

4. Remove the two mounting nuts (A) and the side airbag (B).

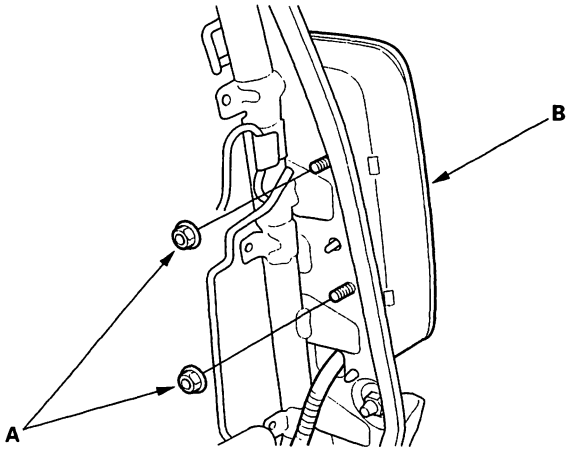

Installation

NOTICE
Be sure to install the harness wires so that they are not pinched or interfering with other parts.

NOTE:
- If the side airbag lid is secured by a tape, remove the tape.
- Do not open the lid of the side airbag cover.
- Use new mounting nuts tightened to the specified torque when you replace a side airbag.
- Make sure that the seat-back cover is installed properly. Improper installation may prevent proper deployment.

1. Place the new side airbag on the seat back-frame (A). Tighten the side airbag mounting nuts (B).

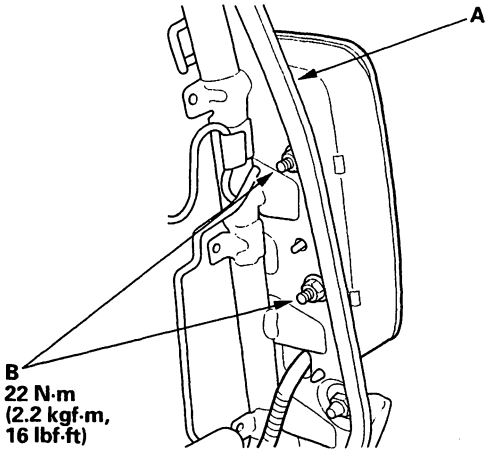

2. Install the new seat-back cover (Sedan) (see page 20-98), (Coupe) (see page 20-97).

3. Install the seat assembly(Sedan) (see page 20-98), (Coupe) (see page 20-97), then connect the side airbag harness 2P connector.

4. Move the front seat and the seat-back through their full ranges of movement, making sure the harness wires are not pinched or interfering with other parts.

5. Reconnect the battery negative cable.

6. After installing the side airbag, confirm proper system operation: Turn the ignition switch ON (II); the SRS indicator light should come on for about 6 seconds and then go off.

BACK

Airbag Disposal - '98-99 Models

Special Tool Required
Deployment tool 07HAZ-SG00500

Before scrapping any airbags (including those in a whole vehicle to be scrapped), the airbags must be deployed. If the vehicle is still within the warranty period, before you deploy the airbags, the Honda District Service Manager must give approval and/or special instructions. Only after the airbags have been deployed (as the result of vehicle collision, for example), can they be scrapped. If the airbags appear intact (not deployed), treat them with extreme caution. Follow this procedure:

Deploying Airbags In the vehicle

If an SRS equipped vehicle is to be entirely scrapped, its airbags should be deployed while still in the vehicle. The airbags should not be considered as salvageable parts and should never be installed in another vehicle.

1. Turn the ignition switch OFF, then disconnect the battery negative cable, and wait at least 3 minutes.

2. Confirm that each airbag is securely mounted.

3. Confirm that the special tool is functioning properly by following the check procedure on the tool label.

Driver's Airbag:

4. Remove the access panel (A), then disconnect the 2P connector between the driver's airbag (B) and the cable reel (C).

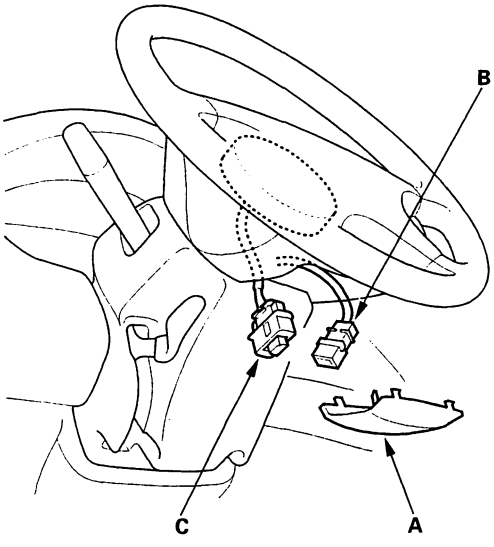

Front Passenger's Airbag:

5. Remove the glove box, then disconnect the 2P connector between the front passenger's airbag (A) and SRS main harness (B).

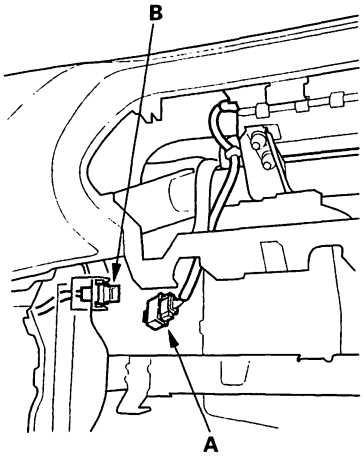

6. Cut off the airbag connector, strip the ends of the airbag wires, and connect the deployment tool alligator clips (A) to the airbag. Place the deployment tool at least 30 feet (10 meters) away from the airbag.

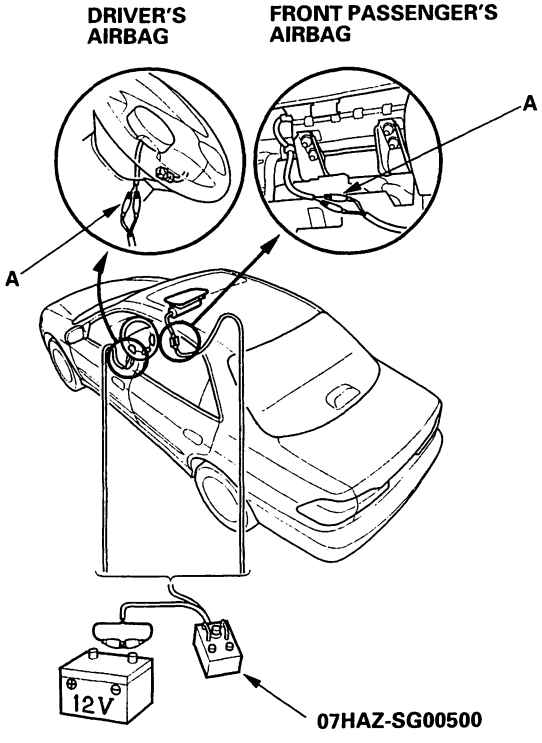

(cont'd)

Airbag Disposal - '98-99 Models (cont'd)

7. Connect a 12 volt battery to the tool.

   - If the green light on the tool comes on, the airbag igniter circuit is defective and cannot deploy the airbag. Go to Damaged Airbag Special Procedure.
   - If the red light on the tool comes on, the airbag is ready to be deployed.

8. Push the tool's deployment switch. The airbag should deploy (deployment is both highly audible and visible: a loud noise and rapid inflation of the bag, followed by slow deflation).

   - If the airbags deploy and the green light on the tool comes on, continue with this procedure.
   - If an airbag doesn't deploy, yet the green light comes ON, its igniter is defective. Go to Disposal of Damaged Components.
   - During deployment the airbag can become hot enough to burn you. Wait 30 minutes after deployment before touching the airbag.

9. Dispose of the complete airbag. No part of it can be reused. Place it in a sturdy plastic bag (A), and seal it securely.

Airbag Disposal - '00 Model

Special Tool Required
Deployment tool 07HAZ-SG00500

Before scrapping any airbags or side airbags (including those in a whole vehicle to be scrapped), the airbags or side airbags must be deployed. If the vehicle is still within the warranty period, before deploying the airbags or side airbags, the Honda District Service Manager must give approval and/or special instruction. Only after the airbags or side airbags have been deployed (as the result of vehicle collision, for example), can they be scrapped.
If the airbags or side airbags appear intact (not deployed), treat them with extreme caution. Follow this procedure.

Deploying Airbags In the vehicle

If an SRS equipped vehicle is to be entirely scrapped, its airbags or side airbags should be deployed while still in the vehicle. The airbags or side airbags should not be considered as salvageable parts and should never be installed in another vehicle.

1. Turn the ignition switch OFF, and disconnect the battery negative cable and wait at least 3 minutes.

2. Confirm that each airbag or side airbag are securely mounted.

3. Confirm that the special tool is functioning properly by following the check procedure on the tool label.

Driver's Airbag:

4. Remove the access panel (A), then disconnect the 2P connector between the driver's airbag (B) and the cable reel (C).

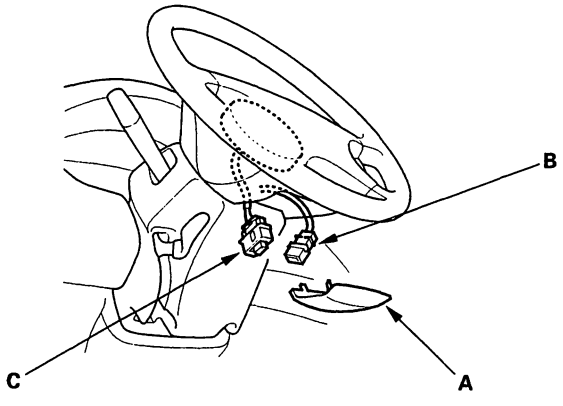

BACK

Front Passenger's Airbag:

5. Remove the glove box, then disconnect the 4P connector between the front passenger's airbag (A) and SRS main harness (B).

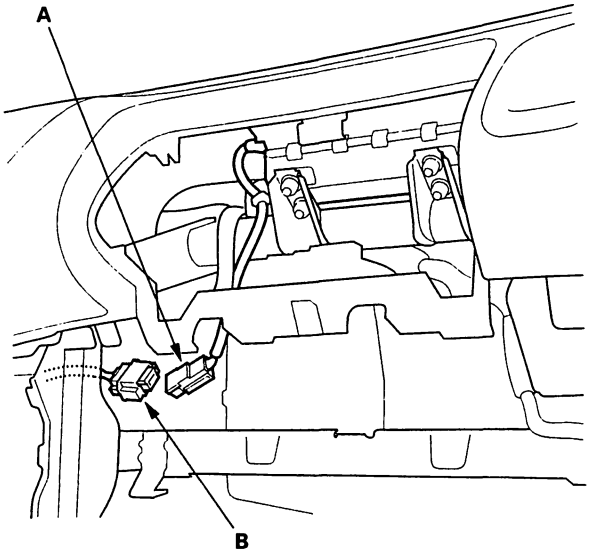

Side Airbag:

6. Disconnect the 2P connector between the side airbag (A) and the SRS floor harness (B) or side wire harness (B).

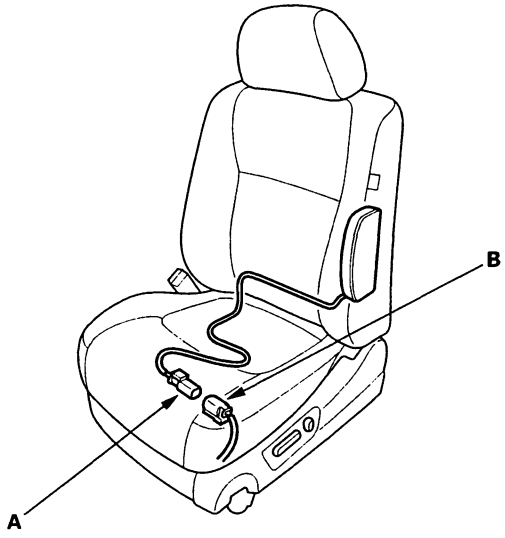

7. Cut off the airbag connector, strip the ends of the airbag wires, and connect the deployment tool alligator clips (A) to the airbag. Place the deployment tool at least 30 feet (10 meters) away from the airbag.

   NOTE: The front passenger's airbag has 4 wires, 2 yellow and 2 red. Twist each pair of unlike color wires together, and connect one alligator clip to each pair.

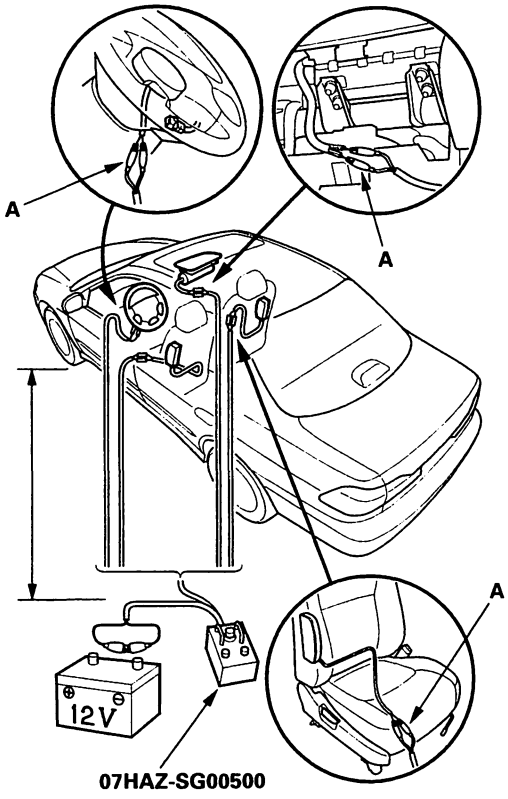

(cont'd)

Airbag Disposal - '00 Model (cont'd)

8. Connect a 12 volt battery to the tool.

   - If the green light on the tool comes on, the airbag igniter circuit is defective and cannot deploy the airbag. Go to Damaged Airbag Special Procedure.
   - If the red light on the tool comes on, the airbag is ready to be deployed.

9. Push the tool's deployment switch. The airbag should deploy (deployment is both highly audible and visible: a loud noise and rapid inflation of the bag, followed by slow deflation).

   - If the airbags deploy and the green light on the tool comes on, continue with this procedure.
   - If an airbag doesn't deploy, yet the green light comes ON, its igniter is defective. Go to Disposal of Damaged Components.
   - During deployment the airbag can become hot enough to burn you. Wait 30 minutes after deployment before touching the airbag.

10. Dispose of the complete airbag. No part of it can be reused. Place it in a sturdy plastic bag (A), and seal it securely.

Airbag Disposal - '01-02 Models

Special Tool Required
Deployment tool 07HAZ-SG00500

Before scrapping any airbags, side airbags, or seat belt tensioners (including those in a whole vehicle to be scrapped), the airbags, side airbags, or seat belt tensioners must be deployed. If the vehicle is still within the warranty period, the Honda District Service Manager must give approval and/or special instruction before deploying the airbags, side airbags, or seat belt tensioners. Only after the airbags, side airbags, or seat belt tensioners have been deployed (as the result of vehicle collision, for example), can they be scrapped. If the airbags, side airbags, or seat belt tensioners appear intact (not deployed), treat them with extreme caution. Follow this procedure.

Deploying Airbags In the vehicle

If an SRS equipped vehicle is to be entirely scrapped, its airbags, side airbags, or seat belt tensioners should be deployed while still in the vehicle. The airbags, side airbags, or seat belt tensioners should not be considered as salvageable parts and should never be installed in another vehicle.

1. Turn the ignition switch OFF, then disconnect the battery negative cable, and wait at least 3 minutes.

2. Confirm that each airbag, side airbag, and seat belt tensioner is securely mounted.

3. Confirm that the special tool is functioning properly by following the check procedure on the tool label.

Driver's Airbag:

4. Remove the access panel (A), then disconnect the 4P connector between the driver's airbag (B) and the cable reel (C).

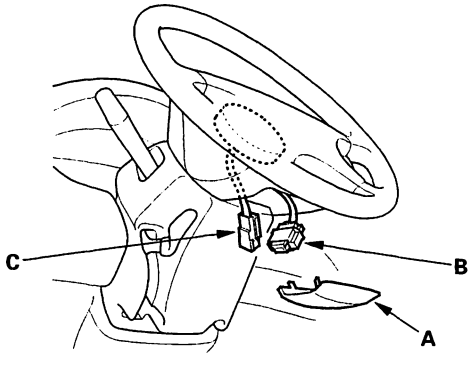

BACK

Front Passenger's Airbag:

5. Remove the glove box, then disconnect the 4P connector between the front passenger's airbag (A) and SRS main harness (B).

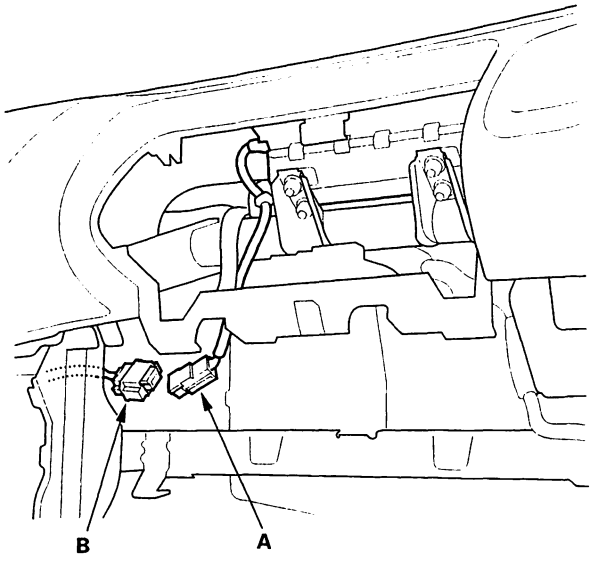

Side Airbag:

6. Disconnect the 2P connector between the side airbag (A) and the side wire harness (B).

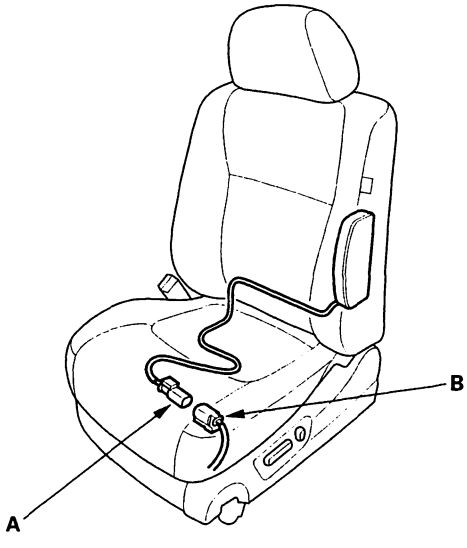

Seat belt tensioner:

7. Disconnect the 2P connector between the seat belt tensioner (A) and side wire harness (B).

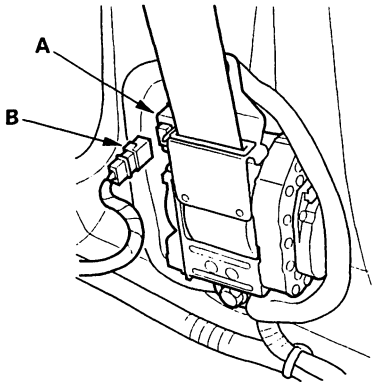

8. Pull the seat belt out all the way and cut it.

9. Cut off each airbag connector, strip the ends of the wires, and connect the deployment tool alligator clips (A) to the wires. Place the deployment tool at least 30 feet (10 meters) away from the vehicle.

   NOTE: The driver's airbag and front passenger's airbag have four wires, two yellow (1st inflator) and 2 red (2nd inflator). Twist each pair of unlike colored wires together, and connect an alligator clip to each pair.

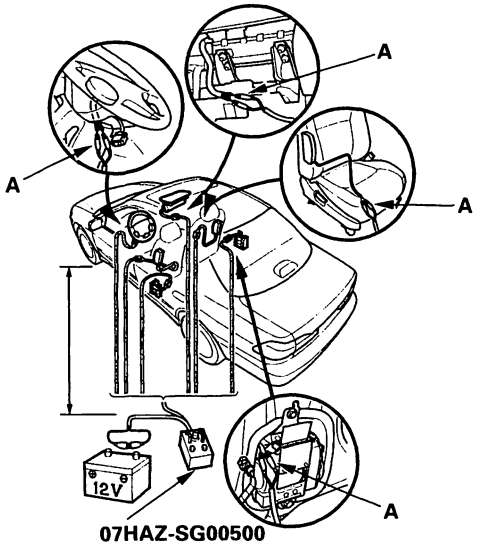

(cont'd)

Airbag Disposal - '01-02 Models (cont'd)

10. Connect a 12 volt battery to the tool.

    - If the green light on the tool comes on, the igniter circuit is defective and cannot deploy the component. Go to Disposal of Damaged Airbag.
    - If the red light on the tool comes on, the component is ready to be deployed.

11. Push the tool's deployment switch. The airbags and tensioners should deploy (deployment is both highly audible and visible: a loud noise and rapid inflation of the bag, followed by slow deflation).

    - If the components deploy and the green light on the tool comes on, continue with this procedure.
    - If an component doesn't deploy, yet the green light comes ON, its igniter is defective. Go to Disposal of Damaged Components.
    - During deployment the airbag can become hot enough to burn you. Wait 30 minutes after deployment before touching the airbag.

12. Dispose of the complete airbag. No part of it can be reused. Place it in a sturdy plastic bag (A), and seal it securely.

Deploying the Components Out of the Vehicle

If an intact airbag has been removed from a scrapped vehicle, or has been found defective or damaged during transit, storage, or service, it should be deployed as follows:

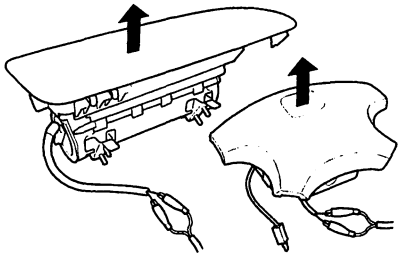

1. Confirm that the special tool is functioning properly by following the check procedure on this page or on the tool label.

2. Position the airbag face up, outdoors, on flat ground, at least 30 feet (10 meters) from any obstacles or people.

3. Follow steps 6, 7, 8, and 9 or 7, 8, 9 and 10 or 9, 10, 11 and 12 of the in-vehicle deployment procedure.

Disposal of Damaged Components

1. If installed in a vehicle, follow the removal procedure of driver's airbag (see page 23-278), front passenger's (see page 23-280), and side airbag (see page 23-282), and seat belt tensioner (see page 23-4).
2. In all cases, make a short circuit by twisting together the two inflator wires.
3. Package the component in exactly the same packaging that the new replacement part came in.
4. Mark the outside of the box "DAMAGED AIRBAG NOT DEPLOYED", "DAMAGED SIDE AIRBAG NOT DEPLOYED" or "DAMAGED SEAT BELT TENSIONER NOT DEPLOYED" so it does not get confused with your parts stock.
5. Contact your Honda District Service Manager for how and where to return it for disposal.

Deployment Tool Check

1. Connect the yellow clips to both switch protector handles on the tool; connect the tool to a battery.
2. Push the operation switch : green means the tool is OK; red means the tool is faulty.
3. Disconnect the battery and the yellow clips.

BACK

Cable Reel Replacement - '98-00 Models

Removal

1. Make sure the front wheels are aligned straight ahead.

2. Disconnect the battery negative cable, and wait at least 3 minutes.

3. Remove the driver's airbag (see page 23-278).

4. Disconnect the connector (A) from the cruise control set/resume switch, then remove the steering wheel bolt (B).

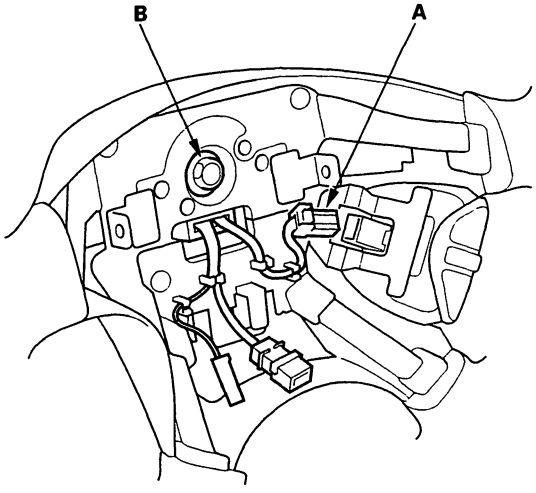

5. Align the front wheels straight ahead, then remove the steering wheel (see page 17-22).

6. Remove the dashboard lower cover (A).

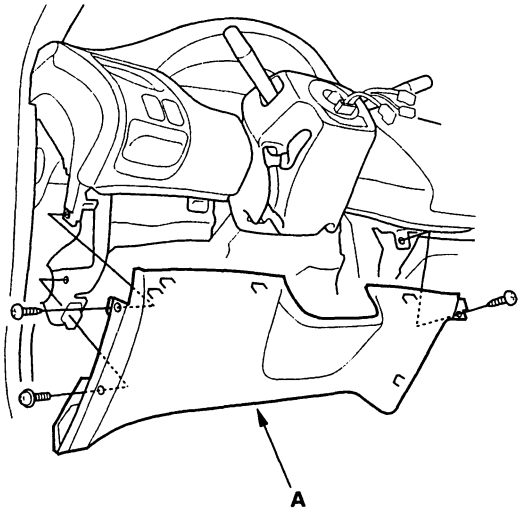

7. Remove the column cover screws (A), then remove the column covers (B, C).

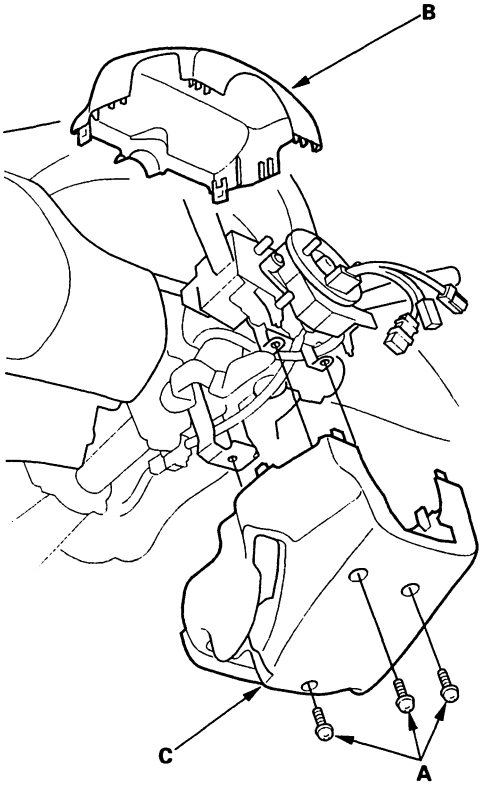

(cont'd)

Cable Reel Replacement - '98-00 Models (cont'd)

8. Disconnect the SRS main harness 2P connector (A) from the cable reel 2P connector (B), then disconnect the dashboard harness 4P connector (C) from the cable reel (D).

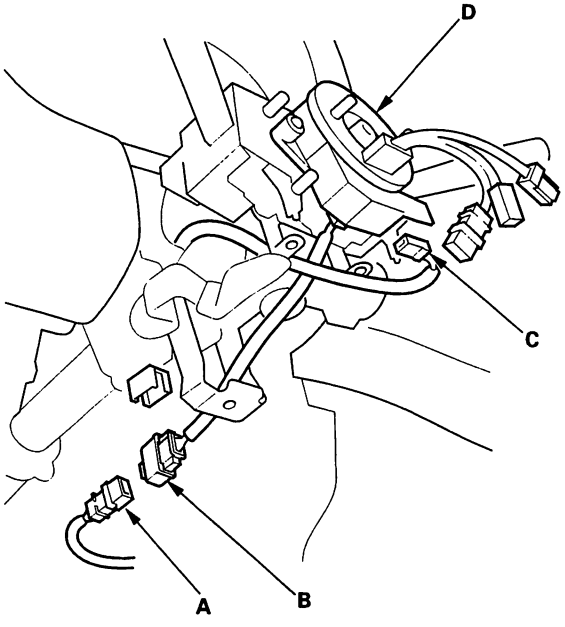

9. Remove the screws (A) from the cable reel, then remove the cable reel from the column.

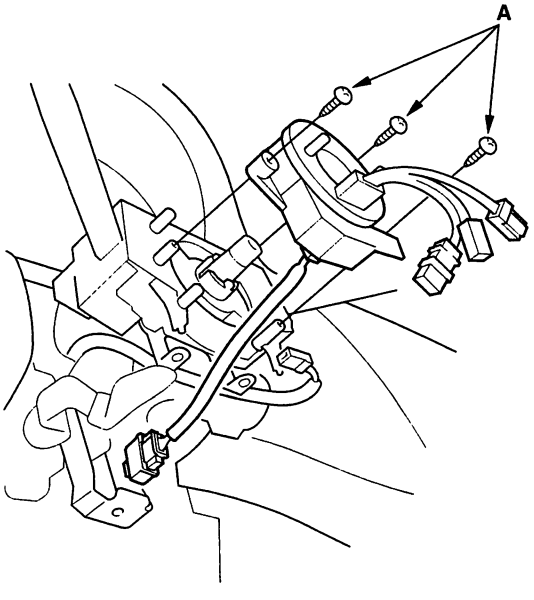

Installation

1. Before installing the steering wheel, the front wheels should be aligned straight ahead.

2. Disconnect the battery negative cable, and wait at least 3 minutes.

3. Set the cancel sleeve (A) so that the projections (B) are aligned vertically.

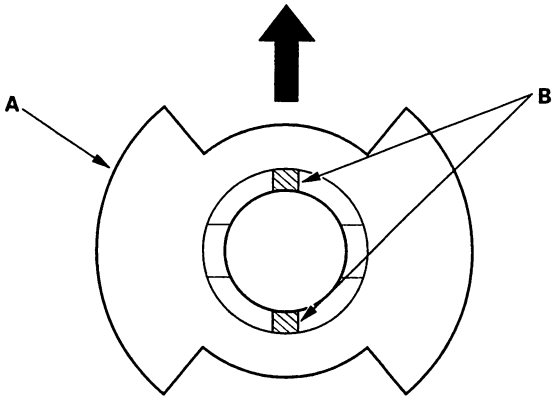

4. Carefully install the cable reel (A) on the steering column shaft. Then connect the 4P connector (B) to the cable reel, and connect the 2P connector (C) to the SRS main harness 2P connector (D).

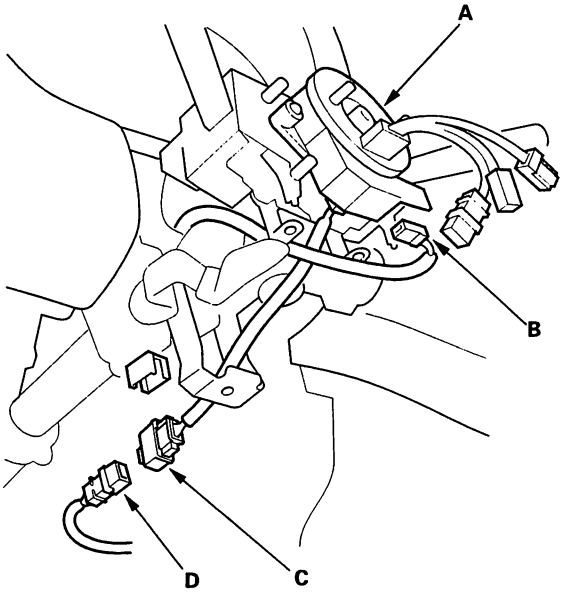

BACK

5. Install the steering column covers.

6. If necessary, center the cable reel. (New replacement cable reels come centered.) Do this by first rotating the cable reel clockwise until it stops. Then rotate it counterclockwise (about 2 1/2 turns) until the arrow mark on the cable reel label points straight up.

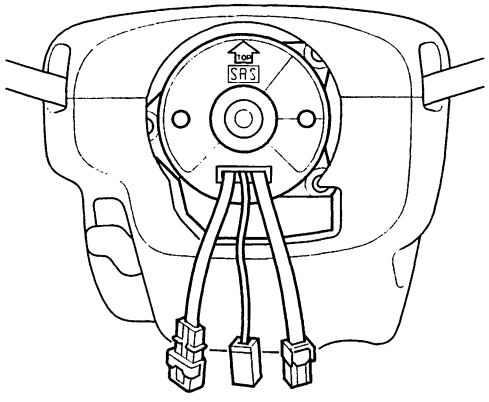

7. Align the projections on the cable reel with the holes on the steering wheel, and install the steering wheel with a new steering wheel bolt.

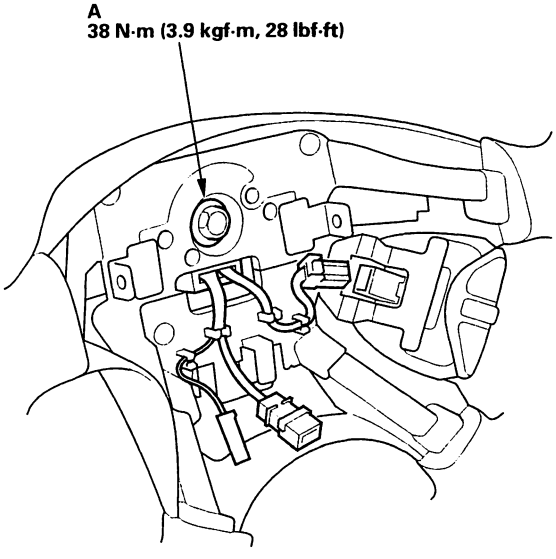

8. Install the driver's airbag (see step 1 on page 23-279).

9. Reconnect the battery negative cable.

10. After installing the cable reel, confirm proper system operation:

    - Turn the ignition switch ON (II); the SRS indicator light should come on for about 6 seconds and then go off.
    - After the SRS indicator light has come off, turn the steering wheel fully left and right to confirm the SRS indicator light does not come on.
    - Make sure both horn buttons work.

Cable Reel Replacement - '01-02 Models

Removal

1. Make sure the front wheels are aligned straight ahead.

2. Disconnect the battery negative cable, and wait at least 3 minutes.

3. Remove the driver's airbag (see page 23-278).

4. Disconnect the connectors (A) from the cruise control set/resume switch and radio remote switch, then remove the steering wheel bolt (B).

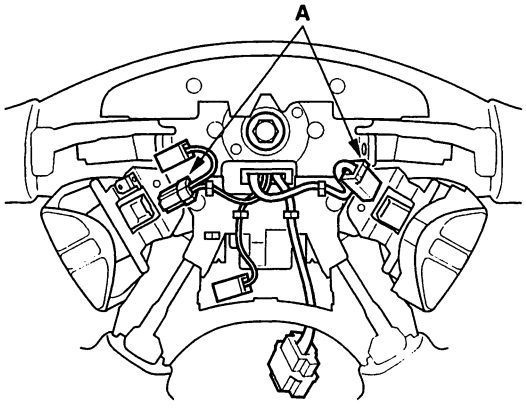

5. Align the front wheels straight ahead, then remove the steering wheel (see page 17-22).

6. Remove the dashboard lower cover (A).

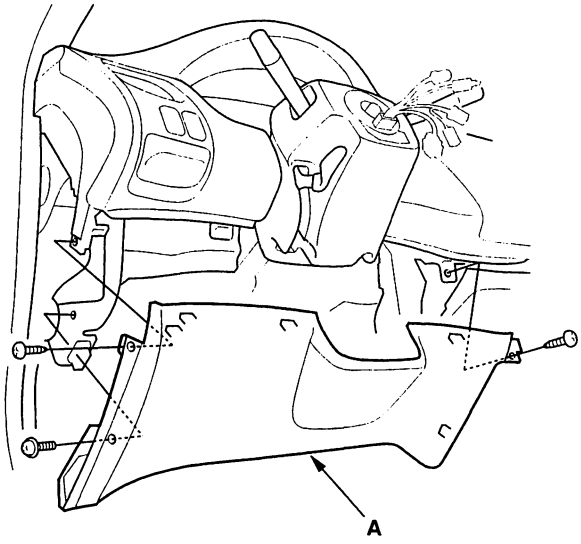

7. Remove the column cover screws (A), then remove the column covers (B, C).

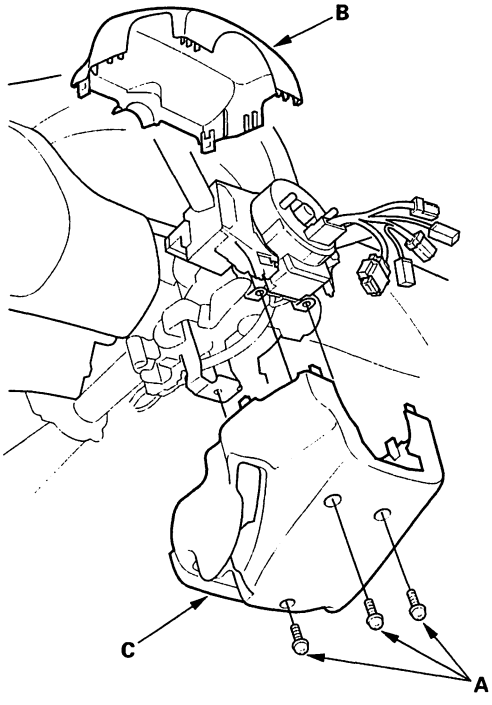

BACK

8. Disconnect the SRS main harness 4P connector (A) from the cable reel 4P connector (B), and dashboard wire harness B 4P connector (C) from the cable reel 4P connector (D).

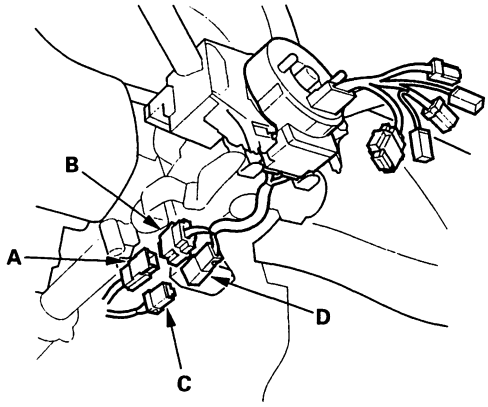

9. Remove the tab (A), then remove the cable reel from the column.

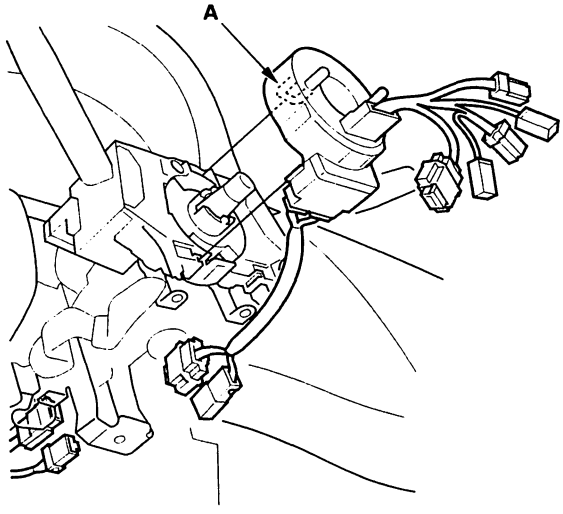

Installation

1. Before installing the steering wheel, the front wheels should be aligned straight ahead.

2. Disconnect the battery negative cable, and wait at least 3 minutes.

3. Set the cancel sleeve (A) so that the projections (B) are aligned vertically.

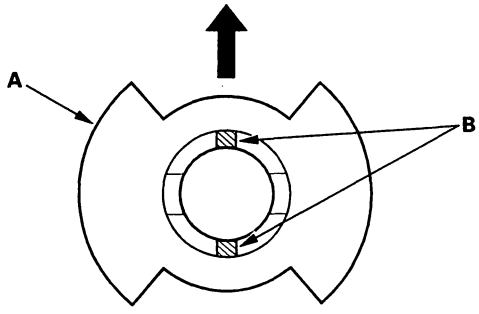

4. Carefully install the cable reel (A) on the steering column shaft. Then connect dashboard wire harness B 4P connector (B) to the cable reel 4P connector (C), and connect the cable reel connector (D) to the SRS main harness 4P connector (E).

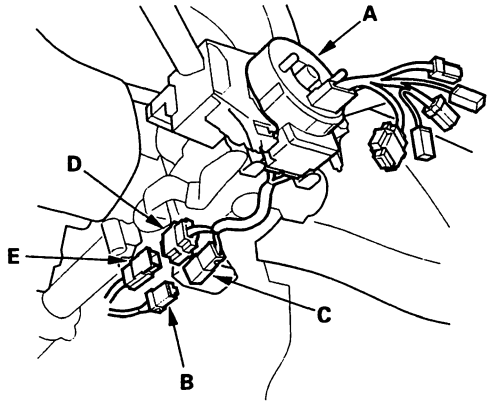

(cont'd)

Cable Reel Replacement - '01-02 Models (cont'd)

5. Install the steering column covers.

6. If necessary, center the cable reel. (New replacement cable reels come centered.) Do this by first rotating the cable reel clockwise until it stops. Then rotate it counterclockwise (about 2 1/2 turns) until the arrow mark on the cable reel label points straight up.

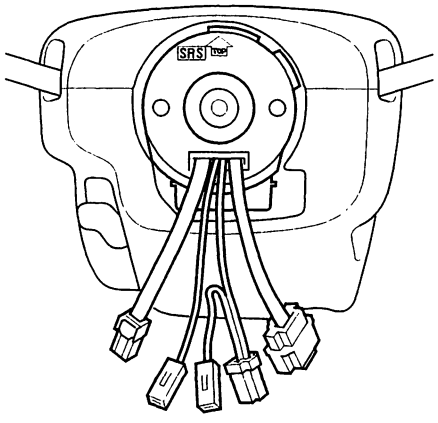

7. Align the projections on the cable reel with the holes on the steering wheel, and install the steering wheel with a new steering wheel bolt.

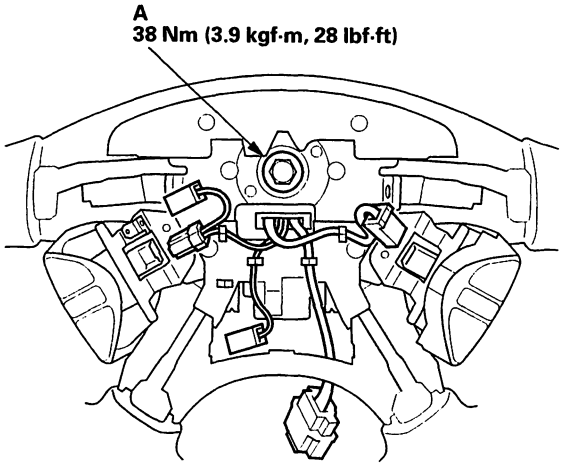

8. Install the driver's airbag (see step 1 on page 23-279).

9. Reconnect the battery negative cable.

10. After installing the cable reel, confirm proper system operation:

    - Turn the ignition switch ON (II); the SRS indicator light should come on for about 6 seconds and then go off.
    - After the SRS indicator light has come off, turn the steering wheel fully left and right to confirm the SRS indicator light does not come on.
    - Make sure both horn buttons work.

BACK

SRS Unit Replacement - '98-99 Models

Removal

1. Disconnect the battery negative cable, and wait at least 3 minutes before beginning work (see page 23-28).

2. Disconnect the airbag connectors.

3. Remove the center console (see page 20-83).

4. Disconnect the SRS main harness 18P connector (A) from the SRS unit (B).

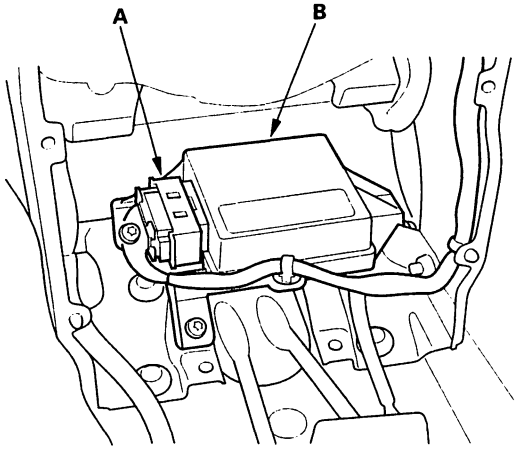

5. Remove the three Torx bolts (A) from the SRS unit (B), then pull out the SRS unit from the bracket.

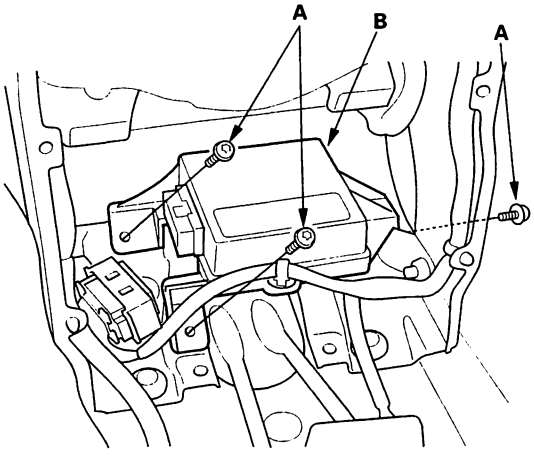

Installation

1. Install the new SRS unit (A) with Torx bolts (B), then connect the SRS main harness 18P connector (C) to the SRS unit; push it into position until it clicks.

   NOTE: When tightening the Torx bolts to the specified torque after replacement, be careful to turn them in so that their heads rest squarely on the brackets.

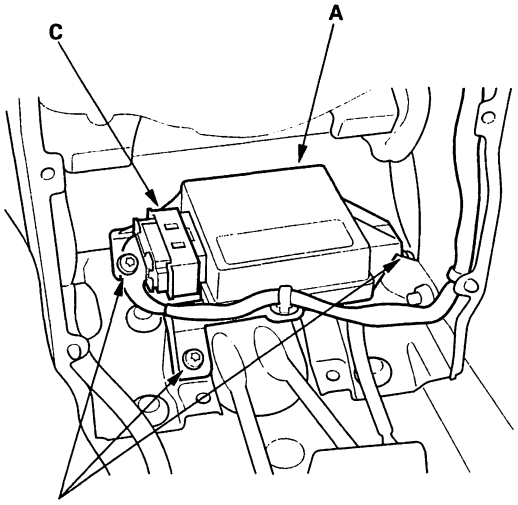

9.8 N·m (1.0 kgf·m, 7.2 lbf·ft)

2. Install the center console (see page 20-83).

3. Reconnect the airbag connectors.

4. Reconnect the battery negative cable.

5. After installing the SRS unit, confirm proper system operation: Turn the ignition switch ON (II); the SRS indicator light should come on for about 6 seconds and then go off.

SRS Unit Replacement - '00-02 Models

Removal

1. Disconnect the battery negative cable, and wait at least 3 minutes before beginning work (see page 23-28).
2. Disconnect the airbag connectors (see page 23-39).
3. Disconnect the side airbag connectors (see page 23-39).
4. Remove the center console (see page 20-83).
5. Disconnect the connectors (A) from the SRS unit (B).

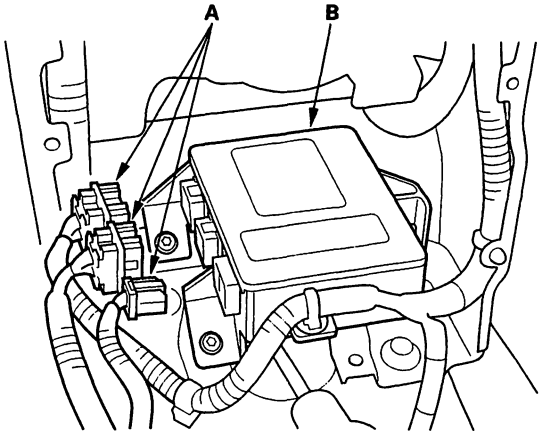

6. Remove the three Torx bolts (A) from the SRS unit (B), than pull out the SRS unit from the bracket.

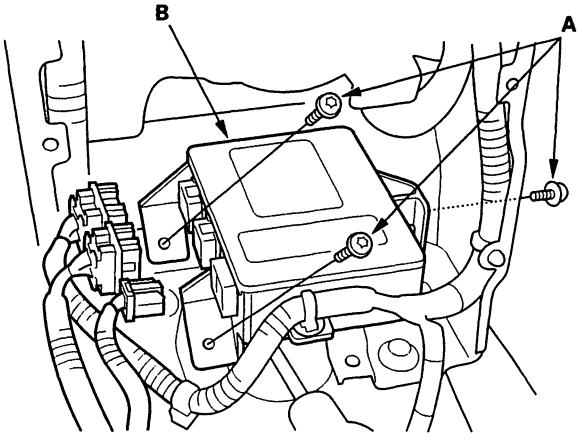

Installation

1. Install the new SRS unit (A) with Torx bolts (B), then connect the connectors (C) to the SRS unit; push it into position until it clicks.

   NOTE:
   - When tightening the Torx bolts to the specified torque after replacement, be careful to turn them in so that their heads rest squarely on the brackets.

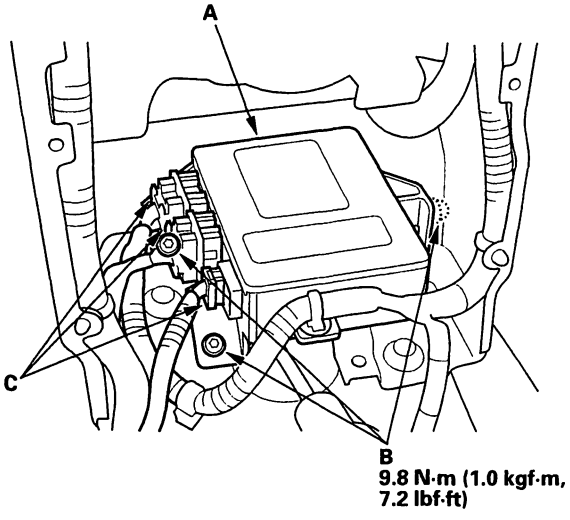

2. Install the center console (see page 20-83).
3. Reconnect the airbag connectors. (see page 23-39).
4. Reconnect the side airbag connectors (see page 23-39).
5. Reconnect the battery negative cable.
6. Initialize the OPDS unit (see page 23-46).
7. After installing the SRS unit, confirm proper system operation: Turn the ignition switch ON (II); the SRS indicator light should come on for about 6 seconds and then go off.

BACK

Side Impact Sensor Replacement - '00 Sedan

Removal

NOTICE

- Removal of the side impact sensor must be performed according to the precautions/ procedures described before.
- Before disconnecting the side impact sensor 2P connector(s), disconnect the side airbag 2P connector(s).
- Do not turn the ignition switch ON (II) and do not connect the battery cable while exchanging the side impact sensor.

1. Disconnect the negative battery cable, and wait at least 3 minutes before beginning work.
2. Remove the seat assembly (see page 20-83).
3. Remove the front door sill trim (see page 20-75).
4. Remove the center pillar trim (see page 20-75).
5. Remove the lower anchor bolt (see page 23-7).
6. Turn up the carpet (A), then remove the 2 mounting bolts (B) and the plate (C).

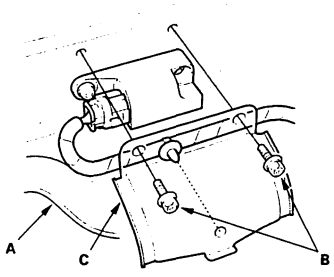

7. Disconnect the SRS floor harness 2P connector from the side impact sensor.
8. Remove the two Torx bolts (A) using a Torx T30 bit, then remove the side impact sensor (B).

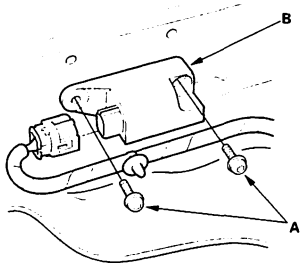

Installation

NOTICE

- Be sure to install the harness wires so that they are not pinched or interfering with other parts.
- Do not turn the ignition switch ON (II) and do not connect the battery cable while exchanging the side impact sensor.

1. Install the new side impact sensor with new Torx bolts (A) then connect the SRS floor harness 2P connector (B) to the side impact sensor (C).
2. Reinstall the plate.

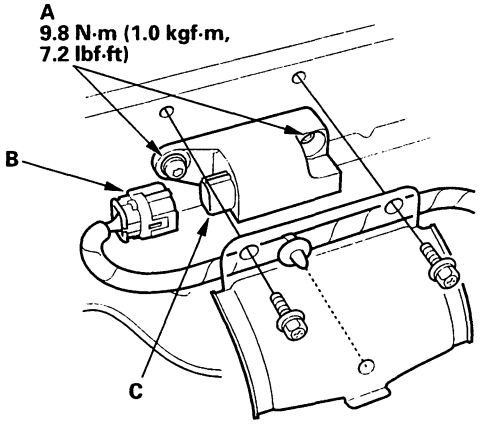

3. Reconnect the negative battery cable.
4. After installing the side impact sensor, confirm proper system operation: Turn the ignition switch ON (II): the SRS indicator light should come on for about 6 seconds and then go off.

Side Impact Sensor Replacement - '00 Coupe

Removal

NOTICE
- Removal of the side impact sensor must be performed according to the precautions/ procedures described before.
- Before disconnecting the side impact sensor 2P connector(s), disconnect the side airbag 2P connector(s).
- Do not turn the ignition switch ON (II) and do not connect the battery cable while exchanging the side impact sensor.

1. Disconnect the negative battery cable, and wait at least 3 minutes before beginning work.
2. Remove the seat assembly (see page 20-98).
3. Remove the front door sill trim (see page 20-74).
4. Remove the rear side trim panel (see page 20-74).
5. Remove the lower anchor bolt (see page 23-5).
6. Turn up the carpet (A), then remove the two clips (B) and the plate (C).

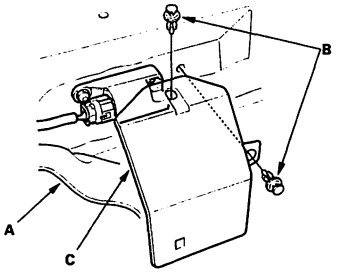

7. Disconnect the side wire harness 2P connector from the side impact sensor.
8. Remove the two Torx bolts (A) using a Torx T30 bit, than remove the side impact sensor (B).

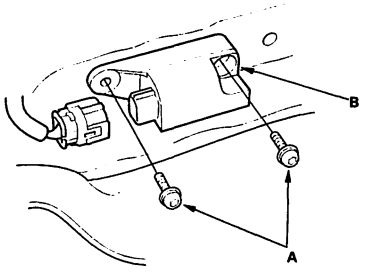

Installation

NOTICE
- Be sure to install the harness wires so that they are not pinched or interfering with other parts.
- Do not turn the ignition switch ON (II) and do not connect the battery cable while exchanging the side impact sensor.

1. Install the new side impact sensor with new Torx bolts (A) then connect the side wire harness 2P connector (B) to the side impact sensor (C).
2. Reinstall the plate.

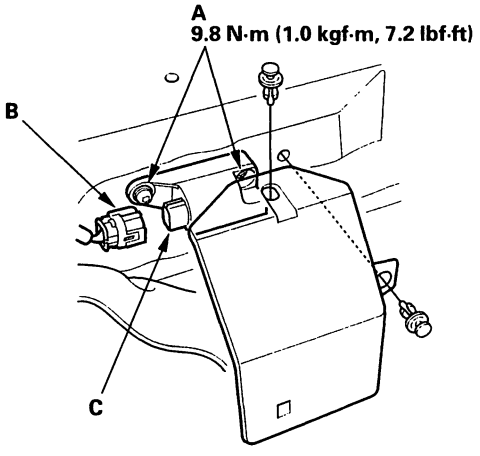

3. Reconnect the negative battery cable.
4. After installing the side impact sensor, confirm proper system operation: Turn the ignition switch ON (II): the SRS indicator light should come on for about 6 seconds and then go off.

BACK

Side Impact Sensor Replacement - '01-02 Models

Removal

NOTICE

- Removal of the side impact sensor must be performed according to the precautions/ procedures described before.
- Before disconnecting the side impact sensor 2P connector(s), disconnect the side airbag 2P connector(s).
- Do not turn the ignition switch ON (II) and do not connect the battery cable while exchanging the side impact sensor.

1. Disconnect the negative battery cable, and wait at least 3 minutes before beginning work.
2. Remove the seat assembly (see page 20-83).
3. Remove the front door sill trim (see page 20-75).
4. Remove the center pillar trim (see page 20-75).
5. Remove the lower anchor bolt (see page 23-7).
6. Turn up the carpet (A), then remove the two mounting bolts (B) and the plate (C).

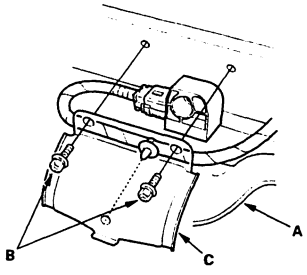

7. Disconnect the side wire harness 2P connector from the side impact sensor.
8. Remove the Torx bolt (A) using a Torx T30 bit, then remove the side impact sensor (B).

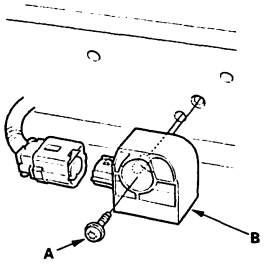

Installation

NOTICE

- Be sure to install the harness wires so that they are not pinched or interfering with other parts.
- Do not turn the ignition switch ON (II) and do not connect the battery cable while exchanging the side impact sensor.

1. Install the new side impact sensor with a new Torx bolt (A), then connect the side wire harness 2P connector (B) to the side impact sensor (C).

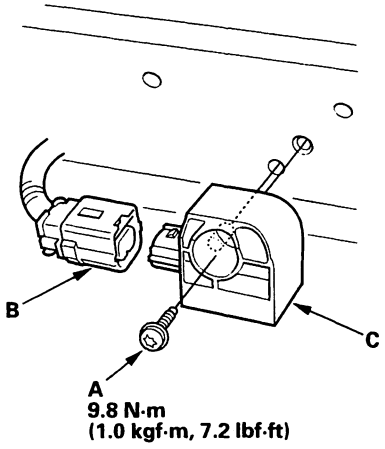

2. Reconnect the battery negative cable.
3. After installing the side impact sensor, confirm proper system operation: Turn the ignition switch ON (II): the SRS indicator light should come on for about 6 seconds and then go off.

OPDS Unit Replacement

NOTE: Review the seat replacement procedure in the body section (see page 20-99) before performing repairs or service.

Removal

1. Disconnect the negative battery cable, and wait at least 3 minutes before beginning work.
2. Disconnect the side airbag harness 2P connector (see page 23-282).
3. Remove the seat assembly (Sedan) (see page 20-98), (Coupe) (see page 20-97), and seat-back cover (Sedan) (see page 20-98), (Coupe) (see page 20-97).
4. Remove the cover (A), then disconnect the OPDS unit harness 8P and sensor connectors from the OPDS unit.
5. Remove the three screws (B) and OPDS unit (C).

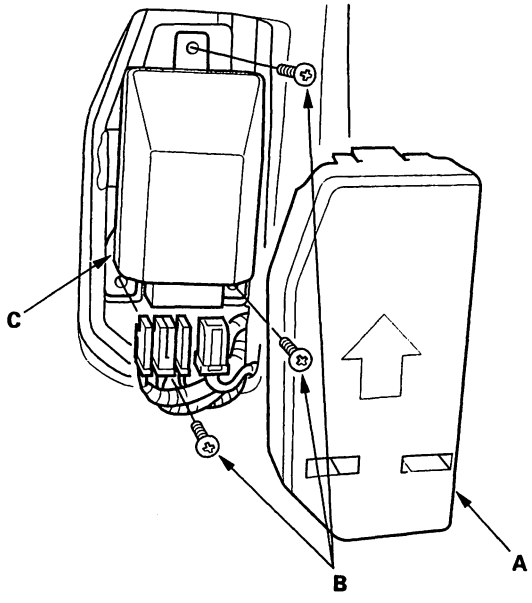

Installation

1. Place the new OPDS unit on the seat-back frame. Tighten the three screws (A), then connect the OPDS unit harness 8P and sensor connectors to the OPDS unit. Reinstall the cover.

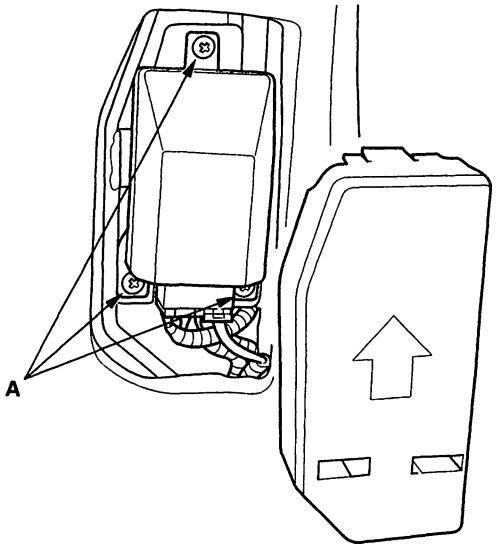

2. Install the new seat-back cover (Sedan) (see page 20-98), (Coupe) (see page 20-97).
3. Install the seat assembly (Sedan) (see page 20-98), (Coupe) (see page 20-97), then connect the side airbag harness 2P connector.
4. Reconnect the battery negative cable.
5. Set the seat-back in the normal position, and make sure there is nothing on the front passenger's seat.
6. Initialize the OPDS unit (see page 23-46).
7. After installing the OPDS unit, confirm proper system operation: Turn the ignition switch ON (II); the SRS indicator light should come on for about 6 seconds and then go off.

BACK

Service Manual Index

NOTE: Refer to the following list to look up DTCs, symptoms, fuses, connectors, wire harnesses, specifications, maintenance schedules, and general service information:

DTC Troubleshooting Indexes
ABS/TCS Components 19-40
Automatic Transaxle 14-7
Fuel and Emissions 11-6
Heating/Ventilation 21-5
SRS 23-48

Symptom Troubleshooting Indexes
A/C 21-34
ABS/TCS Components 19-41
Automatic Transaxle 14-8
Cruise Control System 4-43
Fan Controls 10-16
Fuel and Emissions 11-9
Heating/Ventilation 21-6
Moonroof/Sunroof 20-61
SRS 23-61
Steering 17-4

Fuse/Relay Indexes
A/C Compressor Clutch Relay 22-43
A/C Condenser Fan Relay 22-43
Blower Motor Relay 22-43
ELD (Electrical Load Detector) 22-43
Headlight Relay 22-43
Horn Relay 22-43
Power Distribution 22-46
Radiator Fan Relay 22-43
Under-dash Fuse/Relay Box, Driver's 22-44
Under-dash Fuse/Relay Box, Passenger's .. 22-45
Under-hood Fuse/Relay Box 22-43

Connector and Wire Harness Indexes
Component Connectors (to hamess) 22-12
Grounds (to components) 22-49
In-line Connectors (to hamess) 22-11

Specifications section ..... Section 2

Maintenance section ..... Section 3

General Information section ..... Section 1

A

A/C
Component Location Index 21-31
Description 21-35
Circuit Diagram 21-36
Test 21-43

A/C Compressor
Component Location Index 21-31
Replacement 21-48

A/C Compressor Clutch
Inspection 21-50
Overhaul 21-51

A/C Compressor Clutch Circuit
Troubleshooting 21-39

A/C Compressor Clutch Relay
Component Location Index 21-31

A/C Compressor Relief Valve
Replacement 21-52

A/C Condenser
Component Location Index 21-31
Replacement 21-53

A/C Condenser Fan Assembly
Component Location Index . 10-2, 15, 21-31
Test 10-8
Replacement 10-14

A/C Condenser Fan Circuit
Troubleshooting 21-37

A/C Condenser Fan Relay
Component Location Index 10-15, 21-31

A/C Pressure Switch
Component Location Index 21-31

A/C Pressure Switch Circuit
Troubleshooting 21-41

A/C Service Valve, High Pressure
Component Location Index 21-31

A/C Service Valve, Low Pressure
Component Location Index 21-31

A/C Signal Circuit
Troubleshooting 11-102

A/T Assembly
Removal 14-114
Installation 14-119

A/T Clutch Pressure Control Solenoid Valves
Test 14-108
Replacement 14-109

A/T Countershaft Assembly
Disassembly/Inspection/Reassembly 14-171

A/T Differential
Component Location Index 14-200

A/T Gear Position Indicator
Replacement
A/T Gear Position Indicator System 14-142
Component Location Index
A/T Gear Position Indicator System 22-57

A/T Gear Position Indicator System
Component Location Index 14-136
Circuit Diagram 14-137
Test 14-141

A/T Hydraulic Controls
Test 14-104

A/T Mainshaft Assembly
Disassembly/Inspection/Reassembly 14-168

A/T Secondary Shaft Assembly
Disassembly/Inspection/Reassembly 14-175
Inspection 14-176

A/T Shift Cable
Replacement 14-131
Adjustment 14-134

A/T Shift Lever
Removal 14-127
Installation 14-128
Disassembly/Reassembly 14-130

A-pillar Trim
Component Location Index 20-72

ABS Control Unit
Replacement 19-70

ABS Indicator
Replacement
ABS/TCS Components 22-59
Indicators 22-59

ABS Indicator Circuit
Troubleshooting 19-67

ABS Modulator Unit
Removal/Installation 19-69

ABS/TCS Components
Component Location Index 19-36
How-to Information 19-37
Description 19-42
Circuit Diagram 19-50

Accessory Power Socket, Front
Test/Replacement 22-133

Accessory Power Sockets
Circuit Diagram 22-132

Accumulator Body
Disassembly/Inspection/Reassembly 14-165

Air Cleaner Element
Replacement 11-131

Air Mix Control Motor
Replacement 21-20
Test 21-20

Airbag, Driver's
Component Location Index 23-24, 25
Replacement 23-300
Repair 23-305, 306, 308

Airbag, Front Passenger's
Component Location Index 23-24, 25
Replacement 23-302

Alternator
Replacement 4-32
Overhaul 4-33

Alternator Belt
Inspection/Adjustment 4-40

Alternator FR Signal Circuit
Troubleshooting 11-104

Alternator-compressor Belt
Inspection/Adjustment 4-39

Antenna Lead
Component Location Index 22-122

(cont'd)

Service Manual Index

(cont'd)

ATF
Inspection 14-113
Replacement 14-113

ATF Cooler
Repair 14-125

ATF Cooler Lines and Hoses
Component Location Index 10-2
Replacement 14-126

ATF Pump
Inspection 14-162

Audio Unit
Component Location Index 22-122
Removal/Installation 22-124
Replacement 22-124

Audio/Entertainment
Component Location Index 22-122
Circuit Diagram 22-123

Automatic Transaxle
Description 14-18
Test 14-101

B

Back-up Light Switch
Test 13-3

Back-up Lights
Circuit Diagram 22-90

Balancer Belt
Component Location Index 6-3
Inspection 6-20

Balancer Shaft Bearings
Inspection 7-15

Balancer Shaft Oil Seal
Installation 7-38

Balancer Shafts
Inspection 7-15

Ball Joint Boots
Replacement 18-15

Ball Joints
Removal 18-9

Battery
Test 22-51

Blower Motor
Replacement 21-27

Blower Motor Circuit
Troubleshooting 21-15

Blower Motor Relay
Component Location Index 21-31

Blower Unit
Removal/Installation 21-26

Brake Booster
Test 19-17
Replacement 19-18

Brake Calipers
Overhaul 19-13, 22

Brake Discs
Inspection 19-12, 21

Brake Drums
Inspection 19-25

Brake Fluid Level Switch
Test
Brake System Indicator Components 19-9
Conventional Brake Components 19-9
Component Location Index
Brake System Indicator Components 22-57

Brake Light Failure Sensor
Test 22-78

Brake Lights
Circuit Diagram 22-91

Brake Lines and Hoses
Inspection 19-30
Replacement 19-31

Brake Master Cylinder
Replacement 19-14
Adjustment 19-15
Inspection 19-15

Brake Pads
Inspection/Replacement 19-10, 19

Brake Pedal
Adjustment 19-5

Brake Pedal Position Switch
Test 4-50

Brake Pedal Position Switch Signal Circuit
Troubleshooting 11-107

Brake Shoes
Replacement 19-27

Brake System Indicator
Replacement
Brake System Indicator Components 22-59
Conventional Brake Components .. 22-59

Brake System Indicator Circuit
Circuit Diagram
Brake System Indicator Components 19-8
Conventional Brake Components 19-8

Brake Wheel Cylinders
Replacement 19-29

Bulkhead Cover, Rear
Component Location Index 20-72

Bumper, Front
Removal/Installation 20-140, 142

Bumper, Rear
Removal/Installation 20-145, 148

C

Cable Reel
Component Location Index . 22-130, 23-24, 25
Replacement 23-311, 314

Camshaft
Component Location Index 6-3
Inspection 6-41
Installation 6-50

Camshaft Pulley
Component Location Index 6-3

Camshaft Seal
Component Location Index 6-3

Carpet
Component Location Index 20-72
Replacement 20-81

Catalytic Converter System
How-to Information 11-42
Test 11-135

Ceiling Light
Component Location Index 22-115
Test 22-121

Center Console
Removal/Installation 20-83

Center Panel
Removal/Installation 20-86

Charging System
Component Location Index 4-27
Circuit Diagram 4-28
Troubleshooting 4-29

Charging System Indicator
Replacement
Charging System 22-59
Indicators 22-59

Child Seat Tether Anchor
Installation 23-19
Removal/Installation 23-20, 21, 22

CKP/TDC (Crankshaft Position/Top Dead Center) Sensors
Component Location Index 6-3
Replacement 6-55

Clock
Circuit Diagram 22-128
Replacement 22-129

Clutch
Component Location Index 12-3

Clutch Disc
Component Location Index 12-3
Replacement 12-7

Clutch Interlock Switch
Test 4-6

Clutch Master Cylinder
Component Location Index 12-3
Replacement 12-5

Clutch Pedal
Component Location Index 12-3
Adjustment 12-4

Clutch Pedal Position Switch
Test 4-50

Clutch Pressure Plate
Component Location Index 12-3

Clutch Release Bearing
Component Location Index 12-3

Clutch Slave Cylinder
Component Location Index 12-3
Replacement 12-6

Combination Light Switch
Test/Replacement 22-95

Connecting Rod Bearings
Replacement 7-13

Connecting Rod Bolts
Inspection 7-28

Connecting Rods
Inspection 7-8
Replacement 7-25

Connectors
(See first page of this Index)

Control Arms
Component Location Index 18-4
Replacement 18-29

Conventional Brake Components
Component Location Index 19-3
Inspection 19-4
Repair 19-7

Coolant
Replacement 10-10

Coolant Reservoir
Component Location Index 10-2

Coolant Temperature Gauge
Troubleshooting
  Cooling System 10-5
Component Location Index
  Coolant Temperature Gauge
Components 22-57

Coolant Temperature Gauge Sending Unit
Component Location Index
  Coolant Temperature Gauge
    Components 10-2, 22-57
  Cooling System 10-2
Test
  Cooling System 10-7

Cooling System
Component Location Index 10-2

Countershaft Bearing Hub/Bearing
Replacement 14-174

Countershaft Bearing, A/T Housing
Replacement 14-155

Countershaft Bearing, Torque Converter Housing
Replacement 14-167

Countershaft Bearings
Removal 13-34
Replacement 13-43

Countershaft Idler Gear
Installation 14-194

Countershaft Reverse Selector Hub
Replacement 14-172

Countershaft Speed Sensor
Replacement 14-109

Crankshaft
Inspection 7-8, 21
Removal 7-18
Installation 7-33

Crankshaft Main Bearings
Replacement 7-9

Crankshaft Oil Seal, Pulley End
Installation 7-38

Crankshaft Oil Seal, Transmission End
Installation 7-39

Crankshaft Pulley
Component Location Index
  Crankshaft 6-3
  Timing Belt 6-3
Removal/Installation
  Timing Belt 6-18

Crankshaft Pulley Bolt
Component Location Index
  Crankshaft 6-3
  Timing Belt 6-3

Cruise Control Actuator
Test 4-52
Replacement 4-53

Cruise Control Actuator Cable
Adjustment 4-55

Cruise Control Actuator Solenoid
Test 4-51

Cruise Control Communication Circuit
Troubleshooting 4-45

Cruise Control Indicator
Replacement
  Cruise Control System 22-59
  Indicators 22-59

Cruise Control Main Switch
Test/Replacement 4-49

Cruise Control Set/Resume/Cancel Switch
Test/Replacement 4-49

Cruise Control System
Component Location Index 4-41
Circuit Diagram 4-42

Cruise Control Unit
Input Test 4-46

Cylinder Head Assembly
Component Location Index 6-3
Removal 6-30
Installation 6-52

Cylinder Head Bolts
Component Location Index 6-3
Inspection 6-35

Cylinder Head Cover
Component Location Index 6-3
Installation 6-54

Cylinder Head Cover Gasket
Component Location Index 6-3

Cylinder Head Gasket
Component Location Index 6-3

Cylinder Head, Bare
Component Location Index 6-3
Inspection 6-35

D

Dampers, Front
Component Location Index 18-3
Replacement 18-18

Dampers, Rear
Component Location Index 18-4
Replacement 18-30

Dash Lights Brightness Control
Circuit Diagram 22-112

Dash Lights Brightness Controller
Test 22-114

Dash Vents
Removal/Installation
  Dashboard 20-88, 89
  Heating/Ventilation 20-89

Dashboard
Removal/Installation 20-90

Dashboard Lower Cover
Removal/Installation 20-84, 85

Differential Carrier Bearing Outer Races, A/T
Component Location Index 14-200
Replacement 14-204

Differential Carrier Bearing Outer Races, M/T
Component Location Index 13-53

Differential Carrier Bearings, A/T
Component Location Index 14-200
Replacement 14-202
Inspection 14-205

(cont'd)

Service Manual Index

(cont'd)

Differential Carrier Bearings, M/T
Component Location Index 13-53
Replacement 13-55
Adjustment 13-57

Differential Carrier, A/T
Component Location Index 14-200
Replacement 14-201

Differential Carrier, M/T
Component Location Index 13-53
Replacement 13-54

Differential Oil Seals, A/T
Component Location Index 14-200
Replacement 14-203

Differential Oil Seals, M/T
Component Location Index 13-53
Replacement 13-55

Differential Pinion Gears, A/T
Inspection 14-201

Differential Pinion Gears, M/T
Inspection 13-54

Distributor
Replacement 4-19
Overhaul 4-21, 22

DLC (Data Link Connector)
Component Location Index 23-24, 25

Door Courtesy Light
Component Location Index 22-108

Door Courtesy Lights
Component Location Index 22-108

Door Glass
Replacement 20-14, 16
Adjustment 20-26, 28

Door Key Cylinder Switches
Component Location Index
Keyless Entry/Security
Alarm System 22-206
Power Door Locks 22-229
Test
Keyless Entry/Security
Alarm System 22-225
Power Door Locks 22-225

Door Latches
Replacement
Front Doors 20-14
Rear Doors 20-21

Door Lock Actuators
Component Location Index
Keyless Entry/Security
Alarm System 22-206
Power Door Locks 22-229
Test
Keyless Entry/Security
Alarm System 22-223
Power Door Locks 22-223

Door Lock Knob Switches
Component Location Index
Keyless Entry/Security
Alarm System 22-206
Test
Keyless Entry/Security
Alarm System 22-224
Power Door Locks 22-224

Door Lock Switches
Component Location Index
Keyless Entry/Security
Alarm System 22-206
Power Door Locks 22-229
Test
Power Door Locks 22-225

Door Moldings
Replacement 20-164

Door Opening Trim
Component Location Index 20-72

Door Outer Handles
Replacement
Front Doors 20-11
Rear Doors 20-19

Door Panels
Removal/Installation
Front Doors 20-8, 9
Rear Doors 20-17

Door Sill Trim
Component Location Index 20-72

Door Strikers
Adjustment 20-30

Door Switches
Component Location Index
Door Courtesy Lights 22-108
Entry Light Control System 22-115
Keyless Entry/Security
Alarm System 22-206
Power Door Locks 22-229

Drive Plate
Removal/Installation 7-7

DRL (Daytime Running Lights) Control Unit
Input Test 22-96

DRL Indicator
Replacement
Headlights 22-59
Indicators 22-59

DTCs
(See first page of this Index)

Dust and Pollen Filter
Replacement 21-25

D4 Indicator Circuit
Troubleshooting 14-93

E

ECM
Component Location Index 22-200

ECT Sensor
Component Location Index 10-2

EGR Valve
Replacement 9-2

Emblems
Replacement 20-159, 160

End Cover, A/T
Removal 14-149

Engine Assembly
Removal 5-2
Installation 5-10

Engine Block Assembly
Component Location Index 7-3

Engine Block, Bare
Inspection 7-22
Repair 7-24

Engine Mount Control Solenoid Valve
Component Location Index 4-56

Engine Mount Control System
Component Location Index 4-56
Circuit Diagram 4-57
Troubleshooting 4-58

Entry Light Control System
Component Location Index 22-115
Circuit Diagram 22-116

EVAP Control System
Component Location Index 11-142

EVAP Two-Way Valve
Test 11-158

Evaporator
Component Location Index 21-31
Removal/Installation 21-46

Evaporator Temperature Sensor
Test 21-23
Replacement 21-47

Exhaust Manifold
Removal/Installation 9-3, 4

Exhaust Pipe
Replacement 9-5, 6

F

Fan Controls
Component Location Index 10-15
Circuit Diagram 10-17, 18

Final Driven Gear, A/T
Component Location Index 14-200
Replacement 14-201

Final Driven Gear, M/T
Component Location Index 13-53
Replacement 13-54

Flywheel
Removal/Installation
Crankshaft 7-7
Component Location Index
Clutch 12-3

Frame
Repair Chart 20-182

Front Doors
Component Location Index 20-2, 4
Adjustment 20-29

Front Driveshaft Assembly
Inspection 16-3
Removal 16-3
Disassembly 16-5
Resassembly 16-9
Installation 16-20

Front Seats
Component Location Index ... 20-97, 98, 22-190
Circuit Diagram 22-191, 192

Front Speakers
Component Location Index 22-122
Replacement 22-125

Front Suspension
Component Location Index 18-3

Fuel and Emissions
Description 11-10
Circuit Diagram 11-33

Fuel Fill Cap
Component Location Index 11-109

Fuel Fill Door Latch
Component Location Index 20-169
Replacement 20-177

Fuel Fill Door Opener
Component Location Index 20-169

Fuel Fill Door Opener Cable
Component Location Index 20-169

Fuel Filter
Component Location Index 11-109
Replacement 11-121

Fuel Gauge
Test
Fuel Supply System 11-126
Component Location Index
Fuel Gauge Components 22-57

Fuel Gauge Sending Unit
Component Location Index
Fuel Gauge Components 22-57
Fuel Supply System 11-109
Test/Replacement
Fuel Supply System 11-127

Fuel Injection Air Control Valve
Troubleshooting 11-130

Fuel Injection System (PGM-FI)
Component Location Index 11-45

Fuel Injectors
Replacement 11-95

Fuel Lines and Hoses
Component Location Index 11-109
Inspection 11-116
Removal 11-118
Installation 11-119

Fuel Pipe Protector
Replacement 20-167

Fuel Pressure Regulator
Component Location Index 11-109
Replacement 11-121

Fuel Pump
Component Location Index 11-109
Test 11-115
Replacement 11-122

Fuel Rail
Component Location Index 11-109

Fuel Supply System
Component Location Index 11-109
Adjustment 11-113
Troubleshooting 11-113

Fuel Tank
Component Location Index 11-109
Replacement 11-123

Fuel Tank Vapor Control Valve
Test 11-159
Replacement 11-161

Fuses
(See first page of this Index)

G

Gauge Assembly
Component Location Index 22-57
Replacement 22-68

Gauges
Component Location Index 22-57
Circuit Diagram 22-60, 64

General Information
(See section 1)

Glove Box
Removal/Installation 20-87

Glove Box Light
Component Location Index 22-108

Grille
Replacement 20-160

H

Hazard Warning Switch
Component Location Index 22-104
Test 22-107

Headlight
Adjustment 22-98
Replacement 22-98
Component Location Index 22-206

Headlight Relay
Component Location Index
Headlights 22-206
Keyless Entry/Security
Alarm System 22-206

Headlights
Circuit Diagram 22-84, 85, 86, 88, 92

Headliner
Component Location Index 20-72
Removal/Installation 20-79

Heater Control Panel
How-to Information 21-4
Disassembly/Reassembly 21-24
Removal/Installation 21-24

Heater Control Power and Ground Circuits
Troubleshooting 21-19

Heater Fan Switch
Test 21-23

Heater Hoses and Pipes
Component Location Index 10-2

Heater Unit
Replacement 21-28

Heater Valve
Component Location Index 10-2

Heater Valve Cable
Adjustment 21-30

Heating/Ventilation
Component Location Index 21-3
Description 21-7
Circuit Diagram 21-8

High Beam Cut Relay
Component Location Index 22-206

High Beam Indicator
Replacement
Headlights 22-59
Indicators 22-59

High Mount Brake Light
Replacement 22-102

Hood
Replacement 20-150
Adjustment 20-151

Hood Insulator
Replacement 20-152

(cont'd)

Service Manual Index

(cont'd)

Hood Latch
Component Location Index 20-169
Replacement 20-175

Hood Opener Cable
Component Location Index 20-169
Replacement 20-170

Hood Release Handle
Component Location Index 20-169
Replacement 20-175

Hood Seal
Replacement 20-153

Hood Switch
Component Location Index 22-206
Test 22-227

Horn
Component Location Index
Horns 22-130
Keyless Entry/Security
Alarm System 22-206
Test/Replacement
Horns 22-131

Horn Relay
Component Location Index
Horns 22-130
Keyless Entry/Security Alarm System ....
22-206

Horn Switch
Component Location Index 22-130

Horns
Component Location Index 22-130
Circuit Diagram 22-131

HO2S, Primary
Replacement 11-97

HO2S, Secondary
Replacement 11-97

Hubs
Component Location Index
Front Suspension 18-3
Rear Suspension 18-4
Replacement
Rear Suspension 18-22, 24

I

IAC (Idle Air Control) Valve
Replacement 9-2
Component Location Index 11-98

IAT (Intake Air Temperature) Sensor
Replacement 9-2

ICM (Ignition Control Module)
Input Test 4-23

Idle Control System
Component Location Index 11-98
Adjustment 11-108

Ignition Coil(s)
Test 4-24

Ignition Key Light
Component Location Index 22-115
Test 22-120

Ignition Key Switch
Component Location Index
Entry Light Control System 22-115
Keyless Entry/Security
Alarm System 22-206
Test
Entry Light Control System 22-120
Keyless Entry/Security
Alarm System 22-120
Power Door Locks 22-120

Ignition Key/Transponder
Component Location Index 22-200

Ignition Switch
Test
Starting System 22-55
Wiring System 22-55
Replacement
Wiring System 22-56

Ignition System
Component Location Index 4-17
Circuit Diagram 4-18
Inspection 4-19

Ignition Wires
Test/Inspection 4-25

Immobilizer Indicator
Replacement
Immobilizer System 22-59
Indicators 22-59
Component Location Index
Immobilizer System 22-200

Immobilizer Receiver Unit
Component Location Index 22-200
Replacement 22-205

Immobilizer System
Component Location Index 22-200
Circuit Diagram 22-201
Description 22-202
Troubleshooting 22-204

Indicators
Component Location Index 22-57

Inner Fender
Replacement 20-167

Inside Rearview Mirror
Component Location Index 20-31, 32
Replacement 20-37

Instrument Panel
Removal/Installation 20-84

Intake Air System
Component Location Index 11-129

Intake Manifold
Removal/Installation 9-2

Intake Manifold Chamber
Removal/Installation 9-2

Intake Manifold Gasket
Replacement 9-2

Interlock System
Component Location Index 14-143
Circuit Diagram 14-144

Intermediate Shaft Assembly
Removal 16-21
Disassembly 16-22
Resassembly 16-24
Installation 16-26

Intermittent Dwell Time Controller
Component Location Index 22-179

Intermittent Wiper Relay
Component Location Index 22-179

K

Key Interlock Solenoid
Test 14-147

Key Interlock System Circuit
Troubleshooting 14-99

Keyless Entry Transmitter
Component Location Index 22-206
Repair 22-228
Test 22-228

Keyless Entry/Security Alarm System
Component Location Index 22-206
Circuit Diagram 22-208
Description 22-213

Keyless Receiver Unit
Component Location Index 22-206

Kick Panel
Component Location Index 20-72

Knuckles
Component Location Index
Front Suspension 18-3
Rear Suspension 18-4
Replacement
Front Suspension 18-10
Rear Suspension 18-25

L

Leading Arms
Component Location Index 18-4
Replacement 18-28

License Plate Light
Replacement
Lights, Exterior 22-103
Component Location Index
Keyless Entry/Security
Alarm System 22-206

Lights, Exterior
Component Location Index 22-82

Lights, Interior
Component Location Index 22-108
Circuit Diagram 22-109

Lights-on Reminder
Circuit Diagram 22-79

Lights-on Reminder Indicator
Replacement
Headlights 22-59
Lights-on Reminder 22-59

Lock-up Control Solenoid Valve
Test 14-103

Low Fuel Indicator
Test
Fuel Supply System 11-128
Replacement
Fuel Supply System 22-59
Indicators 22-59

Low Oil Pressure Indicator
Replacement
Low Engine Oil Indicator
Components 22-59
Lubrication System 22-59

Lower Arms
Component Location Index
Front Suspension 18-3
Rear Suspension 18-4
Replacement
Front Suspension 18-17
Rear Suspension 18-29

Lubrication System
Component Location Index 8-3
Test 8-4

M

M/T Assembly
Component Location Index 12-3
Removal 13-4
Installation 13-10
Disassembly 13-21
Resassembly 13-48

M/T Countershaft Assembly
Inspection 13-32, 35
Disassembly 13-34
Resassembly 13-36

M/T Differential
Component Location Index 13-53
Inspection 13-54

M/T Mainshaft Assembly
Inspection 13-26, 29
Disassembly 13-28
Resassembly 13-30
Adjustment 13-45

M/T Reverse Shift Fork
Inspection 13-25

M/T Shift Cables
Replacement 13-52

M/T Shift Lever
Replacement 13-52

Main Valve Body
Removal 14-156
Repair 14-158
Installation 14-159, 189
Disassembly/Inspection/Reassembly 14-160

Mainshaft Bearing, Torque Converter Housing
Replacement 14-166

Mainshaft Bearings
Removal 13-28
Installation 13-30
Replacement 13-44

Mainshaft Oil Seal
Replacement 13-44

Mainshaft Sealing Rings
Replacement 14-170

Maintenance
(See section 3)

Maintenance Required Indicator
Replacement 22-59

Map Light/Spotlight
Component Location Index 22-108
Test 22-110

MES (Memory Erase Signal) Connector
Component Location Index 23-24, 25

MIL
Replacement
Fuel Injection System (PGM-FI) 22-59
Indicators 22-59

MIL Circuit
Troubleshooting 11-91

Mirrors
Component Location Index 20-31, 32

Mode Control Motor
Replacement 21-21
Test 21-21

Moonroof Cable Assembly
Component Location Index 20-60

Moonroof Close Relay
Component Location Index 22-153

Moonroof Drain Channel
Component Location Index 20-60
Replacement 20-63

Moonroof Drain Channel Slider
Component Location Index 20-60
Replacement 20-68

Moonroof Drain Tubes
Component Location Index 20-60

Moonroof Frame
Component Location Index 20-60
Replacement 20-66

Moonroof Glass
Component Location Index 20-60
Adjustment 20-62
Replacement 20-62

Moonroof Motor
Component Location Index ... 20-60, 22-153
Replacement 20-65
Test 22-155

Moonroof Open Relay
Component Location Index 22-153

Moonroof Position Switches
Component Location Index ... 20-60, 22-153
Adjustment 20-70

Moonroof Sunshade
Component Location Index 20-60
Replacement 20-64

Moonroof Switch
Component Location Index 22-153
Test 22-155

Moonroof/Sunroof
Component Location Index ... 20-60, 22-153
Test 20-71
Circuit Diagram 22-154

MTF
Inspection/Replacement 13-3

Multiplex Control Inspection Connector
Component Location Index 22-134

Multiplex Control System
Component Location Index 22-134
Circuit Diagram 22-135
Description 22-136
Troubleshooting 22-137
Input Test 22-140

Multiplex Control Unit, Door
Component Location Index
Entry Light Control System 22-134
Headlights 22-134
Keyless Entry/Security
Alarm System 22-134
Multiplex Control System 22-134
Power Door Locks 22-134
Power Windows 22-134

(cont'd)

Service Manual Index

(cont'd)

Multiplex Control Unit, Driver's
Input Test
Dash Lights Brightness Control 22-113
Entry Light Control System 22-117
Headlights 22-93
Interlock System 14-145
Keyless Entry/Security
Alarm System 22-215
Lights-on Reminder 22-80
Power Windows 22-172
Wiper/Washer 22-182
Component Location Index
Dash Lights Brightness Control 22-134
Entry Light Control System 22-134
Headlights 22-134
Interlock System 22-134
Key Light Timer 22-134
Key-in Reminder 22-134
Keyless Entry/Security Alarm System . 22-134
Multiplex Control System 22-134
Power Door Locks 22-134
Power Windows 22-134
Seat Belt Reminder 22-134
Wiper/Washer 22-134

Multiplex Control Unit, Passenger's
Component Location Index
Entry Light Control System 22-134
Keyless Entry/Security Alarm System . 22-134
Multiplex Control System 22-134
Power Door Locks 22-134
Power Windows 22-134
Wiper/Washer 22-134

O

Oil Control Orifice
Component Location Index 6-3

Oil Drain Bolt
Component Location Index 8-3

Oil Filter
Component Location Index 8-3
Replacement 8-6

Oil Pan
Component Location Index
Engine Block Assembly 8-3
Lubrication System 8-3

Oil Pressure Switch
Component Location Index
Low Engine Oil Indicator Components .. 22-57
Lubrication System 8-3
Test
Low Engine Oil Indicator Components 8-4
Lubrication System 8-4

Oil Pump, Engine
Component Location Index
Engine Block Assembly 8-3
Lubrication System 8-3
Overhaul
Lubrication System 8-7

Oil Screen
Component Location Index 8-3

Oil, Engine
Replacement 8-5

OPDS Sensor
Component Location Index 23-24, 25

OPDS Unit
Component Location Index 23-24, 25
Replacement 23-322

Outside Manual Mirrors
Component Location Index 20-32
Replacement 20-34

Outside Mirror Defogger Switch
Test 22-147

Outside Mirror Holders
Component Location Index 20-31, 32
Replacement 20-33, 36

Outside Power Mirror Actuators
Test 22-148
Replacement 22-149, 151

Outside Power Mirror Switch
Component Location Index 22-143
Test 22-147

Outside Power Mirrors
Component Location Index ... 20-31, 32, 22-143
Replacement 20-35
Circuit Diagram 22-144, 145
Test 22-146

P

Park Lever Position Stop
Inspection/Adjustment 14-152

Park Pin Switch
Test 14-148

Parking Brake
Inspection/Adjustment 19-6

Parking Brake Cable
Replacement 19-32

Parking Brake Switch
Test
Brake System Indicator Components 19-9
Parking Brake 19-9
Component Location Index
Brake System Indicator Components 22-57

PCM
Component Location Index
Engine Mount Control System 4-56
Immobilizer System 22-200

PCV Valve
Test 11-141

PGM-FI Main Relay
Component Location Index 11-109

PGM-FI Main Relay Circuit
Troubleshooting 11-110

Piston Pins
Replacement 7-25

Piston Rings
Replacement 7-29

Pistons
Replacement 7-25
Installation 7-31

Power Door Locks
Component Location Index 22-229
Circuit Diagram 22-230

Power Seat Linkage
Disassembly/Reassembly 20-121, 122

Power Seat Motors
Test 22-195, 196

Power Seat Switch
Test 22-193, 194

Power Steering Fluid
Replacement 17-14

Power Steering Fluid Reservoir
Component Location Index 17-3

Power Steering Lines and Hoses
Replacement 17-15

Power Steering Pump
Component Location Index 17-3
Test 17-9, 10
Replacement 17-16
Overhaul 17-17

Power Steering Pump Belt
Inspection/Adjustment 17-12

Power Window Motor, Driver's
Component Location Index 22-159
Test 22-178

Power Window Motors, Passenger's
Component Location Index 22-159
Test 22-178

Power Window Relay
Test 22-52
Component Location Index 22-159

Power Window Switch, Master
Component Location Index 22-159
Replacement 22-177

Power Window Switch, Passenger's
Component Location Index 22-159
Replacement 22-177

Power Windows
Component Location Index 22-159
Circuit Diagram 22-160, 164, 168, 170

PSP (Power Steering Pressure) Switch
Component Location Index 11-98

PSP (Power Steering Pressure) Switch Signal Circuit
Troubleshooting 11-106

Q

Quarter Trim Panel
Component Location Index 20-72

Quarter Window Glass
Replacement 20-22, 55

Quarter Window Glass Sticker
Replacement 20-25, 59

R

Radiator
Component Location Index 10-2
Test 10-8
Replacement 10-14

Radiator and Condenser Fans Common Circuit
Troubleshooting 21-38

Radiator Cap
Component Location Index 10-2
Test 10-7

Radiator Fan Assembly
Component Location Index . 10-2, 15, 21-31
Test 10-8
Replacement 10-14

Radiator Fan Circuit
Troubleshooting 10-19, 21

Radiator Fan Relay
Component Location Index 10-15

Radiator Fan Switch
Component Location Index 10-2, 15
Test 10-24

Radiator Fan Switch Circuit
Troubleshooting 10-23

Radiator Hoses and Pipes
Component Location Index 10-2

Rear Air Outlet
Replacement 20-168

Rear Door Hook Pin
Replacement 20-26

Rear Doors
Component Location Index 20-6

Rear Shelf
Component Location Index 20-72

Rear Side Trim Panel
Component Location Index 20-72

Rear Speakers
Component Location Index 22-122

Rear Suspension
Component Location Index 18-4

Rear Window Defogger
Component Location Index 22-156
Circuit Diagram 22-157

Rear Window Defogger Switch
Component Location Index 22-156

Rear Window Defogger Wires
Component Location Index 22-156
Repair 22-158
Test 22-158

Rear Window Glass
Replacement 20-49

Receiver/Dryer
Component Location Index 21-31

Recirculation Control Motor
Replacement 21-22
Test 21-22

Recirculation Control Motor Circuit
Troubleshooting 21-14

Refrigerant
Replacement 21-54, 55, 56
Test 21-57

Refrigerant Oil
Replacement 21-32

Regulator Valve Body
Disassembly/Inspection/Reassembly 14-163

Rocker Arm Assembly
Component Location Index 6-3
Removal 6-36
Disassembly/Reassembly 6-37, 38

Rocker Arms
Test 6-11
Inspection 6-39

Roof Drip Moldings
Replacement 20-161, 162

Roof Moldings
Replacement 20-163

S

Safety Indicator
Component Location Index 22-57

Safety Indicator System
Component Location Index 22-73
Circuit Diagram 22-74
Input Test 22-76

Seat Armrest, Rear
Replacement 20-130

Seat Belt Reminder Indicator
Replacement
Seat Belt Reminder 22-59

Seat Belts
Component Location Index 23-3, 4

Seat Belts, Front
Replacement 23-5, 7
Inspection 23-17

Seat Belts, Rear
Replacement 23-12, 15

Seat Cover, Front
Replacement 20-123

Seat Cushion Cover, Rear
Replacement 20-138, 139

Seat Heater Elements
Test 22-199

Seat Heater Switches
Test 22-199

Seat Heaters
Component Location Index 22-197
Circuit Diagram 22-198

Seat Side Bolster Cover, Rear
Replacement 20-137

Seat Torsion Bar
Replacement 20-120

Seat Wire Harness, Driver's
Installation 20-115, 118

Seat, Front
Removal/Installation 20-99
Disassembly/Reassembly 20-102, 103, 104, 105, 106, 107, 108, 109, 110, 111, 112, 113, 114

Seat, Rear
Removal/Installation 20-128, 129

Seat-back Cover, Rear
Replacement 20-134, 135

Seat-back Latch, Rear
Replacement 20-132, 133

Seat-back Lock Cylinder, Rear
Replacement 20-133

Secondary Shaft Bearing, Torque Converter Housing
Replacement 14-167

Secondary Shaft Idler Gear Bearing
Replacement 14-178

Security Indicator
Component Location Index
Indicators 22-206
Keyless Entry/Security Alarm System 22-206
Test
Indicators 22-227
Keyless Entry/Security Alarm System 22-227

Select Lever
Replacement 13-18

(cont'd)

Service Manual Index

(cont'd)

Servo Body
Disassembly/Inspection/Reassembly 14-164

Shift Arm
Replacement 13-18

Shift Control Solenoid Valves
Replacement 14-107
Test 14-107

Shift Forks
Inspection 13-39
Disassembly/Reassembly 13-40

Shift Lock Solenoid
Test 14-147
Replacement 14-148

Shift Lock System Circuit
Troubleshooting 14-96

Side Airbag Indicator
Replacement
Indicators 22-59
SRS 22-59
Component Location Index
SRS 23-24, 25

Side Airbag, Driver's
Component Location Index 23-24, 25
Replacement 23-304

Side Airbag, Front Passenger's
Component Location Index 23-24, 25

Side Impact Sensors
Component Location Index 23-24, 25
Replacement 23-319, 320, 321

Side Marker Light
Replacement 22-103

Side Sill Panels
Replacement 20-165, 166

Spark Plugs
Inspection 4-26

Specifications
(See section 2)

Speedometer
Component Location Index 22-57

SRS
Component Location Index ... 23-23, 24, 25, 26, 27
Description 23-62, 63, 65
Circuit Diagram 23-67, 68, 70, 72

SRS Indicator
Replacement
Indicators 22-59
SRS 22-59
Component Location Index
SRS 23-24, 25

SRS Indicator Circuit
Troubleshooting 23-264, 274, 279, 282, 287, 297

SRS Unit
Component Location Index 23-24, 25
Replacement 23-317, 318

Starter
Test 4-8
Replacement 4-9
Overhaul 4-10

Starter Solenoid
Test 4-7

Starter Switch Signal Circuit
Troubleshooting 11-105

Starting System
Component Location Index 4-3
Circuit Diagram 4-4
Troubleshooting 4-5

Steering
Component Location Index 17-3
Troubleshooting 17-6
Inspection 17-7, 11

Steering Column
Component Location Index 17-3
Removal/Installation 17-25
Inspection/Adjustment 17-27

Steering Gearbox
Component Location Index 17-3
Inspection 17-8
Removal 17-30
Overhaul 17-32
Installation 17-47

Steering Hanger Beam
Replacement 20-94

Steering Linkage
Inspection 17-8

Steering Lock
Component Location Index 17-3
Replacement 17-28

Steering Rack Guide
Adjustment 17-29

Steering Wheel
Component Location Index 17-3
Inspection 17-7
Removal 17-22
Disassembly/Reassembly 17-23
Installation 17-24

Sub-frames
Replacement 20-180

Suspension
Adjustment 18-5

Synchro Ring, Dual-cone
Inspection 13-41

Synchro Sleeve
Inspection/Reassembly 13-41

T

Tachometer
Component Location Index 22-57

Taillight
Replacement 22-100, 101
Component Location Index 22-206

Taillight Relay
Component Location Index
Keyless Entry/Security Alarm System . 22-206
Taillights 22-206

Thermostat
Test 10-9
Replacement 10-13

Throttle Body
Test 11-130
Removal/Installation 11-133
Disassembly/Reassembly 11-134

Throttle Cable
Adjustment 11-132

Tie-rod Ball Joint Boots
Replacement 17-50

Timing Belt
Component Location Index 6-3
Inspection 6-19
Adjustment 6-22
Removal 6-23
Installation 6-26

Torque Converter Clutch Solenoid Valve
Replacement 14-106
Test 14-106

Trailing Arms
Component Location Index 18-4
Replacement 18-28

Transmission Housing
Removal 14-153
Installation 14-191

Transmission Range Switch
Test 14-138
Replacement 14-139

Trim
Component Location Index 20-72, 73
Removal/Installation 20-74, 75, 76, 77, 78

Troubleshooting
(See first page of this Index)

Trunk Floor Mat
Component Location Index 20-72

Trunk Key Cylinder Switch
Component Location Index 22-206
Test 22-226

Trunk Latch Switch
Component Location Index
Keyless Entry/Security
Alarm System 22-206
Trunk Light 22-108
Test
Keyless Entry/Security Alarm System . 22-226
Trunk Light 22-111

Trunk Lid
Replacement 20-154
Adjustment 20-156

Trunk Lid Dynamic Damper
Replacement 20-158

Trunk Lid Latch
Component Location Index 20-169
Replacement 20-178

Trunk Lid Lock Cylinder
Component Location Index 20-169
Replacement 20-179

Trunk Lid Opener
Component Location Index 20-169
Replacement 20-176

Trunk Lid Opener Cable
Component Location Index 20-169
Replacement 20-171, 173

Trunk Lid Opener Solenoid
Test 22-226

Trunk Lid Torsion Bar
Replacement 20-157

Trunk Lid Weatherstrip
Replacement 20-158

Trunk Light Assembly
Component Location Index 22-108
Test 22-111

Trunk Pass-through Cover Key Cylinder
Replacement 20-131

Trunk Rear Trim Panel
Component Location Index 20-72

Trunk Side Pocket
Component Location Index 20-72

Trunk Side Trim Panel
Component Location Index 20-72

Turn Signal Indicators
Replacement
Indicators 22-59
Turn Signal/Hazard Warning Lights 22-59
Component Location Index
Turn Signal/Hazard Warning Lights 22-104

Turn Signal Light Switch
Component Location Index 22-104

Turn Signal/Hazard Relay
Component Location Index 22-104
Test 22-106

Turn Signal/Hazard Warning Lights
Component Location Index 22-104
Circuit Diagram 22-105

Tweeters
Component Location Index 22-122

U

Under-dash Fuse/Relay Box, Driver's
Removal/Installation 22-50

Under-dash Fuse/Relay Box, Passenger's
Removal/Installation 22-50

Upper Arms
Component Location Index
Front Suspension 18-3
Rear Suspension 18-4
Replacement
Front Suspension 18-16
Rear Suspension 18-27

V

Valve Guides
Component Location Index 6-3
Inspection 6-44
Replacement 6-45

Valve Seals
Component Location Index 6-3
Replacement 6-16
Removal 6-43

Valve Seats
Repair 6-47

Valve Springs
Component Location Index 6-3
Removal 6-43

Valves
Component Location Index 6-3
Adjustment 6-14
Removal 6-43
Inspection 6-44
Installation 6-49

Vanity Mirror Lights
Component Location Index 22-108

Vehicle Speed Signal Circuit
Troubleshooting 22-69, 71

VSS
Component Location Index
Speedometer Components 22-57
Replacement
Cruise Control System 22-68
Fuel Injection System (PGM-FI) 22-68
Speedometer Components 22-68

VTEC Lost Motion Assemblies/Springs
Component Location Index 6-3

VTEC Solenoid Valve
Component Location Index 6-3
Test 6-10

VTEC Solenoid Valve Filter
Component Location Index 6-3

W

Washer Fluid Level Indicator
Replacement
Indicators 22-59
Wiper/Washer 22-59

Washer Fluid Level Switch
Component Location Index 22-179
Test 22-188

Washer Fluid Reservoir
Component Location Index 22-179
Replacement 22-188

Washer Motor, Windshield
Component Location Index 22-179
Test 22-187

Washer Tube, Windshield
Component Location Index 22-179
Replacement 22-189

Water Outlet
Component Location Index 10-2
Replacement 10-12

Water Pump
Component Location Index 10-2
Inspection 10-9
Replacement 10-10

Wheel Bearings
Component Location Index
Front Suspension 18-3
Rear Suspension 18-4
Inspection
Front Suspension 18-8

Wheel Speed Sensors
Inspection 19-70
Replacement 19-71

Wheels and Tires
Inspection 18-8

Window Antenna Coil
Component Location Index
Antenna 22-122
Rear Window Defogger 22-156
Test
Antenna 22-127

Window Antenna Wires
Component Location Index 22-122
Repair 22-126
Test 22-126

Windows
Component Location Index 20-38, 39

(cont'd)

Service Manual Index

(cont'd)

Windshield Glass
Replacement 20-40

Wiper Arms, Windshield
Component Location Index 22-179

Wiper Linkage, Windshield
Component Location Index 22-179

Wiper Motor, Windshield
Component Location Index 22-179
Replacement 22-186
Test 22-186

Wiper/Washer
Component Location Index 22-179
Circuit Diagram 22-180

Wiper/Washer Switch
Component Location Index 22-179
Test/Replacement 22-185

Wire Harnesses
(See first page of this Index)

Wiring System
How-to Information 22-3
Relay and Control Unit Locations ... 22-7, 8, 10

1

1st/2nd Clutch Assembly
Disassembly 14-179
Inspection 14-182
Resassembly 14-184

2

2nd Clutch Pressure Switch
Replacement 14-110, 111

3

3rd Clutch Pressure Switch
Replacement 14-112

3rd/4th Clutch Assembly
Inspection 14-169

ACCORD

1998-2002
Service Manual
V6 Supplement

General Information

Chassis and Paint Codes
- 1998 Model 1-2

Chassis and Paint Codes
- 1999 Model 1-3

Chassis and Paint Codes
- 2000 Model 1-4

Chassis and Paint Codes
- 2001 Model 1-5

Chassis and Paint Codes
- 2002 Model 1-6

Identification Number Locations 1-7

Warning/Caution Label Locations 1-8

Under-hood Emission Control Label 1-9

Parts Marking 1-14

Chassis and Paint Codes - 1998 Model

Vehicle Identification Number

1HG CG1 6 4 * W A 000001

a b c d e f g h

a. Manufacturer, Make, and Type of Vehicle
1HG: HONDA OF AMERICA MFG., INC., U.S.A.
HONDA, Passenger vehicle

b. Line, Body, and Engine Type
CG1: ACCORD V6/J30A1
CG2: ACCORD COUPE V6/J30A1

c. Body Type and Transmission Type
1: 2-door Coupe/5-speed Manual
2: 2-door Coupe/4-speed Automatic
6: 4-door Sedan/4-speed Automatic

d. Vehicle Grade (Series)

US model	Canada model
4: LX, LX V6	4: LX, LX V6
5: EX, EX V6	5: EX, EX V6
	6: EX-L

e. Check Digit

f. Model Year
W: 1998

g. Factory Code
A: Marysville, Ohio Factory in U.S.A.

h. Serial Number
000001—: US model
800001—: Canada model

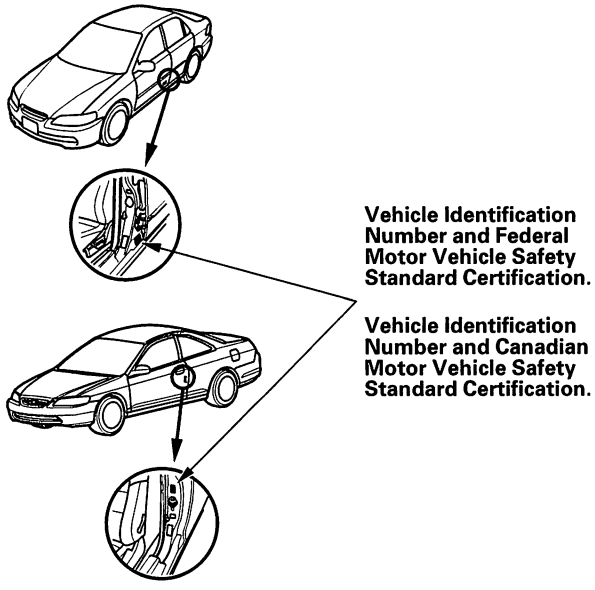

Engine Number

J30A1 - 1300001

a b

a. Engine Type
J30A1: 3.0 ℓ SOHC VTEC Sequential Multiport Fuel-injected engine

b. Serial Number

Transmission Number

B7XA - 5000001

a b

a. Transmission Type
B7XA: 4-speed Automatic
P2A8: 5-speed Manual

b. Serial Number

Paint Code

Code	Color
B-80P	Mystic Blue Pearl * Note 1
G-87P	Dark Emerald Pearl
NH-578	Taffeta White
NH-592P	Flamenco Black Pearl
NH-612M	Regent Silver Metallic
RP-25P	Black Currant Pearl
RP-29P	Raisin Pearl
R-94	San Marino Red
YR-508P	Heather Mist Metallic * Note 2

* Note 1: US model only
* Note 2: Canada model only

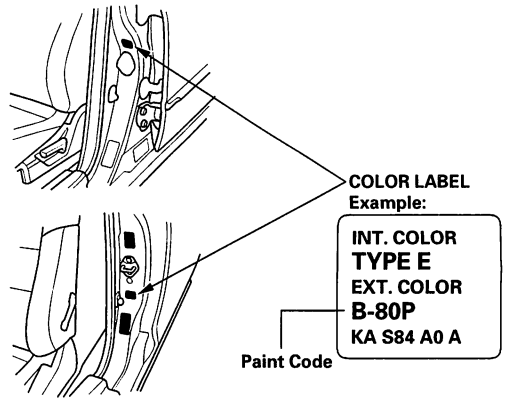

BACK

Chassis and Paint Codes - 1999 Model

Vehicle Identification Number

1HG CG1 6 4 * X A 000001

a b c d e f g h

a. Manufacturer, Make, and Type of Vehicle
1HG: HONDA OF AMERICA MFG., INC., U.S.A.
HONDA, Passenger vehicle

b. Line, Body, and Engine Type
CG1: ACCORD V6/J30A1
CG2: ACCORD COUPE V6/J30A1

c. Body Type and Transmission Type
2: 2-door Coupe/4-speed Automatic
6: 4-door Sedan/4-speed Automatic

d. Vehicle Grade (Series)

US model	Canada model
4: LX, LX V6	4: LX
5: EX, EX V6	5: EX

e. Check Digit

f. Model Year
X: 1999

g. Factory Code
A: Marysville, Ohio Factory in U.S.A.

h. Serial Number
000001—: US model
800001—: Canada model

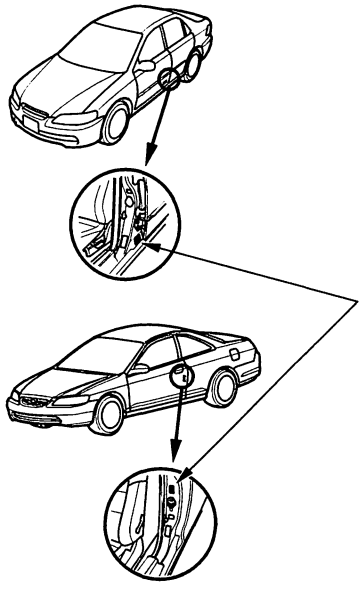

Engine Number

J30A1 - 2000001

a b

a. Engine Type
J30A1: 3.0 ℓ SOHC VTEC Sequential Multiport Fuel-injected engine

b. Serial Number

Transmission Number

B7XA - 6000001

a b

a. Transmission Type
B7XA: 4-speed Automatic

b. Serial Number

Paint Code

Code	Color
G-87P	Dark Emerald Pearl
NH-578	Taffeta White
NH-592P	Flamenco Black Pearl
NH-612M	Regent Silver Metallic * Note 2
NH-623M	Satin Silver Metallic
RP-25P	Black Currant Pearl * Note 1
R-94	San Marino Red * Note 1
YR-508M	Heather Mist Metallic

* Note 1: US model only
* Note 2: Canada model only

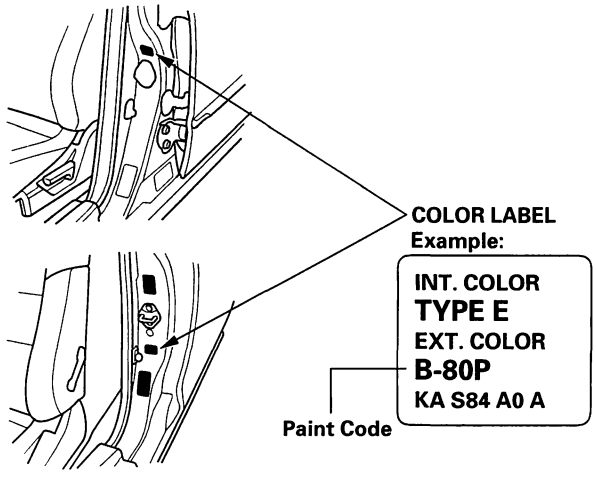

Chassis and Paint Codes - 2000 Model

Vehicle Identification Number

1HG CG1 6 4 * Y A 000001

a b c d e f g h

a. Manufacturer, Make, and Type of Vehicle
1HG: HONDA OF AMERICA MFG., INC., U.S.A.
HONDA, Passenger vehicle

b. Line, Body, and Engine Type
CG1: ACCORD V6/J30A1
CG2: ACCORD COUPE V6/J30A1

c. Body Type and Transmission Type
2: 2-door Coupe/4-speed Automatic
6: 4-door Sedan/4-speed Automatic

d. Vehicle Grade (Series)

US model	Canada model
4: LX, LX V6	4: LX
5: EX, EX V6	5: EX

e. Check Digit

f. Model Year
Y: 2000

g. Factory Code
A: Marysville, Ohio Factory in U.S.A.

h. Serial Number
000001—: US model
800001—: Canada model

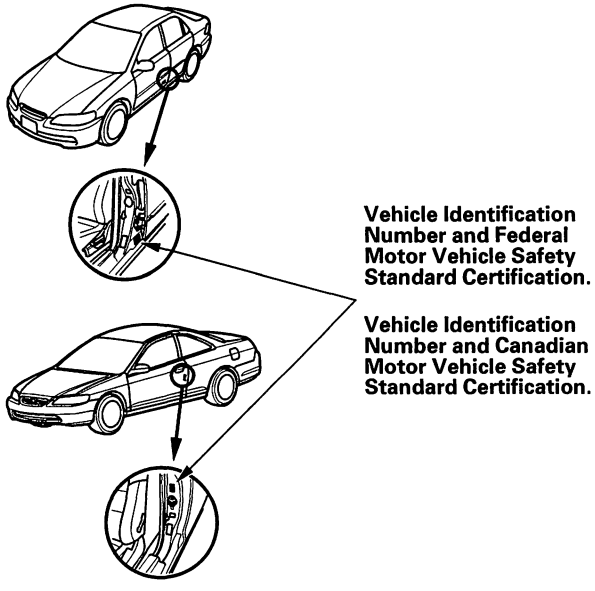

Engine Number

J30A1 - 3000001

a b

a. Engine Type
J30A1: 3.0 ℓ SOHC VTEC Sequential Multiport Fuel-injected engine

b. Serial Number

Transmission Number

B7XA - 7500001

a b

a. Transmission Type
B7XA: 4-speed Automatic

b. Serial Number

Paint Code

Code	Color
B-92P	Nighthawk Black Pearl
G-87P	Dark Emerald Pearl
NH-578	Taffeta White * Note
NH-623M	Satin Silver Metallic
RP-31M	Signet Silver Metallic
R-94	San Marino Red * Note
YR-524M	Naples Gold Metallic

* Note : US model only

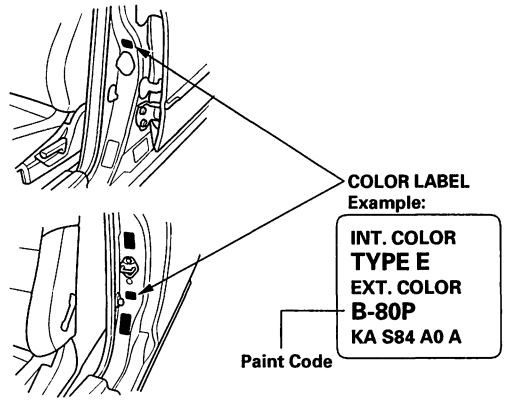

BACK

Chassis and Paint Codes - 2001 Model

Vehicle Identification Number

1HG CG1 6 4 * 1 A 000001

a b c d e f g h

a. Manufacturer, Make and Type of Vehicle
JHM: HONDA MOTOR CO., LTD.
HONDA, Passenger vehicle
1HG: HONDA OF AMERICA MFG., INC., U.S.A.
HONDA, Passenger vehicle

b. Line, Body and Engine Type
CG1: ACCORD V6/J30A1
CG2: ACCORD COUPE V6/J30A1

c. Body Type and Transmission Type
2: 2-door Coupe/4-speed Automatic
6: 4-door Sedan/4-speed Automatic

d. Vehicle Grade (Series)

US model	Canada model
4: LX, LX V6	4: LX
5: EX, EX V6	5: EX

e. Check Digit

f. Model Year
1: 2001

g. Factory Code
A: Marysville, Ohio Factory in U.S.A.
C: Saitama in Japan (Sayama).

h. Serial Number
000001 –: US model
800001 –: Canada model

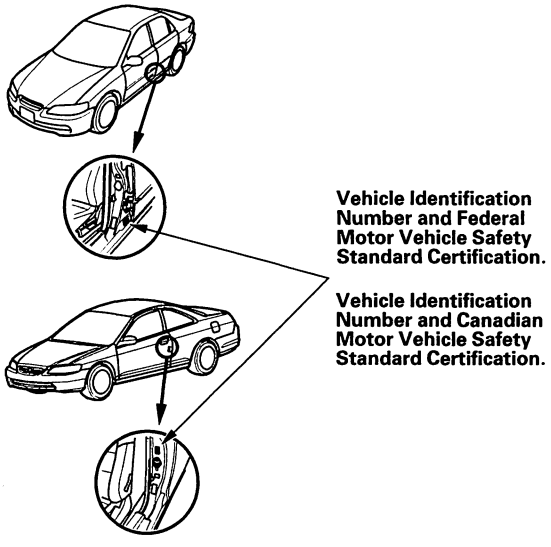

Engine Number

J30A1 - 4000001

a b

a. Engine Type
J30A1: 3.0 ℓ SOHC VTEC Sequential Multiport Fuel-injected engine

b. Serial Number

Transmission Number

B7XA - 8000001

a b

a. Transmission Type
B7XA: 4-speed Automatic

b. Serial Number

Paint Code

Code	Color
B-92P	Nighthawk Black Pearl
B-96P	Eternal Blue Pearl * Note 2
G-87P	Dark Emerald Pearl * Note 1
NH-578	Taffeta White * Note 1
NH-623M	Satin Silver Metallic
R-94	San Marino Red * Note 1
R-507P	Firepepper Pearl
RP-31M	Signet Silver Metallic * Note 2
YR-524M	Naples Gold Metallic

* Note 1: US model only
* Note 2: Canada model only

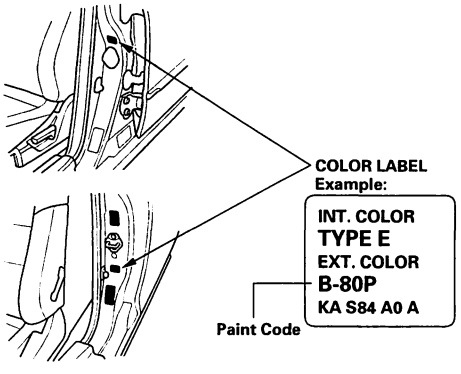

Chassis and Paint Codes - 2002 Model

Vehicle Identification Number

1HG CG1 6 4 * 2 A 000001

a b c d e f g h

a. Manufacturer, Make and Type of Vehicle
JHM: HONDA MOTOR CO., LTD.
HONDA, Passenger vehicle
1HG: HONDA OF AMERICA MFG., INC., U.S.A.
HONDA, Passenger vehicle

b. Line, Body and Engine Type
CG1: ACCORD V6/J30A1
CG2: ACCORD COUPE V6/J30A1

c. Body Type and Transmission Type
2: 2-door Coupe/4-speed Automatic
6: 4-door Sedan/4-speed Automatic

d. Vehicle Grade (Series)

US model	Canada model
4: LX V6	1: SE
5: EX V6	4: LX
	5: EX

e. Check Digit

f. Model Year
2: 2002

g. Factory Code
A: Marysville, Ohio Factory in U.S.A.
C: Saitama in Japan (Sayama)

h. Serial Number
000001—: US model
800001—: Canada model

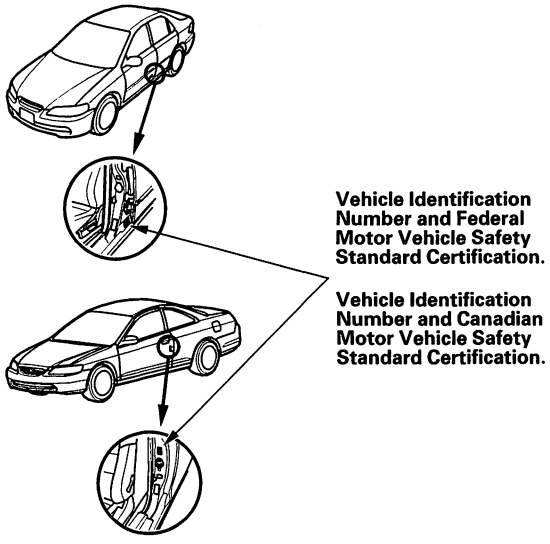

Engine Number

J30A1 - 5000001

a b

a. Engine Type
J30A1: 3.0 ℓ SOHC VTEC Sequential Multiport Fuel-injected engine

b. Serial Number

Transmission Number

B7XA - 9000001

a b

a. Transmission Type
B7XA: 4-speed Automatic

b. Serial Number

Paint Code

Code	Color
B-92P	Nighthawk Black Pearl
B-96P	Eternal Blue Pearl * Note 2
G-508P	Noble Green Pearl * Note 1
NH-578	Taffeta White * Note 1
NH-623M	Satin Silver Metallic
R-94	San Marino Red * Note 1
R-507P	Firepepper Pearl
YR-524M	Naples Gold Metallic

* Note 1: US model only
* Note 2: Canada model only

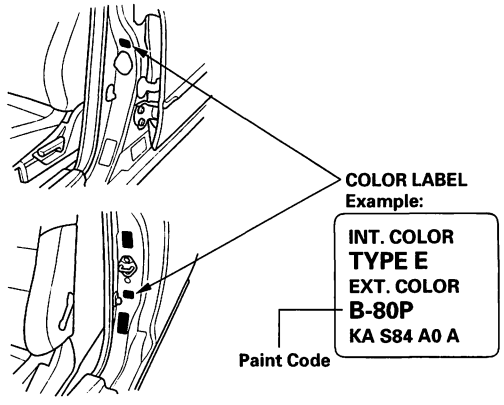

BACK

Identification Number Locations

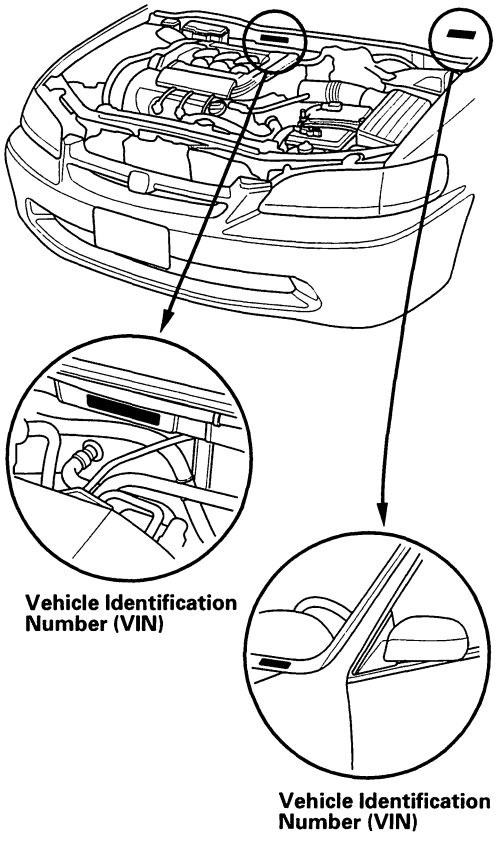

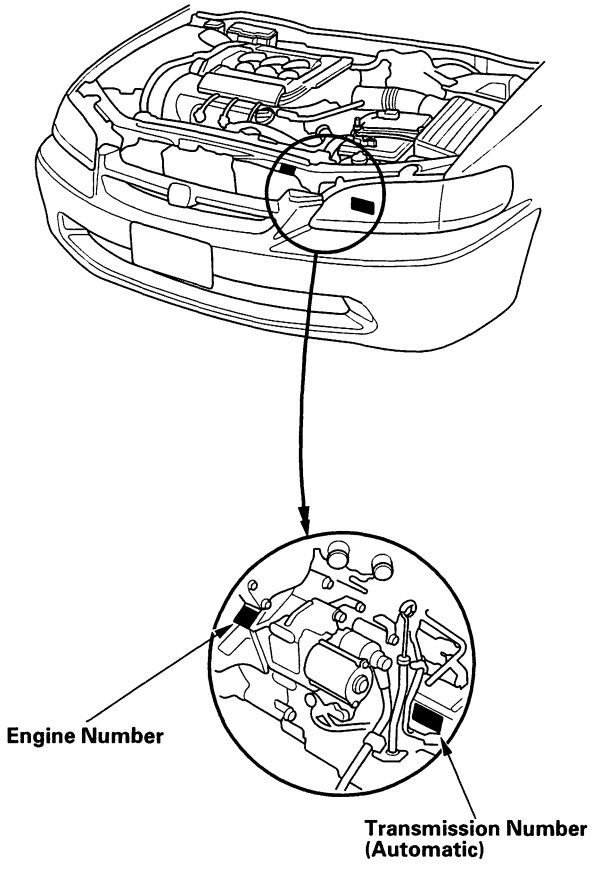

Warning/Caution Label Locations

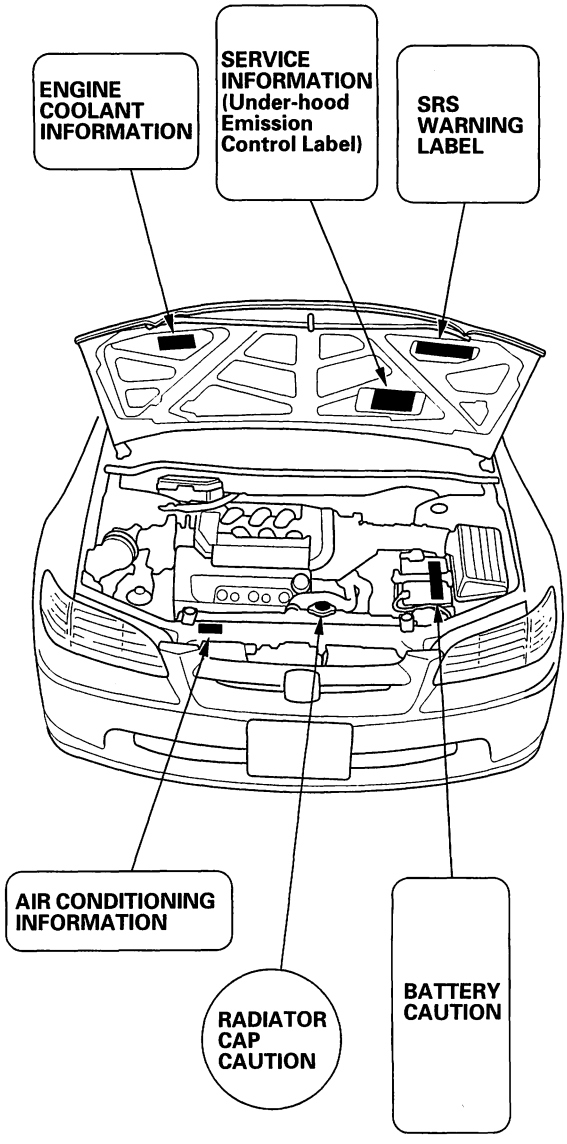

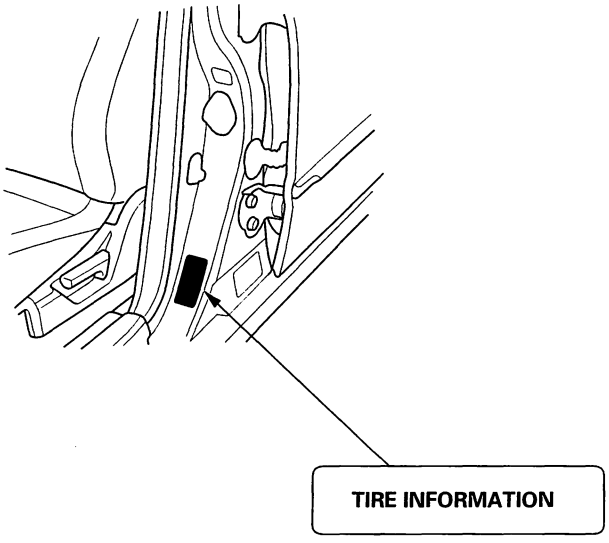

BACK

Under-hood Emission Control Label (1998 Model)

Emission Group Identification

Example:

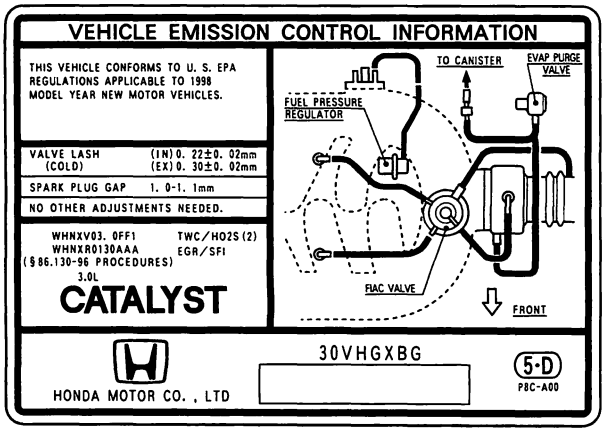

FEDERAL
THIS VEHICLE CONFORMS TO U.S. EPA REGULATIONS APPLICABLE TO 1998 MODEL YEAR NEW MOTOR VEHICLES.

CALIFORNIA TLEV
THIS VEHICLE CONFORMS TO U.S EPA AND STATE OF CALIFORNIA REGULATIONS APPLICABLE TO 1998 NEW TLEV PASSENGER CARS PROVIDED THAT THIS VEHICLE IS ONLY INTRODUCED INTO COMMERCE FOR SALE IN THE STATE OF CALIFORNIA.

TIER 1/LEV
THIS VEHICLE CONFORMS TO U.S. EPA TIER 1 AND STATE OF CALIFORNIA LEV REGULATIONS APPLICABLE TO 1998 MODEL YEAR NEW MOTOR VEHICLES.

CALIFORNIA LEV
THIS VEHICLE CONFORMS TO U.S EPA AND STATE OF CALIFORNIA REGULATIONS APPLICABLE TO 1998 NEW LEV PASSENGER CARS PROVIDED THAT THIS VEHICLE IS ONLY INTRODUCED INTO COMMERCE FOR SALE IN THE STATE OF CALIFORNIA.

CALIFORNIA ULEV
THIS VEHICLE CONFORMS TO U.S. EPA AND STATE OF CALIFORNIA REGULATIONS APPLICABLE TO 1998 NEW ULEV PASSENGER CARS PROVIDED THAT THIS VEHICLE IS ONLY INTRODUCED INTO COMMERCE FOR SALE IN THE STATE OF CALIFORNIA.

Engine and Evaporative Families

Engine Family:

W HNX V 03.0 FF1
a b c d e

a. **Model Year**
W: 1998
b. **Manufacturer Subcode**
HNX: HONDA
c. **Family Type**
V: LDV
T: LDT
d. **Displacement**
e. **Sequence Characters**

Evaporative Family:

W HNX R 0130 AAA
a b c d e

a. **Model Year**
W: 1998
b. **Manufacturer Subcode**
HNX: HONDA
c. **Family Type**
E: EVAP
R: EVAP/ORVR
d. **Canister Work Capacity**
e. **Sequence Characters**

Under-hood Emission Control Label (1999 Model)

Emission Group Identification

Example:

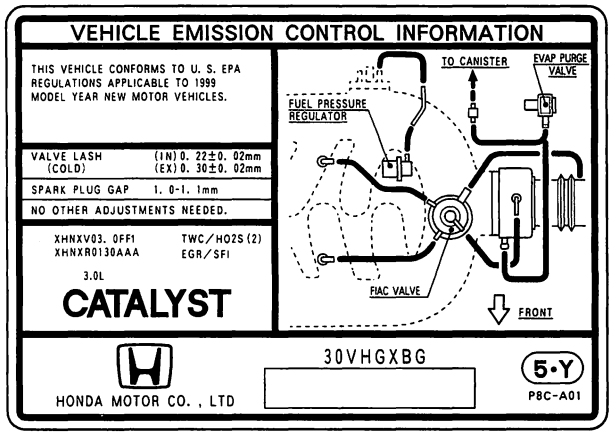

FEDERAL
THIS VEHICLE CONFORMS TO U.S. EPA REGULATIONS APPLICABLE TO 1999 MODEL YEAR NEW MOTOR VEHICLES.

CALIFORNIA TLEV
THIS VEHICLE CONFORMS TO U.S EPA AND STATE OF CALIFORNIA REGULATIONS APPLICABLE TO 1999 NEW TLEV PASSENGER CARS PROVIDED THAT THIS VEHICLE IS ONLY INTRODUCED INTO COMMERCE FOR SALE IN THE STATE OF CALIFORNIA.

TIER 1/LEV
THIS VEHICLE CONFORMS TO U.S. EPA TIER 1 AND STATE OF CALIFORNIA LEV REGULATIONS APPLICABLE TO 1999 MODEL YEAR NEW MOTOR VEHICLES.

CALIFORNIA LEV
THIS VEHICLE CONFORMS TO U.S EPA AND STATE OF CALIFORNIA REGULATIONS APPLICABLE TO 1999 NEW LEV PASSENGER CARS PROVIDED THAT THIS VEHICLE IS ONLY INTRODUCED INTO COMMERCE FOR SALE IN THE STATE OF CALIFORNIA.

CALIFORNIA ULEV
THIS VEHICLE CONFORMS TO U.S. EPA AND STATE OF CALIFORNIA REGULATIONS APPLICABLE TO 1999 NEW ULEV PASSENGER CARS PROVIDED THAT THIS VEHICLE IS ONLY INTRODUCED INTO COMMERCE FOR SALE IN THE STATE OF CALIFORNIA.

Engine and Evaporative Families

Engine Family:

X HNX V 03.0 FF1
a b c d e

a. **Model Year**
   X: 1999
b. **Manufacturer Subcode**
   HNX: HONDA
c. **Family Type**
   V: LDV
   T: LDT
d. **Displacement**
e. **Sequence Characters**

Evaporative Family:

X HNX R 0130 AAA
a b c d e

a. **Model Year**
   X: 1999
b. **Manufacturer Subcode**
   HNX: HONDA
c. **Family Type**
   E: EVAP
   R: EVAP/ORVR
d. **Canister Work Capacity**
e. **Sequence Characters**

BACK

Under-hood Emission Control Label (2000 Model)

Emission Group Identification

Example:

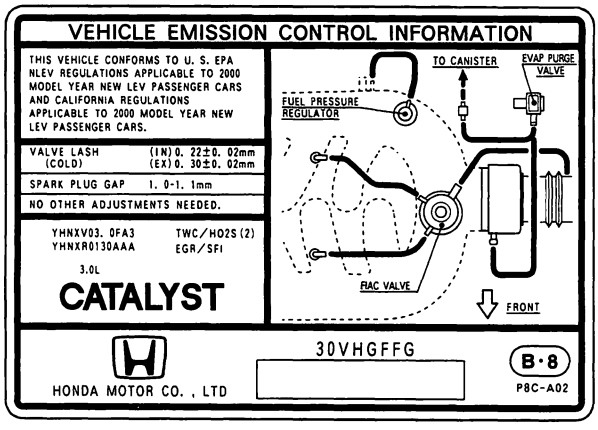

FEDERAL
THIS VEHICLE CONFORMS TO U.S. EPA NLEV REGULATIONS APPLICABLE TO 2000 MODEL YEAR NEW LEV PASSENGER CARS, AND CALIFORNIA REGULATIONS APPLICABLE TO 2000 MODEL YEAR NEW LEV PASSENGER CARS.

Engine and Evaporative Families

Engine Family:

Y HNX V 03.0 FF1

a b c d e

a. **Model Year**
   Y: 2000
b. **Manufacturer Subcode**
   HNX: HONDA
c. **Family Type**
   V: LDV
   T: LDT
d. **Displacement**
e. **Sequence Characters**

Evaporative Family:

Y HNX R 0130 AAA

a b c d e

a. **Model Year**
   Y: 2000
b. **Manufacturer Subcode**
   HNX: HONDA
c. **Family Type**
   E: EVAP
   R: EVAP/ORVR
d. **Canister Work Capacity**
e. **Sequence Characters**

Under-hood Emission Control Label (2001 Model)

Emission Group Identification

Example:

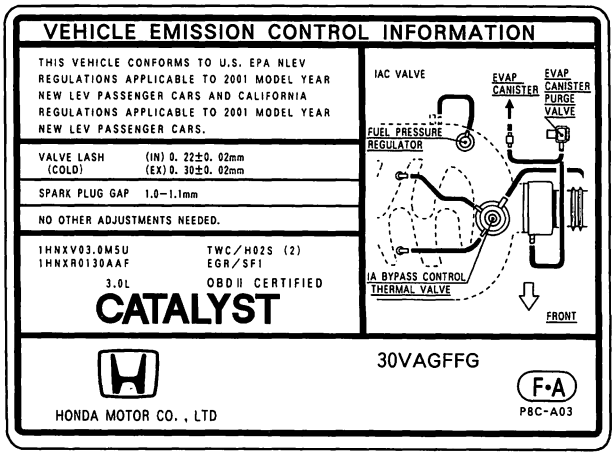

FEDERAL
THIS VEHICLE CONFORMS TO U.S. EPA NLEV REGULATIONS APPLICABLE TO 2001 MODEL YEAR NEW LEV PASSENGER CARS, AND CALIFORNIA REGULATIONS APPLICABLE TO 2001 MODEL YEAR NEW LEV PASSENGER CARS.

CANADIAN TIER 1
THIS VEHICLE CONFORMS TO U.S. EPA NLEV REGULATIONS AND CANDIAN TIER 1 STANDARDS FOR 2001 MODEL YEAR NEW PASSENGER CARS.

Engine and Evaporative Families

Engine Family:

1 HNX V 03.0 M5U
a b c d e

a. **Model Year**
   1: 2001
b. **Manufacturer Subcode**
   HNX: HONDA
c. **Family Type**
   V: LDV
   T: LDT
d. **Displacement**
e. **Sequence Characters**

Evaporative Family:

1 HNX R 0130 AAF
a b c d e

a. **Model Year**
   1: 2001
b. **Manufacturer Subcode**
   HNX: HONDA
c. **Family Type**
   E: EVAP
   R: EVAP/ORVR
d. **Canister Work Capacity**
e. **Sequence Characters**

BACK

Under-hood Emission Control Label (2002 Model)

Emission Group Identification

Example:

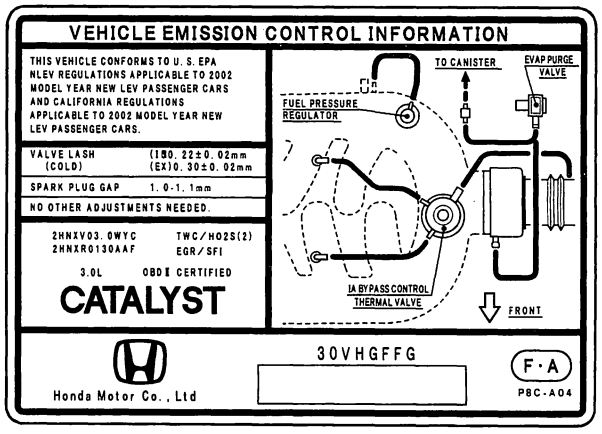

FEDERAL and CANADIAN TIER 1
THIS VEHICLE CONFORMS TO U.S. EPA NLEV REGULATIONS APPLICABLE TO 2002 MODEL YEAR NEW LEV PASSENGER CARS, AND CALIFORNIA REGULATIONS APPLICABLE TO 2002 MODEL YEAR NEW LEV PASSENGER CARS.

Engine and Evaporative Families

Engine Family:

2 HNX V 03.0 MYC
a b c d e

a. **Model Year**
   2: 2002
b. **Manufacturer Subcode**
   HNX: HONDA
c. **Family Type**
   V: LDV
   T: LDT
d. **Displacement**
e. **Sequence Characters**

Evaporative Family:

2 HNX R 0130 AAF
a b c d e

a. **Model Year**
   2: 2002
b. **Manufacturer Subcode**
   HNX: HONDA
c. **Family Type**
   E: EVAP
   R: EVAP/ORVR
d. **Canister Work Capacity**
e. **Sequence Characters**

Parts Marking

To deter vehicle theft, certain major components are marked with the vehicle identification number (VIN). Original parts have self-adhesive labels. Replacement body parts will have self-adhesive labels, and a replacement engine and transmission will have the VIN plate attached with a break-off bolt.

NOTE: Be careful not to damage the parts marking labels during body repair. Mask the labels before repairing the part.

Specifications

Standards and Service Limits

Engine Electrical 2-2
Engine Assembly 2-2
Cylinder Head 2-3
Engine Block 2-4
Engine Lubrication 2-5
Cooling 2-5
Fuel and Emissions 2-5
Automatic Transmission and Differential 2-6
Steering 2-12
Suspension 2-13
Brakes 2-13
Air Conditioning 2-13

Design Specifications

Dimensions 2-14
Weight (U.S.A.) 2-14
Weight (CANADA) 2-14
Engine 2-14
Starter 2-14
Automatic Transmission 2-14
Steering 2-15
Suspension 2-15
Wheel Alignment 2-15
Brakes 2-15
Tires 2-15
Air Conditioning 2-15
Electrical Ratings 2-16

Body Specifications

Illustration 2-17

Standards and Service Limits

Engine Electrical

Item	Measurement	Qualification	Standard or New	Service Limit
Ignition coil	Rated voltage		12 V	
	Primary winding resistance	at 68°F (20°C)	0.34−0.42 Ω	
	Secondary winding resistance	at 68°F (20°C)	1.71−20.3 kΩ	
	Firing order		1−4−2−5−3−6	
Ignition wire	Resistance	at 68°F (20°C)	25 kΩ max.	
Spark plug	Type		NGK: PZFR5F-11 DENSO: PKJ16CR-L11	
	Gap		1.0−1.1 mm (0.039−0.043 in.)	1.3 mm (0.05 in.)
Ignition timing		At idle (check the *red* mark)	A/T (in N or P): 10±2°BTDC at 680±50 rpm	
Alternator belt	Tension adjustment		Auto adjuster type	
Alternator	Output	At 13.5 V and normal engine temperature	100 A	
Starter	Output		1.6 kW	
	Commutator mica depth		0.4−0.5 mm (0.016−0.020 in.)	0.15 mm (0.006 in.)
	Commutator runout		0.02 mm (0.001 in.) max.	0.05 mm (0.002 in.)
	Commutator O.D.		28.0−28.1 mm (1.102−1.106 in.)	27.5 mm (1.083 in.)
	Brush length		15.8−16.2 mm (0.62−0.64 in.)	11.0 mm (0.43 in.)
	Brush spring tension (new)		15.7−17.7 N (1.60−1.80 kgf, 3.53−3.97 lbs)	

Engine Assembly

Item	Measurement	Qualification	Standard or New	Service Limit
Compression	Pressure Check at 200 rpm with wide open throttle. (See Design Specs for ratio.)	Minimum	930 kPa (9.5 kgf/cm², 135 psi)	——
		Maximum variation	200 kPa (2.0 kgf/cm², 28 psi)	——

BACK

Cylinder Head

Item	Measurement	Qualification	Standard or New	Service Limit
Head	Warpage		———	0.05 mm (0.002 in.)
	Height		120.95 – 121.05 mm (4.762 – 4.766 in.)	———
Camshaft	End play		0.05 – 0.20 mm (0.002 – 0.008 in.)	0.20 mm (0.008 in.)
	Camshaft-to-holder oil clearance		0.050 – 0.089 mm (0.0020 – 0.0035 in.)	0.15 mm (0.006 in.)
	Total runout		0.03 mm (0.001 in.) max.	0.04 mm (0.002 in.)
	Cam lobe height	Intake, primary	34.615 mm (1.3628 in.)	———
		Intake, mid	36.210 mm (1.4256 in.)	———
		Intake, secondary	31.188 mm (1.2279 in.)	———
		Exhaust	36.076 mm (1.4203 in.)	———
Valves	Clearance (cold)	Intake	0.20 – 0.24 mm (0.008 – 0.009 in.)	———
		Exhaust	0.28 – 0.32 mm (0.011 – 0.013 in.)	———
	Stem O.D.	Intake	5.485 – 5.495 mm (0.2159 – 0.2163 in.)	5.455 mm (0.2148 in.)
		Exhaust	5.450 – 5.460 mm (0.2146 – 0.2150 in.)	5.420 mm (0.2134 in.)
	Stem-to-guide clearance	Intake	0.020 – 0.045 mm (0.0008 – 0.018 in.)	0.08 mm (0.003 in.)
		Exhaust	0.055 – 0.080 mm (0.0022 – 0.0031 in.)	0.12 mm (0.005 in.)
Valve seats	Width	Intake	1.25 – 1.55 mm (0.049 – 0.061 in.)	2.00 mm (0.079 in.)
		Exhaust	1.25 – 1.55 mm (0.049 – 0.061 in.)	2.00 mm (0.079 in.)
	Stem installed height	Intake	46.75 – 47.55 mm (1.841 – 1.872 in.)	47.80 mm (1.882 in.)
		Exhaust	46.68 – 47.48 mm (1.838 – 1.869 in.)	47.73 mm (1.879 in.)
Valve springs	Free length	Intake	51.03 mm (2.009 in.)	———
		Exhaust	53.48 mm (2.106 in.)	———
Valve guides	I.D.	Intake	5.515 – 5.530 mm (0.2171 – 0.2177 in.)	5.55 mm (0.219 in.)
		Exhaust	5.515 – 5.530 mm (0.2171 – 0.2177 in.)	5.55 mm (0.219 in.)
	Installed height	Intake	21.20 – 22.20 mm (0.835 – 0.874 in.)	———
		Exhaust	20.63 – 21.63 mm (0.812 – 0.852 in.)	———
Rocker arms	Arm-to-shaft clearance	Intake	0.026 – 0.067 mm (0.0010 – 0.0026 in.)	0.067 mm (0.0026 in.)
		Exhaust	0.026 – 0.077 mm (0.0010 – 0.0030 in.)	0.077 mm (0.0030 in.)

Standards and Service Limits

Engine Block

Item	Measurement	Qualification	Standard or New	Service Limit
Block	Warpage of deck		0.07 mm (0.003 in.) max.	0.10 mm (0.004 in.)
	Bore diameter		86.000−86.015 mm (3.3858−3.3864 in.)	86.065 mm (3.3884 in.)
	Bore taper		——	0.05 mm (0.002 in.)
	Reboring limit		——	0.5 mm (0.02 in.)
Piston	Skirt O.D.at 16.0 mm (0.63 in.) from bottom of skirt		85.975−85.985 mm (3.3848−3.3852 in.)	85.965 mm (3.3844 in.)
	Clearance in cylinder		0.015−0.040 mm (0.0006−0.0016 in.)	0.08 mm (0.003 in.)
	Ring groove width	Top	1.220−1.230 mm (0.0480−0.0484 in.)	1.25 mm (0.049 in.)
		Second	1.220−1.230 mm (0.0480−0.0484 in.)	1.25 mm (0.049 in.)
		Oil	2.805−2.825 mm (0.1104−0.1112 in.)	2.85 mm (0.112 in.)
Piston rings	Ring-to-groove clearance	Top	0.035−0.060 mm (0.0014−0.024 in.)	0.13 mm (0.005 in.)
		Second	0.030−0.055 mm (0.0012−0.0022 in.)	0.13 mm (0.005 in.)
	Ring end gap	Top	0.20−0.35 mm (0.008−0.014 in.)	0.60 mm (0.024 in.)
		Second	0.040−0.55 mm (0.016−0.022 in.)	0.70 mm (0.028 in.)
		Oil	0.20−0.70 mm (0.008−0.028 in.)	0.80 mm (0.031 in.)
Piston pin	O.D.		21.962−21.965 mm (0.8646−0.8648 in.)	21.954 mm (0.8643 in.)
	Pin-to-piston clearance		−0.0050−+0.0010 mm (−0.00020−+0.00004 in.)	0.004 mm (0.0002 in.)
Connecting rod	Pin-to-rod clearance		0.005−0.014 mm (0.0002−0.0006 in.)	0.019 mm (0.0007 in.)
	Small-end bore diameter		21.970−21.976 mm (0.8650−0.8652 in.)	——
	Large-end bore diameter	Nominal	56.0 mm (2.20 in.)	——
	End play installed on crankshaft		0.15−0.35 mm (0.006−0.014 in.)	0.45 mm (0.018 in.)
Crankshaft	Main journal diameter		71.976−72.000 mm (2.8337−2.8346 in.)	——
	Rod journal diameter		52.976−53.000 mm (2.0857−2.0866 in.)	——
	Rod/main journal taper		0.005 mm (0.0002 in.) max.	0.010 mm (0.0004 in.)
	Rod/main journal out-of-round		0.005 mm (0.0002 in.) max.	0.010 mm (0.0004 in.)
	End play		0.10−0.35 mm (0.004−0.014 in.)	0.45 mm (0.018 in.)
	Runout		0.020 mm (0.0008 in.) max.	0.03 mm (0.0012 in.)
Crankshaft bearings	Main bearing-to-journal oil clearance		0.020−0.044 mm (0.0008−0.0017 in.)	0.050 mm (0.0020 in.)
	Rod bearing clearance		0.020−0.044 mm (0.0008−0.0017 in.)	0.050 mm (0.002 in.)

BACK

Engine Lubrication

Item	Measurement	Qualification	Standard or New	Service Limit
Engine oil	Capacity		5.0 ℓ (5.3 US qt, 4.4 Imp qt) for engine overhaul 4.4 ℓ (4.6 US qt, 3.9 Imp qt) for oil change, including filter 4.0 ℓ (4.2 US qt, 3.5 Imp qt) for oil change, without filter	
Oil pump	Inner-to-outer rotor clearance		0.04–0.16 mm (0.002–0.006 in.)	0.20 mm (0.008in.)
	Pump housing-to-outer rotor clearance		0.14–0.19 mm (0.006–0.007 in.)	0.20 mm (0.008 in.)
	Pump housing-to-outer rotor axial clearance		0.02–0.07 mm (0.001–0.003 in.)	0.12 mm (0.005 in.)
	Oil pressure with oil temperature at 176°F (80°C)	at idle	70 kPa (0.7 kgf/cm², 10 psi)	
		at 3,000 rpm	490 kPa (5.0 kgf/cm², 71 psi)	

Cooling

Item	Measurement	Qualification	Standard or New	Service Limit
Radiator	Coolant capacity (includes engine, heater, hoses and reservoir)	Engine overhaul	7.5 ℓ (7.9 US qt, 6.6 Imp qt)	
		Coolant change	5.6 ℓ (5.9 US qt, 4.9 Imp qt)	
Reservoir	Coolant capacity		0.6 ℓ (0.6 US qt, 0.5 Imp qt)	
Radiator cap	Opening pressure		93–123 kPa (0.95–1.25 kgf/cm², 14–18 psi)	
Thermostat '98-00 models	Opening temperature	Begins to open	169–176°F (76–80°C)	
		Fully open	194°F (90°C)	
	Valve lift at fully open		10.0 mm (0.39 in.) min.	
Thermostat '01-02 models	Opening temperature	Begins to open	163–171°F (73–77°C)	
		Fully open	190°F (88°C)	
	Valve lift at fully open		10.0 mm (0.39 in.) min.	
Radiator fan switch	Thermoswitch "ON" temperature		196–203°F (91–95°C)	
	Thermoswitch "OFF" temperature		Subtract 5–15°F (3–8°C) from actual "ON" temperature	
	Fan timer "ON" temperature		217–232°F (103–111°C)	
	Fan timer "OFF" temperature		Subtract 5–23°F (3–13°C) from actual "ON" temperature	

Fuel and Emissions

Item	Measurement	Qualification	Standard or New	Service Limit
Fuel pressure regulator	Pressure with regulator vacuum hose disconnected		280–330 kPa (2.9–3.4 kgf/cm², 41–48 psi)	
Fuel tank	Capacity		64.8 ℓ (17.1 US gal, 14.3 Imp gal)	
Engine idle	Idle speed with headlights and radiator fan off	In N or P	680±50 rpm	
	Idle CO %		0.1 max.	

Standards and Service Limits

Automatic Transmission and Differential

Item	Measurement	Qualification	Standard or New	Service Limit
ATF (Automatic Transmission Fluid)	Capacity	Use Honda ATF-Z1	For fluid change: 2.9 ℓ (3.1 US qt, 2.6 Imp qt) For overhaul: 7.2 ℓ (7.6 US qt, 6.3 Imp qt)	
ATF pressure	Line pressure	At 1,500 rpm in N or P position	800–860 kPa (8.2–8.8 kgf/cm², 120–130 psi)	760 kPa (7.7 kgf/cm², 110 psi)
	4th clutch pressure	At 2,000 rpm in D4 position	790–870 kPa (8.1–8.9 kgf/cm², 120–130 psi)	750 kPa (7.6 kgf/cm², 110 psi)
	3rd clutch pressure	At 2,000 rpm in D4 position	790–870 kPa (8.1–8.9 kgf/cm², 120–130 psi)	750 kPa (7.6 kgf/cm², 110 psi)
	2nd clutch pressure	At 1,500 rpm in 2 position	790–870 kPa (8.1–8.9 kgf/cm², 120–130 psi)	750 kPa (7.6 kgf/cm², 110 psi)
	1st clutch pressure	At 1,500 rpm in 1 position	790–870 kPa (8.1–8.9 kgf/cm², 120–130 psi)	750 kPa (7.6 kgf/cm², 110 psi)
Torque converter	Stall speed: Check with vehicle on level ground			2,250–2,550 rpm
Clutches	Clutch end plate-to-top disc clearance	1st		1.2–1.4 mm (0.047–0.055 in.)
		2nd		0.85–1.05 mm (0.033–0.041 in.)
		3rd		0.55–0.75 mm (0.022–0.030 in.)
		4th		0.55–0.75 mm (0.022–0.030 in.)
	Clutch return spring free length	1st	45.7 mm (1.80 in.)	43.7 mm (1.72 in.)
		2nd	63.0 mm (2.48 in.)	61.0 mm (2.40 in.)
		3rd, 4th	33.5 mm (1.32 in.)	31.5 mm (1.24 in.)
	Clutch disc thickness		1.94 mm (0.076 in.)	————
	Clutch plate thickness	1st	2.0 mm (0.079 in.)	When discolored
		2nd	2.0 mm (0.079 in.)	When discolored
		3rd	2.3 mm (0.091 in.)	When discolored
		4th	2.0 mm (0.079 in.)	When discolored
	1st and 2nd clutch end plate thickness	Mark 1	3.10 mm (0.122 in.)	When discolored
		Mark 2	3.20 mm (0.126 in.)	When discolored
		Mark 3	3.30 mm (0.130 in.)	When discolored
		Mark 4	3.40 mm (0.134 in.)	When discolored
		Mark 6	2.60 mm (0.102 in.)	When discolored
		Mark 7	2.70 mm (0.106 in.)	When discolored
		Mark 8	2.80 mm (0.110 in.)	When discolored
		Mark 9	2.90 mm (0.114 in.)	When discolored
		Mark 0	3.00 mm (0.118 in.)	When discolored
	3rd and 4th clutch end plate thickness	Mark 1	2.10 mm (0.083 in.)	When discolored
		Mark 2	2.20 mm (0.087 in.)	When discolored
		Mark 3	2.30 mm (0.091 in.)	When discolored
		Mark 4	2.40 mm (0.094 in.)	When discolored
		Mark 5	2.50 mm (0.098 in.)	When discolored
		Mark 6	2.60 mm (0.102 in.)	When discolored
		Mark 7	2.70 mm (0.106 in.)	When discolored
		Mark 8	2.80 mm (0.110 in.)	When discolored
		Mark 9	2.90 mm (0.114 in.)	When discolored

BACK

Item	Measurement	Qualification	Standard or New	Service Limit
Valve body	Stator shaft needle bearing contact I.D.	Torque converter side	27.000–27.021 mm (1.0630–1.0638 in.)	When worn or damaged
		ATF pump side	29.000–29.021 mm (1.1417–1.1426 in.)	When worn or damaged
	ATF pump gear thrust clearance		0.03–0.05 mm (0.001–0.002 in.)	0.07 mm (0.003 in.)
	ATF pump gear-to-body clearance	Drive gear	0.210–0.265 mm (0.0083–0.0104 in.)	———
		Driven gear	0.070–0.125 mm (0.0028–0.0049 in.)	———
	ATF pump drive gear I.D.		14.016–14.034 mm (0.5518–0.5525 in.)	When worn or damaged
	ATF pump driven gear shaft O.D.		13.980–13.99 mm (0.5504–0.5508 in.)	When worn or damaged
Reverse shift fork	Fork finger thickness		5.60–6.00 mm (0.220–0.236 in.)	5.40 mm (0.213 in.)
Park gear and pawl				When worn or damaged
Servo body	Shift fork shaft bore I.D.		14.000–14.010 mm (0.5512–0.5516 in.)	———
	Shift fork shaft valve bore I.D.		37.000–37.039 mm (1.4567–1.4582 in.)	37.045 mm (1.4585 in.)
Regulator valve body	Sealing ring contact I.D.		32.000–32.025 mm (1.2598–1.2608 in.)	32.050 mm (1.2618 in.)
Accumulator body	Sealing ring contact I.D.		35.000–35.025 mm (1.3780–1.3789 in.)	35.05 mm (1.3799 in.)
Stator shaft	Sealing ring contact I.D.		29.000–29.013 mm (1.1417–1.1422 in.)	29.050 mm (1.1437 in.)

(cont'd)

Standards and Service Limits

Automatic Transmission and Differential (cont'd)

Item	Measurement	Qualification	Standard or New	Service Limit
Mainshaft	Diameter of needle bearing contact area	at stator shaft	22.984–23.000 mm (0.9049–0.9055 in.)	When worn or damaged
		at 3rd gear	52.975–52.991 mm (2.0856–2.0863 in.)	When worn or damaged
		at 4th gear collar	33.975–33.991 mm (1.3376–1.3382 in.)	When worn or damaged
	I.D. of 3rd gear		59.000–59.019 mm (2.3228–2.3236 in.)	When worn or damaged
	I.D. of 4th gear		40.000–40.016 mm (1.5748–1.5754 in.)	When worn or damaged
	End play of 3rd gear		0.03–0.31 mm (0.001–0.012 in.)	———
	End play of 4th gear		0.10–0.22 mm (0.004–0.009 in.)	———
	41 x 73 mm thrust shim thickness	No. 1	7.85 mm (0.309 in.)	When worn or damaged
		No. 2	7.90 mm (0.311 in.)	When worn or damaged
		No. 3	7.95 mm (0.313 in.)	When worn or damaged
		No. 4	8.00 mm (0.315 in.)	When worn or damaged
		No. 5	8.05 mm (0.317 in.)	When worn or damaged
		No. 6	8.10 mm (0.319 in.)	When worn or damaged
	Thrust washer thickness	27 x 47 x 5 mm	5.00 mm (0.197 in.)	When worn or damaged
	Length of 4th gear collar		58.5–58.6 mm (2.303–2.307 in.)	———
	4th gear collar flange thickness		4.45–4.60 mm (0.175–0.181 in.)	When worn or damaged
	Sealing ring thickness	32 mm sealing ring	1.850–1.950 mm (0.073–0.077 in.)	1.800 mm (0.071 in.)
		29 mm sealing ring	1.850–1.950 mm (0.073–0.077 in.)	1.800 mm (0.071 in.)
	Width of sealing ring groove		2.025 – 2.060 mm (0.079 – 0.081 in.)	2.080 mm (0.082 in.)
	Clutch feed pipe O.D.	3rd clutch	5.97 – 5.98 mm (0.2350 – 0.2354 in.)	5.95 mm (0.2343 in.)
		4th clutch	11.47 – 11.48 mm (0.4516 – 0.4520 in.)	11.45 mm (0.4508 in.)
	Clutch feed pipe bushing I.D.	3rd clutch	6.018 – 6.030 mm (0.2369 – 0.2374 in.)	6.045 mm (0.2380 in.)
		4th clutch	11.500 – 11.518 mm (0.4528 – 0.4535 in.)	11.530 mm (0.4539 in.)

BACK

Item	Measurement	Qualification	Standard or New	Service Limit
Countershaft	Diameter of needle bearing contact area	at 4th gear	34.975–34.991 mm (1.3770–1.3776 in.)	When worn or damaged
		at 2nd gear	39.979–40.000 mm (1.5740–1.5748 in.)	When worn or damaged
		at park gear	41.964–41.980 mm (1.6521–1.6528 in.)	When worn or damaged
		at right end	38.505–38.515 mm (1.5159–1.5163 in.)	When worn or damaged
	I.D. of 4th gear		41.000–41.016 mm (1.6142–1.6148 in.)	When worn or damaged
	I.D. of idler gear		50.000–50.016 mm (1.9685–1.9691 in.)	When worn or damaged
	I.D. of reverse gear		46.000–46.016 mm (1.8110–1.8116 in.)	When worn or damaged
	End play of 1st gear		0.00–0.33 mm (0.000–0.013 in.)	———
	End play of 4th gear		0.04–0.27 mm (0.002–0.011 in.)	———
	End play of idler gear		0.015–0.045 mm (0.0006–0.0018 in.)	———
	End play of reverse gear		0.10–0.25 mm (0.004–0.010 in.)	———
	Length of distance collar		53.92–53.96 mm (2.123–2.124 in.)	———
	Cotter thickness		1.99–2.02 mm (0.078–0.080 in.)	———
	Reverse selector hub O.D.		55.87–55.90 mm (2.1996–2.2008 in.)	When worn or damaged

(cont'd)

Automatic Transmission and Differential (cont'd)

Item	Measurement	Qualification	Standard or New	Service Limit
Secondary shaft	Diameter of needle bearing contact area	at 1st gear	37.978–37.993 mm (1.4952–1.4958 in.)	When worn or damaged
		at 2nd gear	33.986–33.999 mm (1.3380–1.3385 in.)	When worn or damaged
	I.D. of 1st gear		44.000–44.016 mm (1.7323–1.7329 in.)	When worn or damaged
	I.D. of 2nd gear		40.000–40.016 mm (1.5748–1.5754 in.)	When worn or damaged
	End play of 1st gear		0.07–0.15 mm (0.003–0.006 in.)	———
	End play of 2nd gear		0.04–0.12 mm (0.002–0.005 in.)	———
	38 x 56.5 mm splined washer thickness	No. 1	6.85 mm (0.270 in.)	When worn or damaged
		No. 2	6.90 mm (0.272 in.)	When worn or damaged
		No. 3	6.95 mm (0.274 in.)	When worn or damaged
		No. 4	7.00 mm (0.276 in.)	When worn or damaged
		No. 5	7.05 mm (0.278 in.)	When worn or damaged
		No. 6	7.10 mm (0.280 in.)	When worn or damaged
	37 x 55 mm thrust shim thickness	No. 1	4.90 mm (0.193 in.)	When worn or damaged
		No. 2	4.95 mm (0.195 in.)	When worn or damaged
		No. 3	5.00 mm (0.197 in.)	When worn or damaged
		No. 4	5.05 mm (0.199 in.)	When worn or damaged
		No. 5	5.10 mm (0.201 in.)	When worn or damaged
		No. 6	5.15 mm (0.203 in.)	When worn or damaged
		No. 7	5.20 mm (0.205 in.)	When worn or damaged
	Cotter thickness		1.99–2.02 mm (0.078–0.080 in.)	———
	Sealing ring thickness		1.890–1.950 mm (0.074–0.077 in.)	1.800 mm (0.071 in.)
	Width of sealing ring groove		2.025–2.060 mm (0.080–0.081 in.)	2.080 mm (0.082 in.)
	Clutch feed pipe O.D.		7.97–7.98 mm (0.3138–0.3142 in.)	7.95 mm (0.3130 in.)
	Clutch feed pipe bushing I.D.		8.000–8.015 mm (0.3150–0.3156 in.)	8.030 mm (0.3161 in.)
Reverse idler gear	Diameter of needle bearing contact area	at reverse idler gear shaft	13.990–14.000 mm (0.5508–0.5512 in.)	When worn or damaged
	End play		0.03–0.36 mm (0.001–0.014 in.)	———
	I.D.		18.007–18.020 mm (0.7089–0.7094 in.)	When worn or damaged
	Thrust washer thickness	Transmission housing side	0.97–1.03 mm (0.038–0.041 in.)	———
		Reverse idler gear shaft holder side	0.97–1.03 mm (0.038–0.041 in.)	———
	I.D. of reverse idler gear shaft holder		14.006–14.024 mm (0.5514–0.5521 in.)	When worn or damaged
	I.D. of transmission housing of reverse idler gear shaft contact area		14.006–14.024 mm (0.5514–0.5521 in.)	———

BACK

Item	Measurement	Qualification	Standard or New			
			Wire Diameter	O.D.	Free Length	No. of Coils
Main valve body springs (see page 14-161)	Modulator valve spring		1.6 mm (0.063 in.)	10.4 mm (0.409 in.)	33.5 mm (1.319 in.)	9.8
	Shift valve C spring		0.8 mm (0.031 in.)	6.6 mm (0.260 in.)	49.1 mm (1.933 in.)	21.7
	Shift valve D spring		0.7 mm (0.028 in.)	6.6 mm (0.260 in.)	35.7 mm (1.406 in.)	17.2
	Shift valve E spring		0.7 mm (0.028 in.)	6.6 mm (0.260 in.)	32.2 mm (1.268 in.)	13.4
	Relief valve spring		1.1 mm (0.043 in.)	8.6 mm (0.339 in.)	30.1 mm (1.185 in.)	10.7
	Lock-up shift valve spring		0.9 mm (0.035 in.)	7.6 mm (0.299 in.)	63.0 mm (2.480 in.)	22.4
	Cooler check valve spring		0.6 mm (0.024 in.)	5.8 mm (0.228 in.)	14.5 mm (0.571 in.)	6.8
	Torque converter check valve spring		1.2 mm (0.047 in.)	8.6 mm (0.339 in.)	35.1 mm (1.382 in.)	14.3
	Servo control valve spring		0.7 mm (0.028 in.)	6.6 mm (0.260 in.)	35.7 mm (1.406 in.)	17.2
	Reverse CPC valve spring		0.7 mm (0.028 in.)	6.1 mm (0.240 in.)	17.8 mm (0.701 in.)	7.9
Regulator valve body springs (see page 14-164)	Stator reaction spring		5.5 mm (0.217 in.)	37.4 mm (1.472 in.)	30.3 mm (1.193 in.)	2.12
	Regulator valve spring A		1.8 mm (0.071 in.)	14.7 mm (0.579 in.)	87.5 mm (3.445 in.)	16.5
	Regulator valve spring B		1.7 mm (0.067 in.)	9.4 mm (0.370 in.)	44.0 mm (1.732 in.)	13.4
	Lock-up control valve spring		0.7 mm (0.028 in.)	6.6 mm (0.260 in.)	42.9 mm (1.689 in.)	14.2
	Lock-up timing valve spring		0.65 mm (0.026 in.)	6.6 mm (0.260 in.)	34.8 mm (1.370 in.)	15.6
Servo body springs (see page 14-165)	Shift valve B spring		0.8 mm (0.031 in.)	7.1 mm (0.280 in.)	40.4 mm (1.591 in.)	16.9
	Shift valve A spring		0.8 mm (0.031 in.)	7.1 mm (0.280 in.)	40.4 mm (1.591 in.)	16.9
	CPC valve A spring		0.7 mm (0.028 in.)	6.1 mm (0.240 in.)	17.8 mm (0.701 in.)	7.9
	CPC valve B spring		0.7 mm (0.028 in.)	6.1 mm (0.240 in.)	17.8 mm (0.701 in.)	7.9
	4th accumulator spring A		2.6 mm (0.102 in.)	19.6 mm (0.772 in.)	66.4 mm (2.614 in.)	9.7
	4th accumulator spring B		2.4 mm (0.094 in.)	12.8 mm (0.504 in.)	51.5 mm (2.028 in.)	11.5
	3rd accumulator spring A		2.6 mm (0.102 in.)	19.6 mm (0.772 in.)	66.4 mm (2.614 in.)	9.7
	3rd accumulator spring B		2.4 mm (0.094 in.)	12.8 mm (0.504 in.)	51.5 mm (2.028 in.)	11.5
Accumulator body springs (see page 14-166)	1st accumulator spring B		2.7 mm (0.106 in.)	15.0 mm (0.591 in.)	52.5 mm (2.067 in.)	10.3
	1st accumulator spring A		2.5 mm (0.098 in.)	21.6 mm (0.850 in.)	87.5 mm (3.445 in.)	11.8
	2nd accumulator spring B		2.4 mm (0.094 in.)	12.6 mm (0.496 in.)	53.5 mm (2.106 in.)	12.9
	2nd accumulator spring A		2.7 mm (0.106 in.)	19.6 mm (0.772 in.)	66.3 mm (2.610 in.)	9.9

(cont'd)

Standards and Service Limits

Automatic Transmission and Differential (cont'd)

Item	Measurement	Qualification	Standard or New	Service Limit
A/T differential carrier	Pinion shaft contact area I.D.		18.010 – 18.028 mm (0.7091 – 0.7098 in.)	———
	Carrier-to-pinion shaft clearance		0.023 – 0.057 mm (0.001 – 0.002 in.)	0.1 mm (0.004 in.)
	Driveshaft contact area I.D.		30.025 – 30.045 mm (1.182 – 1.183 in.)	———
	Carrier-to-driveshaft clearance		0.045 – 0.086 mm (0.002 – 0.003 in.)	0.12 mm (0.005 in.)
	Carrier-to-intermediate shaft clearance		0.080 – 0.116 mm (0.003 – 0.005 in.)	———
	Tapered roller bearing starting torque (preload)	For new bearing	2.7 – 3.9 N·m (28 – 40 kgf·cm, 24 – 35 lbf·in.)	Adjust
		For used bearing	2.5 – 3.6 N·m (25 – 37 kgf·cm, 22 – 32 lbf·in.)	Adjust
A/T differential pinion gear	Backlash		0.05 – 0.15 mm (0.002 – 0.006 in.)	———
	I.D.		18.042 – 18.066 mm (0.7103 – 0.7113 in.)	———
	Pinion gear-to-pinion shaft clearance		0.055 – 0.095 mm (0.0022 – 0.0037 in.)	0.12 mm (0.005 in.)

Steering

Item	Measurement	Qualification	Standard or New	Service Limit
Steering wheel	Rotational play measured at outside edge	With engine running	0 – 10 mm (0 – 0.39 in.)	———
	Starting load measured at outside edge	With engine running	30 N (3.1 kgf, 6.8 lbs)	———
Gearbox	Angle of rack guide screw loosened from locked position		60° ± 5°	
Pump	Output pressure with shut-off valve closed		7,600 – 8,300 kpa (78 – 85 kgf/cm², 1,110 – 1,210 psi)	
Power steering fluid	Capacity	Use Genuine Honda Power Steering Fluid	For fluid change: 0.4 ℓ (0.42 US pt, 0.35 Imp qt)	
			For system overhaul: 1.1 ℓ (1.16 US qt, 0.97 Imp qt)	
Power steering pump belt NOTE: Adjust a new belt to the new belt spec, run the engine for 5 minutes, then readjust it to the used belt spec.	Deflection with 98 N (10 kgf, 22 lbs) applied mid-way between pulleys		Used belt: 13.0 – 16.5 mm (0.51 – 0.65 in.)	
			New belt: 8.5 – 11.0 mm (0.34 – 0.43 in.)	
	Tension (measured with belt tension gauge)		Use belt: 390 – 540 N (40 – 55 kgf, 88 – 120 lbs))	
			New belt: 740 – 880 N (75 – 90 kgf, 170 – 200 lbs))	

BACK

Suspension

Item	Measurement	Qualification	Standard or New	Service Limit
Wheel alignment	Camber	Front	0°00′±1°	
		Rear	−0°30′±1°	
	Caster	Front	2°48′±1°	
	Total toe	Front	0±2 mm (0±1/16 in.)	
		Rear	IN 2±2 (1/16±1/16 in.)	
	Front wheel turning angle	Inside wheel	38°32′±2°	
		Outside wheel	31°03′ (Reference)	
Aluminum wheel	Runout	Axial	0−0.7 mm (0−0.03 in.)	2.0 mm (0.08 in.)
		Radial	0−0.7 mm (0−0.03 in.)	1.5 mm (0.06 in.)
Steel wheel	Runout	Axial	0−1.0 mm (0−0.04 in.)	2.0 mm (0.08 in.)
		Radial	0−1.0 mm (0−0.04 in.)	1.5 mm (0.06 in.)
Wheel bearings	End play	Front	0−0.05 mm (0−0.002 in.)	
		Rear	0−0.05 mm (0−0.002 in.)	

Brakes

Item	Measurement	Qualification	Standard or New	Service Limit
Parking brake lever	Distance travelled when pulled with 196 N (20 kgf, 44 lbs) of force		6−9 clicks	
Brake pedal	Pedal height (carpet removed)		148 mm (5 13/16 in.)	
	Free play		1−5 mm (1/16−3/16 in.)	
Master cylinder	Piston-to-pushrod clearance		0−0.4 mm (0−0.015 in.)	
Brake disc	Thickness	Front	22.9−23.1 mm (0.90−0.91 in.)	21.0 mm (0.83 in.)
		Rear	8.9−9.1 mm (0.35−0.36 in.)	8.0 mm (0.31 in.)
	Runout	Front	————	0.10 mm (0.004 in.)
		Rear	————	0.10 mm (0.004 in.)
	Parallelism	Front and rear		0.015 mm (0.0006 in.)
Brake pads	Thickness	Front	10.5−11.5 mm (0.41−0.45 in.)	1.6 mm (0.06 in.)
		Rear	8.9−9.1 mm (0.355−0.358 in.)	1.6 mm (0.06 in.)

Air Conditioning

Item	Measurement	Qualification	Standard or New	Service Limit
Refrigerant	Type		HFC-134a (R-134a)	
	Capacities of systems		Calsonic condenser 450−500 g (15.9−17.6 oz)	
			Showa condenser 600−650 g (21.2−22.9 oz)	
Refrigerant oil	Type		DENSO: ND-OIL 8 (P/N 38897-PR7-A01AH or 38899-PR7-A01)	
	Capacity of components	Condenser	25 mℓ (5/6 fl oz, 0.9 Imp oz)	
		Evaporator	40 mℓ (1 1/3 fl oz, 1.4 Imp oz)	
		Each line and hose	10 mℓ (1/3 fl oz, 0.4 Imp oz)	
		Receiver	10 mℓ (1/3 fl oz, 0.4 Imp oz)	
		Compressor	160−175 mℓ (5 1/3−6 fl oz, 5.6−6.2 Imp oz)	
Compressor (DENSO)	Starter coil resistance	at 68°F (20°C)	3.4−3.8 Ω	
	Pulley-to-pressure plate clearance		0.5±0.15 mm (0.02±0.006 in.)	

Design Specifications

Item	Measurement	Qualification	Specification
DIMENSIONS	Overall length	4-door	4,795 mm (188.8 in.)
		2-door	4,745 mm (186.8 in.)
	Overall width		1,785 mm (70.3 in.)
	Overall height	4-door	1,455 mm (57.3 in.)
		2-door	1,405 mm (55.3 in.)
	Wheelbase	4-door	2,715 mm (106.9 in.)
		2-door	2,670 mm (105.1 in.)
	Track	Front	1,555 mm (61.2 in.)
		Rear	1,535 mm (60.4 in.)
	Ground clearance		158 mm (6.2 in.)
	Seating capacity		Five
WEIGHT (U.S.A.)	Gross Vehicle Weight Rating (GVWR)	4-door	4,235 lbs
		2-door	4,190 lbs
WEIGHT (CANADA)	Gross Vehicle Weight Rating (GVWR)	4-door	1,920 kg
		2-door	1,900 kg
ENGINE	Type		Water-cooled, 4-stroke SOHC VTEC V6 gasoline engine
	Cylinder arrangement		60° V6-cylinder, transverse
	Bore and stroke		86.0 x 86.0 mm (3.39 x 3.39 in.)
	Displacement		2,997 cm^3 (mℓ) (183 cu in.)
	Compression ratio		9.4
	Valve train		Belt driven, SOHC VTEC 4 valves per cylinder
	Lubrication system		Forced, wet sump, with trochoid pump
	Oil pump displacement	at 6,000 engine rpm	58.4 ℓ (61.7 US qt, 51.4 Imp qt)/minute
	Water pump displacement	at 6,000 engine rpm	172 ℓ (182 US qt, 151 Imp qt)/minute
	Fuel required		UNLEADED gasoline with 86 pump octane number or higher
STARTER	Type		Gear reduction
	Normal output		1.6 kW
	Nominal voltage		12 V
	Hour rating		30 seconds
	Direction of rotation		Clockwise as viewed from gear end
AUTOMATIC TRANSMISSION	Type		Electronically controlled automatic, 4-speed forward, 1 reverse
	Primary reduction		Direct 1:1
	Gear ratio	1st	2.534
		2nd	1.502
		3rd	0.947
		4th	0.608
		Reverse	1.846
	Final reduction	Type	Single helical gear
		Gear ratio	4.200

BACK

Item	Measurement	Qualification	Specification
STEERING	Type		Power-assisted rack and pinion
	Overall ratio		15.77
	Turns, lock-to-lock		3.05
	Steering wheel diameter		380 mm (15.0 in.)
SUSPENSION	Type	Front	Independent double wishbone, coil spring with stabilizer
		Rear	Five-link double wishbone
	Shock absorber	Front and rear	Telescopic, hydraulic, nitrogen gas-filled
WHEEL ALIGNMENT	Camber	Front	0°
		Rear	−0°30′
	Caster	Front	2°48′
	Total toe	Front	0 mm (0 in.)
		Rear	In 2 mm (1/16 in.)
BRAKES	Type of service brake	Front	Power-assisted self-adjusting ventilated disc
		Rear	Power-assisted self-adjusting solid disc
	Type of parking brake		Mechanical actuating, rear wheels
	Pad friction surface area	Front	59 cm^2 x 2 (9.0 sq in. x 2)
		Rear	28 cm^2 x 2 (4.3 sq in. x 2)
TIRES	Size of front and rear tires		P205/65 R15 92V
	Size of spare tires		T135/90D15 100M
AIR CONDITIONING	Cooling capacity		5,240 Kcal/h (20,800 BTU/h)
	Compressor	Type/Manufacturer	Swash plate/DENSO
		Number of cylinders	10
		Capacity	177.7 mℓ/rev. (10.84 cu in/rev.)
		Maximum speed	7,600 rpm
		Lubricant capacity	160 mℓ (5 1/3 fl oz)
		Lubricant type	ND-OIL 8
	Condenser	Type	Corrugated fin
	Evaporator	Type	Corrugated fin
	Blower	Type	Sirocco fan
		Motor input	230 W/12 V
		Speed control	Manual A/C: 4-speed Auto A/C: Infinite variable
		Maximum capacity	520 m^3/h (18,300 cu ft/h)
	Temperature control		Air-mix type
	Compressor clutch	Type	Dry, single plate, Poly-V belt drive
		Electrical power consumption at 68°F (20°C)	40 W maximum at 12 V
	Refrigerant	Type	HFC-134 a (R-134 a)
		Quantity	Calsonic condenser 450−500 g (15.9−17.6 fl oz)
			Showa condenser 600−650 g (21.2−22.9 fl oz)

Design Specifications

Item	Measurement	Qualification	Specification
ELECTRICAL RATINGS	Battery		12 V – 55 AH/5 hours
	Starter		12 V – 1.6 kW
	Alternator		12 V – 100A
	Fuses	Under-hood fuse/relay box	100A, 50A, 40A, 30A, 20A, 15A
		Under-dash driver's fuse/ relay box	30A, 15A, 10A, 7.5A
		Under-dash passenger's fuse/relay box	30A, 20A, 10A, 7.5A
	Light bulbs	Headlight high beam	12 V – 60 W
		Headlight low beam	12 V – 51 W
		Front turn signal/Front side marker lights	12 V – 24 W/2.2 CP (candlepower) (two filaments)
		Front parking lights	12 V – 3 CP
		Rear turn signal lights	12 V – 21 W
		Brake/Taillights	12 V – 21/5 W
		Taillight	12 V – 3 CP
		High mount brake light	12 V – 21 W
		Back-up lights	12 V – 21 W
		License plate light	12 V – 3 CP
		Ceiling light	12 V – 8 W
		Trunk lights	12 V – 5 W
		Door courtesy lights	12 V – 2 CP
		Vanity mirror lights	12 V – 1.1 W
		Glove box light	12 V – 3.4 W
		Spotlights	12 V – 4 CP
		Gauge lights	12 V – 1.26 W, 3.78 W
		Indicator lights	12 V – LED,14 V – 0.56 W, 0.7 W, 1.4 W
		Panel and pilot lights	14 V – 0.56 W, 0.84 W
		Heater control panel lights	8 V – 1.2 W, 14 V – 1.12 W, 1.4W

BACK

Body Specifications

4-door sedan

Unit: mm (in.)

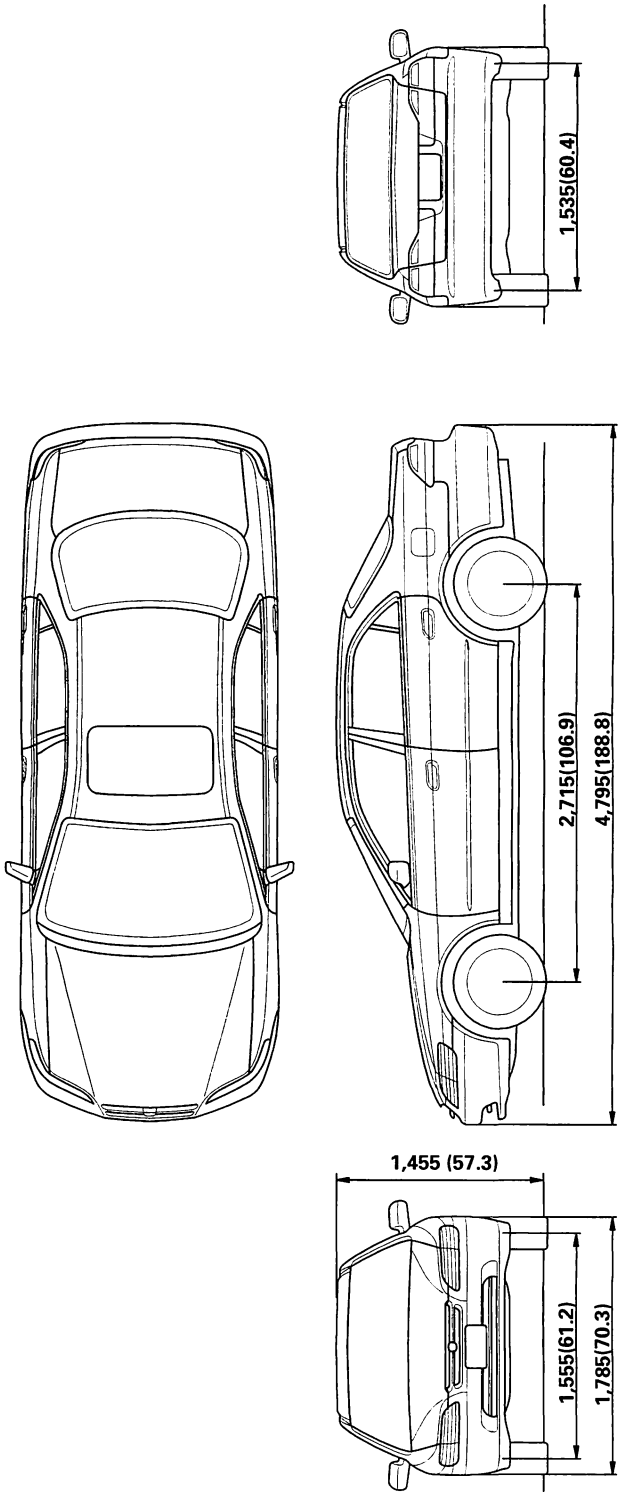

(cont'd)

(cont'd)

2-door coupe

Unit: mm (in.)

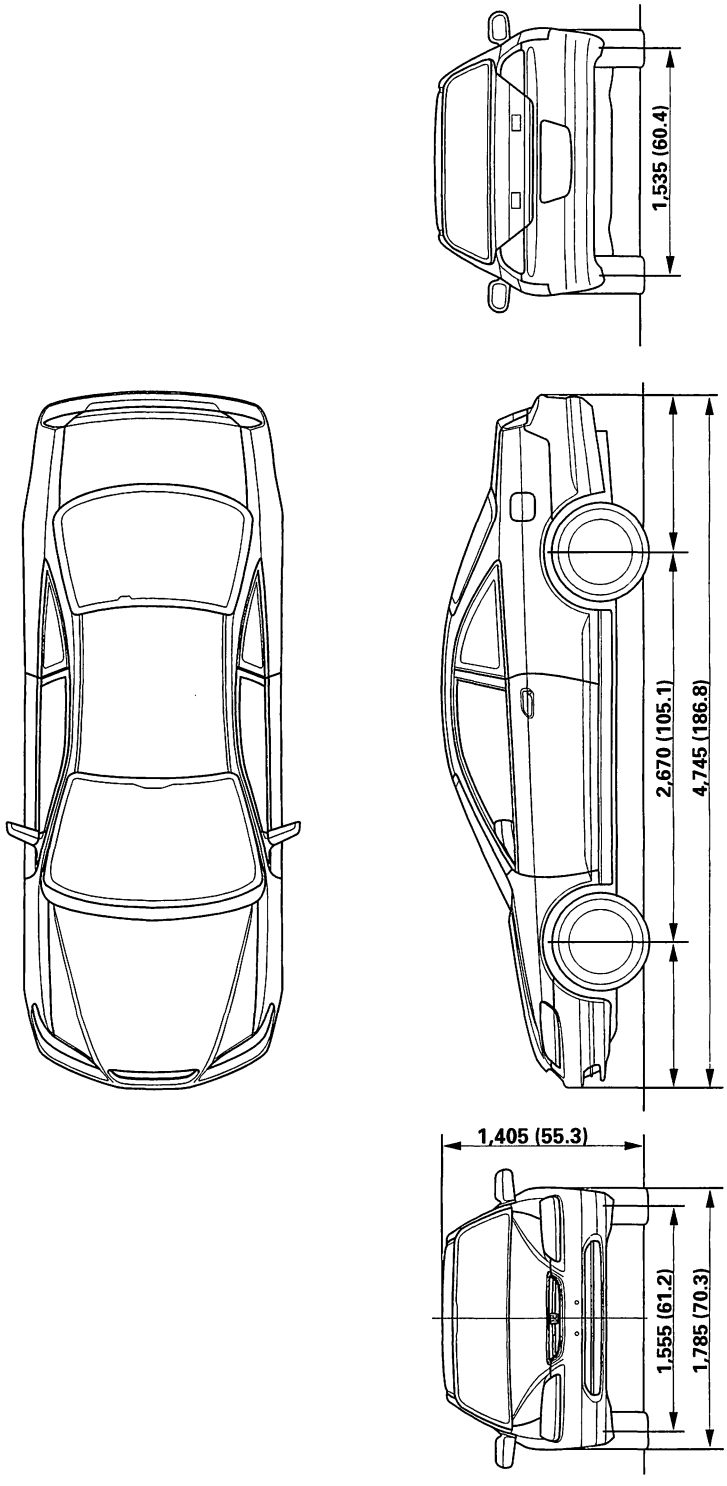

BACK

Maintenance

Lubricants and Fluids **3-2**

Maintenance Schedule for Normal Conditions (1998-2000 Models)
Listed by Distance/Time 3-4

Maintenance Schedule for Severe Conditions (1998-2000 Models)
Listed by Distance/Time 3-6

Maintenance Schedule for Normal and Severe Conditions (1998-2000 Models)
Listed by Maintenance Item 3-8

Maintenance Schedule for Normal Conditions (2001-2002 Models)
Listed by Distance/Time 3-10

Maintenance Schedule for Severe Conditions (2001-2002 Models)
Listed by Distance/Time 3-12

Maintenance Schedule for Normal and Severe Conditions (2001-2002 Models)
Listed by Maintenance Item 3-14

Lubricants and Fluids

For details of lubrication points and type of lubricants to be applied, refer to the illustrated index and various work procedures (such as Assembly/Reassembly, Replacement, Overhaul, Installation, etc.) contained in each section.

NO.	LUBRICATION POINTS	LUBRICANT
1	Engine	Honda Motor Oil. API Service Grade: Use SJ "Energy Conserving" grade oil. The oil container may also display the API Certification seal shown below. Make sure it says "For Gasoline Engines." SAE Viscosity: See chart below.
2	Transmission	Honda ATF-Z1*[1]
3	Brake line (includes ABS line)	Honda DOT 3 Brake Fluid*[2]
4	Power steering gearbox	Steering grease P/N 08733-B070E
5	Throttle cable end (Dashboard lower panel hole)	Silicone grease
6 7 8 9 10	Throttle cable end (Throttle link) Brake master cylinder pushrod Pedal linkage Battery terminals Fuel fill lid	Multi-purpose grease
11 12 13 14	Hood hinges and hood latch Trunk hinges and latch Door hinges, upper and lower Door opening detent	Honda White Lithium Grease
15	Caliper piston boot, caliper pins, and boots.	Silicone grease
16	Brake line joints (Front and rear wheelhouse)	Rust preventives
17	Power steering system	Honda Power Steering Fluid*[3]
18	Air conditioning compressor	Compressor oil: DENSO: ND-OIL 8 (P/N 38897-PR7-A01AH or 38899-PR7-A01) For Refrigerant: HFC-134 a (R-134 a)

API CERTIFICATION SEAL

Recommended Engine Oil
Engine oil viscosity for ambient temperature ranges

For '98—00 models

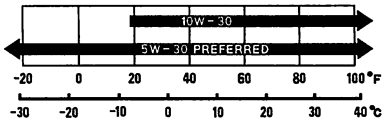

For '01—02 models

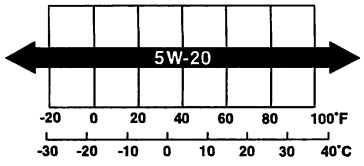

*1: Always use Honda ATF-Z1. Using a non-Honda ATF can affect shift quality.
*2: Always use Honda DOT 3 Brake Fluid. Using a non-Honda brake fluid can cause corrosion and decrease the life of the system.
*3: Always use Honda Power Steering Fluid. Using any other type of power steering fluid or automatic transmission fluid can cause increased wear and poor steering in cold weather.

NOTE:
Lubricate all hinges, latches, and locks once a year.
In corrosive areas, more frequent lubrication is necessary.
We recommend Honda White Lithium Grease.

BACK

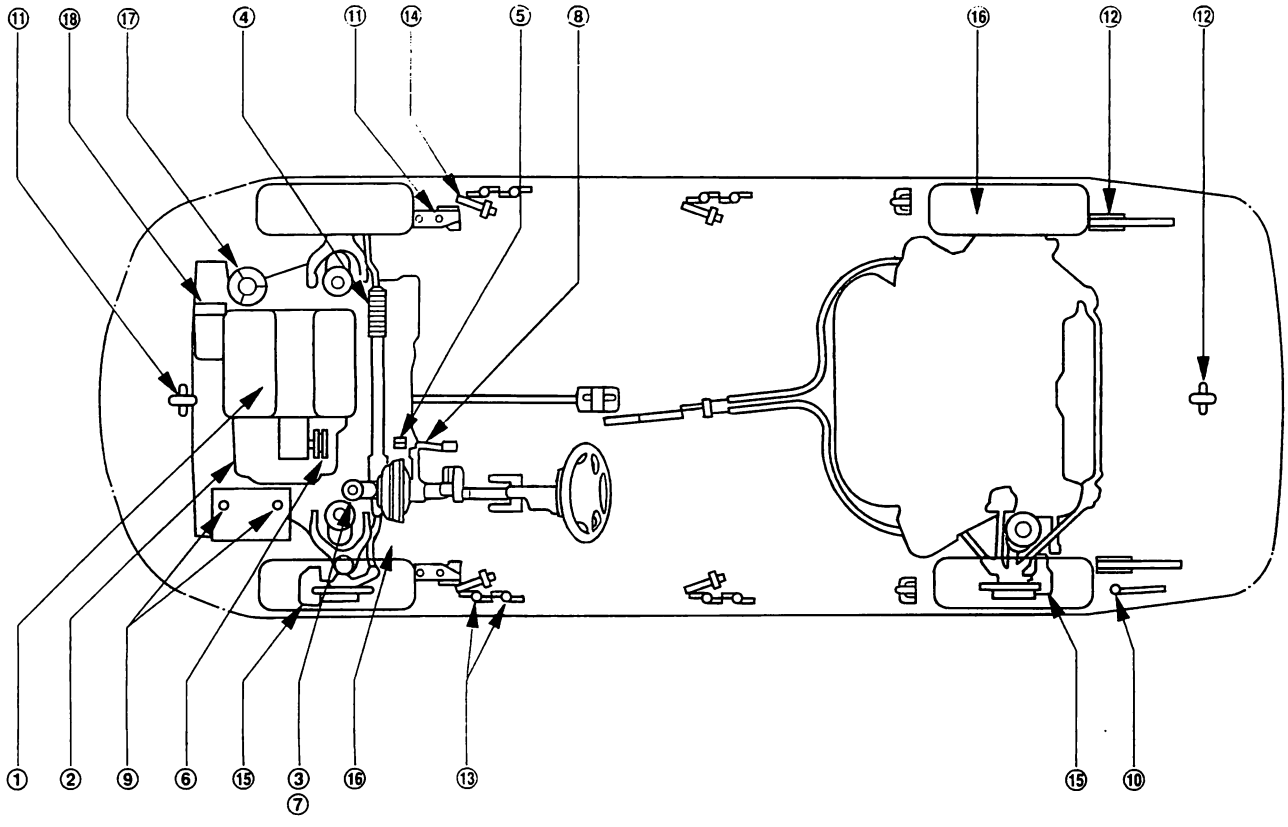
⑪ ⑱ ⑰ ④ ⑪ ⑭ ⑤ ⑧ ⑯ ⑫ ⑫
① ② ⑨ ⑥ ⑮ ③ ⑦ ⑯ ⑬ ⑮ ⑩

Maintenance Schedule for Normal Conditions (1998-2000 Models)

Listed by Distance/Time

This two-page maintenance schedule outlines the minimum required maintenance. Service at the indicated time or distance, whichever comes first. Use the Maintenance Schedule for Severe Conditions if the vehicle meets any of the qualifiers listed in the severe conditions schedule or if the vehicle is normally driven in Canada.

7,500 mi/ 12,000 km/ —	☐ Do items in A.
15,000 mi/ 24,000 km/ 1 year	☐ Do items in A and B.
22,500 mi/ 36,000 km/—	☐ Do items in A.
30,000 mi/ 48,000 km/ 2 years	☐ Do items in A, B, and C.
37,500 mi/ 60,000 km/ —	☐ Do items in A.
45,000 mi/ 72,000 km/ 3 years	
☐ Replace coolant (see page 10-10). Capacity: 5.6 ℓ (5.9 US qt, 4.9 Imp qt). Use Honda All Season Antifreeze/coolant Type 2.	
☐ Replace brake fluid. Use Honda DOT 3 Brake Fluid. Fill to between marks on reservoir.	
☐ Do items in A and B.	
52,500 mi/ 84,000 km/ —	☐ Do items in A.
60,000 mi/ 96,000 km/4 years	☐ Do items in A, B, and C.
67,500 mi/108,000 km/ —	☐ Do items in A.
75,000 mi/120,000 km/ 5 years	
☐ Replace coolant (see page 10-10). Capacity: 5.6 ℓ (5.9 US qt, 4.9 Imp qt). Use Use Honda All Season Antifreeze/coolant Type 2.	
☐ Do items in A and B.	
82,500 mi/132,000 km/—	☐ Do items in A.
90,000 mi/144,000 km/ 6 years	
☐ Replace transmission fluid. 2.9 ℓ (3.1 US qt, 2.6 Imp qt). Use Honda ATF-Z1 (see page 14-113).	
☐ Replace brake fluid. Use Honda DOT 3. Fill to between marks on reservoir.	
☐ Do items in A, B, and C.	
97,500 mi/156,000 km/ —	☐ Do items in A.
105,000 mi/168,000 km/ 7 years	
☐ Inspect valve clearance (cold) (see page 6-13). Intake: 0.20 – 0.24 mm (0.008 – 0.009 in.), Exhaust: 0.28 – 0.32 mm (0.011 – 0.013 in.)	
☐ Replace spark plugs (see page 4-24). Use NGK (PZFR5F-11) or DENSO (PKJ 16CR-L11). GAP: 1.0 – 1.1 mm (0.039 – 0.043 in)	
☐ Replace timing belt (see page 6-19) and inspect water pump (see page 10-10).	
☐ Check idle speed. Should be 680 ± 50 rpm in N or P position (see page 11-69).	
☐ Replace coolant (see page 10-10). Capacity: 5.6 ℓ (5.9 US qt, 4.9 Imp qt). Use Honda All Season Antifreeze/coolant Type 2.	
☐ Do items in A and B.	
112,500 mi/181,000 km/ —	☐ Do items in A.
120,000 mi/192,000 km/ 8 years	☐ Do the items in A, B, and C.

BACK

Do the items in parts A, B, and C as required for mileage/time interval listed.

A

- ☐ Replace engine oil (see page 8-5). —Capacity with filter change: 4.4 ℓ (4.6 US qt, 3.9 Imp qt)
- ☐ Rotate tires. Follow the pattern shown in the Owner's Manual —Check tire inflation and condition.

B

- ☐ Replace engine oil filter (see page 8-5).
- ☐ Inspect front and rear brakes (see page 19-2).
  - Check pads and discs for wear (thickness), damage, and cracks.
  - Check calipers for damage, leaks, and tightness of mount bolts.
- ☐ Check parking brake adjustment. Should be fully applied within 6 to 9 clicks.
- ☐ Inspect tie rod ends, steering gearbox, and boots (see page 17-12).
  - Check rack grease and steering linkage.
  - Check boots for damage and leaking grease.
  - Check fluid line for damage and leaks.
- ☐ Inspect suspension components.
  - Check bolts for tightness.
  - Check condition of ball joint boots for deterioration and damage.
- ☐ Inspect driveshaft boots. Check boots for cracks and boot bands for tightness (see page 16-3)*[1].
- ☐ Inspect brake hoses and lines (including ABS). —Check the master cylinder, proportioning control valve, and ABS modulator for damage and leakage.
- ☐ Check all fluid levels and condition of fluids; check for leaks. If necessary, add ATF (see page 14-112), engine coolant, brake fluid, and windshield washer fluid.
- ☐ Inspect cooling system hoses and connections.
  - Check for damage, leaks, and deterioration.
  - Check for proper fan operation.
- ☐ Inspect exhaust system* . Check catalytic converter heat shield, exhaust pipe, and muffler for damage, leaks, and tightness (see page 9-4).
- ☐ Inspect fuel lines and connections*. Check for loose connections, cracks and deterioration; retighten loose connections and replace damaged parts (see page 11-74).

C

- ☐ Replace air cleaner element.
- ☐ Inspect and adjust drive belt.
  - Look for cracks and damage, then check belt deflection by pushing on it (about 22 lbs) midway between the pulleys.
    - P/S pump belt: 13.0—16.5 mm (0.51—0.65 in) (see page 17-10).
- ☐ Replace the air conditioning filter (see page 21-26)*[1].
  - Replace it twice as often (at 15,000 mile interval) if the vehicle is driven mostly in urban areas that have high concentrations of soot in the air from industry and diesel-powered vehicles.
  - Replace it whenever airflow from the climate control system is less than normal.

According to state and federal regulations, failure to do the maintenance service items marked with asterisk (*) will not void customer's emissions warranties. However, Honda recommends that all maintenance services be done at the recommended interval to ensure long-term reliability.

*[1]: Refer to '98-02 ACCORD Service Manual (P/N 61S8400)

Maintenance Schedule for Severe Conditions (1998-2000 Models)

Listed by Distance/Time

Service at the indicated distance or time, whichever comes first. Use this schedule if the vehicle is driven MAINLY in Canada or in any of the following conditions; if only OCCASIONALLY driven in these conditions, use the Normal Conditions schedule (see page 3-4).

Severe Driving Conditions

- Less than 5 miles (8 km) per trip or, in freezing temperatures, less than 10 miles (16 km) per trip
- In extremely; hot weather (over 90°F/32°C)
- Extensive idling or long periods of stop-and-go driving
- Trailer towing
- On muddy, dusty, or de-iced roads
- Driving in mountainous conditions

3,750 mi/ 6,000 km/ —	☐ Replace oil and filter.
7,500 mi/ 12,000 km/ —	☐ Do items in A.
11,250 mi/ 18,000 km/ —	☐ Replace oil and filter.
15,000 mi/ 24,000 km/ 1 year ☐ Clean air cleaner element with low pressure air. ☐ Do items in A and B.	
18,750 mi/ 30,000 km/ —	☐ Replace oil and filter.
22,500 mi/ 36,000 km/ 1 1/2 years:	☐ Do items in A.
26,250 mi/ 42,000 km/ ————	☐ Replace oil and filter
30,000 mi/ 48,000 km/ 2 years:	☐ Do items in A, B, and C
33,750 mi/ 54,000 km/ —	☐ Replace oil and filter.
37,500 mi/ 60,000 km/2 1/2 years:	☐ Do items in A.
41,250 mi/ 66,000 km/ —	☐ Replace oil and filter.
45,000 mi/ 72,000 km/ 3 years: ☐ Clean air cleaner element with low pressure air. ☐ Replace coolant (see page 10-10). Capacity: 5.6 ℓ (5.9 US qt, 4.9 Imp qt). Use Honda All Season Antifreeze/Coolant Type 2. ☐ Replace brake fluid (see page 19-7)*[1]. • Use Honda DOT 3; fill to between marks on reservoir. ☐ Do items in A and B.	
48,750 mi/ 78,000 km/ —	☐ Replace oil and filter.
52,500mi/ 84,000 km 3 1/2 years:	☐ Do items in A.
56,250 mi/ 90,000 km/ —	☐ Replace oil and filter.
60,000 mi/ 96,000 km/ 4 years: ☐ Replace timing belt (see page 6-19) and inspect the water pump (see page 10-9) if the vehicle is regularly driven in weather over 110°F (43°C) or under −20°F (−29°C); If not, replace the belts at 105,000 miles. ☐ Do items in A, B and C.	
63,750 mi/102,000 km/ —	☐ Replace oil and filter.
67,500 mi/108,000 km 4 1/2 years:	☐ Do items in A.
71,250 mi/114,000 km —	☐ Replace oil and filter.
75,000mi/120,000 km/5 years: ☐ Clean air cleaner element with low pressure air. ☐ Replace coolant (see page 10-10). Capacity: 5.6 ℓ (5.9 US qt, 4.9 Imp qt). Use Honda All Season Antifreeze/Coolant Type 2. ☐ Do items in A and B.	
78,750 mi/126,000 km/ —	☐ Replace oil and filter.
82,500 mi/132,000 km/5 1/2 years	☐ Do items in A.
86,250 mi/138,000 km/ —	☐ Replace oil and filter.
90,000 mi/144,000 km/ 6 years: ☐ Replace brake fluid (see page 19-7)*[1]. Use Honda DOT 3 brake fluid; fill to between marks on reservoir. ☐ Do items in A, B and C.	
93,750 mi/150,000 km/ —	☐ Replace oil and filter.
97,500 mi/156,000 km/6 1/2 years:	☐ Do items in A.
101,250 mi/162,000 km/ —	☐ Replace oil and filter.
105,000 mi/168,000 km/ 7 years: ☐ Clean air cleaner element with low pressure air. ☐ Inspect valve clearance (cold) (see page 6-13)Intake: 0.20−0.24 mm (0.008−0.009 in.) Exhaust: 0.28−0.32 mm (0.011−0.013 in.) ☐ Replace spark plugs. Use NGK (PZFR5F-11) or DENSO (PKJ16CR-L11). Gap: 1.0−1.1 mm (0.039−0.043 in) (see page 4-24). ☐ Replace timing belt (see page 6-19), and inspect the water pump (see page 10-10) only if the belts was not replaced at 60,000 miles. ☐ Check idle speed. Should be 680±50 rpm in [N] or [P] position (see page 11-69). ☐ Replace coolant (see page 10-10). Capacity: 5.6 ℓ (5.9 US qt, 4.9 Imp qt). Use Honda All Season Antifreeze/Coolant Type 2. ☐ Do items in A and B.	
108,750 mi/174,000 km/ —	☐ Replace oil and filter.
112,500 mi/180,000 km/ 7 1/2 years:	☐ Do items in A.
116,250 mi/186,000 km/ —	☐ Replace oil and filter.
120,000 mi/192,000 km/ 8 years:	☐ Do items A, B, and C.

*[1]: Refer to '98-02 ACCORD Service Manual (P/N 61S8400)

BACK

Do the items in parts A, B, and C as required for mileage/time interval.

A

- ☐ Replace engine oil and filter (see page 8-5). — Capacity with filter change: 4.4 ℓ (4.6 US qt, 3.9 Imp qt)
- ☐ Inspect front and rear brakes, every 6 months if vehicle is driven less than 7,500 miles per year (see page 19-2).
  - Check pads and discs for wear (thickness), damage, and cracks.
  - Check calipers for damage, leaks, and tightness of mount bolts.
- ☐ Rotate tires, if the vehicle has been driven the distance listed. Follow the pattern shown in the Owner's Manual. (Check tire inflation and condition.)
- ☐ Inspect tie rod ends, steering gearbox, and boots (see page 17-12).
  - Check rack grease and steering linkage.
  - Check boots for damage and leaking grease.
  - Check fluid lines for damage and leaks.
- ☐ Inspect suspension components.
  - Check bolts for tightness.
  - Check condition of ball joint boots for deterioration and damage.
- ☐ Inspect driveshaft boots. Check boots for cracks and boot bands for tightness (see page 16-3)*[1].

B

- ☐ Check parking brake adjustment. — Should be fully applied within 6 to 9 clicks.
- ☐ Lubricate locks, latches, and hinges with Honda white lithium grease.
- ☐ Inspect brake hoses and lines (including ABS). Check the master cylinder, proportioning control valve, and ABS modulator for damage and leakage (see page 19-30)*[1].
- ☐ Check fluid levels and condition of fluids; check for leaks. If necessary, add ATF (see page 14-112), engine coolant, brake fluid, and windshield washer fluid.
- ☐ Inspect cooling system hoses and connections.
  - Check for damage, leaks, and deterioration.
  - Check for proper fan operation.
- ☐ Inspect exhaust system.* Check catalytic converter heat shield, exhaust pipe, and muffler for damage, leaks, and tightness (see page 9-4).
- ☐ Inspect fuel lines and connections.* Check for loose connections, cracks and deterioration; retighten loose connections and replace damaged parts (see page 11-74).
- ☐ Check all lights. Check function of all interior and exterior lights, and the positions of the headlights (see page 22-98)*[1].
- ☐ Inspect the vehicle underbody. Check the paint for damage, scratches, stone chipping, and dents.

C

- ☐ Replace air cleaner element.
- ☐ Inspect and adjust drive belt. Look for cracks and damage, then check tension by pushing on each belt (about 22 lbs) midway between the pulleys:
  - P/S pump belt: 13.0 – 16.5 mm (0.51 – 0.65 in) (see page 17-10)
- ☐ Replace transmission fluid. Use Honda ATF-Z1 (ATF).
- ☐ Replace air conditioning filter, every 15,000 miles if vehicle is driven mostly where air has high concentration of soot from industry and diesel-powered vehicles; also replace it anytime airflow is less than usual (see page 21-26)*[1].

According to state and federal regulations, failure to do the maintenance items marked with asterisk (*) will not void customer's emissions warranties. However, Honda recommends that all maintenance services be done at the recommended interval to ensure long-term reliability.
*[1]: Refer to '98-02 ACCORD Service Manual (P/N 61S8400)

Maintenance Schedule for Normal and Severe Conditions (1998-2000 Models)

Listed by Maintenance Item

Service at the indicated distance or time, whichever comes first.
- If driven in normal conditions, do items with a dot (●).
- If driven in severe conditions (see page 3-6) or normally driven in Canada, do the circle (○) and dot (●) items.

Service at the indicated distance or time, whichever comes first.	miles x 1000	3.75	7.5	11.25	15	18.75	22.5	26.25	30	33.75	37.5
	km x 1000	6	12	18	24	30	36	42	48	54	60
	years	—	1/2	—	1	—	1 1/2	—	2	—	2 1/2
Replace engine oil		Normal Conditions: Every 7,500 miles (12,000 km) or 1 year Severe Conditions: Every 3,750 miles (6,000 km) or 6 months									
Replace engine oil filter		Normal Conditions: Every other oil change Severe Conditions: Every oil change									
Clean air cleaner element					○						
Replace air cleaner element									●		
Inspect valve clearance		Adjust only if noisy.									
Replace spark plugs											
Replace timing belt, NOTE 1 and inspect water pump											
Inspect and adjust drive belts									●		
Inspect idle speed*											
Replace engine coolant											
Replace transmission fluid									○		
Inspect front and rear brakes			○		●		○		●		○
Replace brake fluid											
Check parking brake adjustment					●				●		
Replace air conditioning filter NOTE 2									●		
Lubricate locks, latches, and hinges					○				○		
Rotate tires (Check tire inflation and condition at least once a month)			●		●		●		●		●
Inspect tie-rod ends, steering gearbox, and boots			○		●		○		●		○
Inspect suspension components			○		●		○		●		○
Inspect driveshaft boots			○		●		○		●		○
Inspect brake hoses and lines (including ABS)					●				●		
Inspect all fluid levels and condition of fluids					●				●		
Inspect cooling system hoses and connections					●				●		
Inspect exhaust system*					●				●		
Inspect fuel lines and connections*					●				●		
Check lights and controls					○				○		
Inspect vehicle under body					○				○		

NOTE:
1. If the vehicle is regularly driven in very hot or cold weather, over 110°F (43°C) or under −20°F (−29°C), replace this belt every 60,000 miles; If not, replace it at 105,000 miles.
2. Replace the air conditioning filter every 15,000 miles if the vehicle is driven mostly where air has a high concentration of soot from industry and diesel-powered vehicle; also replace it anytime airflow is less than usual.

* According to state and federal regulations, failure to do the maintenance items marked with an asterisk (*) will not void the customer's emissions warranties. However, Honda recommends that all maintenance services be done at the recommended interval to ensure long-term

BACK

reliability.

41.25	45	48.75	52.5	56.25	60	63.75	67.5	71.25	75	78.75	82.5	86.25	90	93.75	97.5	101.25	105	108.75	112.5	116.25	120
66	72	78	84	90	96	102	108	114	120	126	132	138	144	150	156	162	168	175	181	187	193
—	3	—	3 1/2	—	4	—	4 1/2	—	5	—	5 1/2	—	6	—	6 1/2	—	7	—	7 1/2	—	8
Normal Conditions: Every 7,500 miles (12,000 km) or 1 year Severe Conditions: Every 3,750 miles (6,000 km) or 6 months																					
Normal Conditions: Every other oil change Severe Conditions: Every oil change																					
	○								○								○				
					●								●								●
Adjust only if noisy.																	●				
																	●				
					○												●				○
					●								●								●
																	●				
	●								●								●				
					○								●								○
	●		○		●		○		●		○		●		○		●		○		●
	●												●								
	●				●				●				●				●				●
					●								●								●
	○				○				○				○				○				○
	●		●		●		●		●		●		●		●		●		●		●
	●		○		●		○		●		○		●		○		●		○		●
	●		○		●		○		●		○		●		○		●		○		●
	●		○		●		○		●		○		●		○		●		○		●
	●				●				●				●				●				●
	●				●				●				●				●				●
	●				●				●				●				●				●
	●				●				●				●				●				●
	●				●				●				●				●				●
	○				○				○				○				○				○
	○				○				○				○				○				○

Maintenance Schedule for Normal Conditions (2001-2002 Models)

Listed by Distance/Time

This two-page maintenance schedule outlines the minimum required maintenance. Service at the indicated time or distance, whichever comes first. Use the Maintenance Schedule for Severe Conditions if the vehicle meets any of the qualifiers listed in the severe conditions schedule or if the vehicle is normally driven in Canada.

7,500 mi/ 12,000 km/ —	☐ Do items in A.
15,000 mi/ 24,000 km/ 1 year	☐ Do items in A and B.
22,500 mi/ 36,000 km/—	☐ Do items in A.
30,000 mi/ 48,000 km/ 2 years	☐ Do items in A, B, and C.
37,500 mi/ 60,000 km/ —	☐ Do items in A.
45,000 mi/ 72,000 km/ 3 years	☐ Do items in Aand B.
—/—/ 3 years	☐ Do item in D.
52,500 mi/ 84,000 km/ —	☐ Do items in A.
60,000 mi/ 96,000 km/4 years	☐ Do items in A, B, and C.
67,500 mi/108,000 km/ —	☐ Do items in A.
75,000 mi/120,000 km/ 5 years	☐ Do items in A and B.
82,500 mi/132,000 km/—	☐ Do items in A.
90,000 mi/144,000 km/ 6 years	☐ Do items in A, B, and C.
—/—/ 6 years	☐ Do item in D.
97,500 mi/156,000 km/ —	☐ Do items in A.
105,000 mi/168,000 km/ 7 years ☐ Inspect valve clearance (cold) (see page 6-13). Intake: 0.20—0.24 mm (0.008—0.009 in.), Exhaust: 0.28—0.32 mm (0.011—0.013 in.) ☐ Replace spark plugs (see page 4-24). Use NGK (PZFR5F-11) or DENSO (PKJ 16CR-L11). GAP: 1.0—1.1 mm (0.039—0.043 in) ☐ Replace timing belt (see page 6-19) and inspect water pump (see page 10-9). ☐ Check idle speed. Should be 680±50 rpm in N or P position (see page 11-69). ☐ Do items in A and B.	
112,500 mi/181,000 km/ —	☐ Do items in A.
120,000 mi/192,000 km/ 8 years	☐ Do the items in A, B, and C.
120,000 mi/192,000 km/6 years ☐ Replace transmission fluid. Use Honda ATF-Z1 (ATF) (see page 14-113), then every 90,000 miles (144,000 km) or 5 years	
—/—/ 9 years	☐ Do item in D.
120,000 mi/192,000 km/10 years ☐ Replace Coolant (see page 10-10). Use Honda All Season Antifreeze/Coolant Type 2. Capacity: 5.6 ℓ (5.9 US qt, 4.9 Imp qt), then every 60,000 miles (96,000 km) or 5 years.	

BACK

Do the items in parts A, B, C, and D as required for mileage/time interval listed.

A

- ☐ Replace engine oil (see page 8-5). —Capacity with filter change: 4.4 ℓ (4.6 US qt, 3.9 Imp qt)
- ☐ Rotate tires. Follow the pattern shown in the Owner's Manual —Check tire inflation and condition.

B

- ☐ Replace engine oil filter (see page 8-5).
- ☐ Inspect front and rear brakes (see page 19-2).
  - Check pads and discs for wear (thickness), damage, and cracks.
  - Check calipers for damage, leaks, and tightness of mount bolts.
- ☐ Check parking brake adjustment. Should be fully applied within 6 to 9 clicks.
- ☐ Inspect tie rod ends, steering gearbox, and boots (see page 17-12).
  - Check rack grease and steering linkage.
  - Check boots for damage and leaking grease.
  - Check fluid line for damage and leaks.
- ☐ Inspect suspension components.
  - Check bolts for tightness.
  - Check condition of ball joint boots for deterioration and damage.
- ☐ Inspect driveshaft boots. Check boots for cracks and boot bands for tightness (see page 16-3)*[1].
- ☐ Inspect brake hoses and lines (including ABS). —Check the master cylinder, proportioning control valve, and ABS modulator for damage and leakage.
- ☐ Check all fluid levels and condition of fluids; check for leaks. If necessary, add ATF (see page 14-112), engine coolant, brake fluid, and windshield washer fluid.
- ☐ Inspect cooling system hoses and connections.
  - Check for damage, leaks, and deterioration.
  - Check for proper fan operation.
- ☐ Inspect exhaust system* . Check catalytic converter heat shield, exhaust pipe, and muffler for damage, leaks, and tightness (see page 9-4).
- ☐ Inspect fuel lines and connections*. Check for loose connections, cracks and deterioration; retighten loose connections and replace damaged parts (see page 11-74).

C

- ☐ Replace air cleaner element.
- ☐ Inspect and adjust drive belt.
  - Look for cracks and damage, then check belt deflection by pushing on it (about 22 lbs) midway between the pulleys.
    - P/S pump belt: 13.0—16.5 mm (0.51—0.65 in) (see page 17-10).
- ☐ Replace the dust and pollen filter (see page 21-26)*[1].
  - Replace it twice as often (at 15,000 mile interval) if the vehicle is driven mostly in urban areas that have high concentrations of soot in the air from industry and diesel-powered vehicles.
  - Replace it whenever airflow from the climate control system is less than normal.

D

- ☐ Replace brake fluid every 3 years (Independent of Distance). Use Honda DOT 3 Brake Fluid. Fill to between marks on reservoir, (see page 19-7)*[1].

According to state and federal regulations, failure to do the maintenance service items marked with asterisk (*) will not void customer's emissions warranties. However, Honda recommends that all maintenance services be done at the recommended interval to ensure long-term reliability.

*[1]: Refer to '98-02 ACCORD Service Manual (P/N 61S8400)

Maintenance Schedule for Severe Conditions (2001-2002 Models)

Listed by Distance/Time

Service at the indicated distance or time, whichever comes first. Use this schedule if the vehicle is driven MAINLY in Canada or in any of the following conditions; if only OCCASIONALLY driven in these conditions, use the Normal Conditions schedule (see page 3-10).

Severe Driving Conditions

- Less than 5 miles (8 km) per trip or, in freezing temperatures, less than 10 miles (16 km) per trip
- In extremely; hot weather (over 90°F/32°C)
- Extensive idling or long periods of stop-and-go driving
- Trailer towing
- On muddy, dusty, or de-iced roads
- Driving in mountainous conditions

3,750 mi/ 6,000 km/ —	☐ Replace engine oil and filter.
7,500 mi/ 12,000 km/ —	☐ Do items in A.
11,250 mi/ 18,000 km/ —	☐ Replace engine oil and filter.
15,000 mi/ 24,000 km/ 1 year ☐ Clean air cleaner element with low pressure air. ☐ Do items in A and B.	
18,750 mi/ 30,000 km/ —	☐ Replace engine oil and filter.
22,500 mi/ 36,000 km/ 1 1/2 years:	☐ Do items in A.
26,250 mi/ 42,000 km/ ————	☐ Replace engine oil and filter
30,000 mi/ 48,000 km/ 2 years:	☐ Do items in A, B, and C
33,750 mi/ 54,000 km/ —	☐ Replace engine oil and filter.
37,500 mi/ 60,000 km/2 1/2 years:	☐ Do items in A.
41,250 mi/ 66,000 km/ —	☐ Replace engine oil and filter.
45,000 mi/ 72,000 km/ 3 years: ☐ Clean air cleaner element with low pressure air. ☐ Do items in A, B, and D.	
—/—/3 years	☐ Do item in D.
48,750 mi/ 78,000 km/ —	☐ Replace engine oil and filter.
52,500mi/ 84,000 km 3 1/2 years:	☐ Do items in A.
56,250 mi/ 90,000 km/ —	☐ Replace engine oil and filter.
60,000 mi/96,000 km/3 years ☐ Replace transmission fluid. Use Honda ATF-Z1 (ATF) (see page 14-113), then every 30,000 miles (48,000 km) or 2 years.	
60,000 mi/ 96,000 km/ 4 years: ☐ Replace timing belt (see page 6-19) and inspect the water pump (see page 10-9) if the vehicle is regularly driven in weather over 110°F (43°C) or under −20°F (−29°C); If not, replace the belts at 105,000 miles. ☐ Do items in A, B and C.	
63,750 mi/102,000 km/ —	☐ Replace engine oil and filter.
67,500 mi/108,000 km 4 1/2 years:	☐ Do items in A.
71,250 mi/114,000 km —	☐ Replace engine oil and filter.
75,000mi/120,000 km/5 years: ☐ Clean air cleaner element with low pressure air. ☐ Do items in A and B.	
78,750 mi/126,000 km/ —	☐ Replace engine oil and filter.
82,500 mi/132,000 km/5 1/2 years	☐ Do items in A.
86,250 mi/138,000 km/ —	☐ Replace engine oil and filter.
90,000mi/144,000 km/5 years: ☐ Replace transmission fluid. Use Honda ATF-Z1 (ATF) (see page 14-113), then every 30,000miles (48,000km) or 2 years.	
90,000 mi/144,000 km/ 6 years:	☐ Do items in A, B, C. and D.
—/—/6 years	☐ Do item in D.
93,750 mi/150,000 km/ —	☐ Replace engine oil and filter.
97,500 mi/156,000 km/6 1/2 years:	☐ Do items in A.
101,250 mi/162,000 km/ —	☐ Replace engine oil and filter.
105,000 mi/168,000 km/ 7 years: ☐ Clean air cleaner element with low pressure air. ☐ Inspect valve clearance (cold) (see page 6-13)Intake: 0.20−0.24 mm (0.008−0.009 in.) Exhaust: 0.28−0.32 mm (0.011−0.013 in.) ☐ Replace spark plugs. Use NGK (PZFR5F-11) or DENSO (PKJ16CR-L11). Gap: 1.0−1.1 mm (0.039−0.043 in) (see page 4-24). ☐ Replace timing belt (see page 6-19), and inspect the water pump (see page 10-9) only if the belts was not replaced at 60,000 miles. ☐ Check idle speed. Should be 680±50 rpm in N or P position (see page 11-69). ☐ Do items in A and B.	
108,750 mi/174,000 km/ —	☐ Replace engine oil and filter.
112,500 mi/180,000 km/ 7 1/2 years:	☐ Do items in A.
116,250 mi/186,000 km/ —	☐ Replace engine oil and filter.
120,000 mi/192,000 km/ 7 years: ☐ Replace transmission fluid. Use Honda ATF-Z1 (ATF) (see page 14-113), then every 30,000miles (48,000km) or 2 years.	
120,000 mi/192,000 km/ 8 years: ☐ Replace timing belt (see page 6-19), and inspect the water pump (see page 10-9) only if the belts was not replaced at 60,000 miles. ☐ Do items A, B, and C.	
—/—/9 years	☐ Do item in D.
120,000 mi/192,000 km/10 years ☐ Replace engine coolant (see page 10-10). Use Honda All Season Antifreeze/Coolant Type 2. Capacity: 5.6 ℓ (5.9 US qt, 4.9 Imp qt), then every 60,000 miles (96,000 km) or 5 years.	

BACK

Do the items in parts A, B, C, and D as required for mileage/time interval.

A

- ☐ Replace engine oil and filter (see page 8-5). — Capacity with filter change: 4.4 ℓ (4.6 US qt, 3.9 Imp qt)
- ☐ Inspect front and rear brakes, every 6 months if vehicle is driven less than 7,500 mile per year (see page 19-2).
  - Check pads and discs for wear (thickness), damage, and cracks.
  - Check calipers for damage, leaks, and tightness of mount bolts.
- ☐ Rotate tires, if the vehicle has been driven the distance listed. Follow the pattern shown in the Owner's Manual. (Check tire inflation and condition.)
- ☐ Inspect tie rod ends, steering gearbox, and boots (see page 17-12).
  - Check rack grease and steering linkage.
  - Check boots for damage and leaking grease.
  - Check fluid lines for damage and leaks.
- ☐ Inspect suspension components.
  - Check bolts for tightness.
  - Check condition of ball joint boots for deterioration and damage.
- ☐ Inspect driveshaft boots. Check boots for cracks and boot bands for tightness (see page 16-3)*[1].

B

- ☐ Check parking brake adjustment. — Should be fully applied within 6 to 9 clicks.
- ☐ Lubricate locks, latches, and hinges with Honda white lithium grease.
- ☐ Inspect brake hoses and lines (including ABS). Check the master cylinder, proportioning control valve, and ABS modulator for damage and leakage (see page 19-30)*[1].
- ☐ Check fluid levels and condition of fluids; check for leaks. If necessary, add ATF (see page 14-112), engine coolant, brake fluid, and windshield washer fluid.
- ☐ Inspect cooling system hoses and connections.
  - Check for damage, leaks, and deterioration.
  - Check for proper fan operation.
- ☐ Inspect exhaust system.* Check catalytic converter heat shield, exhaust pipe, and muffler for damage, leaks, and tightness (see page 9-4).
- ☐ Inspect fuel lines and connections.* Check for loose connections, cracks and deterioration; retighten loose connections and replace damaged parts (see page 11-74).
- ☐ Check all lights. Check function of all interior and exterior lights, and the positions of the headlights (see page 22-98)*[1].
- ☐ Inspect the vehicle underbody. Check the paint for damage, scratches, stone chipping, and dents.

C

- ☐ Replace air cleaner element.
- ☐ Inspect and adjust drive belt. Look for cracks and damage, then check tension by pushing on each belt (about 22 lbs) midway between the pulleys:
  - P/S pump belt: 13.0 – 16.5 mm (0.51 – 0.65 in) (see page 17-10)
- ☐ Replace dust and pollen filter, every 15,000 miles if vehicle is driven mostly where air has high concentration of soot from industry and diesel-powered vehicles; also replace it anytime airflow is less than usual (see page 21-26)*[1].

D

- ☐ Replace brake fluid every 3 years (Independent of Distance). Use Honda DOT 3 Brake Fluid. Fill to between marks on reservoir, (see page 19-7)*[1].

According to state and federal regulations, failure to do the maintenance items marked with asterisk (*) will not void customer's emissions warranties. However, Honda recommends that all maintenance services be done at the recommended interval to ensure long-term reliability.
*[1]: Refer to '98-02 ACCORD Service Manual (P/N 61S8400)

Maintenance Schedule for Normal and Severe Conditions (2001-2002 Models)

Listed by Maintenance Item

Service at the indicated distance or time, whichever comes first.
- If driven in normal conditions, do items with a dot (●).
- If driven in severe conditions (see page 3-12) or normally driven in Canada, do items with a circle (○) and items with a dot (●).

Service at the indicated distance or time, whichever comes first.	miles x 1000	3.75	7.5	11.25	15	18.75	22.5	26.25	30	33.75	37.5
	km x 1000	6	12	18	24	30	36	42	48	54	60
	years	—	1/2	—	1	—	1 1/2	—	2	—	2 1/2
Replace engine oil		Normal Conditions: Every 7,500 miles (12,000 km) or 1 year Severe Conditions: Every 3,750 miles (6,000 km) or 6 months									
Replace engine oil filter		Normal Conditions: Every other oil change Severe Conditions: Every oil change									
Clean air cleaner element					○						
Replace air cleaner element									●		
Inspect valve clearance		Adjust only if noisy.									
Replace spark plugs											
Replace timing belt, NOTE 1 and inspect water pump											
Inspect and adjust drive belts									●		
Inspect idle speed*											
Replace engine coolant		Normal Conditions: At 120,000 miles (192,000 km) or 10 years, then every 60,000 miles (96,000 km) or 5 years Severe Conditions: At 120,000 miles (192,000 km) or 10 years, then every 60,000 miles (96,000 km) or 5 years,									
Replace transmission fluid		Normal Conditions: At 120,000 miles (192,000 km) or 6 years, then every 90,000 miles (144,000 km) or 5 years Severe Conditions: At 60,000 miles (96,000 km) or 3 years, then every 30,000 miles (48,000 km) or 2 years,									
Inspect front and rear brakes			○		●		○		●		○
Replace brake fluid		Every 3 years (independent of distance)									
Check parking brake adjustment					●				●		
Replace dust and pollen filter NOTE 2									●		
Lubricate locks, latches, and hinges					○				○		
Rotate tires (Check tire inflation and condition at least once a month)			●		●		●		●		●
Inspect tie-rod ends, steering gearbox, and boots			○		●		○		●		○
Inspect suspension components			○		●		○		●		○
Inspect driveshaft boots			○		●		○		●		○
Inspect brake hoses and lines (including ABS)					●				●		
Inspect all fluid levels and condition of fluids					●				●		
Inspect cooling system hoses and connections					●				●		
Inspect exhaust system*					●				●		
Inspect fuel lines and connections*					●				●		
Check lights and controls					○				○		
Inspect vehicle under body					○				○		

NOTE:
1. If the vehicle is regularly driven in very hot or cold weather, over 110°F (43°C) or under −20°F (−29°C), replace this belt every 60,000 miles; If not, replace it at 105,000 miles.
2. Replace the dust and pollen filter every 15,000 miles if the vehicle is driven mostly where air has a high concentration of soot from industry and diesel-powered vehicle; also replace it anytime airflow is less than usual.

* According to state and federal regulations, failure to do the maintenance items marked with an asterisk (*) will not void customer's emissions warranties. However, Honda recommends that all maintenance services be done at the recommended interval to ensure long-term reliability.

BACK

41.25	45	48.75	52.5	56.25	60	63.75	67.5	71.25	75	78.75	82.5	86.25	90	93.75	97.5	101.25	105	108.75	112.5	116.25	120
66	72	78	84	90	96	102	108	114	120	126	132	138	144	150	156	162	168	175	181	187	193
—	3	—	3 1/2	—	4	—	4 1/2	—	5	—	5 1/2	—	6	—	6 1/2	—	7	—	7 1/2	—	8
Normal Conditions: Every 7,500 miles (12,000 km) or 1 year Severe Conditions: Every 3,750 miles (6,000 km) or 6 months																					
Normal Conditions: Every other oil change Severe Conditions: Every oil change																					
	○								○								○				
					●								●								●
Adjust only if noisy.																	●				
																	●				
					○												●				○
					●								●								●
																	●				
Normal Conditions: At 120,000 miles (192,000 km) or 10 years, then every 60,000 miles (96,000 km) or 5 years Severe Conditions: At 120,000 miles (192,000 km) or 10 years, then every 60,000 miles (96,000 km) or 5 years																					
Normal Conditions: At 120,000 miles (192,000 km) or 6 years, then every 90,000 miles (144,000 km) or 5 years Severe Conditions: At 60,000 miles (96,000 km) or 3 years, then every 30,000 miles (48,000 km) or 2years																					
	●		○		●		○		●		○		●		○		●		○		●
Every 3 years (independent of distance)																					
	●				●				●				●				●				●
					●								●								●
	○				○				○				○				○				○
	●		●		●		●		●		●		●		●		●		●		●
	●		○		●		○		●		○		●		○		●		○		●
	●		○		●		○		●		○		●		○		●		○		●
	●		○		●		○		●		○		●		○		●		○		●
	●				●				●				●				●				●
	●				●				●				●				●				●
	●				●				●				●				●				●
	●				●				●				●				●				●
	●				●				●				●				●				●
	○				○				○				○				○				○
	○				○				○				○				○				○

BACK

Engine Electrical

Engine Electrical
Special Tools 4-2

Starting System
Component Location Index 4-3
Circuit Diagram 4-4
Starter Circuit Troubleshooting 4-5
Starter Solenoid Test 4-6
Starter Performance Test 4-7
Starter Replacement 4-8
Starter Overhaul 4-9

Ignition System
Component Location Index 4-14
Circuit Diagram 4-16
Ignition Timing Inspection 4-18
Distributor Replacement 4-19
Distributor Disassembly/Reassembly 4-20
ICM (Ignition Control Module) Input Test 4-21
Ignition Coil Test 4-22
Ignition Wire Inspection and Test 4-22
Ignition Coil Troubleshooting 4-23
Spark Plug Inspection/Replacement 4-24

Charging System
Component Location Index 4-25
Circuit Diagram 4-26
Charging Circuit Troubleshooting 4-27
Alternator-Compressor Belt
Inspection and Replacement 4-31
Alternator Replacement 4-31
Auto-Tensioner Inspection 4-33
Alternator Overhaul 4-35

Cruise Control
Component Location Index 4-41
Circuit Diagram 4-42
Symptom Troubleshooting Index 4-43
Cruise Control Communication Circuit
Troubleshooting 4-45
Control Unit Input Test 4-46
Main Switch Test/Replacement 4-48
Set/Resume/Cancel Switch Test/Replacement 4-49
Brake Pedal Position Switch Test 4-50
Actuator Solenoid Test 4-50
Actuator Test 4-51
Actuator/Solenoid/Cable Replacement 4-52
Actuator Cable Adjustment 4-54

Engine Mount Control System
Component Location Index 4-55
Circuit Diagram 4-56
Troubleshooting 4-57

Special Tools

Ref. No.	Tool Number	Description	Qty
①	A973X-041-XXXXX	Vacuum Pump/Gauge, 0—30 in.Hg	1
②	07746-0010400	Driver Attachment, 52 x 55 mm	1
③	07749-0010000	Driver	1

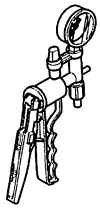

①

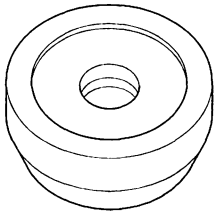

②

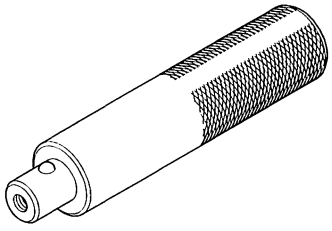

③

BACK

Component Location Index

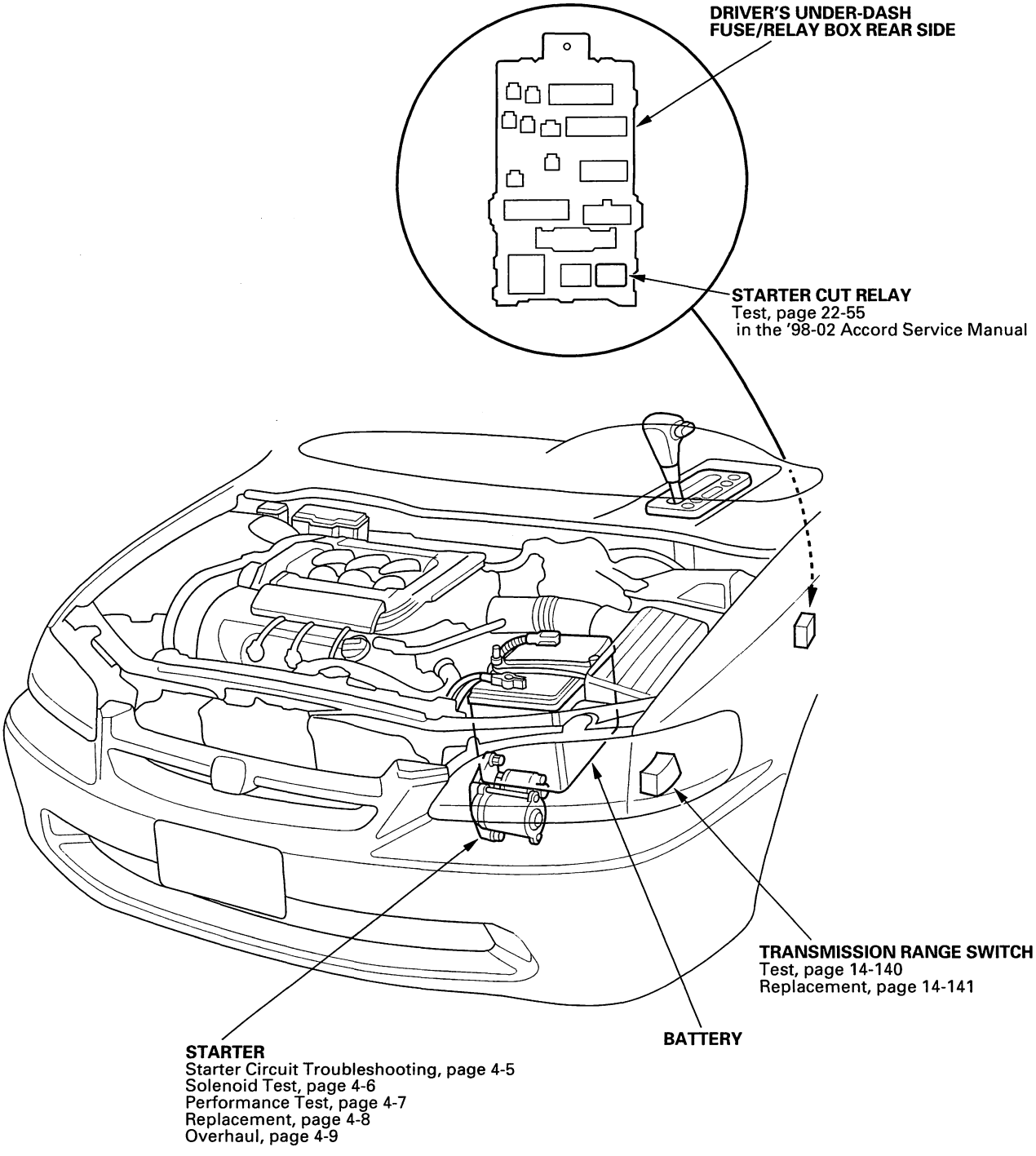

Circuit Diagram

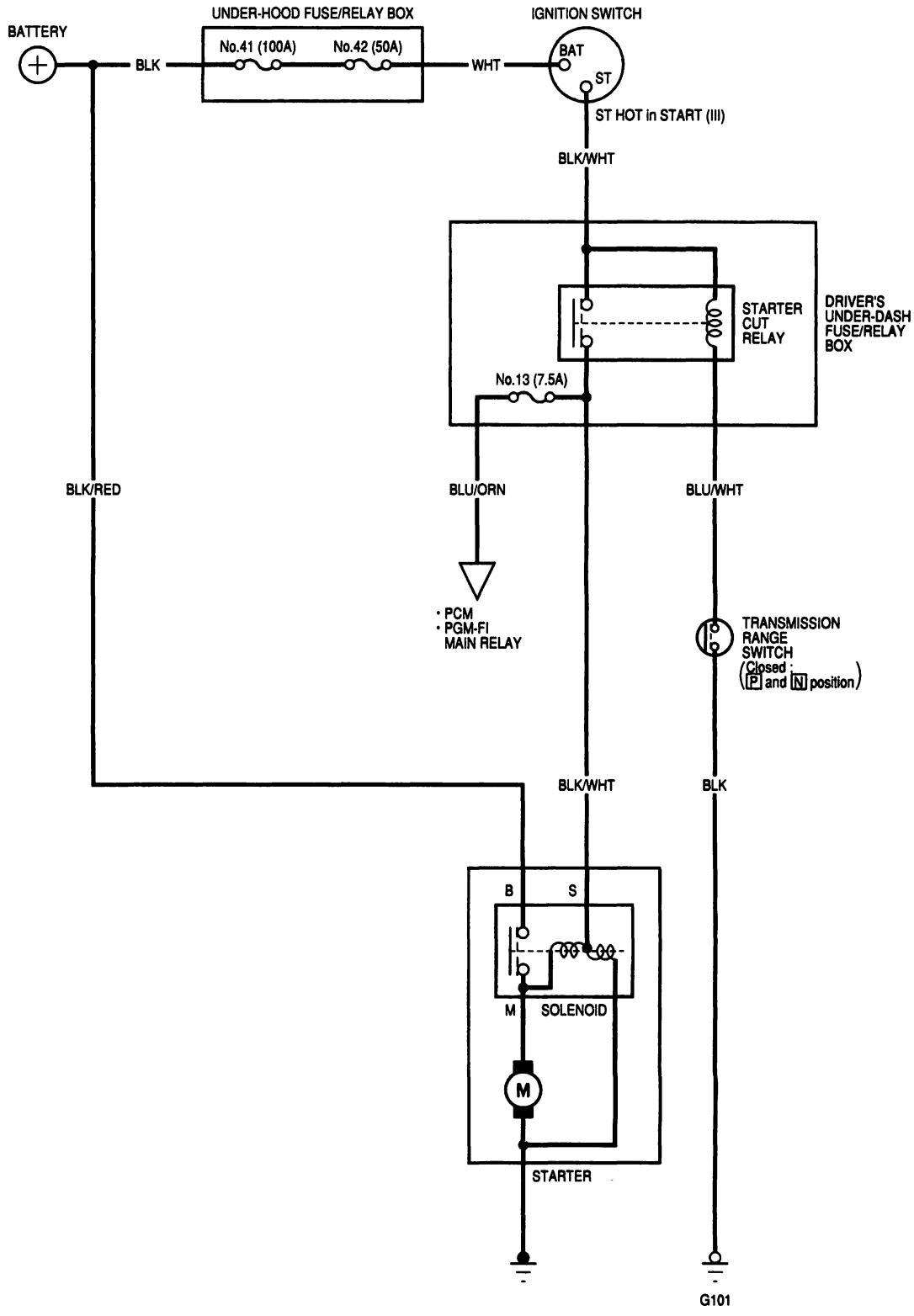

BACK

Starter Circuit Troubleshooting

NOTE:
- Air temperature must be between 59° and 100°F (15° and 38°C) during this procedure.
- After this test, or any subsequent repair, reset the Powertrain Control Module (PCM) to clear any Diagnostic Trouble Code (DTC); refer to the '98-02 Accord Service Manual (see page 11-3).
- The battery must be in good condition and fully charged.

Recommended Procedure:
- Use a starter system tester.
- Connect and operate the equipment in accordance with the manufacturer's instructions.

Alternate Procedure

1. Hook up the following equipment:

   - Ammeter, 0—400 A
   - Voltmeter, 0—20 V (accurate within 0.1 volt)
   - Tachometer, 0—1200 rpm

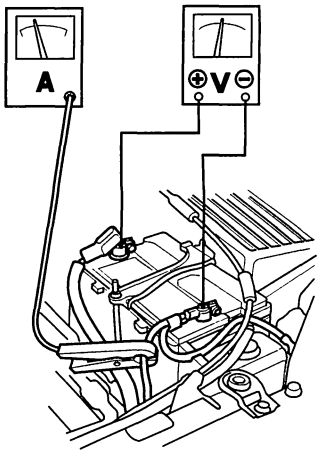

2. Remove the No. 46 (15 A) fuse from the under-dash fuse/relay box.

3. With the shift lever in N or P, turn the ignition switch to start (III).

   Did the starter crank the engine normally?

   YES—The starting system is OK. ■

   NO—If the starter will not crank the engine at all, go to step 4. If it cranks the engine erratically or too slowly, go to step 7. If it won't disengage from the torque converter ring gear when you release the key, check for the following until you find the cause.

   - Solenoid plunger and switch malfunction
   - Dirty drive gear or damaged overrunning clutch.

4. Check the battery condition. Check electrical connections at the battery, the negative battery cable to body, engine ground cables, and the starter for looseness and corrosion. Then try starting the engine again.

   Did the starter crank the engine?

   YES—The starting system is OK. ■

   NO—Go to step 5.

5. Make sure the transmission is in neutral, then disconnect the BLK/WHT wire (A) from the starter solenoid (B). Connect a jumper wire from the battery positive terminal to the solenoid terminal.

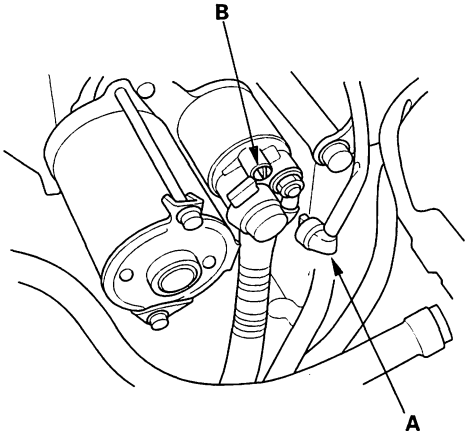

   Did the starter crank the engine?

   YES—Go to step 6.

   NO—Remove the starter and repair or replace as necessary. ■

6. Check the following items in the order listed until you find the open circuit.

   - Check the BLK/WHT wire and connectors between the driver's under-dash fuse/relay box and the ignition switch, and between the driver's under-dash fuse/relay box and the starter.
   - Check the ignition switch, refer to the '98-02 Accord Service Manual (see page 22-55).
   - Check the transmission range switch and connector (see page 14-141).
   - Substitute a known-good starter relay.

(cont'd)

Starter Circuit Troubleshooting (cont'd)

7. Check the engine speed while cranking the engine.

   Is the engine speed above 100 rpm?

   YES—Go to step 8.

   NO—Replace the starter, or remove and disassemble the starter, and check for the following until you find the cause.■

   - Excessively worn starter brushes
   - Open circuit in commutator brushes
   - Dirty or damaged helical spline or drive gear
   - Faulty drive gear clutch

8. Check the cranking voltage and current draw.

   Is cranking voltage no less than 8.5 volts, and current draw no more than 380 amps?

   YES—Go to step 9.

   NO—Replace the starter, or remove and disassemble the starter, and check for the following until you find the cause.■

   - Open circuit in starter armature commutator segments
   - Starter armature dragging
   - Shorted armature winding
   - Excessive drag in engine

9. Remove the starter and inspect its drive gear and the torque converter ring gear for damage. Replace any damaged parts.

Starter Solenoid Test

1. Check the hold-in coil for continuity between the S terminal and the armature housing (ground). There should be continuity.

   - If there is continuity, go to step 2.
   - If there is no continuity, replace the solenoid.

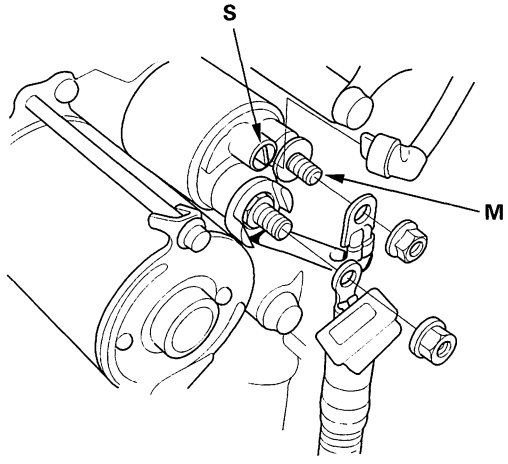

2. Check the pull-in coil for continuity between the S and M terminals. There should be continuity.

   - If there is continuity, the solenoid is OK.
   - If there is no continuity, replace the solenoid.

BACK

Starter Performance Test

1. Disconnect the wires from the S terminal and the M terminal.

2. Make the connections as described below using as heavy a wire as possible (preferably equivalent to the wire used for the vehicle). To avoid damaging the starter, never leave the battery connected for more than 10 seconds.

3. Connect the battery as shown. Be sure to disconnect the starter motor wire from the solenoid. If the starter pinion moves out, it is working properly.

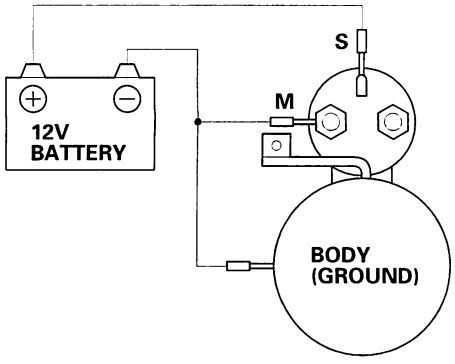

4. Disconnect the battery from the M terminal. If the pinion does not retract, the hold-in coil of the solenoid is working properly.

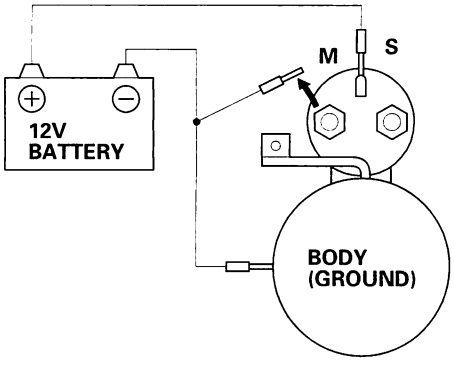

5. Disconnect the battery from the starter body. If the pinion retracts immediately, it is working properly.

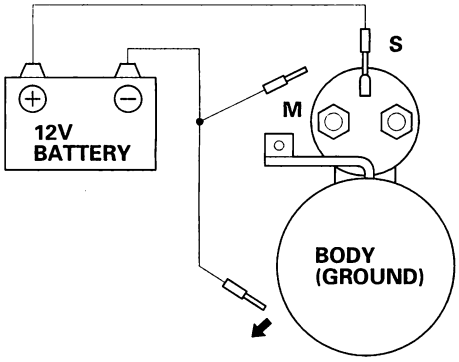

6. Clamp the starter firmly in a vise.

7. Connect the starter to the battery as described in the diagram below, and confirm that the motor starts and keeps rotating.

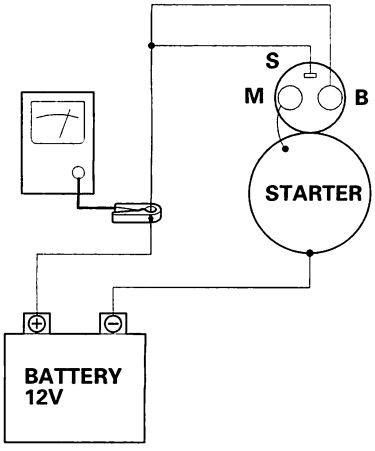

8. If the electric current and motor speed meet the specifications when the battery voltage is at 11.5 V, the starter is working properly.

Specifications:

1.6 kw	**80 A or less (Electric current), 2,600 rpm or more (Motor speed)**

Starter Replacement

1. Make sure you have the anti-theft code for the radio, then write down the frequencies for the radio's preset buttons.

2. Disconnect the battery negative cable, then disconnect the positive cable, and wait at least 3 minutes.

3. Remove the Automatic Transmission Fluid (ATF) cooler hose from the clamp on the starter motor.

4. Disconnect the starter cable (A) from the B terminal on the solenoid, then disconnect the BLK/WHT wire (B) from the S terminal.

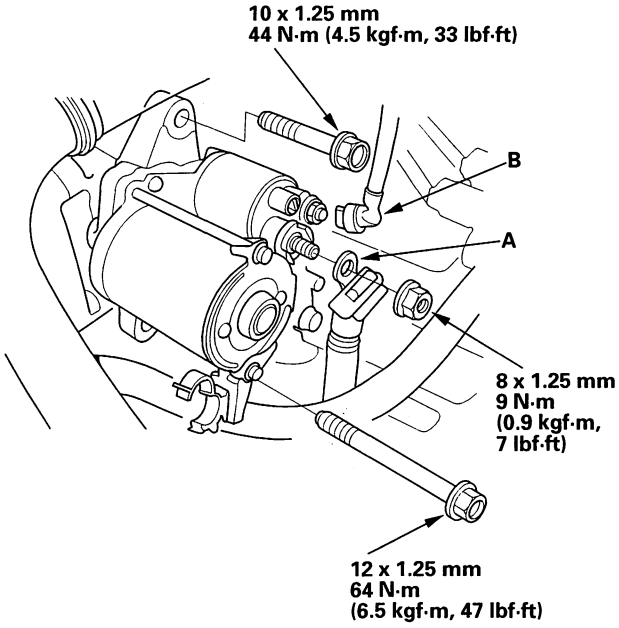

5. Remove the two bolts holding the starter, then remove the starter.

6. Install in the reverse order of removal. Make sure the crimped side of the ring terminal (A) is facing out.

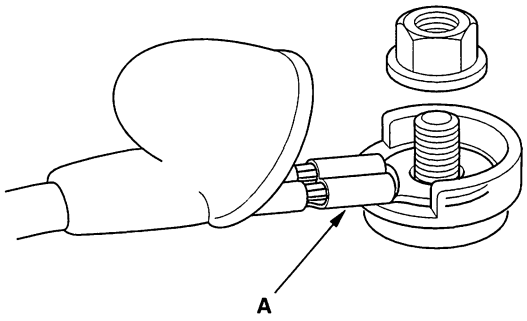

7. Connect the battery positive cable and negative cable to the battery.

8. Enter the anti-theft code for the radio, then enter the customer's radio station presets.

9. Retest starter performance.

BACK

Starter Overhaul

Disassembly/Reassembly

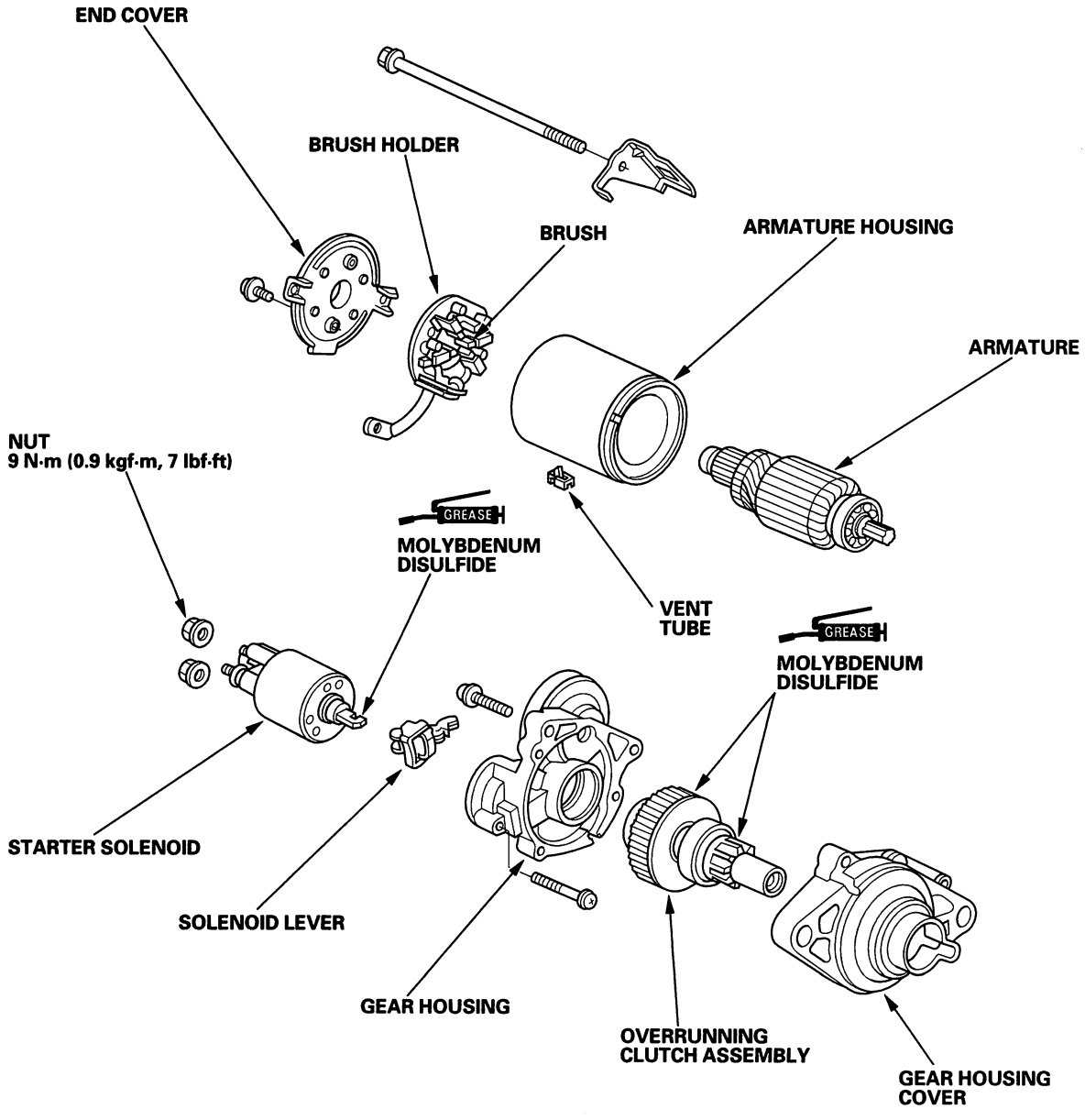

(cont'd)

Starter Overhaul (cont'd)

1. Remove the starter (see page 4-8).

2. Disassemble the starter as shown at the beginning of this procedure.

Armature Inspection and Test

3. Inspect the armature for wear or damage due to contact with the permanent magnet. If there is wear or damage, replace the armature.

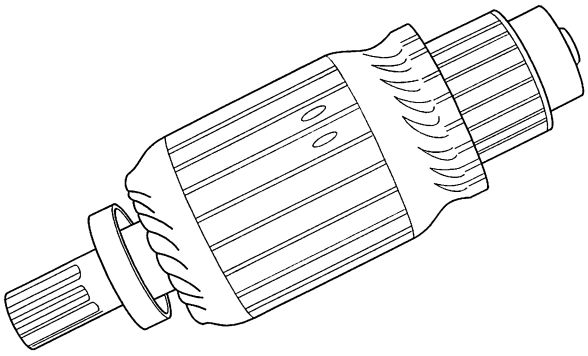

4. Check commutator (A) surface. If the surface is dirty or burnt, resurface with emery cloth or a lathe within the following specifications, or recondition with # 500 or # 600 sandpaper (B).

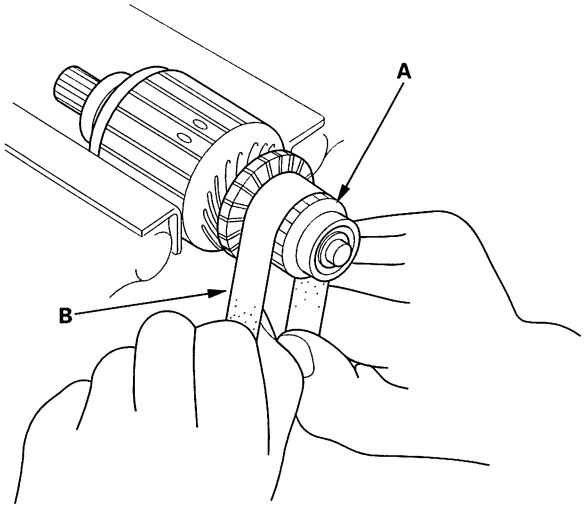

5. Check the commutator diameter. If the diameter is below the service limit, replace the armature.

Commutator Diameter
Standard (New): 28.0 – 28.1 mm (1.102 – 1.106 in.)
Service Limit: 27.5 mm (1.083 in.)

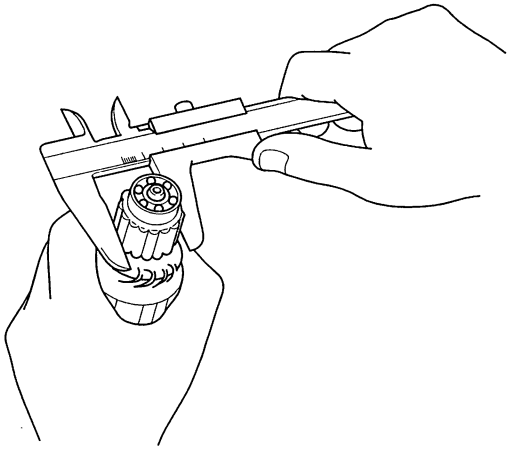

6. Measure the commutator runout.

- If the commutator runout is within the service limit, check the commutator for carbon dust or brass chips between the segments.
- If the commutator runout is not within the service limit, replace the armature.

Commutator Runout
Standard (New): 0.02 mm (0.001 in.) max.
Service Limit: 0.05 mm (0.002 in.)

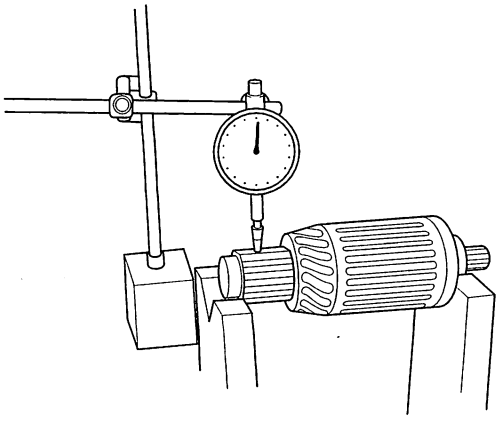

BACK

7. Check the mica depth (A). If the mica is too high (B), undercut the mica with a hacksaw blade to the proper depth. Cut away all the mica (C) between the commutator segments. The undercut should not be too shallow, too narrow, or V-shaped (D).

Commutator Mica Depth
Standard (New): 0.4—0.5 mm (0.016—0.020 in.)
Service Limit: 0.15 mm (0.006 in.)

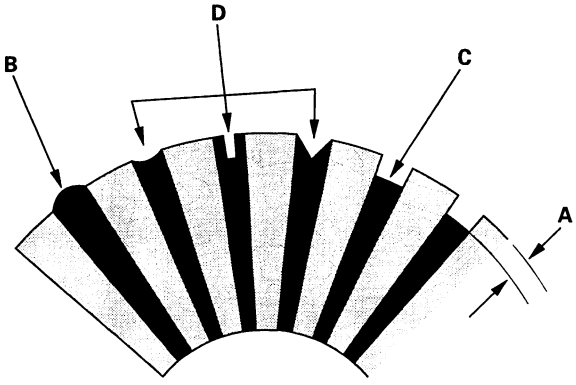

8. Check for continuity between the segments of the commutator. If an open circuit exists between any segments, replace the armature.

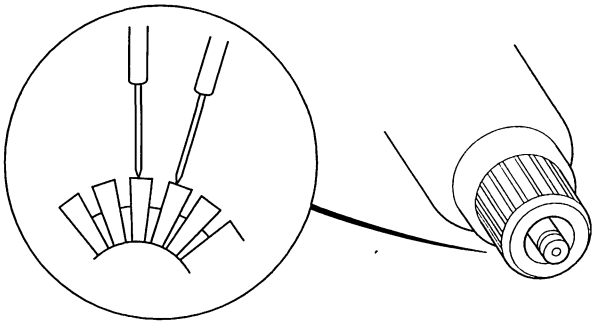

9. Place the armature (A) on an armature tester (B). Hold a hacksaw blade (C) on the armature core. If the blade is attracted to the core or vibrates while the core is turned, the armature is shorted. Replace the armature.

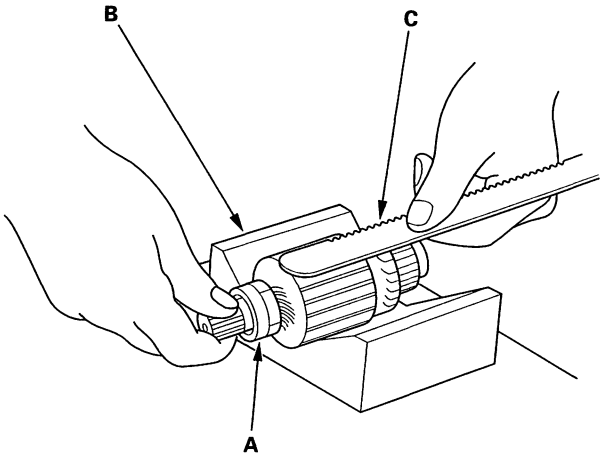

10. Check with an ohmmeter that no continuity exists between the commutator (A) and armature coil core (B), and between the commutator and armature shaft (C). If continuity exists, replace the armature.

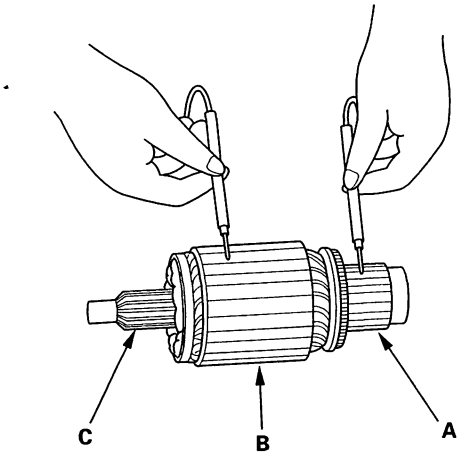

(cont'd)

Starter Overhaul (cont'd)

Starter Brush Inspection

11. Measure the brush length. If it is not within the service limit, replace the brush holder assembly.

    Brush Length
    Standard (New): 15.8 – 16.2 mm (0.62 – 0.64 in.)
    Service Limit: 11.0 mm (0.43 in.)

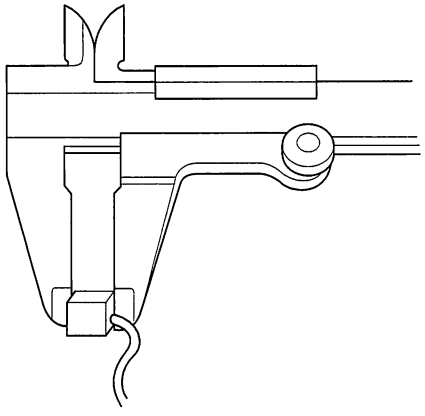

Starter Brush Holder Test

12. Check that there is no continuity between the (+) brush holder (A) and (–) brush holder (B). If there is continuity, replace the brush holder assembly.

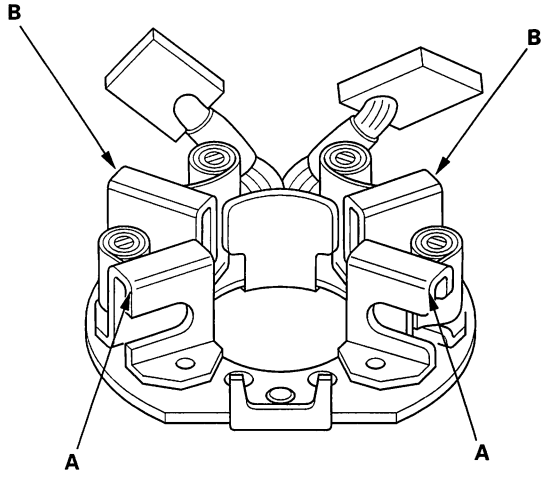

13. Insert the brush (A) into the brush holder, and bring the brush into contact with the commutator, then attach a spring scale (B) to the spring (C). Measure the spring tension at the moment the spring lifts off the brush. If the spring tension is not within specification, replace the spring.

    Spring Tension:
    15.7 – 17.7 N (1.6 – 1.8 kgf, 3.53 – 3.97 lbf)

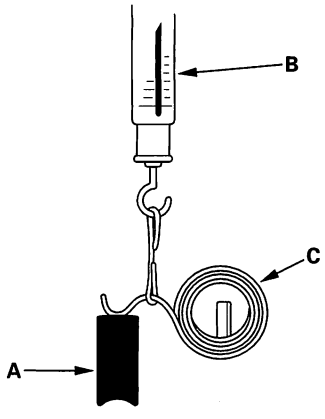

BACK

14. Pry back each brush spring with a screwdriver, then position the brush about halfway out of its holder, and release the spring to hold it there.

    NOTE: To seat new brushes, slip a strip of # 500 or # 600 sandpaper, with the grit side up, between the commutator and each brush, and smoothly rotate the armature. The contact surface of the brushes will be sanded to the same contour as the commutator.

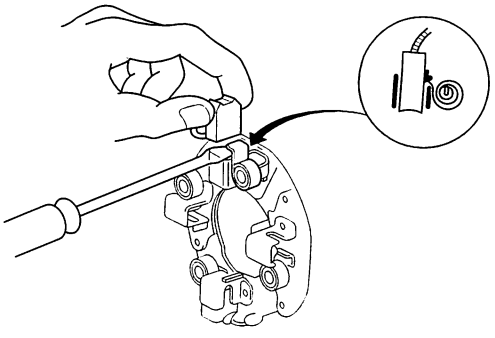

15. Install the armature in the housing. Next, pry back each brush spring again, and push the brush down until it seats against the commutator, then release the spring against the end of the brush.

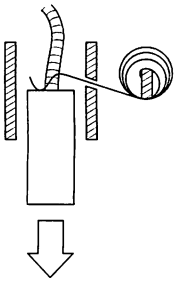

16. Install the starter end cover (A) to retain the brush holder (B).

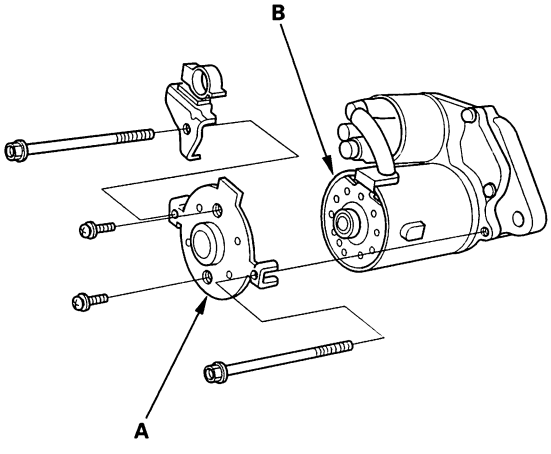

Overrunning Clutch Inspection

17. Slide the overrunning clutch along the shaft. Replace it if it does not slide smoothly.

18. Rotate the overrunning clutch (A) both ways. If it does not lock in either direction or it locks in both directions, replace it.

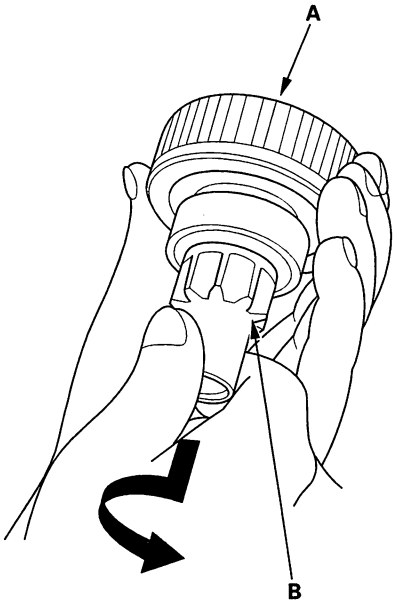

19. If the starter drive gear (B) is worn or damaged, replace the overrunning clutch assembly; the gear is not available separately.

    Check the condition of the torque converter ring gear if the starter drive gear teeth are damaged.

20. Reassemble the starter in reverse order of disassembly.

Component Location Index

'98-99 models:

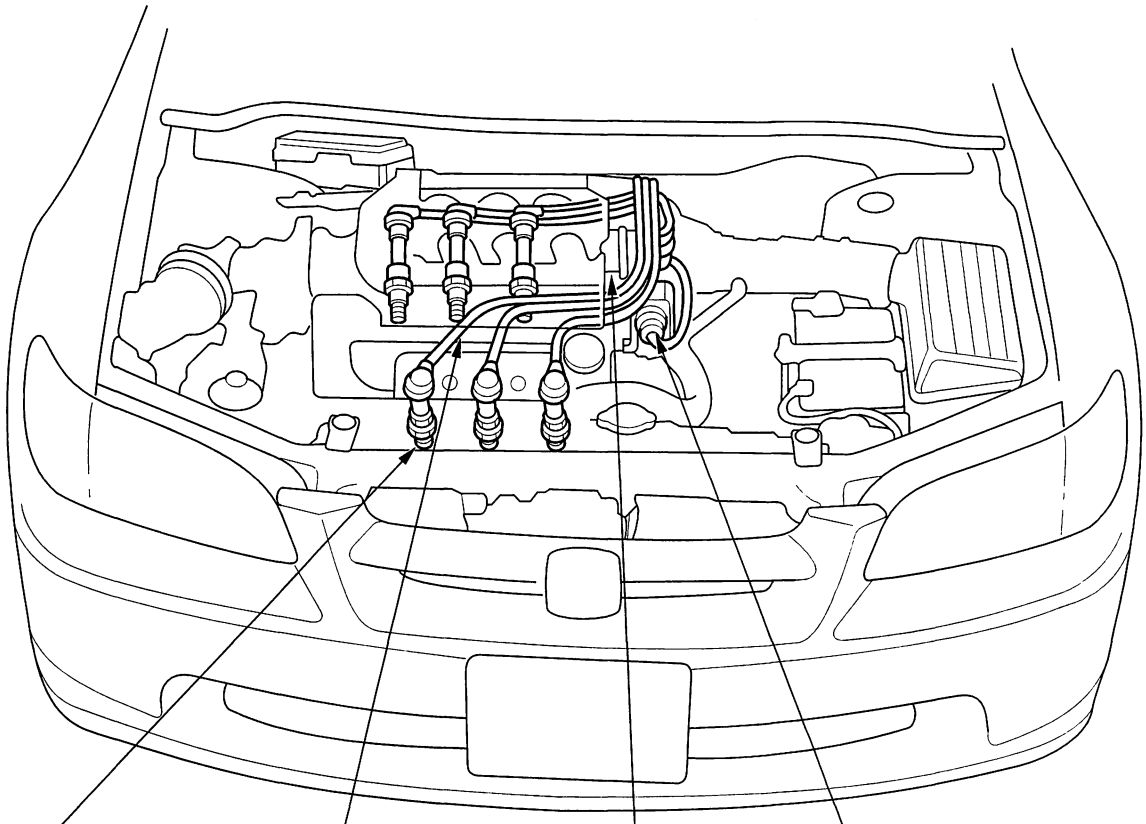

SPARK PLUG
Inspection, page 4-24

IGNITION WIRES
Inspection and Test, page 4-22

IGNITION COIL
Test, page 4-22

DISTRIBUTOR
Replacement, page 4-19
Overhaul, page 4-20
Ignition Control Module (ICM) Input Test, page 4-21
Ignition Timing Inspection, page 4-18

BACK

'00-02 models:

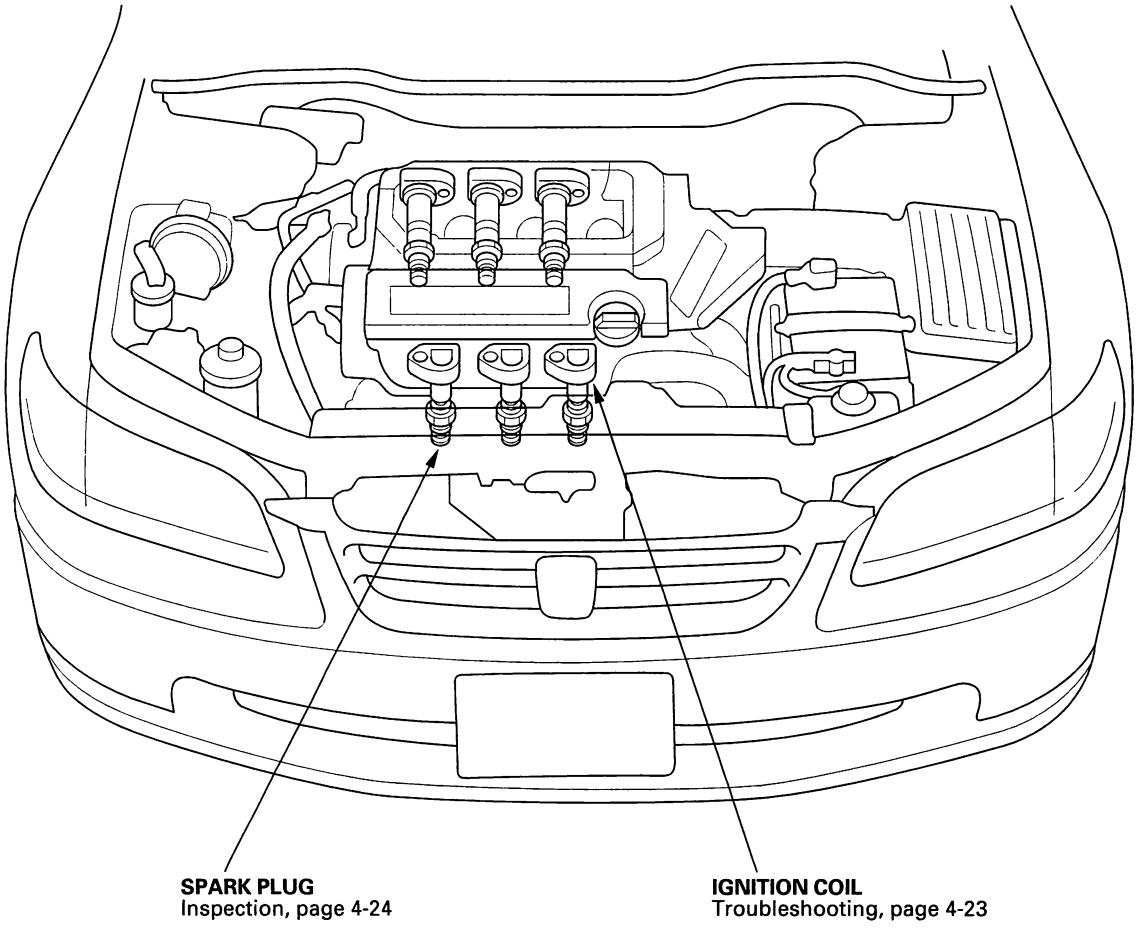
SPARK PLUG
Inspection, page 4-24
IGNITION COIL
Troubleshooting, page 4-23

Circuit Diagram

'98-99 models:

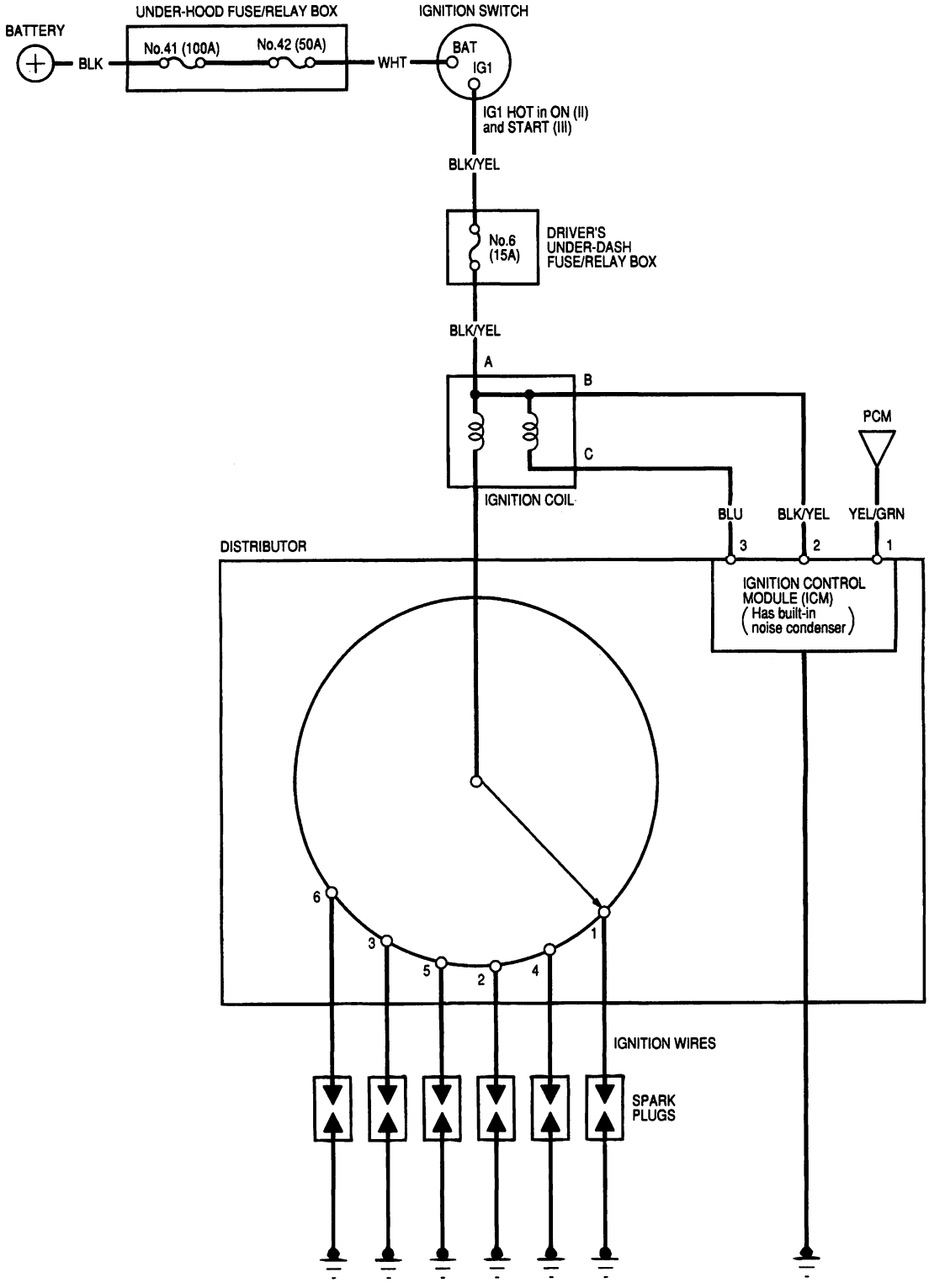

BACK

'00-02 models:

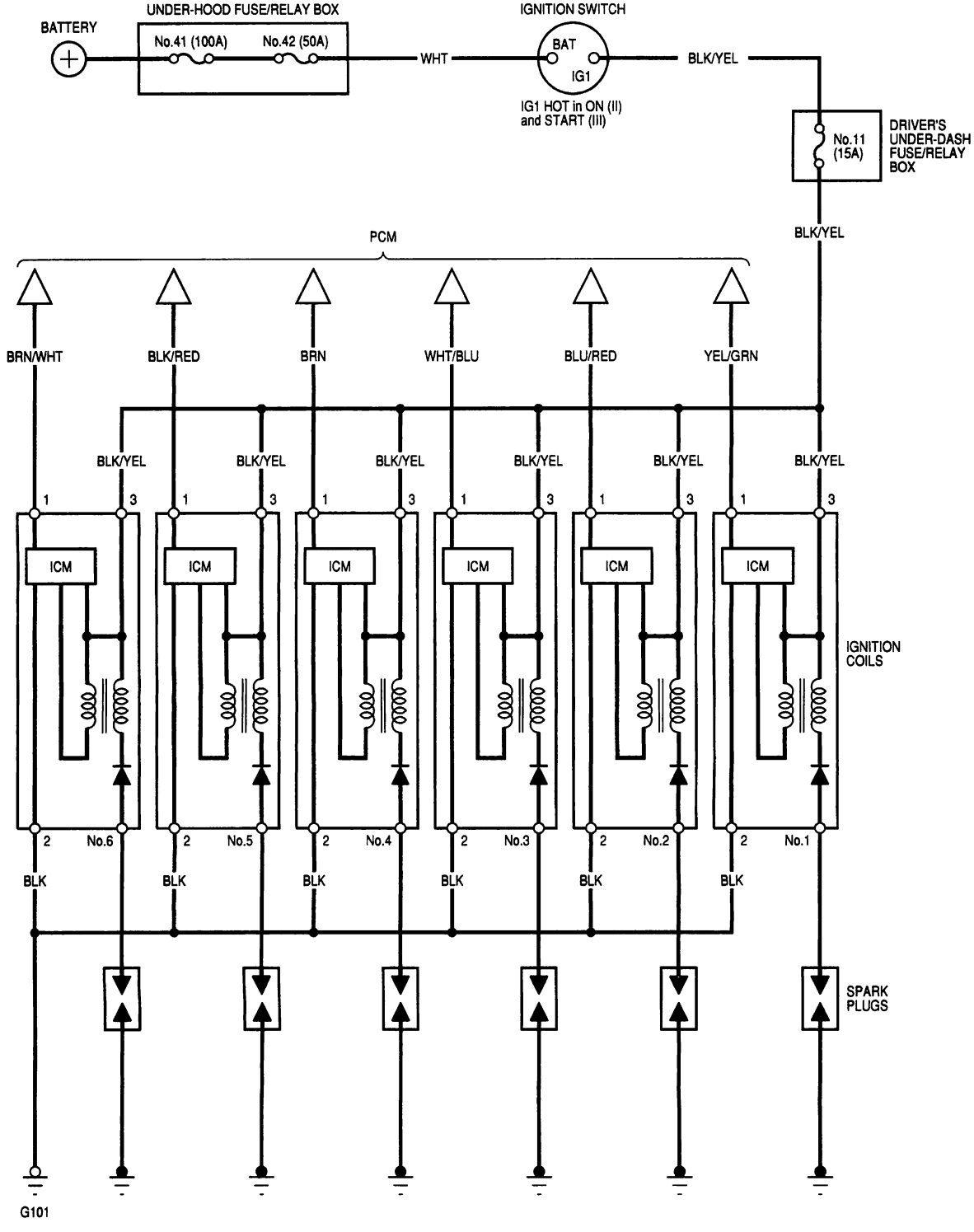

ICM : Ignition Control Module

Ignition Timing Inspection

1. Check the idle speed, and adjust it if necessary (see page 11-87).

2. Connect the Honda PGM tester to the Data Link Connector (DLC), and follow the tester's prompts in the "SCS" menu (see the Honda PGM Tester Operator's Manual).

3. Start the engine. Hold the engine at 3,000 rpm with no load, shift lever in N or P, until the radiator fan comes on, then let it idle.

4. Connect the timing light to the No. 1 ignition wire (ignition coil wire for '00-02 models).

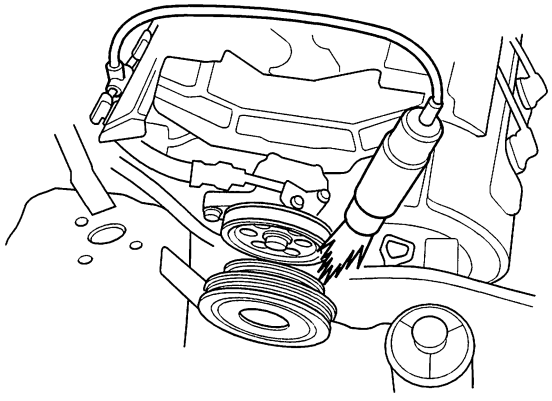

5. Point the light toward the pointer (A) on the timing belt cover. Check the ignition timing under a no load conditions: headlights, blower fan, rear window defogger, and air conditioner are not operating. If the ignition timing differs from the specification below, replace the PCM; refer to the '98-02 Accord Service Manual (see page 11-3).

   Ignition Timing:
   10° ± 2° BTDC (RED mark (B)) during idling in N or P

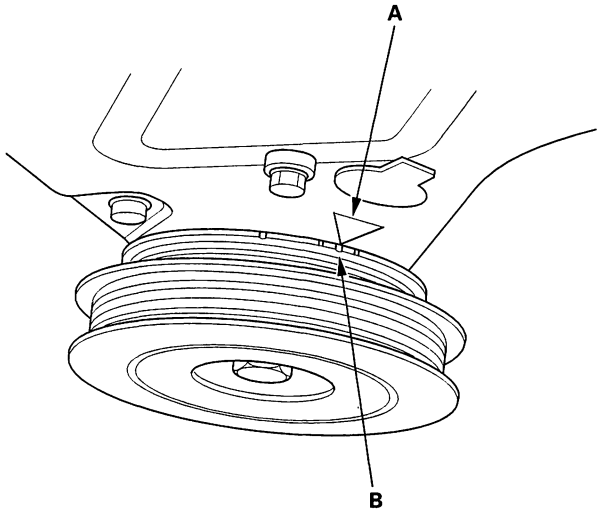

6. Disconnect the Honda PGM tester and the timing light.

BACK

Distributor Replacement - '98-99 models

Removal

1. Disconnect the connector(A) from the distributor.

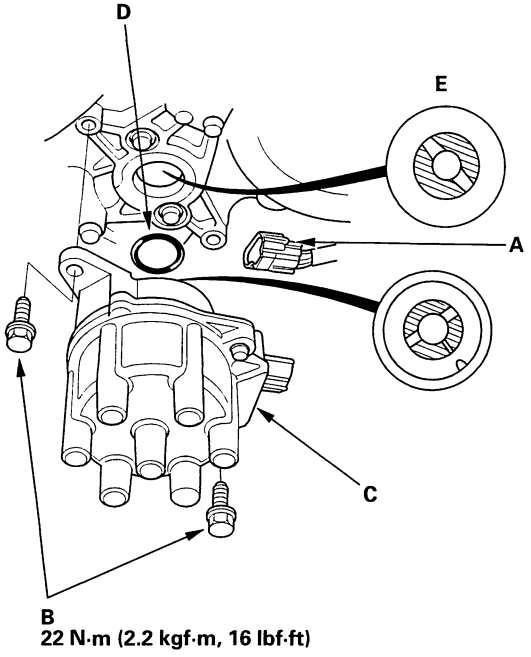

2. Disconnect the ignition wires from the distributor cap.

3. Remove the distributor mounting bolts (B) then remove the distributor (C) from the cylinder head.

Installation

1. Bring the No. 1 piston to compression stroke TDC.

2. Coat a new O-ring (D) with engine oil, then install it.

3. Slip the distributor into position.

   NOTE: The lug on the end of the distributor and its mating grooves in the camshaft end (E) are both offset to eliminate the possibility of installing the distributor 180° out of time.

4. Tighten the mounting bolts (B).

5. Connect the ignition wires to the distributor cap as shown.

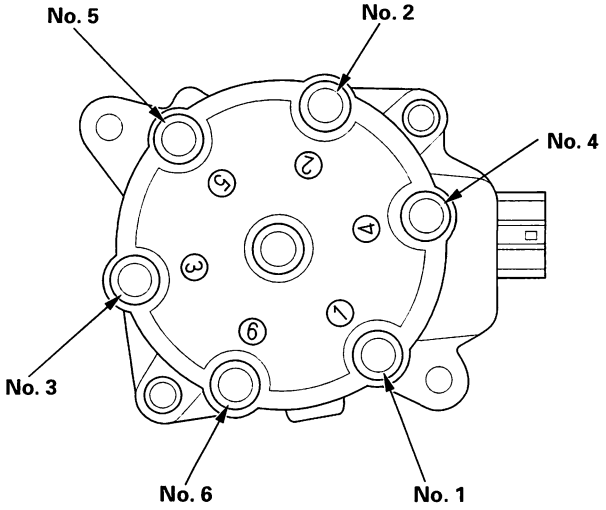

6. Connect the 3P connector to the distributor.

Distributor Disassembly/Reassembly - '98-99 models

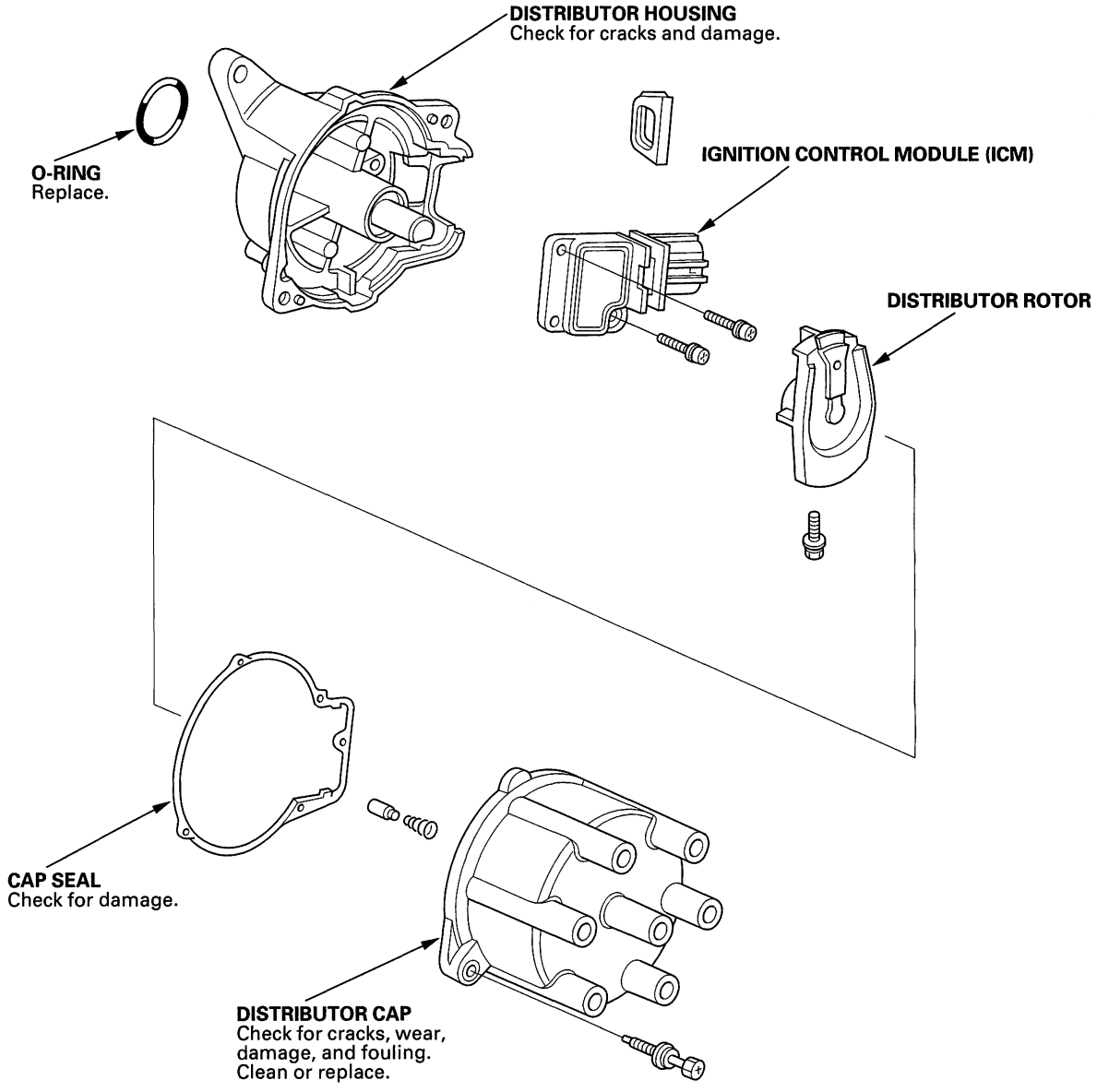

BACK

ICM (Ignition Control Module) Input Test - '98-99 models

NOTE:
- If the malfunction indicator lamp (MIL) comes on, refer to the Diagnostic Trouble Code (DTC) troubleshooting Index; refer to the '98-02 Accord Service Manual.
- Perform an input test for the ignition control module (ICM) after finishing the fundamental tests for the ignition system and the fuel and emissions systems.

1. Disconnect the 3P connector from the distributor.

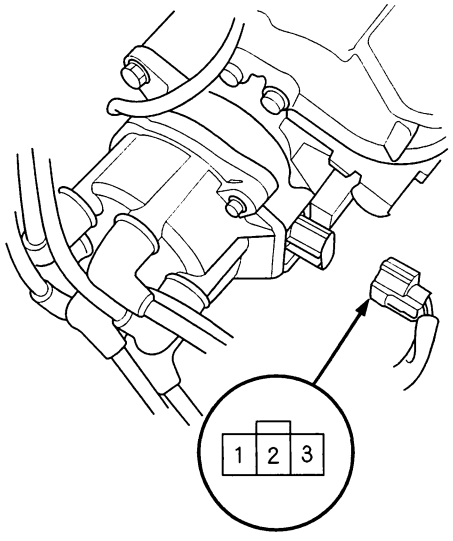

Wire side of female terminals

2. Turn the ignition switch ON (II). Check for voltage between the No. 2 terminal and body ground. There should be battery voltage.
   - If there is no battery voltage, check:
     - ignition coil.
     - BLK/YEL wire between the ICM and ignition coil.
   - If there is battery voltage, go to step 3.
3. Turn the ignition switch ON (II). Check for voltage between the No. 3 terminal and body ground. There should be battery voltage.
   - If there is no battery voltage, check:
     - ignition coil.
     - BLU wire between the ICM and ignition coil.
   - If there is battery voltage, go to step 4.
4. Disconnect PCM connector B (25P) and check for continuity on the No. 1 terminal between the ICM connector terminal No. 1 (YEL/GRN) and PCM connector terminal B13. There should be continuity.
5. Check for continuity on the No. 1 terminal to body ground. There should be no continuity. If there is continuity (short to ground), the ICM is probably damaged.
6. Reconnect PCM connector B (25P) and the distributor 3P connector.
7. If all the tests are normal, replace the ICM.

Ignition Coil Test - '98-99 models

1. Turn the ignition switch OFF.

2. Disconnect the 3P connector and the ignition coil wire.

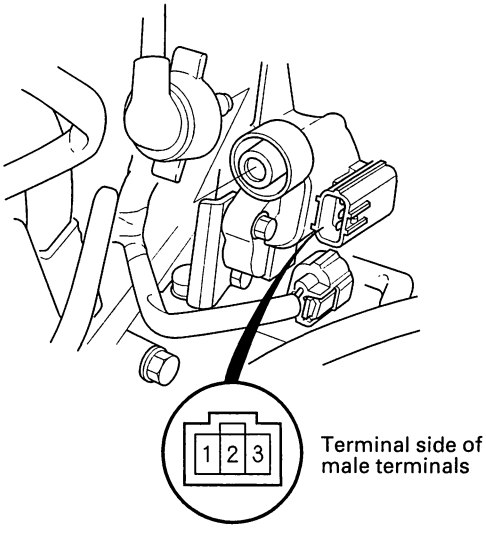

3. Using an ohmmeter, measure resistance between the terminals. Replace the coil if the resistance is not within specifications.

   NOTE: Resistance will vary with the coil temperature; specifications are at 68°F (20°C).

   Primary Winding Resistance (Between the terminals 1 and 3): 0.34 – 0.42 Ω

   Secondary Winding Resistance (Between terminal 2 and secondary winding terminal): 17.1 – 20.3 kΩ

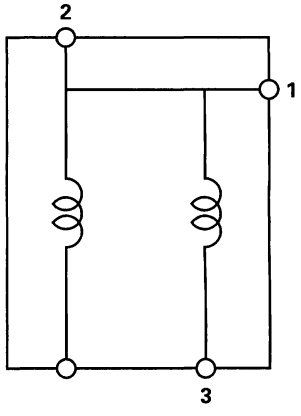

Ignition Wire Inspection and Test - '98-99 models

1. Carefully remove the ignition wires by pulling on the rubber boots. Do not bend the wires; you might break them inside.

2. Check the condition of the ignition wire terminals. If any terminal is corroded, clean it, and if it is broken or distorted, replace the ignition wire.

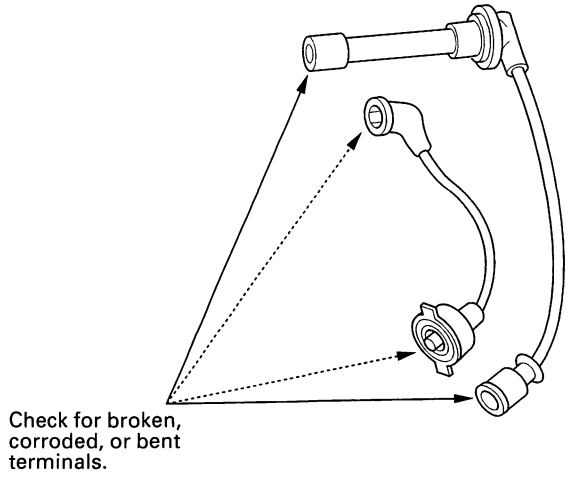

3. Connect ohmmeter probes, and measure resistance while flexing and moving the wire. Do not bend the wires; you might break them inside.

   Ignition Wire Resistance: 25 kΩ max. at 68°F (20°C)

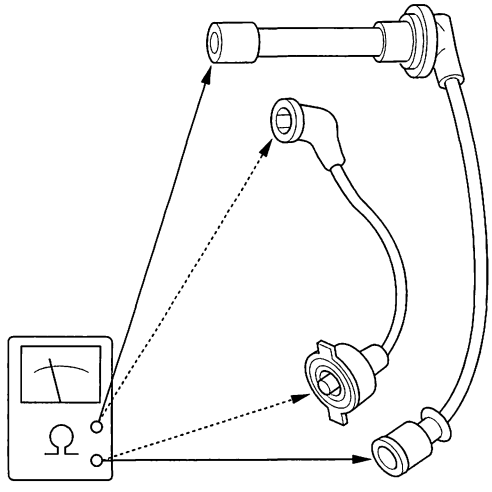

4. If resistance exceeds 25 kΩ, replace the ignition wire.

BACK

Ignition Coil Troubleshooting - '00-02 models

NOTE: Perform an ignition coil test after finishing the fundamental tests for the ignition system and the fuel and emissions system.

1. Remove the ignition coil cover.
2. Disconnect the 6 ignition coil 3P connectors.
3. Turn the ignition switch ON (II).
4. Measure the voltage at the No. 3 terminal of each ignition coil 3P connector.

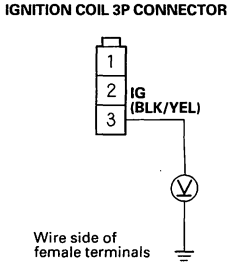

Is there battery voltage?

YES—Go to step 5.

NO—Repair open in the wire between ignition coil and No. 11 (15A) fuse in the driver's under-dash fuse/relay box. ■

5. Turn the ignition switch OFF.
6. Check for continuity between the No. 2 terminal of each ignition coil 3P connector and body ground.

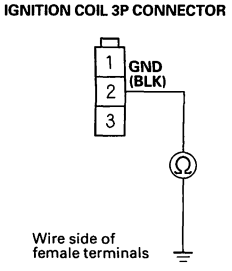

Is there continuity?

YES—Go to step 7.

NO—Repair open in the wire between ignition coil and body ground (G101). ■

7. Disconnect Powertrain Control Module (PCM) connector C (31P).
8. With all the coils still disconnected, check for continuity between the body ground and PCM connector terminals C3, C4, C12, C13, C14, and/or C23 individually.

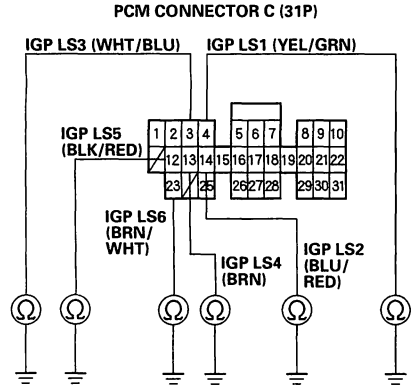

Is there continuity?

YES—Repair short to ground in the wire between ignition coil and PCM. ■

NO—Go to step 9.

9. Connect PCM connector C (31P).
10. Connect the coil(s) and 3P connector(s).
11. Turn the ignition switch ON (II).
12. Measure the voltage at the No. 1 terminal of each ignition coil 3P connector with the ignition switch to start (III).

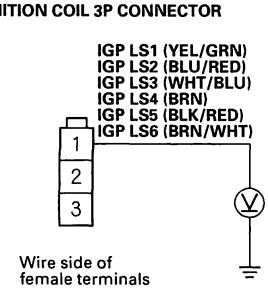

Is there about 0.25 V to 0.5 V?

YES—Replace the ignition coil. ■

NO—Repair open in the wire between ignition coil and PCM. ■

Spark Plug Inspection

1. Inspect the electrodes and ceramic insulator.

   Burned or worn electrodes may be caused by:
   - Advanced ignition timing
   - Loose spark plug
   - Plug heat range too hot
   - Insufficient cooling

   Fouled plug may be caused by:
   - Retarded ignition timing
   - Oil in combustion chamber
   - Incorrect spark plug gap
   - Plug heat range too cold
   - Excessive idling/low speed running
   - Clogged air cleaner element
   - Deteriorated ignition coil

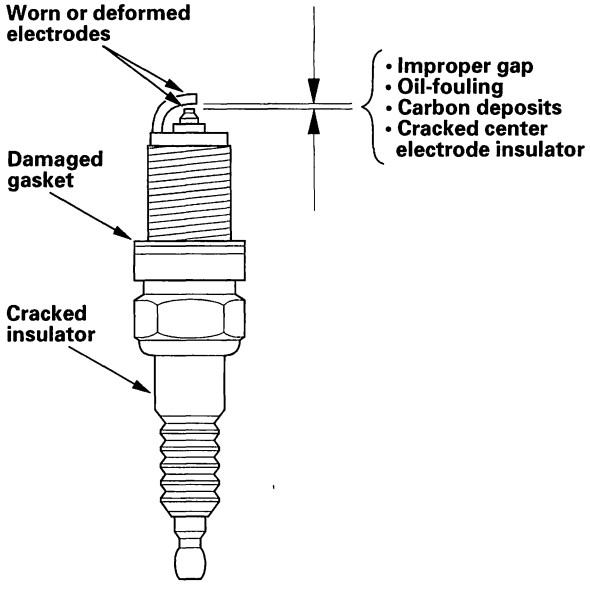

2. Do not adjust the gap of platinum tip plugs (A); replace the spark plug if the gap is out of specification.

   Electrode Gap:
   Standard (New): 1.0 – 1.1 mm (0.039 – 0.043 in.)
   Service Limit: 1.3 mm (0.05 in.)

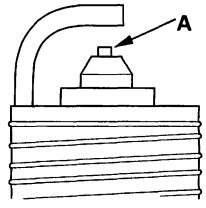

3. Replace the plug at the specified interval, or if the center electrode is rounded (A). Use only the spark plugs listed below.

   Spark Plugs:
   NGK: PZFR5F-11
   DENSO: PKJ16CR-L11

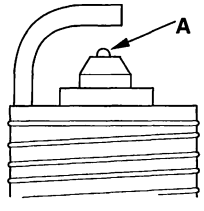

4. Apply a small quantity of anti-seize compound to the plug threads, and screw the plugs into the cylinder head finger-tight. Torque them to 18 N·m (1.8 kgf·m, 13 lbf·ft).

BACK

Charging System

Component Location Index

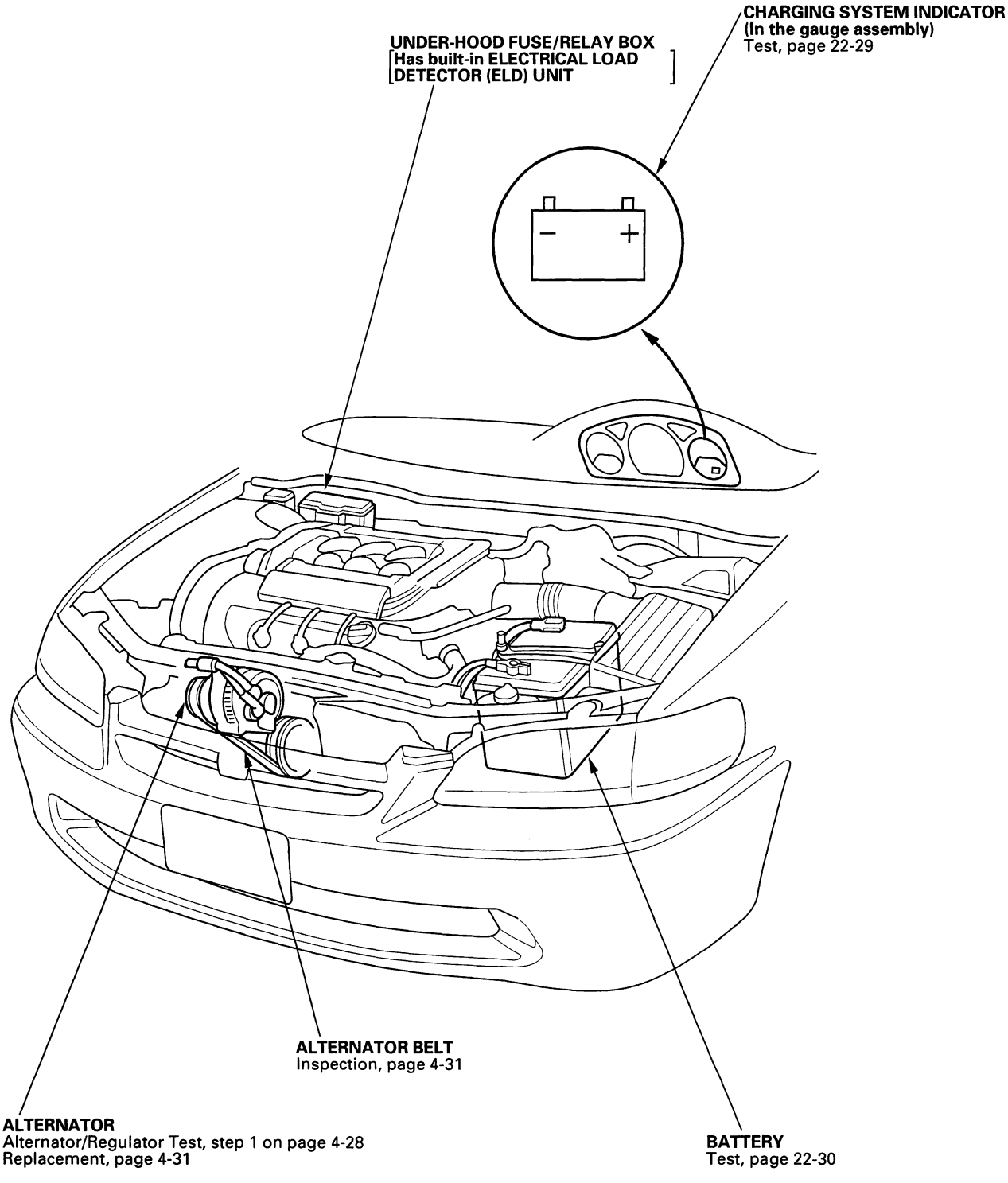

Circuit Diagram

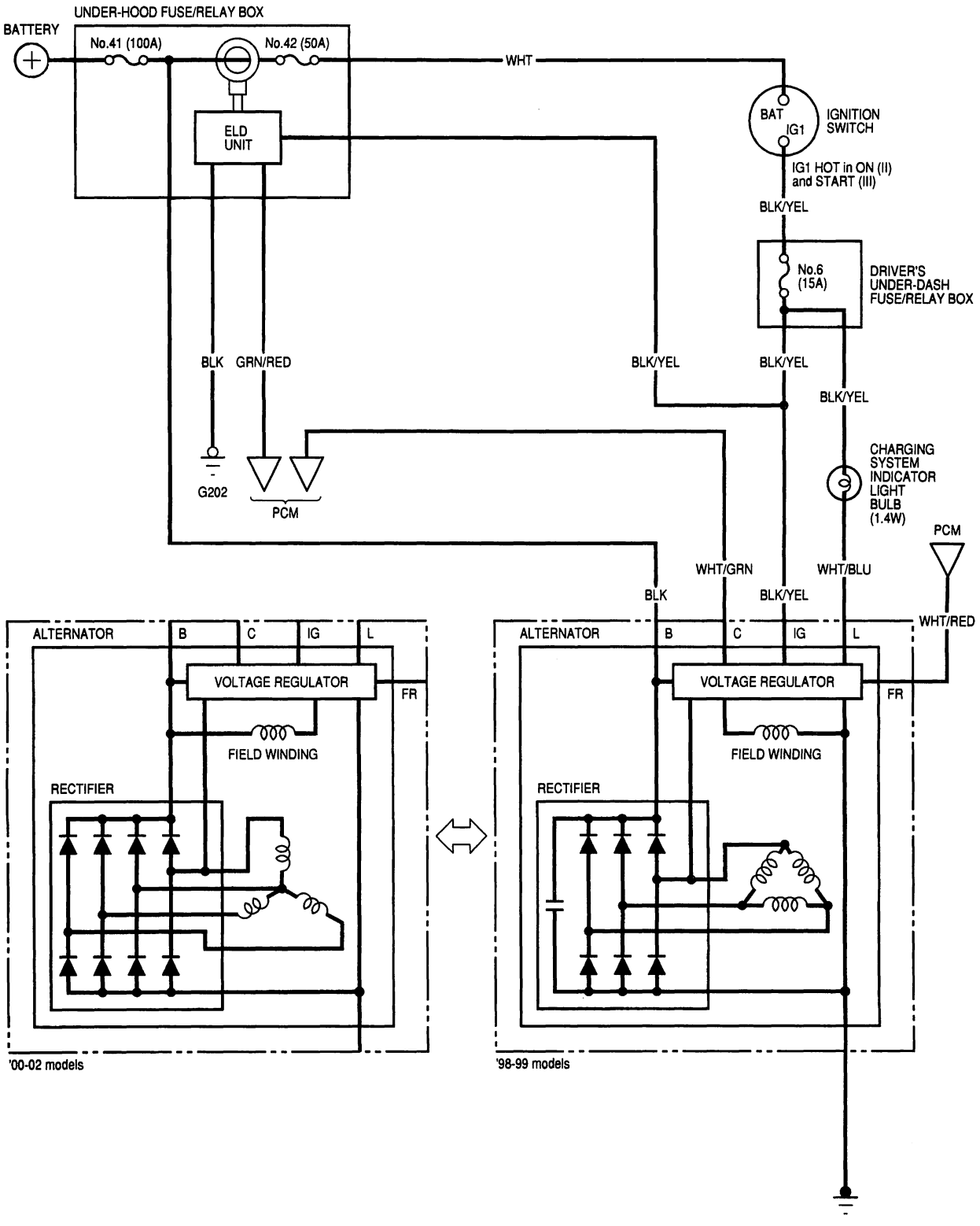

BACK

Charging Circuit Troubleshooting

If the charging system indicator does not come on or does not go off, or the battery is dead or low, test the following items in the order listed below:

Battery (see page 22-30)
Charging system indicator
Alternator/regulator circuit
Alternator control system

Charging System Indicator Test

1. Check the battery terminals, the battery ground, the main fuses, and that the 4P connector at the alternator and under-hood fuse/relay box terminals to be sure they are securely tightened.

   Are they securely tightened?

   YES—Go to step 2.

   NO—Tighten or reconnect.■

2. Turn the ignition switch ON (II).

   Does the charging system indicator come on?

   YES—Go to step 3.

   NO—Go to step 7.

3. Start the engine.

   Does the charging system indicator go off?

   YES—Charging system indicator circuit is OK.■

   NO—Go to step 4.

4. Turn the ignition switch OFF.

5. Disconnect the 4P connector from the alternator.

6. Turn the ignition switch ON (II).

   Does the charging system indicator come on?

   YES—Turn the ignition switch OFF, and repair the short in the WHT/BLU wire. If the WHT/BLU wire is shorted to ground, the voltage regulator in the alternator may be damaged.■

   NO—Go to step 10.

7. Turn the ignition switch OFF.

8. Disconnect the 4P connector from the alternator.

9. Ground the No. 3 terminal of the 4P connector. Turn the ignition switch ON (II).

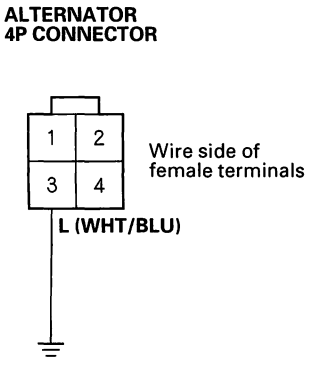

   Does the charging system indicator come on?

   YES—Go to step 10.

   NO—Turn the ignition switch OFF. Check for a blown No. 6 (15 A) fuse and a blown charging system light bulb. If the fuse and bulb are OK, repair the open in the WHT/BLU wire to the indicator bulb.■

10. Measure the voltage at the No. 1 terminal of the alternator 4P connector with the ignition switch ON (II).

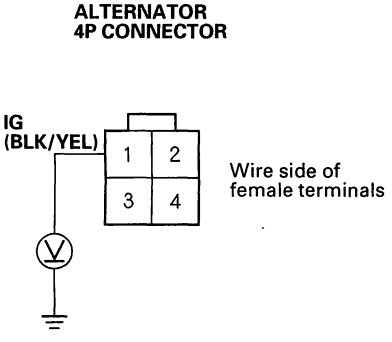

   Is there battery voltage?

   YES—Repair or replace the alternator.■

   NO—Repair open in the BLK/YEL wire between the alternator and the under-dash driver's fuse relay box.■

(cont'd)

Charging Circuit Troubleshooting (cont'd)

Alternator and Regulator Circuit Test—'98-99 models

1. Be sure the battery is sufficiently charged and in good condition (see page 22-30).

2. Connect a VAT-40 (or equivalent tester), and turn the selector switch to position 1 (starting).

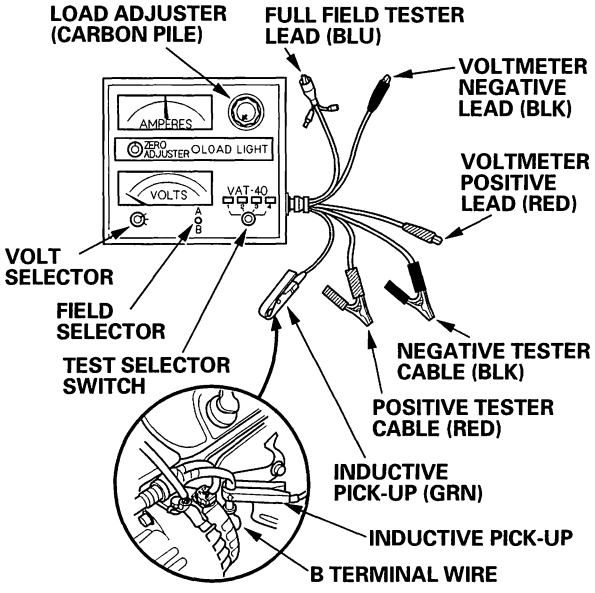

3. Shift to park or neutral, and start the engine. Hold the engine at 3,000 rpm, with no load until the radiator fan comes on, then let it idle.

4. Raise the engine speed to 2,000 rpm, and hold it there.

   Is the voltage over 16.0 V?

   YES—Repair or replace the alternator.■

   NO—Go to step 5.

5. Release the accelerator pedal, and let the engine idle.

6. Make sure all accessories are turned off. Turn the selector switch to position 2 (charging).

7. Remove the inductive pick-up, and zero the ammeter.

8. Place the inductive pick-up over the B terminal wire of the alternator so that the arrow points away from the alternator.

9. Raise the engine speed to 2,000 rpm, and hold it there.

   Is the voltage less than 12.0 V?

   YES—Repair or replace the alternator.■

   NO—Go to step 10.

10. Apply a load with the VAT-40 until the battery voltage drops to between 12—13.5 V.

    Is the amperage 75 A or more?

    YES—The charging system is OK.■

    NO—Replace the alternator.■

BACK

Alternator and Regulator Circuit Test—'00-02 models

1. Be sure the battery is sufficiently charged and in good condition (see page 22-30).

2. Connect a VAT-40 (or equivalent tester), and turn the selector switch to position 1 (starting).

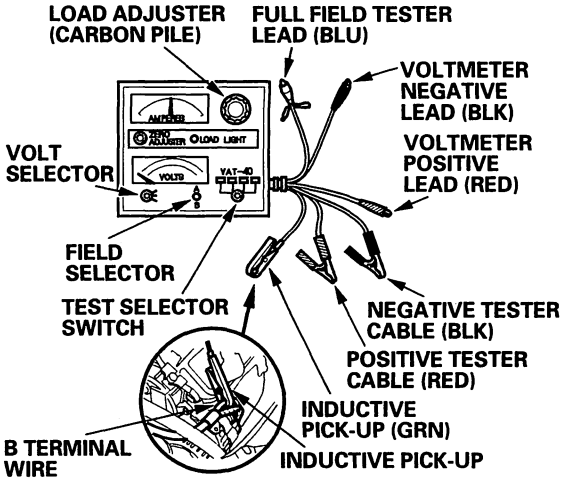

3. Shift to park or neutral, and start the engine. Hold the engine at 3,000 rpm, with no load until the radiator fan comes on, then let it idle.

4. Raise the engine speed to 2,000 rpm, and hold it there.

   Is the voltage over 15.1 V?

   YES—Repair the voltage regulator.■

   NO—Go to step 5.

5. Release the accelerator pedal, and let the engine idle.

6. Make sure all accessories are turned off. Turn the selector switch to position 2 (charging).

7. Remove the inductive pick-up, and zero the ammeter.

8. Place the inductive pick-up over the B terminal wire of the alternator so that the arrow points away from the alternator.

9. Raise the engine speed to 2,000 rpm, and hold it there.

   Is the voltage less than 13.5 V?

   YES—Repair the alternator components (see page 4-35).■

   NO—Go to step 10.

10. Apply a load with the VAT-40 until the battery voltage drops to between 12—13.5 V.

    Is the amperage 75 A or more?

    YES—The charging system is OK.■

    NO—Go to step 11.

11. With the engine speed still at 2,000 rpm, full-field the alternator Attach the probe to the VAT-40 full-field test lead, and insert the probe into the full field access hold at the back of the alternator. Switch the field selector to the "A (Ground)" position momentarily, and check the amperage reading. Because voltage will rise quickly when the alternator is full-fielded, do not allow the voltage to exceed 18 V: it may damage the electrical system.

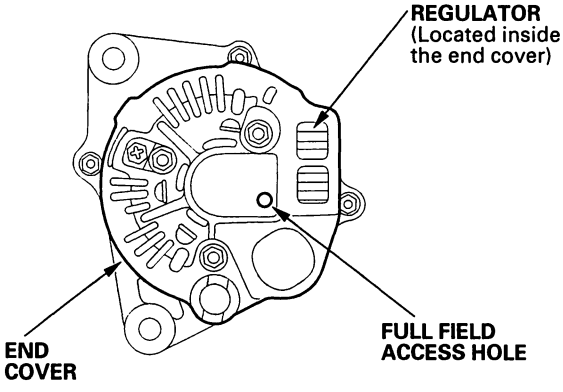

    Is the alternator out put 75 A or more ?

    YES—Replace the voltage regulator.■

    NO—Repair or replace the alternator (see page 4-35).■

(cont'd)

Charging Circuit Troubleshooting (cont'd)

Alternator Control System Test

1. Check for proper operation of the Electrical Load Detector (ELD) by confirming that the Malfunction Indicator Lamp (MIL) is OFF and there is no DTC for ELD failure.

2. Disconnect the 4P connector from the alternator.

3. Start the engine and turn the headlights (high beam) ON.

4. Measure voltage between the 4P connector terminal No. 2 and the positive terminal of the battery.

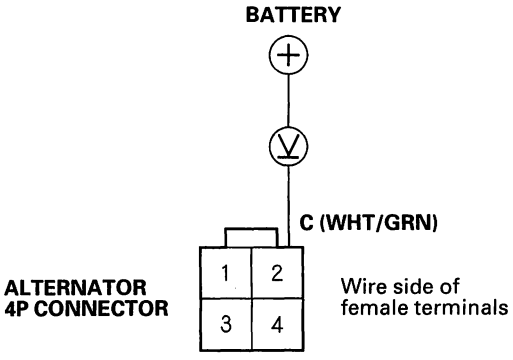

Is there 1 V or less?

YES—Go to step 8.

NO—Go to step 5.

5. Turn the headlight and ignition switch OFF.

6. Disconnect the Powertrain Control Module (PCM) connector C (31P).

7. Check for continuity between the PCM connector terminal C2 and body ground.

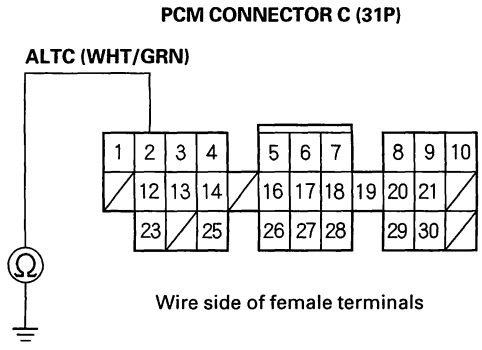

Is there continuity?

YES—Repair short to ground in the wire between the alternator and PCM.■

NO—Check that the terminals are firmly seated at the connectors. If OK, substitute a known-good PCM, and recheck; refer to the '98-'02 Accord Service Manual. If prescribed voltage is now available, replace the original PCM.■

8. Turn the headlight and ignition switch OFF.

9. Disconnect the PCM connector C (31P).

10. Check for continuity between the PCM connector terminal C2 and alternator 4P connector terminal No. 2.

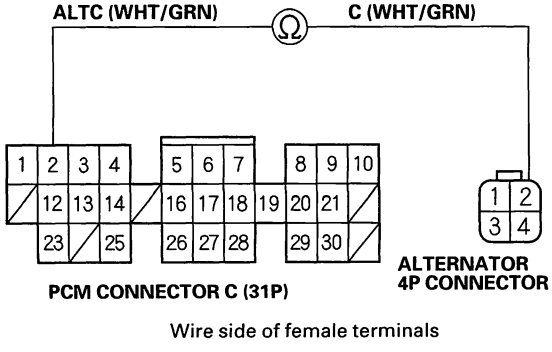

Is there continuity?

YES—Test the alternator/regulator.■

NO—Repair open in the wire between the alternator and PCM.■

BACK

Alternator-compressor Belt Inspection and Replacement

1. Inspect the belt for cracks and damaged. If the belt is cracked or damaged, replace it.

2. Check that the pointer (A) on the auto-tensioner housing is not beyond the edge of the indicator rib (B) on the tensioner base.

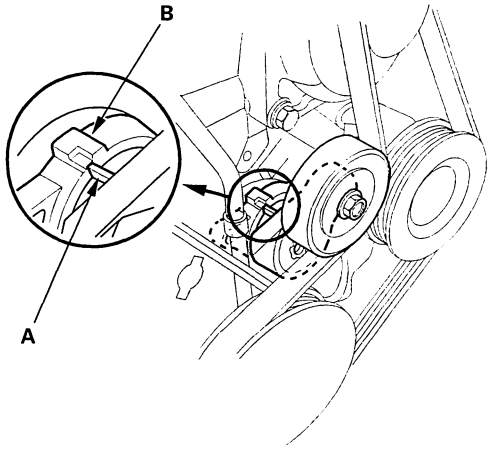

3. Move the auto-tensioner (A) to relieve tensioner from the alternator belt (B), and remove the alternator belt.

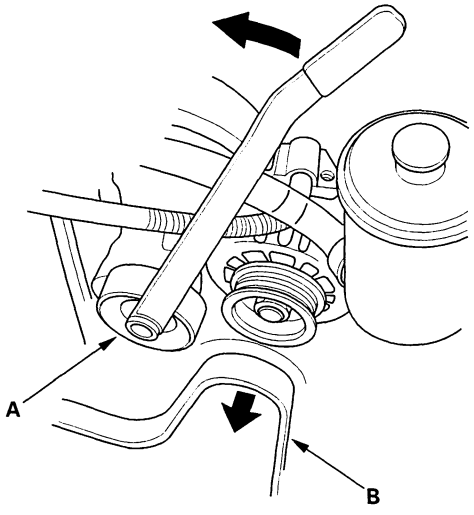

4. Install the new belt in reverse order of removal.

Alternator Replacement

1. Make sure you have the anti-theft code for the radio, then write down the frequencies for the radio's preset buttons.

2. Disconnect the battery negative cable, then disconnect the positive cable.

3. Move the auto-tensioner (A) to relieve tension from the alternator belt (B), and remove the alternator belt.

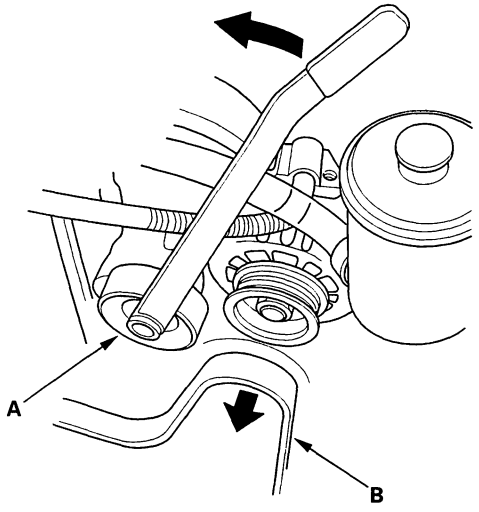

(cont'd)

Alternator Replacement (cont'd)

4. Disconnect the condenser fan motor connector (A) from the condenser fan shroud.

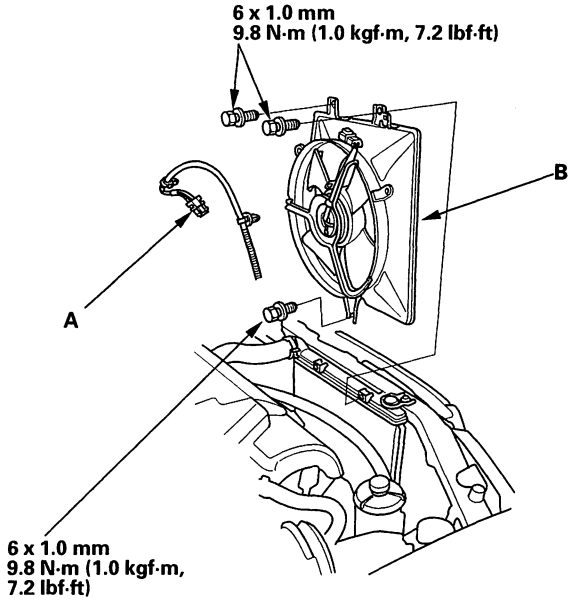

5. Remove the condenser fan/shroud assembly (B).

6. Disconnect the 4P connector (A) and BLK wire (B) from the alternator.

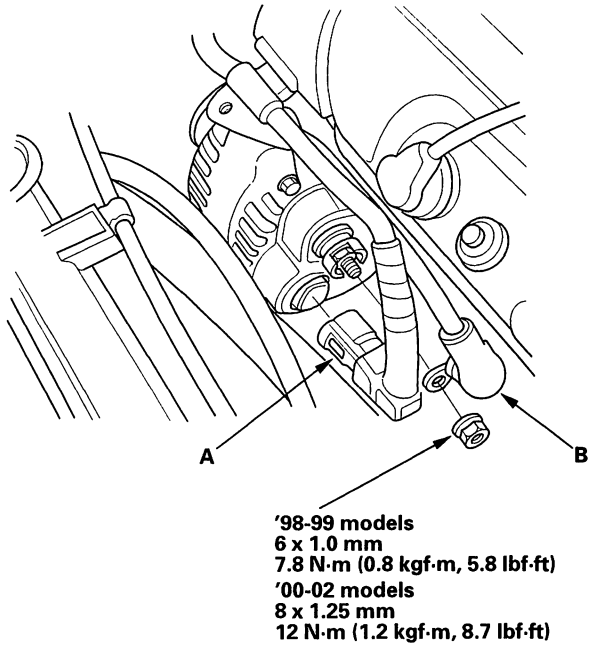

7. Remove the mount bolt (A) and alternator bracket mounting bolt (B), then remove the harness clamp (C) from the alternator bracket.

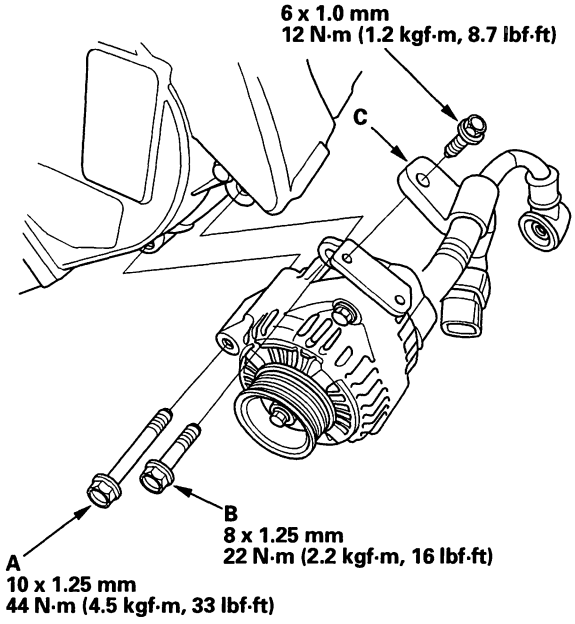

8. Install in the reverse order of removal.

9. Enter the anti-theft code for the radio, then enter the customer's radio station presets.

BACK

Auto-Tensioner Inspection/Replacement

1. Check the position of the auto-tensioner indicator's pointer (A), start the engine, then check the position of the pointer again. If the position changes, go to step 5.

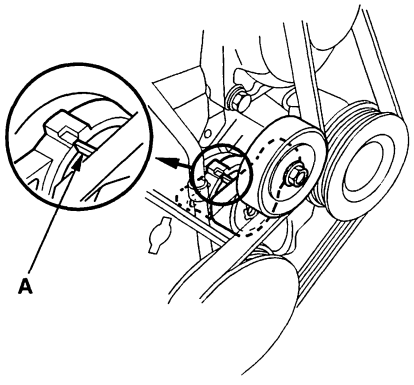

2. Check for abnormal noise from the tensioner pulley. If you hear abnormal noise, replace the tensioner pulley.

3. Stop the engine, then remove the alternator belt (see page 4-31).

4. Check if the auto-tensioner (A) moves smoothly and check for abnormal noise when the pulley is turned counterclockwise with the designated tool. If the auto-tensioner does not move smoothly or if the there is abnormal noise. Replace the auto-tensioner. Do not move the auto-tensioner beyond its limit.

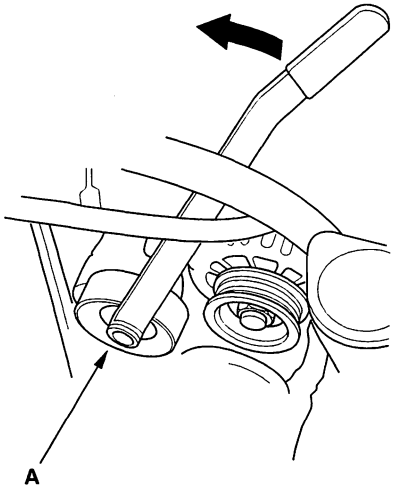

5. Remove the auto-tensioner.

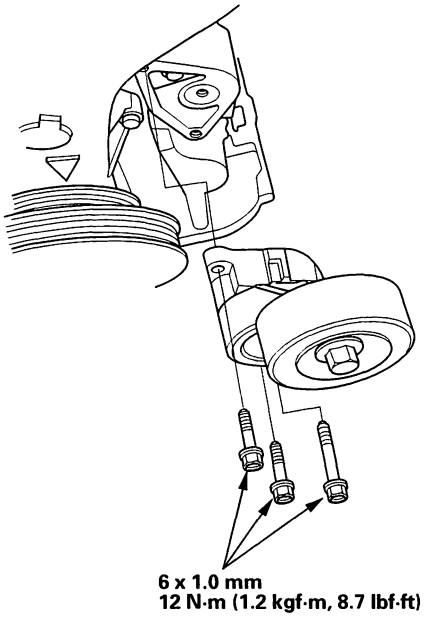

(cont'd)

Auto-Tensioner Inspection/Replacement (cont'd)

6. Clamp the auto-tensioner (A) by using 2 bolts (6 mm diameter) (B) and vise (C) in a vise as shown. Do not clamp the auto-tensioner itself.

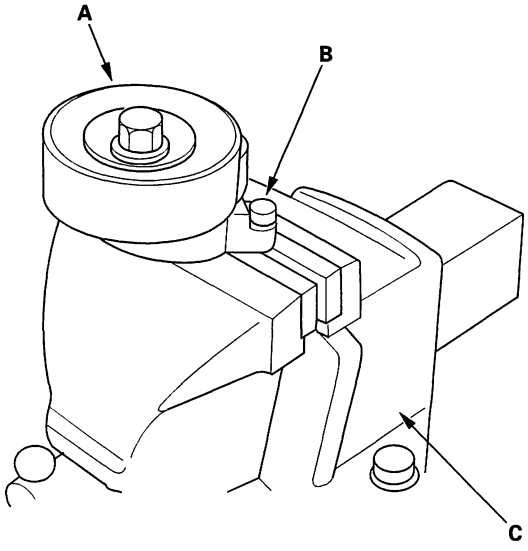

7. Attach a torque wrench (A) to the pulley bolt. Measure the torque when the tensioner is turned counterclockwise. If the torque is less than specified value, replace the auto tensioner.

23 N·m (2.3 kgf·m, 17 lbf·ft)

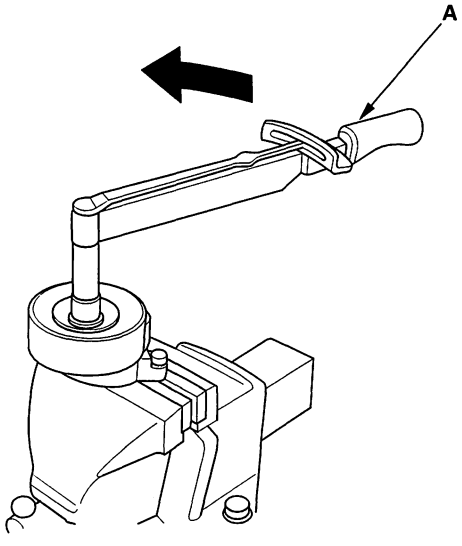

8. If necessary, remove the pulley bolt (A) (left-hand threads), and replace the tensioner pully (B).

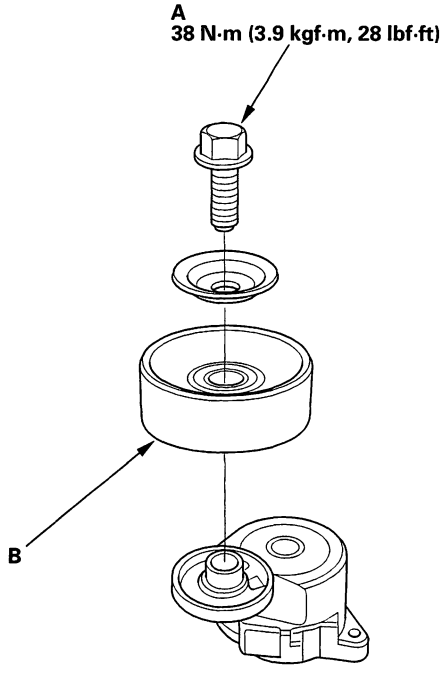

BACK

Alternator Overhaul - '00-02 models

Exploded View

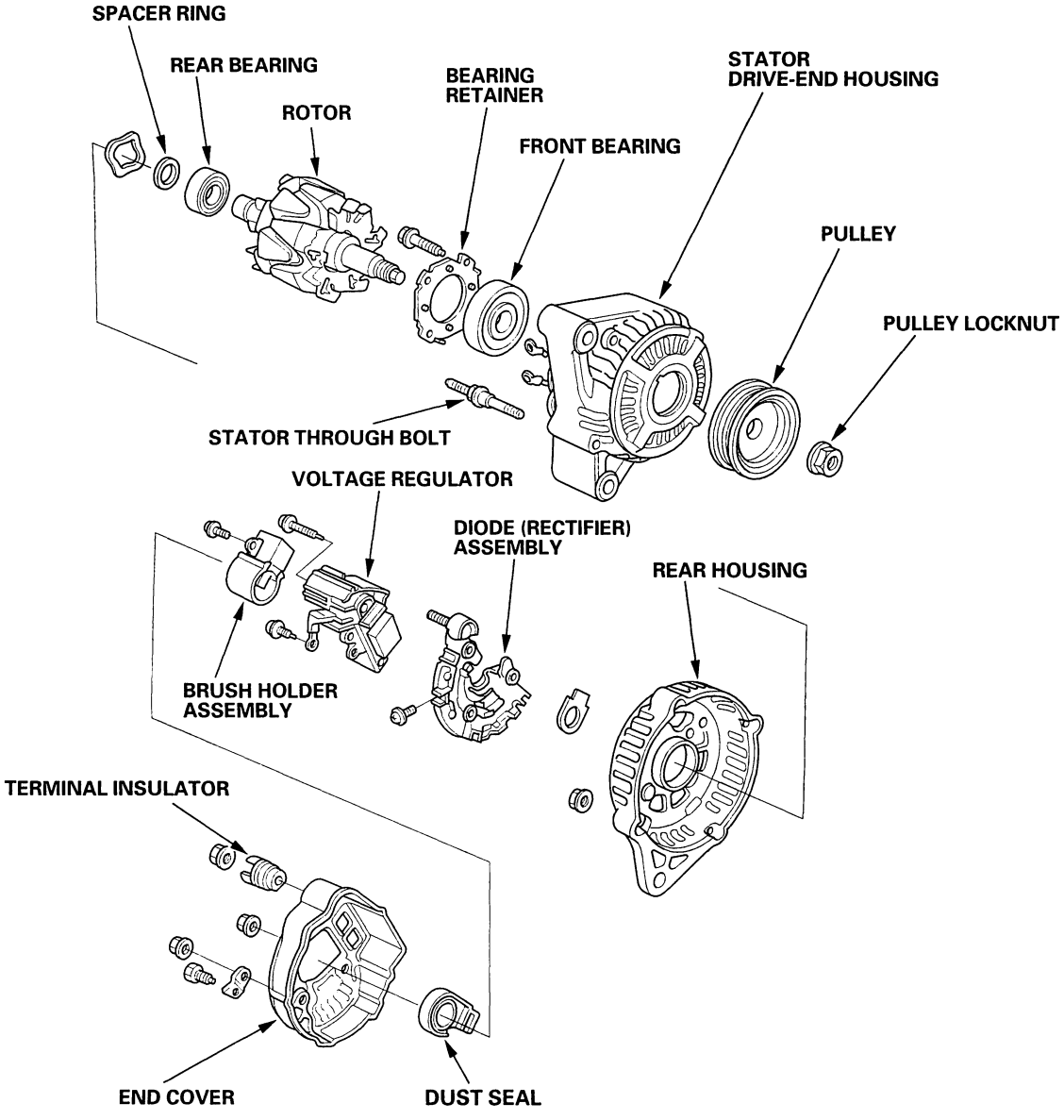

(cont'd)

Alternator Overhaul - '00-02 models (cont'd)

Special Tools Required
- Driver 07749-0010000
- Driver Attachment, 52 x 55 mm 07746-0010400

NOTE: Refer to the Exploded View as needed during this procedure.

1. Test the alternator and regulator before you remove them (see step 1 on page 4-27).

2. Remove the alternator (see page 4-31).

3. If the front bearing needs replacing, remove the pulley locknut with a 10 mm wrench (A) and a 22 mm wrench (B). If necessary, use an impact wrench.

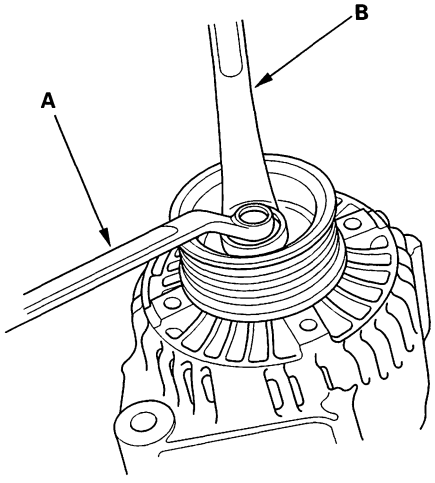

4. Remove the 3 flange nuts (A) and the screw (B) from the alternator, then remove the plate terminal (C).

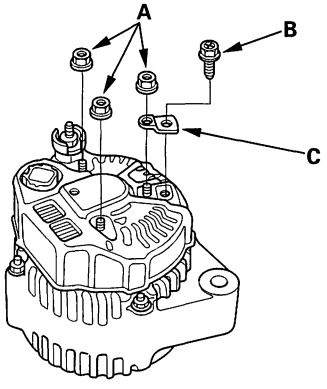

5. Remove the washer nut (A) and insulator (B) from the "B" terminal, then remove the end cover (C) and dust seal (D).

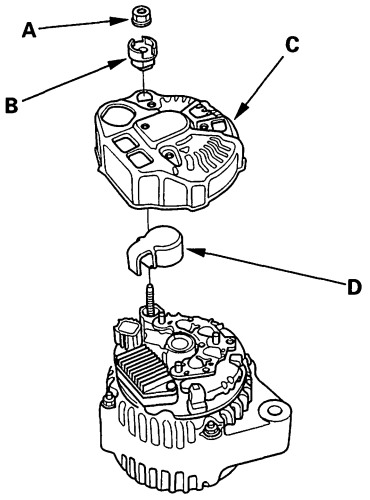

6. Remove the brush holder.

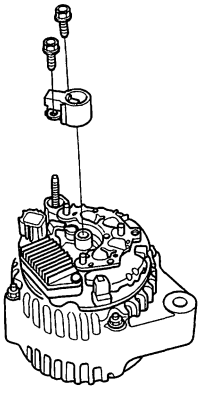

BACK

7. Remove the voltage regulator.

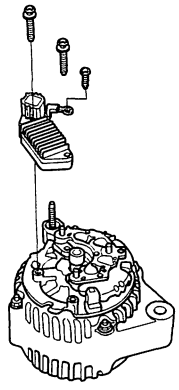

8. Remove the 4 screws (A), then remove the rectifier (B) and rubber seal (C).

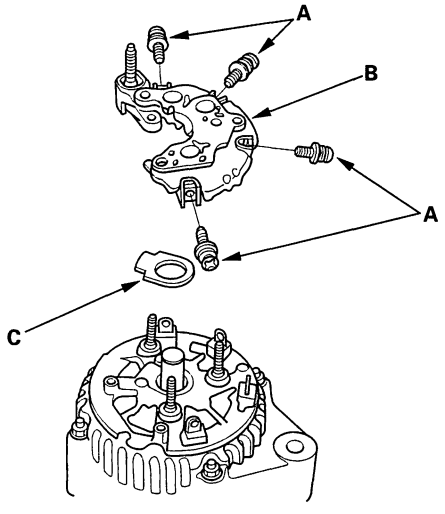

9. Remove the 4 flange nuts.

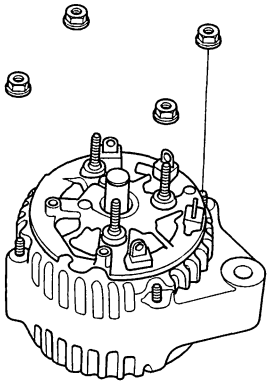

10. Remove the 4 insulators (A), rear housing (B) and washer (C).

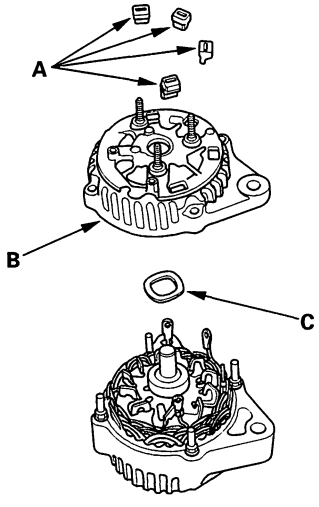

(cont'd)

Alternator Overhaul - '00-02 models (cont'd)

11. (If you are not replacing the front bearing and/or rear bearing, go to step 18). Remove the rotor from the stator drive end housing.

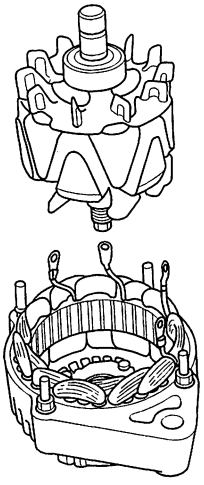

12. Inspect the rotor shaft for galling, and inspect the bearing journal surface in the stator housing for seizure marks.

    - If either the rotor or stator housing is damaged, replace the alternator.
    - If both the rotor and the stator housing are OK, go to step 13.

13. Remove the rear bearing using a puller as shown.

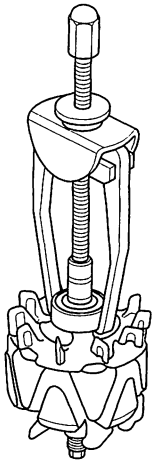

14. With a hammer and commercially available tools shown, install a new rear bearing in the rotor shaft.

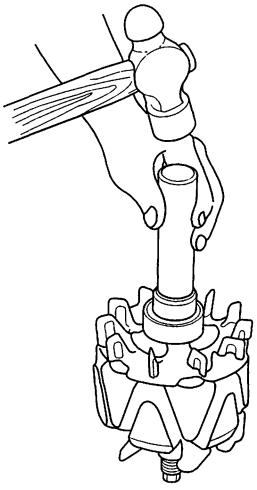

15. Remove the front bearing retainer plate.

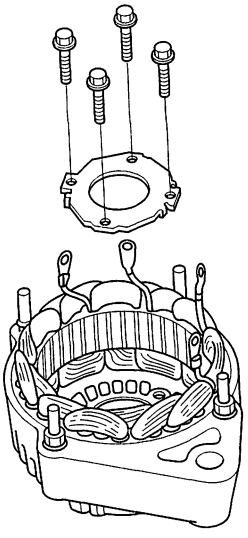

BACK

16. Support the stator housing in a vise, and drive out the front bearing with a brass drift (A) and hammer.

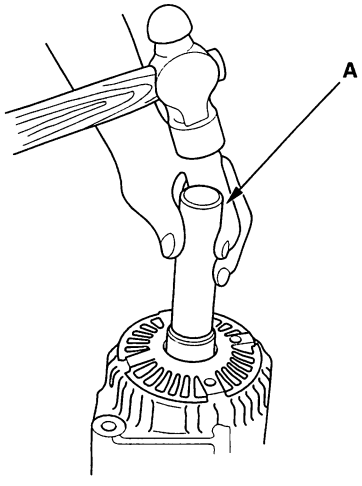

17. With a hammer and the special tools, install a new front bearing in the stator housing.

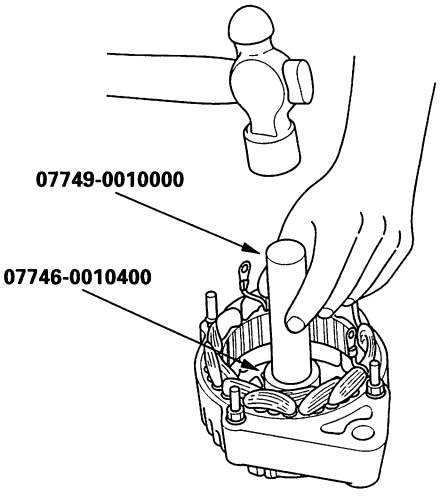

Rectifier Test

18. Check for continuity in each direction, between the B terminal (A) and P terminals (B), and between the E terminal (C) and P terminals (B) of each diode pair. All diodes should have continuity in only one direction. Because the rectifier diodes are designed to allow current to pass in one direction, and the rectifier is made up of 8 diodes (4 pairs), you must test each diode in both directions for continuity with an ohmmeter that has diode checking capability: a total of 16 checks.

- If any diode failed, replace the rectifier assembly. (Diodes are not available separately.)
- If all the diodes are OK, go to step 19.

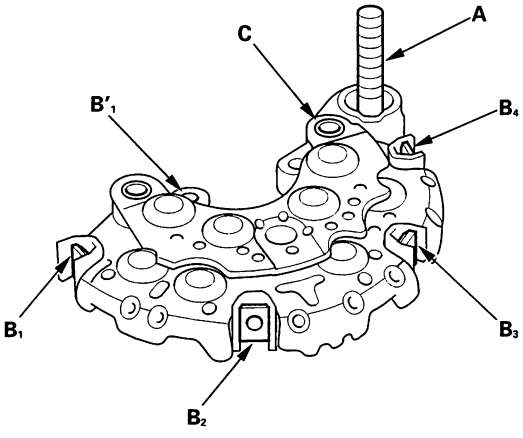

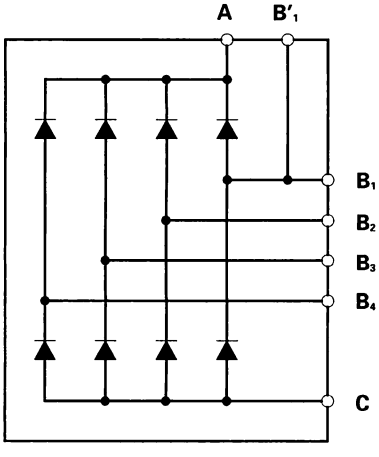

(cont'd)

Alternator Overhaul - '00-02 models (cont'd)

Alternator Brush Inspection

19. Measure the length of both brushes (A) with a vernier caliper (B).

    - If either brush is shorter than the service limit, replace the brush assembly.
    - If brush length is OK, go to step 20.

    Alternator Brush Length:
    Standard (New): 10.5 mm (0.41 in.)
    Service Limit: 1.5 mm (0.06 in.)

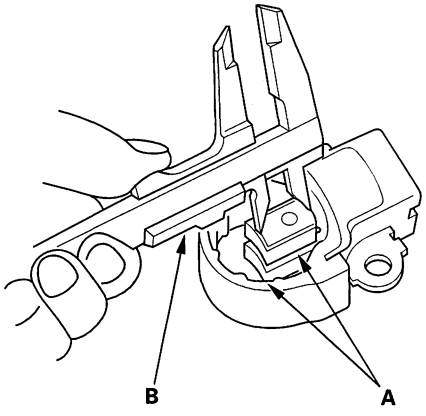

Rotor Slip Ring test

20. Check that there is continuity between the slip rings (A).

    - If there is continuity, go to step 21.
    - If there is no continuity, replace the alternator.

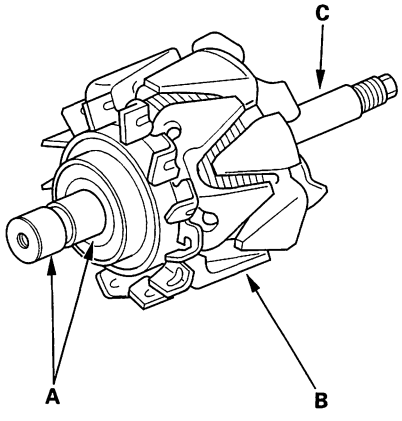

21. Then check that there is no continuity between each slip ring (A) and the rotor (B) and the rotor shaft (C).

    - If there is no continuity, go to step 22.
    - If there is continuity, replace the alternator.

Stator Test

22. Check that there is continuity between each pair of leads (A).

    - If there is continuity, go to step 23.
    - If there is no continuity, replace the alternator.

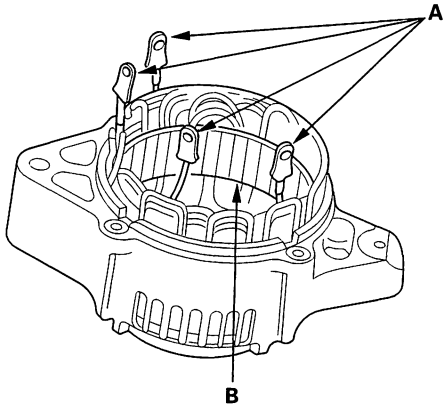

23. Check for no continuity between each lead and the coil core (B).

    - If there is no continuity, go to step 24.
    - If there is continuity, replace the alternator.

24. Reassemble the alternator in reverse order of disassembly, and note these items:

    - Be careful not to get any grease or oil on the slip rings.
    - If you removed the pulley, tighten its locknut to 111 N·m (11.3 kgf·m, 81.7 lbf·ft) when you reinstall it.

BACK

Cruise Control

Component Location Index

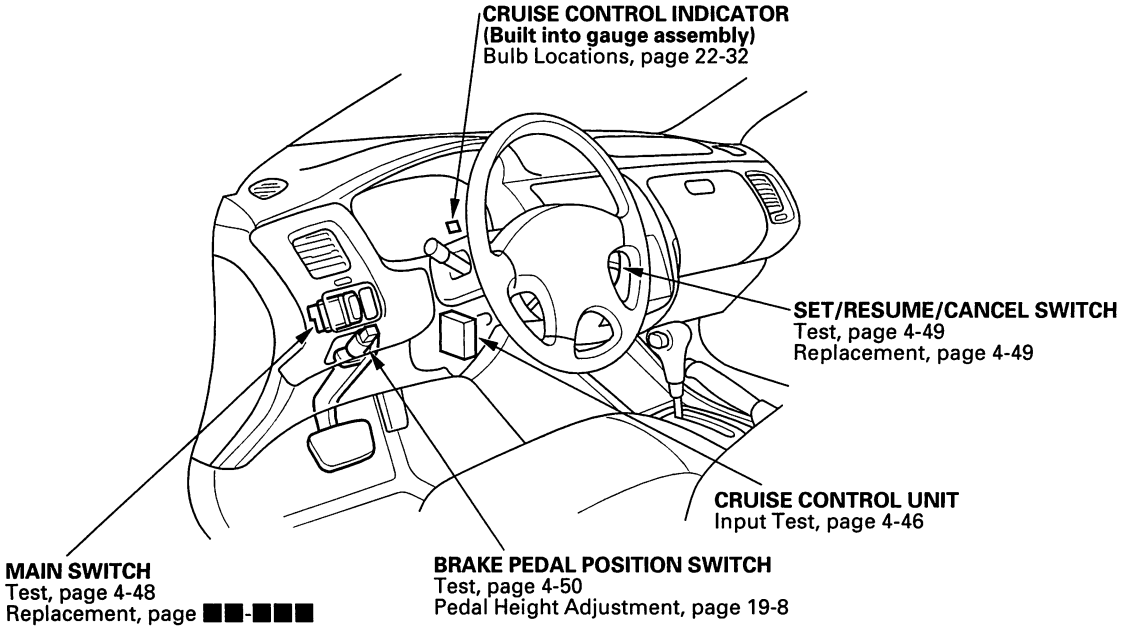

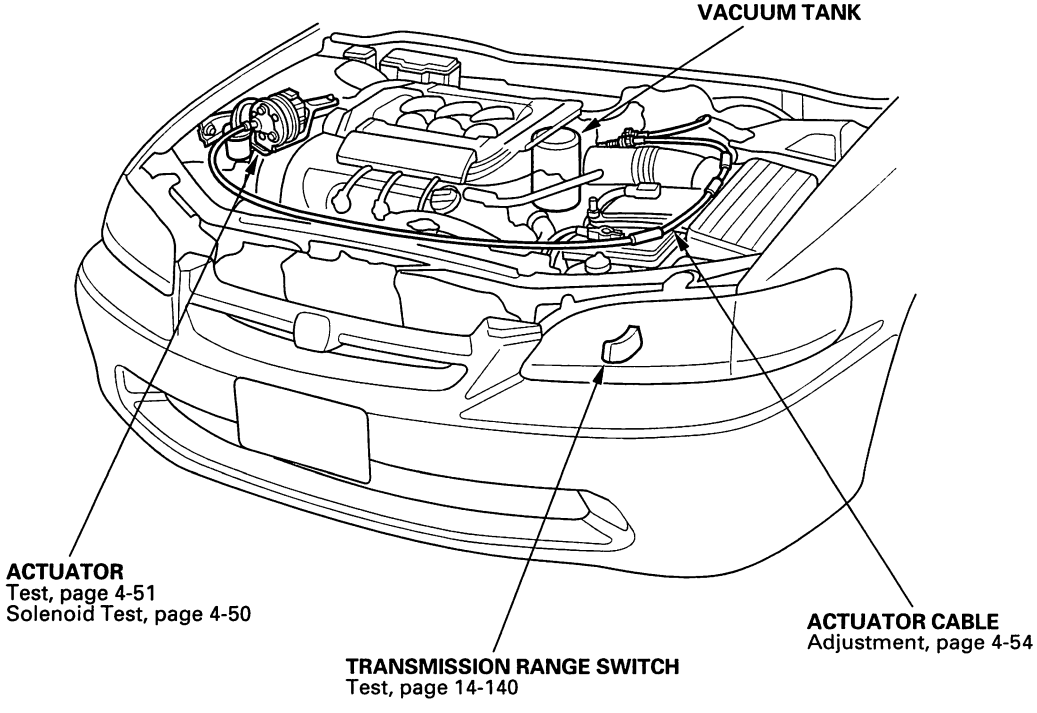

Circuit Diagram

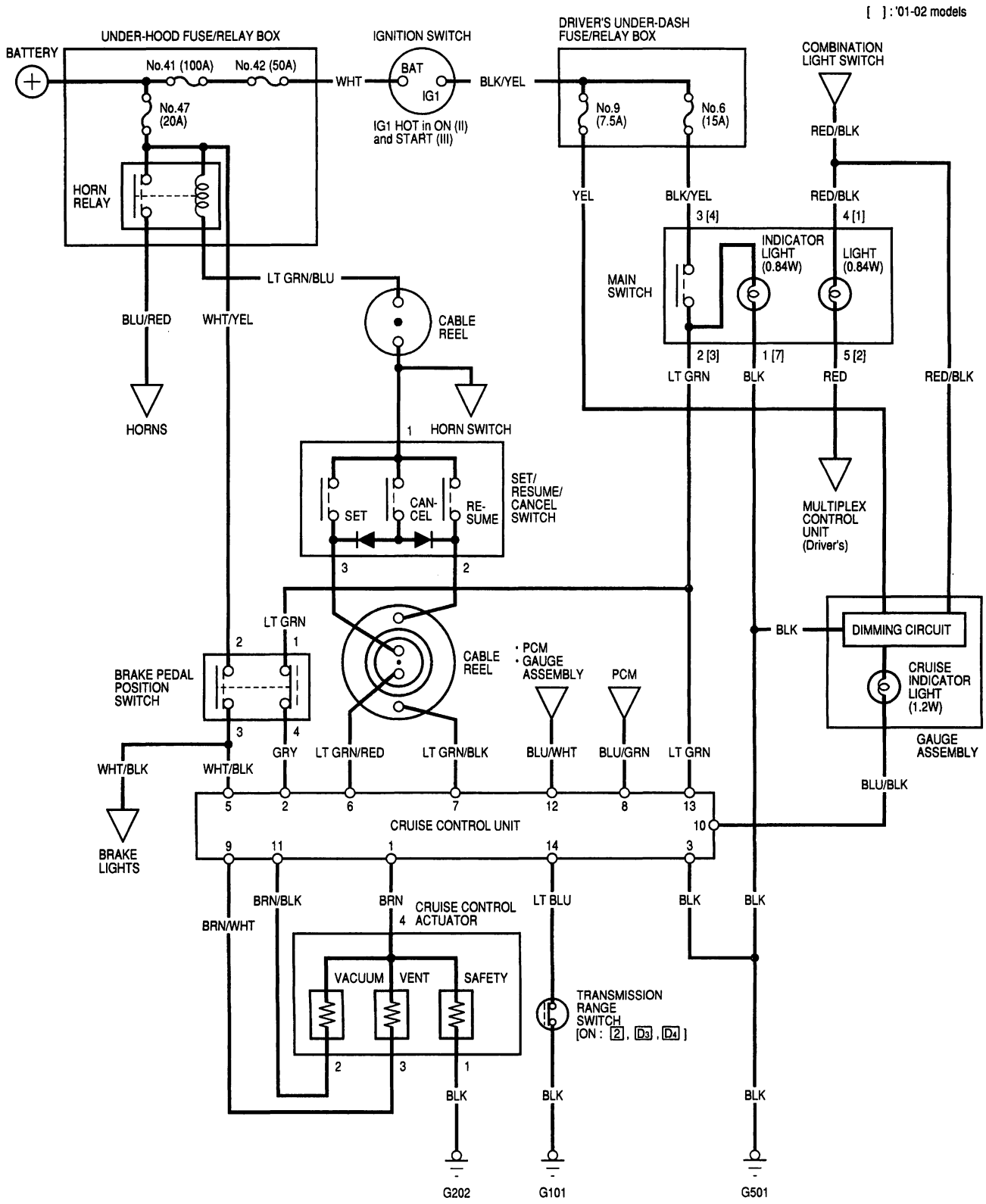

BACK

Symptom Troubleshooting Index

NOTE:
- The numbers in the table show the troubleshooting sequence.
- Before troubleshooting,
  - check that the speedometer works properly.
  - check for proper engine vacuum at the actuator.
  - check the No. 9 (7.5A) and No. 6 (15A) fuses in the driver's under-dash fuse/relay box, and No. 47 (20A) fuse in the under-hood fuse/relay box.
  - check that the horn sounds.
  - check the tachometer to see if it works properly.

Symptom	Diagnostic procedure	Also check for
Cruise control cannot be set.	1. Check main switch (see page 4-48) 2. Check SET/RESUME/CANCEL switch (see page 4-49) 3. Check brake pedal position switch and mounting (see page 4-50) 4. Check transmission range switch (see page 14-140) 5. Check control unit (see page 4-46)	• Poor ground: G101 • Open circuit, loose or disconnected terminals: LT GRN, LT GRN/RED, GRY, LT BLU, BLU/WHT
Cruise control can be set, but indicator light does not go on.	Check control unit (see page 4-46)	• Poor ground: G501 • Open circuit, loose or disconnected terminals: YEL, BLU/BLK
Cruise speed is noticeably higher or lower than what was set.	1. Check actuator and vent line for the actuator (see page 4-51) 2. Check control unit (see page 4-46)	
Excessive overshooting or undershooting when trying to set speed.	1. Check actuator and vent line for the actuator (see page 4-51) 2. Check control unit (see page 4-46)	
Speed fluctuates on a flat road with cruise control set.	1. Check actuator (see page 4-51) 2. Check control unit (see page 4-46)	
Vehicle does not decelerate or accelerate accordingly when SET/RESUME/CANCEL button is pushed.	1. Check SET/RESUME/CANCEL switch (see page 4-49) 2. Check control unit (see page 4-46)	Open circuit, loose or disconnected terminals: LT GRN/RED, LT GRN/BLK
Set speed not cancelled (engine rpm stays high) when shift lever is moved to N position.	1. Check transmission range switch (see page 14-140) 2. Check control unit (see page 4-46)	Open circuit, loose or disconnected terminals, short to ground: LT BLU
Set speed is not cancelled when brake pedal is pushed.	1. Check brake pedal position switch and mounting (see page 4-50) 2. Check control unit (see page 4-46)	Open circuit, loose or disconnected terminals: WHT/BLK

(cont'd)

Symptom Troubleshooting Index (cont'd)

Symptom	Diagnostic procedure	Also check for
Set speed, does not cancell when main switch is pushed OFF	1. Check main switch (see page 4-48) 2. Check control unit (see page 4-46)	Shorted main switch, or short to power: LT GRN
Set speed, does not cancelled when CANCEL button is pushed	1. Check SET/RESUME/CANCEL switch (see page 4-49) 2. Check control unit (see page 4-46)	Open circuit, loose or disconnected terminals: LT GRN/ RED, LT GRN/BLK
Set speed will not resume when RESUME button is pushed (with main switch on, set speed is temporarily cancelled by pressing brake pedal).	1. Check SET/RESUME/CANCEL switch (see page 4-49) 2. Check control unit (see page 4-46)	Open circuit, loose or disconnected terminals: LT GRN/ BLK
The transmission shifts down slower than normal when going up a hill with the cruise control on.	1. Troubleshoot the cruise control communication circuit (see page 4-45)	Open circuit, loose or disconnected terminals, short to ground: BLU/GRN

BACK

Cruise Control Communication Circuit Troubleshooting

1. Start the engine.

2. Turn on the cruise control main switch, then drive the vehicle to speeds over 25 mph (40 km/h) with the cruise control.

   Does the cruise control operate?

   YES—Go to step 3.

   NO—Check the cruise control unit (see page 4-46). or cruise control actuator.■

3. Turn the ignition switch OFF.

4. Disconnect Powertrain Control Module (PCM) connector A (32P) and cruise control unit 14P connector.

5. Check for continuity between the PCM connector terminal A5 and body ground.

PCM CONNECTOR A (32P)

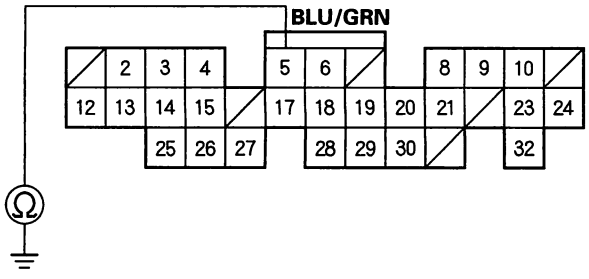

Wire side of female terminals

Is there continuity?

YES—Repair a short to ground in the wire between the PCM connector terminal A5 and the cruise control unit 14P connector terminal No. 8.■

NO—Go to step 8.

6. Reconnect PCM connector A (32P) and cruise control unit 14P connector.

7. Turn the ignition switch ON (II).

8. Connect a voltmeter between cruise control unit 14P connector terminal No. 8 and body ground. Test-drive the vehicle at speeds over 25 mph (40 km/h) with the cruise control set, and watch the voltmeter.

CRUISE CONTROL UNIT 14P CONNECTOR

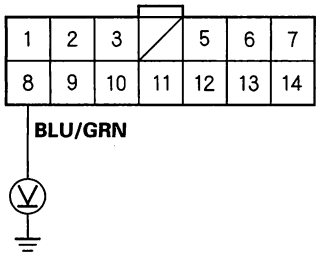

Wire side of female terminals

Is there about 1 V?

YES—Go to step 9.

NO—Substitute a known-good control unit. If the system works properly, replace the cruise control unit.■

9. Connect a voltmeter between PCM connector terminal A15 and body ground. Drive the vehicle at speeds over 25 mph (40 km/h) with the cruise control set, and watch the voltmeter.

PCM CONNECTOR A (32P)

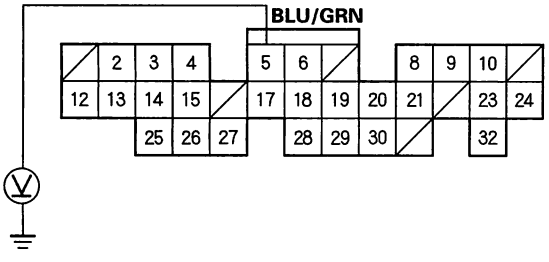

Wire side of female terminals

Is there about 1 V?

YES—Check for loose connections of the BLU/GRN wire between the cruise control unit and the PCM. If necessary replace the PCM and recheck, refer to '98-02 Accord Service Manual (see page 11-3).■

NO—Repair or open in the BLU/GRN wire between the A5 terminal and the cruise control unit.■

Control Unit Input Test

SRS components are located in this area. Review the SRS component locations, precautions, and procedures in the SRS before performing repairs or service, refer to the '98-02 Accord Service Manual (see page 23-25).

1. Remove the driver's dashboard lower cover.

2. Disconnect the 14P connector from the control unit.

3. Inspect the connector and socket terminals to be sure they are all making good contact.

   - If the terminals are bent, loose, or corroded, repair them as necessary, and recheck the system.
   - If the terminals look OK, go to step 4.

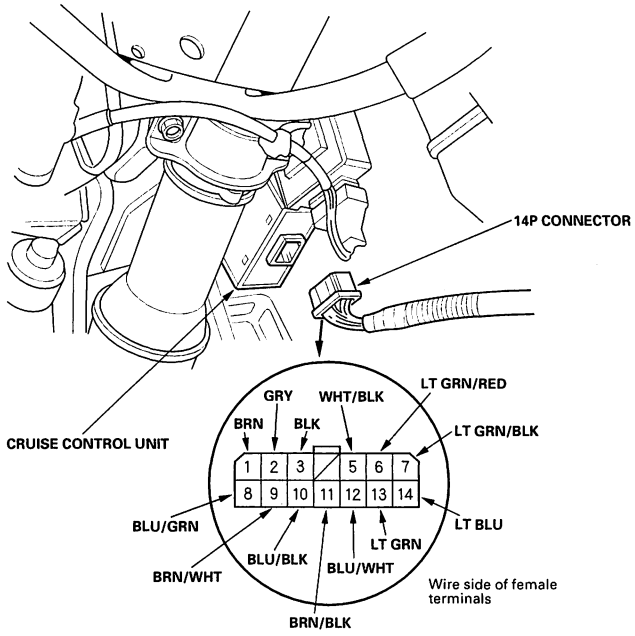

4. With the 14P connector disconnected, make these input tests.

Cavity	Wire	Test condition	Test: Desired result	Possible cause if result is not obtained
9	BRN/WHT	Under all conditions	Check for resistance to ground: There should be 80–120 Ω.	• Faulty actuator solenoid • Poor ground (G202) • An open in the wire • Short to ground
1	BRN	Under all conditions	Check for resistance to ground: There should be 40–60 Ω.	
11	BRN/BLK	Under all conditions	Check for resistance to ground: There should be 70–110 Ω.	
2	GRY	Ignition switch ON (II), main switch ON and brake pedal depressed, then released	Check for voltage to ground: There should be 0 V with the pedal depressed and battery voltage with the pedal released.	• Faulty brake pedal position switch • An open in the wire • Open in cruise control main switch. • Blown No. 6 (15A) fuse in the driver's under-dash fuse/relay box

BACK

Cavity	Wire	Test condition	Test: Desired result	Possible cause if result is not obtained
3	BLK	Under all conditions	Check for continuity to ground: There should be continuity.	• Poor ground (G501) • An open in the wire
5	WHT/BLK	Brake pedal depressed, then released	Check for voltage to ground: There should be battery voltage with the pedal depressed, and 0 V with the pedal released.	• Blown No. 47 (20A) fuse in the under-hood fuse/ relay box • Faulty brake pedal position switch • An open in the wire
6	LT GRN/ RED	Set button pushed	Check for voltage to ground: There should be battery voltage. When testing terminal No. 6, there should be no voltage on terminal No. 7.	• Blown No. 47 (20A) fuse in the under-hood fuse/ relay box • Faulty horn relay • Faulty set/resume/cancel switch • Faulty cable reel • An open in the wire
7	LT GRN/ BLK	Resume button pushed	Check for voltage to ground: There should be battery voltage. When testing terminal No. 7, there should be no voltage on terminal No. 6.	
10	BLU/BLK	Ignition switch ON (II)	Attach to ground: Cruise indicator light in the gauge assembly should comes on.	• Blown bulb • Blown No. 9 (7.5A) fuse in the under-dash driver's fuse/relay box • Faulty dimming circuit in the gauge assembly • An open in the wire
12	BLU/WHT	Ignition switch ON (II) and main switch ON; raise the front of the vehicle, and rotate 1 wheel slowly while holding the other wheel	Check for voltage between the BLU/WHT (+) and BLK (−) terminals: There should be 0−8 V −0−5 V (2.5 V average).	• Faulty vehicle speed sensor • An open in the wire • Short to ground
13	LT GRN	Ignition switch ON (II) and main switch ON	Check for voltage to ground: There should be battery voltage.	• Blown No. 6 (15A) fuse in the under-dash driver's fuse/ relay box • Faulty main switch • An open in the wire
14	LT BLU	Shift lever in 2, D3 or D4	Check for continuity to ground: There should be continuity.	• Faulty transmission range switch • Poor ground (G401) • An open in the wire
8	BLU/GRN	Reconnect the cruise control unit 14P connector, start the engine, main switch ON and drive the vehicle to speeds over 25 mph (40 km/h) with the cruise control set.	Check for voltage to ground: There should be approx. 1 V	• Faulty cruise control unit • Short to ground • Faulty PCM

5. If any test indicates a problem, find and correct the cause, then recheck the system. If all the input tests prove OK, the control unit may be faulty. Substitute a known-good control unit and retest. If the system works properly, replace the control unit.

Main Switch Test/Replacement

'98-00 models:

1. Carefully pry the switch (A) out of the instrument panel.

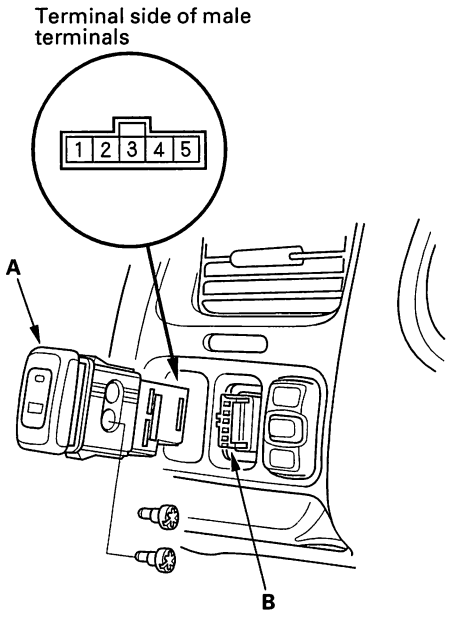

2. Disconnect the 5P connector (B) from the switch.
3. Check for continuity between the terminals in each switch position according to the table.

Position \ Terminal	1		2	3	4		5
OFF	○	⊗	○		○	⊗	○
ON	○	⊗	○	○	○	⊗	○

4. If the continuity is not as specified, replace the switch.

'01-02 model:

1. Carefully pry the switch (A) out of the instrument panel.

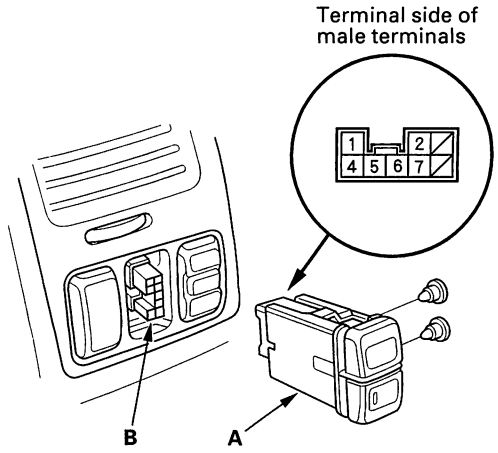

2. Disconnect the 8P connector (B) from the switch.
3. Check for continuity between the terminals in each switch position according to the table.

Position \ Terminal	4		7	5	1		2
OFF	○	⊗	○		○	⊗	○
ON	○	⊗	○	○	○	⊗	○

4. If the continuity is not as specified, replace the switch.

BACK

Set/Resume/Cancel Switch Test/Replacement

1. Carefully remove the set/resume/cancel switch cover (A) by prying between the cover and the switch (B) in the sequence shown.

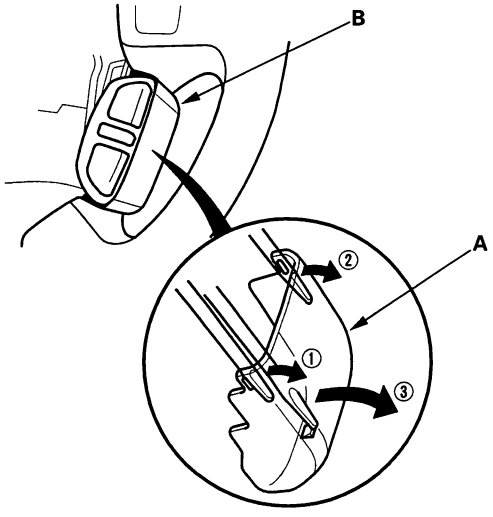

2. Remove the 2 screws (A), then remove the switch (B).

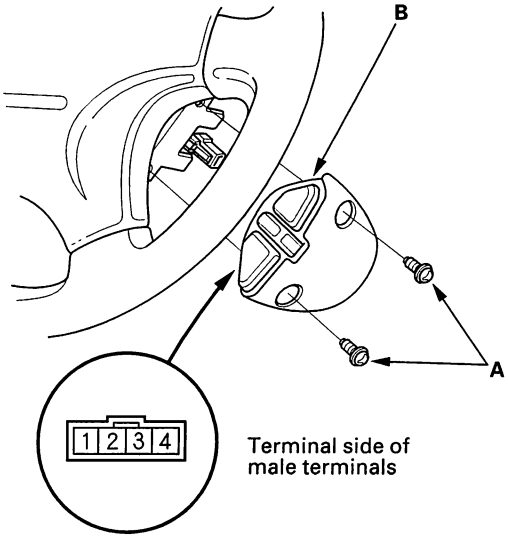

3. Check for continuity between the terminals in switch position according to the table.

- If there is continuity and it matches the table, but switch failure is occurred on the cruise control unit input test, check and repair the wire harness on the switch circuit.
- If there is no continuity in one or both positions, replace the switch.

Terminal / Position	1		2	3
SET (ON)	○			○
RESUME (ON)	○		○	
CANCEL (ON)	○	▶ ▶	○	○

Brake Pedal Position Switch Test

1. Disconnect the 4P connector from the switch (A).

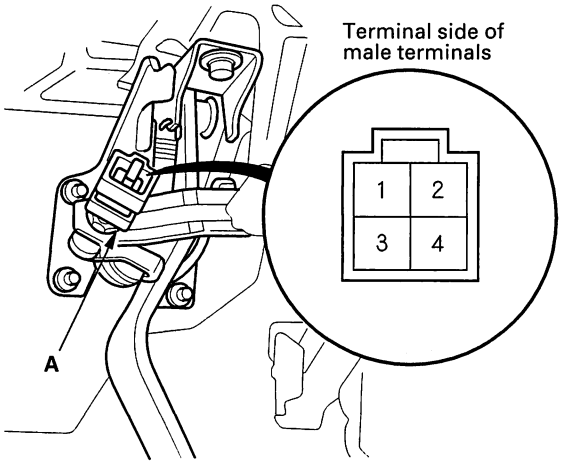

2. Remove the brake pedal position switch.

3. Check for continuity between the terminals according to the table.

Terminal / Brake Switch	1	2	3	4
DEPRESSED		○	○	
RELEASED	○			○

4. If necessary, replace the switch or adjust the pedal height, refer to '98-02 Accord Service Manual (see page 19-5).

Actuator Solenoid Test

1. Disconnect the 4P connector (A) from the actuator.

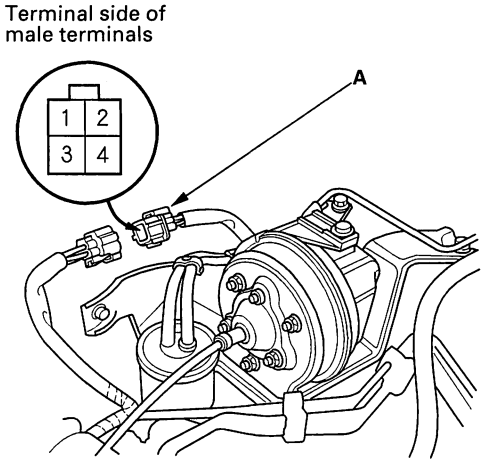

2. Check for resistance between the terminals according to the table.

   NOTE: Resistance will vary slightly with temperature; specified resistance is at 70°F (20°C).

Terminal / Resistance (Ω)	1	2	3	4
VENT SOLENOID 40—60 Ω			○	○
VACUUM SOLENOID 30—50 Ω		○		○
SAFETY SOLENOID 40—60 Ω	○			○

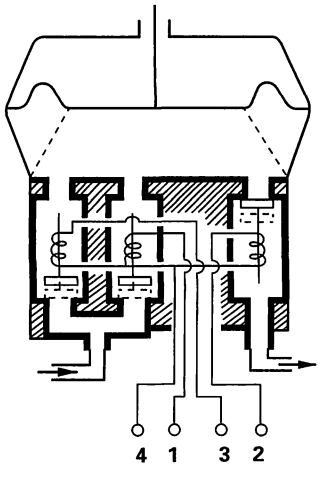

3. If the resistance is not as specified, replace the actuator.

BACK

Actuator Test

Special Tools Required
Vacuum Pump/Gauge, 0–30 in.Hg
A973X-041-XXXXX

1. Disconnect the actuator cable from the actuator rod and disconnect the 4P connector (A).

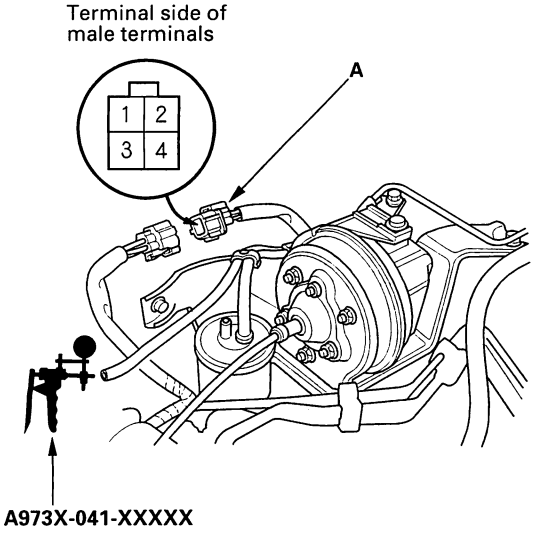

2. Connect battery power to the No. 4 terminal and ground the No. 1, No. 2 and No. 3 terminals.

3. Connect a vacuum pump to the vacuum hose, then apply vacuum to the actuator.

4. The actuator rod (A) should pull in completely. If the rod pulls in only part-way or not at all, check for a leaking vacuum line or defective solenoid.

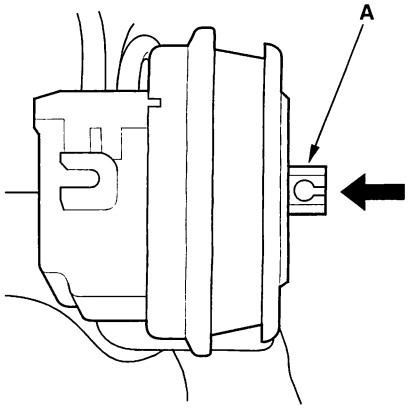

5. With voltage and vacuum still applied, try to pull the actuator rod out by hand. You should not be able to pull it out. If you can, it is defective.

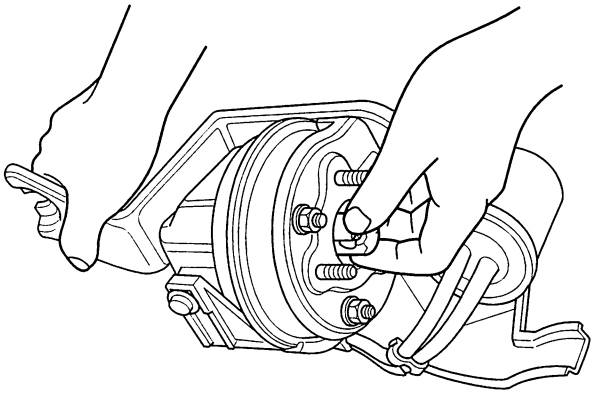

6. Disconnect ground from the No. 3 terminal. The actuator rod should return. If it does not return, but the vent hose and filter are not plugged, the solenoid valve assembly is defective.

7. Repeat steps 2 through 5, and disconnect ground from the No. 1 terminal. The actuator rod should return. If it does not return, but the vent hose and filter are not plugged, the solenoid valve assembly is defective.

8. If you replace the solenoid valve assembly, be sure to use new O-rings on each solenoid.

9. Disconnect power and ground from the 4P connector. Disconnect the vent hose from the actuator. Connect a vacuum pump to the actuator vent hose port, and apply vacuum. The actuator rod should pull in completely. If not, the vacuum valve is stuck open. Replace the actuator.

Actuator/Solenoid/Cable Replacement

Removal/Installation

1. Disconnect the 4P connector (A) from the actuator.

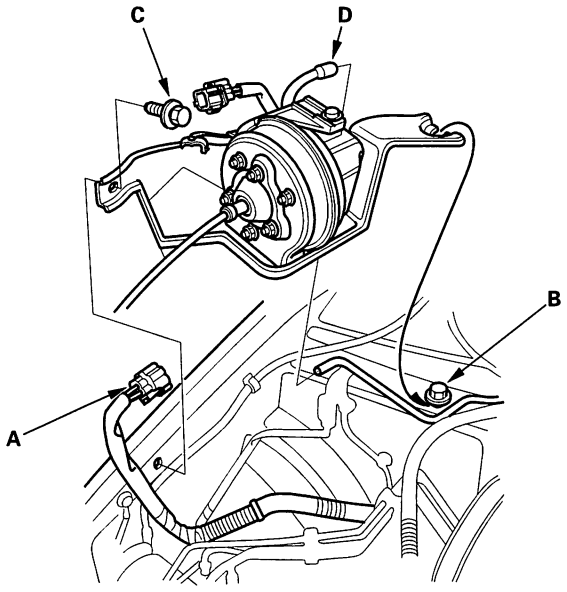

2. Loosen the mounting bolt (B), and remove the mounting bolt (C), then remove the actuator with the bracket.

3. Disconnect the vacuum hose (D).

4. Remove the 3 nuts (A).

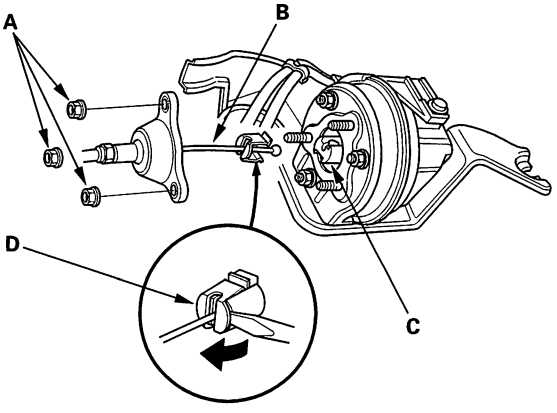

5. Disconnect the actuator cable (B) from the actuator rod (C) by releasing the clip (D) from the rod with a screwdriver.

6. Loosen the locknut (A), then disconnect the actuator cable (B) from the throttle linkage (C).

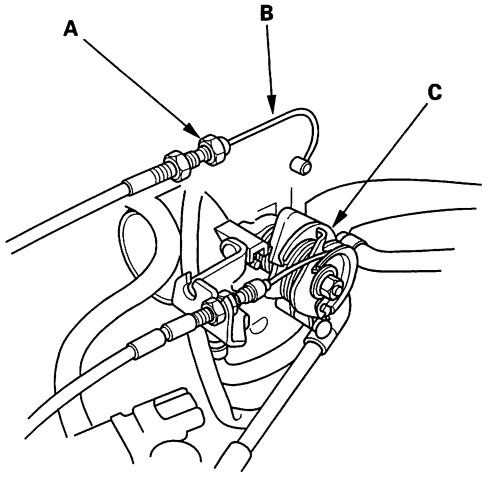

7. Install in the reverse order of removal, and adjust the free play at the throttle linkage after connecting the actuator cable.

BACK

Disassembly/Reassembly

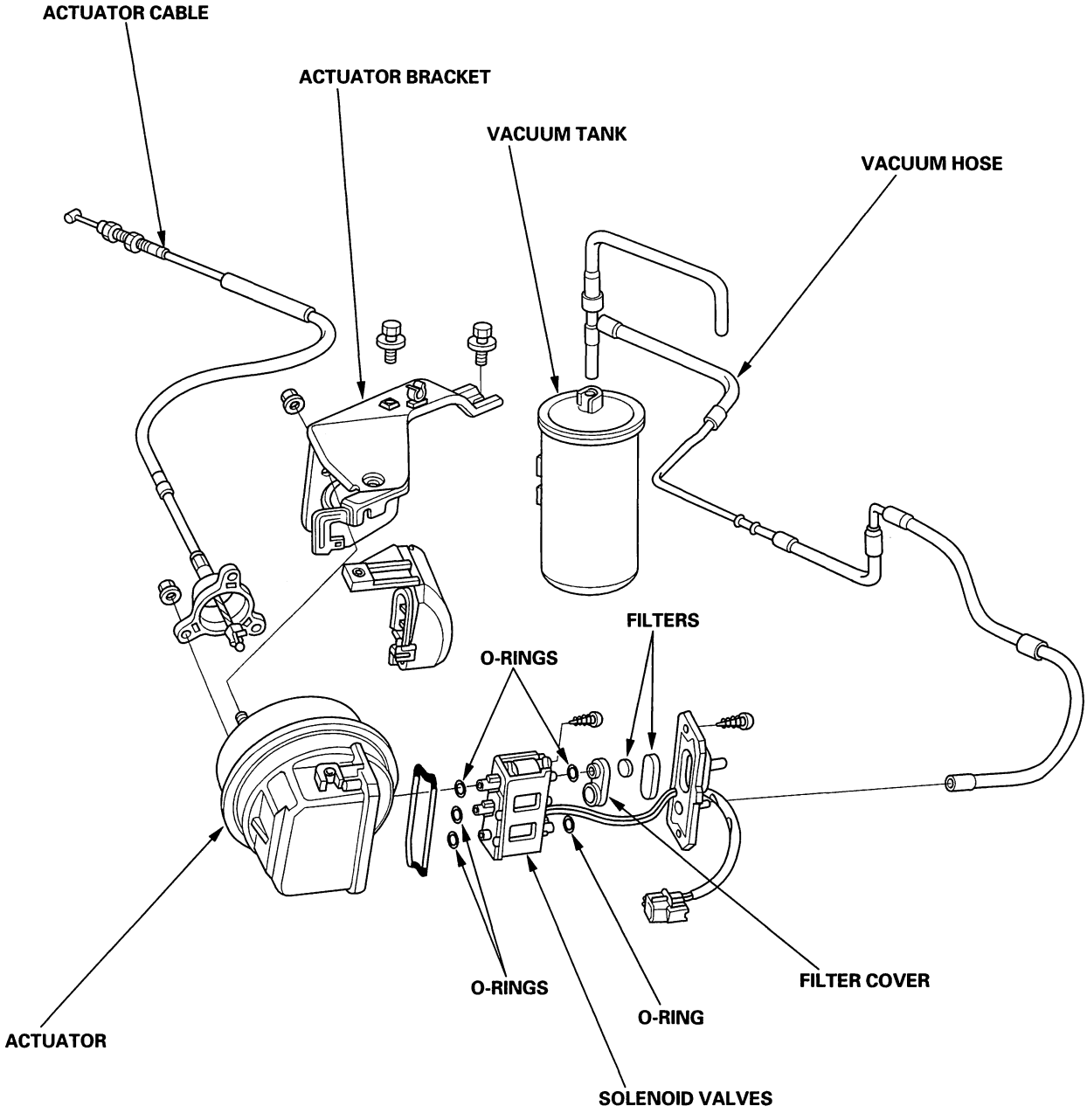

Actuator Cable Adjustment

1. Check that the actuator cable (A) moves smoothly with no binding or sticking.

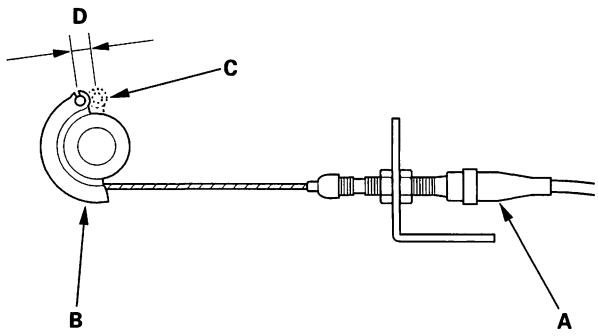

2. Start the engine. Hold the engine at 3,000 rpm with no load (N or P position) until the radiator fan comes on, then let it idle.

3. Measure the amount of movement of the output linkage (B) until the engine speed starts to increase. At first, the output linkage should be located at the fully closed position (C). The free play (D) should be 3.75±0.5 mm (0.15±0.02 in.).

4. If the free play is not within specs, move the cable to the point where the engine speed starts to increase, and tighten the locknut (A) and adjusting nut (B).

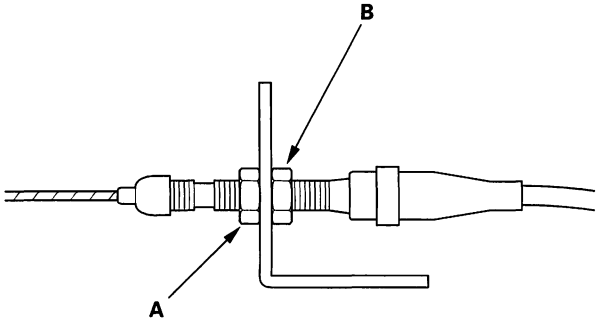

5. Turn the adjusting nut (B) until it is 3.75±0.5 mm (0.15±0.02 in.) away from the bracket (C).

3.75±0.5 mm (0.15±0.02 in.)

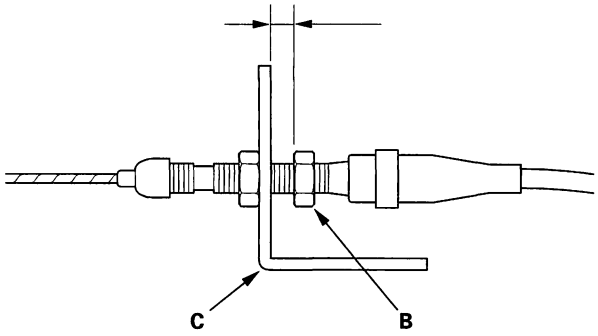

6. Pull the cable so that the adjusting nut (B) touches the bracket, and tighten the locknut (A).

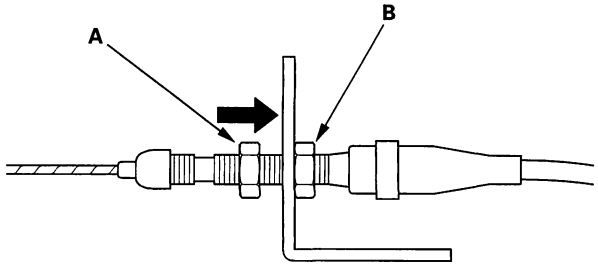

BACK

Engine Mount Control System

Component Location Index

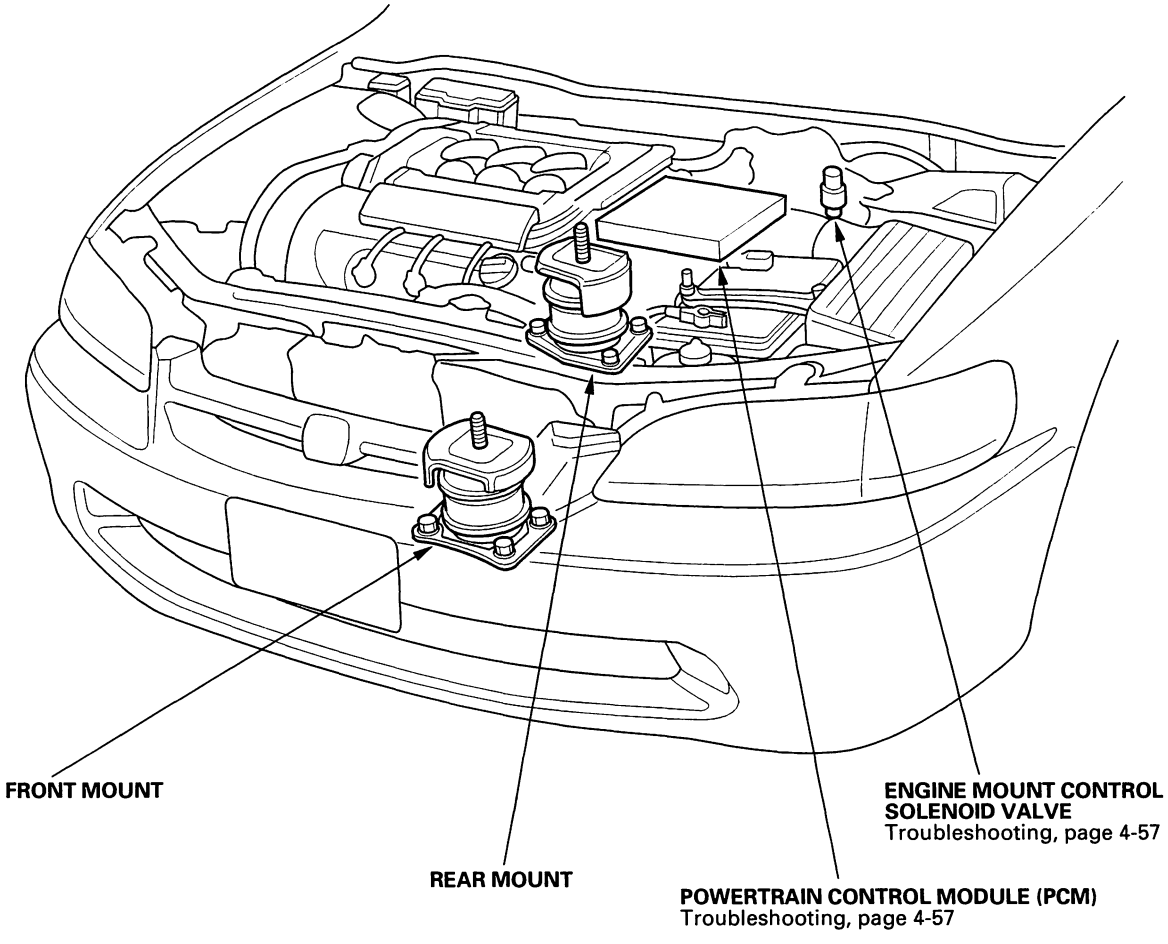

Engine Mount Control System

Circuit Diagram

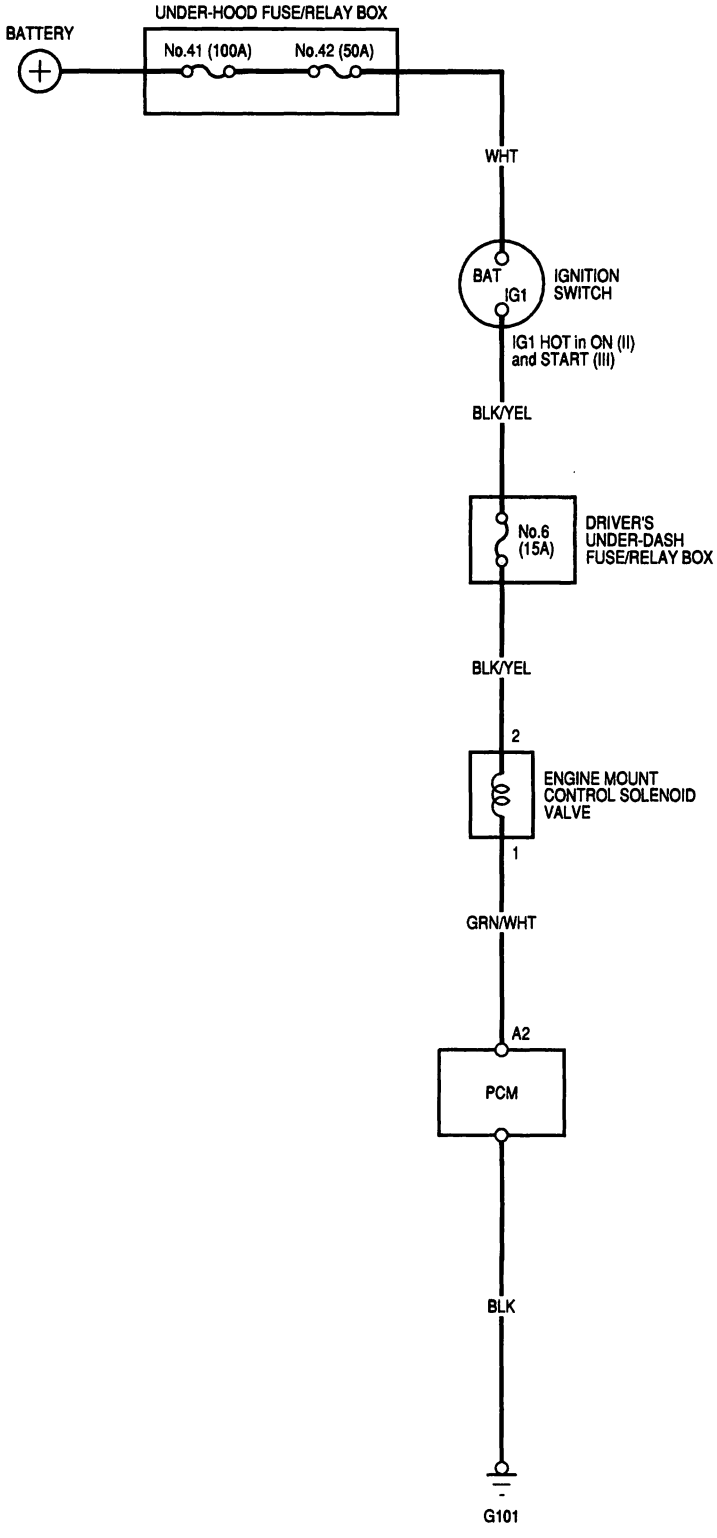

BACK

Troubleshooting

Special Tools Required
Vacuum Pump/Gauge, 0–30 in.Hg
A973X-041-XXXXX

NOTE: Check the vacuum hoses and lines for damage and proper connections before troubleshooting.

Follow this procedure if the engine vibrates excessively when idling.

1. Warm up the engine to normal operating temperature (the cooling fan comes on 2 times).

   Is the idle speed less than 800 rpm?

   YES—Go to step 2.

   NO—Adjust the idle speed (see page 11-87).■

2. Fully depress the brake pedal.

3. With the transmission in gear, have an assistant disconnect and reconnect the 2P connector from the engine mount control solenoid valve.

   Is there a noticeable change in idle smoothness when the 2P connector is disconnected?

   YES—Reconnect the 2P connector to the solenoid valve. The engine mount control system is OK.■

   NO—Go to step 4.

4. Shift to [N] or [P] position.

5. Disconnect the 2P connector from the engine mount control solenoid valve.

6. Measure voltage between the No. 2 terminal and body ground.

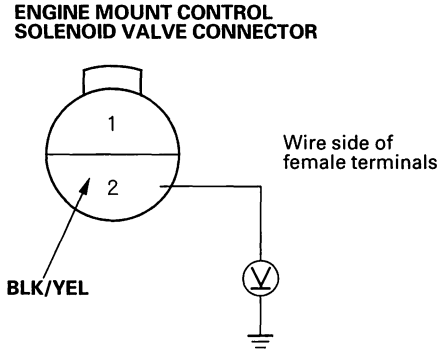

   Is there battery voltage?

   YES—Go to step 7.

   NO—Repair open in BLK/YEL wire between the 2P connector and No. 6 (15A) fuse in the driver's under-dash fuse/relay box.■

7. Measure voltage between the No. 1 and No. 2 terminals.

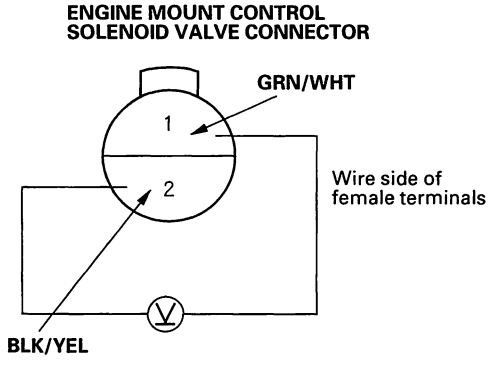

   Is there battery voltage?

   YES—Go to step 8.

   NO—Repair open in GRN/WHT wire between Powertrain Control Module (PCM) (A2) and the 2P connector. If the wire is OK, substitute a known-good PCM and recheck, refer to '98-02 Accord Service Manual (see page 11-3).■

(cont'd)

Troubleshooting (cont'd)

8. Raise the engine speed above 1,000 rpm.

9. Measure voltage between the No. 1 and No. 2 terminals.

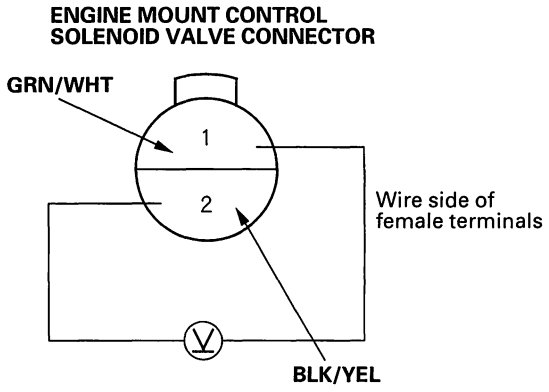

Is there battery voltage?

YES—Repair short to body ground in GRN/WHT wire between PCM (A2) and the 2P connector. If the wire is OK, substitute a known-good PCM and recheck, refer to '98-02 Accord Service Manual (see page 11-3).■

NO—Go to step 10.

10. Disconnect the upper vacuum hose (A) from the engine mount control solenoid valve (B), and connect a vacuum pump/gauge to the hose. Apply vacuum for 20 seconds.

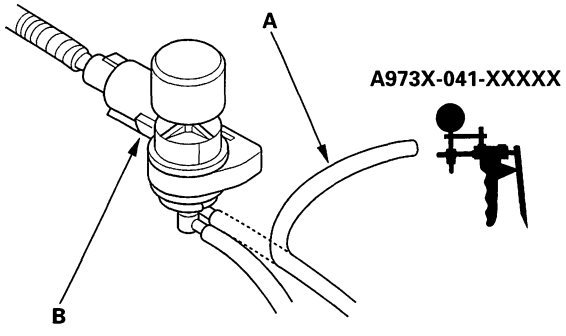

Does the engine mount hold vacuum?

YES—Go to step 11.

NO—Either the vacuum hose or one of the engine mounts has a vacuum leak. Repair as needed.■

11. Release the vacuum, then apply vacuum again.

Is there a noticeable change in idle smoothness with and without vacuum applied?

YES—Go to step 12.

NO—Isolate and replace the leaking engine mount.■

12. Disconnect the lower vacuum hose (A) from the engine mount control solenoid valve (B) and connect a vacuum pump/gauge to the hose.

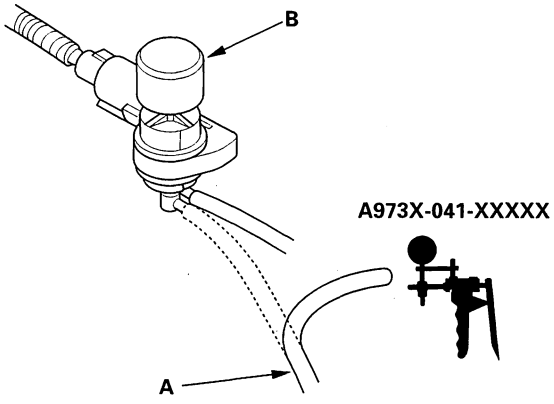

Is there manifold vacuum at idle a decrease when you raise the engien speed above 1,000 rpm?

YES—Replace the engine mount control solenoid valve.■

NO—A hose is restricted or pinched or the intake manifold port is plugged, Repair as needed.■

BACK

Engine Mechanical

Engine Assembly
Engine Removal 5-2
Engine Installation 5-11

Cylinder Head 6-1

Engine Block 7-1

Engine Lubrication 8-1

Intake Manifold/Exhaust System 9-1

Engine Cooling 10-1

NOTE: Refer to the 1998–2002 Accord Service Manual, P/N 61S8008, for items not shown in this section.

Engine Assembly

Engine Removal

Special Tool Required
Belt Tension Release Arm, YA 9317, commercially available

NOTE:
- Use fender covers to avoid damaging painted surfaces.
- To avoid damage, unplug the wiring connectors carefully while holding the connector portion.
- Mark all wiring and hoses to avoid misconnection. Also, be sure that they do not contact other wiring or hoses, or interfere with other parts.

1. Remove the support struts from the hood, then fix the hood in a vertical position.

2. Make sure you have the anti-theft code for the radio, then write down the frequencies for the radio's preset buttons.

3. Disconnect the battery negative terminal first, then the positive terminal. Remove the battery.

4. Remove the throttle body cover (A) and intake manifold cover (B).

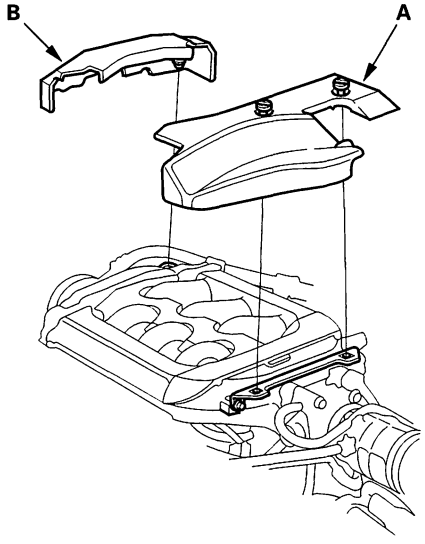

5. Remove the Evaporative Emission (EVAP) canister hose (A) from the throttle body.

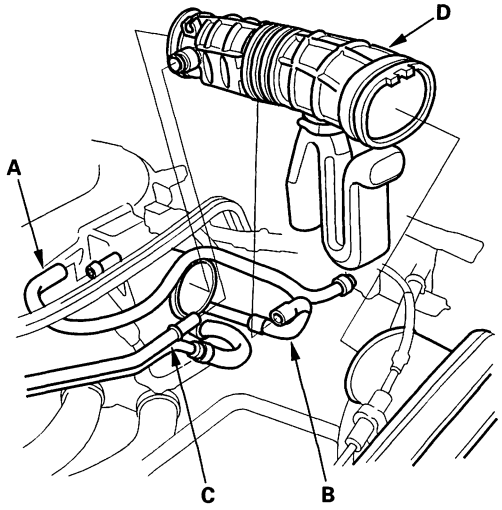

6. Remove the vacuum hose (B) and breather pipe (C), then remove the intake air duct (D).

7. Remove the ground cable (A) and harness clamp (B).

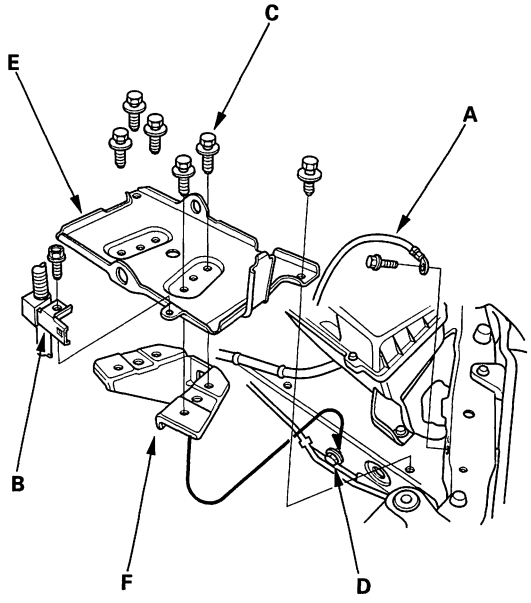

8. Remove 6 mounting bolts (C), and loosen the mounting bolt (D), then remove the battery base (E) and battery base bracket (F).

BACK

9. Remove the throttle cable (A) and cruise control cable (B) by loosening the locknuts (C), then slip the cable ends out of the accelerator linkage. Take care not to bend the cables when removing them. Always replace any kinked cable with a new one.

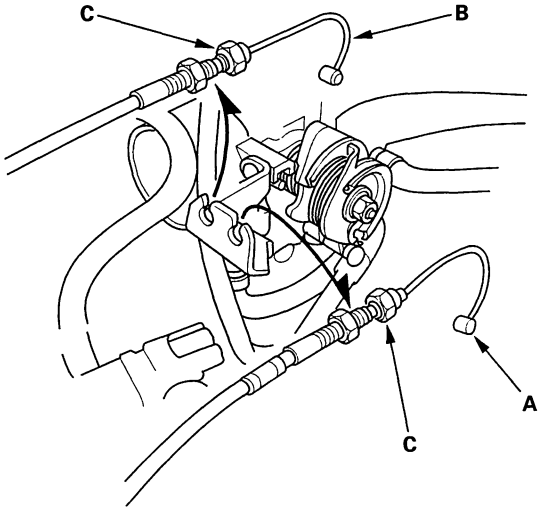

10. Disconnect the engine wire harness connectors on the left side of the engine compartment.

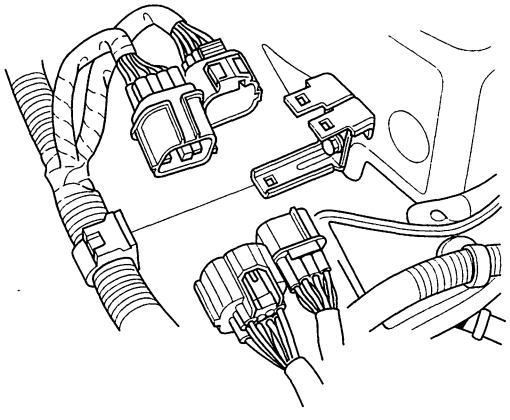

11. Relieve fuel pressure (see page 11-89).

12. Remove the fuel feed hose (A) and fuel return hose (B).

'98-99 models:

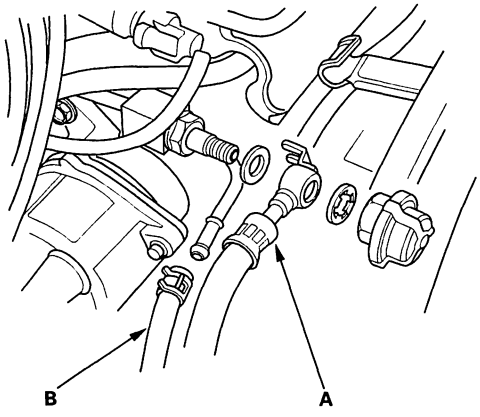

'00-02 models:

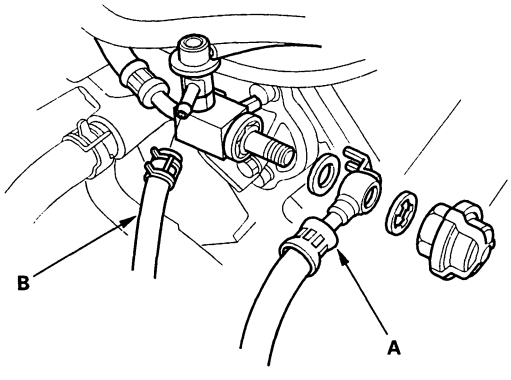

13. Remove the brake booster vacuum hose (A) and the cruise control vacuum hose (B).

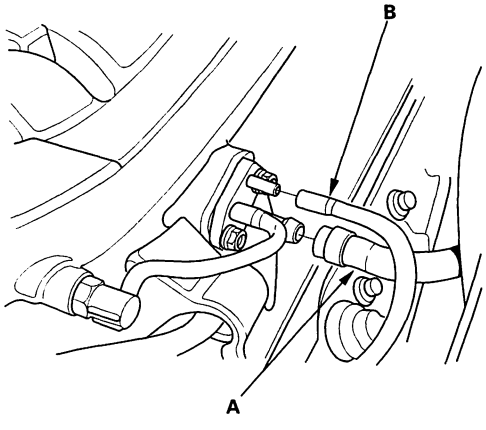

(cont'd)

Engine Removal (cont'd)

14. Remove the engine wire harness clamps.

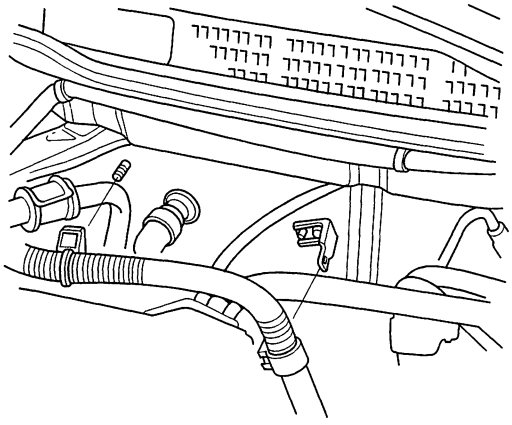

15. Remove the battery cables (A), and disconnect the connector (B) from the under-hood fuse/relay box (C).

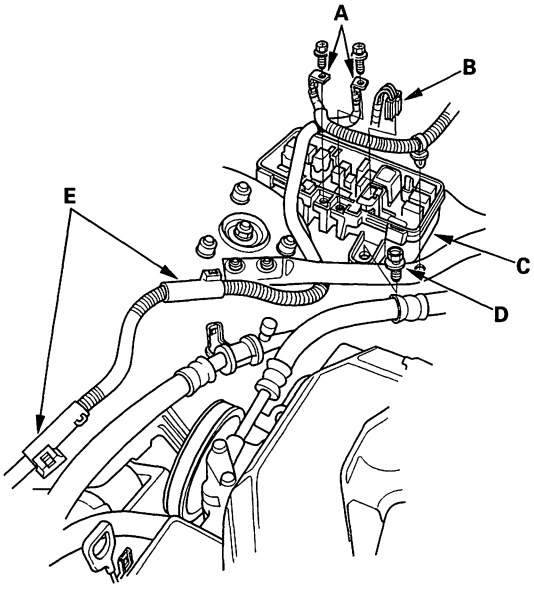

16. Remove the flange bolt (D), then remove the under-hood fuse/relay box.

17. Remove the harness clamps (E).

18. Remove the starter cable clamps.

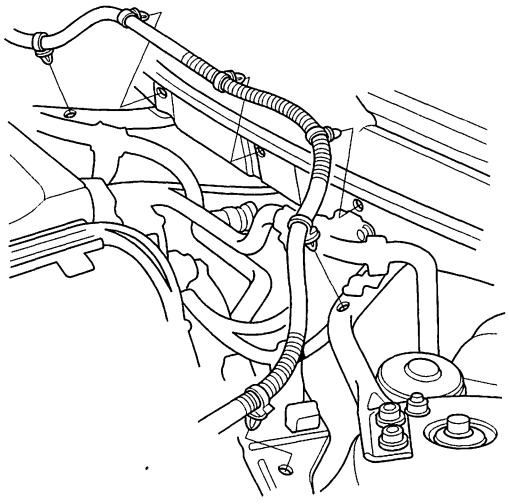

19. Disconnect the connectors from the Powertrain Control Module (PCM).

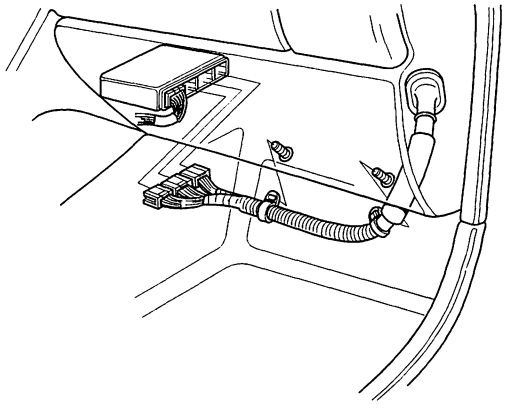

BACK

20. Remove the grommet (A), then pull out the PCM connectors.

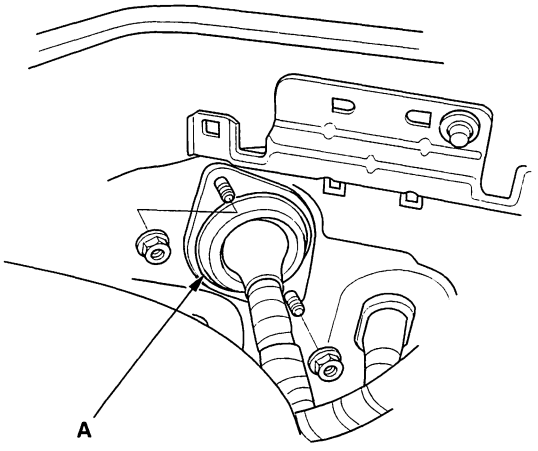

21. Move the auto-tensioner (A) with the belt tension release arm (B) to remove tension from the alternator belt (C), then remove the alternator belt.

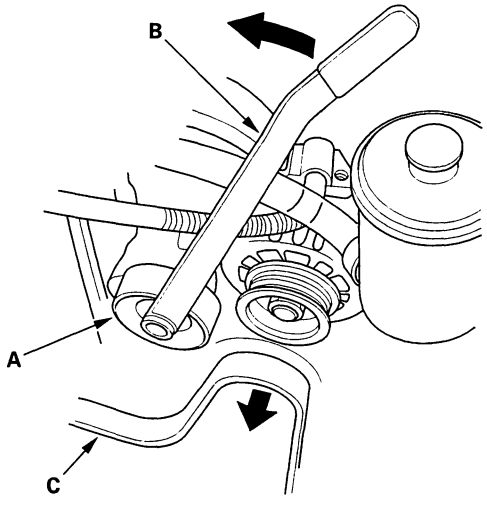

22. Loosen the adjusting nut (A), and remove the locknut (B) and mounting bolt (C), then remove the Power Steering (P/S) pump belt (D) and pump without disconnecting the P/S hoses.

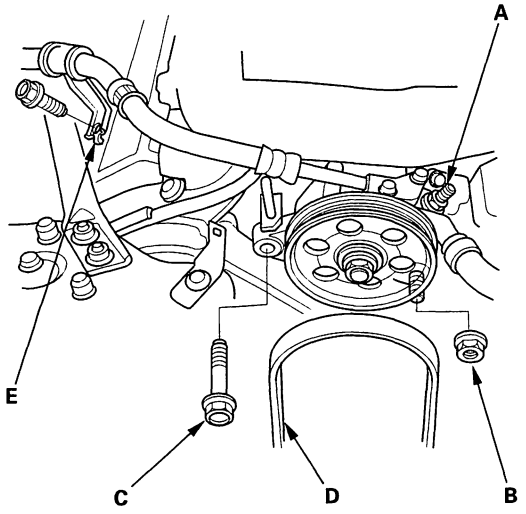

23. Remove the P/S hose clamp (E).

24. Remove the radiator cap.

25. Make sure the hoist brackets are positioned properly. Raise the hoist to full height.

26. Remove the front tires/wheels.

27. Remove the splash shield.

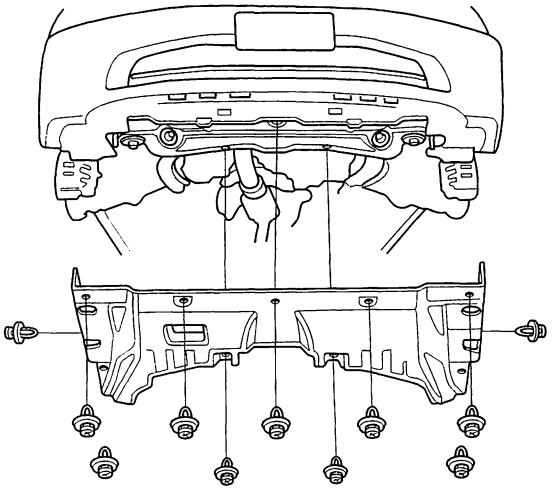

(cont'd)

BACK

Engine Removal (cont'd)

28. Loosen the drain plug in the radiator to drain the engine coolant (see page 10-10).

29. Drain the Automatic Transmission Fluid (ATF). Reinstall the drain plug using a new washer (see page 14-113).

30. Drain the engine oil. Reinstall the drain bolt using a new washer (see page 8-5).

31. Disconnect the Primary Heated Oxygen Sensor connector (A), then remove the exhaust pipe A (B).

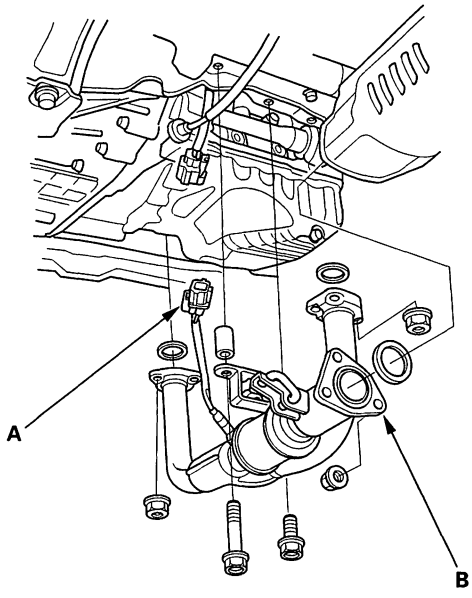

32. Remove the damper fork, refer to the '98-02 Accord Service Manual (see page 18-19).

33. Disconnect the suspension lower arm ball joints; refer to the '98-02 Accord Service Manual (see page 18-17).

34. Remove the driveshafts; refer to the '98-02 Accord Service Manual (see page 16-3). Coat all precision-finished surfaces with clean engine oil. Tie plastic bags over the driveshaft ends.

35. Remove the bolts (A) securing the shift cable holder (B), then remove the shift cable cover (C). To prevent damage to the control lever joint, be sure to remove the bolts securing the shift cable holder before removing the bolts securing the shift cable cover.

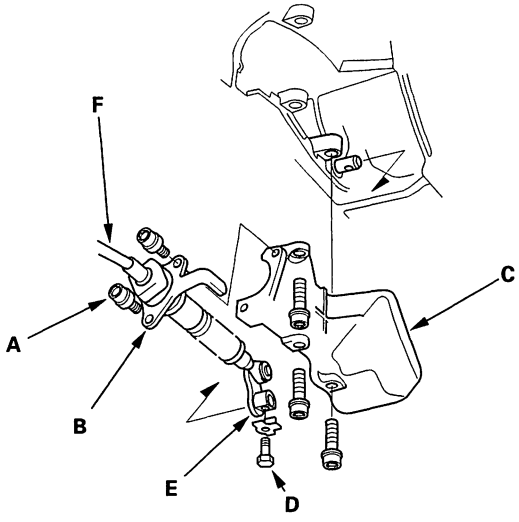

36. Remove the lock bolt (D) securing the control lever (E), then remove the shift cable (F) with the control lever. Take care not to bend the shift cable while removing it.

37. Unplug the P/S hose clamps (A), and disconnect the engine mount control vacuum hose (B).

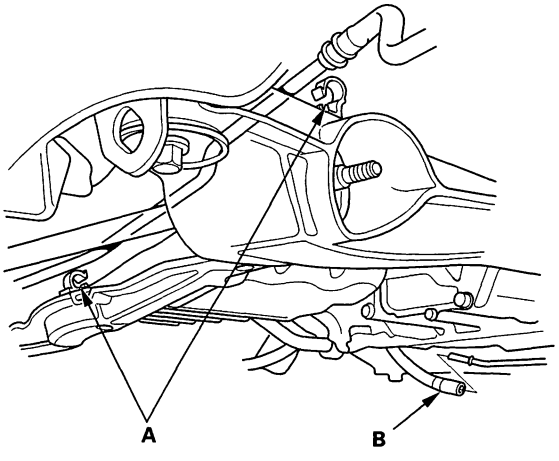

BACK

38. Lower the hoist, then remove the upper radiator hose (A), and the lower radiator hose (B).

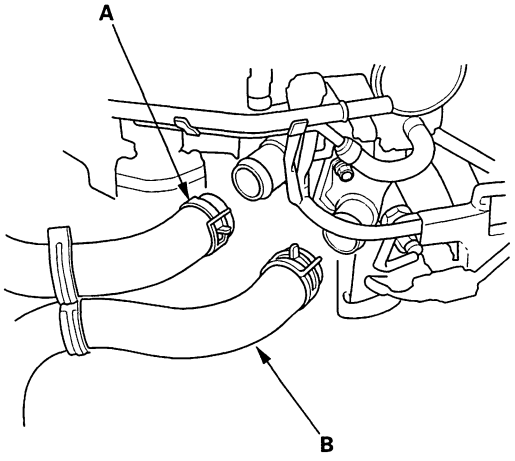

39. Remove the distributor cap, then remove the heater hoses.

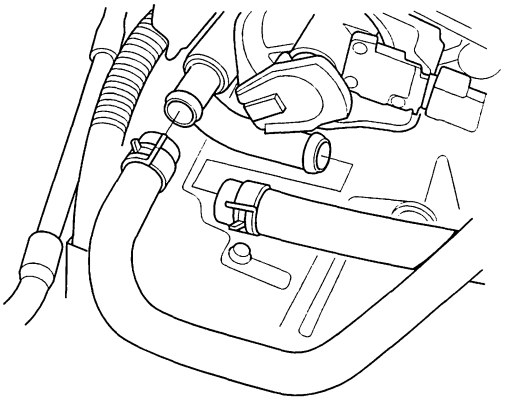

40. Remove the Automatic Transmission Fluid (ATF) cooler hoses, then plug the ATF cooler hoses and lines.

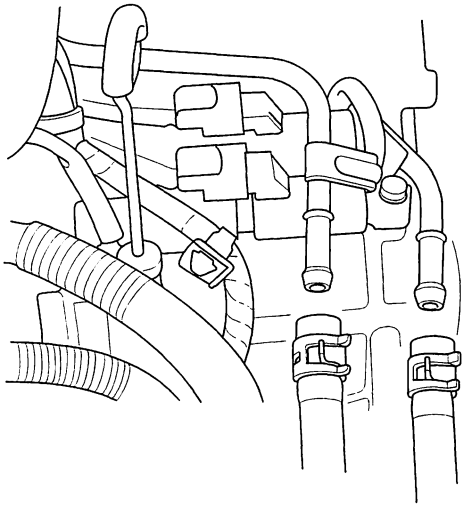

(cont'd)

Engine Removal (cont'd)

41. Attach the chain hoist to the engine as shown.

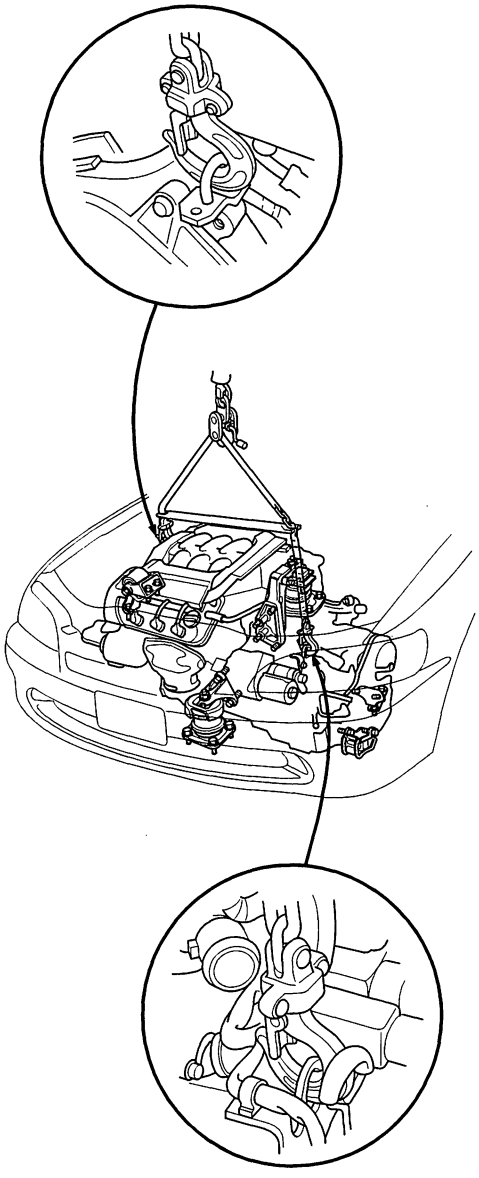

42. Remove the side engine mount bracket.

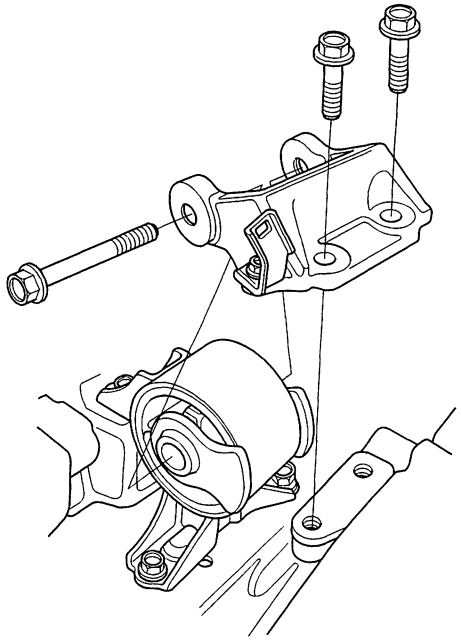

43. Remove the rear mount bracket support nut (A) and mounting bolt (B).

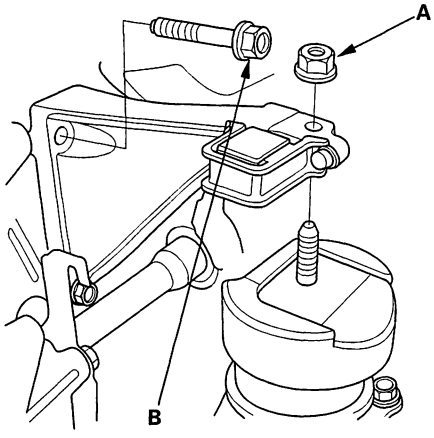

BACK

44. Remove the front mount bracket support nut.

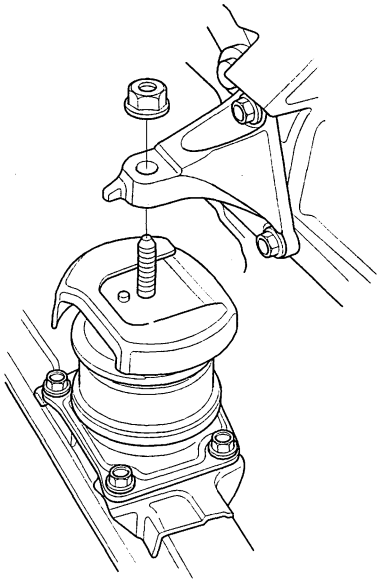

45. Make sure the hoist brackets are positioned properly. Raise the hoist to full height.

46. Remove the flange bolts securing the radius rods.

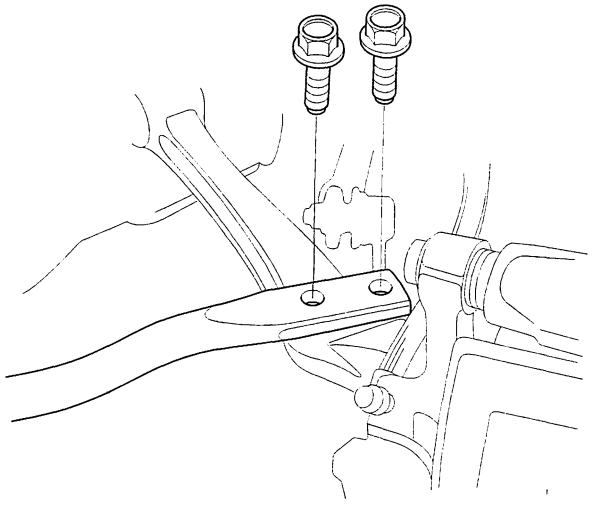

47. Make a mark (A) on the front beam (B) and rear beam (C), then remove the front beam.

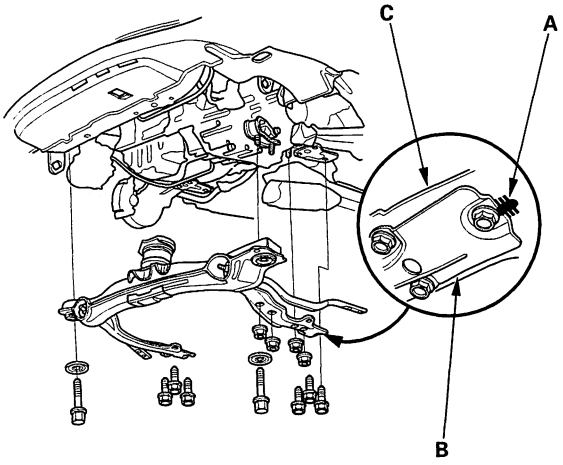

48. Remove the A/C compressor without disconnecting the A/C hoses.

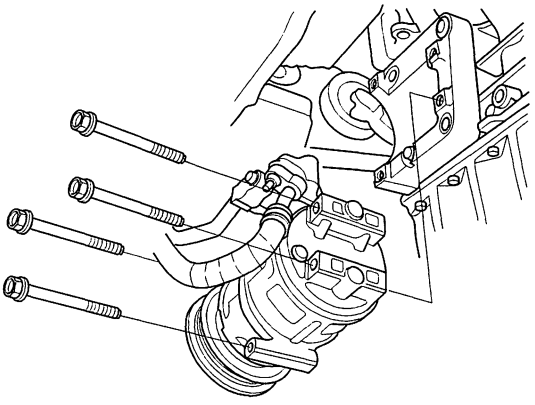

(cont'd)

Engine Removal (cont'd)

49. Remove the rear mount.

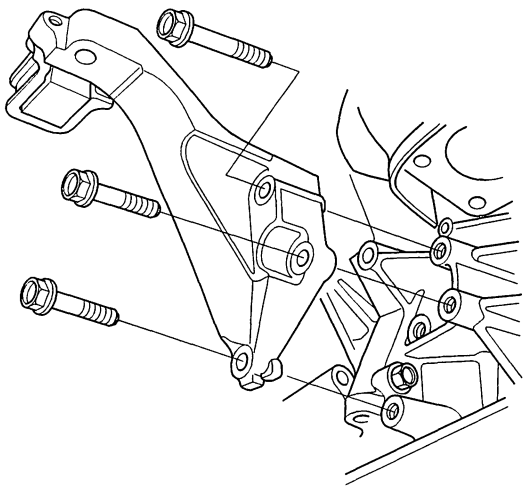

50. Remove the transmission lower rear mount.

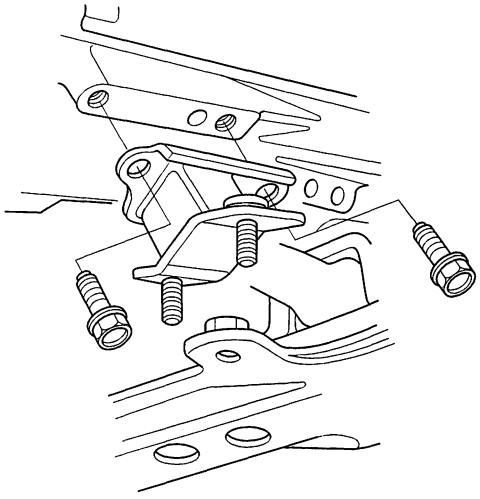

51. Check that the engine/transmission is completely free of vacuum hoses, fuel and coolant hoses and electrical wiring.

52. Slowly lower the engine about 150 mm (6 in.). Check once again that all hoses and wires are disconnected from the engine/transmission.

53. Lower the engine all the way, and disconnect the chain hoist from the engine.

54. Remove the engine from under the vehicle.

BACK

Engine Installation

1. Install the accessory brackets and tighten their bolts and nuts to the specified torques.

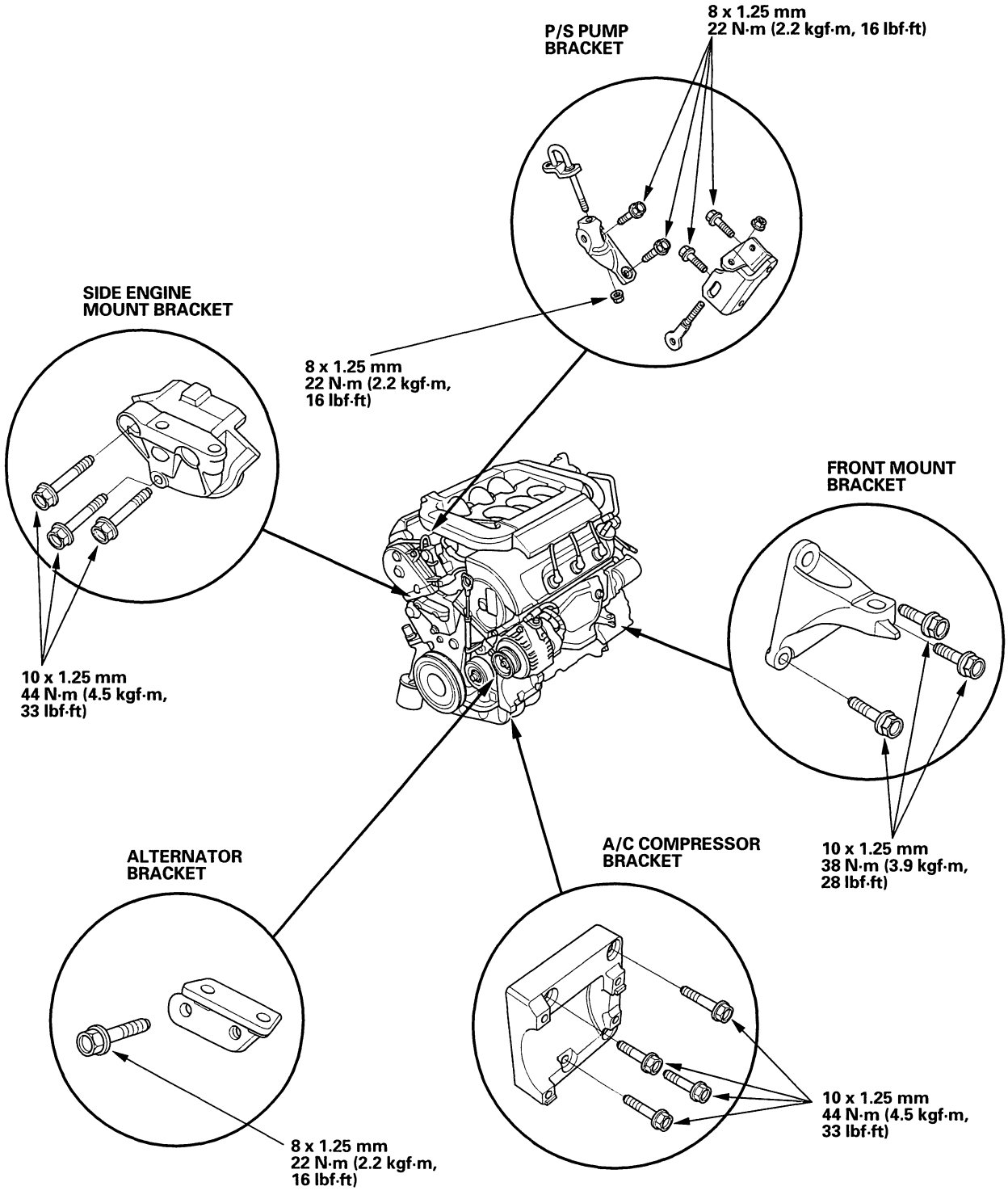

(cont'd)

BACK

Engine Installation (cont'd)

2. Position the engine under the vehicle. Attach the chain hoist to the engine, then lift the engine into position in the vehicle.

NOTICE
Reinstall the mounting bolts/nuts in the sequence given. Failure to follow this sequence may cause excessive noise and vibration, and reduce bushing life.

3. Install the transmission lower rear mount.

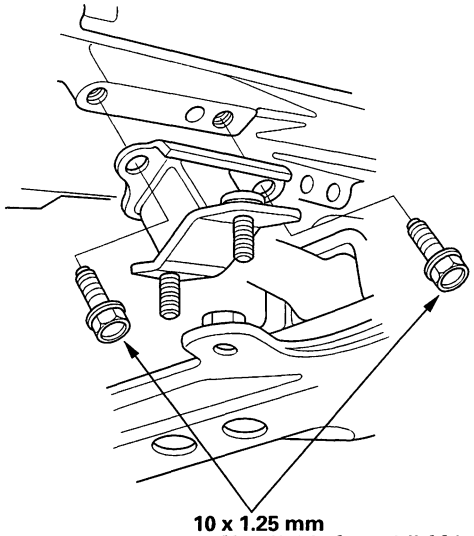

4. Install the rear mount bracket.

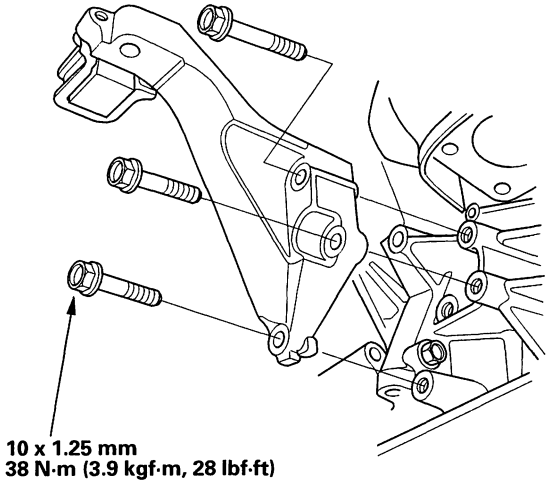

5. Install the A/C compressor.

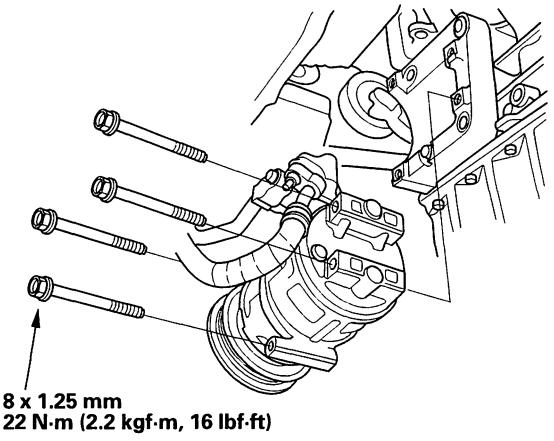

6. Install the front beam. Align mark (A) on the rear beam (B) and front beam (C), then tighten the bolts (D).

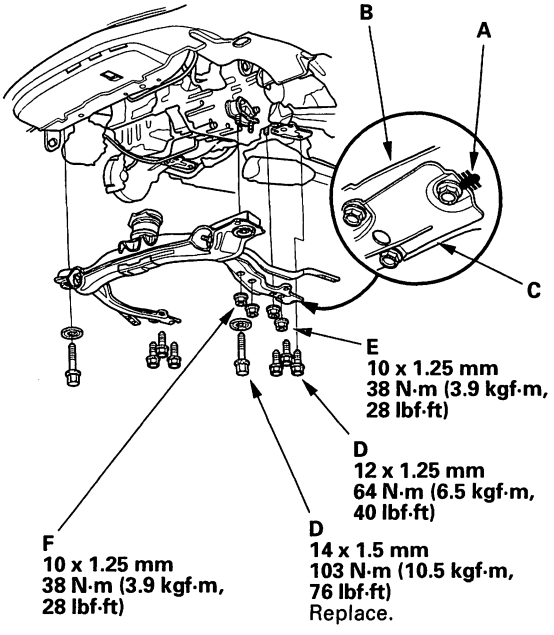

7. Tighten the transmission lower rear mount mounting nuts (E) and transmission lower front mount mounting nuts (F).

BACK

8. Tighten the flange bolts on the radius rods.

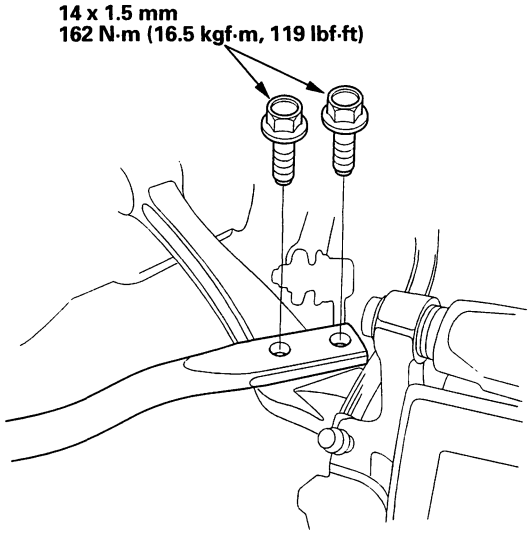

9. Lower the hoist.

10. Tighten the front mount bracket support nut.

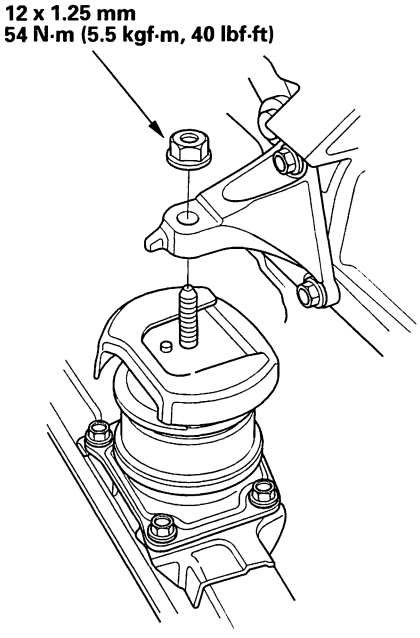

11. Tighten the rear mount bracket support nut and mounting bolt.

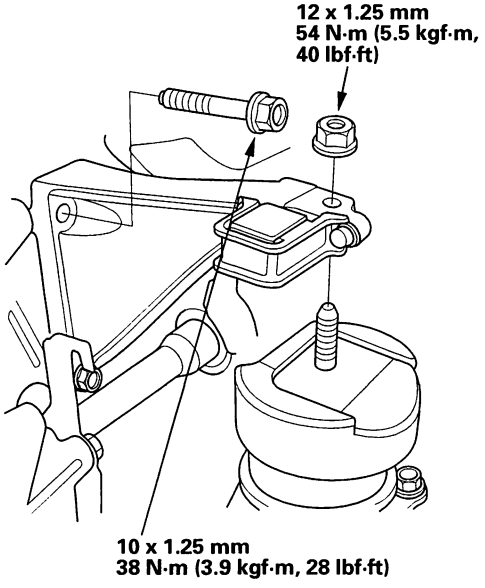

12. Install the side engine mount bracket, then tighten the mounting bolts in the numbered sequence shown.

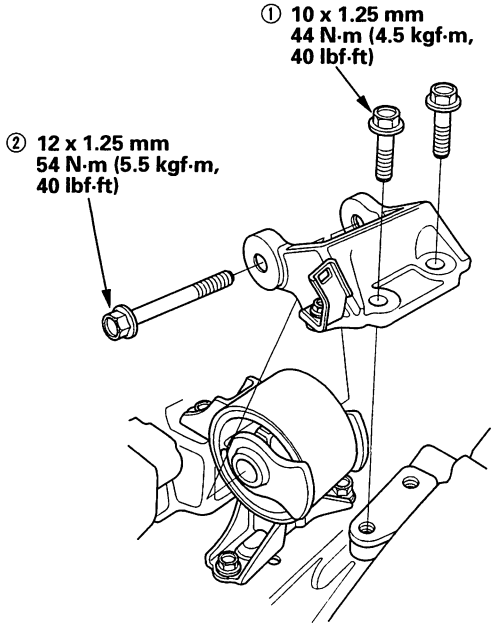

13. Remove the chain hoist from the engine.

(cont'd)

Engine Installation (cont'd)

14. Raise the hoist to full height.

15. Install a new spring clip on the end of each driveshaft, then install the driveshafts. Make sure each clip "clicks" into place in the differential and intermediate shaft.

16. Connect the suspension lower arm ball joints use new cotter pins; refer to the '98-02 Accord Service Manual (see page 18-17).

17. Install the damper fork; refer to the '98-02 Accord Service Manual (see page 18-21).

18. Install exhaust pipe A (A); use new gaskets (B) and new self locking nuts (C). Then connect the Primary Heated Oxygen Sensor connector (D).

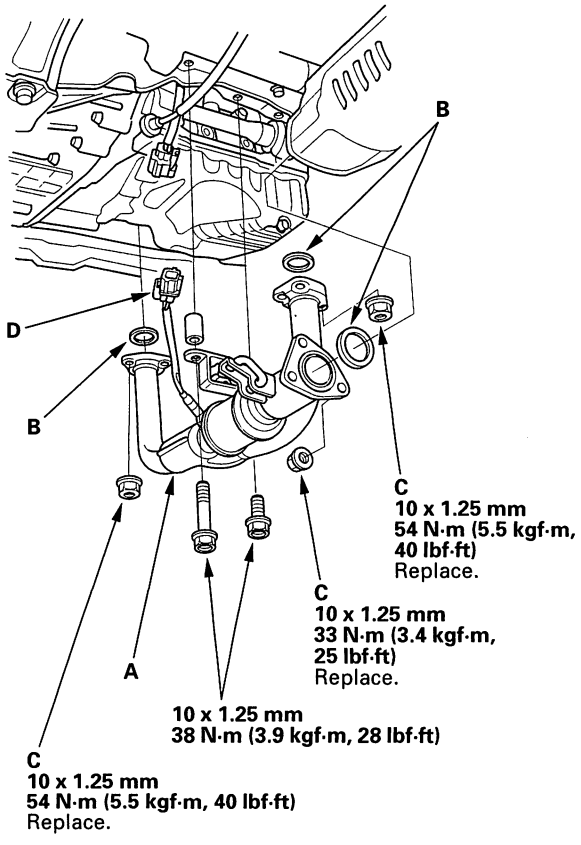

19. Install the control lever (A) with the shift cable on the control shaft. Do not bend the shift cable any more than is necessary to install the control lever.

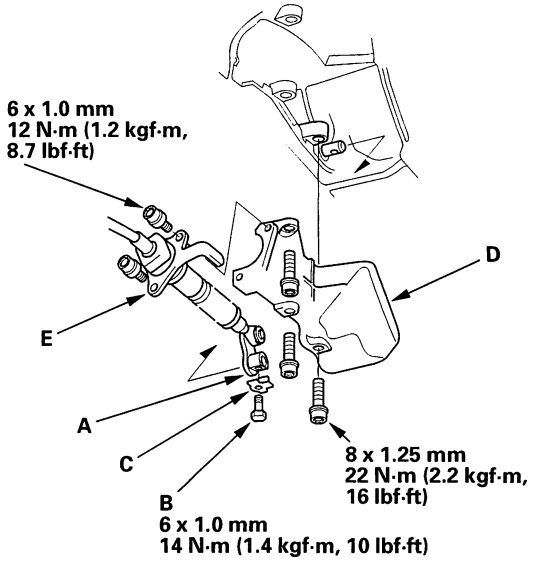

20. Install the lock bolt (B) with a new lock washer (C), then bend the lock tab of the lock washer.

21. Install the shift cable cover (D), then install the shift cable holder (E) on the shift cable cover.

22. Install the P/S hose into the clamps (A), and connect the engine mount control vacuum hose (B).

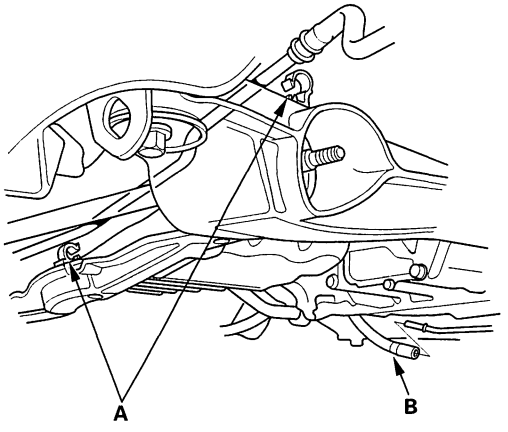

BACK

23. Connect the upper radiator hose (A), and the lower radiator hose (B).

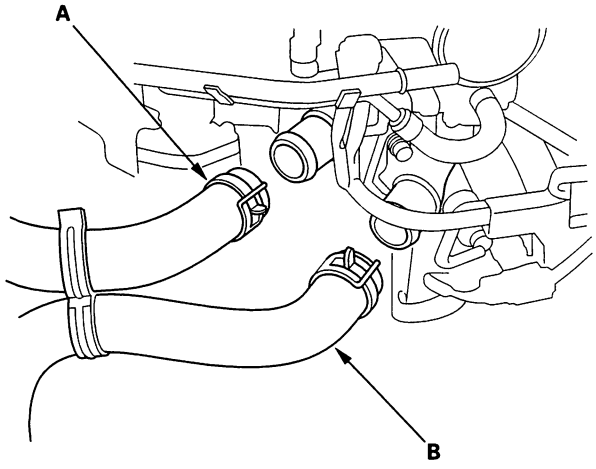

24. Install the heater hoses, then install the distributor cap.

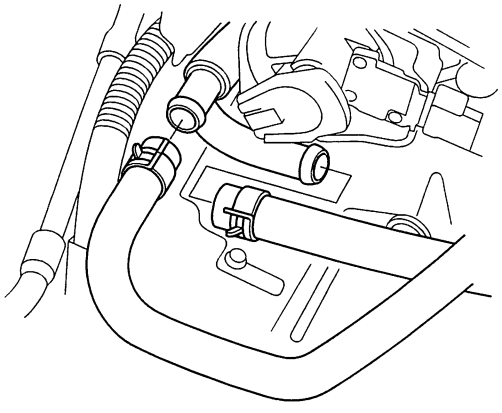

25. Connect the Automatic Transmission Fluid (ATF) cooler hoses.

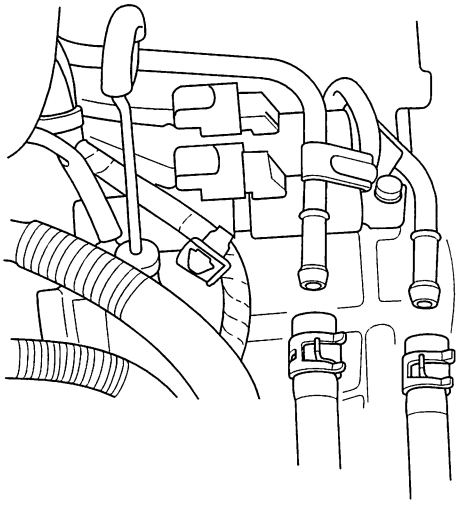

26. Install the splash shield.

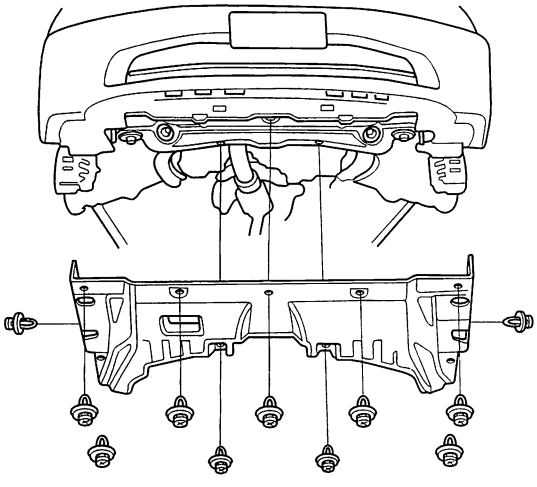

(cont'd)

Engine Installation (cont'd)

27. Install the front tires/wheels.

28. Lower the hoist.

29. Install the alternator belt.

30. Loosely install the Power Steering (P/S) pump belt and pump.

31. Adjust the Power Steering (P/S) pump belt (see page 17-13).

32. Push in the Powertrain Control Module (PCM) connectors, through the bulkhead then install the grommet (A).

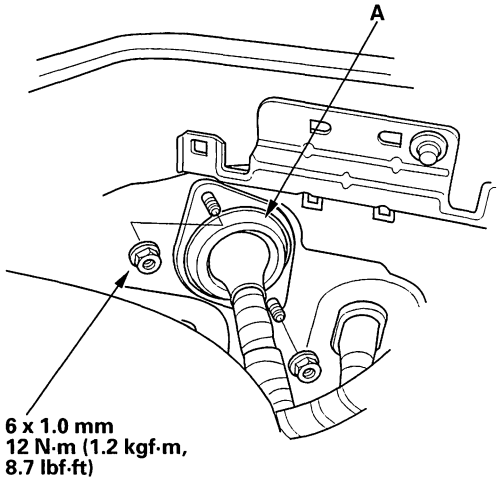

33. Connect the PCM connectors.

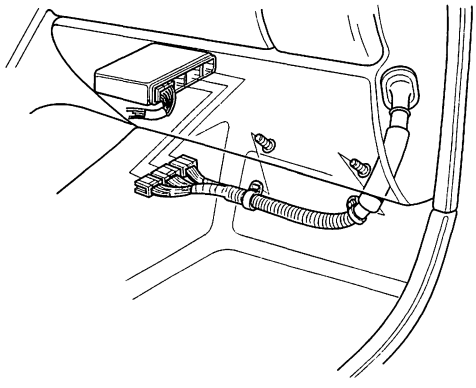

34. Install the starter cable clamps.

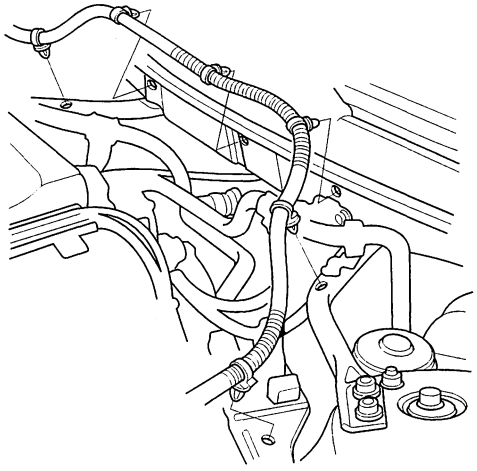

35. Install the under-hood fuse/relay box (A) and harness clamps (B).

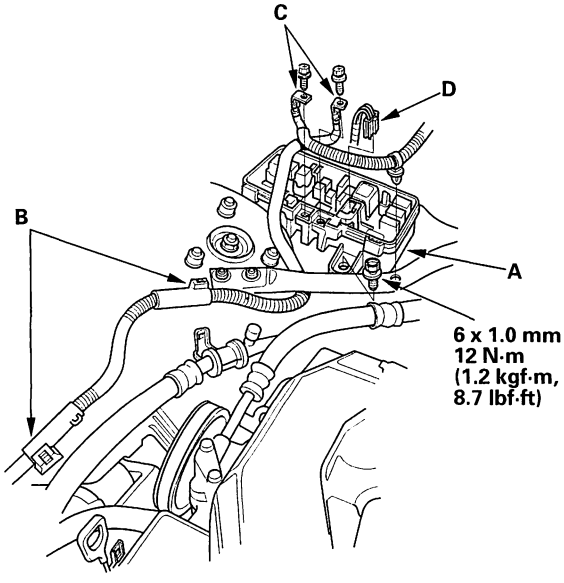

36. Install the battery cables (C), and connect the connector (D) from the under-hood fuse/relay box (A).

BACK

37. Install the engine wire harness clamps.

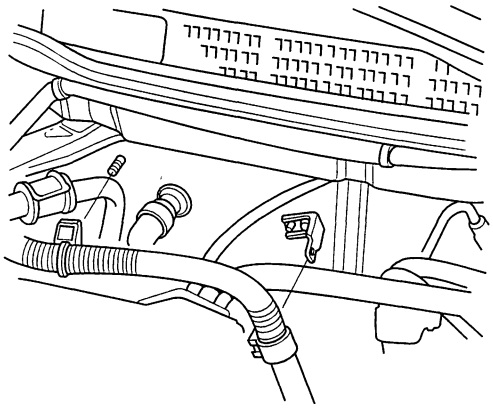

38. Install the brake booster vacuum hose (A) and the cruise control vacuum hose (B).

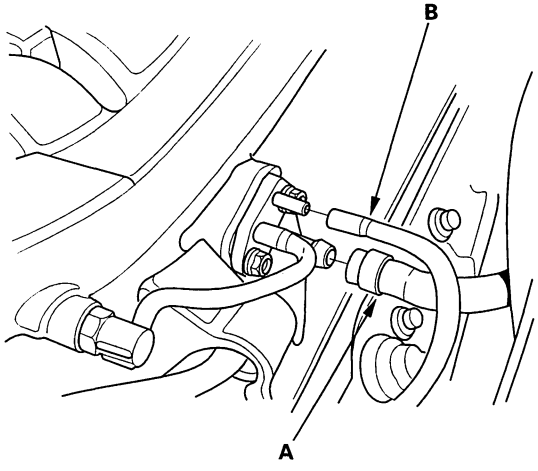

39. Install the fuel hose (A) and fuel return hose (B), using new washers (C).

'98-99 models:

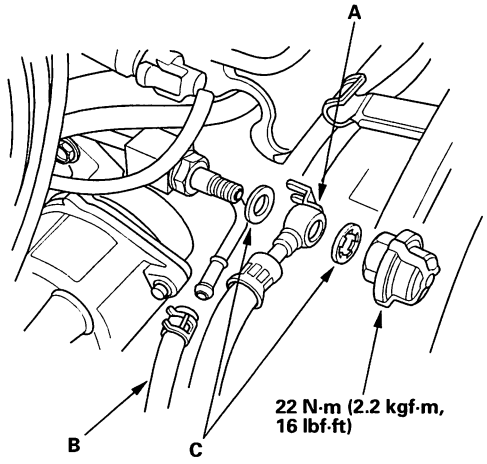

'00-02 models:

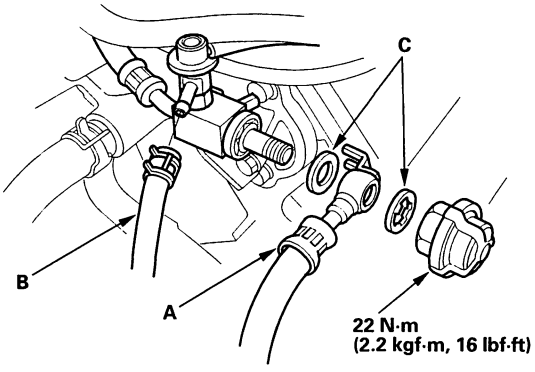

40. Connect the engine wire harness connectors on the left side of the engine compartment.

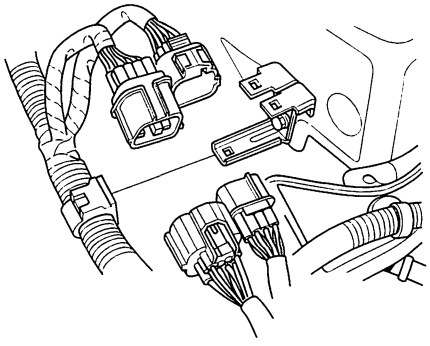

(cont'd)

BACK

Engine Installation (cont'd)

41. Install the cruise control cable, then adjust the cable (see page 4-53).

42. Install the throttle cable, then adjust the cable (see page 11-100).

43. Install the battery base bracket (A), battery base (B), then install the ground cable (C) and harness clamp (D).

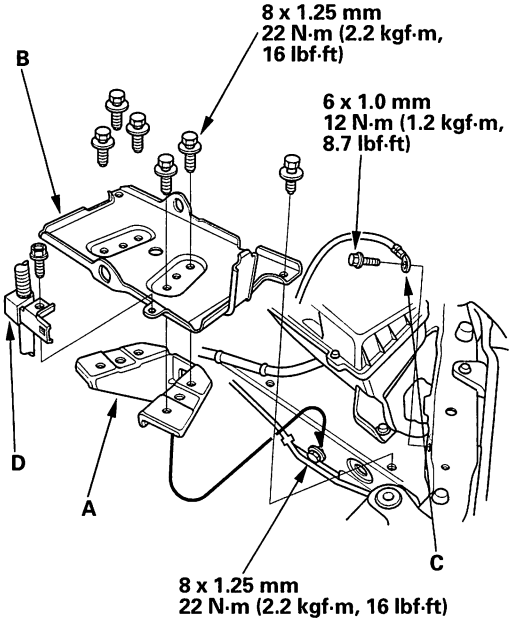

44. Install the throttle body cover (A) and intake manifold cover (B).

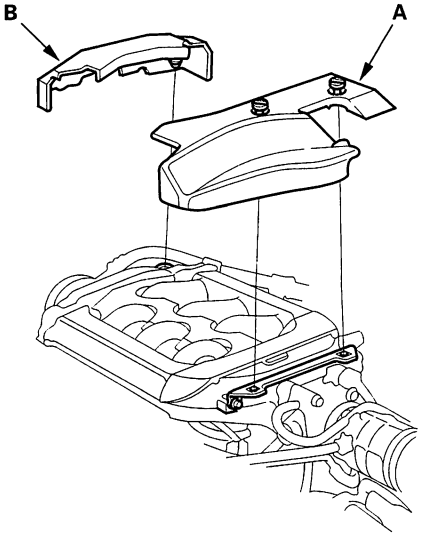

45. Install the intake air duct (A), then install the vacuum hose (B) and breather pipe (C).

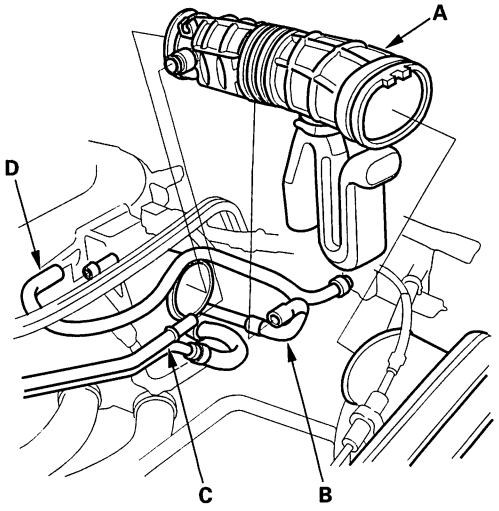

46. Install the Evaporative Emission (EVAP) canister hose (D) to the throttle body.

47. Install the battery. Clean the battery posts and cable terminals with sandpaper, then assemble them and apply grease to prevent corrosion.

48. Refill the engine with engine oil (see page 8-5).

49. Refill the transmission with Automatic Transmission Fluid (ATF) (see page 14-113).

50. Refill the radiator with engine coolant, and bleed air from the cooling system with the heater valve open (see page 10-10).

51. Move the shift lever to each gear, and verify that the A/T gear position indicator follows the transmission range switch.

52. Inspect for fuel leaks. Turn on (II) the ignition switch (do not operate the starter) so that the fuel pump runs for approximately 2 seconds and pressurizes the fuel line. Repeat this operation two or three times, then check for fuel leakage at any point in the fuel line.

53. Enter the anti-theft code for the radio, then enter the customer's radio station presets.

BACK

Engine Mechanical

Cylinder Head

Special Tools 6-2
Component Location Index 6-3
DTC Troubleshooting 6-6
VTEC Solenoid Valve Test 6-9
VTEC Rocker Arms Test 6-10
Valve Clearance Adjustment 6-13
Crankshaft Pulley Removal and Installation 6-17
Timing Belt Inspection 6-18
Timing Belt Removal 6-19
Timing Belt Installatioin 6-22
Cylinder Head Removal 6-31
Cylinder Head Inspection for Warpage 6-36
Rocker Arm Assembly Removal 6-36
Rocker Arms and Shafts Disassembly/Reassembly 6-37
Rocker Arms and Shafts Inspection 6-38
VTEC Lost Motion Assemblies Inspection 6-39
Camshaft Inspection 6-40
Valves, Springs, and Valve Seals Removal 6-43
Valve Inspection 6-44
Valve Stem-to-Guide Clearance Inspection 6-44
Valve Guide Replacement 6-45
Valve Seat Reconditioning 6-47
Valves, Springs, and Valve Seals Installation 6-49
Camshaft/Rocker Arms, Camshaft Seal, and Pulley Installation 6-50
Cylinder Head Installation 6-51
TDC Sensor Replacement 6-55
CKP Sensor Replacement 6-56

BACK

Special Tools

Ref. No.	Tool Number	Description	Qty
①	07HAH-PJ7010B	Valve Guide Reamer, 5.5 mm	1
②	07JAA-001020A	Socket, 19 mm	1
③	07JAB-001020A	Holder Handle	1
④	07MAB-PY30100	Pulley Holder Attachment, 50 mm Offset	1
⑤	07NAJ-P07010A	Pressure Gauge Adapter	1
⑥	07VAJ-P8A010A	VTEC Air Adapter	1
⑦	07VAJ-P8A020A	VTEC Air Stopper	1
⑧-1	07406-0070300	A/T Low Pressure Gauge W/Panel	1
⑧-2	07MAJ-PY4011A	A/T Pressure Hose, 2,210 mm	1
⑧-3	07MAJ-PY40120	A/T Pressure Hose Adapter	1
⑨	07742-0010100	Valve Guide Driver, 5.5 mm	1
⑩	07757-PJ1010A	Valve Spring Compressor Attachment	1

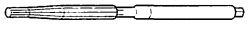

①

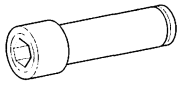

②

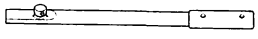

③

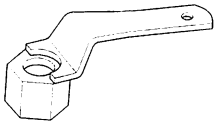

④

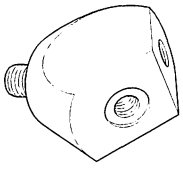

⑤

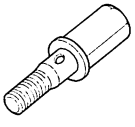

⑥

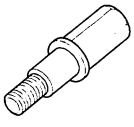

⑦

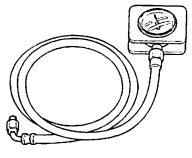

⑧-1, ⑧-2, ⑧-3

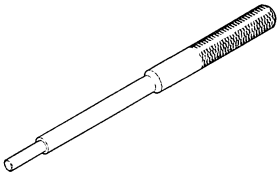

⑨

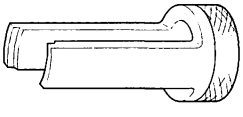

⑩

BACK

Component Location Index

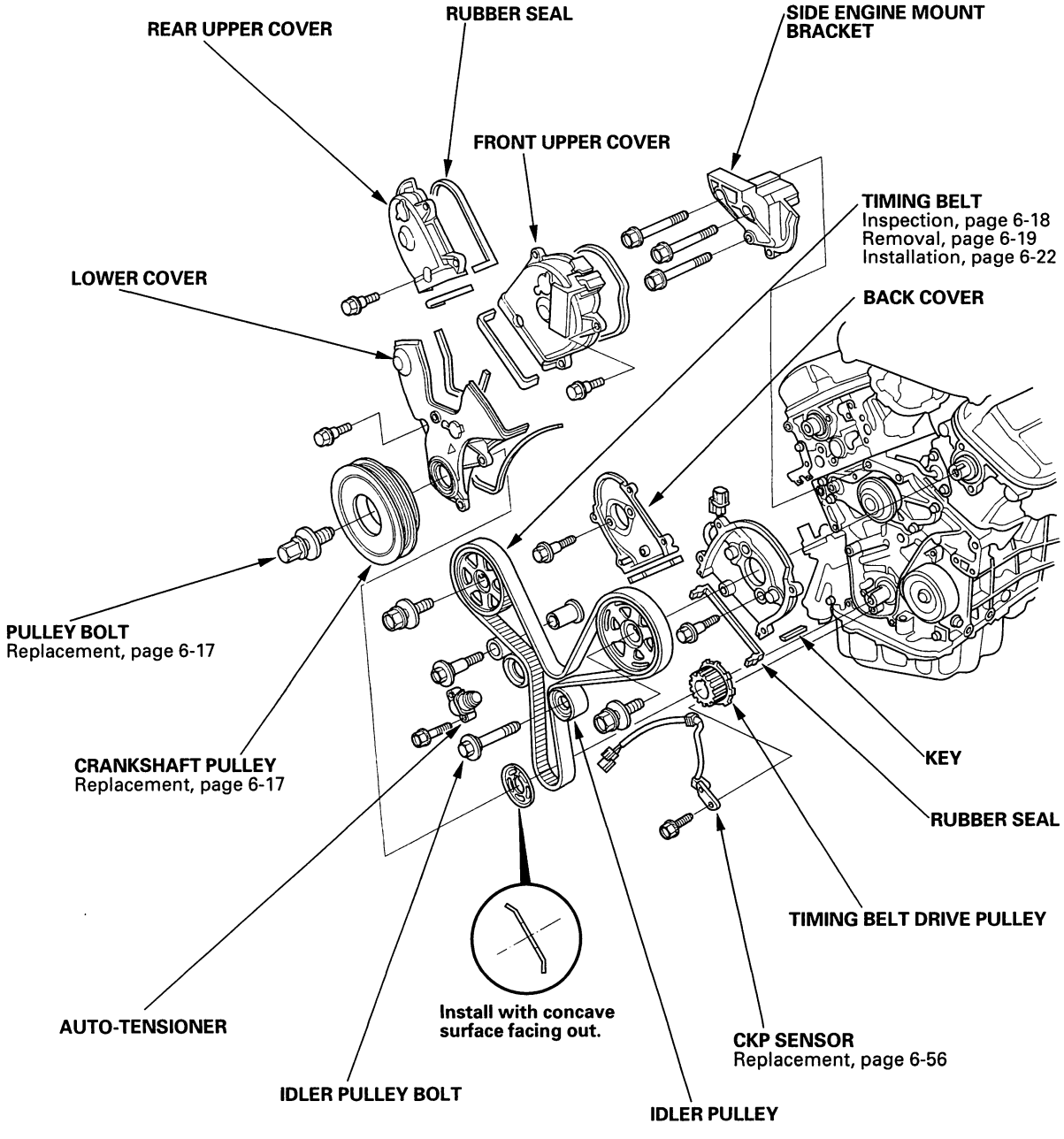

(cont'd)

Component Location Index (cont'd)

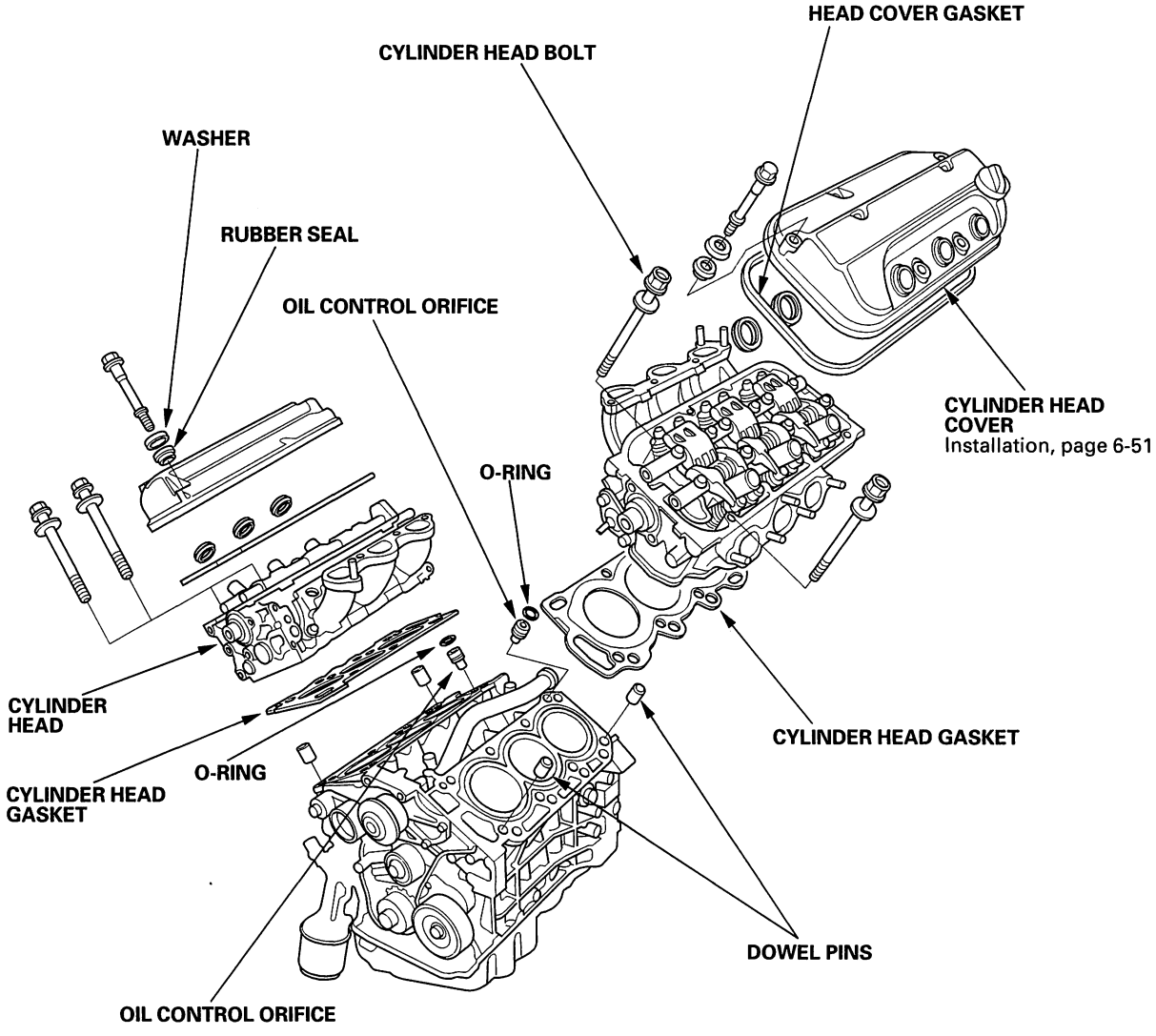

BACK

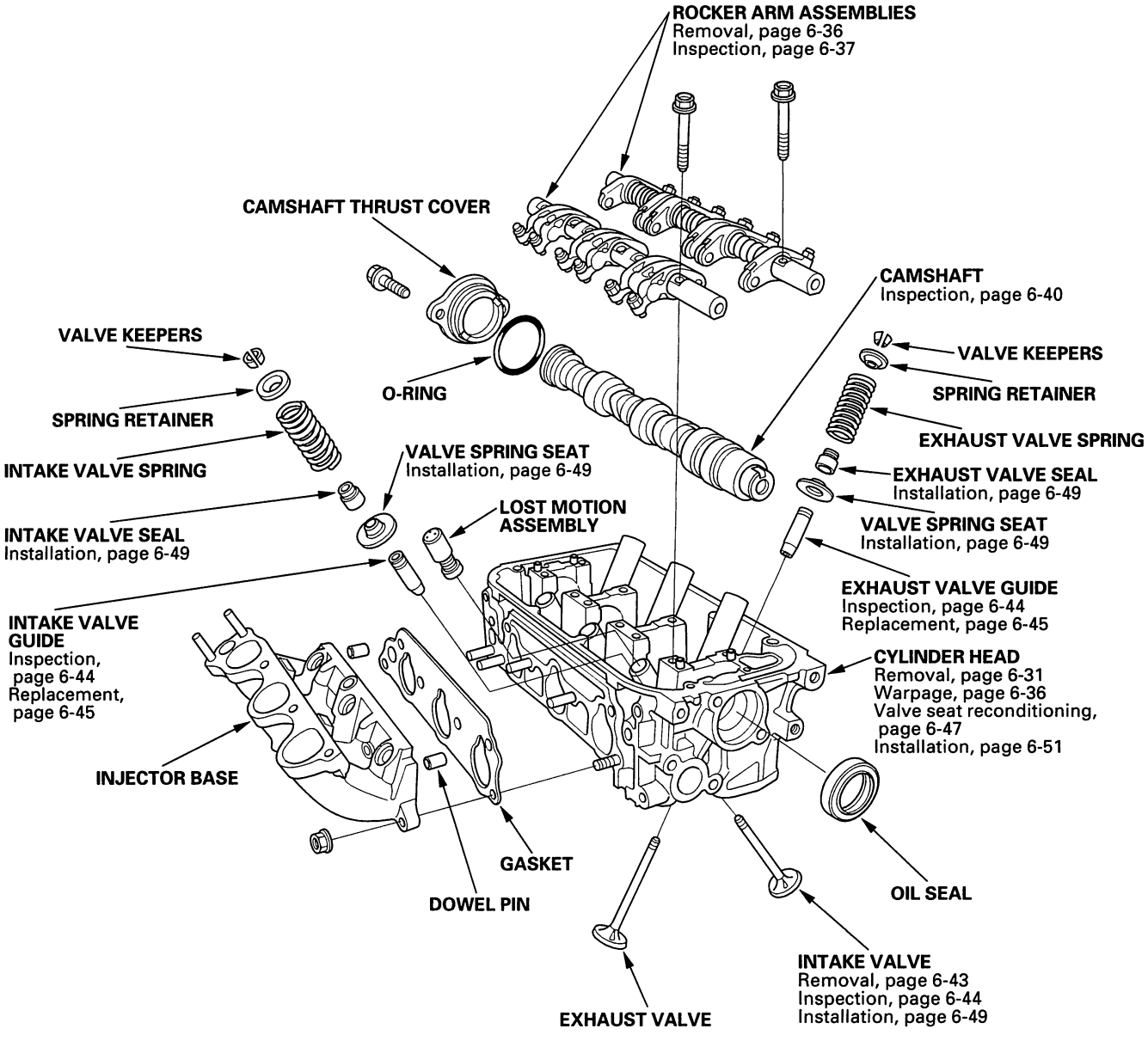
ROCKER ARM ASSEMBLIES
Removal, page 6-36
Inspection, page 6-37
CAMSHAFT THRUST COVER
CAMSHAFT
Inspection, page 6-40
VALVE KEEPERS
O-RING
SPRING RETAINER
INTAKE VALVE SPRING
VALVE SPRING SEAT
Installation, page 6-49
LOST MOTION ASSEMBLY
INTAKE VALVE SEAL
Installation, page 6-49
INTAKE VALVE GUIDE
Inspection, page 6-44
Replacement, page 6-45
INJECTOR BASE
GASKET
DOWEL PIN
VALVE KEEPERS
SPRING RETAINER
EXHAUST VALVE SPRING
EXHAUST VALVE SEAL
Installation, page 6-49
VALVE SPRING SEAT
Installation, page 6-49
EXHAUST VALVE GUIDE
Inspection, page 6-44
Replacement, page 6-45
CYLINDER HEAD
Removal, page 6-31
Warpage, page 6-36
Valve seat reconditioning, page 6-47
Installation, page 6-51
OIL SEAL
INTAKE VALVE
Removal, page 6-43
Inspection, page 6-44
Installation, page 6-49
EXHAUST VALVE

DTC Troubleshooting

DTC P1259: A problem in the VTEC Oil Pressure Switch circuit or VTEC Solenoid Valve circuit

Special Tools Required
- Pressure Gauge Adaptor 07NAJ-P07010A
- A/T Low Pressure Gauge W/Panel 07406-0070300
- A/T Pressure Hose, 2,210 mm 07MAJ-PY4011A
- A/T Pressure Adaptor 07MAJ-PY40120

1. Do the Powertrain Control Module (PCM) reset procedure; refer to the '98-02 Accord Service Manual (see page 11-3).

2. Start the engine.

3. Warm up the engine to normal operating temperature (cooling fan comes on).

4. Road test the vehicle:
   Accelerate in [2] position to an engine speed over 4,000 rpm. Hold that engine speed for at least 2 seconds. If DTC P1259 is not repeated during the 1st road test, repeat this test two more times.

   Is DTC P1259 indicated?

   YES—Go to step 5.

   NO—Intermittent failure, system is OK at this time. Check for poor connections or loose wires at the VTEC solenoid valve and PCM.■

5. Turn the ignition switch OFF.

6. Disconnect the VTEC oil pressure switch connector.

7. Check for continuity on the VTEC oil pressure switch between the pressure switch connector terminals No. 1 and No. 2.

VTEC OIL PRESSURE SWITCH CONNECTOR

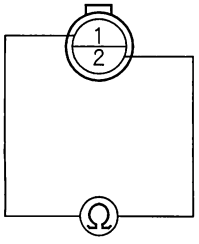

Terminal side of male terminals

Is there continuity?

YES—Go to step 8.

NO—Replace the VTEC oil pressure switch.■

8. Turn the ignition switch ON (II).

9. Measure the voltage between the VTEC oil pressure switch harness connector No. 1 terminal and body ground.

VTEC OIL PRESSURE SWITCH HARNESS CONNECTOR

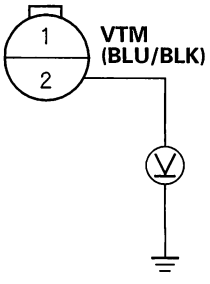

Wire side of female terminals

Is there battery voltage?

YES—Go to step 10.

NO—Inspect for an open or short to ground in the wire between the VTEC oil pressure switch and the PCM (C10). If the wire is OK, substitute a known-good PCM and recheck.■

BACK

10. Measure voltage across the VTEC oil pressure switch harness 2P connector.

VTEC OIL PRESSURE SWITCH HARNESS 2P CONNECTOR

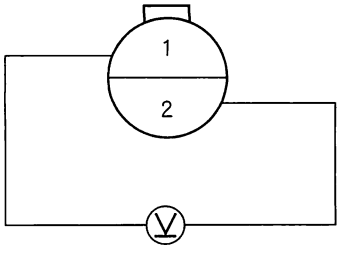

Wire side of female terminals

Is there battery voltage?

YES – Go to step 11.

NO – Repair open in the wire between the VTEC oil pressure switch and G101. If the wire is OK, substitute a known-good PCM and recheck. ■

11. Turn the ignition switch OFF.

12. Disconnect the VTEC solenoid valve 1P connector.

13. Check for continuity on the VTEC solenoid valve between the solenoid valve 1P connector terminal and body ground.

VTEC SOLENOID VALVE 1P CONNECTOR

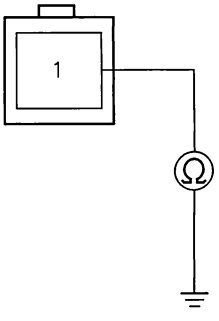

Terminal side of male terminal

Is there 14 – 30 Ω ?

YES – Go to step 14.

NO – Replace the VTEC solenoid valve. ■

14. Remove the VTEC oil pressure switch (A) and install the special tools as shown, then reinstall the VTEC oil pressure switch.

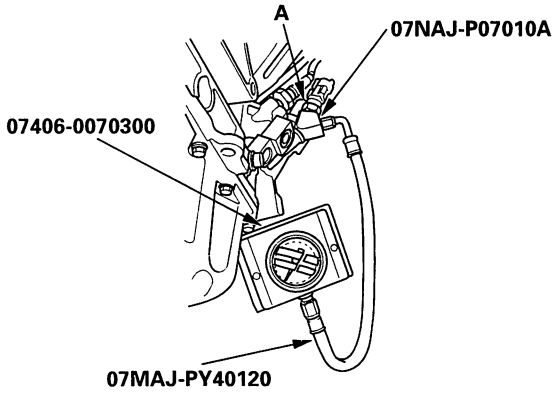

15. Reconnect the VTEC solenoid valve 1P connector and VTEC oil pressure switch 2P connector.

16. Connect a tachometer.

17. Warm up the engine to normal operating temperature (cooling fan comes on).

18. Check oil pressure at engine speeds of 1,000, 2,000 and 3,000 rpm. Keep measuring time as short as possible because the engine is running with no load (less than 1 minute).

Is pressure below 49 kPa (0.5 kgf/cm², 7 psi)?

YES – Go to step 19.

NO – Inspect the VTEC solenoid valve (see page 6-9). ■

19. Turn the ignition switch OFF.

20. Disconnect the VTEC solenoid valve 1P connector.

21. Attach the battery positive terminal to the VTEC solenoid valve terminal.

22. Start the engine and check oil pressure at an engine speed of 3,000 rpm.

Is pressure above 390 kPa (4.0 kgf/cm², 57 psi)?

YES – Go to step 23.

NO – Inspect the VTEC solenoid valve (see page 6-9). ■

(cont'd)

DTC Troubleshooting (cont'd)

23. With the battery positive terminal still connected to the VTEC solenoid valve, measure voltage between C10 and body ground.

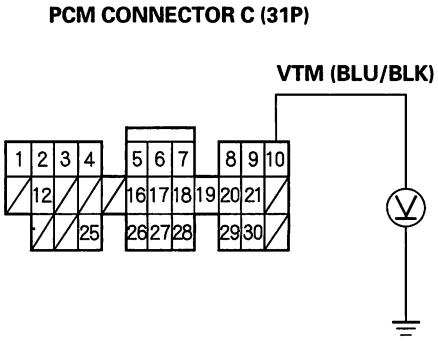

Wire side of female terminals

Is there battery voltage above 4,000 rpm?

YES—Go to step 24.

NO—Replace the VTEC oil pressure switch. ■

24. Turn the ignition switch OFF.

25. Disconnect the battery positive terminal from the VTEC solenoid valve terminal.

26. Check for continuity between the VTEC solenoid valve harness 1P connector terminal and the PCM connector terminal B12.

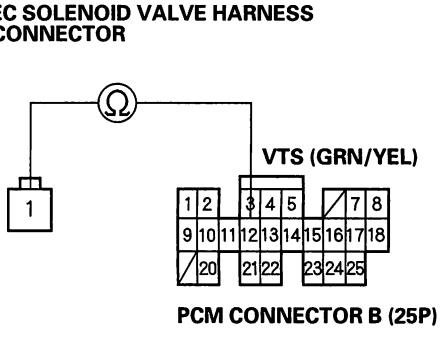

Wire side of female terminals

Is there continuity?

YES—Go to step 27.

NO—Repair open in the wire between the PCM (B12) and VTEC solenoid valve connector. ■

27. Check for continuity between the VTEC solenoid valve 1P connector terminal and body ground.

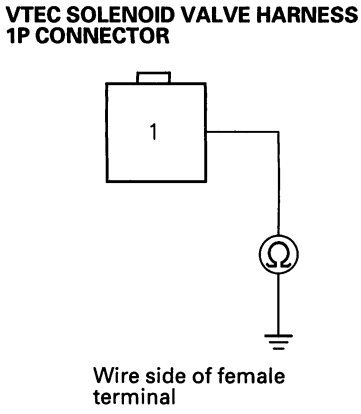

Wire side of female terminal

Is there continuity?

YES—Repair short in the wire between the PCM (B12) and VTEC solenoid valve connector. ■

NO—Substitute a known-good PCM and recheck. If symptom/indication goes away, replace the original PCM. ■

BACK

VTEC Solenoid Valve Test

1. Disconnect the 1P connector from the VTEC solenoid valve.

2. Measure resistance between the terminal and body ground.

   Resistance: 14–30 Ω

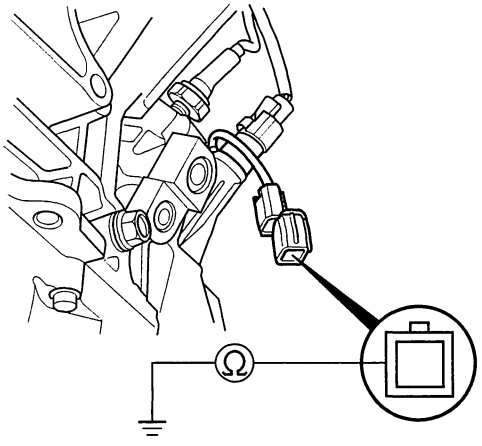

3. If the resistance is within specifications, remove the VTEC solenoid valve/oil filter assembly (A) from the oil pump, and check the VTEC solenoid valve filter (B) for clogging. If there is clogging, clean the filter and replace the engine oil filter and the engine oil.

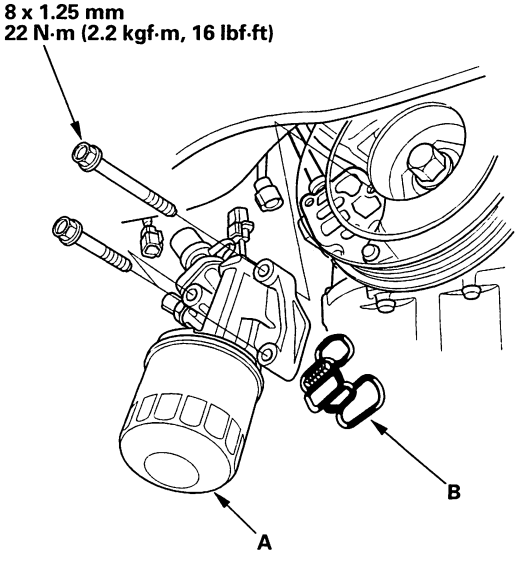

4. If the filter is not clogged, push the VTEC solenoid valve with your finger and check its movement. If the VTEC solenoid valve is normal, check the engine oil pressure.

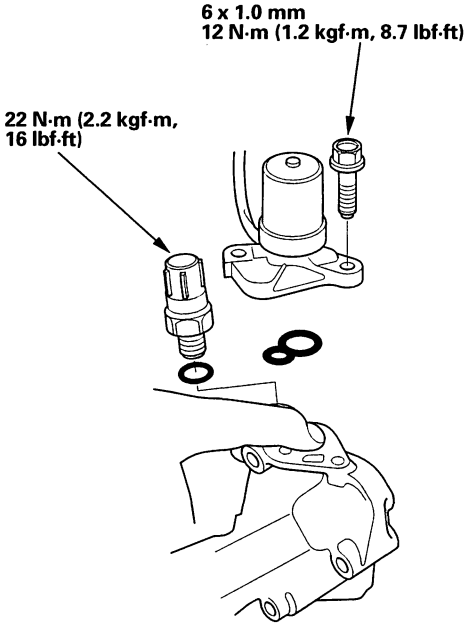

VTEC Rocker Arm Test

Special Tools Required
- VTEC Air Adapter 07VAJ-P8A010A
- VTEC Air Stopper 07VAJ-P8A020A

1. '98-99 models: Remove the throttle body cover (A), ignition wire cover (B) and intake manifold covers (C).
   '00-02 models: Remove the throttle body cover (A), intake manifold covers (B) and intake manifold cover stay (C).

   '98-99 models:

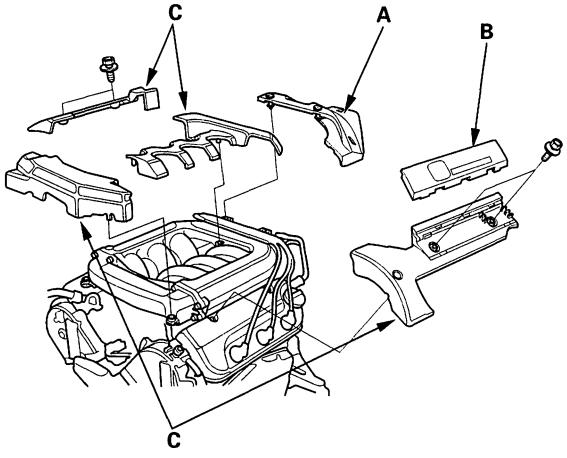

   '00-02 models:

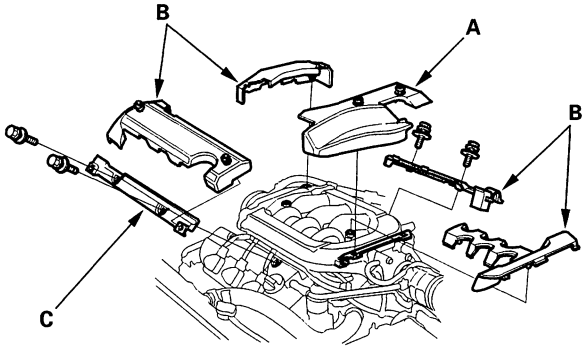

2. Remove the Evaporative Emission (EVAP) canister hose (A) from the throttle body.

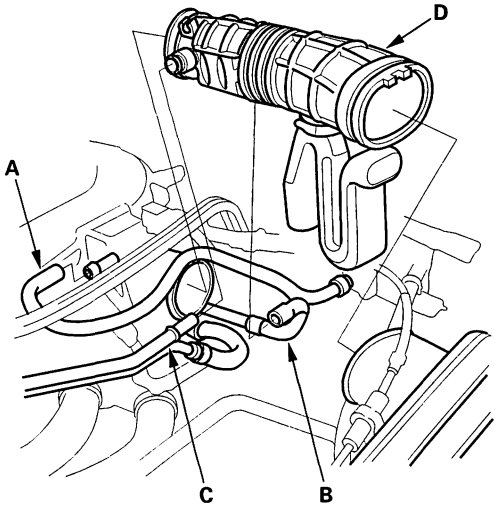

3. Remove the vacuum hose (B) and breather pipe (C), then remove the intake air duct (D).

4. Remove the throttle cable (A) and cruise control cable (B) by loosening the locknuts (C), then slip the cable ends out of the accelerator linkage. Take care not to bend the cables when removing them. Always replace any kinked cable with a new one.

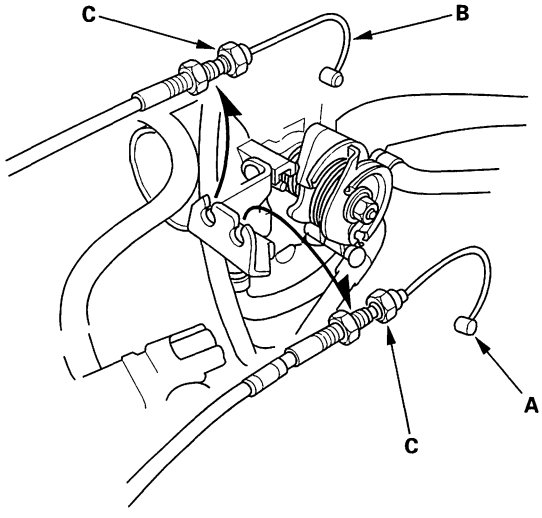

BACK

5. Remove the brake booster vacuum hose (A), vacuum hoses (B) and Positive Crankcase Ventilation (PCV) hose (C).

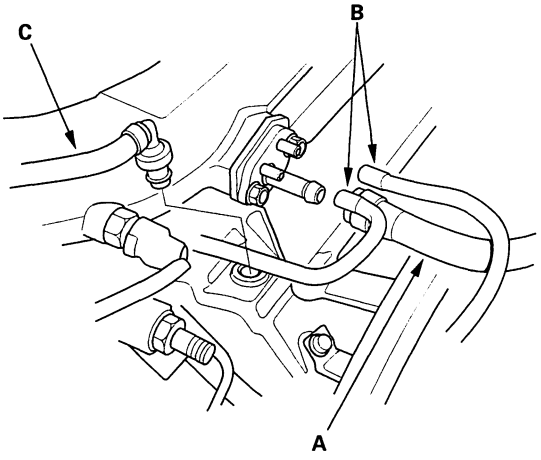

6. Remove the vacuum hose (A) ('98-99 models), breather hose (B) and water bypass hoses (C).

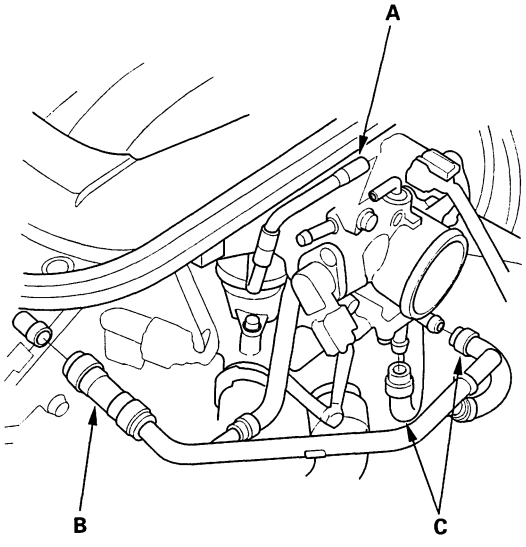

7. Remove the intake manifold.

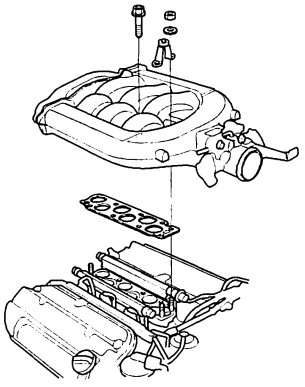

8. Remove the cylinder head covers.

9. Remove the front upper cover (see step 2 on page 6-18).

10. Set the No. 1 piston at TDC (see step 10 on page 6-14).

11. Push on the intake mid rocker arm (A) for the No. 1 cylinder. The mid rocker arm should move independently of the primary rocker arm (B) and secondary rocker arm (C).
    - If the intake mid rocker arm does not move, remove the mid, primary, and secondary intake rocker arms as an assembly, and check that the pistons in the mid and primary rocker arms move smoothly. If any rocker arm needs replacing, replace the primary, mid and secondary rocker arms as an assembly, and retest.
    - If the mid rocker arm moves freely, go to step 12.

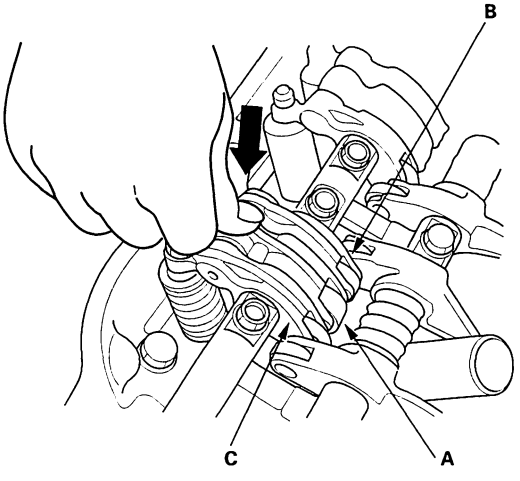

(cont'd)

VTEC Rocker Arm Test (cont'd)

12. Repeat step 11 on the remaining intake mid rocker arms with each piston at TDC. When all the mid rocker arms pass the test, go to step 13.

13. Check that the air pressure on the shop air compressor gauge indicates over 690 kPa (7.0 kgf/cm², 100 psi).

14. Inspect the valve clearance (see page 6-13).

15. Cover the timing belt with a shop towel to protect the belt.

16. Remove the 2 intake rocker shaft mounting bolts, then connect the special tools and Valve Inspection an air pressure regulator with a 0—100 psi gauge (A) as shown below.

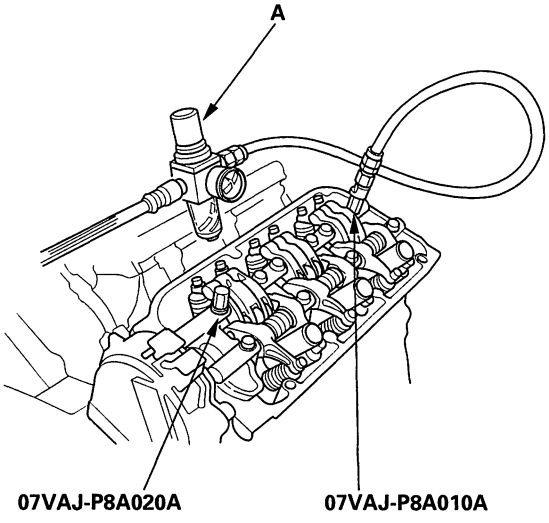

17. Loosen the valve on the regulator and apply the specified air pressure.

    Specified Air Pressure:
    390 kPa (4.0 kgf/cm², 57 psi)

    NOTE: If the synchronizing pistons A and B do not move after applying air pressure; move the primary or secondary rocker arm up and down manually by rotating the crankshaft clockwise.

18. Make sure that the intake primary rocker arm (A) and intake secondary rocker arm (B) are mechanically connected by the piston and that the mid rocker arm (C) does not move when pushed manually. If any intake mid rocker arm moves independently of the primary and secondary rocker arms, replace the rocker arms as a set.

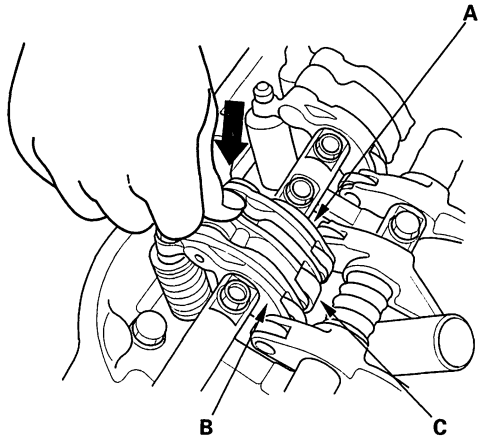

19. Remove the tools.

20. Check for smooth operation of each lost motion assembly (see page 6-37). Replace the lost motion assembly if it does not move smoothly.

BACK

Valve Clearance Adjustment

NOTE: Adjust the valves only when the cylinder head temperature is less than 100°F (38°C).

1. '98-99 models: Remove the throttle body cover (A), ignition wire cover (B) and intake manifold covers (C).
   '00-02 models: Remove the throttle body cover (A), intake manifold covers (B) and intake manifold cover stay (C).

   '98-99 models:

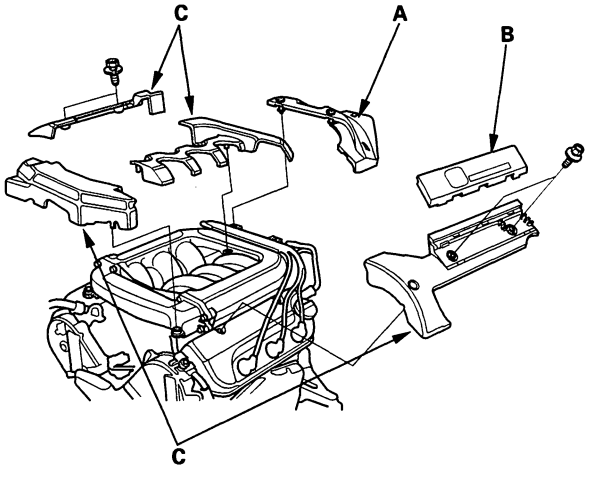

   '00-02 models:

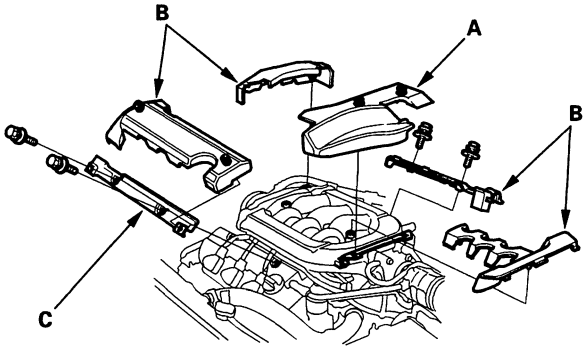

2. Remove the Evaporative Emission (EVAP) canister hose (A) from the throttle body.

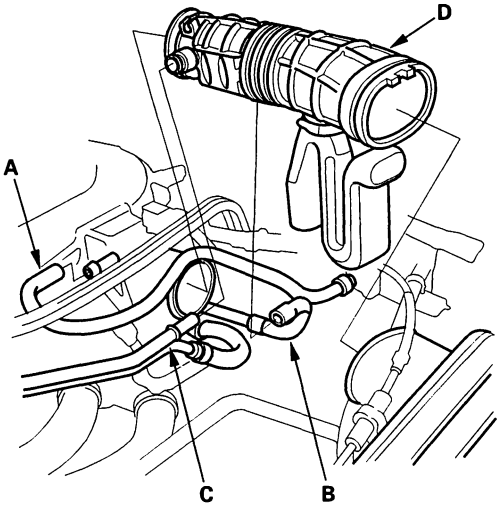

3. Remove the vacuum hose (B) and breather pipe (C), then remove the intake air duct (D).

4. Remove the throttle cable (A) and cruise control cable (B) by loosening the locknuts (C), then slip the cable ends out of the accelerator linkage. Take care not to bend the cables when removing them. Always replace any kinked cable with a new one.

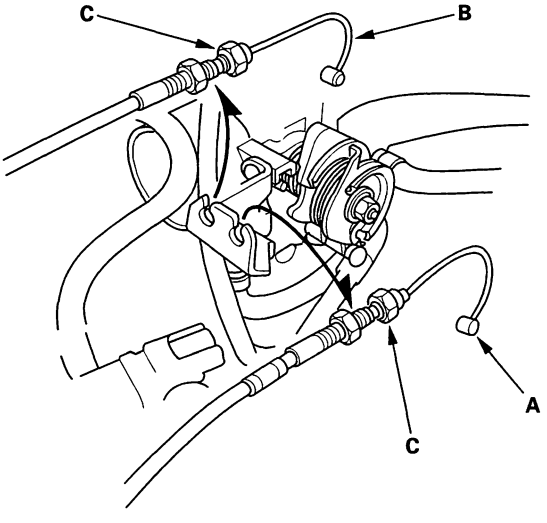

(cont'd)

Valve Clearance Adjustment (cont'd)

5. Remove the brake booster vacuum hose (A), vacuum hoses (B) and Positive Crankcase Ventilation (PCV) hose (C).

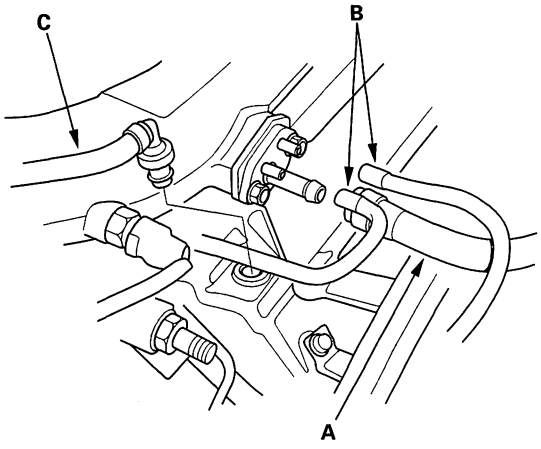

6. Remove the vacuum hose (A) ('98-99 models), breather hose (B) and water bypass hoses (C).

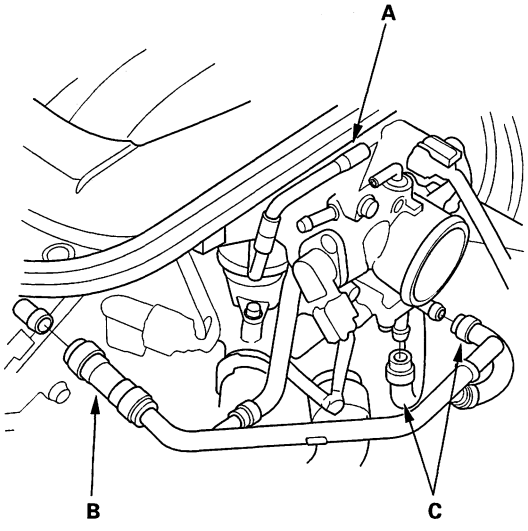

7. Remove the intake manifold.

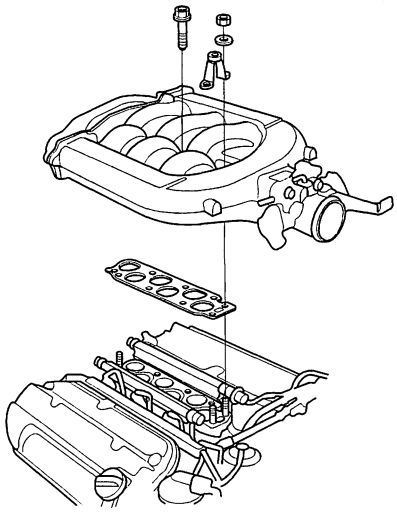

8. Remove the cylinder head covers.

9. Remove the front upper cover (see step 2 on page 6-18).

10. Set the No. 1 piston at TDC. Align the pointer (A) on the back cover with the No. 1 piston TDC mark (B) on the front camshaft pulley.

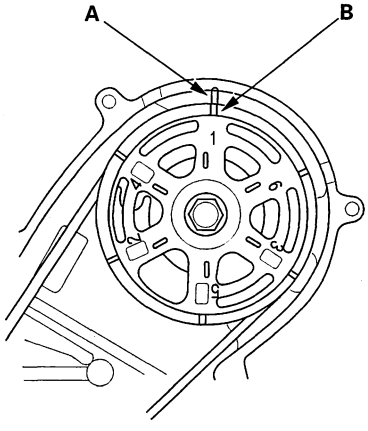

BACK

11. Select the correct thickness feeler gauge for the valves you're going to check.

Intake: 0.20 – 0.24 mm (0.008 – 0.009 in.)
Exhaust: 0.28 – 0.32 mm (0.011 – 0.013 in.)

Adjusting screw locations:

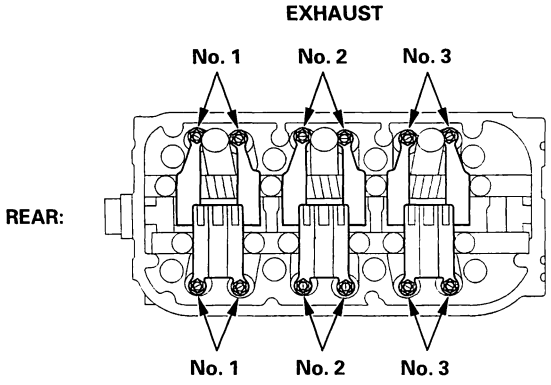

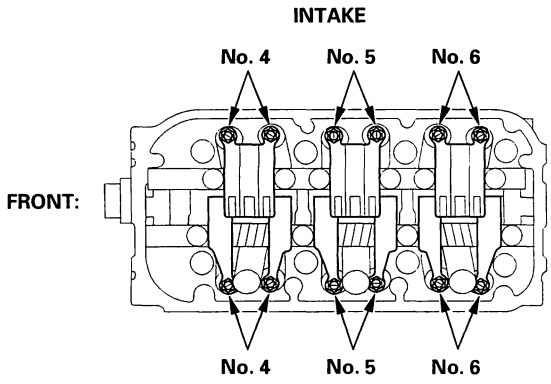

12. Insert the feeler gauge (A) between the adjusting screw (B) and the end of the valve stem and slide it back and forth; you should feel a slight amount of drag.

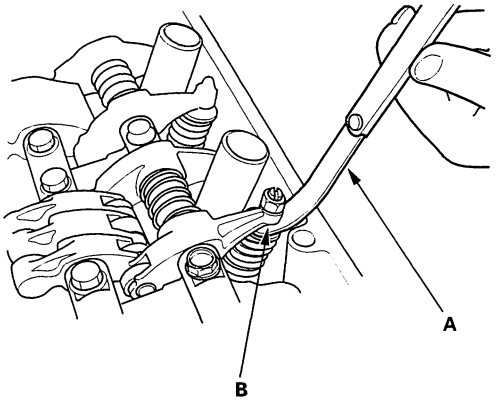

13. If you feel too much or too little drag, loosen the locknut (A), and turn the adjusting screw (B) until the drag on the feeler gauge is correct.

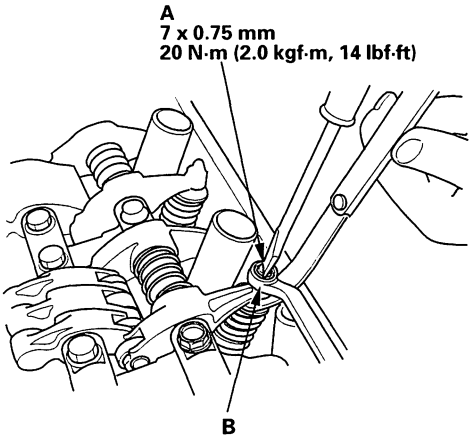

14. Tighten the locknut and recheck the clearance. Repeat the adjustment if necessary.

15. Rotate the crankshaft clockwise. Align the pointer (A) on the back cover with the No. 4 piston TDC mark (B) on the front camshaft pulley.

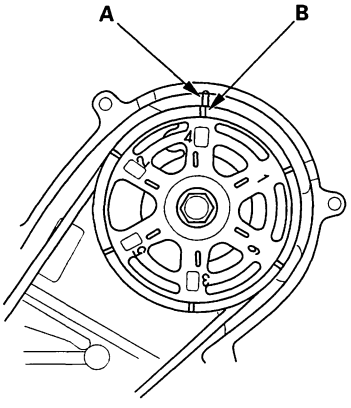

16. Check and, if necessary, adjust the valve clearance on No. 4 cylinder.

(cont'd)

Valve Clearance Adjustment (cont'd)

17. Rotate the crankshaft clockwise. Align the pointer (A) on the back cover with the No. 2 piston TDC mark (B) on the front camshaft pulley.

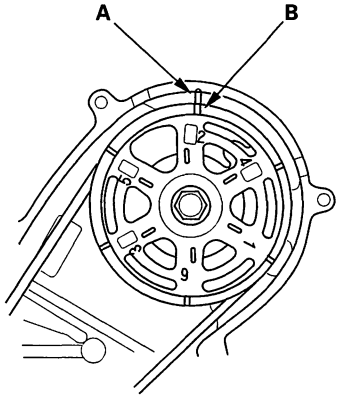

18. Check and, if necessary, adjust the valve clearance on No. 2 cylinder.

19. Rotate the crankshaft clockwise. Align the pointer (A) on the back cover with the No. 5 piston TDC mark (B) on the front camshaft pulley.

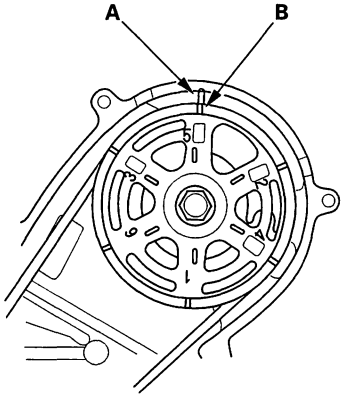

20. Check and, if necessary, adjust the valve clearance on No. 5 cylinder.

21. Rotate the crankshaft clockwise. Align the pointer (A) on the back cover with the No. 3 piston TDC mark (B) on the front camshaft pulley.

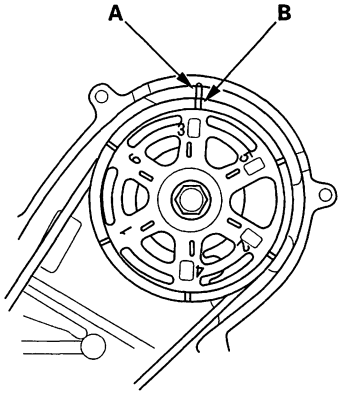

22. Check and, if necessary, adjust the valve clearance on No. 3 cylinder.

23. Rotate the crankshaft clockwise. Align the pointer (A) on the back cover with the No. 6 piston TDC mark (B) on the front camshaft pulley.

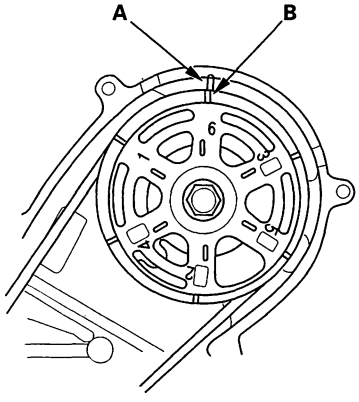

24. Check and, if necessary, adjust the valve clearance on No. 6 cylinder.

BACK

Crankshaft Pulley Removal and Installation

Special Tools Required
- Holder Handle 07JAB-001020A
- Holder Attachment, 50 mm, Offset 07MAB-PY3010A
- Socket, 19 mm 07JAA-001020A
  or a commercially available 19 mm socket

Removal

1. Hold the pulley with holder handle (A) and holder attachment (B).

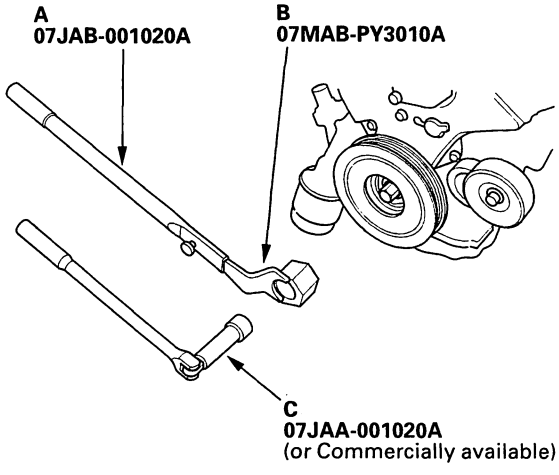

2. Remove the bolt with a heavy duty 19 mm socket (C) and breaker bar.

Installation

1. Clean the pulleys (A), crankshaft (B), bolt (C) and washer (D). Lubricate the points shown below.

○ : Clean
● : Lubricate

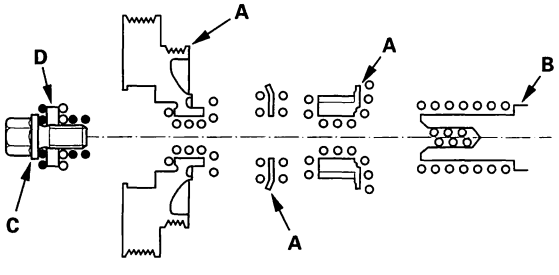

2. Install the crankshaft pulley, and tighten the bolt to 245 N·m (25.0 kgf·m, 181 lbf·ft). Do not use an impact wrench.

   –1 Hold the pulley with holder handle (A) and holder attachment (B).
   –2 Tighten the bolt with a torque wrench and 19 mm socket (C).

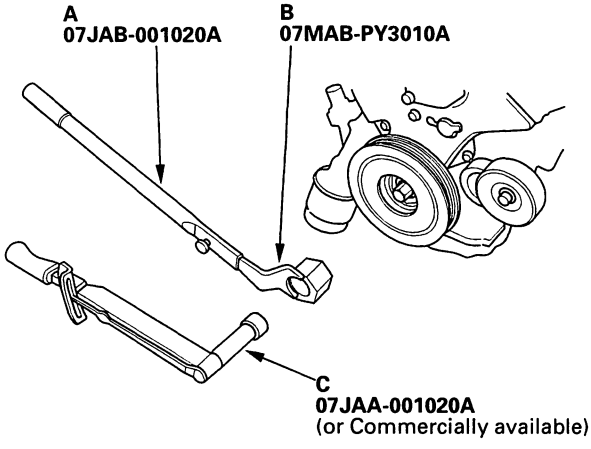

Timing Belt Inspection

1. '98-99 models: Remove the throttle body cover (A), ignition wire cover (B) and intake manifold cover (C).
   '00-02 models: Remove the throttle body cover (A) and intake manifold cover (B).

   '98-99 models:

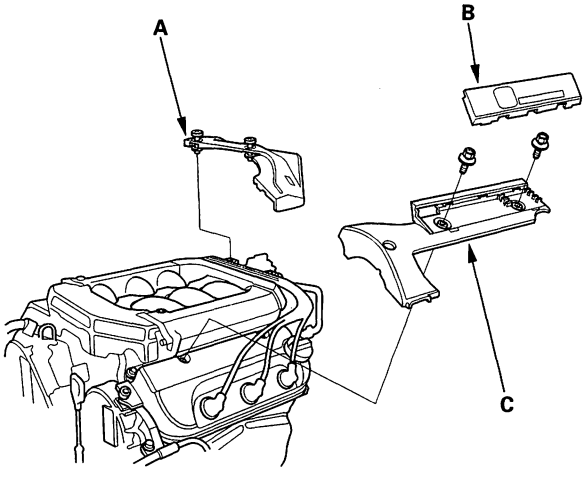

   '00-02 models:

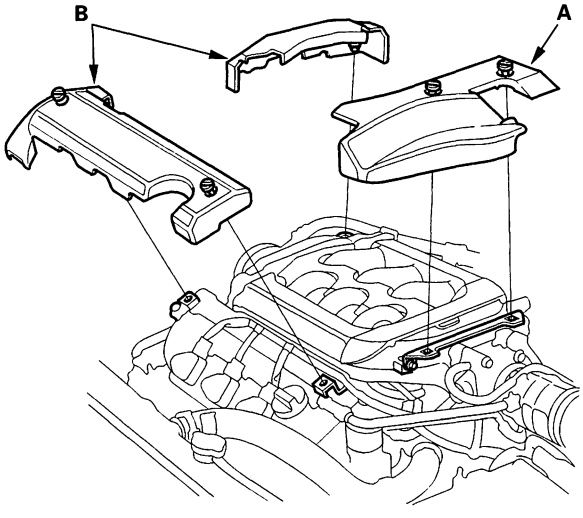

2. Remove the front upper cover.

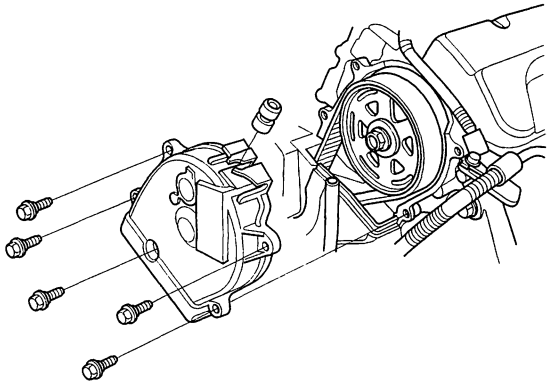

3. Inspect the timing belt for cracks and oil or coolant soaking. Replace the belt if it is oil or coolant soaked. Remove any oil or solvent that gets on the belt.

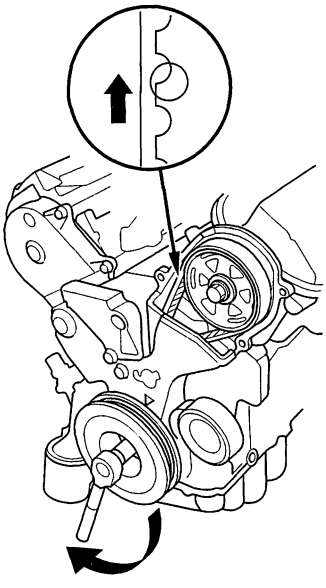

BACK

Timing Belt Removal

Special Tools Required
- Holder Handle 07JAB-001020A
- Holder Attachment, 50 mm, Offset 07MAB-PY3010A
- Socket, 19 mm 07JAA-001020A
  or a commercially available 19 mm socket
- Belt Tension Release Arm, YA9317,
  commercially available

1. Turn the crankshaft so its white mark (A) lines up with the pointer (B).

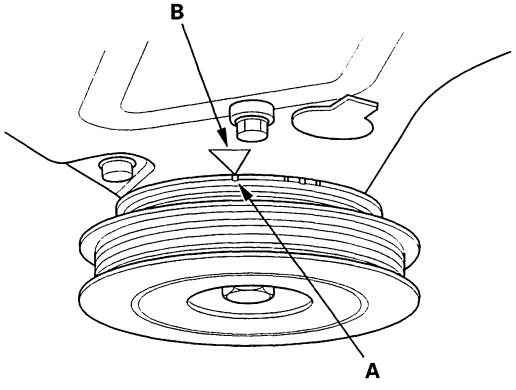

2. Check that the rear camshaft pulley mark (A) and rear upper cover mark (B) are aligned.

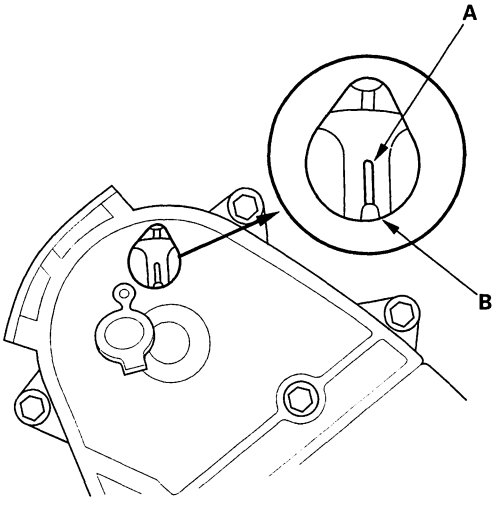

3. Remove the front tires/wheels.

4. Remove the splash shield.

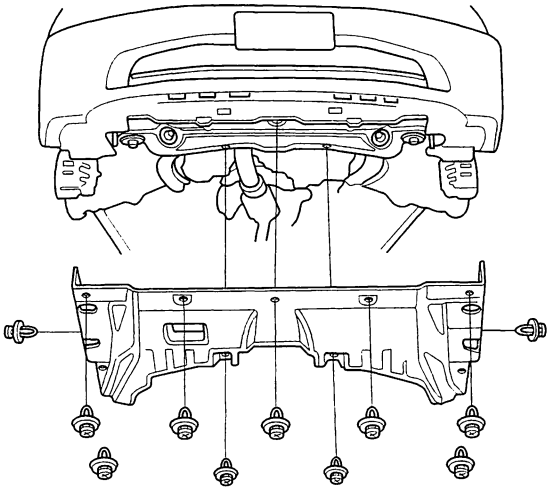

5. Move the auto-tensioner (A) with the belt tension release arm (B) to remove tension from the alternator belt (C), then remove the alternator belt.

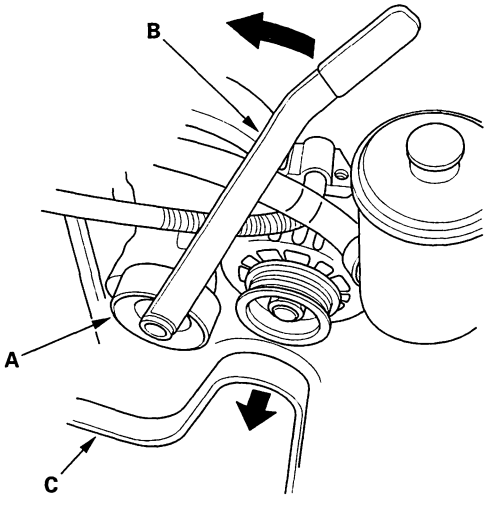

(cont'd)

Timing Belt Removal (cont'd)

6. Loosen the adjusting nut (A), locknut (B) and mounting bolt (C), then remove the power steering (P/S) pump belt (D).

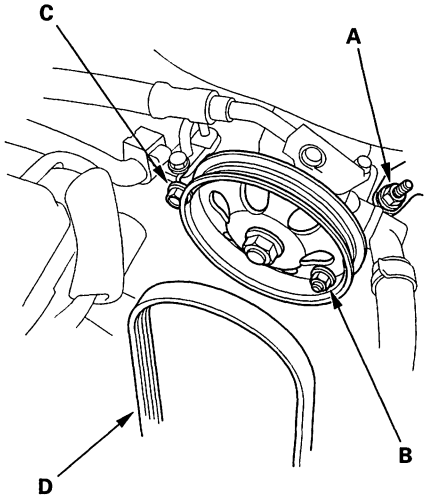

7. Support the engine with a jack and wood block under the oil pan.

8. Remove the side engine mount bracket.

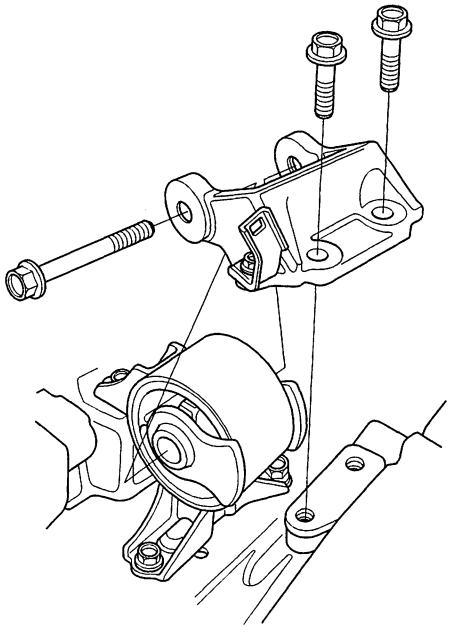

9. Remove the dipstick and tube (A); discard the O-ring (B).

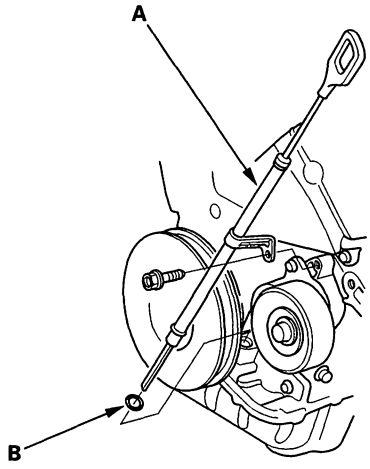

10. Hold the pulley with holder handle (A) and holder attachment (B).

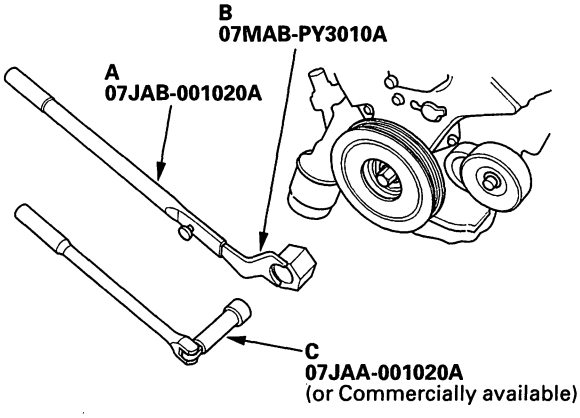

11. Remove the bolt with a heavy duty 19 mm socket (C) and breaker bar.

BACK

12. Remove the front upper cover (A), rear upper cover (B) and lower cover (C).

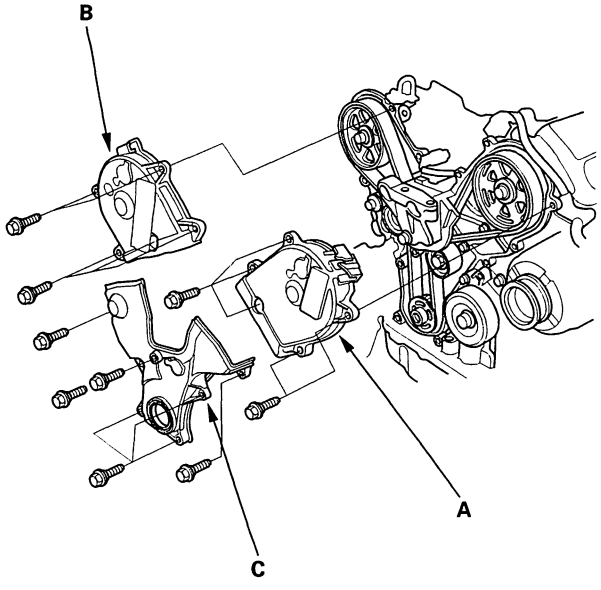

13. Remove one of the battery clamp bolts from the battery tray, and grind the end of it as shown.

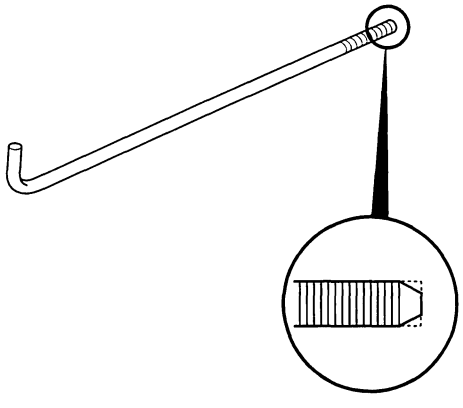

14. To hold the timing belt adjuster its current position, screw the battery clamp bolt in as shown. Tighten it by hand, do not use a wrench.

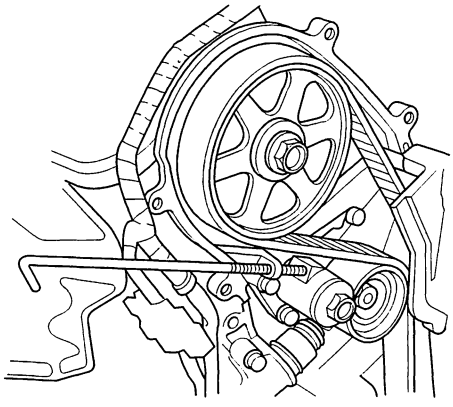

15. Remove the engine mount bracket.

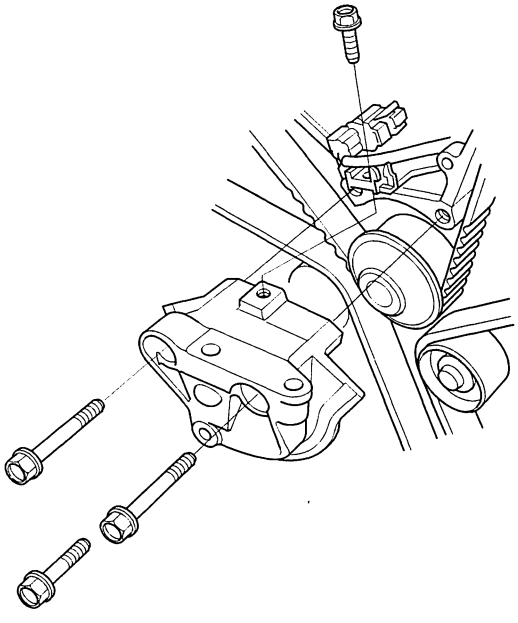

(cont'd)

Timing Belt Removal (cont'd)

16. Loosen the idler pulley bolt (A) about five or six turns, then remove the timing belt.

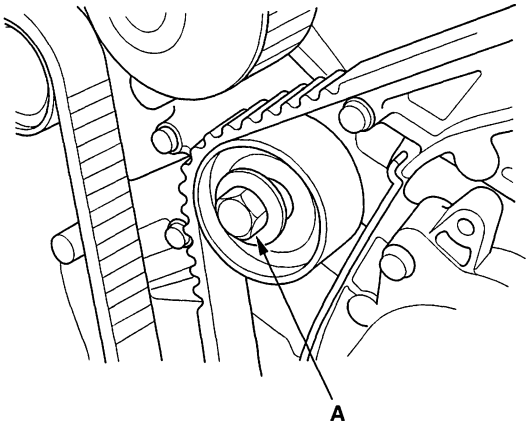

Timing Belt Installation

NOTE: The following procedure is for installing a new timing belt. If you are installing a used timing belt, refer to the next procedure.

New Belt

1. Clean the timing belt pulleys, and upper and lower covers.

2. Set the timing belt drive pulley to TDC by aligning the TDC mark (A) on the tooth of the timing belt drive pulley with the pointer (B) on the oil pump.

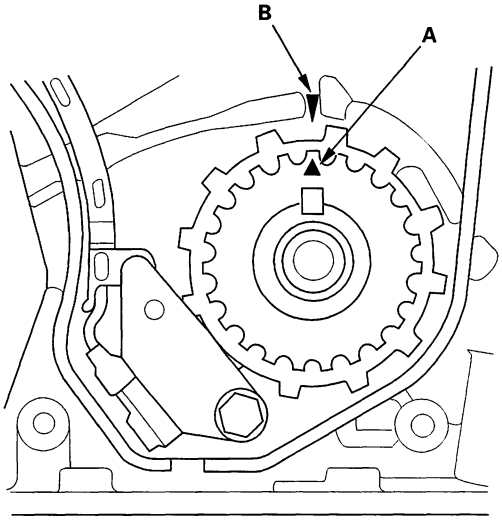

BACK

3. Clean the camshaft pulleys. Set the camshaft pulleys to TDC by aligning the TDC marks (A) on the camshaft pulleys with the pointers (B) on the back covers.

FRONT:

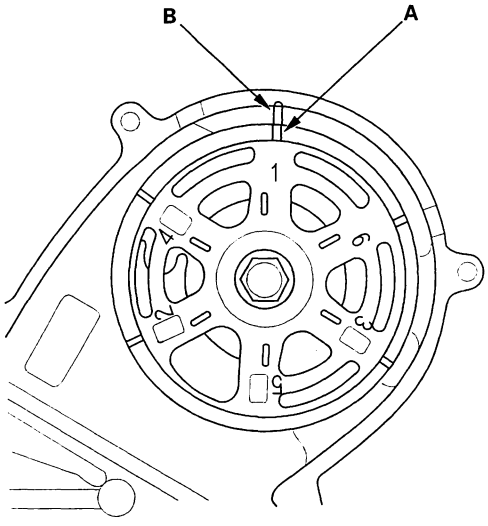

REAR:

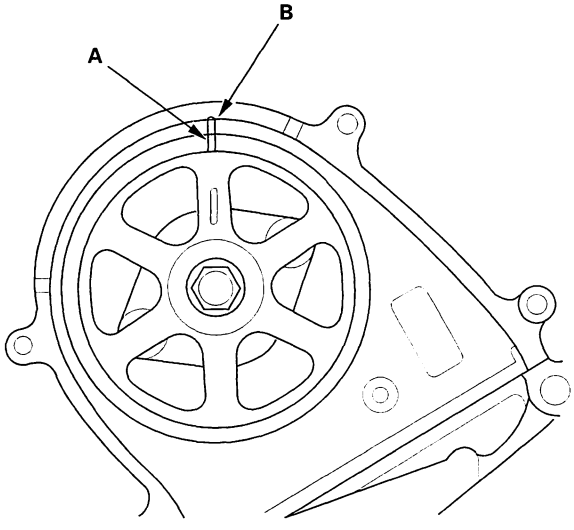

4. Remove the battery clamp bolt from the back cover.

5. Remove the auto-tensioner.

6. Hold the auto-tensioner (A) with the maintenance bolt pointing up. Loosen and remove the maintenance bolt (B).

   NOTE: Handle the auto-tensioner carefully so the oil inside does not spill or leak. If any of the oil has spilled or leaked out of the auto-tensioner, refill it with 5 W-30 motor oil. The total capacity is 6.5 mℓ (0.22 fl oz).

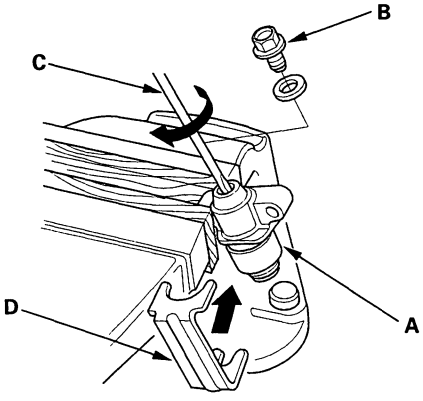

7. Clamp the boss of the auto-tensioner in a soft-jawed vise. Do not grip the housing of the auto-tensioner.

8. Insert a flat blade screwdriver (C) into the maintenance hole. Place the holder (D) (P/N 14540-P8A-A01) on the auto-tensioner while turning the screwdriver clockwise to compress the bottom.

   NOTE: Take care not to damage the threads or the gasket contact surface with the screwdriver.

9. Reinstall the maintenance bolt (A). Always use a new gasket (B).

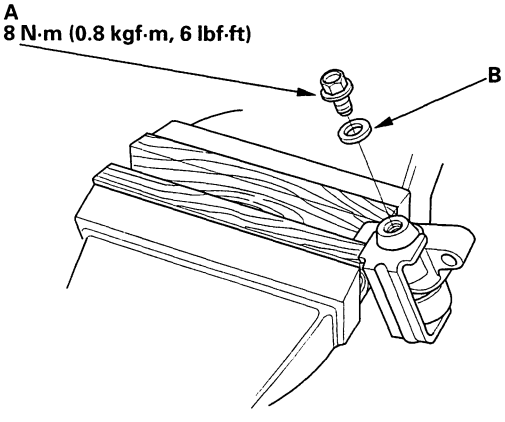

(cont'd)

Timing Belt Installation (cont'd)

10. Make sure no oil is leaking around the maintenance bolt, then install the auto-tensioner (A).

    NOTE: Make sure the holder (B) stays in place.

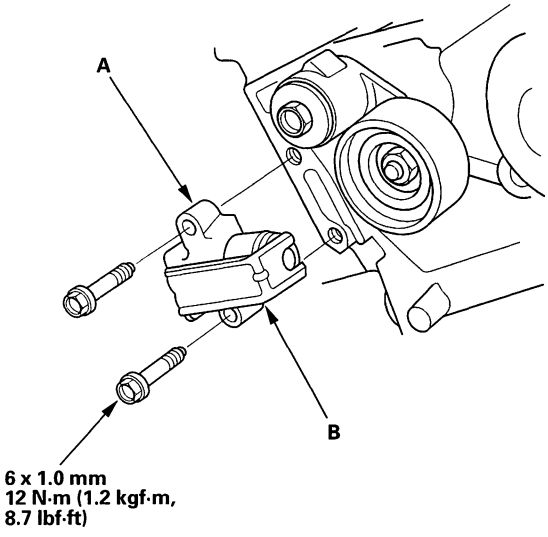

11. Install the timing belt in a counter clockwise sequence starting with the drive pulley.

    –1 Drive pulley (A).
    –2 Idler pulley (B).
    –3 Front camshaft pulley (C).
    –4 Water pump pulley (D).
    –5 Rear camshaft pulley (E).
    –6 Adjusting pulley (F).

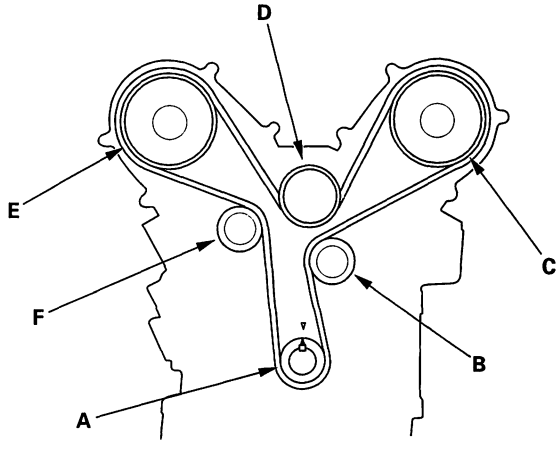

12. Tighten the idler pulley bolt.

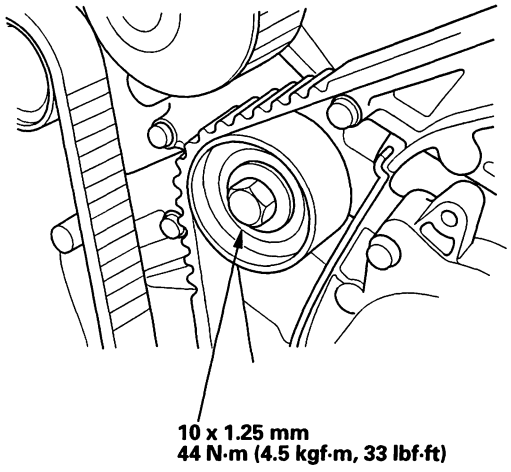

13. Remove the holder.

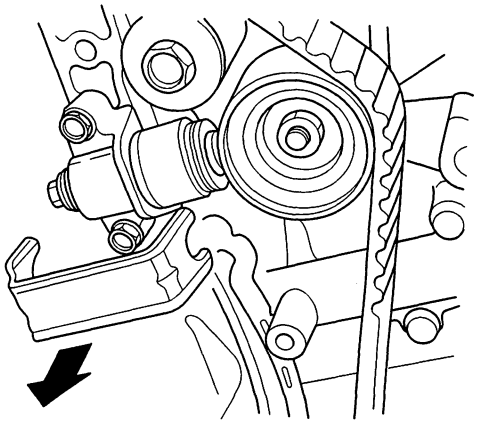

BACK

14. Install the engine mount bracket.

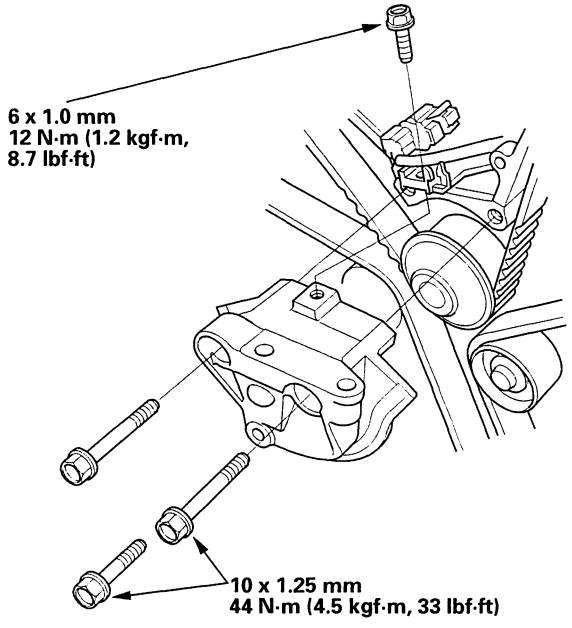

15. Install the lower cover (A), front upper cover (B) and rear upper cover (C).

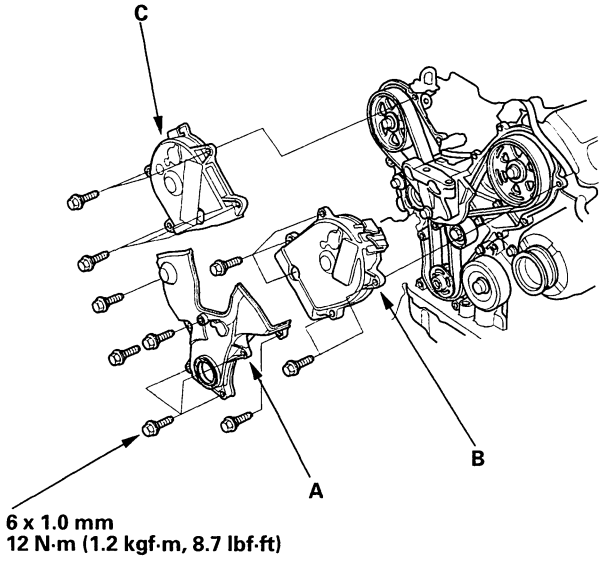

16. Clean the crankshaft pulley bolt and washer.

17. Clean all oil off the inside face (A) of the crankshaft pulley, and apply lubricant to the pulley bolt (B) and washer (C).

○ : Clean
● : Lubricate

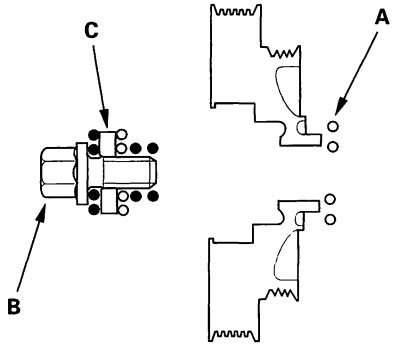

18. Install the crankshaft pulley, and tighten the bolt to 245 N·m (25.0 kgf·m, 181 lbf·ft). Do not use an impact wrench.

   –1 Hold the pulley with holder handle (A) and holder attachment (B).
   –2 Tighten the bolt with a torque wrench and 19 mm socket (C).

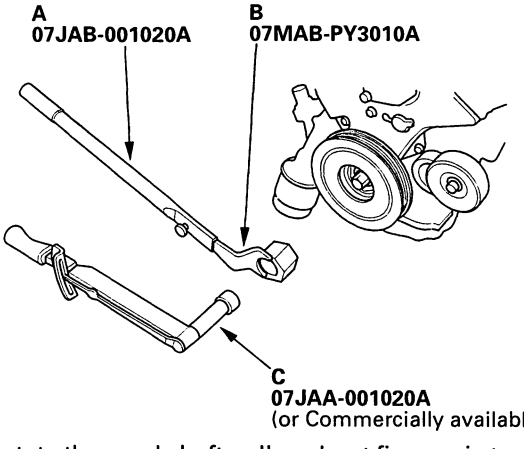

19. Rotate the crankshaft pulley about five or six turns clockwise so the timing belt positions on the pulleys.

(cont'd)

Timing Belt Installation (cont'd)

20. Turn the crankshaft pulley so its white mark (A) lines up with the pointer (B).

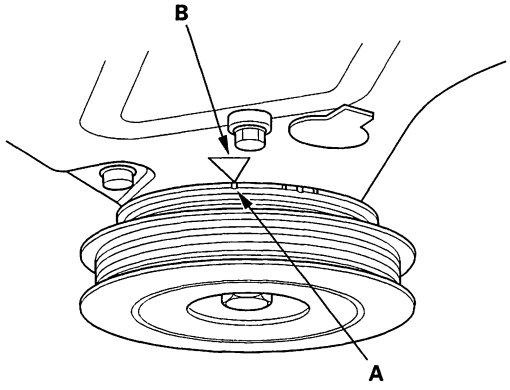

21. Check the camshaft pulley marks.

- If the camshaft pulley marks are at TDC, go to step 22.
- If the camshaft pulley marks are not at TDC, remove the timing belt and repeat steps 2 through 20.

FRONT CAMSHAFT PULLEY:

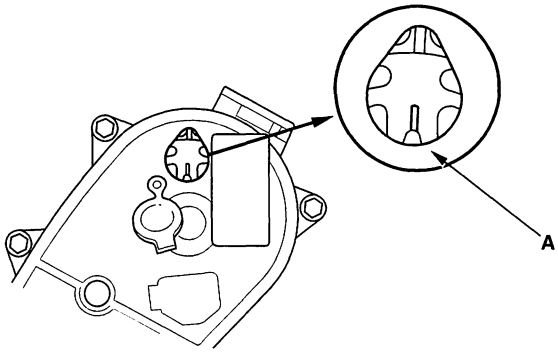

REAR CAMSHAFT PULLEY:

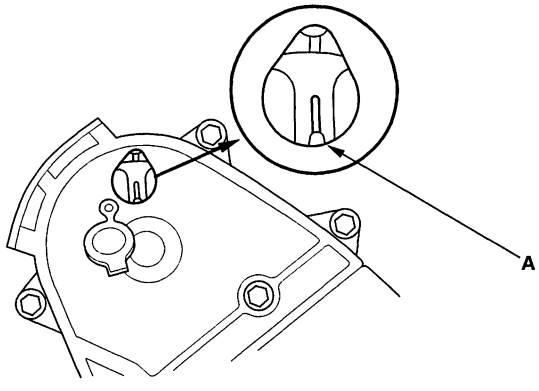

22. Install the dipstick and tube (A) with a new O-ring (B).

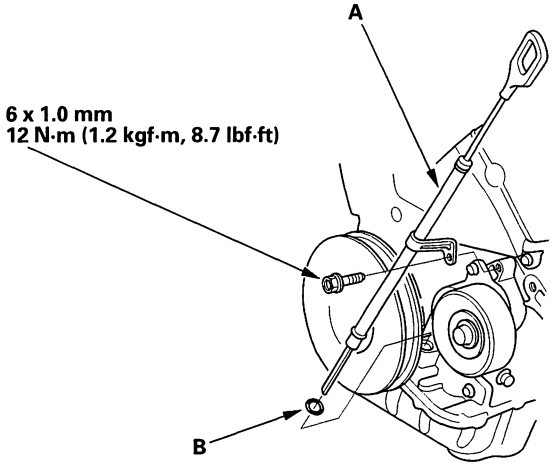

23. Install and adjust the P/S pump belt (see page 17-10).

24. Install the alternator belt.

25. Install the side engine mount bracket, then tighten the mounting bolts in the numbered sequence shown.

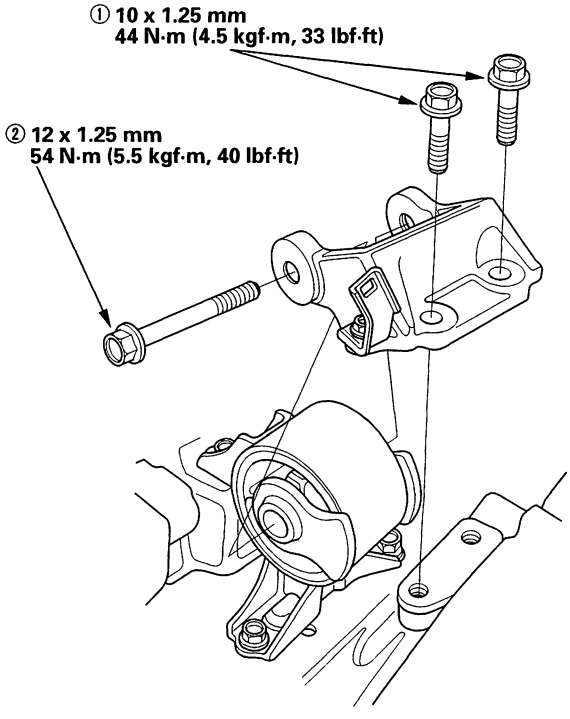

BACK

Used Belt

Follow this procedure when installing a used timing belt.

1. Clean the timing belt pulleys, and upper and lower covers.

2. Set the timing belt drive pulley to TDC by aligning the TDC mark (A) on the tooth of the timing belt drive pulley with the pointer (B) on the oil pump.

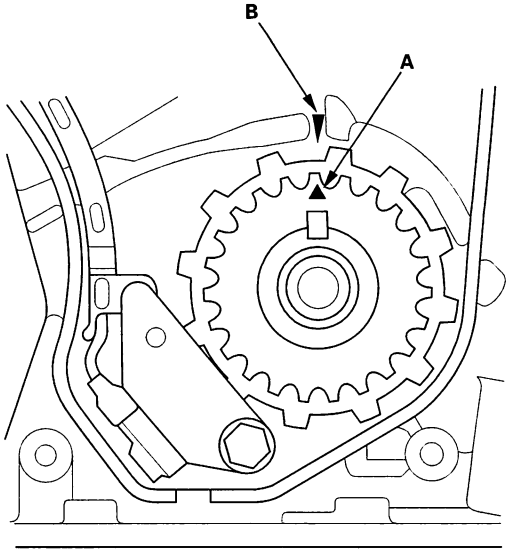

3. Clean the camshaft pulleys. Set the camshaft pulleys to TDC by aligning the TDC marks (A) on the camshaft pulleys with the pointers (B) on the back covers.

FRONT:

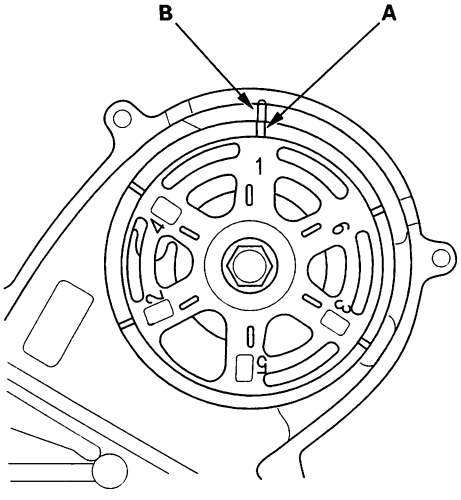

REAR:

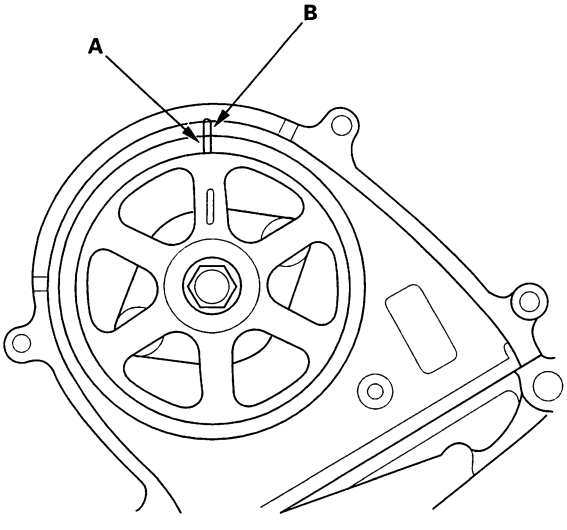

(cont'd)

Timing Belt Installation (cont'd)

4. If the auto-tensioner has extended and the timing belt cannot be installed, remove and compress the auto-tensioner (refer to steps 6-23 of the New Belt Installation Procedure).

5. Install the timing belt in a counter clockwise sequence starting with the drive pulley. Take care not to damage the timing belt when installing it.

   –1 Drive pulley (A).
   –2 Idler pulley (B).
   –3 Front camshaft pulley (C).
   –4 Water pump pulley (D).
   –5 Rear camshaft pulley (E).
   –6 Adjusting pulley (F).

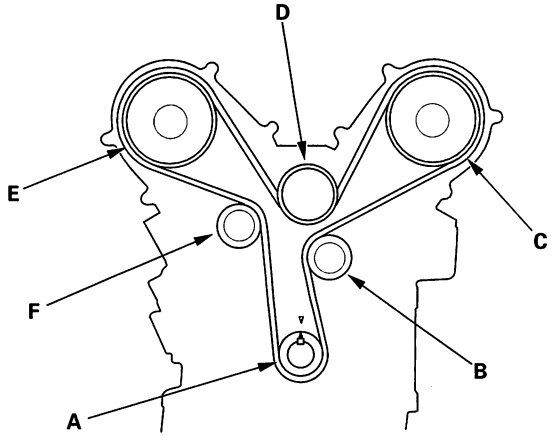

6. Tighten the idler pulley bolt.

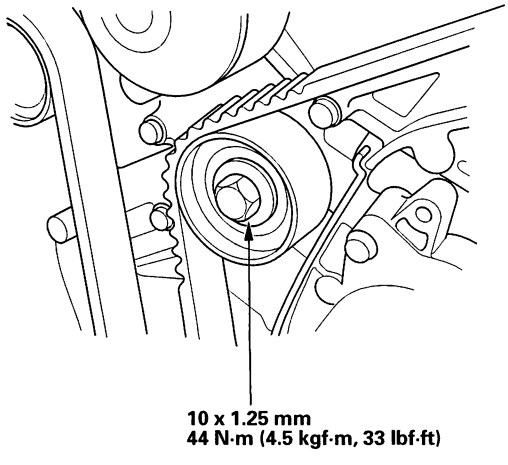

7. Remove the battery clamp bolt from the back cover.

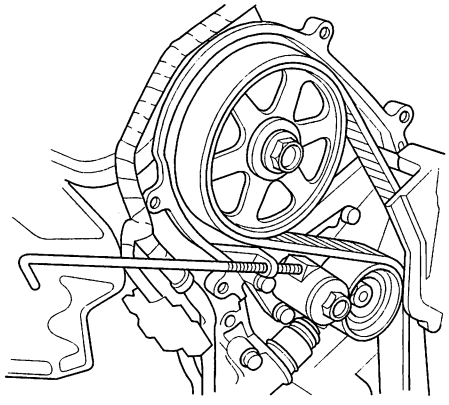

8. Install the engine mount bracket.

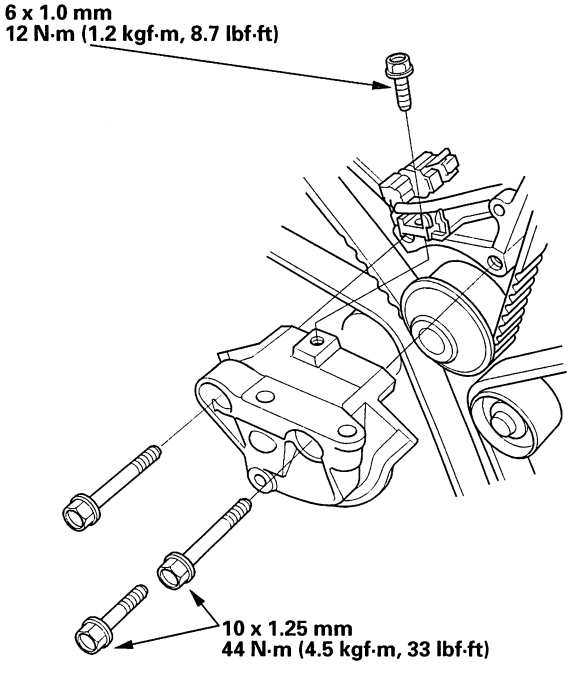

BACK

9. Install the lower cover (A), front upper cover (B) and rear upper cover (C).

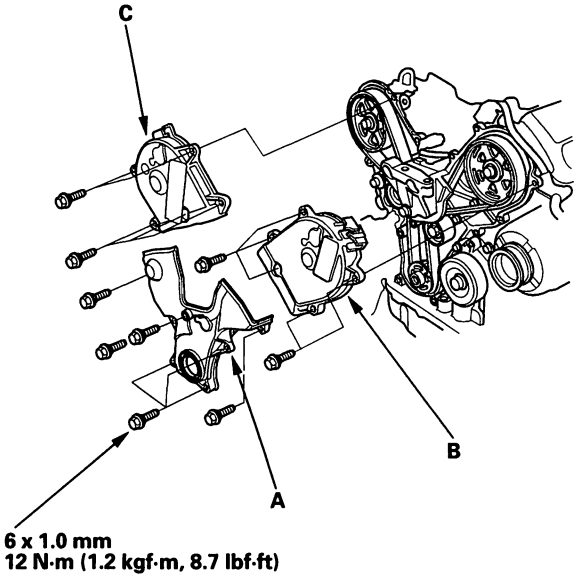

10. Clean the crankshaft pulley bolt and washer.

11. Clean any oil off the inside face (A) of the crankshaft pulley, and apply lubricant to the pulley bolt (B) and washer (C).

○ : Clean
● : Lubricate

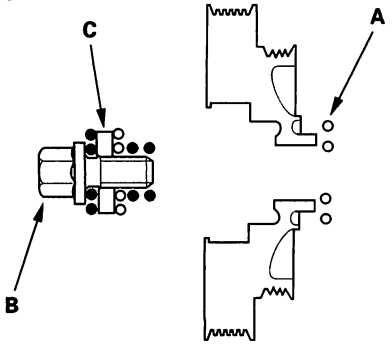

12. Install the crankshaft pulley, and tighten the bolt to 245 N·m (25.0 kgf·m, 181 lbf·ft). Do not use an impact wrench.

   –1 Hold the pulley with holder handle (A) and holder attachment (B).
   –2 Tighten the bolt with a torque wrench and 19 mm socket (C).

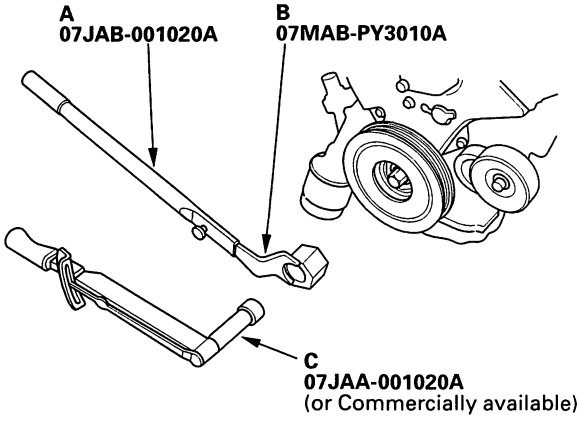

13. Rotate the crankshaft pulley about five or six turns clockwise so the timing belt positions on the pulleys.

14. Turn the crankshaft pulley so its white mark (A) lines up with the pointer (B).

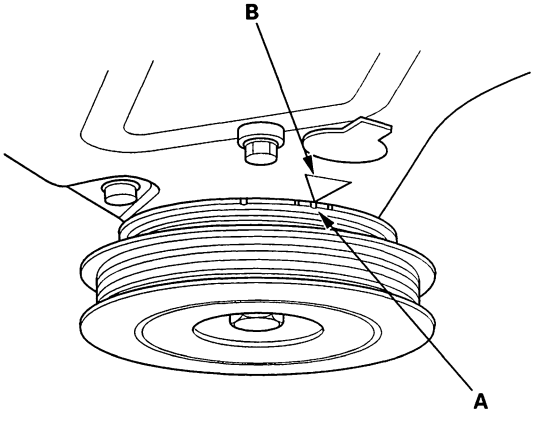

(cont'd)

Timing Belt Installation (cont'd)

15. Check the camshaft pulley marks (A).

    - If the camshaft pulley marks are at TDC, go to step 16.
    - If the camshaft pulley marks are not at TDC, remove the timing belt and repeat steps 2 through 14.

FRONT CAMSHAFT PULLEY:

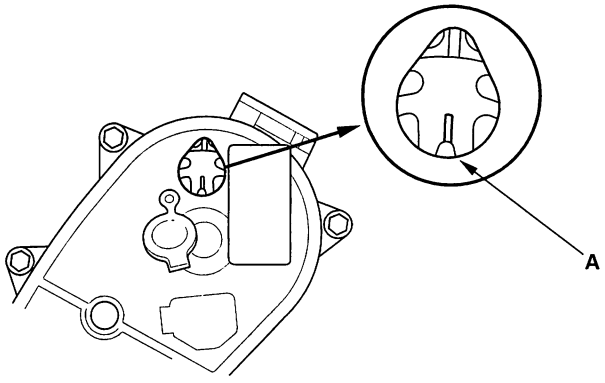

REAR CAMSHAFT PULLEY:

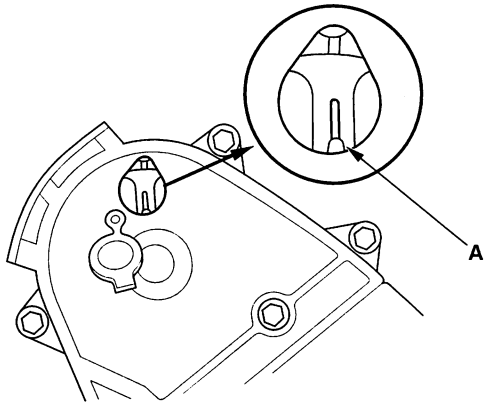

16. Install the dipstick and tube (A) with a new O-ring (B).

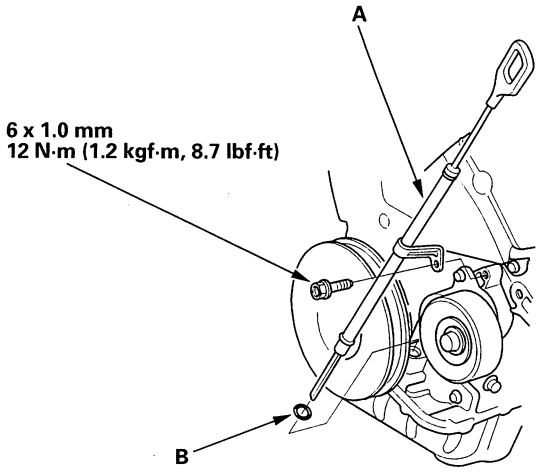

17. Install and adjust the P/S pump belt (see page 17-10).

18. Install the alternator belt.

19. Install the side engine mount bracket, then tighten the mounting bolts in the numbered sequence shown.

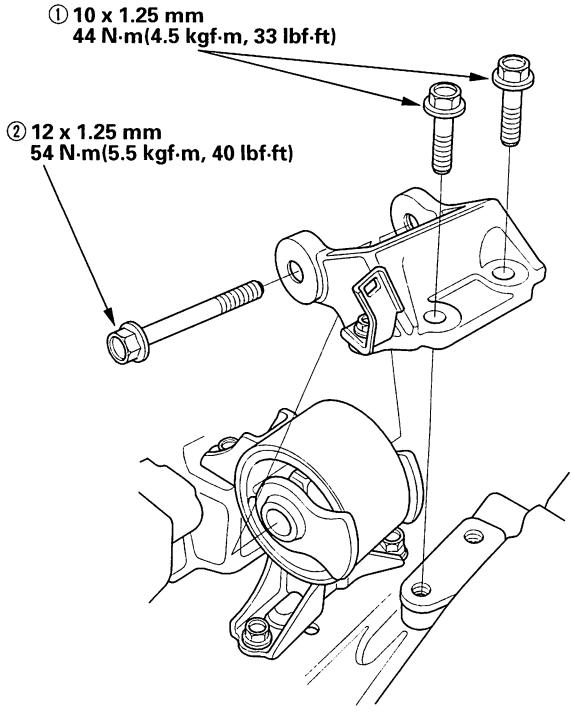

BACK

Cylinder Head Removal

Special Tool Required
Belt Tension Release Arm,YA9317, commercially available

Engine removal is not required this procedure.

NOTE:
- Use fender covers to avoid damaging painted surfaces.
- To avoid damage, unplug the wiring connectors carefully while holding the connector portion.
- To avoid damaging the cylinder head, wait until the engine coolant temperature drops below 100°F (38°C) before loosening the retaining bolts.
- Mark all wiring and hoses to avoid misconnection. Also, be sure that they do not contact other wiring or hoses, or interfere with other parts.

1. Make sure you have the anti-theft code for the radio, then write down the frequencies for the radio's preset buttons.

2. Disconnect the battery negative terminal.

3. Drain the engine coolant (see page 10-10).

4. '98-99 models: Remove the throttle body cover (A) , ignition wire cover (B) and intake manifold covers (C).

   '00-02 models: Remove the throttle body cover (A) , intake manifold covers (B) and intake manifold cover stay (C).

   '98-99 models:

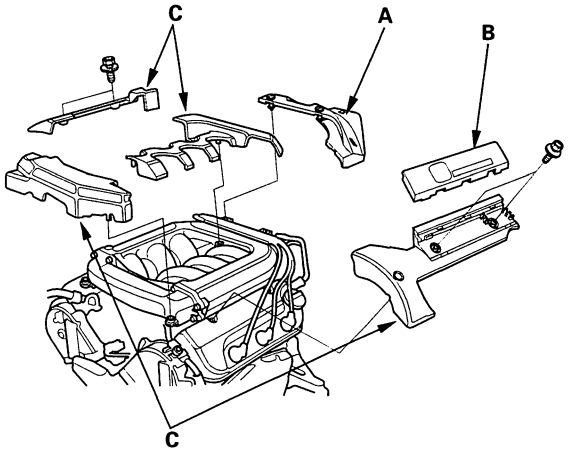

'00-02 models:

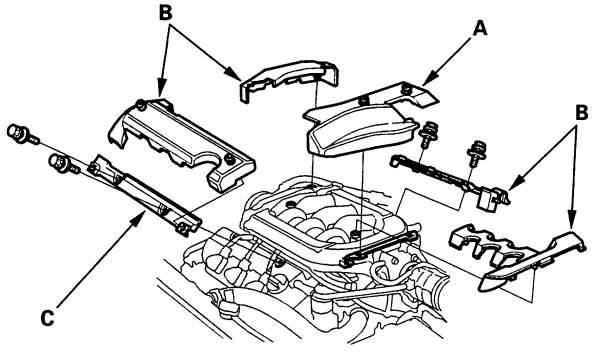

5. Remove the Evaporative Emission (EVAP) canister hose (A) from the throttle body.

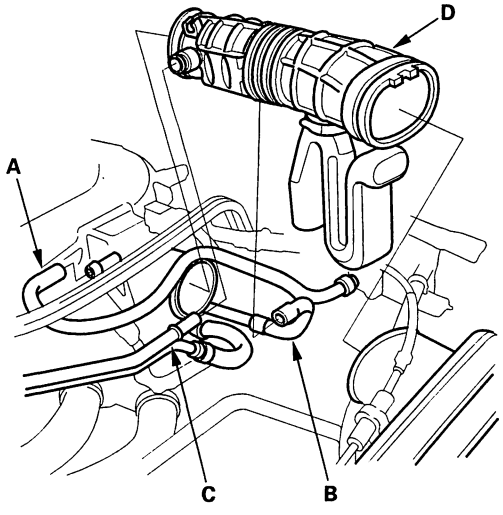

6. Remove the vacuum hose (B) and breather pipe (C) , then remove the intake air duct (D).

(cont'd)

Cylinder Head Removal (cont'd)

7. Remove the throttle cable (A) and cruise control cable (B) by loosening the locknuts (C), then slip the cable ends out of the accelerator linkage.Take care not to bend the cables when removing them. Always replace any kinked cable with a new one.

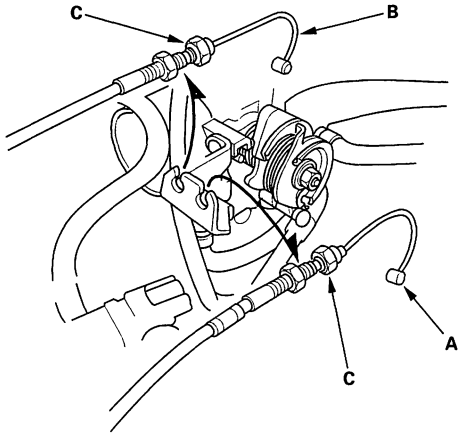

8. Relieve fuel pressure (see page 11-89).

9. Remove the fuel feed hose (A) and fuel return hose (B).

'98-99 models:

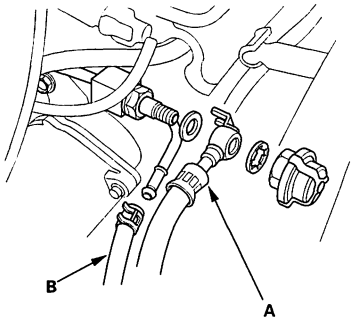

'00-02 models

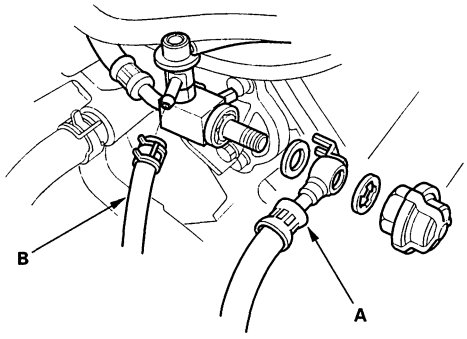

10. Remove the brake booster vacuum hose (A), vacuum hoses (B) and Positive Crankcase Ventilation (PCV) hose (C).

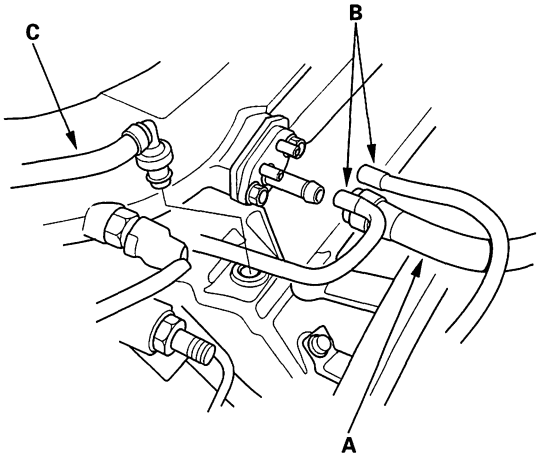

11. Remove the vacuum hose (A), ('98-99 models) breather hose (B) and water bypass hoses (C).

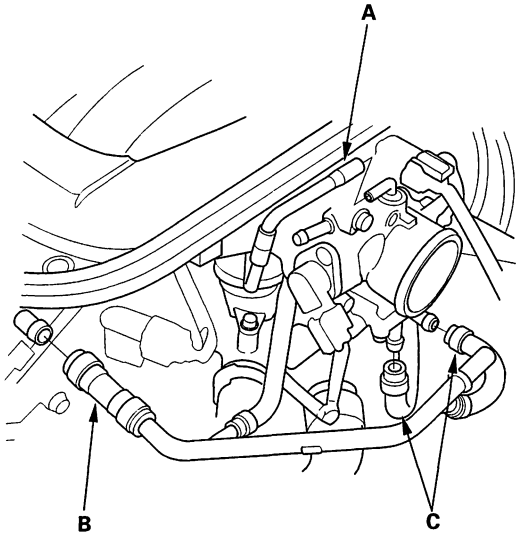

BACK

12. Remove the ground cable (A).

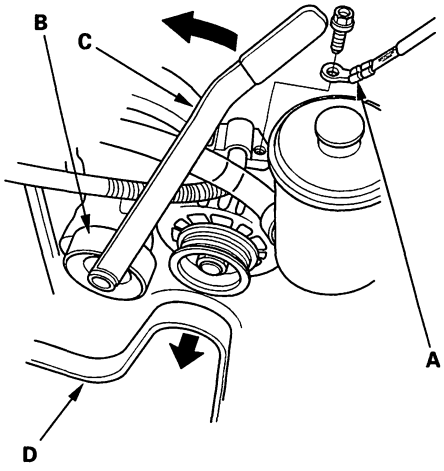

13. Move the auto-tensioner (B) with the belt tension release arm (C) to remove tension from the alternator belt (D), then remove the alternator belt.

14. Support the engine with a jack and wood block under the oil pan.

15. Remove the side engine mount bracket.

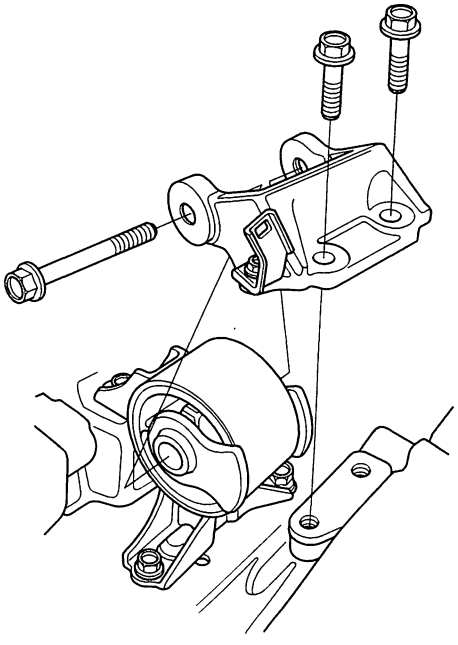

16. Loosen the adjusting nut (A), then remove the locknut (B) and mounting bolt (C). Remove the Power Steering (P/S) pump belt (D) and pump without disconnecting the P/S hoses.

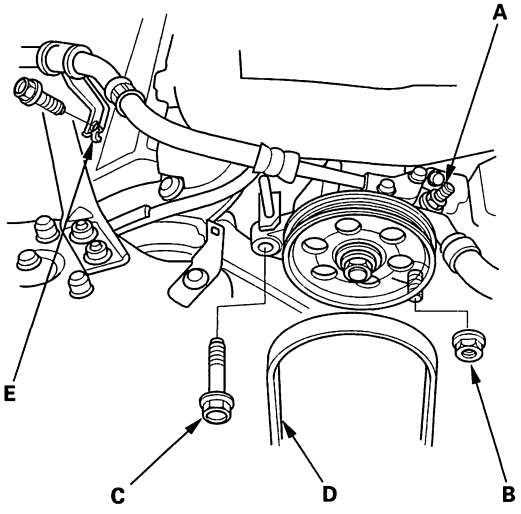

17. Remove the P/S hose clamp (E).

18. Remove the alternator (see page 4-31).

19. Remove the engine wire harness connectors and wire harness clamps from the cylinder heads and the intake manifold.

- Intake Air Temperature (IAT) sensor connector
- Idle Air Control (IAC) valve connector
- Throttle Position (TP) sensor connector
- Manifold Absolute Pressure (MAP) sensor connector
- Engine Coolant Temperature (ECT) sensor connector
- Radiator fan switch A connector
- Radiator fan switch B connector
- Coolant temperature gauge sending unit connector ('98-99 models)
- CKP sensor connector
- TDC sensor connector
- Exhaust Gas Recirculation (EGR) valve connector
- Distributor connector ('98-99 models)
- VTEC solenoid valve connector
- VTEC oil pressure switch connector
- Oil pressure switch connector

20. Remove the spark plug caps and distributor from the cylinder heads.

(cont'd)

Cylinder Head Removal (cont'd)

21. Remove the intake manifold.

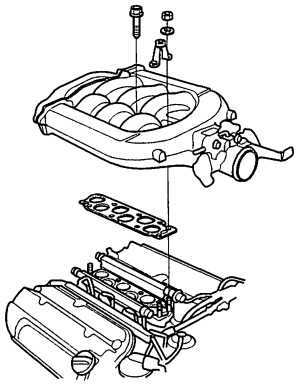

22. Disconnect the six injector connectors.

23. Remove the fuel rails.

'98-99 models:

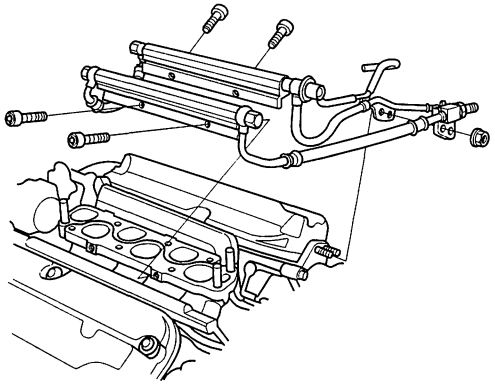

'00-02 models:

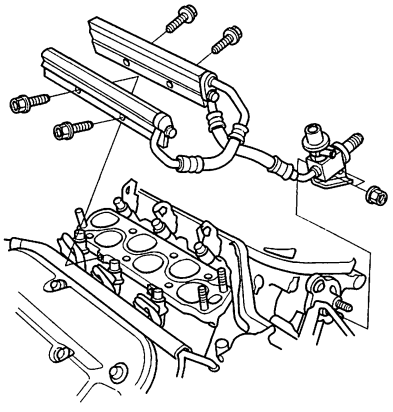

24. Remove the vacuum hoses (A) from the intake air bypass control thermal valve (B).

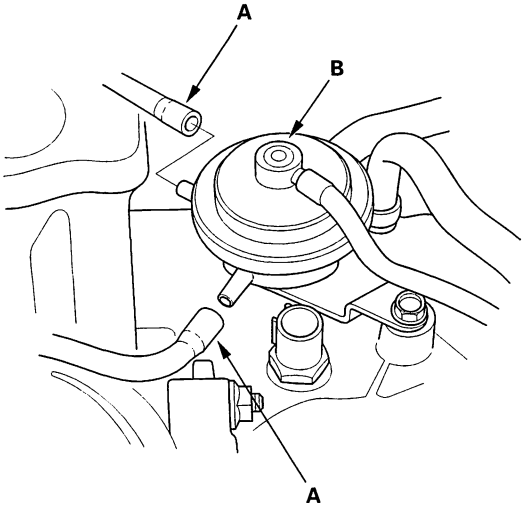

25. Remove the timing belt (see page 6-19).

26. Remove the upper radiator hose (A) and lower radiator hose (B).

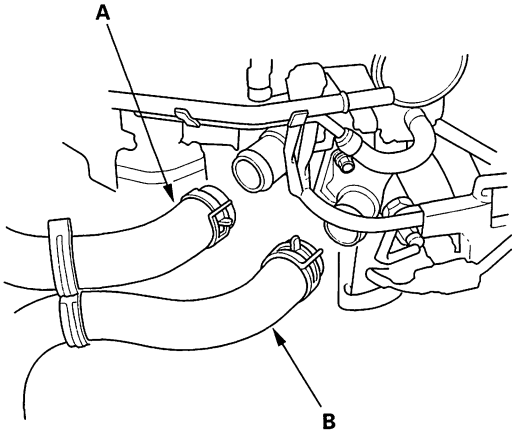

BACK

27. Remove the heater hoses.

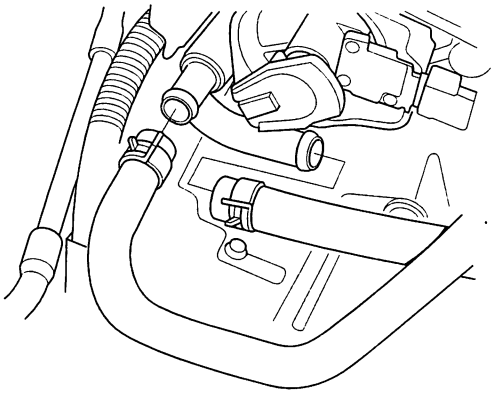

28. Remove the front and rear exhaust manifolds (see page 9-3).

29. Remove the water passage.

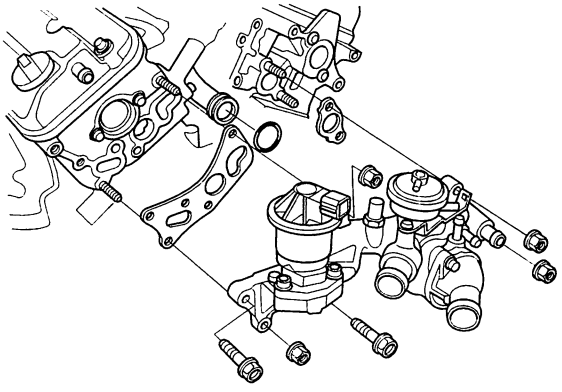

30. Remove the camshaft pulleys (A) and back covers (B).

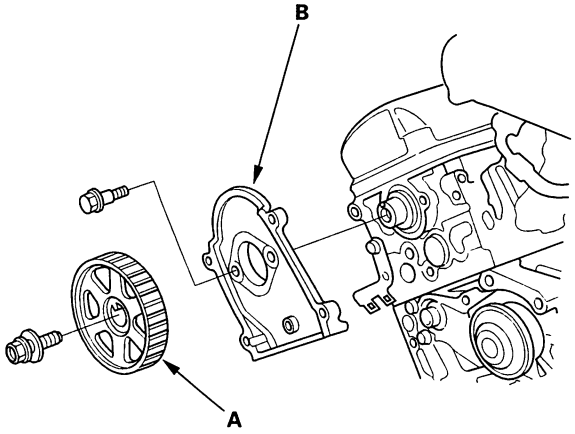

31. Remove the cylinder head covers.

32. Remove the cylinder head bolts. To prevent warpage, unscrew the bolts in sequence 1/3 turn at a time; repeat the sequence until all bolts are loosened.

CYLINDER HEAD BOLT LOOSENING SEQUENCE:

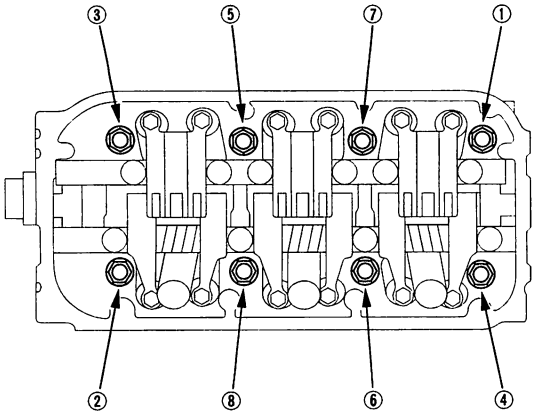

33. Remove the cylinder heads.

Cylinder Head Inspection for Warpage

NOTE: If camshaft-to-holder oil clearances (see page 6-40) are not within specifications, the cylinder head cannot be resurfaced.

If camshaft-to-holder oil clearances are within specifications, check the cylinder head for warpage. Measure along the edges, and three ways across the center.

- If warpage is less than 0.05 mm (0.002 in.), cylinder head resurfacing is not required.
- If warpage is between 0.05 mm (0.002 in.) and 0.2 mm (0.008 in.), resurface the cylinder head.
- Maximum resurface limit is 0.2 mm (0.008 in.) based on a height of 121 mm (4.76 in.).

Cylinder Head Height:
Standard (New): 120.95 – 121.05 mm (4.762 – 4.766 in.)

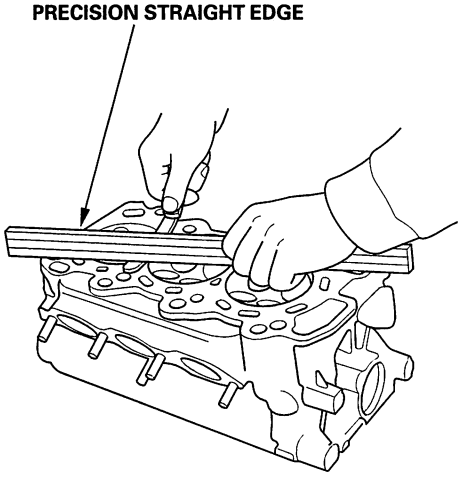

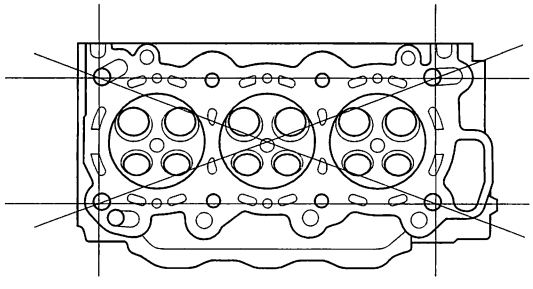

Rocker Arm Assembly Removal

1. Loosen the adjusting screws (A).

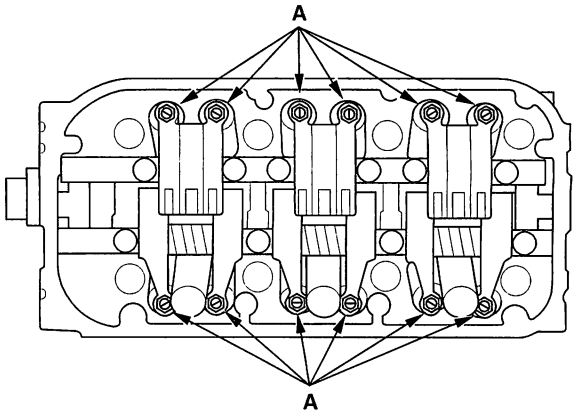

2. Remove the bolts and the rocker arm assembly.

   –1 Unscrew the rocker shaft mounting bolts two turns at a time, in a crisscross pattern, to prevent damaging the valves or rocker arm assembly.
   –2 When removing the rocker arm assembly, do not remove the rocker shaft mounting bolts. The bolts will keep the springs and the rocker arms on the shafts.

CAMSHAFT HOLDER BOLT LOOSENING SEQUENCE:

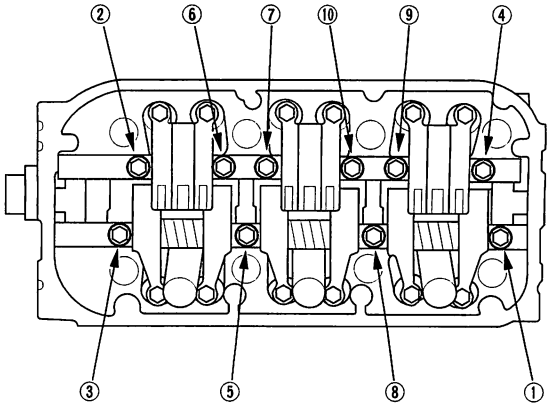

BACK

Rocker Arms and Shafts Disassembly/Reassembly

NOTE:
- Identify parts as they are removed so they can be reinstalled in their original locations.
- Inspect the rocker shafts and rocker arms (see page 6-38).
- Rocker arms must be installed in the same positions if reused.
- When removing or installing the rocker arm assembly, do not remove the rocker shaft mounting bolts. The bolts will keep the springs and rocker arms on the shaft.
- Bundle the rocker arms with rubber bands to keep them together as a set.
- Prior to reassembling, clean all the parts in solvent, dry them and apply lubricant to any contact points.

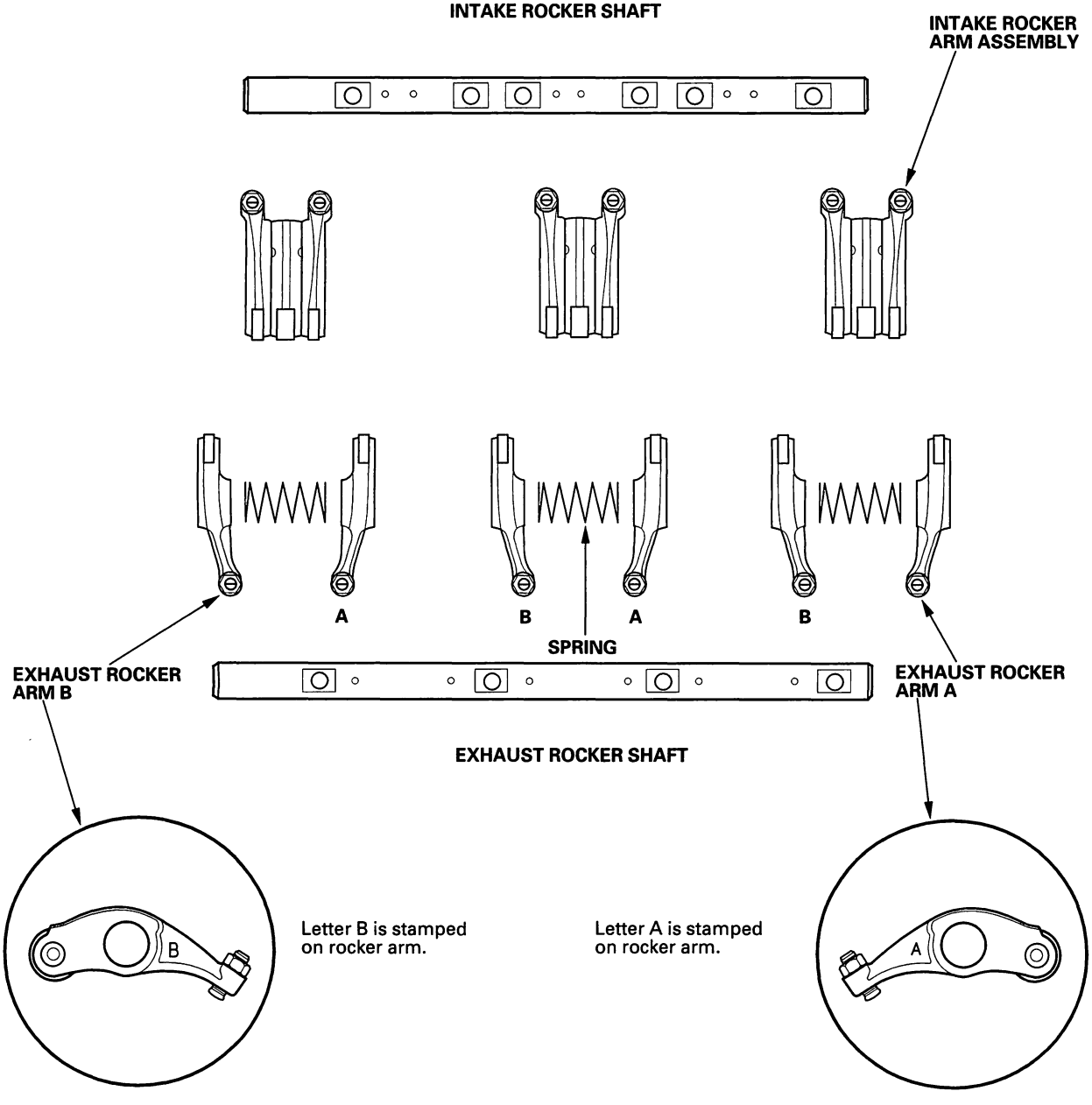

Rocker Arms and Shafts Inspection

Measure the intake rocker shaft and exhaust rocker shaft.

1. Measure the diameter of the shaft at the first rocker location.

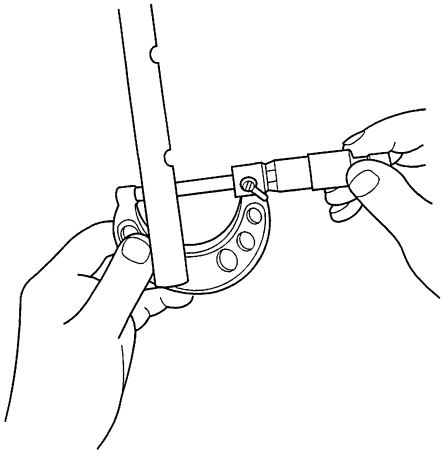

2. Zero the gauge (A) to the shaft diameter.

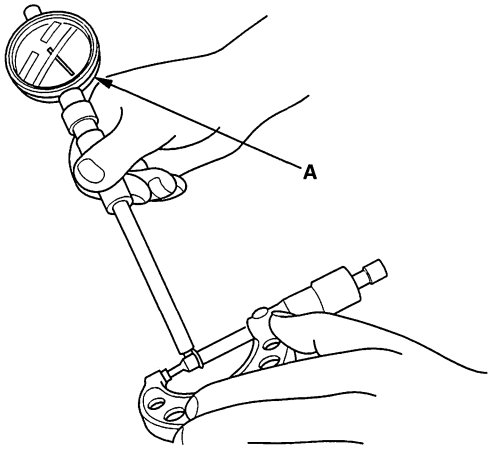

3. Measure the inside diameter of the rocker arm, and check it for an out-of-round condition.

Rocker Arm-to-Shaft Clearance:
Standard (New):

Intake:	**0.026–0.067 mm (0.0010–0.0026 in.)**
Service Limit:	**0.067 mm (0.0026 in.)**
Exhaust:	**0.026–0.077 mm (0.0010–0.0030 in.)**
Service Limit:	**0.077 mm (0.0030 in.)**

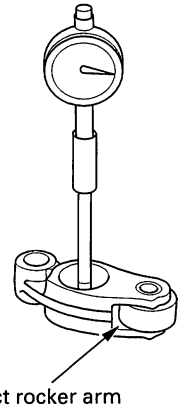

Inspect rocker arm face for wear.

4. Repeat for all rockers and both shafts. If the clearance is over the limit, replace the rocker shaft and all overtolerance rocker arms. If any intake rocker arm needs replacement, replace all three rocker arms in that set (primary, mid, and secondary).

BACK

VTEC Rocker Arms

5. Inspect the rocker arm pistons (A). Push them manually. If they do not move smoothly, replace the rocker arm set.

   NOTE:
   - Apply oil to the pistons when reassembling.
   - When reassembling the primary rocker arm (B), carefully apply air pressure to the oil passage of the rocker arm.

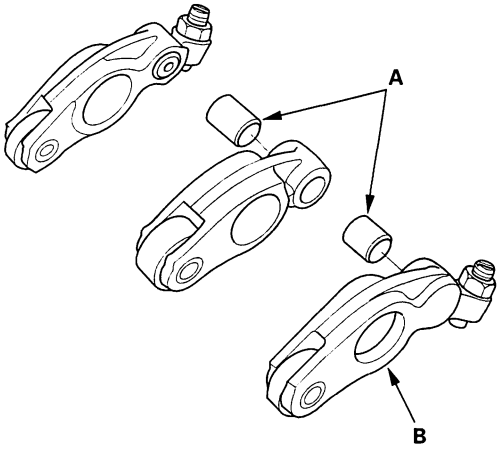

VTEC Lost Motion Assemblies Inspection

Push on the lost motion assembly (A) with your finger. If it does not move smoothly, replace it.

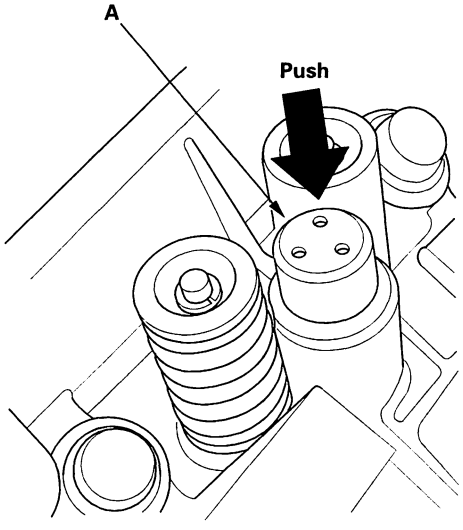

Camshaft Inspection

1. Remove the rocker arms.

2. Put the rocker shafts on the cylinder head, then tighten the bolts to the specified torque.

   Specified torque:
   8 X 1.25 mm
   24 N·m (2.4 kgf·m, 17 lbf·ft)
   Apply engine oil to the bolt threads and flange

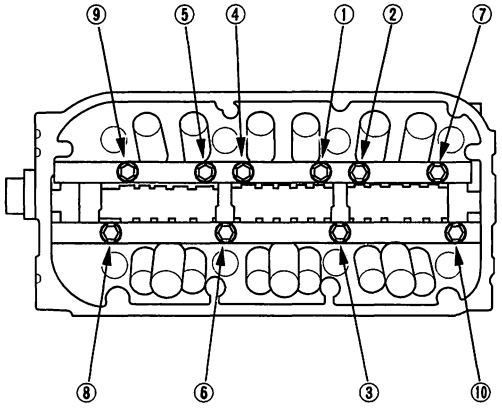

3. Seat the camshaft by pushing it toward the rear of the cylinder head.

4. Zero the dial indicator against the end of the camshaft. Push the camshaft back and forth and read the end play.

   Camshaft End Play:
   Standard (New): 0.05–0.20 mm (0.002–0.008 in.)
   Service Limit: 0.20 mm (0.008 in.)

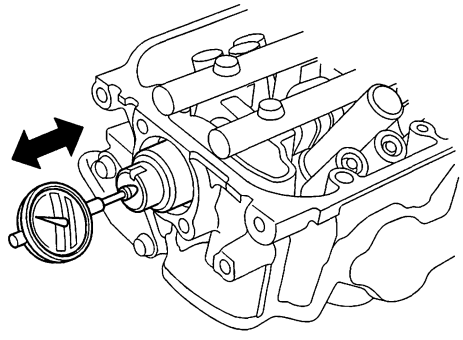

5. Remove the camshaft thrust cover (A), then pull out the camshaft (B).

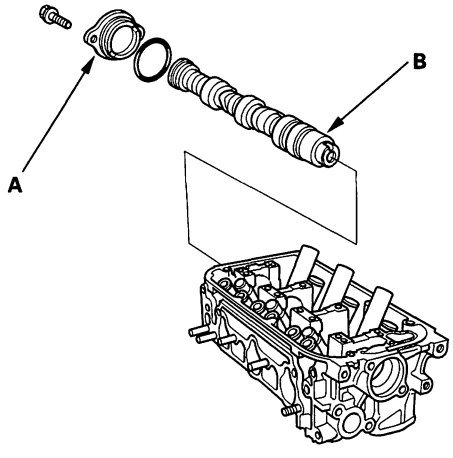

BACK

6. Wipe the camshaft clean, then inspect the lift ramps. Replace the camshaft if any lobes are pitted, scored or excessively worn.

7. Measure the diameter of each camshaft journal.

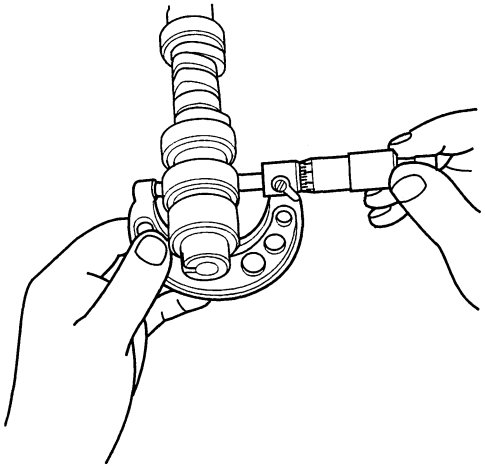

8. Zero the gauge to the journal diameter.

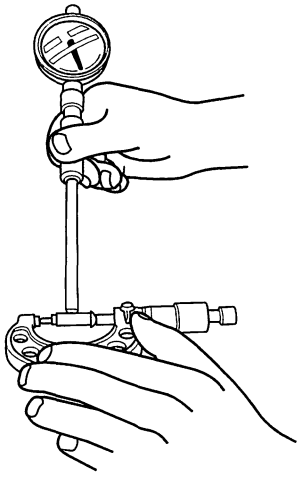

9. Clean the camshaft bearing surfaces in the cylinder head. Measure the inside diameter of each camshaft bearing surface, and check for an out-of-round condition.
   - If the camshaft-to-holder clearance is within limits, go to step 11.
   - If the camshaft-to-holder clearance is beyond the service limit and the camshaft has been replaced, replace the cylinder head.
   - If the camshaft-to-holder clearance is beyond the service limit and the camshaft has not been replaced, go to step 10.

Camshaft-to-Holder Oil Clearance:

Standard (New):	**0.050 – 0.089 mm (0.0020 – 0.0035 in.)**
Service Limit:	**0.15 mm (0.006 in.)**

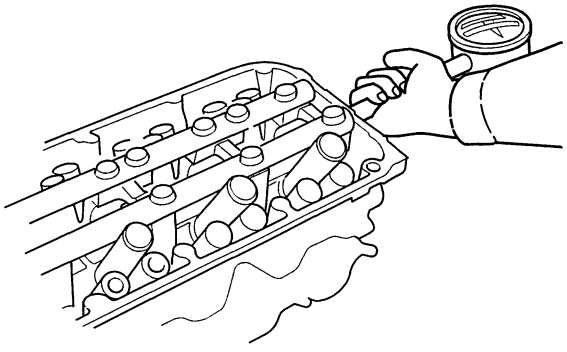

(cont'd)

Camshaft Inspection (cont'd)

10. Check total runout with the camshaft supported on V-blocks.

    - If the total runout of the camshaft is within the service limit, replace the cylinder head.
    - If the total runout is beyond the service limit, replace the camshaft and recheck the oil clearance. If the clearance is still out of tolerance, replace the cylinder head.

    Camshaft Total Runout:
    Standard (New): 0.03 mm (0.001 in.) max.
    Service Limit: 0.04 mm (0.002 in.)

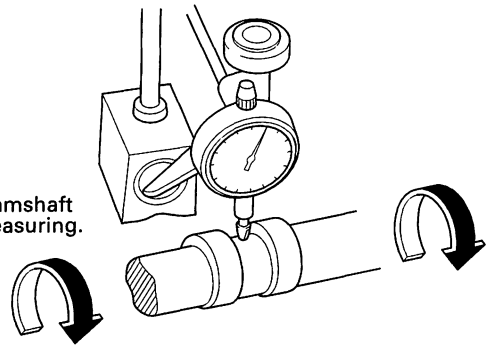

11. Measure cam lobe height.

Cam Lobe Height Standard (New):

	INTAKE	EXHAUST
PRI	34.615 mm (1.3628 in.)	36.076 mm (1.4203 in.)
MID	36.210 mm (1.4256 in.)	
SEC	31.188 mm (1.2279 in.)	

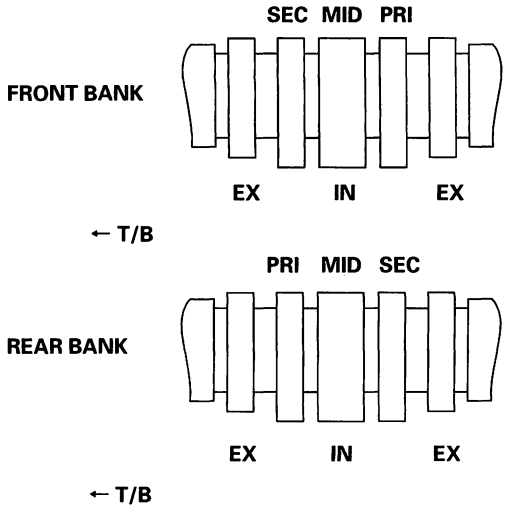

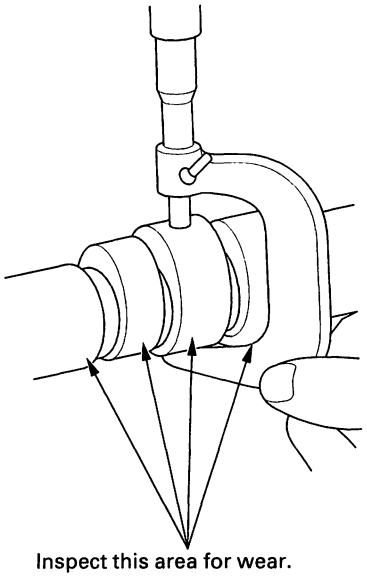

BACK

Valves, Springs and Valve Seals Removal

Special Tools Required
- Valve Spring Compressor Attachment 07757-PJ1010A
- Commercially available Valve Spring Compressor KD383 with No.32 jaws
- Commercially available Valve Guide Seal Remover KD3350

Identify the valves and valve springs as they are removed so that each item can be reinstalled in its original position.

1. Using an appropriate-sized socket (A) and plastic mallet (B), lightly tap the valve retainer to loosen the valve keepers.

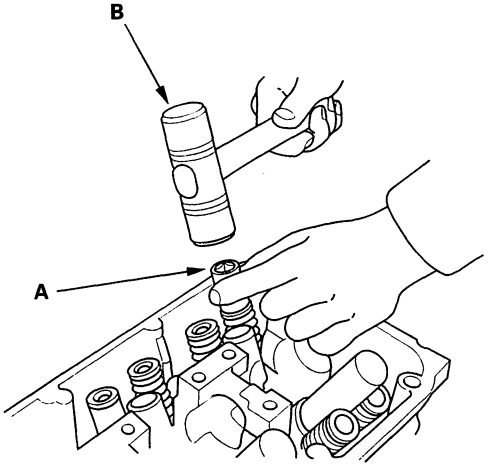

2. Install the valve spring compressor. Compress the spring and remove the valve keepers.

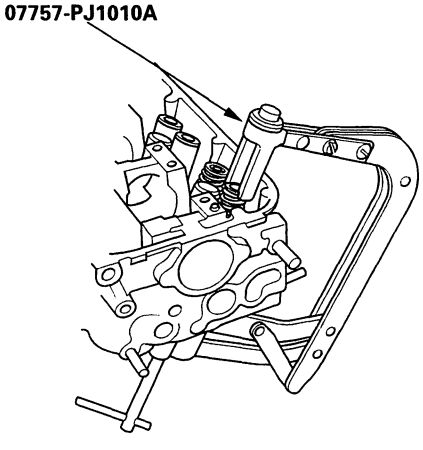

3. Install the valve guide seal remover (A).

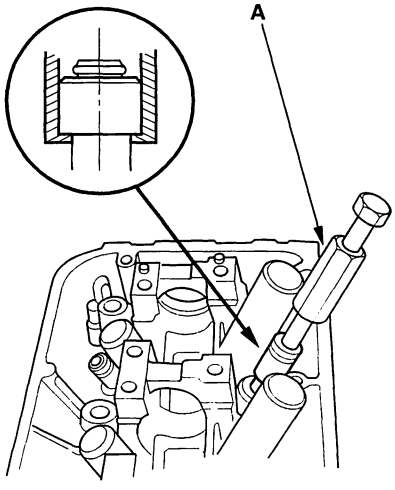

4. Remove the valve seal.

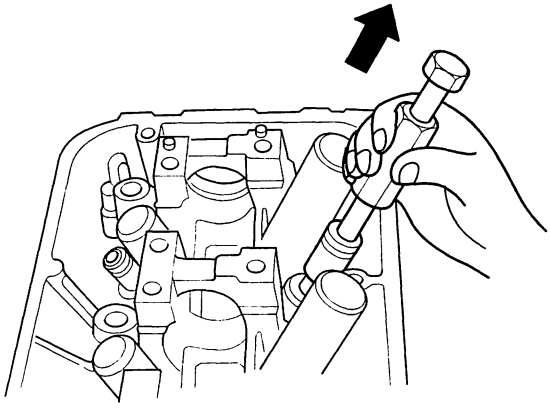

Valve Inspection

Measure the valve in these areas.

Intake Valve Dimensions

A Standard (New):	**33.90–34.10 mm (1.335–1.343 in.)**
B Standard (New):	**114.85–115.15 mm (4.522–4.533 in.)**
C Standard (New):	**5.485–5.495 mm (0.2159–0.2163 in.)**
C Service Limit:	**5.455 mm (0.2148 in.)**
D Standard (New):	**0.85–1.15 mm (0.033–0.045 in.)**
D Service Limit:	**0.65 mm (0.026 in.)**

Exhaust Valve Dimensions

A Standard (New):	**28.90–29.10 mm (1.138–1.146 in.)**
B Standard (New):	**112.85–113.15 mm (4.443–4.455 in.)**
C Standard (New):	**5.450–5.460 mm (0.2146–0.2150 in.)**
C Service Limit:	**5.420 mm (0.2134 in)**
D Standard (New):	**1.05–1.35 mm (0.041–0.053 in.)**
D Service Limit:	**0.95 mm (0.037 in.)**

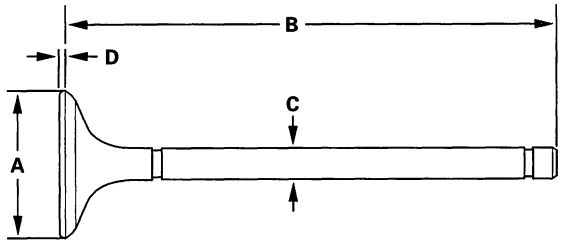

Valve Stem-to-Guide Clearance Inspection

1. Slide the valve out of its guide about 10 mm, then measure the guide-to-stem clearance with a dial indicator while rocking the stem in the direction of normal thrust (wobble method).
   - If the measurement exceeds the service limit, recheck it using a new valve.
   - If the measurement is now within the service limit, reassemble using a new valve.
   - If the measurement with a new valve still exceeds the service limit, go to step 2.

   Intake Valve Stem-to-Guide Clearance:

Standard (New):	**0.04–0.09 mm (0.002–0.004 in.)**
Service Limit:	**0.16 mm (0.006 in.)**

   Exhaust Valve Stem-to-Guide Clearance:

Standard (New):	**0.11–0.16 mm (0.004–0.006 in.)**
Service Limit:	**0.24 mm (0.009 in.)**

2. Subtract the O.D. of the valve stem, measured with a micrometer, from the I.D. of the valve guide, measured with an inside micrometer or ball gauge. Take the measurements in three places along the valve stem and three places inside the valve guide. The difference between the largest guide measurement and the smallest stem measurement should not exceed the service limit.

   Intake Valve Stem-to-Guide Clearance:

Standard (New):	**0.020–0.045 mm (0.0008–0.0018 in.)**
Service Limit:	**0.08 mm (0.003 in.)**

   Exhaust Valve Stem-to-Guide Clearance:

Standard (New):	**0.055–0.080 mm (0.0022–0.0031 in.)**
Service Limit:	**0.12 mm (0.005 in.)**

BACK

Valve Guide Replacement

Special Tools Required
- Valve Guide Driver, 5.5 mm 07742-0010100
- Valve Guide Reamer, 5.5 mm 07HAH-PJ7010B

1. As illustrated below, use a commercially available air-impact valve guide driver (A) modified to fit the diameter of the valve guides. In most cases, the same procedure can be done using the special tool and a conventional hammer.

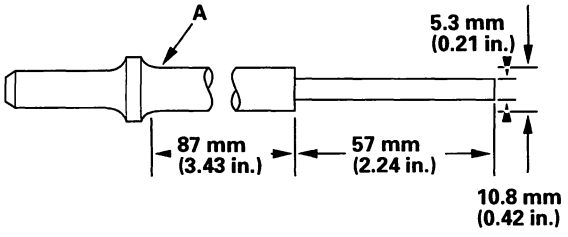

2. Select the proper replacement guides and chill them in the freezer section of a refrigerator for about an hour.

3. Use a hot plate or oven to evenly heat the cylinder head to 300°F (150°C). Monitor the temperature with a cooking thermometer. Do not get the head hotter than 300°F (150°C); Excessive heat may loosen the valve seats.

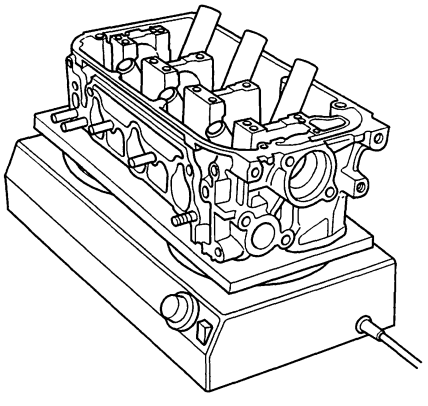

4. Working from the camshaft side, use the driver and an air hammer to drive the guide about 2 mm (0.1 in.) towards the combustion chamber. This will knock off some of the carbon and make removal easier. Hold the air hammer directly in line with the valve guide to prevent damaging the driver. Wear safety goggles or a face shield.

5. Turn the head over and drive the guide out toward the camshaft side of head.

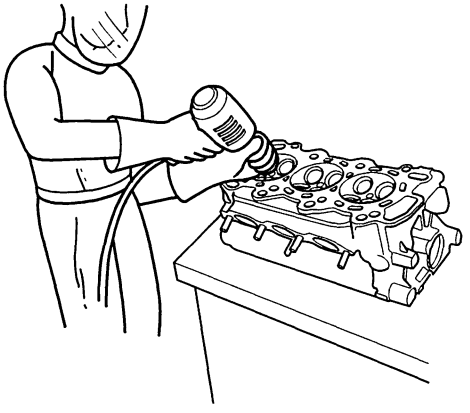

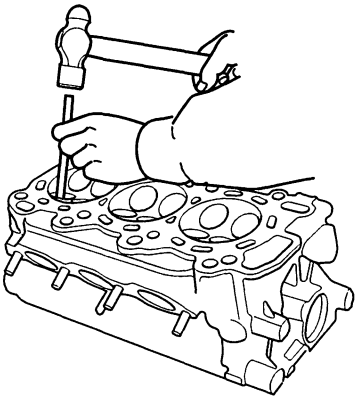

6. If a valve guide won't move, drill it out with a 8 mm (5/16 in.) bit, then try again. Drill guides only in extreme cases; you could damage the cylinder head if the guide breaks.

7. Remove the new guide(s) from the freezer, one at a time, as you need them.

(cont'd)

Valve Guide Replacement (cont'd)

8. Apply a thin coat of clean engine oil to the outside of the new valve guide. Install the guide from the camshaft side of the head; use the special tool to drive the guide in to the specified installed height (A) of the guide (B). If you have all 12 guides to do, you may have to reheat the head.

   Valve Guide Installed Height:
   Intake: 21.20–22.20 mm (0.835–0.874 in.)
   Exhaust: 20.63–21.63 mm (0.812–0.852 in.)

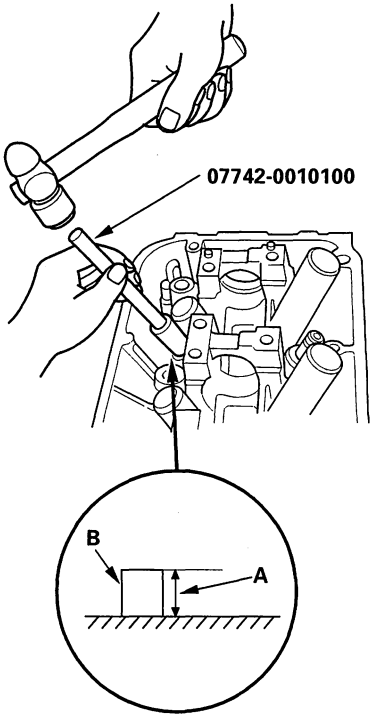

9. Coat both the reamer and the valve guide with cutting oil.

10. Rotate the reamer clockwise the full length of the valve guide bore.

11. Continue to rotate the reamer clockwise while removing it from the bore.

12. Thoroughly wash the guide in detergent and water to remove any cutting residue.

13. Check the clearance with a valve (see page 6-44). Verify that the valve slides in the intake and exhaust valve guides without exerting pressure.

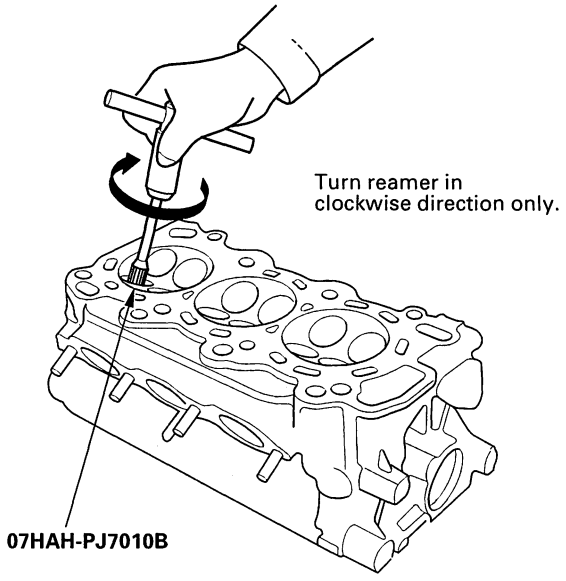

BACK

Valve Seat Reconditioning

If the valve guides are worn (see page 6-44), replace them (see page 6-45)before cutting the valve seats.

1. Renew the valve seats in the cylinder head using a valve seat cutter.

   –1 Carefully cut a 45° seat, removing only enough material to ensure a smooth and concentric seat.
   –2 Bevel the upper edge of the seat with the 30° cutter and the lower edge of the seat with the 60° cutter. Check the width of the seat and adjust accordingly.
   –3 Make one more very light pass with the 45° cutter to remove any possible burrs caused by the other cutters.

   Valve Seat Width:
   Standard (New): 1.25 – 1.55 mm (0.049 – 0.061 in.)
   Service Limit: 2.00 mm (0.079 in.)

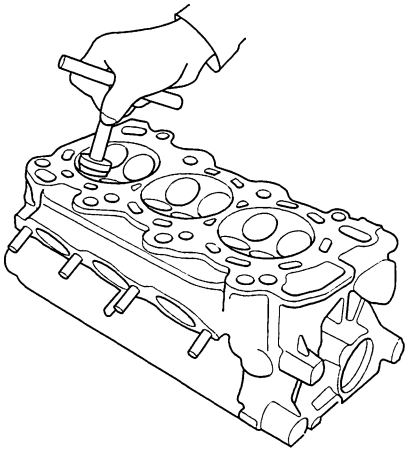

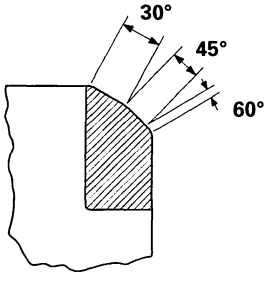

2. After resurfacing the seat, inspect it for even valve seating: Apply Prussian Blue compound (A) to the valve face. Insert the valve in its original location in the head, then lift it and snap it closed against the seat several times.

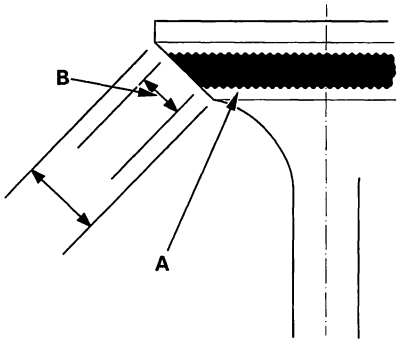

3. The actual valve seating surface (B), as shown by the blue compound, should be centered on the seat.

   - If it is too high (closer to the valve stem), you must make a second cut with the 60° cutter to move it down, then one more cut with the 45° cutter to restore seat width.
   - If it is too low (closer to the valve edge), you must make a second cut with the 30° cutter to move it up, then one more cut with the 45° cutter to restore seat width.

   NOTE: The final cut should always be made with the 45° cutter.

(cont'd)

Valve Seat Reconditioning (cont'd)

4. Insert the intake and exhaust valves in the head and measure the valve stem installed height (A).

   Intake Valve Stem Installed Height:
   Standard (New): 46.75 – 47.55 mm (1.841 – 1.872 in.)
   Service Limit: 47.80 mm (1.882 in.)

   Exhaust Valve Stem Installed Height:
   Standard (New): 46.68 – 47.48 mm (1.838 – 1.869 in.)
   Service Limit: 47.73 mm (1.879 in.)

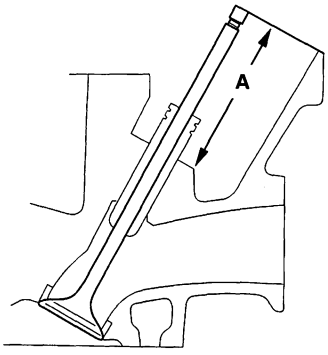

5. If the valve stem installed height is over the service limit, replace the valve and recheck. If it is still over the service limit, replace the cylinder head; the valve seat in the head is too deep.

BACK

Valves, Springs and Valve Seals Installation

Special Tools Required
- Valve Spring Compressor Attachment 07757-PJ1010A or 07VAE-001010A
- Commercially available Valve Spring Compressor KD383 with No.32 jaws, commercially available
- Commercially available Valve Guide Seal Remover KD3372, commercially available

1. Coat the valve stems with engine oil. Install the valves in the valve guides.

2. Check that the valves move up and down smoothly.

3. Install the spring seats on the cylinder head.

4. Install the new valve seals (A) using the valve guide seal installer (B).

   NOTE: Exhaust valve seals (C) have a black spring (D) and intake valve seals (E) have a white spring (F); they are not interchangeable.

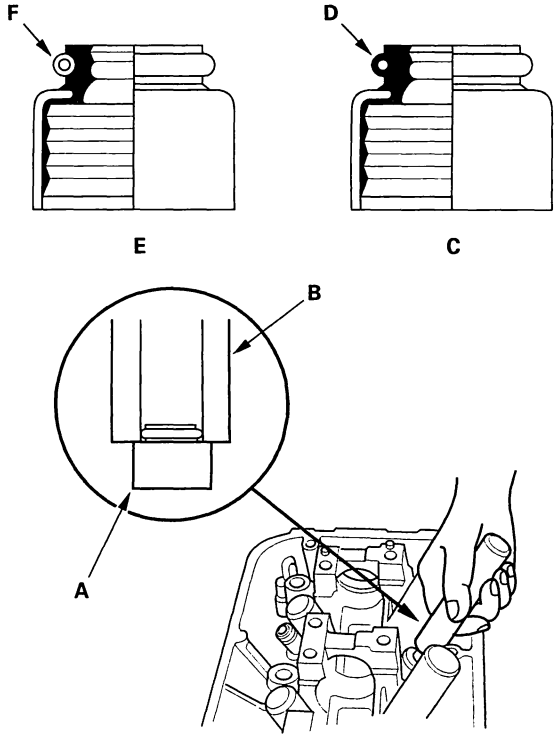

5. Install the valve spring and valve retainer. Place the end of the valve spring with closely wound coils toward the cylinder head.

6. Install the valve spring compressor. Compress the spring and install the valve keepers.

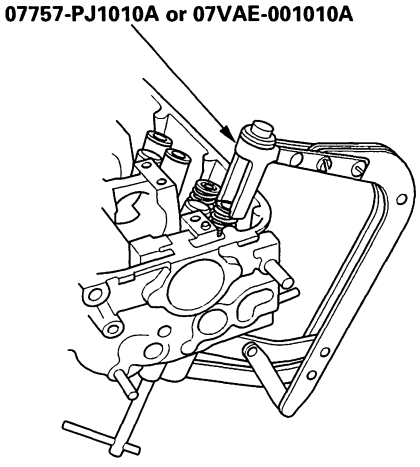

7. Lightly tap the end of each valve stem two or three times with a plastic mallet (A) to ensure proper seating of the valve and valve keepers. Tap the valve stem only along its axis so you do not bend the stem.

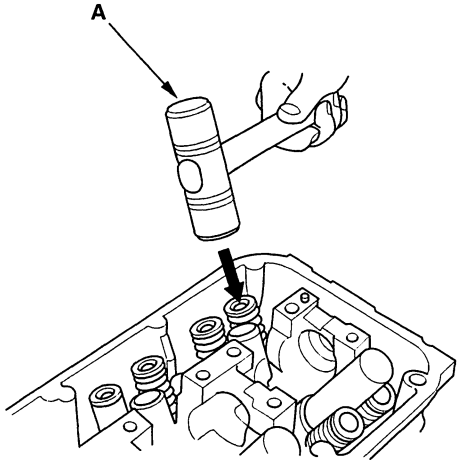

Camshaft/Rocker Arms, Camshaft Seal, and Pulley Installation

1. Apply a light coat of oil around the camshaft oil seal.

2. Gently tap the new camshaft oil seal (A) into the cylinder head.
   –1 Tap the camshaft oil seal in squarely.
   –2 Tap the oil seal into the cylinder head about 0.5 – 1.5 mm (0.02 – 0.06 in.) from the surface of the cylinder head.

3. Insert the camshaft (B) into the cylinder head, then install the camshaft thrust cover (C). Always use a new O-ring (D).

4. Check that the oil seal lips are not distorted.

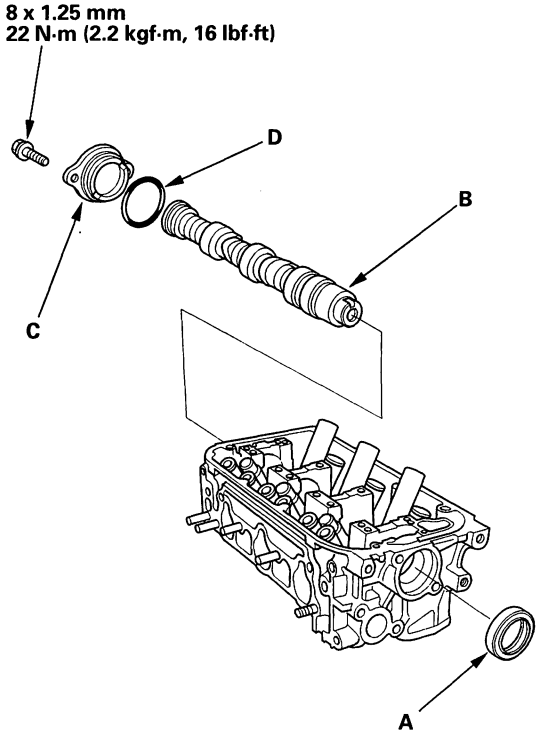

5. Loosen the valve adjusting screws.

6. Set the rocker arm assembly in place and loosely install the bolts. Make sure that the rocker arms are properly positioned on the valve stems.

7. Tighten each bolt 2 turns at a time in the sequence shown below to ensure that the rockers do not bind on the valves.

   Specified torque:
   8 x 1.25 mm
   24 N·m (2.4 kgf·m, 17 lbf·ft)
   Apply engine oil to the bolt threads and flange

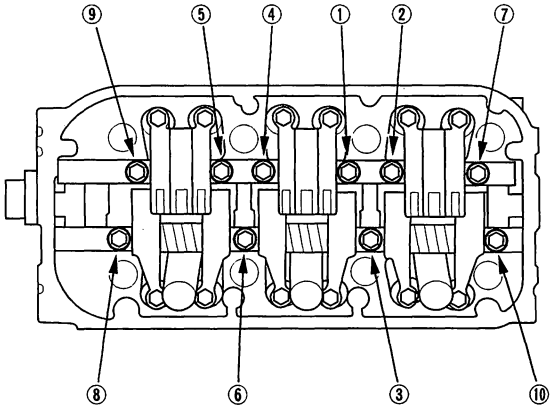

8. Install the injector base (A). Always use a new gasket (B).

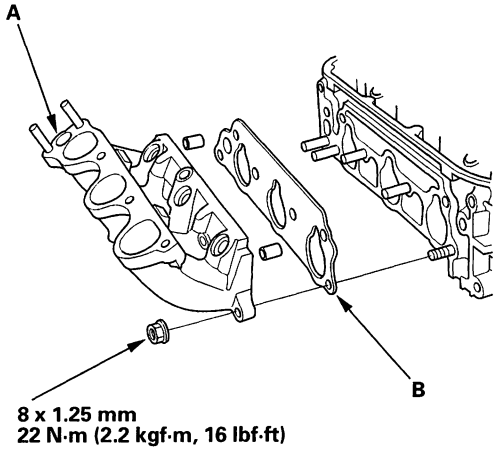

BACK

9. Install the back cover (A), then install the camshaft pulley (B).

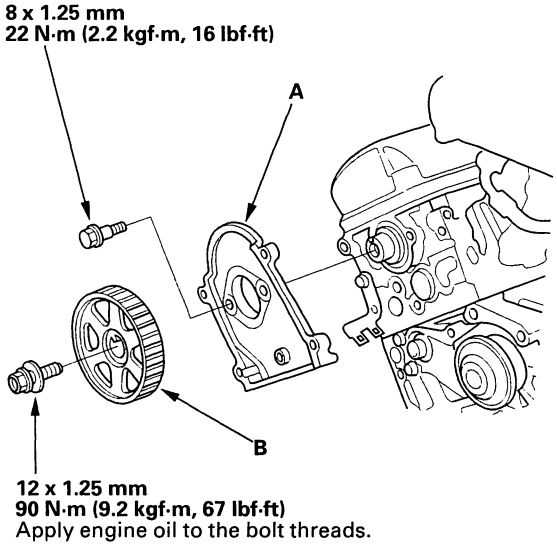

Cylinder Head Installation

Install the cylinder heads in the reverse order of removal:

1. Clean the cylinder heads and block surface.
2. Clean and install the oil control orifices (A) with new O-rings (B).
3. Install the dowel pins (C) and new cylinder head gaskets (D).

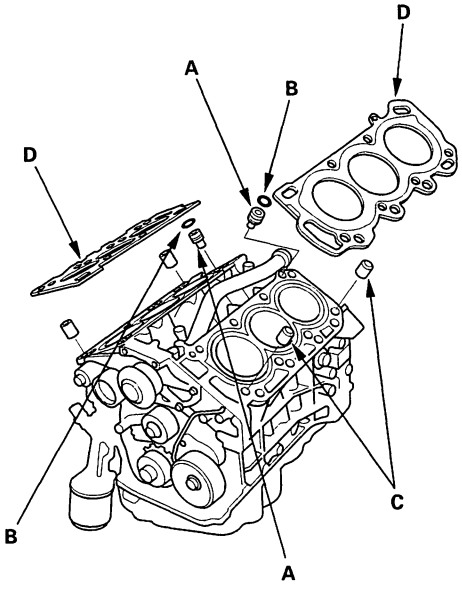

(cont'd)

Cylinder Head Installation (cont'd)

4. Clean the timing belt drive pulley.

5. Set the timing belt drive pulley to TDC by aligning the TDC mark (A) on the tooth of the timing belt drive pulley with the pointer (B) on the oil pump.

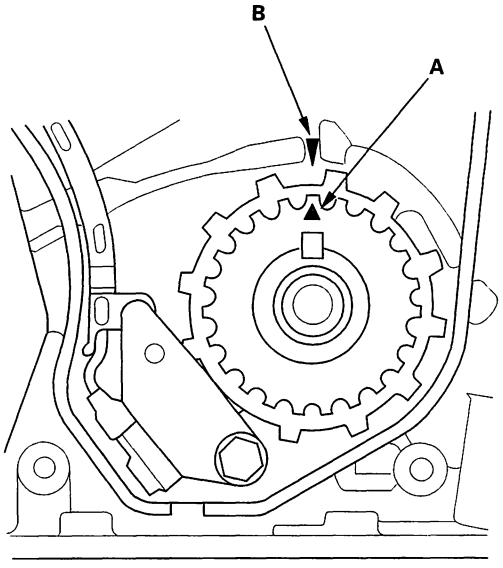

6. Clean the camshaft pulleys. Set the camshaft pulleys to TDC by aligning the TDC marks (A) on the camshaft pulleys with the pointers (B) on the back covers.

FRONT:

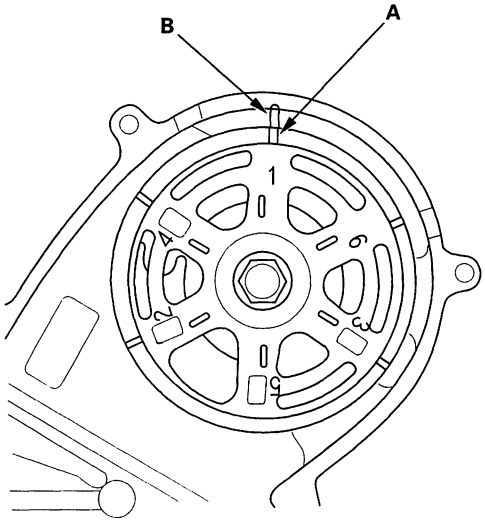

REAR:

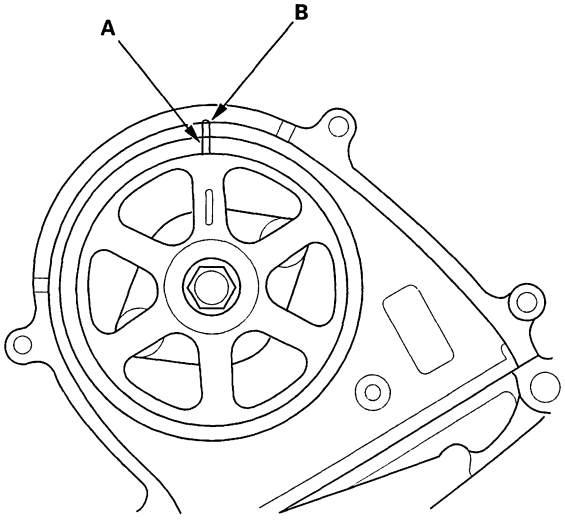

BACK

7. Apply clean engine oil to the threads and flange of the cylinder head bolts.

8. Tighten the cylinder head bolts sequentially in three steps. Perform each step twice.

   1st step torque: 39 N·m (4.0 kgf·m, 29 lbf·ft)
   2nd step torque: 69 N·m (7.0 kgf·m, 51 lbf·ft)
   3rd step torque: 98.1 N·m (10.0 kgf·m, 72.3 lbf·ft)

   Use a beam-type torque wrench. When using a preset-type torque wrench, be sure to tighten slowly and not to overtighten.
   If a bolt makes any noise while you are torquing it, loosen the bolt, and retighten it from the first step.

CYLINDER HEAD BOLTS TORQUE SEQUENCE:

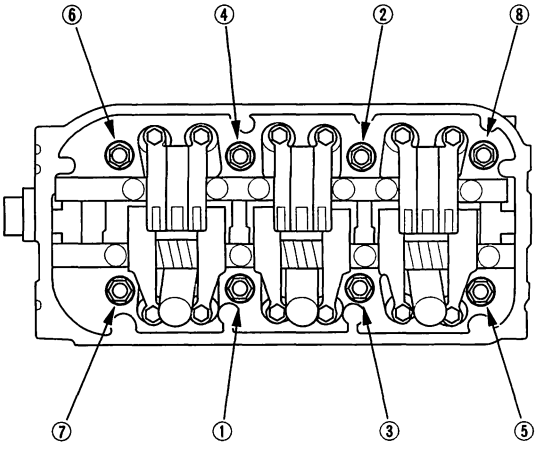

9. Install the exhaust manifold and tighten the nuts in a crisscross pattern in two or three steps, beginning with the inner nut (see page 9-3). Always use a new exhaust manifold gasket.

10. Install exhaust pipe A and bracket, then install the cover (see page 9-4).

11. Install the timing belt (see page 6-22).

12. Adjust the valve clearance (see page 6-13).

13. Install the cylinder head covers.

    NOTE:
    - Before installing the cylinder head cover, clean the cylinder head contacting surfaces with a shop towel.
    - Take care not to damage the spark plug seals when installing the cylinder head cover.
    - Visually check the spark plug seals for damage.
    - Replace any washer that is damaged or deteriorated.

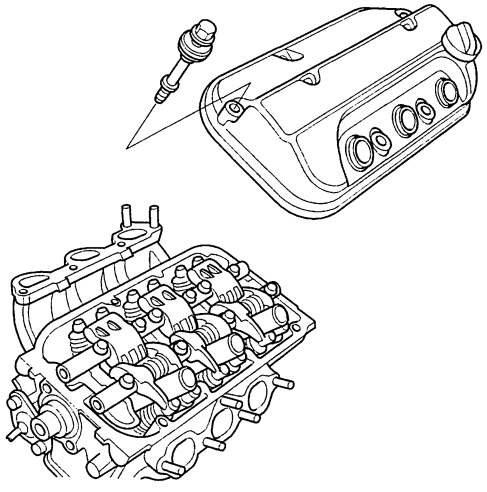

(cont'd)

Cylinder Head Installation (cont'd)

14. Tighten the nuts in two or three steps. In the final step, tighten all nuts, in sequence, to 12 N·m (1.2 kgf·m, 8.7 lbf·ft).

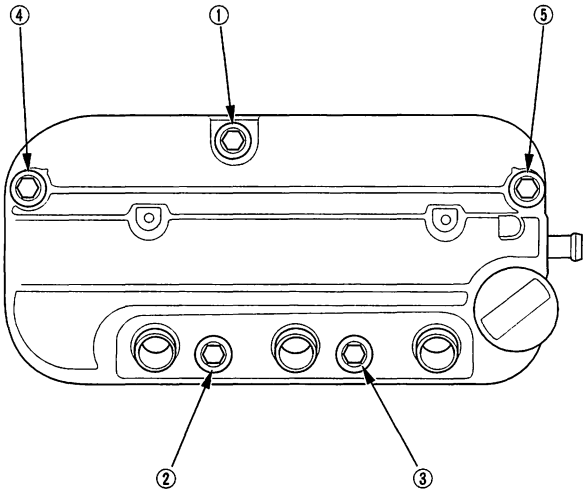

15. Install the water passage (A). Always use a new O-ring (B) and new gaskets (C).

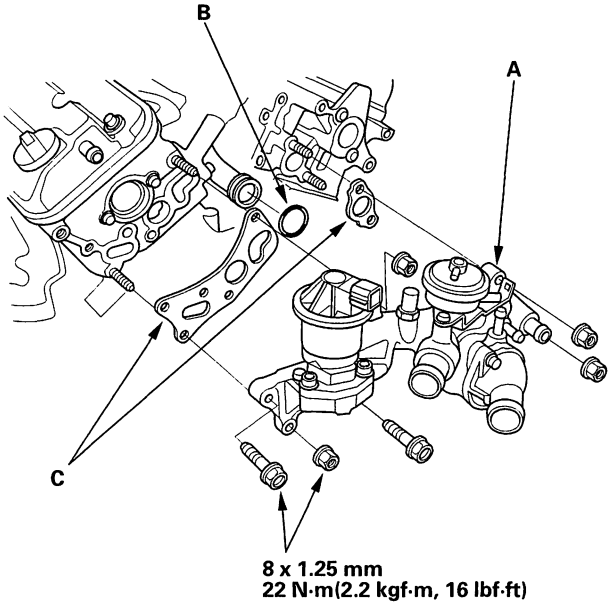

16. Install the intake manifold. Tighten the bolts and nuts sequentially in two or three steps. Always use a new intake manifold gasket.

Specified torque:
8 x 1.25 mm
22 N·m (2.2 kgf·m, 16 lbf·ft)

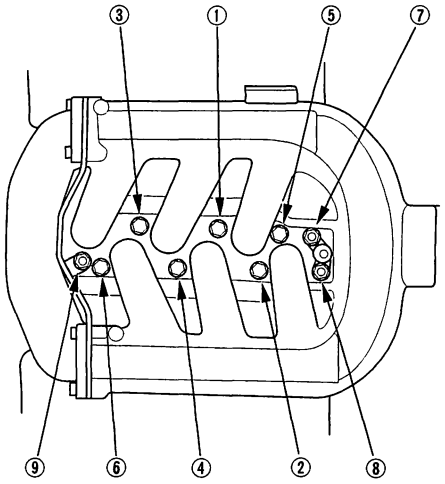

17. After installation, check that all tubes, hoses and connectors are installed correctly.

18. Enter the anti-theft code for the radio, then enter the customer's radio station presets.

BACK

TDC Sensor Replacement

1. Set the No.1 piston at TDC (see page 6-22).

2. Remove the upper covers.

3. To hold the timing belt adjuster in its current position, thread in the battery clamp bolt hand-tight (see step 14 on page 6-21).

4. Loosen the idler pulley bolt about 5 or 6 turns, then remove the timing belt from the front camshaft pulley (see step 16 on page 6-22).

5. Remove the front camshaft pulley.

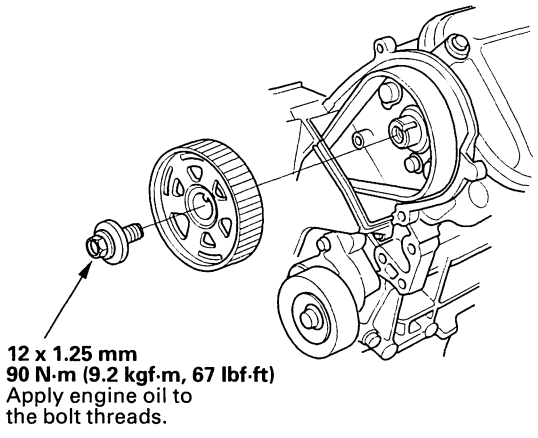

6. Disconnect the TDC 1/TDC 2 sensor connector, then remove the back cover.

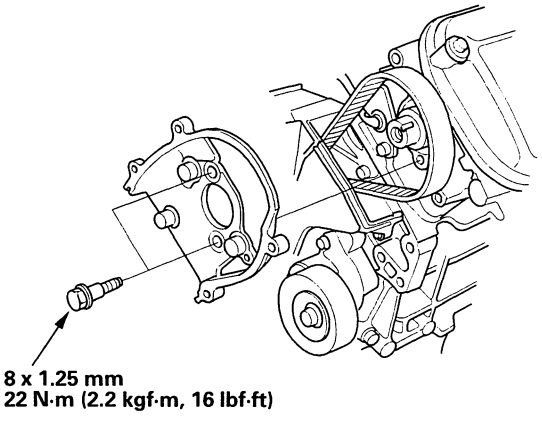

7. Remove the TDC 1/TDC 2 sensor from the back cover.

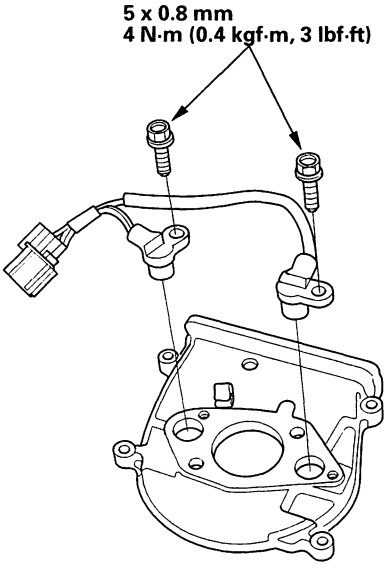

8. Install the TDC 1/TDC 2 sensor in reverse order of removal. Reinstall the timing belt and other removed components (see page 6-22).

CKP Sensor Replacement

1. Move the auto-tensioner to remove tension from the alternator belt, then remove the alternator belt (see step 5 on page 6-19).

2. Loosen the adjusting bolt, locknut and mounting bolt, then remove the power steering (P/S) pump belt (see step 6 on page 6-20).

3. Remove the dipstick and tube (see step 9 on page 6-20).

4. Remove the crankshaft pulley (see step 10 on page 6-20).

5. Remove the upper and lower covers (see step 12 on page 6-21).

6. Remove the CKP sensor from the oil pump.

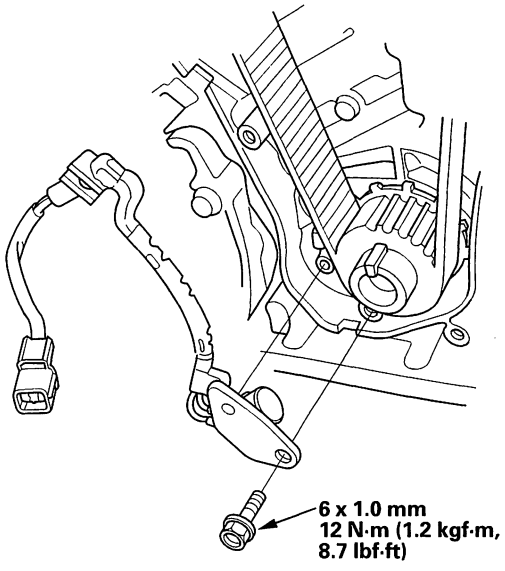

7. Install the CKP sensor in the reverse order of removal.

BACK

Engine Mechanical

Engine Block

Special Tools 7-2
Component Location Index 7-3
Drive Plate Removal and Installation 7-6
Connecting Rod and Crankshaft End Play Inspection 7-7
Crankshaft Main Bearing Replacement 7-8
Connecting Rod Bearing Replacement 7-10
Crankshaft and Pistons Removal 7-12
Crankshaft Inspection 7-14
Block and Piston Inspection 7-15
Cylinder Honing 7-17
Piston, Pin, and Connecting Rod Replacement 7-18
Piston Rings Replacement 7-21
Connecting Rod Bolt Inspection 7-23
Crankshaft and Piston Installation 7-23
Pulley End Crankshaft Seal Installation-In-car 7-28
Transmission End Crankshaft Seal Installation-In-car 7-28

BACK

Special Tools

Ref. No.	Tool Number	Description	Qty
①	07LAD-PT3010A	Oil Seal Driver	1
②	07VAD-P8A010A	Oil Seal Driver Attachment, 80 mm I.D.	1
③	07749-0010000	Driver	1

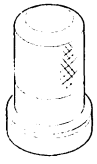

①

②

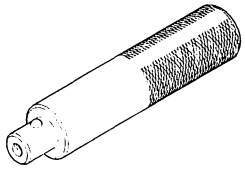

③

BACK

Component Location Index

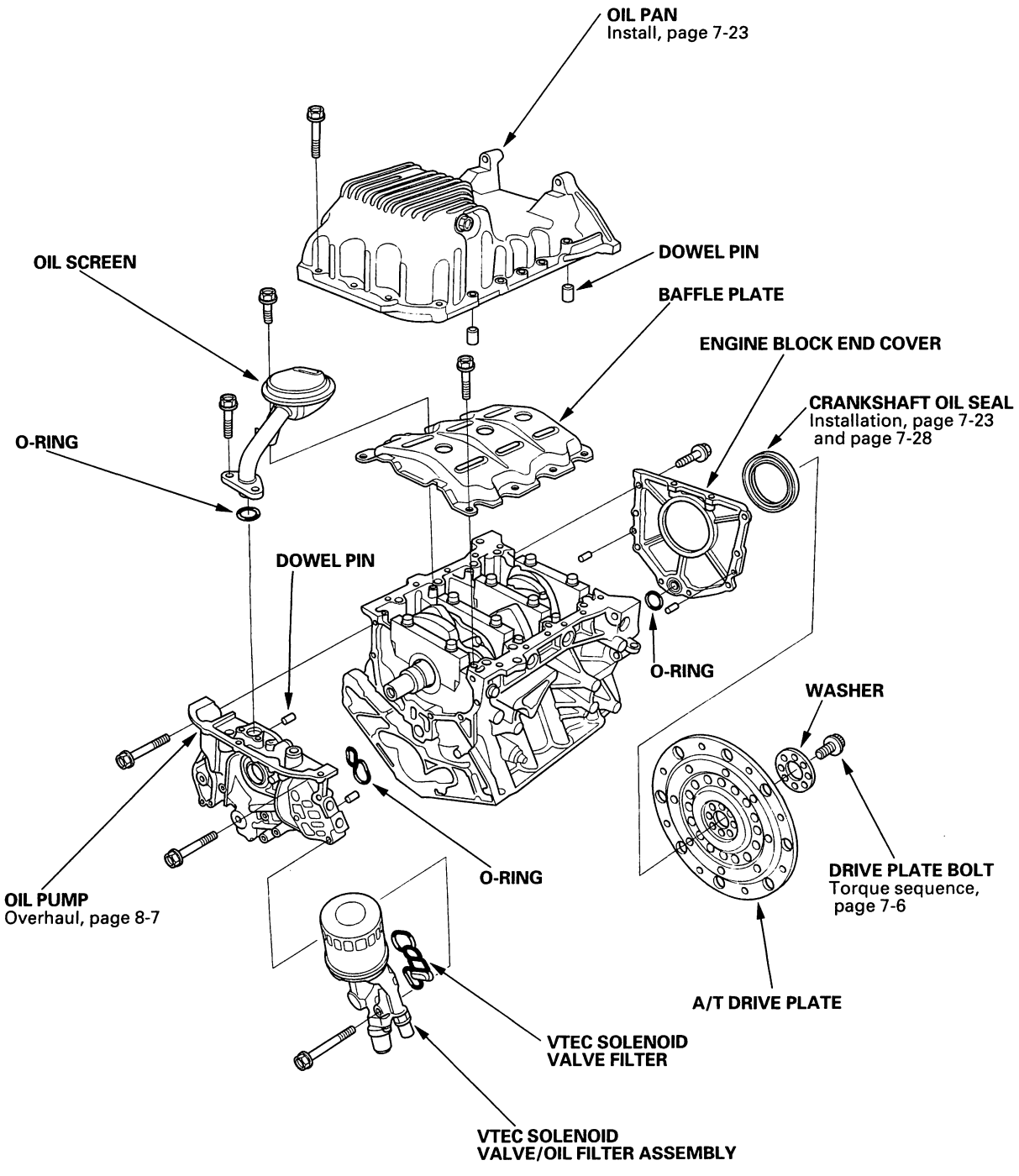

(cont'd)

Component Location Index (cont'd)

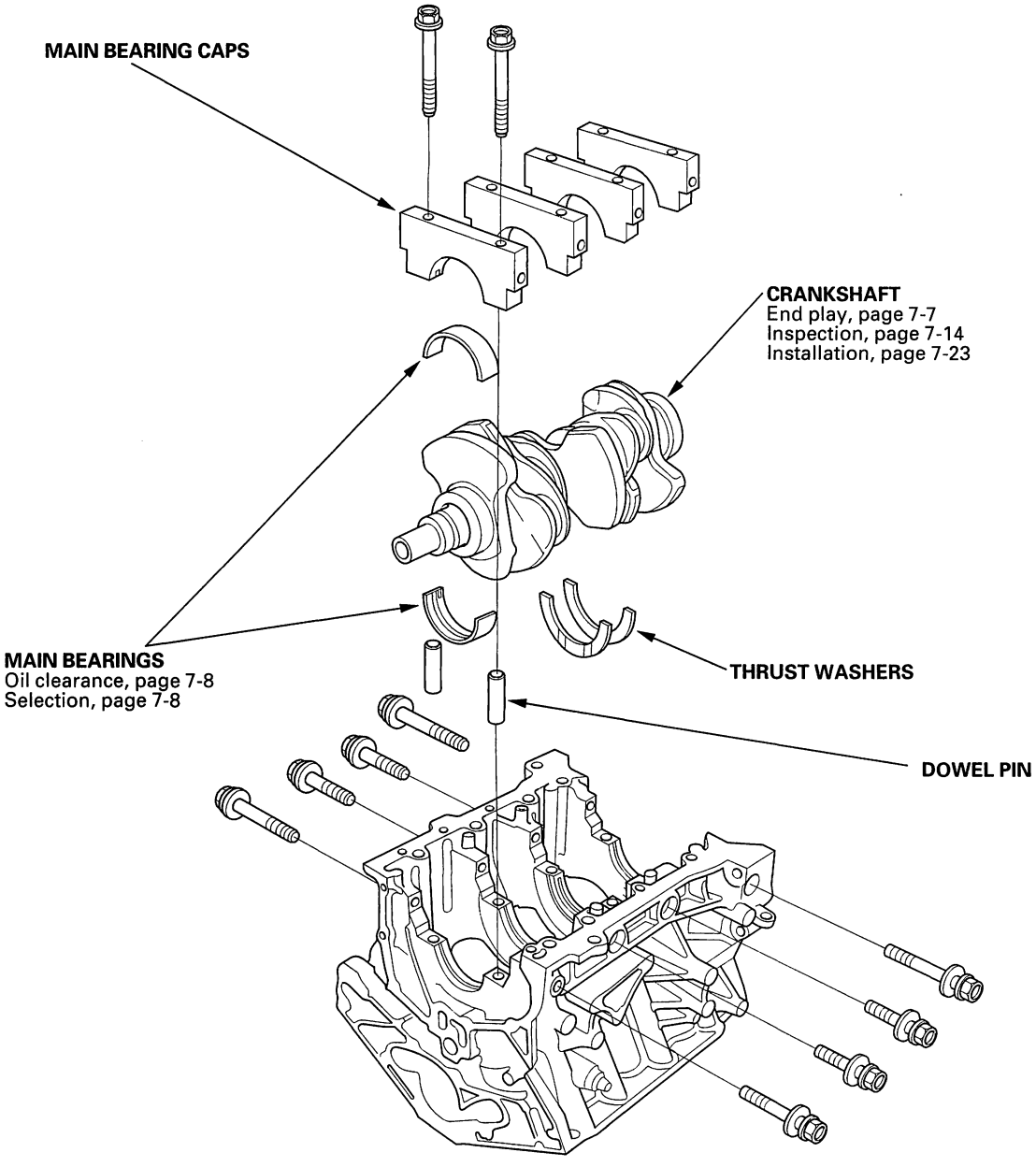

BACK

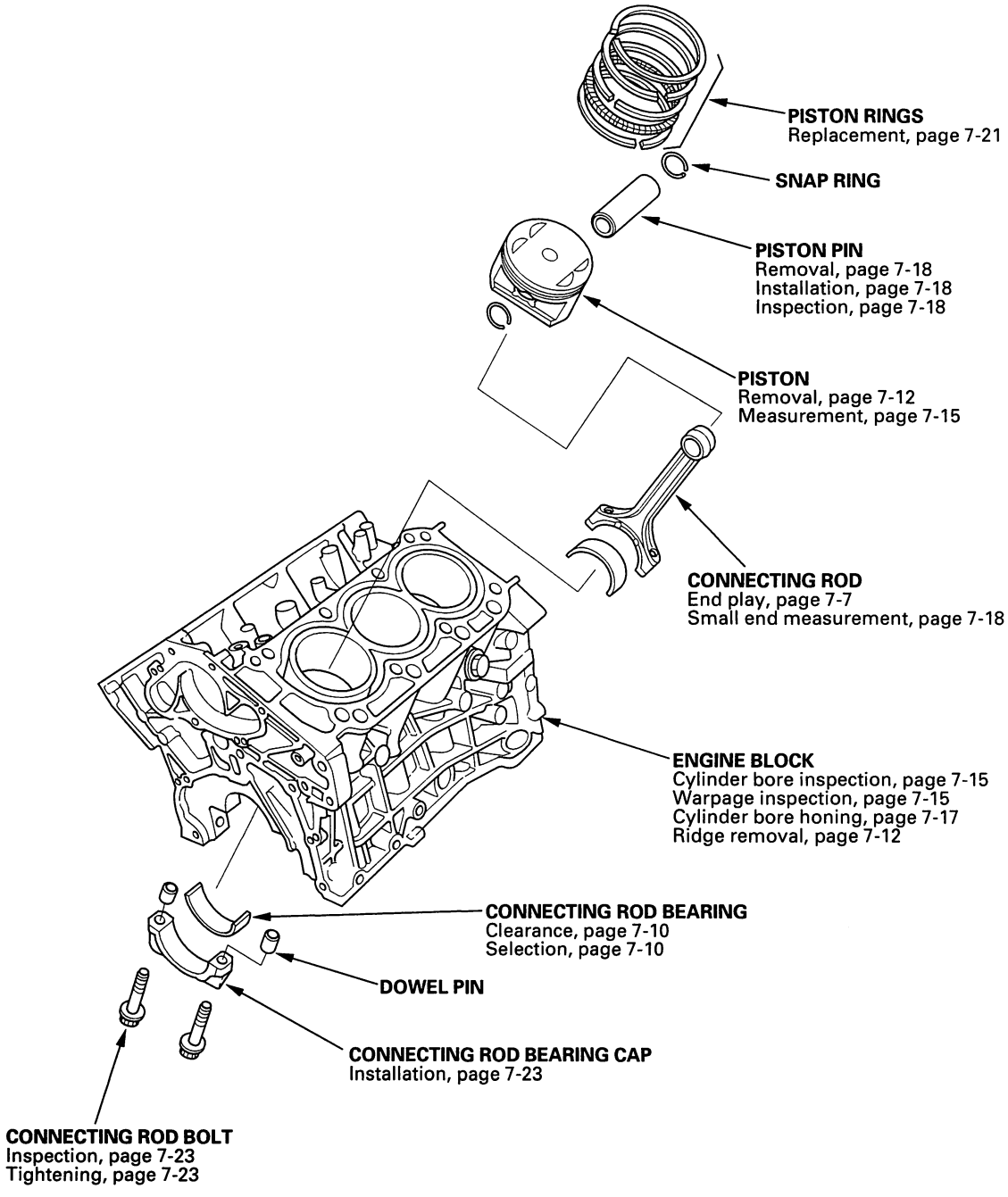
PISTON RINGS
Replacement, page 7-21
SNAP RING
PISTON PIN
Removal, page 7-18
Installation, page 7-18
Inspection, page 7-18
PISTON
Removal, page 7-12
Measurement, page 7-15
CONNECTING ROD
End play, page 7-7
Small end measurement, page 7-18
ENGINE BLOCK
Cylinder bore inspection, page 7-15
Warpage inspection, page 7-15
Cylinder bore honing, page 7-17
Ridge removal, page 7-12
CONNECTING ROD BEARING
Clearance, page 7-10
Selection, page 7-10
DOWEL PIN
CONNECTING ROD BEARING CAP
Installation, page 7-23
CONNECTING ROD BOLT
Inspection, page 7-23
Tightening, page 7-23

Drive Plate Removal and Installation

1. Remove the transmission (see page 14-114).

2. Remove the eight drive plate bolts, then separate the drive plate from the crankshaft flange. After installation, tighten the bolts in the sequence shown.

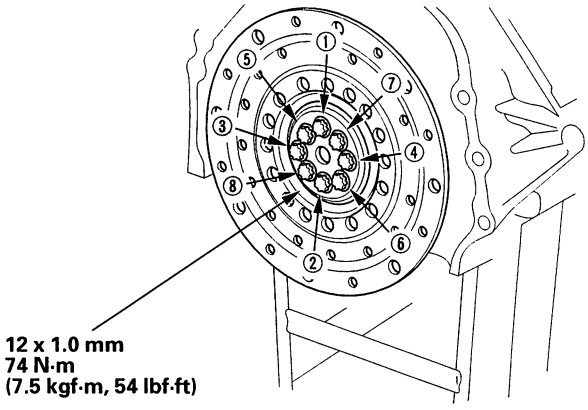

3. Install the transmission (see page 14-121).

BACK

Connecting Rod and Crankshaft End Play Inspection

1. Remove the oil pump (see page 8-8).

2. Remove the baffle plate (see step 6 on page 7-12).

3. Measure the connecting rod end play with a feeler gauge (A) between the connecting rod (B) and crankshaft (C).

   Connecting Rod End Play:
   Standard (New): 0.15–0.35 mm (0.006–0.014 in.)
   Service Limit: 0.45 mm (0.018 in.)

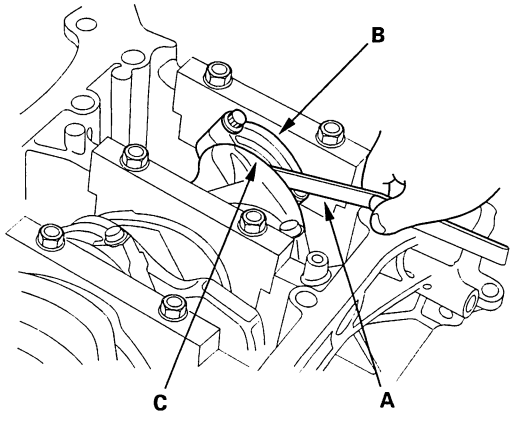

4. If the connecting rod end play is out-of-tolerance, install a new connecting rod, and recheck. If it still out-of-tolerance, replace the crankshaft (see step 6 on page 7-12).

5. Push the crankshaft firmly away from the dial indicator, and zero the dial against the end of the crankshaft. Then pull the crankshaft firmly back toward the indicator; dial reading should not exceed the service limit.

   Crankshaft End Play:
   Standard (New): 0.10–0.35 mm (0.004–0.014 in.)
   Service Limit: 0.45 mm (0.018 in.)

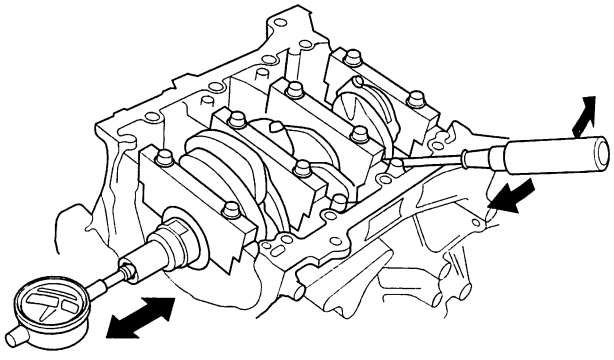

6. If end play is excessive, replace the thrust washers and recheck. If it is still out-of-tolerance, replace the crankshaft.

Crankshaft Main Bearing Replacement

Main Bearing Clearance Inspection

1. To check main bearing-to-journal oil clearance, remove the main caps and bearing halves.

2. Clean each main journal and bearing half with a clean shop towel.

3. Place one strip of plastigage across each main journal.

   NOTE: If the engine is still in the car when you bolt the main cap down to check the clearance, the weight of the crankshaft and drive plate will flatten the plastigage further than just the torque on the cap bolt and give you an incorrect reading. For an accurate reading, support the crank with a jack under the counterweights, and check only one bearing at a time.

4. Reinstall the bearings and caps, then torque the bolts (see page 7-23). Do not rotate the crankshaft.

5. Remove the caps and bearing halves, and measure the widest part of the plastigage.

   Main Bearing-to-Journal Oil Clearance:
   Standard (New): 0.020–0.044 mm (0.0008–0.0017 in.)
   Service Limit: 0.050 mm (0.0020 in.)

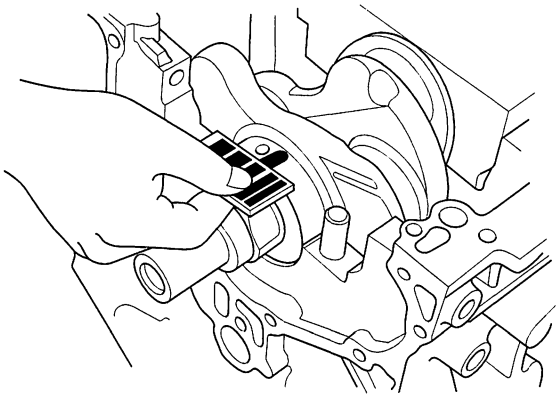

6. If the plastigage measures too wide or too narrow, (remove the engine if it's still in the car), remove the crankshaft, and remove the upper half of the bearing. Install a new, complete bearing with the same color code, and recheck the clearance. Do not file, shim, or scrape the bearings or the caps to adjust clearance.

7. If the plastigage shows the clearance is still incorrect, try the next larger or smaller bearing (the color listed above or below that one), and check again. If the proper clearance cannot be obtained by using the appropriate larger or smaller bearings, replace the crankshaft and start over.

BACK

Main Bearing Selection

Crankshaft Bore Code Location

1. Letters or Bars have been stamped on the end of the block as a code for the size of each of the four main journal bores.

   If you cannot read the codes because of an accumulation of dirt and dust, do not scrub them with a wire brush or scraper. Clean them only with solvent or detergent.

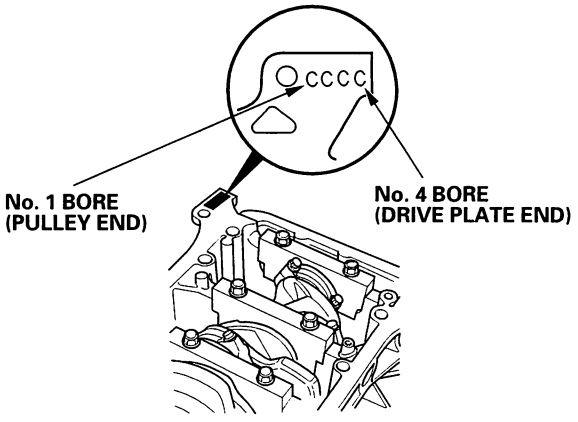

Main Journal Code Locations

2. Number or bars have been stamped on the crankshaft No. 1 web as a code for the main journal sizes.

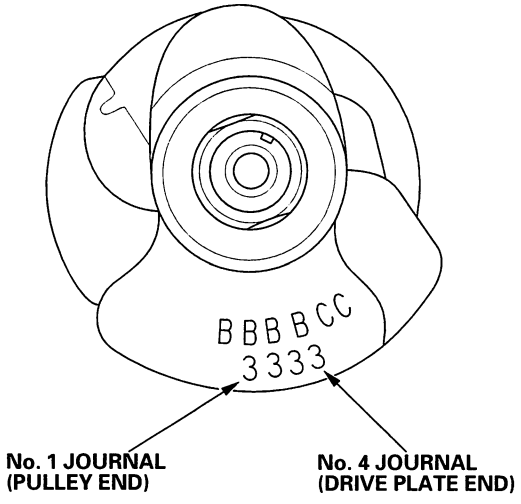

3. Use the crankshaft bore codes and journal codes to select the appropriate main bearings from the table.

Smaller main Journal ↓ / Larger crank bore →	A or I	B or II	C or III	D or IIII
	Smaller bearing (Thicker) →			
1 or I	Red/ Pink	Pink	Pink/ Yellow	Yellow
2 or II	Pink	Pink/ Yellow	Yellow	Yellow/ Green
3 or III	Pink/ Yellow	Yellow	Yellow/ Green	Green
4 or IIII	Yellow	Yellow/ Green	Green	Green/ Brown
5 or IIIII	Yellow/ Green	Green	Green/ Brown	Brown
6 or IIIIII	Green	Green/ Brown	Brown	Brown/ Black

Smaller main Journal ↓ — Smaller bearing (Thicker) ↓

NOTE:
- **When using bearing halves of different colors, it does not matter which color is used in the top or bottom.**
- **Color code is on the dege of the bearing.**

Connecting Rod Bearing Replacement

Rod Bearing Clearance Inspection

1. Remove the connecting rod cap and bearing half.
2. Clean the crankshaft rod journal and bearing half with a clean shop towel.
3. Place a strip of plastigage across the rod journal.
4. Reinstall the bearing half and cap, and torque the bolts (see page 7-23). Do not rotate the crankshaft.
5. Remove the rod cap and bearing half and measure the widest part of the plastigage.

   Connecting Rod Bearing-to-Journal Oil Clearance:
   Standard (New): 0.020–0.044 mm (0.0008–0.0017 in.)
   Service Limit: 0.050 mm (0.0020 in.)

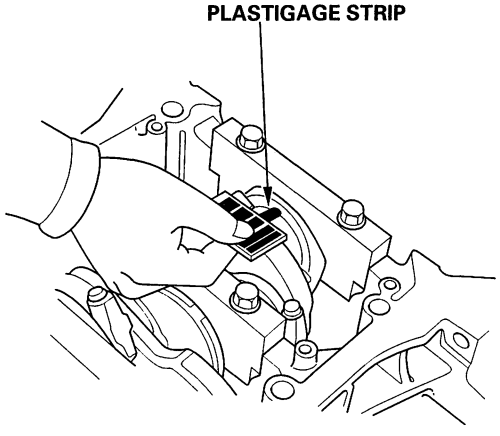

6. If the plastigage measures too wide or too narrow, remove the upper half of the bearing, install a new, complete bearing with the same color code, and recheck the clearance. Do not file, shim, or scrape the bearings or the caps to adjust clearance.
7. If the plastigage shows the clearance is still incorrect, try the next larger or smaller bearing (the color listed above or below that one), and check clearance again. If the proper clearance cannot be obtained by using the appropriate larger or smaller bearings, replace the crankshaft and start over.

BACK

Rod Bearing Selection

1. Inspect the connecting rods for cracks and heat damage.

Connecting Rod Bore/Journal Code Locations

2. Each rod has a tolerance range (from 0 to 0.024 mm (0.0009 in.), in 0.006 mm (0.0002 in.) increments) depending on the size of its big end bore.
   It's then stamped with a code (1,2,3, or 4/I, II, III,or IIII) indicating the range.
   You may find any combination of 1,2,3, or 4/I, II, III, or IIII in any engine.
   Half of the code is stamped on the bearing cap and the other half is stamped on the rod. If the codes are indecipherable because of an accumulation of dirt and dust, do not scrub them with a wire brush or scraper. Clean them only with solvent or detergent.

   Normal Bore Size: 56.0 mm (2.20 in.)

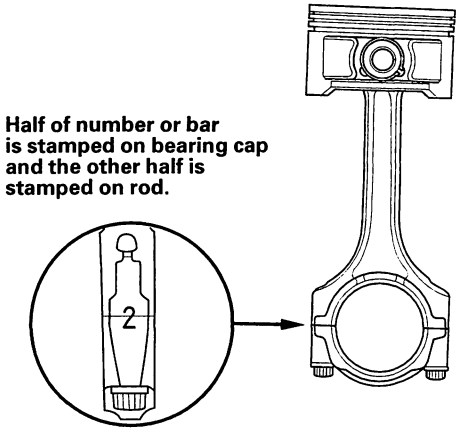

Connecting Rod Journal Code Locations

3. Letters or bars have been stamped on the crankshaft No. 1 web as a code for the rod journal sizes.

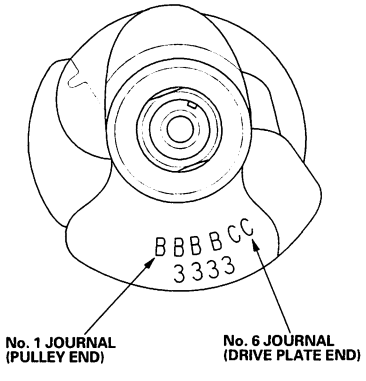

4. Use the connecting rod bore codes and journal codes to select the appropriate rod bearing from the table.

Bearing Identification

Color code is on the edge of the bearing

Smaller rod Journal ↓	→ Larger big end bore: 1 or I	2 or II	3 or III	4 or IIII
A or I	Pink	Pink/ Yellow	Yellow	Yellow/ Green
B or II	Pink/ Yellow	Yellow	Yellow/ Green	Green
C or III	Yellow	Yellow/ Green	Green	Green/ Brown
D or IIII	Yellow/ Green	Green	Green/ Brown	Brown
E or IIIII	Green	Green/ Brown	Brown	Brown/ Black
F or IIIIII	Green/ Brown	Brown	Brown/ Black	Black

Smaller bearing (Thicker) ↓

NOTE: When using bearing halves of different colors, it does not matter which color is used in the top or bottom.

Crankshaft and Piston Removal

1. Remove the engine assembly (see page 5-2).
2. Remove the transmission (see page 14-114).
3. Remove the CKP sensor (A) from the oil pump, then remove the timing belt drive pulley (B).

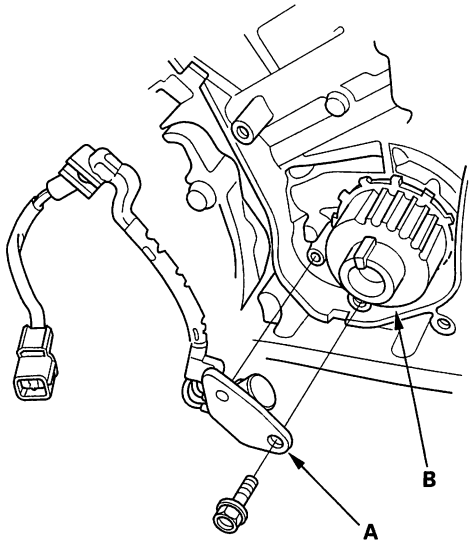

4. Remove the oil pan.
5. Remove the engine block end cover.

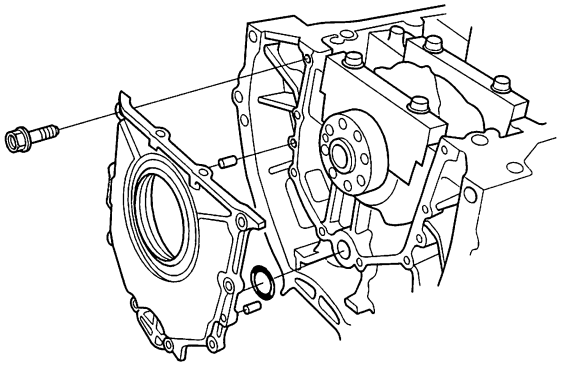

6. Remove the oil screen (A), baffle plate (B) and oil pump (C).

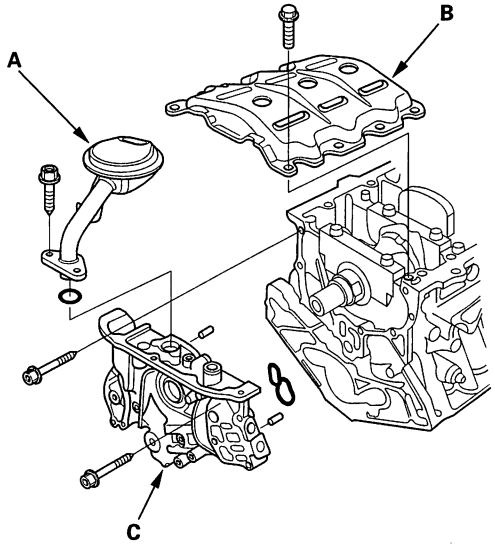

7. If you can feel a ridge of metal or hard carbon around the top of any cylinder, remove it with a ridge reamer (A). Follow the reamer manufacturer's instructions. If the ridge is not removed, it may damage the piston as it is pushed out.

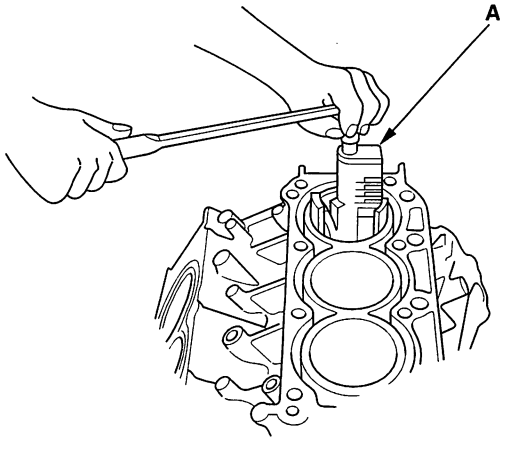

BACK

8. Remove the connecting rod caps after setting the crank pin at BDC for each cylinder. Remove the piston assembly by pushing on the connecting rod. Take care not to damage the crank journal or cylinder with the connecting rod.

CORRECT

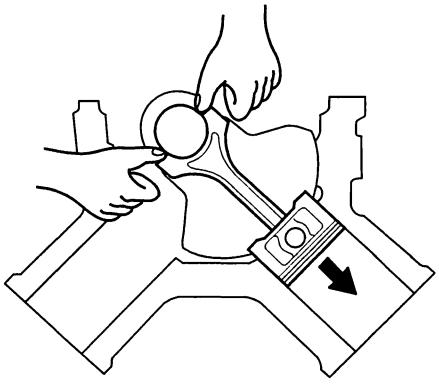

INCORRECT

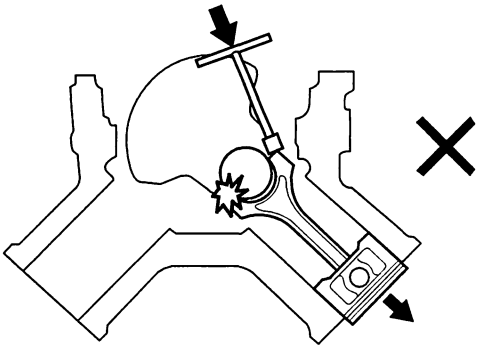

9. Remove the bearing from the cap. Keep all caps/bearings in order.

10. Remove the upper bearing halves from the connecting rods and set them aside with their respective caps.

11. After removing a piston/connecting rod assembly, reinstall the cap on the rod.

12. To avoid mixup during reassembly, mark each piston/connecting rod assembly with its cylinder number.

13. Remove the bearing cap bolts (A) and bearing cap side bolts (B), then remove the bearing cap (C).

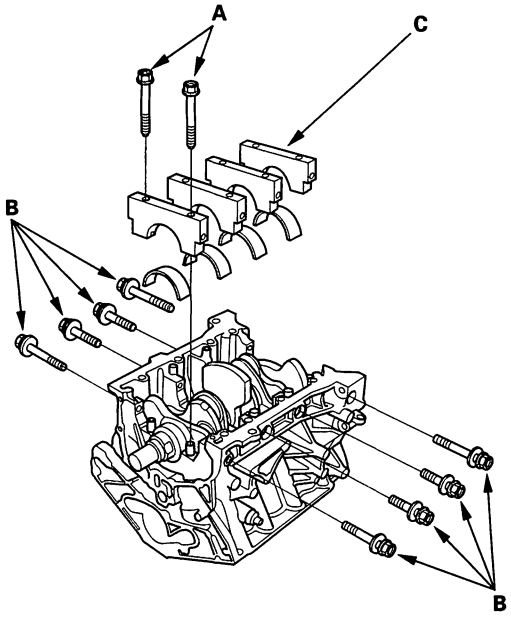

(cont'd)

Crankshaft and Piston Removal (cont'd)

14. Lift the crankshaft (A) out of the cylinder block, being careful not to damage the journals.

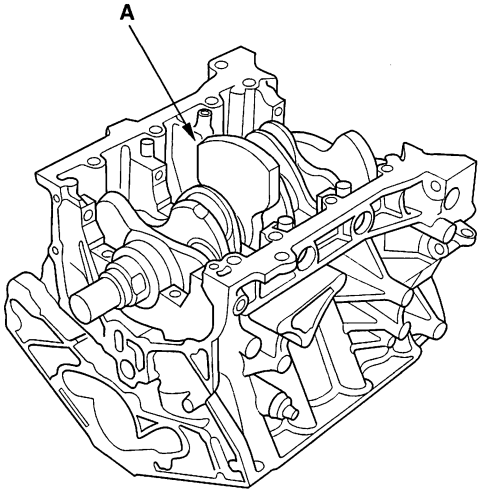

15. Reinstall the main caps and bearings on the cylinder block in the proper order.

Crankshaft Inspection

Straightness

1. Remove the crankshaft from the engine block (see page 7-12).
2. Clean the crankshaft oil passages with pipe cleaners or a suitable brush.
3. Check the keyway and threads.
4. Support the crankshaft with a V-blocks.
5. Measure runout on all main journals to make sure the crank is not bent. Rotate the crankshaft two complete revolutions. The difference between measurements on each journal must not be more that the service limit.

Crankshaft Total Runout:
Standard (New): 0.020 mm (0.0008 in.) max.
Service Limit: 0.030 mm (0.0012 in.)

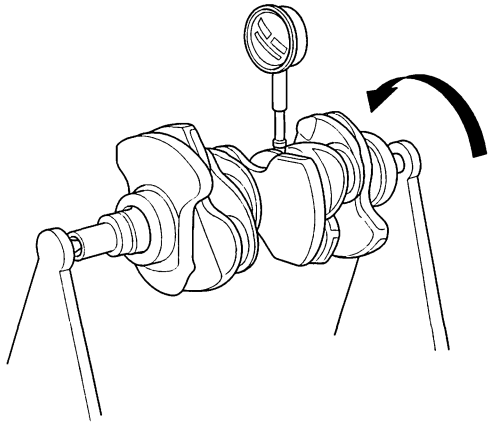

BACK

Out-of-Round and Taper

1. Measure out-of-round at the middle of each rod and main journal in two places. The difference between measurements on each journal must not be more than the service limit.

   Journal Out-of-Round:
   Standard (New): 0.005 mm (0.0002 in.) max.
   Service Limit: 0.010 mm (0.0004 in.)

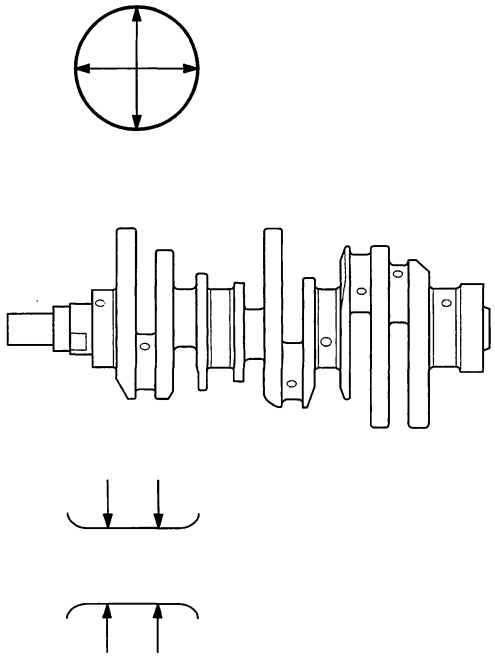

2. Measure taper at the edges of each rod and main journal. The difference between measurements on each journal must not be more than the service limit.

   Journal Taper:
   Standard (New): 0.005 mm (0.0002 in.) max.
   Service Limit: 0.010 mm (0.0004 in.)

Block and Piston Inspection

1. Remove the piston from the cylinder block (see page 7-12).

2. Check the piston for distortion or cracks.

3. Measure the piston diameter at a point 16.0 mm (0.63 in.) from the bottom of the skirt.

   Piston Diameter:
   Standard (New): 85.975 – 85.985 mm (3.3848 – 3.3852 in.)
   Service Limit: 85.965 mm (3.3844 in.)

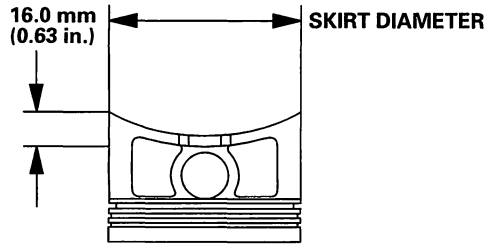

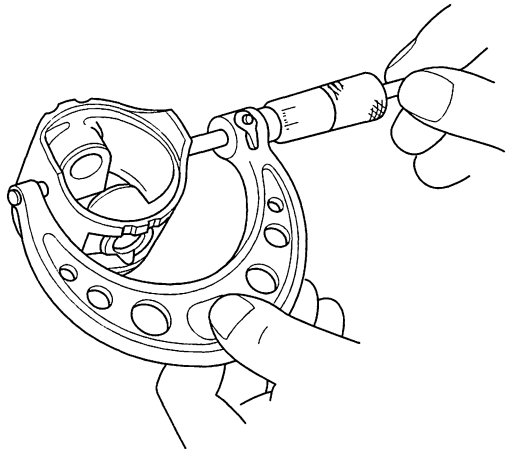

(cont'd)

Block and Piston Inspection (cont'd)

4. Measure wear and taper in directions X and Y at three levels in each cylinder as shown.

   - If the measurements in any cylinder are beyond the oversize bore service limit, replace the cylinder block.
   - If the block is to be rebored, refer to Piston Clearance Inspection after reboring (refer to step 5).

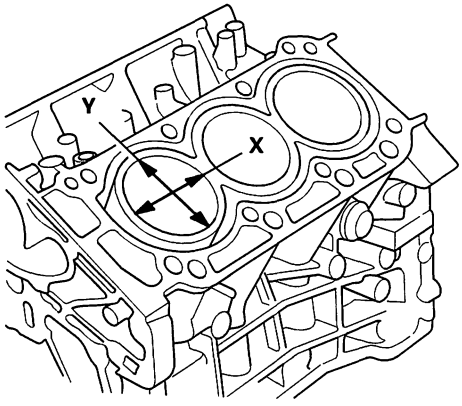

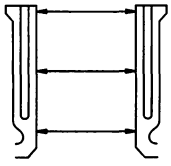

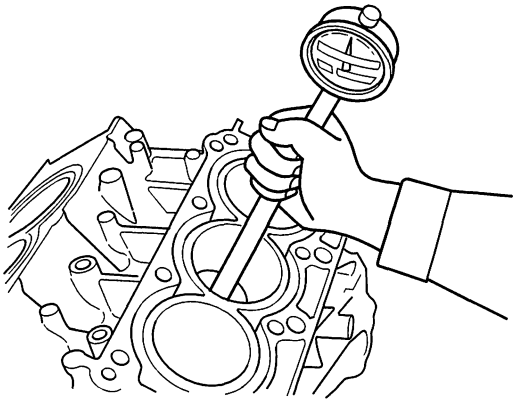

Cylinder Bore Size:
Standard (New): 86.000–86.015 mm (3.3858–3.3864 in.)
Service Limit: 86.065 mm (3.3884 in.)

Reboring Limit: 0.50 mm (0.02 in.)

Oversize
0.25: 86.250–86.265 mm (3.3957–3.3963 in.)
0.50: 86.500–86.515 mm (3.4055–3.4061 in.)

Bore Taper
Limit: (Difference between first and third measurement) 0.05 mm (0.002 in.)

5. Check the top of the cylinder block for warpage. Measure along the edges and across the center as shown.

   Cylinder Block Warpage:
   Standard (New): 0.07 mm (0.003 in.) max.
   Service Limit: 0.10 mm (0.004 in.)

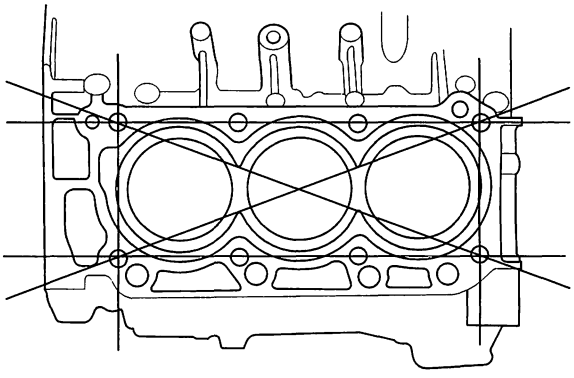

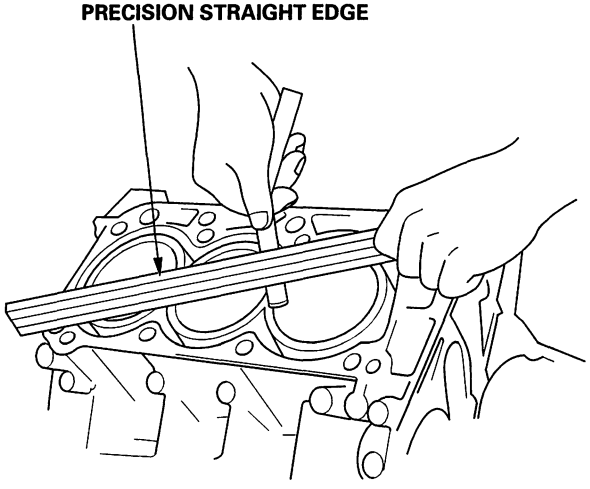

BACK

6. Calculate the difference between the cylinder bore diameter and piston diameter.

Piston-to-Block Clearance:
Standard (New): 0.015–0.040 mm (0.0006–0.0016 in.)
Service Limit: 0.08 mm (0.003 in.)

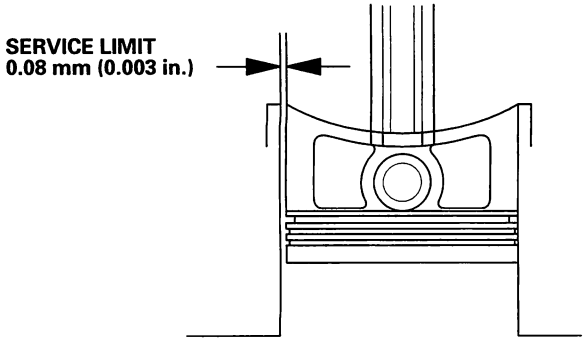

Oversize Piston Diameter
0.25: 86.225–86.235 mm (3.3947–3.3951 in.)
0.50: 86.475–86.485 mm (3.4045–3.4049 in.)

Cylinder Honing

1. Measure the cylinder bores (see page 7-15). If the cylinder block is to be reused, hone the cylinders and remeasure the bores. Only scored or scratched cylinder bores must be honed.

2. Hone the cylinder bores with honing oil and a fine (400 grit) stone in a 60 degree crosshatch pattern.

   NOTE:
   - Use only a rigid hone with 400 grit or finer stone, such as Sunnen, Ammco, or equivalent.
   - Do not use stones that are worn or broken.

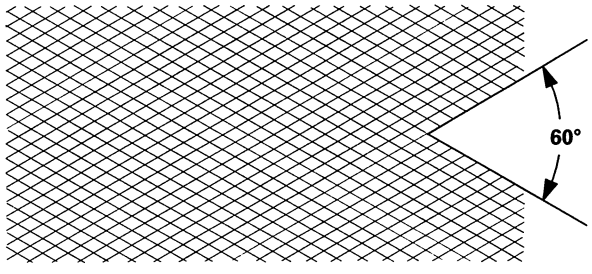

3. When honing is complete, thoroughly clean the cylinder block of all metal particles. Wash the cylinder bores with hot soapy water, then dry and oil them immediately to prevent rusting. Never use solvent, it will only redistribute the grit on the cylinder walls.

4. If scoring or scratches are still present in the cylinder bores after honing to the service limit, rebore the cylinder block. Some light vertical scoring and scratching is acceptable if it is not deep enough to catch your fingernail and does not run the full length of the bore.

Piston, Pin and Connecting Rod Replacement

Disassembly

1. Apply engine oil to the piston pin snap rings (A) and turn them in the ring grooves until the end gaps are lined up with the cutouts in the piston pin bores (B).

   NOTE: Take care not to damage the ring grooves.

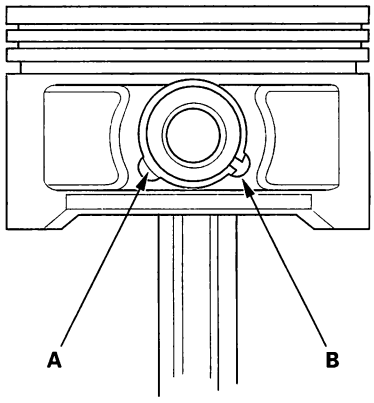

2. Remove both snap rings (A). Start at the cutout in the piston pin bore. Remove the snap rings carefully so they do not go flying or get lost. Wear eye protection.

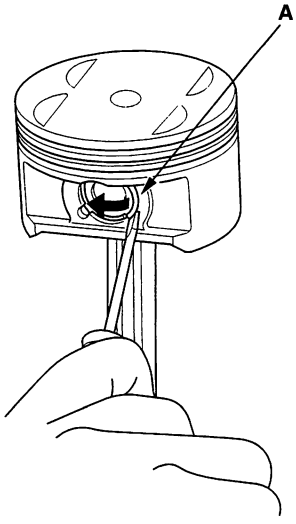

3. Heat the piston and connecting rod assembly to about 158°F (70°C), then remove the piston pin.

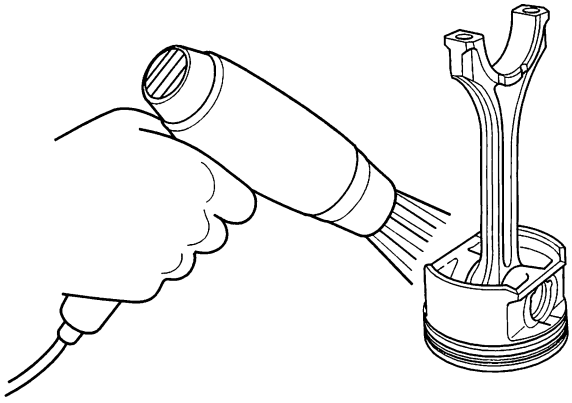

BACK

Inspection

NOTE: Inspect the piston, piston pin and connecting rod when they are at room temperature.

1. Measure the diameter of the piston pin.

   Piston Pin Diameter:
   Standard (New): 21.962−21.965 mm (0.8646−0.8648 in.)
   Service Limit: 21.954 mm (0.8643 in.)

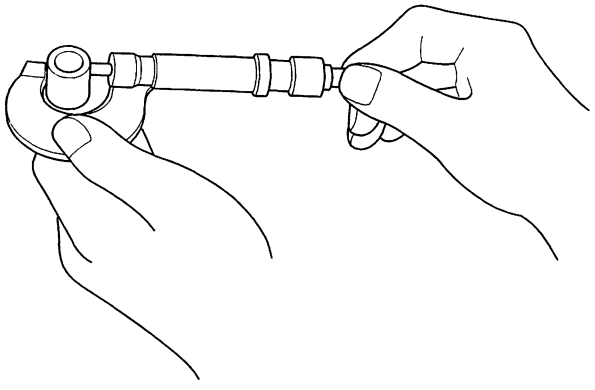

2. Zero the dial indicator to the piston pin diameter.

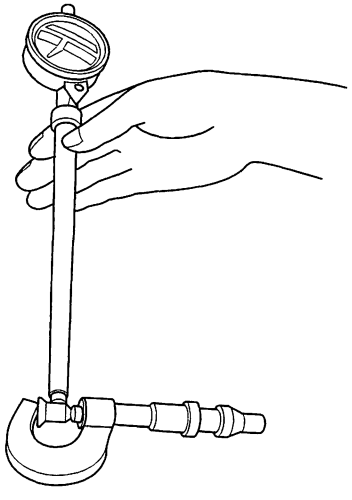

3. Check the difference between the piston pin diameter and piston pin hole diameter in the piston.

   Piston Pin-to-Piston Clearance:
   Standard (New): −0.0050 to +0.0010 mm (−0.00020 to +0.00004 in.)
   Service Limit: 0.004 mm (0.0002 in.)

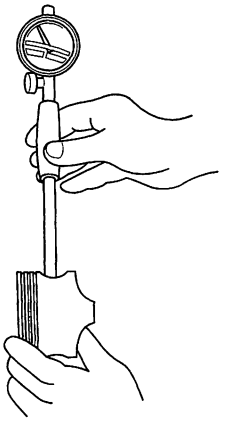

4. Measure the piston pin-to-connecting rod clearance.

   Piston Pin-to-Connecting Rod Clearance:
   Standard (New): 0.005−0.014 mm (0.0002−0.0006 in.)
   Service Limit: 0.019 mm (0.0007 in.)

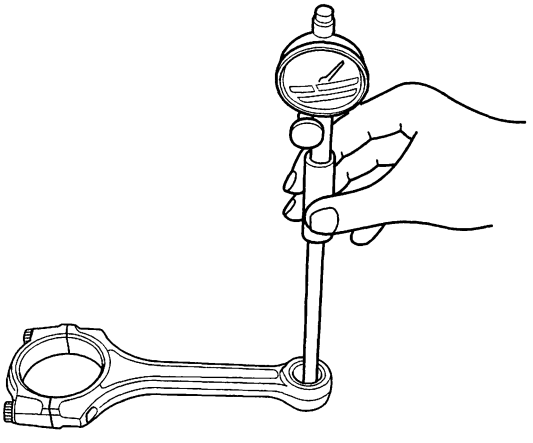

(cont'd)

Piston, Pin and Connecting Rod Replacement (cont'd)

Reassembly

1. Install a piston pin snap ring (A).

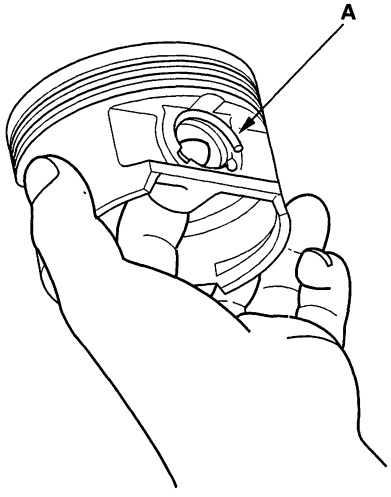

2. Coat the piston pin bore in the piston, the bore in the connecting rod, and the piston pin with engine oil.

3. Heat the piston to about 158°F (70°C).

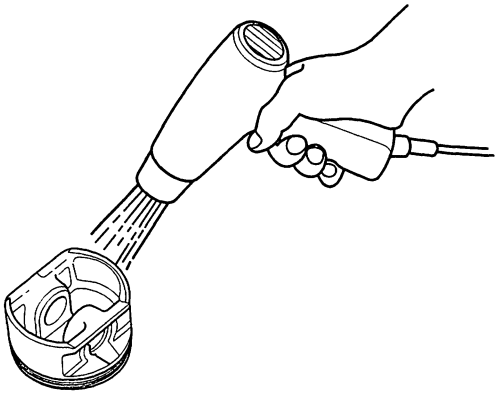

4. Install the piston pin (A). Assemble the piston (B) and connecting rod (C) with the embossed marks (D) on the same side.

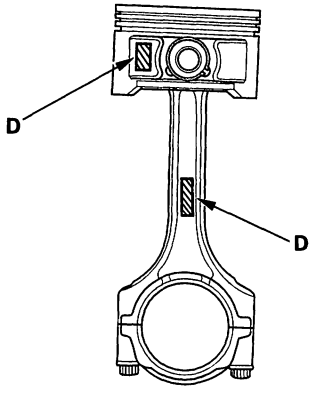

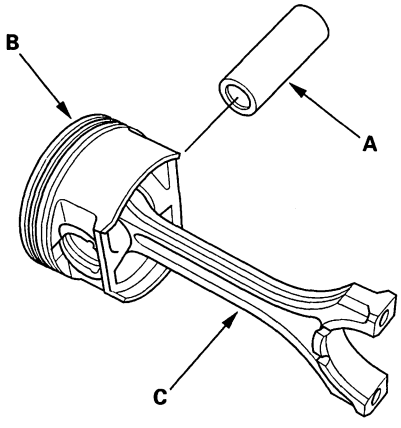

5. Install the remaining snap ring.

BACK

Piston Ring Replacement

1. Remove the piston from the cylinder block (see page 7-12).

2. Using a piston, push a new ring (A) into the cylinder bore 15—20 mm (0.6—0.8 in.) from the bottom.

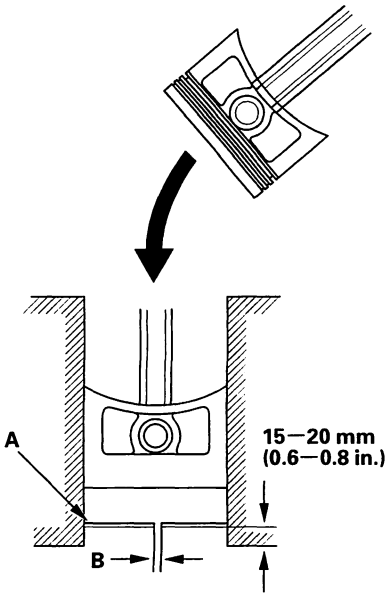

3. Measure the piston ring end-gap (B) with a feeler gauge:

   - If the gap is too small, check to see if you have the proper rings for your engine.
   - If the gap is too large, recheck the cylinder bore diameter against the wear limits (see page 7-15).

   If the bore is over the service limit, the cylinder block must be rebored.

Piston Ring End-Gap:

Top Ring
Standard (New): 0.20—0.35 mm (0.008—0.014 in.)
Service Limit: 0.60 mm (0.024 in.)

2nd Ring
Standard (New): 0.40—0.55 mm (0.016—0.022 in.)
Service Limit: 0.70 mm (0.028 in.)

Oil Ring
Standard (New): 0.20—0.70 mm (0.008—0.028 in.)
Service Limit: 0.80 mm (0.031 in.)

4. Using a ring expander (A), remove the old piston rings (B).

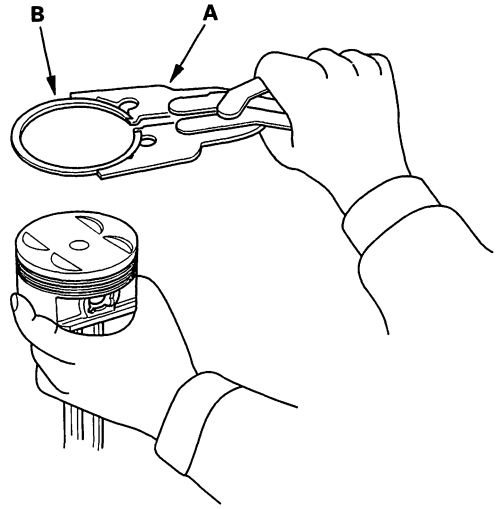

5. Clean all the ring grooves throughly with a squared-off broken ring or ring groove cleaner with a blade to fit the piston grooves. File down the blade if necessary. Top ring groove and 2nd ring grooves are 1.2 mm (0.05 in.) wide, and the oil ring groove is 2.8 mm (0.11 in.) wide. Do not use a wire brush to clean the ring grooves, or cut the ring grooves deeper with the cleaning tool.

   NOTE: If the piston is to be separated from the connecting rod, do not install new rings yet.

(cont'd)

Piston Ring Replacement (cont'd)

6. Install the rings as shown. The top ring (A) has a 1B and the 2nd ring (B) is marked 2B. The manufacturing marks (C) must be facing upward.

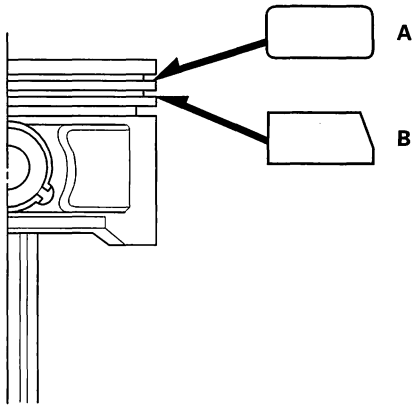

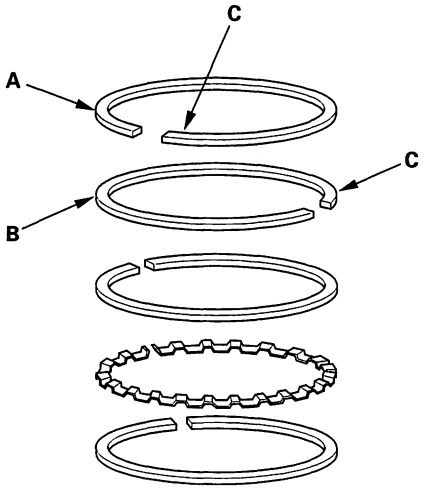

Piston Ring Dimensions:

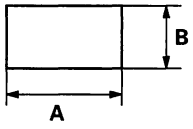

Top Ring (Standard)
A: 3.1 mm (0.12 in)
B: 1.2 mm (0.05 in)
2nd Ring (Standard)
A: 3.4 mm (0.13 in)
B: 1.2 mm (0.05 in)

7. After installing a new set of rings, measure the ring-to-groove clearance:

Top Ring Clearance
Standard (New): 0.035–0.060 mm (0.0014–0.0024 in.)
Service Limit: 0.13 mm (0.005 in.)

2nd Ring Clearance
Standard (New): 0.030–0.055 mm (0.0012–0.0022 in.)
Service Limit: 0.13 mm (0.005in.)

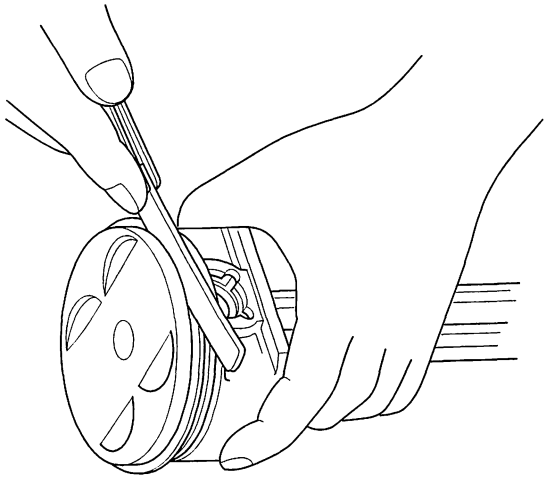

8. Rotate the rings in their grooves to make sure they do not bind.

9. Position the ring end gaps as shown:

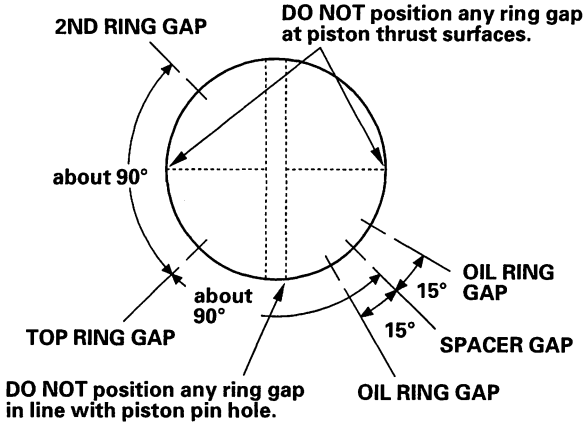

BACK

Connecting Rod Bolt Inspection

1. Measure the diameter of each connecting rod bolt at point A and point B.

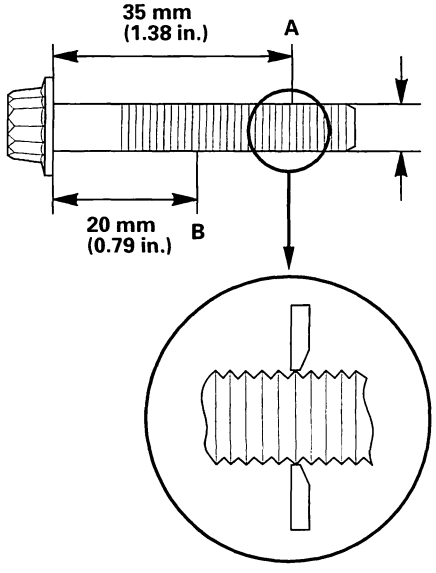

2. Calculate the difference in diameter between point A and point B.

   Point A − Point B = Difference in Diameter

   Difference in Diameter:
   Specification: 0 − 0.1 mm (0 − 0.004 in.)

3. If the difference in diameter is out of tolerance, replace the connecting rod bolt.

Crankshaft and Piston Installation

Special Tools Required
- Driver 07749-0010000
- Oil Seal Driver Attachment, 80 mm I.D. 07VAD-P8A010A

1. Check the connecting rod bearing clearance with plastigage (see page 7-10).

2. Check the main bearing clearance with plastigage (see page 7-8).

3. Inspect the connecting rod bolts (see page 7-23).

4. Apply engine oil to the main bearings and rod bearings.

5. Install the bearing halves in the cylinder block and connecting rods.

6. Lower the crankshaft (A) into the block.

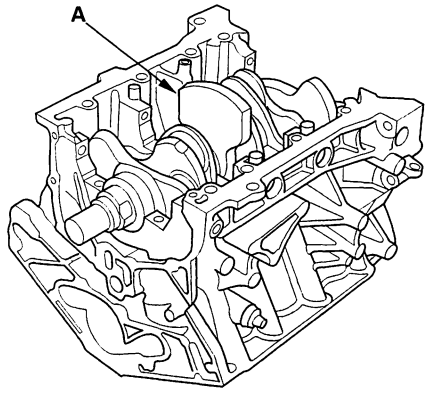

7. Oil the thrust washer surfaces. Install the thrust washers (A) in the No. 3 journal.

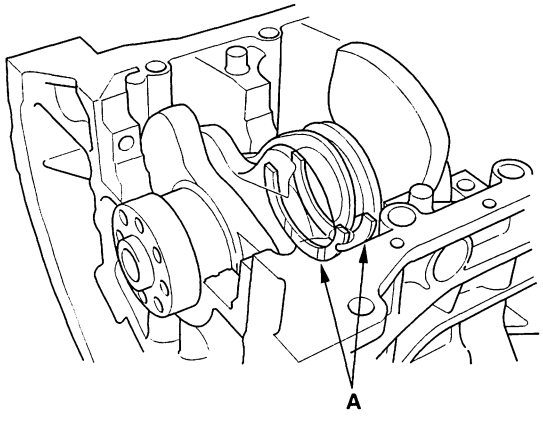

(cont'd)

Crankshaft and Piston Installation (cont'd)

8. Install the bearings (A) and bearing caps (B) with the arrow (C) facing the timing belt end of the engine.

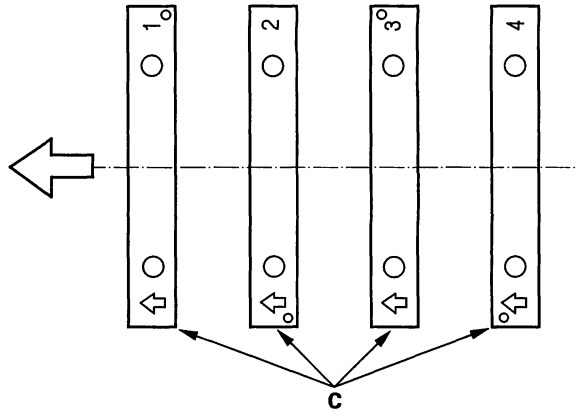

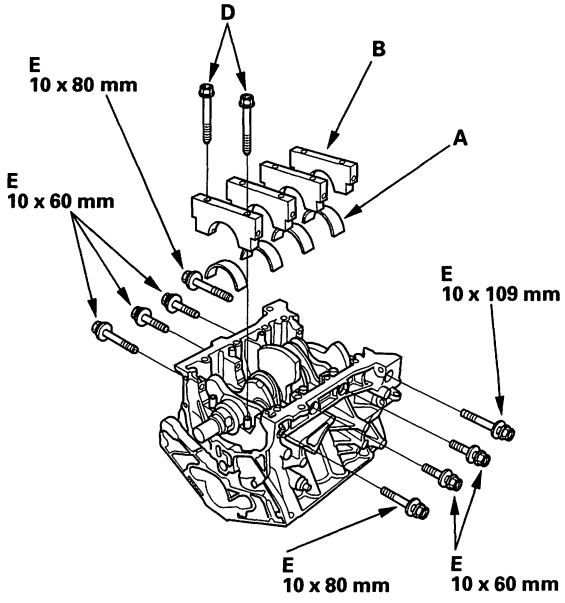

9. Apply engine oil to the bolt threads and flange, then install the bearing cap bolts (D) and bearing cap side bolts (E).

10. Set the crankshaft to BDC for the cylinder you are working on.

11. Remove the connecting rod caps. Install the ring compressor, and check that the bearing is securely in place.

12. Install the piston with the arrow (A) facing the timing belt side of the engine.

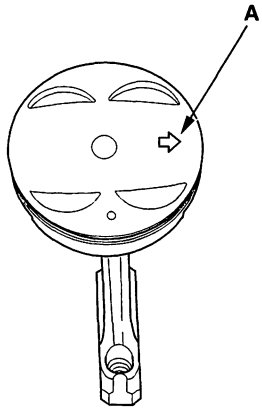

13. Position the piston in the cylinder, and tap it in using the wooden handle of a hammer (A). Maintain downward force on the ring compressor (B) to prevent the rings from expanding before entering the cylinder bore.

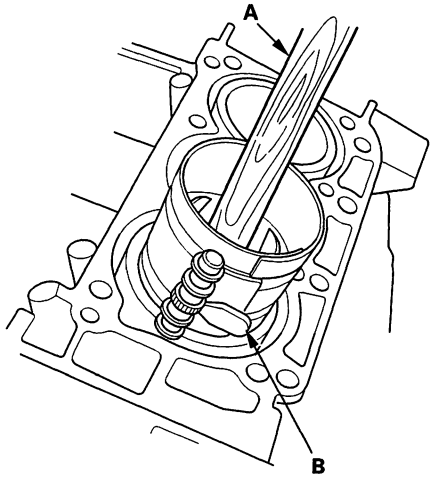

14. Stop after the ring compressor pops free, and check the connecting rod-to-crank journal alignment before pushing the piston into place.

BACK

15. Line up the mark (A) on the connecting rod and cap, then install the cap.

16. Apply engine oil to the bolt threads. Torque the bolts (B) to 20 N·m (2.0 kgf·m, 14 lbf·ft).

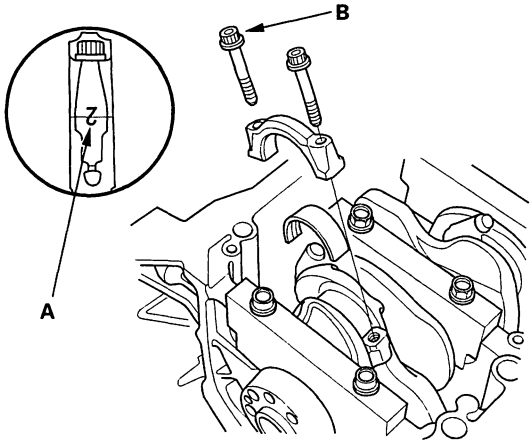

17. Mark the connecting rod (A) and bolt head (B) as shown.

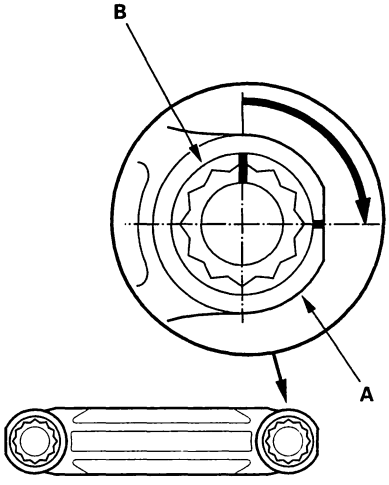

18. Tighten the bolt until the mark on the bolt head lines up with the mark on the connecting rod (turn the bolt 90°).

19. Torque the bearing cap bolts (A), then torque the bearing cap side bolts (B). Follow the numbered sequence shown.

NOTE: Whenever any crankshaft or connecting rod bearing is replaced, it is necessary after reassembly to run the engine at idling speed until it reaches normal operating temperature, then continue to run it for about 15 minutes.

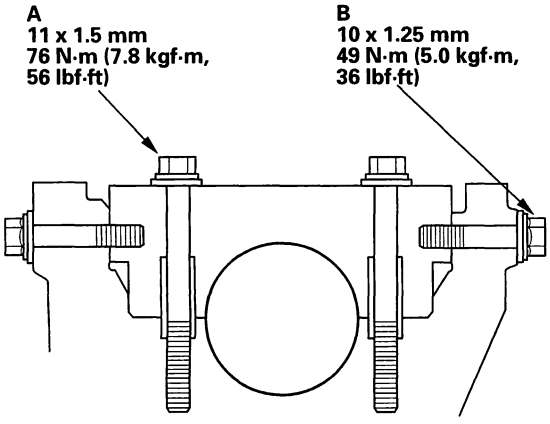

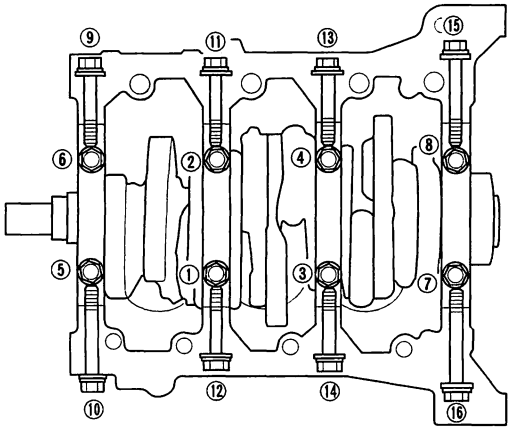

(cont'd)

Crankshaft and Piston Installation (cont'd)

20. The seal mating surface on the engine block end cover should be dry.

21. Drive the crankshaft oil seal sequarely into the left side cover.

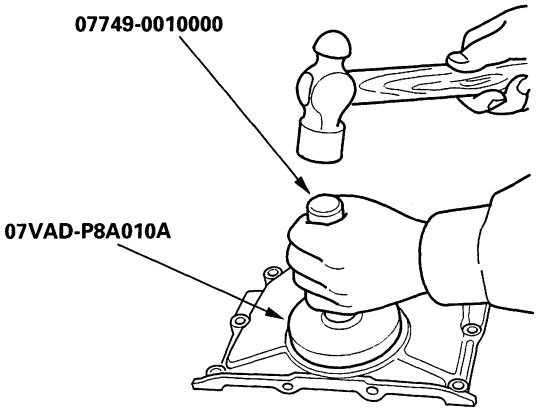

22. Confirm that the clearance is equal all the way around with a feeler gauge.

Clearance: 0.5 – 0.8 mm (0.02 – 0.03 in.)

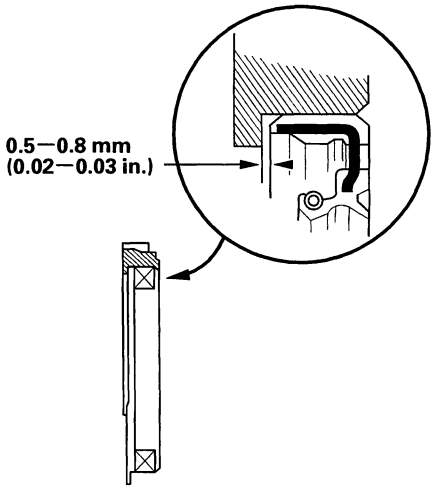

23. Clean and dry the left side cover mating surfaces. Apply a light coat of grease the crankshaft and to the lip of the seal.

24. Apply liquid gasket, part No. 08718-0001 or 08718-0003, evenly to the block mating surface of the left side cover and to the inner threads of the bolt holes. Install the dowel pins (A), new O-ring (B) and the engine block end cover (C) on the cylinder block.

    NOTE: Do not install the parts if 5 minutes or more have elapsed since applying the liquid gasket. Instead, reapply liquid gasket after removing the old residue.

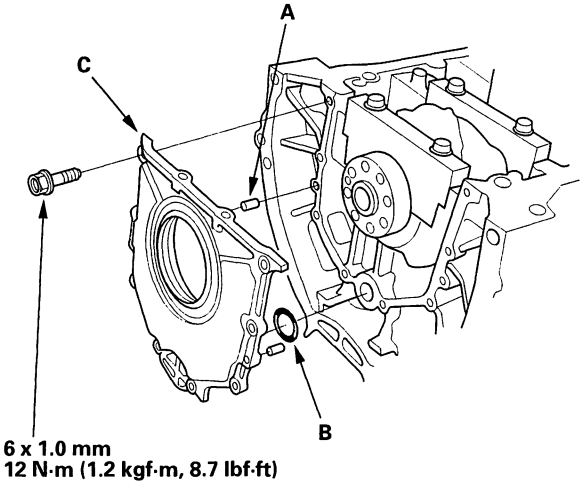

25. After assembly, wait at least 30 minutes before filling the engine with oil.

BACK

26. Clean and dry the oil pump mating surfaces.

27. Install the oil pump (A).

    –1 Install a new crankshaft oil seal in the oil pump (see step 15 on page 8-9).
    –2 Apply liquid gasket, part No. 08718-0001 or 08718-0003, evenly to the block mating surface of the oil pump and to the inner threads of the bolt holes.
    –3 Grease the lip of the oil seal and apply oil to the new O-ring (B).
    –4 Install the dowel pins (C), then align the inner rotor with the crankshaft and install the oil pump.
    –5 Clean the excess grease off the crankshaft and check the seal for distortion.

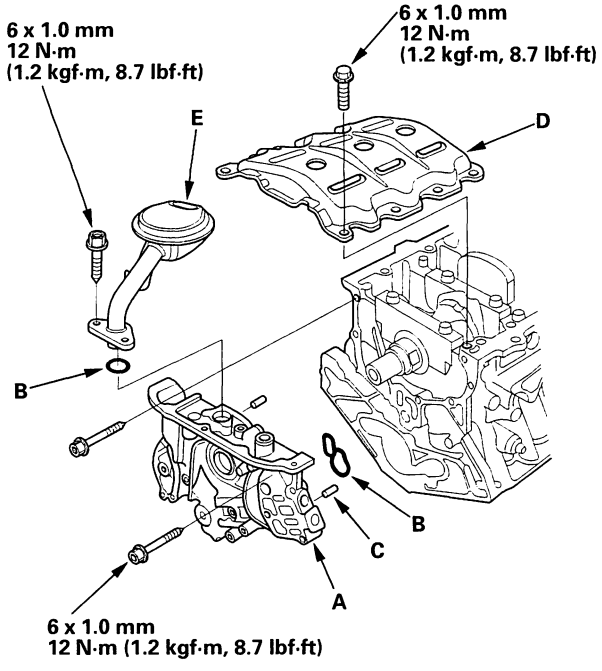

28. Install the baffle plate (D), then install the oil screen (E).

29. Clean and dry the oil pan mating surfaces.

30. Apply liquid gasket, part No. 08718-0001 or 08718-0003, evenly to the oil pan mating surface of the block and to the inner threads of the bolt holes, then install the oil pan.

    NOTE: Do not install the parts if 5 minutes or more have elapsed since applying liquid gasket. Instead, reapply liquid gasket after removing old residue.

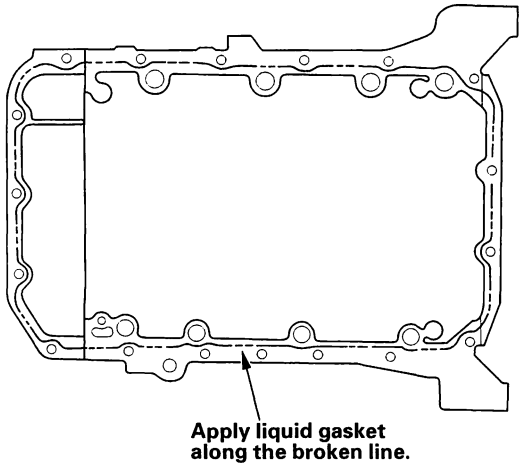

31. Tighten the bolts in two or three steps. In the final step, tighten all bolts, in sequence, to 12 N·m (1.2 kgf·m, 8.7 lbf·ft).

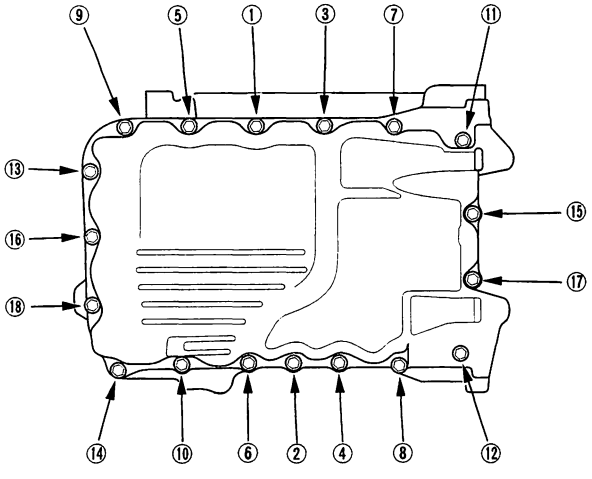

Pulley End Crankshaft Seal Installation - In-car

Special Tools Required
Oil Seal Driver 07LAD-PT3010A

1. Dry the crankshaft oil seal housing.
2. Apply a light coat of grease to the crankshaft and to the lip of the seal.
3. Using the seal driver, drive in the crankshaft oil seal until the driver bottoms against the oil pump. When the seal is in place, clean any excess grease off the crankshaft, and check that the oil seal lip is not distorted.

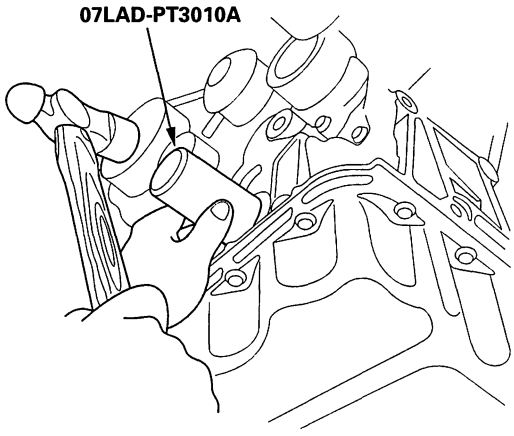

Transmission End Crankshaft Seal Installation - In-car

Special Tools Required
- Driver 07749-0010000
- Oil Seal Driver Attachment, 80 mm I.D. 07VAD-P8A010A

1. Dry the crankshaft oil seal housing.
2. Apply a light coat of grease to the crankshaft and to the lip of the seal.
3. Using the special tools, drive the crankshaft oil seal into the engine block end cover until the driver attachment bottoms against the crankshaft. Align the hole in the driver attachment with the pin on the crankshaft.

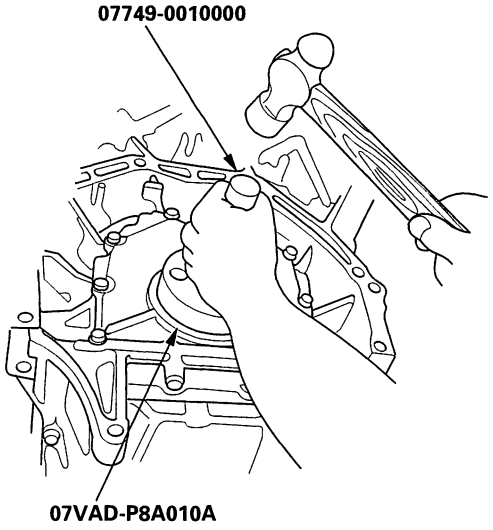

4. Clean any excess grease off the crankshaft, and check that the oil seal lip is not distorted.

BACK

Engine Mechanical

Engine Lubrication

Special Tools 8-2
Component Location Index 8-3
Oil Pressure Switch Test 8-4
Oil Pressure Test 8-4
Engine Oil Replacement 8-5
Engine Oil Filter Replacement 8-5
Oil Pump Overhaul 8-7

BACK

Special Tools

Ref. No.	Tool Number	Description	Qty
①	07GAD-PH70201	Oil Seal Driver	1
②	07912-6110001	Oil Filter Wrench	1

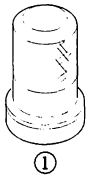

①

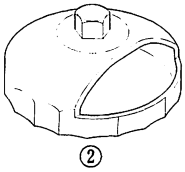

②

BACK

Component Location Index

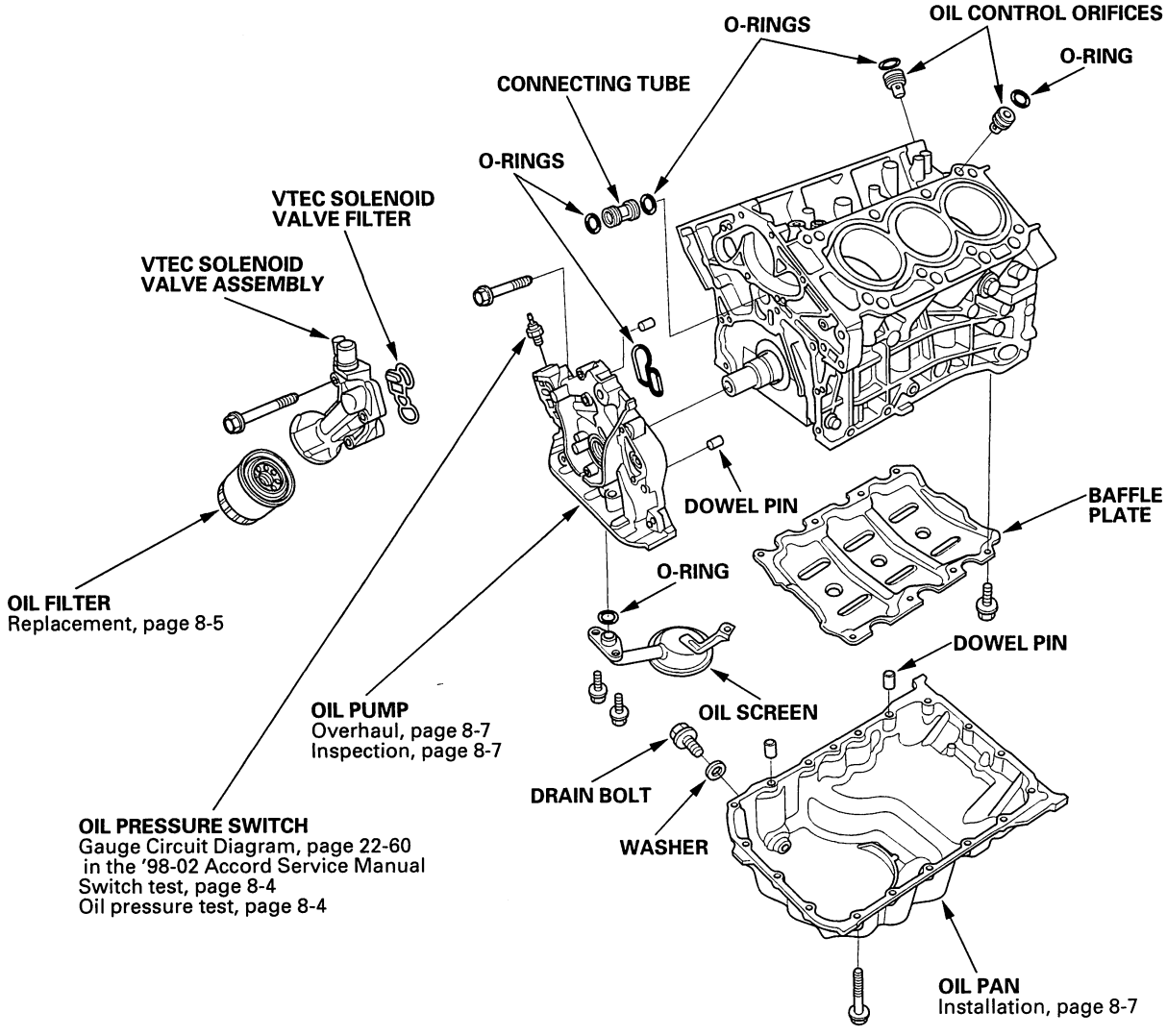

Oil Pressure Switch Test

1. Remove the YEL/RED wire (A) from the engine oil pressure switch (B).

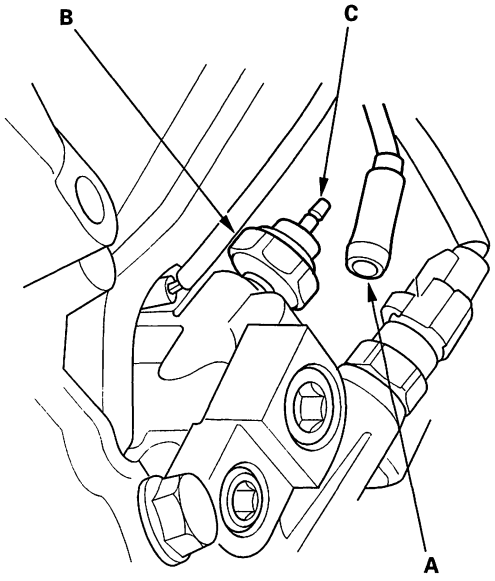

2. Check for continuity between the positive terminal (C) and the engine (ground). There should be continuity with the engine stopped. There should be no continuity with the engine running.

3. If the switch fails to operate, check the engine oil level. If the engine oil level is OK, check the engine oil pressure.

Oil Pressure Test

If the oil pressure warning light stays on with the engine running, check the engine oil level. If the oil level is correct:

1. Connect a tachometer or a Honda PGM tester.

2. Remove the engine oil pressure switch and install an oil pressure gauge (A).

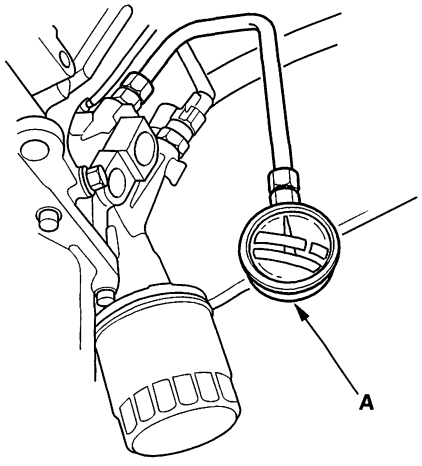

3. Start the engine. Shut it off immediately if the gauge registers no oil pressure. Repair the problem before continuing.

4. Allow the engine to reach operating temperature (fan comes on at least twice). The pressure should be:

   Engine Oil Temperature: 176°F (80°C)
   Engine Oil Pressure:
   At Idle: 70 kPa (0.7 kgf/cm², 10 psi) minimum
   At 3,000 rpm: 490 kPa (5.0 kgf/cm², 71 psi) minimum

5. If oil pressure is NOT within specifications, inspect these items:
   - Check the oil filter for clogging.
   - Check the oil pump (see page 8-7).

BACK

Engine Oil Replacement

NOTE: Under normal conditions, the oil filter should be replaced at every other oil change. Under severe conditions, the oil filter should be replaced at each oil change.

Change interval:
Every 7,500 miles (12,000 km) or 12 months (Normal conditions)
Every 3,750 miles (6,000 km) or 6 months (Severe conditions).

1. Warm up the engine.

2. Remove the drain bolt (A), and drain the engine oil.

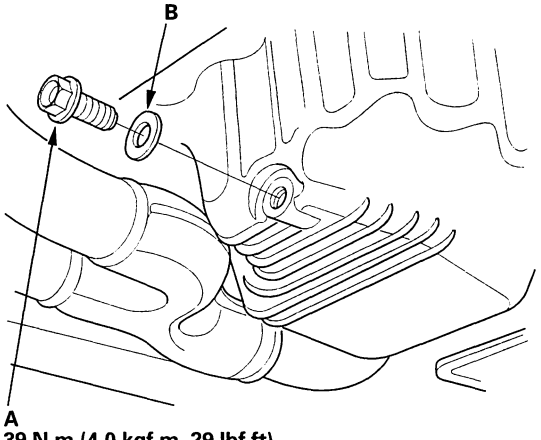

39 N·m (4.0 kgf·m, 29 lbf·ft)
Do not overtighten.

3. Reinstall the drain bolt with a new washer (B).

4. Refill with the recommended oil (see page 3-2).

   Capacity
   4.0 ℓ (4.2 US qt, 3.5 Imp qt) at oil change.
   4.4 ℓ (4.6 US qt, 3.9 Imp qt) at oil change including filter.
   5.0 ℓ (5.3 US qt, 4.4 Imp qt) after engine overhaul.

5. Run the engine for more than 3 minutes, then check for oil leakage.

Engine Oil Filter Replacement

Special Tools Required
Oil Filter Wrench 07912-6110001

1. Remove the oil filter with the special oil filter wrench.

2. Inspect the threads (A) and rubber seal (B) on the new filter. Wipe off the seat on the engine block, then apply a light coat of oil to the filter rubber seal. Use only filters with a built-in bypass system.

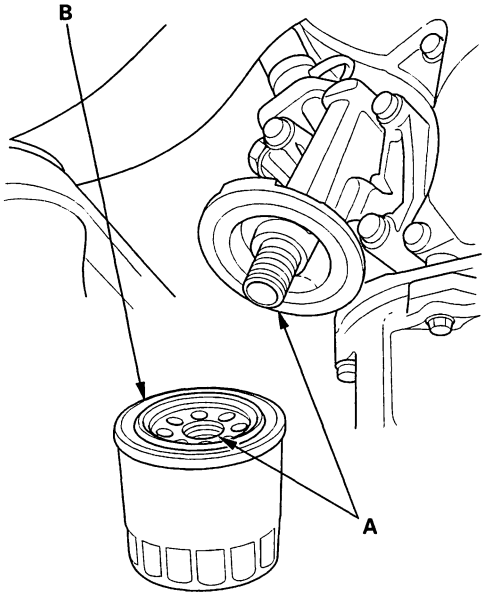

(cont'd)

Engine Oil Filter Replacement (cont'd)

3. Install the oil filter by hand.

4. After the rubber seal seats, tighten the oil filter clockwise with the special tool.

   Tighten: 7/8 turn clockwise.
   Tightening torque: 22 N·m (2.2 kgf·m, 16 lbf·ft)

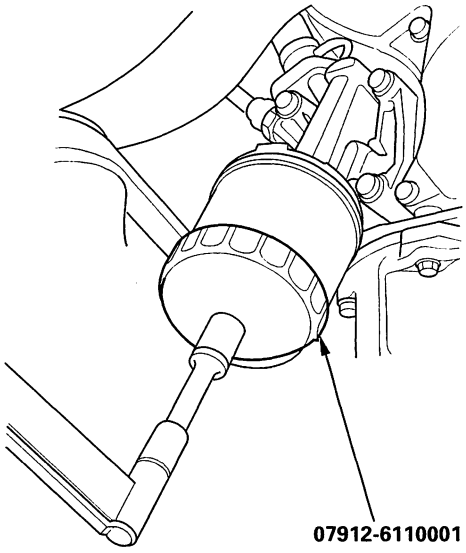

5. If 8 numbers (1 to 8) are printed around the outside of the filter, use the following procedure to tighten the filter.

   - Spin the filter on until its seal lightly seats against the block, and note which number is at the bottom.
   - Tighten the filter by turning it clockwise 7 numbers from the one you noted. For example, if number 2 is at the bottom when the seal is lightly seated, tighten the filter until the number 1 comes around to the bottom.

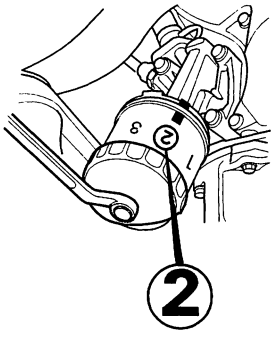

Number when rubber seal is seated.

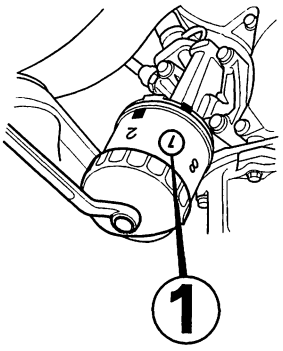

Number after tightening.

Number when rubber seal is seated	1	2	3	4	5	6	7	8
Number after tightening	8	1	2	3	4	5	6	7

6. After installation, fill the engine with oil up to the specified level, run the engine for more than 3 minutes, then check for oil leakage.

BACK

Oil Pump Overhaul

Exploded View

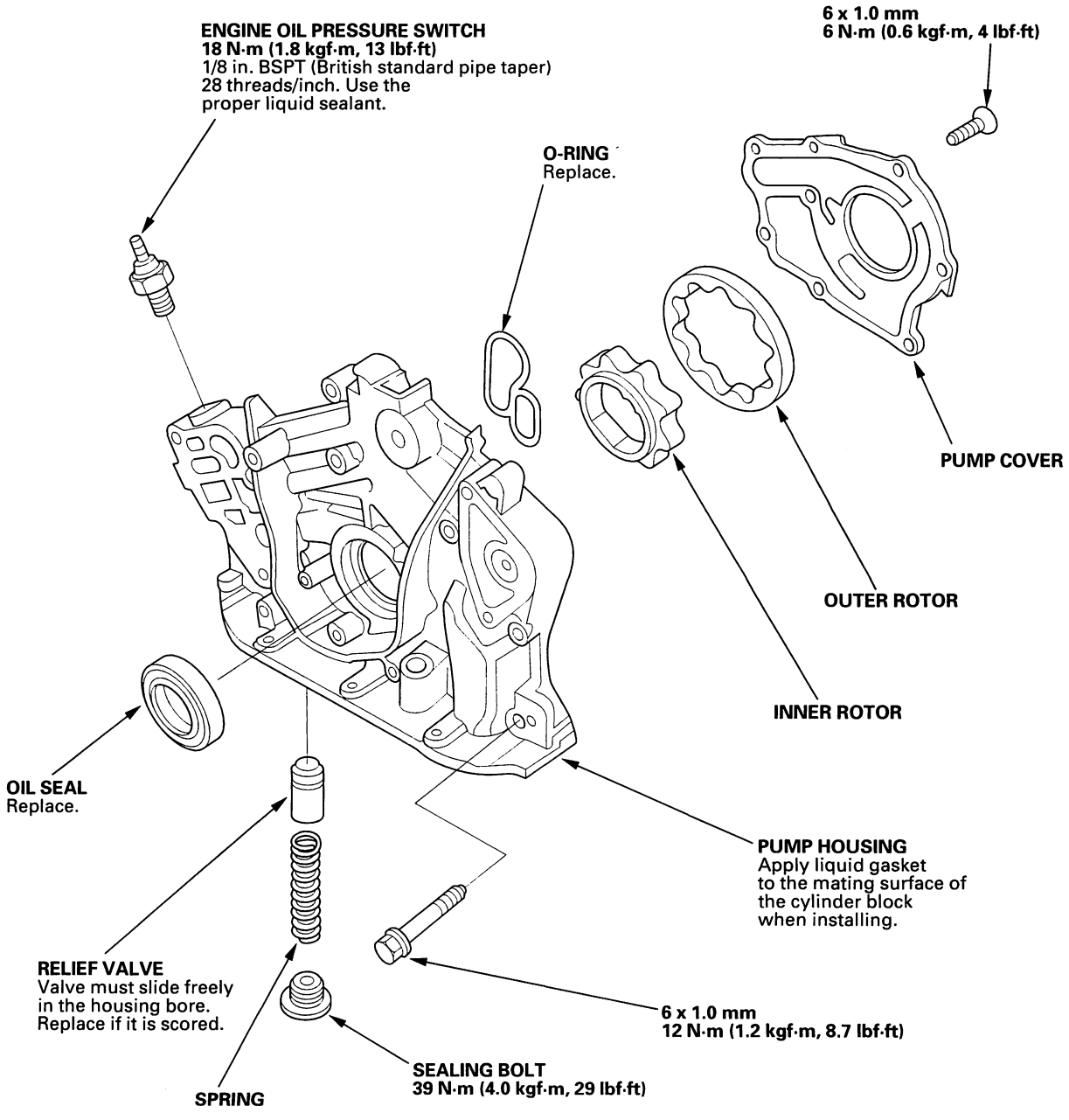

(cont'd)

BACK

Oil Pump Overhaul (cont'd)

Special Tools Required
Oil Seal Driver 07GAD-PH70201

Removal

1. Drain the engine oil.
2. Turn the crankshaft so that the No. 1 piston is at TDC (see page 6-22).
3. Remove the timing belt (see page 6-19).
4. Remove the idler pulley.
5. Remove the CKP sensor, then remove the timing belt drive pulley (see page 6-56).
6. Remove the VTEC solenoid valve and oil filter assembly (see page 6-9).
7. Remove the oil pan and the oil screen (A).

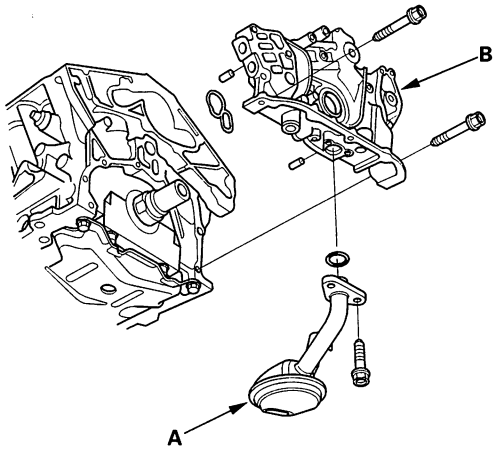

8. Remove the mounting bolts and the oil pump assembly (B).
9. Remove the screws from the pump housing, then separate the housing and cover.

Inspection

10. Check the inner-to-outer rotor radial clearance between the inner rotor (A) and outer rotor (B). If the inner-to-outer rotor clearance exceeds the service limit, replace the oil pump assembly.

    Inner Rotor-to-Outer Rotor Radial Clearance
    Standard (New): 0.04–0.16 mm (0.002–0.006 in.)
    Service Limit: 0.20 mm (0.008 in.)

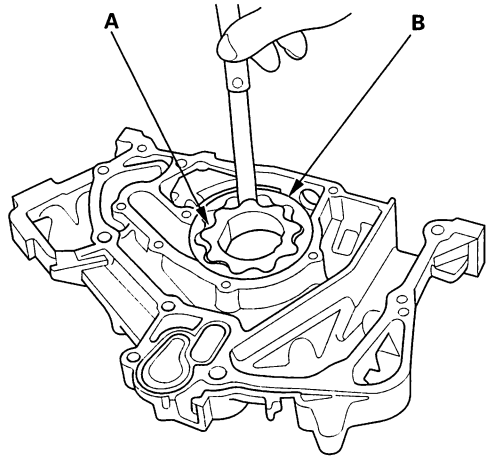

11. Check the housing-to-rotor axial clearance between the rotors (A) and pump housing (B). If the housing-to-rotor axial clearance exceeds the service limit, replace the oil pump assembly.

    Housing-to-Rotor Axial Clearance
    Standard (New): 0.02–0.07 mm (0.001–0.003 in.)
    Service Limit: 0.12 mm (0.005 in.)

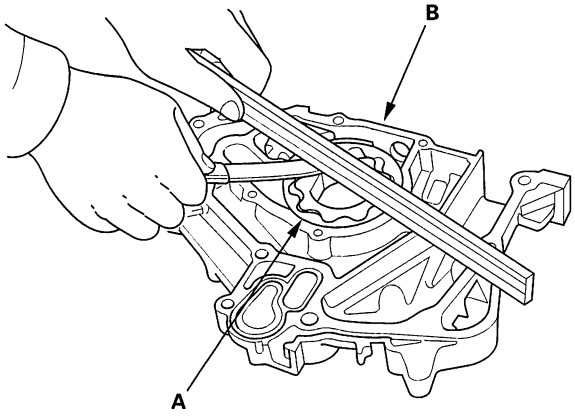

BACK

12. Check the housing-to-outer rotor radial clearance between the outer rotor (A) and pump housing (B). If the housing-to-outer rotor radial clearance exceeds the service limit, replace the oil pump assembly.

Housing-to-Outer Rotor Radial Clearance
Standard (New): 0.14–0.19 mm (0.006–0.007 in.)
Service Limit: 0.20 mm (0.008 in.)

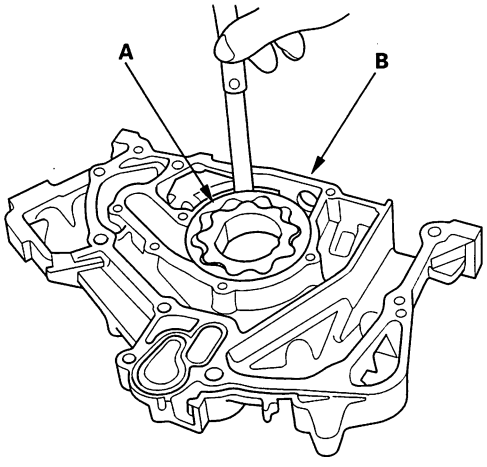

13. Inspect both rotors and the pump housing for scoring or other damage. Replace parts if necessary.

14. Remove the old oil seal from the oil pump.

15. Gently tap in the new oil seal until the special tool bottoms on the pump.

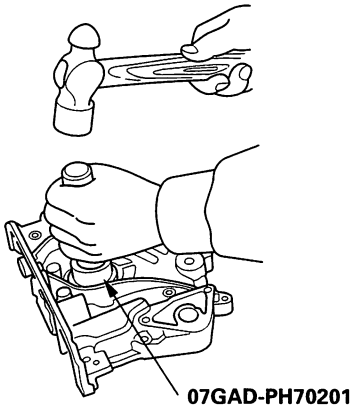

16. Apply liquid thread lock to the pump housing screws.

Installation

17. Reassemble the oil pump.

18. Check that the oil pump turns freely.

19. Clean and dry the oil pump mating surfaces.

20. Install the oil pump (A).
    - –1 Apply liquid gasket part No. 08718-0001 or 08718-0003 evenly to the block mating surface of the oil pump and to the inner threads of the bolt holes.
    - –2 Grease the lip of the oil seal and apply oil to the new O-rings (B).
    - –3 Install the dowel pins (C), then align the inner rotor with the crankshaft and install the oil pump.
    - –4 Clean the excess grease off the crankshaft, and check the seal for distortion.

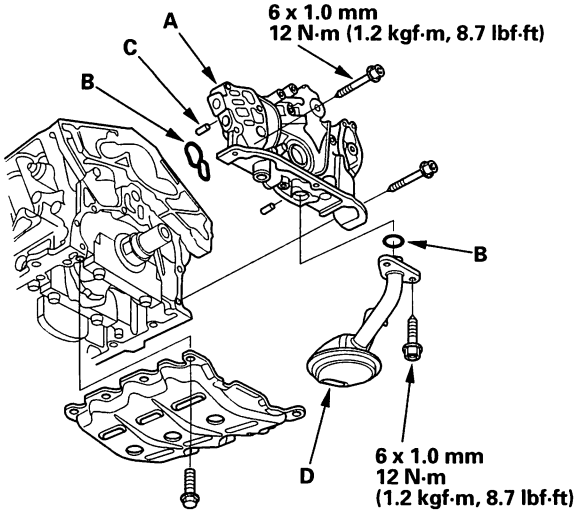

21. Install the oil screen (D).

(cont'd)

Oil Pump Overhaul (cont'd)

22. Clean and dry the oil pan mating surfaces.

23. Apply liquid gasket, part No. 08718-0001 or 08718-0003, evenly to the oil pan mating surface of the block and to the inner threads of the bolt holes, then install the oil pan.

    NOTE: Do not install the parts if 5 minutes or more have elapsed since applying liquid gasket. Instead, reapply liquid gasket after removing the old residue.

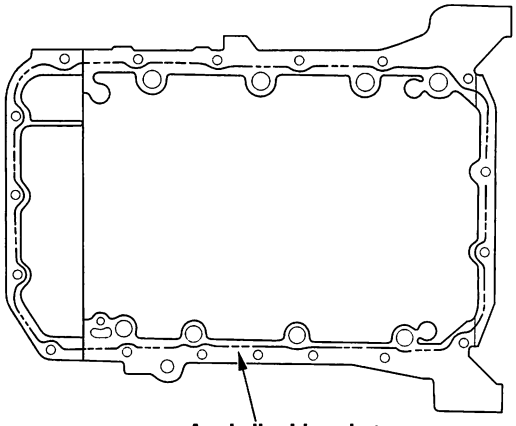

Apply liquid gasket along the broken line.

24. Tighten the bolts in two or three steps. In the final step, tighten all bolts, in sequence, to 12 N·m (1.2 kgf·m, 8.7 lbf·ft).

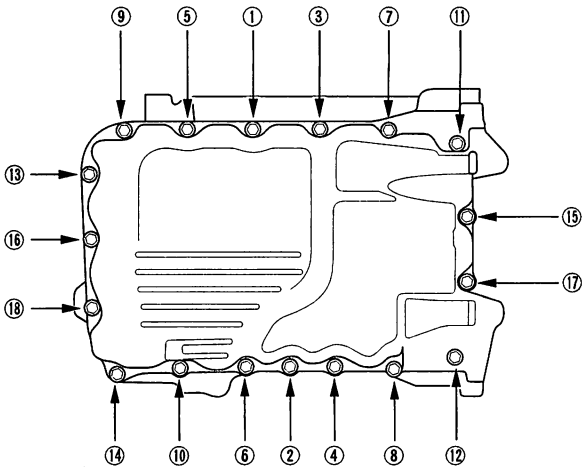

BACK

Engine Mechanical

Intake Manifold and Exhaust System

Intake Manifold Removal and Installation 9-2
Exhaust Manifold Removal and Installation 9-3
Exhaust Pipe and Muffler Replacement 9-4

BACK

Intake Manifold Removal and Installation

NOTE:
- Use new O-rings and gaskets when reassembling.
- Check for folds or scratches on the surfaces of the gaskets.
- Replace with a new gasket if damaged.

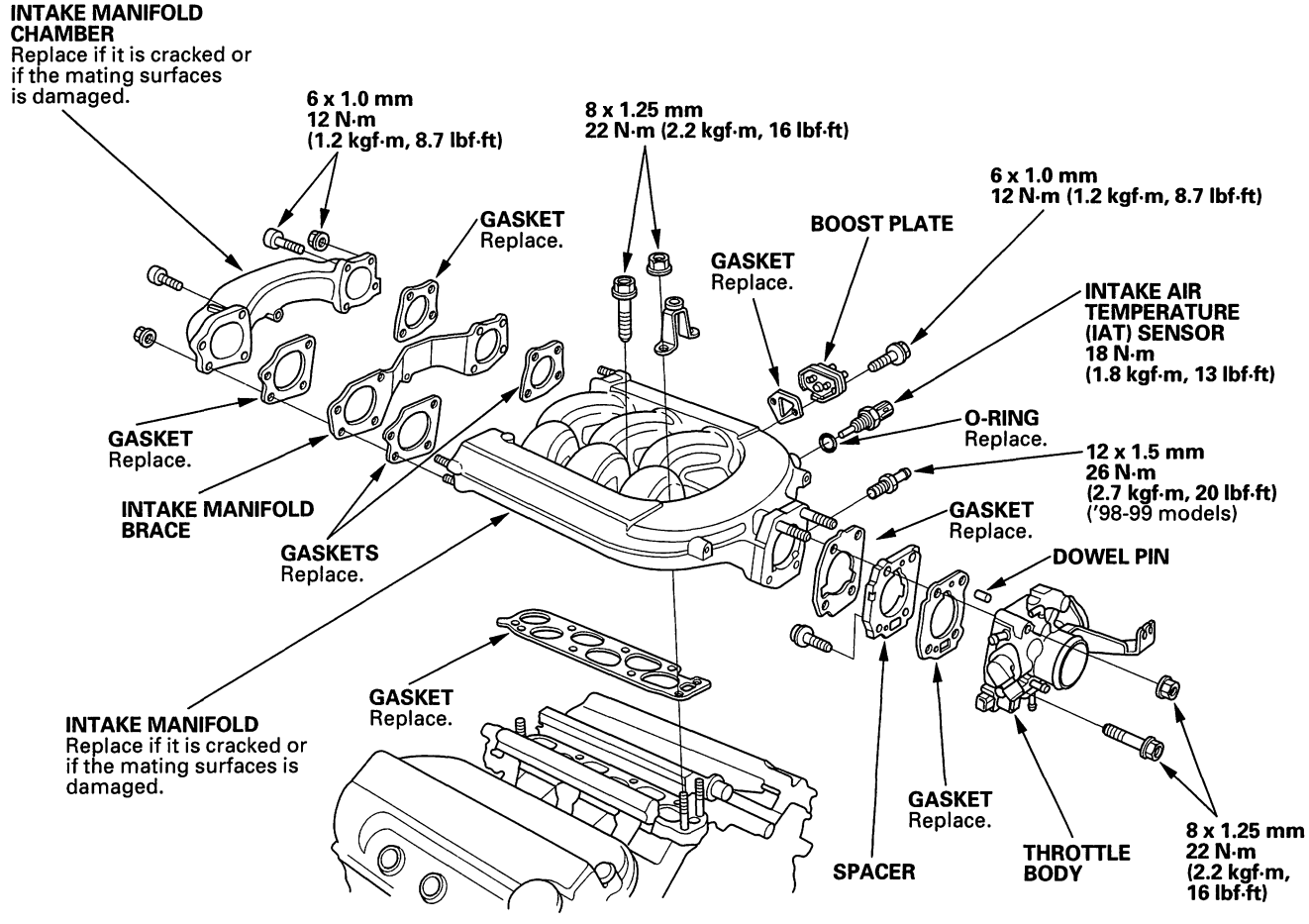

BACK

Exhaust Manifold Removal and Installation

NOTE:
- Use new gaskets and self-locking nuts when reassembling.
- Check for folds or scratches on the surfaces of the gaskets.
- Replace with a new gasket if damaged.

FRONT:

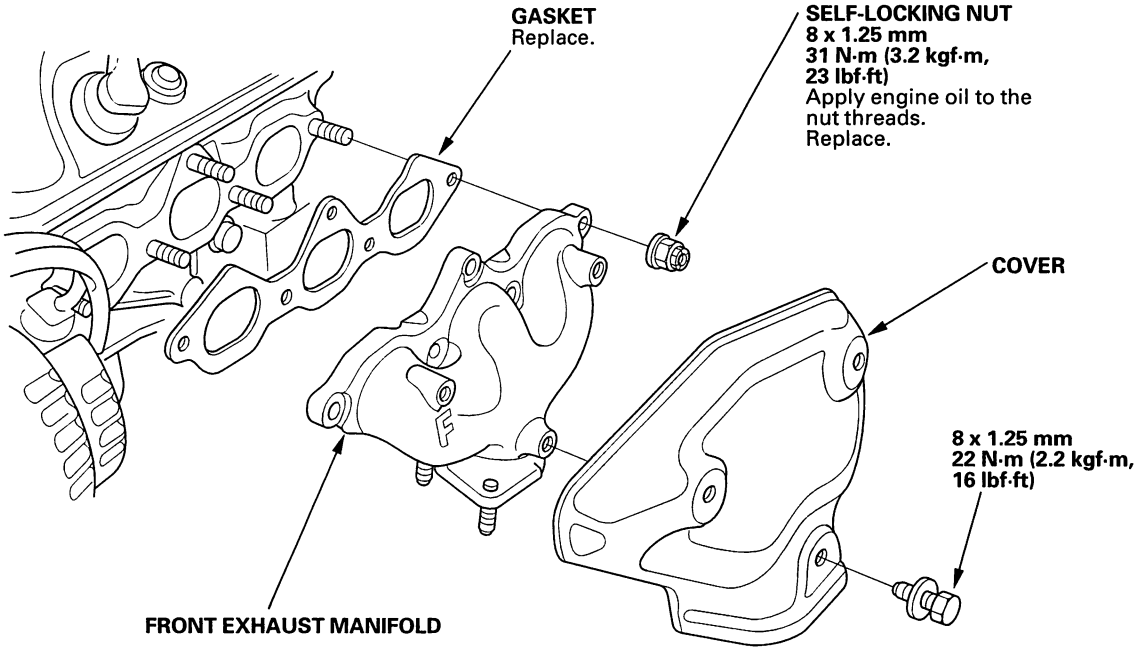

REAR:

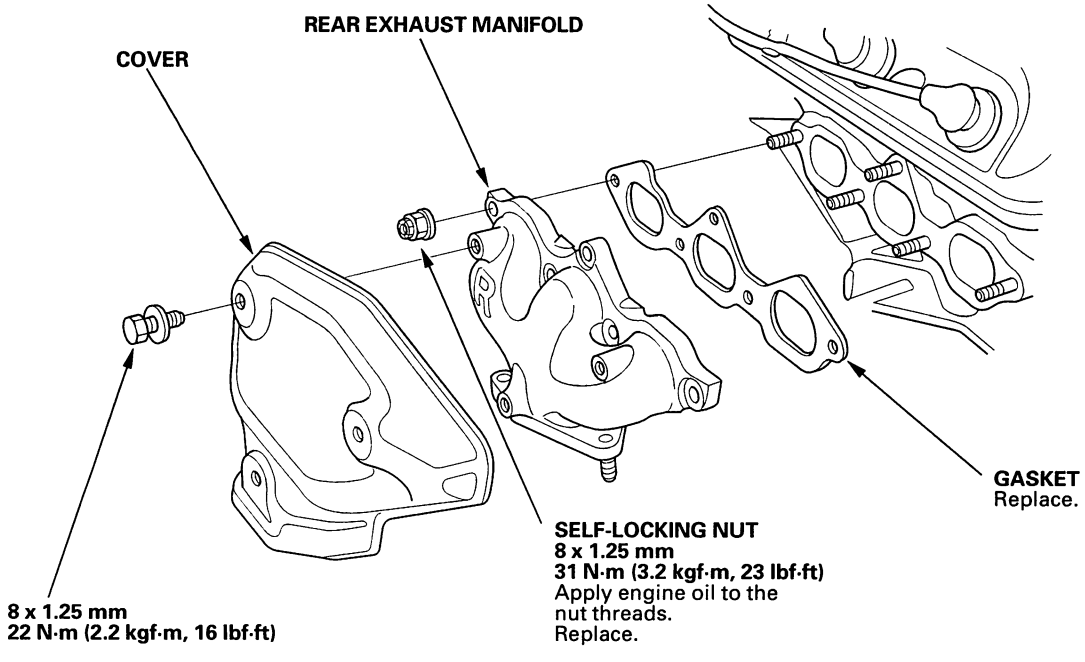

Exhaust Pipe and Muffler Replacement

NOTE: Use new gaskets and self-locking nuts when reassembling.

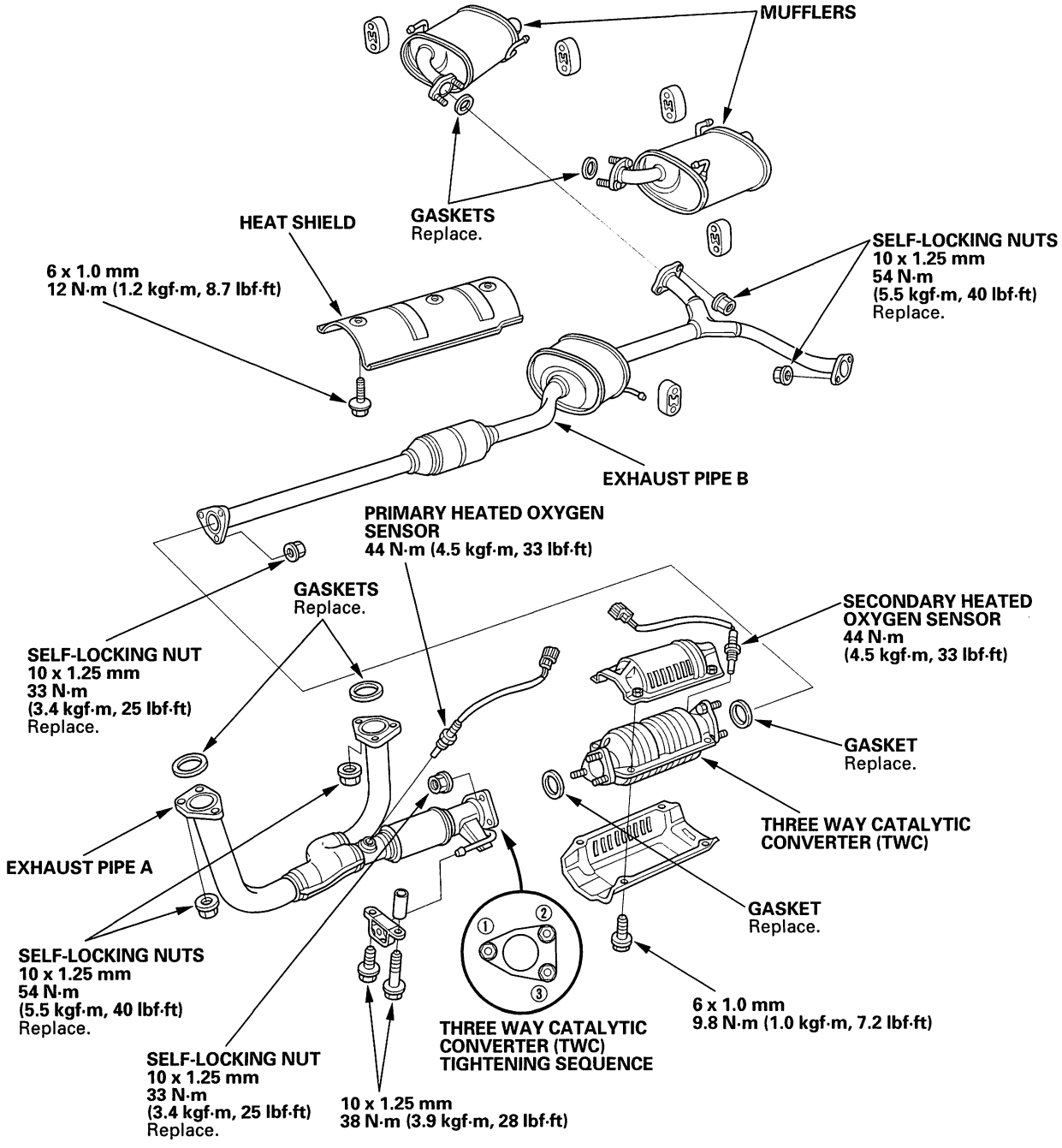

BACK

Engine Cooling

Cooling System

Component Location Index 10-2
Coolant Temperature Gauge Testing 10-5
Sending Unit Testing 10-7
Radiator Cap Test 10-7
Radiator Test 10-8
Fan Motor Test 10-8
Thermostat Test 10-9
Water Pump Inspection 10-9
Water Pump Replacement 10-10
Coolant Replacement 10-10
Thermostat Replacement 10-12
Radiator and Fans Replacement 10-13

Fan Controls

Component Location Index 10-14
Symptom Troubleshooting Index 10-15
Circuit Diagram 10-16
Radiator Fan Circuit Troubleshooting 10-17
Radiator Fan Switch A Circuit Troubleshooting 10-19
Fan control Module Input Test 10-20
Radiator Fan Switch (A or B) Test 10-21

BACK

Component Location Index

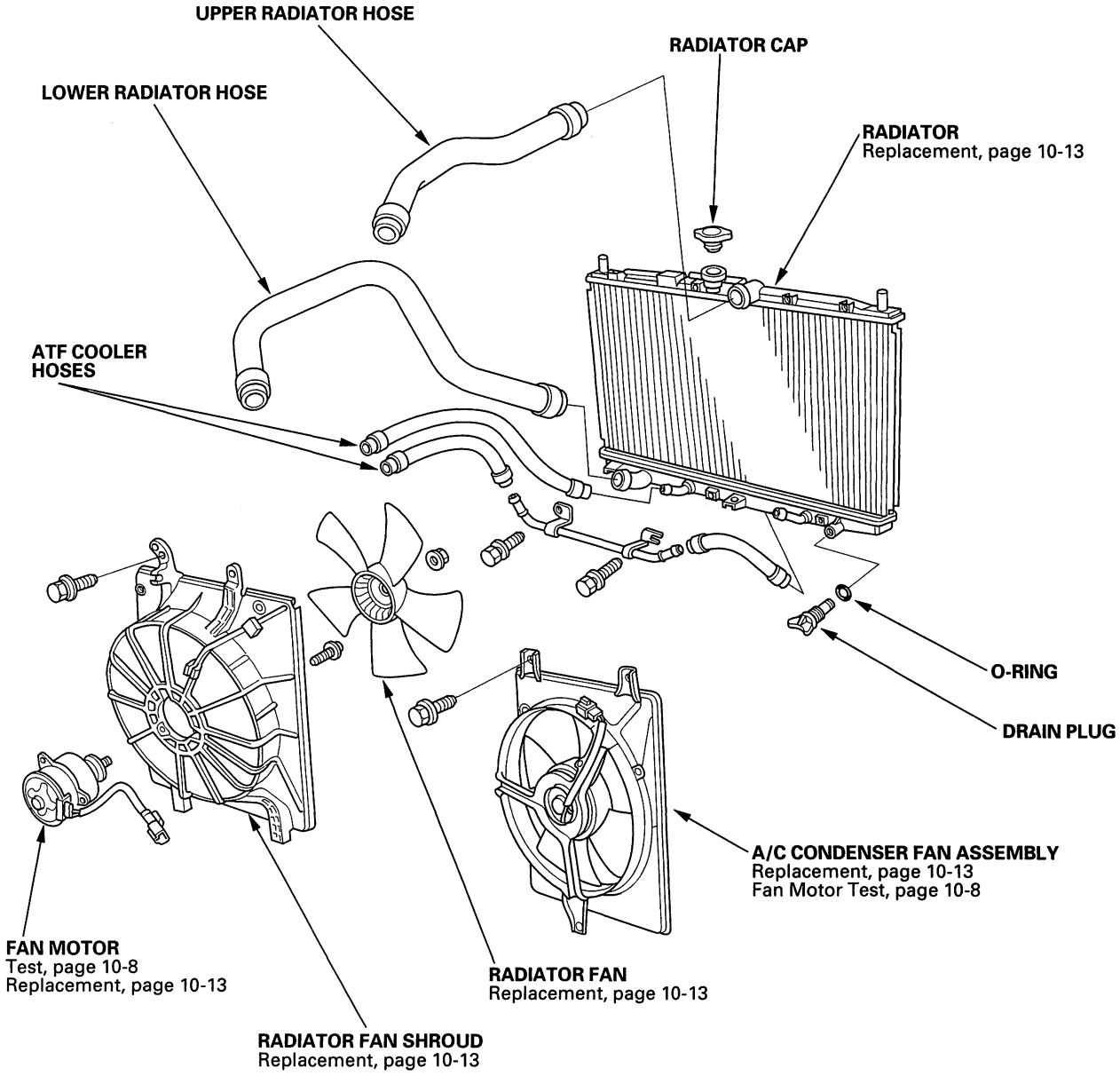

BACK

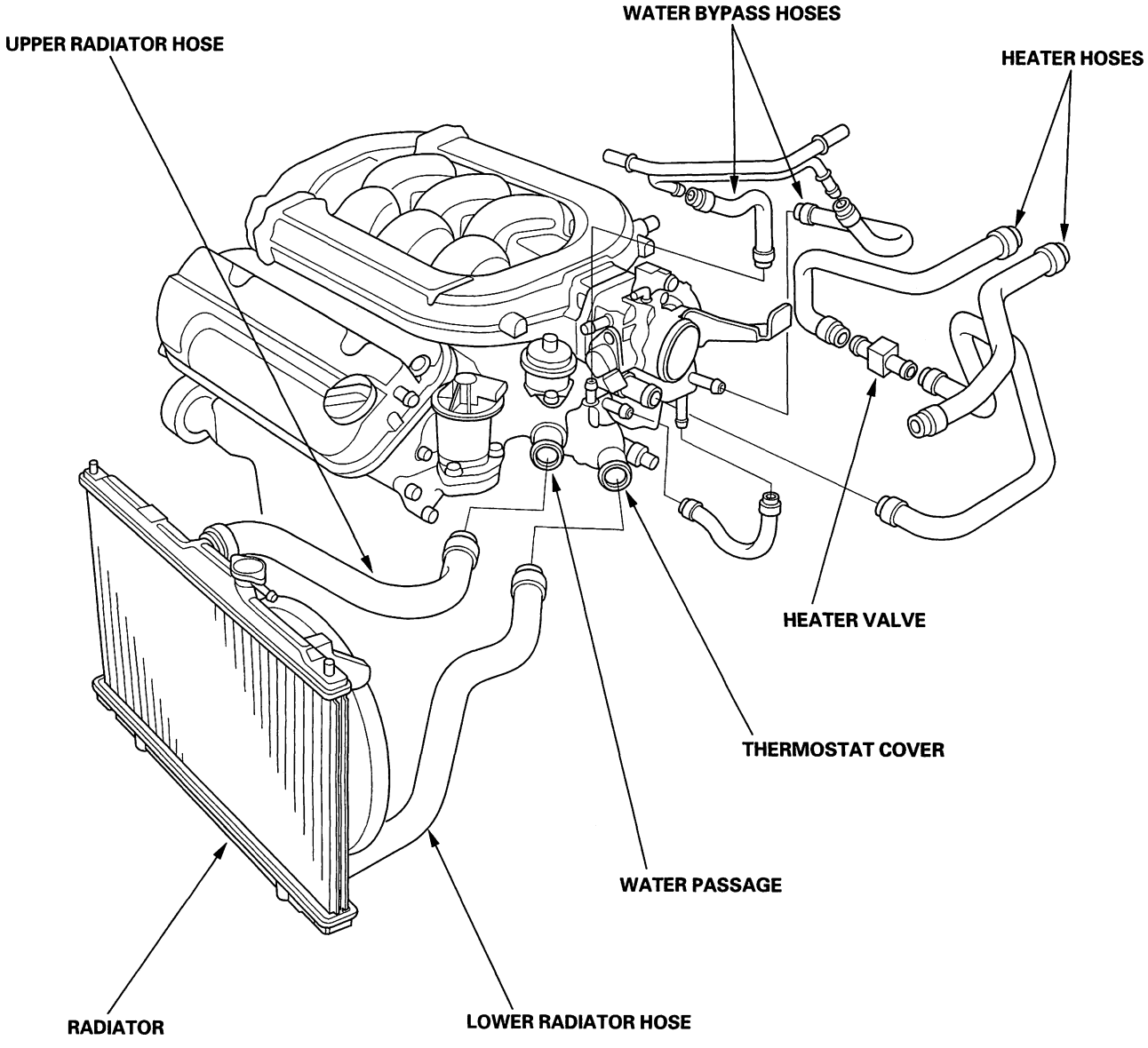
WATER BYPASS HOSES
UPPER RADIATOR HOSE
HEATER HOSES
HEATER VALVE
THERMOSTAT COVER
WATER PASSAGE
RADIATOR
LOWER RADIATOR HOSE

(cont'd)

Component Location Index (cont'd)

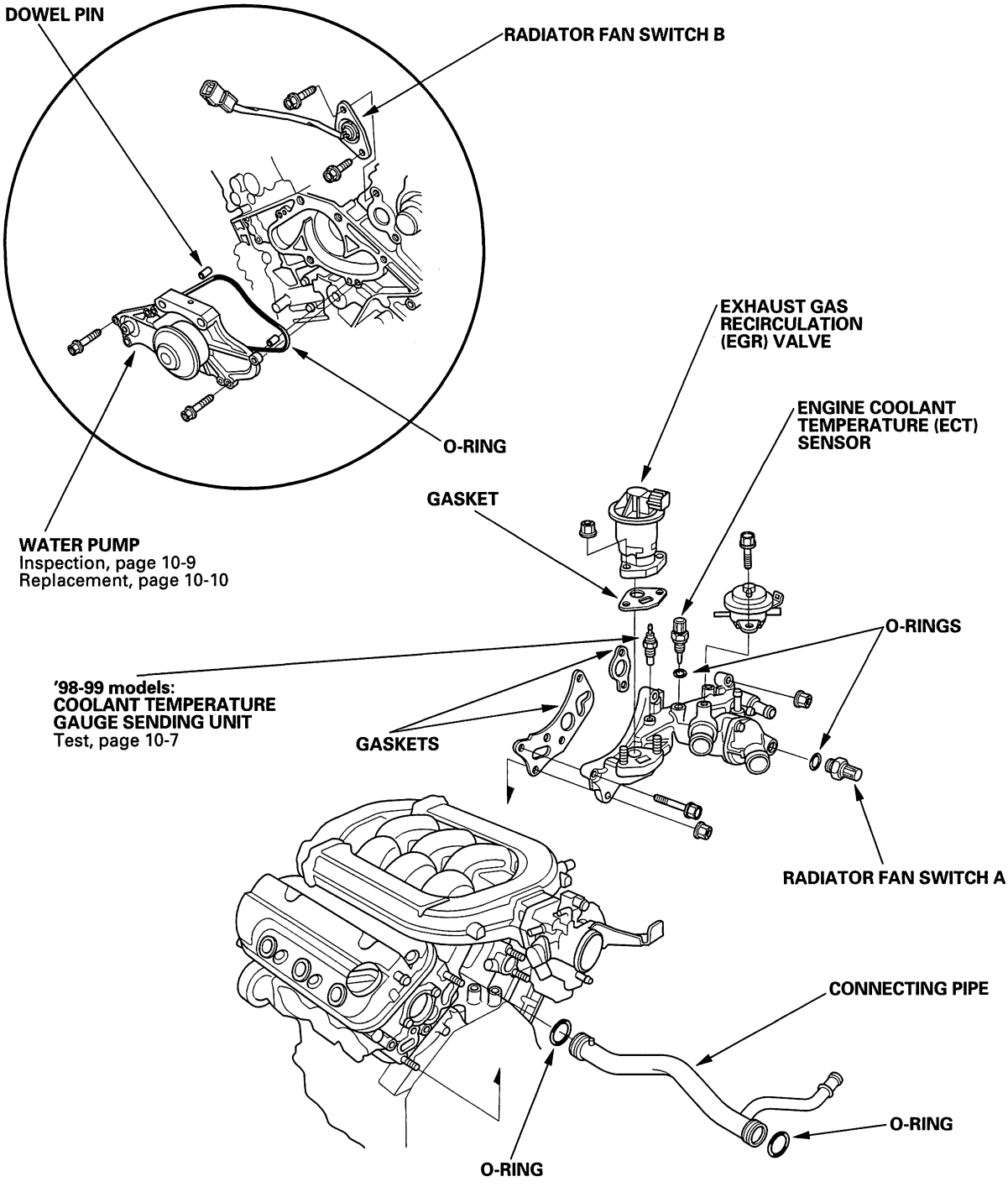

BACK

Coolant Temperature Gauge Test

'98-99 models:

1. Check the No. 9 (7.5A) fuse in the under-dash fuse/relay box before testing.

2. Make sure the ignition switch is OFF, then disconnect the YEL/GRN wire (A) from the coolant temperature gauge sending unit (B), and ground it with a jumper wire.

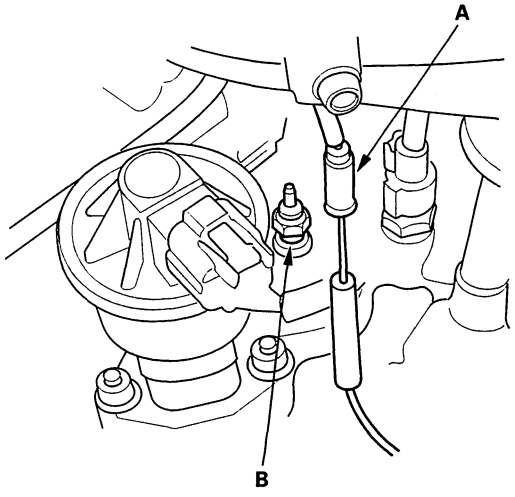

3. Turn the ignition switch ON (II). Check that the pointer of the coolant temperature gauge starts moving toward the "H" mark. Turn the ignition switch OFF before the pointer reaches "H" on the gauge dial. Failure to do so may damage the gauge.

   - If the pointer of the gauge does not move at all, check for an open in the YEL/GRN wire. If the wires are OK, replace the coolant temperature gauge.
   - If the coolant temperature gauge works, test the coolant temperature gauge sending unit.

'00-02 models:

Coolant Temperature Gauge Needle Does Not Move at All

1. Turn the ignition switch OFF, and connect Powertrain Control Module (PCM) connector terminal A1 to body ground with a jumper wire.

PCM CONNECTOR A (32P)

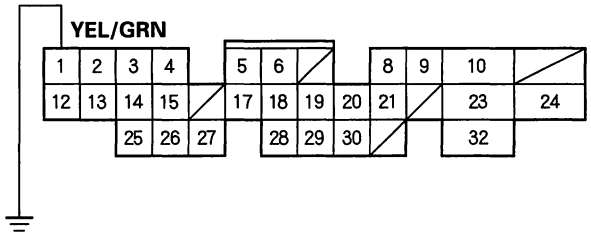

Wire side of female terminals

2. Turn the ignition switch ON (II).

   After 30 seconds or more, does the temperature gauge needle move to the Hot side ?

   YES—Substitute a known-good PCM and recheck, refer to '98-02 Accord Service Manual (see page 11-5). If the symptom/indication goes away, replace the original PCM.

   NO—Go to step 3.

3. Turn the ignition switch OFF, and disconnect PCM connector A (32P).

(cont'd)

Coolant Temperature Gauge Test (cont'd)

4. Turn the ignition switch ON (II), and measure voltage between PCM connector terminal A1 and body ground.

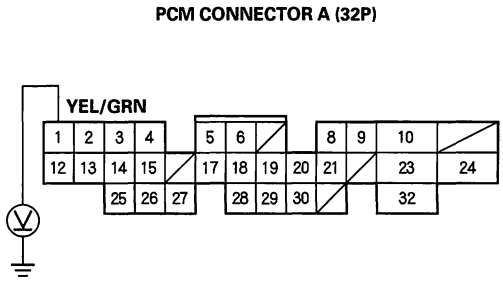

Wire side of female terminals

Is there about 5V ?

YES—Replace the fuel and temperature gauge assembly.■

NO—Go to step 5.

5. Turn the ignition switch ON (II), and measure voltage between PCM connector terminal A1 and body ground.

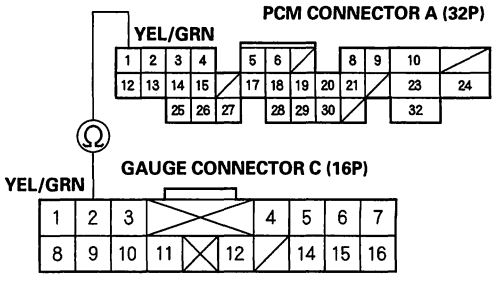

Wire side of female terminals

Is there continuity ?

YES—Replace the fuel and temperature gauge assembly.■

NO—Repair open in the wire between PCM connector terminal A1 and gauge connector terminal C2.■

Coolant Temperature Gauge Needle Goes Past the Hot Mark

1. Turn the ignition switch OFF, and disconnect PCM connector A (32P).

2. Turn the ignition switch ON (II).and watch the coolant temperature gauge.

Does the temperature gauge needle move at all ? (you may have to watch it for about 30 seconds.)

YES—Go to step 3.
NO—Substitute a known-good PCM and recheck, refer to '98-01 Accord Service Manual (see page 11-5). If the symptom/indication goes away, replace the original PCM.■

3. Turn the ignition switch OFF, then turn it ON (II) again, and watch the coolant temperature gauge.

Does the temperature gauge needle immediately go past the Hot mark ?

YES—Replace the fuel and temperature gauge assembly.■
NO—The temperature gauge needle went past the Hot mark after about 30 seconds or more.Go to step 4.

4. Turn the ignition switch OFF, and disconnect the gauge assembly connector C (16P).
5. Check for continuity between PCM connector terminal aaA1 and gauge assembly connector terminal C2.

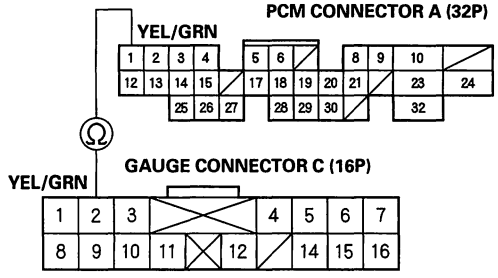

Wire side of female terminals

Is there continuity ?

YES—Replace short in the wire between PCM connector terminal A1 and gauge connector terminal C2.■
NO—Replace the fuel and temperature gauge assembly.■

BACK

Sending Unit Test

'98-99 models:

1. Disconnect the YEL/GRN wire (A) from the coolant temperature gauge sending unit (B).

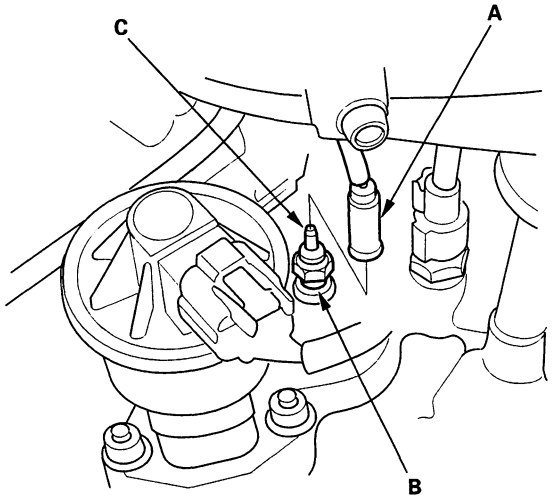

2. Using an ohmmeter, measure the change in resistance between the positive terminal (C) and the engine (ground) with the engine cold and with the engine at operating temperature.

Temperature	133°F (56°C)	185°F (85°C)–212°F (100°C)
Resistance (Ω)	137	46–30

3. If the obtained readings are substantially different from the specifications above, replace the sending unit.

Radiator Cap Test

1. Remove the radiator cap (A), wet its seal with engine coolant, then install it on the pressure tester (B) (commercially available).

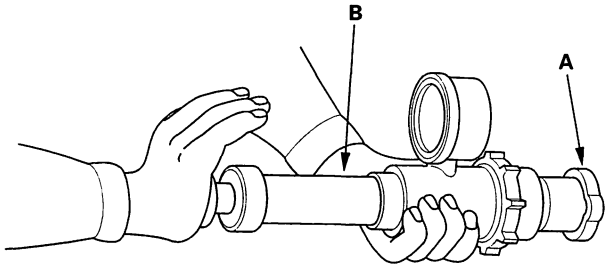

2. Apply a pressure of 93–123 kPa (0.95–1.25 kgf/cm^2, 14–18 psi).
3. Check for a drop in pressure.
4. If the pressure drops, replace the cap.

Radiator Test

1. Wait until the engine is cool, then carefully remove the radiator cap and fill the radiator with engine coolant to the top of the filler neck.

2. Attach the pressure tester (A) (commercially available) to the radiator and apply a pressure of 93 – 123 kPa (0.95 – 1.25 kgf/cm^2, 14 – 18 psi).

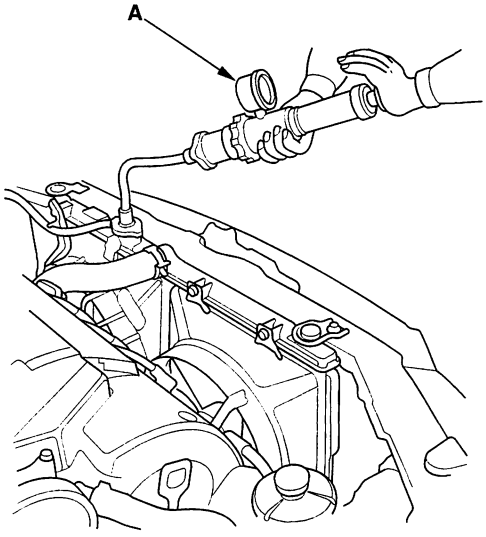

3. Inspect for engine coolant leaks and a drop in pressure.

4. Remove the tester and reinstall the radiator cap.

5. Check for engine oil in the coolant and/or coolant in the engine oil.

Fan Motor Test

1. Disconnect the 2P connectors from the radiator fan motor (A) and condenser fan motor (B).

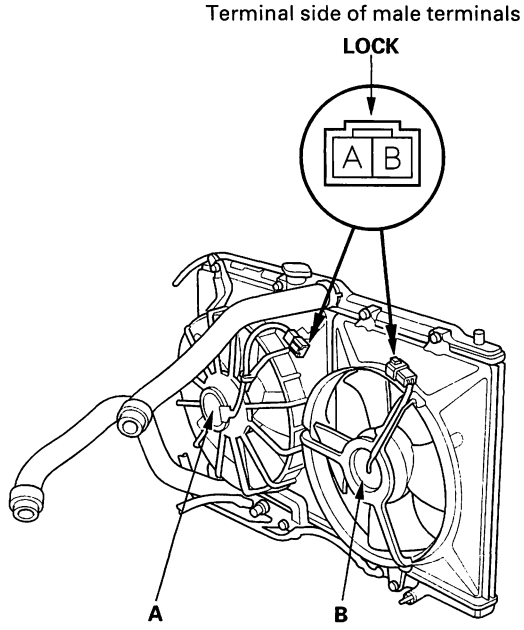

2. Test the motor by connecting battery power to the B terminal, and ground to the A terminal.

3. If the motor fails to run or does not run smoothly, replace it.

BACK

Thermostat Test

Replace the thermostat if it is open at room temperature.

To test a closed thermostat:

1. Suspend the thermostat (A) in a container of water. Do not let the thermometer (B) touch the bottom of the hot container.

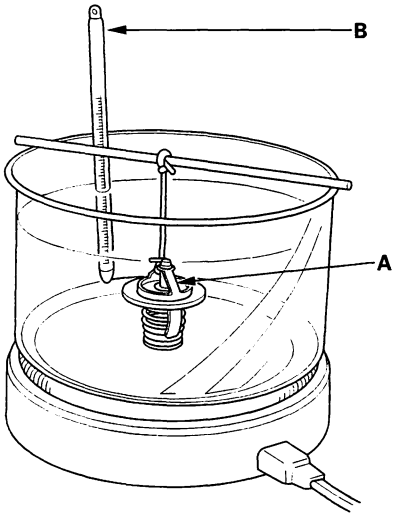

2. Heat the water and check the temperature with a thermometer. Check the temperature at which the thermostat first opens, and at which it is fully open.

3. Measure the lift height of the thermostat when it is fully open.

STANDARD THERMOSTAT

Lift height:	**above 10.0 mm (0.39 in.)**
Starts opening:	
'98-00 models:	**169 – 176°F (76 – 80°C)**
'01 model:	**163 – 171°F (73 – 77°C)**
Fully open:	
'98-00 models:	**194°F (90°C)**
'01 model:	**190°F (88°C)**

Water Pump Inspection

1. Remove the timing belt (see page 6-19).

2. Turn the water pump pulley counterclockwise. Check that it turns freely.

3. Check for signs of seal leakage. A small amount of "weeping" from the bleed holes (A) is normal.

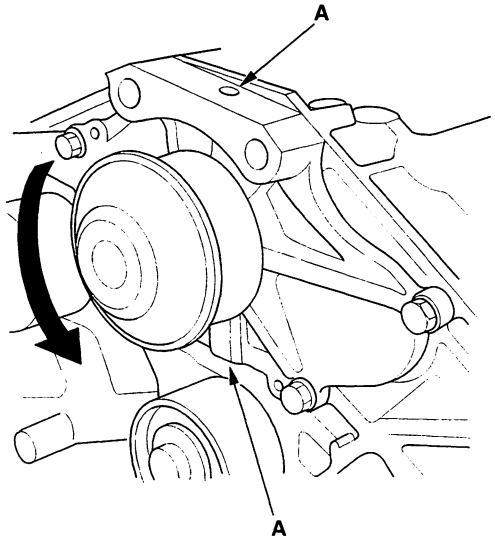

Water Pump Replacement

1. Remove the timing belt (see page 6-19).
2. Remove the timing belt tensioner.
3. Remove the water pump (A) by removing 5 bolts.

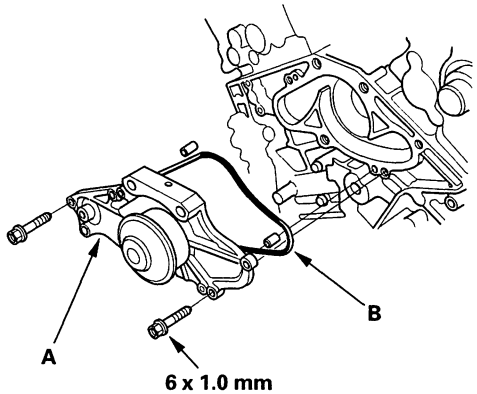

6 x 1.0 mm
12 N·m (1.2 kgf·m, 8.7 lbf·ft)

4. Inspect, repair and clean the O-ring groove and mating surface on the cylinder block.
5. Install the water pump with a new O-ring (B) in the reverse order of removal.
6. Clean up any spilled engine coolant.

Coolant Replacement

1. Set the heater temperature control dial to maximum heat. Make sure the engine and radiator are cool to the touch.
2. Remove the radiator cap.
3. Loosen the drain plug (A), and drain the coolant.

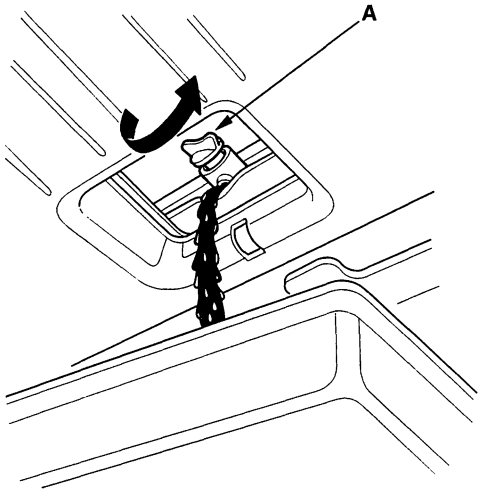

4. Install a rubber hose (A) on the drain bolt (B) located at the rear of the cylinder block, then loosen the drain bolt.

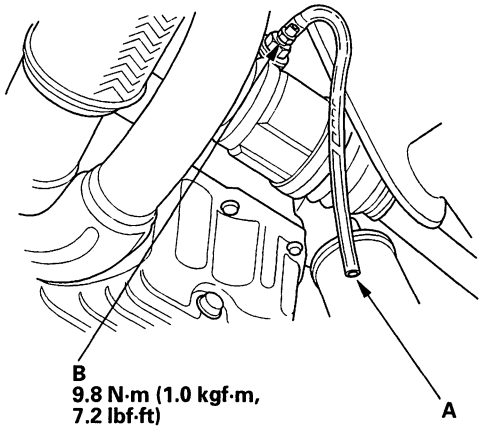

9.8 N·m (1.0 kgf·m, 7.2 lbf·ft)

5. When the coolant stops draining, tighten the drain bolt.
6. Tighten the radiator drain plug securely.

BACK

7. Remove, drain, and reinstall the reservoir. Fill the tank to the MAX mark with Honda All Season Antifreeze/Coolant Type 2.

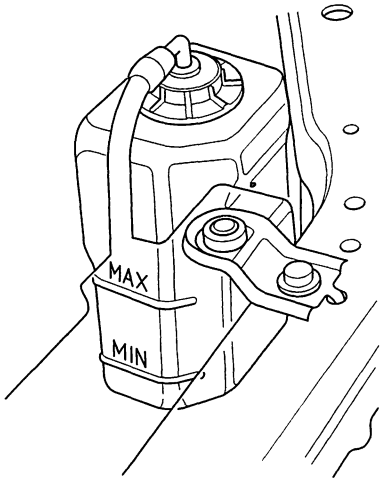

8. Pour Honda All Season Antifreeze/Coolant Type 2 into the radiator up to the base of the filler neck.

   NOTE:
   - Always use Honda All Season Antifreeze/Coolant Type 2. Using a non-Honda coolant can result in corrosion, causing the cooling system to malfunction or fail.
   - Honda All Season Antifreeze/Coolant Type 2 is a mixture of 50 % antifreeze and 50 % water. Pre-mixing is not required.

   Engine Coolant Refill Capacity
   [including the reservoir capacity of (0.6 ℓ (0.6 US qt, 0.5 Imp qt))] :
   5.6 ℓ (5.9 US qt, 4.9 Imp qt)

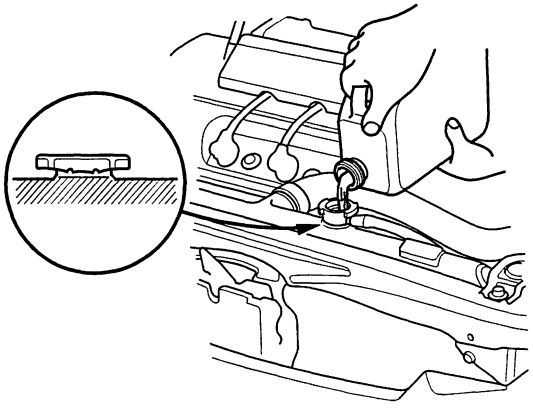

9. Install the radiator cap loosely.

10. Start the engine and let it run until it warms up (the radiator fan comes on at least twice).

11. Turn off the engine. Check the level in the radiator, and add Honda All Season Antifreeze/Coolant Type 2 if needed.

12. Put the radiator cap on tightly, then run the engine again and check for leaks.

Thermostat Replacement

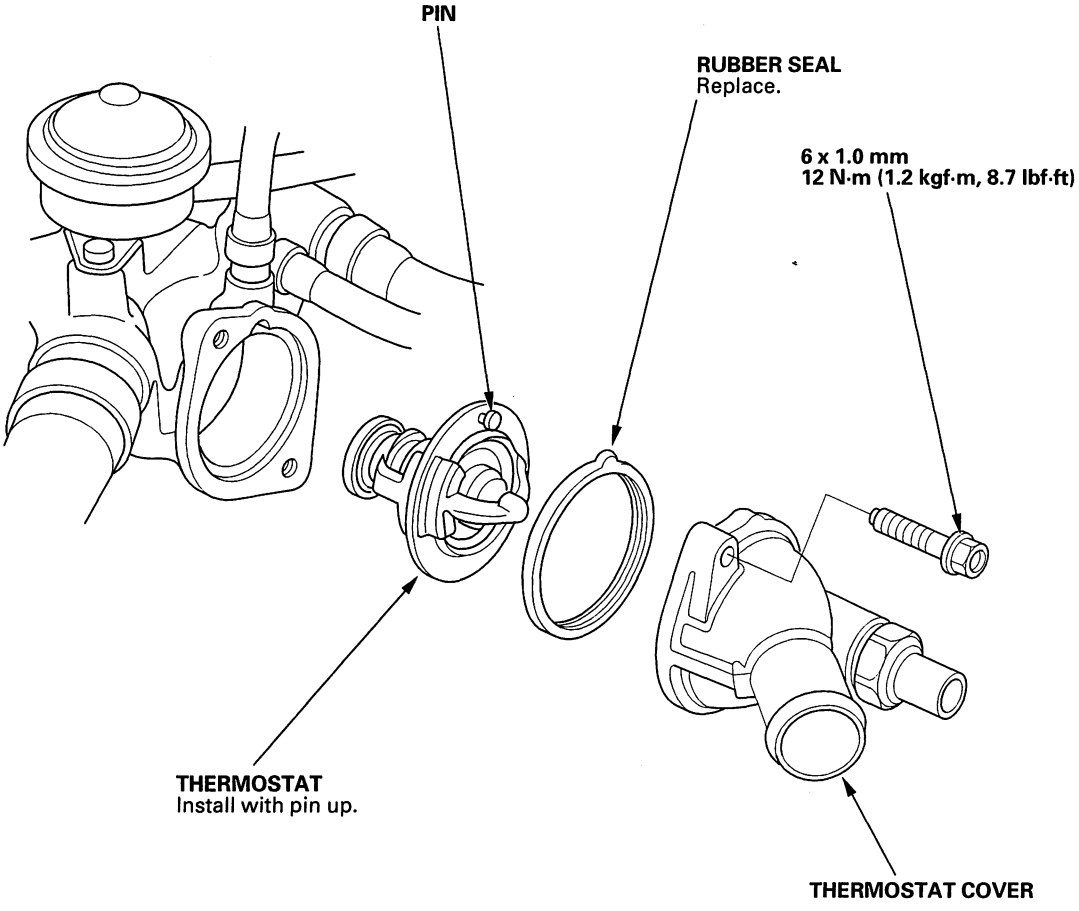

BACK

Radiator and Fans Replacement

1. Drain the engine coolant.
2. Remove the upper and lower radiator hoses, and ATF cooler hoses.

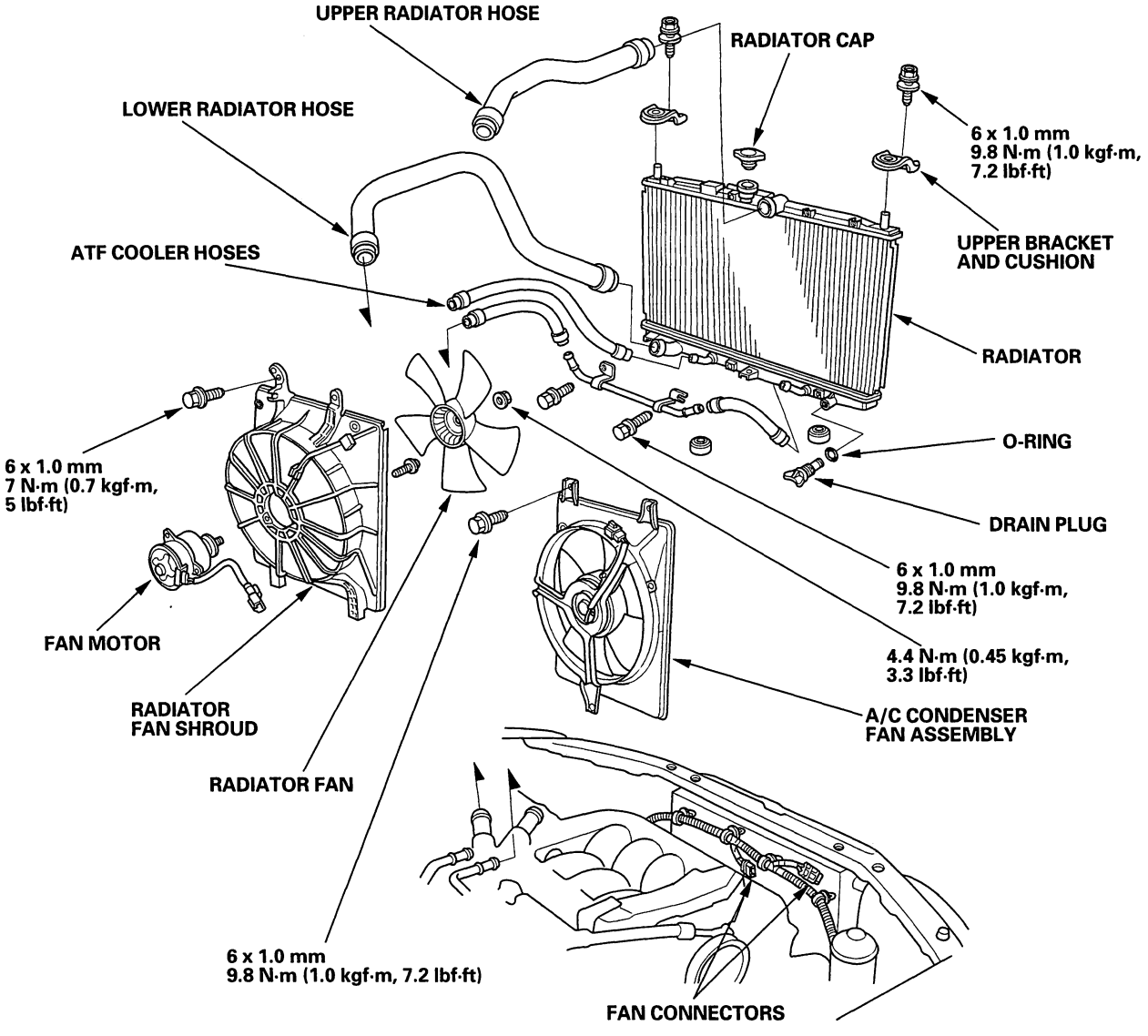

3. Disconnect the fan motor connectors.
4. Remove the radiator upper brackets, then pull up the radiator.
5. Remove the fan shroud assemblies and other parts from radiator.
6. Install the radiator in the reverse order of removal.
7. Set the upper and lower cushions securely.
8. Fill the radiator with engine coolant and bleed the air.

Fan Controls

Component Location Index

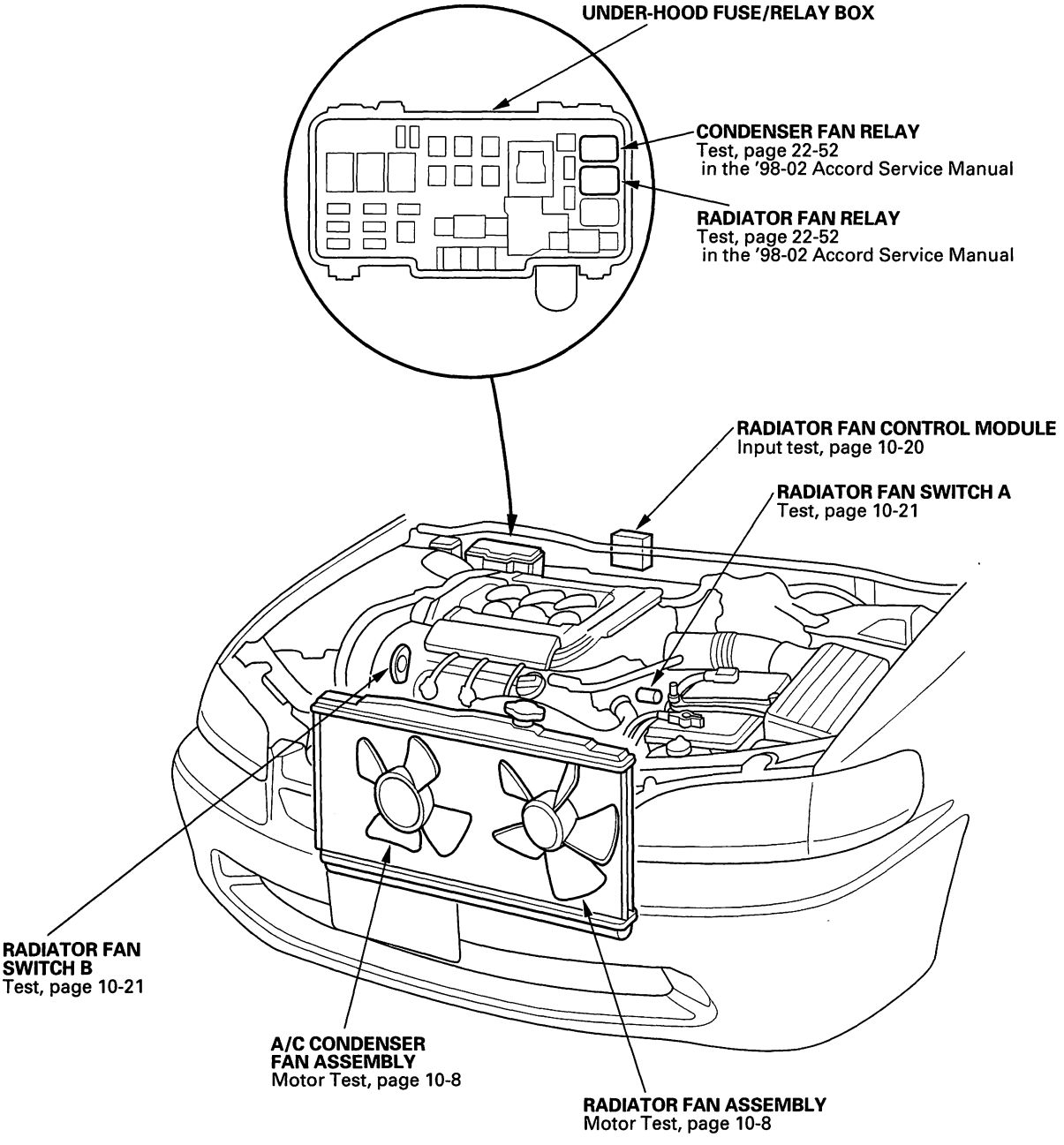

BACK

Symptom Troubleshooting Index

Before performing any troubleshooting procedures check:

- Fuses
- Grounds
- Cleanliness and tightness of all connectors

SYMPTOM	PROCEDURE
Radiator fan does not run at all.	Radiator Fan Circuit Troubleshooting (see page 10-17)
Both fans (radiator and condenser) do not run for engine cooling, but they do run with the A/C on.	Radiator Fan Switch A Circuit Troubleshooting (see page 10-19)
Both fans do not run with A/C on.	Radiator and Condenser Fans Common Circuit Troubleshooting, refer to '98-02 Accord Service Manual, (see page 21-14)

Fan Controls

Circuit Diagram

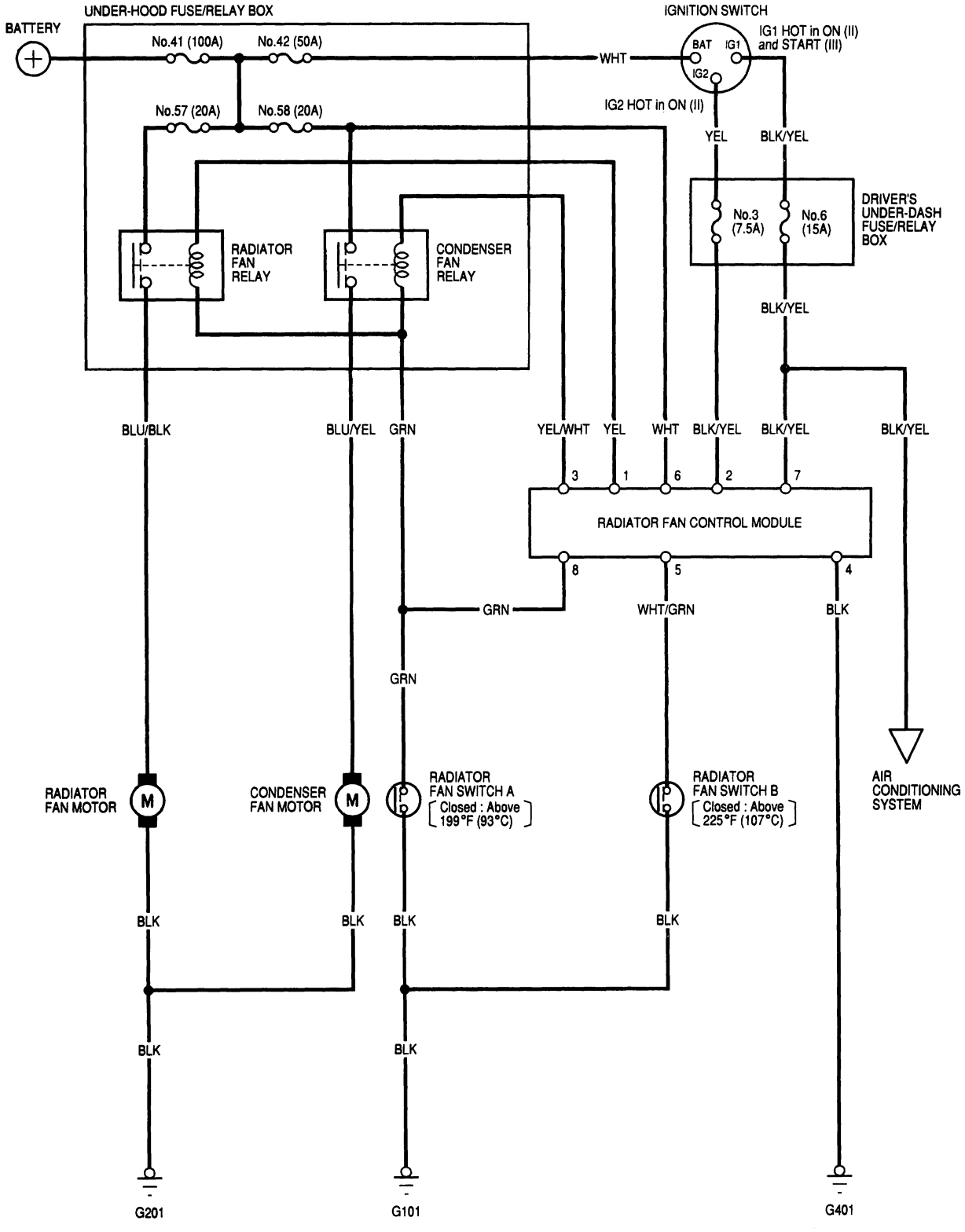

BACK

Radiator Fan Circuit Troubleshooting

1. Check the No. 57 (20A) fuse in the under-hood fuse/relay box.

   Is the fuse OK?

   YES—Go to step 2.

   NO—Replace the fuse and recheck.■

2. Remove the radiator fan relay from the under-hood fuse/relay box, and test it. Refer to the '98-02 Accord Service Manual (see page 22-52).

   Is the relay OK?

   YES—Go to step 3.

   NO—Replace the radiator fan relay.■

3. Measure the voltage between the No. 1 terminal of the radiator fan relay 4P socket and body ground.

RADIATOR FAN RELAY 4P SOCKET

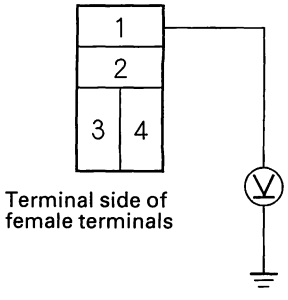

Is there battery voltage?

YES—Go to step 4.

NO—Replace the under-hood fuse/relay box.■

4. Connect the No. 1 and No. 2 terminals of the radiator fan relay 4P socket with a jumper wire.

RADIATOR FAN RELAY 4P SOCKET

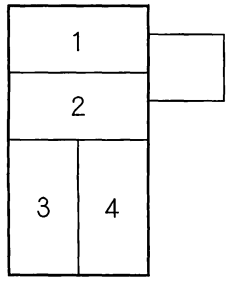

Does the radiator fan run?

YES—Go to step 9.

NO—Go to step 5.

5. Disconnect the jumper wire.

6. Disconnect the radiator fan connector.

7. Check for continuity between the No. 2 terminal of the radiator fan relay 4P socket and the No. 2 terminal of the radiator fan connector.

RADIATOR FAN RELAY 4P SOCKET

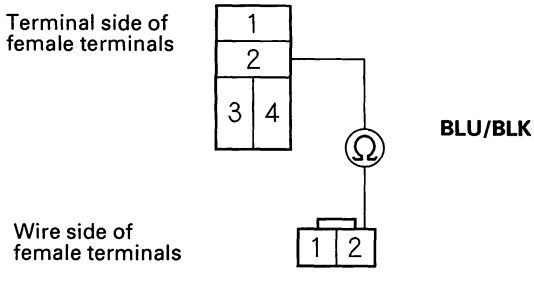

RADIATOR FAN CONNECTOR

Is there continuity?

YES—Go to step 8.

NO—Repair open in the BLU/BLK wire between the under-hood fuse/relay box and the radiator fan.■

(cont'd)

Radiator Fan Circuit Troubleshooting (cont'd)

8. Check for continuity between the No. 1 terminal of the radiator fan connector and body ground.

RADIATOR FAN CONNECTOR

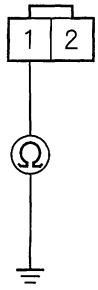

Wire side of female terminals

Is there continuity?

YES—Replace the radiator fan motor.■

NO—Check for an open in the BLK wire between the radiator fan connector and body ground. If the wire is OK, check for a poor ground at G201.■

9. Disconnect the jumper wire, and turn the ignition switch on (II).

10. Measure the voltage between No. 3 terminal of the radiator fan relay 4P socket and body ground.

RADIATOR FAN RELAY 4P SOCKET

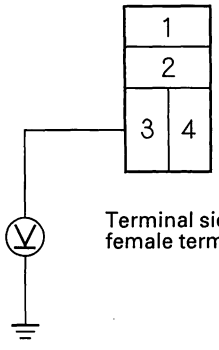

Terminal side of female terminals

Is there battery voltage?

YES—Replace the under-hood fuse/relay box.■

NO—Go to step 11.

11. Measure the voltage between the No. 1 terminal of the radiator fan control module and body ground.

RADIATOR FAN CONTROL MODULE 8P CONNECTOR

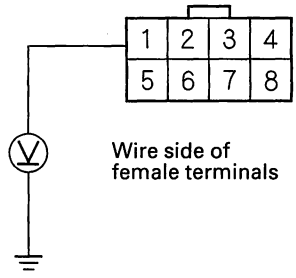

Wire side of female terminals

Is there battery voltage?

YES—Repair open in the YEL wire between the under-hood fuse/relay box and the radiator fan control module.■

NO—Perform the radiator fan control module input tests (see page 10-20).■

BACK

Radiator Fan Switch A Circuit Troubleshooting

1. Disconnect the radiator fan switch A connector.

2. Turn the ignition switch ON (II).

3. Measure the voltage between the No. 2 terminal on the radiator fan switch connector and body ground.

RADIATOR FAN SWITCH CONNECTOR

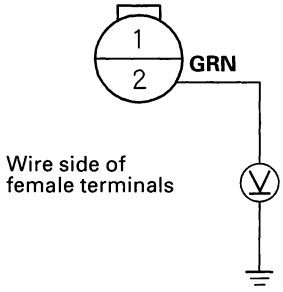

Is there battery voltage?

YES—Go to step 4.

NO—Repair open in the GRN wire between the radiator fan switch A and under-hood fuse/relay box.■

4. Turn the ignition switch OFF, and check for continuity between the No. 1 terminal on the radiator fan switch A connector and body ground.

RADIATOR FAN SWITCH CONNECTOR

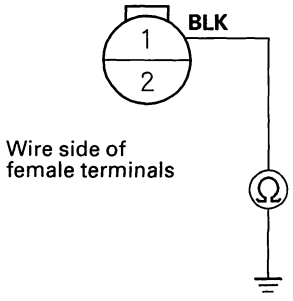

Is there continuity?

YES—Go to step 5.

NO—Check for an open in the BLK wire between the radiator fan switch A connector and body ground. If the wire is OK, check for poor ground at G101.■

5. Check the cooling system.

Is the cooling system OK?

YES—Replace the radiator fan switch A.■

NO—Repair the cooling system.■

Fan Control Module Input Test

Perform the following tests with the radiator fan control module 8P connector connected, the ignition switch ON (II) and the A/C switch OFF.
If you find the cause of a problem, correct it before you continue.

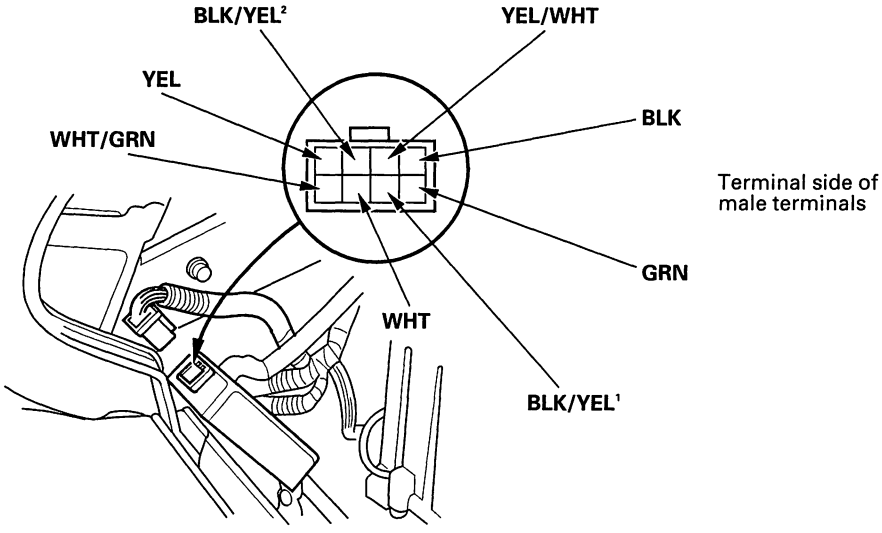

Wire color	Test condition	Desired result	Possible cause if desired result is not obtained
BLK	Check for voltage to body ground.	There should be less than 1V.	• Poor ground (G401) • An open in the wire
WHT	Check for battery voltage to body ground.	There should be battery voltage.	• Blown No. 58 (20 A) fuse in the under-hood fuse/relay box • An open in the wire
BLK/YEL¹	Check battery voltage to body ground: Ignition switch-ON (II)		• Blown No. 6 (15 A) fuse in the under-dash driver's fuse/relay box • An open in the wire
BLK/YEL²	Check battery voltage to body ground: Ignition switch-ON (II)		• Blown No. 3 (7.5 A) fuse in the under-dash driver's fuse/relay box • An open in the wire
YEL/WHT	Check battery voltage to body ground: Ignition switch-ON (II)		• Faulty radiator fan control module • An open in the wire
YEL	Check battery voltage to body ground: Ignition switch-ON (III)		
GRN	Connect body ground: Ignition switch-ON (II)	Radiator fan and condenser fan should come on.	• Faulty radiator fan relay or condenser fan relay • An open in the wire
WHT/GRN	Check for voltage: Engine coolant temperature below 225°F (107°C)	There should be approx. 11 V.	• Faulty radiator fan switch B • Faulty radiator fan control module

BACK

Radiator Fan Switch (A or B) Test

NOTE: Bleed air from the cooling system after installing the radiator fan switch (see page 10-10).

1. Remove radiator fan switch A from the water passage and radiator fan switch B from the cylinder head (see page 10-2).

2. Suspend each radiator fan switch (A) in a container of coolant as shown.

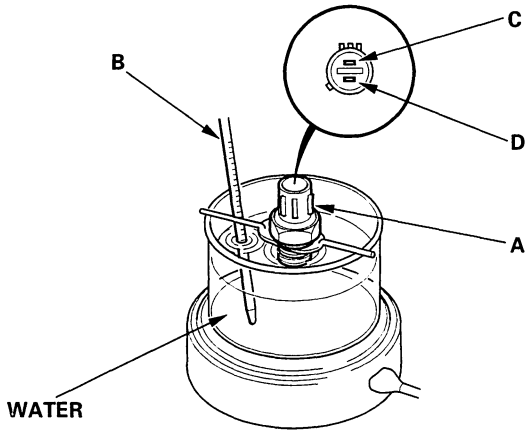

3. Heat the coolant and check the temperature with a thermometer (B). Do not let the thermometer touch the bottom of the hot container.

4. Measure the continuity between the A terminal (C) and B terminal (D) according to the table.

Operation		Temperature	Terminal A	Terminal B
SWITCH A	ON	196—203°F (91—95°C)	○—○	
	OFF	5—15°F (3—8°C) lower than the temperature when it goes on		
SWITCH B	ON	217—232°F (103—111°C)	○—○	
	OFF	5—23° (3—13°) lower than the temperature when it goes on		

BACK

Fuel and Emissions

Fuel and Emissions Systems

Special Tools 11-2
DTC Troubleshooting Index 11-3
Symptom Troubleshooting Index 11-6
System Descriptions 11-7

PGM-FI System

Component Location Index 11-50
DTC Troubleshooting 11-52
Injector Replacement 11-81
Primary HO2S Replacement 11-85
Secondary HO2S Replacement 11-85

Idle Control System

Component Location Index 11-86
Idle Speed Adjustment 11-87

Fuel Supply System

Component Location Index 11-88
Fuel Pressure Relieving 11-88
Fuel Pressure Test 11-90
Fuel Lines Inspection 11-92
Fuel Pressure Regulator Replacement 11-93
Fuel Gauge Test 11-95

Intake Air System

Component Location Index 11-96
Throttle Body Test 11-97
Air Cleaner Element Replacement 11-99
Throttle Cable Adjustment 11-100
Throttle Body Removal/Installation 11-101
Throttle Body Assembly/Reassembly 11-102
Intake Air Bypass Control Valve Test 11-103

PCV System

PCV Valve Inspection and Test 11-104

EVAP System

Component Location Index 11-105

Refer to the 1998-02 Accord Service Manual, P/N 61S8400, for the items not shown in this section.

Outline of Accord V6 Model Change

J30A1 engine has been added.

Special Tools

Ref. No.	Tool Number	Description	Qty
①	A973X-041-XXXXX	Vacuum Pump/Gauge, 0—30 in.Hg	1
②	07VAJ-0040100	Fuel Pressure Gauge Attachment	1
③	07406-004000A	Fuel Pressure Gauge	1

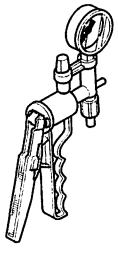

①

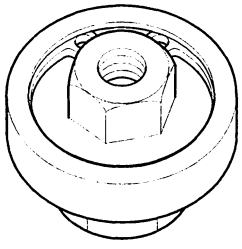

②

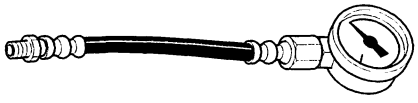

③

BACK

DTC Troubleshooting Index

DTC (MIL indication*)	Temporary DTC	Detection Item	Note
P0107 (3)	———	Manifold Absolute Pressure (MAP) Circuit Low Voltage	Refer to the '98-02 Accord Service Manual (see page 11-47)
P0108 (3)	———	Manifold Absolute Pressure (MAP) Circuit High Voltage	Refer to the '98-02 Accord Service Manual (see page 11-48)
P0112 (10)	———	Intake Air Temperature (IAT) Circuit Low Voltage	Refer to the '98-02 Accord Service Manual (see page 11-50)
P0113 (10)	———	Intake Air Temperature (IAT) Circuit High Voltage	Refer to the '98-02 Accord Service Manual (see page 11-51)
P0116 (86)	P0116	Engine Coolant Temperature (ECT) Sensor Range/Performance Problem	Refer to the '98-02 Accord Service Manual (see page 11-52)
P0117 (6)	———	Engine Coolant Temperature (ECT) Sensor Circuit Low Voltage	Refer to the '98-02 Accord Service Manual (see page 11-52)
P0118 (6)	———	Engine Coolant Temperature (ECT) Sensor Circuit High Voltage	Refer to the '98-02 Accord Service Manual (see page 11-53)
P0122 (7)	———	Throttle Position (TP) Sensor Circuit Low Voltage	(see page 11-52)
P0123 (7)	———	Throttle Position (TP) Sensor Circuit High Voltage	Refer to the '98-02 Accord Service Manual (see page 11-57)
P0128 (87)*4	———	Thermostat Range/Performance Problem	(see page 11-55)
P0131 (1)	———	Primary Heated Oxygen Sensor (Primary HO2S) (Sensor 1) Circuit Low Voltage	(see page 11-56)
P0132 (1)	———	Primary Heated Oxygen Sensor (Primary HO2S) (Sensor 1) Circuit High Voltage	(see page 11-57)
P0133 (61)	P0133	Primary Heated Oxygen Sensor (Primary HO2S) (Sensor 1) Slow Response	(see page 11-58)
P0135 (41)	———	Primary Heated Oxygen Sensor (Primary HO2S) (Sensor 1) Heater Circuit Malfunction	(see page 11-61)
P0137 (63)	P0136	Secondary Heated Oxygen Sensor (Secondary HO2S) (Sensor 2) Circuit Low Voltage	(see page 11-59)
P0138 (63)	P0136	Secondary Heated Oxygen Sensor (Secondary HO2S) (Sensor 2) High Voltage	(see page 11-60)
P0139 (63)	P0136	Secondary Heated Oxygen Sensor (Secondary HO2S) (Sensor 2) Slow Response	(see page 11-63)
P0141 (65)	———	Secondary Heated Oxygen Sensor (Secondary HO2S) (Sensor 2) Heater Circuit Malfunction	(see page 11-61)
P0171 (45)	P0170	Fuel System Too Lean	Refer to the '98-02 Accord Service Manual (see page 11-69)
P0172 (45)	P0170	Fuel System Too Rich	Refer to the '98-02 Accord Service Manual (see page 11-69)
P0300 and some of P0301 (71) P0302 (72) P0303 (73) P0304 (74) P0305 (75) P0306 (76)	P1399	Random Misfire	(see page 11-64)

*: These DTCs are indicated by a blinking Malfunction Indicator Lamp (MIL) when the SCS service signal line is jumped with the Honda PGM Tester.
**: The D4 indicator light and the MIL may come on simultaneously.
*4: '02 model

(cont'd)

DTC Troubleshooting Index (cont'd)

DTC (MIL indication*)	Temporary DTC	Detection Item	Note
P0301 (71)	P1339	No. 1 Cylinder Misfire	*1: (see page 11-65) *2: (see page 11-69)
P0302 (72)	P1339	No. 2 Cylinder Misfire	*1: (see page 11-65) *2: (see page 11-69)
P0303 (73)	P1339	No. 3 Cylinder Misfire	*1: (see page 11-65) *2: (see page 11-69)
P0304 (74)	P1339	No. 4 Cylinder Misfire	*1: (see page 11-65) *2: (see page 11-69)
P0305 (75)	P1339	No. 5 Cylinder Misfire	*1: (see page 11-65) *2: (see page 11-69)
P0306 (76)	P1339	No. 6 Cylinder Misfire	*1: (see page 11-65) *2: (see page 11-69)
P0335 (4)	———	Crankshaft Position (CKP) Sensor No Signal	(see page 11-74)
P0336 (4)	———	Crankshaft Position (CKP) Sensor Intermittent Interruption	(see page 11-74)
P0401 (80)	P0401	Exhaust Gas Recirculation (EGR) Insufficient Flow	Refer to the '98-02 Accord Service Manual (see page 11-138)
P0420 (67)	P0420	Catalyst System Efficiency Below Threshold	Refer to the '98-02 Accord Service Manual (see page 11-137)
P0451 (91)*1	P0451	Fuel Tank Pressure (FTP) Sensor Range/ Performance Problem	Refer to the '98-02 Accord Service Manual (see page 11-145)
P0452 (91)	P0450	Fuel Tank Pressure (FTP) Sensor Circuit Low Voltage	Refer to the '98-02 Accord Service Manual (see page 11-146)
P0453 (91)	P0450	Fuel Tank Pressure (FTP) Sensor Circuit High Voltage	Refer to the '98-02 Accord Service Manual (see page 11-147)
P0505 (14)	P0505	Idle Control System Malfunction	Refer to the '98-02 Accord Service Manual (see page 11-101)
P0560 (34)	———	Powertrain Control Module (PCM) Back up Circuit Low Voltage	Refer to the '98-02 Accord Service Manual (see page 11-76)
P0700** (70) P0715** (70) P0720** (70) P0730** (70) P0740** (70) P0753** (70) P0758** (70) P0763** (70) P0780** (70)	———	Automatic Transaxle System Malfunction	Refer to the Automatic Transmission DTC Troubleshooting Index
P1106 (13)	P1106	Barometric Pressure (BARO) Sensor Range/Performance Problem	Refer to the '98-02 Accord Service Manual (see page 11-77)
P1107 (13)	———	Barometric Pressure (BARO) Sensor Circuit Low Input	Refer to the '98-02 Accord Service Manual (see page 11-77)
P1108 (13)	———	Barometric Pressure (BARO) Sensor Circuit High Input	Refer to the '98-02 Accord Service Manual (see page 11-77)
P1121 (7)	P1121	Throttle Position (TP) Sensor Lower Than Expected	(see page 11-76)

*: These DTCs are indicated by a blinking Malfunction Indicator Lamp (MIL) when the SCS service signal line is jumped with the Honda PGM Tester.
**: The D4 indicator light and the MIL may come on simultaneously.
*1: '98-99 models
*2: '00-02 models

BACK

DTC (MIL indication*)	Temporary DTC	Detection Item	Page
P1122 (7)	P1122	Throttle Position (TP) Sensor Higher Than Expected	(see page 11-76)
P1128 (5)	P1128	Manifold Absolute Pressure (MAP) Sensor Lower Than Expected	Refer to the '98-02 Accord Service Manual (see page 11-49)
P1129 (5)	P1129	Manifold Absolute Pressure (MAP) Sensor Higher Than Expected	Refer to the '98-02 Accord Service Manual (see page 11-49)
P1259 (22)	———	VTEC System Malfunction	(see page 6-6)
P1297 (20)	———	Electrical Load Detector (ELD) Circuit Low Voltage	Refer to the '98-02 Accord Service Manual (see page 11-84)
P1298 (20)	———	Electrical Load Detector (ELD) Circuit High Voltage	Refer to the '98-02 Accord Service Manual (see page 11-85)
P1361 (8)	———	Top Dead Center (TDC) 1 Sensor Intermittent Interruption	(see page 11-77)
P1362 (8)	———	Top Dead Center Sensor (TDC) 1 No Signal	(see page 11-77)
P1366 (58)	———	Top Dead Center Sensor (TDC) 2 Intermittent Interruption	(see page 11-77)
P1367 (58)	———	Top Dead Center Sensor (TDC) 2 No Signal	(see page 11-77)
P1456 (90)	P1456 (90)	Evaporative Emission (EVAP) Control System Leakage (Fuel Tank System)	Refer to the '98-02 Accord Service Manual (see page 11-149)
P1457 (90)	P1457 (90)	Evaporative Emission (EVAP) Control System Leakage (EVAP Canister System)	Refer to the '98-02 Accord Service Manual (see page 11-152)
P1491 (12)	P1491 (12)	Exhaust Gas Recirculation (EGR) Valve Insufficient Lift	Refer to the '98-02 Accord Service Manual (see page 11-138)
P1498 (12)	———	Exhaust Gas Recirculation (EGR) Valve Position Sensor Circuit High Voltage	Refer to the '98-02 Accord Service Manual (see page 11-142)
P1519 (14)	———	Idle Air Control (IAC) Valve Circuit Malfunction	Refer to the '98-02 Accord Service Manual (see page 11-102)
P1607 (—)	———	Powertrain Control Module (PCM) Internal Circuit Malfunction	Refer to the '98-02 Accord Service Manual (see page 11-90)
P1676 (35)*3	———	FPTDR Signal Line Malfunction	(see page 11-79)
P1678 (35)*3	———	FPTDR Signal Line Malfunction	(see page 11-79)
P1705** (70)	———	Automatic Transaxle System Malfunction	Refer to the Automatic Transmission DTC Troubleshooting Index
P1706** (70)	P1706		
P1738** (70) P1739** (70) P1750** (70) P1751** (70) P1753** (70) P1768** (70) P1773** (70)			

*: These DTCs are indicated by a blinking Malfunction Indicator Lamp (MIL) when the SCS service signal line is jumped with the Honda PGM Tester.
**: The D4 indicator light and the MIL may come on simultaneously.
*3: '01-02 models

Symptom Troubleshooting Index

These symptoms DO NOT trigger Diagnostic Trouble Codes (DTCs) and cause the Malfunction Indicator Lamp (MIL) to come on. If the MIL is reported on, check for DTCs. If the vehicle has one of these symptoms, do the diagnostic procedure for it, in the sequence listed, until you find the cause.

Symptom	Diagnostic procedure	Also check for
Engine will not start (MIL works OK, no DTCs set)	1. Test the battery (see page 22-30). 2. Test the starter (see page 4-7). 3. Test the fuel pump, refer to the '98-02 Accord Service Manual (see page 11-117). 4. Test the ignition wires for '98-99 models (see page 4-22). 5. Test the ignition coil for '98-99 models (see page 4-22), or for '00-02 models (see page 4-23). 6. Check the ignition control module (ICM) inputs for '98-99 models (see page 4-21). 7. Troubleshoot the PGM-FI main relay circuit, refer to the '98-02 Accord Service Manual (see page 11-112).	• Low compression • No ignition spark • Intake air leaks • Locked up engine • Slipped/ broken timing belt • Contaminated fuel
Engine will not start (MIL comes on and stays on, or never comes on at all, no DTCs set)	Troubleshoot the MIL circuit, refer to the '98-02 Accord Service Manual (see page 11-91).	
Engine will not start (immobilizer indicator light comes on)	Troubleshoot the immobilizer system, refer to the '98-02 Accord Service Manual (see page 22-206).	
Hard starting (MIL works OK, no DTCs set)	1. Test the battery (see page 22-30). 2. Check the fuel pressure (see page 11-90). 3. Test the ignition wires for '98-99 models (see page 4-22). 4. Test the ignition coil for '98-99 models (see page 4-22), or for '00-02 models (see page 4-23). 5. Check the ignition control module (ICM) input for '98-99 models (see page 4-21).	• Low compression • Intake air leaks • Contaminated fuel
Cold fast idle too low (MIL works OK, no DTCs set)	Check/adjust the idle speed (see page 11-87).	
Cold fast idle too high (MIL works OK, no DTCs set)	1. Check/adjust the idle speed (see page 11-87). 2. Inspect/adjust the throttle cable (see page 11-100). 3. Inspect and test the throttle body (see page 11-97).	
Idle speed fluctuates (MIL works OK, no DTCs set)	1. Check/adjust the idle speed (see page 11-87). 2. Inspect/adjust the throttle cable (see page 11-100). 3. Inspect and test the throttle body (see page 11-97).	Intake air leaks
Low power (MIL works OK, no DTCs set)	1. Check the fuel pressure (see page 11-90). 2. Inspect and test the throttle body (see page 11-97). 3. Inspect/adjust the throttle cable (see page 11-100).	Low compression
Engine stalls (MIL works OK, no DTCs set)	1. Check the fuel pressure (see page 11-90). 2. Test the ignition wires for '98-99 models (see page 4-22). 3. Check/adjust the idle speed (see page 11-87). 4. Troubleshoot the brake switch signal circuit.	• Intake air leaks • Faulty harness and sensor connectors
Difficult to refuel (MIL works OK, no DTCs set)	1. Test the fuel tank vapor control valve, refer to the '98-02 Accord Service Manual (see page 11-160). 2. Inspect the fuel tank signal tube between the fuel pipe and the fuel tank vapor control valve. 3. Inspect the fuel tank vapor vent tube between the EVAP control canister and the fuel tank vapor control valve. 4. Check the EVAP canister, refer to the '98-02 Accord Service Manual (see page 11-138).	
Fuel overflows during refueling (No DTCs set)	Replace the fuel tank vapor control valve, refer to the '98-02 Accord Service Manual (see page 11-162).	

BACK

System Descriptions

Electronic Control System

The functions of the fuel and emission control systems are managed by the Powertrain Control Module (PCM).

Fail-safe Function
When an abnormality occurs in the signal from a sensor, the PCM ignores that signal and assumes a pre-programmed value for that sensor that allows the engine to continue to run.

Back-up Function
When an abnormality occurs in the PCM, the injectors are controlled by a back-up circuit independent of the system in order to permit minimal driving.

Self-diagnosis
When an abnormality occurs in the signal from a sensor, the PCM supplies ground for the Malfunction Indicator Lamp (MIL) and stores the Diagnostic Trouble Code (DTC) in erasable memory. When the ignition is first turned on, the PCM supplies ground to the MIL for 2 seconds ('98-01 models) or 15 to 20 seconds ('02 models) to check the MIL bulb condition.

Two Driving Cycle Detection Method
To prevent false indications, the "two driving cycle detection method" is used for some self-diagnostic functions. When an abnormality occurs, the PCM stores it in its memory. When the same abnormality recurs after the ignition switch is turned OFF and ON (II) again, the PCM turns on the MIL.

(cont'd)

System Descriptions (cont'd)

PCM Data

You can retrieve data from the PCM by connecting the OBD II scan tool or the Honda PGM Tester to the Data Link Connector (DLC). The items listed in the table below conform to SAE recommended practice. The Honda PGM Tester also reads data beyond that recommended by SAE to help you find the causes of intermittent problems.

NOTE:
- The "operating values" listed are approximate and may vary depending on the environment and the individual vehicle.
- Unless noted otherwise, "at idle speed" means idling with the engine completely warmed up, transmission in Park or neutral, and the A/C and all accessories turned off.

Data	Description	Operating Value	Freeze Data
Diagnostic Trouble Code (DTC)	If the PCM detects a problem, it will store it as a code consisting of one letter and four numbers. Depending on the problem, an SAE-defined code (P0xxx) or a Honda-defined code (P1xxx) will be output to the tester.	If no problem is detected, there is no output.	YES
Engine Speed	The PCM computes engine speed from the signals sent from the Crankshaft Position (CKP) sensor. This data is used for determining the time and amount of fuel injection.	Nearly the same as tachometer indication At idle speed: 680±50 rpm	YES
Vehicle Speed	The PCM converts pulse signals from the countershaft speed sensor into speed data.	Nearly the same as speedometer indication	YES
Manifold Absolute Pressure (MAP)	The absolute pressure caused in the intake manifold by engine load and speed.	With engine stopped: Nearly the same as atmospheric pressure. At idle speed: 20−34 kPa (150−260 mmHg, 6−10 in.Hg), 0.9 – 1.0 V	YES
Engine Coolant Temperature (ECT)	The ECT sensor converts coolant temperature into voltage, and sends a voltage signal to the PCM. The sensor is a thermistor whose internal resistance changes with coolant temperature. The PCM uses the voltage signals from the ECT sensor to determine the amount of injected fuel.	With cold engine: Same as ambient temperature and IAT With engine warmed up: about 176 − 212°F (80−100°C), 0.9 – 1.0 V	YES
Primary Heated Oxygen Sensor (Primary HO2S) (Sensor 1), Secondary Heated Oxygen Sensor (Secondary HO2 S) (Sensor 2)	The HO2S detects the oxygen content in the exhaust gas and sends voltage signals to the PCM. Based on these signals, the PCM controls the air/fuel ratio. When the oxygen content is high (that is, when the ratio is leaner than the stoichiometric ratio), the voltage signal is lower. When the oxygen content is low (that is, when the ratio is richer than the stoichiometric ratio), the voltage signal is higher.	0.0−1.25 V At idle speed: about 0.1−0.9 V	NO

BACK

Data	Description	Operating Valve	Freeze Data
Fuel System	Fuel system status is indicated as "open" or "closed". Closed: Based on the HO2S output, the PCM determines the air/fuel ratio and controls the amount of injected fuel. Open: ignoring HO2S output, the PCM refers to signals from the Throttle Position (TP), Manifold Absolute Pressure (MAP), Intake Air Temperature (IAT), Barometic Pressure (BARO), and Engine Coolant Temperature (ECT) sensors to control the amount of injected fuel.	At idle speed: closed	YES
Short Term Fuel Trim	The air/fuel ratio correction coefficient for correcting the amount of injected fuel when Fuel System Status is "closed". When the ratio is leaner than the stoichiometric ratio, the PCM increases short term fuel trim gradually, and the amount of injected fuel increases. The air/fuel ratio gradually gets richer, causing a lower oxygen content in the exhaust gas. Consequently, the short term fuel trim is lowered, and the PCM reduces the amount of injected fuel. This cycle keeps the air/fuel ratio close to the stoichiometric ratio when in closed loop status.	0.73—1.47	YES
Long Term Fuel Trim	Long term fuel trim is computed from short term fuel trim and indicates changes occuring in the fuel supply system over a long period. If long term fuel trim is higher than 1.00, the amount of injected fuel must be increased. If it is lower than 1.00, the amount of injected fuel must be reduced.	0.81—1.19	YES
Intake Air Temperature (IAT)	The IAT sensor converts intake air temperature into voltage and signals the PCM. When intake air temperature is low, the internal resistance of the sensor increases, and the voltage signal is higher.	With cold engine: Same as ambient temperature and ECT	YES
Throttle Position	Based on the accelerator pedal position, the opening angle of the throttle valve is indicated.	At idle speed: approx. 10%	YES
Ignition Timing	Ignition timing is the ignition advance angle set by the PCM. The PCM matches ignition timing to the driving conditions.	At idle speed: 10°±2° BTDC with the SCS service signal jumped with the Honda PGM Tester	NO
Calculated Load Value (CLV)	CLV is the engine load calculated from the MAP data.	At idle speed: 16−33% At 2,500 rpm with no load: 17−25%	YES

(cont'd)

System Descriptions (cont'd)

PCM Electrical Connections (cont'd)

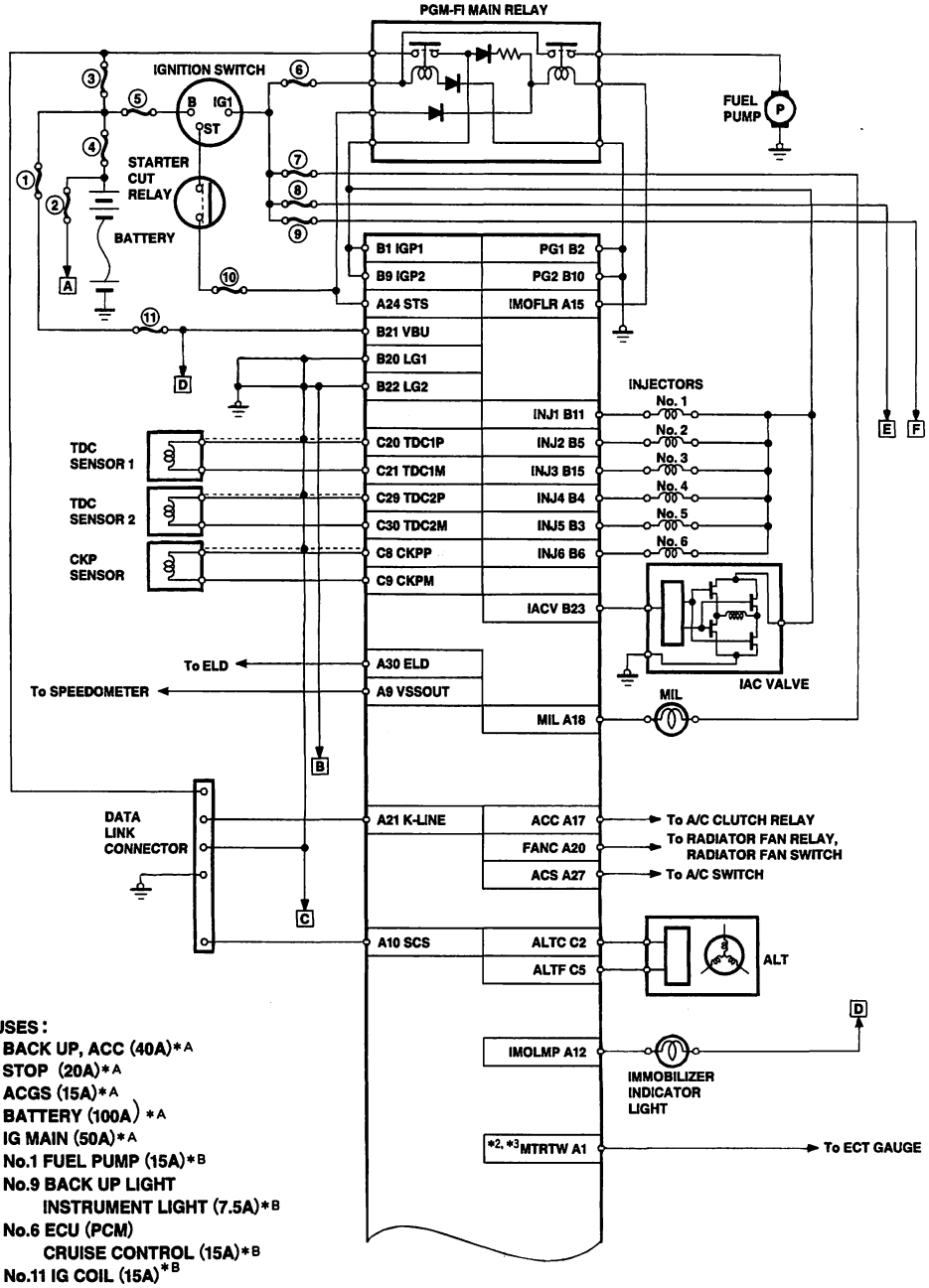

FUSES:
① BACK UP, ACC (40A)*A
② STOP (20A)*A
③ ACGS (15A)*A
④ BATTERY (100A) *A
⑤ IG MAIN (50A)*A
⑥ No.1 FUEL PUMP (15A)*B
⑦ No.9 BACK UP LIGHT
INSTRUMENT LIGHT (7.5A)*B
⑧ No.6 ECU (PCM)
CRUISE CONTROL (15A)*B
⑨ No.11 IG COIL (15A)*B
⑩ No.13 STARTER SIGNAL (7.5A)*B
⑪ No.13 CLOCK BACKUP (7.5A)*C
*A: in the under-hood fuse/relay box
*B: in the driver's under-dash fuse/relay box
*C: in the passenger's under-dash fuse/relay box

*1: '98—99 models
*2: '00 model
*3: '01—02 models

BACK

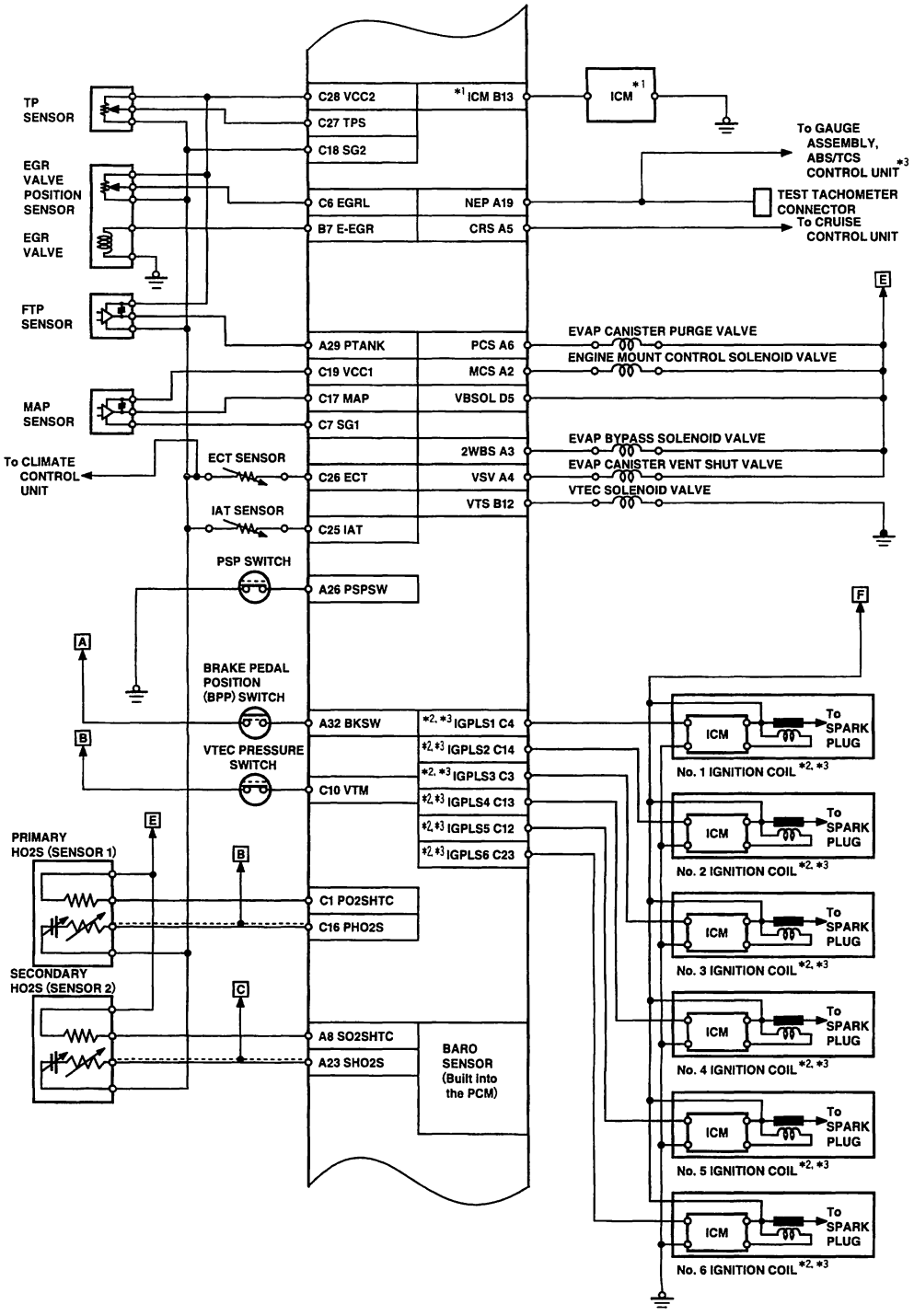
TP SENSOR
EGR VALVE POSITION SENSOR
EGR VALVE
FTP SENSOR
MAP SENSOR
To CLIMATE CONTROL UNIT
ECT SENSOR
IAT SENSOR
PSP SWITCH
BRAKE PEDAL POSITION (BPP) SWITCH
VTEC PRESSURE SWITCH
PRIMARY HO2S (SENSOR 1)
SECONDARY HO2S (SENSOR 2)
C28 VCC2
C27 TPS
C18 SG2
C6 EGRL
B7 E-EGR
A29 PTANK
C19 VCC1
C17 MAP
C7 SG1
C26 ECT
C25 IAT
A26 PSPSW
A32 BKSW
C10 VTM
C1 PO2SHTC
C16 PHO2S
A8 SO2SHTC
A23 SHO2S
*1 ICM B13
NEP A19
CRS A5
PCS A6
MCS A2
VBSOL D5
2WBS A3
VSV A4
VTS B12
*2, *3 IGPLS1 C4
*2, *3 IGPLS2 C14
*2, *3 IGPLS3 C3
*2, *3 IGPLS4 C13
*2, *3 IGPLS5 C12
*2, *3 IGPLS6 C23
BARO SENSOR (Built into the PCM)
ICM *1
To GAUGE ASSEMBLY, ABS/TCS CONTROL UNIT *3
TEST TACHOMETER CONNECTOR
To CRUISE CONTROL UNIT
EVAP CANISTER PURGE VALVE
ENGINE MOUNT CONTROL SOLENOID VALVE
EVAP BYPASS SOLENOID VALVE
EVAP CANISTER VENT SHUT VALVE
VTEC SOLENOID VALVE
ICM
To SPARK PLUG
No. 1 IGNITION COIL *2, *3
No. 2 IGNITION COIL *2, *3
No. 3 IGNITION COIL *2, *3
No. 4 IGNITION COIL *2, *3
No. 5 IGNITION COIL *2, *3
No. 6 IGNITION COIL *2, *3

(cont'd)

System Descriptions (cont'd)

PCM Electrical Connections (cont'd)

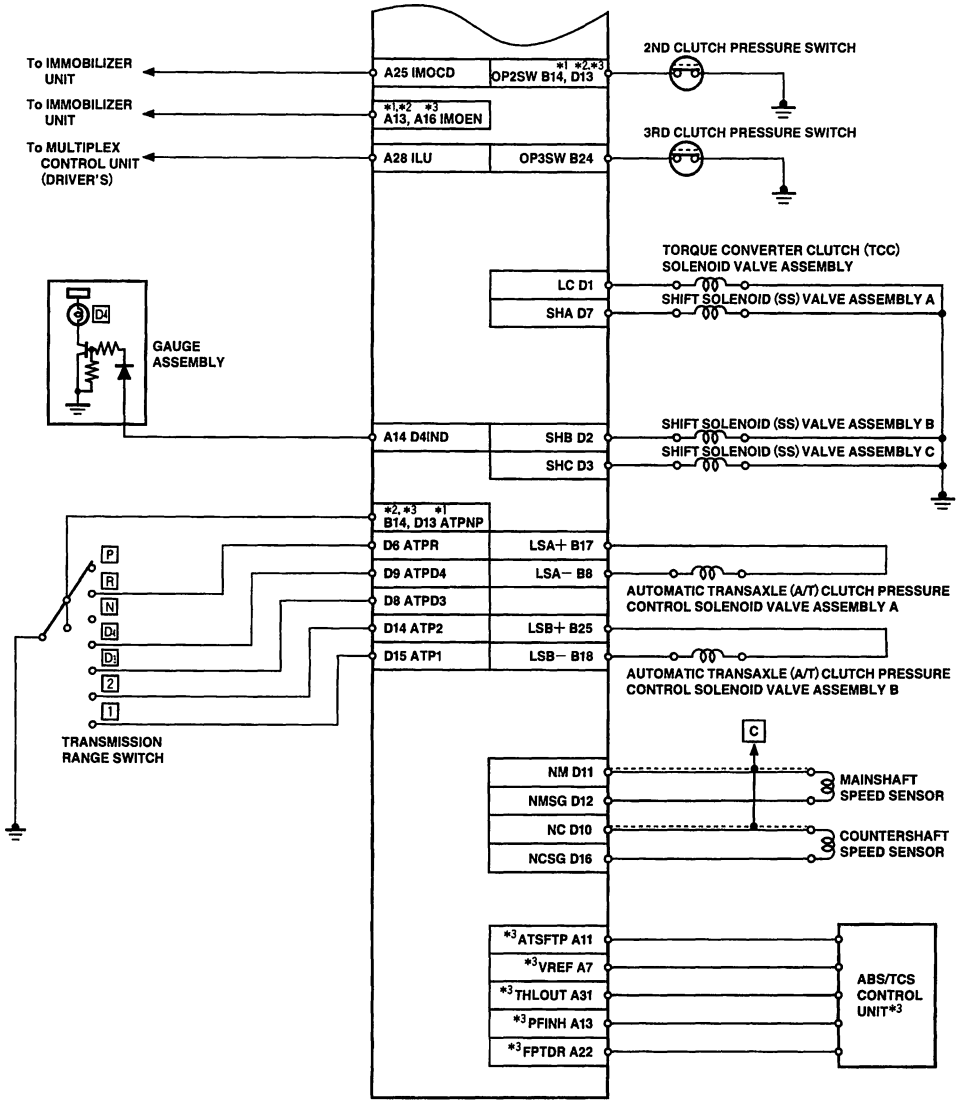

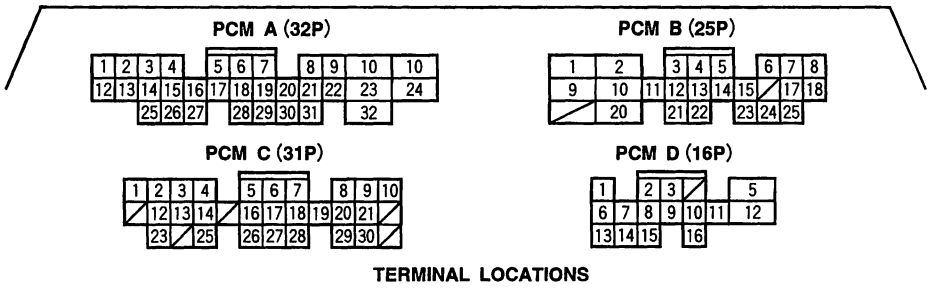

TERMINAL LOCATIONS

BACK

PCM Inputs and Outputs at Connector A (32P)

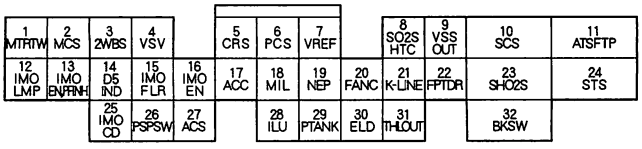

Wire side of female terminals

NOTE: Standard battery voltage is 12 V.

Terminal number	Wire color	Terminal name	Description	Signal
1*2, *3	YEL/GRN	MTRTW	Sends engine coolant temperature signal.	With ignition switch ON (II): pulses
2	GRN/WHT	MCS (ENGINE MOUNT CONTROL SOLENOID VALVE)	Drives engine mount control solenoid valve.	At idle: 0 V Above idle: battery voltage
3	BLU	2WBS (EVAP BYPASS SOLENOID VALVE)	Drives EVAP bypass solenoid valve.	With ignition switch ON (II): battery voltage
4	LT GRN/ WHT	VSV (EVAP CANISTER VENT SHUT VALVE)	Drives EVAP canister vent shut valve.	With ignition switch ON (II): battery voltage
5	BLU/GRN	CRS (CRUISE CONTROL SIGNAL)	Detects cruise control signal.	With ignition switch ON (II): pulses
6	RED/YEL	PCS (EVAP CANISTER PURGE VALVE)	Drives EVAP canister purge valve.	With engine running, engine coolant, below 147°F (64 °C): battery voltage With engine running, engine coolant, above 147°F (64 °C): duty controlled
7*3	ORN/GRN	VREF (REFERRENCE VOLTAGE)	Provides reference voltage to ABS/TCS control unit.	With ignition switch ON (II): about 5 V With ignition switch OFF: 0 V
8	BLK/WHT	SO2SHTC (SECONDARY HEATED OXYGEN SENSOR HEATER CONTROL)	Drives secondary heated oxygen sensor heater.	With ignition switch ON (II): battery voltage With fully warmed up engine running: duty controlled
9	BLU/WHT	VSSOUT (VEHICLE SPEED SENSOR OUTPUT SIGNAL)	Sends vehicle speed sensor signal.	Depending on vehicle speed: pulses
10	BRN	SCS (SERVICE CHECK SIGNAL)	Detects service check connector signal (the signal causing a DTC indication).	With the service check signal shorted with the Honda PGM Tester: 0 V With the service check signal opened: about 5 V or battery voltage
11*3	LT GRN	ATSFTP (TRANSMISSION RANGE SWITCH)	Sends transmission gear switch signal.	With engine running in park position: about 4 V With the service check signal opened: about 5 V or battery voltage
12	PNK	IMOLMP (IMMOBLIZER INDICATOR LIGHT)	Drives immobilizer indicator light.	With immobilizer indicator light turned ON: 0 V With immobilizer indicator light turned OFF: battery voltage
13*1, *2	BLU	IMOEN (IMMOBILZER ENABLE SIGNAL)	Sends immobilizer enable signal.	
14	GRN/BLK	D4IND (D4 INDICATOR)	Drives D4 indicator light.	With D4 indicator light turned ON: 0 V With D4 indicator light turned OFF: battery voltage
15	GRN/YEL	IMO FLR (IMMOBILIZER FUEL PUMP RELAY)	Drives fuel pump relay.	0 V for two seconds after turning ignition switch ON (II), then battery voltage
16*3	BLU	IMOEN (IMMOBILIZER ENABLE SIGNAL)	Sends immobilizer enable signal.	
17	RED	ACC (A/C CLUTCH RELAY)	Drives A/C clutch relay.	With compressor ON: 0 V With compressor OFF: battery voltage

*1: '98-99 models
*2: '00 model
*3: '01-02 models

(cont'd)

System Descriptions (cont'd)

PCM Inputs and Outputs at Connector A (32P)

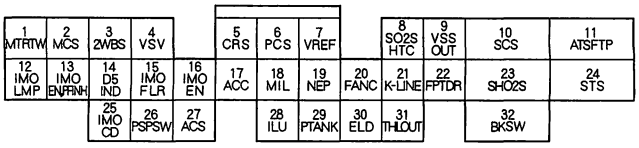

Wire side of female terminals

NOTE: Standard battery voltage is 12 V.

Terminal number	Wire color	Terminal name	Description	Signal
18	GRN/ORN	MIL (MALFUNCTION INDICATOR LIGHT)	Drives MIL.	With MIL turned ON: 0 V With MIL turned OFF: battery voltage
19	BLU	NEP (ENGINE SPEED PULSE)	Outputs engine speed pulse.	With engine running: pulses
20	GRN	FANC (RADIATOR FAN CONTROL)	Drives radiator fan relay.	With radiator fan running: 0 V With radiator fan stopped: battery voltage
21	GRY	K-LINE	Sends and receives scan tool signal.	With ignition switch ON (II): pulses
22*3	GRN/RED	FPTDR (FRAME TO POWERTRAIN TORQUE DOWN REQUEST)	Detects engine retard request signal.	With TCS operating: about 5 V With TCS not operating: about 2.5 V
23	WHT/RED	SHO2S (SECONDARY HEATED OXYGEN SENSOR, SENSOR 2)	Detects secondary heated oxygen sensor (sensor 2) signal.	With throttle fully opened from idle with fully warmed up engine: above 0.6 V With throttle quickly closed: below 0.4 V
24	BLU/ORN	STS (STARTER SWITCH SIGNAL)	Detects starter switch signal.	With starter switch ON (II): battery voltage With starter switch OFF: 0 V
25	RED	IMOCD (IMMOBILIZER CODE)	Detects immobilizer signal.	
26	GRN	PSPSW (P/S PRESSURE SWITCH SIGNAL)	Detects PSP switch signal.	At idle with steering wheel in straight ahead position: 0 V At idle with steering wheel at full lock: battery voltage
27	BLU/RED	ACS (A/C SWITCH SIGNAL)	Detects A/C switch signal.	With A/C switch ON: 0 V With A/C switch OFF: about 5V
28	WHT/RED	ILU (INTERLOCK CONTROL UNIT)	Sends Interlock control signal.	With ignition switch ON (II) and brake pedal pressed: about 0 V
29	LT GRN	PTANK (FUEL TANK PRESSURE SENSOR)	Detects FTP sensor signal.	With ignition switch ON (II) and fuel fill cap: opened: about 2.5 V
30	GRN/RED	ELD (ELECTRICAL LOAD DETECTOR)	Detects ELD signal.	With parking lights turned on at idle: about 2.5–3.5 V With low beam headlights turned on at idle: about 1.5–2.5 V
31*3	YEL/GRN	THLOUT (THROTTLE POSITION SENSOR OUTPUT SIGNAL)	Sends TP sensor signal.	With throttle fully open: about 4.8 V With throttle fully closed: about 0.5 V
32	WHT/BLK	BKSW (BRAKE PEDAL POSITION SWITCH)	Detects brake pedal position switch signal.	With brake pedal released: 0 V With brake pedal pressed: battery voltage

*1: '98-99 models
*2: '00 model
*3: '01-02 models

BACK

PCM Inputs and Outputs at Connector B (25P)

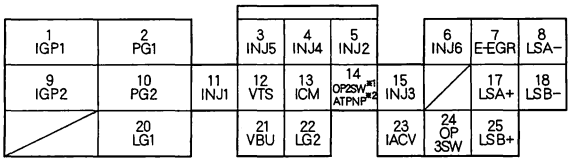

Wire side of female terminals

NOTE: Standard battery voltage is 12 V.

Terminal number	Wire color	Terminal name	Description	Signal
1	YEL/BLK	IGP1 (POWER SOURCE)	Power source for the PCM circuit.	With the ignition switch ON (II): battery voltage With the ignition switch OFF: about 0 V
2	BLK	PG1 (POWER GROUND)	Ground for the PCM circuit.	Less than 1.0 V at all times
3	BLK/RED	INJ5 (No. 5 INJECTOR)	Drives No. 5 injector.	With engine running: pulses
4	YEL	INJ4 (No. 4 INJECTOR)	Drives No. 4 injector.	
5	RED	INJ2 (No. 2 INJECTOR)	Drives No. 2 injector.	
6	WHT/BLU	INJ6 (No. 6 INJECTOR)	Drives No. 6 injector.	
7	PNK	E-EGR	Drives EGR valve.	With EGR operating : duty controlled With EGR not operating: about 0 V
8	WHT	LSA − (A/T CLUTCH PRESSURE CONTROL SOLENOID VALVE A − SIDE)	A/T clutch pressure control solenoid valve A power supply negative terminal	With the ignition switch ON (II): pulses
9	YEL/BLK	IGP2 (POWER SOURCE)	Power source for the PCM circuit.	With the ignition switch ON (II): battery voltage With the ignition switch OFF: 0 V
10	BLK	PG2 (POWER GROUND)	Ground for the PCM circuit.	Less than 1.0 V at all times
11	BRN	INJ1 (No. 1 INJECTOR)	Drives No. 1 injector.	With engine running: pulses
12	GRN/YEL	VTS (VTEC SOLENOID VALVE)	Drives VTEC solenoid valve.	With engine at low rpm: 0 V With engine at high rpm: battery voltage
13*1	YEL/GRN	ICM (IGNITION CONTROL MODULE)	Sends ignition pulse.	With the ignition switch ON (II): battery voltage With engine running: about 10 V (depending on engine speed)
14*1	BLU/BLK	OP2SW (2ND OIL PRESSURE SWITCH)	Detects 2nd oil pressure switch.	With the ignition switch ON (II): battery voltage
14*2, *3	BLU/WHT	ATPNP (TRANSMISSION RANGE SWITCH)	Detects transmission range switch signal.	In Park or Neutral: 0 V In any other position: battery voltage
15	BLU	INJ3 (No. 3 INJECTOR)	Drives No. 3 injector.	With engine running: pulses
17	RED	LSA + (A/T CLUTCH PRESSURE CONTROL SOLENOID VALVE A + SIDE)	A/T clutch pressure control solenoid valve A power supply positive terminal	With the ignition switch ON (II): pulses
18	GRN	LSB − (A/T CLUTCH PRESSURE CONTROL SOLENOID VALVE B − SIDE)	A/T clutch pressure control solenoid valve B power supply negative terminal	With the ignition switch ON (II): pulses
20	BRN/BLK	LG1 (LOGIC GROUND)	Ground for the PCM circuit.	Less than 1.0 V at all times
21	WHT/YEL	VBU (VOLTAGE BACK UP)	Power source for the PCM circuit. Power source for the DTC memory.	Battery voltage at all times
22	BLK*1 BRN/BLK*2	LG2 (LOGIC GROUND)	Ground for the PCM circuit.	Less than 1.0 V at all times
23	BLK/BLU	IACV (IDLE AIR CONTROL VALVE)	Drives IAC valve.	With engine running: pulses
24	BLU/WHT	OP3SW (3RD OIL PRESSURE SWITCH)	Detects 3rd oil pressure switch.	With the ignition switch ON (II): battery voltage
25	ORN	LSB + (A/T CLUTCH PRESSURE CONTROL SOLENOID VALVE B + SIDE)	A/T clutch pressure control solenoid valve B power supply positive terminal	With the ignition switch ON (II): pulses

*1: '98-99 models
*2: '00 model
*3: '01-02 models

(cont'd)

System Descriptions (cont'd)

PCM Inputs and Outputs at connector C (31P)

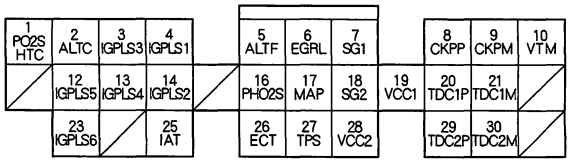

Wire side of female terminals

NOTE: Standard battery voltage is 12 V.

Terminal number	Wire color	Terminal name	Description	Signal
1	BLK/WHT	PO2SHTC (PRIMARY HEATED OXYGEN SENSOR HEATER CONTROL)	Drives primary heated oxygen sensor heater.	With ignition switch ON (II): battery voltage With fully warmed up engine running: duty controlled
2	WHT/GRN	ALTC (ALTERNATOR CONTROL)	Sends alternator control signal.	With engine running: about 0 V–5 V (depending on electrical load)
3*2, *3	WHT/BLU	IGPLS 3 (No. 3 IGNITION COIL PULSE)	Drives No. 3 ignition coil.	With ignition switch ON (II): 0 V With engine running: pulses
4*2, *3	YEL/GRN	IGPLS 1 (No. 1 IGNITION COIL PULSE)	Drives No. 1 ignition coil.	
5	WHT/RED	ALTF (ALTERNATOR FR SIGNAL)	Detects alternator FR signal.	With engine running: about 0 V–5 V (depending on electrical load)
6	WHT/BLK	EGRL (EGR VALVE LIFT SENSOR)	Detects EGR valve lift sensor signal.	At idle: about 1.2 V
7	GRN/WHT	SG1 (SENSOR GROUND)	Ground for MAP sensor.	Less than 1.0 V at all times
8	BLU	CKPP (CKP SENSOR P SIDE)	Detects CKP sensor.	With engine running: pulses
9	WHT	CKPM (CKP SENSOR M SIDE)	Ground for CKP sensor.	
10	BLU/BLK	VTM (VTEC PRESSURE SWITCH SIGNAL)	Detects VTEC pressure switch signal.	With engine at low rpm: 0 V With engine at high rpm: battery voltage
12*2, *3	BLK/RED	IGPLS 5 (No. 5 IGNITION COIL PULSE)	Drives No. 5 ignition coil.	With ignition switch ON (II): 0V With engine running: pulses
13*2, *3	BRN	IGPLS 4 (No. 4 IGNITION COIL PULSE)	Drives No. 4 ignition coil.	
14*2, *3	BLU/RED	IGPLS 2 (No. 2 IGNITION COIL PULSE)	Drives No. 2 ignition coil.	
16	WHT	PHO2S (PRIMARY HEATED OXYGEN SENSOR, SENSOR 1)	Detects primary heated oxygen sensor (sensor 1) signal.	With throttle fully opened from idle with fully, warmed up engine: above 0.6 V With throttle quickly closed: below 0.4 V
17	RED/GRN	MAP (MANIFOLD ABSOLUTE PRESSURE SENSOR)	Detects MAP sensor signal.	With ignition switch ON (II): about 3 V At idle: about 1.0 V (depending on engine speed)
18	GRN/BLK	SG2 (SENSOR GROUND)	Sensor ground.	Less than 1.0 V at all times.
19	YEL/RED	VCC1 (SENSOR VOLTAGE)	Power source to MAP sensor.	With ignition switch ON (II): about 5 V With ignition switch OFF: 0 V
20	GRN	TDC1P (TDC SENSOR 1P SIDE)	Detect TDC sensor 1.	With engine running: pulses
21	RED	TDC1M (TDC SENSOR 1M SIDE)	Ground for TDC sensor 1.	
23*2, *3	BRN/WHT	IGPLS 6 (No. 6 IGNITION COIL PULSE)	Drives No. 6 ignition coil.	With ignition switch ON (II): 0V With engine running: pulses
25	RED/YEL	IAT (INTAKE AIR TEMPERATURE SENSOR)	Detects IAT sensor signal.	With ignition switch ON (II): about 0.1–4.8 V (depending on intake air temperature)
26	RED/WHT	ECT (ENGINE COOLANT TEMPERATURE SENSOR)	Detects ECT sensor signal.	With ignition switch ON (II): about 0.1–4.8 V (depending on engine coolant temperature)
27	RED/BLK	TPS (THROTTLE POSITION SENSOR)	Detects TP sensor signal.	With throttle fully open: about 4.8 V With throttle fully closed: about 0.5 V
28	YEL/BLU	VCC2 (SENSOR VOLTAGE)	Provides sensor voltage.	With ignition switch ON (II): about 5 V With ignition switch OFF: 0 V
29	YEL	TDC2P (TDC2 SENSOR P SIDE)	Detects TDC sensor 2.	With engine running: pulses
30	BLK	TDC2M (TDC2 SENSOR M SIDE)	Ground for TDC sensor 2.	

*2: '00 model
*3: '01-02 models

BACK

PCM Inputs and Outputs at Connector D (16P)

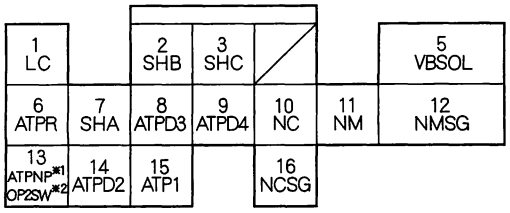

Wire side of female terminals

NOTE: Standard battery voltage is 12 V.

Terminal number	Wire color	Terminal name	Description	Signal
1	YEL	LC (TORQUE CONVERTER CLUTCH SOLENOID VALVE)	Drives torque converter clutch solenoid valve.	With lock-up ON: battery voltage With lock-up OFF: 0 V
2	GRN/WHT	SHB (SHIFT SOLENOID VALVE B)	Drives shift solenoid valve B.	With engine running in 1st, 2nd gears: battery voltage With engine running in 3rd, 4th gears: about 0 V
3	GRN	SHC (SHIFT CONTROL SOLENOID VALVE C)	Drives shift control solenoid valve C.	With engine running in 1st and 3rd gears: battery voltage With engine running in 2nd and 4th gears: 0 V
5	BLK/YEL	VBSOL (BATTERY VOLTAGE FOR SOLENOID VALVE)	Power source for solenoid valve.	With ignition switch ON (II): battery voltage
6	WHT	ATPR (TRANSMISSION RANGE SWITCH)	Detects transmission range switch signal.	In R position: 0 V In any other position: battery voltage
7	BLU/YEL	SHA (SHIFT SOLENOID VALVE A)	Drives shift solenoid valve A.	With engine running in 2nd, 3rd gears: battery voltage With engine running in 1st, 4th gears: about 0 V
8	PNK	ATPD3 (TRANSMISSION RANGE SWITCH)	Detects transmission range switch signal.	In D3 position: 0 V In any other position: battery voltage
9	YEL	ATPD4 (TRANSMISSION RANGE SWITCH)	Detects transmission range switch signal.	In D4 position: 0 V In any other position: about 5 V or battery voltage
10	BLU	NC (COUNTERSHAFT SPEED SENSOR)	Detects countershaft speed sensor signals.	With ignition switch ON (II), and front wheels rotating: battery voltage
11	RED	NM (MAINSHAFT SPEED SENSOR)	Detects mainshaft speed sensor signals.	With engine running: pulses
12	WHT	NMSG (MAINSHAFT SPEED SENSOR GROUND)	Ground for mainshaft speed sensor.	
13*2,*3	BLU/WHT	ATPNP (TRANSMISSION RANGE SWITCH)	Detects transmission range switch signal.	In Park or Neutral: 0 V In any other position: battery voltage
13*2,*3	BLU/BLK	OP2SW (2ND OIL PRESSURE SWITCH)	Detects 2nd oil pressure switch.	With the ignition switch ON (II): battery voltage
14	BLU	ATP2 (TRANSMISSION RANGE SWITCH)	Detects transmission range switch signal.	In 2nd position: 0 V In any other position: battery voltage
15	BRN	ATP1 (TRANSMISSION RANGE SWITCH)	Detects transmission range switch signal.	In 1st position: 0 V In any other position: battery voltage
16	GRN	NCSG (COUNTERSHAFT SPEED SENSOR GROUND)	Ground for countershaft speed sensor.	

*1: '98-99 models
*2: '00 model
*3: '01-02 models

(cont'd)

System Descriptions (cont'd)

Vacuum Hose Routing — '98-99 models:

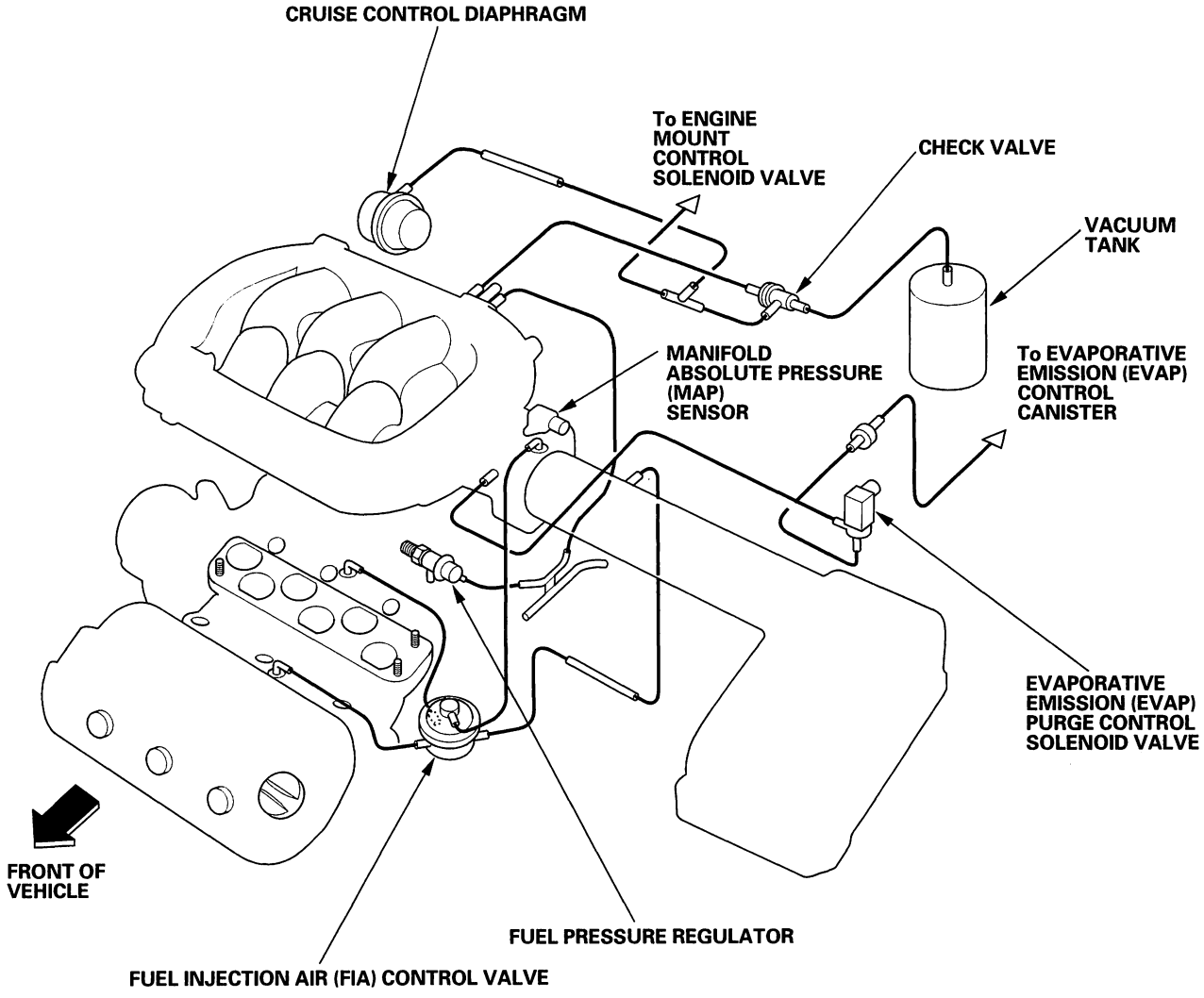

BACK

'00-02 models:

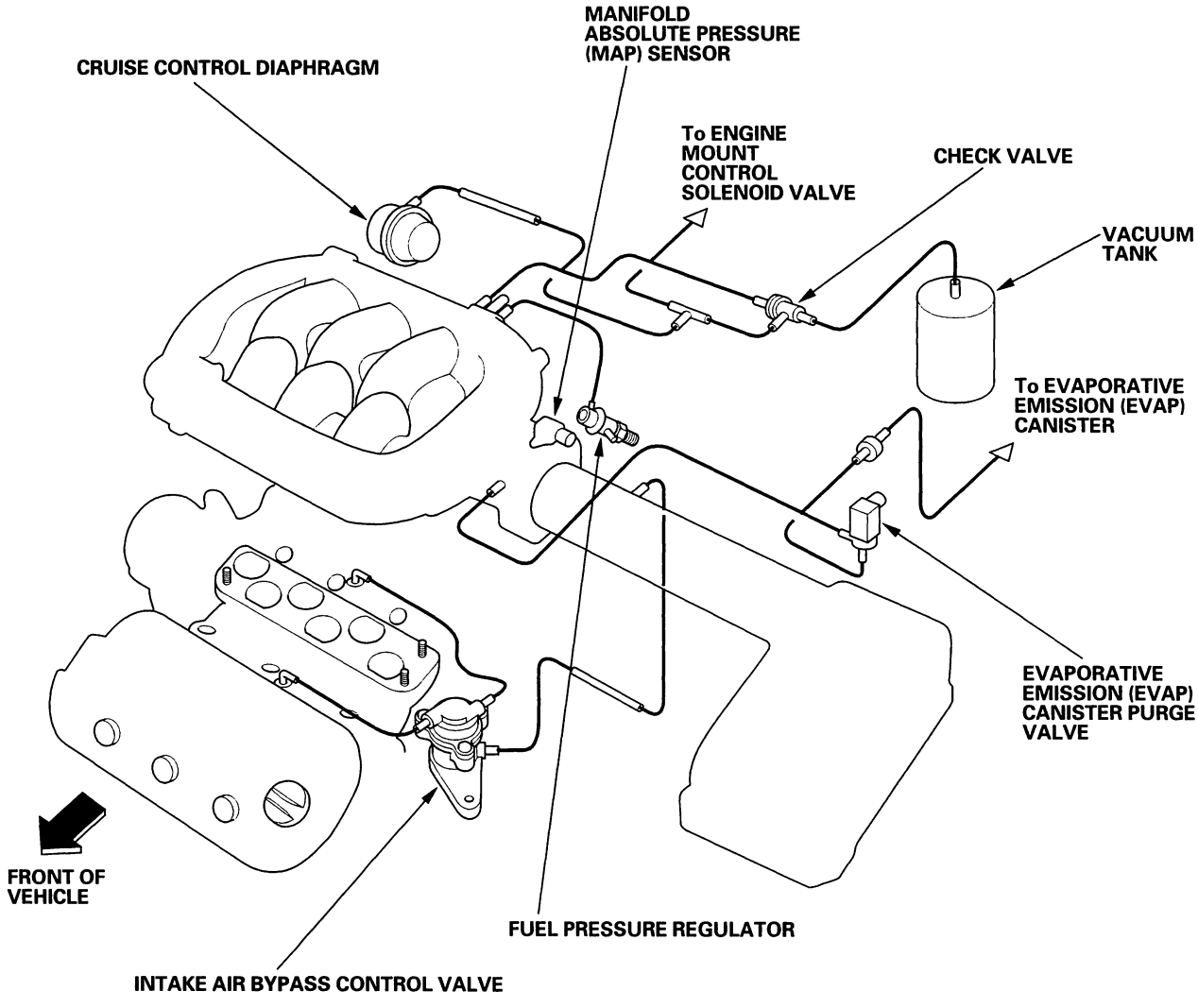

(cont'd)

System Descriptions (cont'd)

Vacuum Distribution — '98-99 models:

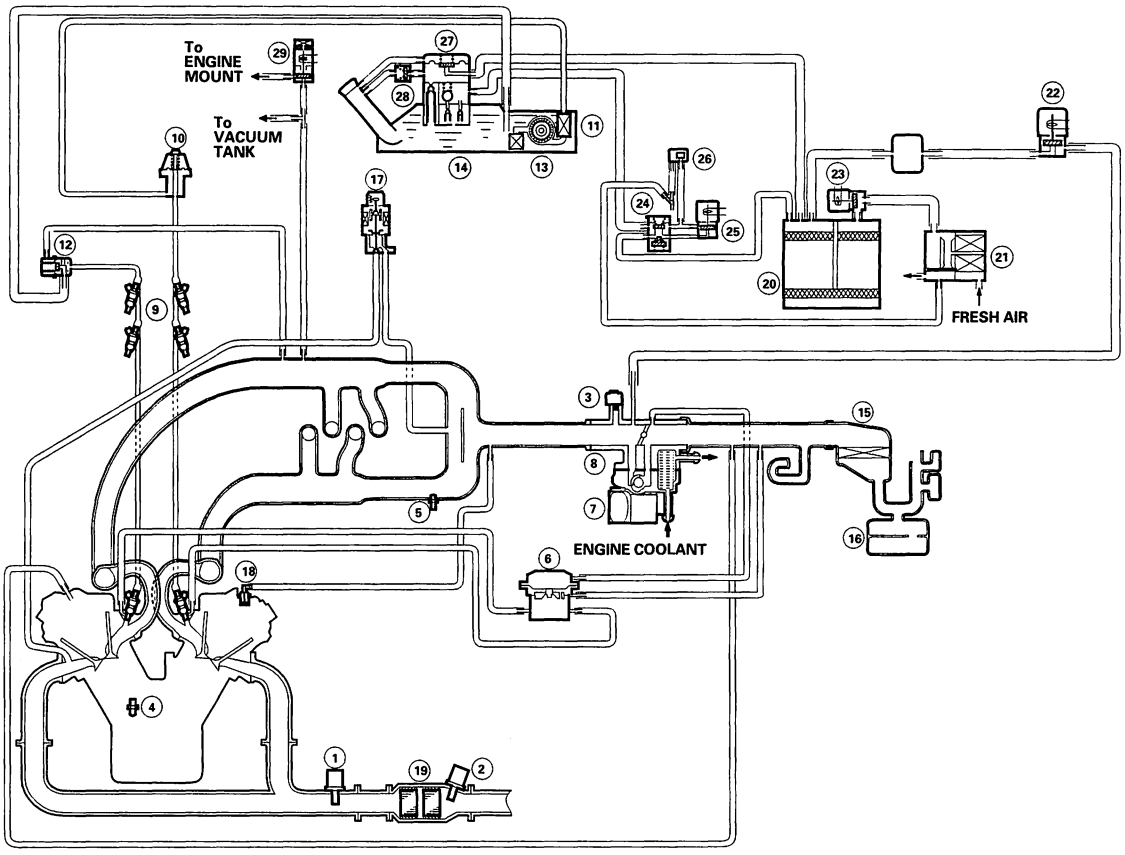

① PRIMARY HEATED OXYGEN SENSOR (PRIMARY HO2S) (SENSOR 1)
② SECONDARY HEATED OXYGEN SENSOR (SECONDARY HO2S) (SENSOR 2)
③ MANIFOLD ABSOLUTE PRESSURE (MAP) SENSOR
④ ENGINE COOLANT TEMPERATURE (ECT) SENSOR
⑤ INTAKE AIR TEMPERATURE (IAT) SENSOR
⑥ FUEL INJECTION AIR (FIA) CONTROL VALVE
⑦ IDLE AIR CONTROL (IAC) VALVE
⑧ THROTTLE BODY (TB)
⑨ FUEL INJECTOR
⑩ FUEL PULSATION DAMPER
⑪ FUEL FILTER
⑫ FUEL PRESSURE REGULATOR
⑬ FUEL PUMP (FP)
⑭ FUEL TANK
⑮ AIR CLEANER
⑯ RESONATOR
⑰ EXHAUST GAS RECIRCULATION (EGR) VALVE and LIFT SENSOR
⑱ POSITIVE CRANKCASE VENTILATION (PCV) VALVE
⑲ THREE WAY CATALYTIC CONVERTER
⑳ EVAPORATIVE EMISSION (EVAP) CONTROL CANISTER
㉑ EVAPORATIVE EMISSION (EVAP) CONTROL CANISTER FILTER
㉒ EVAPORATIVE EMISSION (EVAP) PURGE CONTROL SOLENOID VALVE
㉓ EVAPORATIVE EMISSION (EVAP) CONTROL CANISTER VENT SHUT VALVE
㉔ EVAPORATIVE EMISSION (EVAP) TWO WAY VALVE
㉕ EVAPORATIVE EMISSION (EVAP) BYPASS SOLENOID VALVE
㉖ FUEL TANK PRESSURE SENSOR
㉗ ONBOARD REFUELING VAPOR RECOVERY (ORVR) VENT SHUT VALVE
㉘ ONBOARD REFUELING VAPOR RECOVERY (ORVR) VAPOR RECIRCULATION VALVE
㉙ ENGINE MOUNT CONTROL SOLENOID VALVE

BACK

'00-02 models:

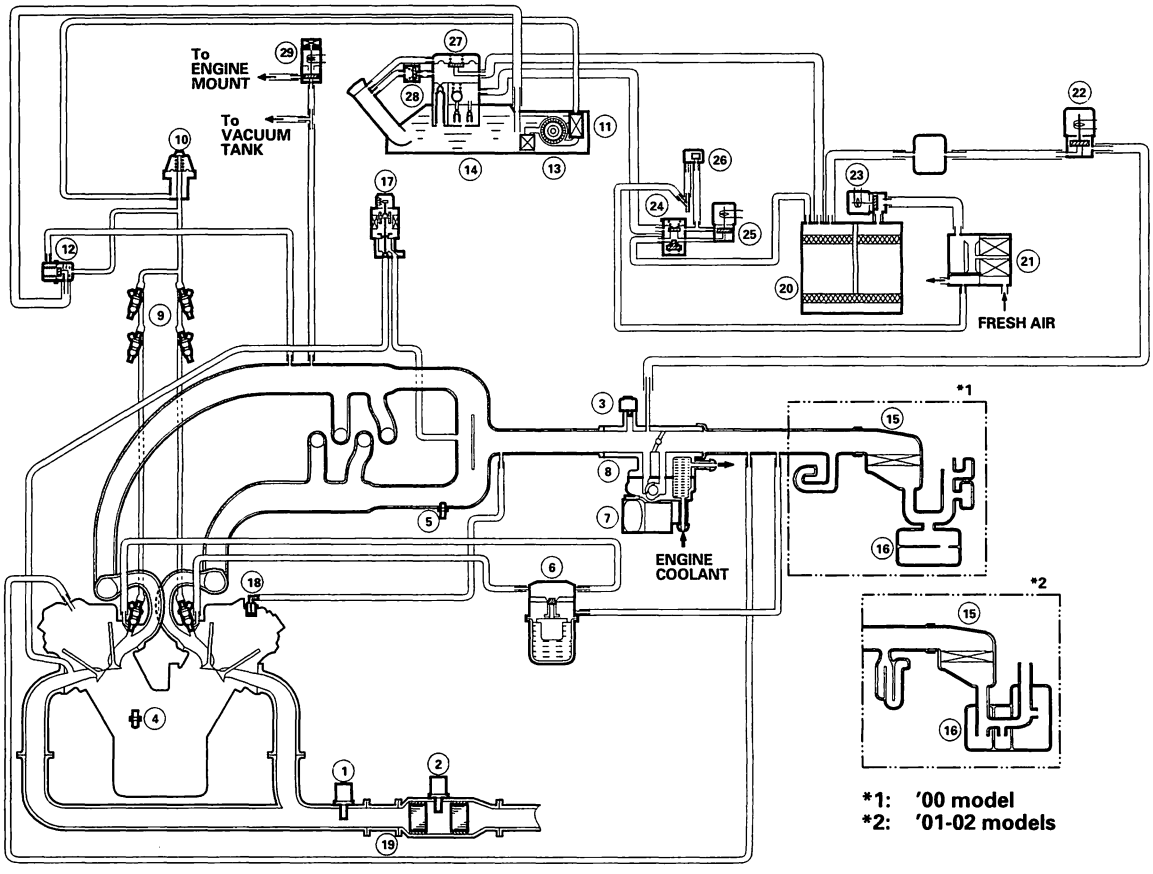

① PRIMARY HEATED OXYGEN SENSOR (PRIMARY HO2S) (SENSOR 1)
② SECONDARY HEATED OXYGEN SENSOR (SECONDARY HO2S) (SENSOR 2)
③ MANIFOLD ABSOLUTE PRESSURE (MAP) SENSOR
④ ENGINE COOLANT TEMPERATURE (ECT) SENSOR
⑤ INTAKE AIR TEMPERATURE (IAT) SENSOR
⑥ INTAKE AIR BYPASS CONTROL VALVE
⑦ IDLE AIR CONTROL (IAC) VALVE
⑧ THROTTLE BODY
⑨ INJECTOR
⑩ FUEL PULSATION DAMPER
⑪ FUEL FILTER
⑫ FUEL PRESSURE REGULATOR
⑬ FUEL PUMP (FP)
⑭ FUEL TANK
⑮ AIR CLEANER
⑯ RESONATOR
⑰ EXHAUST GAS RECIRCULATION (EGR) VALVE and POSITION SENSOR
⑱ POSITIVE CRANKCASE VENTILATION (PCV) VALVE
⑲ THREE WAY CATALYTIC CONVERTER
⑳ EVAPORATIVE EMISSION (EVAP) CANISTER
㉑ EVAPORATIVE EMISSION (EVAP) CANISTER FILTER
㉒ EVAPORATIVE EMISSION (EVAP) CANISTER PURGE VALVE
㉓ EVAPORATIVE EMISSION (EVAP) CANISTER VENT SHUT VALVE
㉔ EVAPORATIVE EMISSION (EVAP) TWO WAY VALVE
㉕ EVAPORATIVE EMISSION (EVAP) BYPASS SOLENOID VALVE
㉖ FUEL TANK PRESSURE SENSOR
㉗ FUEL TANK VAPOR CONTROL VALVE
㉘ FUEL TANK VAPOR RECIRCULATION VALVE
㉙ ENGINE MOUNT CONTROL SOLENOID VALVE

(cont'd)

System Descriptions (cont'd)

PGM-FI System

The Programmed Fuel Injection (PGM-FI) system is a sequential multiport fuel injection system.

Air Conditioning (A/C) Compressor Clutch Relay
When the PCM receives a demand for cooling from the A/C system, it delays the compressor from being energized, and enriches the mixture to assure smooth transition to the A/C mode.

Air Conditioning (A/C) Switch
The A/C switch signals the PCM whenever there is a demand for cooling.

Alternator Control
The alternator signals the Powertrain Control Module (PCM) during charging. The PCM then controls the voltage generated at the alternator assording to the electrical load determined by the Electrical Load Detector (ELD) and driving mode. This reduces engine load to improve fuel economy.

Barometric Pressure (BARO) Sensor
The Baro sensor is inside the PCM. It converts atmospheric pressure into a voltage signal that modifies the basic duration of the fuel injection discharge.

Crankshaft Position (CKP) Sensor
The CKP sensor determines timing for fuel injection of each cylinder and also detects engine speed.
The PCM detects misfiring by using the CKP sensor to monitor fluctuations in crankshaft speed. It will then set DTCs depending on how much misfiring occurs.

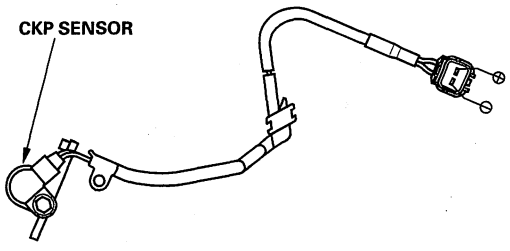

Engine Coolant Temperature (ECT) Sensor
The ECT sensor is a temperature dependent resistor (thermistor). The resistance of the thermistor decreases as the Engine Coolant temperature increases.

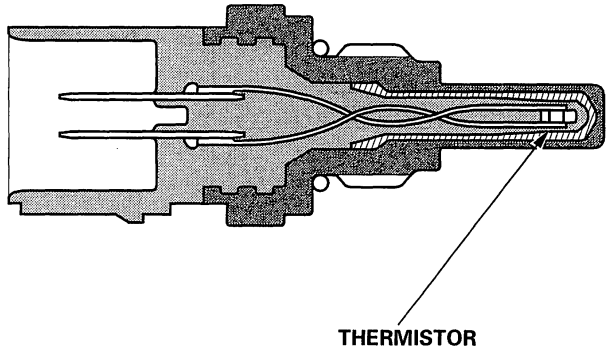

Ignition Timing Control
The PCM contains the memory for basic ignition timing at various engine speeds and manifold absolute pressure. It also adjusts the timing according to engine coolant temperature.

Injector Timing and Duration
The PCM contains the memory for basic discharge duration at various engine speeds and manifold pressures. The basic discharge duration, after being read out from the memory, is further modified by signals sent from various sensors to obtain the final discharge duration.
By monitoring long term fuel trim, the PCM detect long term malfunctions in the fuel system and set a Diagnostic Trouble Code (DTC).

BACK

Intake Air Temperature (IAT) Sensor
The IAT sensor is a temperature dependent resistor (thermistor). The resistance of the thermistor decreases as the intake air temperature increases.

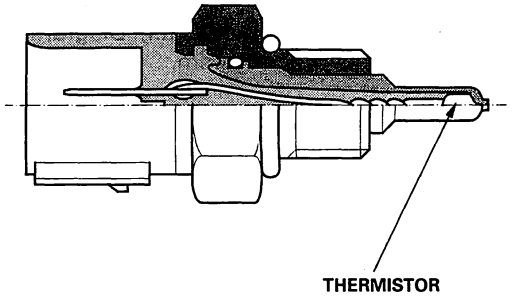

Malfunction Indicator Lamp (MIL) Indication (In relation to Readiness Codes)('01-02 models)
The vehicle has certain "readiness codes" that are part of the on-board diagnostics for the emissions systems. If the vehicle's battery has been disconnected or gone dead, if the DTCs have been cleared, or if the PCM has been reset, these codes are reset to complete. In some states, part of the emissions testing is to make sure these codes are set to complete. If all of them are not set to complete, the test cannot be finished.

To check if the readiness codes are set, turn the ignition switch ON (II), but do not start the engine. The MIL will come on for 15—20 seconds. If it then goes off, the readiness codes are set. If it blinks several times, one or more readiness codes are not set to complete. To set each code, drive the vehicle or run the engine as described in the procedures to set them. Refer to the '98-02 Accord Service Manual (see page 11-42).

Manifold Absolute Pressure (MAP) Sensor
The MAP sensor converts manifold absolute pressure into electrical signals to the PCM.

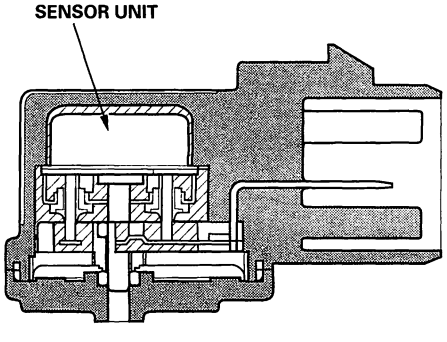

Primary Heated Oxygen sensor (Primary HO2S)
The primary HO2S detects the oxygen content in the exhaust gas and sends signals to the PCM which varies the duration of fuel injection accordingly. To stabilize its output, the sensor has an internal heater. The primary HO2S is installed in the exhaust manifold.
By controlling the air fuel ratio with primary HO2S and secondary HO2S, the deterioration of the primary HO2S can be evaluated by its feedback period. When the feedback period exceeds a certain value during stable driving conditions, the sensor is considered deteriorated and the PCM sets a DTC.

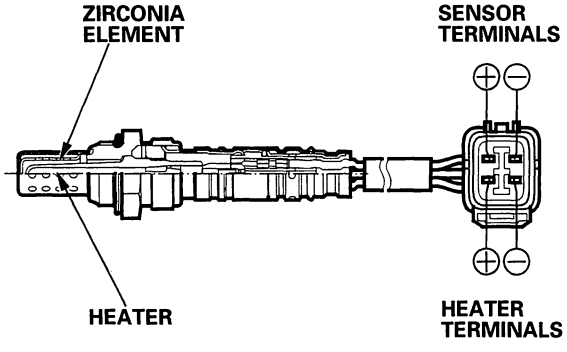

Secondary Heated Oxygen sensor (Secondary HO2S)
The secondary HO2S detects the oxygen content in the exhaust gas downstream of the Three Way Catalytic Converter (TWC) and sends signals to the PCM which varies the duration of fuel injection accordingly. To stabilize its output, the sensor has an internal heater. The secondary HO2S is installed in the TWC.

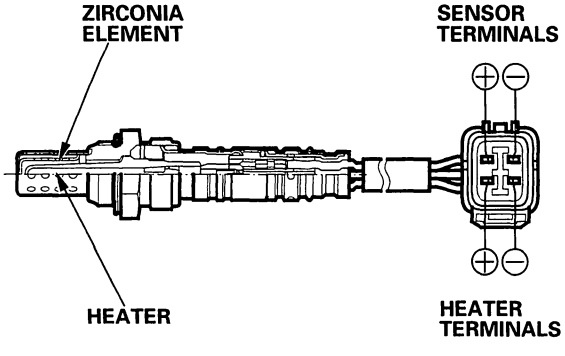

Starting Control
When the engine is started, the PCM provides a rich mixture by increasing injector duration.

(cont'd)

System Descriptions (cont'd)

Throttle Position (TP) Sensor
The TP sensor is a potentiometer connected to the throttle valve shaft. As the throttle position changes, the sensor varies the signal voltage to the PCM. The TP sensor is not replaceable apart from the throttle body.

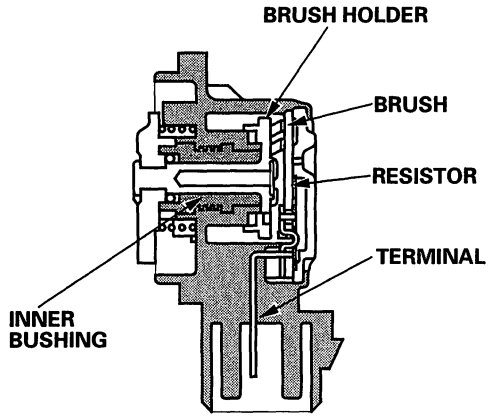

Top Dead Center (TDC) Sensor
The TDC1/TDC2 sensor determines ignition timing at start up (cranking) and when crank angle is abnormal.

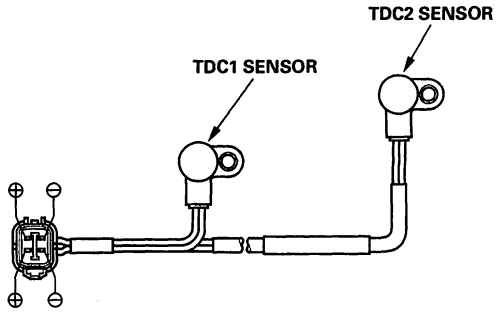

Idle Control System

When the engine is cold, the A/C compressor is on, the transmission is in gear, the brake pedal is pressed, the P/S load is high, or the alternator is charging, the PCM controls current to the IAC valve to maintain the correct idle speed. Refer to the System Diagram to see the functional layout of the system.

Brake Pedal Position Switch
The brake pedal position switch signals the PCM when the brake pedal is pressed.

Idle Air Control (IAC) Valve
To maintain the proper idle speed, the IAC valve changes the amount of air bypassing the throttle body in response to an electrical signal from the PCM.

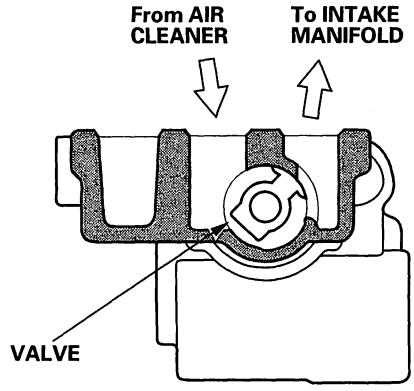

Power Steering Pressure (PSP) Switch
The PSP switch signals the PCM when the power steering load is high.

Starter (Ignition) Switch
The starter switch signals the PCM when the engine is cranking.

BACK

Fuel Supply System

Fuel Cut-off Control
During deceleration with the throttle valve closed, current to the fuel injectors is cut off to improve fuel economy at speeds over 1,100 rpm.
Fuel cut-off action also occurs when engine speed exceeds 6,600 rpm, regardless of the position of the throttle valve, to protect the engine from over-revving. When the vehicle is stopping, the PCM cuts the fuel at engine speed over 5,000 rpm.

Fuel Pump Control
When the ignition is turned on, the PCM grounds the PGM-FI main relay which feeds current to the fuel pump for 2 seconds to pressurize the fuel system. With the engine running, the PCM grounds the PGM-FI main relay and feeds current to the fuel pump. When the engine is not running and the ignition is on, the PCM cuts ground to the PGM-FI main relay which cuts current to the fuel pump.

PGM-FI Main Relay
The PGM-FI relay contains two separate relays. One is energized whenever the ignition is on. It supplies battery voltage to the PCM, power to the fuel injectors, and power for the second relay. The second relay is energized to supply power to the fuel pump for 2 seconds when the ignition is switched ON (II), and when the engine is running.

Intake Air System

Refer to the System Diagram to see the functional layout of the system.

Intake Air Bypass Control System (Fuel Air (FIA) Control System)
When the engine is running, the Intake Air Bypass control valve sends air to the fuel injectors.

'98-99 models:

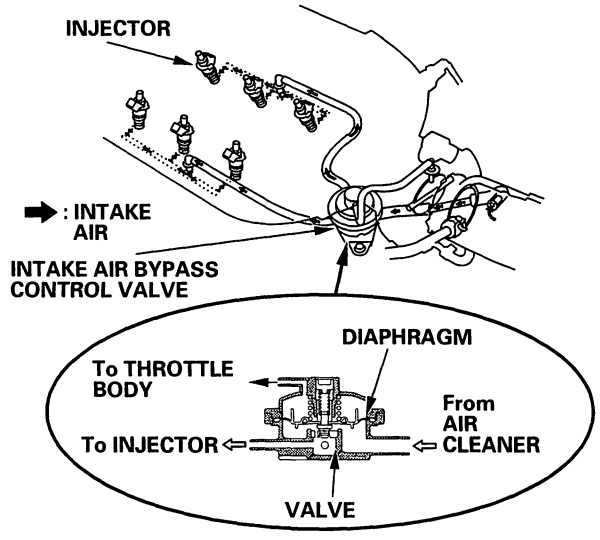

'00-02 models:

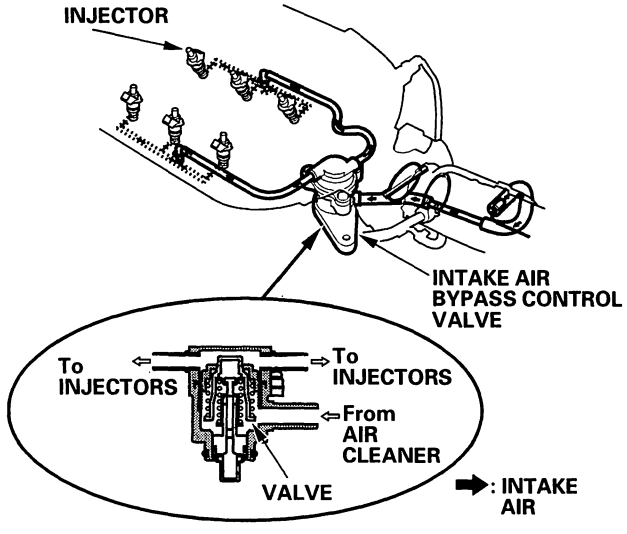

(cont'd)

System Descriptions (cont'd)

Throttle Body
The throttle body is a single-barrel side draft type. The lower portion of the throttle valve is heated by engine coolant from the cylinder head. The idle adjusting screw, which increases/decreases bypass air, is located on the top of the throttle body.

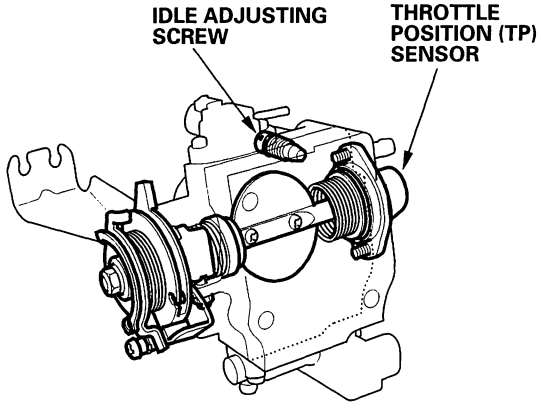

Catalytic Converter System

Three-Way Catalytic Converter (TWC)
The TWC converts hydrocarbons (HC), carbon monoxide (CO), and oxides of nitrogen (NOx) in the exhaust gas to carbon dioxide (CO2), dinitrogen (N2), and water vapor.

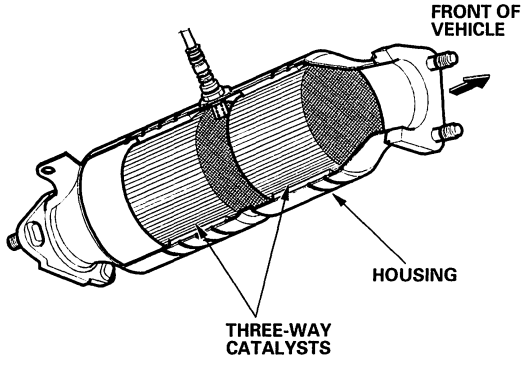

Exhaust Gas Recirculation System

Refer to System Diagram to see the functional layout of the system.

EGR Valve
The EGR valve lowers peak combustion temperatures and reduces oxides of nitrogen emissions (NOx) by recirculating exhaust gas through the intake manifold and into the combustion chambers.

Positive Crankcase Ventilation (PCV) System

The PCV valve prevents blow-by gasses from escaping into the atmosphere by venting them into the intake manifold.

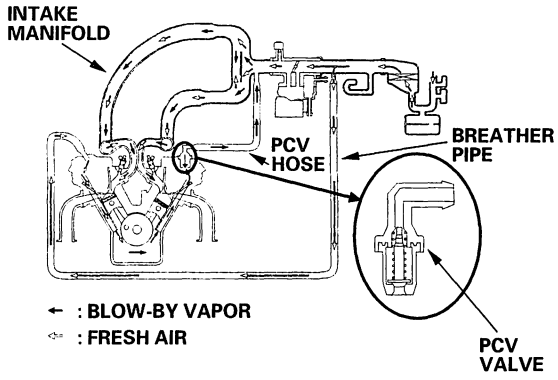

Evaporative Emission Control System

Refer to System Diagram to see the functional layout of the system.

EVAP Canister
The EVAP canister temporarily stores fuel vapor from the fuel tank until it can be purged back into the engine and burned.

EVAP Canister Purge Valve
When the engine coolant temperature is above 167°F (75°C), the PCM controls the EVAP canister purge valve which provides vacuum to the EVAP canister.

Fuel Tank Pressure (FTP) Sensor
The FTP sensor converts fuel tank absolute pressure into an electrical input to the PCM.

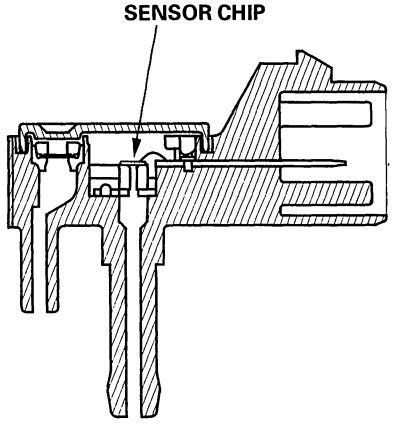

BACK

Idle Control System Diagram

The idle speed of the engine is controlled by the IAC (Idle Air Control) valve:

- After the engine starts, the IAC valve opens for a certain amount of time. The amount of air is increased to raise the idle speed by about 150—300 rpm.
- When the engine coolant temperature is low, the IAC valve is opened to obtain the proper fast idle speed. The amount of bypassed air is thus controlled in relation to engine coolant temperature.

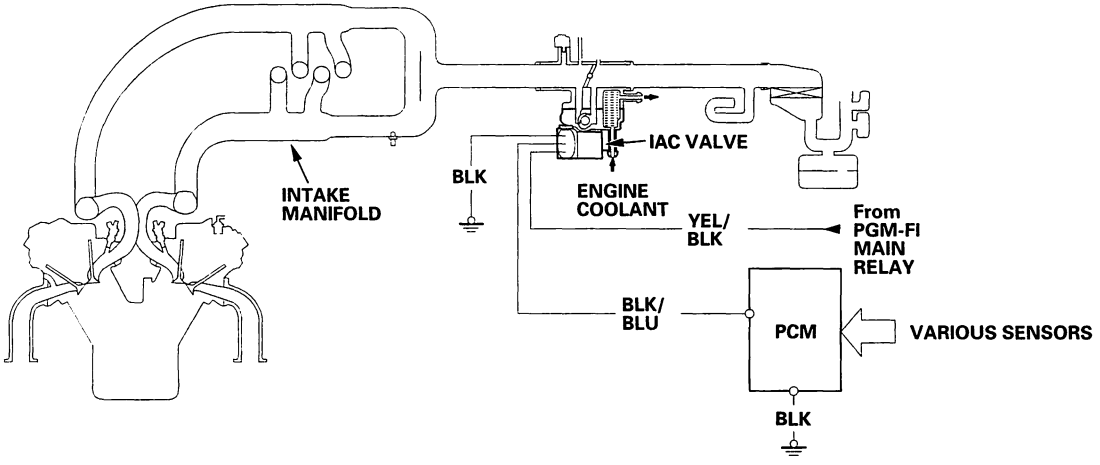

Intake Air System Diagram

This system supplies air to the engine. A resonator in the intake air duct provides additional silencing as air is drawn into the system.

'98-99 models:

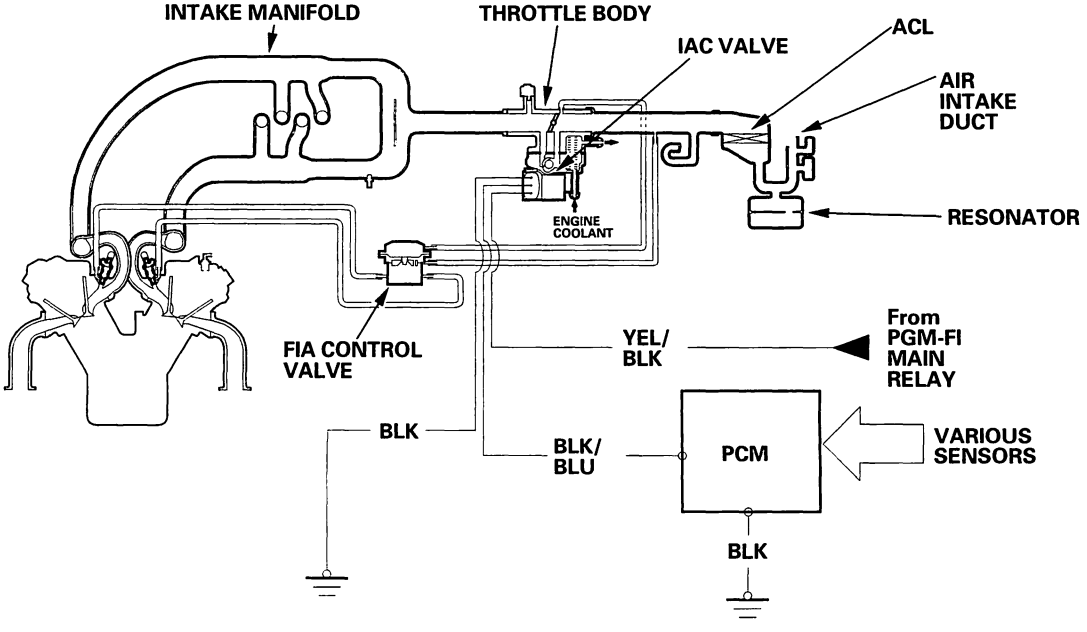

(cont'd)

System Descriptions (cont'd)

'00-02 models:

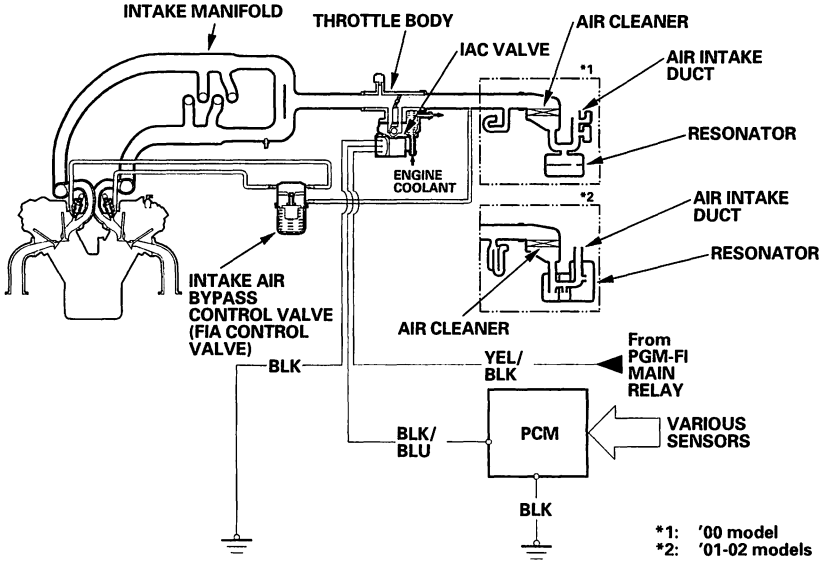

Exhaust Gas Recirculation (EGR) System Diagram

The EGR system reduces oxides of nitrogen (NOx) emissions by recirculating exhaust gas through the EGR valve and the intake manifold into the combustion chambers. The PCM memory includes the ideal EGR valve position for varying operating conditions.
The EGR valve position sensor detects the amount of EGR valve lift and sends it to the PCM. The PCM then compares it with the ideal lift in its memory (based on signals sent from other sensors). If there is any difference between the two, the PCM cuts current to the EGR valve.

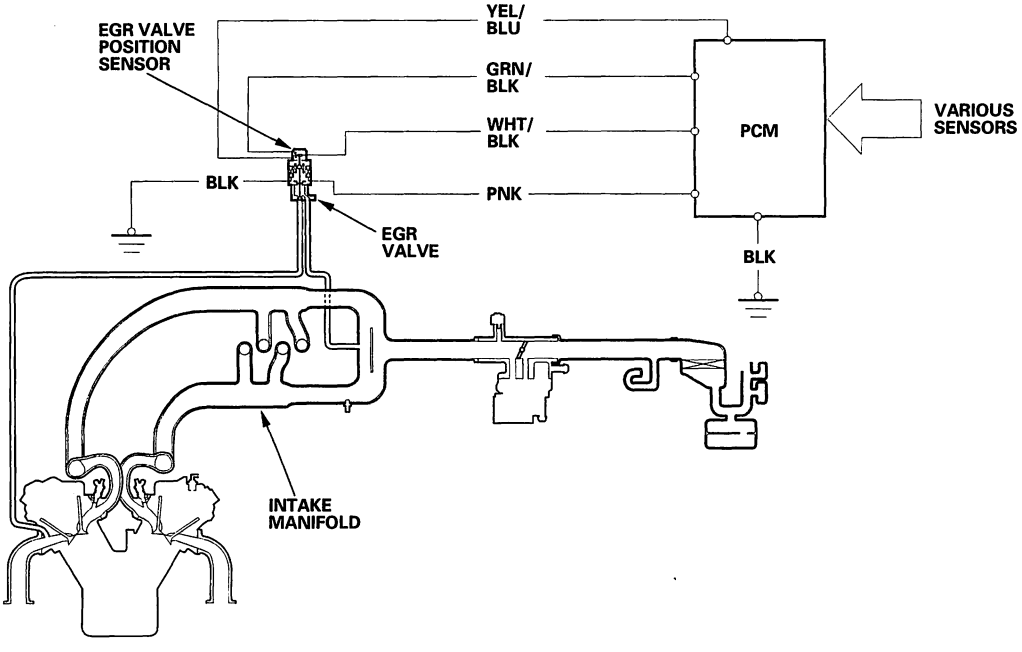

BACK

Evaporative Emission (EVAP) Control Diagram

The EVAP controls minimize the amount of fuel vapor escaping to the atmosphere. Vapor from the fuel tank is temporarily stored in the EVAP canister until it can be purged from the canister into the engine and burned.

- The EVAP canister is purged by drawing fresh air through it and into a port on the intake manifold. The purging vacuum is controlled by the EVAP canister purge valve, which is open whenever engine coolant temperature is above 147°F (64°C).
- When vapor pressure in the fuel tank is higher than the set value of the EVAP two way valve, the valve opens and regulates the flow of fuel vapor to the EVAP control canister.
- During refueling, the fuel tank vapor control valve opens with the pressure in the fuel tank, and feeds the fuel vapor to the EVAP canister.

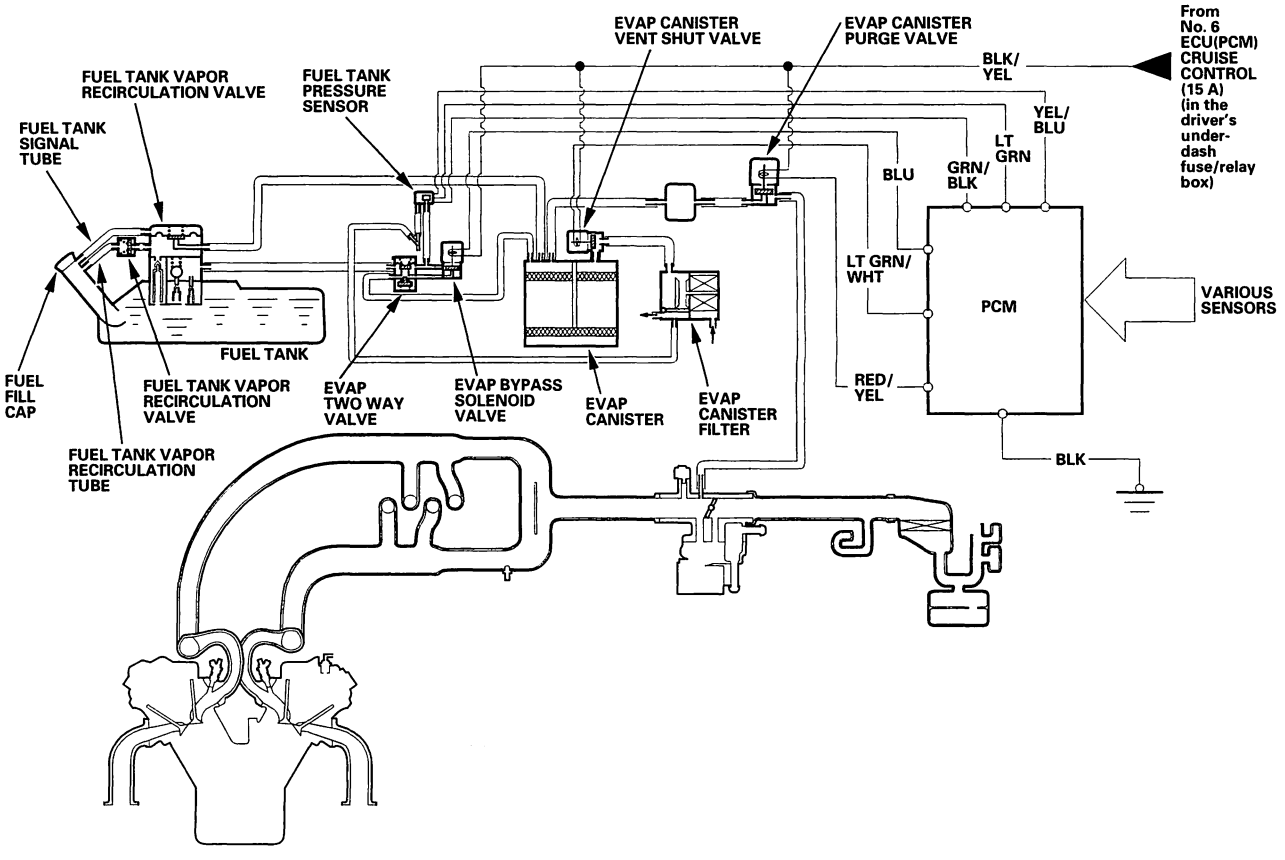

Circuit Diagram

PCM Circuit Diagram — '98-99 models:

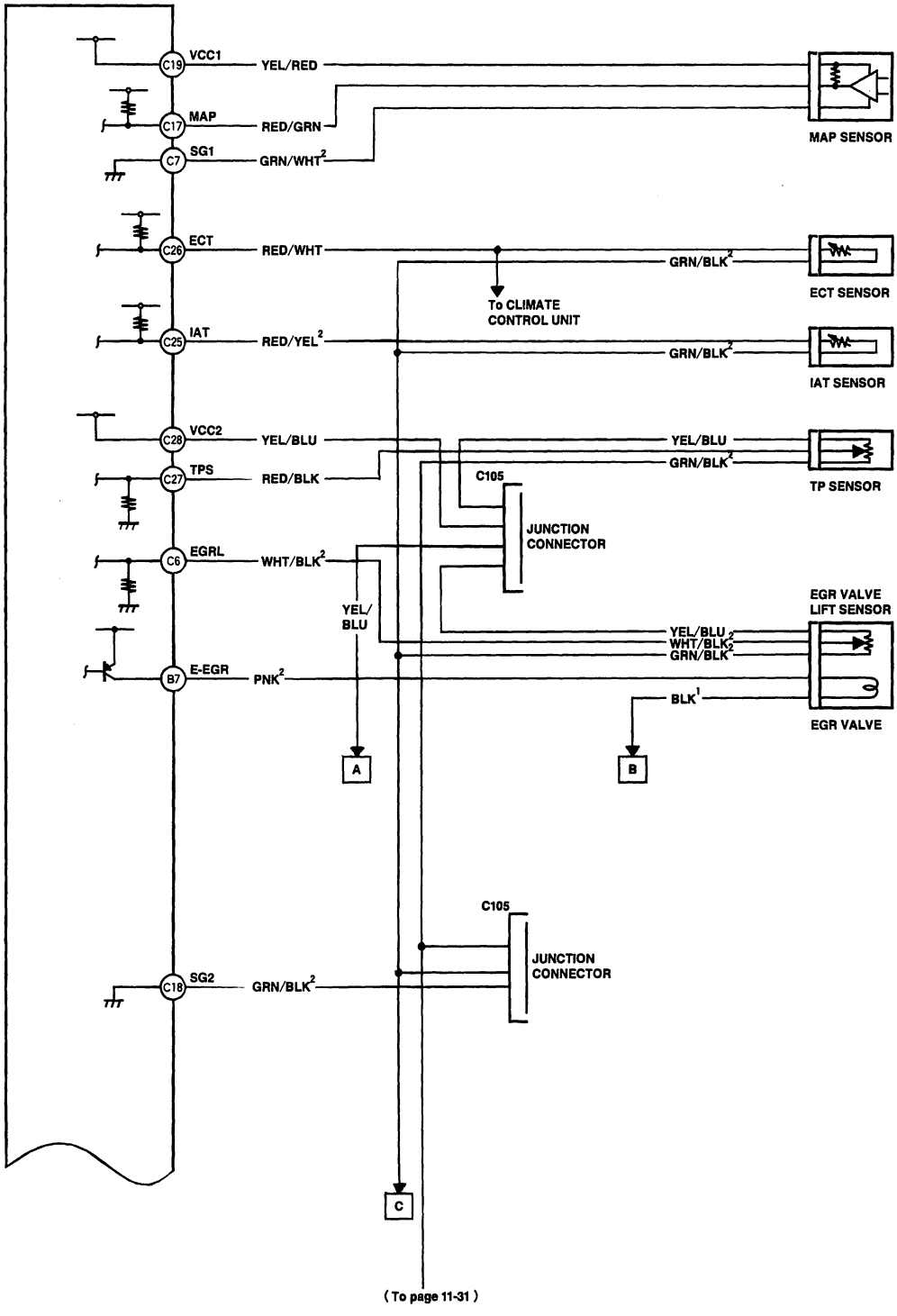

(To page 11-31)

BACK

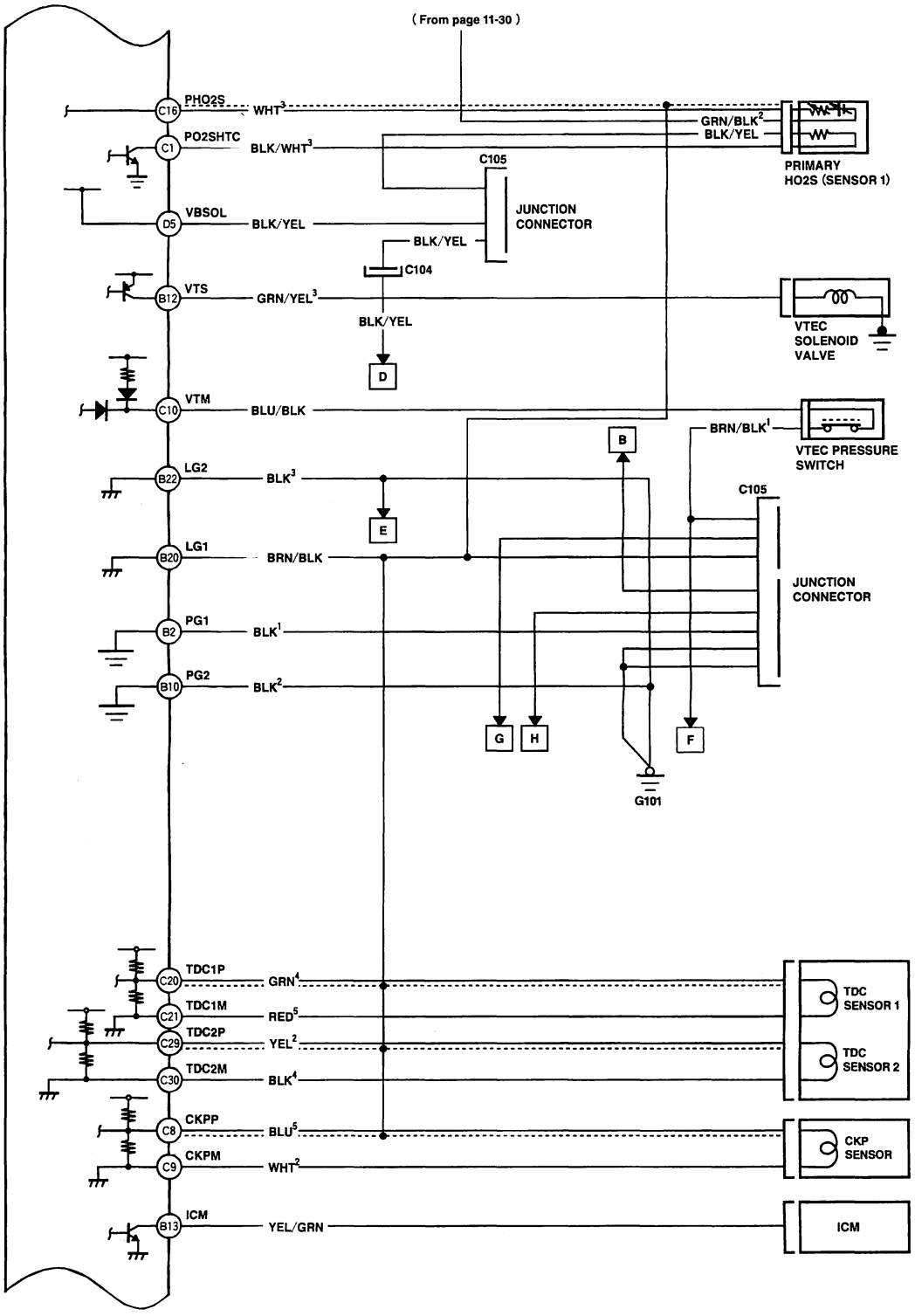
(From page 11-30)
PHO2S
C16
WHT3
GRN/BLK2
BLK/YEL
PRIMARY HO2S (SENSOR 1)
PO2SHTC
C1
BLK/WHT3
C105
JUNCTION CONNECTOR
VBSOL
D5
BLK/YEL
BLK/YEL
C104
VTS
B12
GRN/YEL3
BLK/YEL
D
VTEC SOLENOID VALVE
VTM
C10
BLU/BLK
BRN/BLK1
VTEC PRESSURE SWITCH
B
LG2
B22
BLK3
E
C105
LG1
B20
BRN/BLK
JUNCTION CONNECTOR
PG1
B2
BLK1
PG2
B10
BLK2
G
H
F
G101
TDC1P
C20
GRN4
TDC1M
C21
RED5
TDC2P
C29
YEL2
TDC2M
C30
BLK4
TDC SENSOR 1
TDC SENSOR 2
CKPP
C8
BLU5
CKPM
C9
WHT2
CKP SENSOR
ICM
B13
YEL/GRN
ICM

(cont'd)

BACK

Circuit Diagram (cont'd)

PCM Circuit Diagram (cont'd) — '98-99 models:

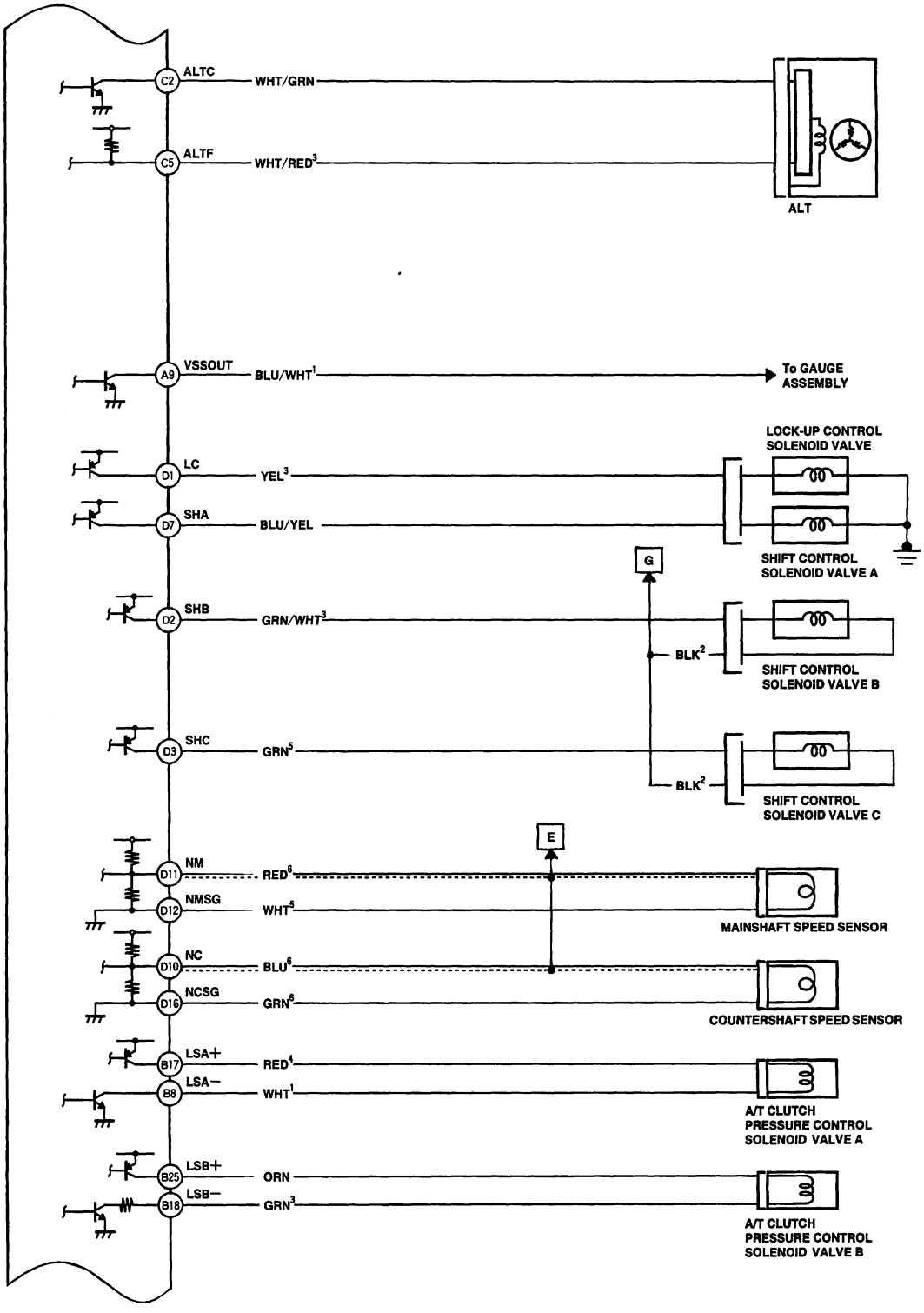

BACK

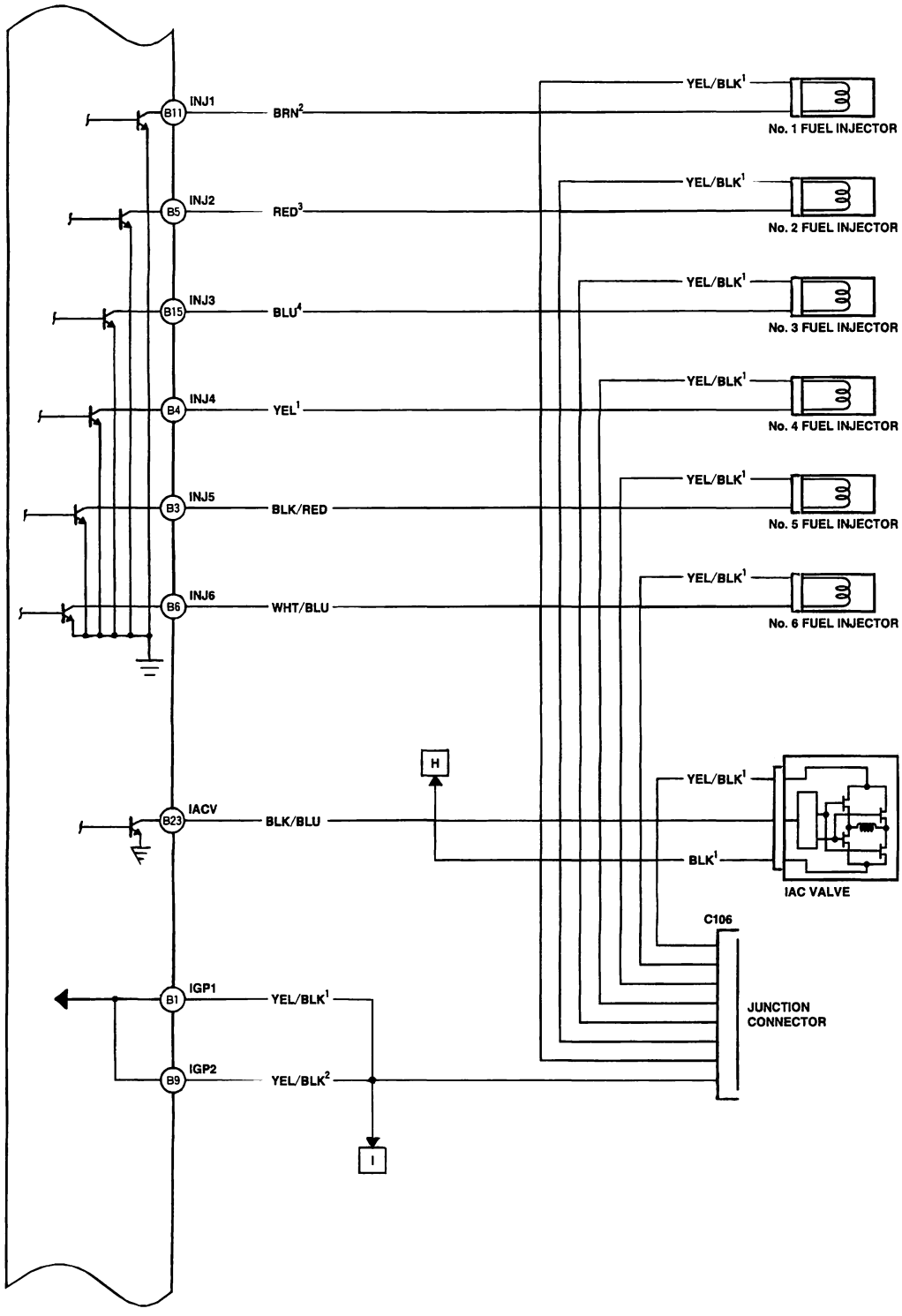
INJ1
B11
BRN2
YEL/BLK1
No. 1 FUEL INJECTOR
INJ2
B5
RED3
YEL/BLK1
No. 2 FUEL INJECTOR
INJ3
B15
BLU4
YEL/BLK1
No. 3 FUEL INJECTOR
INJ4
B4
YEL1
YEL/BLK1
No. 4 FUEL INJECTOR
INJ5
B3
BLK/RED
YEL/BLK1
No. 5 FUEL INJECTOR
INJ6
B6
WHT/BLU
YEL/BLK1
No. 6 FUEL INJECTOR
H
IACV
B23
BLK/BLU
YEL/BLK1
BLK1
IAC VALVE
C106
JUNCTION CONNECTOR
IGP1
B1
YEL/BLK1
IGP2
B9
YEL/BLK2
I

(cont'd)

Circuit Diagram (cont'd)

PCM Circuit Diagram (cont'd) — '98-99 models:

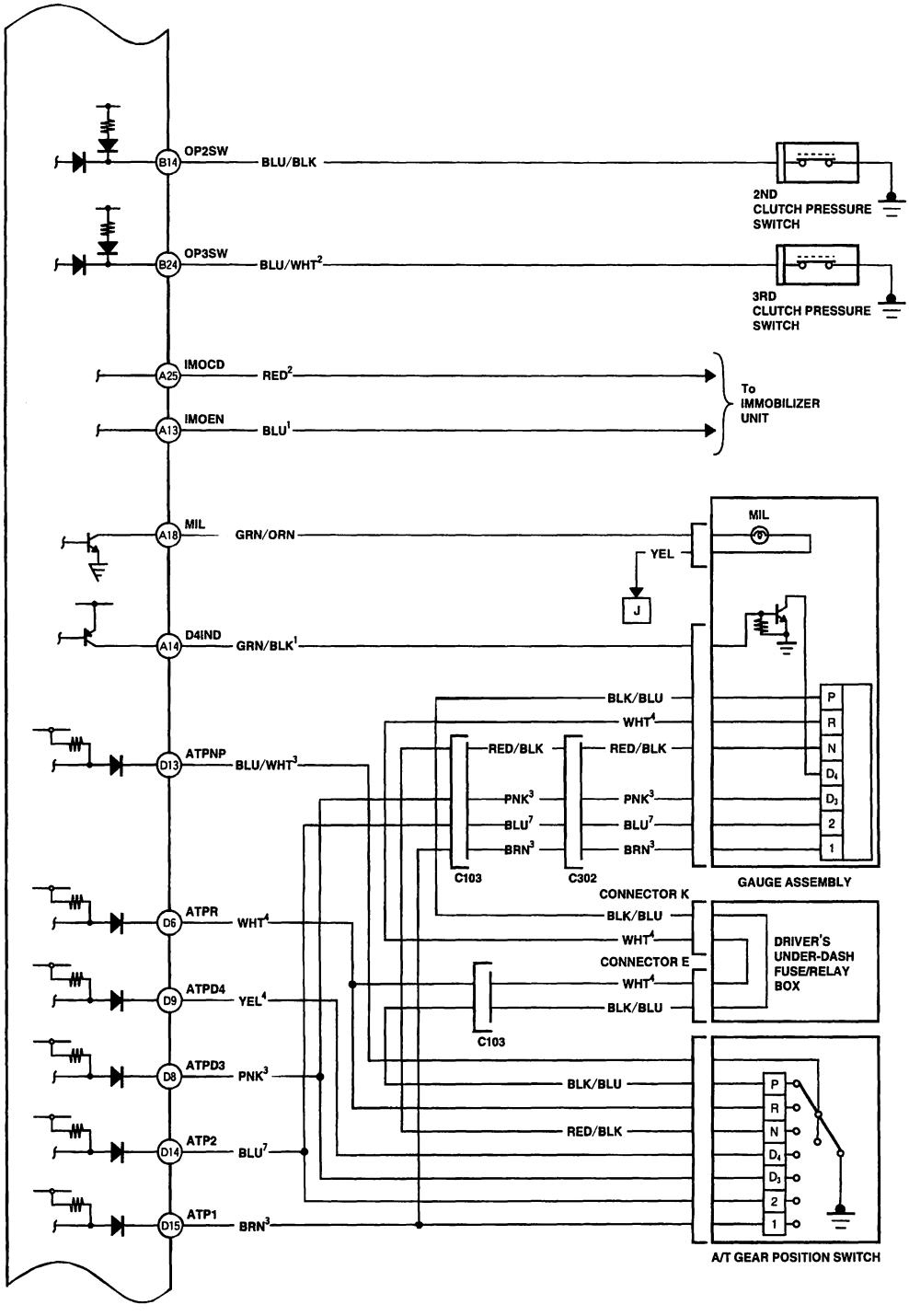

BACK

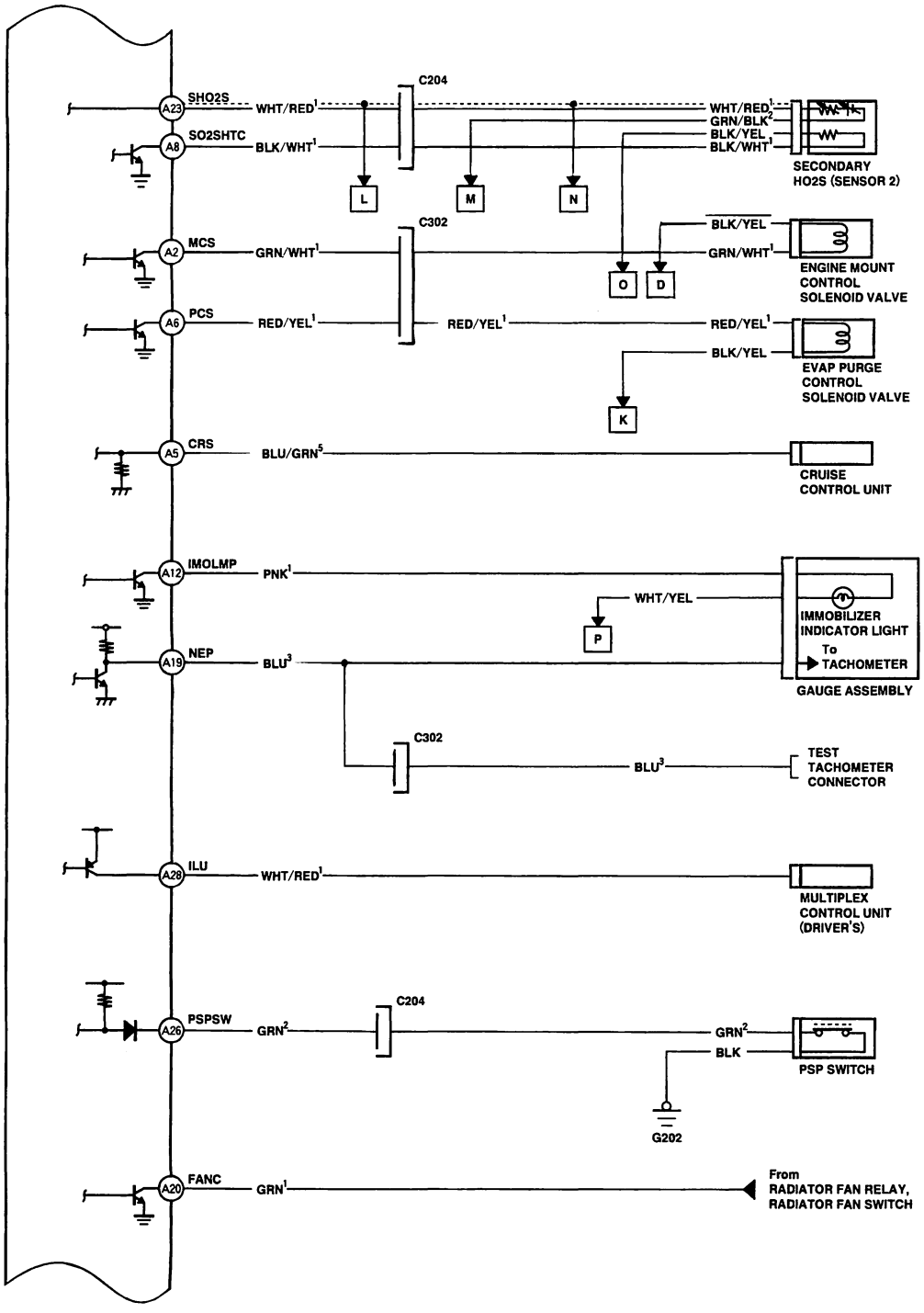
SHO2S
A23
WHT/RED1
C204
WHT/RED1
GRN/BLK2
BLK/YEL
BLK/WHT1
SO2SHTC
A8
BLK/WHT1
SECONDARY
HO2S (SENSOR 2)
L
M
N
C302
BLK/YEL
MCS
A2
GRN/WHT1
GRN/WHT1
O
D
ENGINE MOUNT
CONTROL
SOLENOID VALVE
PCS
A6
RED/YEL1
RED/YEL1
RED/YEL1
BLK/YEL
EVAP PURGE
CONTROL
SOLENOID VALVE
K
CRS
A5
BLU/GRN5
CRUISE
CONTROL UNIT
IMOLMP
A12
PNK1
WHT/YEL
P
IMMOBILIZER
INDICATOR LIGHT
To
TACHOMETER
NEP
A19
BLU3
GAUGE ASSEMBLY
C302
BLU3
TEST
TACHOMETER
CONNECTOR
ILU
A28
WHT/RED1
MULTIPLEX
CONTROL UNIT
(DRIVER'S)
PSPSW
A26
GRN2
C204
GRN2
BLK
PSP SWITCH
G202
FANC
A20
GRN1
From
RADIATOR FAN RELAY,
RADIATOR FAN SWITCH

(cont'd)

BACK

Circuit Diagram (cont'd)

PCM Circuit Diagram (cont'd) — '98-99 models:

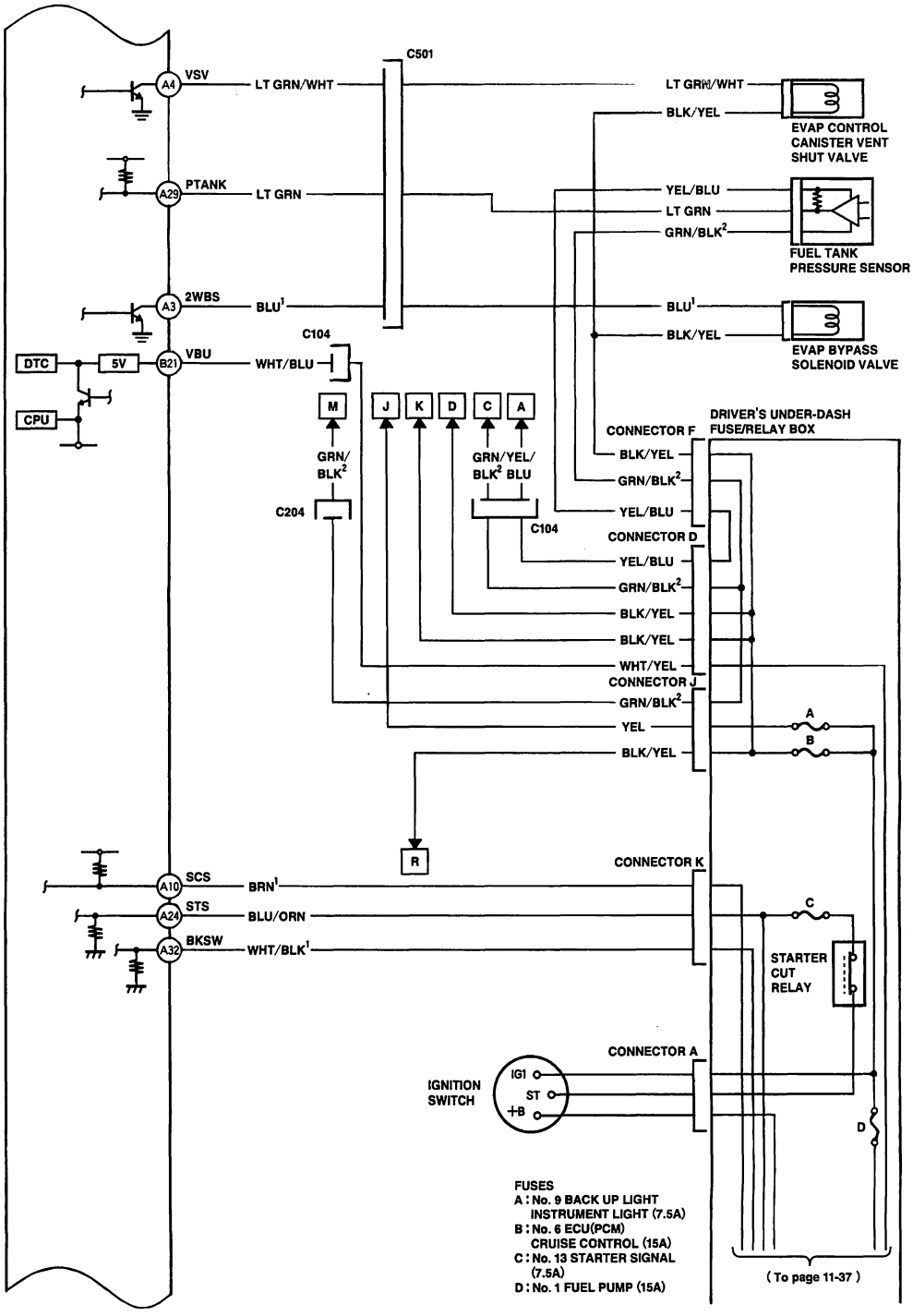

BACK

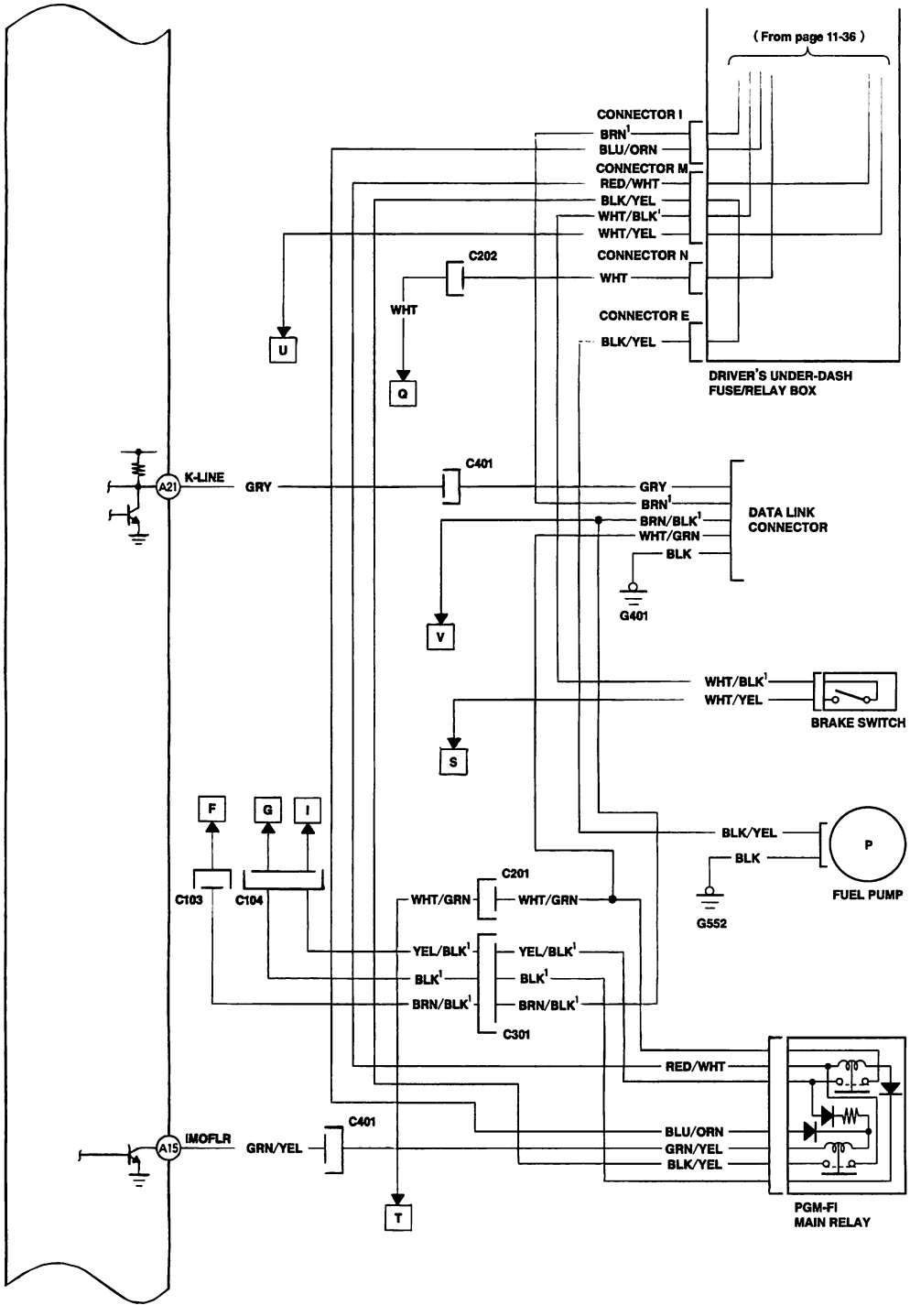
(From page 11-36)
CONNECTOR I
BRN[1]
BLU/ORN
CONNECTOR M
RED/WHT
BLK/YEL
WHT/BLK[1]
WHT/YEL
CONNECTOR N
WHT
CONNECTOR E
BLK/YEL
DRIVER'S UNDER-DASH FUSE/RELAY BOX
C202
WHT
U
Q
K-LINE
A21
GRY
C401
GRY
BRN[1]
BRN/BLK[1]
WHT/GRN
BLK
DATA LINK CONNECTOR
G401
V
WHT/BLK[1]
WHT/YEL
BRAKE SWITCH
S
F
G
I
C103
C104
BLK/YEL
BLK
P
FUEL PUMP
G552
C201
WHT/GRN
WHT/GRN
YEL/BLK[1]
BLK[1]
BRN/BLK[1]
YEL/BLK[1]
BLK[1]
BRN/BLK[1]
C301
RED/WHT
IMOFLR
A15
GRN/YEL
C401
BLU/ORN
GRN/YEL
BLK/YEL
T
PGM-FI MAIN RELAY

(cont'd)

BACK

Circuit Diagram (cont'd)

PCM Circuit Diagram (cont'd) — '98-99 models:

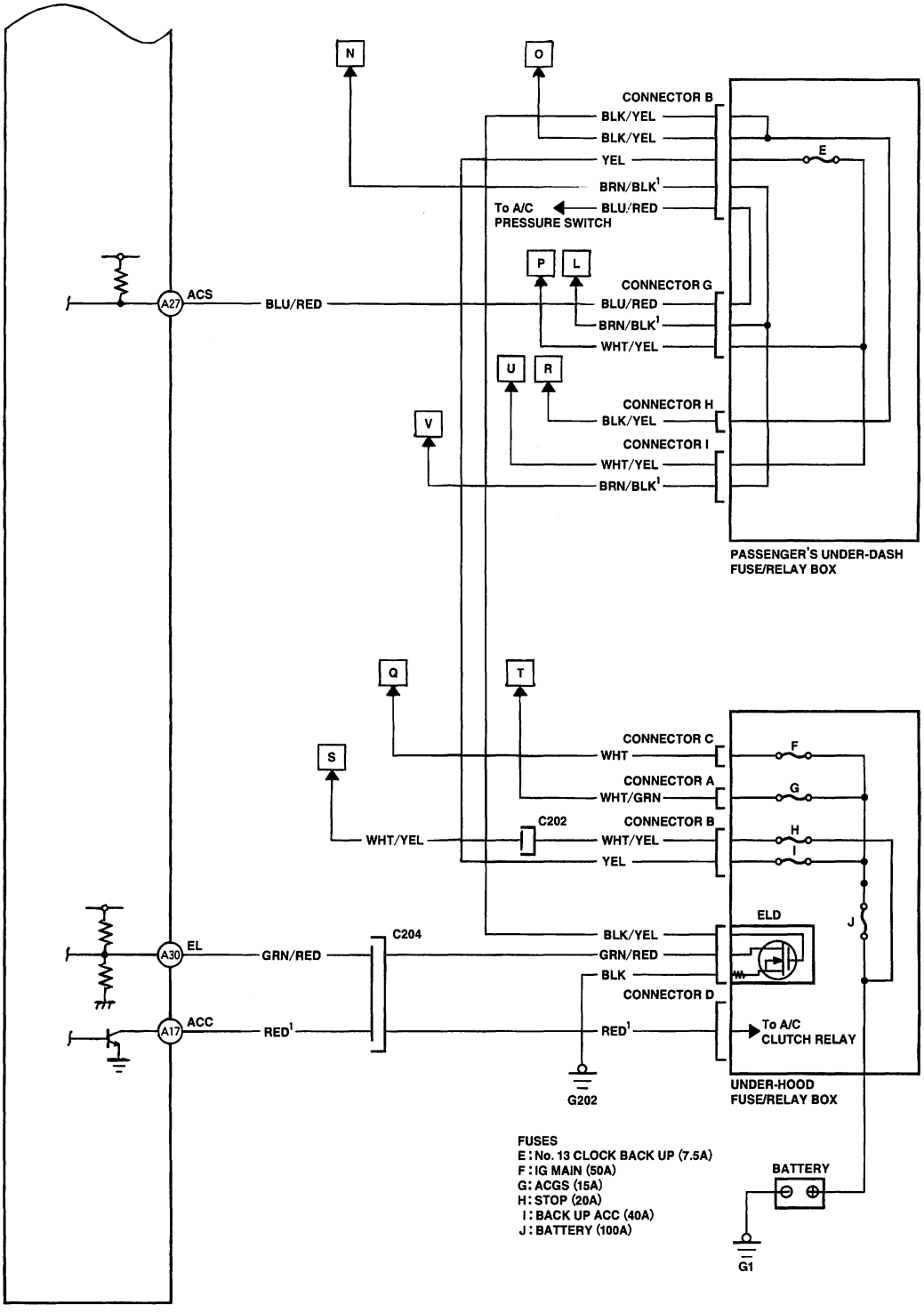

BACK

'00-02 models:

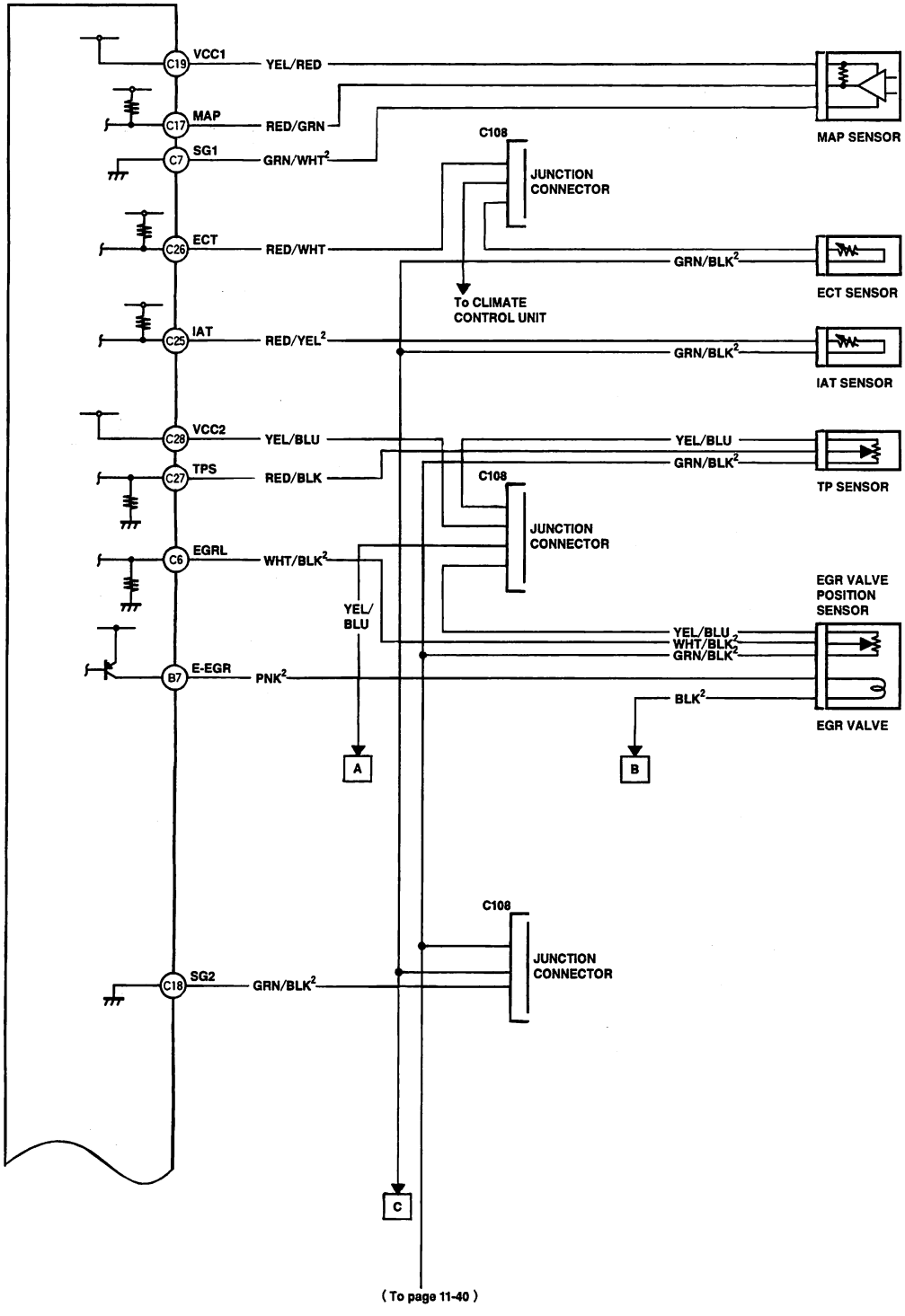

(cont'd)

BACK

Circuit Diagram (cont'd)

PCM Circuit Diagram (cont'd) — '00-02 models:

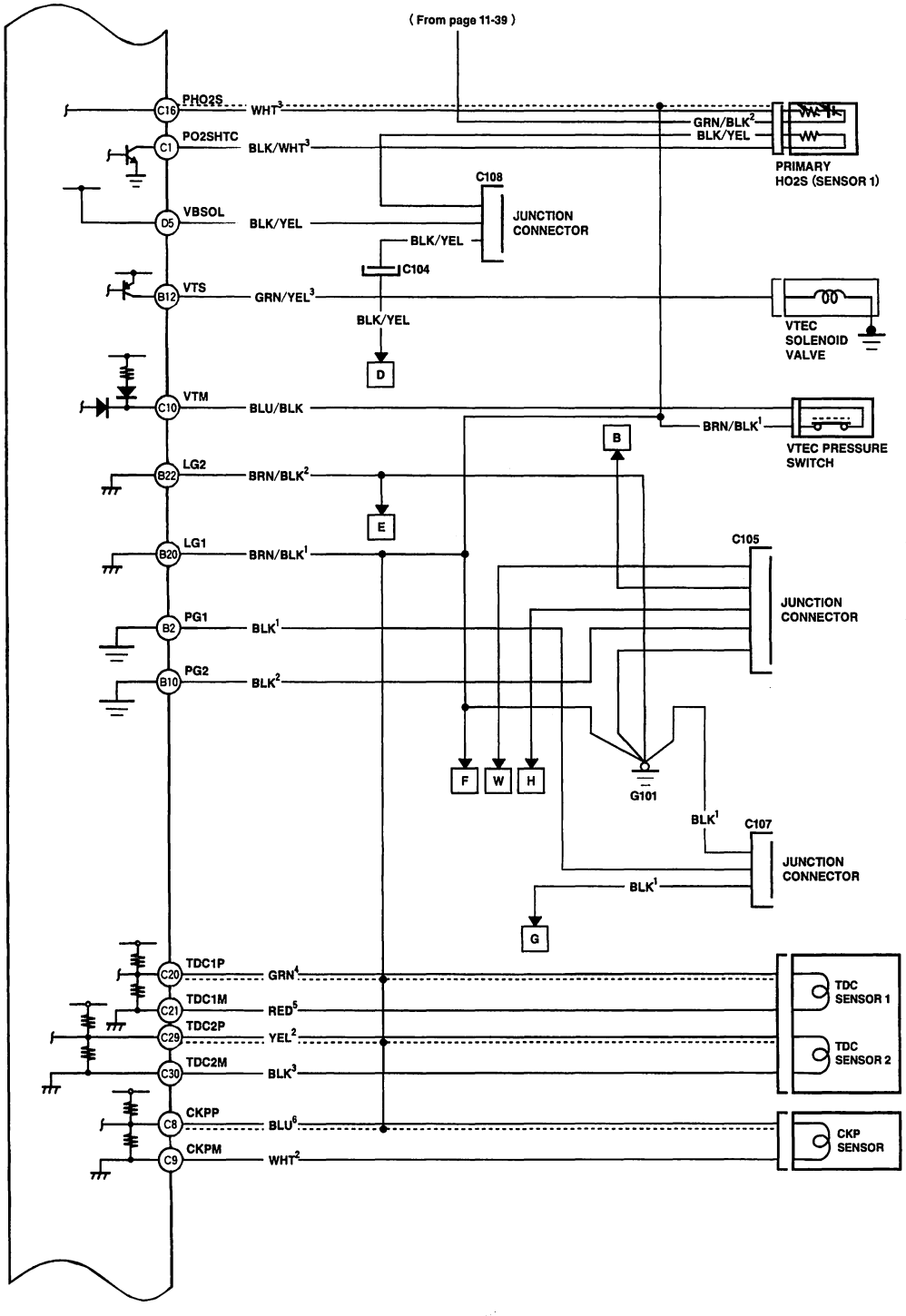

BACK

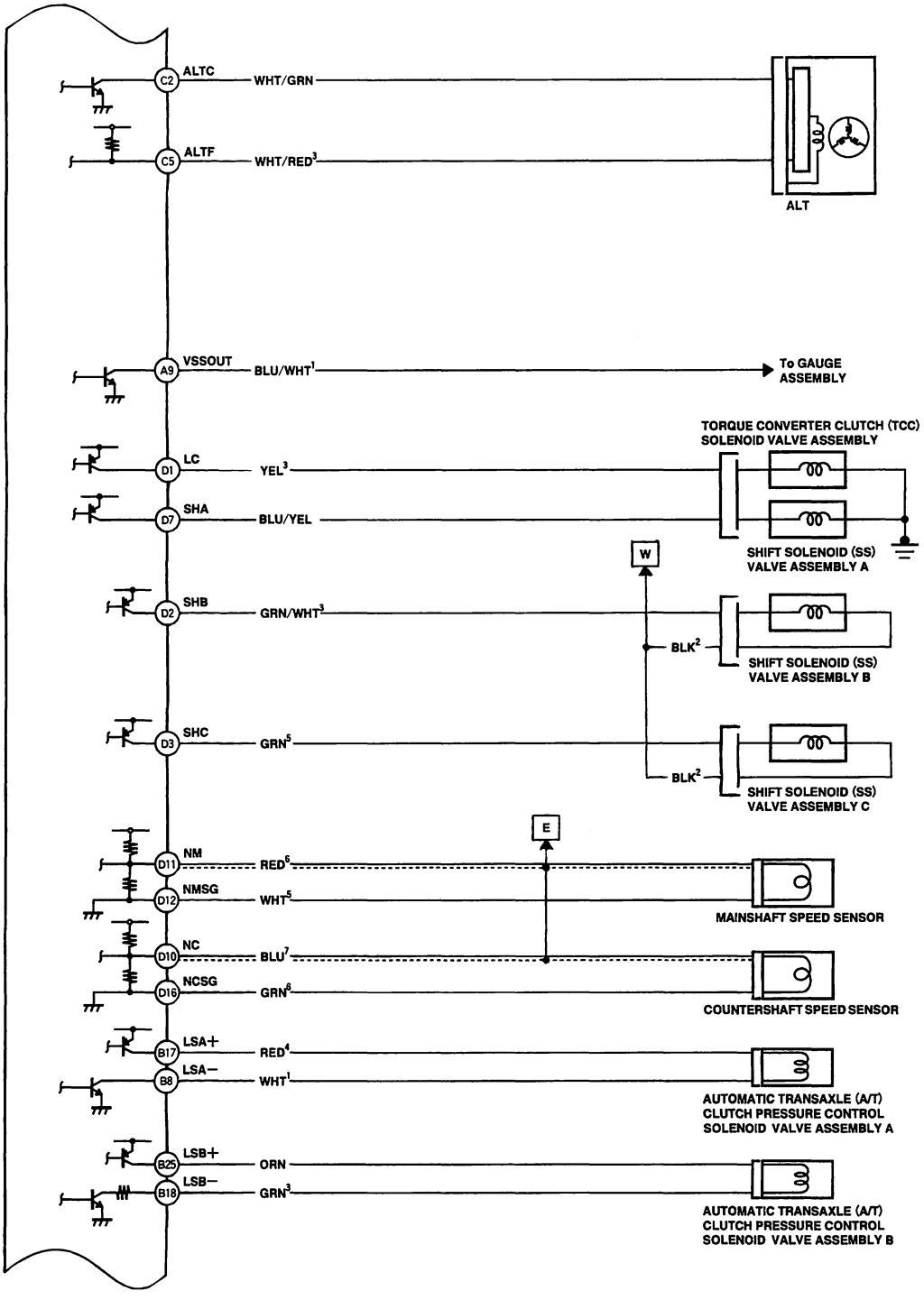
C2
ALTC
WHT/GRN
C5
ALTF
WHT/RED3
ALT
A9
VSSOUT
BLU/WHT1
To GAUGE ASSEMBLY
TORQUE CONVERTER CLUTCH (TCC) SOLENOID VALVE ASSEMBLY
D1
LC
YEL3
D7
SHA
BLU/YEL
W
SHIFT SOLENOID (SS) VALVE ASSEMBLY A
D2
SHB
GRN/WHT3
BLK2
SHIFT SOLENOID (SS) VALVE ASSEMBLY B
D3
SHC
GRN5
BLK2
SHIFT SOLENOID (SS) VALVE ASSEMBLY C
E
D11
NM
RED6
D12
NMSG
WHT5
MAINSHAFT SPEED SENSOR
D10
NC
BLU7
D16
NCSG
GRN6
COUNTERSHAFT SPEED SENSOR
B17
LSA+
RED4
B8
LSA−
WHT1
AUTOMATIC TRANSAXLE (A/T) CLUTCH PRESSURE CONTROL SOLENOID VALVE ASSEMBLY A
B25
LSB+
ORN
B18
LSB−
GRN3
AUTOMATIC TRANSAXLE (A/T) CLUTCH PRESSURE CONTROL SOLENOID VALVE ASSEMBLY B

(cont'd)

Circuit Diagram (cont'd)

PCM Circuit Diagram (cont'd) — '00-02 models:

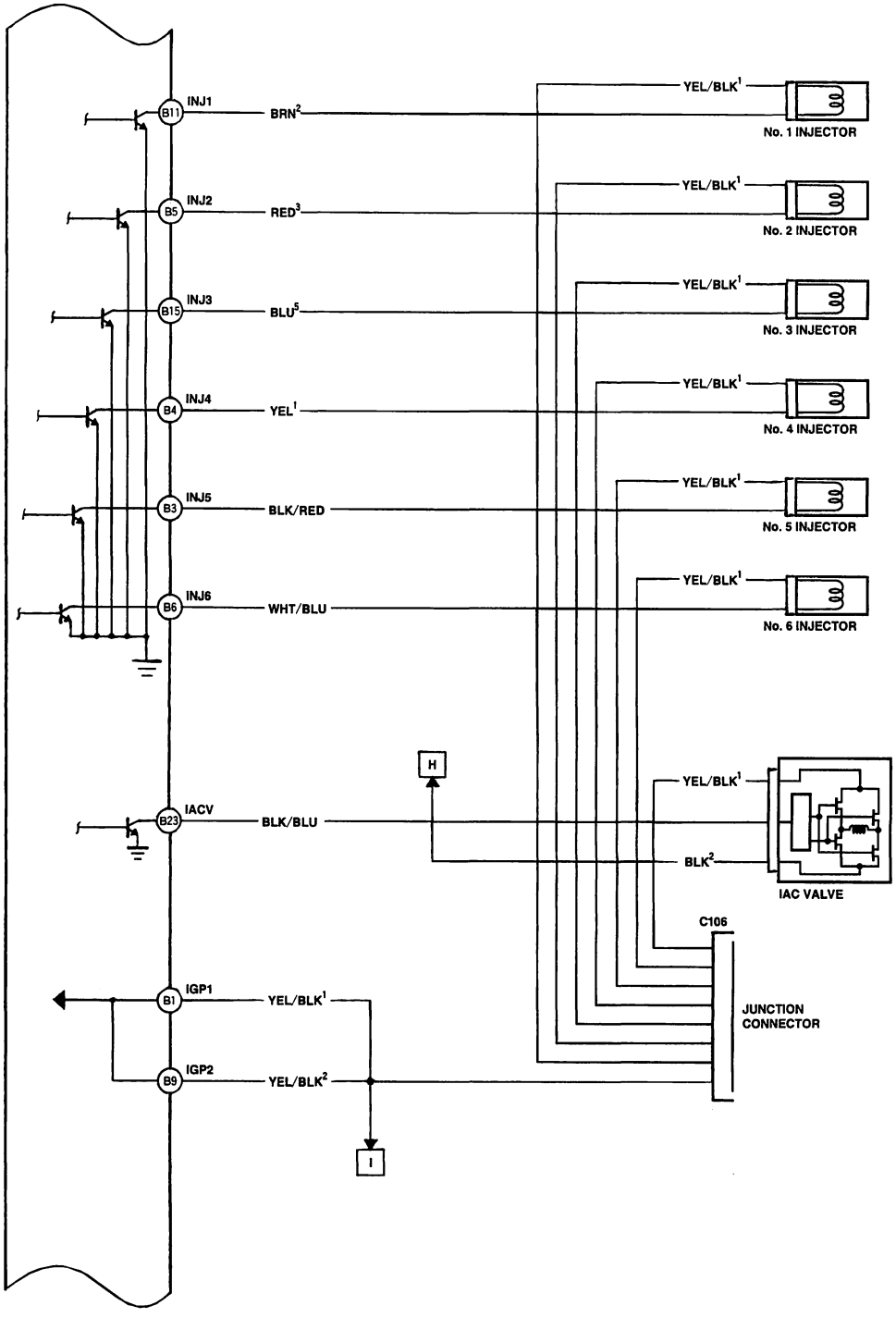

BACK

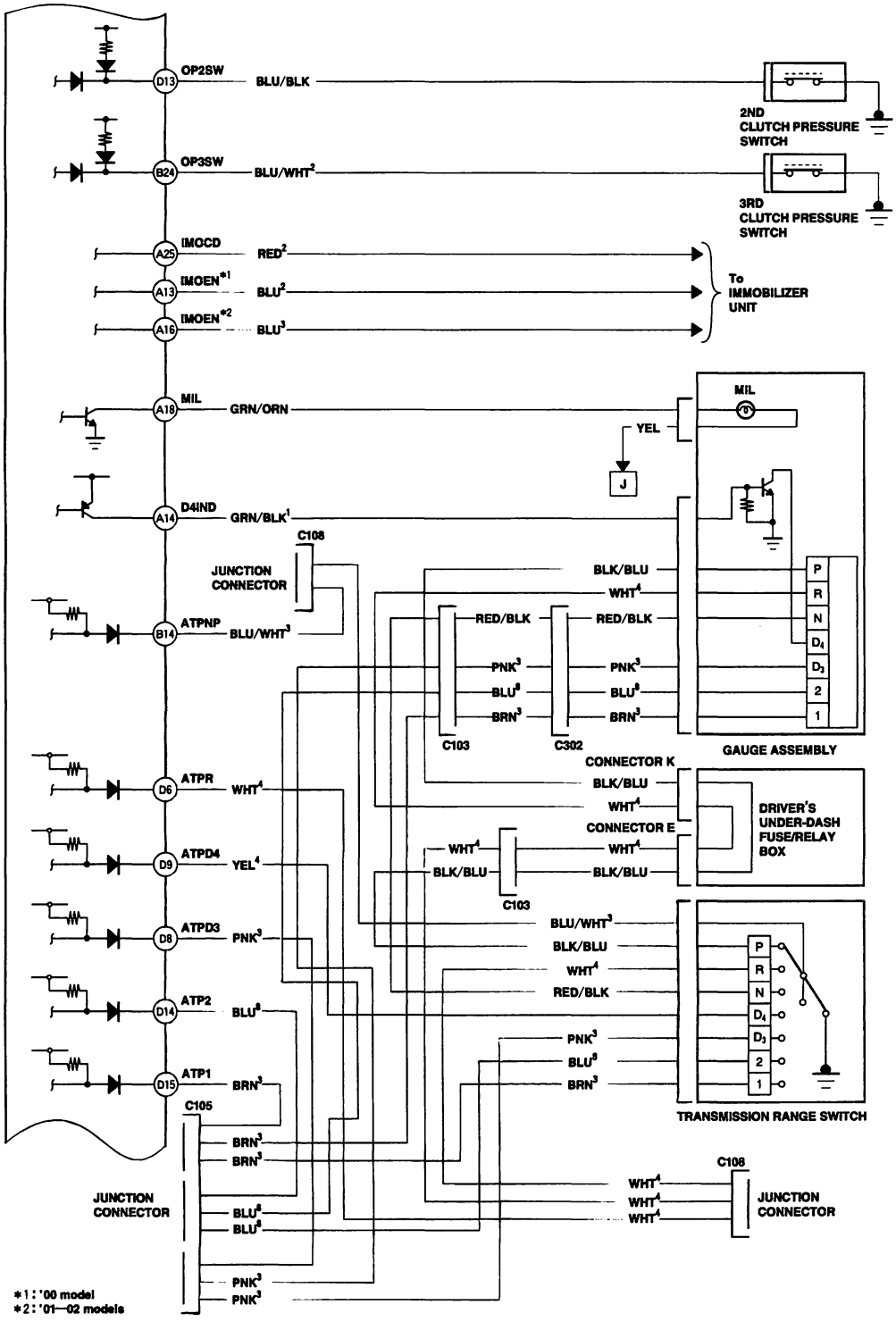
OP2SW
D13
BLU/BLK
2ND CLUTCH PRESSURE SWITCH
OP3SW
B24
BLU/WHT2
3RD CLUTCH PRESSURE SWITCH
IMOCD
A25
RED2
IMOEN*1
A13
BLU2
IMOEN*2
A16
BLU3
To IMMOBILIZER UNIT
MIL
A18
GRN/ORN
YEL
J
D4IND
A14
GRN/BLK1
C108
JUNCTION CONNECTOR
ATPNP
B14
BLU/WHT3
BLK/BLU
WHT4
RED/BLK
PNK3
BLU8
BRN3
C103
C302
P
R
N
D4
D3
2
1
GAUGE ASSEMBLY
ATPR
D6
WHT4
CONNECTOR K
CONNECTOR E
DRIVER'S UNDER-DASH FUSE/RELAY BOX
ATPD4
D9
YEL4
ATPD3
D8
PNK3
ATP2
D14
BLU8
ATP1
D15
BRN3
TRANSMISSION RANGE SWITCH
C105
JUNCTION CONNECTOR
*1 : '00 model
*2 : '01—02 models

(cont'd)

BACK

Circuit Diagram (cont'd)

PCM Circuit Diagram (cont'd) — '00-02 models:

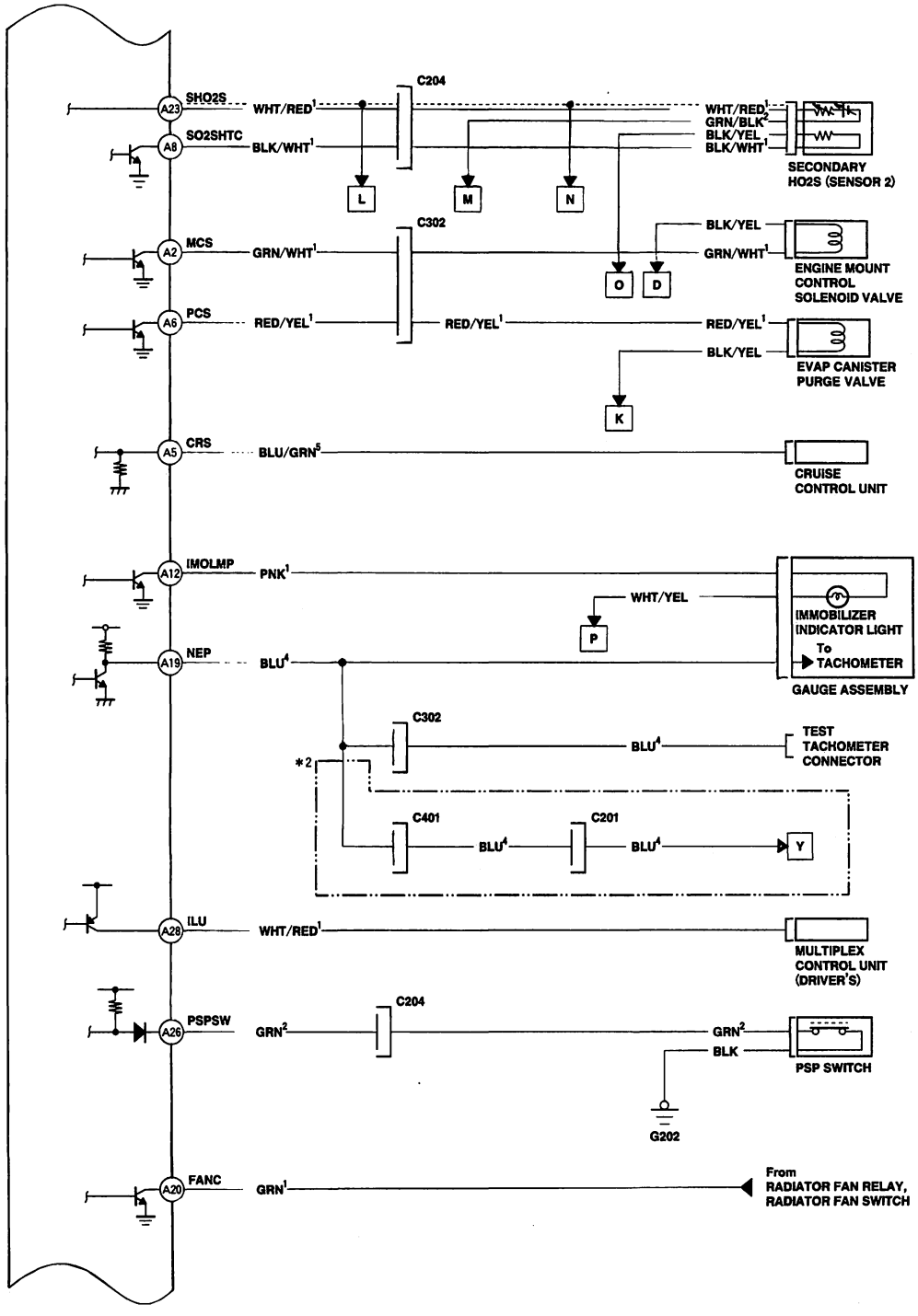

*2: '01—02 models

BACK

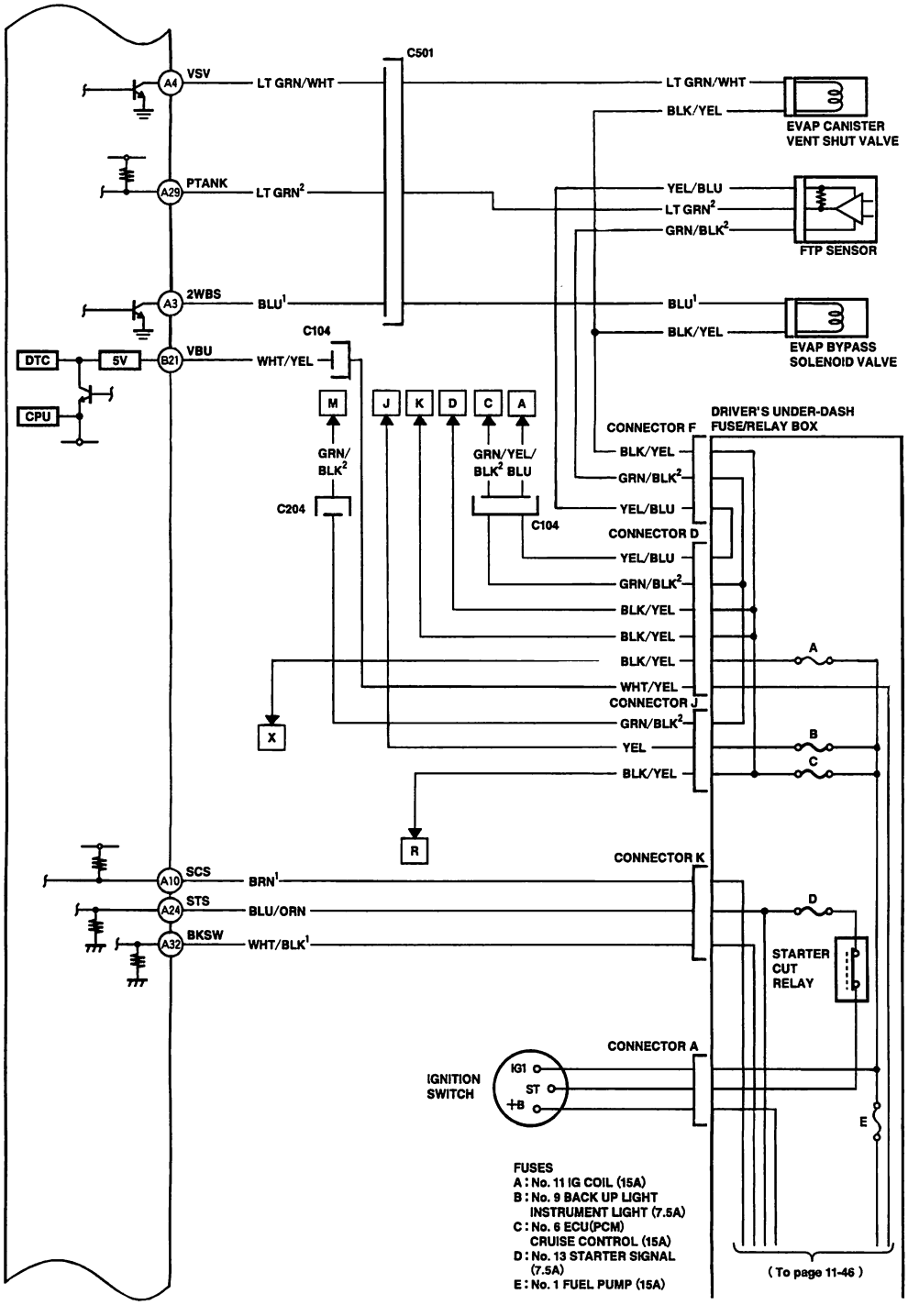
C501
VSV
A4
LT GRN/WHT
LT GRN/WHT
BLK/YEL
EVAP CANISTER VENT SHUT VALVE
PTANK
A29
LT GRN2
YEL/BLU
LT GRN2
GRN/BLK2
FTP SENSOR
2WBS
A3
BLU1
BLU1
BLK/YEL
EVAP BYPASS SOLENOID VALVE
C104
DTC
5V
B21
VBU
WHT/YEL
CPU
M
J
K
D
C
A
GRN/BLK2
GRN/YEL/BLK2 BLU
C204
C104
DRIVER'S UNDER-DASH FUSE/RELAY BOX
CONNECTOR F
BLK/YEL
GRN/BLK2
YEL/BLU
CONNECTOR D
YEL/BLU
GRN/BLK2
BLK/YEL
BLK/YEL
BLK/YEL
WHT/YEL
CONNECTOR J
GRN/BLK2
YEL
BLK/YEL
A
B
C
X
R
CONNECTOR K
SCS
A10
BRN1
STS
A24
BLU/ORN
BKSW
A32
WHT/BLK1
D
STARTER CUT RELAY
CONNECTOR A
IGNITION SWITCH
IG1
ST
+B
E
FUSES
A : No. 11 IG COIL (15A)
B : No. 9 BACK UP LIGHT
INSTRUMENT LIGHT (7.5A)
C : No. 6 ECU(PCM)
CRUISE CONTROL (15A)
D : No. 13 STARTER SIGNAL (7.5A)
E : No. 1 FUEL PUMP (15A)
(To page 11-46)

(cont'd)

Circuit Diagram (cont'd)

PCM Circuit Diagram (cont'd) — '00-02 models:

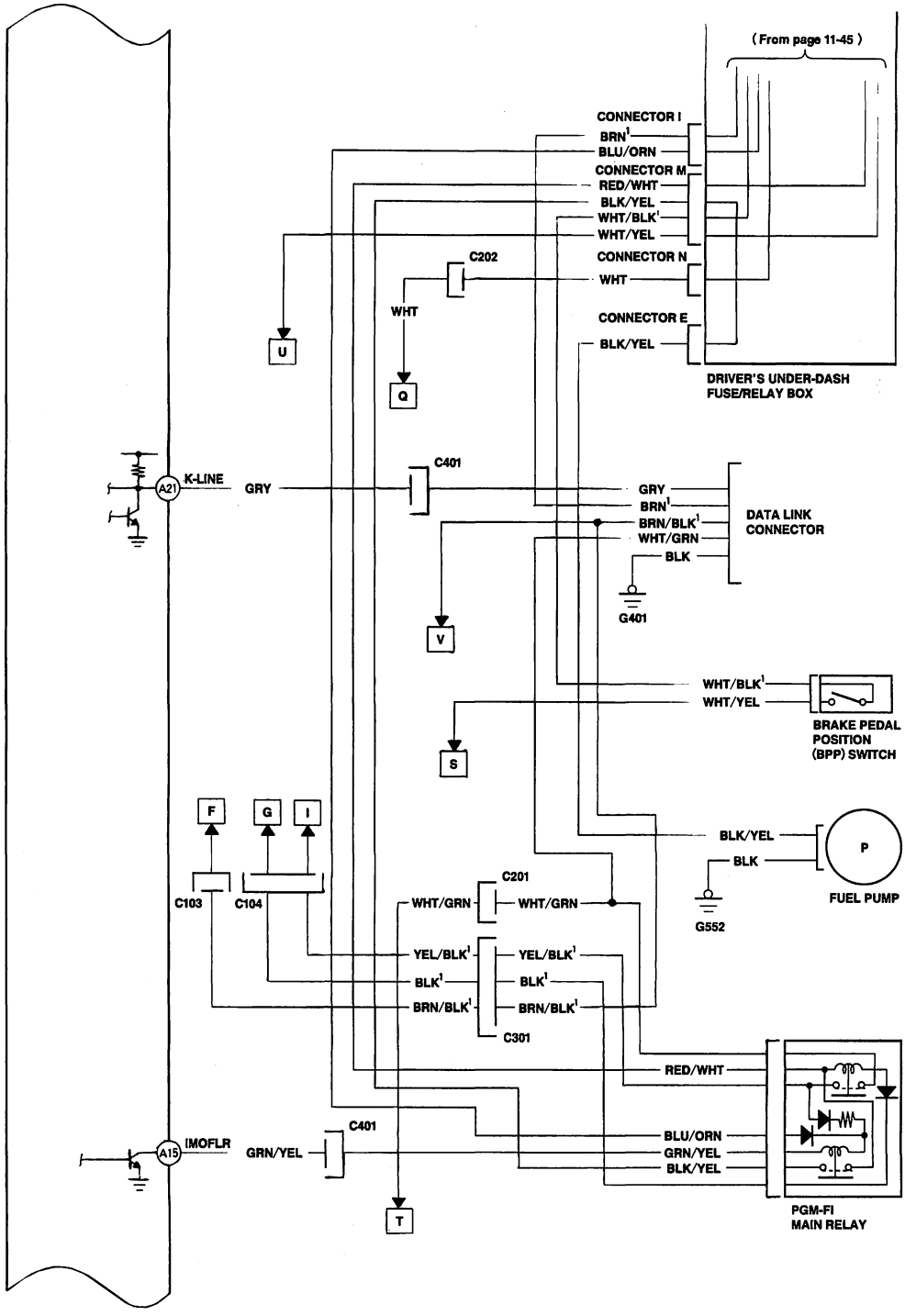

BACK

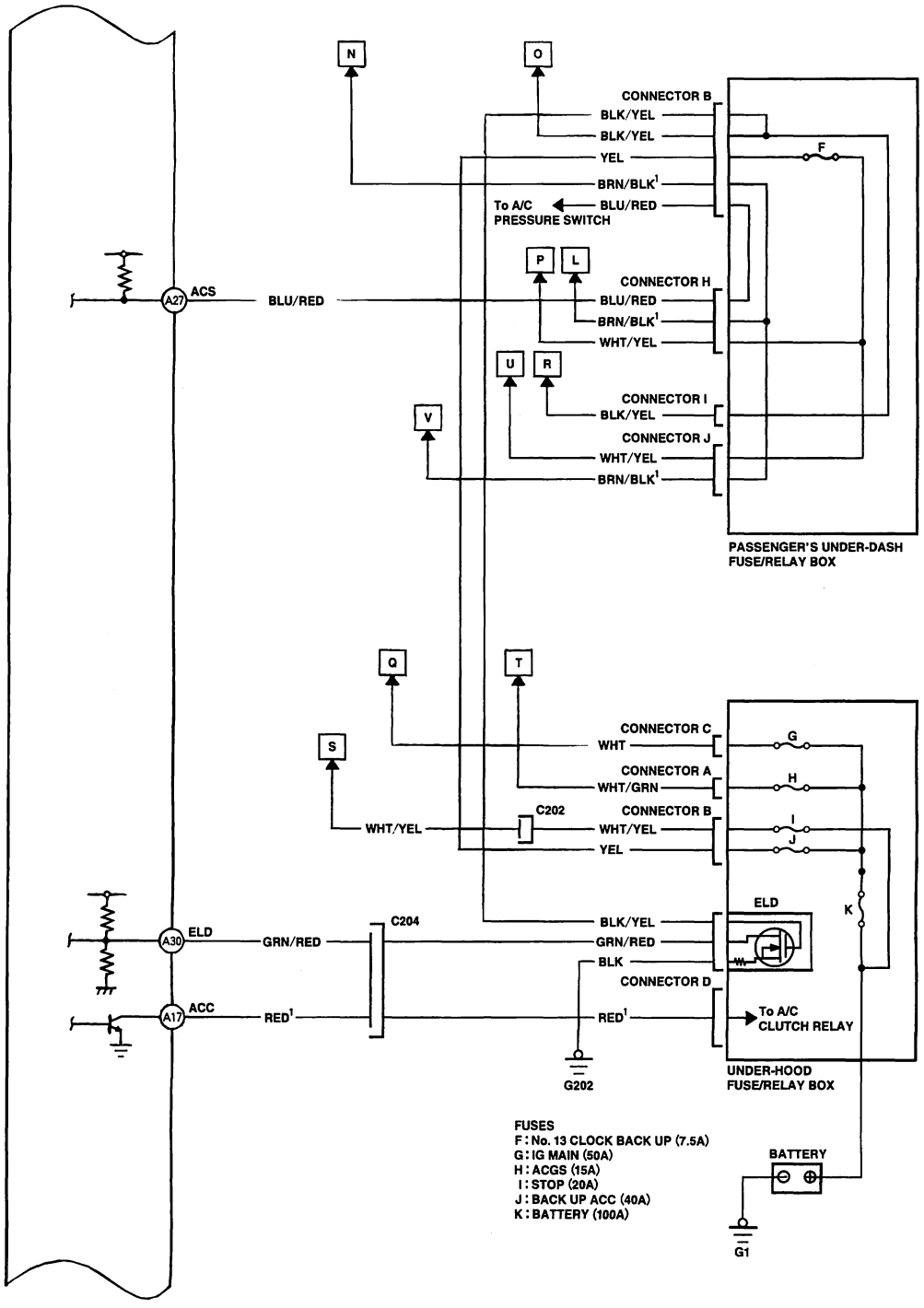
N
O
CONNECTOR B
BLK/YEL
BLK/YEL
YEL
BRN/BLK[1]
To A/C PRESSURE SWITCH
BLU/RED
F
P
L
CONNECTOR H
BLU/RED
BRN/BLK[1]
WHT/YEL
U
R
CONNECTOR I
BLK/YEL
V
CONNECTOR J
WHT/YEL
BRN/BLK[1]
PASSENGER'S UNDER-DASH FUSE/RELAY BOX
A27
ACS
BLU/RED
Q
T
S
CONNECTOR C
WHT
G
CONNECTOR A
WHT/GRN
H
C202
CONNECTOR B
WHT/YEL
WHT/YEL
I
J
YEL
ELD
K
A30
ELD
GRN/RED
C204
BLK/YEL
GRN/RED
BLK
CONNECTOR D
A17
ACC
RED[1]
RED[1]
To A/C CLUTCH RELAY
G202
UNDER-HOOD FUSE/RELAY BOX
FUSES
F : No. 13 CLOCK BACK UP (7.5A)
G : IG MAIN (50A)
H : ACGS (15A)
I : STOP (20A)
J : BACK UP ACC (40A)
K : BATTERY (100A)
BATTERY
G1

(cont'd)

BACK

Circuit Diagram (cont'd)

PCM Circuit Diagram (cont'd) — '00-02 models:

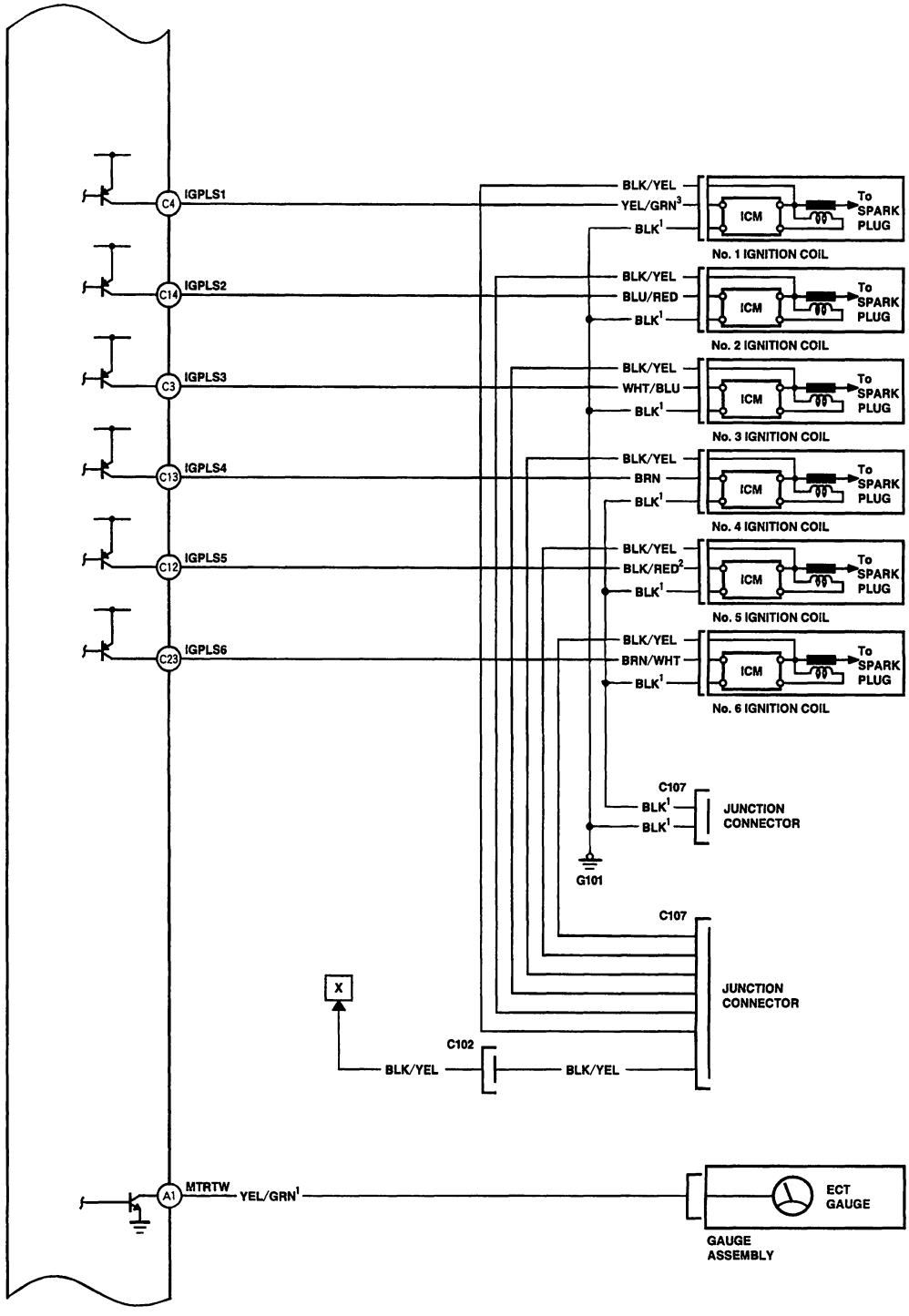

BACK

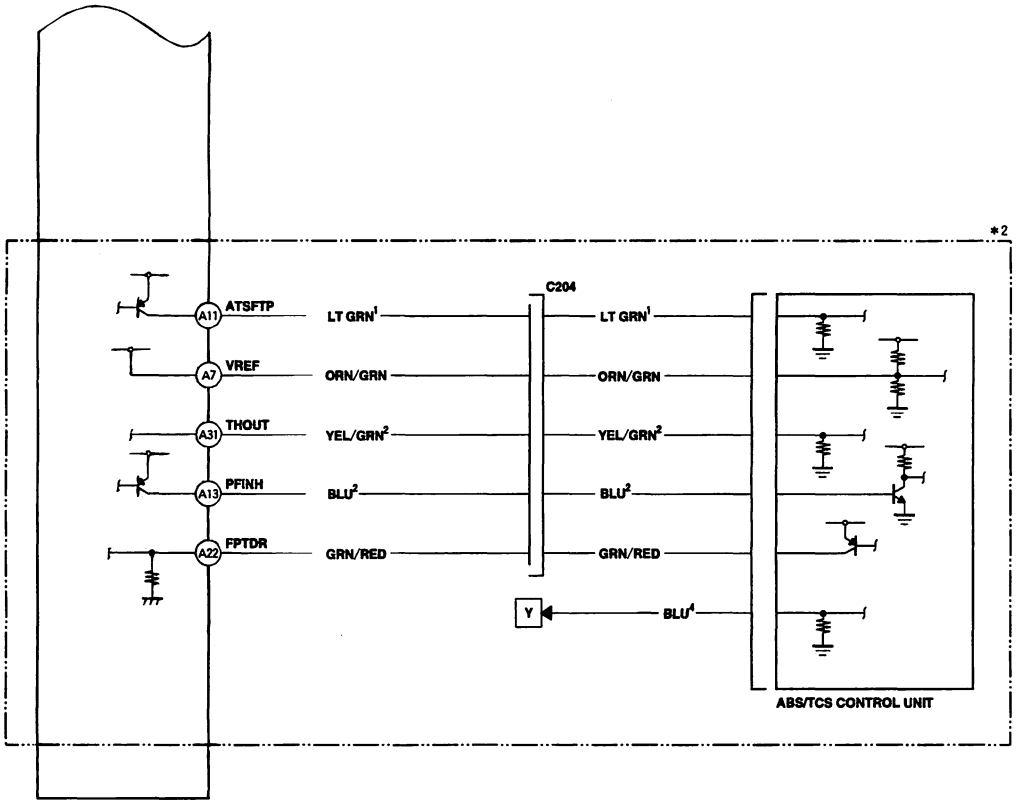

*2: '01—02 models

Component Location Index

NOTE: The illustration shows '00-02 models.

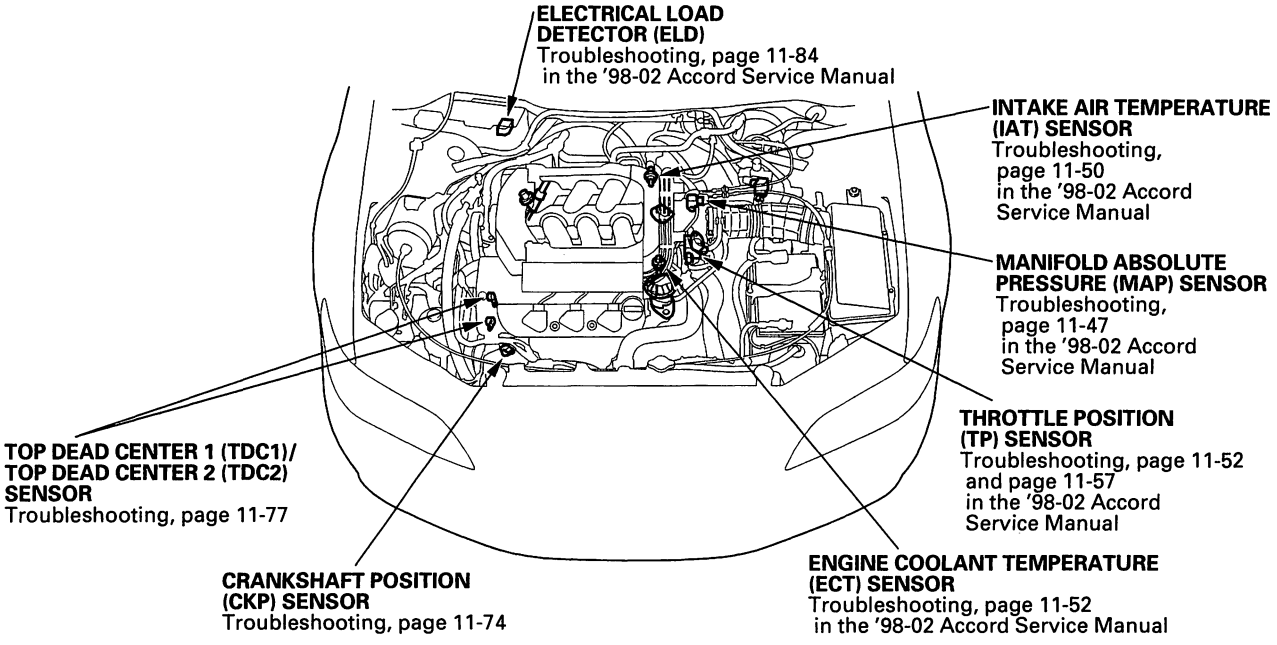

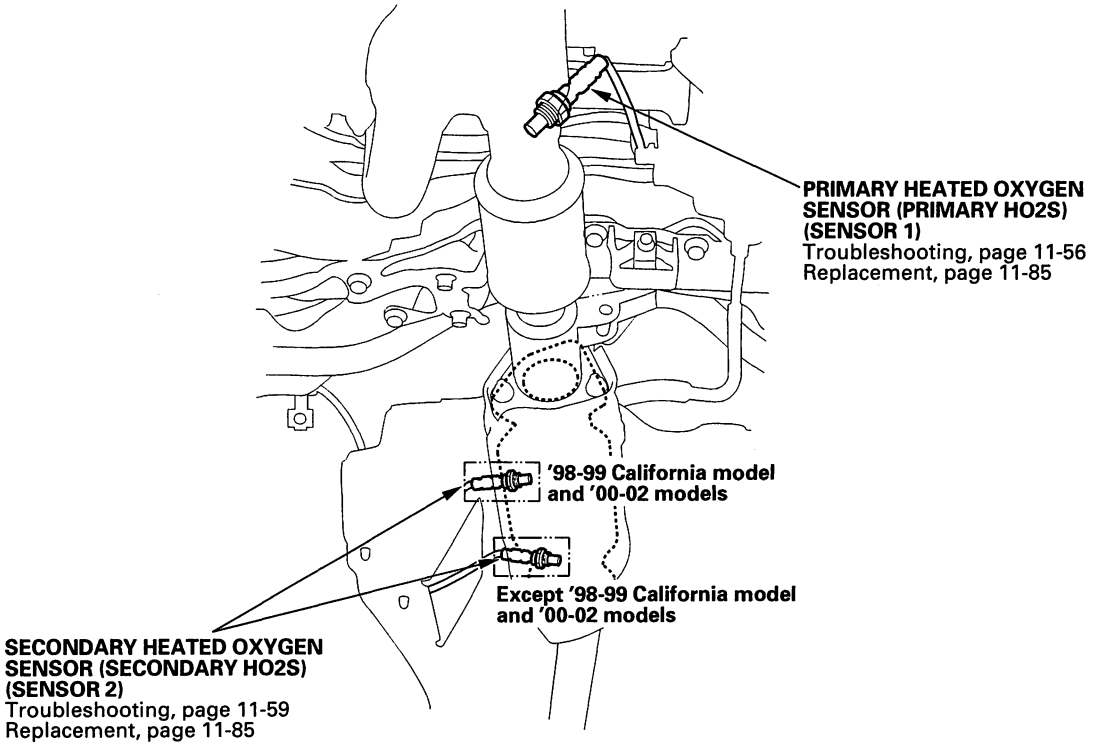

BACK

NOTE: The illustration shows '00-02 models.

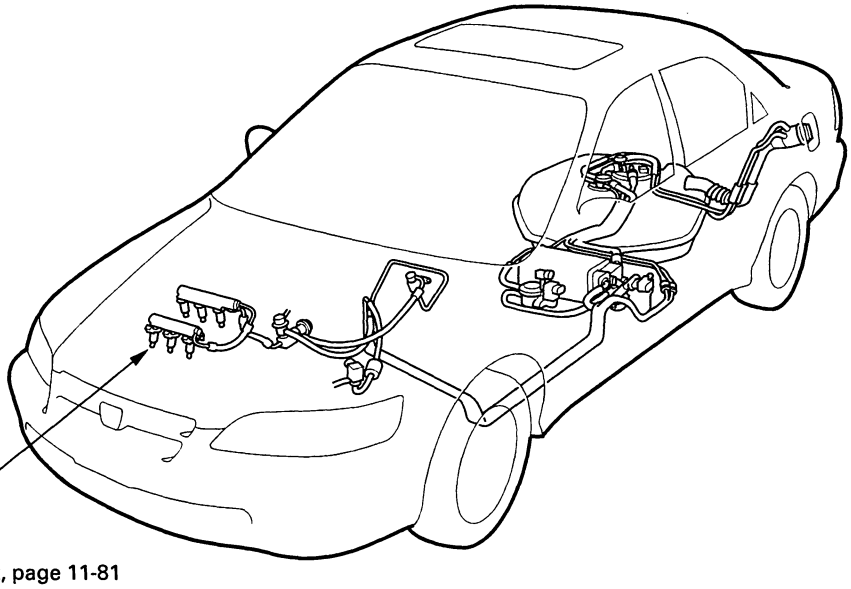

INJECTORS
Replacement, page 11-81

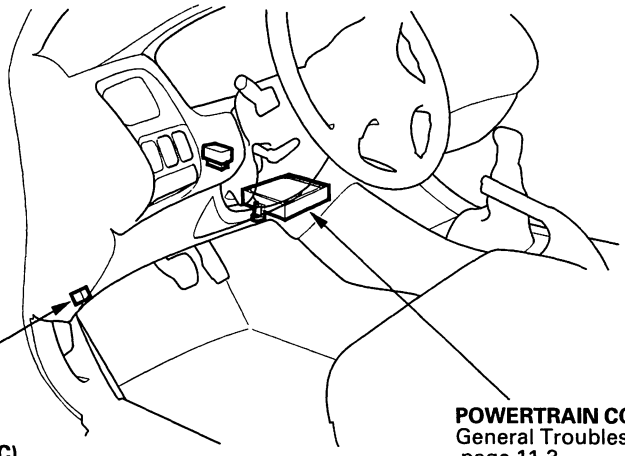

DATA LINK CONNECTOR (DLC)
General Troubleshooting Information,
page 11-3
in the '98-02 Accord Service Manual
Troubleshooting, page 11-95
in the '98-02 Accord Service Manual

POWERTRAIN CONTROL MODULE (PCM)
General Troubleshooting Information,
page 11-3
in the '98-02 Accord Service Manual
Troubleshooting, page 11-90
in the '98-02 Accord Service Manual

DTC Troubleshooting

DTC P0122: TP Sensor Circuit Low Voltage

1. Start the engine. Hold the engine at 3,000 rpm with no load (in Park or neutral) until the radiator fan comes on, then turn the ignition switch OFF.

2. Turn the ignition switch ON (II).

3. Check the throttle position with the scan tool.

   Is there approx. 10% or 0.5 V when the throttle is fully closed and approx. 90% or 4.5 V when the throttle is fully opened?

   YES—Intermittent failure, system is OK at this time. Check for poor connections or loose wires at the TP sensor and the PCM.■

   NO—Go to step 4.

4. Turn the ignition switch OFF.

5. Disconnect the TP sensor connector.

6. Turn the ignition switch ON (II).

7. Measure voltage between TP sensor 3P connector terminals No. 1 and No. 3.

TP SENSOR 3P CONNECTOR

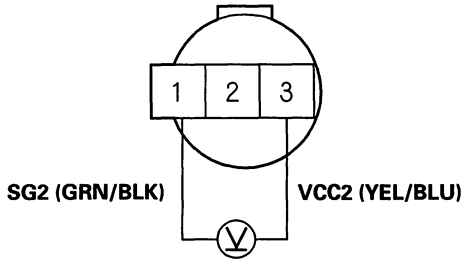

Wire side of female terminals

Is there approx. 5 V?

YES—Go to step 8.

NO—Go to step 19.

8. Turn the ignition switch OFF.

9. At the sensor side, measure resistance between TP sensor 3P connector terminals No. 1 and No. 2 with the throttle fully closed.

TP SENSOR 3P CONNECTOR

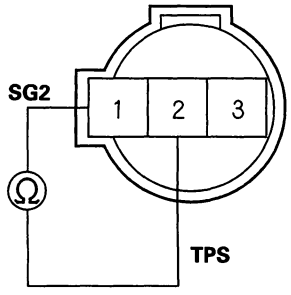

Terminal side of male terminals

Is there approx. 0.5—0.9 kΩ ?

YES—Go to step 10.

NO—Replace the throttle body (The TP sensor is not available separately).■

10. Measure resistance between TP sensor 3P connector terminals No. 2 and No. 3 with the throttle fully closed.

TP SENSOR 3P CONNECTOR

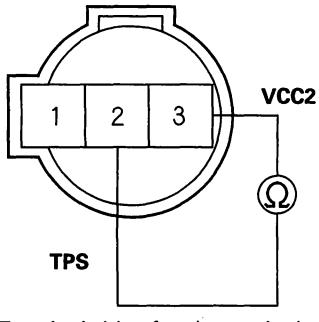

Terminal side of male terminals

Is there approx. 4.5kΩ ?

YES—Go to step 11.

NO—Replace the throttle body (The TP sensor is not available separately).■

11. Disconnec the PCM connector C (31P) connector.

BACK

12. At the wire harness side, check for continuity between TP sensor 3P connector terminal No. 2 and body ground.

TP SENSOR 3P CONNECTOR

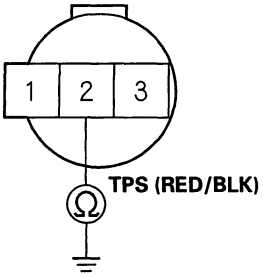

Wire side of female terminals

Is there continuity?

YES—Repair short in the wire between the PCM (C 27) and the TP sensor. ■

NO—Go to step 13 ('01-02 models), or step 17 ('98-00 models).

13. Disconnect PCM connector A (32P).

14. Check for continuity between body ground and PCM connector terminal A31.

PCM CONNECTOR A (32P)

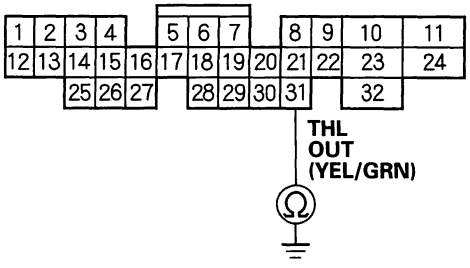

Wire side of female terminals

Is there continuity?

YES—Go to step 15.

NO—Go to step 17.

15. Disconnect the ABS/TCS control unit 16P connector.

16. Check for continuity between body ground and PCM connector terminal A31.

PCM CONNECTOR A (32P)

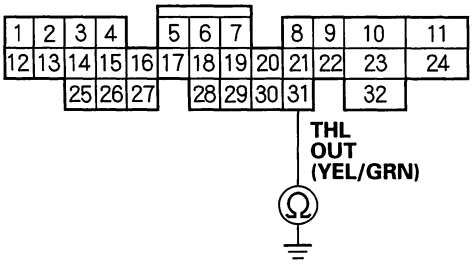

Wire side of female terminals

Is there continuity?

YES—Repair short in the wire between the ABS/TCS control unit and PCM (A31). ■

NO—Substitute a known-good ABS/TCS control unit and recheck. If the symptom/indication goes away, replace the original ABS/TCS control unit. ■

17. Connect PCM connector terminal C27 and body ground with a jumper wire.

PCM CONNECTOR C (31P)

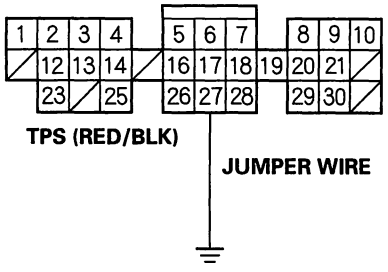

Wire side of female terminals

(cont'd)

DTC Troubleshooting (cont'd)

18. At the wire harness side, check for continuity between TP sensor 3P connector terminal No. 2 and body ground.

TP SENSOR 3P CONNECTOR

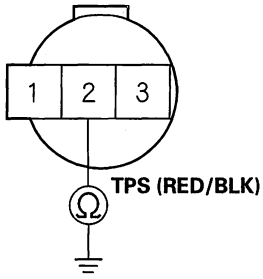

Wire side of female terminals

Is there continuity?

YES—Substitute a known-good PCM and recheck. Refer to the '98-02 Accord Service Manual (see page 11-5). If the prescribed voltage is now available, replace the original PCM. ■

NO—Repair open in the wire between the PCM (C27) and the TP senso r. ■

19. Measure voltage between PCM connector terminals C18 and C28.

PCM CONNECTOR C (31P)

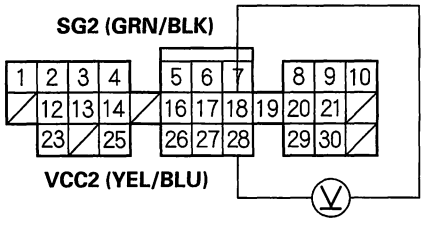

Wire side of female terminals

Is there about 5 V?

YES—Repair open in the wire between the PCM (C28) and the TP sensor. ■

NO—Substitute a known-good PCM and recheck. Refer to the '98-02 Accord Service Manual (see page 11-5). If voltage is normal, replace the original PCM. ■

BACK

DTC P0128: Range/ Performance Problem in Thermostat

NOTE: If the DTCs listed below are stored at the same time as DTC P0128, troubleshoot those DTCs first, then recheck for P0128.

P0107, P0108, P1129: MAP Sensor
P1106, P1107, P1108: Barometric Pressure Circuit
P1259: VTEC system
P0401: EGR Flow Insufficient
P1491: EGR Valve Position Insufficient
P1498: EGR Valve Position Sensor High Voltage
P0116, P0117, P0118: Engine Coolant Temperature Circuit
P0112, P0113: Intake Air Tenperature Circuit
P0335, P0336, P1359: Crankshaft Position Sensor
P0300: Random Misfire
P0301, P0302, P0303, P0304, P0305, P0306: Cylinder 1,2,3,4,5 or 6 Misfire Detected
P0505 :Idle Control System Malfuction
P1519: Idle Air Control Valve

DTC P0128 can occasionally set when the hood is opened.

1. Check the engine coolant level.

   Is the engine coolant level low?

   YES—Refill the engine coolant. If necessary, check the cooling system.■

   NO—Go to step 2.

2. Turn the ignition switch ON (II), and make sure the A/C is off.

3. Check the radiator fan.

   Dose the radiator fan keep running?

   YES—Check the radiator fan circuit (see page 10-16), radiator fan switch circuit (see page 10-16), and the radiator fan switch (see page 10-16).

   - If they are OK, substitute the PCM and recheck, refer to the '98-02 Accord Service Manual (see page 11-5).
   - If the symptom/indicator goes away, replace the original PCM.■

   NO—Test the thermostat, refer to the '98-02 Accord Service Manual (see page 10-9).■

DTC Troubleshooting (cont'd)

DTC P0131: Primary HO2S(Sensor 1) Circuit Low Voltage

1. Reset the PCM.

2. Start the engine. Hold the engine at 3,000 rpm with no load (in Park or neutral) until the radiator fan comes on.

3. Check the primary HO2S (Sensor 1) output voltage with the scan tool during acceleration using wide open throttle.

   Does the voltage stay at 0.5 V or less?

   YES—Go to step 4.

   NO—Intermittent failure, system is OK at this time. Check for poor connections or loose wires at the primary HO2S (Sensor 1) and the PCM.■

4. Check the fuel pressure (see page 11-90).

   Is it normal?

   YES—Go to step 5.

   NO—Repair the fuel supply system.■

5. Turn the ignition switch OFF.

6. Disconnect the primary HO2S (Sensor 1) 4P connector.

7. Start the engine and let it idle.

8. Check the primary HO2S (Sensor 1) output voltage with the scan tool.

   Does it stay at 0.5 V or less?

   YES—Go to step 9.

   NO—Replace the primary HO2S (Sensor 1).■

9. Turn the ignition switch OFF.

10. Disconnect PCM connector C (31P).

11. Check for continuity between primary HO2S (Sensor 1) 4P connector terminal No. 1 and body ground.

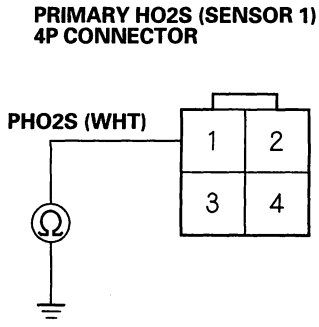

Wire side of female terminals

Is there continuity?

YES—Repair short in the wire between the PCM (C16) and the primary HO2S (Sensor 1).■

NO—Substitute a known-good PCM and recheck. Refer to the '98-02 Accord Service Manual (see page 11-5). If the symptom/indication goes away, replace the original PCM.■

BACK

DTC P0132: Primary HO2S (Sensor 1) Circuit High Voltage

1. Reset the PCM.

2. Start the engine. Hold the engine at 3,000 rpm with no load (in Park or neutral) until the radiator fan comes on.

3. Check the primary HO2S (Sensor 1) output voltage with the scan tool.

   Does the voltage stay at 0.9 V or more?

   YES—Go to step 4.

   NO—Intermittent failure, system is OK at this time. Check for poor connections or loose wires at the primary HO2S (Sensor 1) and the PCM.■

4. Turn the ignition switch OFF.

5. Disconnect the primary HO2S (Sensor 1) 4P connector.

6. Connect primary HO2S (Sensor 1) 4P connector terminals No. 1 and No. 2 with a jumper wire.

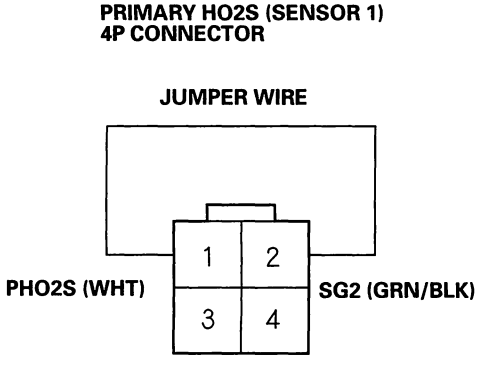

Wire side of female terminals

7. Turn the ignition switch ON (II).

8. Check the primary HO2S (Sensor 1) output voltage with the scan tool.

   Is there 0.9 V or more?

   YES—Go to step 9.

   NO—Replace the primary HO2S (Sensor 1).■

9. Turn the ignition switch OFF.

10. Connect PCM connector terminals C16 and C18 with a jumper wire.

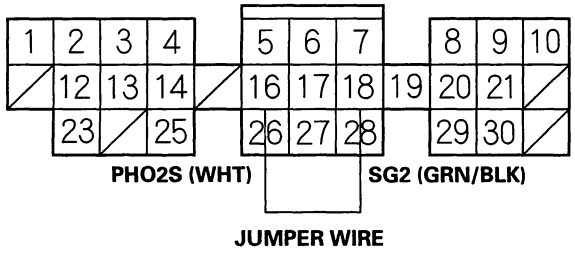

Wire side of female terminals

11. Turn the ignition switch ON (II).

12. Check the primary HO2S (Sensor 1) output voltage with the scan tool.

    Is there 0.9 V or more?

    YES—Substitute a known-good PCM and recheck. Refer to the '98-02 Accord Service Manual (see page 11-5). If the symptom/indication goes away, replace the original PCM.■

    NO—Repair open in the wire between the PCM (C16 or C18) and the primary HO2S (Sensor 1).■

DTC Troubleshooting (cont'd)

DTC P0133: Primary HO2S (Sensor 1) Circuit Slow Response

NOTE: If DTC P0131, P0132 and/or P0135 are stored at the same time as DTC P0133, troubleshoot those DTCs first, then recheck for DTC P0133.

1. Reset the PCM.

2. Start the engine. Hold the engine at 3,000 rpm with no load (in Park or neutral) until the radiator fan comes on.

3. Test-drive under following conditions.

   - 55 mph (89 km/h) steady speed
   - Transmission in D4 position
   - Until readiness code or Temporary DTC P0133 comes on

4. Check for a Temporary DTC with the scan tool.

   Is Temporary DTC P0133 indicated?

   YES—Replace the primary HO2S (Sensor 1).■

   NO—Intermittent failure, system is OK at this time. Check for poor connections or loose wires at C104 (located at the right side of the engine compartment), the primary HO2S (Sensor 1) and the PCM.■

BACK

DTC P0137: Secondary HO2S (Sensor 2) Circuit Low Voltage

1. Reset the PCM.

2. Start the engine. Hold the engine at 3,000 rpm with no load (in Park or neutral) until the radiator fan comes on.

3. Check the secondary HO2S (Sensor 2) output voltage at 3,000 rpm with the scan tool.

   Does the voltage stay at 0.3 V or less?

   YES—Go to step 4.

   NO—Intermittent failure, system is OK at this time. Check for poor connections or loose wires at C204 (located under the right side of the dash), C104 (located at the right side of the engine compartment), the secondary HO2S (Sensor 2) and the PCM.■

4. Turn the ignition switch OFF.

5. Disconnect the secondary HO2S (Sensor 2) 4P connector.

6. Start the engine.

7. Check the secondary HO2S (Sensor 2) output voltage with the scan tool.

   Does the voltage stay at 0.3 V or less?

   YES—Go to step 8.

   NO—Replace the secondary HO2S (Sensor 2).■

8. Turn the ignition switch OFF.

9. Disconnect PCM connector A (32P).

10. Check for continuity between the secondary HO2S (Sensor 2) 4P connector terminal No. 2 and body ground.

SECONDARY HO2S (SENSOR 2) 4P CONNECTOR

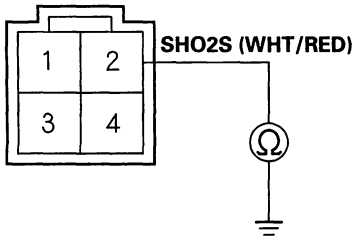

Terminal side of male terminals

Is there continuity?

YES—Repair short in the wire between the PCM (A23) and the secondary HO2S (Sensor 2).■

NO—Substitute a known-good PCM and recheck. Refer to the '98-02 Accord Service Manual (see page 11-5). If the symptom/indication goes away, replace the original PCM.

DTC Troubleshooting (cont'd)

DTC P0138: Secondary HO2S (Sensor 2) Circuit High Voltage

1. Reset the PCM.

2. Start the engine. Hold the engine at 3,000 rpm with no load (in Park or neutral) until the radiator fan comes on.

3. Check the secondary HO2S (Sensor 2) output voltage at 3,000 rpm with the scan tool.

   Does the voltage stay at 0.8 V or more?

   YES—Go to step 4.

   NO—Intermittent failure, system is OK at this time. Check for poor connections or loose wires at C204 (located under the right side of the dash), C104 (located at the right side of the engine compartment), the secondary HO2S (Sensor 2) and the PCM.■

4. Turn the ignition switch OFF.

5. Disconnect the secondary HO2S (Sensor 2) 4P connector.

6. Connect secondary HO2S (Sensor 2) 4P connector terminals No. 1 and No. 2 with a jumper wire.

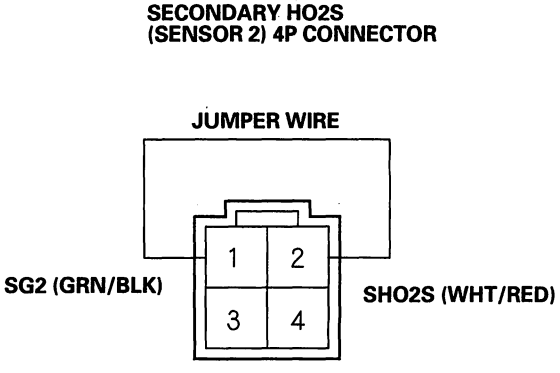

Terminal side of male terminals

7. Turn the ignition switch ON (II).

8. Check the secondary HO2S (Sensor 2) output voltage with the scan tool.

   Is there 0.8 V or more?

   YES—Go to step 9.

   NO—Replace the secondary HO2S (Sensor 2).■

9. Turn the ignition switch OFF.

10. Connect PCM connector terminals A23 and C18 with a jumper wire.

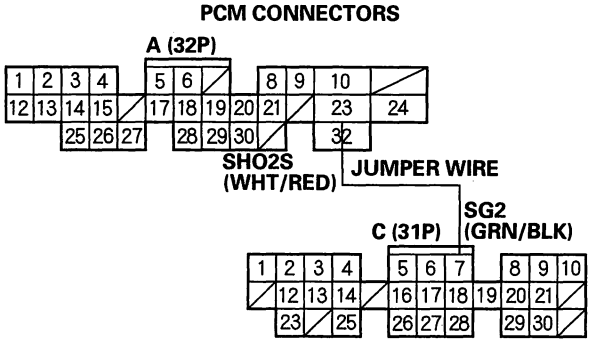

Wire side of female terminals

11. Turn the ignition switch ON (II).

12. Check the secondary HO2S (Sensor 2) output voltage with the scan tool.

    Is there 0.8 V or more?

    YES—Substitute a known-good PCM and recheck. Refer to the '98-02 Accord Service Manual (see page 11-5). If the symptom/indication goes away, replace the original PCM.■

    NO—Repair open in the wire between the PCM (A23 or C18) and the secondary HO2S (Sensor 2).■

BACK

DTC P0135: Primary HO2S (Sensor 1) Heater Circuit Malfunction

DTC P0141: Secondary HO2S(Sensor 2) Heater Circuit Malfunction

NOTE: Information marked with an asterisk (*) applies to DTC P0141.

1. Reset the PCM.

2. Start the engine.

   Is DTC P0135 or P0141 indicated?

   YES—Go to step 3.

   NO—Intermittent failure, system is OK at this time. Check for poor connections or loose wires at C204 (located under the right side of the dash), C101 or C102 (located at the left side of the engine compartment), the Primary HO2S (Sensor 1), the Secondary HO2S (Sensor 2), and the ECM/PCM. ■

3. Check the No. 6 ECU (PCM) CRUSE CONTROL (15A) fuse in the driver's under-dash fuse/relay box.

   Is DTC P0135 or P0141 indicated?

   YES—Go to step 4.

   NO—Replace the fuse and retest. ■

4. Turn the ignition switch OFF.

5. Disconnect the HO2S (primary or secondary *) (Sensor 1 or Sensor 2 *) 4P connector.

6. At the HO2S side, measure resistance between HO2S 4P connector terminals No. 3 and No. 4.

HO2S 4P CONNECTOR

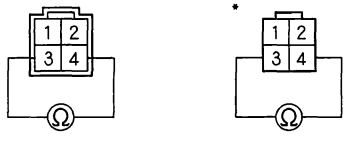

Terminal side of male terminals — Wire side of female terminals

Is there 5—15 Ω (10—40 Ω) ?*

YES—Go to step 7.

NO—Replace the primary HO2S (Sensor 1) or secondary HO2S (Sensor 2) * . ■

7. Check continuity between body ground and HO2S 4P connector terminals No. 3 and No. 4 individually.

HO2S 4P CONNECTOR

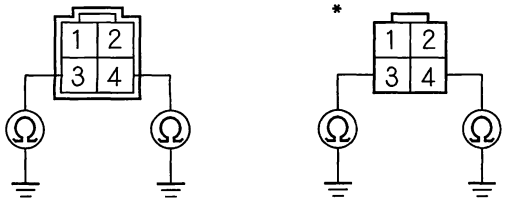

Terminal side of male terminals — Wire side of female terminals

Is there continuity?

YES—Replace the HO2S (primary or secondary *) (Sensor 1 or Sensor 2 *). ■

NO—Go to step 7.

8. Start the engine.

9. Measure voltage between HO2S 4P connector terminal No. 3 and No. 4.

PRIMARY/SECONDARY*HO2S (SENSOR 1/ SENSOR 2*) 4P CONNECTOR

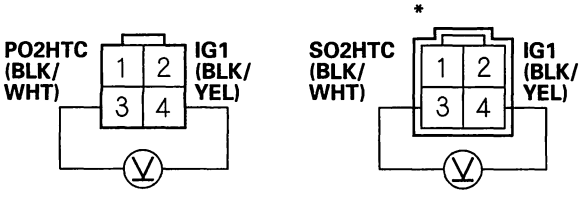

Wire side of female terminals — Terminal side of male terminals

Is there battery voltage?

YES—Go to step 10.

NO—Go to step 13.

10. Turn the ignition switch OFF.

(cont'd)

DTC Troubleshooting (cont'd)

11. Disconnect PCM connector C (31P) (PCM connector A, 32P)*.

12. Check for continuity between PCM connector terminal C1 (A8)* and body ground.

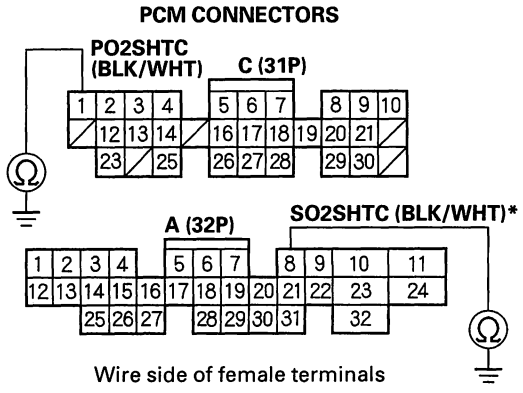

Is there continuity?

YES—Repair short in the wire between the PCM (C1, A8*) and the HO2S (Primary or Secondary*) (Sensor 1, Sensor 2*).■

NO—Substitute a known-good PCM and recheck (see page 11-5). If the symptom/indication goes away, replace the original PCM.■

13. Measure voltage between HO2S 4P connector terminal No. 4 and body ground.

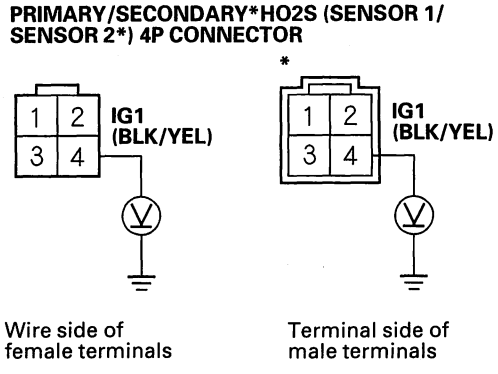

Is there battery voltage?

YES—Go to step 14.

NO—Repair open in the wire between the No. 6 ECU (PCM) CRUSE CONTROL (15A) fuse and the HO2S.■

14. Turn the ignition switch OFF.

15. Reconnect the HO2S 4P connector.

16. Disconnect the PCM connector C (31P) (PCM connector A, 32P) * .

17. Turn the ignition switch ON (II).

18. Measure voltage between the PCM connector terminals B2 and C1 (A8) * .

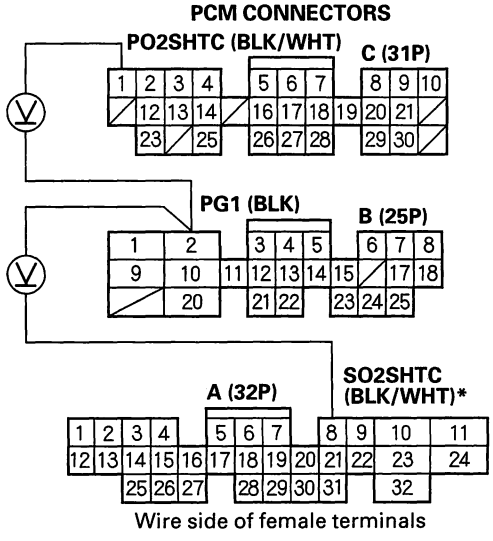

Is there battery voltage?

YES—Substitute a known-good PCM and recheck (see page 11-5). If the symptom/indication goes away, replace the original PCM. ■

NO— Repair open in the wire between the PCM (C1, A8*) and the HO2S (primary or secondary*) (Sensor 1, Sensor 2*). ■

BACK

DTC P0139: Secondary HO2S (Sensor 2) Circuit Slow Response

1. Reset the PCM.

2. Start the engine. Hold the engine at 3,000 rpm with no load (in Park or neutral) until the radiator fan comes on.

3. Check the secondary HO2S (Sensor 2) output voltage at 3,000 rpm with the scan tool.

   Does the voltage stay within 0.3–0.8 V for two minutes?

   YES—Replace the secondary HO2S (Sensor 2). ■

   NO—Intermittent failure, system is OK at this time. Check for poor connections or loose wires at C204 (located under the right side of the dash), C104 (located at the right side of the engine compartment), the secondary HO2S (Sensor 2), and the PCM. ■

DTC Troubleshooting (cont'd)

DTC P0300: Random Misfire
and Any Combination of the Following:

DTC P0301: No. 1 Cylinder Misfire

DTC P0302: No. 2 Cylinder Misfire

DTC P0303: No. 3 Cylinder Misfire

DTC P0304: No. 4 Cylinder Misfire

DTC P0305: No. 5 Cylinder Misfire

DTC P0306: No. 6 Cylinder Misfire

NOTE:
- If the misfiring is frequent enough to trigger detection of increased emissions during two consecutive driving cycles, the MIL will come on, and DTC P0300 (and some combination of P0301 through P0306) will be stored.
- If the misfiring is frequent enough to damage the catalyst, the MIL will blink whenever the misfiring occurs, and DTC P0300 (and some combination of P0301 through P0306) will be stored. When the misfiring stops, the MIL will remain on.

1. Troubleshoot the following DTCs first, if any of them were stored along with the random misfire DTC(s):
   P0107, P0108, P1128, P1129: MAP Sensor
   P0131, P0132: Primary HO2S
   P0171, P0172: Fuel metering
   P0401, P1491, P1498: EGR System
   P0505: Idle control system
   P1259: VTEC System
   P1361, P1362, P1366, P1367: TDC 1/TDC 2 Sensor
   P1519: IAC Valve

2. Test-drive the vehicle to verify the symptom.

3. Find the symptom in the chart below, and do the related procedures and checks, in the order listed, until you find the cause.

Symptom	Procedure	Also check for:
Random misfire only at low RPM and under load	1. Check fuel pressure (see page 11-90) 2. Inspect the ignition distributor housing*	• Low compression • Low quality fuel • Correct EGR valve function
Random misfire only during acceleration	1. Inspect and test ignition wires (see page 4-22).* 2. Inspect the ignition distributor housing.* 3. Check fuel pressure (see page 11-90). 4. Test the ignition coil for '98-99 models (see page 4-22), or for '00-02 models (see page 4-23). 5. Test the ignition control module (see page 4-19).*	Malfunction in the VTEC system (see page 6-9)
Random misfire at high RPM and under load, or under random conditions	1. Check fuel pressure (see page 11-90). 2. Inspect and test ignition wires (see page 4-22).* 3. Inspect the ignition distributor housing.* 4. Test the ignition coil for '98-99 models (see page 4-22), or for '00-02 models (see page 4-23). Test the ignition control module (see page 4-21).*	Correct valve clearance (see page 6-13)

*: '98-99 models

BACK

DTC P0301: No. 1 Cylinder Misfire ('98-99 models)

DTC P0302: No. 2 Cylinder Misfire ('98-99 models)

DTC P0303: No. 3 Cylinder Misfire ('98-99 models)

DTC P0304: No. 4 Cylinder Misfire ('98-99 models)

DTC P0305: No. 5 Cylinder Misfire ('98-99 models)

DTC P0306: No. 6 Cylinder Misfire ('98-99 models)

1. Remove the intake manifold cover (see step 4 on page 6-31).

2. After checking and recording the freeze data, reset the PCM. If there is no freeze data of misfiring, just clear the DTC.

3. Start the engine, and listen for a clicking sound at the injector in the problem cylinder.

   Does the injector click?

   YES—Go to step 4.

   NO—Go to step 19.

4. Turn the ignition switch OFF.

5. Inspect the ignition wire on the problem cylinder (see page 4-22).

   Is the ignition wire OK?

   YES—Go to step 6.

   NO—Replace the faulty ignition wire. ■

6. Check the distributor cap for cracks, wear, damage, and fouling.

   Is the distributor cap OK?

   YES—Go to step 7.

   NO—Clean or replace the distributor cap. ■

7. Exchange the spark plug from the problem cylinder with one from another cylinder.

8. Test-drive the vehicle several times in the range of the freeze data or under various conditions if there was no freeze data.

9. Check for a DTC or Temporary DTC with the scan tool.

   Is DTC P0301, P0302, P0303, P0304, P0305, or P0306, or Temporary DTC P1399 indicated?

   YES—Go to step 10.

   NO—Intermittent misfire due to spark plug fouling, etc. (no misfire at this time). ■

10. Determine which cylinder had the misfire.

    Does the misfire occur in the cylinder where the spark plug was exchanged?

    YES—Replace the faulty spark plug. ■

    NO—Go to step 11.

11. Turn the ignition switch OFF.

12. Exchange the injector from the problem cylinder with one from the another cylinder.

13. Let the engine idle for 2 minutes.

14. Test-drive the vehicle several times in the range of the freeze data or under various conditions if there was no freeze data.

15. Check for a DTC or Temporary DTC with the scan tool.

    Is DTC P0301, P0302, P0303, P0304, P0305, or P0306, or Temporary DTC P1399 indicated?

    YES—Go to step 16.

    NO—Intermittent misfire due to bad contact in the injector connector (no misfire at this time). ■

(cont'd)

DTC Troubleshooting (cont'd)

16. Determine which cylinder had the misfire.

    Does the misfire occur in the cylinder where the injector was exchanged?

    YES—Replace the faulty injector (see page 11-81).■

    NO—Go to step 17.

17. Turn the ignition switch OFF.

18. Check the engine compression.

    Is the engine compression OK?

    YES—Substitute a known-good PCM and recheck. Refer to the '98-02 Accord Service Manual (see page 11-5). If the symptom/indication goes away, replace the original PCM.■

    NO—Repair the engine.■

19. Turn the ignition switch OFF.

20. Disconnect PCM connector B (25P).

21. Turn the ignition switch ON (II).

22. Measure voltage between body ground and the PCM connector terminal (see table).

PCM CONNECTOR B (25P)

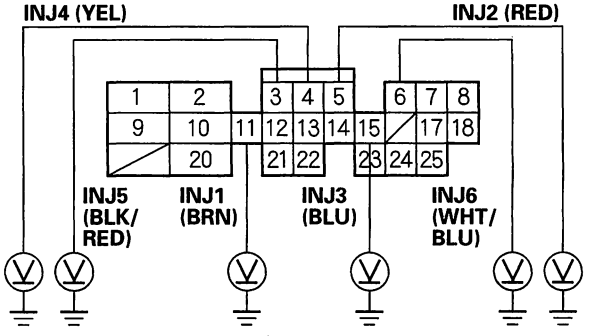

Wire side of female terminals

PROBLEM CYLINDER	DTC	PCM TERMINAL	WIRE COLOR
No. 1	P0301	B11	BRN
No. 2	P0302	B5	RED
No. 3	P0303	B15	BLU
No. 4	P0304	B4	YEL
No. 5	P0305	B3	BLK/RED
No. 6	P0306	B6	WHT/BLU

Is there battery voltage?

YES—Go to step 23.

NO—Go to step 31.

23. Turn the ignition switch OFF.

24. Disconnect the injector 2P connector from the problem cylinder.

25. Measure resistance between injector 2P connector terminals No. 1 and No. 2.

INJECTOR 2P CONNECTOR

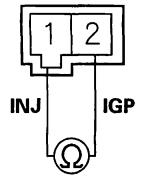

Terminal side of male terminals

Is there 10 Ω – 13 Ω?

YES—Go to step 26.

NO—Replace the injector (see page 11-81).■

26. Exchange the injector from the problem cylinder with one from another cylinder.

27. Let the engine idle for 2 minutes.

28. Test-drive the vehicle several times in the range of the freeze data or under various conditions if there was no freeze data.

29. Check for a DTC or Temporary DTC with the scan tool.

    Is DTC P0301, P0302, P0303, P0304, P0305, P0306, or Temporary DTC P1399 indicated?

    YES—Go to step 30.

    NO—Intermittent misfire due to injector fouling, etc.■

BACK

30. Determine which cylinder had the misfire.

Does the misfire occur in the cylinder where the injector was exchanged?

YES—Replace the faulty injector.■

NO—Substitute a known-good PCM and recheck Refer to the '98-02 Accord Service Manual (see page 11-5). If the symptom/indication goes away, replace the original PCM.■

31. Turn the ignition switch OFF.

32. Disconnect the injector 2P connector from the problem cylinder.

33. Turn the ignition switch ON (II).

34. Measure voltage between injector 2P connector terminals No. 2 and body ground.

INJECTOR 2P CONNECTOR

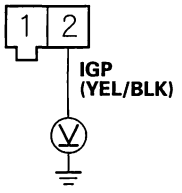

Wire side of female terminals

Is there battery voltage?

YES—Go to step 35.

NO—Repair open in the wire between the injector and the PGM-FI main relay.■

35. Turn the ignition switch OFF.

36. Check for continuity between body ground and the PCM connector terminal (see table).

PCM CONNECTOR B (25P)

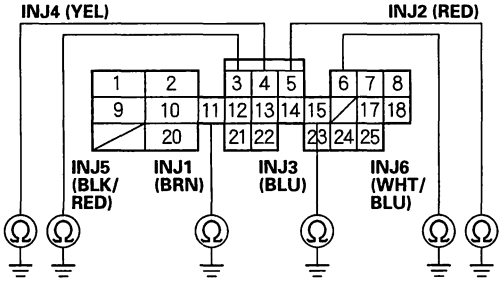

Wire side of female terminals

PROBLEM CYLINDER	DTC	PCM TERMINAL	WIRE COLOR
No. 1	P0301	B11	BRN
No. 2	P0302	B5	RED
No. 3	P0303	B15	BLU
No. 4	P0304	B4	YEL
No. 5	P0305	B3	BLK/RED
No. 6	P0306	B6	WHT/BLU

Is there continuity?

YES—Repair short in the wire between the PCM and the injector.■

NO—Go to step 37.

37. Connect the injector 2P connector terminal No. 1 to body ground with a jumper wire (see table).

INJECTOR 2P CONNECTOR

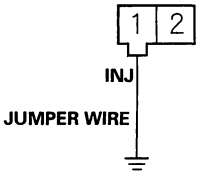

Wire side of female terminals

PROBLEM CYLINDER	DTC	WIRE COLOR
No. 1	P0301	BRN
No. 2	P0302	RED
No. 3	P0303	BLU
No. 4	P0304	YEL
No. 5	P0305	BLK/RED
No. 6	P0306	WHT/BLU

(cont'd)

DTC Troubleshooting (cont'd)

38. Check for continuity between body ground and the PCM connector terminals (see table).

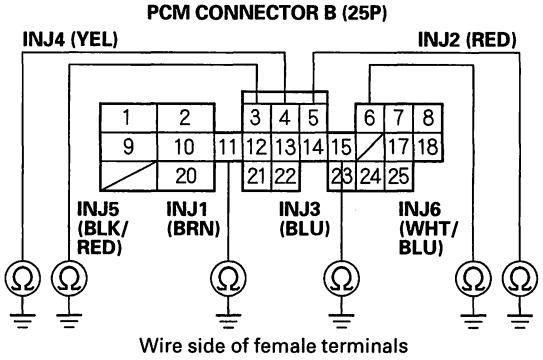

PROBLEM CYLINDER	DTC	PCM TERMINAL	WIRE COLOR
No. 1	P0301	B11	BRN
No. 2	P0302	B5	RED
No. 3	P0303	B15	BLU
No. 4	P0304	B4	YEL
No. 5	P0305	B3	BLK/RED
No. 6	P0306	B6	WHT/BLU

Is there continuity?

YES—Replace the injector (see page 11-81). then recheck. ■

NO—Repair open in the wire between the PCM and the injector. ■

BACK

DTC P0301: No. 1 Cylinder Misfire ('00-02 models)

DTC P0302: No. 2 Cylinder Misfire ('00-02 models)

DTC P0303: No. 3 Cylinder Misfire ('00-02 models)

DTC P0304: No. 4 Cylinder Misfire ('00-02 models)

DTC P0305: No. 5 Cylinder Misfire ('00-02 models)

DTC P0306: No. 6 Cylinder Misfire ('00-02 models)

1. Remove the intake manifold cover and the ignition coil cover (see step 4 on page 6-31).

2. After checking and recording the freeze data, reset the PCM. If there is no freeze data of misfiring, just clear the DTC.

3. Start the engine, and listen for a clicking sound at the injector in the problem cylinder.

   Does the injector click?

   YES— Go to step 4.

   NO— Go to step 31.

4. Turn the ignition switch OFF.

5. Exchange the ignition coil from the problem cylinder with one from another cylinder.

6. Test-drive the vehicle several times in the range of the freeze data or under various conditions if there was no freeze data.

7. Check for a DTC or Temporary DTC with the scan tool.

   Is DTC P0301, P0302, P0303, P0304, P0305, P0306, or Temporary DTC P1399 indicated?

   YES— Go to step 8.

   NO— Intermittent misfire due to ignition coil fouling, etc. (no misfire at this time).■

8. Determine which cylinder had the misfire.

   Does the misfire occur in the cylinder where the ignition coil was exchanged?

   YES— Replace the faulty ignition coil.■

   NO— Go to step 9.

9. Turn the ignition switch OFF.

10. Exchange the spark plug from the problem cylinder with one from another cylinder.

11. Test-drive the vehicle several times in the range of the freeze data or under various conditions if there was no freeze data.

12. Check for a DTC or Temporary DTC with the scan tool.

    Is DTC P0301, P0302, P0303, P0304, P0305, P0306, or Temporary DTC P1399 indicated?

    YES— Go to step 13.

    NO— Intermittent misfire due to spark plug fouling, etc. (no misfire at this time).■

13. Determine which cylinder had the misfire.

    Does the misfire occur in the cylinder where the spark plug was exchanged?

    YES— Replace the faulty spark plug.■

    NO— Go to step 14.

14. Turn the ignition switch OFF.

15. Exchange the injector from the problem cylinder with one from the another cylinder.

16. Let the engine idle for 2 minutes.

17. Test-drive the vehicle several times in the range of the freeze data or under various conditions if there was no freeze data.

(cont'd)

DTC Troubleshooting (cont'd)

18. Check for a DTC or Temporary DTC with the scan tool.

    Is DTC P0301, P0302, P0303, P0304, P0305, P0306, or Temporary DTC P1399 indicated?

    YES—Go to step 19.

    NO—Intermittent misfire due to bad contact in the injector connector (no misfire at this time).■

19. Determine which cylinder had the misfire.

    Does the misfire occur in the cylinder where the injector was exchanged?

    YES—Replace the faulty injector (see page 11-83).■

    NO—Go to step 20.

20. Turn the ignition switch OFF.

21. Disconnect the ignition coil 3P connector from the problem cylinder.

22. Turn the ignition switch ON (II).

23. Measure voltage between ignition coil 3P connector terminal No. 3 and body ground.

IGNITION COIL 3P CONNECTOR

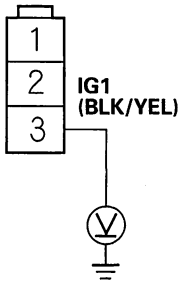

Wire side of female terminals

Is there battery voltage?

YES—Go to step 24.

NO—Repair open or short in the wire between the No. 11 COIL (15 A) fuse and the ignition coil.■

24. Turn the ignition switch OFF.

25. Check for continuity between ignition coil 3P connector terminal No. 2 and body ground.

IGNITION COIL 3P CONNECTOR

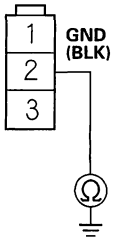

Wire side of female terminals

Is there continuity?

YES—Go to step 26.

NO—Repair open in the wire between the ignition coil and G101 (or G102).■

26. Disconnect PCM connector C (31P).

27. Check for continuity between body ground and the PCM connector terminal (see table).

PCM CONNECTOR C (31P)

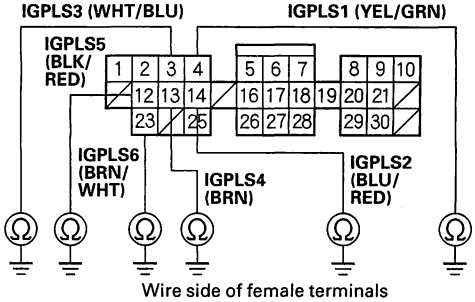

Wire side of female terminals

PROBLEM CYLINDER	DTC	PCM TERMINAL	WIRE COLOR
No. 1	P0301	C4	YEL/GRN
No. 2	P0302	C14	BLU/RED
No. 3	P0303	C3	WHT/BLU
No. 4	P0304	C13	BRN
No. 5	P0305	C12	BLK/RED
No. 6	P0306	C23	BRN/WHT

Is there continuity?

YES—Repair short in the wire between the PCM and the ignition coil.■

NO—Go to step 28.

BACK

28. Connect the ignition coil 3P connector terminal No. 1 to body ground with a jumper wire (see table).

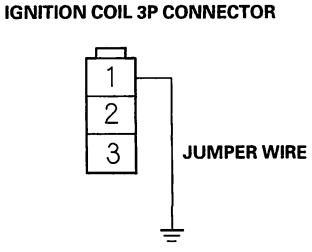

Wire side of female terminals

PROBLEM CYLINDER	DTC	WIRE COLOR
No. 1	P0301	YEL/GRN
No. 2	P0302	BLU/RED
No. 3	P0303	WHT/BLU
No. 4	P0304	BRN
No. 5	P0305	BLK/RED
No. 6	P0306	BRN/WHT

29. Check for continuity between body ground and the PCM connector terminal (see table).

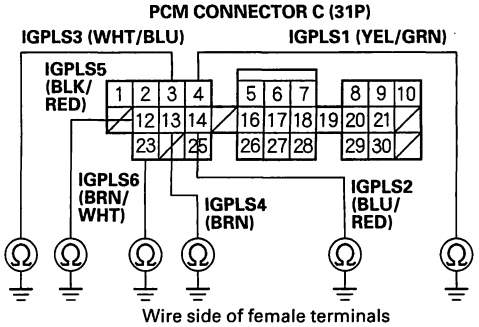

Wire side of female terminals

PROBLEM CYLINDER	DTC	PCM TERMINAL	WIRE COLOR
No. 1	P0301	C4	YEL/GRN
No. 2	P0302	C14	BLU/RED
No. 3	P0303	C3	WHT/BLU
No. 4	P0304	C13	BRN
No. 5	P0305	C12	BLK/RED
No. 6	P0306	C23	BRN/WHT

Is there continuity?

YES—Go to step 30.

NO—Repair open in the wire between the PCM and the ignition coil.■

30. Check the engine compression.

Is the engine compression OK?

YES—Substitute a known-good PCM and recheck. Refer to the '98-02 Accord Service Manual (see page 11-5). If the symptom/indication goes away, replace the original PCM.■

NO—Repair the engine.■

31. Turn the ignition switch OFF.

32. Disconnect PCM connector B (25P).

33. Turn the ignition switch ON (II).

34. Measure voltage between body ground and the PCM connector terminal (see table).

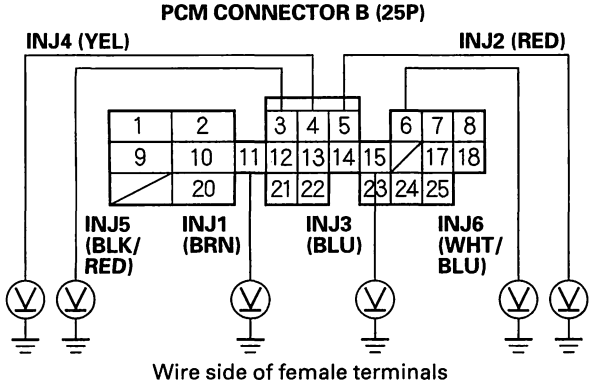

Wire side of female terminals

PROBLEM CYLINDER	DTC	PCM TERMINAL	WIRE COLOR
No. 1	P0301	B11	BRN
No. 2	P0302	B5	RED
No. 3	P0303	B15	BLU
No. 4	P0304	B4	YEL
No. 5	P0305	B3	BLK/RED
No. 6	P0306	B6	WHT/BLU

Is there battery voltage?

YES—Go to step 35.

NO—Go to step 43.

35. Turn the ignition switch OFF.

36. Disconnect the injector 2P connector from the problem cylinder.

(cont'd)

DTC Troubleshooting (cont'd)

37. Measure resistance between the injector 2P connector terminals No. 1 and No. 2.

INJECTOR 2P CONNECTOR

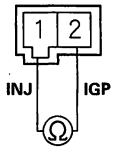

Terminal side of male terminals

Is there 10 Ω – 13 Ω ?

YES – Go to step 38.
NO – Replace the injector (see page 11-83).■

38. Exchange the injector from the problem cylinder with one from another cylinder.

39. Let the engine idle for 2 minutes.

40. Test-drive the vehicle several times in the range of the freeze data or under various conditions if there was no freeze data.

41. Check for a DTC or Temporary DTC with the scan tool.

Is DTC P0301, P0302, P0303, P0304, P0305, P0306, or Temporary DTC P1399 indicated?

YES – Go to step 42.
NO – Intermittent misfire due to injector fouling, etc.■

42. Determine which cylinder had the misfire.

Does the misfire occur in the other cylinder whose injector was exchanged?

YES – Replace the faulty injector.■
NO – Substitute a known-good PCM and recheck Refer to the '98-02 Accord Service Manual (see page 11-5). If the symptom/indication goes away, replace the original PCM.■

43. Turn the ignition switch OFF.

44. Disconnect the injector 2P connector from the problem cylinder.

45. Turn the ignition switch ON (II).

46. Measure voltage between the injector 2P connector terminal No. 2 and body ground.

INJECTOR 2P CONNECTOR

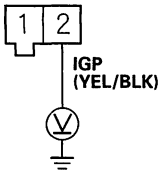

Wire side of female terminals

Is there battery voltage?

YES – Go to step 47.

NO – Repair open in the wire between the injector and the PGM-FI main relay.■

47. Turn the ignition switch OFF.

48. Check for continuity between body ground and the PCM connector terminal (see table).

PCM CONNECTOR B (25P)

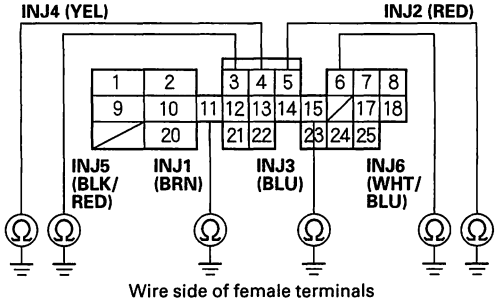

Wire side of female terminals

PROBLEM CYLINDER	DTC	PCM TERMINAL	WIRE COLOR
No. 1	P0301	B11	BRN
No. 2	P0302	B5	RED
No. 3	P0303	B15	BLU
No. 4	P0304	B4	YEL
No. 5	P0305	B3	BLK/RED
No. 6	P0306	B6	WHT/BLU

Is there continuity?

YES – Repair short in the wire between the PCM and the injector.■

NO – Go to step 49.

BACK

49. Connect the injector 2P connector terminal No. 1 to body ground with a jumper wire (see table).

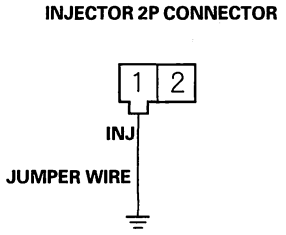

Wire side of female terminals

PROBLEM CYLINDER	DTC	WIRE COLOR
No. 1	P0301	BRN
No. 2	P0302	RED
No. 3	P0303	BLU
No. 4	P0304	YEL
No. 5	P0305	BLK/RED
No. 6	P0306	WHT/BLU

50. Check for continuity between body ground and the PCM connector terminals (see table).

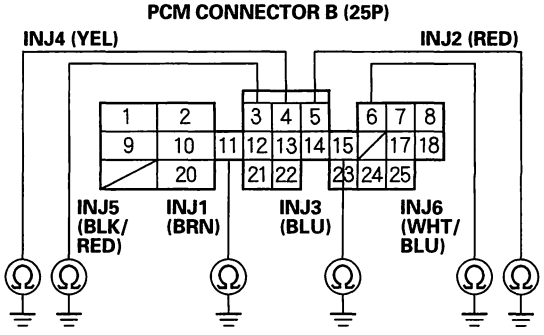

Wire side of female terminals

PROBLEM CYLINDER	DTC	PCM TERMINAL	WIRE COLOR
No. 1	P0301	B11	BRN
No. 2	P0302	B5	RED
No. 3	P0303	B15	BLU
No. 4	P0304	B4	YEL
No. 5	P0305	B3	BLK/RED
No. 6	P0306	B6	WHT/BLU

Is there continuity?

YES—Replace the injector (see page 11-83). then recheck. ■

NO—Repair open in the wire between the PCM and the injector. ■

DTC Troubleshooting (cont'd)

DTC P0335: CKP Sensor No Signal

DTC P0336: CKP Sensor Intermittent Interruption

1. Reset the PCM.
2. Start the engine.

   Is DTC P0335 and/or P0336 indicated?

   YES—Go to step 3.

   NO—Intermittent failure, system is OK at this time. Check for poor connections or loose wires at the CKP sensor and the PCM.■

3. Turn the ignition switch OFF.
4. Disconnect the CKP sensor 2P connector.
5. Measure resistance between CKP sensor 2P connector terminals No. 1 and No. 2.

CKP SENSOR 2P CONNECTOR

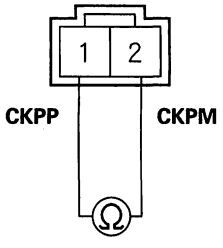

Terminal side of male terminals

Is there 1,850—2,450 Ω ?

YES—Go to step 6.

NO—Replace the CKP sensor (see page 6-56).■

6. Check for continuity between body ground and CKP sensor 2P connector terminals No. 1 and No. 2 individually.

CKP SENSOR 2P CONNECTOR

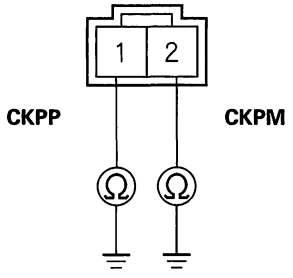

Terminal side of male terminals

Is there continuity?

YES—Replace the CKP sensor (see page 6-56).■

NO—Go to step 7.

7. Reconnect the CKP sensor 2P connector.
8. Disconnect PCM connector C (31P).
9. Measure resistance between PCM connector terminals C8 and C9.

PCM CONNECTOR C (31P)

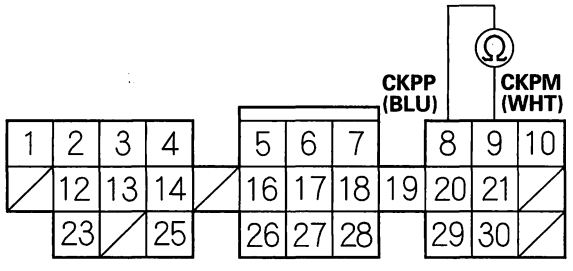

Wire side of female terminals

Is there 1,850—2,450 Ω ?

YES—Go to step 10.

NO—Repair open in the wire between the PCM (C8, C9) and the CKP sensor.■

BACK

10. Check for continuity between body ground and PCM connector terminal C8.

PCM CONNECTOR C (31P)

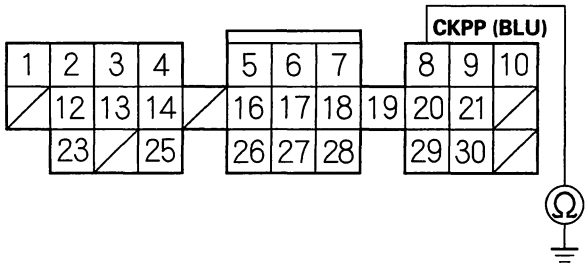

Wire side of female terminals

Is there continuity?

YES—Repair short in the wire between the PCM (C8) and the CKP sensor.

NO—Substitute a known-good PCM and recheck. Refer to the '98-02 Accord Service Manual (see page 11-5). If the symptom/indication goes away, replace the original PCM.■

DTC Troubleshooting (cont'd)

DTC P1121: TP Sensor Lower Than Expected

1. Turn the ignition switch ON (II).
2. Check the throttle position with the scan tool.

   Is 13.7% or higher indicated when the throttle is fully opened?

   YES—Intermittent failure, system is OK at this time.■

   NO—Replace the throttle body (The TP sensor is not available separately). ■

DTC P1122: TP Sensor Higher Than Expected

1. Turn the ignition switch ON (II).
2. Check the throttle position with the scan tool.

   Is 16.9% or less indicated when the throttle is fully closed?

   YES—Intermittent failure, system is OK at this time.■

   NO—Replace the throttle body (The TP sensor is not available separately). ■

BACK

DTC P1361: TDC1 Sensor Intermittent Interruption

DTC P1362: TDC1 Sensor No Signal

DTC P1366: TDC2 Sensor Intermittent Interruption

DTC P1367: TDC2 Sensor No Signal

1. Reset the PCM.

2. Start the engine.

   Is DTC P1361, P1362, P1366, and/or P1367 indicated?

   YES—Go to step 3.

   NO—Intermittent failure, system is OK at this time. Check for poor connections or loose wires at the TDC 1/TDC 2 sensor and the PCM.■

3. Turn the ignition switch OFF.

4. Disconnect the TDC 1/TDC2 sensor 4P connector.

5. Measure resistance between the terminals of the indicated sensor (see table).

TDC1/TDC2 SENSOR 4P CONNECTOR

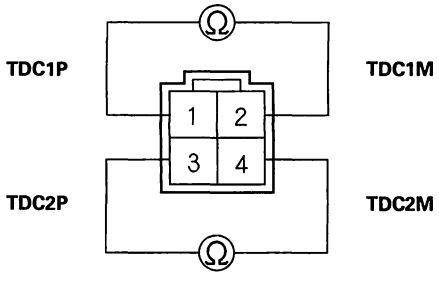

Terminal side of male terminals

SENSOR	DTC	SENSOR TERMINAL	PCM TERMINAL	WIRE COLOR
TDC1	P1361	1	C20	GRN
	P1362	2	C21	RED
TDC2	P1366	3	C29	YEL
	P1367	4	C30	BLK

Is there 1,850—2,450 Ω ?

YES—Go to step 6.

NO—Replace the TDC 1/TDC 2 sensor (see page 6-55).■

6. Check for continuity to body ground on both terminals of the indicated sensor individually.

TDC1/TDC2 SENSOR 4P CONNECTOR

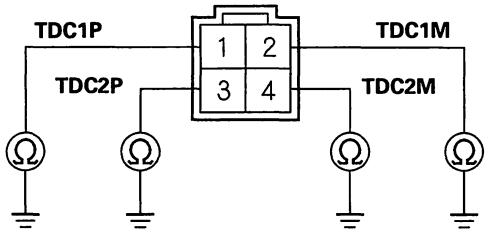

Terminal side of male terminals

Is there continuity?

YES—Replace the TDC 1/TDC 2 sensor (see page 6-55).■

NO—Go to step 7.

7. Reconnect the TDC 1/TDC 2 sensor 4P connector.

8. Disconnect PCM connector C (31P).

9. Measure resistance between the terminals of the indicated sensor on the PCM connector (see table).

PCM CONNECTOR C (31P)

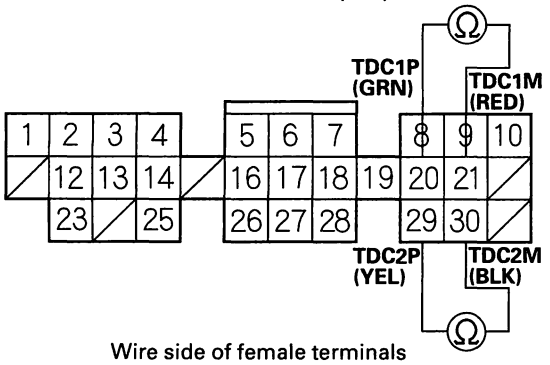

Wire side of female terminals

Is there 1,850—2,450 Ω ?

YES—Go to step 10.

NO—Repair open in the indicated sensor wires (see table).■

(cont'd)

DTC Troubleshooting (cont'd)

10. Check for continuity between body ground and PCM connector terminals C20 and/or C29 individually.

PCM CONNECTOR C (31P)

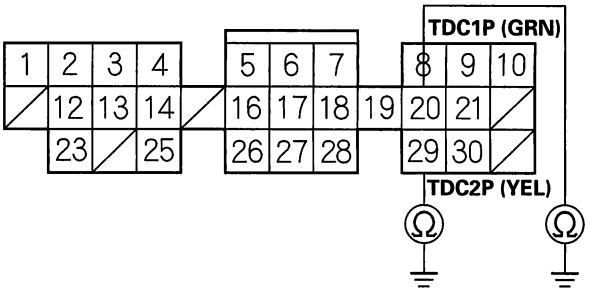

Wire side of female terminals

Is there continuity?

YES—Repair short in the indicated sensor wires (see table).■

NO—Substitute a known-good PCM and recheck. Refer to the '98-02 Accord Service Manual (see page 11-5). If the symptom/indication goes away, replace the original PCM.■

BACK

DTC P1676: FPTDR Signal Line Malfunction

1. Reset the PCM.

2. Start the engine and wait 10 seconds.

   Is DTC P1676 indicated?

   YES—Go to step 3.

   NO—Intermittent failure, system is OK at this time. Check for poor connections or loose wires at the ABS/TCS control unit and at the PCM.■

3. Turn the ignition switch OFF.

4. Disconnect PCM connector A (32P) and the ABS/TCS control unit 16P connector.

5. Check for continuity between body gound and PCM connector terminal A22.

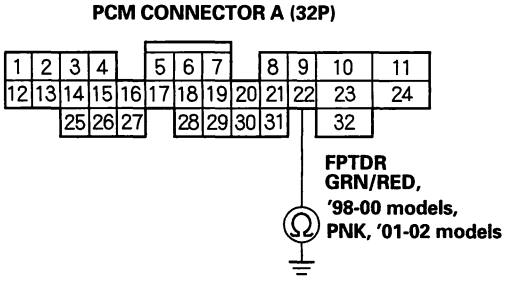

Wire side of female terminals

   Is there continuity?

   YES—Repair short in the wire between the ABS/TCS control unit and the PCM (A22).■

   NO—Go to step 6.

6. Check for continuity between ABS/TCS control unit 16P connector terminal No. 1 and PCM connector terminal A22.

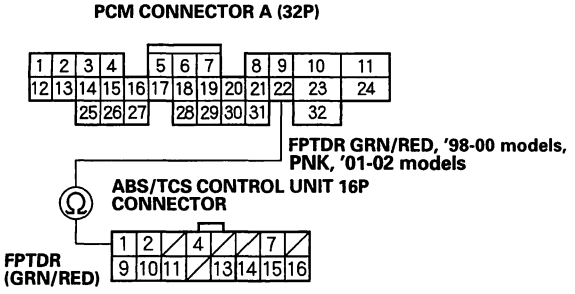

Wire side of female terminals

   Is there continuity?

   YES—Go to step 7.

   NO—Repair open in the wire between the ABS/TCS control unit and the PCM (A22).■

7. Reconnect PCM connector E (32).

8. Connect PCM connector terminals A22 and C28 with a jumper wire.

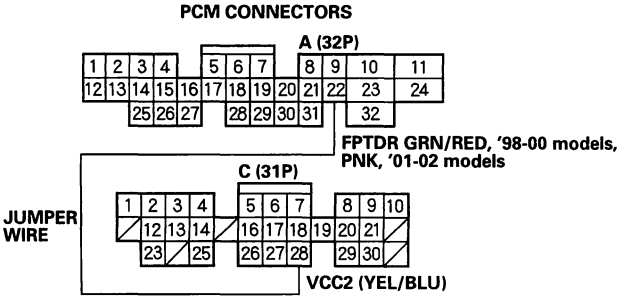

Wire side of female terminals

9. Do the PCM Reset Procedure.

10. Start the engine and wait 60 seconds.

    Is DTC P1678 indicated?

    YES—Substitute a known-good ABS/TCS control unit and recheck. If the symptom/indication goes away, replace the original ABS/TCS control unit.■

    NO—Substitute a known-good PCM and recheck Refer to the '98-02 Accord Service Manual (see page 11-5). If the symptom/indication goes away, replace the original PCM.■

DTC Troubleshooting (cont'd)

DTC P1678: FPTDR Signal Line Malfunction

1. Reset the PCM.
2. Start the engine and wait 60 seconds.

   Is DTC P1678 indicated?

   YES—Substitute a known-good ABS/TCS control unit and recheck. If the symptom/indication goes away, replace the original ABS/TCS control unit.■

   NO—Intermittent failure, system is OK at this time. Check for poor connections or loose wires at the ABS/TCS control unit and at the PCM.

BACK

Injector Replacement

'98-99 models:

1. Relieve fuel pressure (see page 11-89).
2. Remove the intake manifold covers and the intake manifold.
3. Disconnect the connectors from the injectors (A).

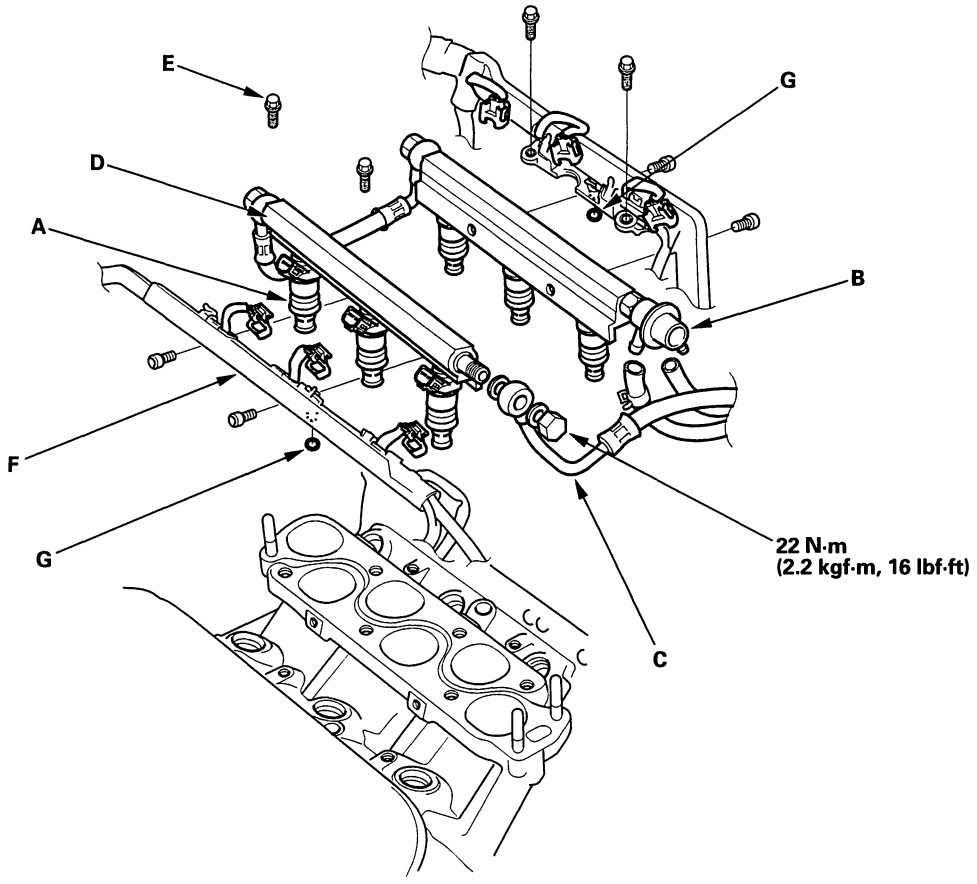

4. Disconnect the vacuum hose and fuel return hose from the fuel pressure regulator (B). Place a rag or shop towel over the hoses before disconnecting them.
5. Disconnect the fuel hose (C) from the fuel rail (D).
6. Remove the retainer bolts (E) from the fuel rails and harness holders (F), then replace the O-rings (G).
7. Disconnect the fuel rails.
8. Remove the injectors from the fuel rails.

(cont'd)

Injector Replacement (cont'd)

9. Slide new cushion rings (A) onto the injectors (B).

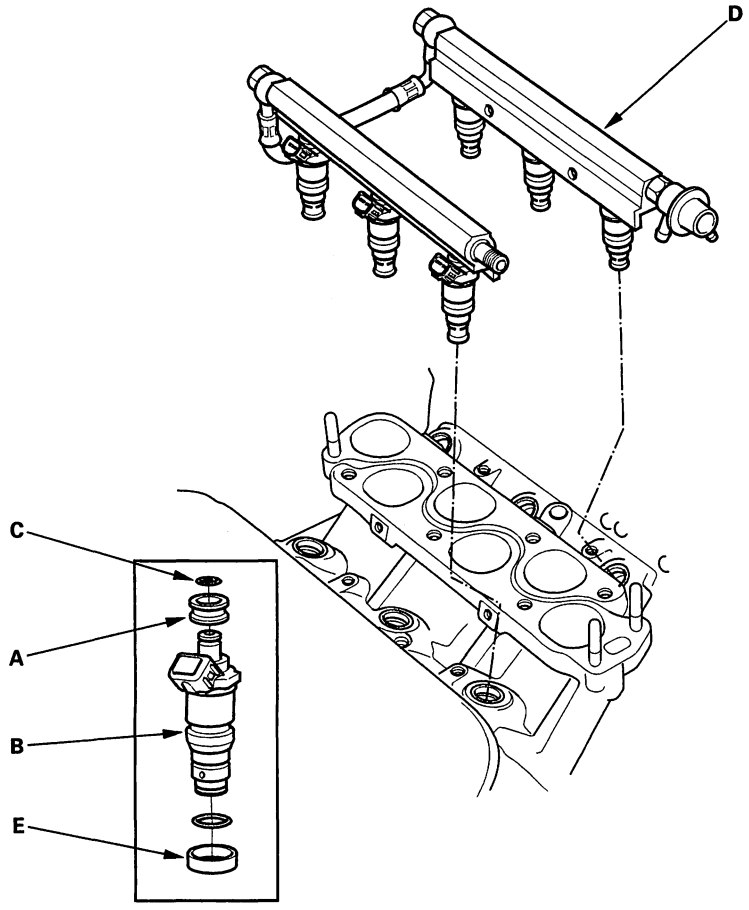

10. Coat new O-rings (C) with clean engine oil, and put them on the injectors.
11. Insert the injectors into the fuel rails (D).
12. Coat new seal rings (E) with clean engine oil, and press them into the intake manifold.
13. Install the injectors into the intake manifold.
14. Install and tighten the retainer bolts.
15. Connect the fuel hose to the fuel rail with new washers.
16. Connect the vacuum hose and fuel return hose to the fuel pressure regulator.
17. Install the connectors on the injectors and harness holders.
18. Install the intake manifold and the intake manifold covers.
19. Turn the ignition switch ON (II), but do not operate the starter. After the fuel pump runs for approximately 2 seconds, the fuel pressure in the fuel line rises. Repeat this 2 or 3 times, then check for fuel leakage.

BACK

'00-02 models:

1. Relieve fuel pressure (see page 11-89).
2. Remove the intake manifold covers and the intake manifold.
3. Disconnect the connectors from the injectors (A).

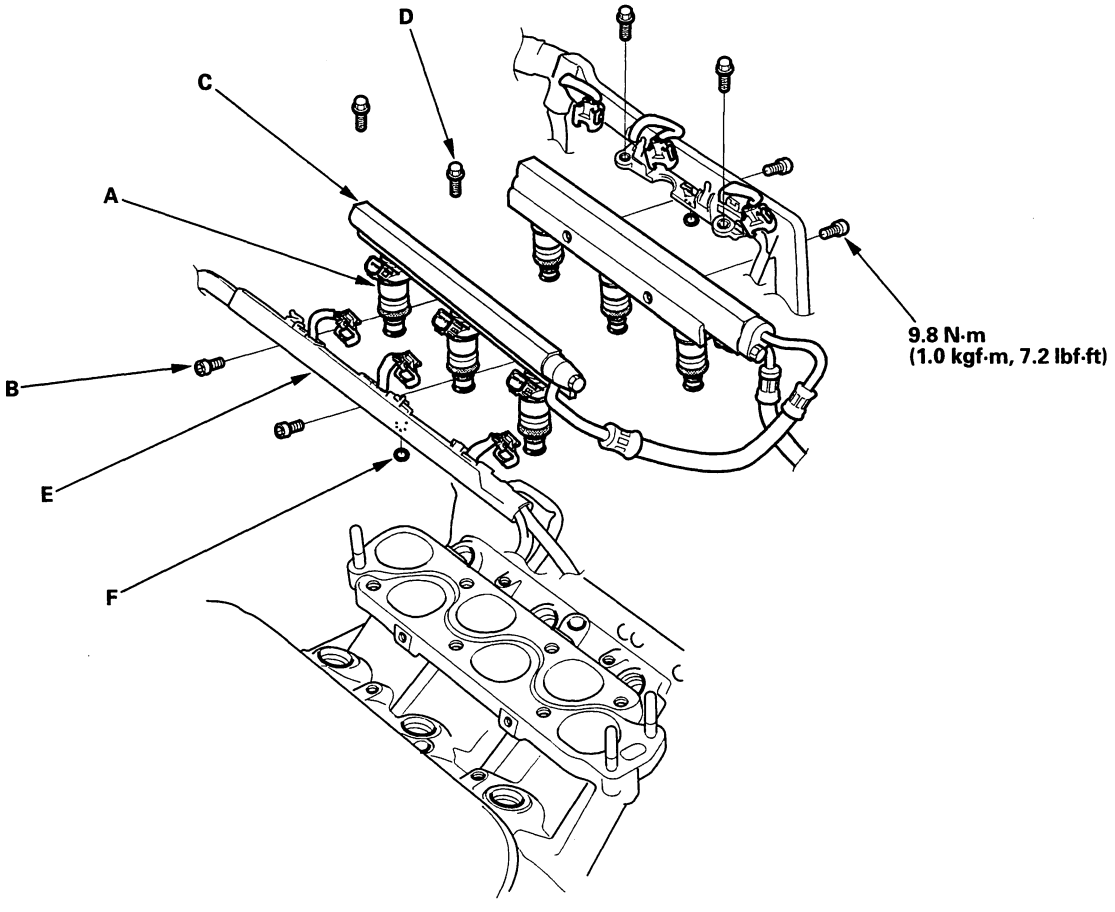

4. Remove the retainer bolts (D) from the fuel rails (C) and harness holders (E), then replace the O-rings (F).
5. Disconnect the fuel rails.
6. Remove the injectors from the fuel rails.

(cont'd)

Injector Replacement (cont'd)

7. Slide new cushion rings (A) onto the injectors (B).

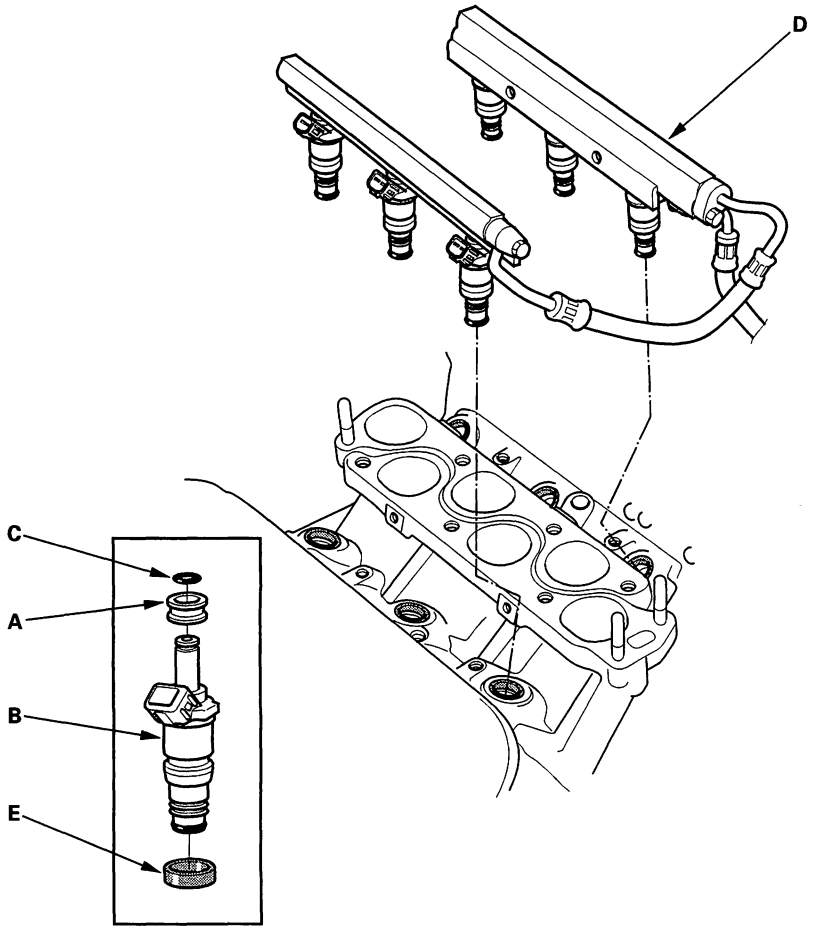

8. Coat new O-rings (C) with clean engine oil, and put them on the injectors.
9. Insert the injectors into the fuel rails (D).
10. Coat new seal rings (E) with clean engine oil, and press them into the intake manifold.
11. Install the fuel injectors into the intake manifold.
12. Install and tighten the bolts.
13. Install the connectors on the injectors.
14. Install the intake manifold and the intake manifold covers.
15. Turn the ignition switch ON (II), but do not operate the starter. After the fuel pump runs for about 2 seconds, the fuel pressure in the fuel line rises. Repeat this 2 or 3 times, then check for fuel leakage.

BACK

Primary HO2S Replacement

Special Tools Required
Commercially available O2 sensor wrench:
Snap-on YA8875, SP Tools 93750, or equivalent

1. Disconnect the primary HO2S 4P connector (A), then remove the primary HO2S (B).

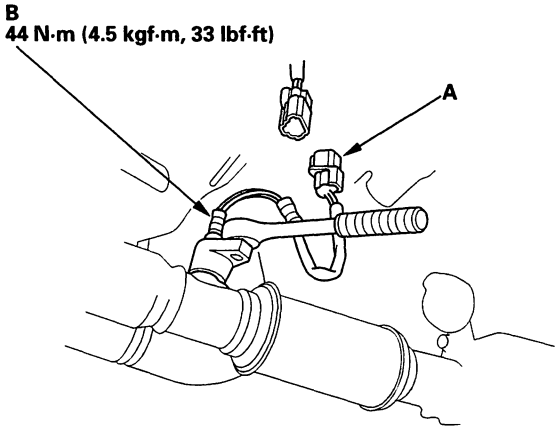

2. Install the primary HO2S in the reverse order of removal.

Secondary HO2S Replacement

Special Tools Required
Commercially available O2 sensor wrench:
Snap-on YA8875, SP Tools 93750, or equivalent

1. Disconnect the secondary HO2S 4P connector (A), then remove the secondary HO2S (B).

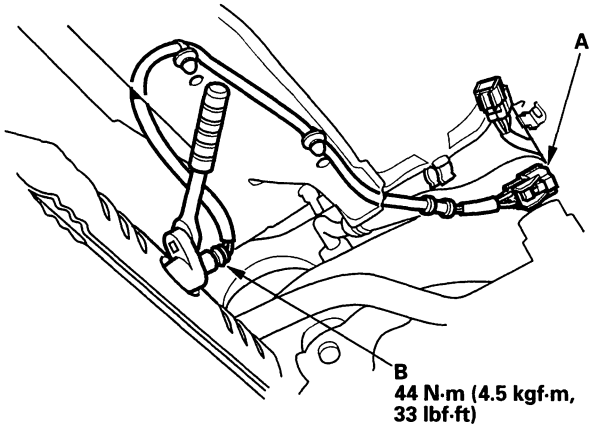

2. Install the secondary HO2S in the reverse order of removal.

Idle Control System

Component Location Index

NOTE: The illustration shows '00-02 models.

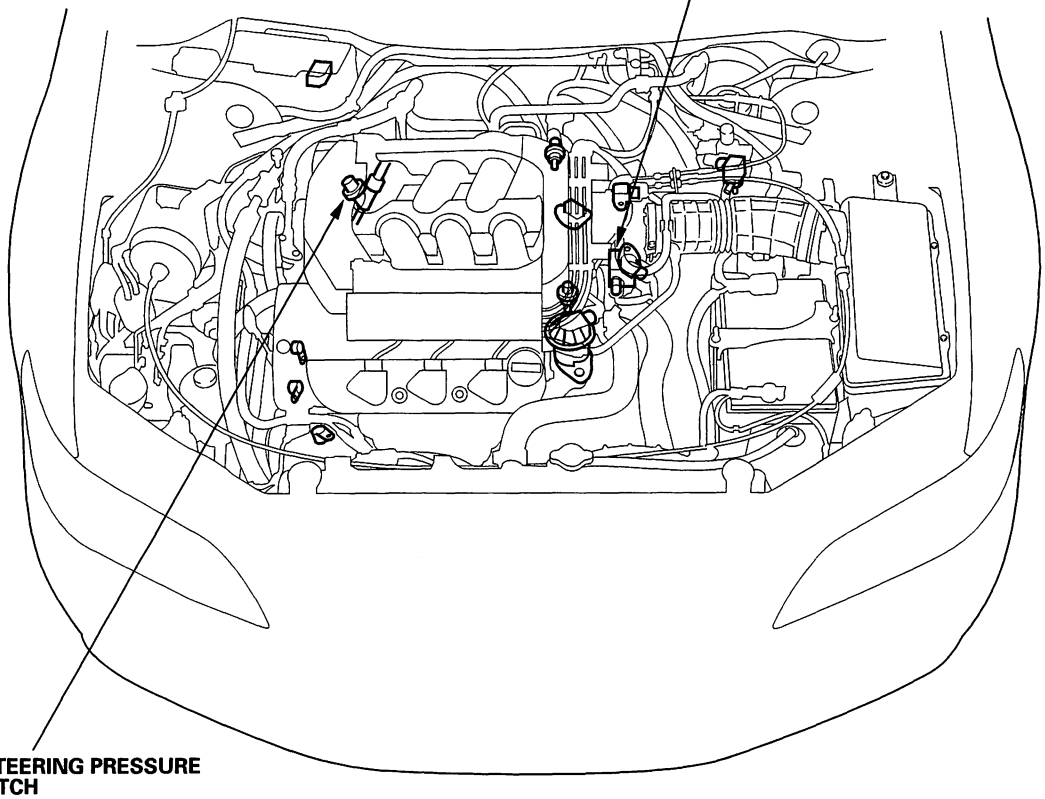

BACK

Idle Speed Adjustment

Adjust idle speed using the Honda PGM Tester procedure, if possible. If not, use the following procedure:

NOTE:
- Leave the IAC valve connected.
- Before setting the idle speed, check these items:
  - The MIL has not been reported on.
  - Ignition timing
  - Spark plugs
  - Air cleaner
  - PCV system
- On Canadian models, pull the parking brake lever up. Start the engine, then check that the headlights are off.

1. Disconnect the EVAP purge control solenoid valve 2P connector.

2. Connect a tachometer, or connect the Honda PGM Tester (A) or an OBD II scan tool to the Data Link Connector (DLC) (B) located under the driver's side of the dashboard.

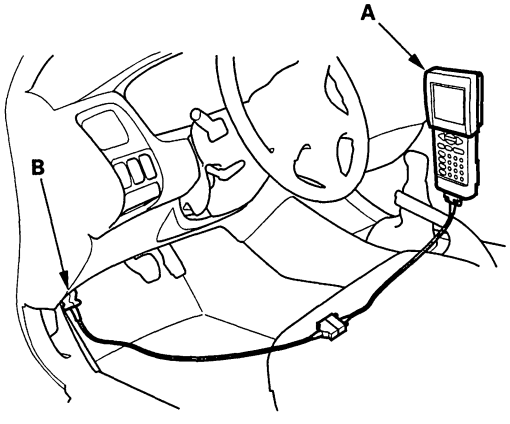

3. Start the engine. Hold the engine at 3,000 rpm with no load (transmission in Park or neutral position) until the radiator fan comes on, then let it idle.

4. Check the idle speed with no-load conditions: headlights, blower fan, rear defogger, radiator fan, and air conditioner off.

   Idle speed should be:
   680±50 rpm (in Park or neutral)

5. Adjust the idle speed, if necessary, by turning the idle adjusting screw (A) 1/4-turn clockwise or counterclockwise.

   NOTE: Do not turn the idle adjusting screw more than 1/4-turn without checking the idle speed.

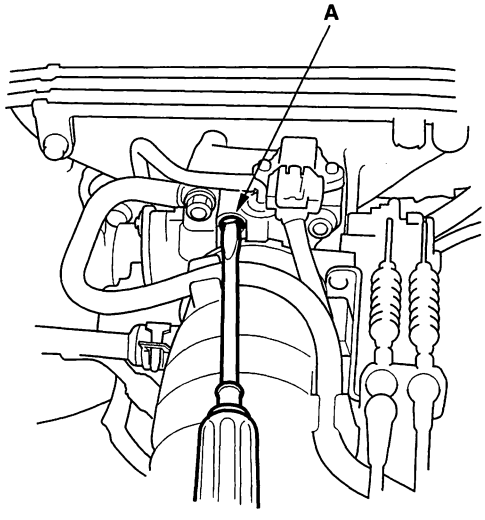

6. After turning the idle adjusting screw 1/4-turn, check the idle speed again. If it is out of spec, turn the idle adjusting screw 1/4-turn again.

7. Idle the engine for one minute with the heater fan switch at HI, and the air conditioner on, then check the idle speed.

   Idle speed should be:
   680±50 rpm (in Park or neutral)

   NOTE:
   - Do not turn the idle adjusting screw when the air conditioner is on.
   - If the idle speed is not within specification, see the Symptom Troubleshooting Index.

8. Reconnect the EVAP purge control solenoid valve 2P connector.

Component Location Index

NOTE: The illustration shows '00-02 models.

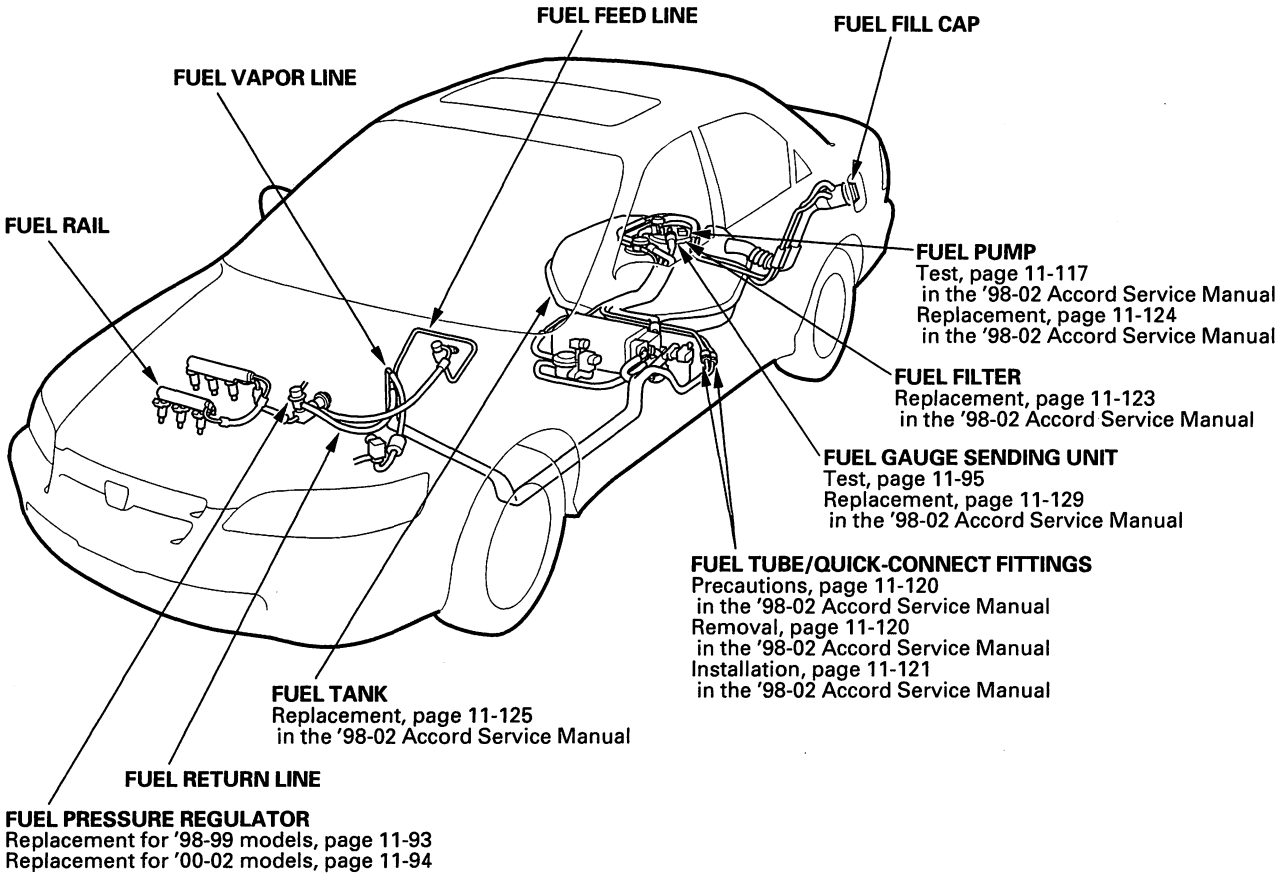

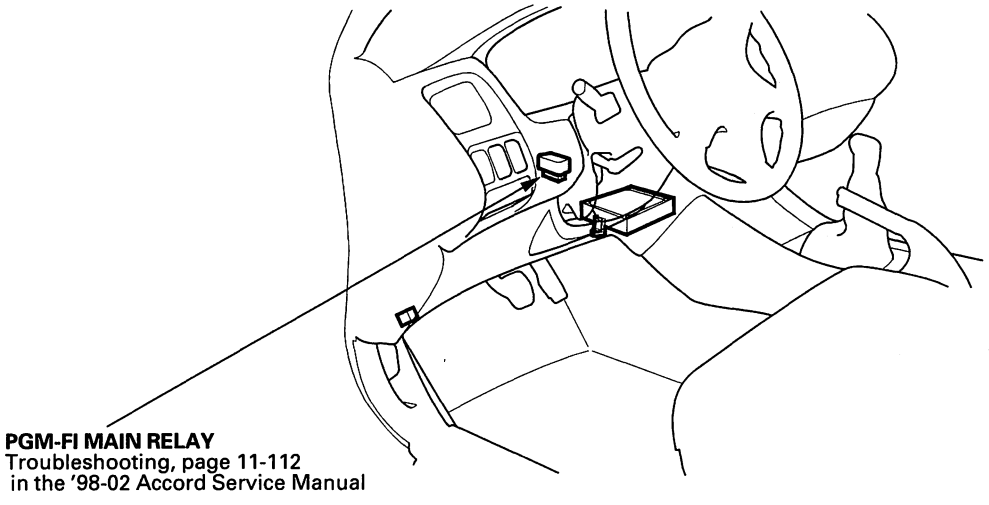

BACK

Fuel Pressure Relieving

Before disconnecting fuel lines or hoses, release pressure from the system by loosening the fuel pulsation damper on top of the fuel rail.

1. Make sure you have the anti-theft code for the radio, then write down the frequencies for the radio's preset buttons.

2. Disconnect the battery negative cable.

3. Remove the fuel fill cap.

4. Place a wrench on the fuel pulsation damper (A) at the fuel rail.

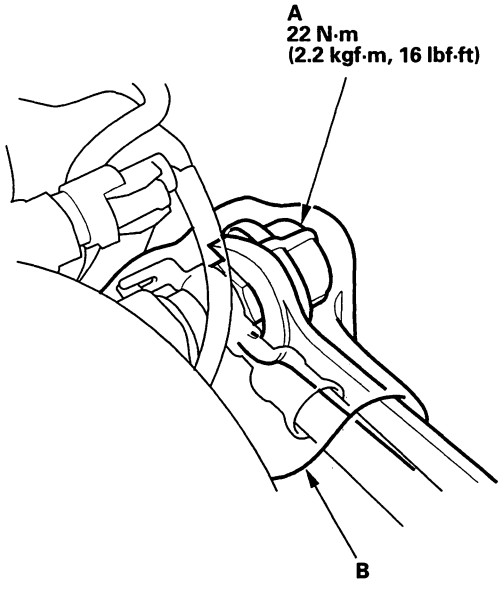

5. Place a rag or shop towel (B) over the fuel pulsation damper.

6. Slowly loosen the fuel pulsation damper (A) one complete turn.

   NOTE: Replace all washers whenever the fuel pulsation damper is loosened or removed.

Fuel Pressure Test

Special Tools Required
- Fuel pressure gauge 07406-0040001
- Fuel pressure gauge attachment 07VAJ-0040100

1. Relieve the fuel pressure (see page 11-89).

2. Use a wrench to remove the fuel pulsation damper from its fitting, then attach the fuel pressure gauge attachment.

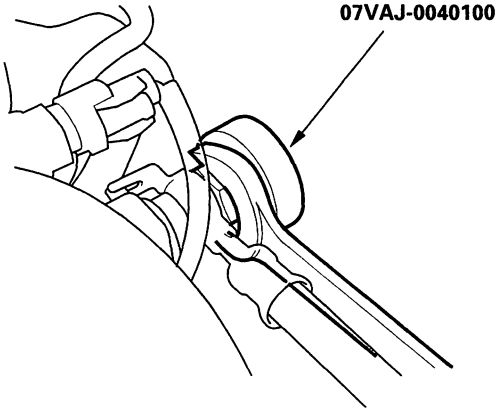

3. Attach the fuel pressure gauge.

'98-99 models:

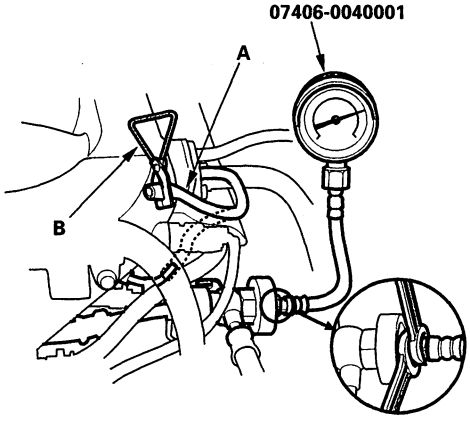

'00-02 models:

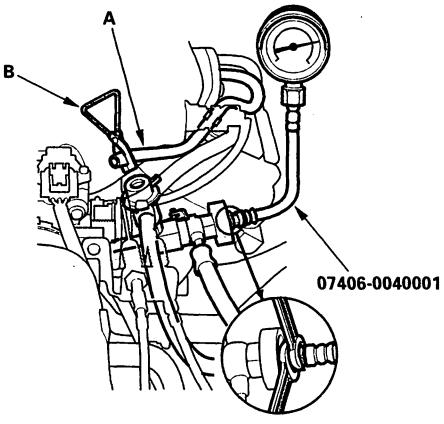

4. Disconnect the vacuum hose (A) of the fuel pressure regulator and pinch it closed with a clamp (B).

5. Start the engine and let it idle.

   - If the engine starts, go to step 7.
   - If the engine does not start, go to step 6.

6. Check to see if the fuel pump is running: remove the fuel fill cap and listen to the fuel fill port while an assistant turns the ignition switch ON (II). You should hear the pump run for about 2 seconds when the ignition is turned ON (II).

   - If the pump runs, go to step 7.
   - If the pump does not run, test it, refer to the '98-02 Accord Service Manual (see page 11-117).■

BACK

7. Read the pressure gauge (with the fuel pressure regulator vacuum hose disconnected and clamped). The pressure should be:
'98-00 models: 280–330 kPa (2.9–3.4 kgf/cm², 41–48 psi).
'01-02 models: 320–370 kPa (3.3–3.8 kgf/cm², 48–54 psi).

   - If the pressure is OK and the engine is running, go to step 8. If the engine is not running, repair the cause, then continue this test.
   - If the pressure is out of spec, go to step 9.

8. With the engine running, reconnect the vacuum hose, and read the gauge again.
The pressure should be:
'98-00 models: 220–270 kPa (2.25–2.75 kgf/cm², 32–40 psi).
'01-02 models: 260–310 kPa (2.7–3.2 kgf/cm², 38–46 psi).

   - If the fuel pressure is OK, the test is complete. Go to step 10.
   - If the pressure is out of spec, go to step 9.

9. Disconnect the vacuum hose from the pressure regulator again while you watch the pressure gauge. The pressure should rise when you disconnect the hose.

   - If the pressure did not rise, replace the fuel pressure regulator for '98-99 models (see page 11-93) or for '00-02 models (see page 11-94), and recheck the fuel pressure.
   - If the pressure rose, and all your readings were within spec, go to step 10.
   - If the pressure rose, but your readings were out of spec, check for these problems:
     - If the pressure is too low, check for a clogged fuel filter and for leaks in the fuel lines. ■
     - If the pressure is too high, check for a pinched or clogged fuel return hose or line. ■

10. Reconnect the vacuum hose, remove the pressure gauge, and reinstall the fuel pulsation damper with a new washer.Tighten the fuel pulsation damper to 22 N·m (2.2kgf·m, 16 lbf·ft).

    NOTE: Disassemble and clean the fuel pressure gauge attachment thoroughly after use.

Fuel Line Inspection

Check the fuel system lines, hoses, and fuel filter for damage, leaks, or deterioration. Replace any damaged parts.

NOTE: The illustration shows '00-02 models.

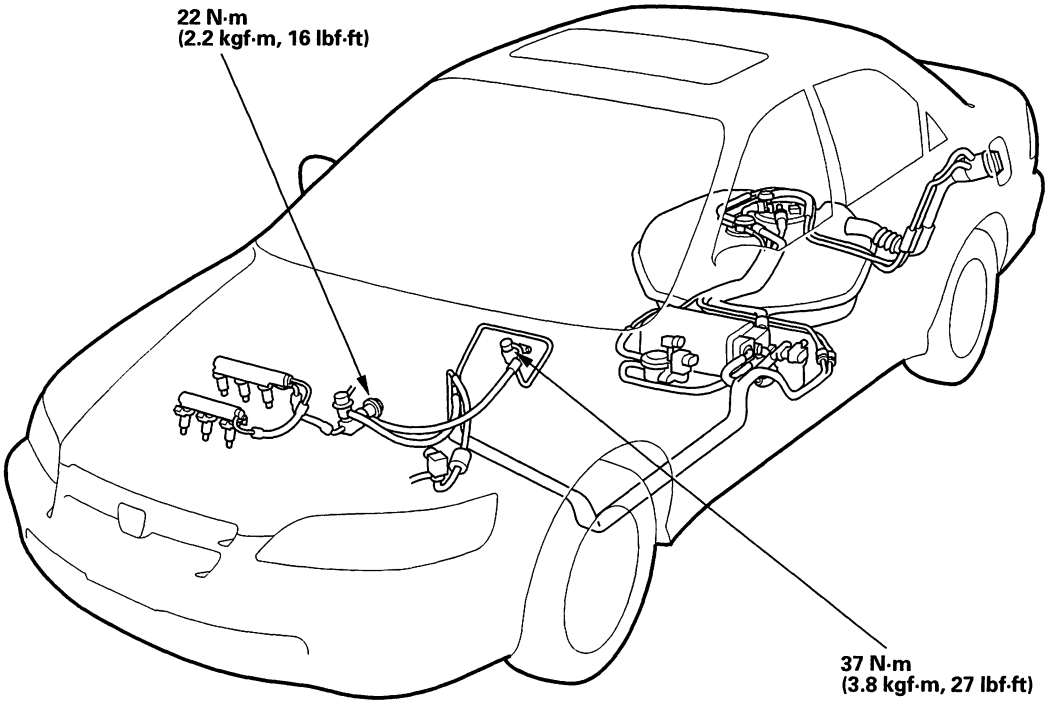

BACK

Fuel Pressure Regulator Replacement

'98-99 models:

1. Remove the intake manifold cover and intake manifold.

2. Place a shop towel under the fuel pressure regulator, then relieve fuel pressure (see page 11-89).

3. Disconnect the vacuum hose (A) and fuel return hose (B).

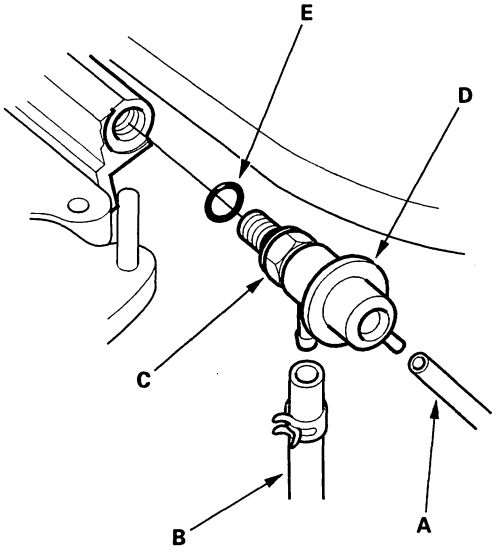

4. Loosen the locking nut (C), and remove the fuel pressure regulator (D).

5. Apply clean engine oil to a new O-ring (E), and carefully install it into its proper position.

6. Install the fuel pressure regulator in the fuel rail. Turn it by hand until stops.

7. Turn the fuel pressure regulator (A) counterclockwise to set the angle as shown.

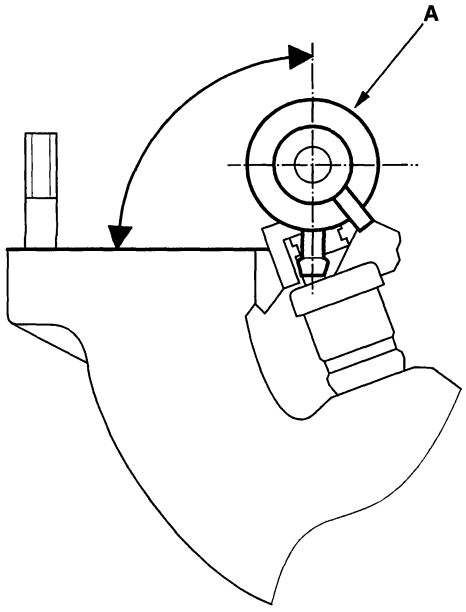

8. Tighten the locking nut to 29 N·m (3.0 kgf·m, 22 lbf·ft).

   NOTE:
   - Replace the O-ring.
   - When assembling the fuel pressure regulator, apply clean engine oil to the O-ring and assemble it into its proper position, taking care not to damage the O-ring.

(cont'd)

Fuel Pressure Regulator Replacement (cont'd)

'00-02 models:

1. Place a shop towel under the fuel pressure regulator, then relieve fuel pressure (see page 11-89).

2. Disconnect the vacuum hose (A) and fuel return hose (B).

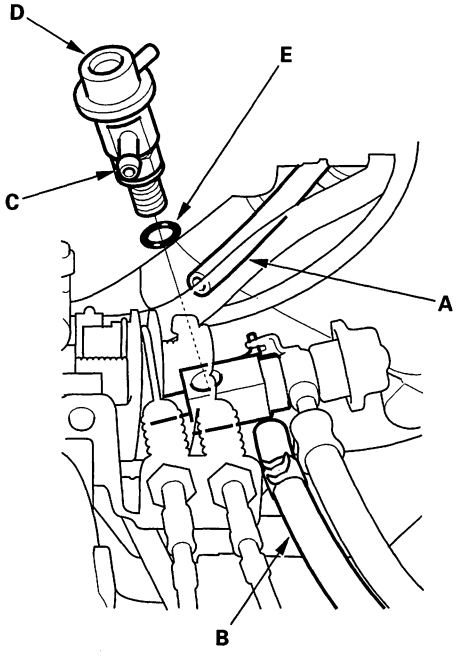

3. Loosen the locking nut (C), and remove the fuel pressure regulator (D).

4. Apply clean engine oil to a new O-ring (E), and carefully install it into its proper position.

5. Install the fuel pressure regulator in the fuel joint. Turn it by hand until stops.

6. Turn the fuel pressure regulator (A) counterclockwise to set the angle as shown.

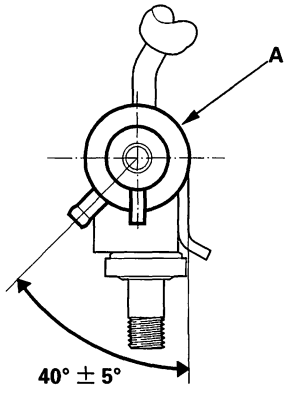

7. Tighten the locking nut to 29 N·m (3.0 kgf·m, 22 lbf·ft).

   NOTE:
   - Replace the O-ring.
   - When assembling the fuel pressure regulator, apply clean engine oil to the O-ring and assemble it into its proper position, taking care not to damage the O-ring.

BACK

Fuel Gauge Test

NOTE: For the fuel gauge system circuit diagram , refer to the '98-02 Accord Service Manual (see page 22-60).

1. Check the No. 9 BACK UP LIGHT INSTRUMENT LIGHT (7.5 A) fuse in the driver's under-dash fuse/ relay box before testing.

2. Remove the spare tire lid.

3. Remove the access panel from the floor.

4. Turn the ignition switch OFF, then disconnect the fuel pump 5P connector.

5. Measure voltage between the fuel pump 5P connector terminals No. 1 and No. 2 with the ignition switch ON (II). There should be between 5 and 8 V.

   - If the voltage is as specified, go to step 6.
   - If the voltage is not as specified, check for:

     - an open in the YEL/BLU or BLK wire.
     - poor ground (G552).

FUEL PUMP 5P CONNECTOR

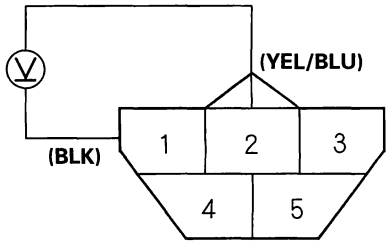

Wire side of female terminals

6. Turn the ignition switch OFF.

7. Install a 2 Ω resistor between the fuel pump 5P connector terminals No. 1 and No. 2, then turn the ignition switch ON (II).

FUEL PUMP 5P CONNECTOR

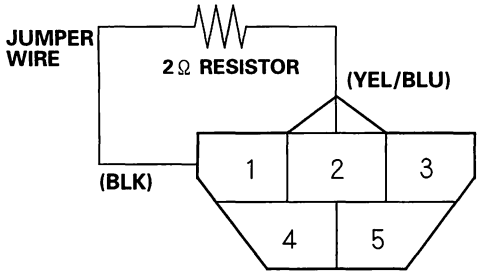

Wire side of female terminals

8. Check that the pointer of the fuel gauge starts moving toward the "F" mark.

   - If the pointer of the fuel gauge does not move at all, replace the gauge.
   - If the gauge is OK, inspect the fuel gauge sending unit, refer to the '98-02 Accord Service Manual (see page 11-129).

   NOTE:
   - Turn the ignition switch OFF before the pointer reaches "F" on the gauge dial. Failure to do so may damage the fuel gauge.
   - The fuel gauge is a bobbin (cross-coil) type, so the fuel level is continuously indicated even when the ignition switch is OFF.
   - The fuel gauge pointer moves more slowly than a bimetal type.

Component Location Index

NOTE: The illustration shows '00-02 models.

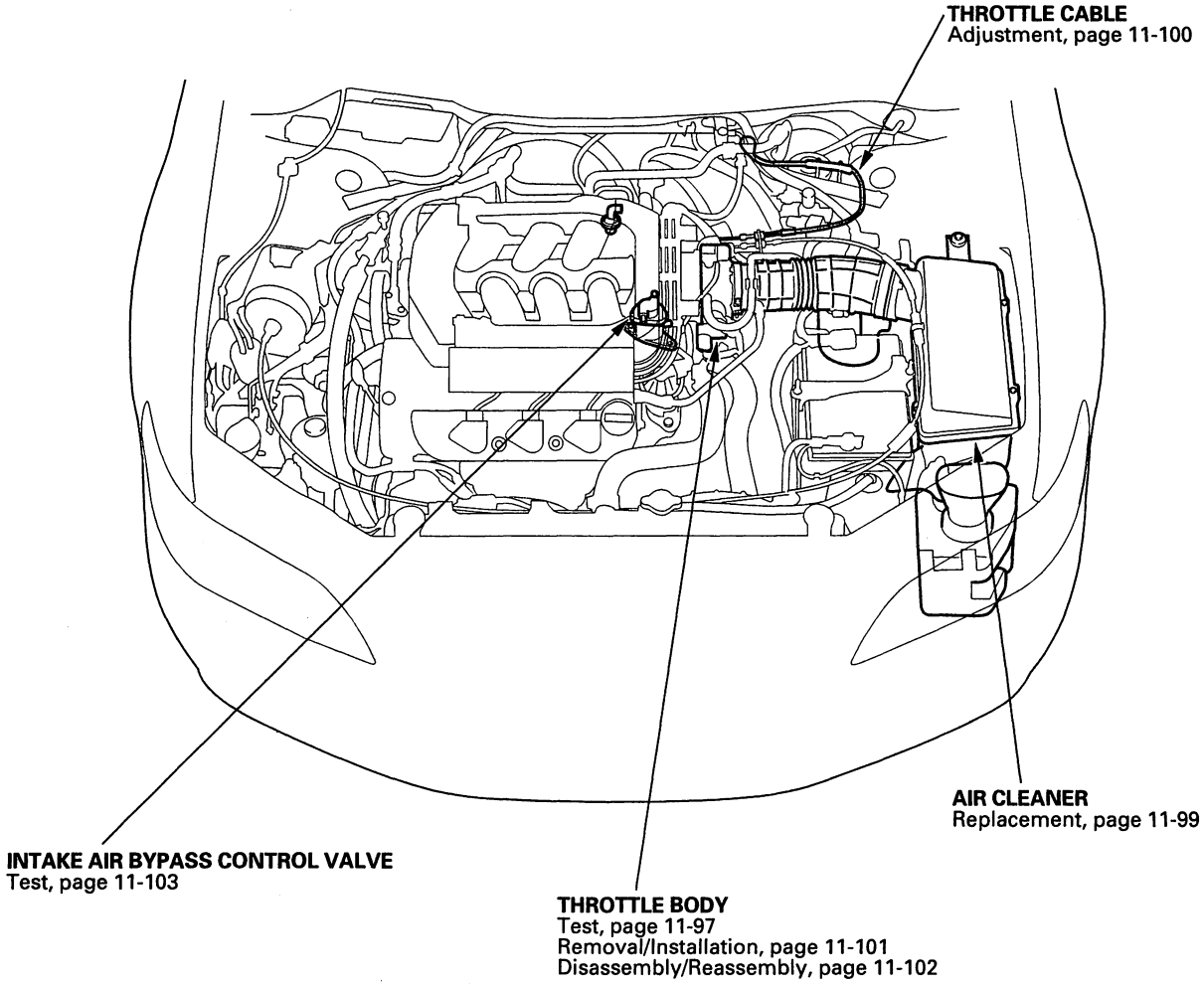

BACK

Throttle Body Test

Special Tools Required
Vacuum Pump/Gauge, 0—30 in.Hg
A973X-041-XXXXX

'98-99 models:

1. Disconnect the vacuum hose (A) between the top of the throttle body at the intake air bypass control valve, and connect it to a vacuum gauge.

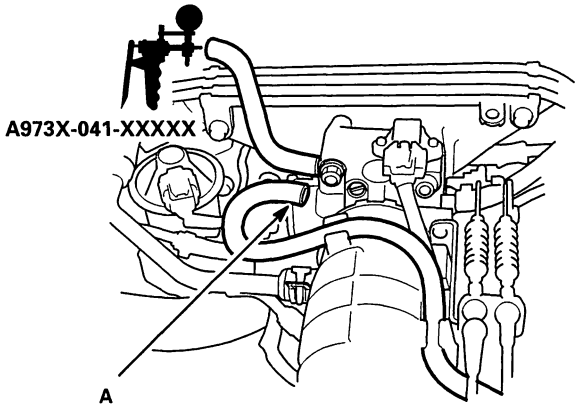

2. Start the engine. Hold the engine at 3,000 rpm with no load (in Park or neutral) until the radiator fan comes on, then let it idle. The gauge should not indicate any vacuum.

   - If the gauge indicates vacuum, check and if necessary adjust the throttle cable (see page 11-100), then go to step 3.
   - If the gauge does not indicate vacuum, go to step 3.

3. Open the throttle slightly from idle, and check the gauge again. The gauge should indicate vacuum.

   - If the gauge indicates vacuum, go to step 4.
   - If the gauge does not indicate vacuum, check the throttle body port. If it's clogged, clean it with carburetor cleaner, then go to step 4.

4. With the engine OFF, check the throttle cable operation. The cable should operate without binding or sticking.

   - If the cable is OK, go to step 5.
   - If the cable binds or sticks, check it and its routing. If the cable is faulty, reroute it or replace it, and adjust it (see page 11-100), then go to step 5.

5. Operate the throttle lever by hand to see if the throttle valve and/or shaft are too loose or too tight.

   - If there is excessive play in the throttle valve shaft or if the throttle valve binds at the fully closed position, replace the throttle body.
   - If the throttle valve and shaft are OK, go to step 6.

6. Check for clearance between the throttle stop screw and the throttle lever at the fully closed position. If there is any clearance, replace the throttle body (see page 11-101). Do not adjust the throttle stop screw.

(cont'd)

Throttle Body Test (cont'd)

'00-02 models:

NOTE:
- Do not adjust the throttle stop screw. It is preset at the factory.
- If the Malfunction Indicator Lamp (MIL) has been reported on, check for Diagnostic Trouble Codes (DTCs), refer to the '98-02 Accord Service Manual (see page 11-3).

1. With the engine off, check the throttle cable operation. The cable should move without binding or sticking.

   - If the cable operates OK, go to step 2.
   - If the cable binds or sticks, check it and its routing.
   - If the cable is faulty, reroute it or replace it and adjust it (see page 11-100), then go to step 2.

2. Operate the throttle lever by hand to see if the throttle valve and/or shaft are too loose or too tight.

   - If there is excessive play in the throttle valve shaft, or any binding in the throttle valve at the fully closed position, replace the throttle body.
   - If the throttle valve and shaft are OK, go to step 3.

3. Connect the scan tool to the Data Link Connector (DLC).

4. Turn the ignition switch ON (II).

5. Check the throttle position with the scan tool. There should be about 10% when the throttle is fully closed and about 90% when the throttle is fully opened.

   - If the throttle position is correct, the throttle body is OK.
   - If the throttle position is not correct, replace the throttle body.

BACK

Air Cleaner Element Replacement

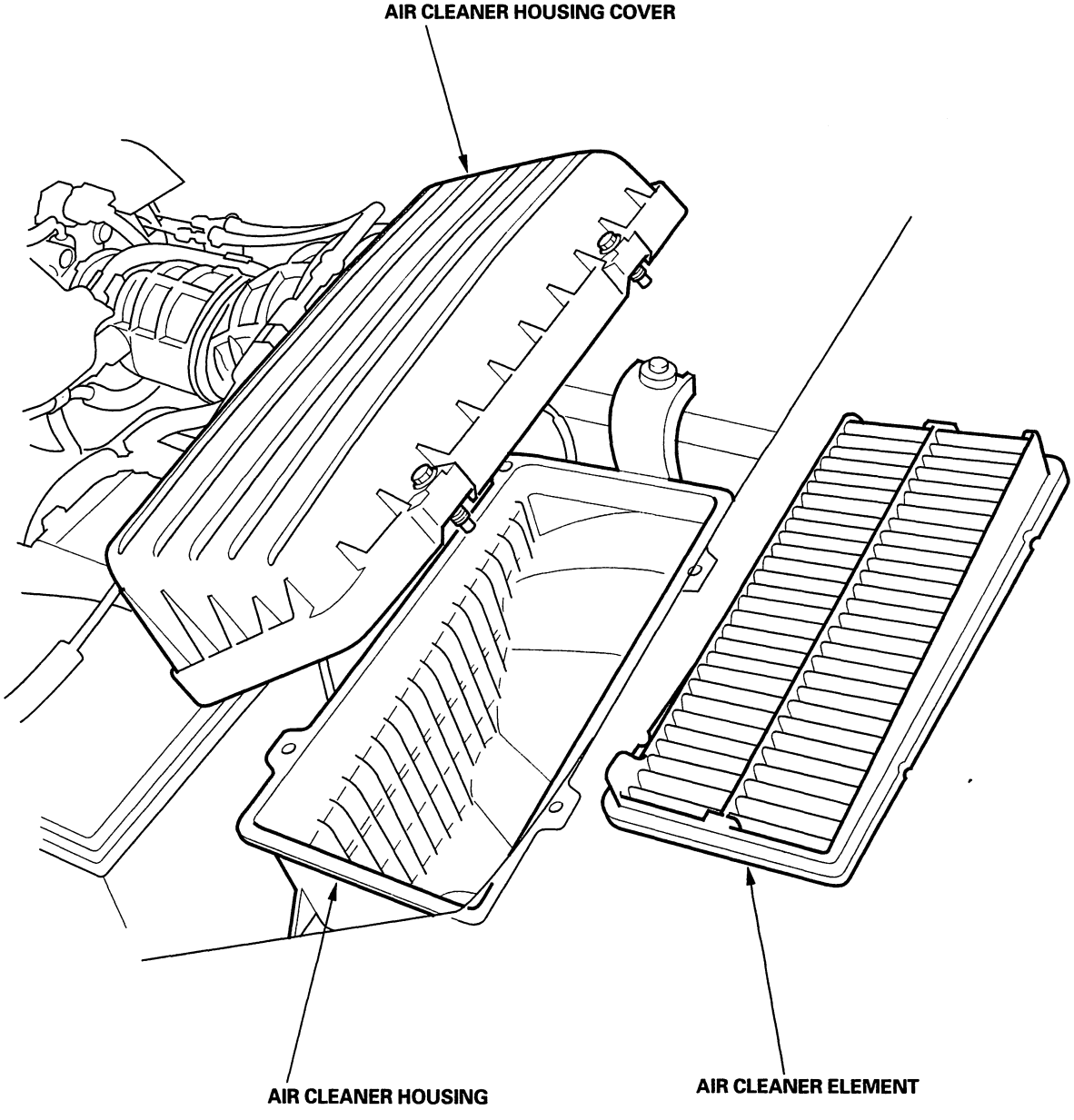

Throttle Cable Adjustment

1. Start the engine. Hold the engine at 3,000 rpm with no load (in Park or neutral) until the radiator fan comes on, then let it idle.

2. Hold the throttle link (A) to the throttle lever (B). There should be no clearance.

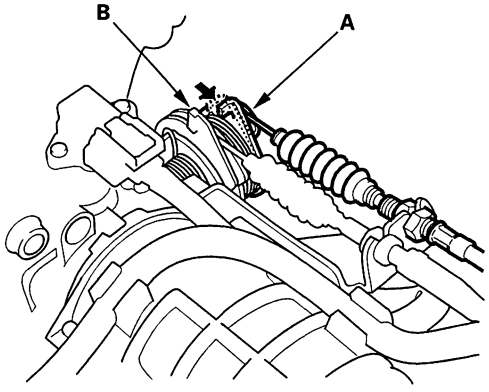

3. Check cable free play at the throttle linkage. Cable deflection (A) should be 10 – 12 mm (3/8 – 1/2 in.)

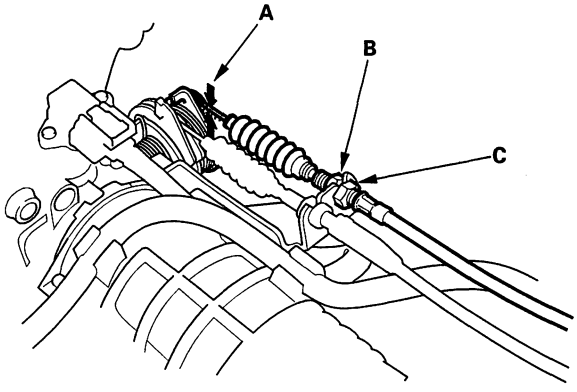

4. If deflection is not within spec (10 – 12 mm, 3/8 – 1/2 in.) loosen the locknut (B), turn the adjusting nut (C) until the deflection is as specified, then retighten the locknut.

5. With the cable properly adjusted, check the throttle valve to be sure it opens fully when you push the accelerator pedal to the floor. Also check the throttle valve to be sure it returns to the idle position whenever you release the accelerator pedal.

BACK

Throttle Body Removal/Installation

NOTE:
- Do not adjust the throttle stop screw.
- After reassembly, adjust the cruise control cable (see page 4-54) and the throttle cable (see page 11-100).
- The TP sensor is not removable.

'98-99 models:

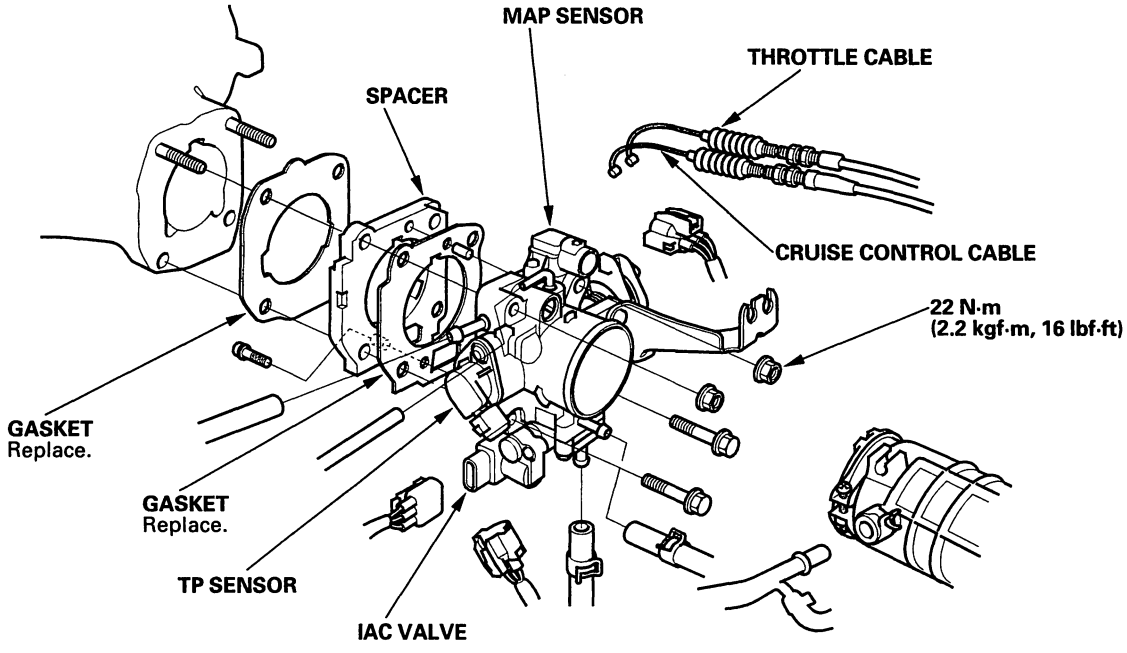

'00-02 models:

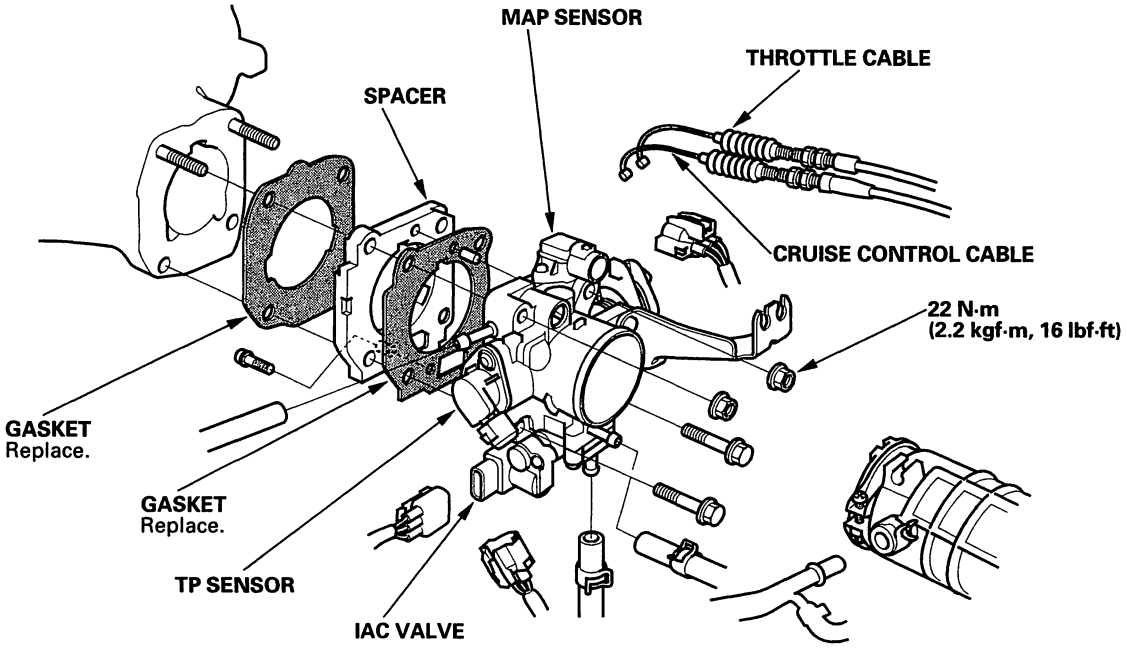

Throttle Body Disassembly/Reassembly

'98-99 models:

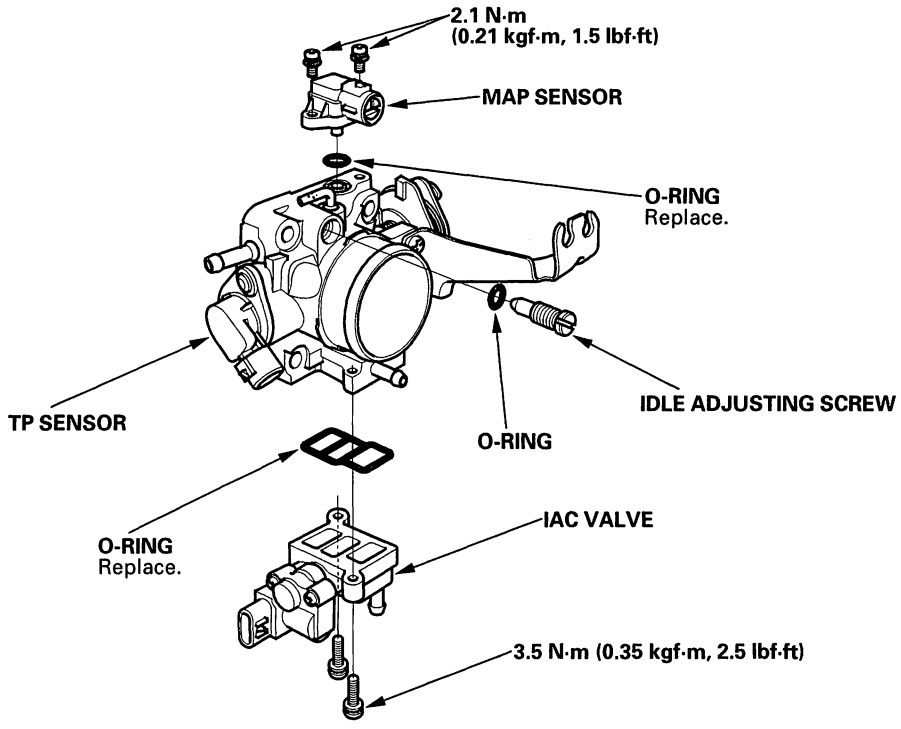

'00-02 models:

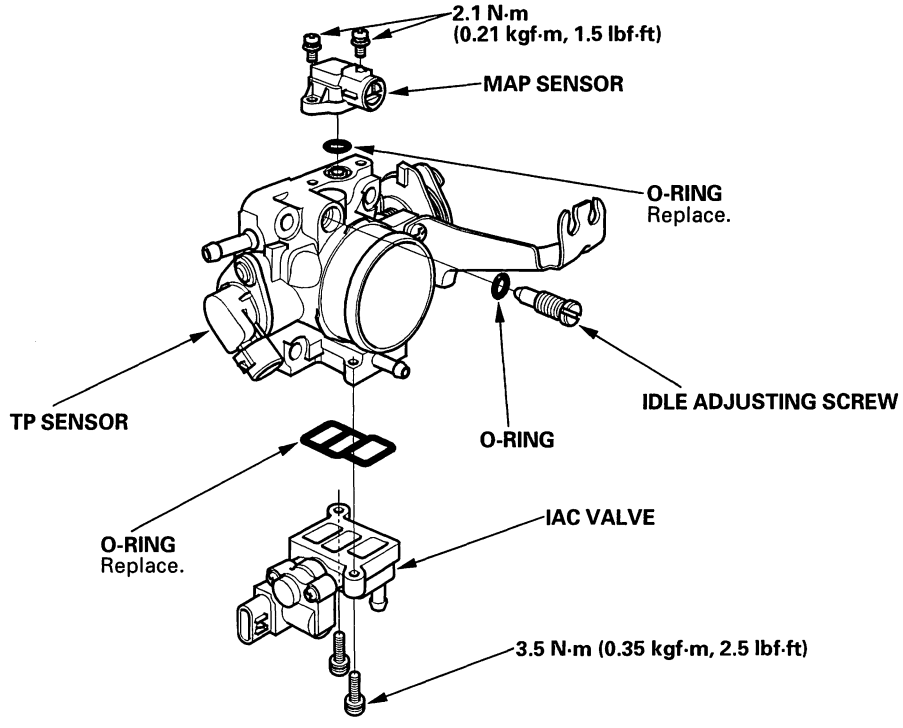

BACK

Intake Air Bypass Control Valve Test

Special Tools Required:
Vacuum pump gauge, 0—30 in.Hg
A973X-041-XXXXX

'98-99 models:

1. Start the engine. Hold the engine at 3,000 rpm with no load (in Park or neutral position) until the radiator fan comes on, then let it idle.

2. Remove the vacuum hose (A) from the intake duct, and connect a vacuum gauge to the hose.

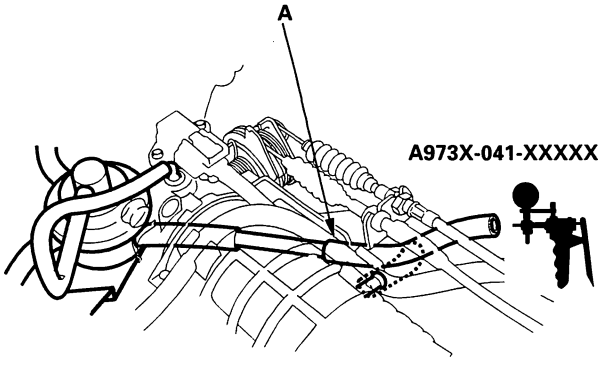

3. Raise and lower the engine speed, and make sure the vacuum gauge reading changes as the rpm changes.
   If the vacuum reading does not change, check for these problems:

   - Misrouted, leaking, broken, or clogged intake air bypass control system vacuum lines.
   - A cracked or damaged intake air bypass control valve.

'00-02 models:

1. Start the engine. then let it idle.

   NOTE: Engine coolant temperature must be below 104°F (40°C).

2. Remove the vacuum hose (A) from the intake duct, and connect a vacuum gauge to the hose.

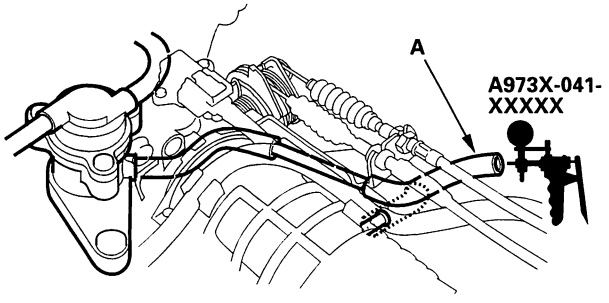

3. Raise and lower the engine speed, and make sure the vacuum gauge reading changes as the rpm changes.

   If the vacuum reading does not change, check for these problems:

   - Misrouted, leaking, broken, or clogged intake air bypass control system vacuum lines.
   - A cracked or damage intake air bypass control valve.

4. Hold the engine at 3,000 rpm with no load (in Park or neutral position) until the radiator fan comes on, then let it idle.

5. Raise and lower the engine speed, and make sure the vacuum gauge reading does not change as the rpm changes.

   If the vacuum reading changes, check for these problems:

   - Misrouted, leaking, broken, or clogged intake air bypass control system vacuum lines.
   - A cracked or damage intake air bypass control valve.

PCV Valve Inspection and Test

1. Check the PCV valve (A), hoses (B), and connections for leaks and restrictions.

'98-99 models:

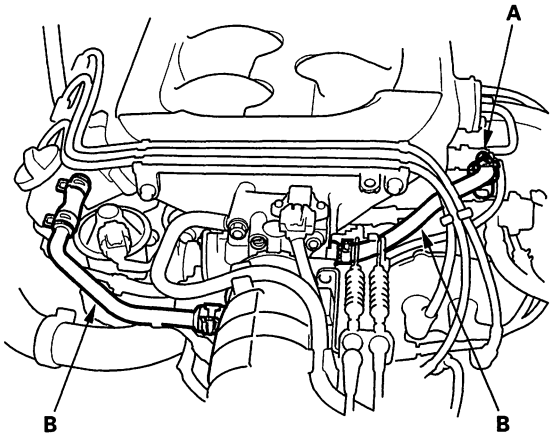

'00-02 models:

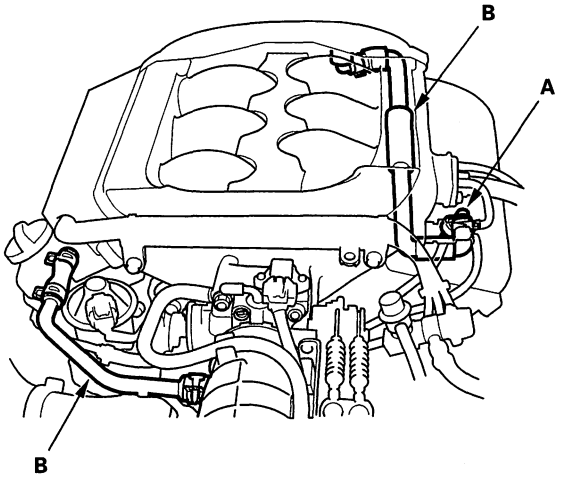

2. At idle, make sure there is a clicking sound from the PCV valve when the hose between the PCV valve and intake manifold is lightly pinched (A) with your fingers or pliers.
   If there is no clicking sound, check the PCV valve grommet for cracks or damage. If the grommet is OK, replace the PCV valve and recheck.

'98-99 models:

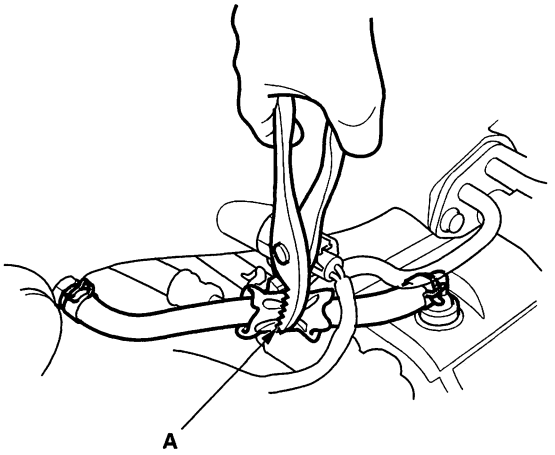

'00-02 models:

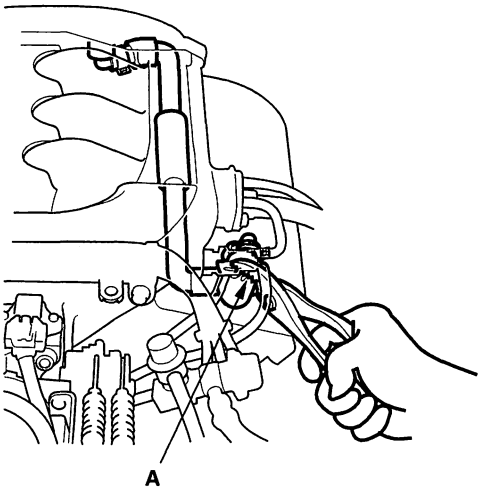

BACK

Component Location Index

NOTE: The illustration shows '00-02 models.

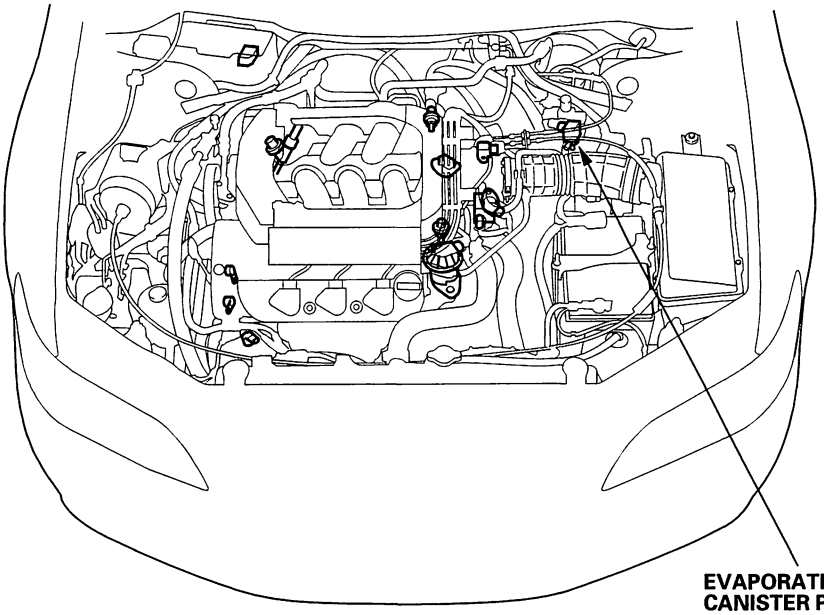

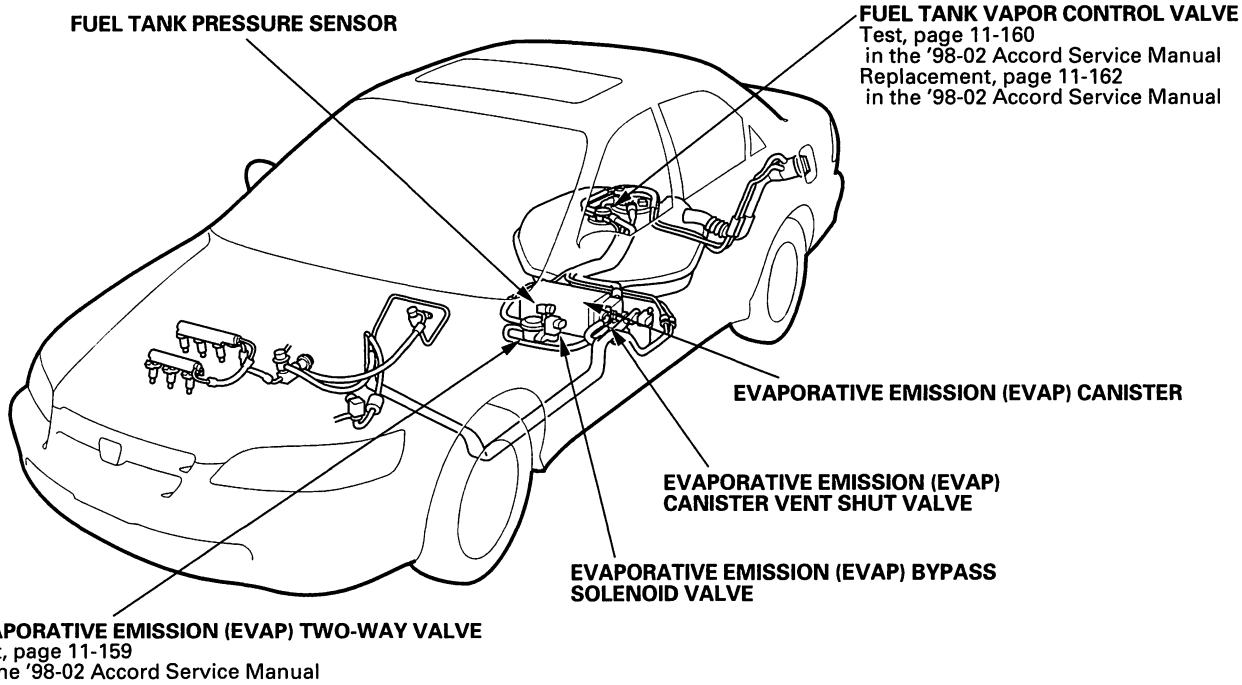

BACK

Automatic Transmission

Automatic Transmission
Special Tools 14-2
General Troubleshooting Information 14-3
DTC Troubleshooting Index 14-7
Symptom Troubleshooting Index 14-8
System Description 14-18
DTC Troubleshooting 14-64
D4 Indicator Circuit
Troubleshooting 14-93
Interlock System Troubleshooting
Shift Lock System Circuit 14-96
Key Interlock System Circuit 14-99
Road Test 14-101
Stall Speed Test 14-103
Pressure Tests 14-104
Torque Converter Clutch Solenoid Valve-
Shift Solenoid Valve A Test 14-106
Torque Converter Clutch Solenoid Valve-
Shift Solenoid Valve A Replacement 14-106
Shift Solenoid Valves B and C Test 14-107
Shift Solenoid Valves B and C
Replacement 14-107
A/T Clutch Pressure Control Solenoid
Valves A and B Test 14-108
A/T Clutch Pressure Control Solenoid
Valves A and B Replacement 14-109
Speed Sensor Replacement 14-110
2nd Clutch Pressure Switch
Replacement 14-111
3rd Clutch Pressure Switch
Replacement 14-111
ATF Level Check 14-112
ATF Replacement 14-113
Transmission Removal 14-114
Transmission Installation 14-121
ATF Cooler Flushing 14-127
ATF Cooler Hoses Replacement 14-128
Shift Lever Removal 14-129
Shift Lever Installation 14-130
Shift Lever Disassembly/Reassembly 14-132
Shift Cable Replacement 14-133
Shift Cable Adjustment 14-136

A/T Gear Position Indicator
Component Location Index 14-138
Circuit Diagram 14-139
Transmission Range Switch Test 14-140
Transmission Range Switch
Replacement 14-141
Indicator Input Test 14-143
Indicator Bulb Replacement 14-144

A/T Interlock System
Component Location Index 14-145
Circuit Diagram 14-146
Control Unit Input Test 14-147
Key Interlock Solenoid/Switch Test 14-149
Shift Lock Solenoid Test 14-149
Shift Lock Solenoid Replacement 14-150
Park Pin Switch Test 14-150

Transmission End Cover
End Cover Removal 14-151
Park Lever Stop Inspection and Adjustment 14-153
End Cover and Idler Gears Instllation 14-195

Transmission Housing
Housing and Shaft Assemblies Removal 14-154
Bearing Replacement 14-156
Shaft Assemblies and Housing Installation 14-192

Valve Body
Valve Bodies and ATF Strainer Removal 14-157
Valve Body Repair 14-159
Valve Body Valve Installation 14-160
Main Valve Body Disassembly,
Inspection and Reassembly 14-161
ATF Pump Inspection 14-163
Regulator Valve Body Disassembly,
Inspection and Reassembly 14-164
Servo Body Disassembly,
Inspection and Reassembly 14-165
Accumulator Body Disassembly, Inspection
and Reassembly 14-166
Valve Bodies and ATF Strainer
Installation 14-190

Torque Converter Housing
Mainshaft Bearing/Oil Seal
Replacement 14-167
Countershaft Bearing Replacement 14-168
Secondary Shaft Bearing Repacement 14-168

Shafts and Clutches
Mainshaft Disassembly, Inspection,
and Reassembly 14-169
3rd/4th Clutch Clearance Inspection 14-170
Mainshaft Sealing Rings Replacement 14-171
Countershaft Disassembly,
Inspection, and Reassembly 14-172
Countershaft Reverse Selector Hub,
3rd Gear, and 1st Gear Replacement 14-173
Countershaft Bearing Hub/Bearing
Replacement 14-175
Secondary Shaft Disassembly, Inspection,
and Reassembly 14-176
Secondary Shaft Clearance Inspection 14-177
Secondary Shaft Idler Gear Bearing
Replacement 14-179
Clutch Disassembly 14-180
Clutch Inspection 14-183
Clutch Reassembly 14-185

A/T Differential
Component Location Index 14-201
Backlash Inspection 14-201
Final Driven Gear/Carrier Replacement 14-202
Carrier Bearing Replacement 14-202
Oil Seal Replacement 14-203
Carrier Bearing Outer Race Replacement 14-204
Carrier Bearing Preload Inspection 14-205

Outline of V6 Model Change

The B7XA automatic transmission has been added.

Special Tools

Ref.No.	Tool Number	Description	Qty
①	07GAB-PF50101 or 07GAB-PF50100	Mainshaft Holder	1
②	07GAD-PG40101 or 07GAD-PG40100	Seal Driver Attachment	1
③	07GAE-PG40200 or 07GAE-PG4020A	Clutch Spring Compressor Bolt Assembly	1
*④	07HAC-PK40102	Housing Puller	1
⑤	07HAJ-PK40201	Preload Inspection Tool	1
⑥	07JAD-PH80101	Oil Seal Driver Attachment	1
⑦	07JAD-PH80400	Pilot, 28 x 30 mm	1
⑧	07LAD-PW50601	Attachment, 40 x 50 mm	1
**⑨	07LAE-PX40100	Clutch Spring Compressor Attachment	2
⑩	07MAJ-PY4011A	A/T Pressure Hose, 2,210 mm	4
⑪	07MAJ-PY40120	A/T Pressure Hose Adapter	4
⑫	07NAD-PX40100	Attachment, 78 x 80 mm	1
⑬	07SAZ-001000A	Backprobe Set	2
⑭	07WAZ-002010A	SCS Service Connector (DLC)	1
⑮	07ZAE-PRP0100	Clutch Compressor Attachment	1
⑯	07406-0020400	A/T Oil Pressure Gauge Set W/Panel	1
***⑰	07736-A01000B or 07736-A01000A	Adjustable Bearing Puller, 25—40 mm	1
⑱	07746-0010300	Attachment, 42 x 47 mm	1
⑲	07746-0010500	Attachment, 62 x 68 mm	1
⑳	07746-0010600	Attachment, 72 x 75 mm	1
㉑	07746-0030100	Driver 40 mm I.D.	1
㉒	07749-0010000	Driver	1
㉓	07947-6340500	Driver Attachment	1

* If the top arm is too short, replace it with 07SAC-P0Z01001.
** 07HAE-PL50101 may be used to substitute one of these tools.
*** Must be used with commercially available 3/8''-16 slide hammer.

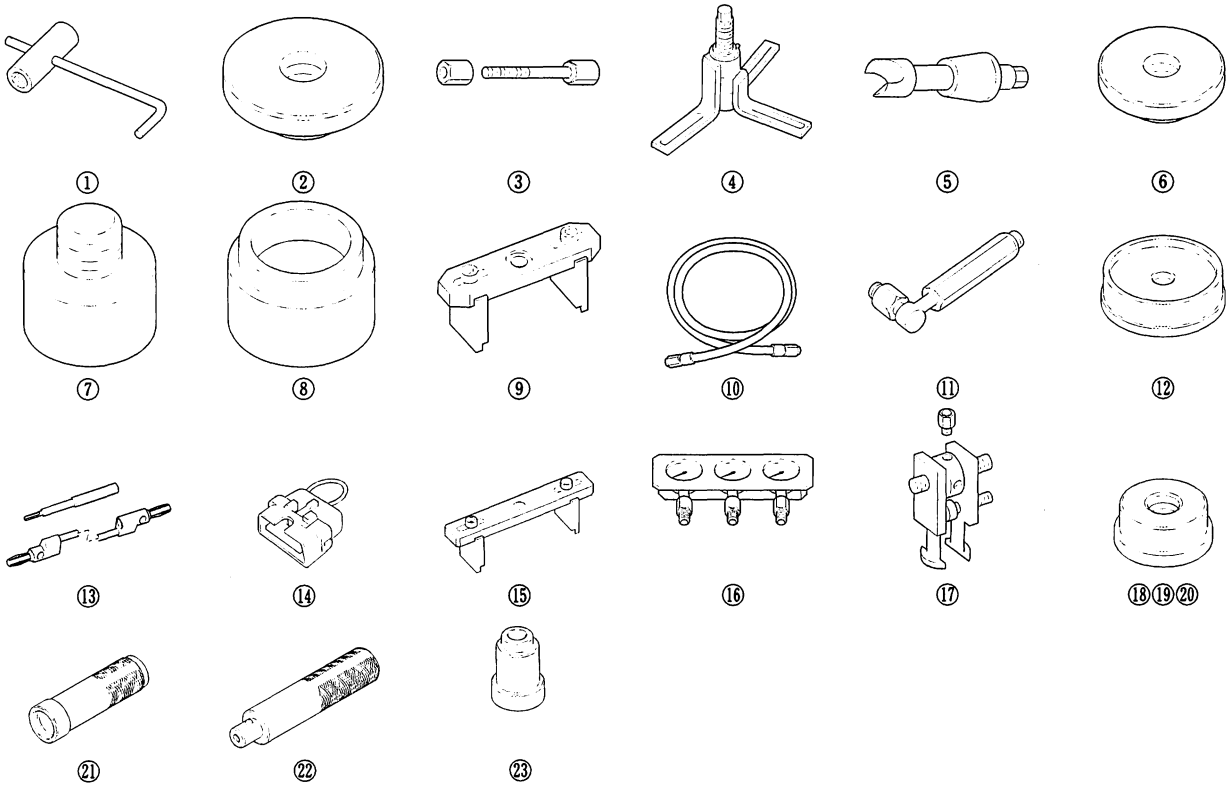

BACK

General Troubleshooting Information

How to Check for DTCs with the PGM Tester/Scan Tool

When the PCM senses an abnormality in the input or output systems, the D4 indicator in the gauge assembly will blink. When the 16P Data Link Connector (DLC) (located next to the driver's side kick panel) is connected to the OBD II Scan Tool or Honda PGM Tester as shown, the scan tool or tester will indicate the Diagnostic Trouble Code (DTC) when the ignition switch is turned ON(II).

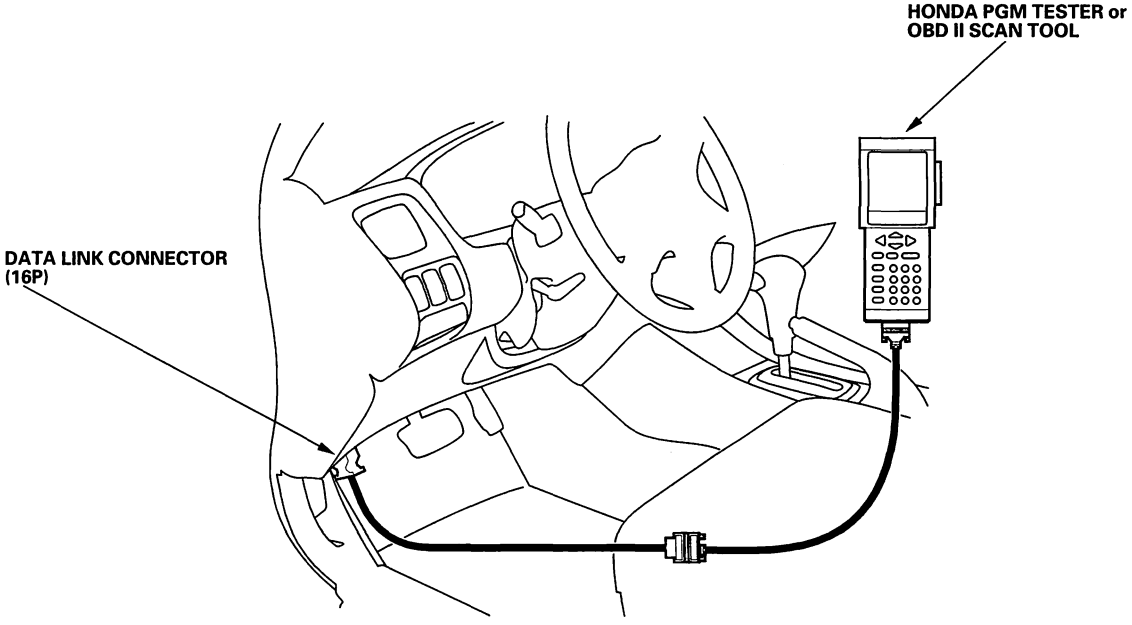

If the D4 indicator or the MIL has been reported on, or if a driveability problem is suspected, follow this procedure

1. Connect the OBD II Scan Tool (conforming to SAE J1978) or Honda PGM Tester to the 16P DLC. (See the OBD II Scan Tool or Honda PGM Tester user's manual for specific instructions. If you are using the Honda PGM Tester, make sure it is set to the SAE DTC type.)

2. Turn the ignition switch ON (II), and observe the DTC on the screen.

3. Record all fuel and emission DTCs, A/T DTCs, and freeze data.

4. If there is a fuel and emissions DTC, first check the fuel and emissions system as indicated by the DTC (except for DTC P0700). DTC P0700 means there is one or more A/T DTC, and no problems were detected in the fuel and emissions circuit of the PCM.

5. Get the anti-theft code for the radio, then write down the radio station presets.

6. Reset the memory with the PGM Tester or by removing the BACK UP fuse in the passenger's under-dash fuse/relay box for more than 10 seconds.

7. Drive the vehicle for several minutes under the same conditions as those indicated by the freeze data, and then recheck for DTCs. If the A/T DTC returns, go to the DTC Troubleshooting Index on page 14-7. If the DTC does not return, there was an intermittent problem within the circuit. Make sure all pins and terminals in the circuit are tight, and then go to step 8.

8. Enter the radio code, reset the radio preset stations, and set the clock.

(cont'd)

General Troubleshooting Information (cont'd)

How to Check for DTCs

When the PCM senses an abnormality in the input or output systems, the D4 indicator in the gauge assembly will usually blink and/or the Malfunction Indicator Lamp (MIL) may come on. When the Data Link Connector (DLC) (located next to the driver's side kick panel) is connected to the Honda PGM Tester, the D4 indicator will blink the Diagnostic Trouble Code (DTC) when the ignition switch is turned ON (II).
When the D4 indicator has been reported on, connect the Honda PGM Tester to the DLC. Turn the ignition switc ON (II), select Honda Systems, and then the SCS mode, then observe the D4 indicator.

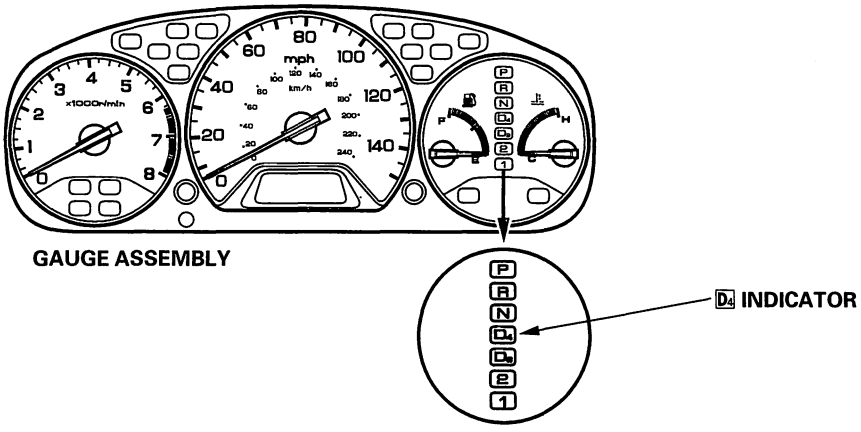

Codes 1 through 9 are indicated by individual short blinks. Codes 10 and above are indicated by a series of long and short blinks. One long blink equals 10 short blinks. Add the long and short blinks together to determine the code. After determining the code, refer to the DTC Troubleshooting Index.

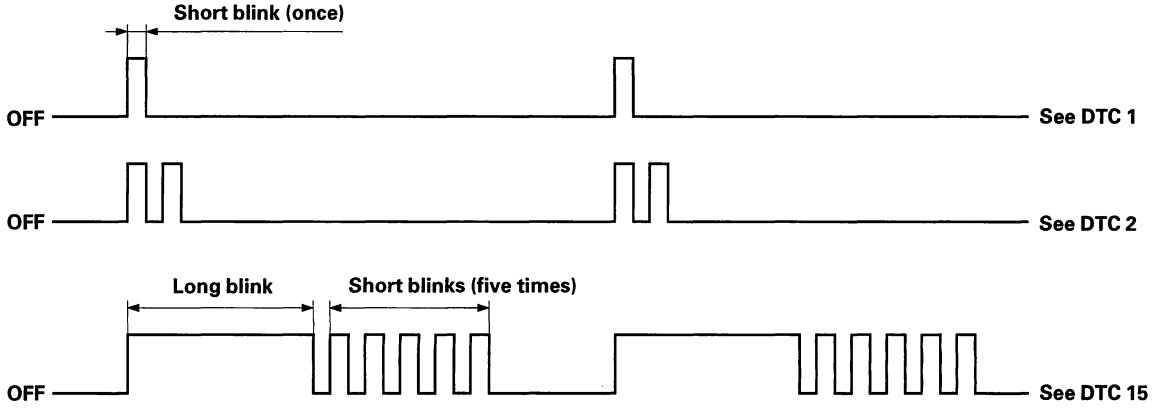

If the D4 indicator or the MIL has been reported on, or if a driveability problem, follow this procedure:

1. Record all fuel/emissions DTCs, A/T DTCs, and freeze data.
2. If there is a fuel and emissions DTC, first check the fuel and emissions system as indicated by the DTC (except for DTC P0700), DTC P0700 means there is one or more A/T DTC, and no problems were detected in the fuel and emissions circuit of the PCM.
3. Get the customer's radio anti-theft code, and write down the numbers of the radio station presets.
4. Reset the memory by removing the BACK UP fuse in the passenger's under-dash fuse/relay box for more than 10 seconds.
5. Drive the vehicle for several minutes under the same conditions as those indicated by the freeze data, and then recheck for DTCs. If the DTC returns, refer to the DTC Troubleshooting Index. If the DTC does no return, there was an intermittent problem within the circuit. Make sure all pins and terminals in the circuit are tight, then go to step 6.
6. Enter the radio code, reset the preset stations, and reset the clock.

BACK

How to Troubleshoot Circuits at the PCM

Special Tools Required
Backprobe set 07SAZ-001000A (Two required)

SRS components are located in this area. Review the SRS components locations, precautions, and procedures in the SRS section before performing repairs or service, refer to the '98-02 Accord Service Manual (see page 23-28).

1. Pull back the carpet from the passenger's side of the center console to expose the PCM.

2. Inspect the circuit on the PCM, according to the DTC troubleshooting, with the special tools and a digital multimeter.

3. Connect the backprobe adapters (A) to the stacking patch cords (B), and connect the cords to a multimeter (C). Using the wire insulation as a guide for the contoured tip of the backprobe adapter, gently slide the tip into the connector from the wire side until it comes in contact with the terminal end of the wire.

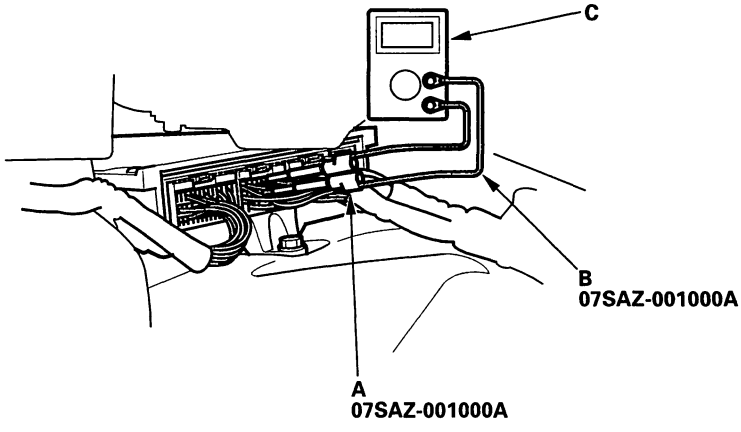

(cont'd)

General Troubleshooting Information (cont'd)

How to Reset the PCM

1. Make sure you have the anti-theft code for the radio, then write down the radio station presets.
2. Turn the ignition switch OFF.
3. Use one of these methods to reset the PCM memory:
   - Use the OBD II Scan Tool or the Honda PGM Tester.
   - Remove the BACK UP fuse (7.5 A)(A) from the passenger's under-dash fuse/relay box (B) for 10 seconds.

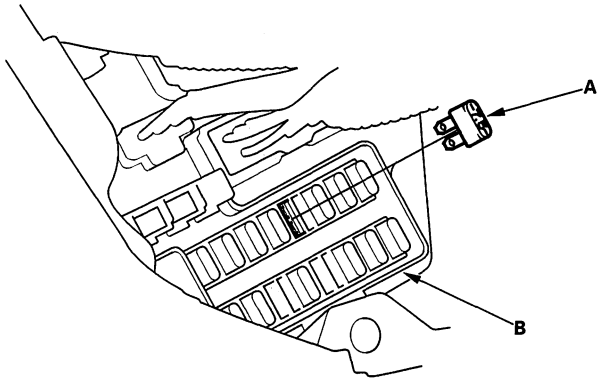

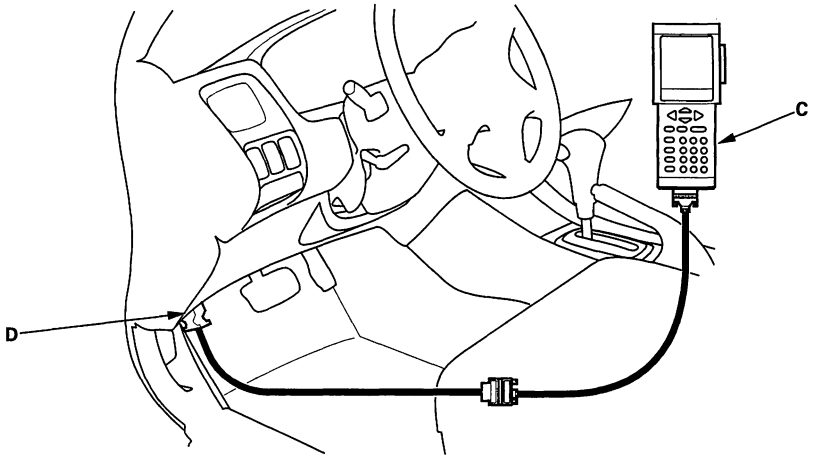

How to End a Troubleshooting Session

This procedure must be done after any troubleshooting.

1. Turn the ignition switch OFF.
2. Disconnect the OBD II Scan Tool or Honda PGM Tester (C) from the DLC (D).
3. Reset the PCM.
4. Turn the ignition switch ON (II).
5. Enter the radio code, reset the preset stations, and set the clock.
6. To verify that the problem is repaired, test-drive the vehicle for several minuites at speeds over 30 mph (48km/h).

BACK

DTC Troubleshooting Index

NOTE: Record all freeze data before you troubleshoot.

DTC*	D4 Indicator	MIL	Detection Item	Page
P0715 (15)	Blinks	ON	Mainshaft speed sensor	(see page 14-77)
P0720 (9)	Blinks	ON	Countershaft speed sensor	(see page 14-76)
P0730 (41)	OFF	ON	Shift control system	(see page 14-90)
P0740 (40)	OFF	ON	Lock-up control system	(see page 14-89)
P0753 (7)	Blinks	ON	Shift solenoid valve A	(see page 14-72)
P0758 (8)	Blinks	ON	Shift solenoid valve B	(see page 14-74)
P0763 (22)	Blinks	ON	Shift solenoid valve C	(see page 14-81)
P0780 (45)	Blinks	ON	Mechanical problem in hydraulic system	(see page 14-91)
P1705 (5)	Blinks	ON	Transmission range switch (short to ground)	(see page 14-66)
P1706 (6)	OFF	ON	Transmission range switch (open)	(see page 14-69)
P1738 (25)	OFF	OFF	2nd clutch pressure switch	(see page 14-85)
P1739 (26)	OFF	OFF	3rd clutch pressure switch	(see page 14-87)
P1750 (46)	Blinks	ON	Mechanical problem in hydraulic system	(see page 14-92)
P1751 (47)	Blinks	ON	Mechanical problem in hydraulic system	(see page 14-92)
P1753 (1)	Blinks	ON	Torque converter clutch solenoid valve	(see page 14-64)
P1768 (16)	Blinks	ON	A/T clutch pressure control solenoid valve A	(see page 14-79)
P1773 (23)	Blinks	ON	A/T clutch pressure control solenoid valve B	(see page 14-83)

The DTC in the parentheses is the flash code the D4 indicator indicates when the Data Link Connector (DLC) is connected to the Honda PGM Tester.
NOTE: Codes P0780 (45), P1750 (46), and P1751 (47) are applied to the '00-02 models.

Symptom Troubleshooting Index

These symptoms DO NOT trigger Diagnostic Trouble Codes (DTCs) or cause the D4 indicator to blink. If the Malfunction Indicator Lamp (MIL) was reported ON or the D4 indicator has been blinking, check for DTCs. But if the vehicle has one of the symptoms in the following chart, check the probable causes(s) for it, in the sequence listed, until you find the problem.

Symptom	Probable cause(s)	Notes
When you turn the ignition switch ON (II), the D4 indicator comes on and stays on or never comes on at all	A problem in the D4 indicator circuit	Check the D4 indicator circuit (see page 14-93).
Shift lever cannot be moved from the P position while you're pushing on the brake pedal	A problem in shift lock system of interlock system	Check interlock system — shift lock system circuit (see page 14-96).
Ignition key cannot be moved from ACC (I) position to LOCK (0) position while you're pushing the ignition key with the shift lever in the P position	A problem in key interlock system of interlock system	Check interlock system — key interlock system circuit (see page 14-99).

BACK

Symptom	Probable cause(s)	Notes
Engine runs, but vehicle does not move in any gear	1. Low ATF level 2. Shift cable broken or out of adjustment 3. Joint in shift cable and transmission or body worn 4. ATF pump worn or binding 5. Regulator valve stuck or spring worn 6. ATF strainer clogged 7. Mainshaft worn or damaged 8. Final gears worn or damaged 9. Transmission-to-engine assembly error 10. Axle disengaged	• Check ATF level and check ATF cooler lines for leakage and loose connections. If necessary, flush ATF cooler lines. • Check for a loose shift cable at the shift lever and the transmission control shaft. • Improper alignment of ATF pump and torque converter housing may cause ATF pump seizure. The symptoms are mostly an rpm-related ticking noise or a high pitched squeak. • Measure line pressure. • If the strainer is clogged, find the damaged components that caused debris. • Inspect the differential pinion gears for wear. If the differential pinion gears are worn, replace the differential assembly, replace the ATF strainer, thoroughly clean the transmission, and flush the torque converter, cooler, and lines. • Be careful not to damage the torque converter housing when replacing the main ball bearing. You may also damage the ATF pump when you torque down the main valve body. This will result in ATF pump seizure if not detected. Use the proper tools. • Install the main seal flush with the torque converter housing. If you push it into the torque converter housing until it bottoms out, it will block the fluid return passage and result in damage.
Vehicle moves in 2 and R, but not in D4, D3, or 1 position	1. 1st accumulator defective 2. 1st gears worn or damaged 3. 1st clutch defective	• Inspect 1st clutch pressure. • Inspect the secondary shaft and 1st/2nd clutch assembly for wear and damage. • Inspect the clutch piston and O-rings. Check the spring retainer for wear and damage. Inspect the clutch end plate-to-top disc clearance. If the clearance is out of tolerance, inspect the clutch discs and plates for wear and damage. If the discs and plates are worn or damaged, replace them as a set. If they are OK, adjust the clutch end plate clearance.

(cont'd)

Symptom Troubleshooting Index (cont'd)

Symptom	Probable cause(s)	Notes
Vehicle moves in D4, D3, 1, R, but not in 2 position	1. Shift solenoid valve A defective 2. Shift valve A defective 3. 2nd accumulator defective 4. 2nd gears worn or damaged 5. 2nd clutch defective	• Check the 2 indicator indication, and check for loose connectors. Inspect the O-rings, and check the shift solenoid valve for seizure. • Inspect the secondary shaft and 1st/2nd clutch assembly for wear and damage. • Inspect the clutch piston and O-rings. Check the spring retainer for wear and damage. Inspect the clutch end plate-to-top disc clearance. If the clearance is out of tolerance, inspect the clutch discs and plates for wear and damage. If the discs and plates are worn or damaged, replace them as a set. If they are OK, adjust the clutch end plate clearance.
Vehicle moves in D4, D3, 2, 1, but not in R position	1. Shift fork shaft stuck 2. Modulator valve defective 3. Reverse CPC valve defective 4. 4th accumulator defective 5. 4th clutch defective 6. Reverse gears worn or damaged	• Measure line pressure and 4th clutch pressure. • Check for a missing shift fork bolt on the shift fork shaft. • If the ATF strainer is clogged with particles of steel or aluminum, inspect the ATF pump. If the ATF pump is OK, and no cause for the contamination is found, replace the torque converter. • Inspect the reverse selector gear teeth chamfers, and inspect engagement teeth chamfers of the countershaft 4th gear and reverse gear. Replace the reverse gears and the reverse selector if they are worn or damaged. If the transmission makes clicking, grinding, or whirring noises, also replace the mainshaft 4th gear, reverse idler gear, and countershaft 4th gear. • If the 4th clutch feed pipe guide in the end cover is scored by the mainshaft, inspect the ball bearing for excessive movement in the transmission housing. If the ball bearing is OK, replace the end cover as it is dented. The O-ring under the guide is probably worn. • Replace the mainshaft if the bushing for the 3rd and 4th clutch feed pipes are loose or damaged. If the 4th clutch feed pipe is damaged or out of round, replace the end cover. • Inspect the clutch piston, clutch piston check valve, and O-rings. Check the spring retainer for wear and damage. Inspect the clutch end plate-to-top disc clearance. If the clearance is out of tolerance, inspect the clutch discs and plates for wear and damage. If the discs and plates are worn or damaged, replace them as a set. If they are OK, adjust the clearance with the clutch end plate.

BACK

Symptom	Probable cause(s)	Notes
Poor acceleration; flares on starting off in D4 and D3 positions: Stall speed high in D4, D3, 2, and 1 positions	1. Low ATF level 2. Shift cable broken or out of adjustment 3. ATF pump worn or binding 4. Regulator valve stuck or spring worn 5. ATF strainer clogged 6. Torque converter check valve defective	• Check ATF level and check ATF cooler lines for leakage and loose connections. If necessary, flush ATF cooler lines. • Check for a loose shift cable at the shift lever and the transmission control shaft. • Check line pressure. • Improper alignment of ATF pump and torque converter housing may cause ATF pump seizure. The symptoms are mostly an rpm-ticking noise or a high pitched squeak. • Be careful not to damage the torque converter housing when replacing the main ball bearing. You may also damage the ATF pump when you torque down the main valve body. This will result in ATF pump seizure if not detected. Use the proper tools.
Poor acceleration; flares on starting off in D4 and D3 positions: Stall speed high in D4, D3, and 1 positions	1. Shift cable broken or out of adjustment 2. 1st clutch defective	• Check for a loose shift cable at the shift lever and the transmission control shaft. • Check 1st clutch pressure. • Inspect the clutch piston and O-rings. Check the spring retainer for wear and damage. Inspect the clutch end plate-to-top disc clearance. If the clearance is out of tolerance, inspect the clutch discs and plates for wear and damage. If the discs and plates are worn or damaged, replace them as a set. If they are OK, adjust the clutch end plate clearance.
Poor acceleration; flares on starting off in 2 position: Stall speed high in 2 position	1. Shift cable broken or out of adjustment 2. 2nd clutch defective	• Check for a loose shift cable at the shift lever and the transmission control shaft. • Check 2nd clutch pressure. • Inspect the clutch piston and O-rings. Check the spring retainer for wear and damage. Inspect the clutch end plate-to-top disc clearance. If the clearance is out of tolerance, inspect the clutch discs and plates for wear and damage. If the discs and plates are worn or damaged, replace them as a set. If they are OK, adjust the clutch end plate clearance.
Poor acceleration; flares on starting off in R position: Stall speed is in specification in D4, D3, 2, and 1 positions, but high in R position	4th clutch defective	• Check 4th clutch pressure. • Inspect the clutch piston, clutch piston check valve, and O-rings. Check the spring retainer for wear and damage. Inspect the clutch end plate-to-top disc clearance. If the clearance is out of tolerance, inspect the clutch discs and plates for wear and damage. If the discs and plates are worn or damaged, replace them as a set. If they are OK, adjust the clutch end plate clearance.

(cont'd)

Symptom Troubleshooting Index (cont'd)

Symptom	Probable cause(s)	Notes
Poor acceleration; Stall speed low	1. Torque converter clutch solenoid valve defective 2. Torque converter one-way clutch defective 3. Engine output low 4. Lock-up clutch piston defective 5. Lock-up shift valve defective 6. Restricted cooler	Check ATF cooling system for restriction.
Engine idle vibration	1. Low ATF level 2. Torque converter clutch solenoid valve defective 3. Drive plate defective or transmission misassembed 4. Engine output low 5. Lock-up clutch piston defective 6. ATF pump worn or binding 7. Lock-up shift valve defective 8. Restricted cooler	• Set idle rpm in gear to the specified idle speed. If still no good, adjust the engine mounts as outlined in the engine section of this service manual. • Check ATF level and check ATF cooler lines for leakage and loose connections. If necessary, flush ATF cooler lines. • Check ATF cooling system for restriction.
Vehicle moves in N position	1. Excessive ATF 2. Foreign material in separator plate orifice 3. 1st clutch defective 4. 2nd clutch defective 5. 3rd clutch defective 6. 4th clutch defective 7. Clutch clearance incorrect 8. Needle bearing seized up, worn, or damaged 9. Thrust washer seized up, worn, or damaged	• Check ATF level, and drain ATF if necessary. • Inspect the clutch piston, clutch piston check valve, and O-rings. Check the spring retainer for wear and damage. Inspect the clutch end plate-to-top disc clearance. If the clearance is out of tolerance, inspect the clutch discs and plates for wear and damage. If the discs and plates are worn or damaged, replace them as a set. If they are OK, adjust the clutch end plate clearance. • Check for clutch pressure in neutral.

BACK

Symptom	Probable cause(s)	Notes
Late shift from N position to D4 and D3 positions	1. Shift solenoid valve C defective 2. A/T clutch pressure control solenoid valves A and B defective 3. Shift cable broken or out of adjustment 4. Joint in shift cable and transmission or body worn 5. Shift fork shaft stuck 6. CPC valve A stuck 7. Foreign material in separator plate orifice 8. Shift valve C defective 9. Servo control valve defective 10. 1st accumulator defective 11. 1st check ball stuck 12. 1st clutch defective	• Check the D4 indicator indication, and check for loose connectors. Inspect the O-ring, and check the shift solenoid valve for seizure. • Inspect the A/T clutch pressure control solenoid valve body gasket and ATF feed pipes for wear and damage. If the A/T clutch pressure control solenoid valve is stuck, inspect the CPC valves. • Check for a loose shift cable at the shift lever and the transmission control shaft. • If the ATF strainer is clogged with particles of steel or aluminum, inspect the ATF pump. If the ATF pump is OK, and no cause for the contamination is found, replace the torque converter. • Check 1st clutch pressure. • Inspect the clutch piston, clutch piston check valve, and O-rings. Check the spring retainer for wear and damage. Inspect the clutch end plate-to-top disc clearance. If the clearance is out of tolerance, inspect the clutch discs and plates for wear and damage. If the discs and plates are worn or damaged, replace them as a set. If they are OK, adjust the clutch end plate clearance.
Late shift from N position to R position	1. Shift solenoid valve C defective 2. A/T clutch pressure control solenoid valves A and B defective 3. Shift cable broken or out of adjustment 4. Joint in shift cable and transmission or body worn 5. Shift fork shaft stuck 6. Foreign material in separator plate orifice 7. Reverse CPC valve defective 8. 4th accumulator defective 9. 4th clutch defective	• Check the D4 indicator indication, and check for loose connectors. Inspect the O-ring, and check the shift solenoid valve for seizure. • Inspect the A/T clutch pressure control solenoid valve body gasket and ATF feed pipes for wear and damage. If the A/T clutch pressure control solenoid valve is stuck, inspect the CPC valves. • Check for a loose shift cable at the shift lever and the transmission control shaft. • If the ATF strainer is clogged with particles of steel or aluminum, inspect the ATF pump. If the ATF pump is OK, and no cause for the contamination is found, replace the torque converter. • Check 4th clutch pressure. • Inspect the clutch piston, clutch piston check valve, and O-rings. Check the spring retainer for wear and damage. Inspect the clutch end plate-to-top disc clearance. If the clearance is out of tolerance, inspect the clutch discs and plates for wear and damage. If the discs and plates are worn or damaged, replace them as a set. If they are OK, adjust the clutch end plate clearance.

(cont'd)

Symptom Troubleshooting Index (cont'd)

Symptom	Probable cause(s)	Notes
No shift	Modulator valve defective	Measure line pressure.
Erratic shifting gears: Fails to shift in D4 position; does not upshift to 4th	1. Shift solenoid valve A defective 2. Mainshaft speed sensor defective 3. Countershaft speed sensor defective 4. Shift valve A defective 5. Shift valve D defective	• Inspect the O-ring, and check the shift solenoid valve for seizure. • Check the D4 indicator indication, and check for loose connectors. Inspect the transmission range switch. If the transmission range switch is faulty, replace it. If the transmission range switch is out of adjustment, adjust it and the shift cable.
Erratic shifting gears: Fails to shift in D4 and D3 positions; does not upshift to 3rd and 4th	1. Shift solenoid valve B defective 2. Shift fork shaft stuck 3. Shift valve B defective 4. Servo control valve defective	• Check the D4 indicator indication, and check for loose connectors. Inspect the O-ring, and check the shift solenoid valve for seizure. • Check for a missing shift fork bolt on the shift fork shaft.
Erratic shifting gears: Fails to shift in D4, D3 and 1 positions; starts off in 3rd	1. Shift solenoid valve B defective 2. Shift valve B defective 3. Shift valve E defective	Check the D4 indicator indication, and check for loose connectors. Inspect the O-ring, and check the shift solenoid valve for seizure.
Excessive shock, or flares on all upshifts and downshifts	1. A/T clutch pressure control solenoid valves A and B defective 2. CPC valve A defective 3. CPC valve B defective 4. Foreign material in separator plate orifice	• Check the D4 indicator indication, and check for loose connectors. Inspect the A/T clutch pressure control solenoid valve body gasket and ATF feed pipes for wear and damage. If the A/T clutch pressure control solenoid valve is stuck, inspect the CPC valves. • If the ATF strainer is clogged with particles of steel or aluminum, inspect the ATF pump. If the ATF pump is OK, and no cause for the contamination is found, replace the torque converter.
Excessive shock or flares on 1-2 upshift or 2-1 downshift	1. Shift solenoid valve C defective 2. 2nd clutch pressure switch defective 3. Foreign material in separator plate orifice 4. Shift valve C defective 5. 1st accumulator defective 6. 2nd accumulator defective 7. 1st check ball stuck 8. 2nd check ball stuck 9. 1st clutch defective 10. 2nd clutch defective	• Check the D4 indicator indication, and check for loose connectors. Inspect the O-rings, and check the shift solenoid valve for seizure. • Check the D4 indicator indication, and check for loose connectors. Check that the outlet is not clogged inside of the connector. • Check 1st and 2nd clutch pressures. • Inspect the clutch piston and O-rings. Check the spring retainer for wear and damage. Inspect the clutch end plate-to-top disc clearance. If the clearance is out of tolerance, inspect the clutch discs and plates for wear and damage. If the discs and plates are worn or damaged, replace them as a set. If they are OK, adjust the clutch end plate clearance.

BACK

Symptom	Probable cause(s)	Notes
Excessive shock, or flares on 2-3 upshift or 3-2 downshift	1. Shift solenoid valve C defective 2. 3rd clutch pressure switch defective 3. Foreign material in separator plate orifice 4. Shift valve C defective 5. 2nd accumulator defective 6. 3rd accumulator defective 7. 2nd check ball stuck 8. 2nd clutch defective 9. 3rd clutch defective	• Check the D4 indicator indication, and check for loose connectors. Inspect the O-rings, and check the shift solenoid valve for seizure. • Check 2nd and 3rd clutch pressures. • Inspect the clutch piston, clutch piston check valve, and O-rings. Check the spring retainer for wear and damage. Inspect the clutch end plate-to-top disc clearance. If the clearance is out of tolerance, inspect the clutch discs and plates for wear and damage. If the discs and plates are worn or damaged, replace them as a set. If they are OK, adjust the clutch end plate clearance.
Excessive shock, or flares on 3-4 upshift or 4-3 downshift	1. Shift solenoid valve C defective 2. Foreign material in separator plate orifice 3. Shift valve C defective 4. 3rd accumulator defective 5. 4th accumulator defective 6. 3rd clutch defective 7. 4th clutch defective	• Check the D4 indicator indication, and check for loose connectors. Inspect the O-rings, and check the shift solenoid valve for seizure. • Check 3rd and 4th clutch pressures. • If the ATF strainer is clogged with particles of steel or aluminum, inspect the ATF pump. If the ATF pump is OK, and no cause for the contamination is found, replace the torque converter, and check the stall speed. • Inspect the clutch piston, clutch piston check valve, and O-rings. Check the spring retainer for wear and damage. Inspect the clutch end plate-to-top disc clearance. If the clearance is out of tolerance, inspect the clutch discs and plates for wear and damage. If the discs and plates are worn or damaged, replace them as a set. If they are OK, adjust the clutch end plate clearance.
Noise from transmission in all shift lever positions	1. ATF pump worn or binding 2. Torque converter housing or transmission housing bearing worn or damaged	• Improper alignment of ATF pump and torque converter housing may cause ATF pump seizure. The symptoms are mostly an rpm-ticking noise or a high pitched squeak. • Inspect the contact of the countershaft and secondary shaft with the bearings. Check the ATF guide plates for damage and wear. Inspect the 1st clutch feed pipe for damage and out of round. If the 1st clutch feed pipe is damaged or out of round, replace it. Replace the secondary shaft if the bushing for the 1st clutch feed pipe is damaged or out of round.
Vehicle does not accelerate more than 31 mph (50 km/h)	Torque converter one-way clutch defective	Replace torque converter.

(cont'd)

Symptom Troubleshooting Index (cont'd)

Symptom	Probable cause(s)	Notes
Vibration in all shift lever positions	Drive plate defective or transmission misassembled	• Set idle rpm in gear to the specified idle speed. If still no good, adjust the engine mounts as outlined in the engine section of the service manual. • Check the stall speed.
Shift lever does not operate smoothly	1. A/T gear position switch defective or out of adjustment 2. Shift cable broken or out of adjustment 3. Joint in shift cable and transmission or body worn	• Check the D4 indicator indication, and check for loose connectors. Inspect the transmission range switch. If the transmission range switch is faulty, replace it. If the transmission range switch is out of adjustment, adjust it and the shift cable. • Check for a loose shift cable at the shift lever and the transmission control shaft.
Transmission does not shift into P position	1. Shift cable broken or out of adjustment 2. Joint in shift cable and transmission or body worn 3. Park mechanism defective	• Check for a loose shift cable at the shift lever and the transmission control shaft. • Check the park pawl spring installation and the park lever spring installation. If installation is incorrect, install the spring correctly. Make sure that the park lever stop is not installed upside down. Check the distance between the park pawl and the park lever roller pin. If the distance is out of tolerance, adjust the distance with the park lever stop.
Lock-up clutch does not disengage	1. Torque converter clutch solenoid valve defective 2. A/T clutch pressure control solenoid valves A and B defective 3. Lock-up clutch piston defective 4. Lock-up shift valve defective 5. Lock-up control valve defective 6. Lock-up timing valve defective 7. Restricted cooler	• Check the D4 indicator indication, and check for loose connectors. Inspect the A/T clutch pressure control solenoid valve body gasket and ATF feed pipes for wear and damage. If the A/T clutch pressure control solenoid valve is stuck, inspect the CPC valves. • Check ATF cooling system for restriction.

BACK

Symptom	Probable cause(s)	Notes
Lock-up clutch does not operate smoothly	1. Torque converter clutch solenoid valve defective 2. A/T clutch pressure control solenoid valves A and B defective 3. Lock-up clutch piston defective 4. Torque converter check valve defective 5. Lock-up shift valve defective 6. Lock-up control valve defective 7. Lock-up timing valve defective	• Check the D4 indicator indication, and check for loose connectors. Inspect the A/T clutch pressure control solenoid valve body gasket and ATF feed pipes for wear and damage. If the A/T clutch pressure control solenoid valve is stuck, inspect the CPC valves. • Center all engine mounts.
Lock-up clutch does not engage	1. Torque converter clutch solenoid valve defective 2. A/T clutch pressure control solenoid valves A and B defective 3. Mainshaft speed sensor defective 4. Countershaft speed sensor defective 5. Lock-up clutch piston defective 6. Torque converter check valve defective 7. Lock-up shift valve defective 8. Lock-up control valve defective	Check the D4 indicator indication, and check for loose connectors. Inspect the A/T clutch pressure control solenoid valve body gasket and ATF feed pipes for wear and damage. If the A/T clutch pressure control solenoid valve is stuck, inspect the CPC valves.
A/T gear position indicator does not indicate shift lever positions	1. Transmission range switch defective or out of adjustment 2. Shift cable broken or out of adjustment 3. Joint in shift cable and transmission or body worn	• Check the D4 indicator indication, and check for loose connectors. Inspect the transmission range switch. If the transmission range switch is faulty, replace it. If the transmission range switch is out of adjustment, adjust it and the shift cable. • Check for a loose shift cable at the shift lever and the transmission control shaft.
Speedometer does not operate	Countershaft speed sensor defective	Check the D4 indicator indication, and check for loose connectors.

System Description

General Operation

The automatic transmission is a combination of a 3-element torque converter and triple-shaft electronically controlled automatic transmission which provides 4 speeds forward and 1 reverse. The entire unit is positioned in line with the engine.

Torque Converter, Gears, and Clutches

The torque converter consists of a pump, turbine, and stator assembly in a single unit. They are connected to the engine crankshaft so they turn together as a unit as the engine turns. Around the outside of the torque converter is a ring gear which meshes with the starter pinion when the engine is being started. The entire torque converter assembly serves as a flywheel transmitting power to the transmission mainshaft. The transmission has three parallel shafts: the mainshaft, the countershaft, and the secondary shaft. The mainshaft is in line with the engine crankshaft. The mainshaft includes the 3rd and 4th clutches, and gears for 3rd, 4th, reverse, and idler (reverse gear is integral with the 4th gear). The countershaft includes the final drive, 1st, 3rd, 4th, reverse, 2nd, park, and idler gears (the final drive gear is integral with the countershaft). The secondary shaft includes the 1st and 2nd clutches, and gears for 1st, 2nd and idler. The countershaft 4th gear and the countershaft reverse gear can be locked to the countershaft at its center, providing 4th gear or reverse, depending with which way the selector moved. The gears on the mainshaft and the secondary shaft are in constant mesh with those on the countershaft. When certain combinations of gears in the transmission are engaged by the clutches, power is transmitted from the mainshaft and the secondary shaft to the countershaft to provide D4, D3, 2, 1 and R positions.

Electronic Control

The electronic control system consists of the Powertrain Control Module (PCM), sensors, and six solenoid valves. Shifting and lock-up are electronically controlled for comfortable driving under all conditions. The PCM is located below the dashboard, under the front lower panel behind the center console.

Hydraulic Control

The valve bodies include the main valve body, the regulator valve body, the servo body, and the accumulator body. They are bolted to the torque converter housing. The main valve body contains the manual valve, the modulator valve, the shift valve C, the shift valve D, the shift valve E, the servo control valve, the torque converter check valve, the reverse CPC valve, the lock-up shift valve, the relief valve, the cooler check valve, and the ATF pump gears. The regulator valve body contains the regulator valve, the lock-up timing valve, and the lock-up control valve. The servo body contains the servo valve, the shift valve A, the shift valve B, the CPC valves A and B, and 3rd and 4th accumulators. The accumulator body contains the 1st and 2nd accumulators and lubrication check valve. Fluid from the regulator passes through the manual valve to the various control valves. The 1st, 3rd, and 4th clutches receive fluid from their respective feed pipes, and the 2nd clutch receives fluid from the internal hydraulic circuit.

Shift Control Mechanism

The PCM controls shift solenoid valves A, B, and C, and A/T clutch pressure control solenoid valves A and B while receiving input signal from various sensors located throughout the vehicle. The shift solenoid valves shift the positions of the shift valves to switch the port leading hydraulic pressure to the clutch. The A/T clutch pressure control solenoid valves A and B control the CPC valves A and B to shift smoothly between lower gear and higher gear. This pressurizes a line to one of the clutches, engaging the clutch and its corresponding gear.

Lock-up Mechanism

In D4 position (3rd and 4th), and D3 position (3rd), pressurized fluid is drained from the back of the torque converter through a fluid passage, causing the lock-up piston to be held against the torque converter cover. As this takes place, the mainshaft rotates at the same speed as the engine crankshaft. Together with hydraulic control, the PCM optimizes the timing of the lock-up mechanism. When the torque converter clutch solenoid valve activates, modulator pressure changes to switch lock-up on and off. The lock-up control valve and the lock-up timing valve control the range of lock-up according to A/T clutch pressure control solenoid valves A and B. The torque converter clutch solenoid valve is mounted on the torque converter housing, and A/T clutch pressure control solenoid valves A and B are mounted on the transmission housing. They are all controlled by the PCM.

BACK

Gear Selection
The shift lever has seven positions: P PARK, R REVERSE, N NEUTRAL, D_4 1st through 4th gear ranges, D_3 1st through 3rd gear ranges, 2 2nd gear, and 1 1st gear.

Position	Description
P PARK	Front wheels locked; park pawl engaged with park gear on countershaft. All clutches released.
R REVERSE	Reverse; reverse selector engaged with countershaft reverse gear and 4th clutch locked.
N NEUTRAL	All clutches released.
D_4 DRIVE (1st through 4th)	General driving; starts off in 1st, shifts automatically to 2nd, 3rd, then 4th, depending on vehicle speed and throttle position. Downshift through 3rd, 2nd, and 1st on deceleration to stop. The lock-up mechanism operates in 3rd and 4th gears.
D_3 DRIVE (1st through 3rd)	Used for rapid acceleration at highway speeds and general driving; up-hill and down-hill driving; starts off in 1st, shifts automatically to 2nd, then 3rd, depending on vehicle speed and throttle position. Downshifts through 2nd to 1st on deceleration to stop. The lock-up mechanism operates in 3rd gear.
2 SECOND	Used for engine braking or better traction starting off on loose or slippery surfaces; stays in 2nd gear; does not shift up or down.
1 FIRST	Used for engine braking; stays in 1st gear; does not shift up.

Starting is possible only in P and N positions through the use of a slide-type, neutral-safety switch.

Automatic Transaxle (A/T) Gear Position Indicator
The A/T gear position indicator in the instrument panel shows which gear has been selected without having to look down at the console.

(cont'd)

System Description (cont'd)

Clutches

The four-speed automatic transmission uses hydraulically-actuated clutches to engage or disengage the transmission gears. When hydraulic pressure is introduced into the clutch drum, the clutch piston moves. This presses the friction discs and steel plates together, locking them so they don't slip. Power is then transmitted through the engaged clutch pack to its hub-mounted gear. Likewise, when the hydraulic pressure is bled from the clutch pack, the piston releases the friction discs and the steel plates, and they are free to slide past each other. This allows the gear to spin independently on its shaft, transmitting no power.

1st Clutch
The 1st clutch engages/disengages 1st gear, and is located at the middle of the secondary shaft. The 1st clutch is joined back-to-back to the 2nd clutch. The 1st clutch is supplied hydraulic pressure by its ATF feed pipe within the secondary shaft.

2nd Clutch
The 2nd clutch engages/disengages 2nd gear, and is located at the middle of the secondary shaft. The 2nd clutch is joined back-to-back to the 1st clutch. The 2nd clutch is supplied hydraulic pressure through the secondary shaft by a circuit connected to the internal hydraulic circuit.

3rd Clutch
The 3rd clutch engages/disengages 3rd gear, and is located at the middle of the mainshaft. The 3rd clutch is joined back-to-back to the 4th clutch. The 3rd clutch is supplied hydraulic pressure by its ATF feed pipe within the mainshaft.

4th Clutch
The 4th clutch engages/disengages 4th gear, as well as reverse gear, and is located at the middle of the mainshaft. The 4th clutch is joined back-to-back to the 3rd clutch. The 4th clutch is supplied hydraulic pressure by its ATF feed pipe within the mainshaft.

BACK

Transmission Sectional View

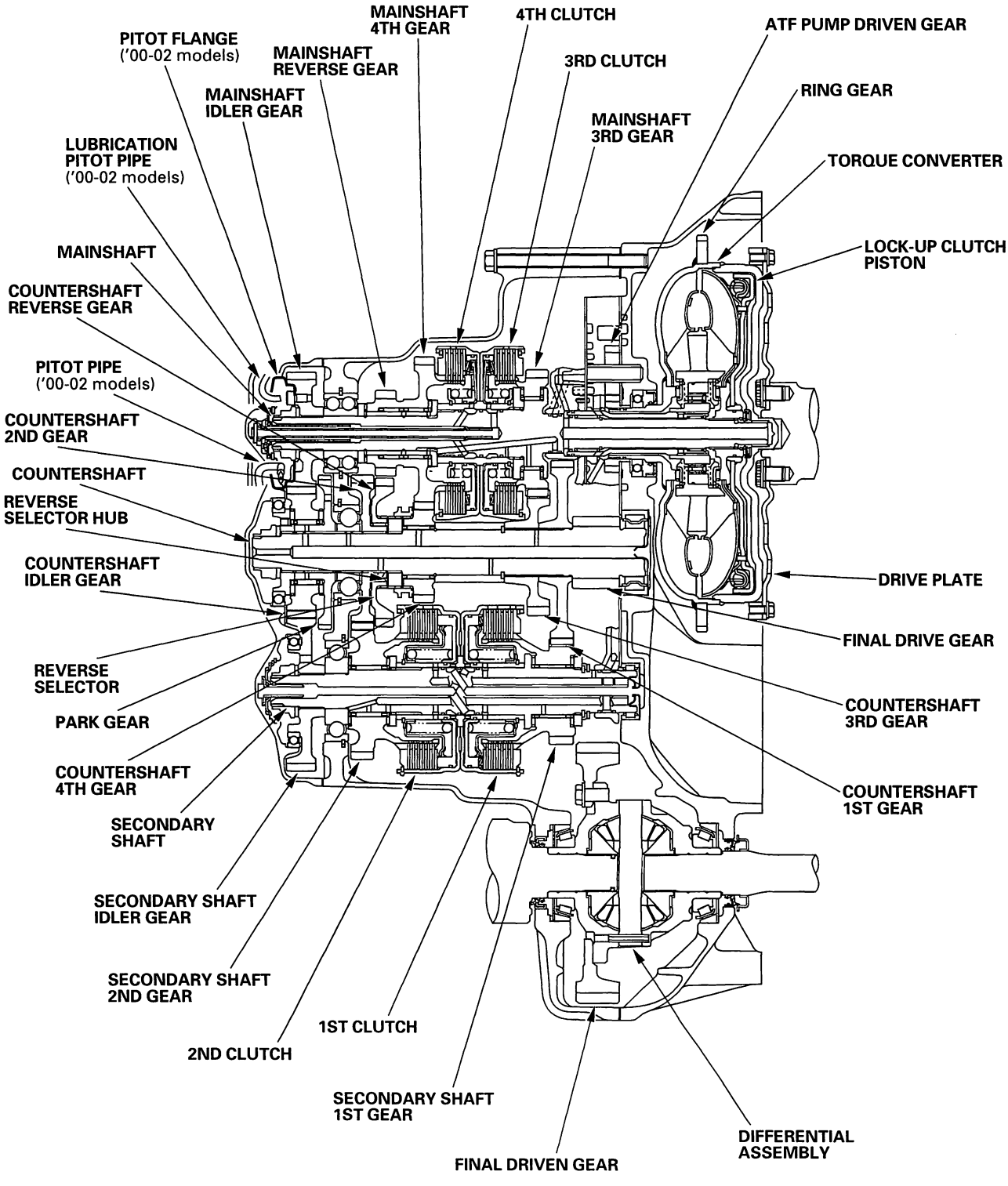

(cont'd)

System Description (cont'd)

Power Flow

POSITION		PART							
		TORQUE CONVERTER	1ST GEAR 1ST CLUTCH	2ND GEAR 2ND CLUTCH	3RD GEAR 3RD CLUTCH	4TH		REVERSE GEAR	PARK GEAR
						GEAR	CLUTCH		
P		○	×	×	×	×	×	×	○
R		○	×	×	×	×	○	○	×
N		○	×	×	×	×	×	×	×
D4	1ST	○	○	×	×	×	×	×	×
	2ND	○	×	○	×	×	×	×	×
	3RD	○	×	×	○	×	×	×	×
	4TH	○	×	×	×	○	○	×	×
D3	1ST	○	○	×	×	×	×	×	×
	2ND	○	×	○	×	×	×	×	×
	3RD	○	×	×	○	×	×	×	×
2		○	×	○	×	×	×	×	×
1		○	○	×	×	×	×	×	×

○:Operates
×:Doesn't operate

Gear Operation

Gears on the mainshaft:

- The 3rd gear is engaged/disengaged with the mainshaft by the 3rd clutch.
- The 4th gear is engaged/disengaged with the mainshaft by the 4th clutch.
- The reverse gear is engaged/disengaged with the mainshaft by the 4th clutch.
- The idler gear is splined with the mainshaft and rotates with the mainshaft.

Gears on the countershaft

- The final drive gear is integral with the countershaft.
- The 1st gear, 3rd gear, 2nd gear, and park gear are splined with the countershaft and rotate with the countershaft.
- The 4th gear and reverse gear rotate freely from the countershaft. The reverse selector engages the 4th gear or the reverse gear with the reverse selector hub. The reverse selector hub is splined with the countershaft so that the 4th gear or reverse gear engage with the countershaft.
- The idler gear rotates freely from the countershaft.

Gears on the secondary shaft

- The 1st gear is engaged/disengaged with the secondary shaft by the 1st clutch.
- The 2nd gear is engaged/disengaged with the secondary shaft by the 2nd clutch.
- The idler gear is splined with the secondary shaft and rotates with the secondary shaft.

BACK

P Position
Hydraulic pressure is not applied to the clutches. Power is not transmitted to the countershaft. The countershaft is locked by the park pawl interlocking the park gear.

N Position
Engine power transmitted from the torque converter drives the mainshaft idler gear, the countershaft idler gear, and the secondary shaft idler gear, but hydraulic pressure is not applied to the clutches. Power is not transmitted to the countershaft. The countershaft 4th gear is engaged with the reverse selector hub and the countershaft by the reverse selector, when the shift lever is shifted in N position from D4 position. The countershaft reverse gear is engaged when shifted from R position.

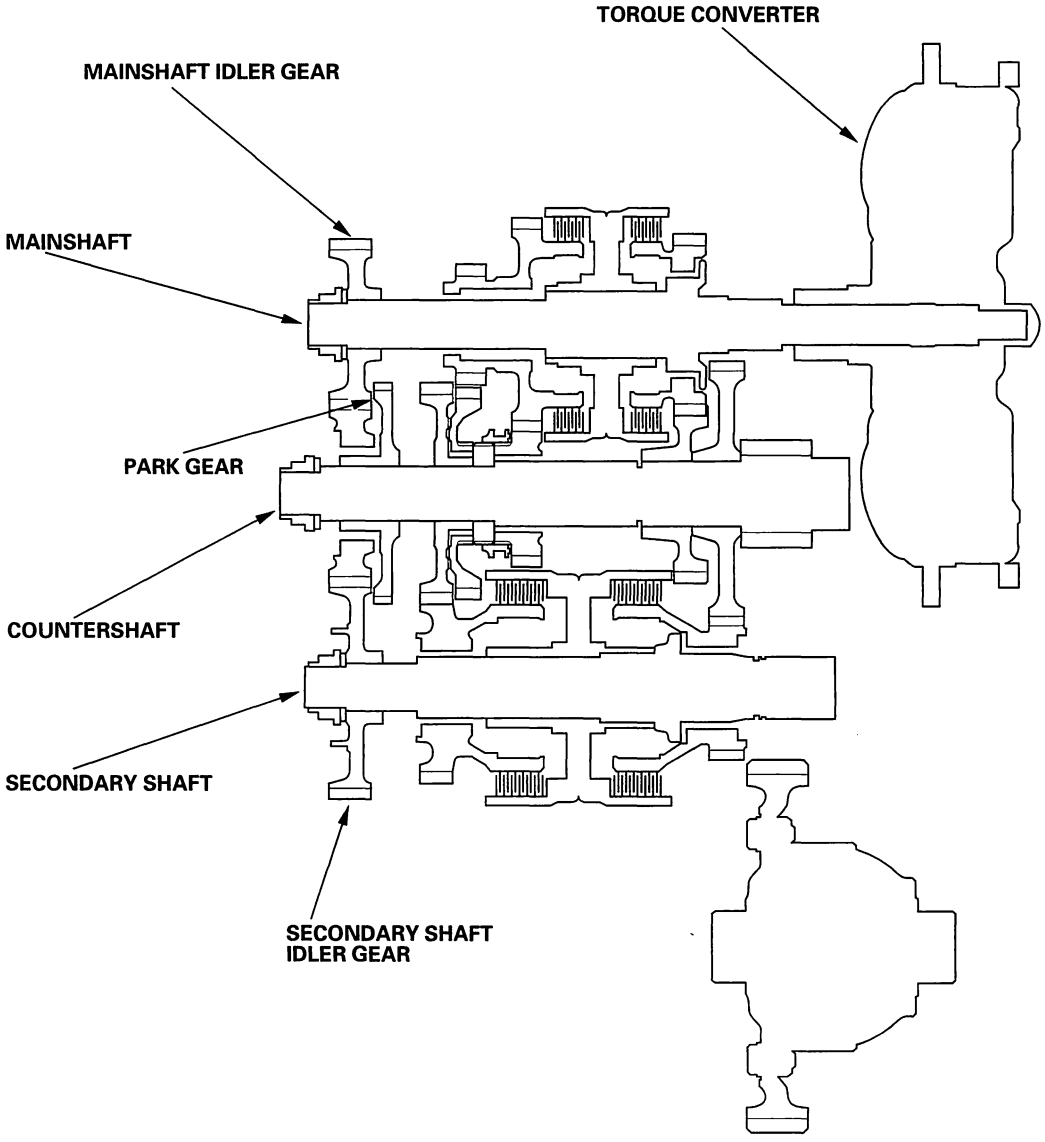

(cont'd)

System Description (cont'd)

Power Flow (cont'd)

In D4 or D3 position, the optimum gear is automatically selected from the 1st, 2nd, 3rd and 4th gears, according to conditions such as the balance between the throttle opening (engine loading) and vehicle speed.

D4 or D3 Position in 1st gear and 1 Position

- Hydraulic pressure is applied to the 1st clutch, then the 1st clutch engages the secondary shaft 1st gear with the secondary shaft.
- The mainshaft idler gear drives the secondary shaft via the countershaft idler gear and secondary shaft idler gear.
- The secondary shaft 1st gear drives the countershaft 1st gear and the countershaft.
- Power is transmitted to the final drive gear, which in turn drives the final driven gear.

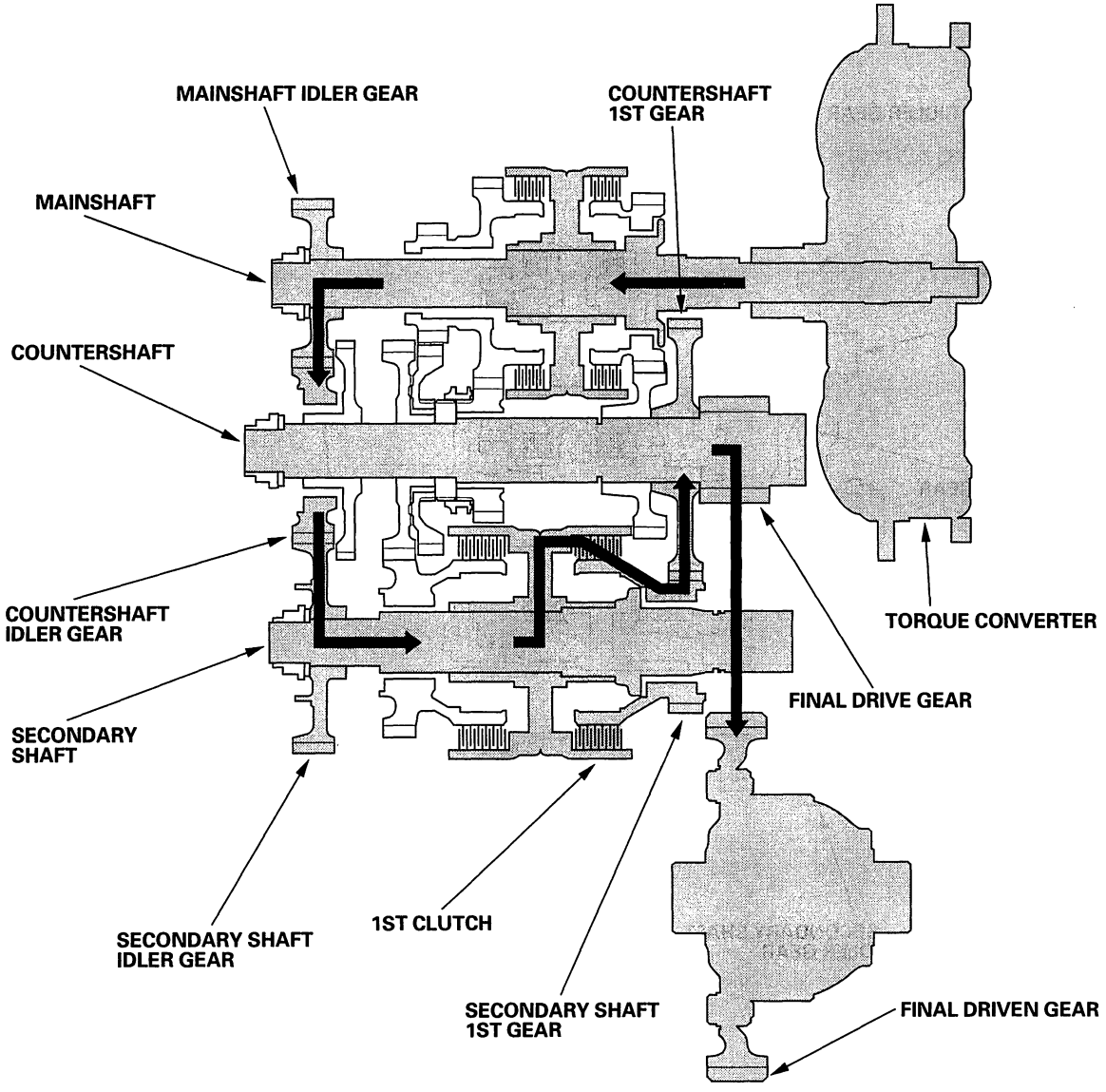

BACK

D4 or D3 Position in 2nd gear and 2 Position

- Hydraulic pressure is applied to the 2nd clutch, then the 2nd clutch engages the secondary shaft 2nd gear with the secondary shaft.
- The mainshaft idler gear drives the secondary shaft via the countershaft idler gear and secondary shaft idler gear.
- The secondary shaft 2nd gear drives the countershaft 2nd gear and the countershaft.
- Power is transmitted to the final drive gear, which in turn drives the final driven gear.

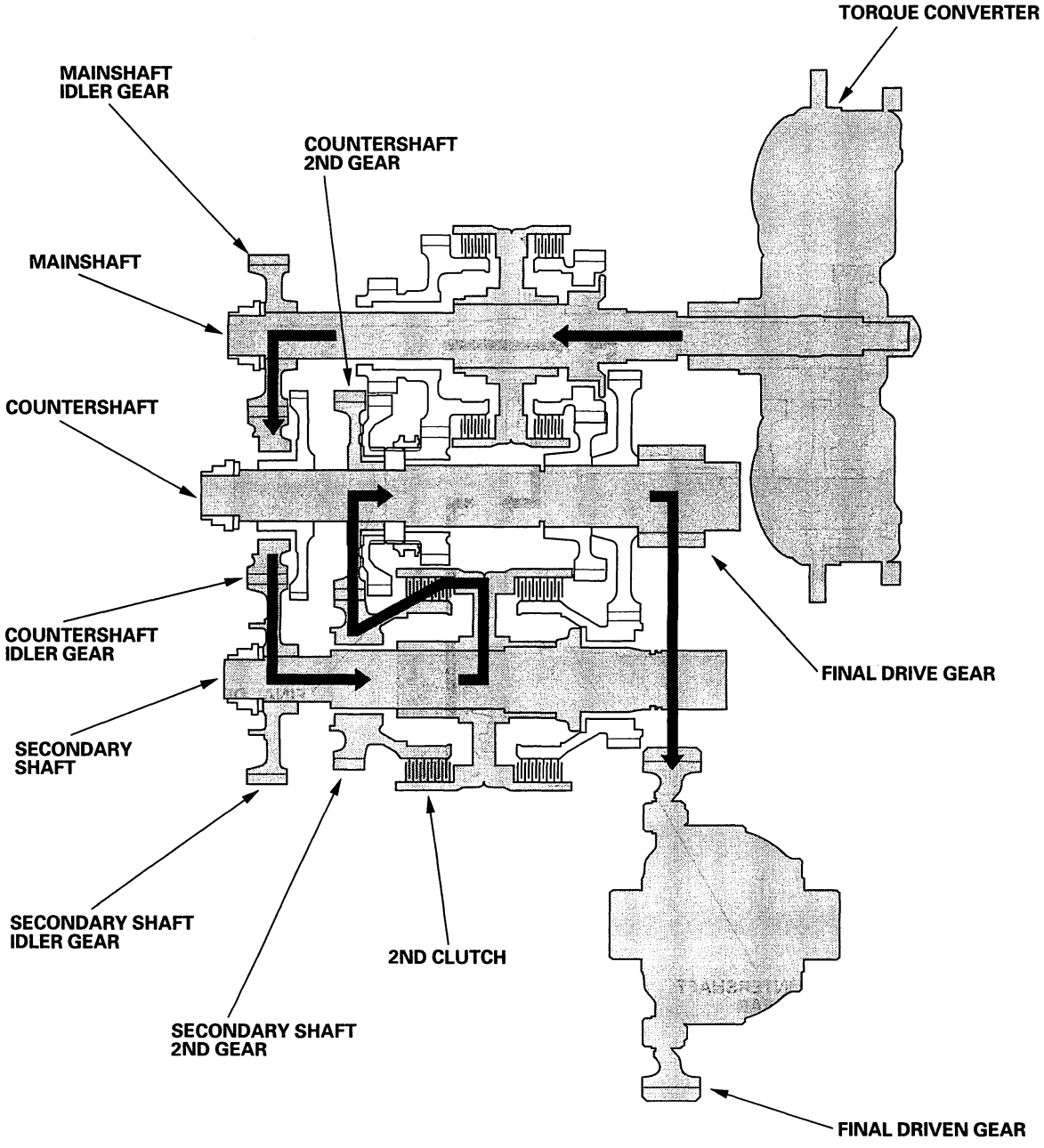

(cont'd)

System Description (cont'd)

Power Flow (cont'd)

D4 or D3 Position in 3rd gear

- Hydraulic pressure is applied to the 3rd clutch, then the 3rd clutch engages the mainshaft 3rd gear with the mainshaft.
- The mainshaft 3rd gear drives the countershaft 3rd gear and the countershaft.
- Power is transmitted to the final drive gear, which in turn drives the final driven gear.

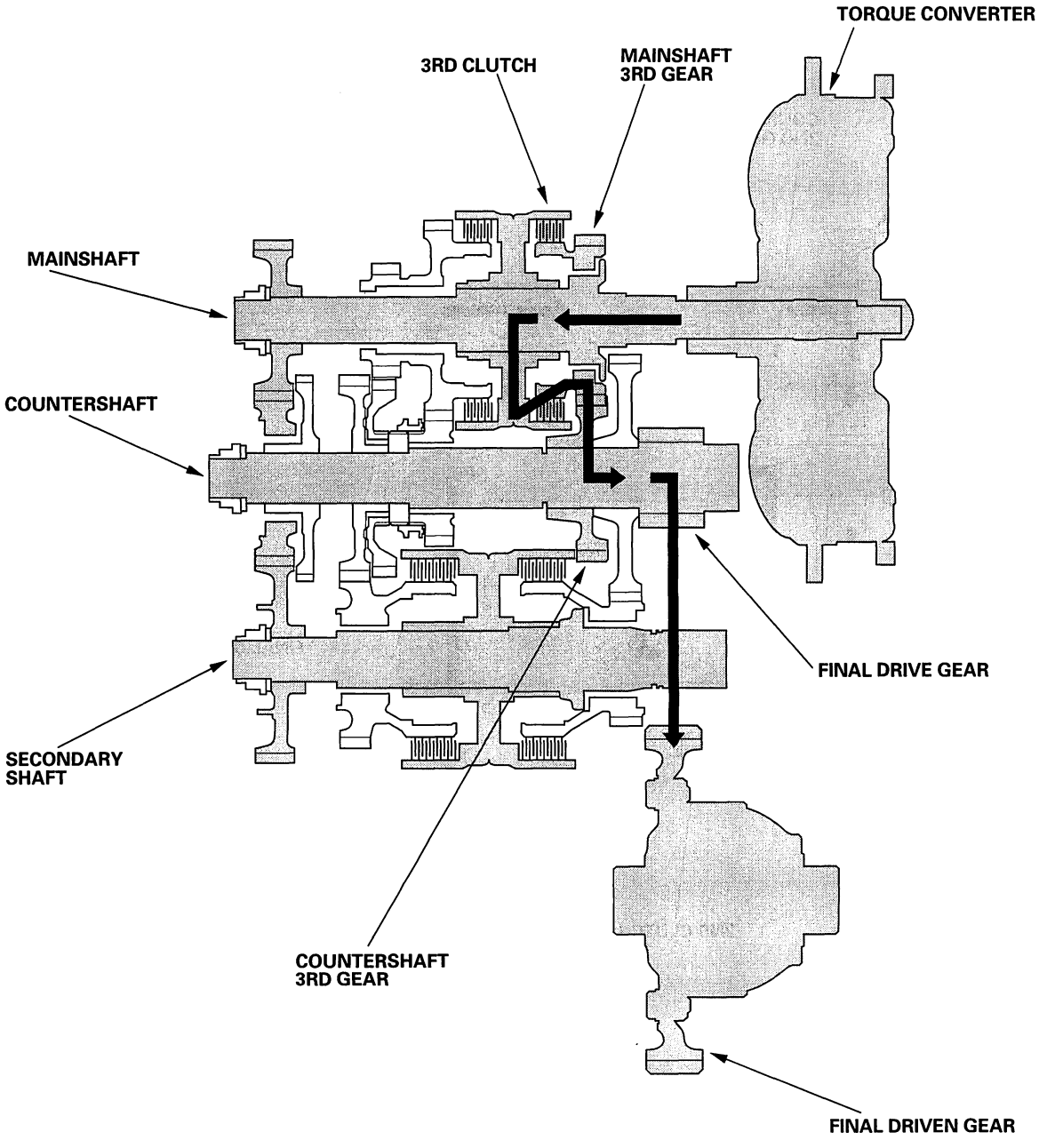

BACK

D4 Position in 4th gear

- Hydraulic pressure is applied to the servo valve to engage the reverse selector with the countershaft 4th gear while the shift lever is in the forward range (D4, D3, 2 and 1 position).
- Hydraulic pressure is also applied to the 4th clutch, then the 4th clutch engages the mainshaft 4th gear with the mainshaft.
- The mainshaft 4th gear drives the countershaft 4th gear, which drives the reverse selector hub and the countershaft.
- Power is transmitted to the final drive gear, which in turn drives the final driven gear.

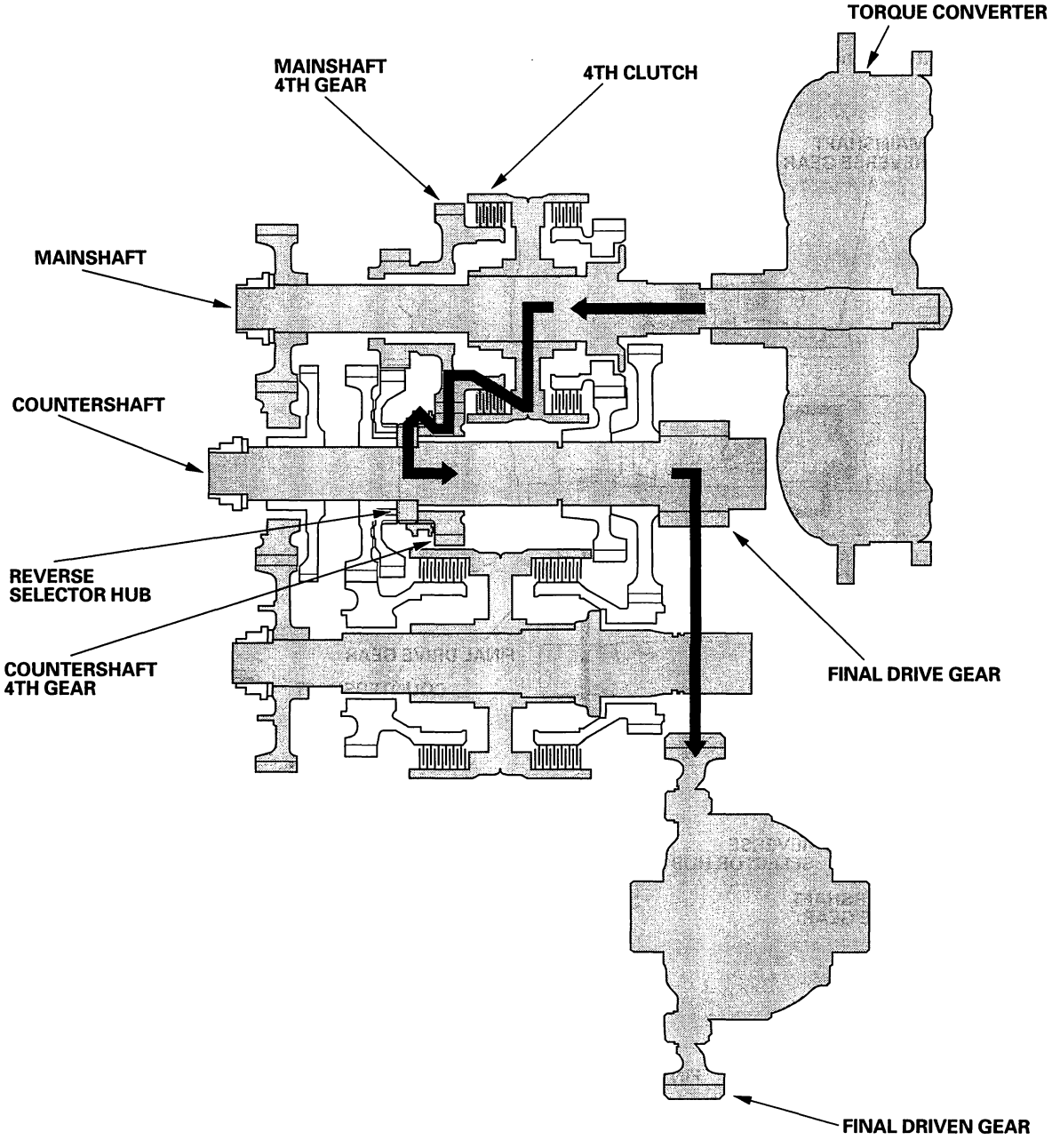

(cont'd)

System Description (cont'd)

Power Flow (cont'd)

R Position

- Hydraulic pressure is applied to the servo valve to engage the reverse selector with the countershaft (reverse gear while the shift lever is in the R position).
- Hydraulic pressure is also applied to the 4th clutch, then the 4th clutch engages the mainshaft reverse gear with the mainshaft.
- The mainshaft reverse gear drives the countershaft reverse gear via the reverse idler gear.
- The rotation direction of the countershaft reverse gear is changed via the reverse idler gear.
- The countershaft reverse gear drives the countershaft via the reverse selector which drives the reverse selector hub.
- Power is transmitted to the final drive gear, which in turn drives the final driven gear.

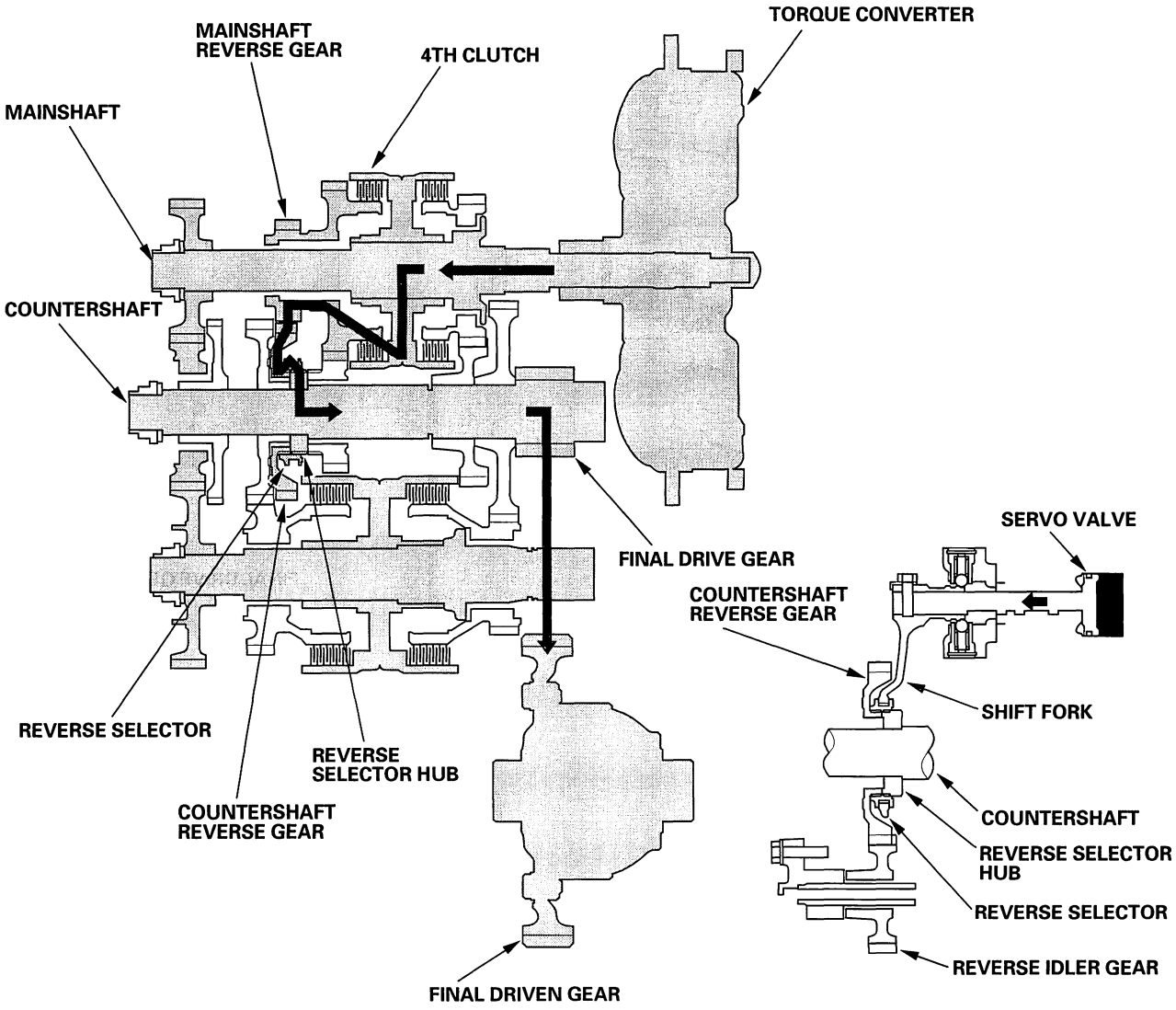

BACK

Electronic Control System

Functional Diagram

The electronic control system consists of the Powertrain Control Model (PCM), sensors, and six solenoid valves. Shifting and lock-up are electronically controlled for comfortable driving under all conditions. The PCM is located below the dashboard, under the front lower panel behind the center console.

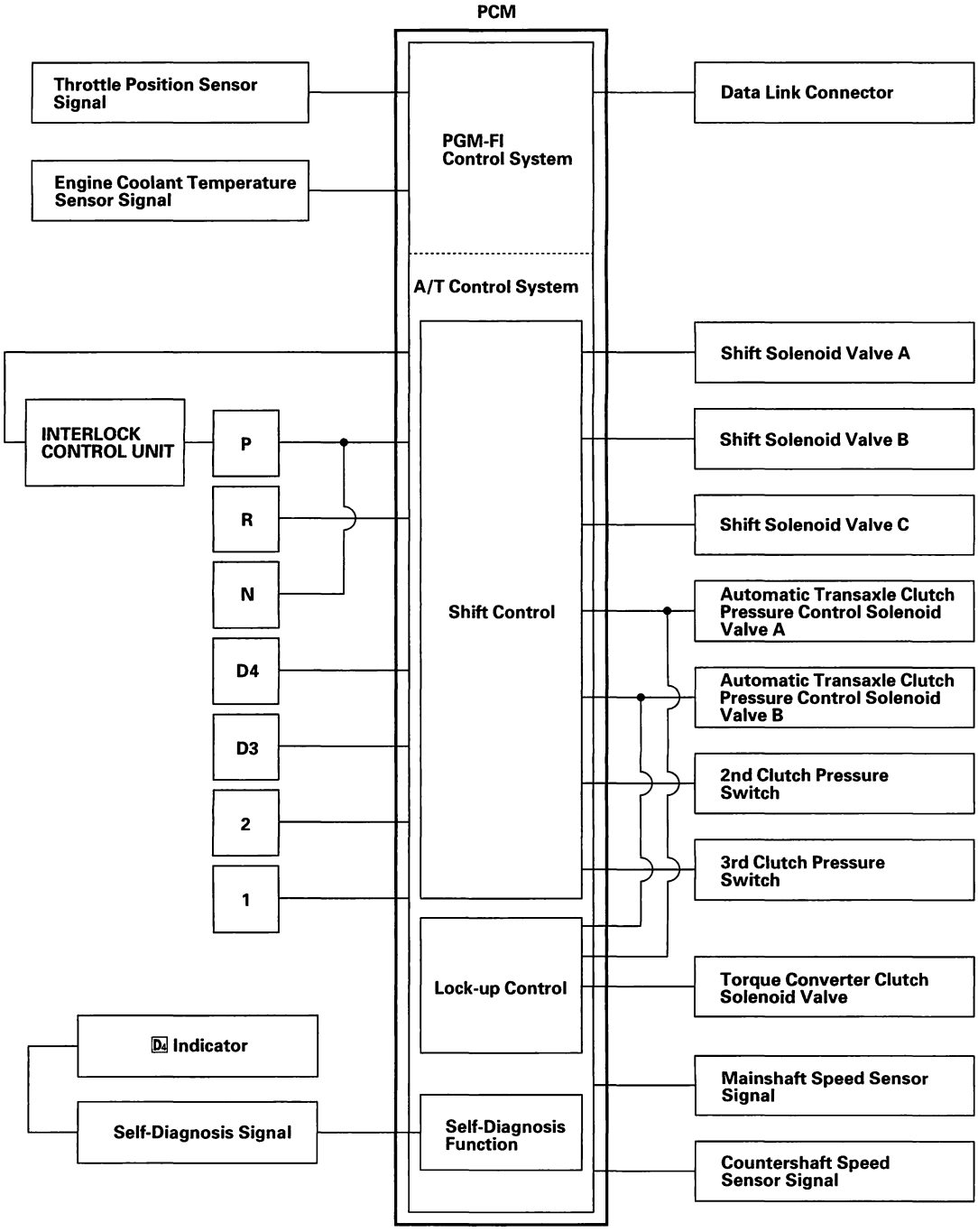

(cont'd)

System Description (cont'd)

Electronic Control System (cont'd)

Electronic Controls Location

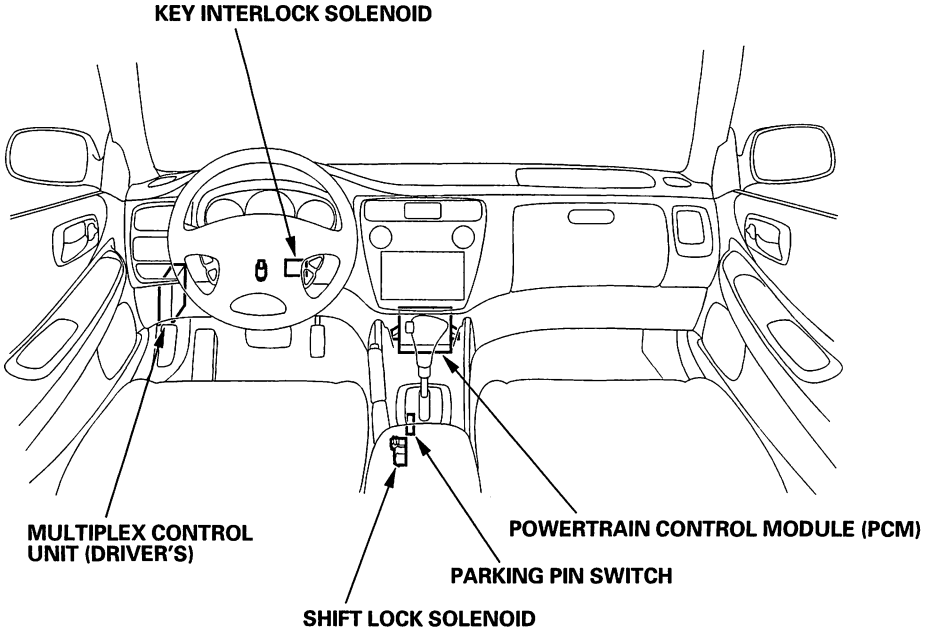

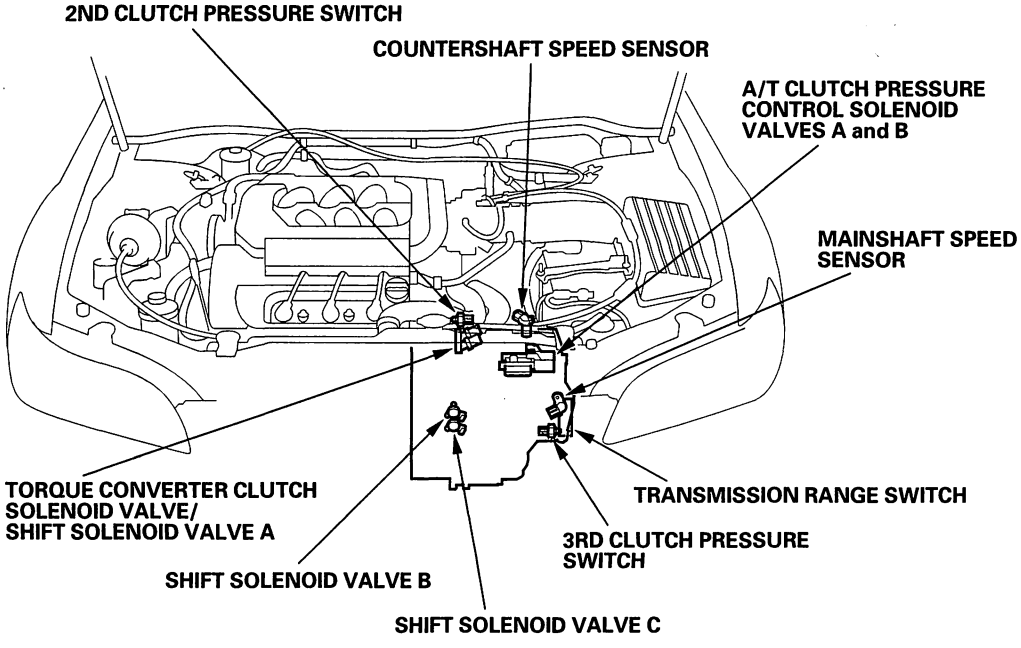

BACK

Shift Control

Shifting is related to engine torque through the solenoid valves, which are controlled by the PCM. The PCM instantly determines which gear should be selected by various signals sent from sensors, and actuates the shift solenoid valves A, B, and C to control shifting. Also, a Grade Logic Control System to controls shifting in D4 and D3 positions while the vehicle is ascending or descending a slope, or reducing speed.

The combination of driving signals to shift solenoid valves A, B, and C is shown in the table below.

Position	Gear position	Shift solenoid valves		
		A	B	C
D4, D3	Shifting from N position	ON	ON	ON
	Stays in 1st	OFF	ON	ON
	Shifting gears between 1st and 2nd	ON	ON	ON
	Stays in 2nd	ON	ON	OFF
	Shifting gears between 2nd and 3rd	ON	OFF	OFF
	Stays in 3rd	ON	OFF	ON
D4	Shifting gears between 3rd and 4th	OFF	OFF	ON
	Stays in 4th	OFF	OFF	OFF
2	2nd	ON	ON	OFF
1	1st	OFF	ON	ON
R	Shifting from P and N position	OFF	ON	ON
	Stays in reverse	OFF	ON	OFF
	Reverse inhibit	OFF	ON	ON
P	Park	OFF	ON	OFF
N	Neutral	OFF	ON	OFF

NOTE: For a description of the reverse inhibit mode, refer to page 14-56.

Lock-up Control

The torque converter clutch solenoid valve controls modulator pressure to switch the lock-up shift valve and lock-up ON and OFF. The PCM controls the torque converter clutch solenoid valve and the A/T clutch pressure control solenoid valves A and B. When the torque converter clutch solenoid valve is turned ON, the condition of lock-up starts. The A/T clutch pressure control solenoid valves A and B regulate A/T clutch pressure control solenoid pressure, and apply the pressure to the lock-up control valve and the lock-up timing valve. The lock-up control mechanism operates in 3rd, and 4th gear in D4 and in 3rd gear in D3 positions.

(cont'd)

System Description (cont'd)

Electronic Control System (cont'd)

Grade Logic Control System

How it works:
The PCM compares actual driving conditions with memorized driving conditions, based on the input from the countershaft speed sensor, the throttle position sensor, the engine coolant temperature sensor, the brake pedal position switch signal, and the shift level position signal, to control shifting while the vehicle is ascending or descending a slope, or reducing speed.

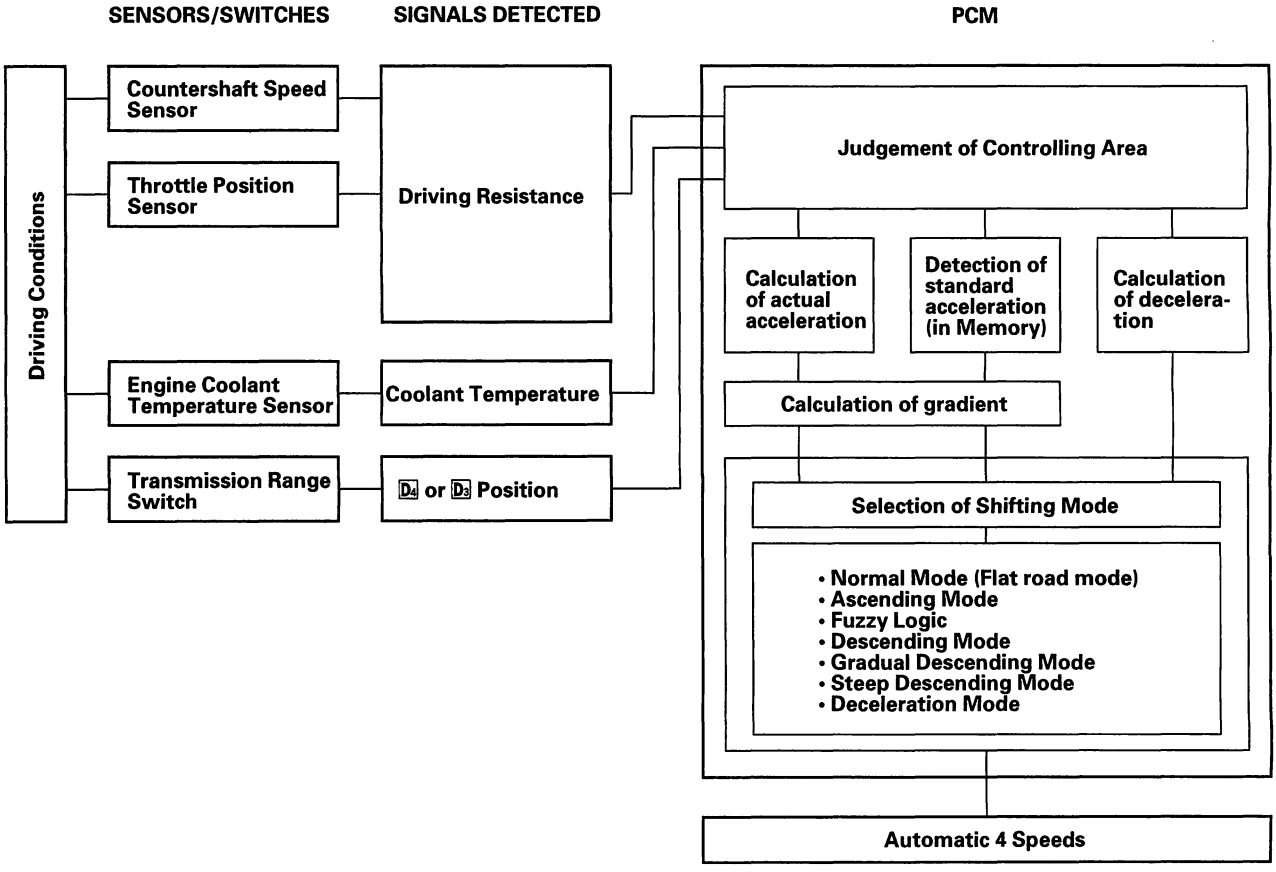

BACK

Ascending Control

When the PCM determines that the vehicle is climbing a hill in D4 and D3 positions, the system extends the engagement area of 2nd gear and 3rd gear to prevent the transmission from frequently shifting between 2nd and 3rd gears, and between 3rd and 4th gears, so the vehicle can run smooth and have more power when needed.

NOTE:
- Shift schedules stored in the PCM between 2nd and 3rd gears, and between 3rd and 4th gears, enable the PCM's fuzzy logic to automatically select the most suitable gear according to the magnitude of a gradient.
- Fuzzy logic is a form of artificial intelligence that lets computers respond to changing conditions much like a human mind would.

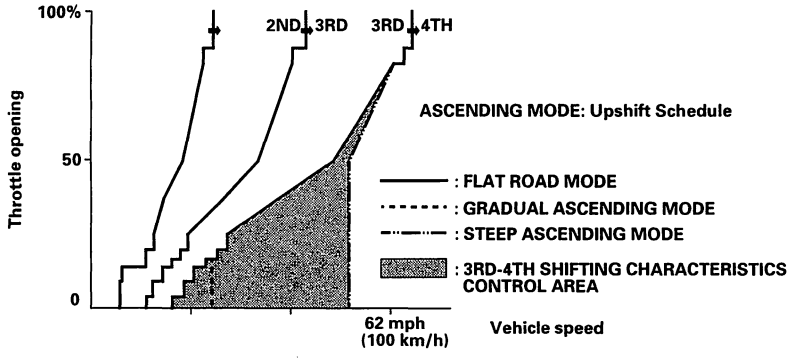

Descending Control

When the PCM determines that the vehicle is going down a hill in D4 and D3 positions, the shift-up speed from 3rd to 4th gear and from 2nd to 3rd (when the throttle is closed) becomes faster than the set speed for flat road driving to widen the 3rd gear and 2nd gear driving areas. This, in combination with engine braking from the deceleration lock-up, achieves smooth driving when the vehicle is descending. There are two descending modes with different 3rd gear driving areas and 2nd gear driving areas according to the magnitude of a gradient stored in the PCM. When the vehicle is in 4th gear, and you are decelerating when you are applying the brakes on a steep hill, the transmission will downshift to 3rd gear. When you accelerate, the transmission will then return to higher gear.

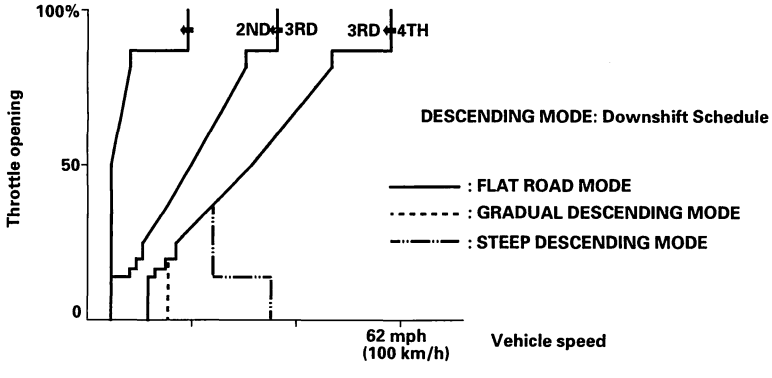

Deceleration Control

When the vehicle goes around a corner and needs to decelerate first and then accelerate, the PCM sets the data for deceleration control to reduce the number of times the transmission shifts. When the vehicle is decelerating from speeds above 27 mph (43 km/h), the PCM shifts the transmission from 4th to 2nd earlier than normal to cope with upcoming acceleration.

(cont'd)

System Description (cont'd)

Electronic Control System (cont'd)

PCM Electrical Connections

Electronic Control System (cont'd)
PCM Electrical Connections

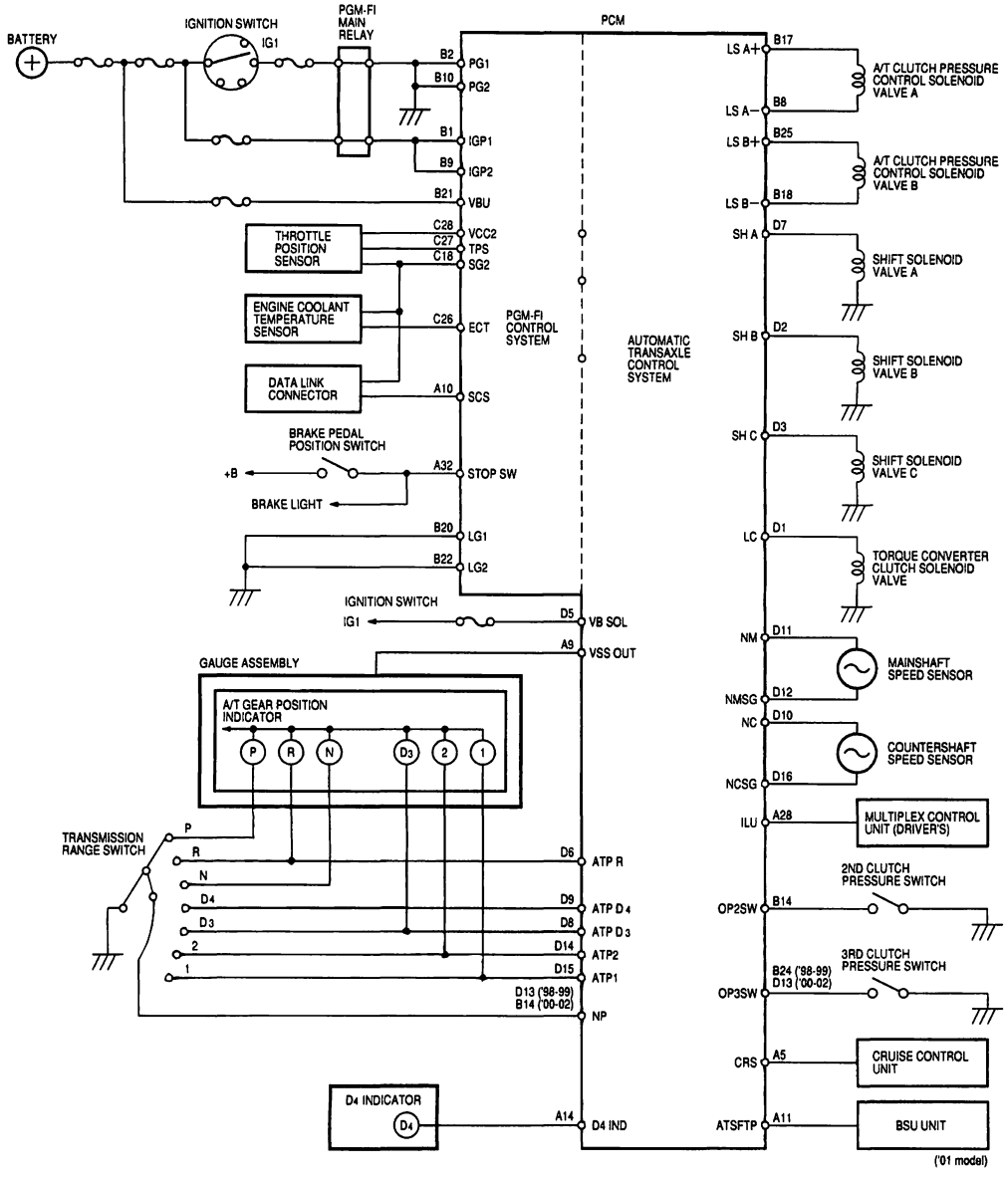

PCM Connector Terminal Locations

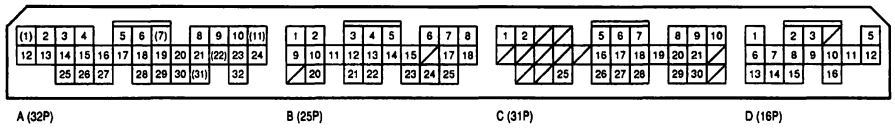

BACK

PCM Inputs and Outputs

The PCM terminal voltage and measuring conditions are shown for the connector terminals related to the A/T control system. The other PCM terminal voltage and measuring conditions are described in section 11.

PCM Connector Terminal Locations

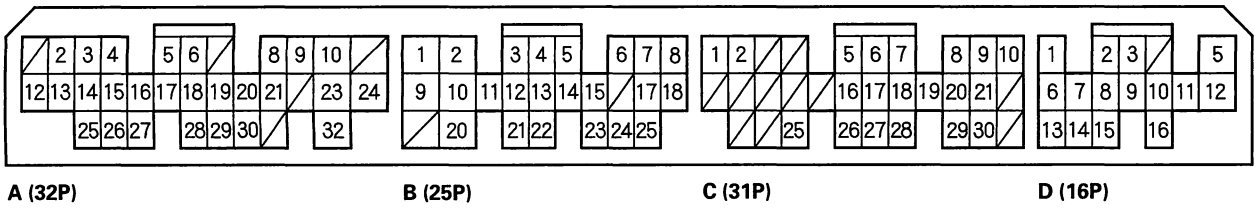

PCM CONNECTOR A (32P)

Terminal Number	Wire	Signal	Description	Measuring Conditions/Terminal Voltage
A5	BLU/GRN	CRS	Downshift signal input from cruise control unit	When cruise control is used: Pulsing signal
A9	BLU/WHT	VSSOUT	Vehicle speed signal detected from countershaft speed sensor	Depending on vehicle speed: Pulsing signal
A10	BRN	SCS	Timing and adjustment service check signal	With ignition switch ON (II) and data link connector open: 5 V With ignition switch ON (II) and data link connector connected with Honda PGM tester: 0 V
A14	GRN/BLK	D4IND	D4 indicator light control	When ignition switch is first turned ON (II): Battery voltage for two seconds In D4 position: Battery voltage
A28	WHT/RED	ILU	Interlock control	When ignition switch ON (II), brake pedal pressed, and accelerator pedal released: Battery voltage
A32	WHT/BLK	BKSW	Brake pedal position switch signal output	Brake pedal pressed: Battery voltage Brake pedal released: 0 V

(cont'd)

System Description (cont'd)

Electronic Control System (cont'd)

PCM Inputs and Outputs

PCM Connector Terminal Locations

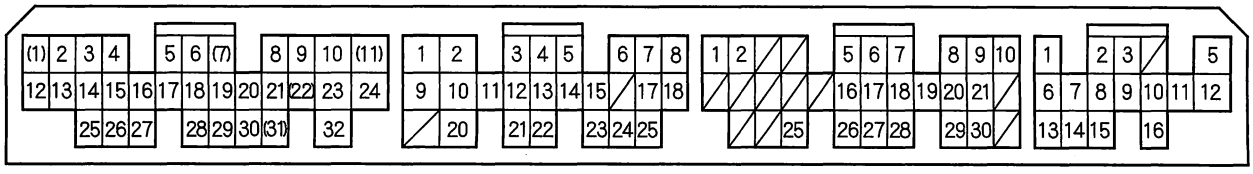

A (32P) B (25P) C (31P) D (16P)

PCM CONNECTOR B (25P)

Terminal Number	Wire	Signal	Description	Measuring Conditions/Terminal Voltage
B1	YEL/BLK	IGP1	Power supply circuit from main relay	With ignition switch ON (II): Battery voltage With ignition switch OFF: 0 V
B2	BLK	PG1	Ground	
B8	WHT	LS A−	A/T clutch pressure control solenoid valve A power supply negative electrode	
B9	YEL/BLK	IGP2	Power supply circuit from main relay	With ignition switch ON (II): Battery voltage With ignition switch OFF: 0 V
B10	BLK	PG2	Ground	
B14 ('98-99)	BLU/BLK	OP2SW	A/T 2nd clutch pressure switch signal input	With ignition switch ON (II): Battery voltage (No 2nd clutch pressure)
B14 ('00-02)	BLU/BLK	ATPNP	Transmission range switch P and N positions input	In P and N positions: 0 V In other than P and N position: Battery voltage
B17	RED	LSA+	A/T clutch pressure control solenoid valve A power supply positive electrode	With ignition switch ON (II): Pulsing signal
B18	GRN	LSB−	A/T clutch pressure control solenoid valve B power supply negative electrode	
B20	BRN/BLK	LG1	Ground	
B21	WHT/YEL	VBU	Back-up power supply	Always battery voltage
B22	BLK ('98-99) BRN/BLK ('00-02)	LG2	Ground	
B24	BLU/WHT	OP3SW	A/T 3rd clutch pressure switch signal input	With ignition switch ON (II): Battery voltage (No 3rd clutch pressure)
B25	ORN	LSB+	A/T clutch pressure control solenoid valve B power supply positive electrode	With ignition switch ON (II): Pulsing signal

BACK

PCM CONNECTOR D (16P)

Terminal Number	Wire	Signal	Description	Measuring Conditions/Terminal Voltage
D1	YEL	LC	Torque converter clutch solenoid valve control	During lock-up conditions: Battery voltage During no lock-up condition: 0 V
D2	GRN/WHT	SHB	Shift solenoid valve B control	Battery voltage in following positions: • 1, 2 positions. • D4, and D3 positions in 1st and 2nd gear • P, R, and N positions 0 V in following positions: • D4, and D3 positions in 3rd gear • D4 position in 4th gear
D3	GRN	SHC	Shift solenoid valve C control	Battery voltage in following positions: • 1 position • D4, and D3 positions in 1st and 3rd gear 0 V in following positions: • 2 position • D4, and D3 positions in 2nd gear • D4 position in 4th gear • P, R, and N positions
D4	———	———	Not used	
D5	BLK/YEL	VBSOL	Power supply for solenoid valves (Fuse No.6 in driver's under-dash fuse/relay box)	With ignition switch ON (II): Battery voltage With ignition switch OFF: 0 V
D6	WHT	ATPR	Transmission range switch R position input	In R position: 0 V In other than R position: Battery voltage
D7	BLU/YEL	SHA	Shift solenoid valve A control	Battery voltage in following positions: • 2 position • D4, and D3 positions in 2nd and 3rd gear 0 V in following positions: • 1 position • D4, and D3 positions in 1st gear • D4 position in 4th gear • P, R, and N positions

(cont'd)

System Description (cont'd)

Electronic Control System (cont'd)

PCM Inputs and Outputs

PCM Connector Terminal Locations

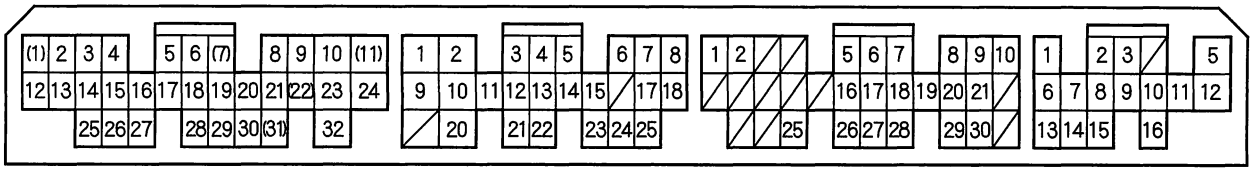

A (32P) B (25P) C (31P) D (16P)

PCM CONNECTOR D (16P)

Terminal Number	Wire	Signal	Description	Measuring Conditions/Terminal Voltage
D8	PNK	ATPD3	Transmission range switch D3 position input	In D3 position: 0 V In other than D3 position: Battery voltage
D9	YEL	ATPD4	Transmission range switch D4 position input	In D4 position: 0 V In other than D4 position: Battery voltage
D10	BLU	NC	Countershaft speed sensor input	Depending on vehicle speed: Pulsing signal When vehicle is stopped: Approx. 0 V
D11	RED	NM	Mainshaft speed sensor input	Depending on vehicle speed: Pulsing signal When engine is stopped: Approx. 0 V
D12	WHT	NMSG	Mainshaft speed sensor ground	
D13 ('98-99)	BLU/WHT	ATPNP	Transmission range switch P and N positions input	In P and N positions: 0 V In other than P and N position: Battery voltage
D13 ('00-02)	BLU/BLK	OP2SW	A/T 2nd clutch pressure switch signal input	With ignition switch ON (II): Battery voltage (No 2nd clutch pressure)
D14	BLU	ATP2	Transmission range switch 2 position input	In 2 position: 0 V In other than 2 position: Battery voltage
D15	BRN	ATP1	Transmission range switch 1 position input	In 1 position: 0 V In other than 1 position: Battery voltage
D16	GRN	NCSG	Countershaft speed sensor ground	

BACK

Hydraulic Controls

The valve body includes the main valve body, the regulator valve body, the servo body and the accumulator body. The ATF pump is driven by splines on the left end of the torque converter which is attached to the engine. Fluid flows through the regulator valve to maintain specified pressure through the main valve body to the manual valve directing pressure to each of the clutches. The shift solenoid valves B and C are mounted on the outside of the torque converter housing. The shift solenoid valve A and the torque converter clutch solenoid valve are mounted on the torque converter housing as an assembly. The A/T clutch pressure control solenoid valves A and B are mounted on the transmission housing.

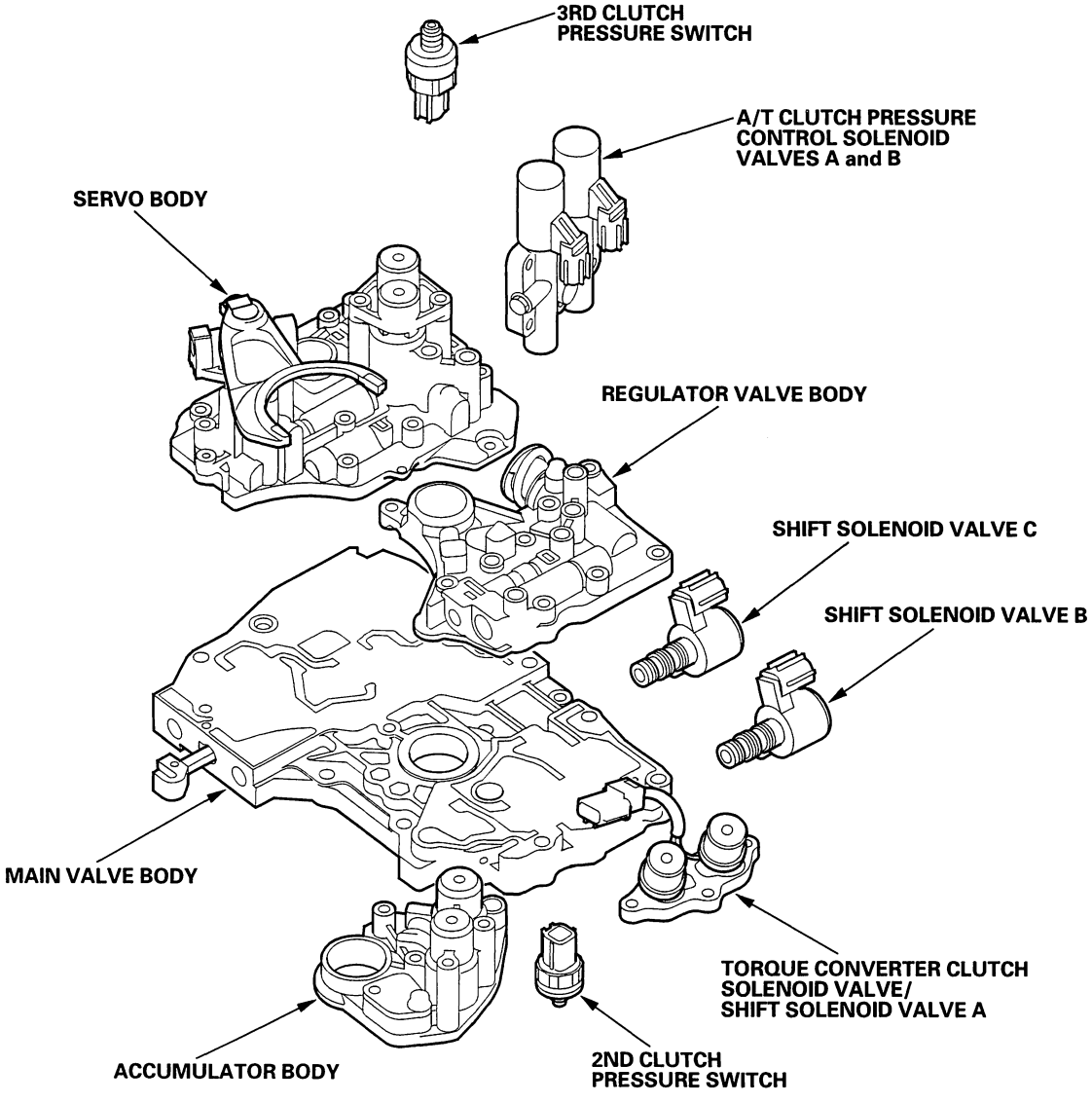

(cont'd)

System Description (cont'd)

Hydraulic Controls (cont'd)

Main Valve Body
The main valve body contains the manual valve, the modulator valve, the shift valve C, the shift valve D, the shift valve E, the servo control valve, the cooler check valve, the torque converter check valve, the reverse CPC valve, the lock-up shift valve, the relief valve, and the ATF pump gears. The primary function of the main valve body are to switch fluid pressure on and off and to control hydraulic pressure going to the hydraulic control system.

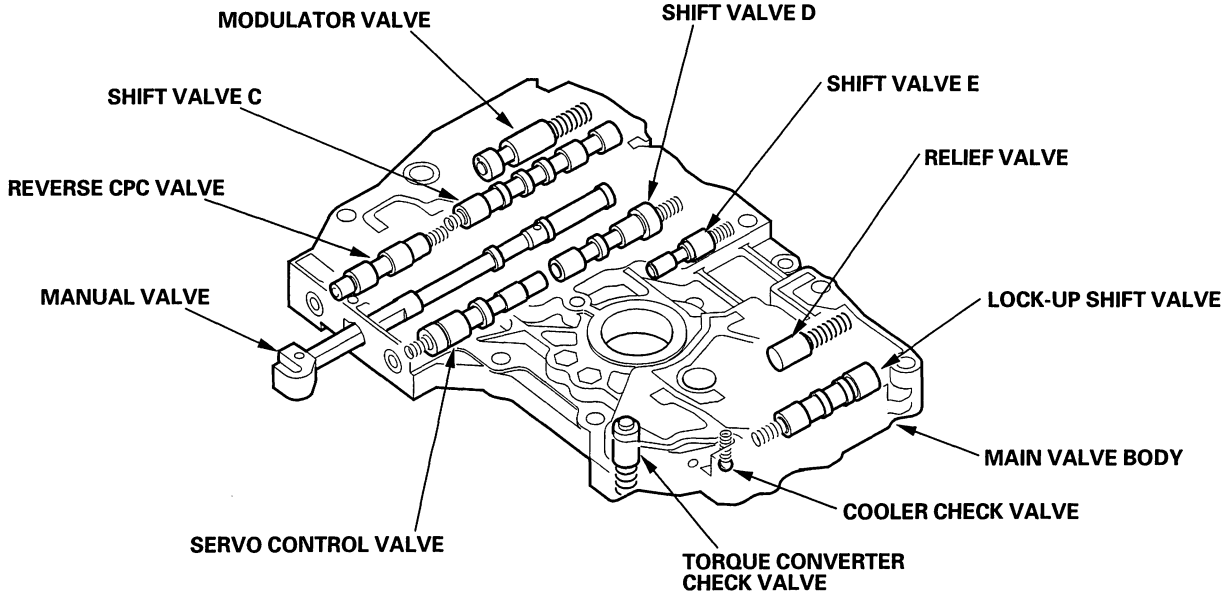

Regulator Valve Body
The regulator valve body is located on the main valve body. The regulator valve body contains the regulator valve, the lock-up timing valve and the lock-up control valve.

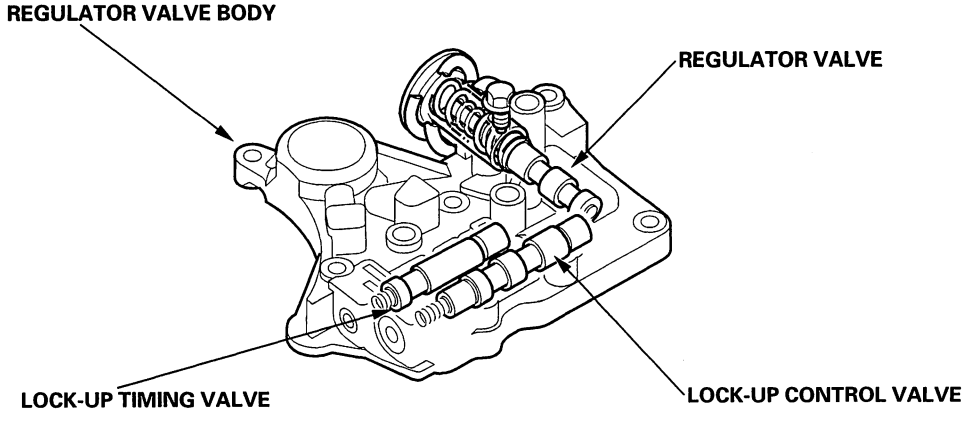

BACK

Regulator Valve

The regulator valve maintains constant hydraulic pressure from the ATF pump to the hydraulic control system, while also furnishing fluid to the lubricating system and torque converter. Fluid from the ATF pump flows through B and B'. Fluid entering from B flows through the valve orifice to the A cavity. This pressure of the A cavity pushes the regulator valve to the right side, and this movement of the regulator valve uncovers the fluid port to the torque converter and the relief valve. The fluid flows out to the torque converter and the relief valve, and the regulator valve moves to the left side. According to the level of the hydraulic pressure through B, the position of the regulator valve changes, and the amount of fluid from B' through torque converter changes. This operation is continued, maintaining the line pressure.

NOTE: When used, "left" or "right" indicates direction on the illustration below.

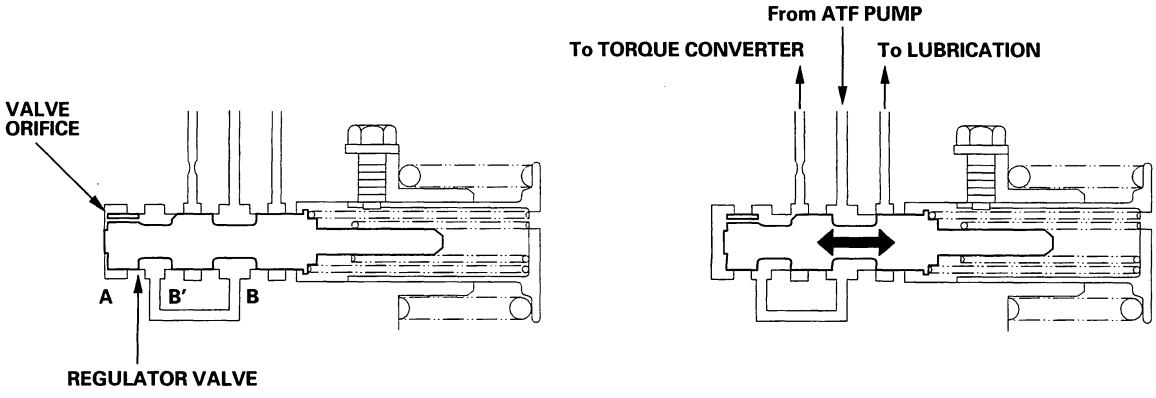

Increases in hydraulic pressure according to torque are performed by the regulator valve using stator torque reaction. The stator shaft is splined to the stator in the torque converter, and its arm end contacts the regulator spring cap. When the vehicle is accelerating or climbing (Torque Converter Range), stator torque reaction acts on the stator shaft, and the stator arm pushes the regulator spring cap in the direction of the arrow in proportion to the reaction. The stator reaction spring compresses, and the regulator valve moves to increase the line pressure which is regulated by the regulator valve. The line pressure reaches its maximum when the stator torque reaction reaches its maximum.

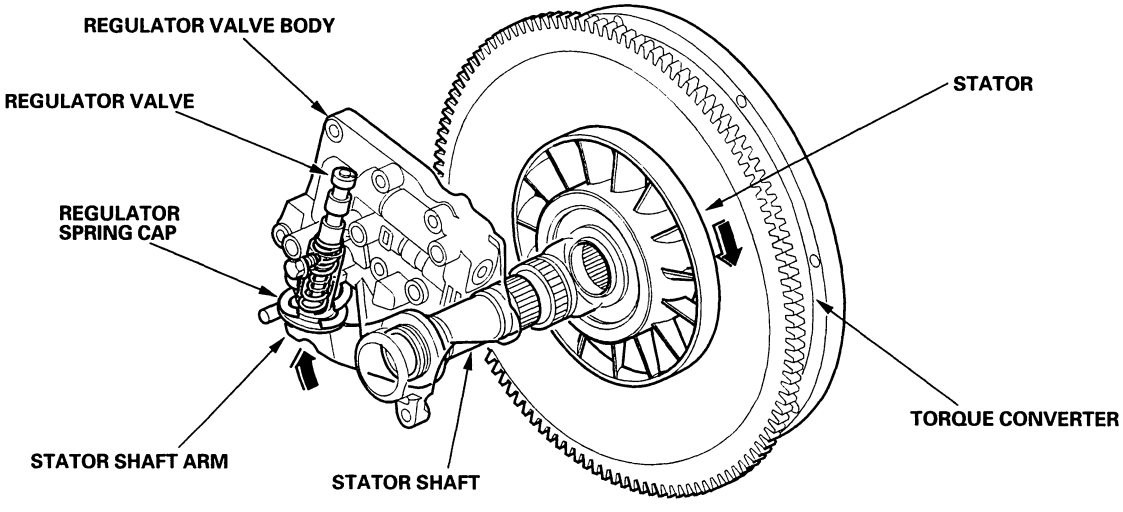

(cont'd)

System Description (cont'd)

Hydraulic Controls (cont'd)

Servo Body
The servo body is on the main valve body. It contains the servo valve, shift valve A, shift valve B, CPC valves A and B, and the 3rd and 4th accumulators.

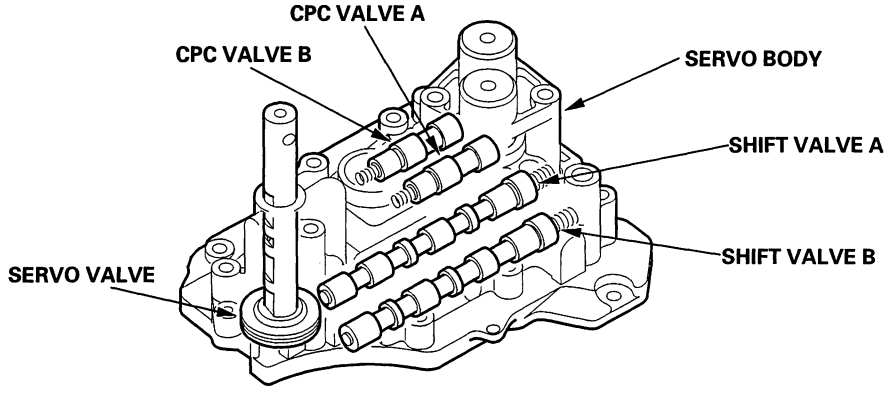

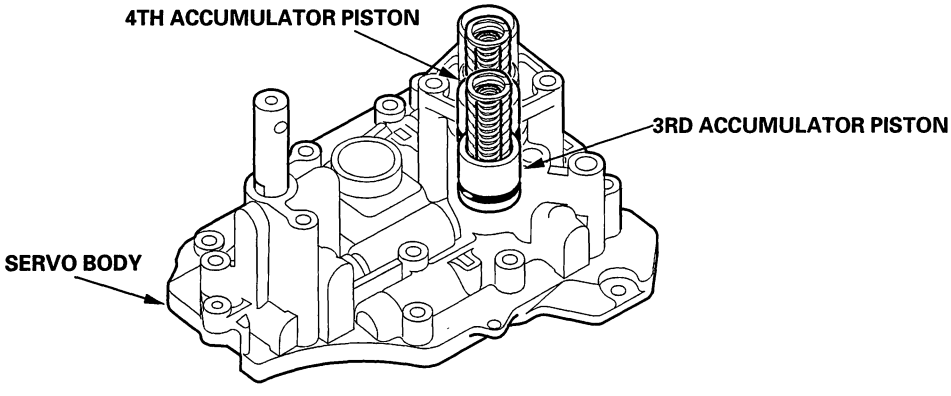

Accumulator Body
The accumulator body is on the torque converter housing, next to the main valve body. It contains the 1st and 2nd accumulators and the lubrication check valve.

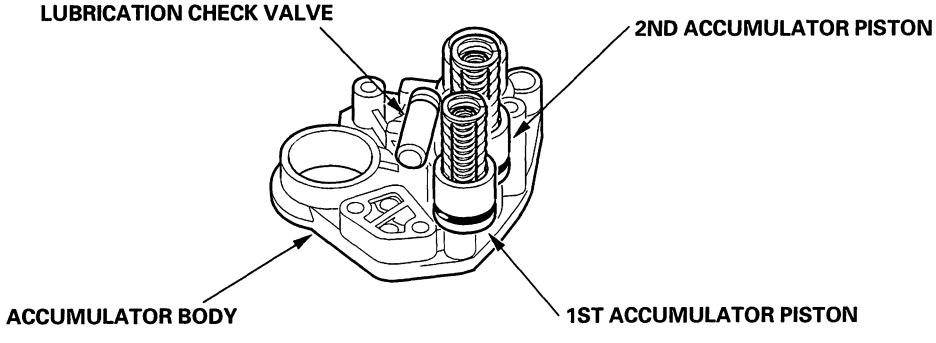

BACK

Hydraulic Flow

Distribution of Hydraulic Pressure

As the engine turns, the ATF pump starts to operate. Automatic transmission fluid (ATF) is drawn through the ATF strainer (filter) and discharged into the hydraulic circuit. Then, ATF flowing from the ATF pump becomes line pressure that's regulated by the regulator valve. Torque converter pressure from the regulator valve enters the torque converter through the lock-up shift valve and it is discharged from the torque converter. The torque converter check valve prevents torque converter pressure from rising.

The PCM controls the shift solenoid valves ON and OFF, and the shift solenoid valves control shift solenoid pressure to the shift valves. Applying shift solenoid pressure to the shift valves moves the position of the shift valve, and switches the port of hydraulic pressure. The PCM also controls A/T clutch pressure control solenoid valves A and B. The A/T clutch pressure control solenoid valves regulated the A/T clutch pressure control solenoid pressure and apply the A/T clutch pressure control solenoid pressure to CPC valves A and B.

When shifting between upper gear and lower gear, the clutch is engaged by pressure from the CPC pressure mode. The PCM controls one of the shift solenoid valves to move the position of the shift valve. This movement switches the port of the CPC and line pressure. Line pressure is then applied to the clutch, and the CPC pressure is intercepted. Engaging the clutch with line pressure happens when shifting is completed.

Hydraulic pressure at the parts is as follows:

PORT NO.	DESCRIPTION OF PRESSURE	PORT NO.	DESCRIPTION OF PRESSURE	PORT NO.	DESCRIPTION OF PRESSURE
1	LINE	5H	CPC B or LINE	57	LS B
3	LINE	5J	CPC B or LINE	58	LS A or LS B
3′	LINE	5K	CPC B or LINE	90	TORQUE CONVERTER
3″	LINE	5K′	CPC B or LINE	90′	TORQUE CONVERTER
4	LINE	6	MODULATE	91	TORQUE CONVERTER
4′	LINE	SA	SH A	91′	TORQUE CONVERTER
4″	LINE	SB	SH B	92	TORQUE CONVERTER
4A	CPC A	SC	SH C	93	ATF COOLER
4B	CPC B	LA	LC	94	TORQUE CONVERTER
5A	CPC A	9	LINE	95	LUBRICATION
5D	CPC B	10	1ST CLUTCH	95′	LUBRICATION
5B	CPC A or LINE	20	2ND CLUTCH	96	TORQUE CONVERTER
5E	CPC A or LINE	25	LINE	97	TORQUE CONVERTER
5F	CPC A or LINE	30	3RD CLUTCH	99	SUCTION
5F′	CPC A or LINE	40	4TH CLUTCH	X	DRAIN
5C	CPC B or LINE	41	4TH CLUTCH	HX	HIGH POSITION DRAIN
5G	CPC B or LINE	56	LS A	AX	AIR DRAIN

NOTE:
- CPC: Clutch Pressure Control pressure
- SH: Shift Solenoid pressure
- LS: A/T Clutch Pressure Control Solenoid pressure
- LC: Torque Converter Clutch Solenoid pressure

(cont'd)

System Description (cont'd)

Hydraulic Flow (cont'd)

N Position

The PCM controls the shift solenoid valves. The conditions of the shift solenoid valve and positions of the shift valve are as follows:
- The shift solenoid valve A is turned OFF, and the shift valve A is moved to the left side.
- The shift solenoid valve B is turned ON, and the shift valve B remains in the right side.
- The shift solenoid valve C is turned OFF, and the shift valve C remains in the left side.

Line pressure (1) passes through the manual valve and stops at shift valve D. Line pressure (1) also flows to the modulator valve, and becomes modulator pressure (6). Modulator pressure (6) flows to the shift solenoid valves and the A/T clutch pressure control solenoid valves. Under this condition, hydraulic pressure is not applied to the clutches.

NOTE:
- When used, "left" or "right" indicates direction on the hydraulic circuit.
- Hydraulic circuit shows the '98-99 models; the '00-02 models are similar.

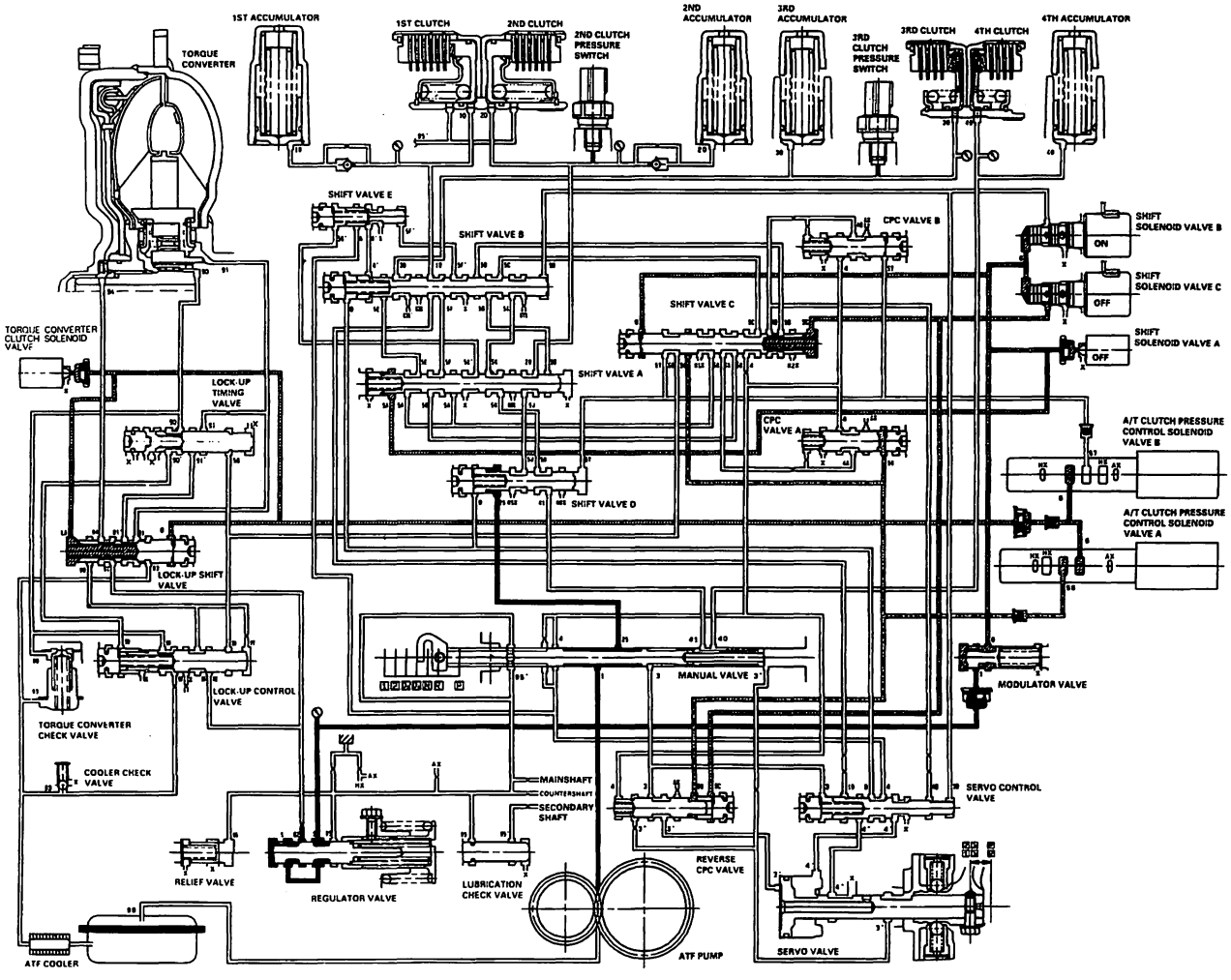

BACK

D4 Position; 1st gear shifting from N position

The PCM turns the shift solenoid valves A and C ON when shifting to D4 position from N. Shift solenoid valve B remains ON. Shift solenoid valve C is turned ON, and SH C pressure (SC) in the right side of the shift valve C is released, then the shift valve C is moved to the right side. Shift solenoid valve A is turned ON, and SH A pressure (SA) in the left side of the shift valve A is released, then shift valve A is moved to the right side. The A/T clutch pressure control solenoid valve A regulates LS A pressure (56) and applies it to CPC valve A. Line pressure (1) becomes line pressure (4) at the manual valve, and flows to shift valve C and CPC valve A. Line pressure (4) becomes CPC A pressure (4A) and passes through shift valve C, A, and B, then CPC A pressure (4A) becomes 1st clutch pressure (10) at shift valve B. 1st clutch pressure (10) is applied to the 1st clutch, then the 1st clutch is engaged with pressure of the CPC pressure mode. Line pressure (4) passes through shift valve A and B, then stops at shift valve B.

NOTE:
- When used, "left" or "right" indicates direction on the hydraulic circuit.
- Hydraulic circuit shows the '98-99 models; the '00-02 models are similar.

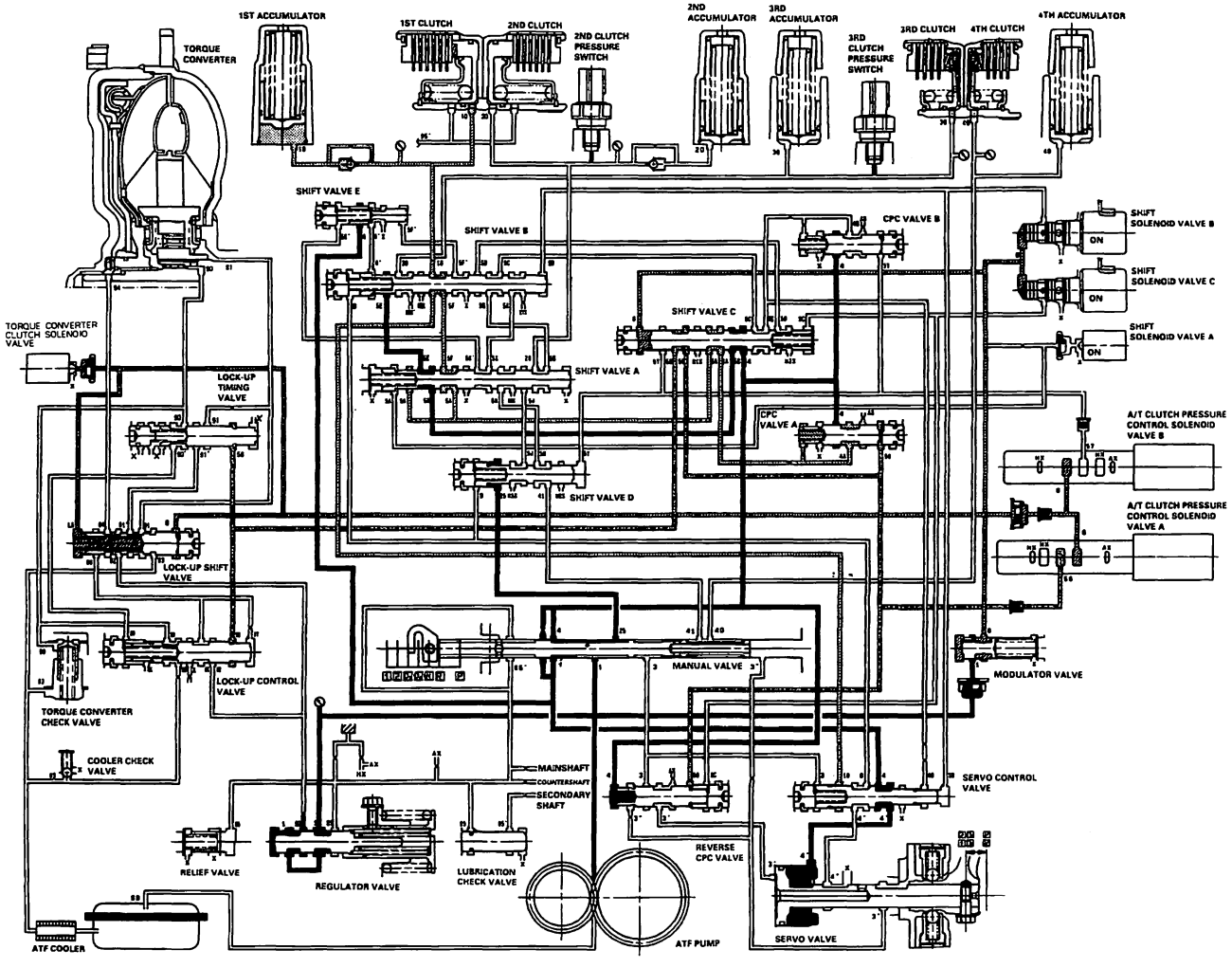

(cont'd)

System Description (cont'd)

Hydraulic Flow (cont'd)

D4 Position: Driving in 1st gear

The PCM turns shift solenoid valve A OFF, but shift solenoid valves B and C remain ON. SH A pressure (SA) is applied to the left side of shift valve A, then shift valve A is moved to the left side. This movement switches the port of line pressure and CPC pressure on shift valve A. The 1st clutch pressure is changed to line pressure mode, and the 1st clutch is engaged securely. CPC A pressure (5E) stops at shift valve B.

NOTE:
- When used, "left" or "right" indicates direction on the hydraulic circuit.
- Hydraulic circuit shows the '98-99 models; the '00-02 models are similar.

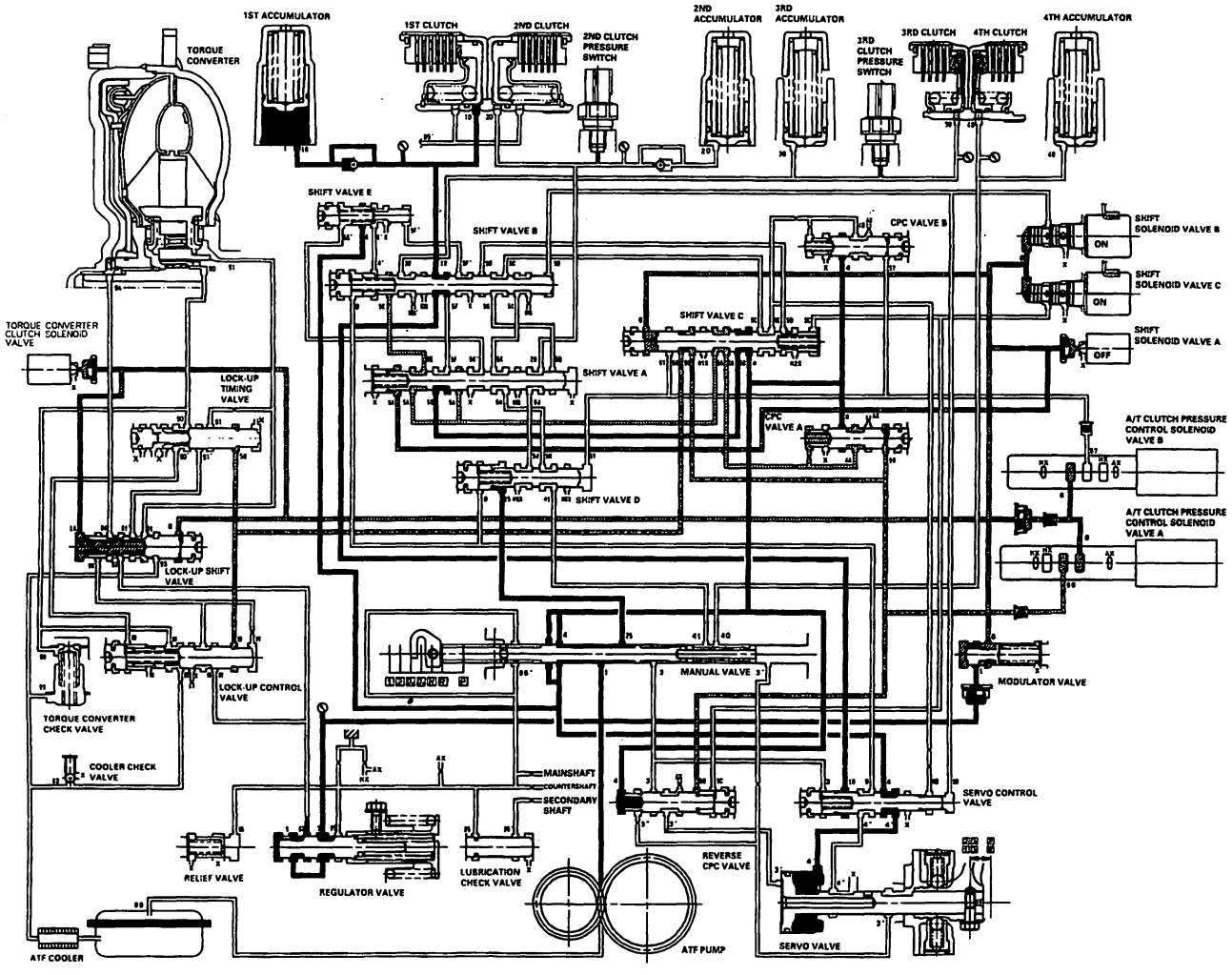

BACK

D4 Position: Shifting between 1st gear and 2nd gear

As the speed of the vehicle reaches the prescribed value, the PCM turns shift solenoid valve A OFF. Shift solenoid valves B and C remain ON. Then shift solenoid valve A is turned ON, and SH A pressure (SA) in the left side of the shift valve A is released. Shift valve A is moved to the right side to switch the port of line pressure and CPC pressure. The PCM also controls the A/T clutch pressure control solenoid valves. The A/T clutch pressure control solenoid valves A and B apply their pressure to the CPC valves A and B. Line pressure (4) becomes CPC B pressure (4B) at the CPC valve B, and CPC B pressure passes through shift valves C, B, and A, to become 2nd clutch pressure. The 1st and 2nd clutches are engaged with the CPC pressure mode.

NOTE:
- When used, "left" or "right" indicates direction on the hydraulic circuit.
- Hydraulic circuit shows the '98-99 models; the '00-02 models are similar.

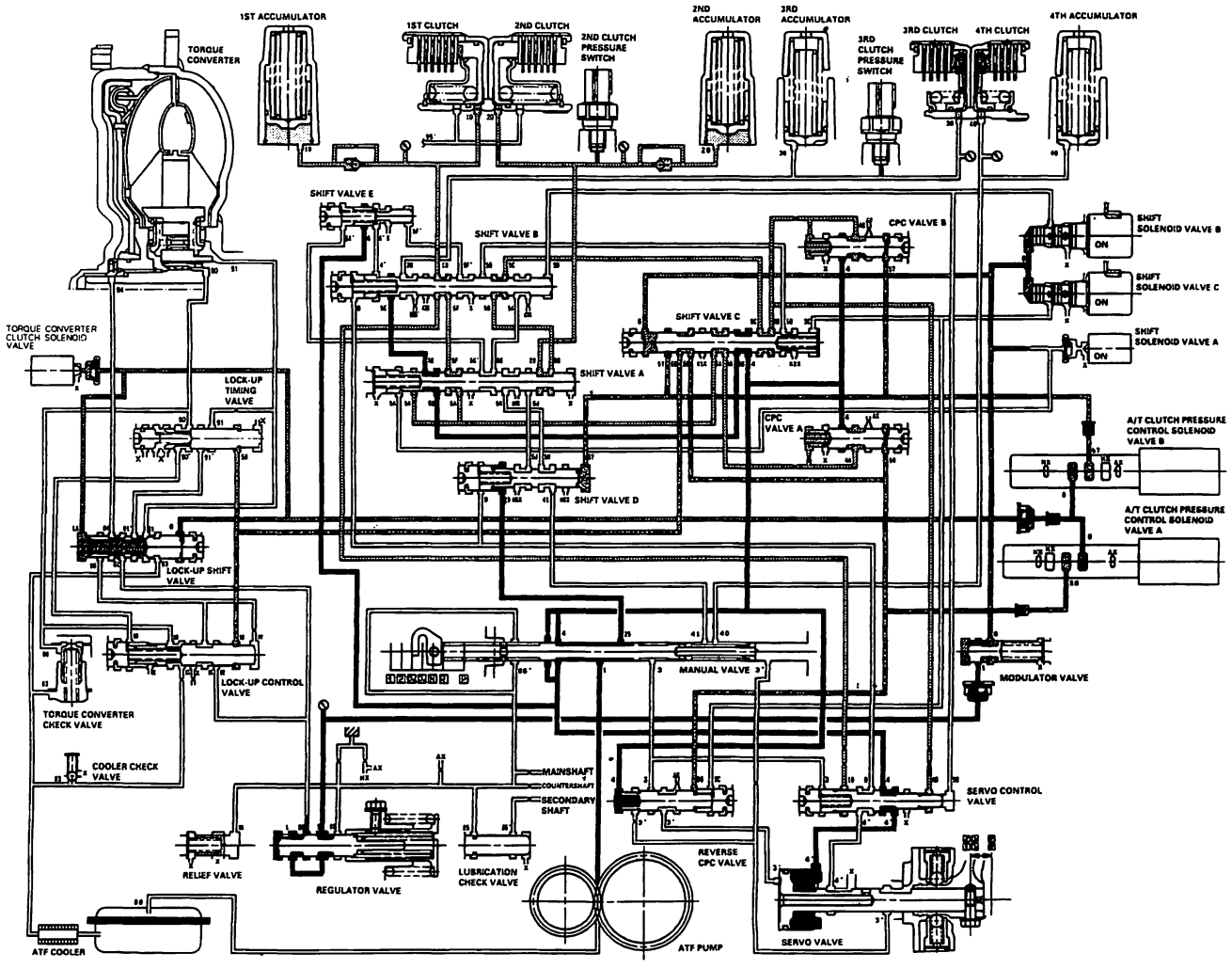

(cont'd)

System Description (cont'd)

Hydraulic Flow (cont'd)

D4 Position: Driving in 2nd gear

The PCM turns shift solenoid valve C OFF, and controls A/T clutch pressure control solenoid valve A to release LS A pressure (56). Shift solenoid valves A and B remain ON. Releasing LS A pressure in the CPC valve A releases CPC A pressure in the 1st clutch pressure circuit. Shift solenoid valve C is turnd OFF, and SH C pressure (SC) is applied to the right side of shift valve C. Then shift valve C is moved to the left side to switch the port of line pressure and CPC pressure. The 2nd clutch pressure is changed to line pressure mode, and the 2nd clutch is engaged securely. The CPC B pressure (5D) stops at shift valve B.

NOTE:
- When used, "left" or "right" indicates direction on the hydraulic circuit.
- Hydraulic circuit shows the '98-99 models; the '00-02 models are similar.

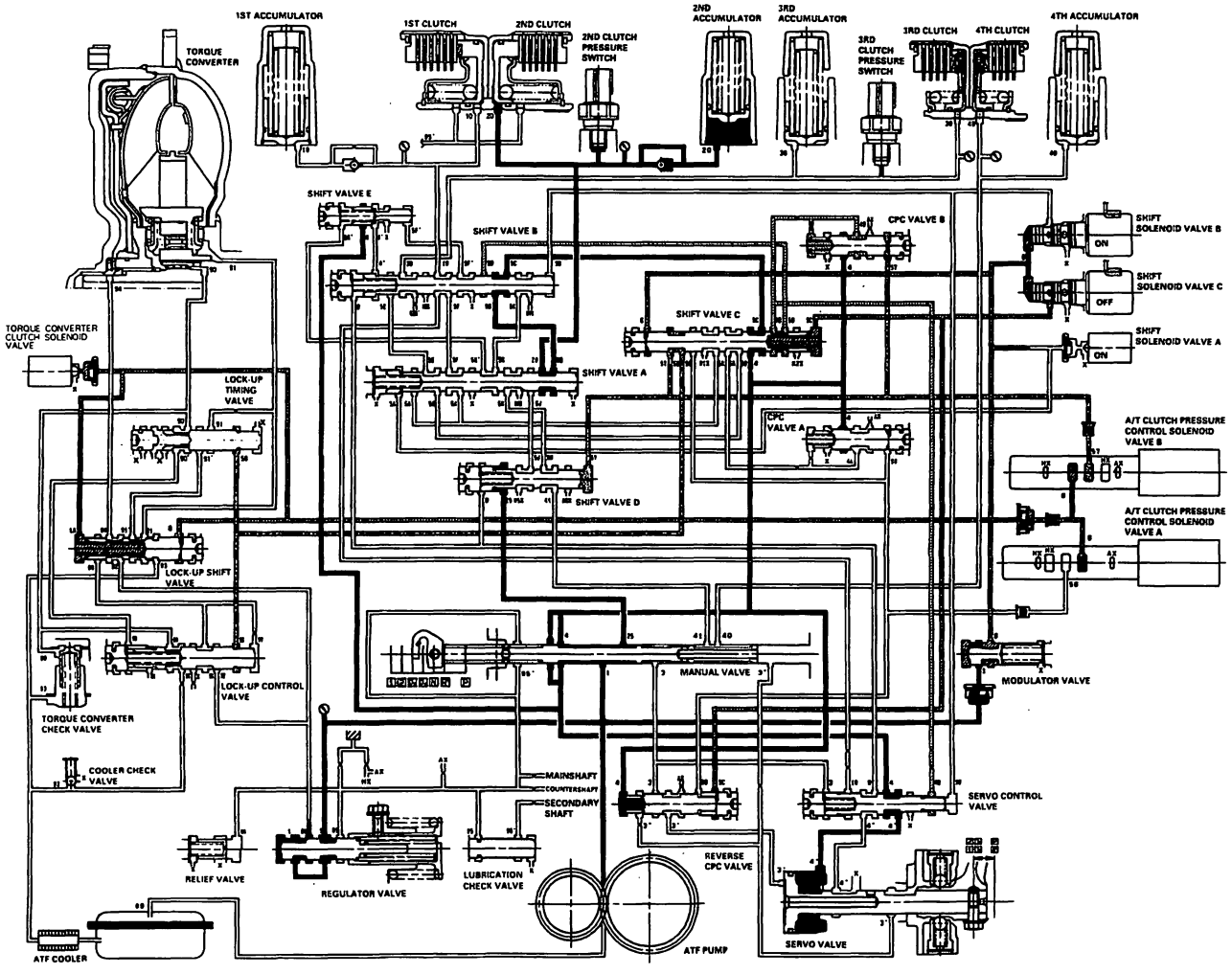

BACK

D4 Position: Shifting between 2nd gear and 3rd gear

As the speed of the vehicle reaches the prescribed value, the PCM turns shift solenoid valve B OFF. The PCM also control A/T clutch pressure control solenoid valve A to apply LS A pressure (56) to CPC valve A. Shift solenoid valve A remains ON, and C remains OFF. Shift solenoid valve B is turned OFF, and SH B pressure (SB) is applied to the right side of shift valve B. Then shift valve B is moved to the left side to switch the port of line pressure and CPC pressure. Line pressure (4) becomes CPC A pressure (4A) at the CPC valve A. The CPC A pressure (4A) becomes 3rd clutch pressure (30) at shift valve B, and flows to the 3rd clutch. The 2nd clutch pressure is changed to CPC pressure mode by switching the position of shift valve B.

NOTE:
- When used, "left" or "right" indicates direction on the hydraulic circuit.
- Hydraulic circuit shows the '98-99 models; the '00-02 models are similar.

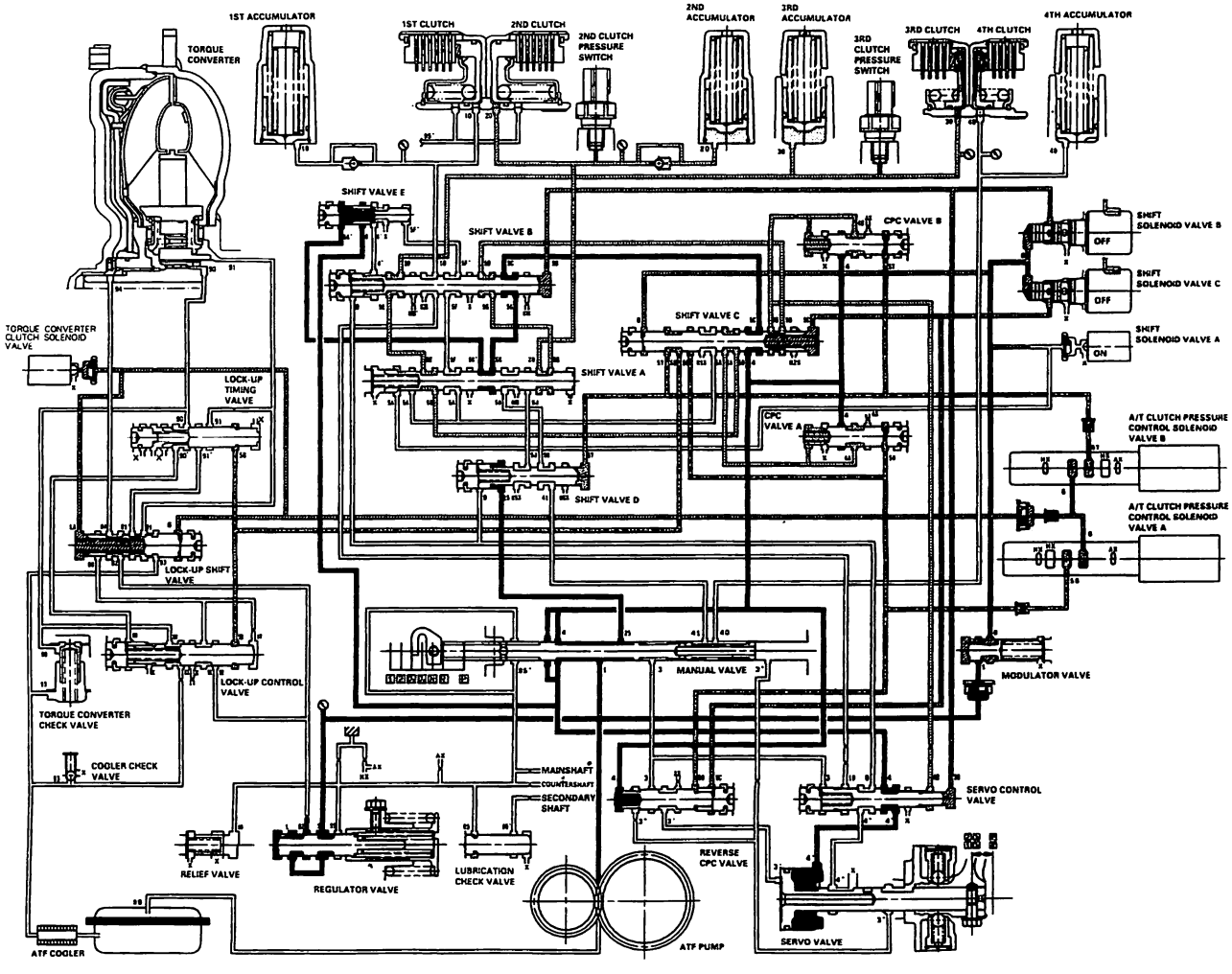

(cont'd)

System Description (cont'd)

Hydraulic Flow (cont'd)

D4 Position: Driving in 3rd gear

The PCM turns the shift solenoid valve C ON, and controls A/T clutch pressure control solenoid valve B to release LS B pressure (57). Shift solenoid valve A remains ON, and B remains OFF. Releasing LS B pressure in the CPC valve B releases CPC B pressure in the 2nd clutch pressure circuit. Shift solenoid valve C is turned ON, and SH C pressure (SC) in the right side of shift valve C is released. Then shift valve C is moved to the right side to switch the port of line pressure and CPC pressure. The 3rd clutch pressure is changed to line pressure mode, and the 3rd clutch is engaged securely. The CPC A pressure (4A) stops at shift valve E.

NOTE:
- When used, "left" or "right" indicates direction on the hydraulic circuit.
- Hydraulic circuit shows the '98-99 models; the '00-02 models are similar.

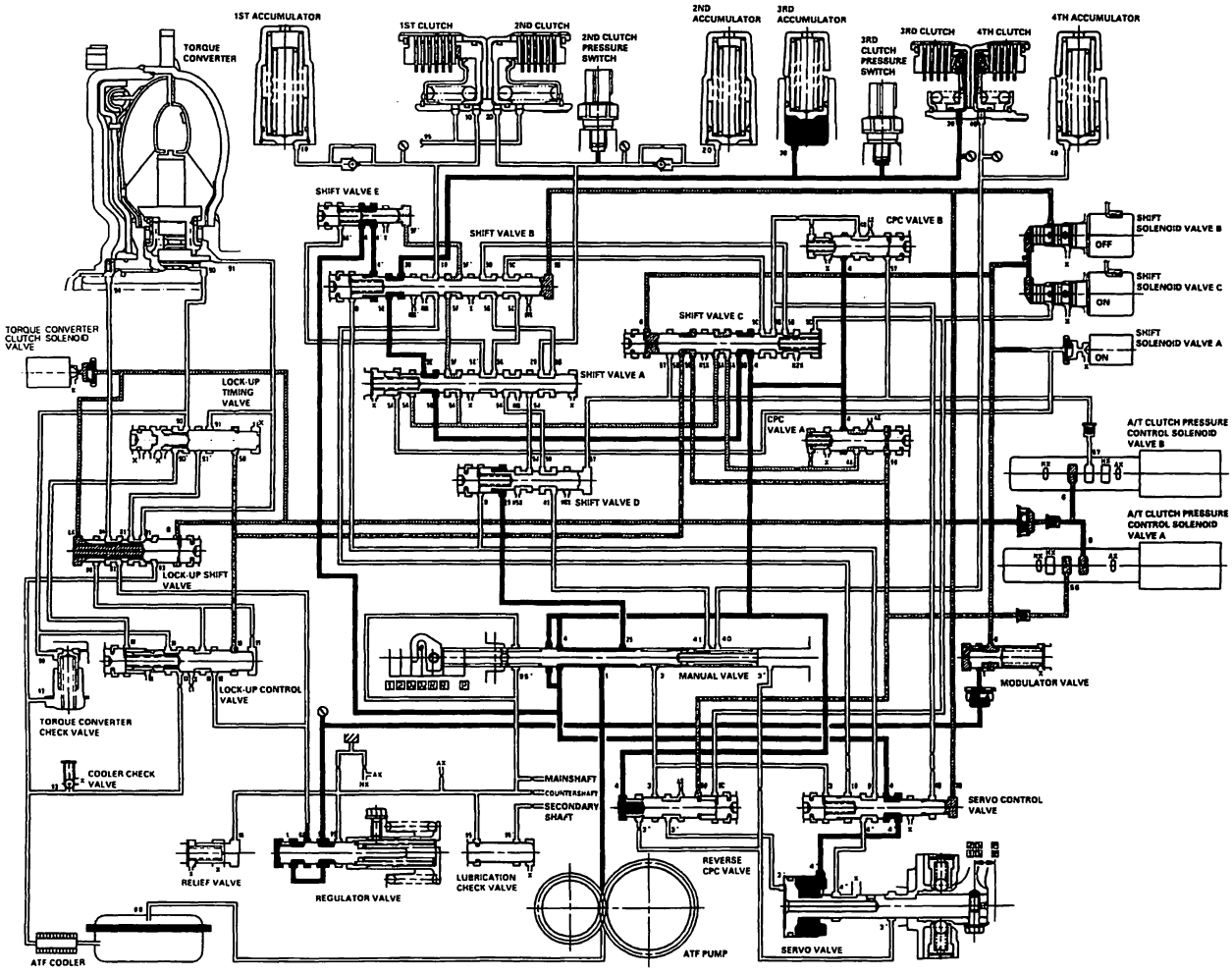

BACK

D4 Position: Shifting between 3rd gear and 4th gear

As the speed of the vehicle reaches the prescribed value, the PCM turns shift solenoid valve A OFF. The PCM also controls A/T clutch pressure control solenoid valve B to apply LS B pressure (57) to CPC valve B. Shift solenoid valve B remains OFF, and C remains ON. Shift solenoid valve A is turned OFF, and SH A pressure (SA) is applied to the left side of shift valve A. Then shift valve A is moved to the left side to switch line pressure and CPC pressure. Line pressure (4) becomes CPC B pressure (4B) at CPC valve B. The CPC B pressure (4B) becomes 4th clutch pressure (41) at shift valve D, and flows to the 4th clutch via the manual valve. The 3rd clutch pressure is changed to CPC pressure mode by switching the position of shift valve A.

NOTE:
- When used, "left" or "right" indicates direction on the hydraulic circuit.
- Hydraulic circuit shows the '98-99 models; the '00-02 models are similar.

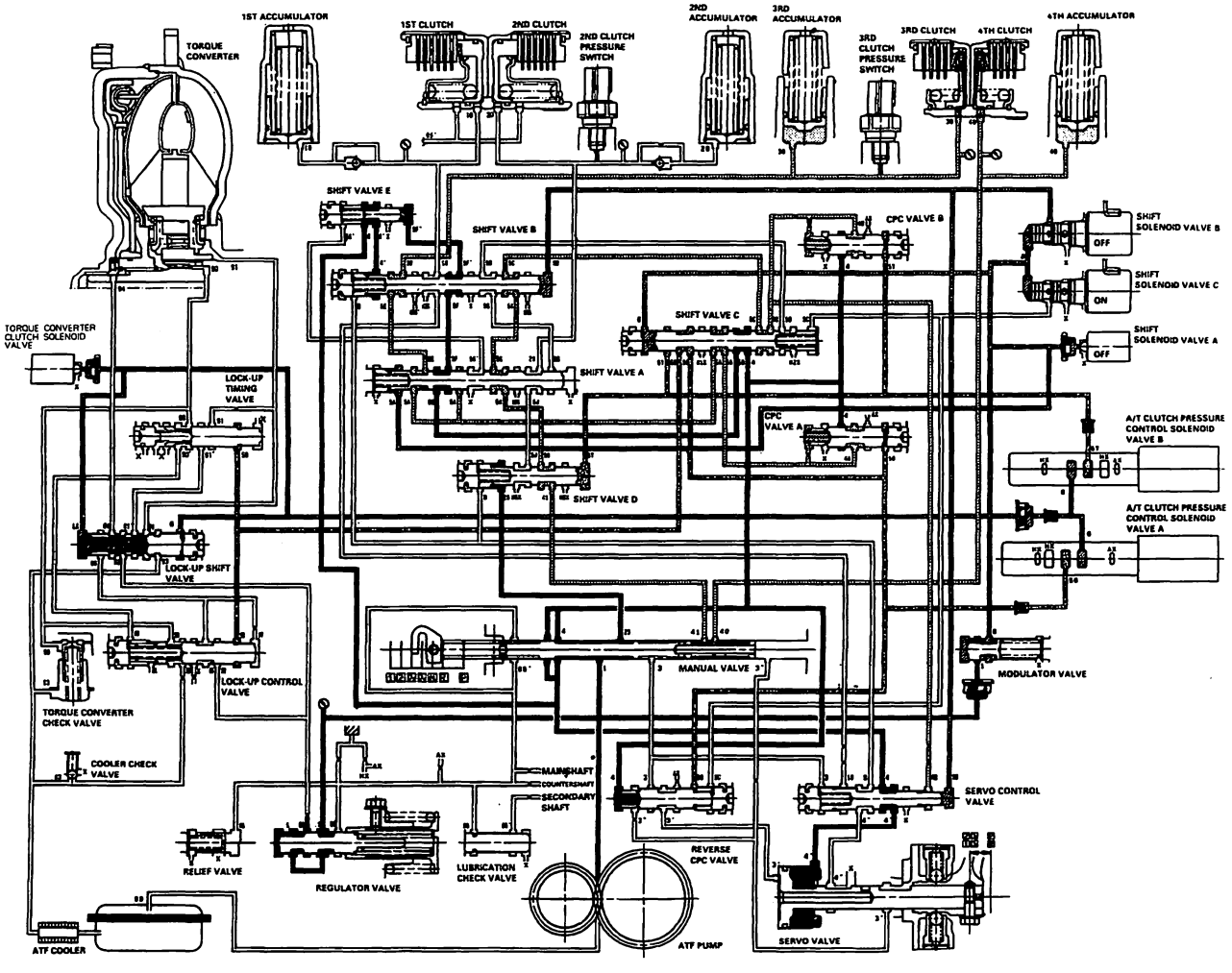

(cont'd)

System Description (cont'd)

Hydraulic Flow (cont'd)

D4 Position: Driving in 4th gear

The PCM turns shift solenoid valve C OFF, and controls A/T clutch pressure control solenoid valve A to release LS A pressure (56). Shift solenoid valves A and B remain OFF. Releasing LS A pressure (56) releases CPC A pressure in the 3 rd clutch pressure circuit. Shift solenoid valve C is turned OFF, and SH C pressure (SC) is applied to the right side of shift valve C. Then shift valve C is moved to the left side to switch the port of line pressure and CPC pressure.
The CPC B pressure (5B) changes to line pressure (5B) at shift valve C, and flows to the 4th clutch via shift valve B, shift valve C, shift valve D, and the manual valve. The 4th clutch pressure is changed to line pressure mode by switching the position of shift valve C, and 4th clutch is engaged securely. The CPC B pressure (5D) stops at shift valve A.

NOTE:
- When used, "left" or "right" indicates direction on the hydraulic circuit.
- Hydraulic circuit shows the '98-99 models; the '00-02 models are similar.

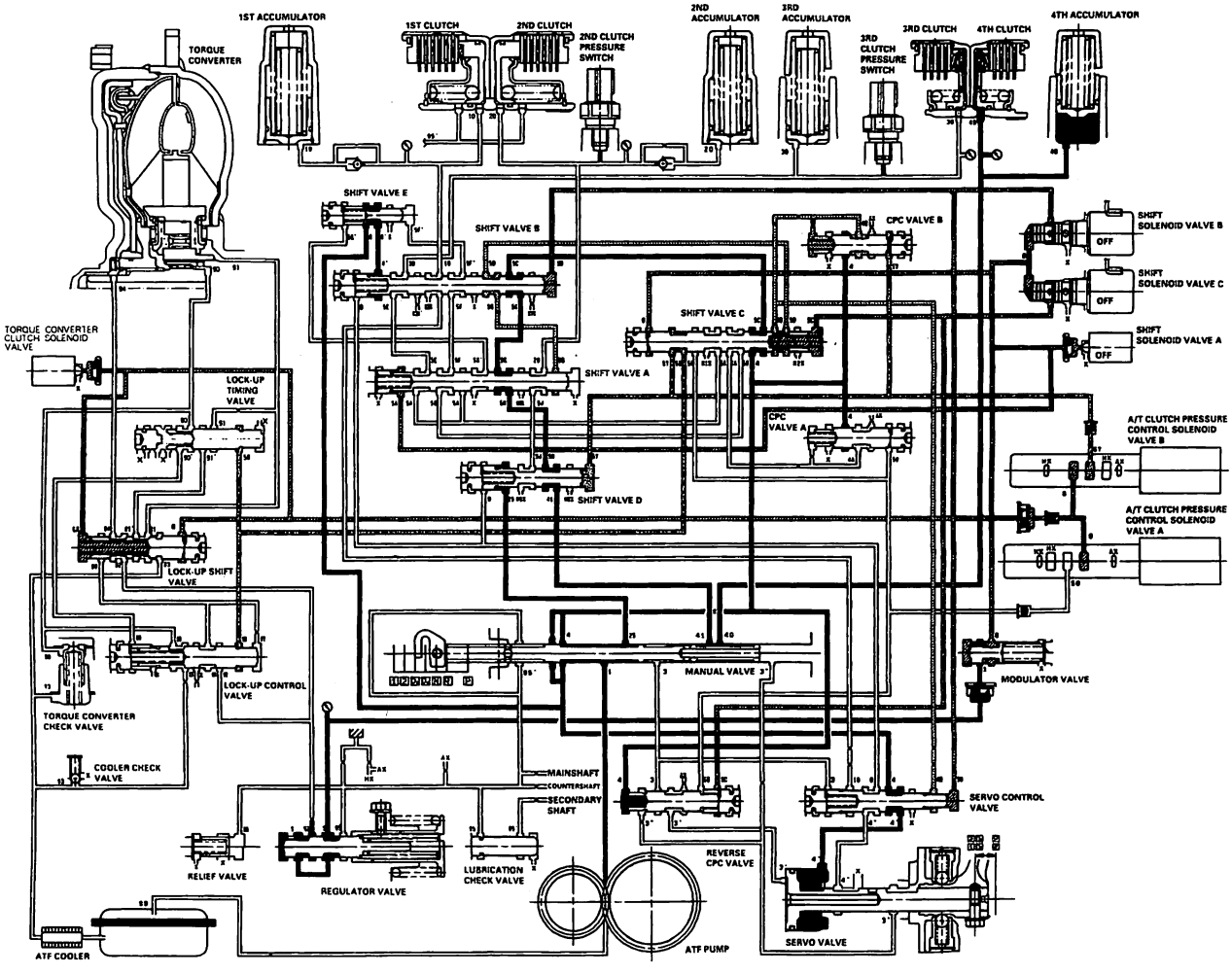

BACK

2 Position

The PCM controls the shift solenoid valves and the A/T clutch pressure control solenoid valves. The conditions of the shift solenoid valves and the positions of the shift valve are as follows:

- Shift solenoid valve A is turned ON, and the shift valve A is in the right side.
- Shift solenoid valve B is turned ON, and the shift valve B is in the right side.
- Shift solenoid valve C is turned OFF, and the shift valve C is moved to the left side.

The PCM also controls A/T clutch pressure control solenoid valve B to apply LS B pressure (57) to CPC valve B. Line pressure (4) from the manual valve becomes line pressure (5C) at shift valve C. Line pressure (5C) flows to shift valve A via shift valve B, and becomes 2nd clutch pressure (20). The 2nd clutch pressure is applied to the 2nd clutch, and 2nd clutch is engaged.

NOTE:

- When used, "left" or "right" indicates direction on the hydraulic circuit.
- Hydraulic circuit shows the '98-99 models; the '00-02 models are similar.

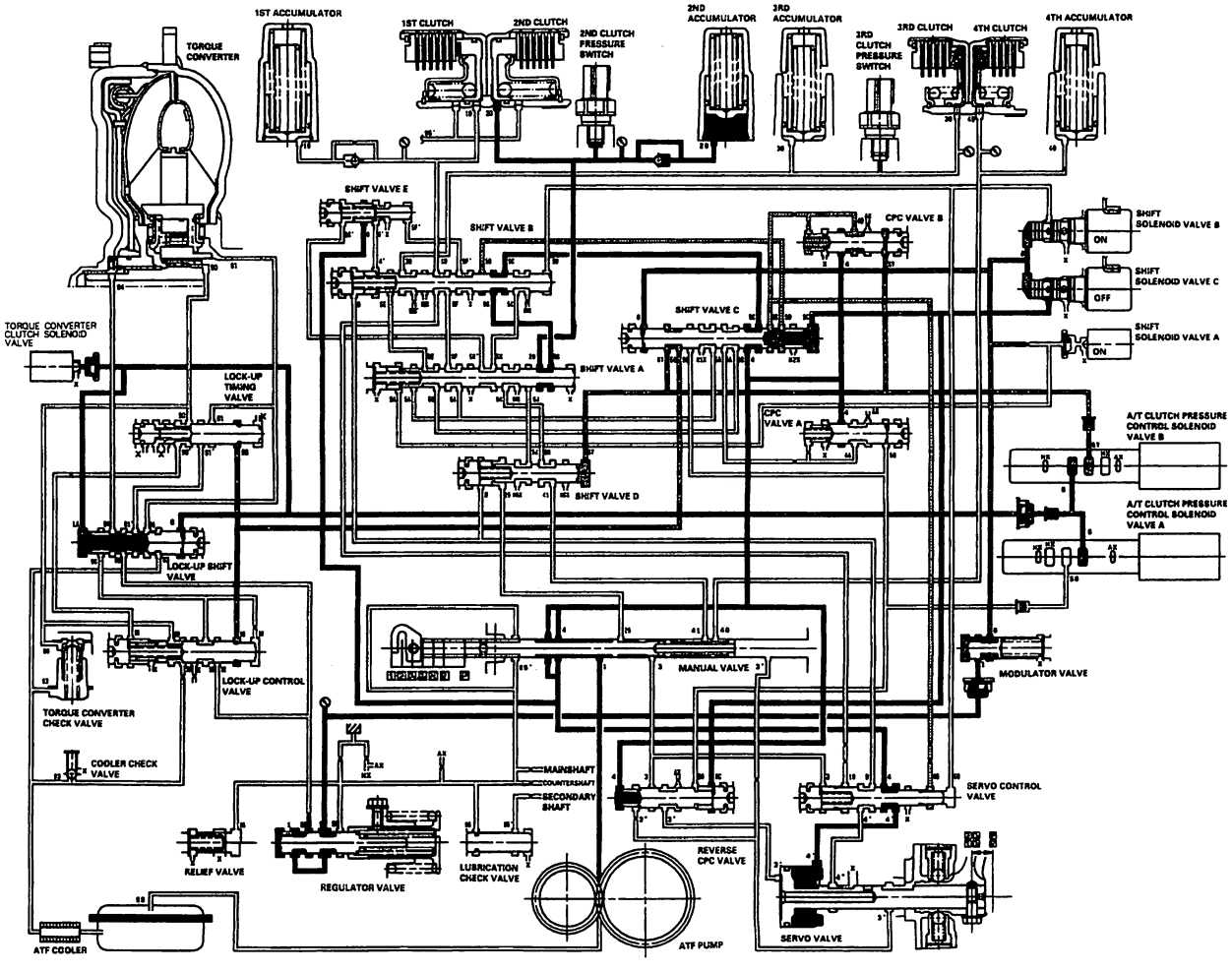

(cont'd)

System Description (cont'd)

Hydraulic Flow (cont'd)

1 Position

The PCM the shift solenoid valves and the A/T clutch pressure control solenoid valves. The conditions of the shift solenoid valves and the positions of the shift valve are as follows:
- Shift solenoid valve A is turned OFF, and shift valve A is moved to the left side.
- Shift solenoid valve B is turned ON, and shift valve B is in the right side.
- Shift solenoid valve C is turned ON, and shift valve C is in the right side.

Line pressure (4) becomes line pressure (5B) at shift valve C. Line pressure (5C) flows to shift valve B via shift valve A, and becomes 1st clutch pressure (10). 1st clutch pressure (10) is applied to the 1st clutch, then 1st clutch is engaged.

NOTE:
- When used, "left" or "right" indicates direction on the hydraulic circuit.
- Hydraulic circuit shows the '98-99 models; the '00-02 models are similar.

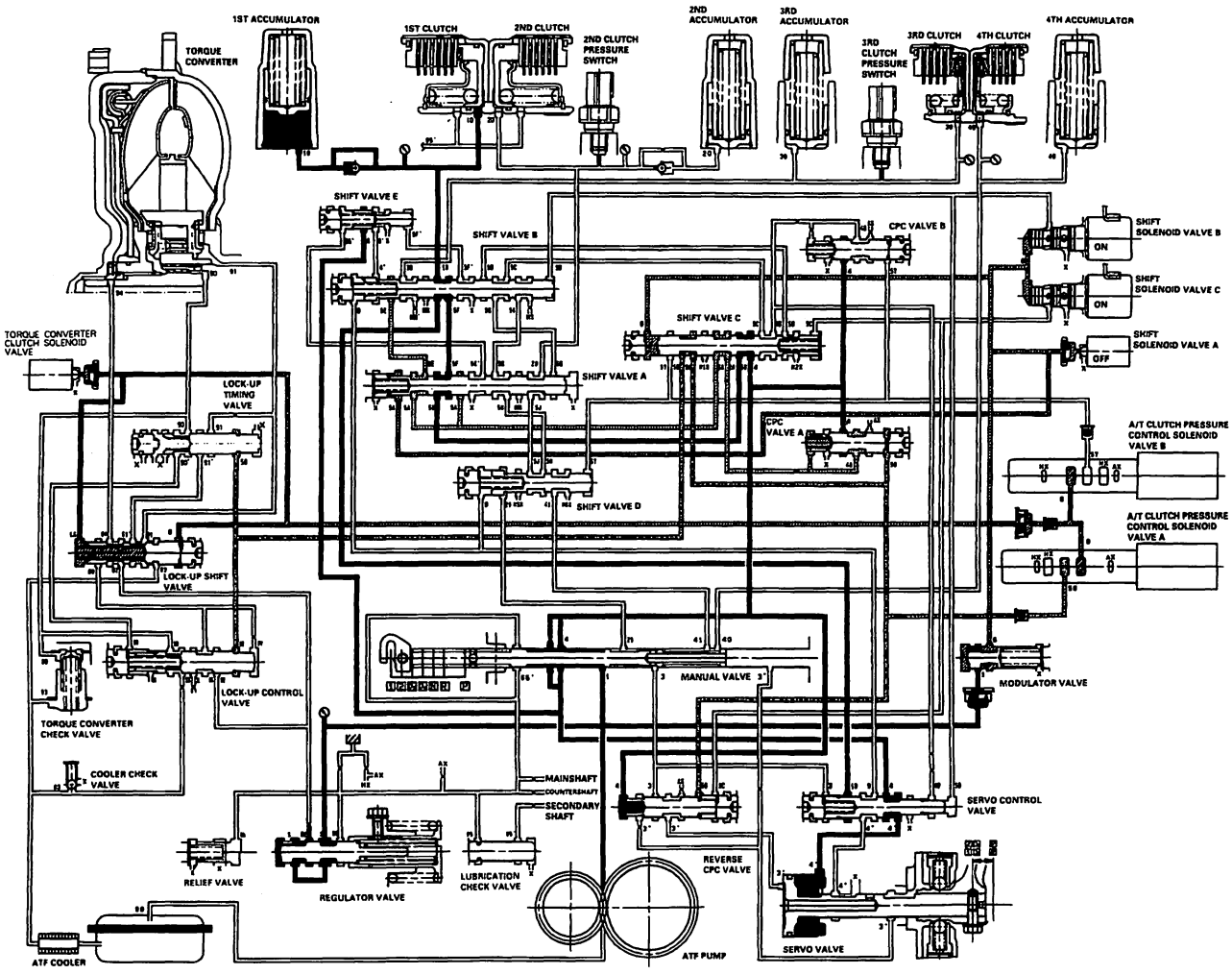

BACK

R Position: Shifting to R position from P or N position

Line pressure (1) becomes line pressure (3) at the manual valve, and flows to the reverse CPC valve. Line pressure (3) is regulated by the reverse CPC valve and becomes line pressure (3'). Line pressure (3') pushes the servo valve to the reverse position, passes through the servo valve, and flows to the manual valve. Line pressure (3') becomes 4th clutch pressure (40). The 4th clutch pressure (40) is applied to the 4th clutch, and 4th clutch is engaged with the reverse CPC pressure mode.

NOTE:
- When used, "left" or "right" indicates direction on the hydraulic circuit.
- Hydraulic circuit shows the '98-99 models; the '00-02 models are similar.

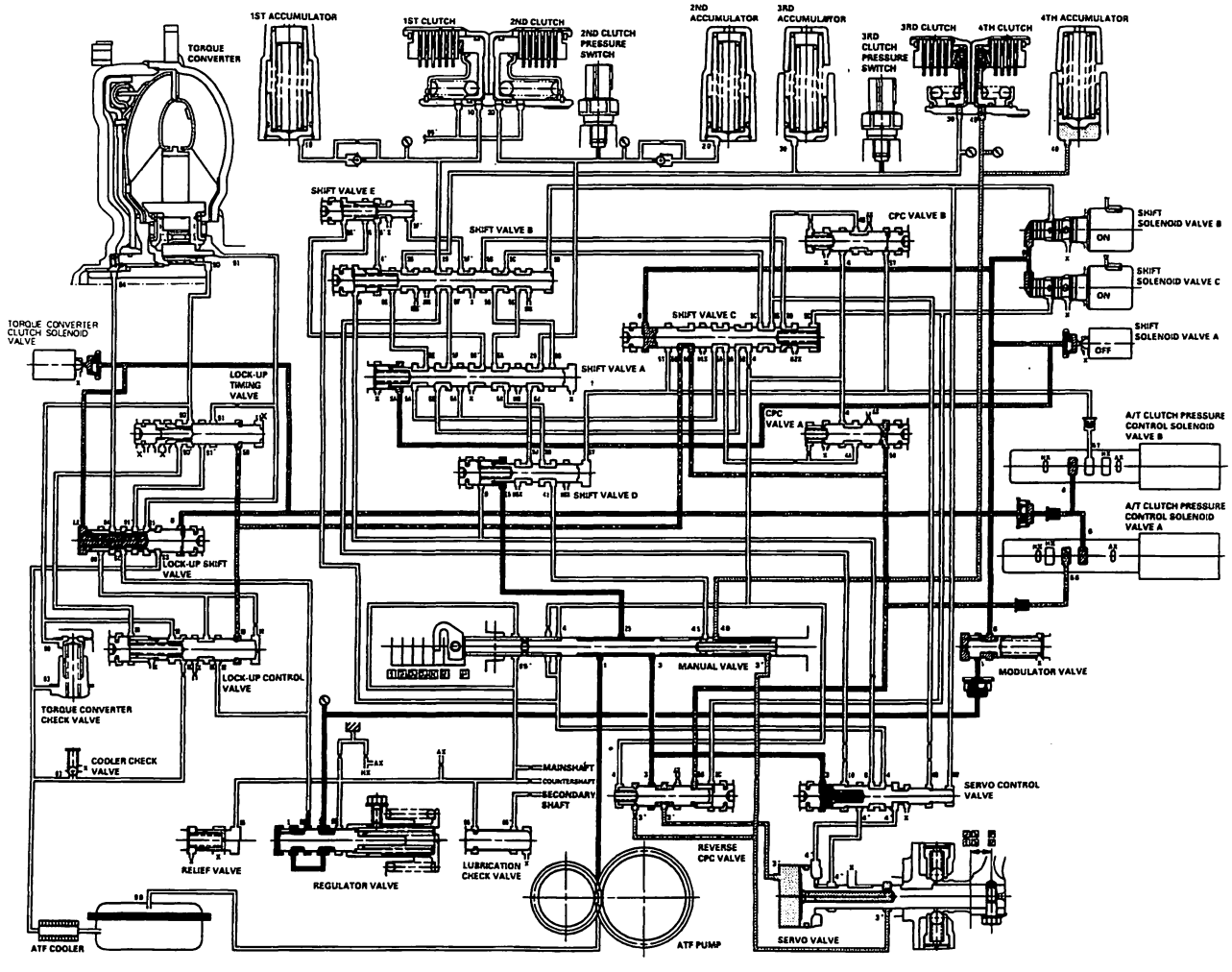

(cont'd)

System Description (cont'd)

Hydraulic Flow (cont'd)

R Position: Driving in reverse gear

The PCM turns shift solenoid valve C OFF. Shift solenoid valve A remains OFF, and B remains ON. Shift solenoid valve C is turned OFF, and SH C pressure (SC) is applied to the right side of the reverse CPC valve. Then the reverse CPC valve moves to the left side, creating full line pressure. Line pressure to the 4th clutch is same as shifting to R position, and 4th clutch pressure increases. The 4th clutch is engaged with line pressure mode.

NOTE:
- When used, "left" or "right" indicates direction on the hydraulic circuit.
- Hydraulic circuit shows the '98-99 models; the '00-02 models are similar.

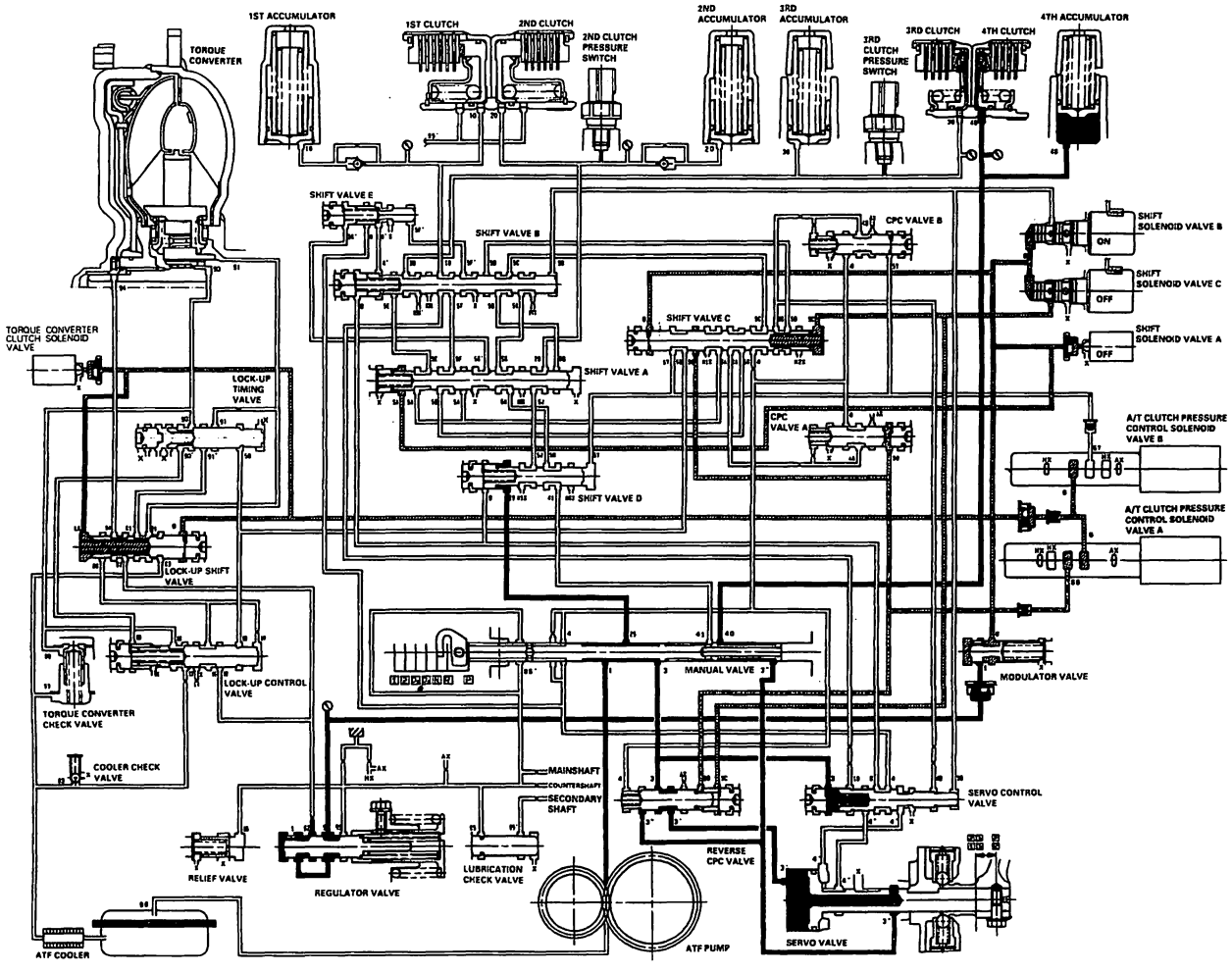

BACK

P Position

Shift solenoid valve C is turned OFF by the PCM, and SH C pressure (SC) is applied to the right side of the reverse CPC valve. Then the reverse CPC valve is moved to the left side to uncover the port leading line pressure (3) to the servo valve. Line pressure (3′) passes through the servo valve and flows to the manual valve. Line pressure (3′) is intercepted at the manual valve, and is not applied to the clutches.

NOTE:
- When used, "left" or "right" indicates direction on the hydraulic circuit.
- Hydraulic circuit shows the '98-99 models; the '00-02 models are similar.

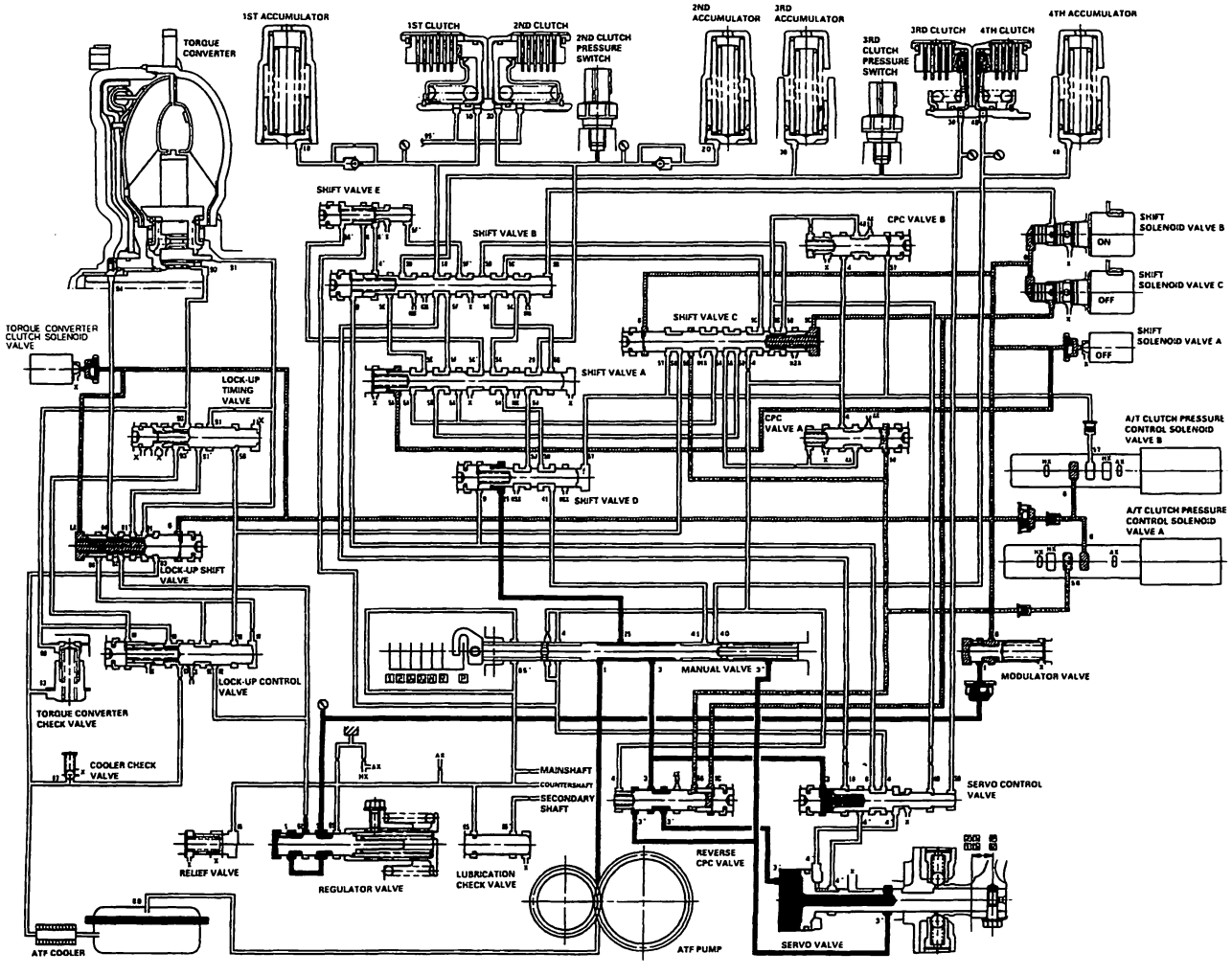

(cont'd)

System Description (cont'd)

Lock-up System

In D4 position (3rd and 4th), and D3 position (3rd), pressurized fluid is drained from the back of the torque converter through a fluid passage, causing the lock-up piston to be held against the torque converter cover. As this takes place, the mainshaft rotates at the same speed as the engine crankshaft. Together with hydraulic control, the PCM optimizes the timing of the lock-up mechanism. When the torque converter clutch solenoid valve activates, modulator pressure changes to switch lock-up ON and OFF. The lock-up control valve and the lock-up timing valve control the range of lock-up according to A/T clutch pressure control solenoid valves A and B. The torque converter clutch solenoid valve is mounted on the torque converter housing, and A/T clutch pressure control solenoid valves A and B are mounted on the transmission housing. They are controlled by the PCM.

General Operation

1. Operation (clutch on)
   With the lock-up clutch on, fluid in the chamber between the torque converter cover and the lock-up piston is drained off, and the converter fluid exerts pressure through the piston against the torque converter cover. As a result, the converter turbine is locked to the converter cover. The effect is to bypass the converter, placing the vehicle in direct drive.

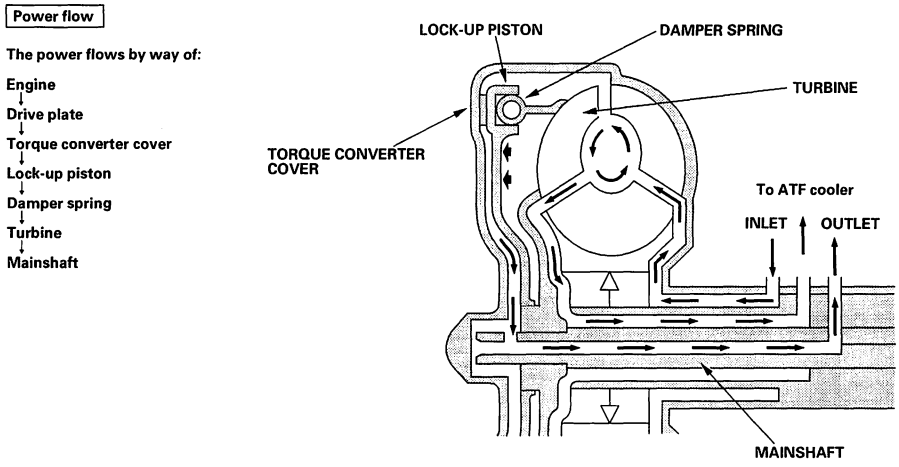

2. Operation (clutch off)
   With the lock-up clutch off, fluid flows in the reverse of CLUTCH ON. As a result, the lock-up piston moves away from the converter cover, and torque converter lock-up is released.

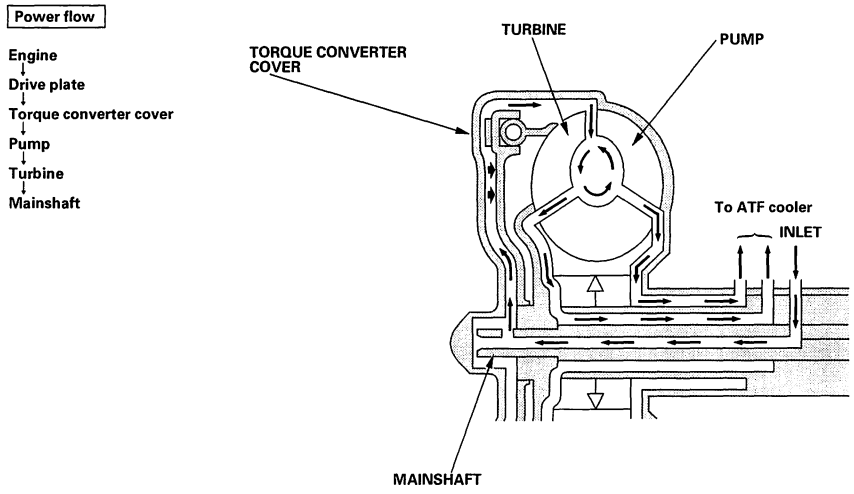

BACK

No Lock-up

The torque converter clutch solenoid valve is turned OFF by the PCM. The lock-up shift valve receives LC pressure (LA) on the left side, and modulator pressure (6) on the right side. The lock-up shift valve is in the right side to uncover the port leading torque converter pressure (92) to the left side of the torque converter. Torque converter pressure (92) becomes torque converter pressure (94), and enters into the left side of the torque converter to disengage the lock-up clutch. The lock-up clutch is OFF.

NOTE:
- When used, "left" or "right" indicates direction on the hydraulic circuit.
- Hydraulic circuit shows the '98-99 models; the '00-02 models are similar.

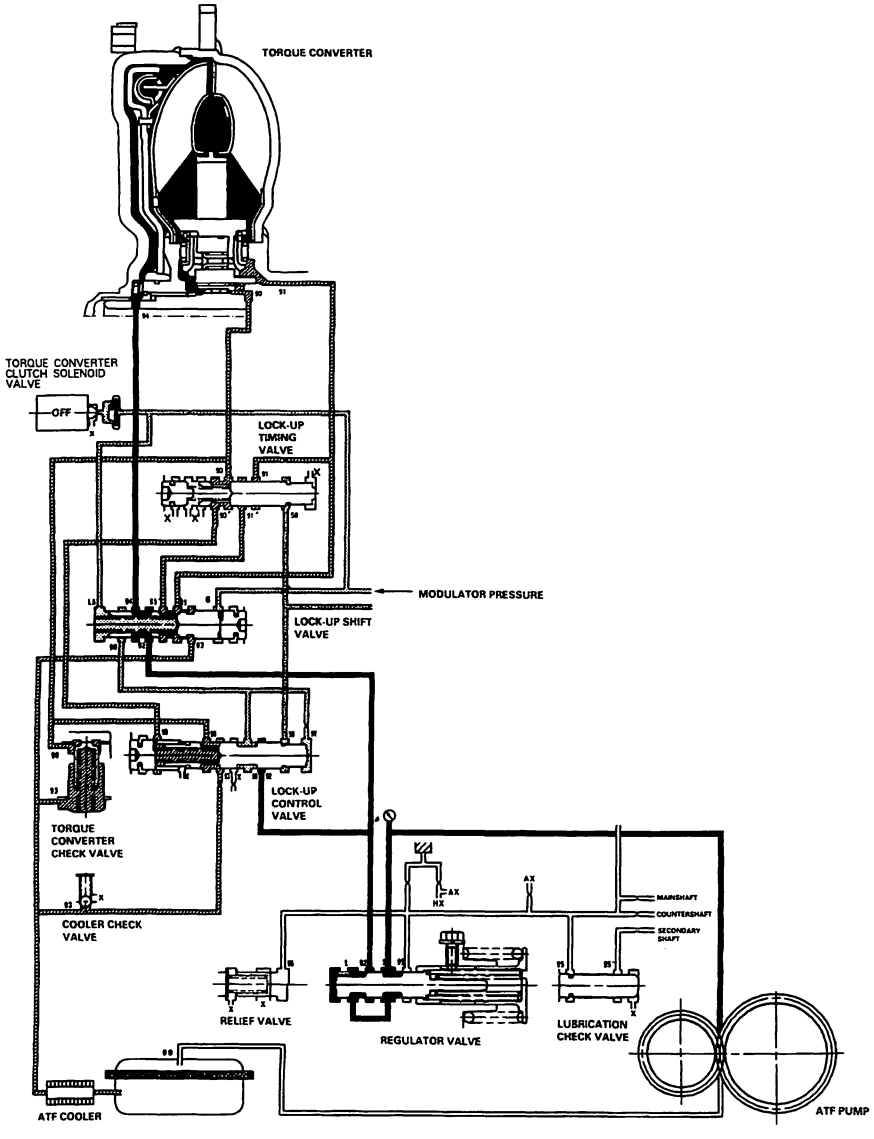

(cont'd)

System Description (cont'd)

Lock-up System (cont'd)

Partial Lock-up

As the speed of the vehicle reaches the prescribed value, the torque converter clutch solenoid valve is turned ON by the PCM to release LC pressure (LA) in the left side of the lock-up shift valve. The lock-up shift valve is moved to the left side to switch the port leading torque converter pressure to the left side and right side of the torque converter. Torque converter pressure (92) flows to the right side of the torque converter to engage the lock-up clutch. The PCM also controls A/T clutch pressure control solenoid valves A and B, and LS A or LS B pressure is applied to the lock-up control valve and the lock-up timing valve. The position of the lock-up control valve depends on torque converter pressure and LS A or LS B pressure. When LS A or LS B pressure (58) is lower, torque converter pressure (91) from the lock-up timing valve is lower. The lock-up clutch is engaged partially. LS A or LS B (58) increases, and the lock-up timing valve is moved to the left side to uncover the port leading torque converter pressure to high. The lock-up clutch is then engaged securely. Under this condition, the lock-up clutch is engaged by pressure from the right side of the torque converter; this condition is partial lock-up.

NOTE:
- When used, "left" or "right" indicates direction on the hydraulic circuit.
- Hydraulic circuit shows the '98-99 models; the '00-02 models are similar.

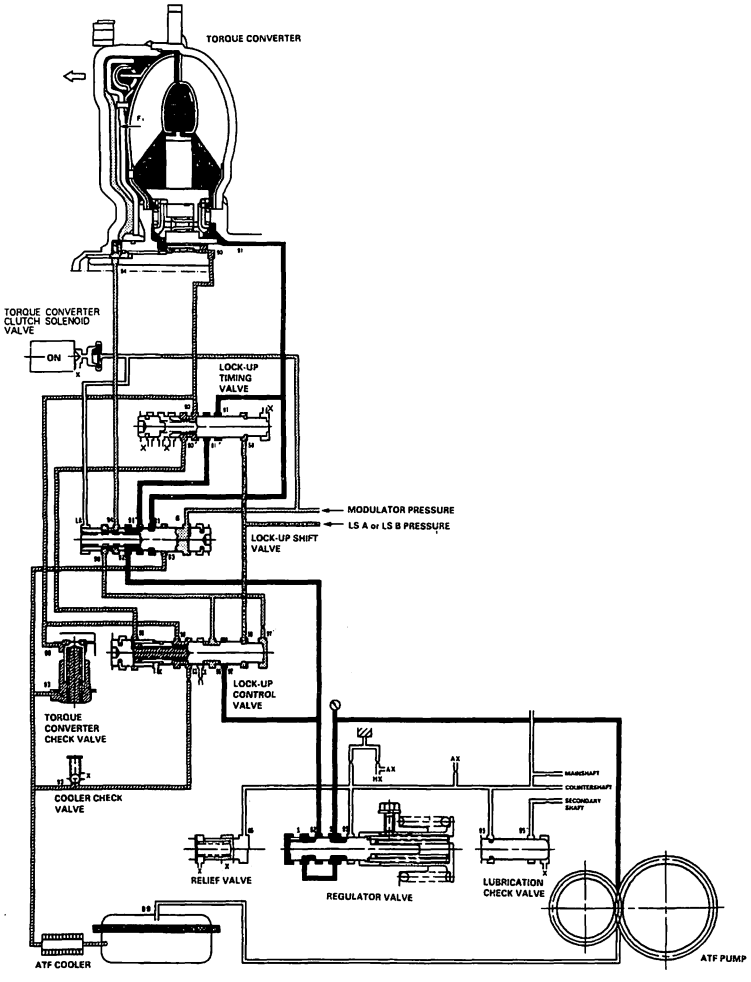

BACK

Full Lock-up

When the vehicle speed further increases, the PCM controls A/T clutch pressure control solenoid valves A and B to increase LS A or LS B pressure (58). The LS A or LS B pressure (58) is applied to the lock-up control valve and the lock-up timing valve, and moves them to the left side. Under this condition, torque converter back pressure is released fully, causing the lock-up clutch to be fully engaged.

NOTE:
- When used, "left" or "right" indicates direction on the hydraulic circuit.
- Hydraulic circuit shows the '98-99 models; the '00-02 models are similar.

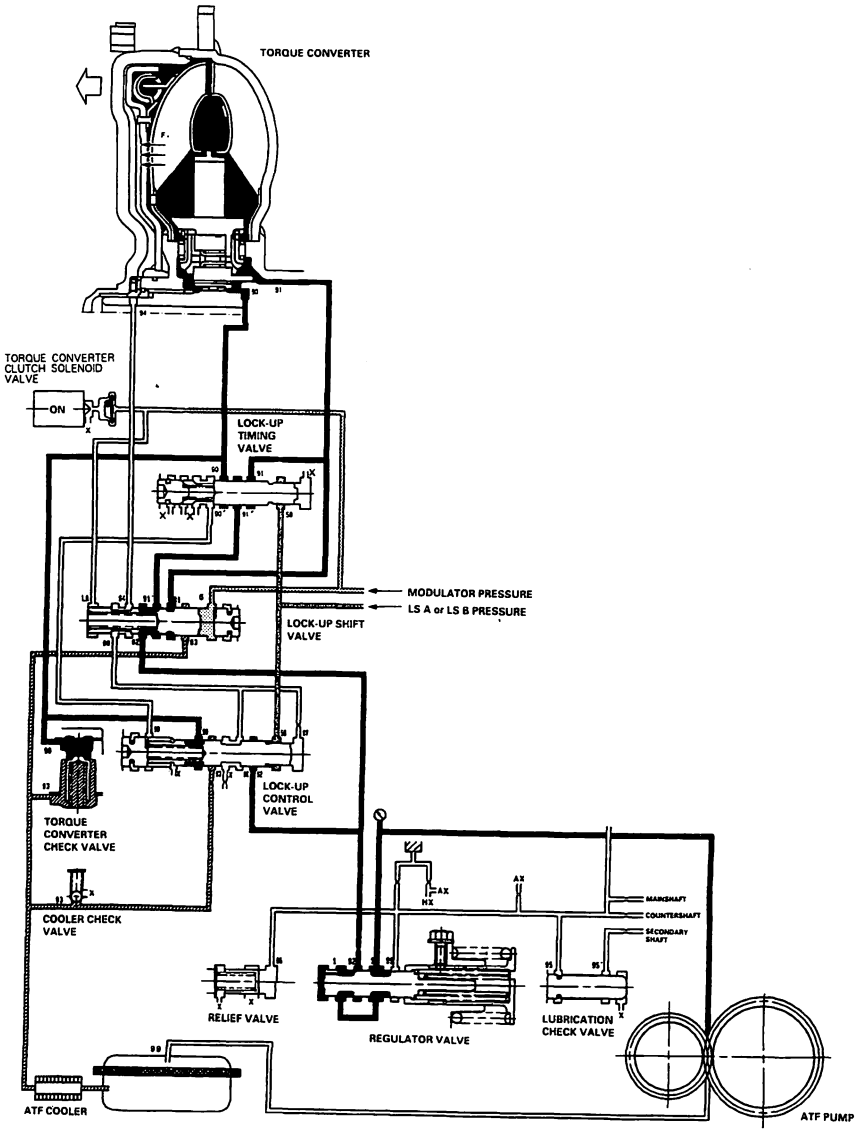

(cont'd)

System Description (cont'd)

Circuit Diagram

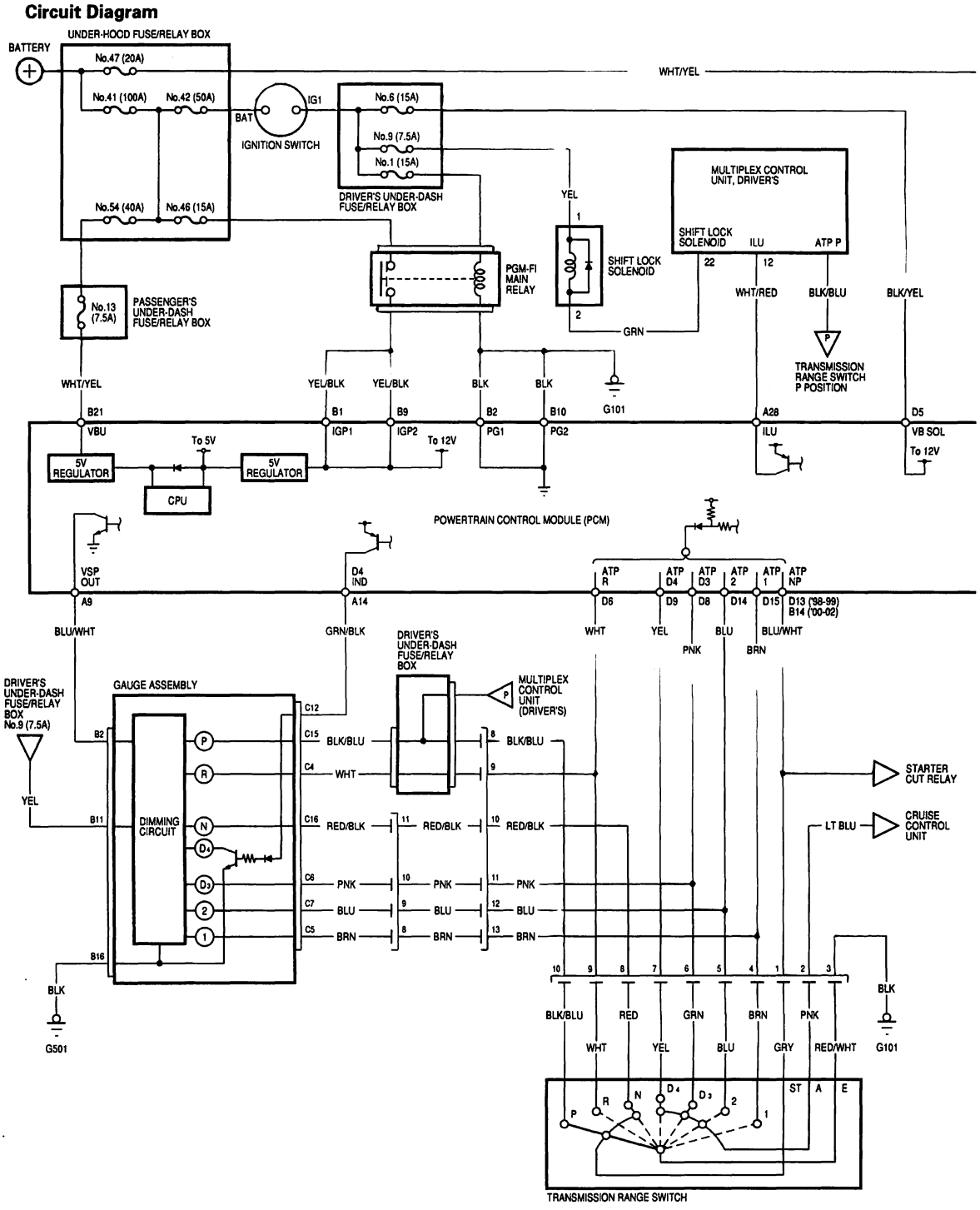

BACK

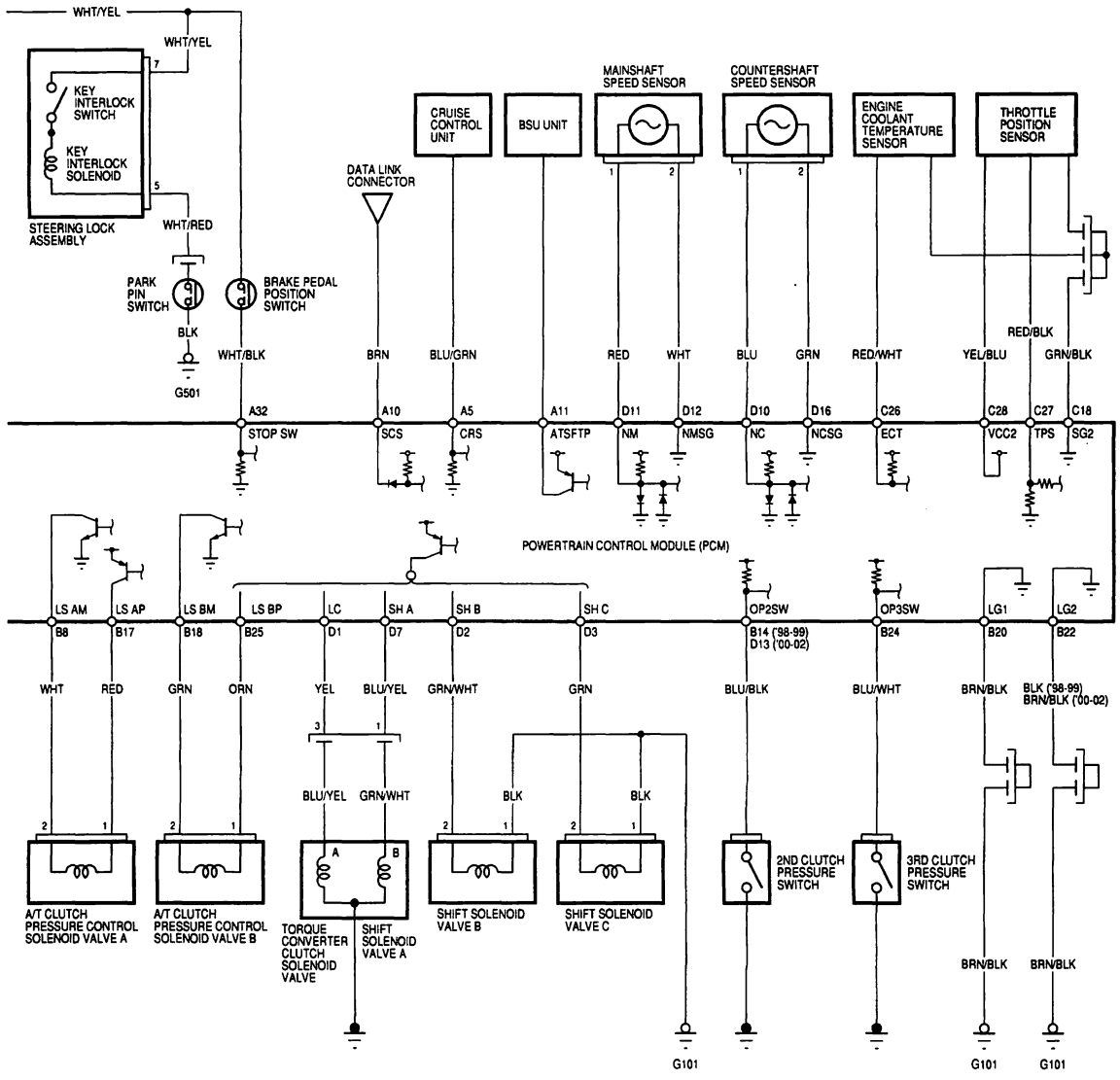

PCM Connector Terminal Locations

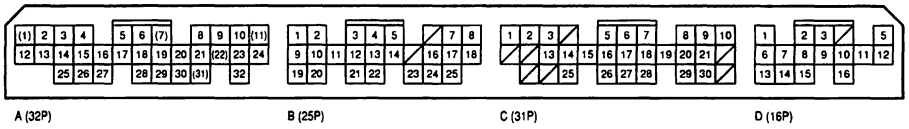

DTC Troubleshooting

DTC P1753: Problem in Torque Converter Clutch Solenoid Valve Circuit

NOTE: Record all freeze data before you troubleshoot.

1. Turn the ignition switch OFF.
2. Disconnect the B (25P) and D (16P) connectors from the PCM.
3. Turn the ignition switch ON (II).
4. Measure the voltage between the D1 and B20 or B22 terminals.

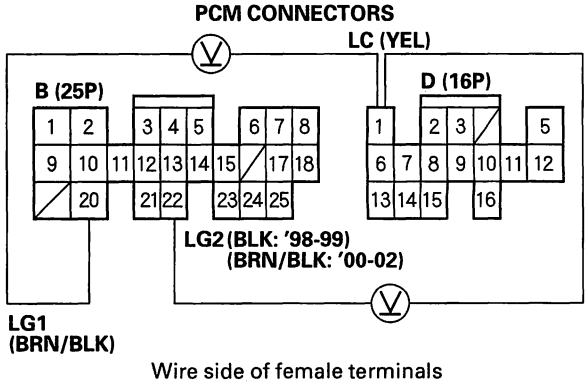

Wire side of female terminals

Is there voltage?

YES—Repair short to power in the wire between the D1 terminal and the torque converter clutch solenoid valve.■

NO—Go to step 5.

5. Turn the ignition switch OFF.
6. Measure the resistance between the D1 and B20 or B22 terminals.

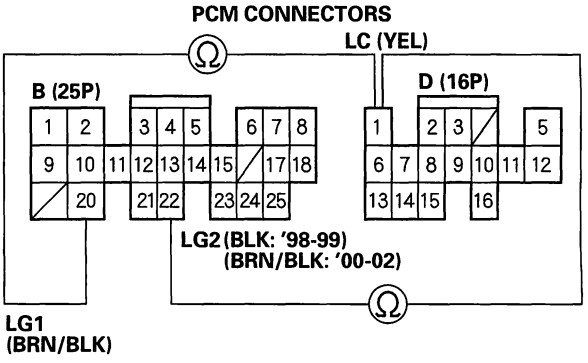

Wire side of female terminals

Is the resistance 12—25Ω ?

YES—Go to step 11.

NO—Go to step 7.

7. Check for continuity between the B20 and B22 terminals and body ground.

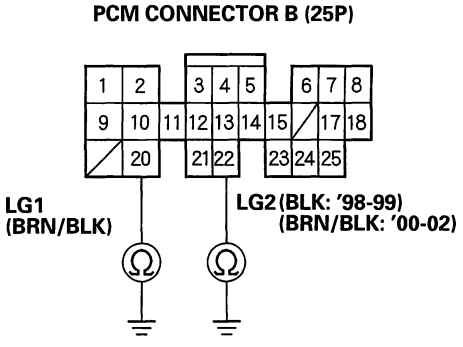

Wire side of female terminals

Is there continuity?

YES—Go to step 8.

NO—Repair open in the wires between the B20 and B22 terminals and ground (G101).■

BACK

8. Disconnect the torque converter clutch solenoid valve/shift solenoid valve A 3P connector.

9. Check for continuity between the D1 and B20 or B22 terminals.

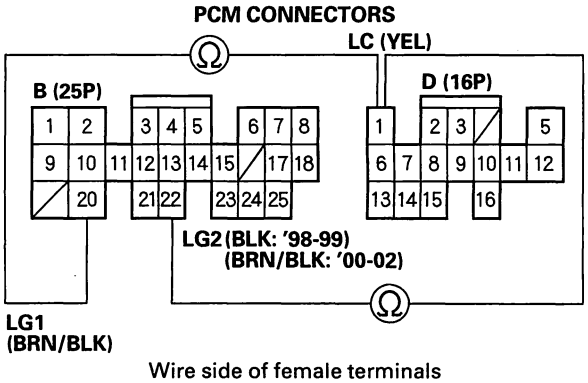

Wire side of female terminals

Is there continuity?

YES—Repair short to ground in the wire between the D1 terminal and the torque converter clutch solenoid valve.■

NO—Go to step 10.

10. Measure the resistance between the No.3 terminal of the lock-up control solenoid valve/shift solenoid valve A connector and body ground.

TORQUE CONVERTER CLUTCH SOLENOID VALVE/ SHIFT SOLENOID VALVE A CONNECTOR (3P)

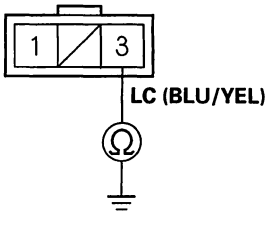

Terminal side of male terminals

Is the resistance 12—25Ω ?

YES—Check for open in the wire between the D1 terminal and the torque converter clutch solenoid valve.■

NO—Replace the torque converter clutch solenoid valve/shift solenoid valve A.■

11. Turn the ignition switch ON (II).

12. Measure the voltage between the D5 and B20 or B22 terminals.

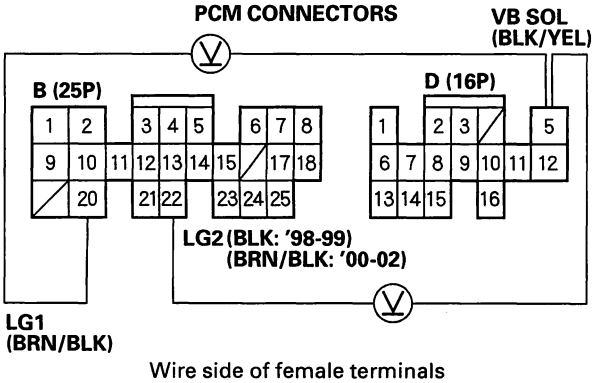

Wire side of female terminals

Is there battery voltage?

YES—Check for loose terminal fit in the PCM connectors. If necessary, substitute a known-good PCM and recheck.■

NO—Check for blown No. 6 (15A) fuse in the driver's under-dash fuse/relay box. If the fuse is OK, repair open in the wire between the D5 terminal and the driver's under-dash fuse/relay box.■

DTC Troubleshooting (cont'd)

DTC P1705: Short in Transmission Range Switch Circuit

NOTE: Record all freeze data before you troubleshoot.

1. Turn the ignition switch ON (II).

2. Observe the A/T gear position indicator, and shift each position separately.

   Do any indicators stay on when the shift lever is not in that position?

   YES—Go to step 3.
   NO—The system is OK at this time. Check the wire harness for damage.■

3. Disconnect the transmission range switch connector.

   Do all gear position indicators go out?

   YES—Replace the transmission range switch.■
   NO—Go to step 4.

4. Turn the ignition switch OFF, and connect the transmission range switch connector.

5. Turn the ignition switch ON (II).

6. Shift to all positions other than [R].

7. Measure the voltage between the D6 and B20 or B22 terminals.

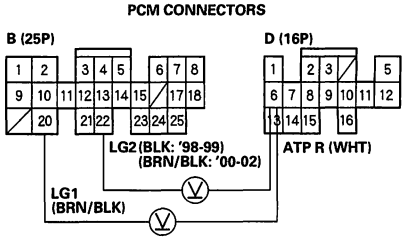

Wire side of female terminals

Is there battery voltage?

YES—Go to step 8.
NO—Check for short in the wire between the D6 terminal and the transmission range switch or A/T gear position indicator, and check for an open in the wires between the B20 and B22 terminals and body ground (G101). If wires are OK, check for loose terminal fit in the PCM connectors. If necessary, substitute a known-good PCM and recheck.■

8. Shift to all positions other than [P] or [N].

9. Measure ATP NP voltage between these terminals:

   - '98-99 models: Between terminals D13 and B20 or B22.
   - '00-02 models: Between terminals B14 and B20 or B22.

'98-99 models:

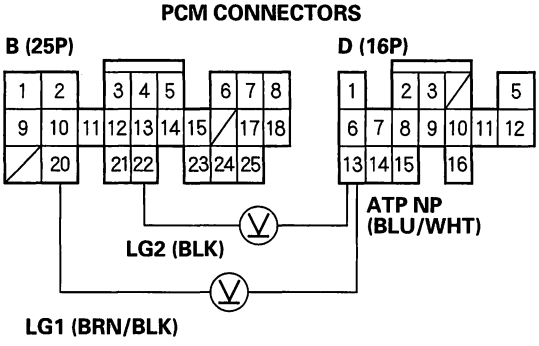

Wire side of female terminals

'00-02 models:

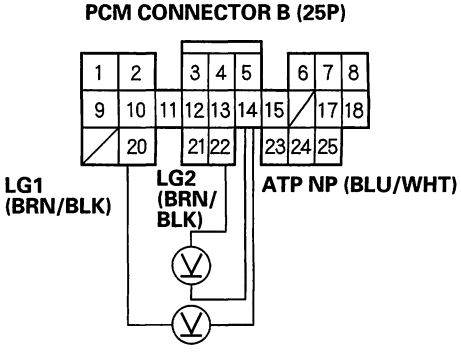

Wire side of female terminals

Is there about 5 V?

YES—Go to step 10.

NO—Check for short in the wire between the D13 terminal and the transmission range switch, and in the [P] and [N] position signal wires between the A/T gear position indicator and the transmission range switch. If wires are OK, check for loose terminal fit in the PCM connectors. If necessary, substitute a known-good PCM and recheck.■

10. Shift to all positions other than [D4].

BACK

11. Measure the voltage between the D9 and B20 or B22 terminals.

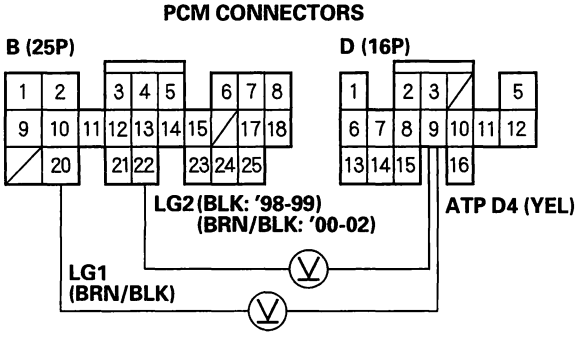

Wire side of female terminals

Is there about 5 V?

YES—Go to step 12.

NO—Check for short in the wire between the D9 terminal and the transmission range switch. If wire is OK, check for loose terminal fit in the PCM connectors. If necessary, substitute a known-good PCM and recheck. ■

12. Shift to all positions other than D3.

13. Measure the voltage between the D8 and B20 or B22 terminals.

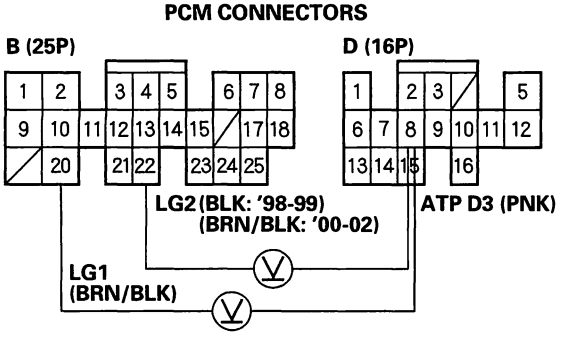

Wire side of female terminals

Is there battery voltage?

YES—Go to step 14.

NO—Check for short in the wire between the D8 terminal and the transmission range switch or A/T gear position indicator. If wires are OK, check for loose terminal fit in the PCM connectors. If necessary, substitute a known-good PCM and recheck. ■

(cont'd)

DTC Troubleshooting (cont'd)

14. Shift to all positions other than [2].

15. Measure the voltage between the D14 and B20 or B22 terminals.

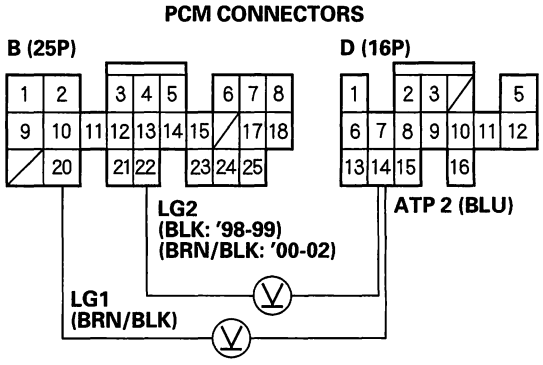

Wire side of female terminals

Is there battery voltage?

YES—Go to step 16.

NO—Check for short in the wire between the D14 terminal and the transmission range switch or A/T gear position indicator. If wires are OK, check for loose terminal fit in the PCM connectors. If necessary, substitute a known-good PCM and recheck.■

16. Shift to all positions other than [1].

17. Measure the voltage between the D15 and B20 or B22 terminals.

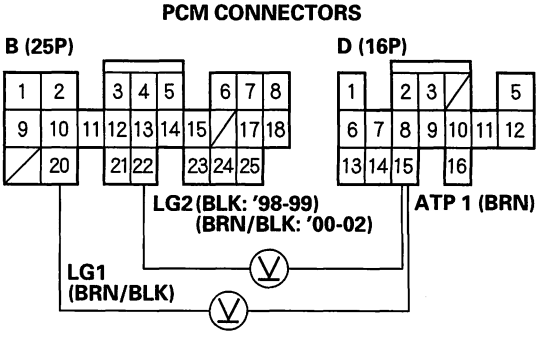

Wire side of female terminals

Is there battery voltage?

YES—Check for loose terminal fit in the PCM connectors. If necessary, substitute a known-good PCM and recheck.■

NO—Check for short in the wire between the D15 terminal and the transmission range switch or A/T gear position indicator. If wires are OK, check for loose terminal fit in the PCM connectors. If necessary, substitute a known-good PCM and recheck.■

BACK

DTC P1706: Open in Transmission Range Switch Circuit (no gear position inputs)

NOTE: Record all freeze data before you troubleshoot.

1. Test the transmission range switch (see page 14-140).

   Is the switch OK?

   YES—Go to step 2.

   NO—Replace the transmission range switch.■

2. Turn the ignition switch OFF.

3. Check for continuity between the B20 and B22 terminals and body ground.

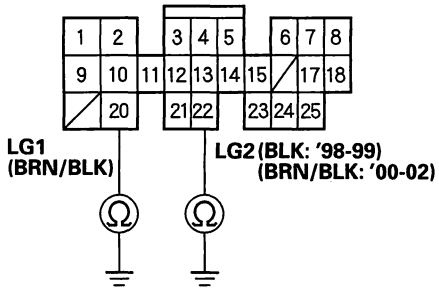

Wire side of female terminals

   Is there continuity?

   YES—Go to step 4.

   NO—Repair open in the wires between the B20 and B22 terminals and ground (G101), or repair poor ground (G101).■

4. Turn the ignition switch ON (II).

5. Shift to D4 position.

6. Measure the voltage between the D9 and B20 or B22 terminals.

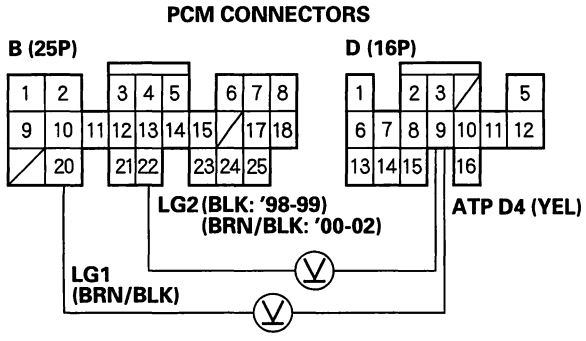

Wire side of female terminals

   Is there voltage?

   YES—Repair open in the wire between the D9 terminal and the transmission range switch.■

   NO—Go to step 7.

7. Shift to R position.

8. Measure the voltage between the D6 and B20 or B22 terminals.

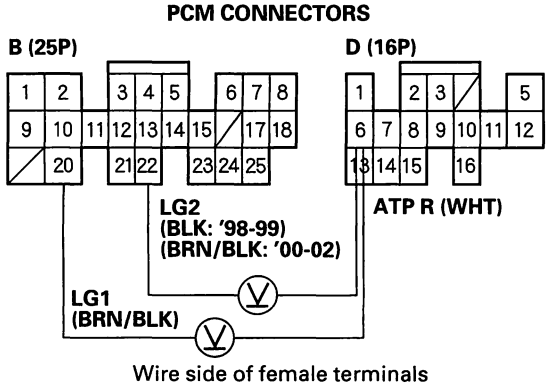

Wire side of female terminals

   Is there voltage?

   YES—Repair open in the wire between the D6 terminal and the transmission range switch.■

   NO—Go to step 9.

9. Shift to P or N position.

(cont'd)

DTC Troubleshooting (cont'd)

10. Measure ATP NP voltage between these terminals:

    - '98-99 models: Between terminals D13 and B20 or B22.
    - '00-02 models: Between terminals B14 and B20 or B22.

'98-99 models:

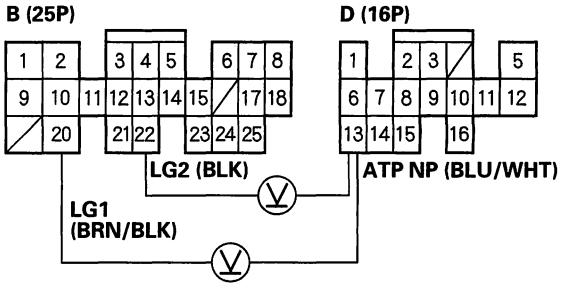

Wire side of female terminals

'00-02 models:

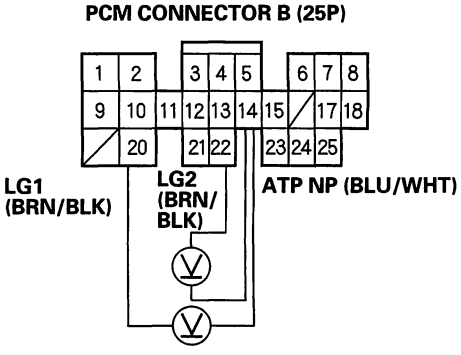

Wire side of female terminals

Is there voltage?

YES—Repair open in the wire between the D13 ('98-99) or B14 ('00-02) terminal and the transmission range switch.■

NO—Go to step 11.

11. Shift to D3 position.

12. Measure the voltage between the D8 and B20 or B22 terminals.

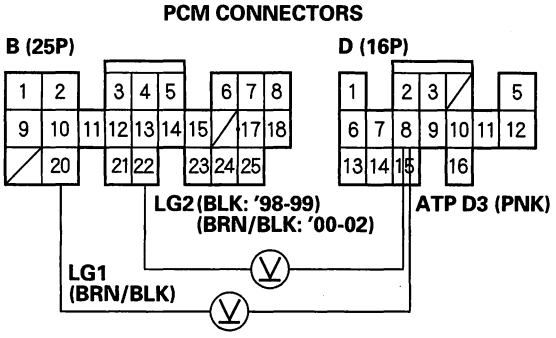

Wire side of female terminals

Is there voltage?

YES—Repair open in the wire between the D8 terminal and the transmission range switch.■

NO—Go to step 13.

13. Shift to 2 position.

14. Measure the voltage between the D14 and B20 or B22 terminals.

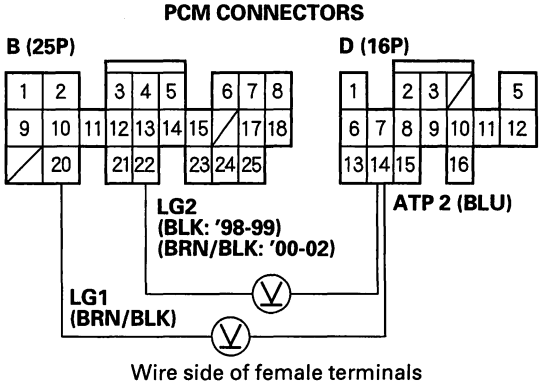

Wire side of female terminals

Is there voltage?

YES—Repair open in the wire between the D14 terminal and the transmission range switch.■

NO—Go to step 15.

BACK

15. Shift to [1] position.

16. Measure the voltage between the D15 and B20 or B22 terminals.

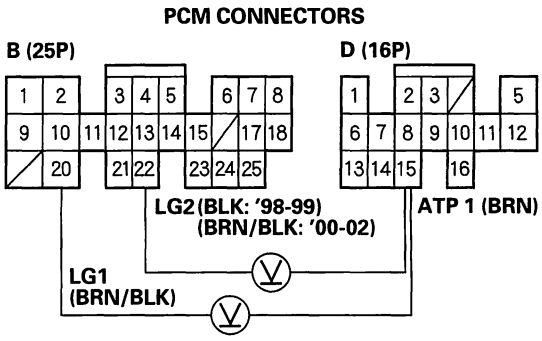

Wire side of female terminals

Is there voltage?

YES—Repair open in the wire between the D15 terminal and the transmission range switch.■

NO—Check for loose terminal fit in the PCM connectors. If necessary, substitute a known-good PCM and recheck.■

DTC Troubleshooting (cont'd)

DTC P0753: Problem in Shift Solenoid Valve A Circuit

NOTE: Record all freeze data before you troubleshoot.

1. Turn the ignition switch OFF.
2. Disconnect PCM connectors B (25P) and D (16P).
3. Turn the ignition switch ON (II).
4. Measure the voltage between the D7 and B20 or B22 terminals.

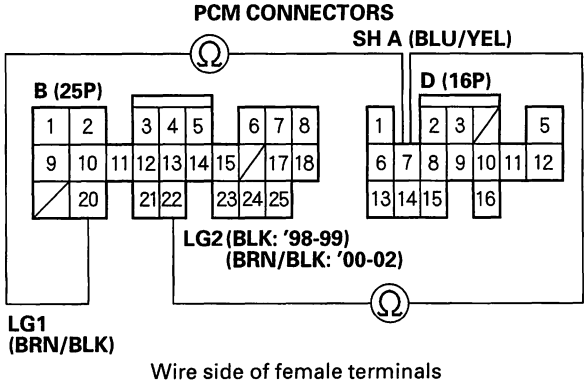

Wire side of female terminals

Is there voltage?

YES—Repair short to power in the wire between the D7 terminal and the shift solenoid valve A.■

NO—Go to step 5.

5. Turn the ignition switch OFF.
6. Measure the resistance between the D7 and B20 or B22 terminals.

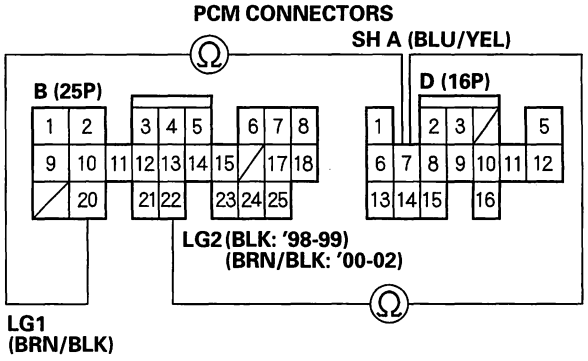

Wire side of female terminals

Is the resistance 12—25 Ω ?

YES—Go to step 11.

NO—Go to step 7.

7. Check for continuity between the B20 and B22 terminals and body ground.

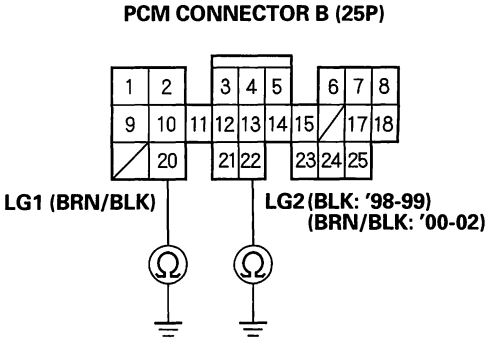

Wire side of female terminals

Is there continuity?

YES—Go to step 8.

NO—Repair open in the wires between the B20 and B22 terminals and ground (G101).■

BACK

8. Disconnect the torque converter clutch solenoid valve/shift solenoid valve A 3P connector.

9. Check for continuity between the D7 and B20 or B22 terminals.

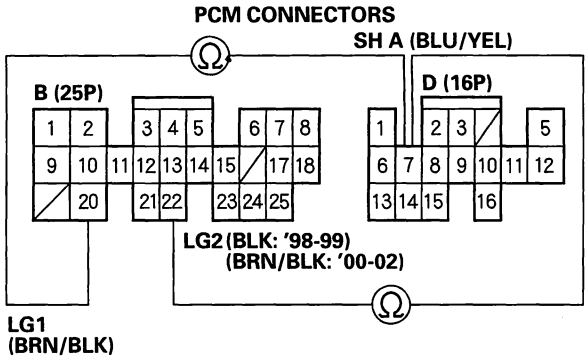

Wire side of female terminals

Is there continuity?

YES—Repair short to ground in the wire between the D7 terminal and shift solenoid valve A.■

NO—Go to step 10.

10. Measure the resistance between the No. 1 terminal of the torque converter clutch solenoid valve/shift solenoid valve A connector and body ground.

TORQUE CONVERTER CLUTCH SOLENOID VALVE/ SHIFT SOLENOID VALVE A CONNECTOR (3P)

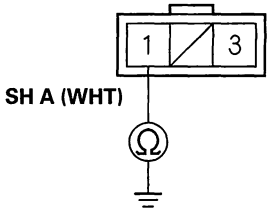

Terminal side of male terminals

Is the resistance 12—25 Ω ?

YES—Check for open in the wire between the D7 terminal and shift solenoid valve A.■

NO—Replace the torque converter clutch solenoid valve/shift solenoid valve A.■

11. Turn the ignition switch ON (II).

12. Measure the voltage between the D5 and B20 or B22 terminals.

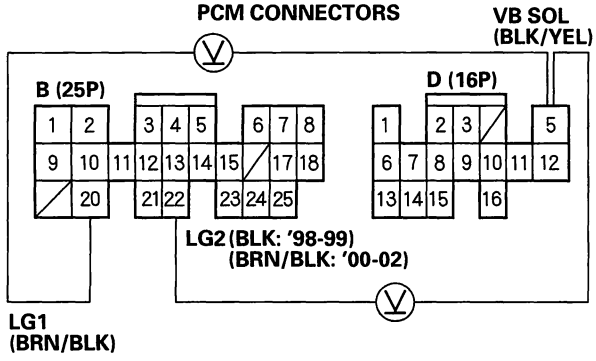

Wire side of female terminals

Is there battery voltage?

YES—Check for loose terminal fit in the PCM connectors. If necessary, substitute a known-good PCM and recheck.■

NO—Check for blown No. 6 (15A) fuse in the driver's under-dash fuse/relay box. If the fuse is OK, repair open in the wire between the D5 terminal and the driver's under-dash fuse/relay box.■

DTC Troubleshooting (cont'd)

DTC P0758: Problem in Shift Solenoid Valve B Circuit

NOTE: Record all freeze data before you troubleshoot.

1. Turn the ignition switch OFF.
2. Disconnect PCM connectors B (25P) and D (16P).
3. Turn the ignition switch ON (II).
4. Measure the voltage between the D2 and B20 or B22 terminals.

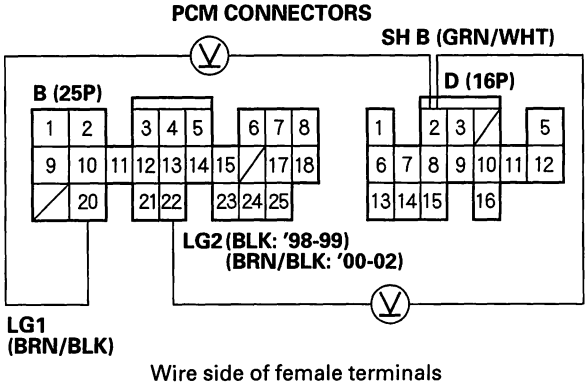

Wire side of female terminals

Is there voltage?

YES—Repair short to power in the wire between the D2 terminal and the shift solenoid valve B.■

NO—Go to step 5.

5. Turn the ignition switch OFF.
6. Measure the resistance between the D2 and B20 or B22 terminals.

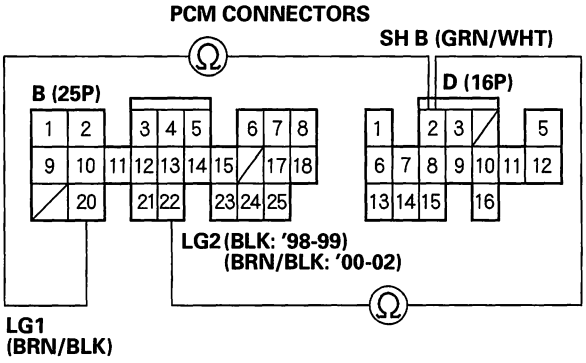

Wire side of female terminals

Is the resistance 12—25 Ω ?

YES—Go to step 11.

NO—Go to step 7.

7. Check for continuity between the B20 and B22 terminals and body ground individually.

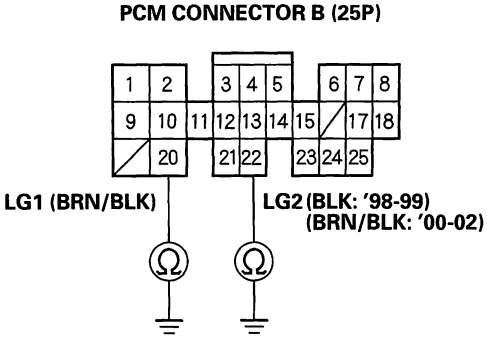

Wire side of female terminals

Is there continuity?

YES—Go to step 8.

NO—Repair open in the wires between the B20 and B22 terminals and ground (G101).■

BACK

8. Disconnect the shift solenoid valve B 2P connector.

9. Check for continuity between the D2 and B20 or B22 terminals.

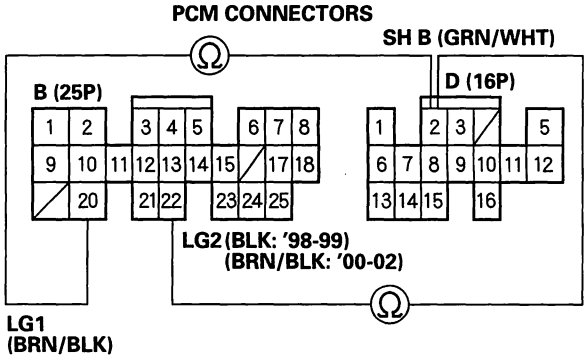

Wire side of female terminals

Is there continuity?

YES—Repair short to ground in the wire between the D2 terminal and the shift solenoid valve B. ■

NO—Go to step 10.

10. Measure shift solenoid valve B resistance at the solenoid valve connector.

SHIFT SOLENOID VALVE B CONNECTOR

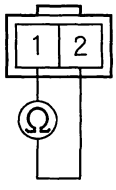

Terminal side of male terminals

Is the resistance 12—25 Ω ?

YES—Check for open in the wires between the D2 terminal and the shift solenoid valve B and between the No. 1 terminal of the shift solenoid valve B connector and ground (G101). ■

NO—Replace the shift solenoid valve B. ■

11. Turn the ignition switch ON (II).

12. Measure the voltage between the D5 and B20 or B22 terminals.

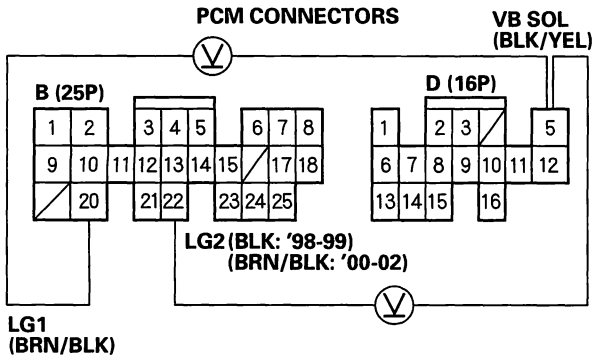

Wire side of female terminals

Is there approx. battery voltage?

YES—Check for loose terminal fit in the PCM connectors. If necessary, substitute a known-good PCM and recheck. ■

NO—Check for blown No. 6 (15A) fuse in the driver's under-dash fuse/relay box. If the fuse is OK, repair open in the wire between the D5 terminal and the driver's under-dash fuse/relay box. ■

DTC Troubleshooting (cont'd)

DTC P0720: Problem in Countershaft Speed Sensor Circuit

NOTE: Record all freeze data before you troubleshoot.

1. Check the countershaft speed sensor installation.

   Is the countershaft speed sensor installed properly?

   YES—Go to step 2.

   NO—Reinstall and recheck.■

2. Disconnect the countershaft speed sensor 2P connector.

3. Measure countershaft speed sensor resistance at the sensor connector.

COUNTERSHAFT SPEED SENSOR CONNECTOR

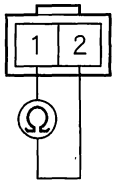

Terminal side of male terminals

Is the resistance 400—600 Ω ?

YES—Go to step 4.

NO—Replace the countershaft speed sensor.■

4. Disconnect PCM connector D (16P).

5. Check for continuity between body ground and the D10 terminal and D16 terminal individually.

PCM CONNECTOR D (16P)

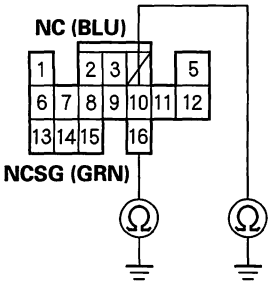

Wire side of female terminals

Is there continuity?

YES—Repair short to ground in the wires between the D10 and D16 terminals and the countershaft speed sensor.■

NO—Go to step 6.

6. Connect the countershaft speed sensor connector.

7. Measure the resistance between the D10 and D16 terminals.

PCM CONNECTOR D (16P)

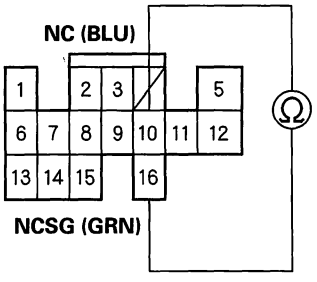

Wire side of female terminals

Is the resistance 400—600 Ω ?

YES—Check for loose terminal fit in the PCM connectors. If necessary, substitute a known-good PCM and recheck.■

NO—Repair loose terminal or open in the wires between the D10 and D16 terminals and the countershaft speed sensor.■

BACK

DTC P0715: Problem in Mainshaft Speed Sensor Circuit

NOTE:
- Record all freeze data before you troubleshoot.
- Code P0715 (15) on the PCM doesn't always mean there's an electrical problem in the mainshaft or countershaft speed sensor circuit; code P0715 (15) may also indicate a mechanical problem in the transmission. Any problem causing irregular countershaft to mainshaft speed difference can cause this code.

1. Check the mainshaft and countershaft speed sensor installation.

   Are the mainshaft and countershaft speed sensor installed properly?

   YES—Go to step 2.

   NO—Reinstall and recheck.■

2. Disconnect the mainshaft speed sensor 2P connector.

3. Measure mainshaft speed sensor resistance at the sensor connector.

MAINSHAFT SPEED SENSOR CONNECTOR

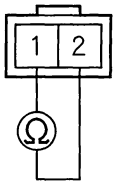

Terminal side of male terminals

Is the resistance 400—600 Ω ?

YES—Go to step 4.

NO—Replace the mainshaft speed sensor.■

4. Disconnect PCM connector D (16P).

5. Check for continuity between body ground and the D11 terminal and D12 terminal individually.

PCM CONNECTOR D (16P)

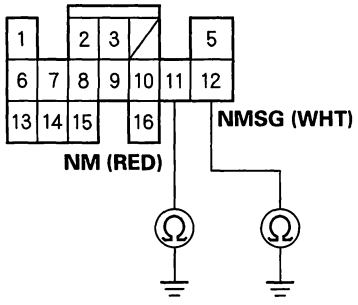

Wire side of female terminals

Is there continuity?

YES—Repair short to ground in the wires between the D11 and D12 terminals and the mainshaft speed sensor.■

NO—Go to step 6.

6. Connect the mainshaft speed sensor connector.

7. Measure the resistance between the D11 and D12 terminals.

PCM CONNECTOR D (16P)

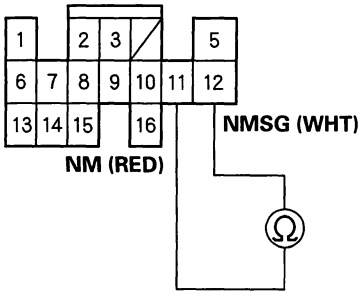

Wire side of female terminals

Is the resistance 400—600 Ω ?

YES—Run the Electrical Troubleshooting Flowchart for code P0720 (code 9). Check for loose terminal fit in the PCM connectors. If necessary, substitute a known-good PCM and recheck.■

NO—Go to step 8.

(cont'd)

DTC Troubleshooting (cont'd)

8. Disconnect the mainshaft speed sensor 2P connector.

9. Check for continuity between the D11 terminal and the No. 1 terminal of the mainshaft speed sensor connector.

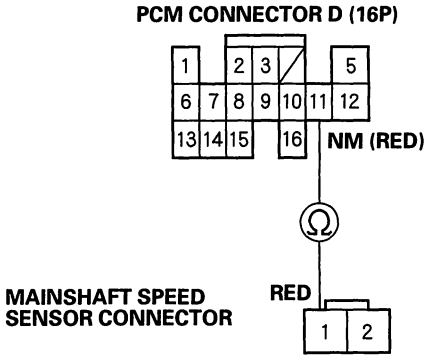

Wire side of female terminals

Is there continuity?

YES—Go to step 10.

NO—Repair open in the wire between the D11 terminal and the mainshaft speed sensor. ■

10. Check for continuity between the D12 terminal and the No. 2 terminal of the mainshaft speed sensor connector.

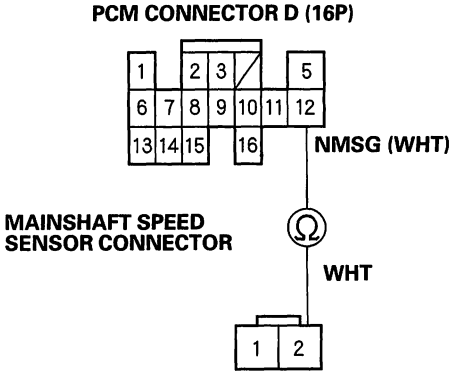

Wire side of female terminals

Is there continuity?

YES—Check for loose terminal fit in the PCM connectors. If necessary, substitute a known-good PCM and recheck. ■

NO—Repair open in the wire between the D12 terminal and the mainshaft speed sensor. ■

BACK

DTC P1768: Problem in A/T Clutch Pressure Control Solenoid Valve A Circuit

NOTE: Record all freeze data before you troubleshoot.

1. Disconnect the A/T clutch pressure control solenoid valve A 2P connector.

2. Measure A/T clutch pressure control solenoid resistance at the solenoid valve connector.

A/T CLUTCH PRESSURE CONTROL SOLENOID VALVE A CONNECTOR

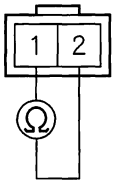

Terminal side of male terminals

Is the resistance about 5 Ω?

YES—Go to step 3.
NO—Replace the A/T clutch pressure control solenoid valve A.■

3. Disconnect PCM connector B (25P).

4. Check for continuity between body ground and the B8 terminal and the B17 terminal individually.

PCM CONNECTOR B (25P)

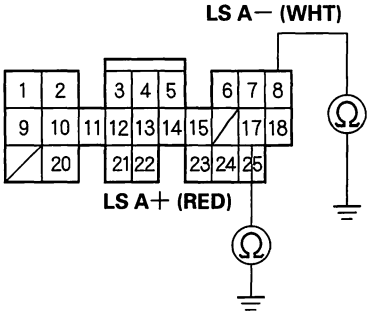

Wire side of female terminals

Is there continuity?

YES—Repair short to ground in the wires between the B8 and B17 terminals and A/T clutch pressure control solenoid valve A.■
NO—Go to step 5.

5. Connect the A/T clutch pressure control solenoid valve A connector.

6. Measure the resistance between the B8 and B17 terminals.

PCM CONNECTOR B (25P)

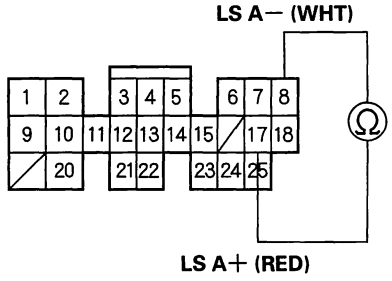

Wire side of female terminals

Is the resistance about 5 Ω?

YES—Go to step 7.
NO—Repair loose terminal or open in the wires between the B8 and B17 terminals and A/T clutch pressure control solenoid valve A.■

7. Disconnect PCM connector D (16P).

8. Turn the ignition switch ON (II).

9. Measure the voltage between the D5 and B20 or B22 terminals.

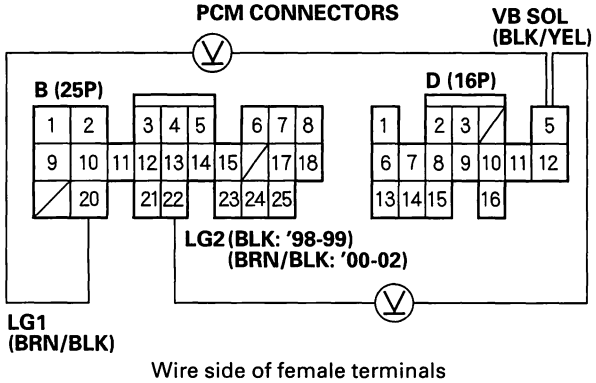

Wire side of female terminals

Is there battery voltage?

YES—Go to step 10.
NO—Check for blown No. 6 (15A) fuse in the driver's under-dash fuse/relay box. If the fuse is OK, repair open in the wire between the D5 terminal and the driver's under-dash fuse/relay box.■

(cont'd)

DTC Troubleshooting (cont'd)

10. Turn the ignition switch OFF.

11. Check for continuity between the B20 and B22 terminals and body ground.

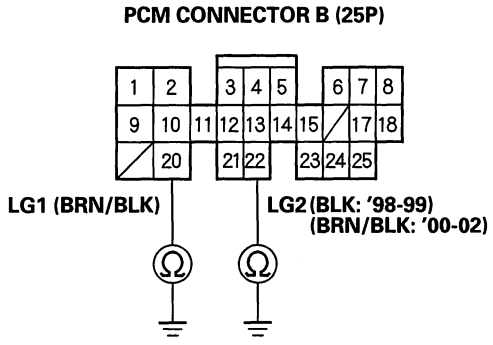

Wire side of female terminals

Is there continuity?

YES—Check for loose terminal fit in the PCM connectors. If necessary, substitute a known-good PCM and recheck.■

NO—Repair open in the wire between the B2, B10, B20 and B22 terminals and ground (G101). Repair poor ground (G101).■

BACK

DTC P0763: Problem in Shift Solenoid Valve C Circuit

NOTE: Record all freeze data before you troubleshoot.

1. Turn the ignition switch OFF.
2. Disconnect PCM connectors B (25P) and D (16P).
3. Turn the ignition switch ON (II).
4. Measure the voltage between the D3 and B20 or B22 terminals.

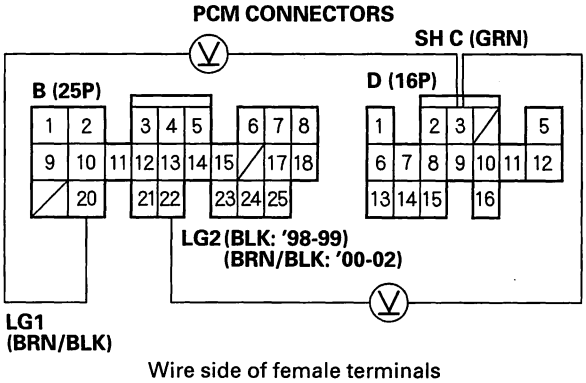

Wire side of female terminals

Is there voltage?

YES—Repair short to power in the wire between the D3 terminal and the shift solenoid valve C. ■

NO—Go to step 5.

5. Turn the ignition switch OFF.
6. Measure the resistance between the D3 and B20 or B22 terminals.

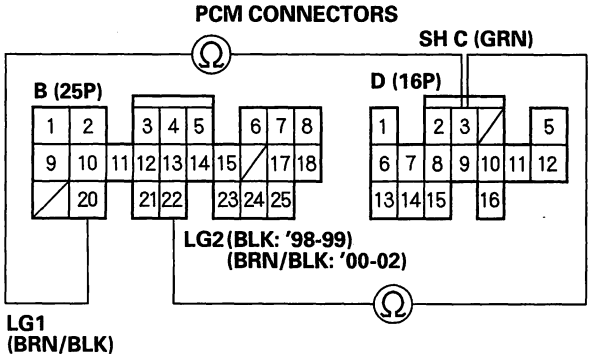

Wire side of female terminals

Is the resistance 12—25 Ω ?

YES—Go to step 11.

NO—Go to step 7.

7. Check for continuity between the B20 and B22 terminals and body ground.

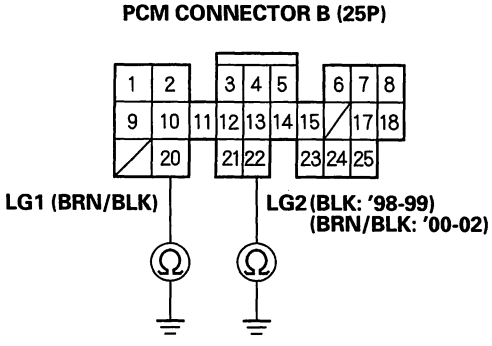

Wire side of female terminals

Is there continuity?

YES—Go to step 8.

NO—Repair open in the wires between the B20 and B22 terminals and ground (G101). ■

(cont'd)

DTC Troubleshooting (cont'd)

8. Disconnect the shift solenoid valve B 2P connector.

9. Check for continuity between the D3 and B20 or B22 terminals.

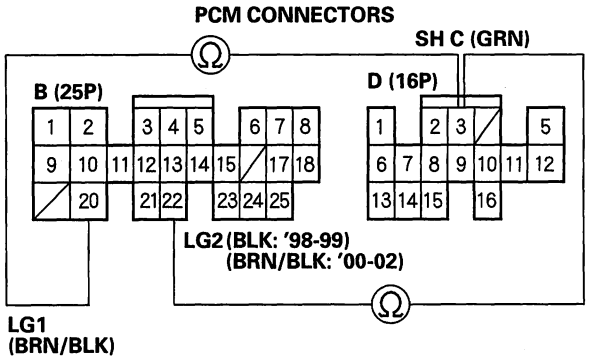

Wire side of female terminals

Is there continuity?

YES—Repair short to ground in the wire between the D3 terminal and the shift solenoid valve C. ■

NO—Go to step 10.

10. Measure shift solenoid valve C resistance at the solenoid valve connector.

SHIFT SOLENOID VALVE C CONNECTOR

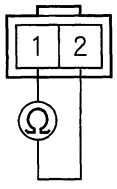

Terminal side of male terminals

Is the resistance 12—25 Ω ?

YES—Check for open in the wires between the D3 terminal and the shift solenoid valve C and between the No. 1 terminal of the shift solenoid valve C connector and ground (G101). ■

NO—Replace shift solenoid valve C. ■

11. Turn the ignition switch ON (II).

12. Measure the voltage between the D5 and B20 or B22 terminals.

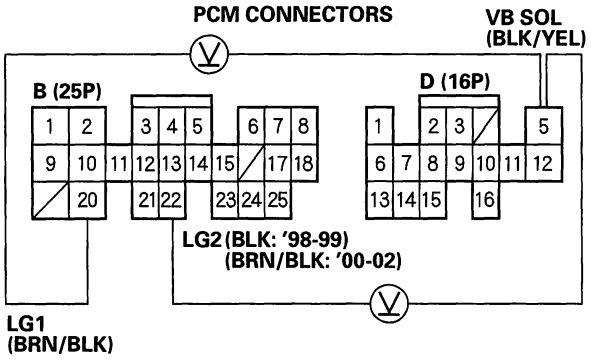

Wire side of female terminals

Is there battery voltage?

YES—Check for loose terminal fit in the PCM connectors. If necessary, substitute a known-good PCM and recheck. ■

NO—Check for blown No. 6 (15A) fuse in the driver's under-dash fuse/relay box. If the fuse is OK, repair open in the wire between the D5 terminal and the driver's under-dash fuse/relay box. ■

BACK

DTC P1773: Problem in A/T Clutch Pressure Control Solenoid Valve B Circuit

NOTE: Record all freeze data before you troubleshoot.

1. Disconnect the A/T clutch pressure control solenoid valve B 2P connector.

2. Measure A/T clutch pressure control solenoid resistance at the solenoid valve connector.

A/T CLUTCH PRESSURE CONTROL SOLENOID VALVE B CONNECTOR

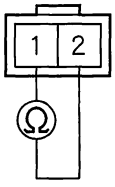

Terminal side of male terminals

Is the resistance about 5 Ω ?

YES—Go to step 3.

NO—Replace the A/T clutch pressure control solenoid valve B.■

3. Disconnect PCM connector B (25P).

4. Check for continuity between body ground and the B18 terminal and the B25 terminal individually.

PCM CONNECTOR B (25P)

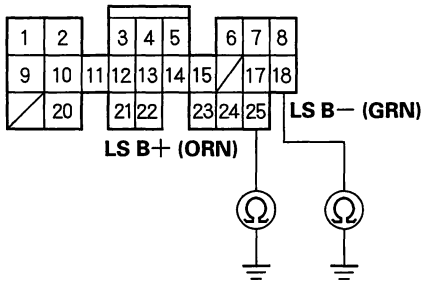

Wire side of female terminals

Is there continuity?

YES—Repair short to ground in the wires between the B18 and B25 terminals and A/T clutch pressure control solenoid valve B.■

NO—Go to step 5.

5. Connect the A/T clutch pressure control solenoid valve B 2P connector.

6. Measure the resistance between the B18 and B25 terminals.

PCM CONNECTOR B (25P)

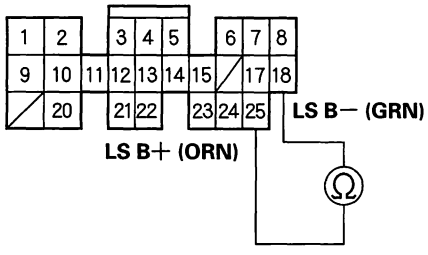

Wire side of female terminals

Is the resistance about 5 Ω ?

YES—Go to step 7.

NO—Repair loose terminal or open in the wires between the B18 and B25 terminals and A/T clutch pressure control solenoid valve B.■

(cont'd)

DTC Troubleshooting (cont'd)

7. Disconnect PCM connector D (16P).

8. Turn the ignition switch ON (II).

9. Measure the voltage between the D5 and B20 or B22 terminals.

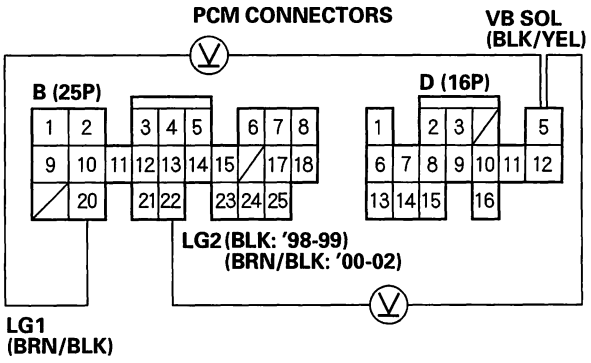

Wire side of female terminals

Is there battery voltage?

YES—Go to step 10.

NO—Check for blown No. 6 (15A) fuse in the driver's under-dash fuse/relay box. If the fuse is OK, repair open in the wire between the D5 terminal and the driver's under-dash fuse/relay box.■

10. Turn the ignition switch OFF.

11. Check for continuity between the B20 and B22 terminals and body ground individually.

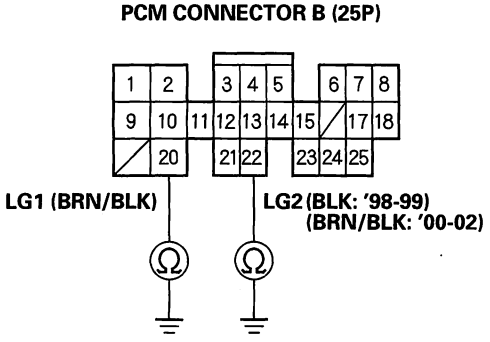

Wire side of female terminals

Is there continuity?

YES—Check for loose terminal fit in the PCM connectors. If necessary, substitute a known-good PCM and recheck.■

NO—Repair open in the wire between the B2, B10, B20 and B22 terminals and ground (G101). Repair poor ground (G101).■

BACK

DTC P1738: Problem in 2nd Clutch Pressure Switch Circuit

NOTE: Record all freeze data before you troubleshoot.

1. Turn the ignition switch ON (II).
2. Measure OP2SW voltage between these terminals.
   - '98-99 models: Terminals B14 and B20 or B22.
   - '00-02 models: Terminals D13 and B20 or B22.

'98-99 models:

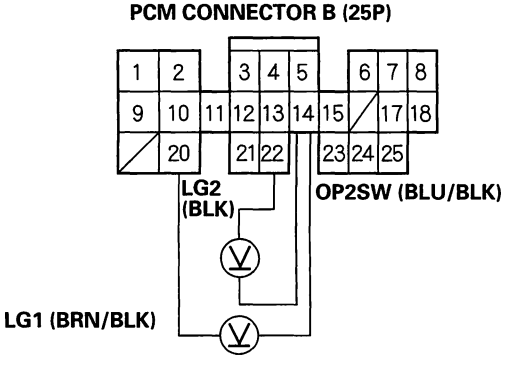

Wire side of female terminals

'00-02 models:

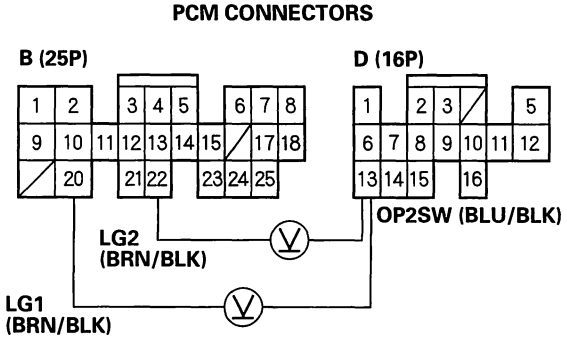

Wire side of female terminals

Is there battery voltage?

YES – Go to step 7.

NO – Go to step 3.

3. Turn the ignition switch OFF.
4. Disconnect PCM connector B (25P) ('98-99) or D (16P) ('00-02).
5. Disconnect the 2nd clutch pressure switch connector.
6. Check OP2SW for continuity to ground:
   - '98-99 models: Between B14 terminal and body ground.
   - '00-02 models: Between D13 terminal and body ground.

'98-99 models:

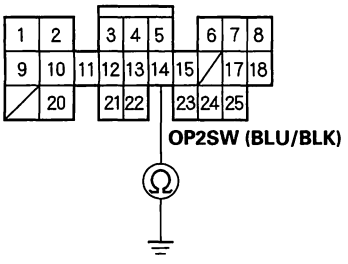

Wire side of female terminals

'00-02 models:

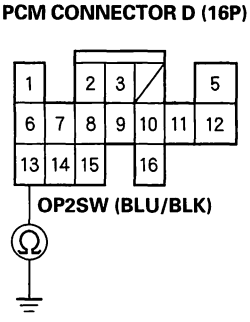

Wire side of female terminals

Is there continuity?

YES – Repair short to ground in the wire between the B14 ('98-99) or D13 ('00-02) terminal and the 2nd clutch pressure switch. ■

NO – Check for loose terminal fit in the PCM connectors. If necessary, substitute a known-good PCM and recheck. ■

(cont'd)

DTC Troubleshooting (cont'd)

7. Raise the front of the vehicle, and make sure it is securely supported.

8. Set the parking brake, and block rear wheels securely.

9. Start the engine, then shift to [2] position and drive for more than five seconds.

10. Measure OP2SW voltage between these terminals:

    - '98-99 models: Terminals B14 and B20 or B22.
    - '00-02 models: Terminals D13 and B20 or B22.

    '98-99 models:

    PCM CONNECTOR B (25P)

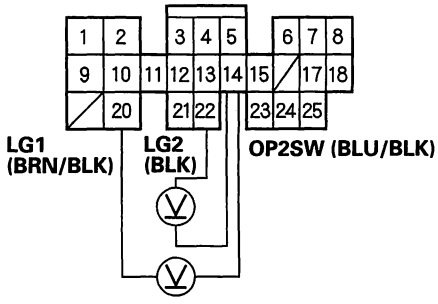

Wire side of female terminals

    '00-02 models:

    PCM CONNECTORS

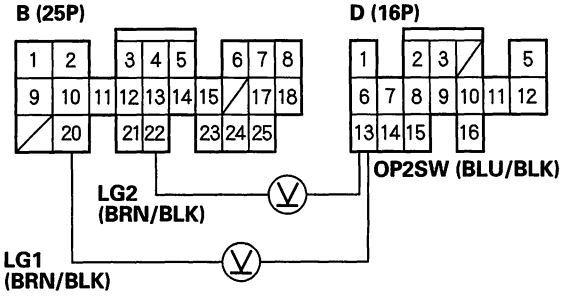

Wire side of female terminals

    Is there about 0 V?

    YES—Check for loose terminal fit in the PCM connectors. If necessary, substitute a known-good PCM and recheck.■

    NO—Go to step 11.

11. Turn the ignition switch OFF.

12. Disconnect the 2nd clutch pressure switch connector.

13. Turn the ignition switch ON (II).

14. Measure the voltage between the 2nd clutch pressure switch connector terminal and body ground.

    2ND CLUTCH PRESSURE SWITCH CONNECTOR

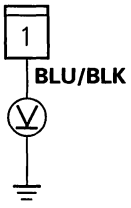

Wire side of female terminal

    Is there battery voltage?

    YES—Go to step 15.

    NO—Repair open in the wire between the 2nd clutch pressure switch and the PCM.■

15. Measure the resistance between the 2nd clutch pressure switch connector terminal and body ground.

    2ND CLUTCH PRESSURE SWITCH CONNECTOR

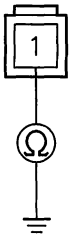

Terminal side of male terminals

    Is the resistance 10 MΩ or more?

    YES—Check for loose terminal fit in the PCM connectors. If necessary, substitute a known-good PCM and recheck.■

    NO—Replace the 2nd clutch pressure switch.■

BACK

DTC P1739: Problem in 3rd Clutch Pressure Switch Circuit

NOTE: Record all freeze data before you troubleshoot.

1. Turn the ignition switch ON (II).
2. Measure the voltage between the B24 and B20 or B22 terminals.

PCM CONNECTOR B (25P)

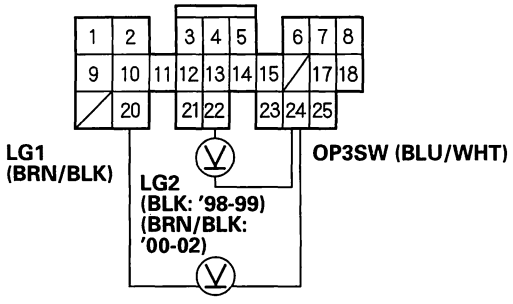

Wire side of female terminals

Is there battery voltage?

YES—Go to step 7.

NO—Go to step 3.

3. Turn the ignition switch OFF.
4. Disconnect PCM connector B (25P).
5. Disconnect the 3rd clutch pressure switch connector.
6. Check for continuity between the B24 terminal and body ground.

PCM CONNECTOR B (25P)

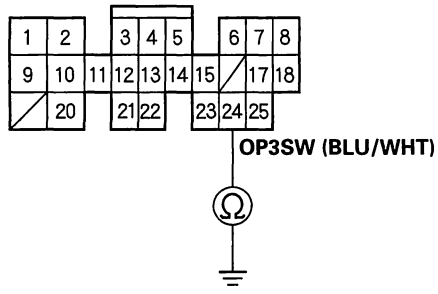

Wire side of female terminals

Is there continuity?

YES—Repair short to ground in the wire between the B24 terminal and the 3rd clutch pressure switch. ■

NO—Check for loose terminal fit in the PCM connectors. If necessary, substitute a known-good PCM and recheck. ■

(cont'd)

DTC Troubleshooting (cont'd)

7. Raise the front of the vehicle, and make sure it is securely supported.

8. Set the parking brake, and block rear wheels securely.

9. Start the engine, then shift to D3 position and drive in 3rd gear for more than five seconds.

10. Measure the voltage between the B24 and B20 or B22 terminals.

PCM CONNECTOR B (25P)

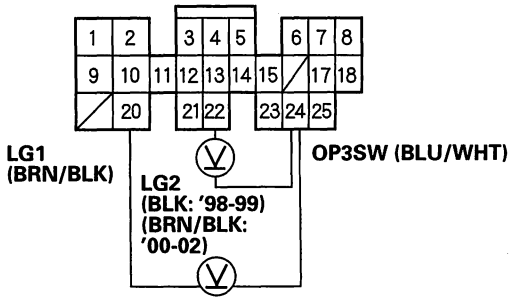

Wire side of female terminals

Is there about 0 V?

YES—Check for loose terminal fit in the PCM connectors. If necessary, substitute a known-good PCM and recheck.■

NO—Go to step 11.

11. Turn the ignition switch OFF.

12. Disconnect the 3rd clutch pressure switch connector.

13. Turn the ignition switch ON (II).

14. Measure the voltage between the 3rd clutch pressure switch connector terminal and body ground.

3RD CLUTCH PRESSURE SWITCH CONNECTOR

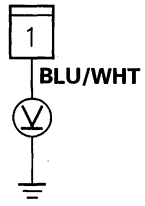

Wire side of female terminal

Is there battery voltage?

YES—Go to step 15.

NO—Repair open in the wire between the 3rd clutch pressure switch and the PCM.■

15. Measure the resistance between the 3rd clutch pressure switch connector terminal and body ground.

3RD CLUTCH PRESSURE SWITCH CONNECTOR

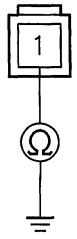

Terminal side of male terminal

Is the resistance 10 MΩ or more?

YES—Check for loose terminal fit in the PCM connectors. If necessary, substitute a known-good PCM and recheck.■

NO—Replace the 3rd clutch pressure switch.■

BACK

DTC P0740: Problem in Lock-up Control System

NOTE:
- Record all freeze data before you troubleshoot.
- Keep replacement solenoid valves on hand:
  - Torque converter clutch solenoid valve/shift solenoid valve A
  - A/T clutch pressure control solenoid valves A and B

1. Check whether the OBD II scan tool indicates another code.

   Does the OBD II scan tool indicate another code?

   YES—Perform the Troubleshooting Flowchart for the indicated Code(s). Recheck for code P0740 after troubleshooting.■

   NO—Go to step 2.
   NOTE: Do not continue with this troubleshooting until the causes of any other DTCs have been corrected.

2. Measure the line pressure.

   Is the line pressure within the service limit?

   YES—Go to step 3.

   NO—Repair the hydraulic system as necessary (see page 14-104).■

3. Replace the torque converter clutch solenoid valve/shift solenoid valve A (see page 14-106).

4. Replace the A/T clutch pressure control solenoid valves A and B (see page 14-109).

5. Turn the ignition switch OFF and reset the PCM memory by removing the BACK UP fuse in the passenger's under-dash fuse/relay box for more than 10 seconds.

6. Using the scan tool, check to be sure that the engine coolant temperature is in 176°F (80°C) and above.

7. Drive the vehicle at 55 mph (88 km/h) constantly for more than one minute.

8. Recheck for code P0740.

   Does the OBD II scan tool indicate code P0740?

   YES—Replace the transmission and torque converter.■

   NO—The system is OK at this time.■

DTC Troubleshooting (cont'd)

DTC P0730: Problem in Shift Control System

NOTE:
- Record all freeze data before you troubleshoot.
- Keep replacement solenoid valves on hand:
  - Torque converter clutch solenoid valve/shift solenoid valve A
  - Shift solenoid valves B and C
  - A/T clutch pressure control solenoid valves A and B

1. Check whether the OBD II scan tool indicates another code.

   Does the OBD II scan tool indicate another code?

   YES—Perform the Troubleshooting Flowchart for the indicated Code(s). Recheck for code P0730 after troubleshooting.■

   NO—Go to step 2.
   NOTE: Do not continue with this troubleshooting until the causes of any other DTCs have been corrected.

2. Measure the 1st, 2nd, 3rd, and 4th clutch pressure (see page 14-104).

   Is each clutch pressure within the service limit?

   YES—Go to step 3.

   NO—Repair the hydraulic system as necessary.■

3. Replace the torque converter clutch solenoid valve/shift solenoid valve A (see page 14-106).

4. Replace the shift solenoid valves B and C (see page 14-107).

5. Replace the A/T clutch pressure control solenoid valves A and B (see page 14-109).

6. Turn the ignition switch OFF and reset the PCM memory by removing the BACK UP fuse in the passenger's under-dash fuse/relay box for more than 10 seconds.

7. Drive the vehicle at a speed over 12 mph (20 km/h) in 1st, 2nd, 3rd, 4th gear in D4 position for more than 30 seconds.

8. Recheck for code P0730.

   Does the OBD II scan tool indicate code P0730?

   YES—Replace the transmission.■

   NO—The system is OK at this time.■

BACK

DTC P0780: Mechanical Problem in Hydraulic Control System for Shift Solenoid Valve A and A/T Clutch Pressure Control Solenoid Valves A and B, or Problem in Hydraulic Control System

NOTE:
- Record all freeze data before you troubleshoot.
- Keep replacement solenoid valves on hand:
  - Torque converter clutch solenoid valve/shift solenoid valve A
  - A/T clutch pressure control solenoid valves A and B

1. Check whether the OBD II scan tool indicates another code.

   Does the OBD II scan tool indicate another code?

   YES—Perform the Troubleshooting Flowchart for the indicated Code(s). Recheck for code P0780 after troubleshooting.■

   NO—Go to step 2.

2. Turn the ignition switch OFF.

3. Replace the torque converter clutch solenoid valve/shift solenoid valve A (see page 14-106), and the A/T clutch pressure control solenoid valves A and B (see page 14-109).

4. Reset the PCM memory by removing the BACK UP fuse in the passenger's under-dash fuse relay box for more than 10 seconds.

5. Drive the vehicle for several minutes in 1st, 2nd, 3rd, and 4th gears in D4 position.

6. Recheck for code P0780.

   Does the OBD II scan tool indicate code P0780?

   YES—Replace the transmission.■

   NO—The problem has been corrected.■

DTC Troubleshooting (cont'd)

DTC P1750: Mechanical Problem in Hydraulic Control System for A/T Clutch Pressure Control Solenoid Valves A and B, or Problem in Hydraulic Control System

NOTE: Record all freeze data before you troubleshoot.

1. Check whether the OBD II scan tool indicates another code.

   Does the OBD II scan tool indicate another code?

   YES—Perform the Troubleshooting Flowchart for the indicated Code(s). Recheck for code P1750 after troubleshooting.■

   NO—Go to step 2.

2. Turn the ignition switch OFF.

3. Replace the A/T clutch pressure control solenoid valves A and B (see page 14-109).

4. Reset the PCM memory by removing the BACK UP fuse in the passenger's under-dash fuse relay box for more than 10 seconds.

5. Drive the vehicle for several minutes in 1st, 2nd, 3rd, and 4th gears in D4 position.

6. Recheck for code P1750.

   Does the OBD II scan tool indicate code P1750?

   YES—Replace the transmission.■

   NO—The problem has been corrected.■

DTC P1751: Mechanical Problem in Hydraulic Control System for Shift Solenoid Valve B and A/T Clutch Pressure Control Solenoid Valves A and B, or Problem in Hydraulic Control System

NOTE:
- Record all freeze data before you troubleshoot.
- Keep replacement solenoid valves on hand:
  - Shift solenoid valve B
  - A/T clutch pressure control solenoid valves A and B

1. Check whether the OBD II scan tool indicates another code.

   Does the OBD II scan tool indicate another code?

   YES—Perform the Troubleshooting Flowchart for the indicated Code(s). Recheck for code P1751 after troubleshooting.■

   NO—Go to step 2.

2. Turn the ignition switch OFF.

3. Replace the shift solenoid valve B (see page 14-107), and the A/T clutch pressure control solenoid valves A and B (see page 14-109).

4. Drive the vehicle for several minutes in 1st, 2nd, 3rd, and 4th gears in D4 position.

5. Recheck for code P1751.

   Does the OBD II scan tool indicate code P1751?

   YES—Replace the transmission.■

   NO—The problem has been corrected.■

BACK

D4 Indicator Circuit Troubleshooting

1. Turn the ignition switch ON (II), and watch the D4 indicator light.

   Does the D4 indicator come on and stay on?

   YES—Go to step 2.

   NO—If the light comes on for about two seconds and then goes off, it's OK. If it doesn't come on at all, go to step 11.

2. Turn the ignition switch OFF.

3. Disconnect PCM connector A (32P).

4. Turn the ignition switch ON (II).

5. Measure the voltage between the A14 terminal and body ground.

PCM CONNECTOR A (32P)

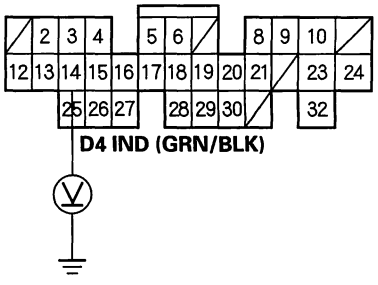

Wire side of female terminals

   Is there voltage?

   YES—Repair short to power in the wire between the A14 terminal and the gauge assembly. ■

   NO—Go to step 6.

6. Turn the ignition switch OFF.

7. Reconnect PCM connector A (32P).

8. Turn the ignition switch ON (II).

9. Shift to any position other than D4.

10. Measure the voltage between the D9 terminal and body ground.

PCM CONNECTOR D (16P)

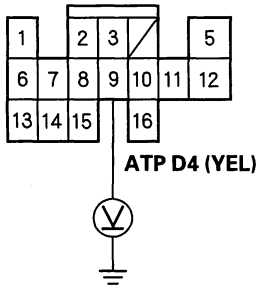

Wire side of female terminals

   Is there about 5 V?

   YES—Faulty PCM or the gauge assembly. ■

   NO—Check for short to ground in the wire between the D9 terminal and the transmission range switch. If wire is OK, check the transmission range switch. ■

11. Make sure the Honda PGM Tester is not connected to the DLC.

12. Shift to D4 position.

    Does the D4 indicator come on?

    YES—Check for loose terminal fit in the PCM connectors and recheck the D4 indicator several times. If the problem is intermittent, substitute a known-good PCM and recheck. If the light then works OK every time, replace the original PCM. ■

    NO—Go to step 13.

13. Turn the ignition switch OFF.

(cont'd)

D4 Indicator Light Circuit Troubleshooting (cont'd)

14. Disconnect PCM connector B (25P).

15. Check for continuity between body ground and B20 and B22 terminals.

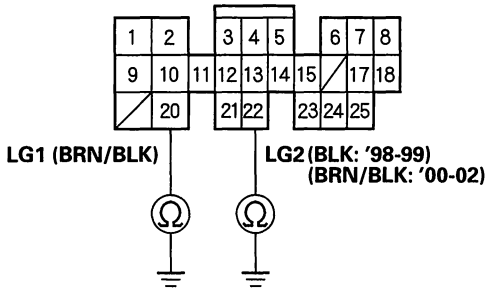

Wire side of female terminals

Is there continuity between ground and each terminal?

YES—Go to step 16.

NO—Repair open in the wire(s) between the B20 or B22 terminal and ground (G101).■

16. Turn the ignition switch ON (II).

17. Measure the voltage between terminals B1 and B22, and between terminals B9 and B20.

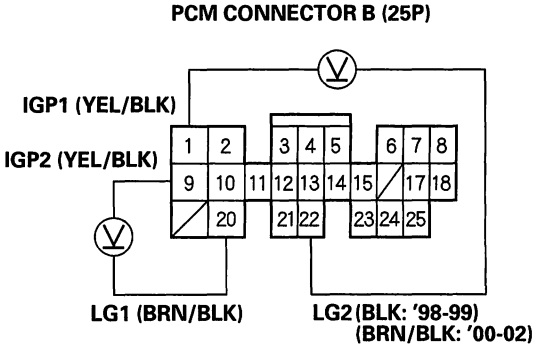

Wire side of female terminals

Is there battery voltage?

YES—Go to step 18.

NO—Repair open or short in the wire between the B1 or B9 terminal and the PGM-FI main relay and from fuse No. 46 in the under-hood fuse/relay box to the PGM-FI main relay.■

18. Turn the ignition switch OFF.

19. Reconnect PCM connector B (25P).

20. Connect the digital multimeter between the A14 and B20 or B22 terminals.

21. Turn the ignition switch ON (II).

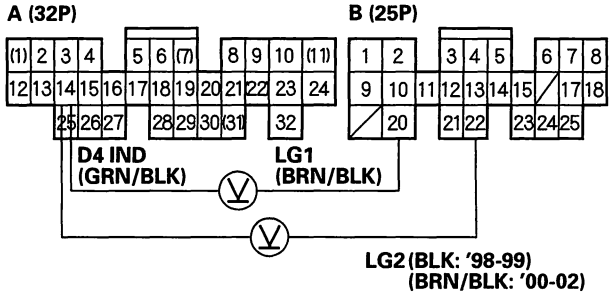

Wire side of female terminals

Is there voltage for at least 2 seconds?

YES—Check for open in the wire between the A14 terminal and the gauge assembly. If wire is OK, check for a faulty D4 indicator bulb or a faulty printed circuit board in the gauge assembly.■

NO—Go to step 22.

BACK

22. Turn the ignition switch OFF.

23. Disconnect PCM connector A (32P).

24. Check for continuity between the A14 terminal and No. 12 terminal of the gauge assembly C (16P) connector.

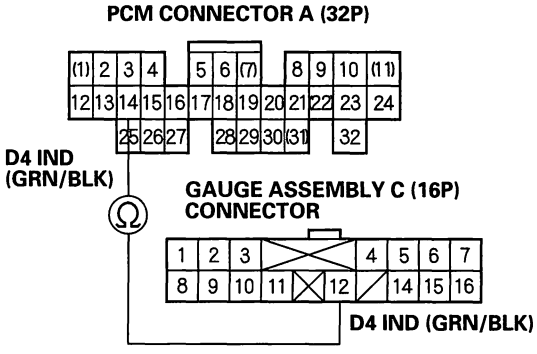

Wire side of female terminals

Is there continuity?

YES—Check for loose terminal fit in the PCM connectors. Check the transmission range switch. If necessary, substitute a known-good PCM and recheck. ■

NO—Repair open in the wire between the A14 terminal and the gauge assembly. ■

Interlock System - Shift Lock System Circuit Troubleshooting

1. Press the brake pedal.

   Are the brake lights ON?

   YES—Go to step 2.

   NO—Repair faulty brake light circuit, refer to the '98-02 Accord Service Manual (see page 19-8).■

2. Turn the ignition switch ON (II), and shift to [P] position.

3. Press the brake pedal, and release the accelerator pedal.

4. Measure the voltage between the A28 terminal and body ground.

PCM CONNECTOR A (32P)

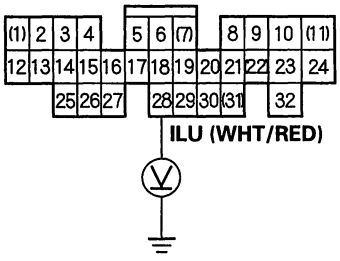

Wire side of female terminals

Is there battery voltage?

YES—Go to step 5.

NO—Go to step 8.

5. Measure the voltage between the B12 terminal of the multiplex control unit, driver's B (22P) connector and body ground with the throttle released and the brake pedal pressed.

MULTIPLEX CONTROL UNIT, DRIVER'S B (22P) CONNECTOR

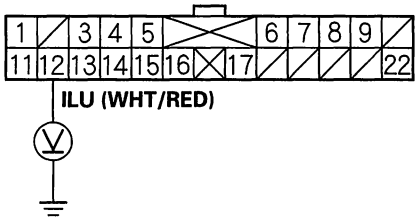

Wire side of female terminals

Is there battery voltage?

YES—Go to step 6.

NO—Repair open in the wire between the A28 terminal of the PCM and B12 terminal of the driver's multiplex control unit.■

6. Measure the voltage between the B22, terminal of the multiplex control unit, driver's B (22P) connector and body ground.

MULTIPLEX CONTROL UNIT, DRIVER'S B (22P) CONNECTOR

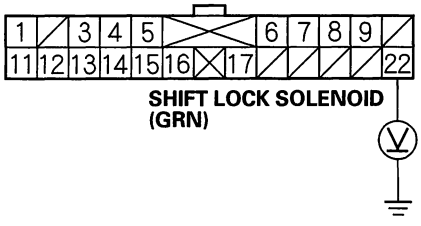

Wire side of female terminals

Is there battery voltage?

YES—Go to step 7.

NO—Repair open in the wire between the B22 terminal of the driver's multiplex control unit and the driver's under-dash fuse No. 9 (via the shift lock solenoid).■

BACK

7. Turn the ignition switch ON (II), and move the shift lever to [P] position.

   Dose the [P] indicator in the gauge assembly illuminate?

   YES—Check for loose terminal fit to the driver's multiplex control unit B12 and B22 terminal wires. If necessary, substitute a known-good driver's multiplex control unit.■

   NO—Repair open in the [P] position switch circuit from the driver's under-dash fuse/relay box K10 (BLK/BLU) wire to ground (G101).■

8. Turn the ignition switch OFF.

9. Disconnect PCM connectors A (32P) and B (25P).

10. Measure the voltage between the A32 and B20 or B22 terminals while pressing the brake pedal.

PCM CONNECTORS

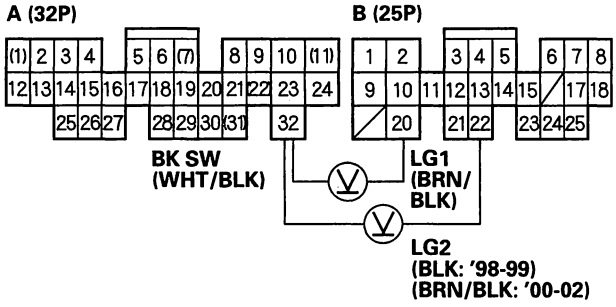

Wire side of female terminals

Is there battery voltage?

YES—Go to step 11.

NO—Repair open in the wire between the A32 terminal and the brake pedal position switch (brake switch).■

(cont'd)

Interlock System - Shift Lock System Circuit Troubleshooting (cont'd)

11. Reconnect PCM connectors A (32P) and B (25P).

12. Turn the ignition switch ON (II).

13. Measure the voltage between the C27 and B20 or B22 terminals.

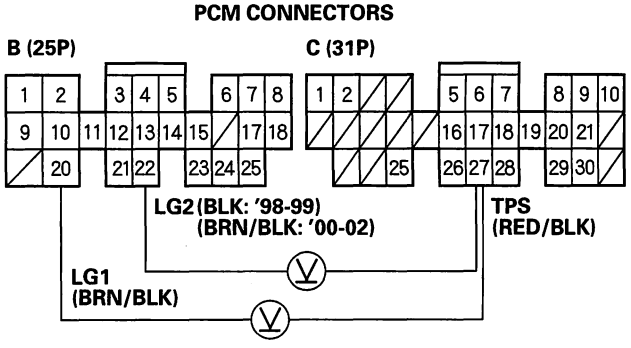

Wire side of female terminals

Is there approx. 0.5 V (throttle fully closed)?

YES—Check for loose terminal fit in the PCM connectors. If necessary, substitute a known-good PCM and recheck.■

NO—Go to step 14.

14. Turn the ignition switch OFF.

15. Disconnect the throttle position sensor connector.

16. Check for continuity between the No. 1 terminal of the throttle position sensor and the B20 or B22 terminal of the PCM.

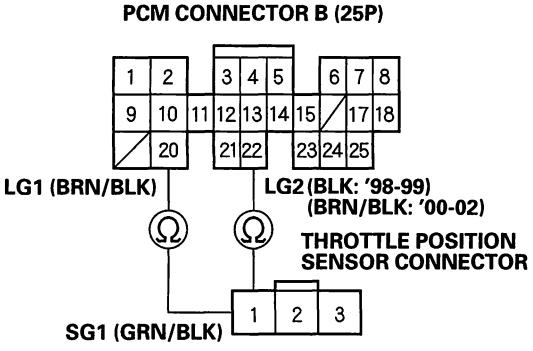

Wire side of female terminals

Is there continuity?

YES—Replace the throttle body.■

NO—Go to step 17.

17. Check for continuity between the C18 and B20 or B22 terminals.

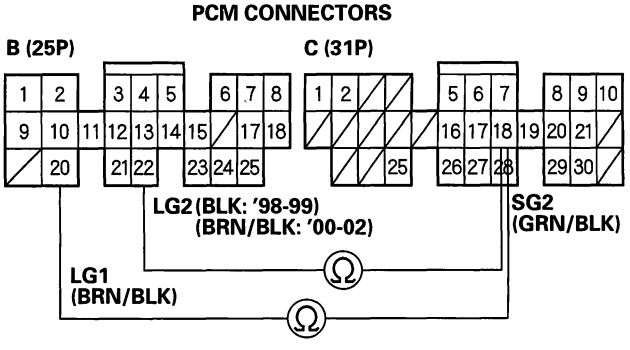

Wire side of female terminals

Is there continuity?

YES—Repair open in the wire between the C18 terminal and the throttle position sensor.■

NO—Check for loose terminal fit in the PCM connectors. If necessary, substitute a known-good PCM and recheck.■

BACK

Interlock System - Key Interlock System Circuit Troubleshooting

1. Check the A/T shift cable adjustment (see page 14-136).

2. Disconnect the key switch 7P connector from the steering lock assembly.

3. Connect the No. 7 terminal of the key switch connector to the battery positive terminal, and connect the No. 5 terminal to the battery negative terminal.

KEY SWITCH CONNECTOR (7P)

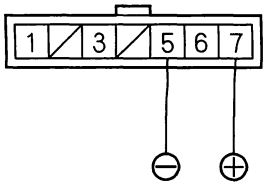

Terminal side of male terminals

4. Turn the ignition switch to ACC (I), then push the ignition key.

5. Check the key interlock solenoid operation. A *clicking* sound should be heard while pushing the ignition key, and no sound should be heard when releasing the key.

   Does the key interlock solenoid operate properly?

   YES—Go to step 6.

   NO—Faulty key interlock solenoid/switch. Replace the ignition key cylinder/steering lock assembly.■

   NOTE: Do not re-key the new ignition switch. Re-key the other lock cylinder to match the new switch.

6. Measure the voltage between the No. 7 terminal and body ground.

KEY SWITCH CONNECTOR (7P)

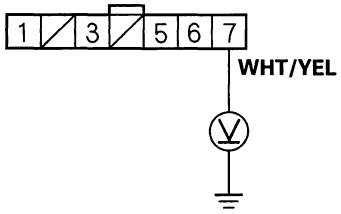

Wire side of female terminals

Is there battery voltage?

YES—Go to step 7.

NO—Check for blown No. 47 (20A) fuse in the under-hood fuse/relay box. If the fuse is OK, repair open or short in the wire between the No. 7 terminal of the key switch connector and under-hood fuse/relay box.■

7. Disconnect the park pin switch 4P connector on the front side of the shift lever.

8. With the shift lever in Park, check for continuity between the No. 3 and No. 4 terminals of the park pin switch 4P connector.

PARK PIN SWITCH 4P CONNECTOR

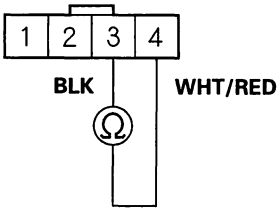

Wire side of female terminals

Is there continuity?

YES—Go to step 9.

NO—Repair open in the wires between the park pin switch and the 4P connector. If wires are OK, replace the park pin switch.■

(cont'd)

Interlock System - Key Interlock System Circuit Troubleshooting (cont'd)

9. Check for continuity between the No. 4 terminal of the park pin switch 4P connector and the No. 5 terminal of the key switch connector.

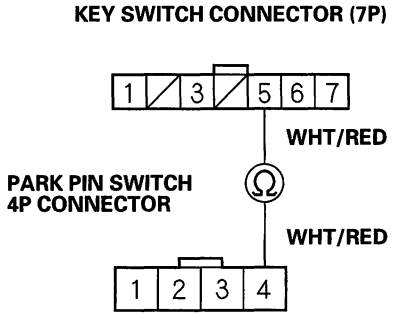

Wire side of female terminals

Is there continuity?

YES—Go to step 10.

NO—Repair open in the wire between No. 4 terminal of the park pin switch 4P connector and the No. 5 terminal of the key switch connector.■

10. Check for continuity between the No. 3 terminal of the 4P connector and body ground.

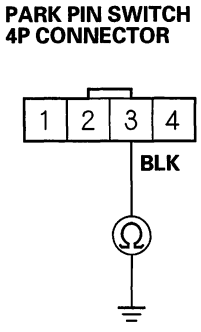

Wire side of female terminals

Is there continuity?

YES—Check for loose key switch connector and park pin switch connector. If necessary, substitute a known-good steering lock assembly.■

NO—Repair open in the wire between the No. 3 terminal of the 4P connector and ground (G101).■

BACK

Road Test

Special Tools Required
Backprobe set 07SAZ-001000A (Two required)

1. Warm up the engine to normal operating temperature (the radiator fan comes on).

2. Apply the parking brake, and block rear wheels. Start the engine, then shift to D4 position while pressing the brake pedal. Press the accelerator pedal, and release it suddenly. The engine should not stall.

3. Repeat the same test in D3 position.

4. Connect the Honda PGM Tester (A), and go to the PGM-FI Data List; then go to step 1. If you don't have a PGM Tester, go to step 5.

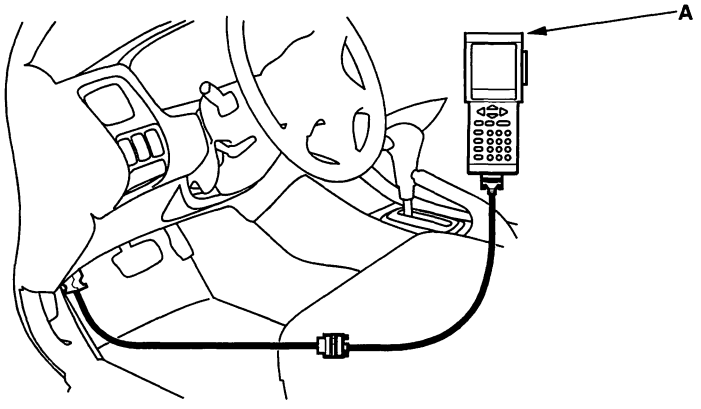

5. Pull back the carpet from the passenger's side of the center console to expose the PCM (A).

6. Connect the digital multimeter (B) and the special tools (C) to check voltage between the C27 (+) terminal and B20 (−) or B22 (−) terminal of the PCM.

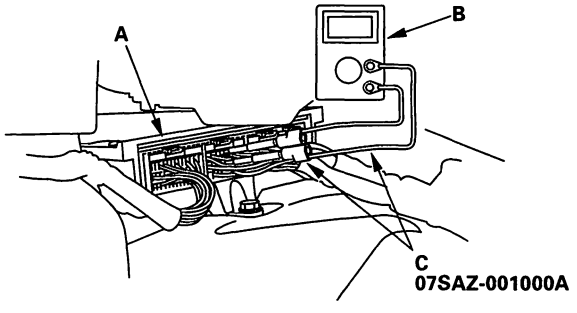

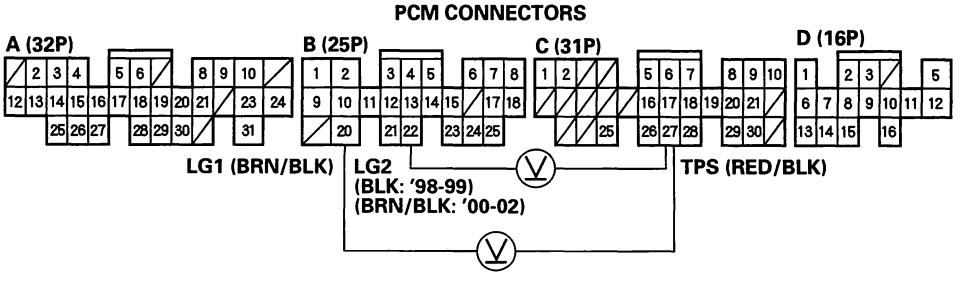

Wire side of female terminals

(cont'd)

Road Test (cont'd)

7. Test-drive the vehicle on a flat road in the D4 position. Check for abnormal noise and clutch slippage. While driving, check that the shift points occur at the proper speeds by monitoring the throttle position sensor voltage and comparing your shift point speeds and voltage to those in the table. (The throttle position sensor voltage represents the throttle opening.)

Upshift-D4 position

Throttle Opening	Unit of Speed	1st → 2nd	2nd → 3rd	3rd → 4th	Lock-up ON
Throttle position sensor voltage: 0.7 V	mph	9–10	21–23	30–34	45–48
	km/h	14–16	33–37	48–54	73–77
Throttle position sensor voltage: 2.25 V	mph	24–27	45–48	65–68	77–81
	km/h	39–43	72–78	104–110	124–130
Fully-opened throttle. Throttle position sensor voltage: 4.5 V	mph	35–39	65–68	98–101	99–103
	km/h	57–63	104–110	157–163	160–166

Downshift-D4 position

Throttle Opening	Unit of Speed	Lock-up OFF	4th → 3rd	3rd → 2nd	2nd → 1st
Throttle position sensor voltage: 0.8 V	mph	44–47	17–19	———	6–8 (3rd → 1st)
	km/h	71–75	27–31	———	9–13 (3rd → 1st)
Throttle position sensor voltage: 2.25 V	mph	68–71	———	———	———
	km/h	109–115	———	———	———
Fully-opened throttle. Throttle position sensor voltage: 4.5 V	mph	90–94	89–92	54–58	27–31
	km/h	145–151	142–148	87–93	44–50

8. Accelerate to about 35 mph (57 km/h) so the transmission is in 4th, then shift from D4 position to 2 position. The vehicle should immediately begin slowing down from engine braking.

9. Check for abnormal noise and clutch slippage in the following positions.

   1 (1st Gear) Position
   Accelerate from a stop at full throttle. Check that there is no abnormal noise or clutch slippage. Upshifts should not occur with the shift lever in this position.

   2 (2nd Gear) Position
   Accelerate from a stop at full throttle. Check that there is no abnormal noise or clutch slippage. Upshifts and downshifts should not occur with the shift lever in this position.

   R (Reverse) Position
   Accelerate from a stop at full throttle, and check that there is no abnormal noise or clutch slippage.

10. Test in P (Park) Position.
    Park the vehicle on a slope (approx. 16°), apply the parking brake, and shift into P position. Release the brake; the vehicle should not move.

BACK

Stall Speed Test

1. Set the parking brake, and block the front wheels.
2. Connect a tachometer to the engine, and start the engine.
3. Make sure the A/C switch is OFF.
4. After the engine has warmed up to normal operating temperature (the radiator fan comes on), shift to [2] position.
5. Fully press the brake pedal and accelerator for 6 to 8 seconds, and note engine speed. Do not move the shift lever while raising engine speed.
6. Allow two minutes for cooling, then repeat the test in [D4], [1], and [R] positions.

NOTE:
- Do not test stall speed for more than 10 seconds at a time.
- Stall speed tests should be used for diagnostic purposes only.
- Stall speed should be the same in [D4], [2], [1], and [R] positions.
- Do not test stall speed with the A/T pressure gauges installed.

Stall Speed rpm:
Specification: 2,400 rpm
Service Limit: 2,250−2,550 rpm

TROUBLE	PROBABLE CAUSE
Stall rpm high in [D4], [2], [1], and [R] positions	• Low fluid level or ATF pump output • Clogged ATF strainer • Pressure regulator valve stuck closed • Slipping clutch
Stall rpm high in [1] position	Slippage of 1st clutch
Stall rpm high in [2] position	Slippage of 2nd clutch
Stall rpm high in [R] position	Slippage of 4th clutch
Stall rpm low in [D4], [2], [1], and [R] positions	• Engine output low • Torque converter one-way clutch slipping

Pressure Tests

Special Tools Required
- A/T oil pressure gauge set 07406-0020400
- A/T pressure hose, 2210 mm 07MAJ-PY4011A
- A/T pressure hose adapter 07MAJ-PY40120

1. Before testing, be sure the transmission fluid is filled to the proper level.
2. Raise the front of the vehicle, and make sure it is securely supported.
3. Set the parking brake, and block rear wheels securely.
4. Allow the front wheels to rotate freely.
5. Warm up the engine (the radiator fan comes on), then stop it and connect the tachometer.
6. Connect the oil pressure gauges to each inspection hole securely, and do not allow dust or other foreign particles to enter the holes.

   TORQUE: 18 N·m (1.8 kgf·m, 13 lbf·ft)

A/T OIL PRESSURE GAUGE SET W/PANEL 07406-0020400

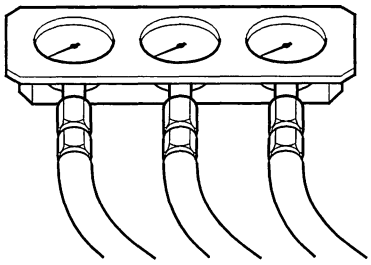

A/T PRESSURE HOSE, 2210 mm 07MAJ-PY4011A (4 Required)

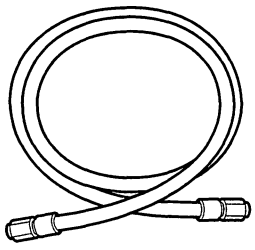

A/T PRESSURE HOSE ADAPTER 07MAJ-PY40120 (4 Required)

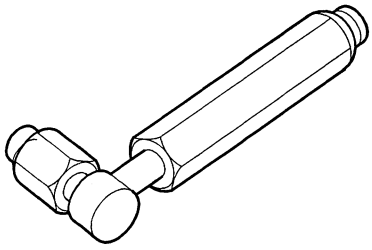

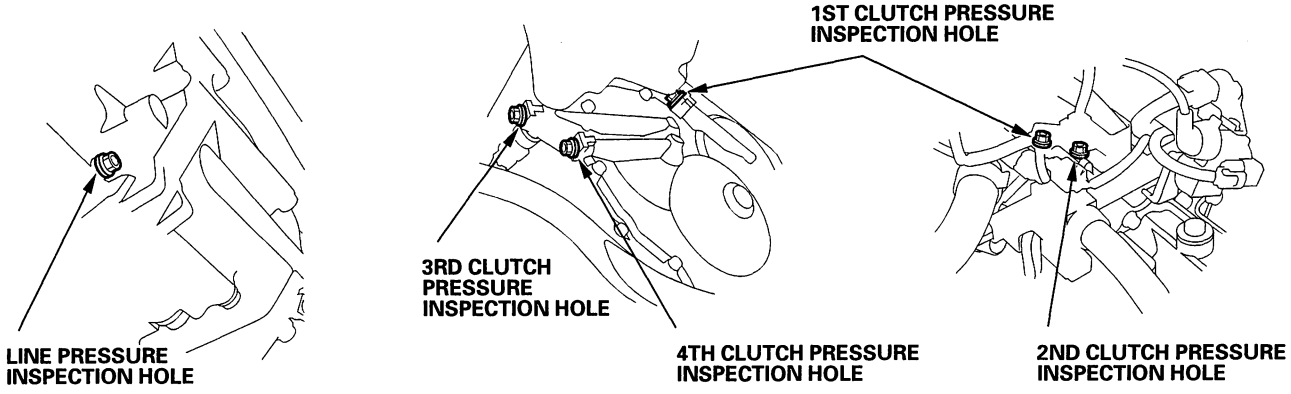

BACK

7. Start the engine, and run it at 1,500 rpm.

8. Shift to N or P position, and measure line pressure at line pressure inspection hole (A).

   NOTE: Higher pressure may be indicated if measurements are made in shift lever positions other than N or P.

9. Shift to 1 position, and measure 1st clutch pressure at the 1st clutch pressure inspection hole (B).

10. Shift to 2 position, and measure 2nd clutch pressure at the 2nd clutch pressure inspection hole (C).

11. Shift to P position, then press the brake pedal and hold it.

12. Shift to D4 position, and release the brake pedal (the transmission is in 1st gear).

13. Accelerate the engine to 2,500 rpm (the transmission will be shifted to 2nd gear).

14. Release the accelerator for more than 5 seconds after the transmission is shifted to 2nd gear, the engine speed will decrease to about 1,000 rpm.

15. Press the accelerator very slowly (so it takes at least 5 seconds to raise the engine speed to 2,000rpm), then hold the engine speed at 2,000 rpm.

16. Measure 3rd and 4th clutch pressure at the 3rd clutch pressure inspection hole (D), and the 4th clutch pressure inspection hole (E), as the transmission will shifted 2nd gear to 3rd gear, then to 4th gear.

PRESSURE	SHIFT LEVER POSITION	SYMPTOM	PROBABLE CAUSE	FLUID PRESSURE	
				Standard	Service Limit
Line (A)	N or P	No (or low) line pressure	Torque converter, ATF pump, pressure regulator valve, torque converter check valve	800 – 860 kPa (8.2 – 8.8 kgf/cm², 120 – 130 psi)	760 kPa (7.7 kgf/cm², 110 psi)
1st clutch (B)	1	No or low 1st pressure	1st clutch	790 – 870 kPa (8.1 – 8.9 kgf/cm², 120 – 130 psi)	750 kPa (7.6 kgf/cm², 110 psi)
2nd clutch (C)	2	No or low 2nd pressure	2nd clutch		
3rd clutch (D)	D4	No or low 3rd pressure	3rd clutch		
4th clutch (E)	D4	No or low 4th pressure	4th clutch		
	R		Servo valve or 4th clutch		

17. Install the inspection hole bolts with new sealing washers, and tighten the bolts to the specified torque.
    TORQUE: 18 N·m (1.8 kgf·m,13 lbf·ft)

    NOTE: Do not reuse old sealing washers.

Torque Converter Clutch Solenoid Valve - Shift Solenoid Valve A Test

1. Disconnect the torque converter clutch solenoid valve 3P connector/shift solenoid valve A.

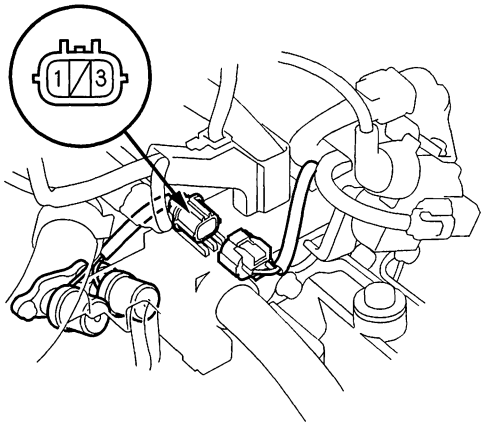

2. Measure the resistance of the torque converter clutch solenoid valve between the No. 3 terminal of the 3P connector and body ground.

   STANDARD: 12–25 Ω

3. Measure the resistance of the shift solenoid valve A between the No. 1 terminal of the 3P connector and body ground.

   STANDARD: 12–25 Ω

4. Replace the torque converter clutch solenoid valve/shift solenoid valve A if either resistance is out of specification.

5. If the resistance is within the standard, connect the No. 1 terminal of the 3P connector to the battery positive terminal. A clicking sound should be heard. Connect the No. 3 terminal to the battery positive terminal. A clicking sound should be heard. Replace the torque converter clutch solenoid valve/shift solenoid valve A if no sound is heard when connecting either terminal to the battery positive terminal.

Torque Converter Clutch Solenoid Valve - Shift Solenoid Valve A Replacement

NOTE: Torque converter clutch solenoid valve/shift solenoid valve A assembly must be removed/replaced as an assembly.

1. Remove the bolts securing the ignition coil bracket ('98-99 models), then remove the harness cover from the transmission hanger.

2. Remove the mounting bolts and torque converter clutch solenoid valve/shift solenoid valve A.

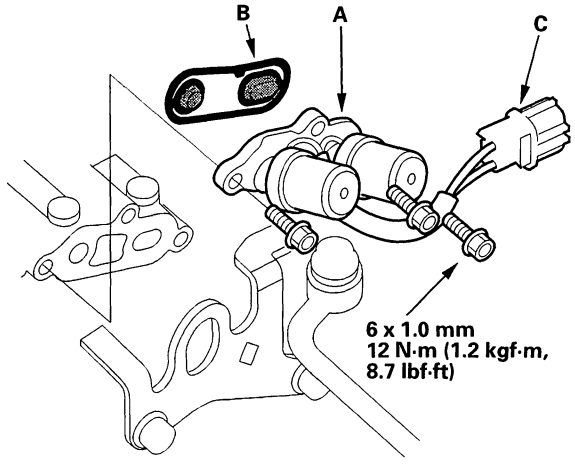

3. Clean the mounting surface and fluid passage of the torque converter clutch solenoid valve/shift solenoid valve A, and install a new torque converter clutch solenoid valve/shift solenoid valve A with a new filter/gasket (B).

4. Install the harness cover on the transmission hanger, and install the ignition coil bracket bolts ('98-99 models).

5. Install the male terminal connector (C) of the solenoid connector on the harness cover.

6. Check the connector for rust, dirt, or oil, then reconnect the connector securely.

BACK

Shift Solenoid Valves B and C Test

1. Remove the starter.

2. Disconnect the shift solenoid valve B or C connector.

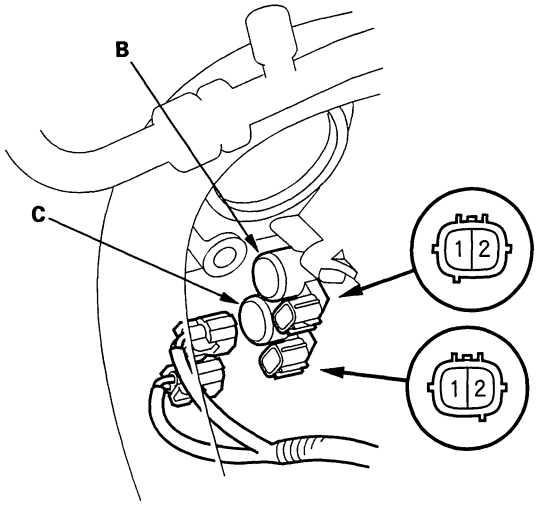

3. Measure the resistance between the No. 1 and No. 2 terminals of the shift solenoid valve B or C.

   STANDARD: 12–25 Ω

4. Replace the shift solenoid valve B or C if the resistance is out of standard.

5. If the resistance is within the standard, connect the No. 2 terminal of the shift solenoid valve B or C connector to the battery positive terminal, and connect the No. 1 terminal to the battery negative terminal. A clicking sound should be heard. Replace the shift solenoid valve B or C if no sound is heard.

Shift Solenoid Valves B and C Replacement

NOTE: If the shift solenoid valve B and C are replaced or removed at the same time, be sure to reinstall them correctly. The connector color of shift solenoid valve B is black, and the connector color of shift solenoid valve C is brown.

1. Remove the starter.

   NOTE: If you are only replacing shift solenoid valve C, starter removal is not needed.

2. Remove the mounting bolt and the shift solenoid valve B.

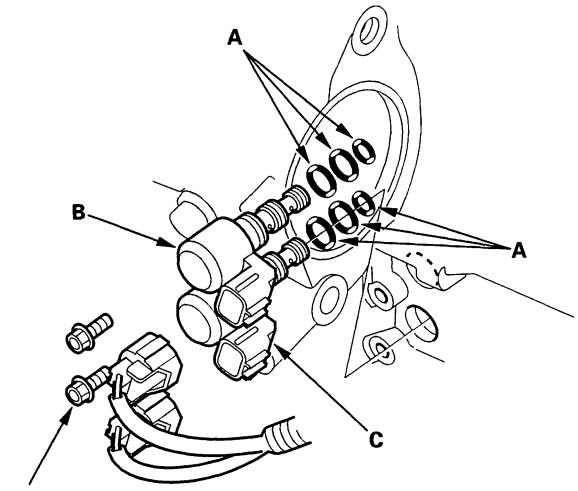

6 x 1.0 mm
12 N·m (1.2 kgf·m, 8.7 lbf·ft)

3. Remove the mounting bolt and the shift solenoid valve C.

4. Install a new shift control solenoid valve B or C with new O-rings (A). While installing the valves, do not allow dust or other foreign particles to enter the transmission.

5. Check the connector for rust, dirt or oil, then reconnect the connector securely.

6. Install the starter.

A/T Clutch Pressure Control Solenoid Valves A and B Test

1. Disconnect the A/T clutch pressure control solenoid valves A and B 2P connectors.

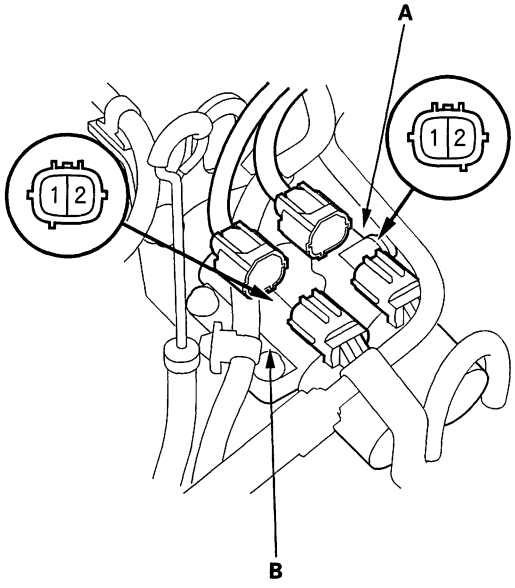

2. Measure the resistance of the A/T clutch pressure control solenoid valves A and B between the No. 1 and No. 2 terminals of each connector.

   STANDARD: About 5.0 Ω

3. If the resistance of either A/T clutch pressure control solenoid is out of standard, replace the A/T clutch pressure control solenoid valves A and B.

4. Connect the No. 1 terminal of the A/T clutch pressure control solenoid valve A (and B) to the battery positive terminal, and connect the No. 2 terminal to the battery negative terminal. A clicking sound should be heard.

5. If not, remove the A/T clutch pressure control solenoid valves A and B.

6. Check the fluid passage of the A/T clutch pressure control solenoid valve for dust and dirt.

7. Connect the No. 1 terminal of the A/T clutch pressure control solenoid valves A and B to the battery positive terminal, and connect the No. 2 terminal to the battery negative terminal. Make sure the A/T clutch pressure control solenoid valve A and B move.

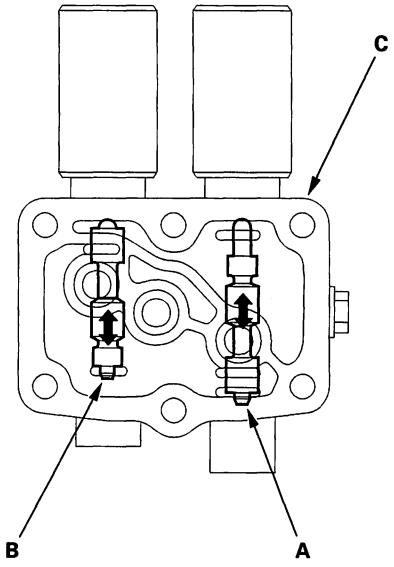

8. Disconnect one of the battery terminals and check valve movement.

   NOTE: You can see the valve movement through the fluid passage in the mounting surface of the A/T clutch pressure control solenoid valves A and B body (C).

9. If either valve binds, or moves sluggishly, or if the A/T clutch pressure control solenoid does not operate, replace the A/T clutch pressure control solenoid valves A and B.

BACK

A/T Clutch Pressure Control Solenoid Valves A and B Replacement

1. Remove the ATF cooler hose (outlet line) at the ATF cooler line. Turn the end of the cooler hose up to prevent ATF from flowing out, then plug the line and hose.

2. Remove the ATF cooler line (outlet line) from the transmission housing.

3. Remove the mounting bolts and the A/T clutch pressure control solenoid valves A and B (A).

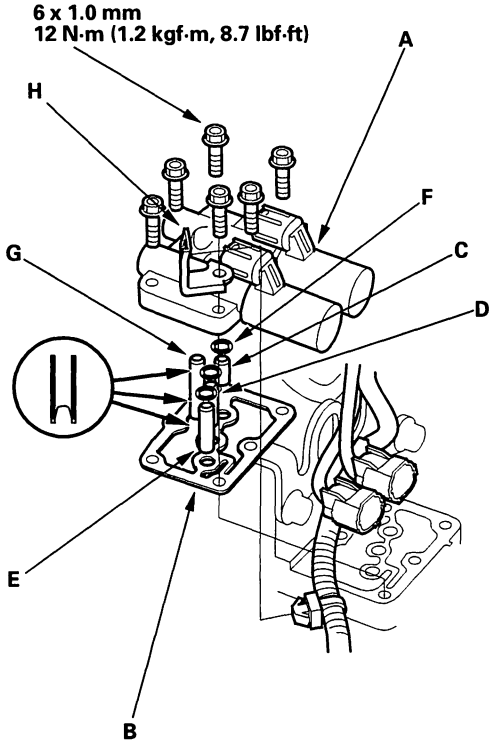

4. Clean the mounting surface and fluid passage of the A/T clutch pressure control solenoid valves A and B and the transmission housing.

5. Place the new gasket (B) on the transmission housing, then install the 8 x 18 mm ATF feed pipe (C), 8 x 26 mm pipe (D) and 8 x 36 mm pipe (E) with their filter side into the transmission housing.

6. Install the new O-rings (F) over the feed pipes, and install the 8 x 40 mm ATF feed pipe (G).

7. Install the new A/T clutch pressure control solenoid valves A and B and harness clamp bracket (H).

8. Check the A/T clutch pressure control solenoid valve connectors for rust, dirt, or oil, then connect them securely.

9. Install the ATF cooler line (outlet line), and connect the ATF cooler hose to the cooler line.

Speed Sensor Replacement

1. Disconnect the connectors from the mainshaft and countershaft speed sensors.

2. Remove the bolt securing the mainshaft speed sensor, then remove the mainshaft speed sensor from the end cover.

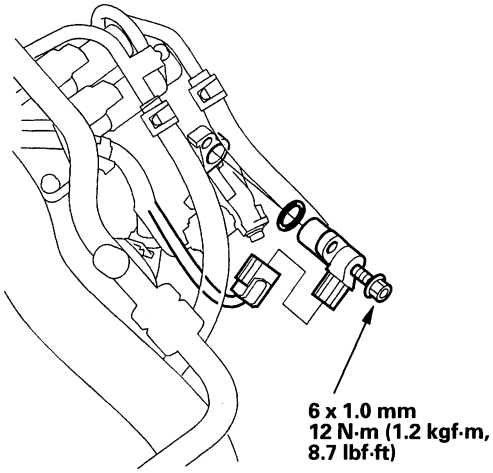

3. Remove the bolt securing the countershaft speed sensor, then remove the countershaft speed sensor from the transmission housing.

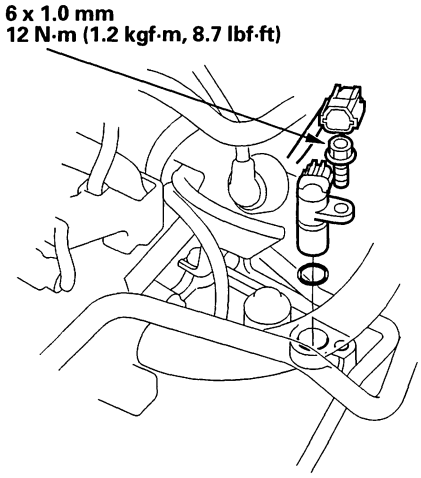

4. Replace the O-rings with new ones before installing the sensors.

5. Install the mainshaft and countershaft speed sensors, then connect the connectors.

BACK

2nd Clutch Pressure Switch Replacement

1. Disconnect the 2nd clutch pressure switch connector.

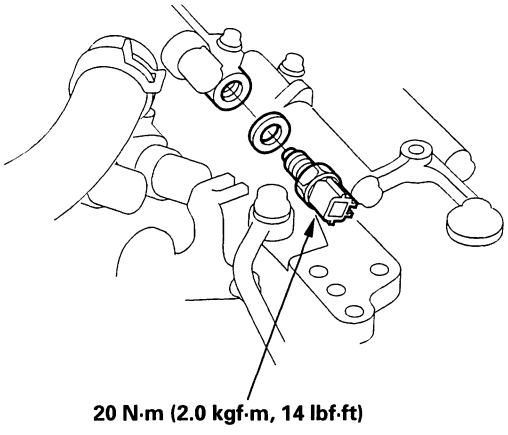

2. Replace the 2nd clutch pressure switch, then install a new one with a new sealing washer. Tighten the switch on the metal part, not the plastic part.

3. Reconnect the connector, making sure there is no water, oil, dust, or other foreign particles inside it.

3rd Clutch Pressure Switch Replacement

1. Disconnect the 3rd clutch pressure switch connector.

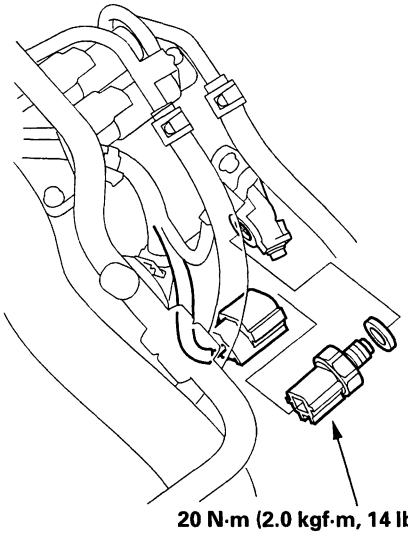

2. Replace the 3rd clutch pressure switch, then install a new one with a new sealing washer. Tighten the switch on the metal part, not the plastic part.

3. Reconnect the connector, making sure there is no water, oil, dust, or other foreign particles inside it.

ATF Level Check

NOTE: Keep all foreign particles out of the transmission.

1. Warm up the engine to normal operating temperature (the radiator fan comes on).
2. Park the vehicle on the level ground. Turn off the engine.
3. Remove the dipstick (yellow loop) (A) from the transmission, and wipe it with a clean cloth.

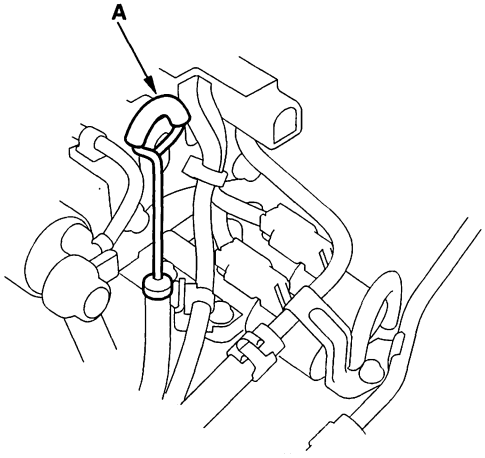

4. Insert the dipstick into the transmission.
5. Remove the dipstick and check the fluid level. It should be between the upper mark (B) and lower mark (C).

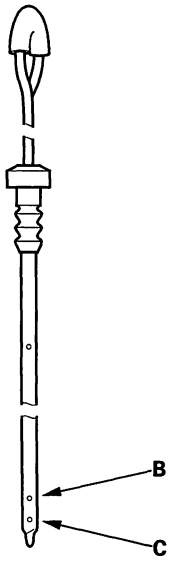

6. If the level is below the lower mark, pour the recommended fluid into the filler hole (A) to bring it to the upper mark. Always use Honda ATF-Z1 Automatic Transmission Fluid (ATF). Using a non-Honda ATF can affect shift quality.

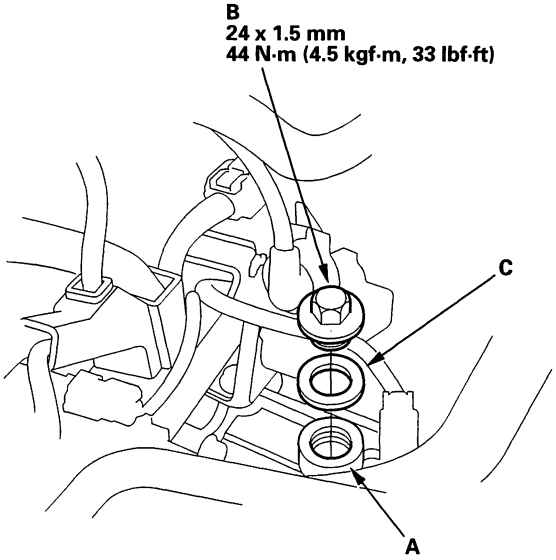

7. Install the ATF filler bolt (B) with a new sealing washer (C).
8. Insert the dipstick back into the transmission.

BACK

ATF Replacement

NOTE: Keep all foreign particles out of the transmission.

1. Bring the transmission up to operating temperature (the radiator fan comes on) by driving the vehicle.

2. Park the vehicle on the level ground, and turn the engine off.

3. Remove the ATF filler bolt and drain plug, and drain the automatic transmission fluid (ATF).

   NOTE: If a cooler flusher is to be used, refer to ATF Cooler Flushing (see page 14-127).

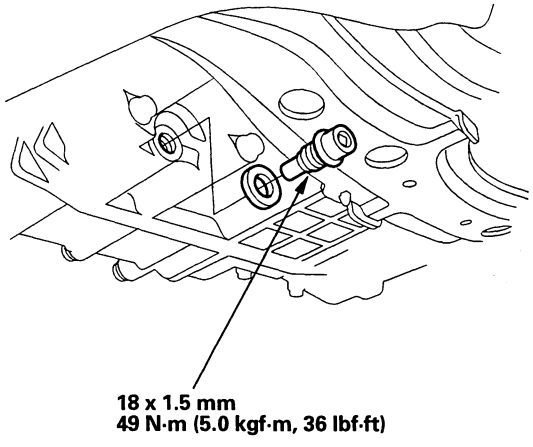

4. Reinstall the drain plug with a new sealing washer.

5. Refill the transmission with the recommended fluid into the filler hole (A) to the upper mark on the dipstick. Always use Honda ATF-Z1 Automatic Transmission Fluid (ATF). Using a non-Honda ATF can affect shift quality.

   Automatic Transmission Fluid Capacity:
   2.9 ℓ (3.1 US qt, 2.6 Imp qt) at changing
   7.2 ℓ (7.6 US qt, 6.3 Imp qt) at overhaul

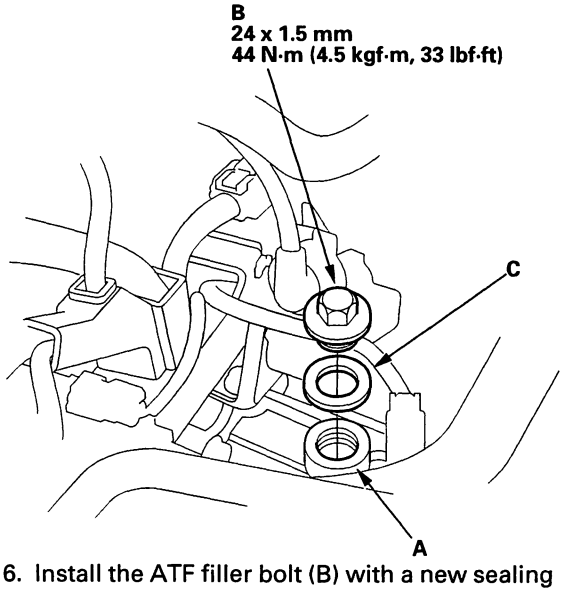

6. Install the ATF filler bolt (B) with a new sealing washer (C).

Transmission Removal

1. Before disconnecting power, make sure you have the anti-theft code for the radio, then write down the frequencies for the radio's preset stations.

2. Disconnect the battery negative terminal, then remove the positive terminal.

3. Remove the battery hold-down bracket, then remove the battery and battery tray.

4. Remove the battery cable clamps from the battery base.

5. Loosen the mounting bolts securing the battery base bracket, then remove the battery base bracket and battery base.

6. Remove the intake air duct and air cleaner housing assembly.

7. Raise the vehicle, and make sure it is securely supported. Remove the drain plug, and drain the automatic transmission fluid (ATF). Reinstall the drain plug with a new sealing washer.

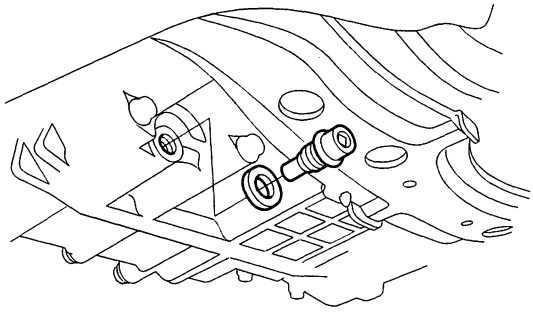

8. Remove the ATF cooler hose (A) from the clamp (B) on the starter.

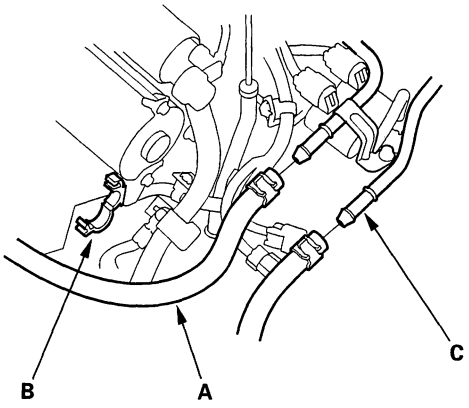

9. Remove the ATF cooler hoses (A) from the ATF cooler lines (C). Turn the ends of the ATF cooler hoses up to prevent ATF from flowing out, then plug the ATF cooler hoses and lines.

   NOTE: Check for any signs of leakage at the hose joints.

10. Remove the starter cables (A) from the starter (B) and clamp bracket (C), then remove the starter.

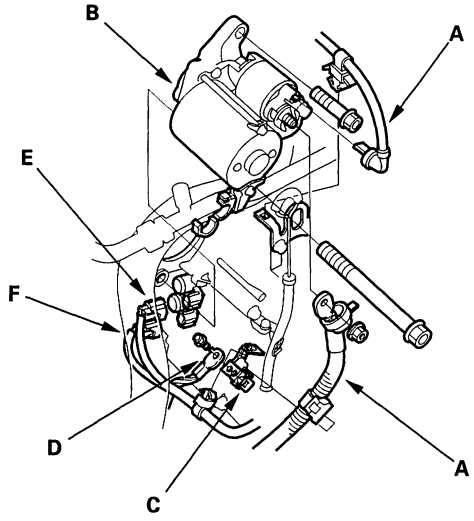

11. Remove the transmission ground terminal (D).

12. Disconnect the shift solenoid valve B connector (E), and C connector (F), then remove the harness clamp from the clamp bracket.

BACK

13. Disconnect the connectors from the 3rd clutch pressure switch (A), mainshaft speed sensor (B), and A/T clutch pressure control solenoid valves A and B (C), then remove the harness clamps from the clamp brackets.

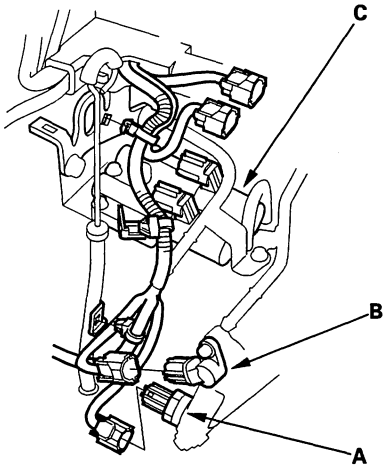

14. Disconnect the connector from the torque converter clutch solenoid valve/shift solenoid valve A assembly (A), then remove the connector from harness cover (B).

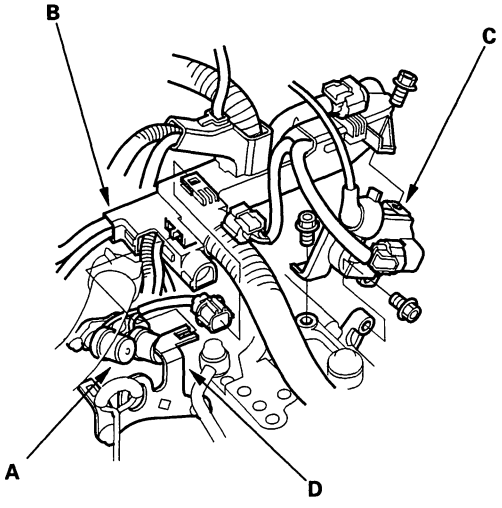

15. Remove the two bolts securing the harness cover and the ignition coil bracket, and remove the ignition coil (C). ('98-99 models)

16. Push the harness cover rearward to remove from the transmission hanger (D).

17. Disconnect the connectors from the countershaft speed sensor (A), and 2nd clutch pressure switch (B).

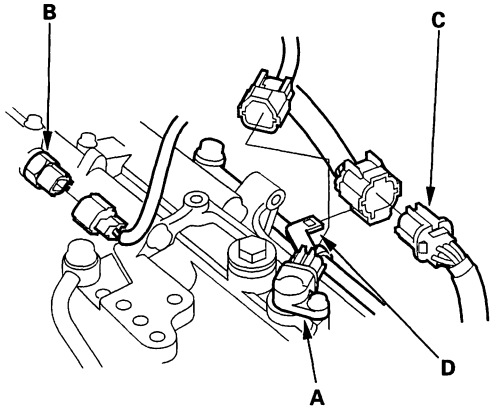

18. Remove the transmission range switch connector (C) from the connector bracket (D), then disconnect it.

19. Remove the nut from the front mount.

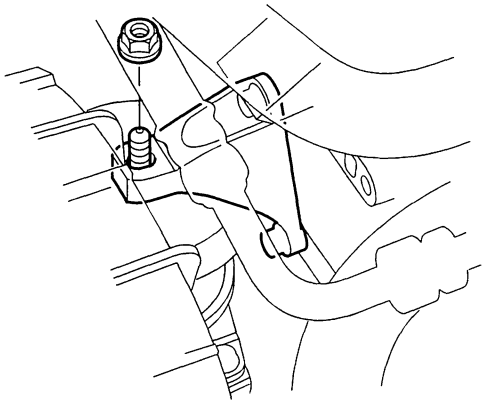

(cont'd)

Transmission Removal (cont'd)

20. Lift and support the engine/transmission assembly with an engine hanger (P/N AAR-T-1256, available through the American Honda Tool and Equipment program, or equivalent).

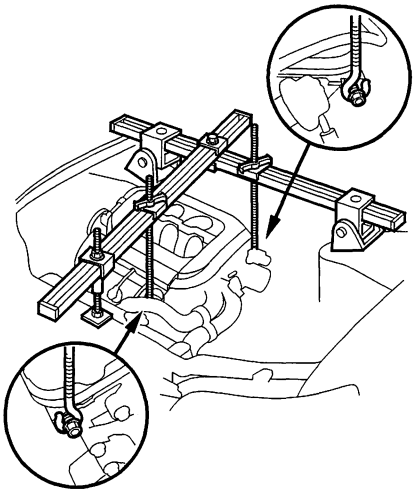

21. Remove the splash shield.

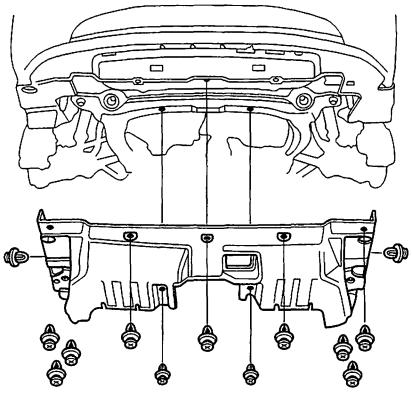

22. Remove the cotter pins (A) and castle nuts (hex nuts) (B), and remove the damper forks (C), then separate the ball joints from the lower arms (D), refer to the '98-02 Accord Service Manual (see page 18-17).

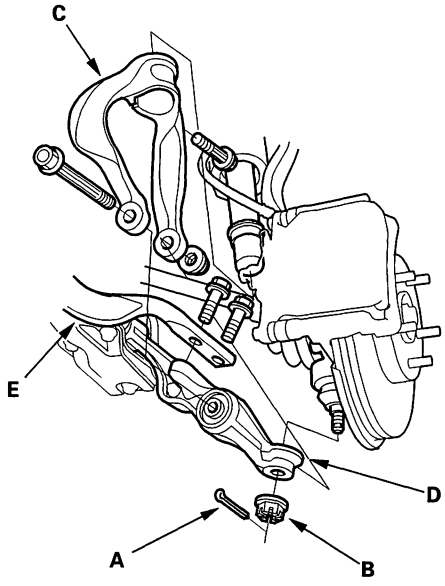

23. Remove the bolts securing the radius rods (E), then separate the radius rods from the lower arms (D).

24. Pry the driveshafts out of the differential and the intermediate shaft, refer to the '98-02 Accord Service Manual (see step 10 on page 16-4).

BACK

25. Make reference marks (A) across both the front beam (B) and the rear beam (C).

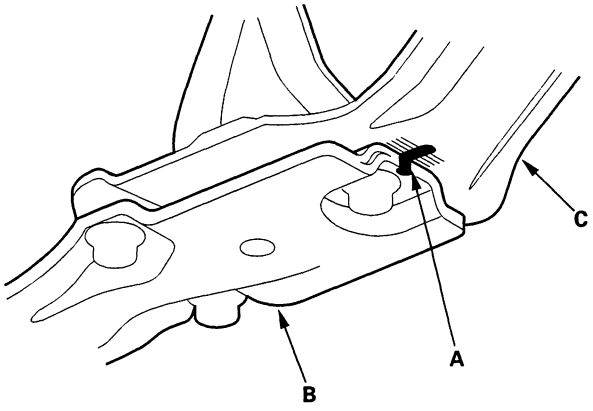

26. Disconnect the vacuum tube (A) on the front beam (B), and unclamp the power steering fluid pipe (C) from the clamps on the front beam.

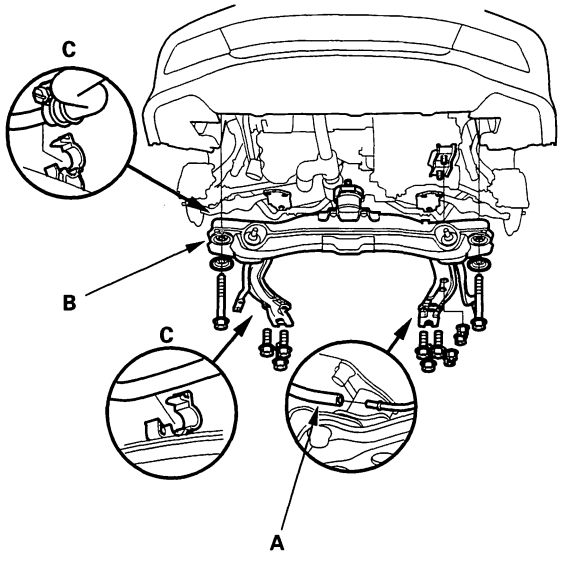

27. Remove the nuts securing the transmission lower mounts, then remove the front beam (B).

28. Remove the transmission lower rear mount (A) from the transmission.

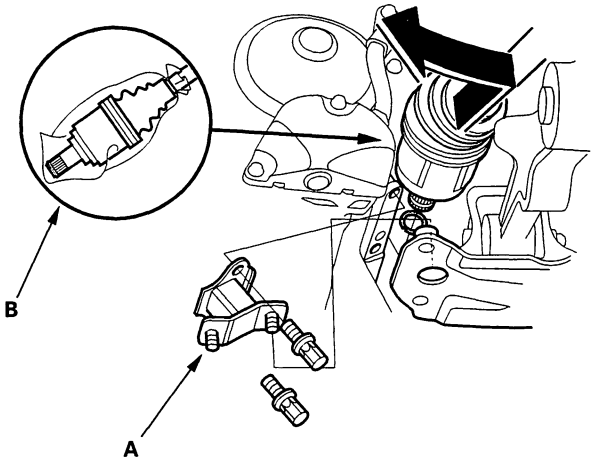

29. Pull on the inboard joints to remove the left driveshaft from the differential and to remove the right driveshaft from the intermediate shaft.

30. Move the left driveshaft to the front side. Coat all precision finished surfaces with clean engine oil, then tie the plastic bags (B) over the driveshaft ends.

31. Remove the intermediate shaft.

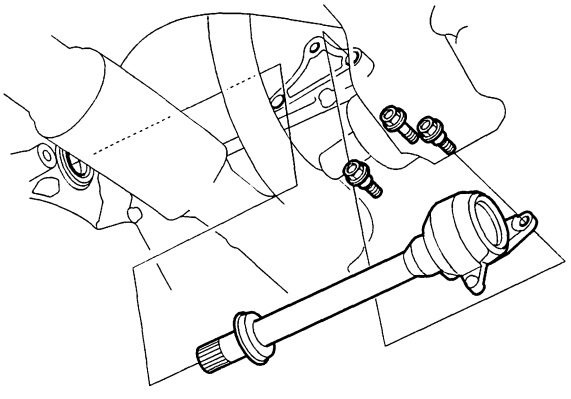

32. Coat all precision finished surfaces with clean engine oil, then tie the plastic bags over the both ends of intermediate shaft.

(cont'd)

Transmission Removal (cont'd)

33. Remove the bolts securing shift cable holder (A), then remove shift cable cover (B).

    NOTE: To prevent damage to the control lever joint, remove the bolts securing the holder before removing the bolts securing the cover.

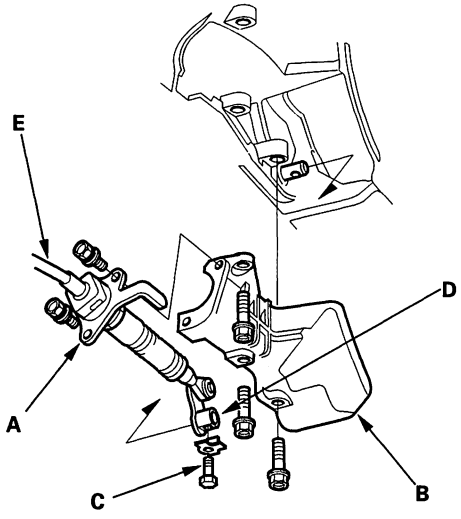

34. Remove the lock bolt (C) securing the control lever (D), then remove the shift cable (E) with the control lever. Do not bend the shift cable excessively.

35. Install a 6 x 1.0 x 14 mm bolt (A) and nut (B) on the shift cable cover (C), then reinstall the shift cable cover to the torque converter housing.
    (The torque converter may stay on the engine, and the bolt head will support the torque converter, when the transmission is removed.)

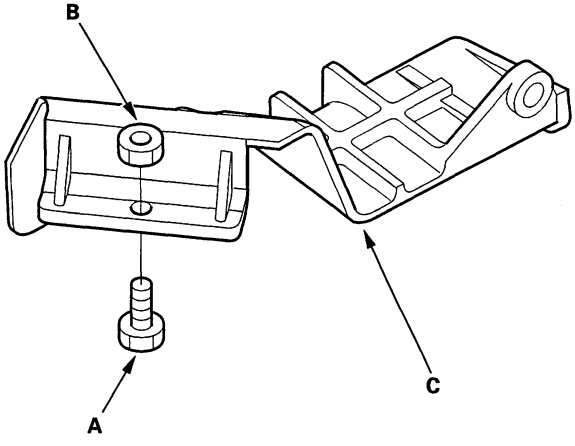

36. Remove the torque converter cover (A), then remove the eight drive plate bolts (B) one at a time while rotating the crankshaft pulley.

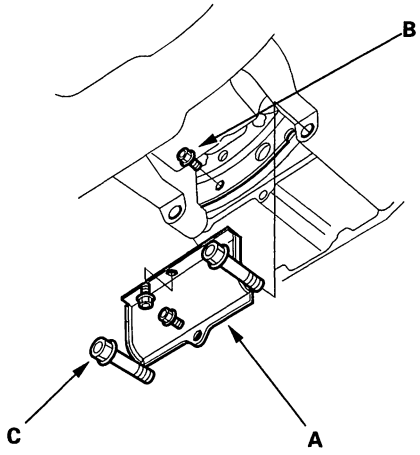

37. Remove the engine stiffener bolts (C).

38. Remove the front mount bracket.

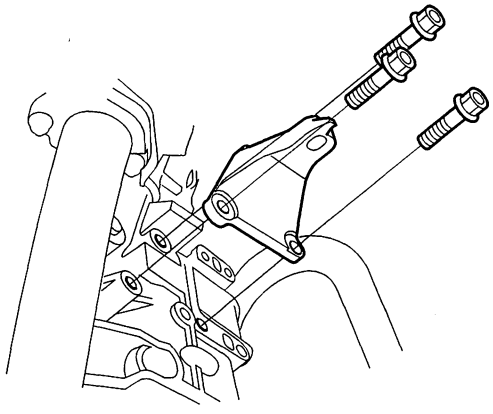

BACK

39. Place a transmission jack under the transmission.

40. Remove the transmission housing mounting bolts.

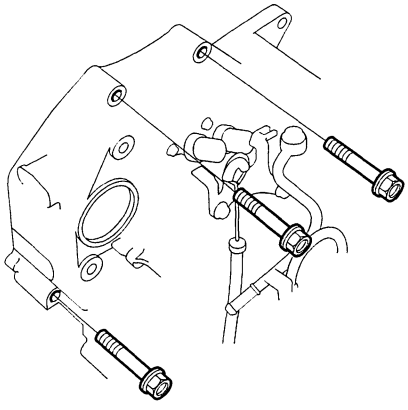

41. Remove the transmission housing mounting bolts (A) and connector bracket bolt (B).

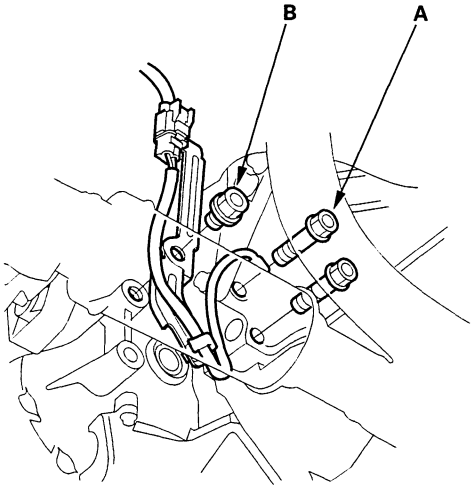

42. Pull the transmission away from the engine until it clears the dowel pins, then lower it on the transmission jack.

NOTE: If the torque converter is stuck to the drive plate, reach through the starter opening, and pull it toward the transmission housing.

43. Remove the shift cable cover, then remove the torque converter assembly from the torque converter housing.

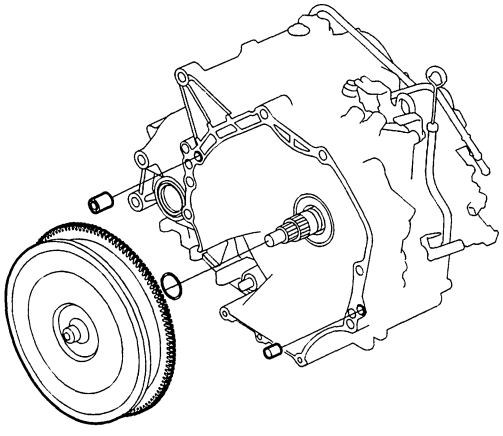

44. Remove the transmission lower front mount.

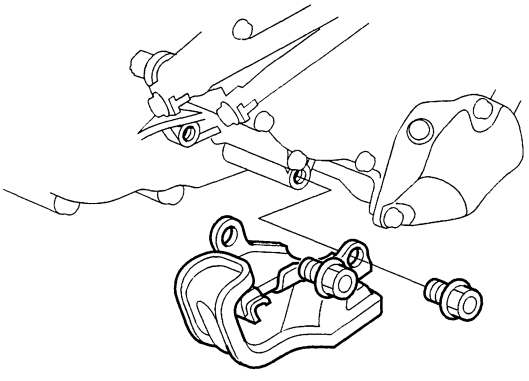

(cont'd)

Transmission Removal (cont'd)

45. Inspect the drive plate, and replace it if it's damaged.

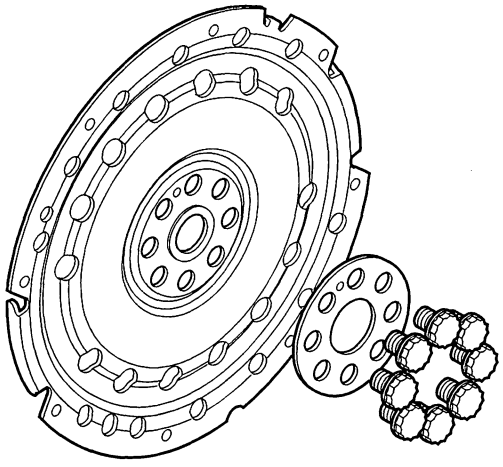

46. Remove the 6 x 1.0 x 14 mm bolt (A) and nut (B) from the shift cable cover (C).

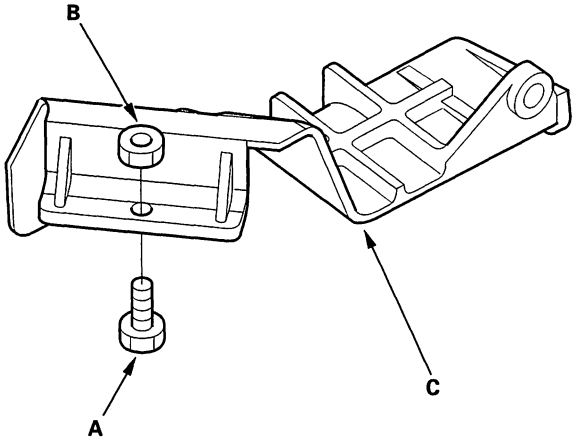

BACK

Transmission Installation

1. Flush the ATF cooler (see page 14-127).

2. Install the transmission lower front mount.

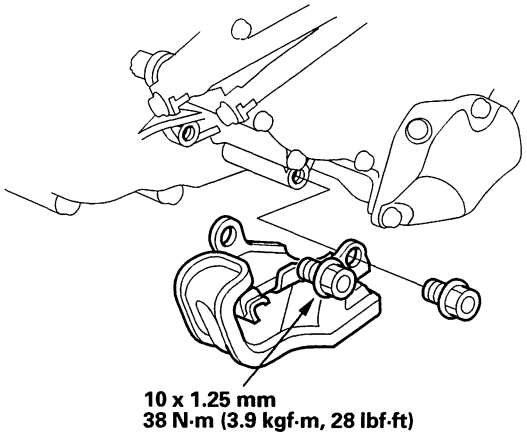

3. Install the torque converter assembly (A) on the mainshaft (B) with a new O-ring (C).

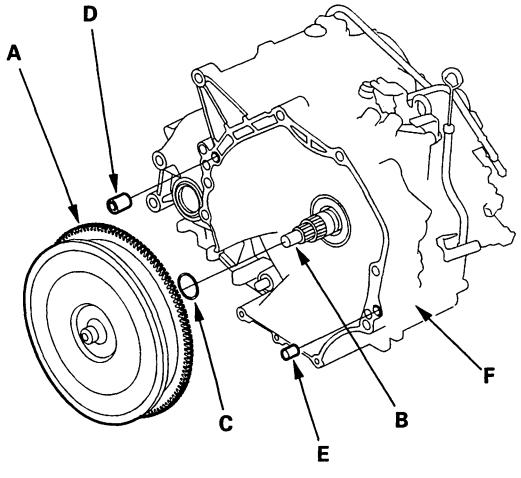

4. Install the 14 mm dowel pin (D) and 10 mm dowel pin (E) in the torque converter housing (F).

5. Place the transmission on a transmission jack, and raise it to engine level.

6. Attach the transmission to the engine, then install the transmission housing mounting bolts (A) and connector bracket bolt (B).

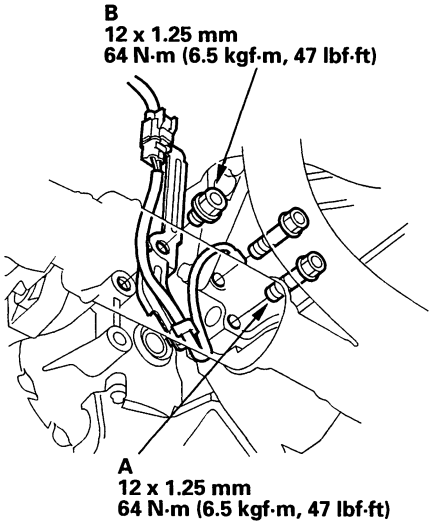

7. Install the transmission housing mounting bolts.

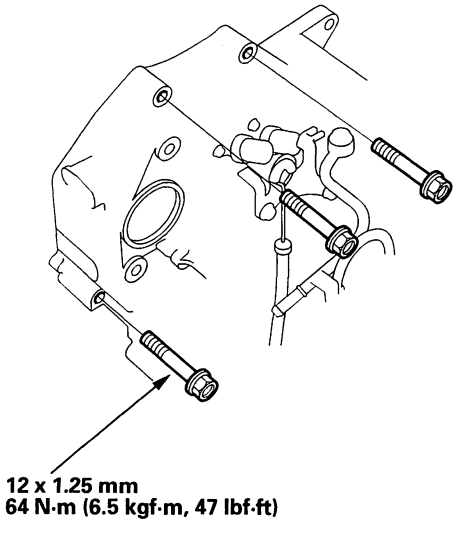

(cont'd)

Transmission Installation (cont'd)

8. Install the front mount bracket.

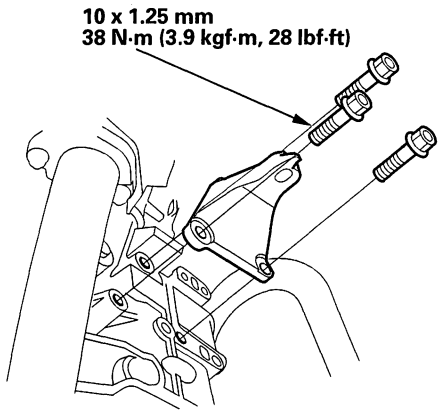

9. Install the engine stiffener mounting bolts (A).

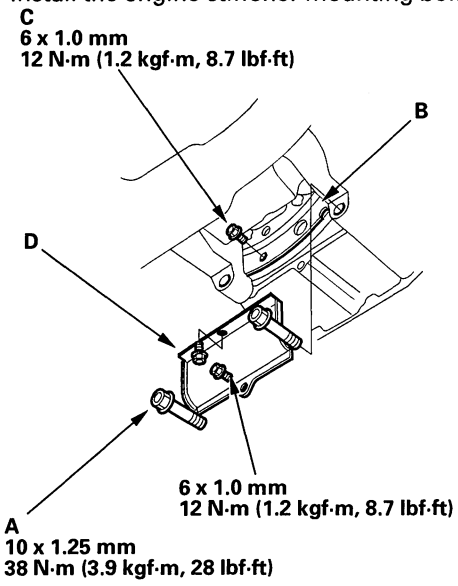

10. Attach the torque converter to the drive plate (B) with eight bolts (C). Rotate the crankshaft pulley as necessary to tighten the bolts to 1/2 of the specified torque, then to the final torque, in a crisscross pattern. After tightening the last bolt, check that the crankshaft rotates freely.

11. Install the torque converter cover (D).

12. Tighten the crankshaft pulley bolt as necessary (see page 6-17).

13. Install the control lever (A) with the shift cable (B) on the control shaft (C). Do not bend the shift cable excessively.

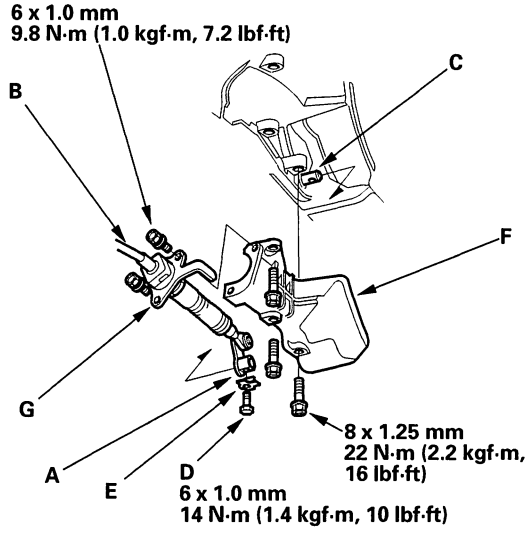

14. Install the lock bolt (D) with a new lock washer (E), then bend the lock washer tab against the bolt.

15. Install the shift cable cover (F), then install the shift cable holder (G) on the shift cable cover.

    NOTE: To prevent damage to the control lever joint, be sure to install the shift cable holder after installing the shift cable cover to the torque converter housing.

16. Clean the areas where the intermediate shaft contacts the transmission (differential) with solvent or carburetor cleaner, and dry with compressed air. Then install the intermediate shaft in the differential. While installing the intermediate shaft, be sure not to allow dust or other foreign particles to enter the transmission.

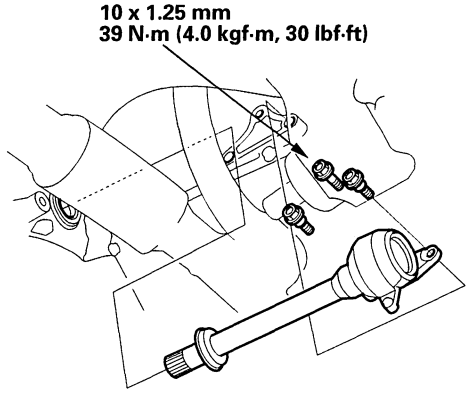

BACK

17. Install new set rings on the right and left driveshafts.

18. Install the right and left driveshaft, refer to the '98-02 Accord Service Manual (see page 16-20). While installing the left driveshaft in the differential, be sure not to allow dust or other foreign particles to enter the transmission.

    NOTE:
    - Clean the areas where the left driveshaft contacts the transmission (differential) with solvent or carburetor cleaner, and dry with compressed air.
    - Turn the right and left steering knuckle fully outward, and slide the left driveshaft into the differential until you feel its spring clip engage the side gear. Slide the right driveshaft into the intermediate shaft until you feel its spring clip engage the intermediate shaft.

19. Install the transmission lower rear mount on the transmission.

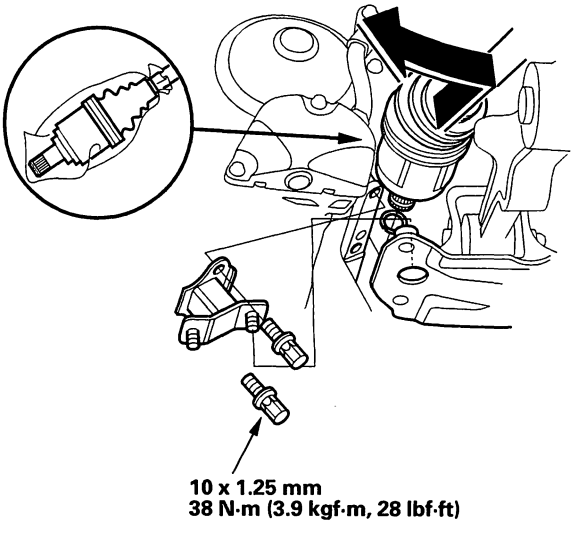

20. Install the front beam (A) by aligning both reference marks (B) on both rear beam (C), and tighten the bolts.

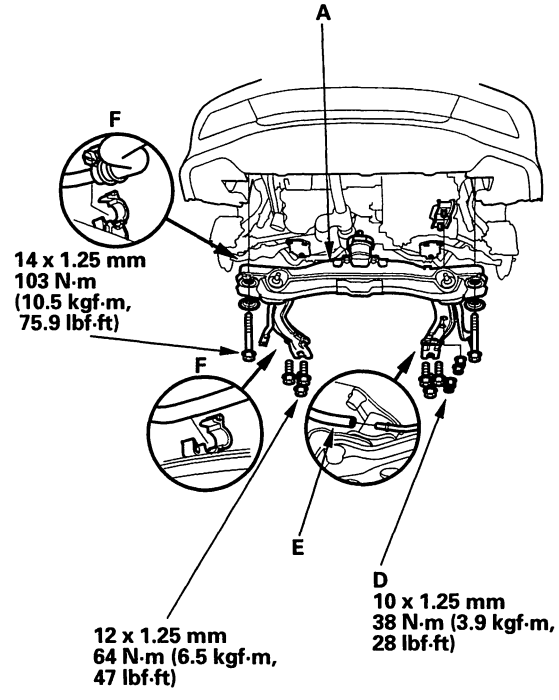

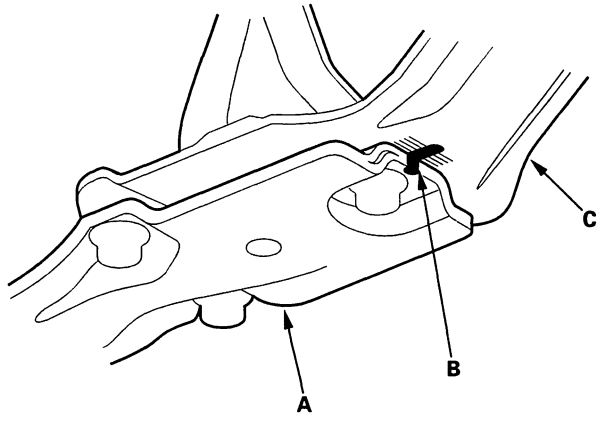

21. Install the transmission lower mount nuts (D).

22. Connect the vacuum tube (E), and install the power steering fluid pipe (F) on its clamps.

(cont'd)

Transmission Installation (cont'd)

23. Install the damper forks (A), then install the ball joints on each lower arms (B) with the castle nuts (hex nuts) (C) and new cotter pins (D).

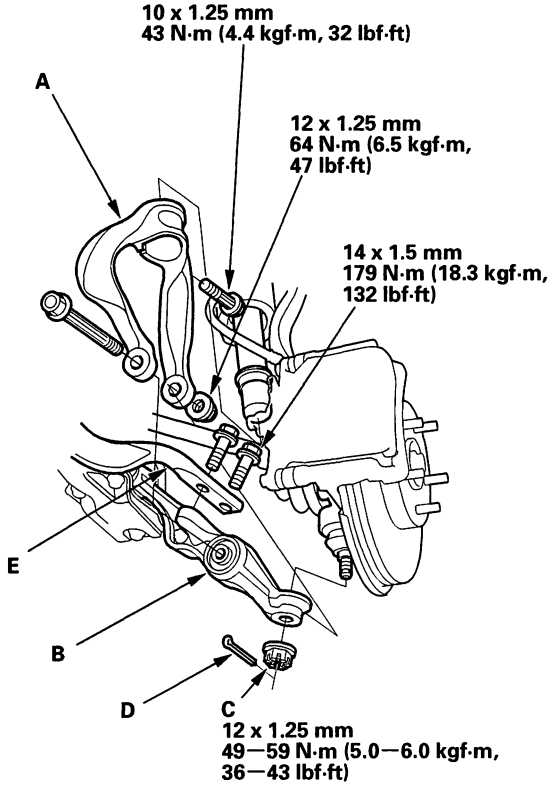

24. Install the radius rods (E) on each lower arm.

25. Remove the jack from the transmission.

26. Install the splash shield.

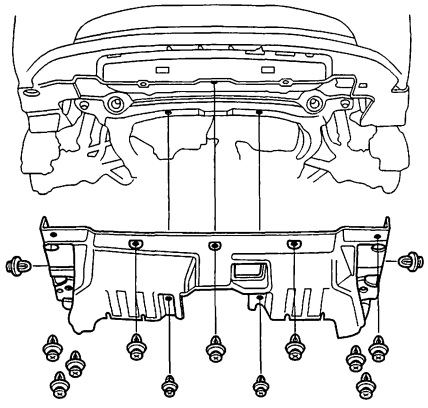

27. Install and tighten the nut on the front mount.

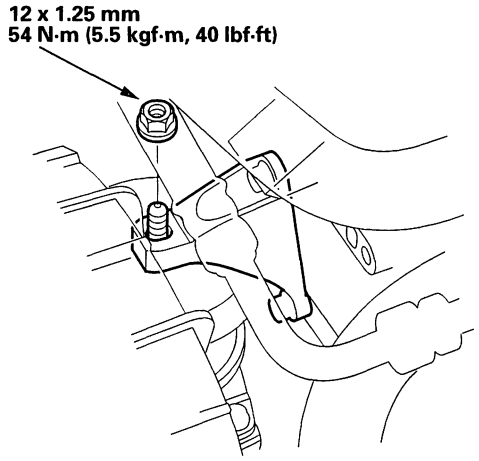

28. Remove the hoist, then remove the hoist bracket from the engine.

29. Connect the transmission range switch connector (A), then install it on its connector bracket (B).

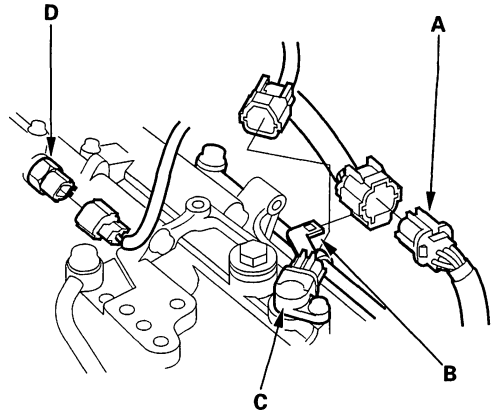

30. Connect the connectors to the countershaft speed sensor (C) and 2nd clutch pressure switch (D). Do not allow water, fluid, oil, dust, or other foreign particles to enter the 2nd clutch pressure switch connector.

BACK

31. Install the harness cover (A) on the transmission hanger (B), then install the ignition coil (C). ('98-99 models)

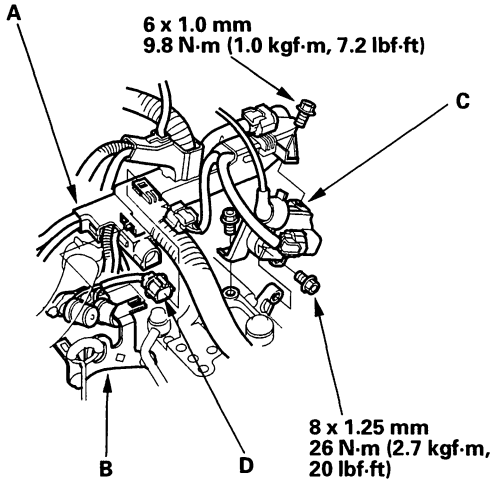

32. Install the torque converter clutch solenoid valve/ shift solenoid valve A assembly connector (D) on the harness cover, then connect the connector.

33. Connect the connectors to the 3rd clutch pressure switch (A), mainshaft speed sensor (B), and A/T clutch pressure control solenoid valves A and B (C), then install the clamps on the clamp brackets. Do not allow water, fluid, oil, dust, or other foreign particles to enter the 3rd clutch pressure switch connector.

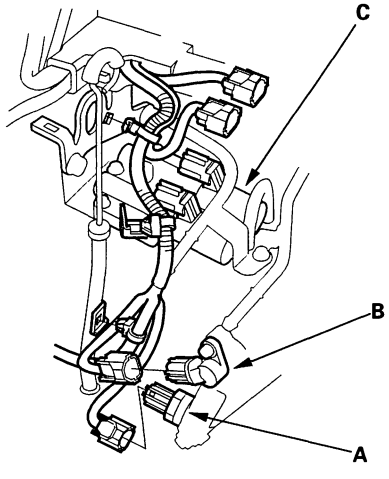

34. Connect the connectors to the shift solenoid valve B (A) and shift solenoid valve C (B), then install the clamp on the clamp bracket.

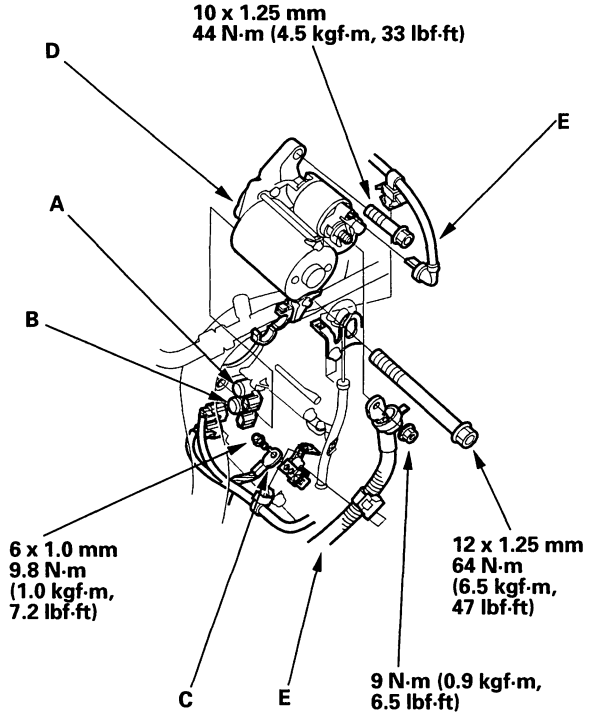

35. Install the transmission ground terminal (C).

36. Install the starter (D) on the torque converter housing. Connect the starter cables (E) to the starter, and install the harness clamp on the clamp bracket. Make sure the crimped side of the starter cable ring terminal is facing out.

37. Connect the ATF cooler hoses (A) to the ATF cooler lines (B) (see page 14-128). Clamp the ATF cooler hose with the clamp (C) on the starter.

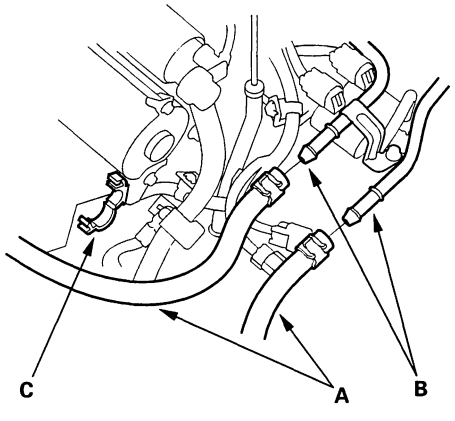

(cont'd)

Transmission Installation (cont'd)

38. Install the battery base bracket and battery base.

39. Install the battery cable clamps on the battery base.

40. Install the battery tray and battery, then secure the battery with its hold-down bracket.

41. Install the intake air duct and air cleaner housing assembly.

42. Refill the transmission with ATF (see page 14-113).

43. Connect the battery positive terminal, then connect the negative terminal.

44. Set the parking brake. Start the engine, and shift the transmission through all gears three times.

45. Check the shift lever operation, A/T gear position indicator operation, and shift cable adjustment.

46. Check and adjust the front wheel alignment, refer to the '98-02 Accord Service Manual (see page 18-5).

47. Start the engine and let it reach normal operating temperature (the radiator fan comes on) with the transmission in P or N position, then turn it off and check the ATF level (see page 14-112).

48. Perform a road test (see page 14-101).

49. Enter the anti-theft code for the radio, then enter the customer's radio station presets.

50. Loosen the front mount nut after the road test, then retighten the nut to the specified torque.

12 x 1.25 mm
54 N·m (5.5 kgf·m, 40 lbf·ft)

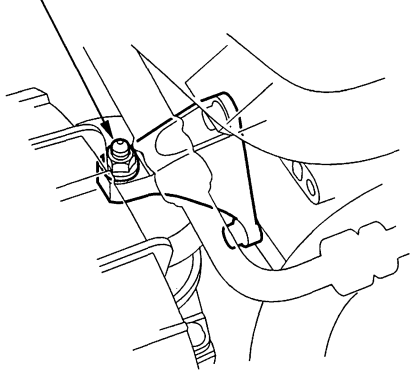

BACK

ATF Cooler Flushing

Special Tools Required
Commercially available transmission cooler flusher
Kent-Moore J38405-A or equivalent

This procedure should be performed before reinstalling the transmission.

1. Check the equipment for wear and cracks before using it. Replace any worn or cracked components.

2. Using the measuring cup, fill the flusher (A) with 21 ounces (approximately 2/3 full) of biodegradable flushing fluid (J35944-20). Do not substitute with any other fluid. Follow the handling procedure on the fluid container.

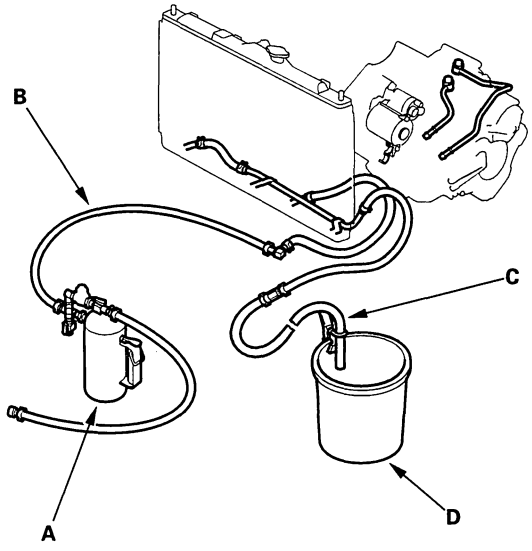

3. Secure the flusher filler cap, and pressurize the flusher with compressed air to 550 – 829 kpa (5.6 – 8.45 kgf/cm², 80 – 120 psi). The air line should be equipped with a water trap to ensure a dry air system.

4. Hang the flusher under the vehicle.

5. Attach the flusher discharge hose (B) to the return line of the ATF cooler using a clamp.

6. Connect the drain hose (C) to the inlet line on the ATF cooler using a clamp. Securely clamp the opposite end of the drain hose to a bucket (D) or floor drain.

7. With the water and air valves (A) off, attach the water and air supplies to the flusher. (Hot water if available.)

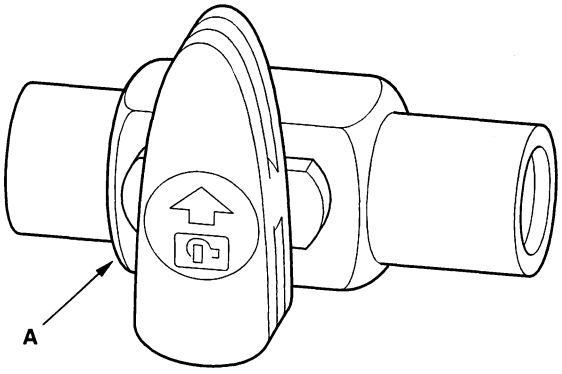

8. Turn on the water valve for 10 seconds. If water does not flow through the cooler, it is completely plugged, cannot be flushed, and must be replaced.

9. Depress the trigger to mix the flushing fluid into the water flow. Use the wire clip to hold the trigger down.

10. While flushing with the water and flushing fluid for two minutes, turn the air valve on for five seconds every 15 – 20 seconds to create a surging action.

    AIR PRESSURE: MAX 845 kPa (8.45 kgf/cm², 120 psi)

11. Turn the water valve off. Release the trigger, then reverse the hoses to the cooler so you can flush in the opposite direction. Repeat steps 8 through 10.

12. Release the trigger, and rinse the cooler with water for one minute.

13. Turn the water valve and the water supply off.

14. Turn the air valve on for two minutes, or until no moisture is visible leaving the drain hose. Residual moisture in the cooler or lines can damage the transmission.

15. Remove the flusher from the cooler line. Attach the drain hose to an ATF container.

16. Install the transmission, and leave the drain hose attached to the cooler line.

(cont'd)

ATF Cooler Flushing (cont'd)

17. Make sure the transmission is in [P] position. Fill the transmission with ATF, and run the engine for 30 seconds or until approximately 0.95 ℓ (1.0 US qt., 0.8 Imp qt.) is discharged.

18. Remove the drain hose, and reconnect the cooler return hose to the transmission.

19. Refill the transmission with ATF to the proper level (see page 14-113).

ATF Cooler Hoses Replacement

1. Connect the cooler hoses (A) to the lines (B) and the ATF cooler, and secure them with the clips (C).

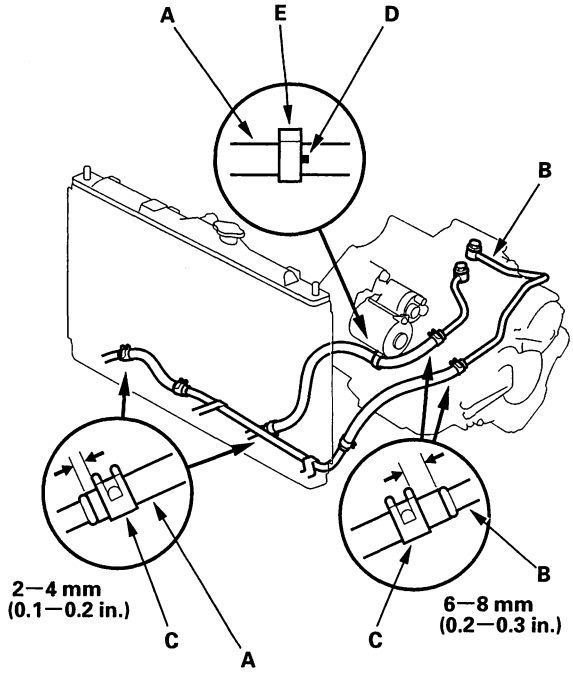

2. Clamp the ATF cooler hose with the yellow mark (D) on the clamp (E).

BACK

Shift Lever Removal

1. Shift the transmission into R position.

2. Remove the center console, refer to '98-02 Accord Service Manual (see page 20-83).

3. Remove the nut securing the shift cable end (A), then separate the shift cable end from the shift lever assembly.

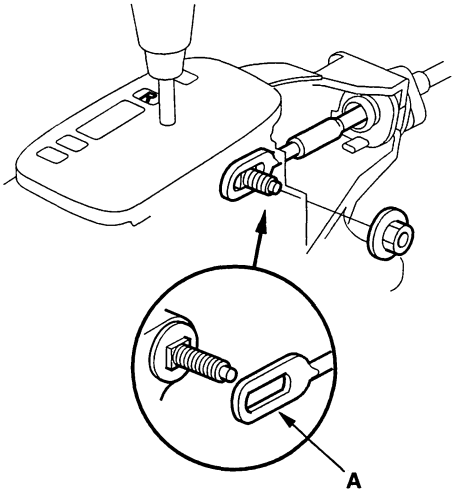

4. Rotate the socket holder (A) on the shift cable (B) counterclockwise a quarter turn, then slide the holder to remove the shift cable from the shift lever bracket base (C).

   NOTE: Do not remove the shift cable by twisting the shift cable guide pipe (D).

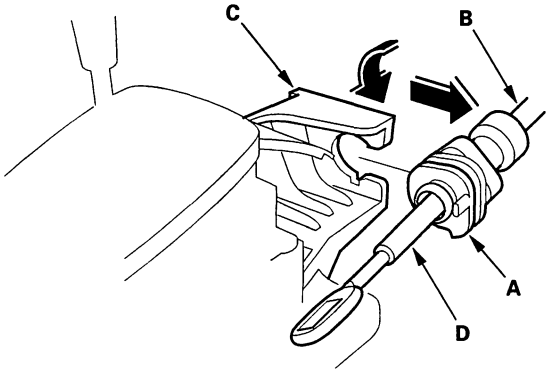

5. Disconnect the shift lock solenoid connector (A) and park pin switch 4P connector (B).

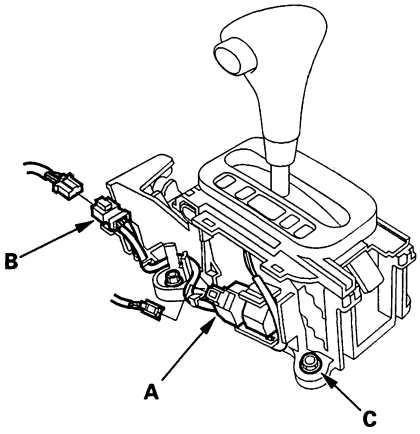

6. Remove the four bolts (C) securing the shift lever bracket base, then remove the shift lever assembly.

Shift Lever Installation

1. Install the shift lever assembly.

2. Turn the ignition switch ON (II), and verify that the R position indicator comes on.

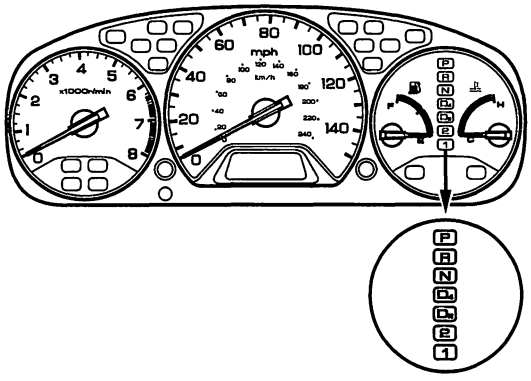

3. If necessary, push the shift cable until it stops, then release your hand. Pull the shift cable back one step so that the shift position is in R.

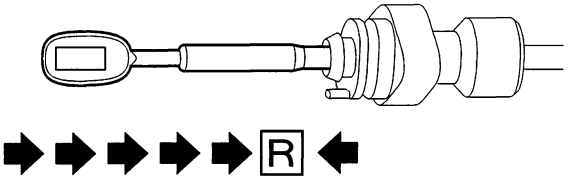

4. Turn the ignition switch OFF.

5. Insert a 6.0 mm (0.24 in.) pin (A) into the positioning hole (B) on the shift lever bracket base through the positioning hole on the shift lever assembly.

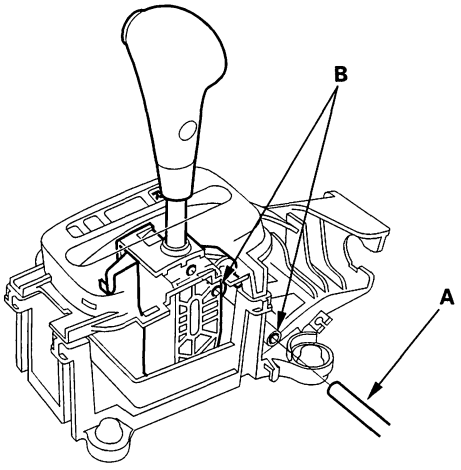

6. Rotate the socket holder (A) on the shift cable (B) counterclockwise a quarter turn, then slide the holder onto the shift lever bracket base (C). Install the shift cable end (D) over the mounting stud (E) by aligning its square hole (F) with the square shape (G) at the bottom of the stud. Rotate the holder clockwise a quarter turn to secure the shift cable.

   NOTE: Do not install the shift cable by twisting the shift cable guide (H).

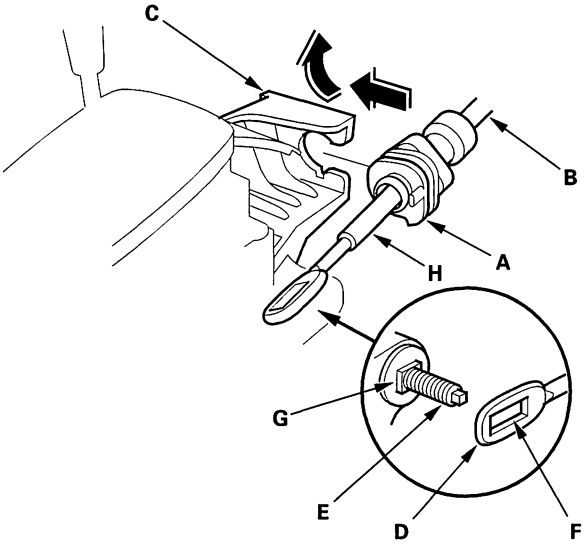

BACK

7. Verify that the shift cable end (A) is properly installed on the mounting stud (B).

Properly Installed:

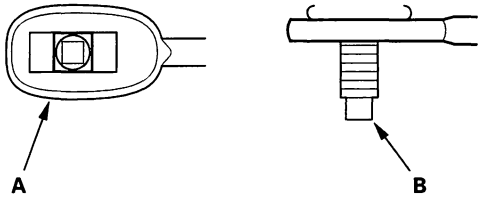

Not Properly Installed:

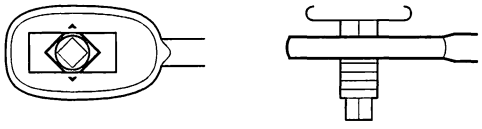

Cable end rides on the bottom of the mounting stud.

8. If not properly installed, remove the shift cable from the shift lever bracket base, and reinstall the shift cable. Do not install the shift cable end on the mounting stud while the shift cable is on the shift cable bracket base.

9. Install and tighten the nut.

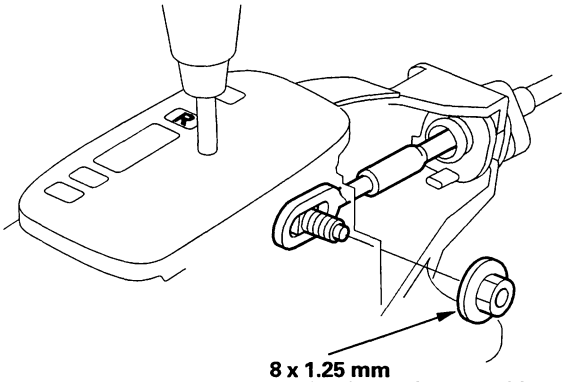

8 x 1.25 mm
22 N·m (2.2 kgf·m, 16 lbf·ft)

10. Remove the 6.0 mm (0.24 in.) pin that was installed to hold the shift lever.

11. Connect the shift lock solenoid connector and park pin switch 4P connector.

12. Move the shift lever to each gear, and verify that the A/T gear position indicator follows the transmission range switch.

13. Push the shift lock release, and verify that the shift lever releases.

Shift Lever Disassembly/Reassembly

SRS components are located in this area. Review the SRS component locations, precautions, and procedures in the SRS section before performing repairs or service, refer to '98-02 Accord Service Manual (see page 23-28).

Apply silicone grease to these parts:

- Movable parts of the shift lever.
- Movable parts of the shift lock mechanism.
- Sliding surfaces on the detent spring.

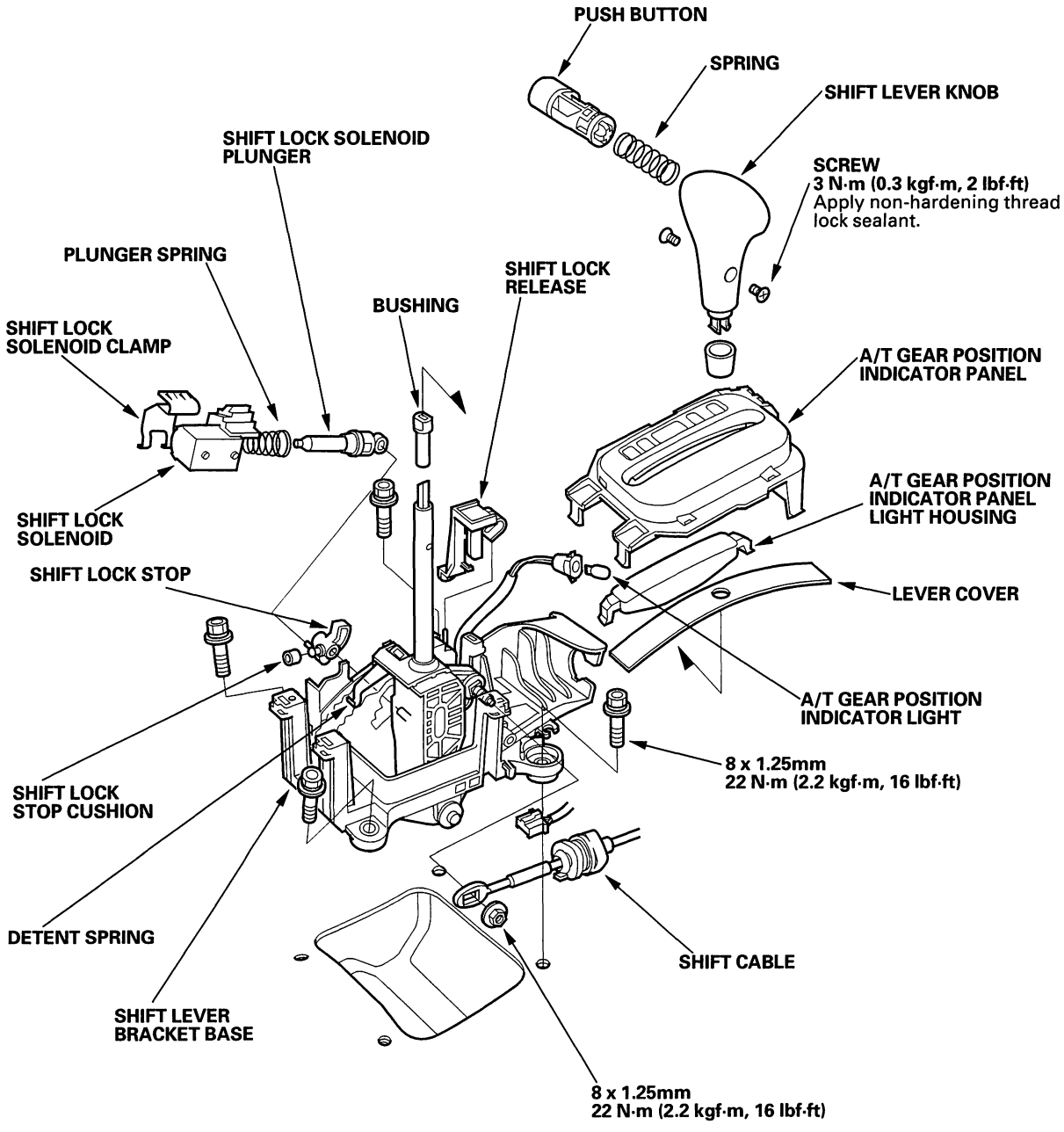

BACK

Shift Cable Replacement

1. Raise the front of the vehicle, and make sure it is securely supported, refer to the '98-02 Accord Service Manual (see page 1-17).

2. Set the parking brake, and block rear wheels securely.

3. Shift the transmission into R position.

4. Remove the center console, refer to the '98-02 Accord Service Manual (see page 20-83).

5. Remove the nut securing the shift cable end (A), then separate the shift cable end from the shift lever assembly.

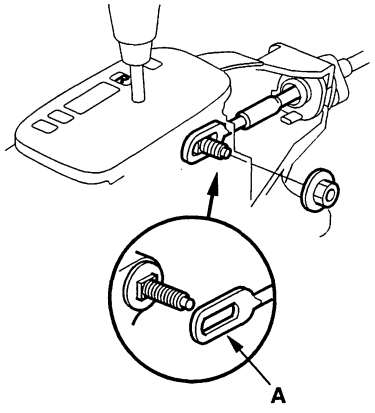

6. Rotate the socket holder (A) on the shift cable (B) counterclockwise a quarter turn, then slide the holder to remove the shift cable from the shift lever bracket base (C).

   NOTE: Do not remove the shift cable by twisting the shift cable guide pipe (D).

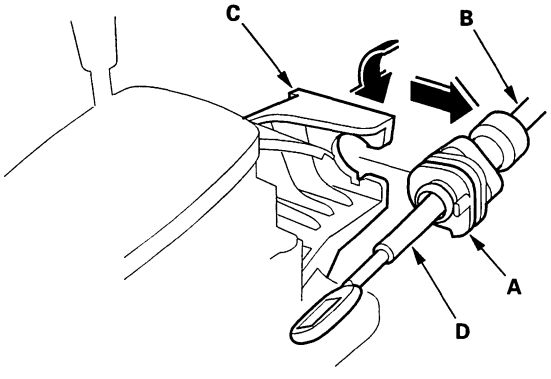

7. Remove the floor heat shield.

8. Remove the shift cable guide bracket (A) and grommet (B).

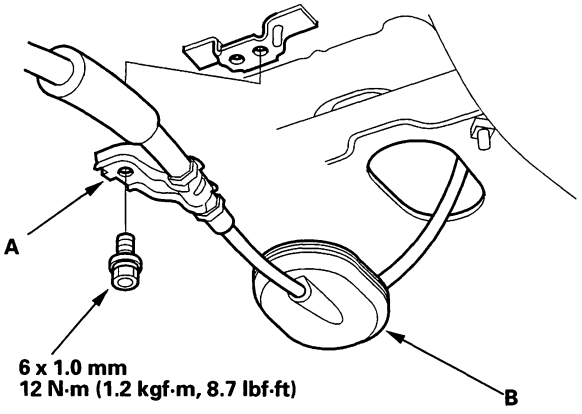

9. Remove the bolts securing the shift cable holder (A), then remove the shift cable cover (B).

   NOTE: To prevent damage to the control lever joint, remove the bolts securing the shift cable holder before removing the bolts securing the shift cable cover.

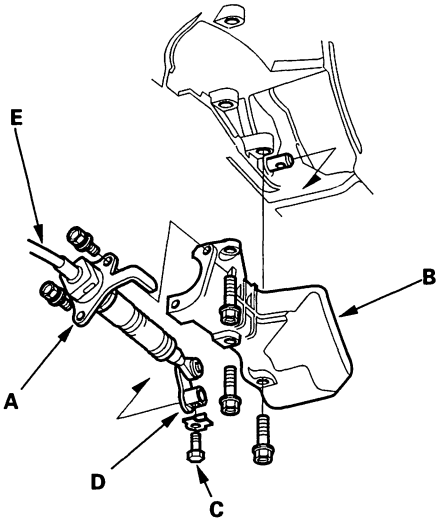

10. Remove the lock bolt (C) securing the control lever (D), then remove the shift cable (E) with the control lever.

(cont'd)

Shift Cable Replacement (cont'd)

11. Insert the new shift cable through the grommet hole, then install the shift cable guide bracket.

12. Verify that the transmission is in R position on the control shaft.

13. Install the control lever (A) with the shift cable (B) on the control shaft (C). Do not bend the shift cable excessively.

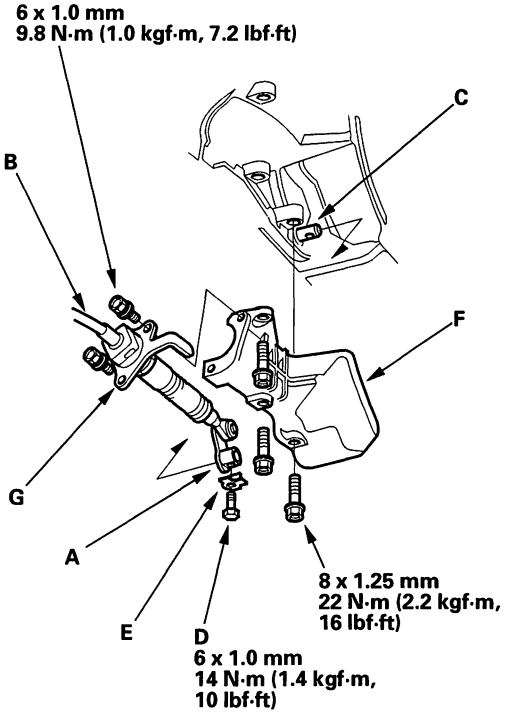

14. Install the lock bolt (D) with a new lock washer (E), then bend the lock washer tab against the bolt.

15. Install the shift cable cover (F), then install the shift cable holder (G) on the cover.

    NOTE: To prevent damage to the control lever joint, be sure to install the shift cable holder after installing the shift cable cover to the torque converter housing.

16. Install the floor heat shield.

17. Turn the ignition switch ON (II), and verify that the R position indicator light comes on.

18. If necessary, push the shift cable until it stops, then release your hand. Pull the shift cable back one step so that the shift position is in R.

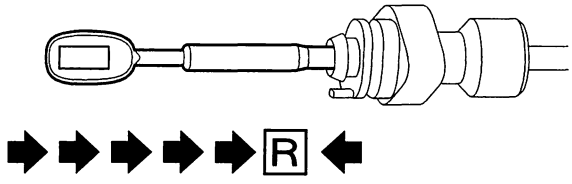

19. Turn the ignition switch OFF.

20. Insert a 6.0 mm (0.24 in.) pin (A) into the positioning hole (B) on the shift lever bracket base through the positioning hole on the shift lever assembly.

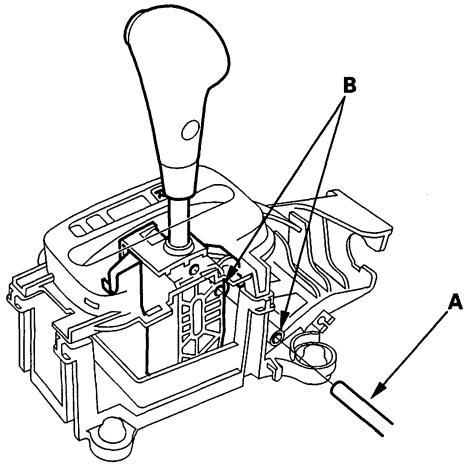

BACK

21. Rotate the socket holder (A) on the shift cable (B) counterclockwise a quarter turn, then slide the holder onto the shift lever bracket base (C). Install the shift cable end (D) over the mounting stud (E) by aligning its square hole (F) with the square shape (G) at the bottom of the stud. Rotate the holder clockwise a quarter turn to secure the shift cable.

    NOTE: Do not install the shift cable by twisting the shift cable guide (H).

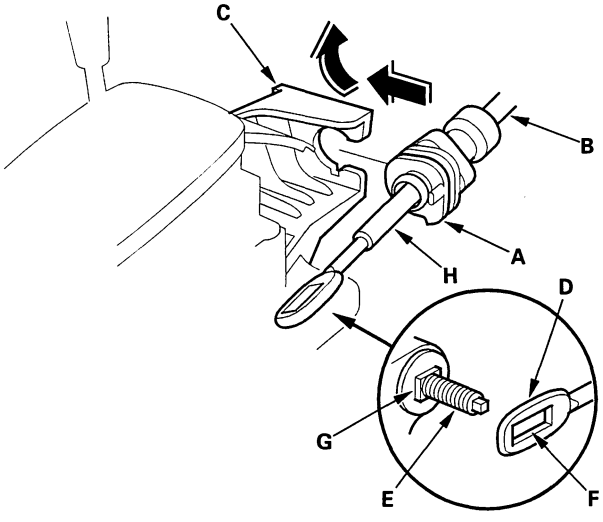

22. Verify that the shift cable end (A) is properly installed on the mounting stud (B).

Properly Installed:

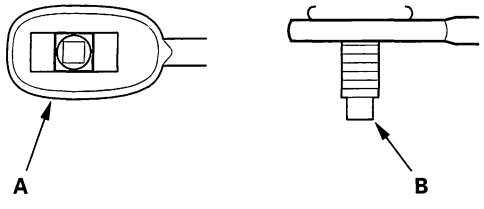

Not Properly Installed:

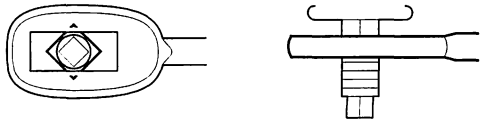

Cable end rides on the bottom of the mounting stud.

23. If not properly installed, remove the shift cable from the shift lever bracket base, and reinstall the shift cable. Do not install the shift cable end on the mounting stud while the shift cable is on the shift cable bracket base.

24. Install and tighten the nut.

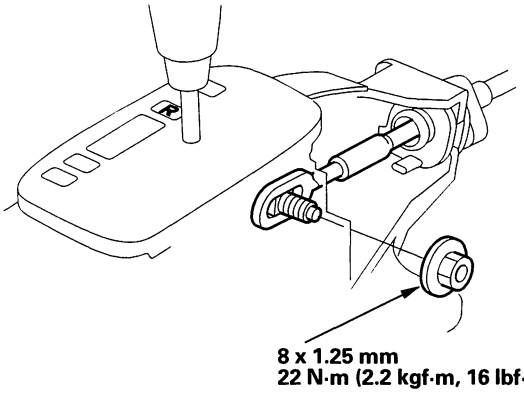

25. Remove the 6.0 mm (0.24 in.) pin that was installed to hold the shift lever.

26. Move the shift lever to each gear, and verify that the A/T gear position indicator follows the transmission range switch.

27. Start the engine, and check the shift lever operation in all gears.

Shift Cable Adjustment

1. Shift the transmission into R position.

2. Remove the center console, refer to '98-02 Accord Service Manual (see page 20-83).

3. Remove the nut securing the shift cable end (A), then separate the shift cable end from the shift lever assembly.

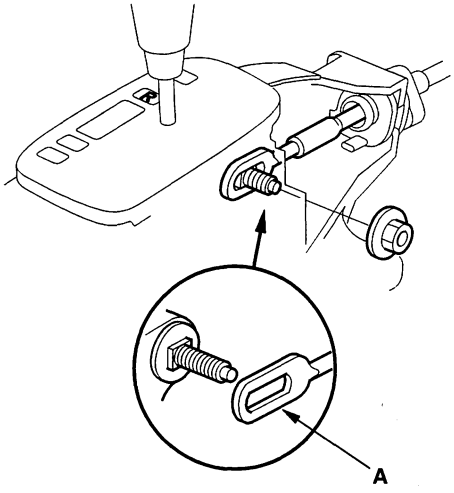

4. Rotate the socket holder (A) on the shift cable (B) counterclockwise a quarter turn, then slide the holder to remove the shift cable from the shift lever bracket base (C).

   NOTE: Do not remove the shift cable by twisting the shift cable guide (D).

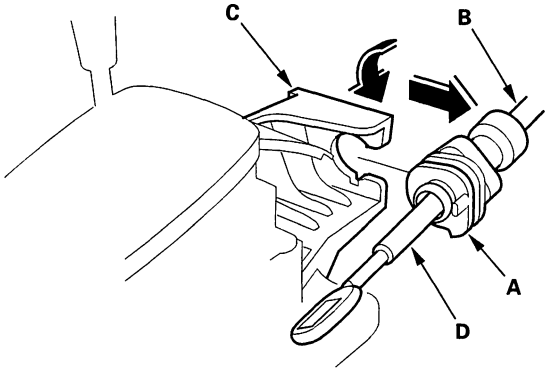

5. Push the shift cable until it stops, then release your hand. Pull the shift cable back one step so that the shift position is in R.

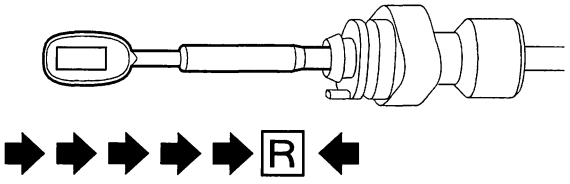

6. Turn the ignition switch ON (II), and verify that the R position indicator light comes on.

7. Turn the ignition switch OFF.

8. Insert a 6.0 mm (0.24 in.) pin (A) into the positioning hole (B) on the shift lever bracket base through the positioning hole on the shift lever assembly.

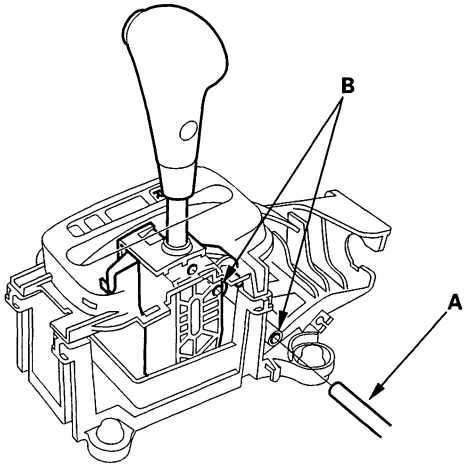

BACK

9. Rotate the socket holder (A) on the shift cable (B) counterclockwise a quarter turn, then slide the holder onto the shift lever bracket base (C). Install the shift cable end (D) over the mounting stud (E) by aligning its square hole (F) with the square shape (G) at the bottom of the stud. Rotate the holder clockwise a quarter turn to secure the shift cable.

   NOTE: Do not install the shift cable by twisting the shift cable guide (H).

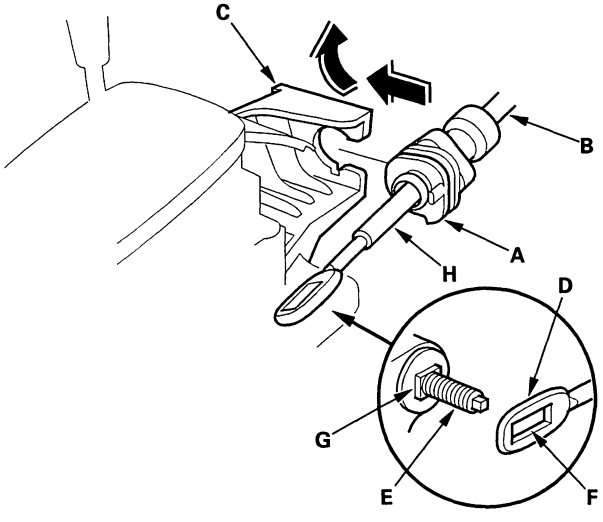

10. Verify that the shift cable end (A) is properly installed on the mounting stud (B).

Properly Installed:

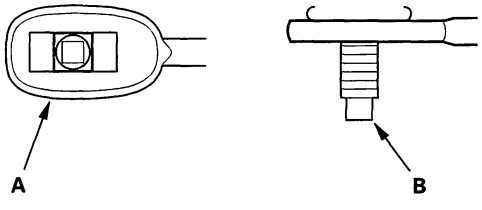

Not Properly Installed:

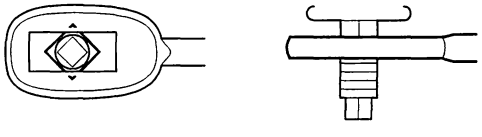

Cable end rides on the bottom of the mounting stud.

11. If not properly installed, remove the shift cable from the shift lever bracket base, and reinstall the shift cable. Do not install the shift cable end on the mounting stud while the shift cable is on the shift cable bracket base.

12. Install and tighten the nut.

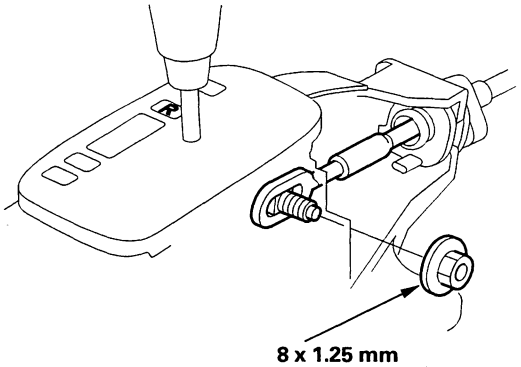

8 x 1.25 mm
22 N·m (2.2 kgf·m, 16 lbf·ft)

13. Remove the 6.0 mm (0.24 in.) pin that was installed to hold the shift lever.

14. Move the shift lever to each gear, and verify that the A/T gear position indicator follows the transmission range switch.

15. Push the shift lock release, and verify that the shift lever releases.

A/T Gear Position Indicator

Component Location Index

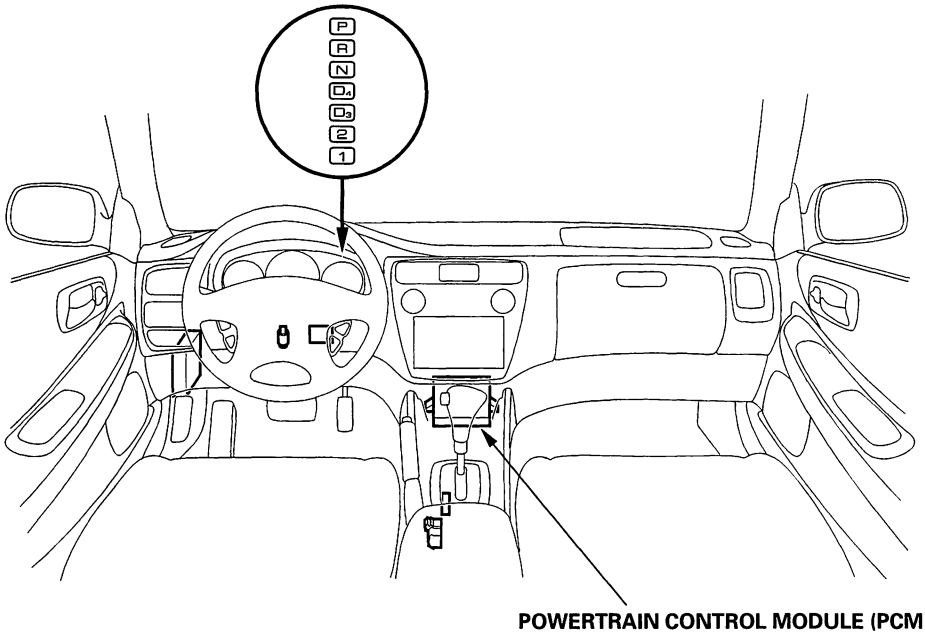

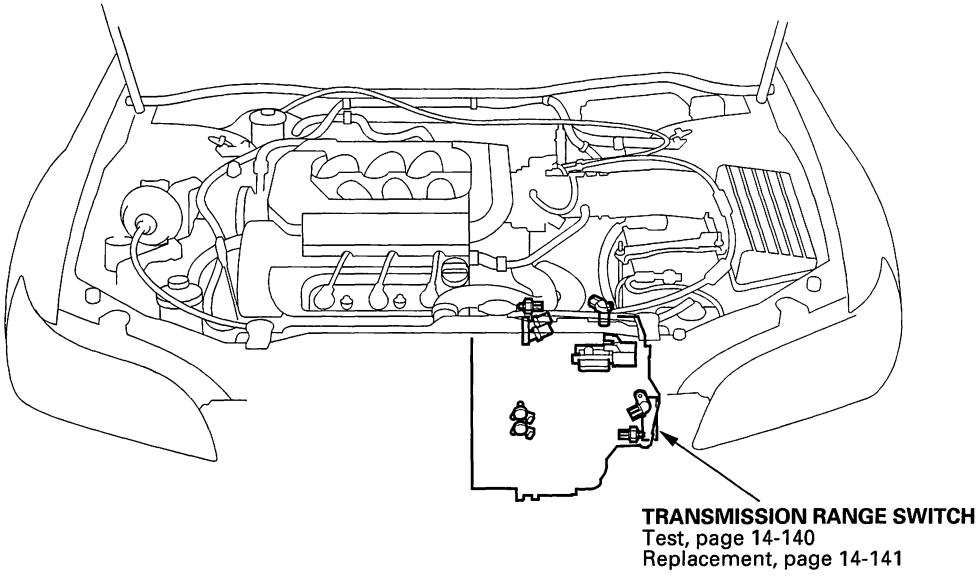

BACK

Circuit Diagram

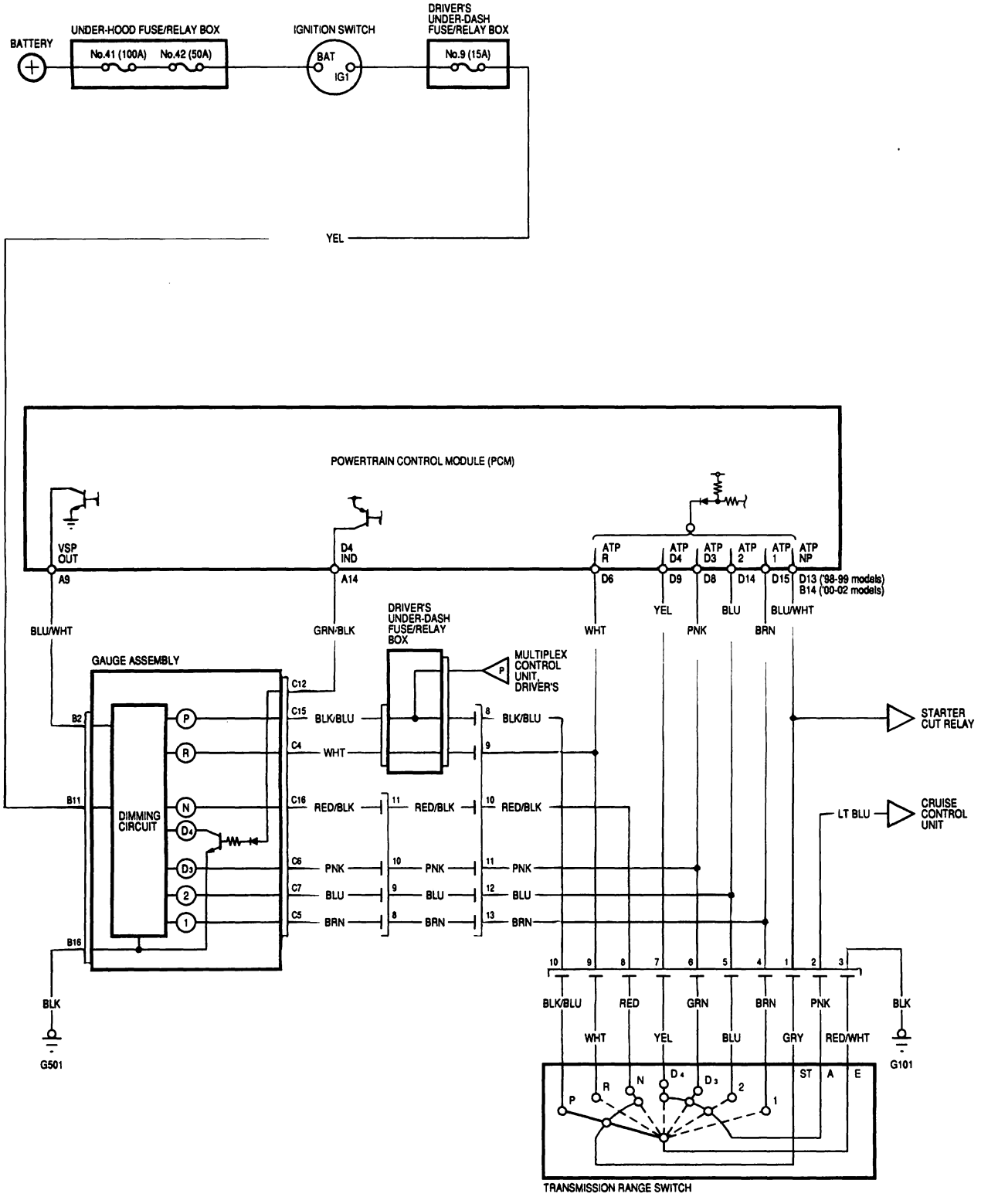

BACK

A/T Gear Position Indicator

Transmission Range Switch Test

1. Remove the transmission range switch connector (A) from the connector bracket (B), then disconnect the transmission range switch connector.

2. Check for continuity between the terminals in each switch position according to the table below.

   NOTE: Terminal No.1: Neutral position switch

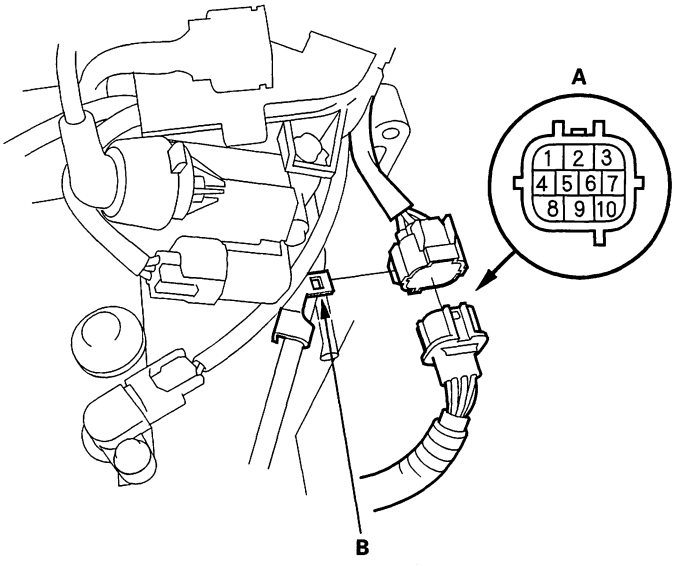

Transmission Range Switch Continuity Check

Position \ Terminal	1	2	3	4	5	6	7	8	9	10
P	○		○							○
R			○						○	
N	○		○					○		
D4		○	○				○			
D3		○	○			○				
2		○	○		○					
1			○	○						

BACK

Transmission Range Switch Replacement

1. Raise the front of the vehicle, and make sure it is securely supported, refer to the '98-02 Accord Service Manual (see page 1-17).

2. Set the parking brake, and block both rear wheels securely.

3. Shift to N position.

4. Remove the transmission range switch connector (A) from the connector bracket (B), then disconnect the transmission range switch connector.

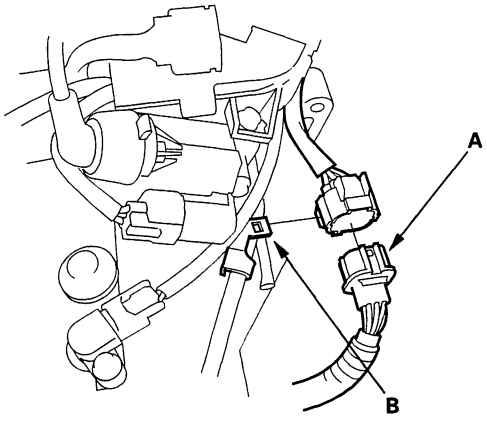

5. Remove the clamp from the harness clamp bracket on the transmission housing, and remove the harness clamp (A) from the end cover (B).

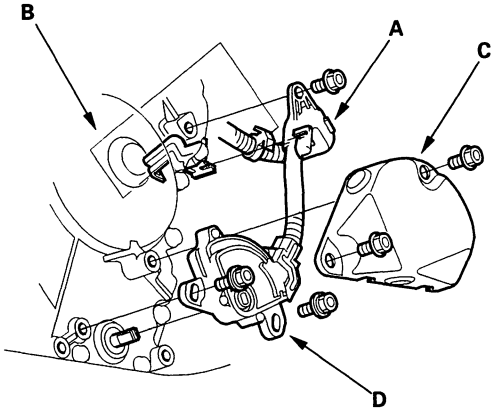

6. Remove the transmission range switch cover (C), then remove the transmission range switch (D) from the end cover.

7. Set the transmission range switch to N position.

   NOTE: The transmission range switch clicks in N position.

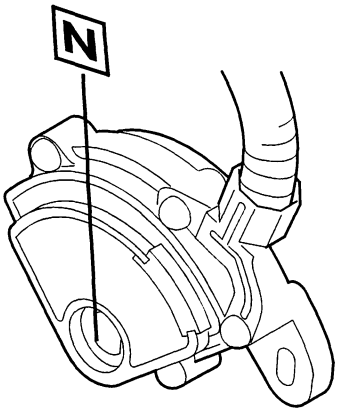

8. Set the control shaft to N position.

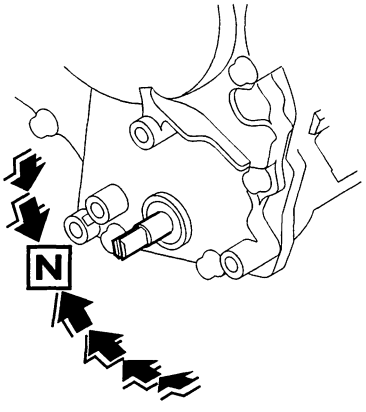

(cont'd)

Transmission Range Switch Replacement (cont'd)

9. Install the transmission range switch (A) on the control shaft (B), then secure it with the bolts.

   NOTE: Do not move the transmission range switch when tightening the bolts.

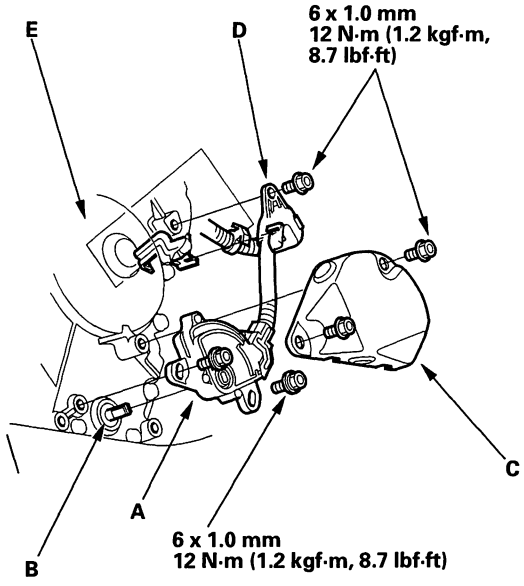

10. Install the transmission range switch cover (C), and the harness clamp (D) on the end cover (E).

11. Connect the transmission range switch connector (A), then install it on the connector bracket (B).

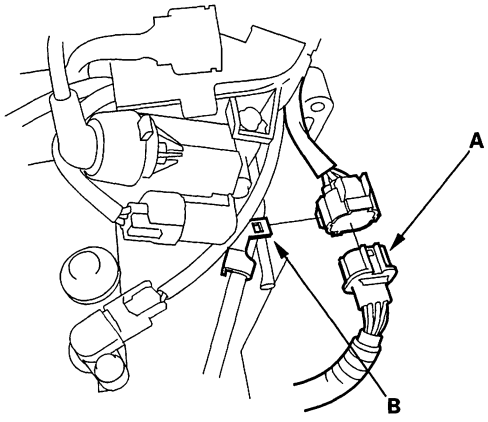

12. Turn the ignition switch ON (II). Move the shift lever through all gears, and check the transmission range switch synchronization with the A/T gear position indicator (A).

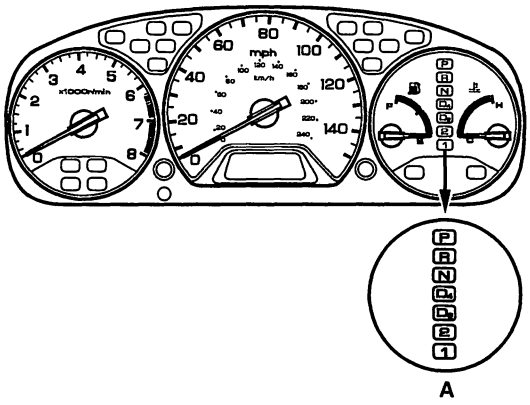

13. Move the shift lever through all gears, and verify the following:

   - The engine will not start in any position other than N or P.
   - The back-up lights come on when the shift lever is in R position.

BACK

Indicator Input Test

SRS components are located in this area. Review the SRS component locations, precautions, and procedures in the SRS section before performing repairs or service, refer to the '98-02 Accord Service Manual (see page 23-28).

1. Remove the instrument panel, refer to the '98-02 Accord Service Manual (see page 20-84).

2. Remove the gauge assembly from the dashboard, refer to the '98-02 Accord Service Manual (see page 22-68), then disconnect the gauge assembly B (22P) and C (16P) connectors.

3. Inspect the connectors and connector terminals to be sure they are all making good contact.
   - If the terminals are bent, loose, or corroded, repair them as necessary, and recheck the system.
   - If the terminals look OK, make the following input tests at the gauge assembly B (22P) and C (16P) connectors.
     - If a test indicates a problem, find a correct the cause, then recheck the system.
     - If all the input tests prove OK, but the indicator is faulty, replace the printed circuit board.

GAUGE ASSEMBLY CONNECTORS

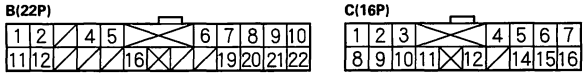

Wire side of female terminals

Cavity	Wire Color	Test Condition	Test: Desired Result	Possible Cause (If result is not obtained)
B11	YEL	Ignition switch ON (II)	Check for voltage to ground: There should be battery voltage.	• Blown No. 9 (7.5 A) fuse in the driver's under-dash fuse/relay box • An open in the wire
B16	BLK	Under all conditions	Check for continuity to ground: There should be continuity.	• Poor ground (G501) • An open in the wire
C4	WHT	Ignition switch ON (II) and shift lever in R	Check for voltage to ground: There should be 1 V or less. There should be battery voltage in any other shift lever position.	• Faulty transmission range switch • An open in the wire
C5	BRN	Ignition switch ON (II) and shift lever in 1		
C6	PNK	Ignition switch ON (II) and shift lever in D3		
C7	BLU	Ignition switch ON (II) and shift lever in 2		
C12	GRN/BLK	Ignition switch ON (II) and shift lever in D4	Check for voltage to ground: There should be battery voltage.	• Faulty transmission range switch • Faulty PCM • An open in the wire
C15	BLK/BLU	Shift lever in P	Check for continuity to ground: There should be no continuity in any other shift lever position.	• Faulty transmission range switch • An open in the wire
C16	RED/BLK	Ignition switch ON (II) and shift lever in N	Check for voltage to ground: There should be 1 V or less. There should be battery voltage in any other shift lever position.	

Indicator Bulb Replacement

SRS components are located in this area. Review the SRS component locations, precautions, and procedures in the SRS section before performing repairs or service, refer to the '98-02 Accord Service Manual (see page 23-28).

1. Remove the instrument panel, refer to the '98-02 Accord Service Manual (see page 20-84).

2. Remove the gauge assembly, refer to the '98-02 Accord Service Manual (see page 22-68).

3. Disassemble the gauge assembly, refer to the '98-02 Accord Service Manual (see page 22-68).

   NOTE: Disassembly is not required on all models.

4. Replace the bulbs (A) at the reverse side of the gauge assembly (B).

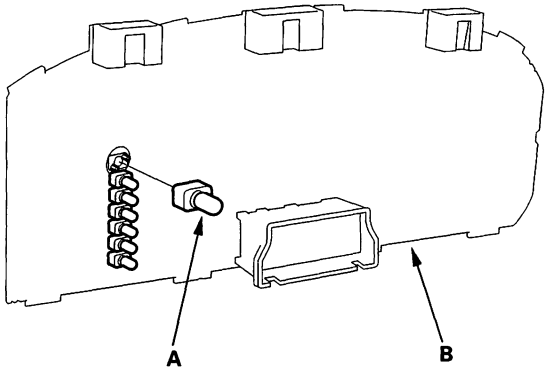

BACK

Component Location Index

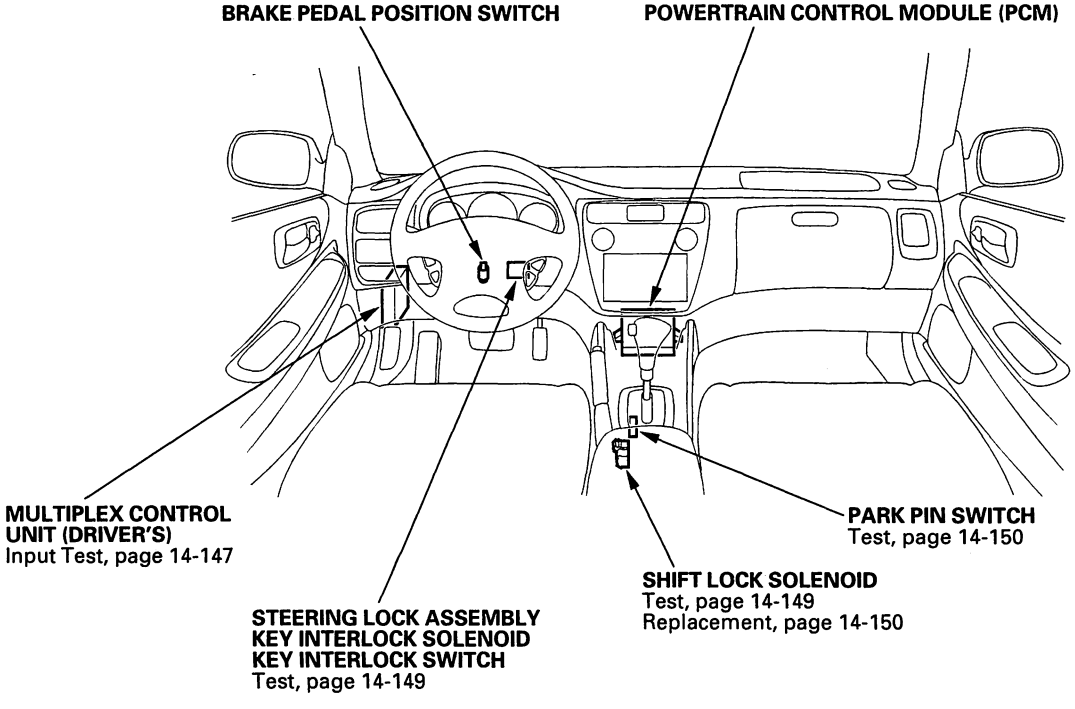

A/T Interlock System

Circuit Diagram

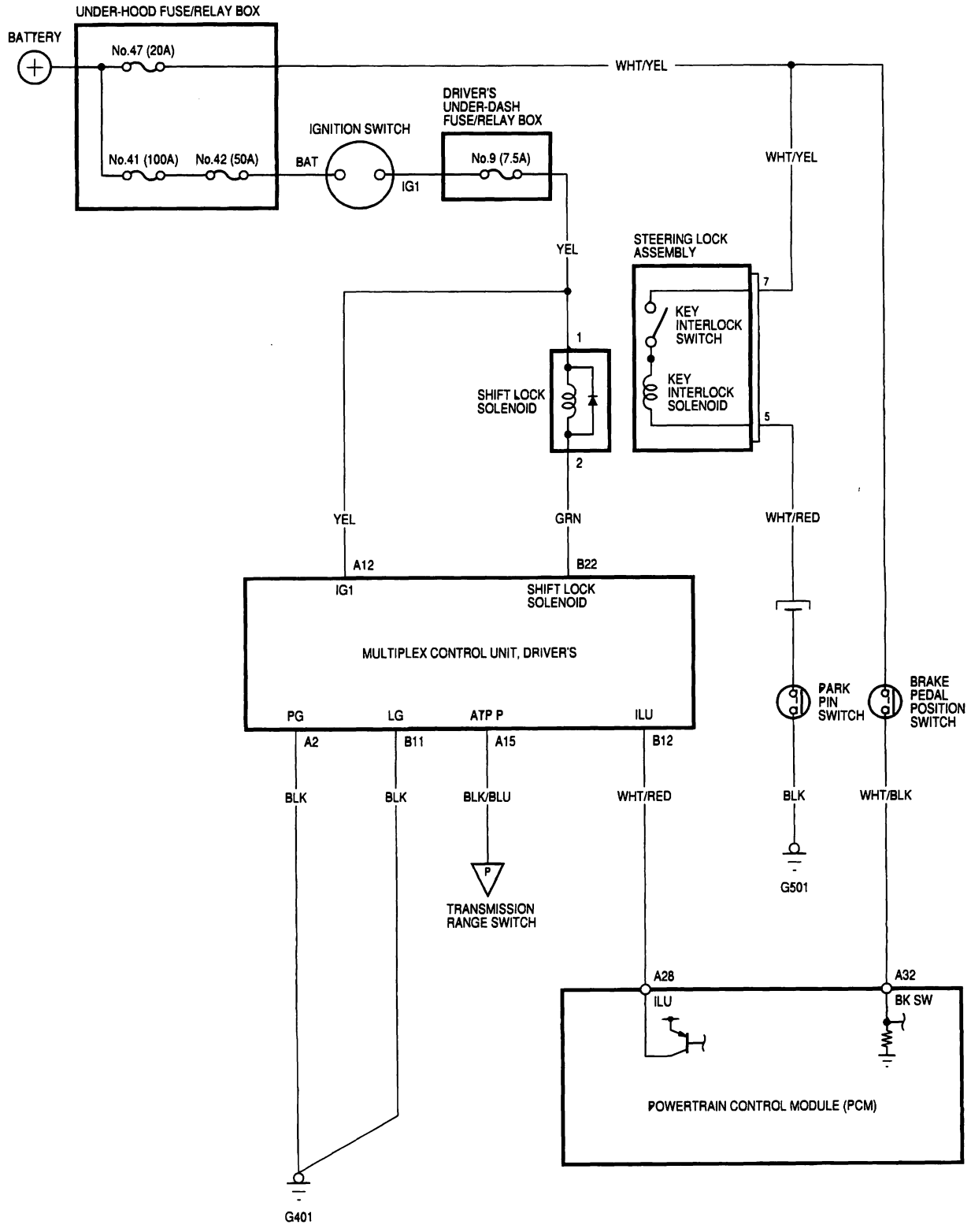

BACK

Control Unit Input Test

SRS components are located in this area. Review the SRS component locations, precautions, and procedures in the SRS section before performing repairs or service, refer to the '98-02 Accord Service Manual (see page 23-28).

1. Disconnect the 22P connector from the multiplex control unit (driver's), then remove the multiplex control unit (driver's) from the driver's under-dash fuse/relay box.

2. Inspect the connectors and connector terminals to be sure they are all making good contact.

   - If the terminals are bent, loose, or corroded, repair them as necessary, and recheck the system.
   - If the terminals look OK, go to step 3.

   NOTE: If the shift lock solenoid clicks when the ignition switch is turned ON (II) while depressing the brake pedal with the shift lever in [P] position, the shift lock system is OK. If the shift lever cannot be shifted from [P] position, test the transmission range switch.

3. With the driver's unit still disconnected from its connector and the fuse/relay box, make these input tests at its connector or its fuse/relay box socket.

   - If a test indicates a problem, find and correct the cause, then recheck the system.
   - If all the input tests prove OK, go to step 4.

(cont'd)

Control Unit Input Test (cont'd)

MULTIPLEX CONTROL UNIT, DRIVER'S CONNECTORS

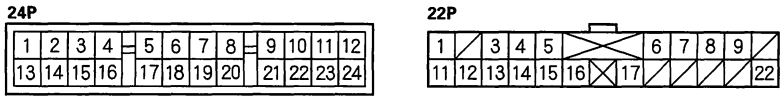

Terminal side of male terminals

Wire side of female terminals

Multiplex Control Unit (Driver's) 24P Connector

Cavity	Wire Color	Test Condition	Test: Desired Result	Possible Cause (If result is not obtained)
A3	———	Shift lever in P	Check for continuity to ground: There should be continuity.	• Faulty transmission range switch • Poor ground (G101) • An open in the wire
A12	———	Under all conditions	Check for voltage to ground: There should be battery voltage.	• Blown No. 13 (7.5A) fuse in the passenger's under-dash fuse/relay box • Faulty passenger's under-dash fuse/relay box • An open in the wire
A14	———	Under all conditions	Check for continuity to ground: There should be continuity.	• Poor ground (G401) • An open in the wire
A24	———	Ignition switch turned ON (II)	Check for voltage to ground: There should be battery voltage.	• Blown No. 9 (7.5 A) fuse in the driver's under-dash fuse/relay box • An open in the wire

Multiplex Control Unit (Driver's) 22P Connector

Cavity	Wire Color	Test Condition	Test: Desired Result	Possible Cause (If result is not obtained)
B11	BLK	Under all conditions	Check for continuity to ground: There should be continuity.	• Poor ground (G503) • An open in the wire
B22	GRN	Ignition switch ON (II)	Check for voltage to ground: There should be battery voltage.	• Blown No. 9 (7.5A) fuse in the driver's under-dash fuse/relay box • Faulty shift lock solenoid • An open in the wire

4. Reconnect the connectors to the multiplex control unit (driver's), and make this input test.

B12	WHT/RED	Ignition switch ON (II) and brake pedal pushed	Check for voltage to ground: There should be battery voltage.	• Faulty brake pedal position switch • Faulty PCM • Faulty multiplex control unit (driver's) • An open in the wire
		Ignition switch ON (II), brake pedal and accelerator pedal pressed at the same time	Check for voltage to ground: There should be 1 V or less.	

- If a test indicates a problem, find and correct the cause, then recheck the system.
- If all the input tests prove OK, substitute a known-good multiplex control unit (driver's), and recheck the system. If the system is OK, the multiplex control unit (driver's) must be faulty; replace it.

BACK

Key Interlock Solenoid/Switch Test

SRS components are located in this area. Review the SRS component locations, precautions, and procedures in the SRS section before performing repairs or service, refer to the '98-02 Accord Service Manual (see page 23-28).

1. Remove the driver's dashboard lower cover, refer to the '98-02 Accord Service Manual (see page 20-84).

2. Disconnect the key switch 7P connector from the steering lock assembly.

3. Check for continuity between the No. 5 and No. 7 terminals when the key is pushed, and check for no continuity when the key is released.

KEY SWITCH CONNECTOR (7P)

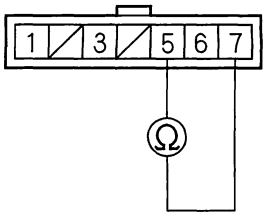

Terminal side of male terminals

4. Check that the key cannot be removed with power connected to the No. 7 terminal and ground connected to the No. 3 terminals.

   - If the key cannot be removed, the key interlock solenoid is OK.
   - If the key can be removed, replace the steering lock assembly (the key interlock solenoid is not available separately).

Shift Lock Solenoid Test

1. Remove the center console, refer to the '98-02 Accord Service Manual (see page 20-83).

2. Disconnect the shift lock solenoid 2P connector.

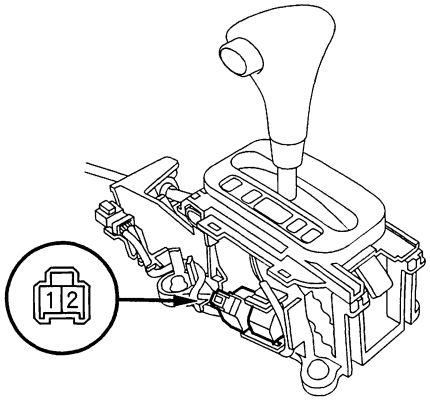

3. Connect the No. 1 terminal of the shift lock solenoid connector to the battery positive terminal, and connect the No. 2 terminal to the battery negative terminal.

4. Check that the shift lever can be moved from the P position. Release the battery terminals from the shift lock solenoid connector. Move the shift lever back to the P position, and make sure it locks.

   NOTE: Do not connect power to the No. 2 terminal (reverse polarity) or you will damage the diode inside the solenoid.

5. Check that the shift lock releases when the release lever is pushed, and check that it locks when the release lever is released.

6. If the solenoid does not work, replace it.

Shift Lock Solenoid Replacement

1. Remove the center console, refer to the '98-02 Accord Service Manual (see page 20-83).
2. Disconnect the shift lock solenoid 2P connector.
3. Pry the shift lock solenoid clamp (A) with a screwdriver, then remove the shift lock solenoid (B).

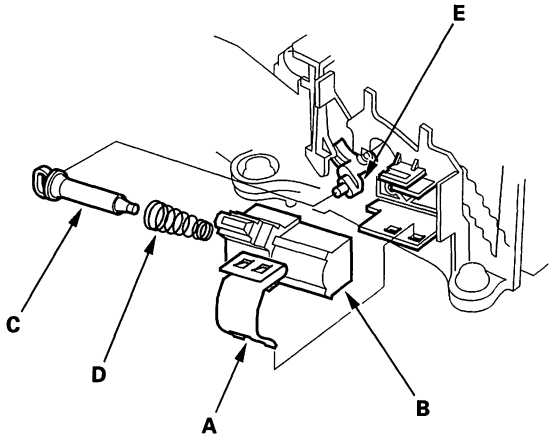

4. Install the shift lock solenoid plunger (C) and plunger spring (D) in the new shift lock solenoid.
5. Install the shift lock solenoid by aligning the joint of the shift lock solenoid with the tip of the shift lock stop (E).
6. Secure the shift lock solenoid with the clamp, then connect the shift lock solenoid connector.

Park Pin Switch Test

1. Remove the center console, refer to the '98-02 Accord Service Manual (see page 20-83).
2. Disconnect the park pin 4P connector.

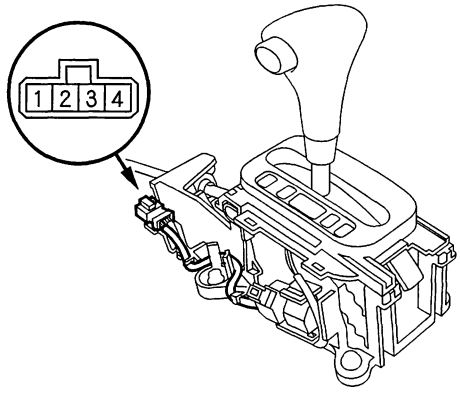

3. Shift the shift lever into the P position, then check for continuity between the No. 3 and No. 4 terminals. There should be no continuity.
4. Shift the shift lever out of the P position, and check for continuity between the terminals in step 3. There should be continuity.
5. If the park pin switch is faulty, replace the shift lever bracket base.

   NOTE: The park pin switch is not available separately from the shift lever bracket base.

BACK

End Cover Removal

Exploded View

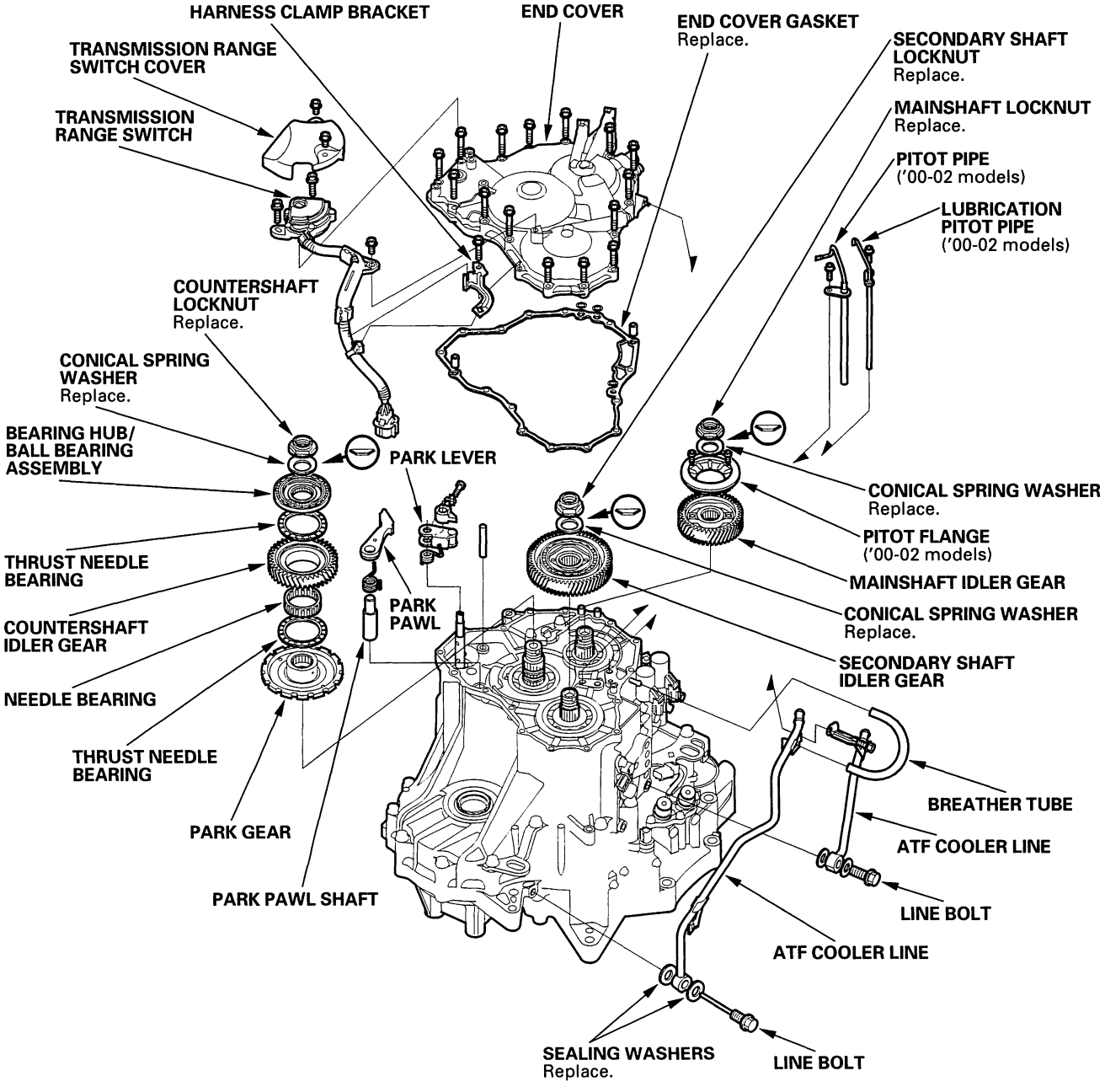

(cont'd)

End Cover Removal (cont'd)

Special Tools Required
Mainshaft holder
07GAB-PF50101 or 07GAB-PF50100

NOTE: Refer to the Exploded View as needed during the following procedure.

1. Remove the transmission range switch cover.
2. Remove the bolts securing the harness clamp (one bolt) and transmission range switch (two bolts), then remove the transmission range switch.
3. Remove the bolts securing the end cover (sixteen bolts), then remove the end cover.
4. For '00-02 models: Remove the pitot pipe (A) and the lubrication pitot pipe (B) from the transmission housing (C), then remove the pitot flange (D) from the mainshaft idler gear (E).

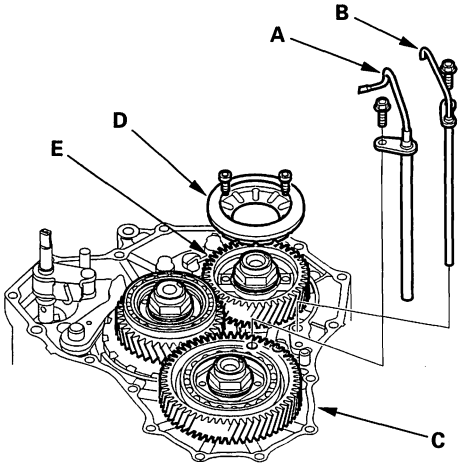

5. Slip the special tool onto the mainshaft.

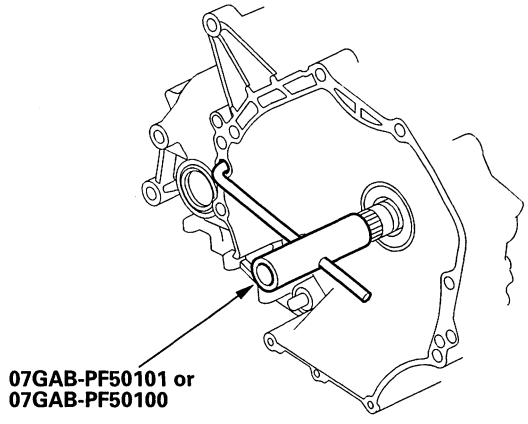

6. Engage the park pawl with the park gear.
7. Cut the lock tabs (A) of each shaft locknut (B) using a chisel (C). Then remove the locknuts and conical spring washers from each shaft.

   NOTE:
   - Countershaft and secondary shaft locknuts have left-hand threads.
   - Clean the old locknuts; they are used to install the press fit idler gears on the mainshaft and secondary shaft, and the park gear and bearing hub on the countershaft.
   - Keep all of the chiseled particles out of the transmission.

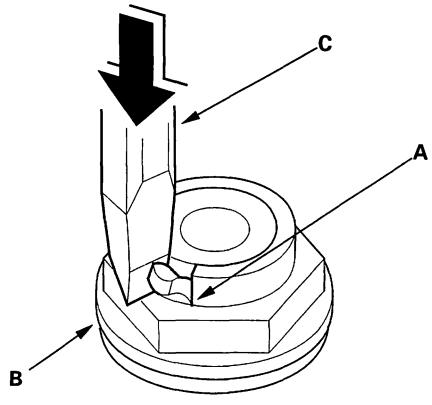

8. Remove the special tool (mainshaft holder) from the mainshaft.

BACK

9. Remove the mainshaft idler gear (A) and the secondary shaft idler gear (B) with a puller (C).

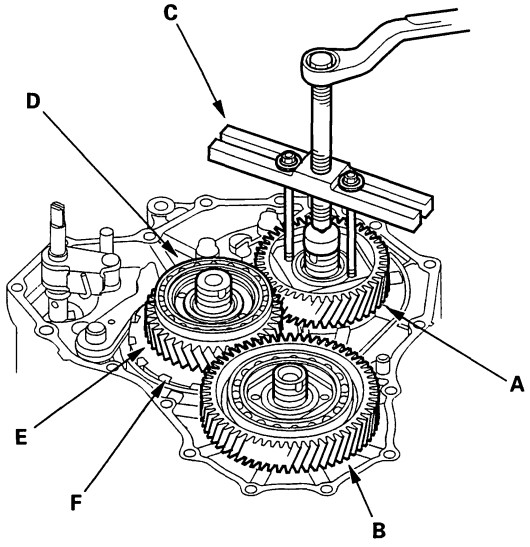

10. Remove the bearing hub (D) with the puller from the countershaft, then remove the countershaft idler gear (E) and bearings.

11. Remove the park gear (F) with the puller.

12. Remove the park pawl, spring, shaft, and shaft stop.

13. Remove the park lever from the control shaft.

14. Remove the line bolts, then remove the ATF cooler lines.

Park Lever Stop Inspection and Adjustment

1. Set the park lever (A) in the P position.

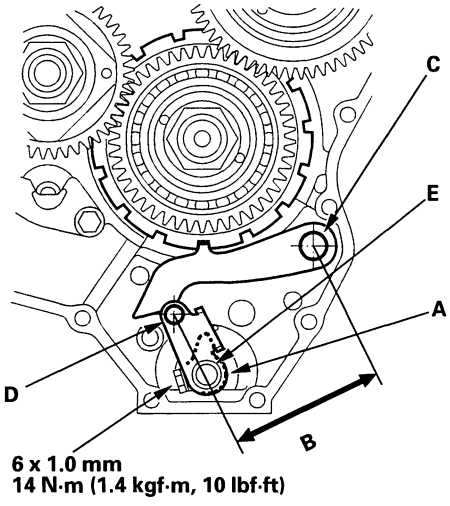

2. Measure the distance (B) between the park pawl shaft (C) and the park lever roller pin (D).

   STANDARD: 84.6–85.6 mm (3.33–3.37 in.)

3. If the measurement is out of tolerance, select and install the appropriate park lever stop (E) from the table below.

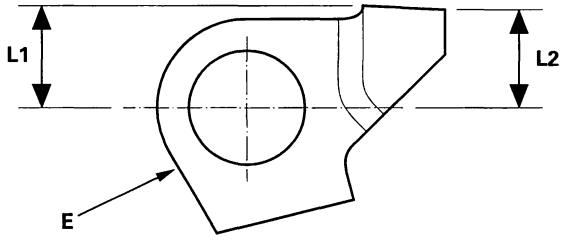

PARK LEVER STOP

Mark	Part Number	L1	L2
1	24537-PA9-003	11.00 mm (0.433 in.)	11.00 mm (0.433 in.)
2	24538-PA9-003	10.80 mm (0.425 in.)	10.65 mm (0.419 in.)
3	24539-PA9-003	10.60 mm (0.417 in.)	10.30 mm (0.406 in.)

4. After replacing the park lever stop, make sure the distance is within tolerance.

Housing and Shaft Assemblies Removal

Exploded View

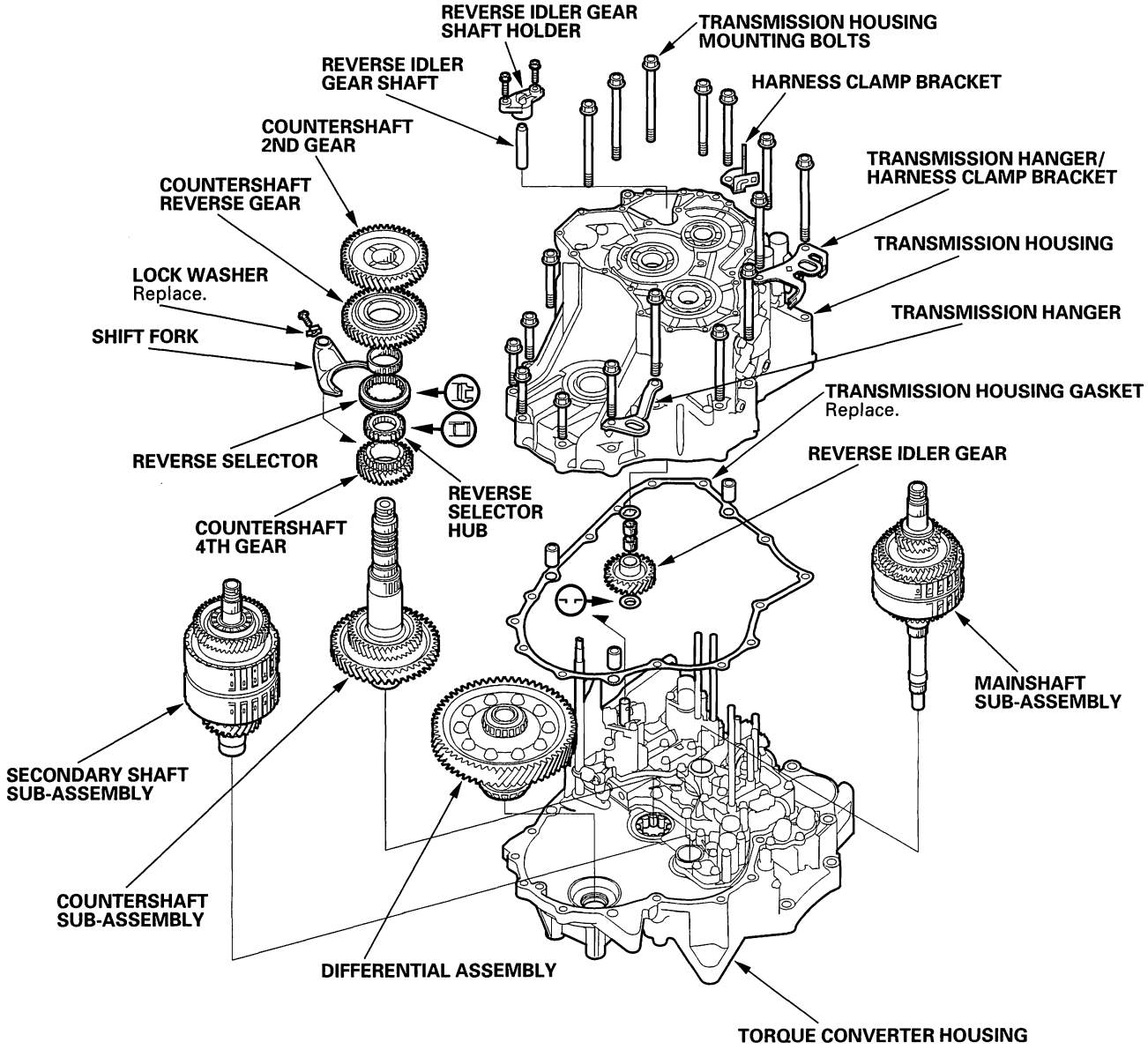

BACK

Special Tools Required
Housing puller 07HAC-PK40102

NOTE: Refer to the Exploded View as needed during the following procedure.

1. Remove the two bolts securing the reverse idler gear shaft holder, then remove the reverse idler gear shaft holder (A), shaft (B), and washer (C).

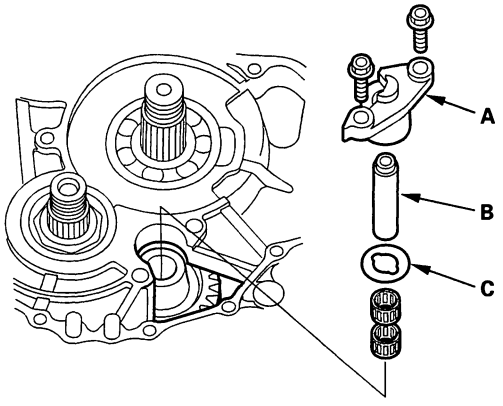

2. Remove the transmission housing mounting bolts, transmission hangers, and harness clamp bracket.

3. Move the reverse idler gear (A) to disengage it from the mainshaft and countershaft reverse gears.

   NOTE: The transmission housing will not separate from the torque converter housing if the reverse idler gear is not moved.

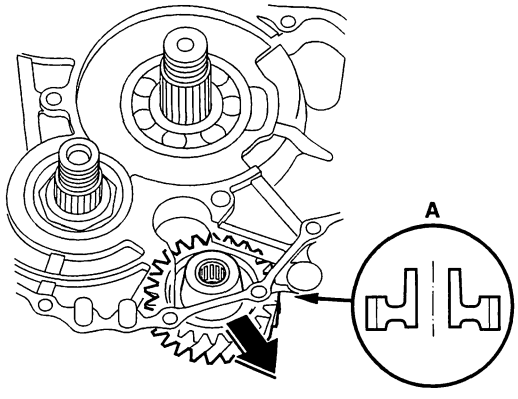

4. Align the spring pin (A) on the control shaft (B) with the transmission housing groove (C) by turning the control shaft.

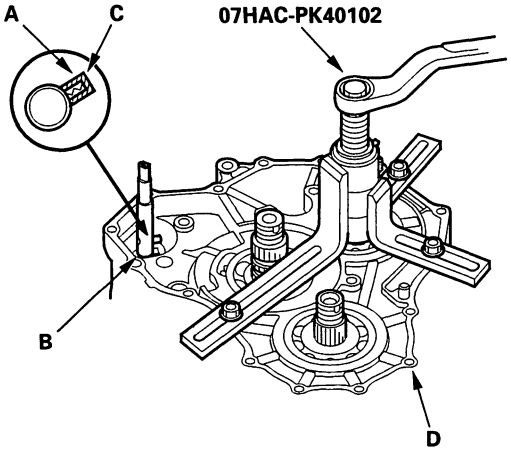

5. Install the special tool over the mainshaft, then remove the transmission housing (D).

   NOTE: If the top arm of your housing puller is too short, replace it with Housing Puller Arm, 205 mm, 07SAC-P0Z0101.

6. Remove the reverse idler gear, needle bearings, and thrust washer from the transmission housing.

7. Remove the countershaft 2nd gear, then remove the countershaft reverse gear and the needle bearing.

8. Remove the lock bolt securing the shift fork, then remove the shift fork with the reverse selector, reverse selector hub, and countershaft 4th gear. If the reverse selector hub is press-fitted, leave it and 4th gear on the countershaft.

9. Remove the secondary shaft sub-assembly. If the reverse selector hub is press-fitted, remove the secondary shaft sub-assembly, countershaft sub-assembly and mainshaft sub-assembly together.

10. Remove the countershaft sub-assembly.

11. Remove the mainshaft sub-assembly.

12. Remove the differential assembly.

Bearing Replacement

Special Tools Required
- Driver 07749-0010000
- Seal driver attachment 07GAD-PG40101
- Attachment, 62 x 68 mm 07746-0010500
- Attachment, 72 x 75 mm 07746-0010600

NOTE: Coat all parts with ATF before assembly.

1. To remove the mainshaft bearing (A), countershaft bearing (B) and secondary shaft bearing (C) from the transmission housing, expand each snap ring with the snap ring pliers, then push the bearing out.

   NOTE: Do not remove the snap rings unless it's necessary to clean the grooves in the housing.

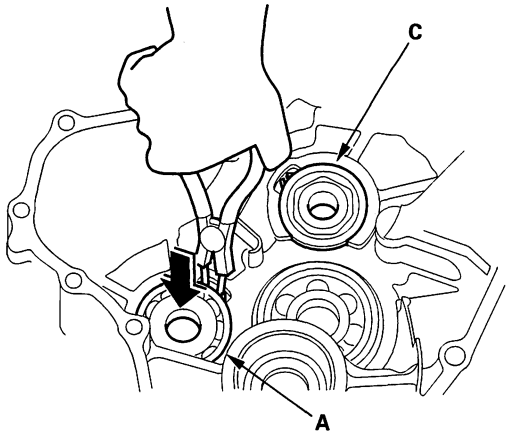

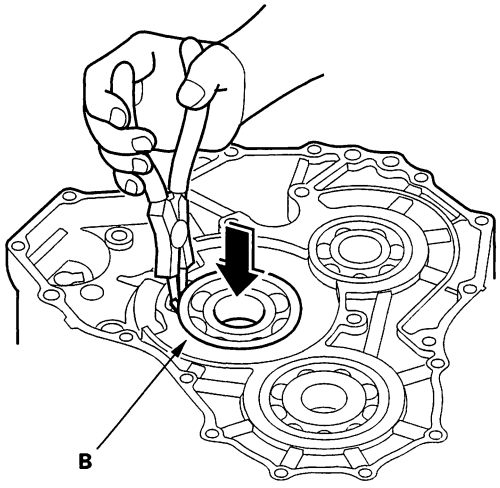

2. Install the bearings in the direction shown.

3. Expand each snap ring with the snap ring pliers, and insert the bearing part-way into the housing.

4. Release the pliers, then push the bearing down into the housing until the snap ring snaps in place around it.

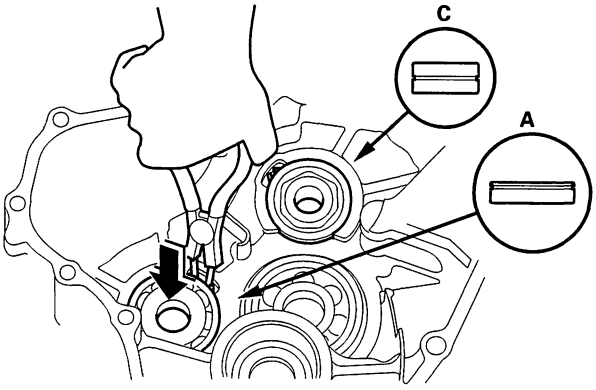

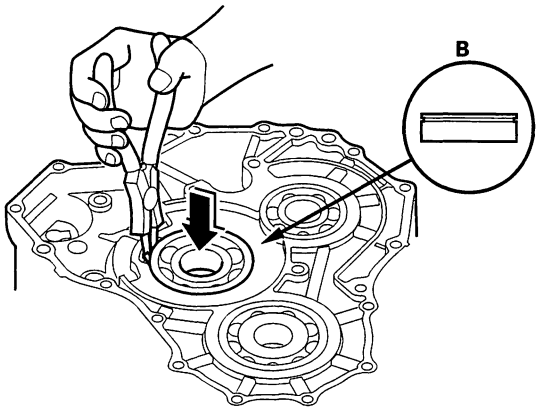

5. After installing the bearings verify the following:

   - The snap rings (A) are seated in the bearing and housing grooves.
   - The ring end gaps (B) are correct.

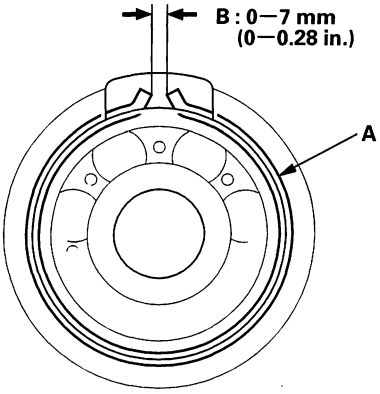

BACK

Valve Bodies and ATF Strainer Removal

Exploded View

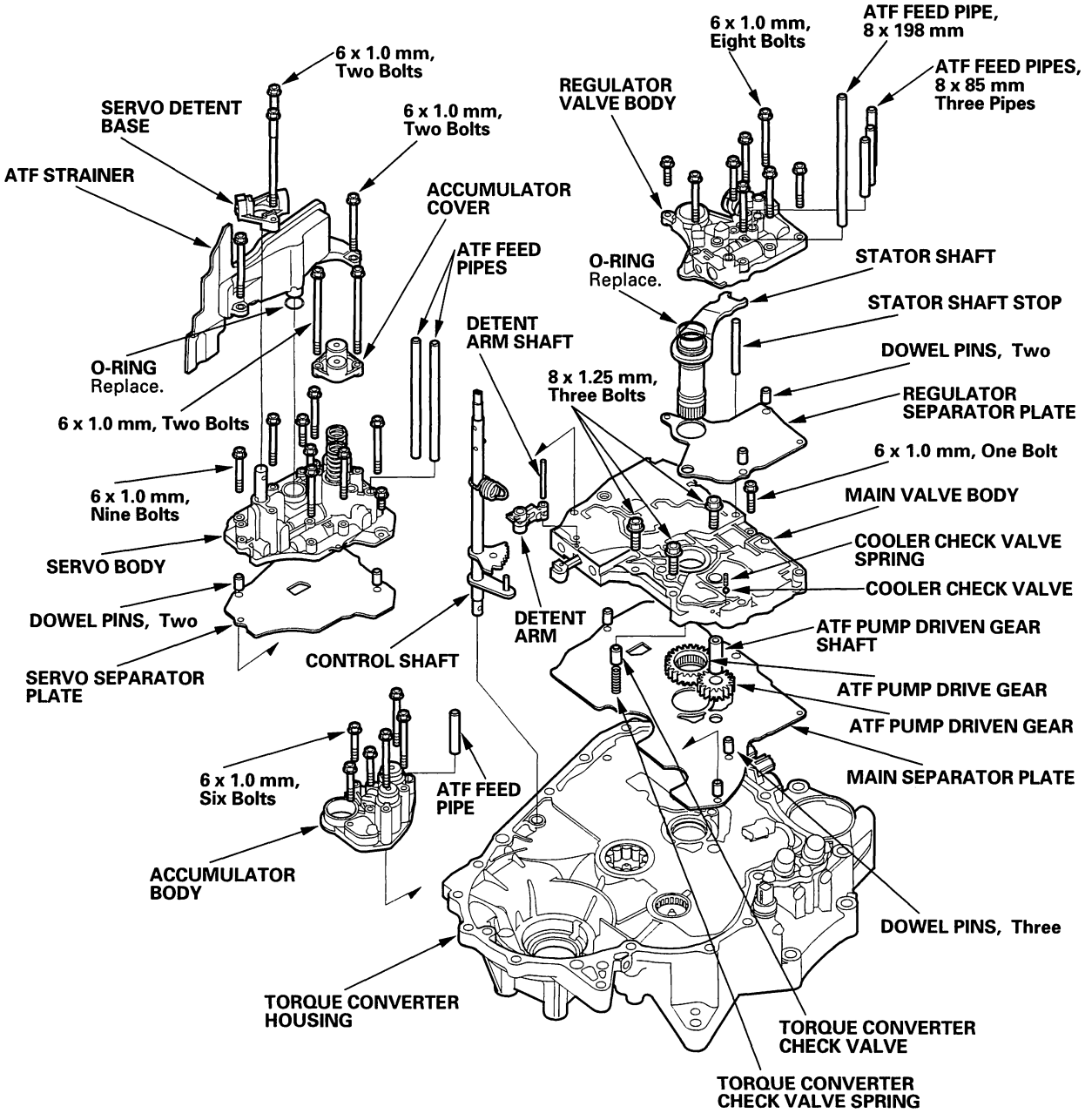

(cont'd)

Valve Bodies and ATF Strainer Removal (cont'd)

NOTE: Refer to the Exploded View as needed during the following procedure.

1. Remove the ATF feed pipes from the regulator valve body, servo body, and accumulator body.
2. Remove the servo detent base (two bolts).
3. Remove the ATF strainer (two bolts).
4. Remove the accumulator cover (two bolts).

   NOTE: The accumulator cover is spring loaded. To prevent stripping the threads in the servo body, press down on the accumulator cover while unscrewing the bolts in a crisscross pattern.

5. Remove the bolts securing the servo body (nine bolts), then remove the servo body, servo separator plate and dowel pins (two).
6. Remove the accumulator body (six bolts).
7. Remove the regulator valve body (eight bolts).
8. Remove the stator shaft and stator shaft stop.
9. Remove the regulator separator plate and dowel pins (two).
10. Unhook the detent spring from the detent arm, then remove the detent arm shaft, detent arm, and control shaft.
11. Remove the cooler check valve spring and cooler check valve (steel ball).
12. Remove the main valve body (four bolts).
13. Remove the torque converter check valve and spring.
14. Remove the ATF pump driven gear shaft, then remove the ATF pump gears.
15. Remove the main separator plate and dowel pins (three).
16. Clean the inlet opening (A) of the ATF strainer (B) thoroughly with compressed air, then check that it is in good condition, and the inlet opening is not clogged.

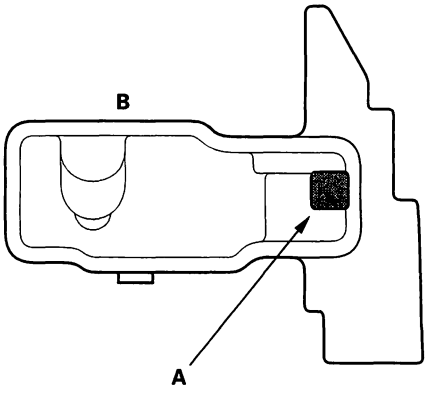

17. Test the ATF strainer by pouring clean ATF through the inlet opening, and replace it if it is clogged or damaged.

BACK

Valve Body Repair

NOTE: This repair is only necessary if one or more of the valves in a valve body do not slide smoothly in their bores. Use this procedure to free the valves.

1. Soak a sheet of # 600 abrasive paper in ATF for about 30 minutes.

2. Carefully tap the valve body so the sticking valve drops out of its bore. It may be necessary to use a small screwdriver to pry the valve free. Be careful not to scratch the bore with the screwdriver.

3. Inspect the valve for any scuff marks. Use the ATF-soaked # 600 paper to polish off any burrs that are on the valve, then wash the valve in solvent and dry it with compressed air.

4. Roll up half a sheet of ATF-soaked # 600 paper and insert it in the valve bore of the sticking valve. Twist the paper slightly, so that it unrolls and fits the bore tightly, then polish the bore by twisting the paper as you push it in and out.

   NOTE: The valve body is aluminum and doesn't require much polishing to remove any burrs.

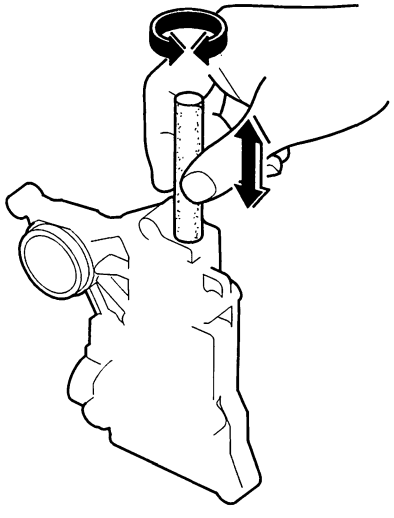

5. Remove the # 600 paper. Thoroughly wash the entire valve body in solvent, then dry it with compressed air.

6. Coat the valve with ATF, then drop it into its bore. It should drop to the bottom of the bore under its own weight. If not, repeat step 4, then retest. If the valve still sticks, replace the valve body.

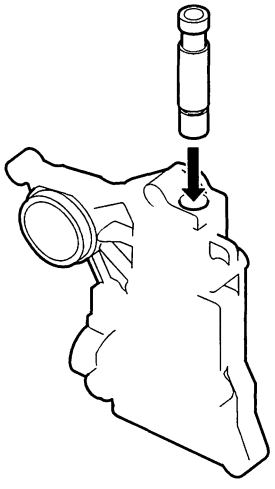

7. Remove the valve, and thoroughly clean it and the valve body with solvent. Dry all parts with compressed air, then reassemble using ATF as a lubricant.

Valve Body Valve Reassembly

1. Coat all parts with ATF before assembly.

2. Install the valves and springs in the sequence shown for the main valve body (see page 14-161), regulator valve body (see page 14-164), and servo body (see page 14-165). Refer to the following valve cap illustrations, and install each valve cap so the end shown facing up will be facing the outside of the valve body.

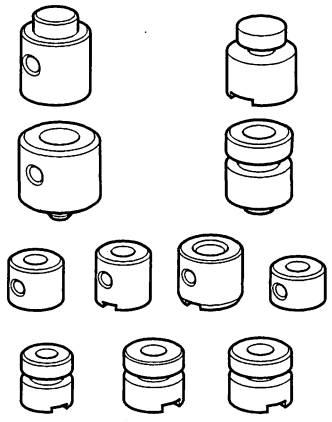

3. Install all the springs and seats. Insert the spring (A) in the valve, then install the valve in the valve body (B). Push the spring in with a screwdriver, then install the spring seat (C).

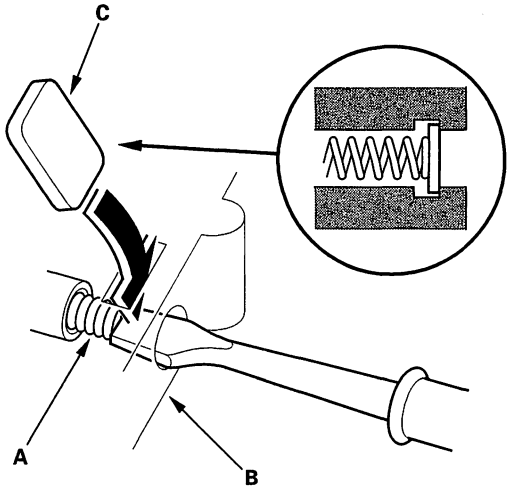

BACK

Main Valve Body Disassembly, Inspection, and Reassembly

1. Clean all parts thoroughly in solvent or carburetor cleaner, and dry them with compressed air. Blow out all passages.
2. Do not use a magnet to remove the check valve ball; it may magnetize the ball.
3. Check all valves for free movement. If any fail to slide freely, refer to Valve Body Repair (see page 14-159).
4. Replace the valve body as an assembly if any parts worn or damaged.
5. Coat all parts with ATF during assembly.
6. Install the filter in the direction shown.

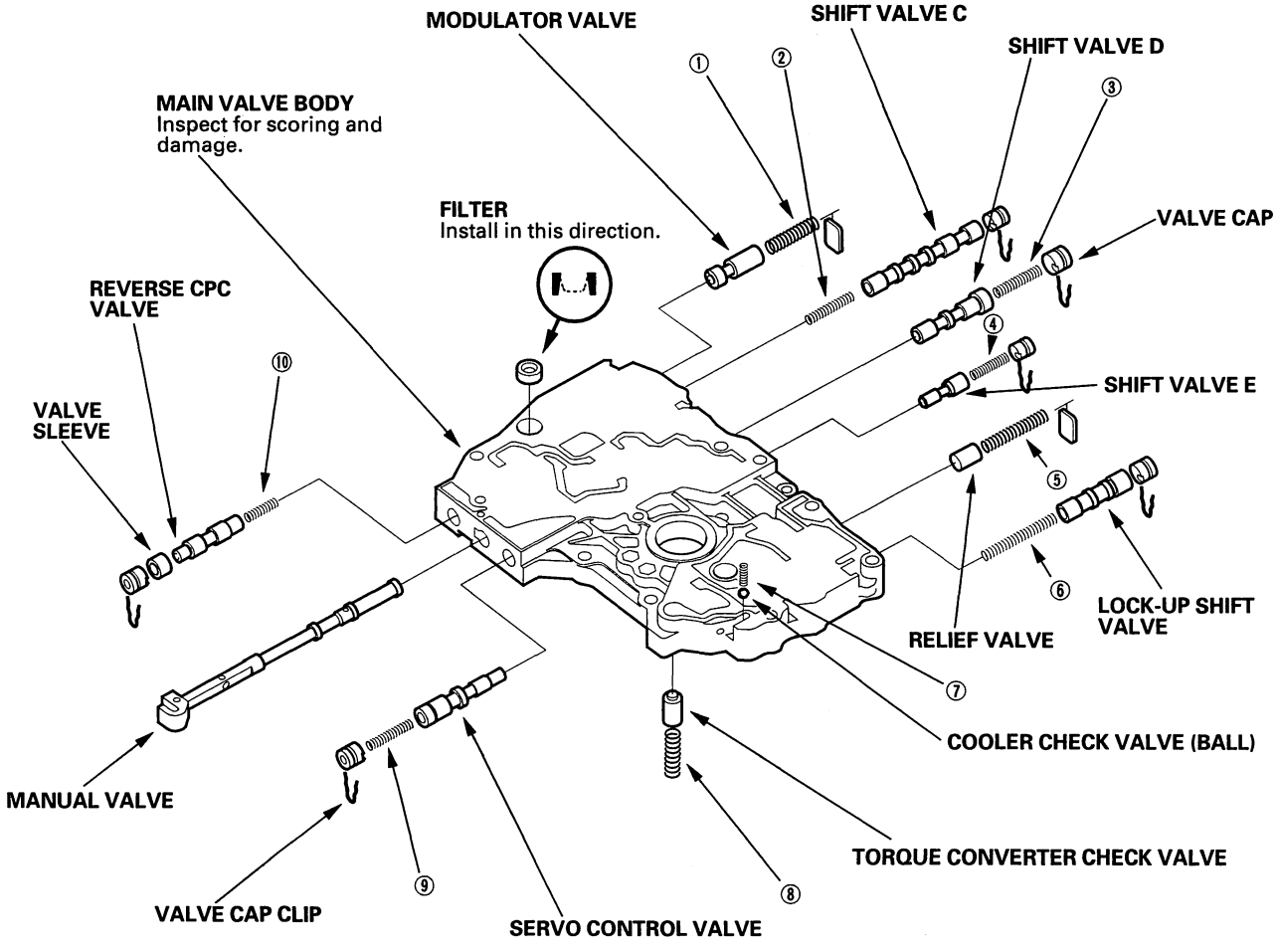

(cont'd)

Main Valve Body Disassembly, Inspection, and Reassembly (cont'd)

Sectional View

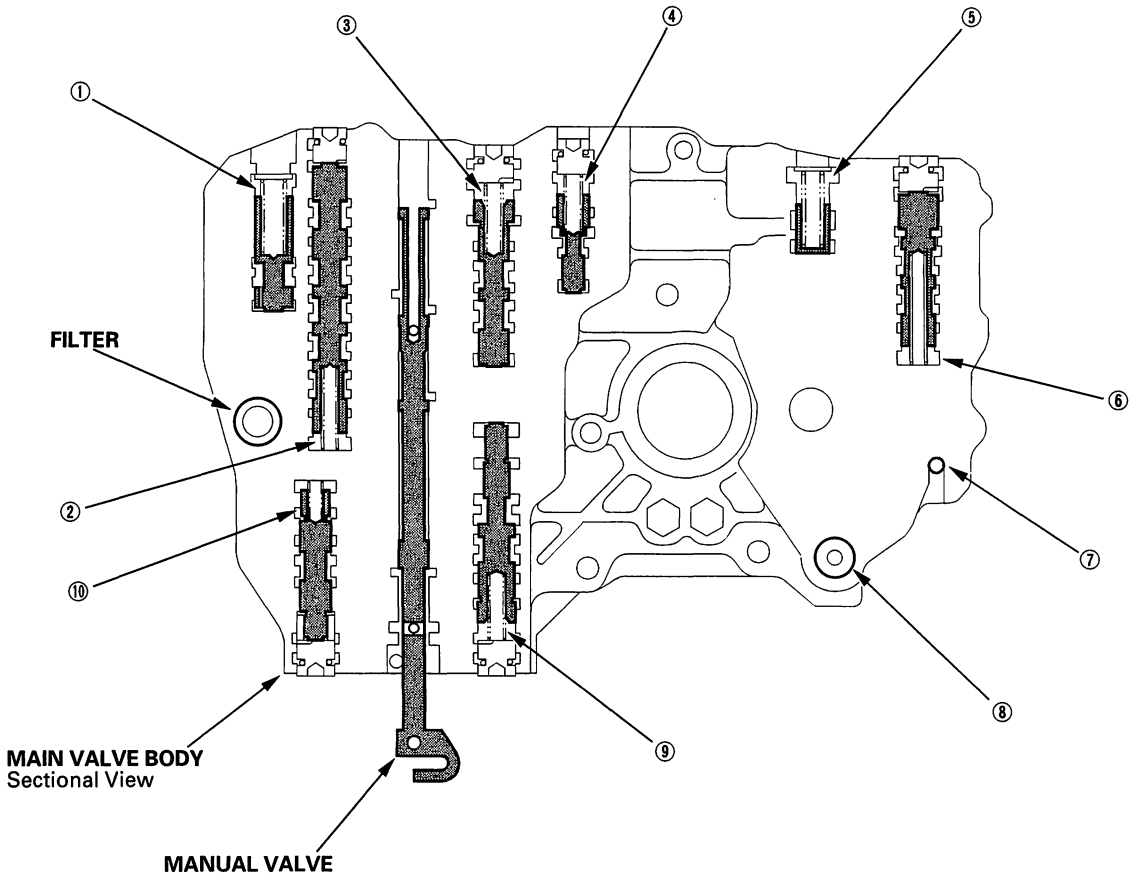

SPRING SPECIFICATIONS

No.	Spring	Standard (New)-Unit: mm (in.)			
		Wire Dia.	O.D.	Free Length	No. of Coils
①	Modulator valve spring	1.6 (0.063)	10.4 (0.409)	33.5 (1.319)	9.8
②	Shift valve C spring	0.8 (0.031)	6.6 (0.260)	49.1 (1.933)	21.7
③	Shift valve D spring	0.7 (0.028)	6.6 (0.260)	35.7 (1.406)	17.2
④	Shift valve E spring	0.7 (0.028)	6.6 (0.260)	32.2 (1.268)	13.4
⑤	Relief valve spring	1.1 (0.043)	8.6 (0.339)	30.1 (1.185)	10.7
⑥	Lock-up shift valve spring	0.9 (0.035)	7.6 (0.299)	63.0 (2.480)	22.4
⑦	Cooler check valve spring	0.6 (0.024)	5.8 (0.228)	14.5 (0.571)	6.8
⑧	Torque converter check valve	1.2 (0.047)	8.6 (0.339)	35.1 (1.382)	14.3
⑨	Servo control valve spring	0.7 (0.028)	6.6 (0.260)	35.7 (1.406)	17.2
⑩	Reverse CPC valve spring	0.7 (0.028)	6.1 (0.240)	17.8 (0.701)	7.9

BACK

ATF Pump Inspection

1. Install the ATF pump drive gear (A), driven gear (B) and ATF pump driven gear shaft (C) in the main valve body (D). Lubricate all parts with ATF, and install the ATF pump driven gear with its grooved and chamfered side facing up.

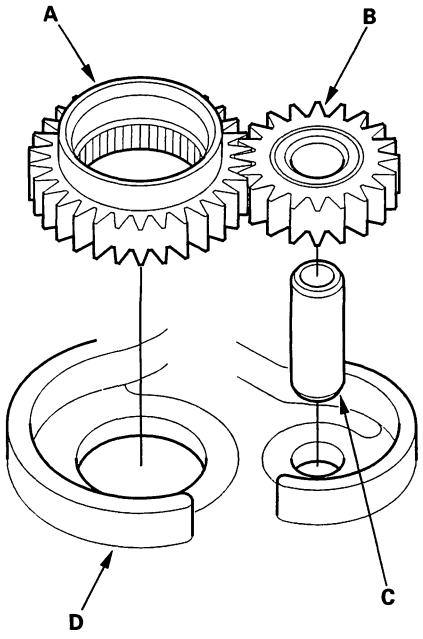

2. Measure the side clearance of the ATF pump drive gear (A) and driven gear (B).

   ATF Pump Gears Side (Radial) Clearance:
   Standard (New):
   ATF Pump Drive Gear
   0.210 – 0.265 mm (0.0083 – 0.00104 in.)
   ATF Pump Driven Gear
   0.035 – 0.063 mm (0.0014 – 0.0025 in.)

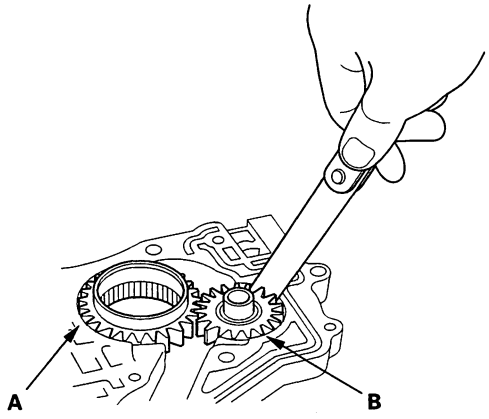

3. Remove the ATF pump driven gear shaft. Measure the thrust clearance between the ATF pump driven gear (A) and the valve body (B) with a straight edge (C) and a feeler gauge (D).

   ATF Pump Drive/Driven Gear Thrust (Axial) Clearance:
   Standard (New): 0.03 – 0.05 mm (0.001 – 0.002 in.)
   Service Limit: 0.07 mm (0.003 in.)

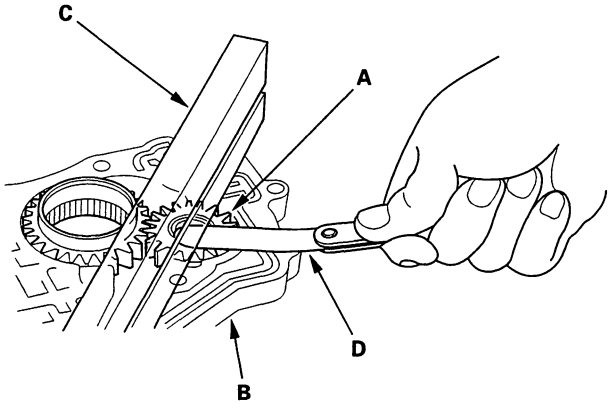

Regulator Valve Body Disassembly, Inspection, and Reassembly

1. Clean all parts thoroughly in solvent or carburetor cleaner, and dry them with compressed air. Blow out all passages.
2. Check all valves for free movement, If any fail to slide freely, refer to Valve Body Repair (see page 14-159).
3. Replace the valve body as an assembly if any parts are worn or damaged.
4. Hold the regulator spring cap in place while removing the stop bolt. The regulator spring cap is spring loaded. Once the stop bolt is removed, release the spring cap slowly so it does not pop out.
5. Reassembly is the reverse of the disassembly. Install the filter in the direction shown.
6. Coat all parts with ATF during reassembly.
7. Align the hole in the regulator spring cap with the hole in the valve body, then press the spring cap into the valve body, and tighten the stop bolt.

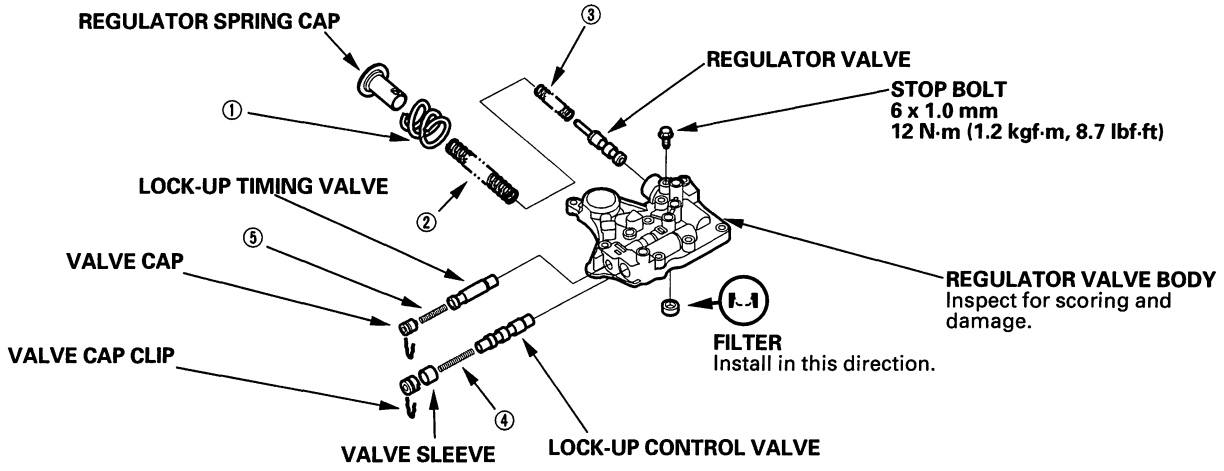

SPRING SPECIFICATIONS

No.	Spring	Standard (New)-Unit: mm (in.)			
		Wire Dia.	O.D.	Free Length	No. of Coils
①	Stator reaction spring	5.5 (0.217)	37.4 (1.472)	30.3 (1.193)	2.12
②	Regulator valve spring A	1.8 (0.071)	14.7 (0.579)	87.5 (3.445)	16.5
③	Regulator valve spring B	1.7 (0.067)	9.4 (0.370)	44.0 (1.732)	13.4
④	Lock-up control valve spring	0.7 (0.028)	6.6 (0.260)	42.9 (1.689)	14.2
⑤	Lock-up timing valve spring	0.65 (0.026)	6.6 (0.260)	34.8 (1.370)	15.6

BACK

Servo Body Disassembly, Inspection, and Reassembly

1. Clean all parts thoroughly in solvent or carburetor cleaner, and dry them with compressed air. Blow out all passages.
2. Check all valves for free movement. If any fail to slide freely, refer to Valve Body Repair (see page 14-159).
3. Replace the valve body as an assembly if any parts worn or damaged.
4. Coat all parts with ATF during reassembly.

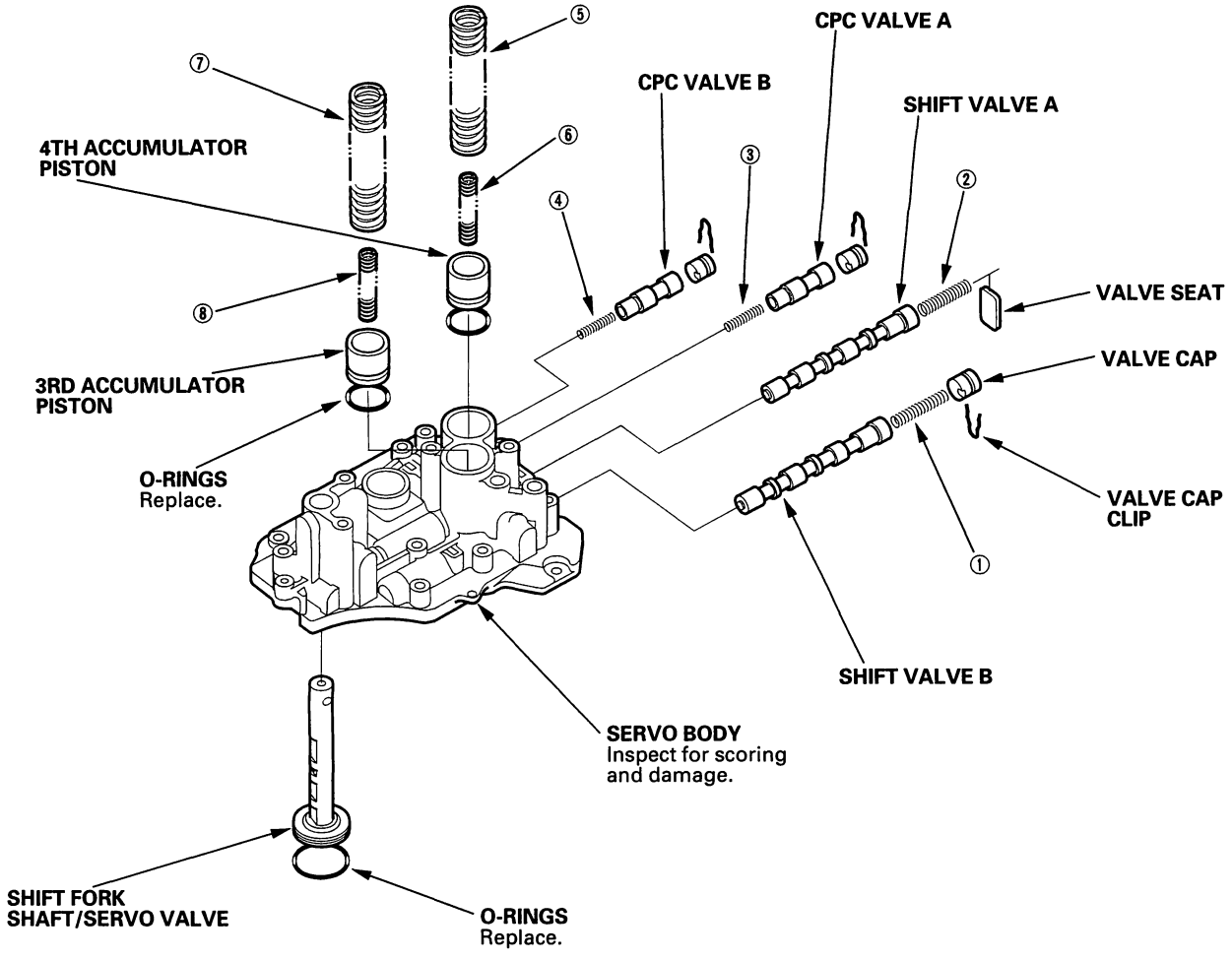

SPRING SPECIFICATIONS

No.	Spring	Standard (New)-Unit: mm (in.)			
		Wire Dia.	O.D.	Free Length	No. of Coils
①	Shift valve B spring	0.8 (0.031)	7.1 (0.280)	40.4 (1.591)	16.9
②	Shift valve A spring	0.8 (0.031)	7.1 (0.280)	40.4 (1.591)	16.9
③	CPC valve A spring	0.7 (0.028)	6.1 (0.240)	17.8 (0.701)	7.9
④	CPC valve B spring	0.7 (0.028)	6.1 (0.240)	17.8 (0.701)	7.9
⑤	4th accumulator spring A	2.6 (0.102)	19.6 (0.772)	66.4 (2.614)	9.7
⑥	4th accumulator spring B	2.4 (0.094)	12.8 (0.504)	51.5 (2.028)	11.5
⑦	3rd accumulator spring A	2.6 (0.102)	19.6 (0.772)	66.4 (2.614)	9.7
⑧	3rd accumulator spring B	2.4 (0.094)	12.8 (0.504)	51.5 (2.028)	11.5

Accumulator Body Disassembly, Inspection, and Reassembly

1. Do not use a magnet to remove the check balls: it may magnetize the balls.
2. Clean all parts thoroughly in solvent or carburetor cleaner, and dry them with compressed air. Blow out all passages.
3. Coat all parts with ATF during reassembly.

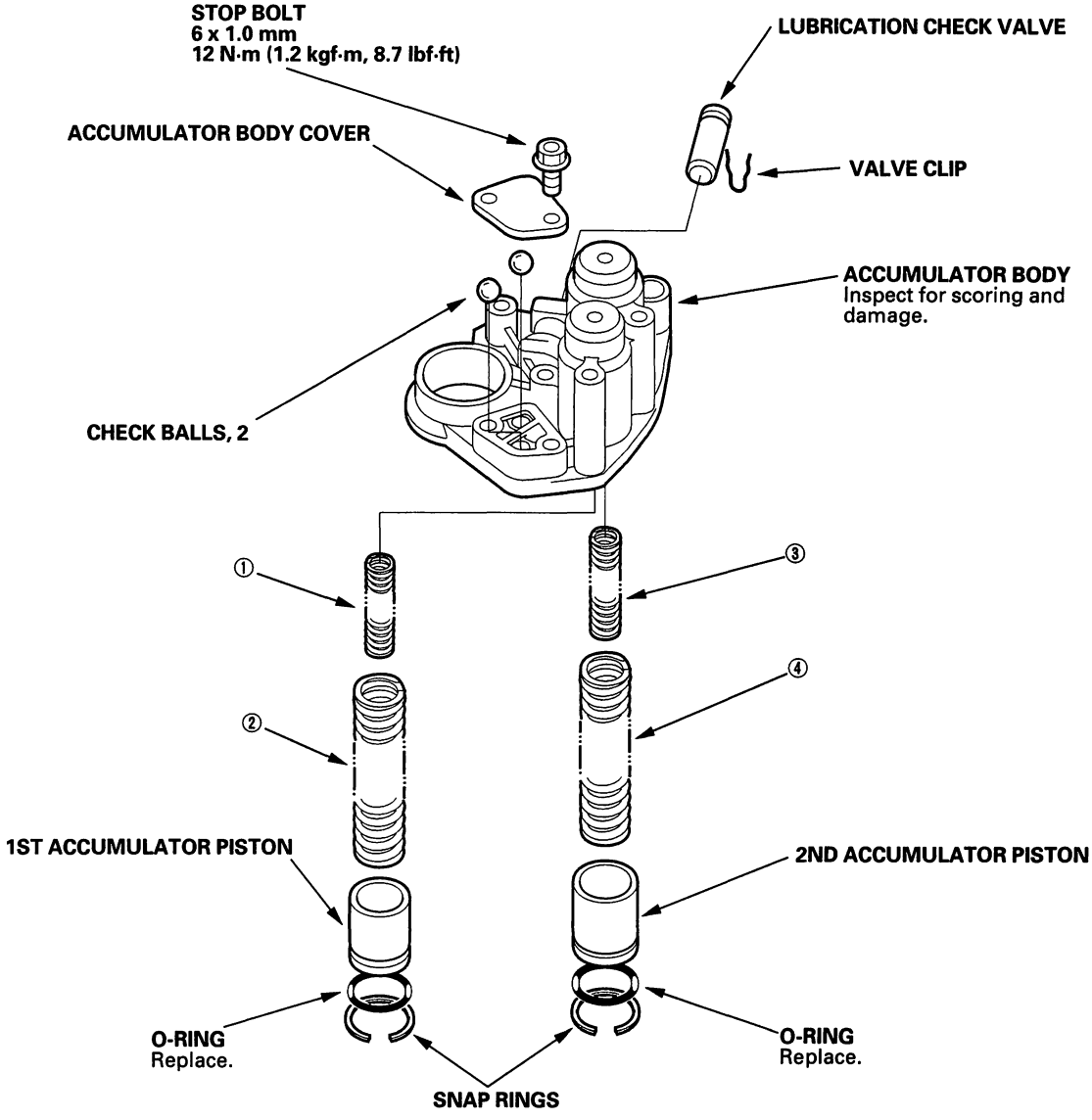

SPRING SPECIFICATIONS

No.	Springs	Standard (New)-Unit: mm (in.)			
		Wire Dia.	O.D.	Free Length	No. of Coils
①	1st accumulator spring B	2.7 (0.106)	15.0 (0.591)	52.5 (2.067)	10.3
②	1st accumulator spring A	2.5 (0.098)	21.6 (0.850)	87.5 (3.445)	11.8
③	2nd accumulator spring B	2.4 (0.094)	12.6 (0.496)	53.5 (2.106)	12.9
④	2nd accumulator spring A	2.7 (0.106)	19.6 (0.772)	66.3 (2.610)	9.9

BACK

Mainshaft Bearing and Oil Seal Replacement

Special Tools Required
- Adjustable bearing puller, 25 – 40 mm 07736-A01000B or 07736-A01000A
- Driver 07749-0010000
- Attachment, 62 x 68 mm 07746-0010500
- Attachment, 72 x 75 mm 07746-0010600

1. Remove the mainshaft bearing and oil seal with the special tool and a commercially available 3/8"-16 slide hammer (A).

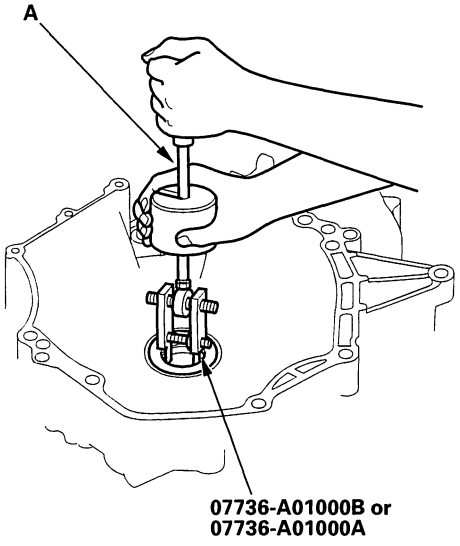

2. Install the new mainshaft bearing until it bottoms in the housing with the special tools.

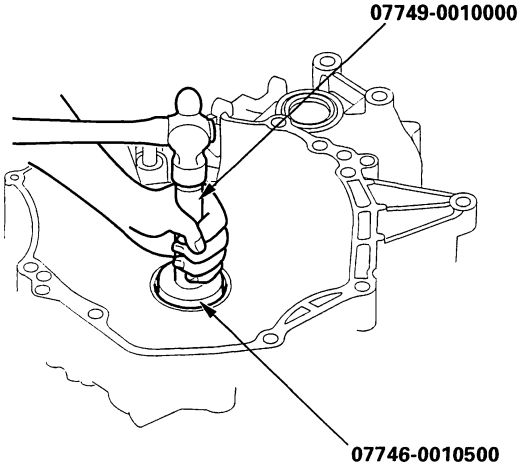

3. Install the new oil seal flush with the housing with the special tools.

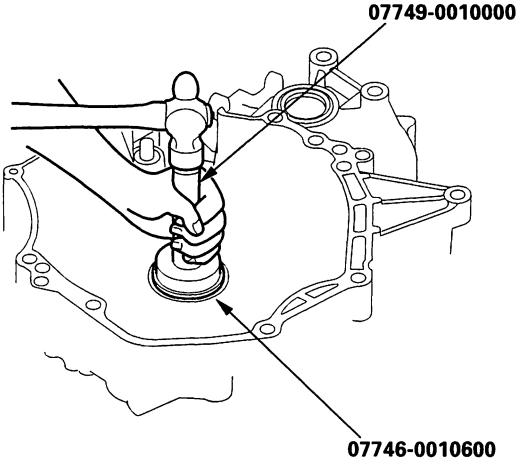

Countershaft Bearing Replacement

Special Tools Required
- Adjustable bearing puller, 25—40 mm 07736-A01000B or 07736-A01000A
- Driver 07749-0010000
- Attachment, 62 x 68 mm 07746-0010500

1. Remove the countershaft bearing (A) with the special tool and a commercially available 3/8"-16 slide hammer (B).

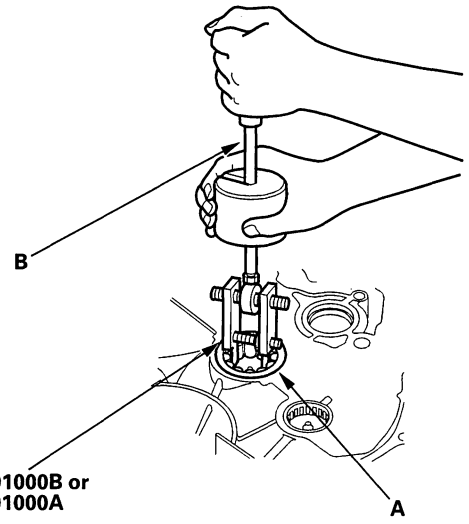

2. Install the ATF guide plate (A).

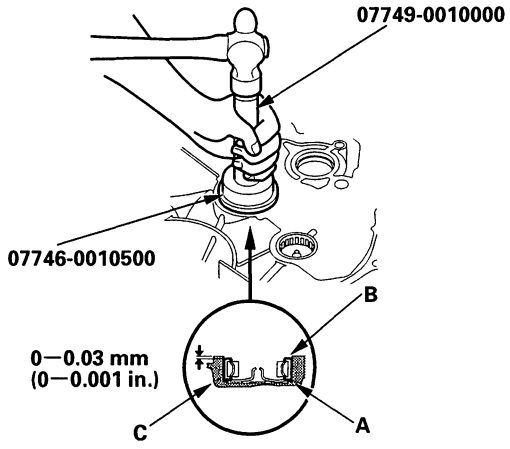

3. Install the new bearing (B) into the housing (C) with the special tools.

Secondary Shaft Bearing Replacement

Special Tools Required
- Adjustable bearing puller, 25—40 mm 07736-A01000B or 07736-A01000A
- Driver 07749-0010000
- Driver attachment 07947-6340500

1. Remove the secondary shaft bearing (A) with the special tool and a commercially available 3/8"-16 slide hammer (B).

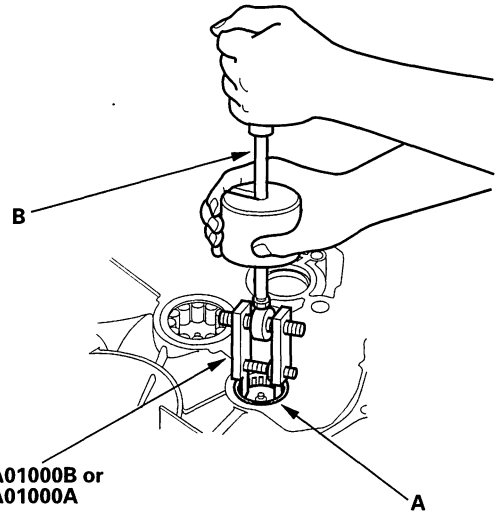

2. Install the ATF guide plate (A).

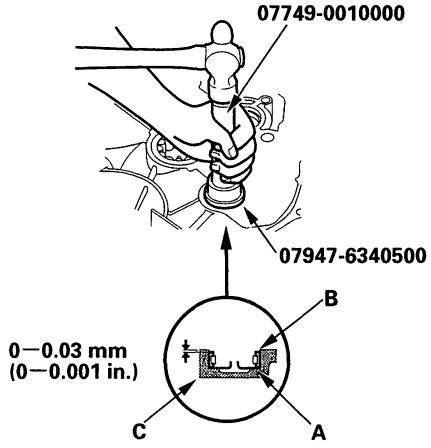

3. Install the new bearing (B) into the housing (C) with the special tools.

BACK

Mainshaft Disassembly, Inspection, and Reassembly

1. Lubricate all parts with ATF during reassembly.

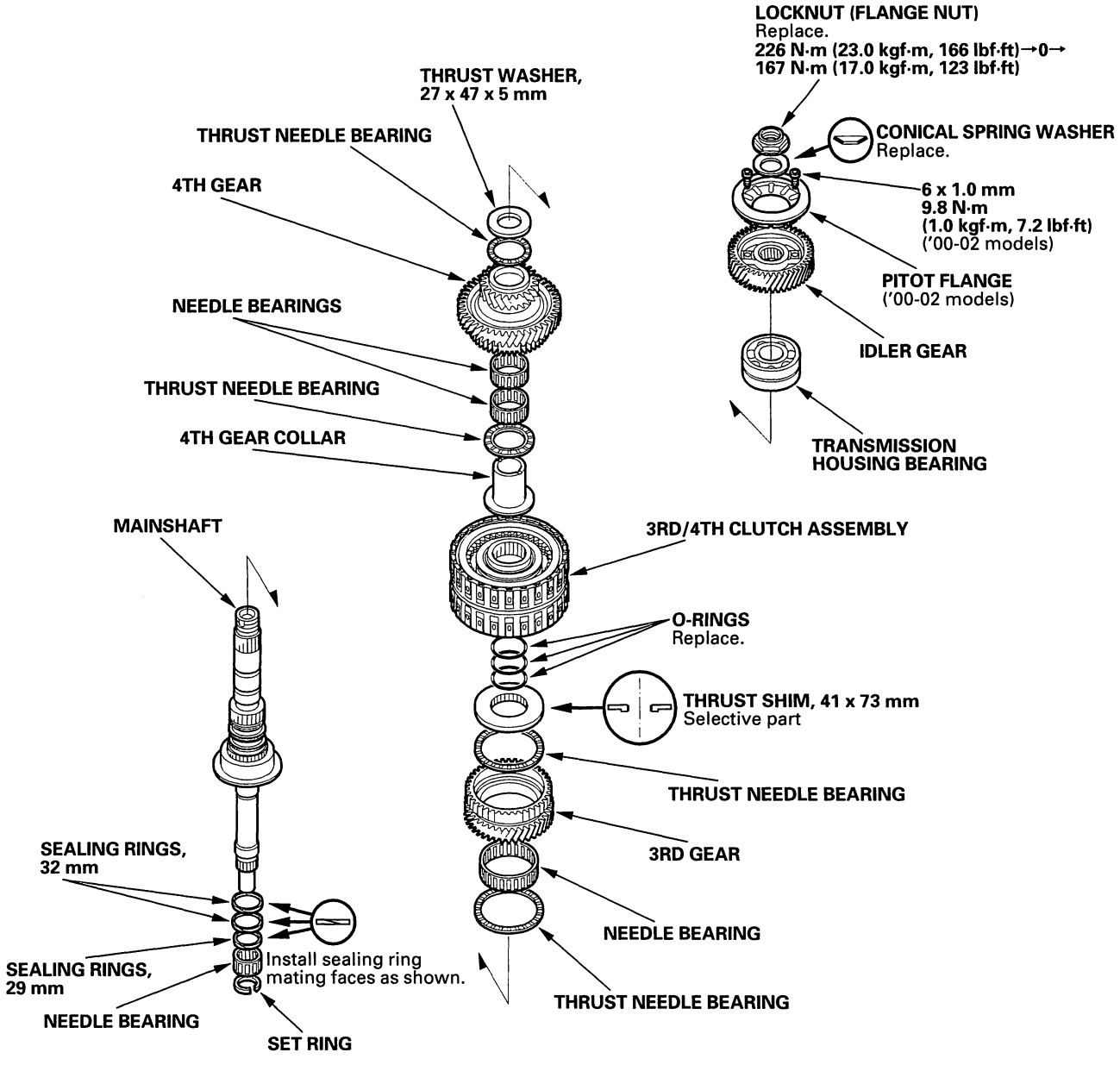

2. Check the clearance of the 3rd/4th clutch assembly (see page 14-170).
3. Inspect the thrust needle bearing and the needle bearing for galling and rough movement.
4. Inspect the splines for excessive wear and damage.
5. Check shaft bearing surfaces for scoring, scratches, and excessive wear.
6. Before installing the O-rings, wrap the shaft splines with tape to prevent damage to the O-rings.
7. Install the conical spring washer and 41 x 73 mm thrust shim in the direction shown.
8. Inspect condition of the sealing rings. If the sealing rings are worn, distorted, or damaged, replace them (see page 14-171).

3rd/4th Clutch Clearance Inspection

1. Remove the O-rings from the mainshaft.

2. Assemble the 41 x 73 mm thrust shim (A), 3rd/4th clutch assembly (B), and 4th gear collar (C) on the mainshaft (D).

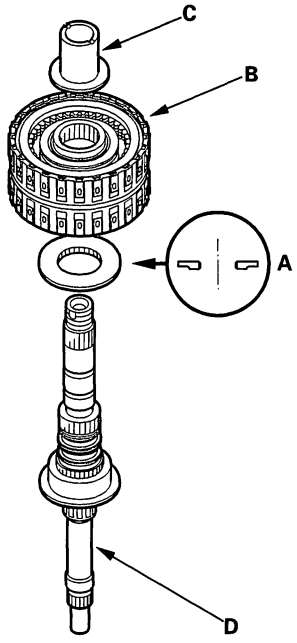

3. Hold the 4th gear collar (C) against the clutch assembly (B), then measure the clearance between the clutch guide (E) and the 4th gear collar with a feeler gauge (F) in at least three places. Use the average as the actual clearance.

STANDARD: 0.03 – 0.11 mm (0.001 – 0.004 in.)

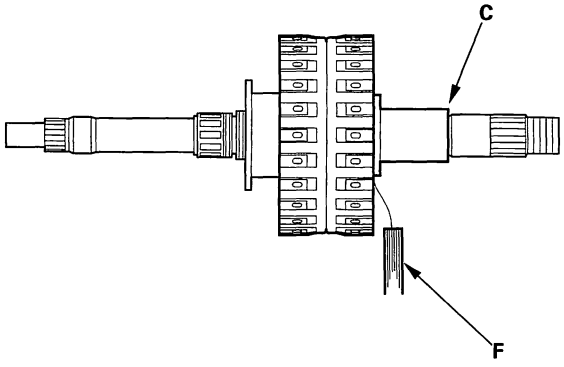

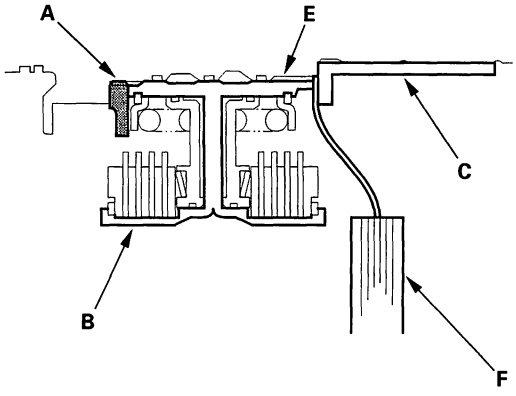

4. If the clearance is out of standard, remove the thrust shim and measure its thickness.

5. Select and install a new shim, then recheck.

THRUST SHIM, 41 x 73 mm

No.	Part Number	Thickness
1	90414-P7X-000	7.85 mm (0.309 in.)
2	90415-P7X-000	7.90 mm (0.311 in.)
3	90416-P7X-000	7.95 mm (0.313 in.)
4	90417-P7X-000	8.00 mm (0.315 in.)
5	90418-P7X-000	8.05 mm (0.317 in.)
6	90419-P7X-000	8.10 mm (0.319 in.)

6. After replacing the thrust shim, make sure the clearance is within standard.

BACK

Mainshaft Sealing Rings Replacement

The sealing rings are synthetic resin with chamfered ends. Check condition of the sealing rings, and replace them only if they are worn, distorted, or damaged.

1. For a better fit, squeeze the sealing rings (A) together slightly before installing them.

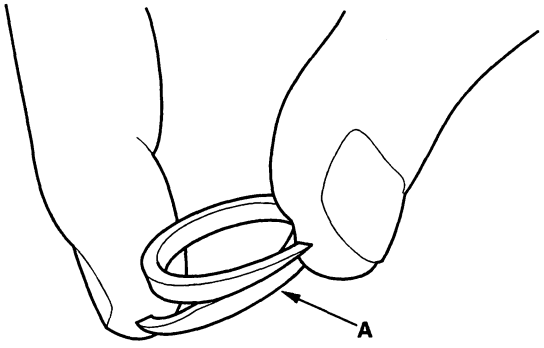

2. Apply ATF to the new sealing rings then install them on the mainshaft.

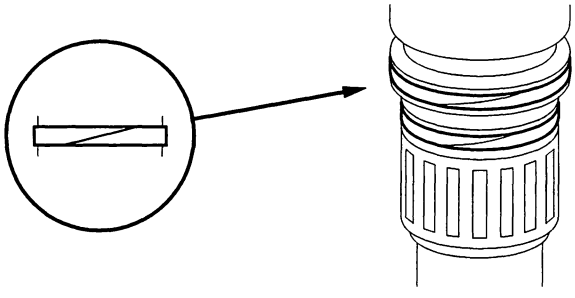

3. After installing the sealing rings, verify the following:

   - The rings are fully seated in the groove.
   - The rings are not twisted.
   - The chamfered ends of the rings are properly joined.

Countershaft Disassembly, Inspection, and Reassembly

1. Remove the locknut, and take off components down to the reverse selector hub.

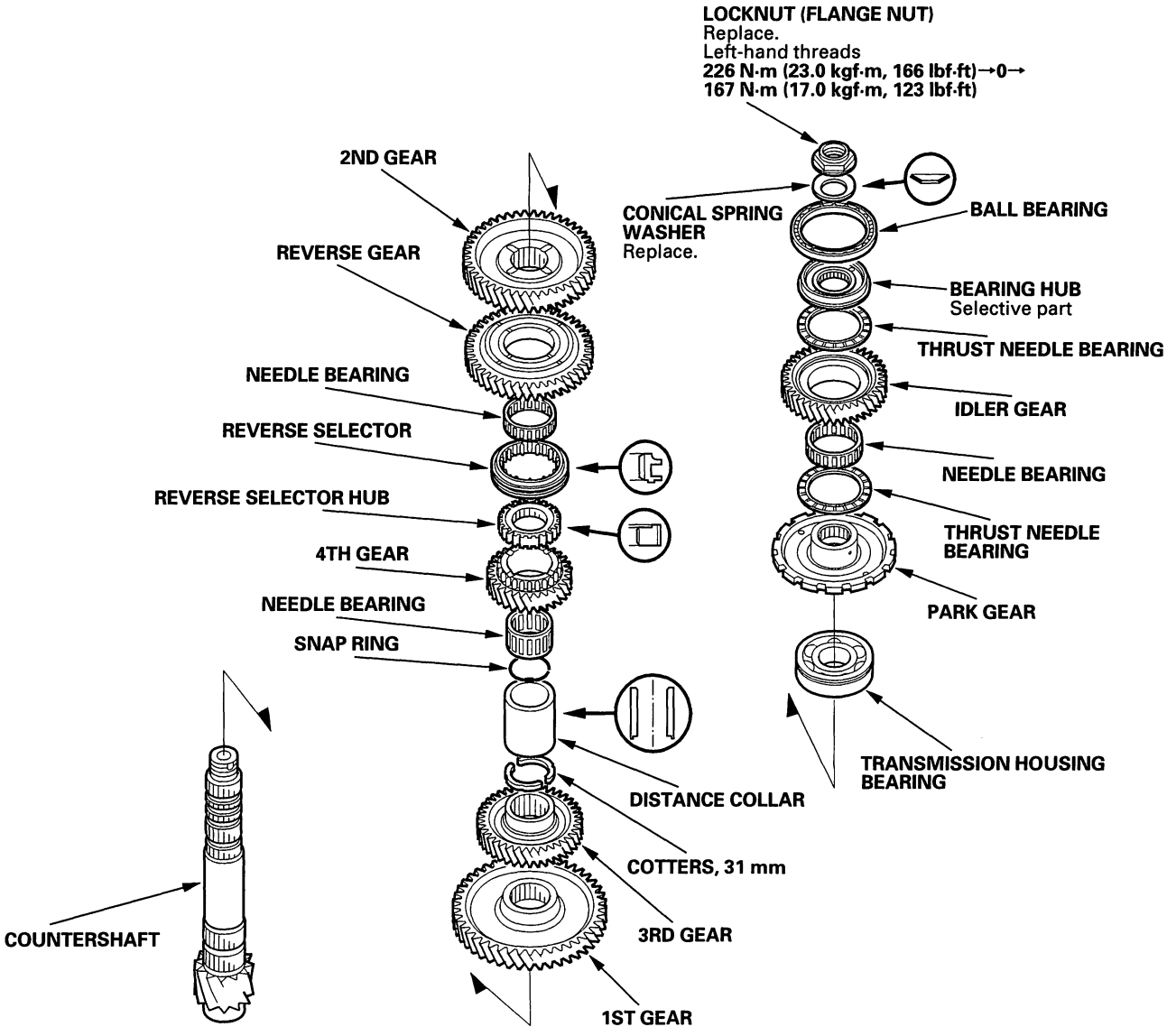

2. Remove the reverse selector hub, 3rd gear, and 1st gear (see page 14-173).

3. Check the bearing in the bearing hub for wear and rough movement. If the bearing is worn or damaged, replace it (see page 14-175).

4. Inspect the thrust needle bearing and the needle bearing for galling and rough movement.

5. Check the splines for excessive wear and damage.

6. Check the shaft bearing surfaces for scoring, scratches, and excessive wear.

7. Lubricate all parts with ATF, and reassemble the shafts and gears.

8. Install the conical spring washer, reverse selector, reverse selector hub, and distance collar in the direction shown.

BACK

Countershaft Reverse Selector Hub, 3rd Gear, and 1st Gear Replacement

Special Tools Required
Driver 40 mm I.D. 07746-0030100

Removal

1. Remove the reverse selector hub (A) and the 4th gear (B) with a universal two-jaw (or three-jaw) puller (C). Place a shaft protector (D) between the puller and countershaft (E) to prevent damaging the countershaft.

   NOTE: Some of the reverse selector hubs are not press-fitted, and can be removed without using a puller.

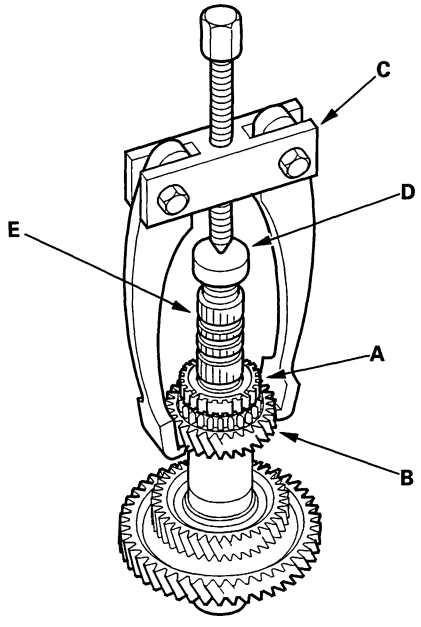

2. Remove the needle bearing, snap ring, distance collar, and 31 mm cotters from the countershaft.

3. Remove the 1st gear (A) and 3rd gear (B) together from the countershaft (C) with a puller (D). Place a shaft protector (E) between the puller and countershaft to prevent damaging the countershaft.

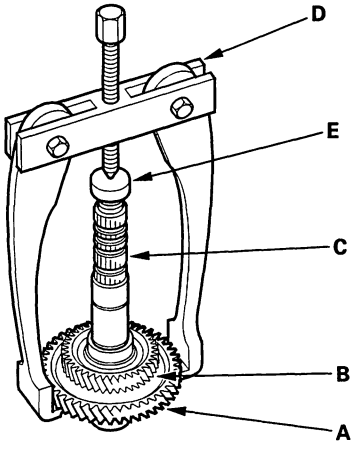

(cont'd)

Countershaft Reverse Selector Hub, 3rd Gear, and 1st Gear Replacement (cont'd)

Installation

1. Apply ATF to the parts.

2. Install the 1st gear on the countershaft by hand.

3. Align the shaft splines with those on 3rd gear, then press the countershaft (A) into the 3rd gear with press.

   - Place an attachment (B) between the press and countershaft to prevent damaging the countershaft.
   - Stop pressing the countershaft when the 3rd gear contacts the 1st gear (C).

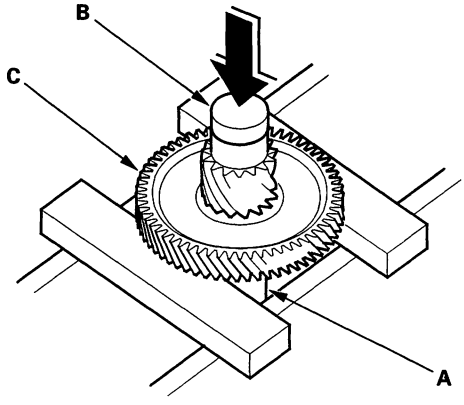

4. Install the 31 mm cotters, distance collar, snap ring, needle bearing, and 4th gear (A) on the countershaft.

5. Slide the reverse selector hub (B) over the countershaft (C), and then press it into place with the special tool and a press.

   NOTE: Some of the reverse selector hubs are not press-fitted and can be installed without using the special tool and a press.

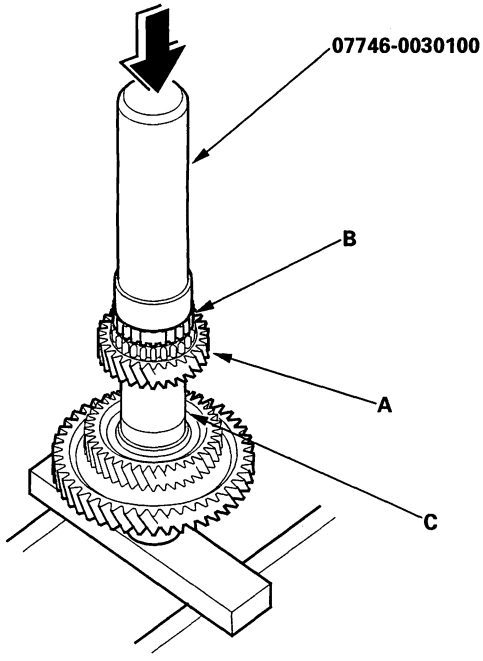

BACK

Countershaft Bearing Hub/Bearing Replacement

Special Tools Required
- Driver 07749-0010000
- Attachment, 42 x 47 mm 07746-0010300
- Attachment, 62 x 68 mm 07746-0010500

1. Check the bearing for wear, damage, and rough movement. If the bearing is worn or damaged, replace it.

2. Remove the bearing (A) from the bearing hub with the special tools, a bearing separator (B), and a press.

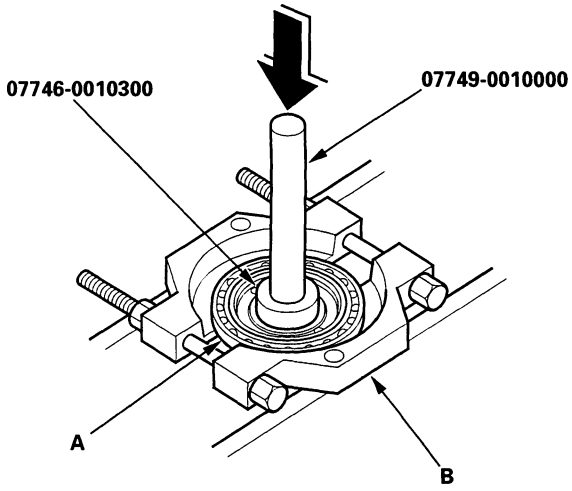

3. Install the new bearing on the bearing hub with the special tools and a press.

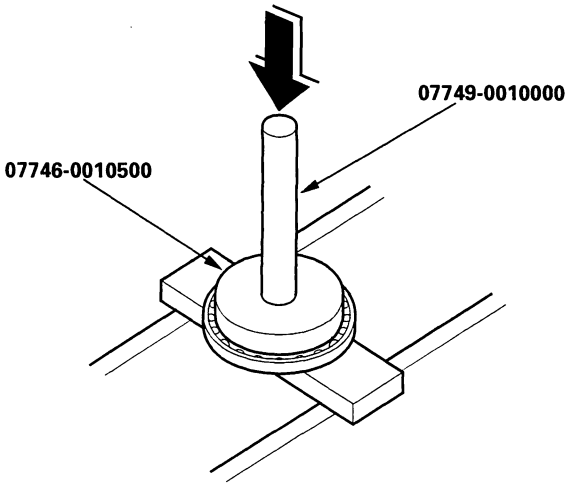

Secondary Shaft Disassembly, Inspection, and Reassembly

1. Remove the locknut, and disassemble the shaft and gears.

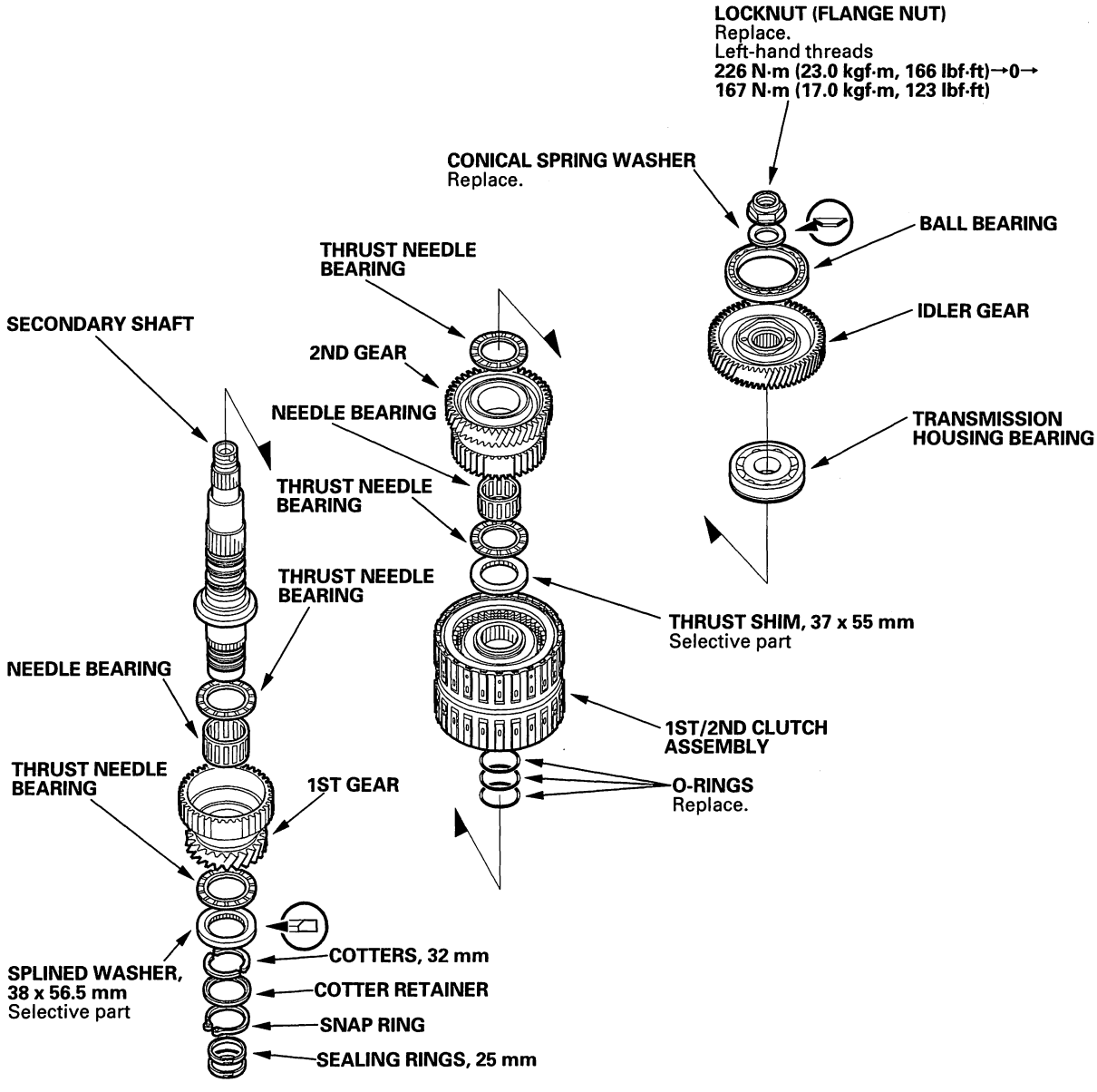

2. Inspect the thrust needle bearing and the needle bearing for galling and rough movement.
3. Check clearance of the secondary shaft assembly (see page 14-177).
4. Check the splines for excessive wear and damage.
5. Check the shaft bearing surfaces for scoring, scratches, and excessive wear.
6. Check the idler gear bearing for wear and rough movement. If the bearing is worn or damaged, replace it (see page 14-179).
7. Before installing the O-rings, wrap the shaft splines with tape to prevent damage to the O-rings.
8. Lubricate all parts with ATF during reassembly.
9. Install the conical spring washer and 38 x 56.5 mm splined washer in the direction shown.

BACK

Secondary Shaft Clearance Inspection

1. Remove the O-rings from the shaft.

2. Assemble the thrust needle bearing (A), needle bearing (B), 1st gear (C), thrust needle bearing (D), 38 x 56.5 mm splined washer (E), 32 mm cotters (F), cotter retainer (G), and snap ring (H) on the secondary shaft (I).

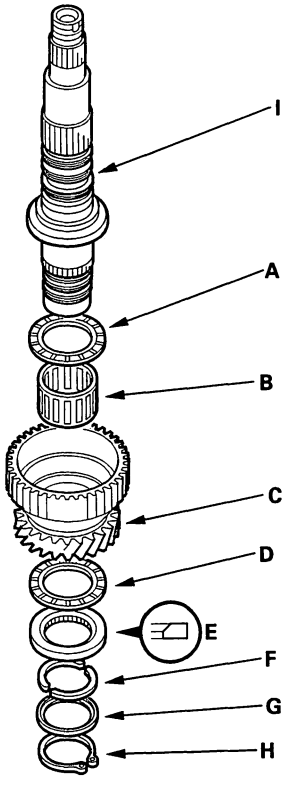

3. Measure the clearance between the 38 x 56.5 mm splined washer (E) and cotters (F) with a feeler gauge (J) in at least three places. Use the average as the actual clearance.

STANDARD: 0.07 – 0.15 mm (0.003 – 0.006 in.)

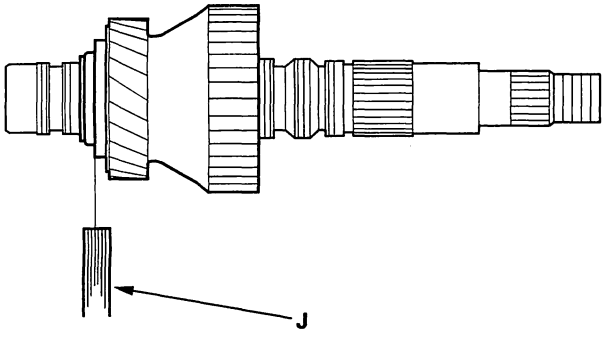

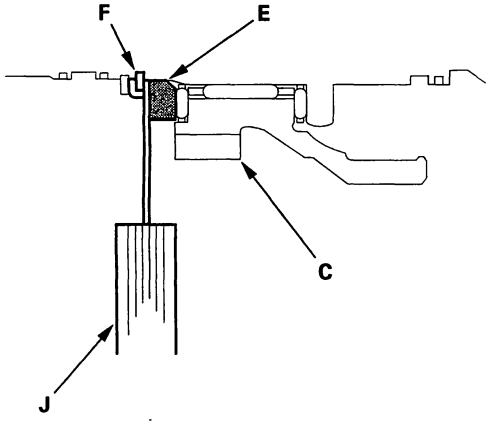

4. If the clearance is out of standard, remove the splined washer, and measure its thickness.

5. Select and install a new splined washer, then recheck.

SPLINED WASHER, 38 x 56.5 mm

No.	Part Number	Thickness
1	90502-P0Z-000	6.85 mm (0.270 in.)
2	90503-P0Z-000	6.90 mm (0.272 in.)
3	90504-P0Z-000	6.95 mm (0.274 in.)
4	90505-P0Z-000	7.00 mm (0.276 in.)
5	90506-P0Z-000	7.05 mm (0.278 in.)
6	90507-P0Z-000	7.10 mm (0.280 in.)

(cont'd)

Secondary Shaft Clearance Inspection (cont'd)

6. Remove the 27 x 47 x 5 mm thrust washer from the mainshaft.

7. Assemble the 1st/2nd clutch assembly (A), 37 x 55 mm thrust shim (B), thrust needle bearing (C), needle bearing (D), 2nd gear (E), thrust needle bearing (F), and 27 x 47 x 5 mm thrust washer (removed from mainshaft) (G) on the secondary shaft (H).

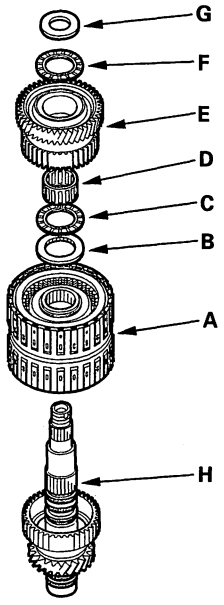

8. Set the dial indicator (I) on 2nd gear (E).

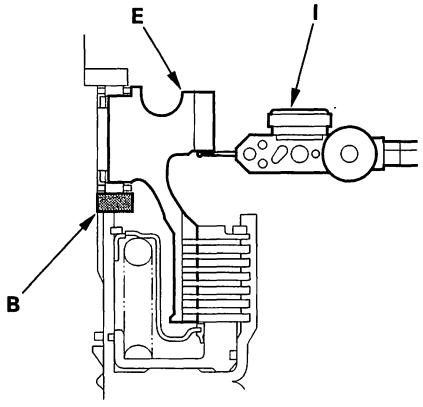

9. Hold the 27 x 47 x 5 mm thrust washer (G) against the clutch assembly (A), and measure the 2nd gear axial clearance in at least three places while moving the 2nd gear (E). Use the average as the actual clearance.

STANDARD: 0.04 – 0.12 mm (0.002 – 0.005 in.)

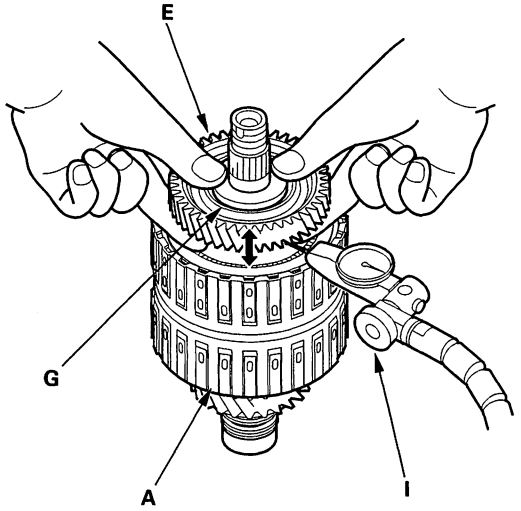

10. If the clearance is out of standard, remove the 37 x 55 mm thrust shim and measure its thickness.

11. Select and install a new thrust shim, then recheck.

THRUST SHIM, 37 x 55 mm

No.	Part Number	Thickness
1	90406-P0Z-000	4.90 mm (0.193 in.)
2	90407-P0Z-000	4.95 mm (0.195 in.)
3	90408-P0Z-000	5.00 mm (0.197 in.)
4	90409-P0Z-000	5.05 mm (0.199 in.)
5	90410-P0Z-000	5.10 mm (0.201 in.)
6	90411-P0Z-000	5.15 mm (0.203 in.)
7	90412-P0Z-000	5.20 mm (0.205 in.)

12. Disassemble the shaft and gears.

13. Reinstall the 27 x 47 x 5 mm thrust washer on the mainshaft.

BACK

Secondary Shaft Idler Gear Bearing Replacement

Special Tools Required
- Driver 07749-0010000
- Attachment, 62 x 68 mm 07746-0010500

1. Check the bearing for wear, damage, and rough movement. If the bearing is worn or damaged, go to step 2.

2. Place the secondary shaft idler gear in a vise with soft jaws.

3. Remove the bearing (A) from the secondary shaft idler gear (B) with a commercially available 3-jaw slide hammer (C).

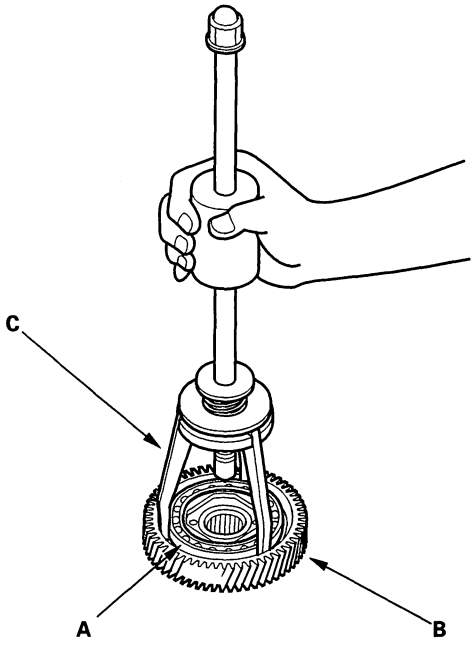

4. Install the bearing on the secondary shaft idler gear with the special tool and a press.

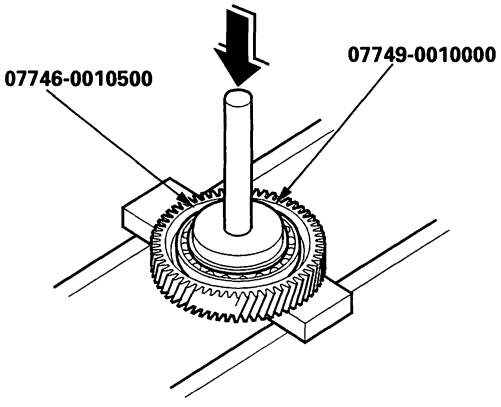

Clutch Disassembly

Special Tools Required
- Clutch spring compressor attachment 07LAE-PX40100
- Clutch spring compressor attachment 07HAE-PL50101
- Clutch spring compressor bolt assembly 07GAE-PG40200 or 07GAE-PG4020A

1. Remove the snap ring (A), then remove the clutch end plate, the clutch discs, and the plates with a screwdriver (B).

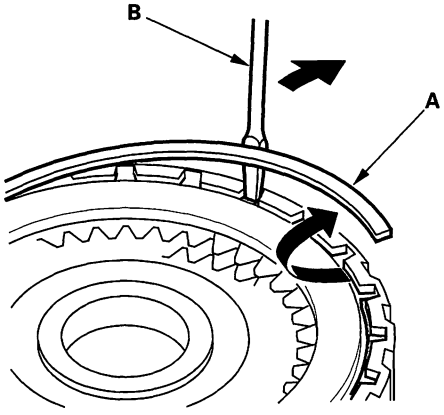

2. Remove the disc spring (A) from the 1st, 3rd and 4th clutches.

   NOTE: The 2nd clutch does not have a disc spring.

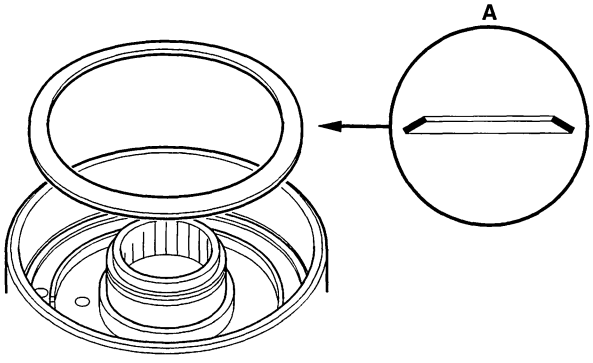

3. Install the special tools on the 3rd/4th clutch assembly.

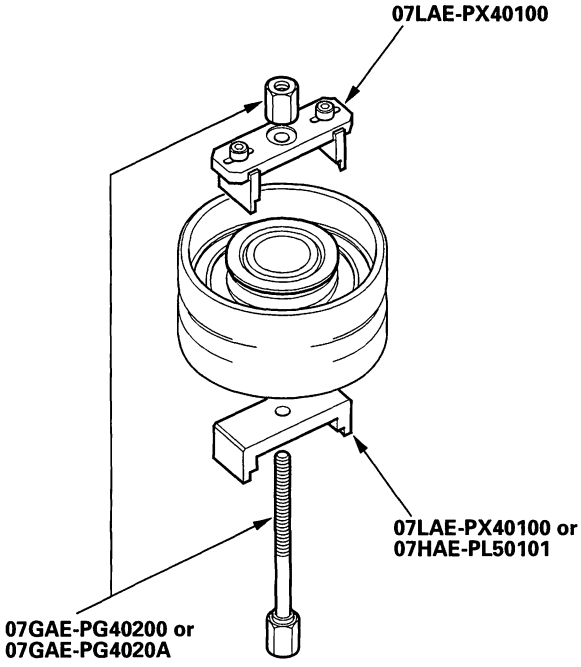

4. Be sure the special tool (A) is adjusted to have full contact with the spring retainer (B) on the 3rd and 4th clutches.

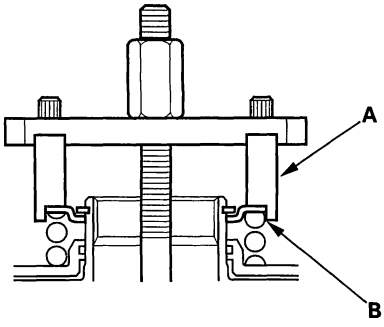

BACK

5. Set the special tool (A) on the spring retainer (B) of the 1st and 2nd clutches in such a way that the special tool works on the clutch return spring (C).

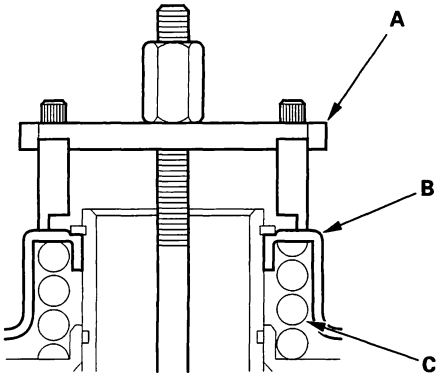

6. If either end of the special tool is set over an area of the spring retainer which is unsupported by the return spring, the retainer may be damaged.

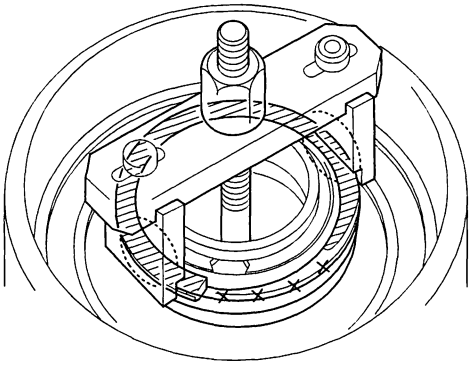

7. Compress the spring until the snap ring can be removed.

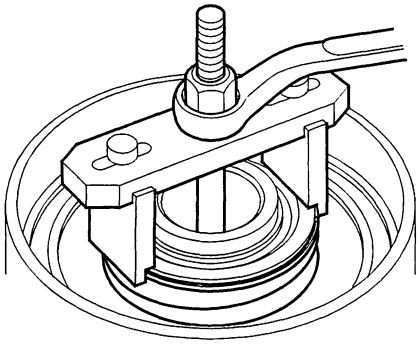

8. Remove the snap ring (A). Then remove the special tools (B), spring retainer (C), return spring.

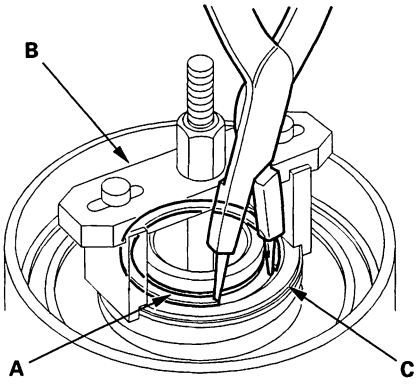

(cont'd)

Clutch Disassembly (cont'd)

9. For 3rd and 4th clutch: Wrap a shop rag around the clutch drum (A), and apply air pressure to the fluid passage to remove the piston (B). Place a finger tip on the other end while applying air pressure.

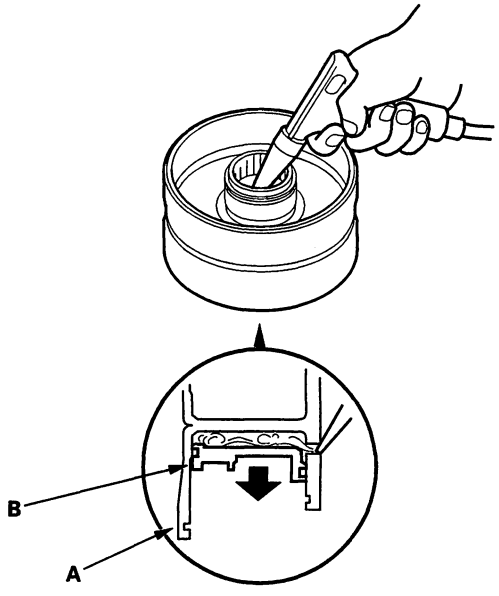

BACK

Clutch Inspection

1ST/2ND CLUTCH

NOTE: There are two types of spring retainer, you may find either type in the clutch assembly. Some spring retainers have seal lips, and do not have O-rings. The seal lip is undetachable from the spring retainer.

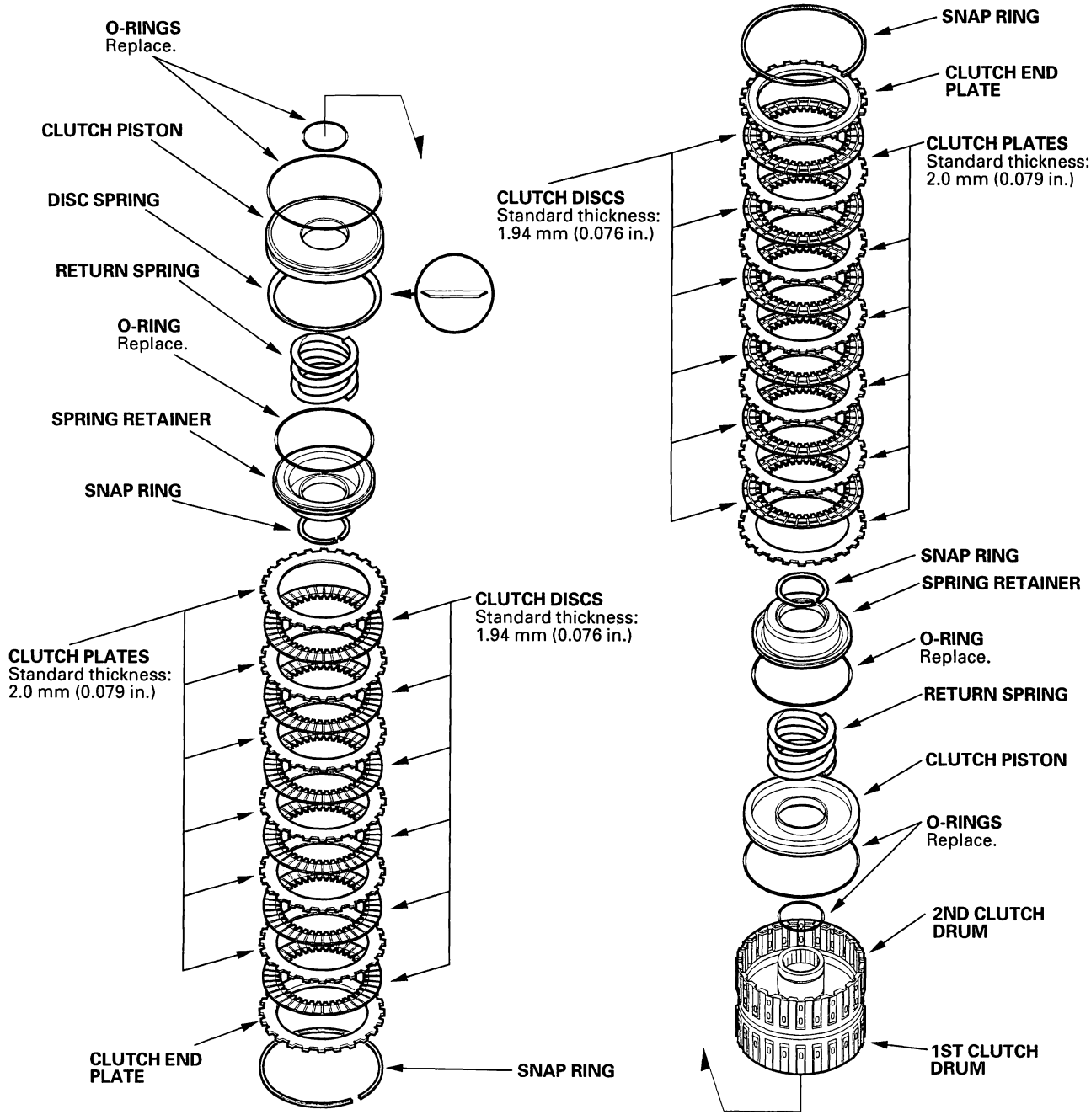

(cont'd)

Clutch Inspection (cont'd)

3RD/4TH CLUTCH

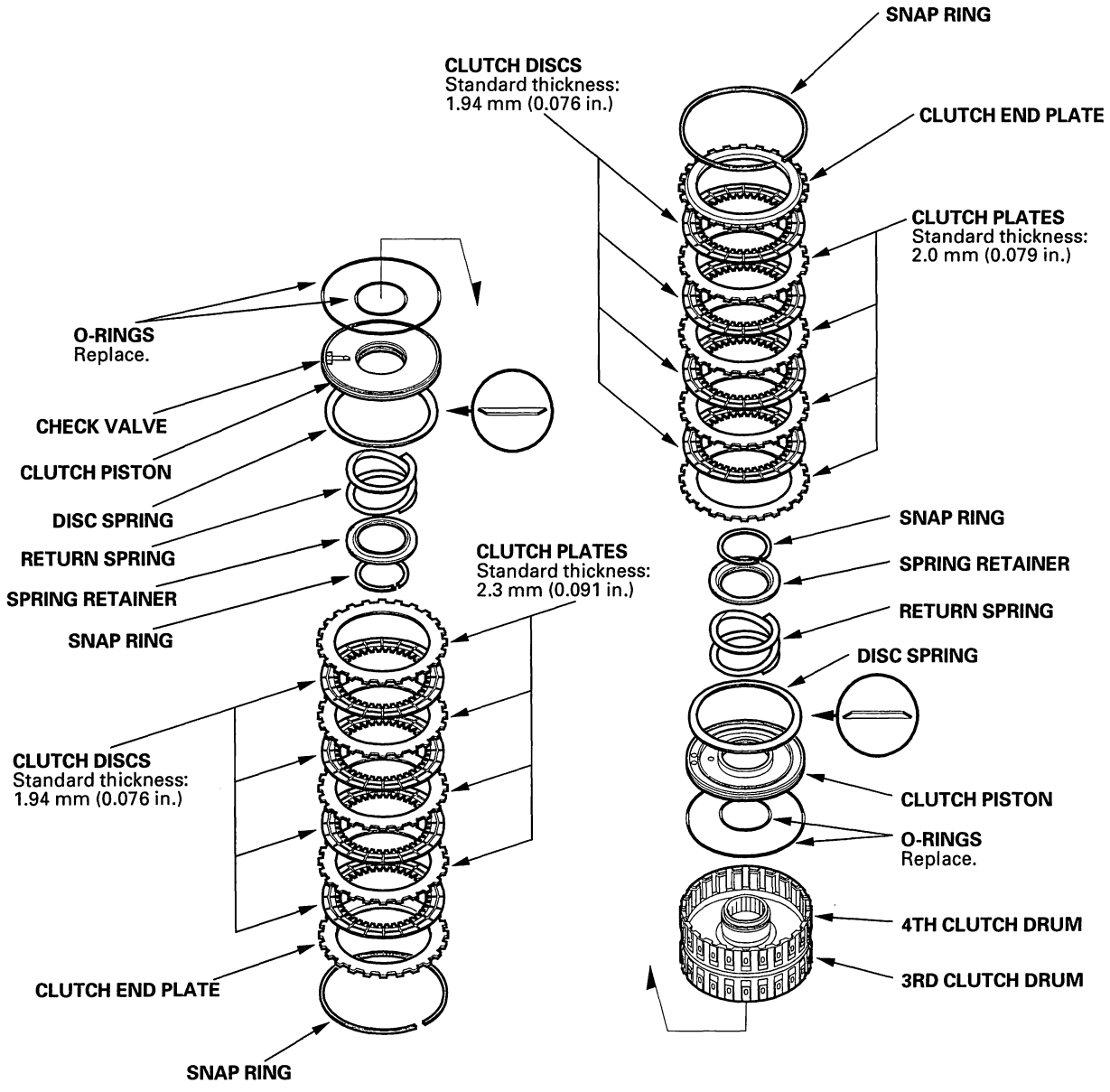

BACK

Clutch Reassembly

Special Tools Required
- Clutch spring compressor attachment 07LAE-PX40100
- Clutch spring compressor attachment 07HAE-PL50101
- Clutch spring compressor bolt assembly 07GAE-PG40200 or 07GAE-PG4020A
- Clutch compressor attachment 07ZAE-PRP0100

Note these items during reassembly:

- Clean all parts thoroughly in solvent or carburetor cleaner, and dry them with compressed air.
- Blow out all passages.
- Apply ATF to all parts before assembly.

1. Inspect the check valve (A) on the 3rd and 4th clutch pistons (B); if it's loose, replace the piston.

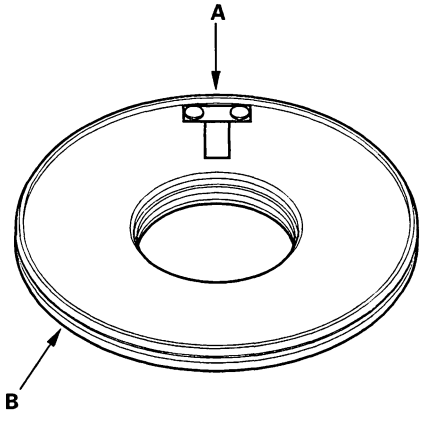

2. Install new O-rings (A) on the piston (B) and the spring retainer (1st and 2nd clutches).

   NOTE: Some spring retainers of the 1st and 2nd clutch have seal lips and do not have O-rings.

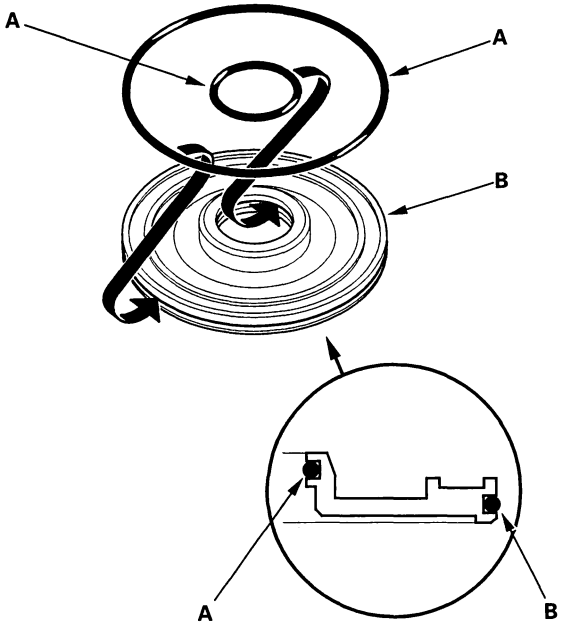

3. Install the piston (A) in the clutch drum (B). Apply pressure and rotate to ensure proper seating. Lubricate the piston O-ring with ATF before installing.

   NOTE: Do not pinch the O-ring by installing the piston with too much force.

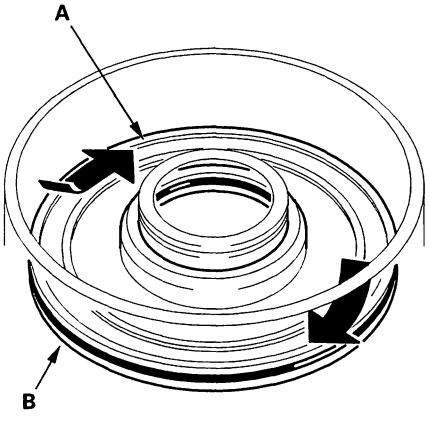

(cont'd)

Clutch Reassembly (cont'd)

4. Install the return spring (A) and spring retainer (B), and position the snap ring (C) on the retainer.

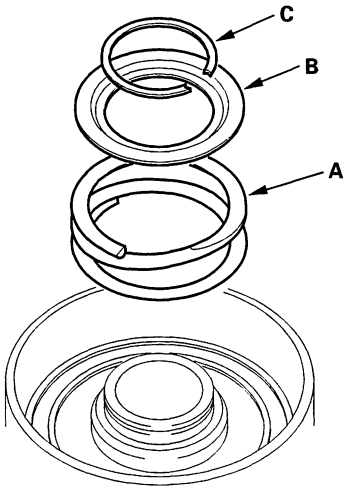

5. Install the special tools on the 3rd/4th clutch assembly.

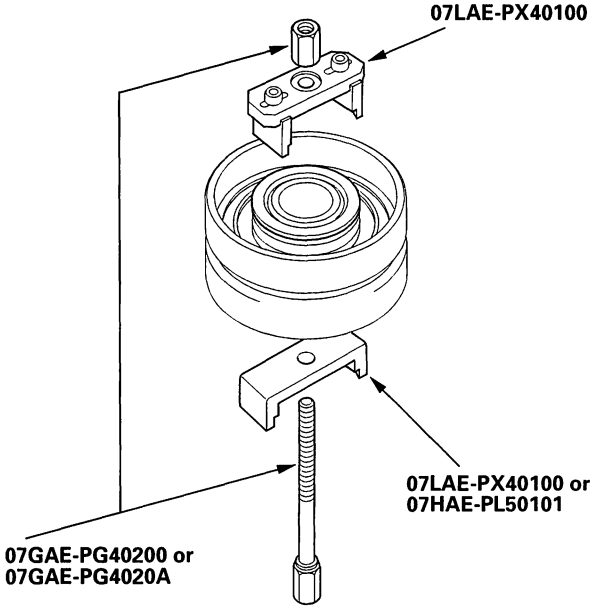

6. Be sure the special too (A) is adjusted to have full contact with the spring retainer (B) on the 3rd and 4th clutches.

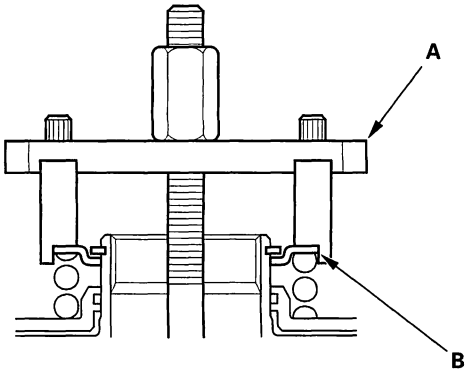

7. Set the special tool (A) on the spring retainer (B) of the 1st and 2nd clutches in such a way that the special tool work on the clutch return spring (C).

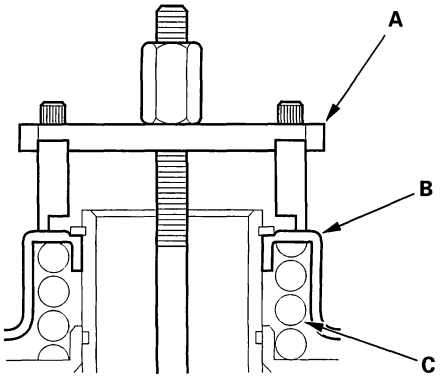

BACK

8. If either end of the special tool is set over an area of the spring retainer which is unsupported by the return spring, the retainer may be damaged.

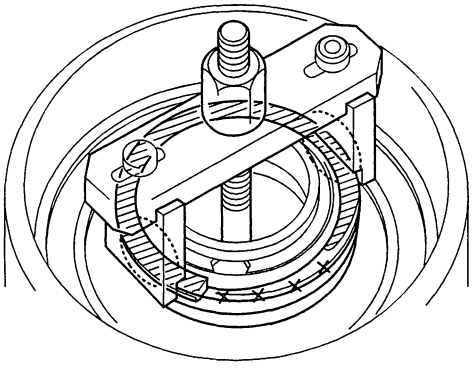

9. Compress the return spring.

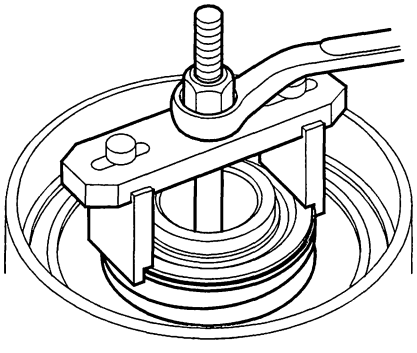

10. Install the snap ring (A).

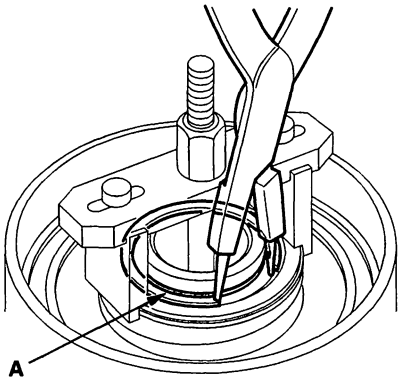

11. Remove the special tools.

12. Install the disc spring in the 1st, 3rd, and 4th clutches in the direction shown.

    NOTE: The 2nd clutch does not have a disc spring.

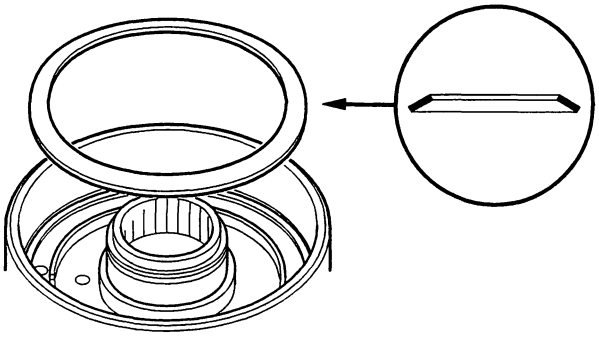

(cont'd)

Clutch Reassembly (cont'd)

13. Soak the clutch discs thoroughly in ATF for a minimum of 30 minutes. Before installing the plates and discs, make sure the inside of the clutch drum is free of dirt and other foreign matter.

14. Starting with a clutch plate, alternately install the clutch plates and discs. Install the clutch end plate (A) with the flat side toward the disc (B).

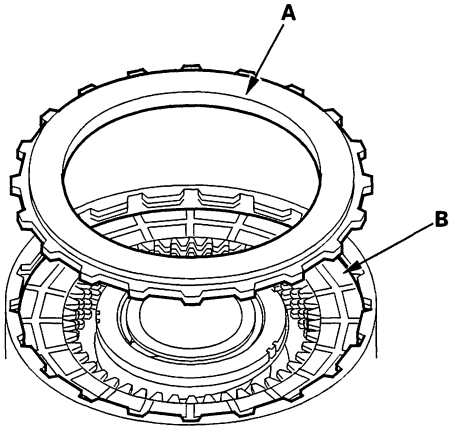

15. Install the snap ring (A) with a screwdriver (B).

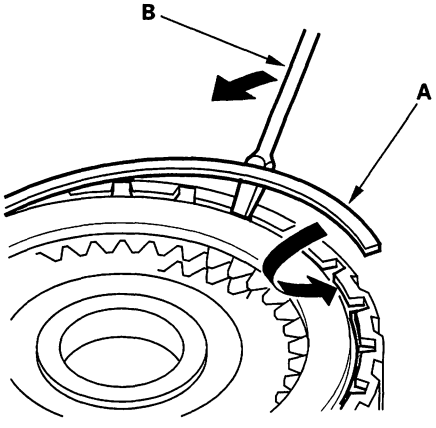

16. Set a dial indicator (A) on the clutch end plate (B).

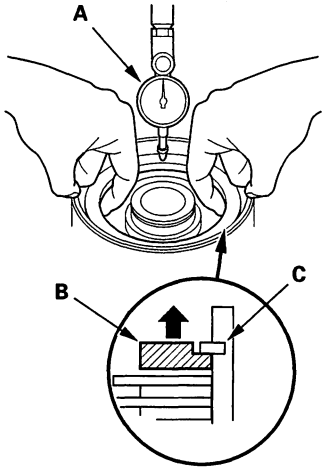

17. Zero the dial indicator with the clutch end plate lifted up to the snap ring (C).

BACK

18. Release the clutch end plate to lower the clutch end plate, then put the special tool on the end plate (A).

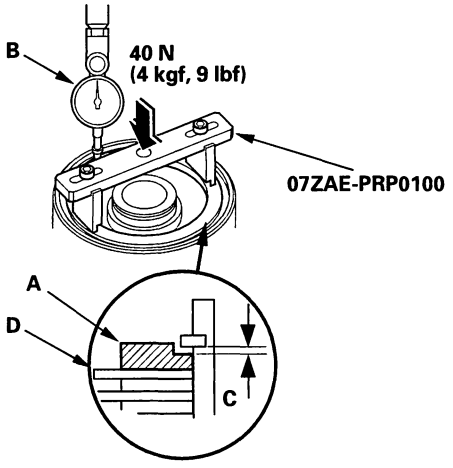

19. Press the special tool down with 40 N (4 kgf, 9 lbf) using a force gauge, and read the dial indicator (B). The dial indicator reads the clearance (C) between the clutch end plate and top disc (D). Take measurements in at least three places, and use the average as the actual clearance.

Clutch End Plate-to-Top Disc Clearance:

Clutch	Service Limit
1st	1.2–1.4 mm (0.047–0.055 in.)
2nd	0.85–1.05 mm (0.033–0.041 in.)
3rd	0.55–0.75 mm (0.022–0.030 in.)
4th	0.55–0.75 mm (0.022–0.030 in.)

20. If the clearance is out of the service limit, select a new clutch end plate from the following table.

NOTE: If the thickest clutch end plate is installed, but the clearance is still over the service limit, replace the clutch discs and clutch plates as a set.

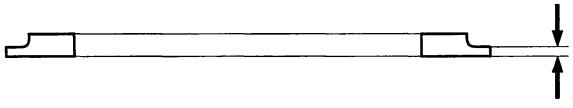

1ST and 2ND CLUTCH END PLATES

Mark	Part Number	Thickness
6	22551-P7Z-003	2.6mm (0.102 in.)
7	22552-P7Z-003	2.7 mm (0.106 in.)
8	22553-P7Z-003	2.8 mm (0.110 in.)
9	22554-P7Z-003	2.9 mm (0.114 in.)
0	22555-P7Z-003	3.0 mm (0.118 in.)
1	22556-P7Z-003	3.1 mm (0.122 in.)
2	22557-P7Z-003	3.2 mm (0.126 in.)
3	22558-P7Z-003	3.3 mm (0.130 in.)
4	22559-P7Z-003	3.4 mm (0.134 in.)

3RD and 4TH CLUTCH END PLATES

Mark	Part Number	Thickness
1	22551-PX4-003	2.1 mm (0.083 in.)
2	22552-PX4-003	2.2 mm (0.087 in.)
3	22553-PX4-003	2.3 mm (0.091 in.)
4	22554-PX4-003	2.4 mm (0.094 in.)
5	22555-PX4-003	2.5 mm (0.098 in.)
6	22556-PX4-003	2.6 mm (0.102 in.)
7	22557-PX4-003	2.7 mm (0.106 in.)
8	22558-PX4-003	2.8 mm (0.110 in.)
9	22559-PX4-003	2.9 mm (0.114 in.)

Valve Bodies and ATF Strainer Installation

Exploded View

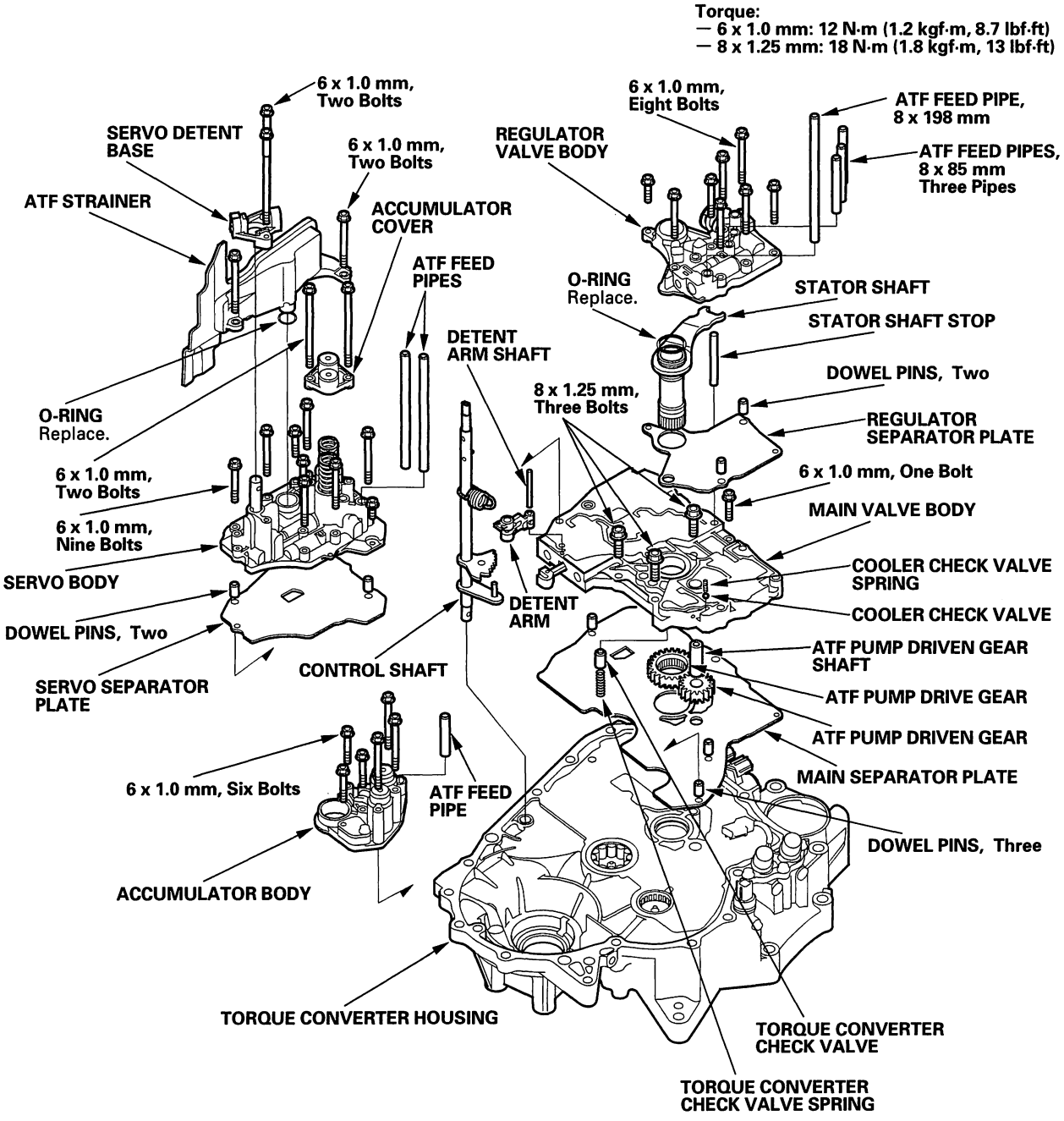

BACK

NOTE: Refer to the exploded view as needed during the following procedure.

1. Install the main separator plate (A) and three dowel pins on the torque converter housing. Then install the ATF pump drive gear (B), driven gear (C) and ATF pump driven gear shaft (D). Install the ATF pump driven gear with its grooved and chamfered side facing down.

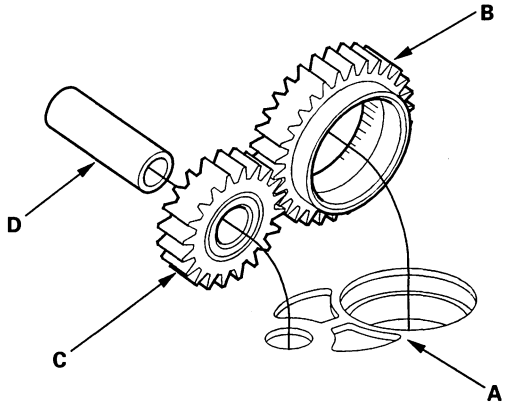

2. Install the torque converter check valve and spring, then install the main valve body (one 6 mm bolt and three 8 mm bolts). Make sure the ATF pump drive gear (B) rotates smoothly in the normal operating direction, and the ATF pump driven gear shaft (D) moves smoothly in the axial and normal operating direction.

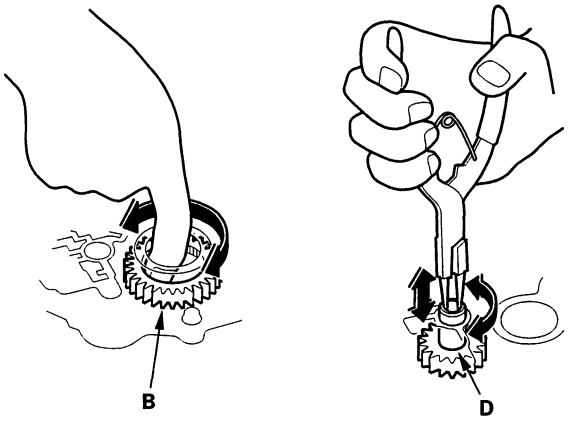

3. If the ATF pump drive gear and ATF pump driven gear shaft do not move smoothly, loosen the main valve body bolts. Realign the ATF pump driven gear shaft, and retighten the bolts to the specified torque, then recheck. Failure to align the ATF pump driven gear shaft correctly will result in a seized ATF pump drive gear or ATF pump driven gear shaft.

4. Install the cooler check valve and spring on the main valve body, then install the two dowel pins and the regulator separator plate.

5. Install the stator shaft and stator shaft stop.

6. Install the regulator valve body (eight bolts).

7. Install the two dowel pins and the servo separator plate on the main valve body.

8. Install the control shaft (A) in the torque converter housing along with the manual valve (B).

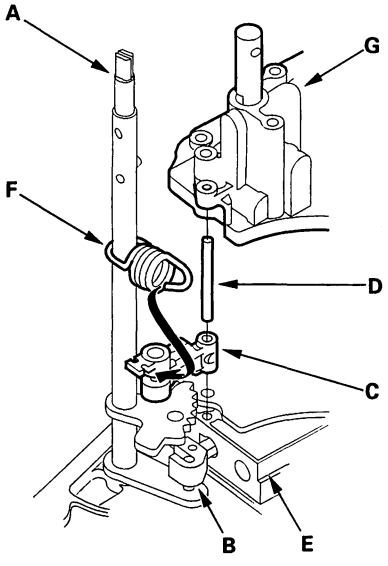

9. Install the detent arm (C) and arm shaft (D) in the main valve body (E), then hook the detent arm spring (F) to the detent arm.

10. Install the servo body (G) (nine bolts).

11. Install the accumulator cover (two bolts).

12. Install the ATF strainer (two bolts).

13. Install the servo detent base (two bolts).

14. Install the accumulator body (six bolts).

15. Install the two ATF feed pipes in the servo body, four pipes in the regulator valve body, and one pipe in the accumulator body.

Shaft Assemblies and Housing Installation

Exploded View

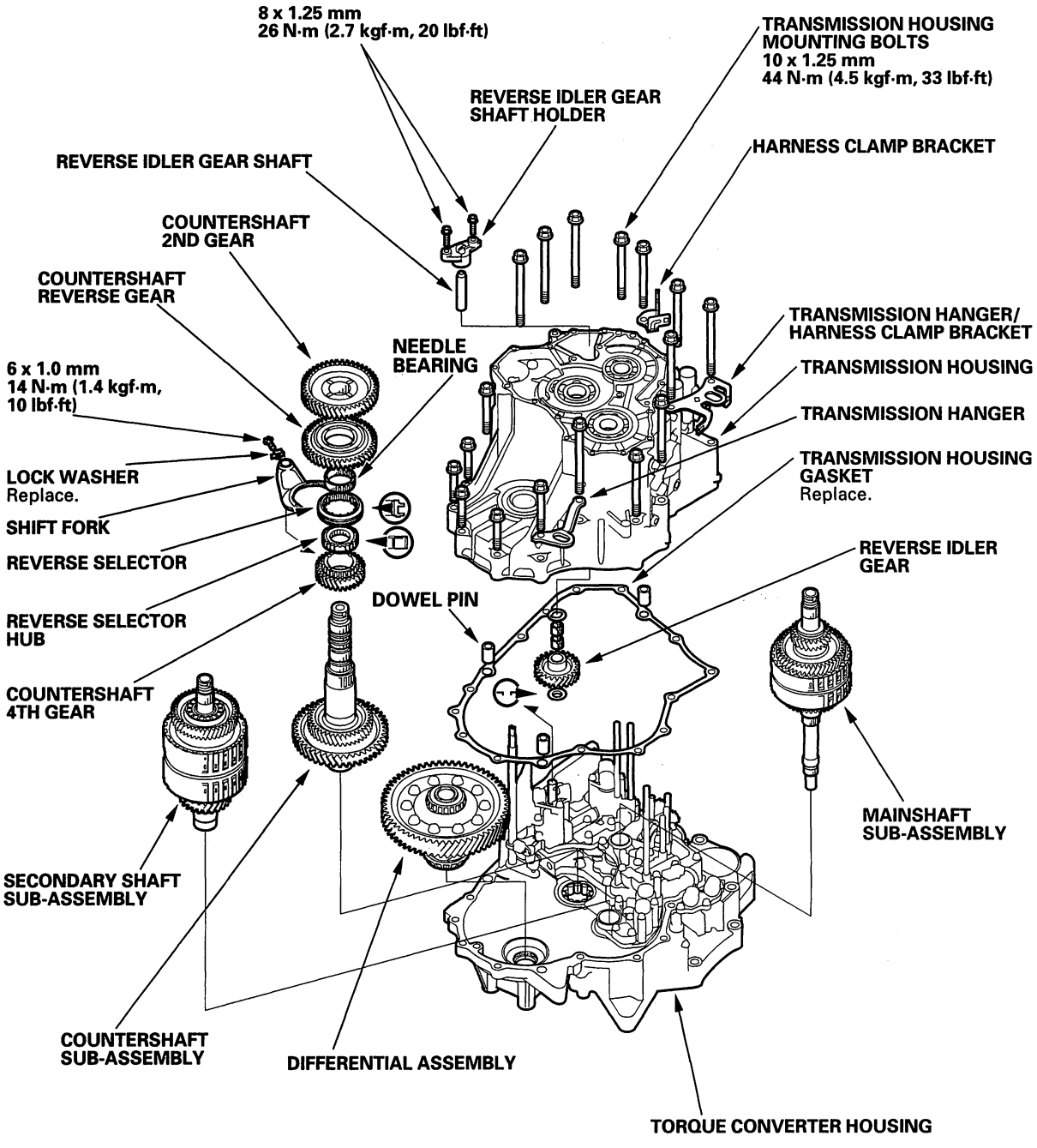

BACK

NOTE: Refer to the Exploded View as needed during the following procedure.

1. Install the differential assembly, countershaft sub-assembly, mainshaft sub-assembly, and secondary shaft sub-assembly in the torque converter housing.

2. Install the countershaft 4th gear and reverse selector hub on the countershaft. If the reverse selector hub is a press-fitted type, refer to the installation procedure (see page 14-173).

3. Turn the shift fork shaft (A) so the large chamfered hole is facing the fork bolt hole. Then install the shift fork (B) and reverse selector (C) together on the shift fork shaft and countershaft (D). Secure the shift fork to the shift fork shaft with the lock bolt (E) and a new lock washer (F), then bend the lock washer against the bolt head.

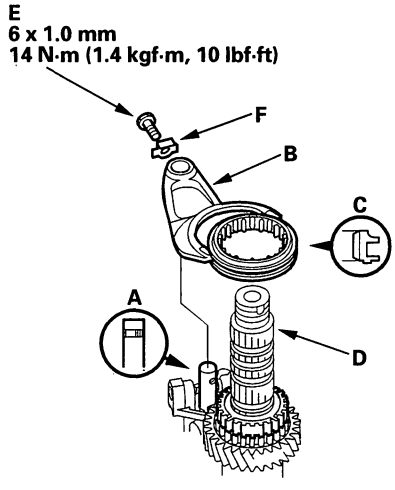

4. Install the needle bearing, countershaft reverse gear, and countershaft 2nd gear on the countershaft.

5. Place the thrust washer (A) in the transmission housing.

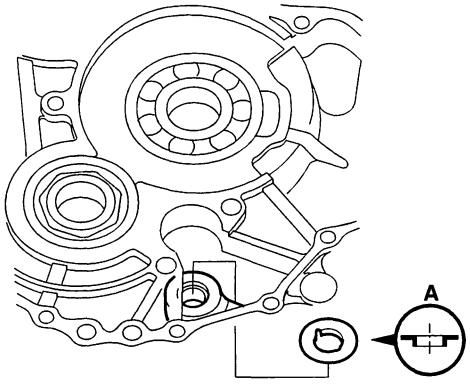

6. Place the reverse idler gear (A) in the transmission housing as shown, then slide it in the direction shown.

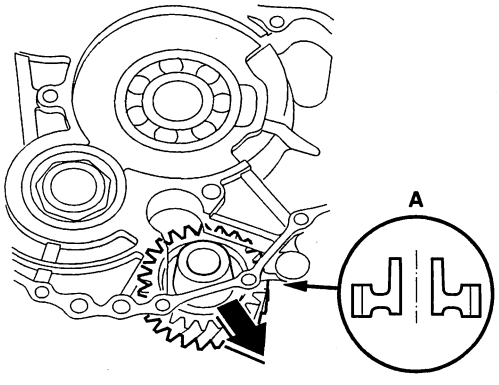

(cont'd)

Shaft Assemblies and Housing Installation (cont'd)

7. Align the spring pin (A) on the control shaft (B) with the transmission housing groove (C) by turning the control shaft.

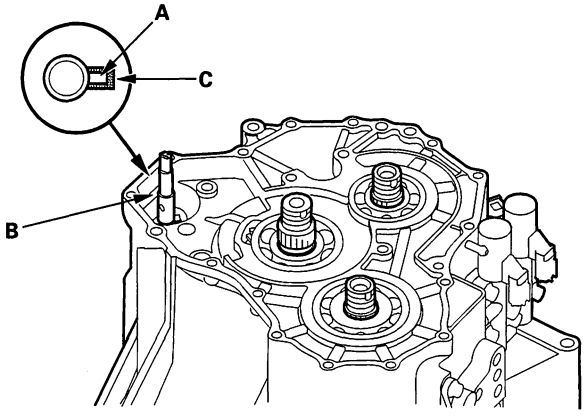

8. Install three dowel pins and a new gasket on the torque converter housing.

9. Place the transmission housing on the torque converter housing, then install the transmission housing mounting bolts along with the harness clamp bracket (A), transmission hanger (B) and transmission hanger/harness clamp bracket (C). Tighten the bolts in two or more steps in the sequence shown.

TORQUE: 44N·m (4.5 kgf·m, 33 lbf·ft)

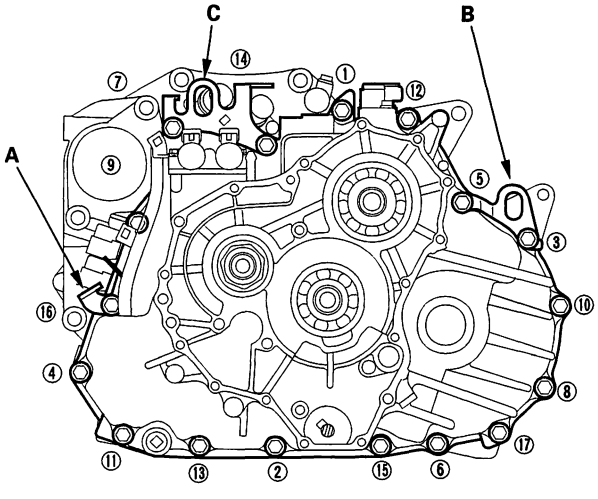

10. Engage the reverse idler gear with the countershaft reverse gear and the mainshaft reverse gear. Then install the needle bearings (A), reverse idler gear shaft (B) and thrust washer (C) in the reverse idler gear, and install the reverse idler gear shaft holder (D) on the transmission housing.

8 x 1.25 mm
26 N·m (2.7 kgf·m, 20 lbf·ft)

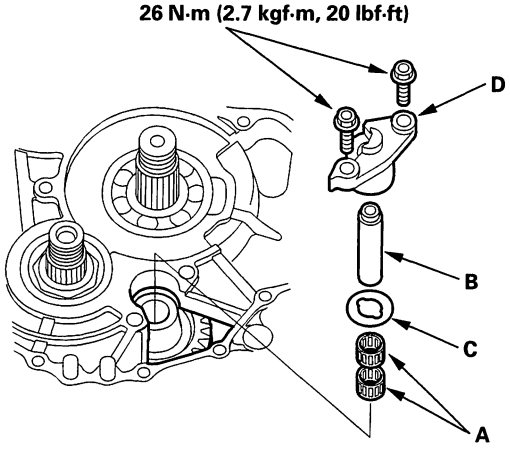

BACK

End Cover and Idler Gears Installation

Special Tools Required
Mainshaft holder
07GAB-PF50101 or 07GAB-PF50100

1. Install the park lever (A) and park lever stop (B) on the control shaft (C), then install the lock bolt (D) with a new lock washer (E). Do not bend the lock tab of the lock washer in this step; bend it after checking park pawl engagement.

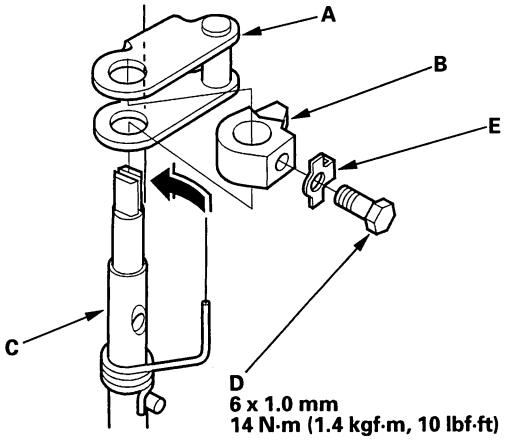

2. Lubricate the following parts with ATF:

   - Splines of the countershaft, the park gear, and the old locknut.
   - Threads of the countershaft and the old locknut.
   - Old conical spring washer.

3. Install the park gear (A) using the old locknut (B) and a collar (C). Hold the park pawl (D) to engage with the park gear, then tighten the old locknut until the shaft splines come out slightly over the park gear splines.

   NOTE:
   - Do not use an impact wrench.
   - Countershaft locknut has left-hand threads.

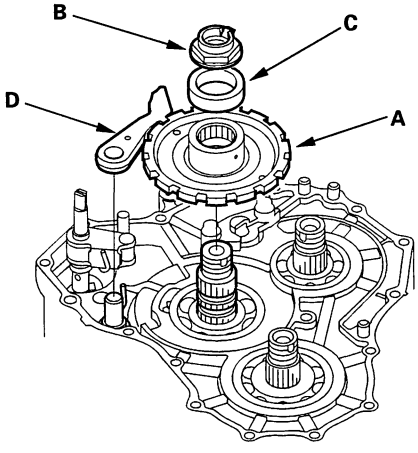

4. Remove the locknut and the collar, then install only the bearing hub/bearing assembly (A) and old conical spring washer (B). Tighten the old locknut (C) to seat the park gear to 226 N·m (23.0 kgf·m, 166 lbf·ft), then remove the locknut and conical spring washer.

   NOTE: Do not use an impact wrench, always use a torque wrench to tighten the locknut.

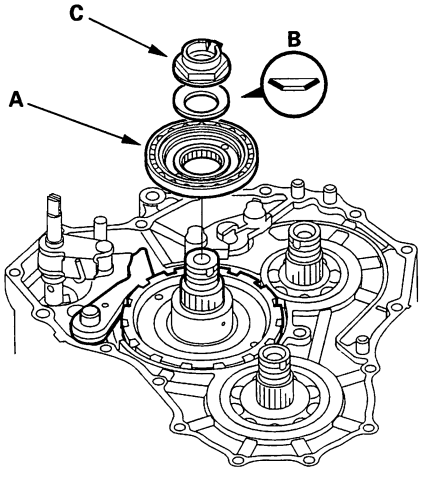

(cont'd)

End Cover and Idler Gears Installation (cont'd)

5. Remove the bearing hub/bearing assembly (A) with a puller (B).

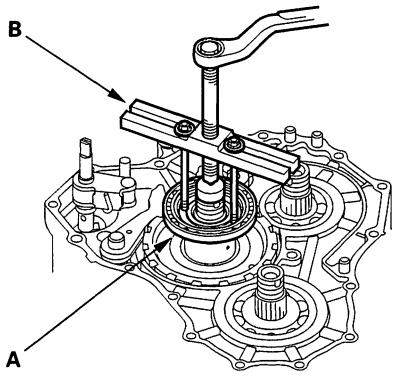

6. Install the thrust needle bearing (A), needle bearing (B), countershaft idler gear (C), thrust needle bearing (D), bearing hub/bearing assembly (E), and the old conical spring washer (F). Then tighten the old locknut (G) to seat the bearing hub/bearing assembly to 164 N·m (17.0 kgf·m, 123 lbf·ft).

   NOTE: Do not use an impact wrench, always use a torque wrench to tighten the locknut.

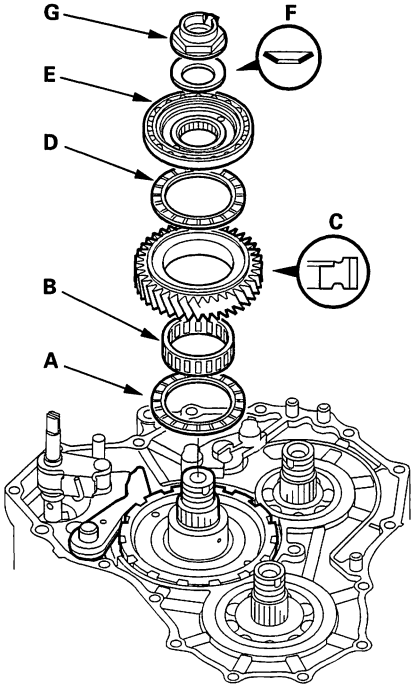

7. Set the dial indicator (A) to the countershaft idler gear (B) as shown.

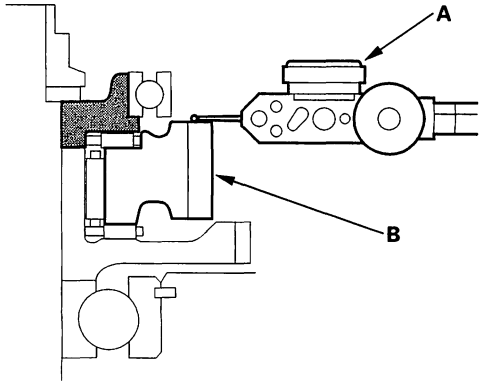

8. Measure the countershaft idler gear axial clearance in at least three places, while moving the countershaft idler gear (A).
   Use the average as the actual clearance.

   STANDARD: 0.015 – 0.045 mm (0.0006 – 0.0018 in.)

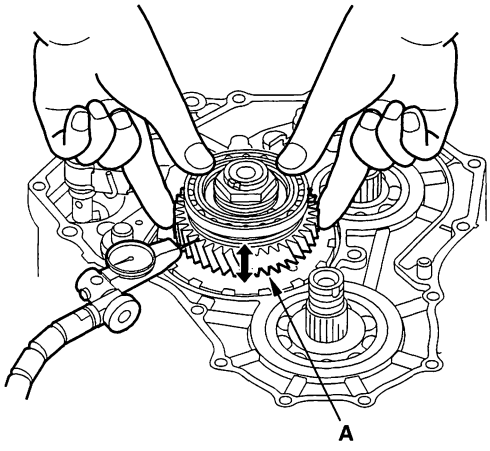

BACK

9. If the clearance is out of standard, remove the bearing hub/bearing assembly using a puller as described on the previous page.

10. Select and install the new bearing hub/bearing assembly, then recheck.

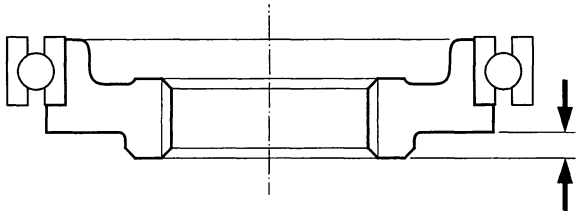

BEARING HUB

Mark	Part Number	Difference
A	90520-P6H-000	3.503 mm (0.1379 in.)
B	90521-P6H-000	3.490 mm (0.1374 in.)
C	90522-P6H-000	3.477 mm (0.1369 in.)
D	90523-P6H-000	3.464 mm (0.1364 in.)

11. After replacing the bearing hub/bearing assembly make sure the clearance is within standard.

12. Remove the old locknut and old conical spring washer from the countershaft.

13. Install the special tool onto the mainshaft.

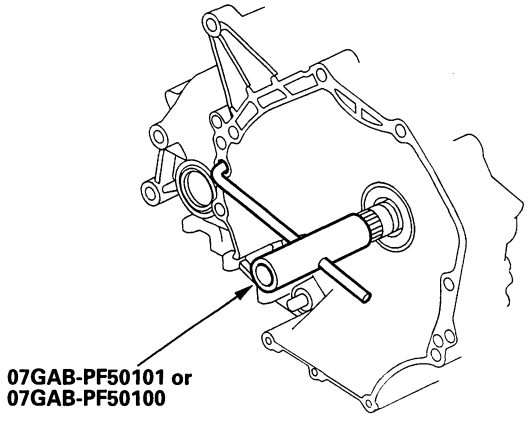

14. Lubricate the following parts with ATF:
    - Splines of the mainshaft, secondary shaft, and idler gears.
    - Threads of the mainshaft, secondary shaft, and new locknuts.
    - Old conical spring washers.

15. Install the mainshaft idler gear (A) and the old conical spring washer (B) on the mainshaft (C). Tighten the old locknut (D) to seat the mainshaft idler gear to 226 N·m (23.0 kgf·m, 166 lbf·ft).

    NOTE: Do not use an impact wrench, always use a torque wrench to tighten the locknut.

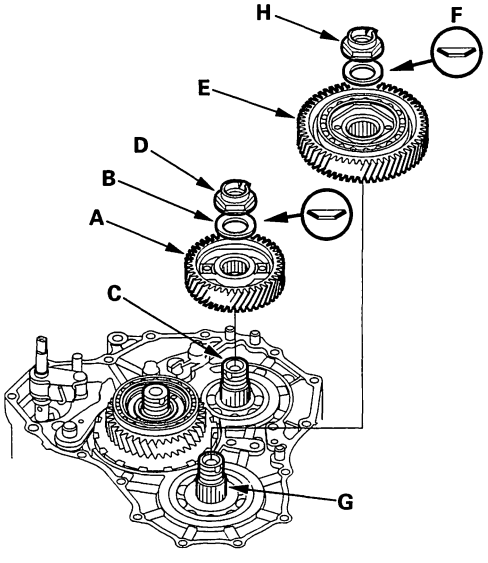

16. Install the secondary shaft idler gear (E) and the old conical spring washer (F) on the secondary shaft (G). Tighten the old locknut (H) to seat the secondary shaft idler gear to 226 N·m (23.0 kgf·m, 166 lbf·ft)

    NOTE:
    - Do not use an impact wrench, always use a torque wrench to tighten the locknut.
    - Secondary shaft locknut has left-hand threads.

17. Remove the old locknuts and old conical spring washer from the mainshaft and the secondary shaft.

(cont'd)

End Cover and Idler Gears Installation (cont'd)

18. Lubricate the threads of each shaft and new locknuts, and new conical spring washers with ATF.

19. Install the new conical spring washers (A) in the direction shown, and install the new locknuts (B).

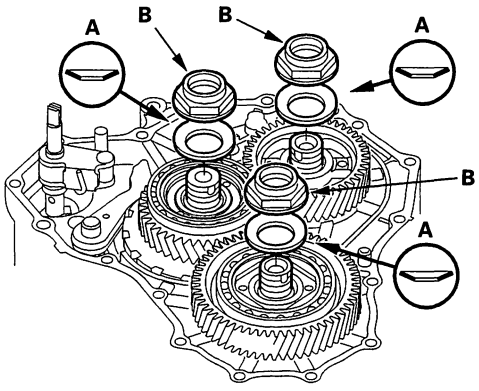

20. Tighten the locknuts to 167 N·m (17.0 kgf·m, 123 lbf·ft).

    NOTE:
    - Do not use an impact wrench, always use a torque wrench to tighten the locknut.
    - Coutershaft and secondary shaft locknuts have left-hand threads.

21. Stake each locknut into its shaft using a 3.5 mm punch.

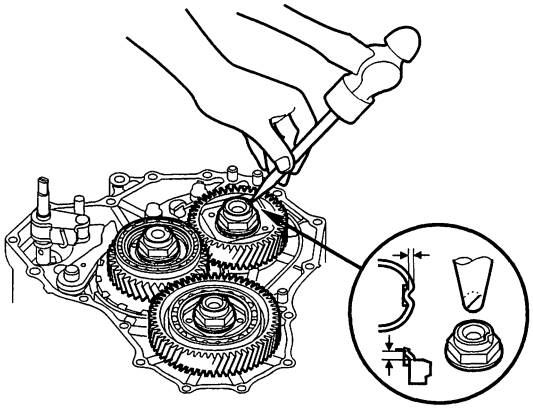

22. For '00-02 models: Install the pitot flange (A) on the mainshaft idler gear (B), then install the lubrication pitot pipe (C) and the pitot pipe (D) on the transmission housing.

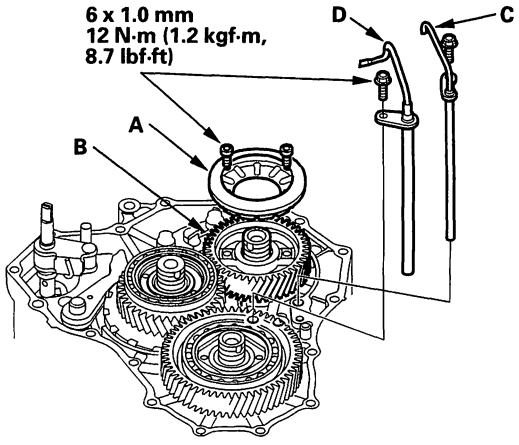

23. Set the park lever in the P position, then verify that the park pawl (A) engages the park gear (B).

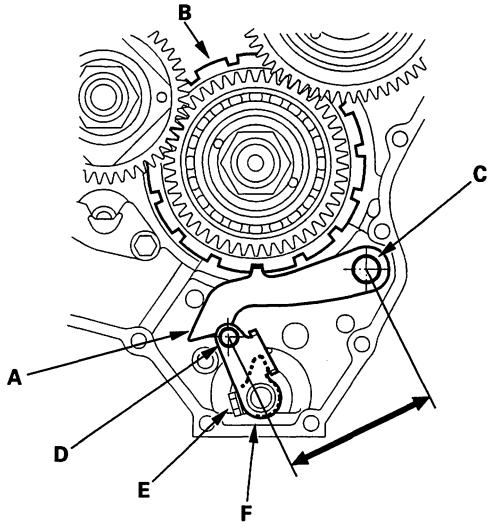

24. If the park pawl does not engage fully, check the distance between the pawl shaft (C) and the park lever roller pin (D) (see page 14-153).

25. Tighten the lock bolt (E), and bend the lock tab of the lock washer (F) against the lock bolt head.

BACK

26. Install the end cover (A) along with two dowel pins, new O-rings, new gasket, and harness clamp bracket (B). Tighten the 16 bolts to 12 N·m, (1.2 kgf·m, 8.7 lbf·ft).

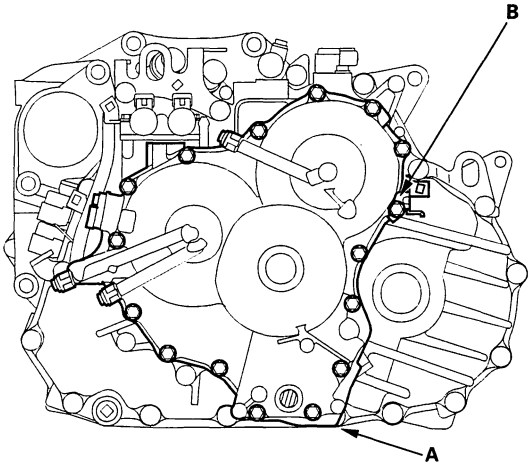

27. Set the transmission range switch to N position.

NOTE: The transmission range switch clicks in N position.

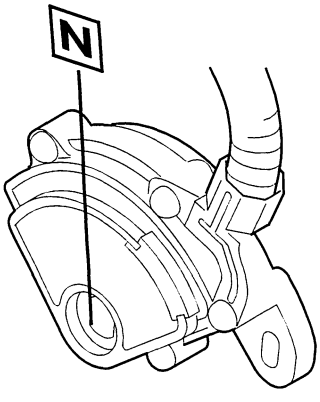

28. Set the control shaft (A) to the N position by turning it.

NOTE: Be careful not to squeeze the end of the control shaft tips together when turning into position. If the tips are squeezed together it will cause a faulty shift signal or position due to the play between the control shaft and the switch.

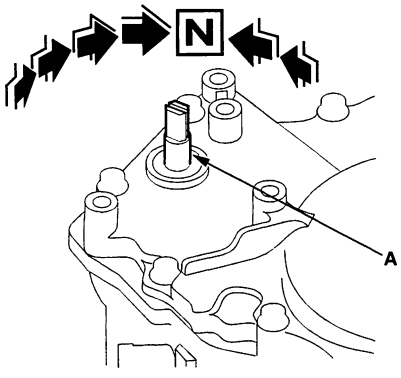

(cont'd)

End Cover and Idler Gears Installation (cont'd)

29. Install the transmission range switch (A) loosely on the control shaft (B), then secure it with the bolts. Do not move the transmission range switch when tightening the bolts.

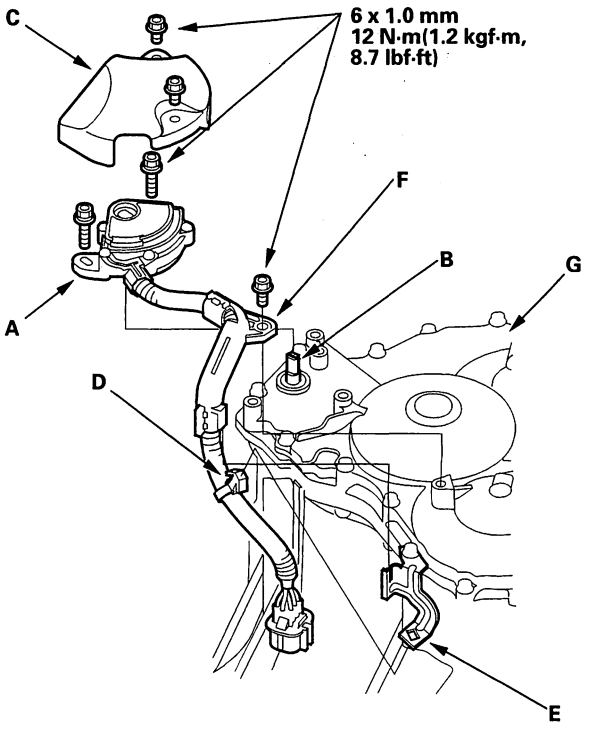

30. Install the transmission range switch cover (C), and install the harness clamp (D) on the clamp bracket (E) on the transmission housing, then install the harness clamp (F) on the end cover (G).

31. Install the ATF cooler lines and new sealing washers. Tighten the line fittings to 28 N·m (2.9 kgf·m, 21 lbf·ft)

32. Install the breather tube.

33. Install the ATF dipstick.

BACK

Component Location Index

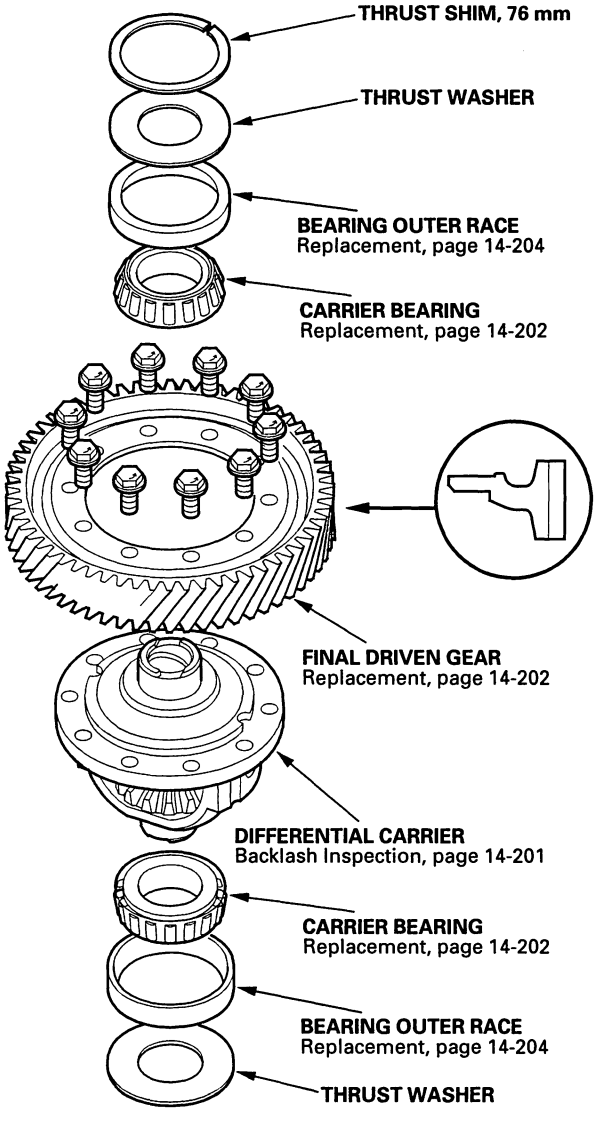

Backlash Inspection

1. Install both axles, and place the differential assembly on V-blocks (A).

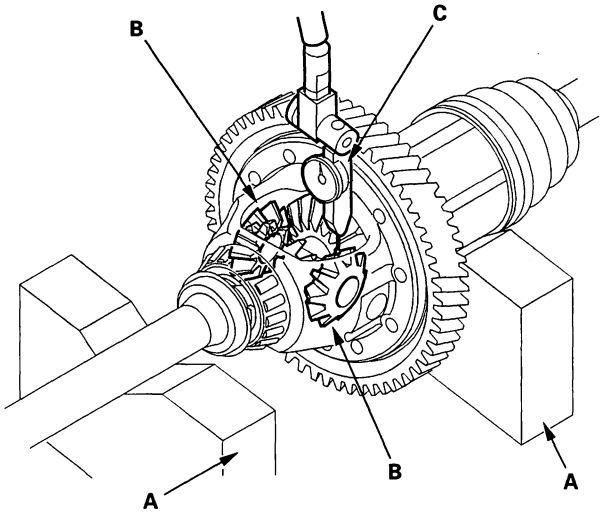

2. Check the backlash of both pinion gears (B) with a dial indicator (C).

   STANDARD: 0.05 – 0.15 mm (0.002 – 0.006 in.)

3. If the backlash is out of standard, replace the differential carrier.

Final Driven Gear/Carrier Replacement

1. Remove the final driven gear from the differential carrier.

   NOTE: The final driven gear bolts have left-hand threads.

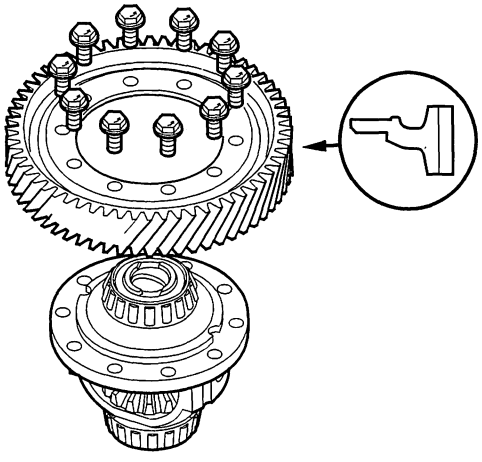

2. Install the final driven gear with the chamfered side on the inner bore facing the differential carrier.

3. Tighten the bolts to the specified torque in a crisscross pattern.

   TORQUE: 101 N·m (10.3 kgf·m, 74.5 lbf·ft)

Carrier Bearing Replacement

Special Tools Required
Attachment, 40 x 50 mm 07LAD-PW50601

NOTE:
- The bearing and outer race should be replaced as a set.
- Inspect and adjust the bearing preload whenever bearing is replaced.
- Check the bearing for wear and rough rotation. If the bearing is OK, removal is not necessary.

1. Remove the carrier bearing (A) with a commercially available bearing puller (B), bearing separator (C), and stepped adapter (D).

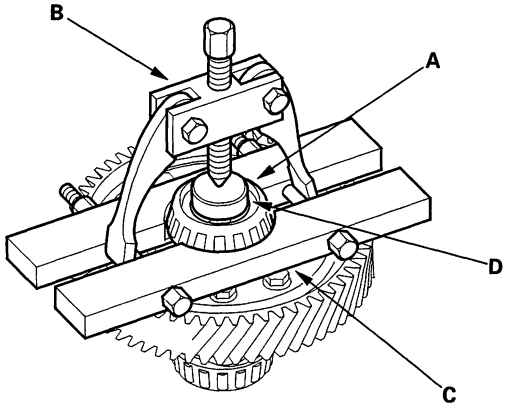

2. Install the new carrier bearings with the special tool and a press.

   NOTE:
   - Press the bearings on until they bottom.
   - Use the small end of the special tool to install the bearing.
   - Press the bearings on securely so there is no clearance between the bearings and the differential carrier.

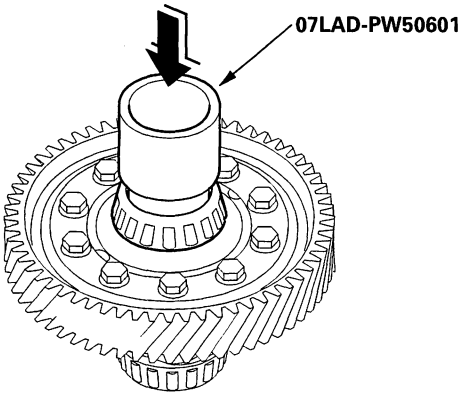

BACK

Oil Seal Replacement

Special Tools Required
- Driver 07749-0010000
- Seal driver attachment 07GAD-PG40101 or 07GAD-PG40100
- Pilot, 28 x 30 mm 07JAD-PH80400
- Oil seal driver attachment 07JAD-PH80101

1. Remove the differential assembly.

2. Remove the oil seal (A) from the transmission housing (B).

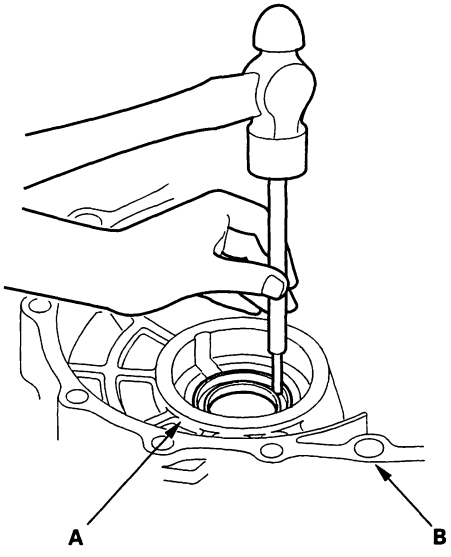

3. Remove the oil seal (A) from the torque converter housing (B).

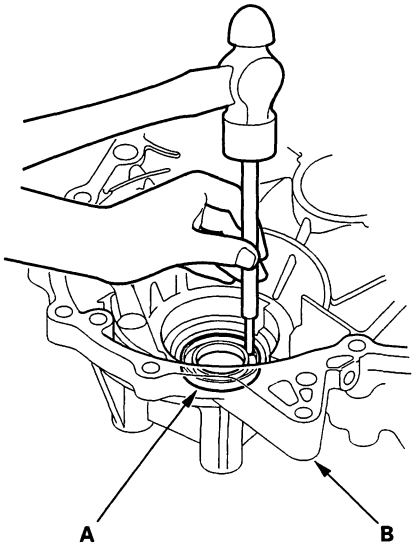

4. Install the oil seal (A) in the transmission housing with the special tools.

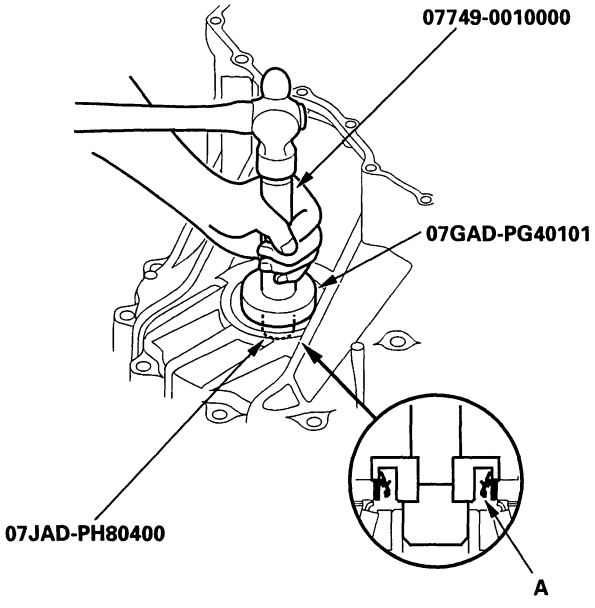

5. Install the oil seal (A) in the torque converter housing with the special tools.

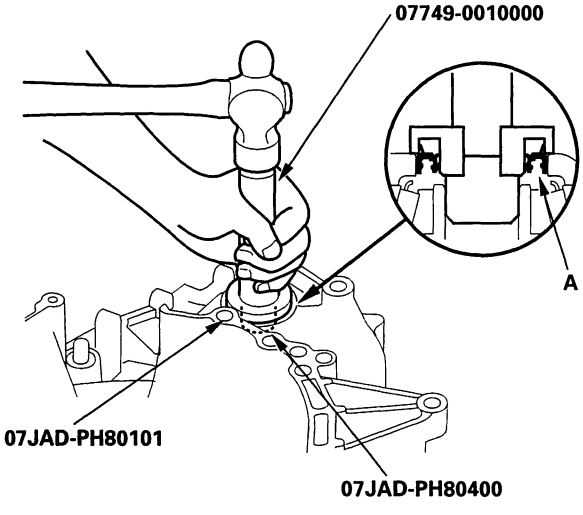

Carrier Bearing Outer Race Replacement

Special Tools Required
- Driver 07749-0010000
- Attachment, 78 x 80 mm 07NAD-PX40100

NOTE:
- Replace the bearing with a new one whenever the outer race is to be replaced.
- Do not use shim(s) on the torque converter housing side.
- Adjust preload after replacing the bearing and outer race.
- Coat all parts with ATF during installation.

1. Remove the bearing outer race from the transmission housing by heating the housing to about 212°F (100°C) with a heat gun. Do not heat the housing more than 212°F (100°C).

2. Remove the bearing outer race from the torque converter housing.

3. Install the thrust shim (A), thrust washer (B) and outer race (C) in the transmission housing (D) with the special tools.

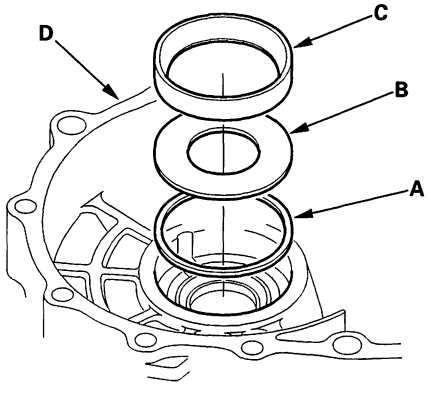

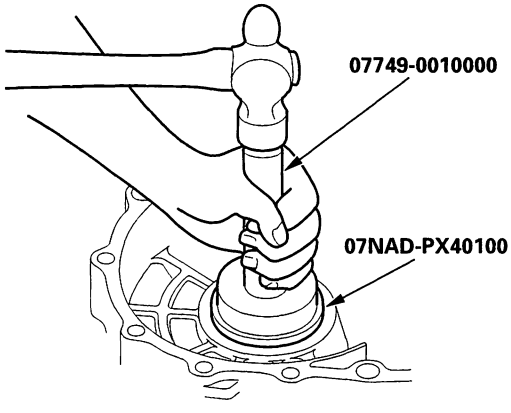

4. Install the thrust washer (A) and outer race (B) in the torque converter housing (C), and be sure to install the outer race until it bottoms in the housing with the special tools.

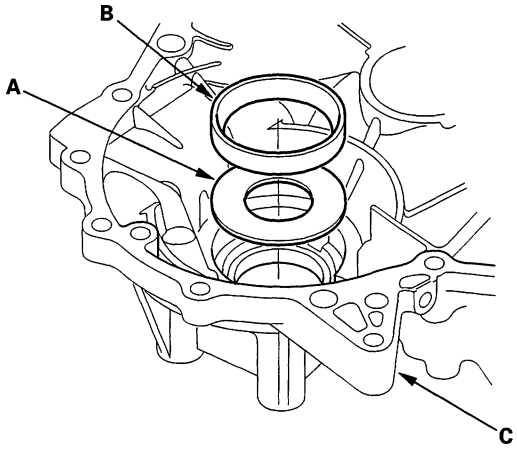

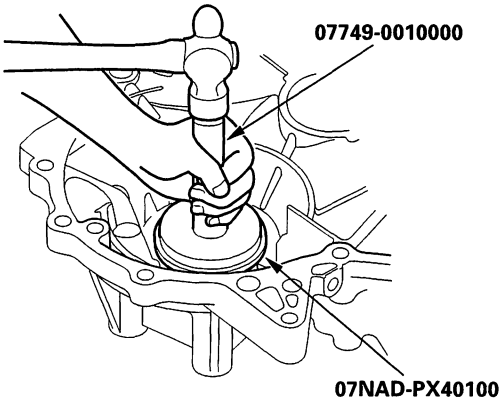

BACK

Carrier Bearing Preload Inspection

Special Tools Required
- Driver 07749-0010000
- Attachment, 78 x 80 mm 07NAD-PX40100
- Preload inspection tool 07HAJ-PK40201

NOTE: If the transmission housing, torque converter housing, differential carrier, tapered roller bearing, outer race, or thrust shim were replaced, the bearing preload must be adjusted.

1. Remove the bearing outer race (A), thrust washer (B) and thrust shim (C) from the transmission housing (D) by heating the housing to about 212°F (100°C) with a heat gun (E). Do not heat the housing more than 212°F (100°C).

   NOTE: Let the transmission housing cool to room temperature before adjusting the bearing preload.

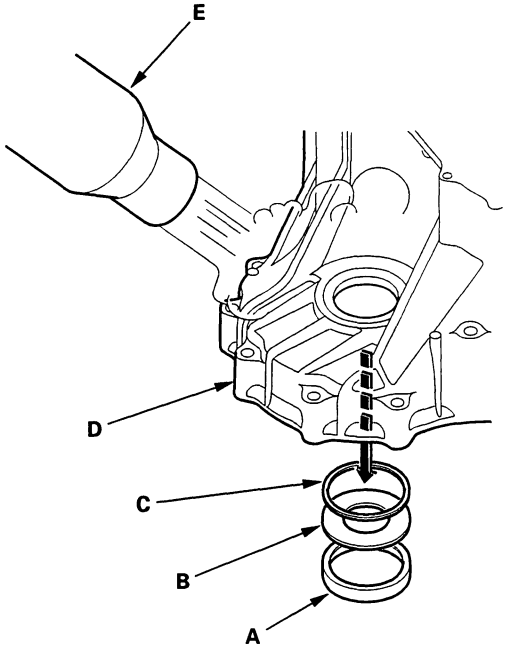

2. Replace the tapered roller bearing when the outer race is to be replaced.

3. Do not use a shim on the torque converter housing side.

4. Select the 2.60 mm (0.102 in.) thrust shim from the middle of the table below.

THRUST SHIM, 76 mm

No.	Part Number	Thickness
S	41438-PX4-700	2.05 mm (0.081 in.)
T	41439-PX4-700	2.01 mm (0.083 in.)
U	41440-PX4-700	2.15 mm (0.085 in.)
A	41441-PK4-000	2.20 mm (0.087 in.)
B	41442-PK4-000	2.25 mm (0.089 in.)
C	41443-PK4-000	2.30 mm (0.091 in.)
D	41444-PK4-000	2.35 mm (0.093 in.)
E	41445-PK4-000	2.40 mm (0.094 in.)
F	41446-PK4-000	2.45 mm (0.096 in.)
G	41447-PK4-000	2.50 mm (0.098 in.)
H	41448-PK4-000	2.55 mm (0.100 in.)
I	41449-PK4-000	2.60 mm (0.102 in.)
J	41450-PK4-000	2.65 mm (0.104 in.)
K	41451-PK4-000	2.70 mm (0.106 in.)
L	41452-PK4-000	2.75 mm (0.108 in.)
M	41453-PK4-000	2.80 mm (0.110 in.)
N	41454-PK4-000	2.85 mm (0.112 in.)
O	41455-PK4-000	2.90 mm (0.114 in.)
P	41456-PK4-000	2.95 mm (0.116 in.)
Q	41457-PK4-000	3.00 mm (0.118 in.)
R	41458-PK4-000	3.05 mm (0.120 in.)

(cont'd)

Carrier Bearing Preload Inspection (cont'd)

5. Install the thrust shim (A), thrust washer (B), and bearing outer race (C) in the transmission housing (D).

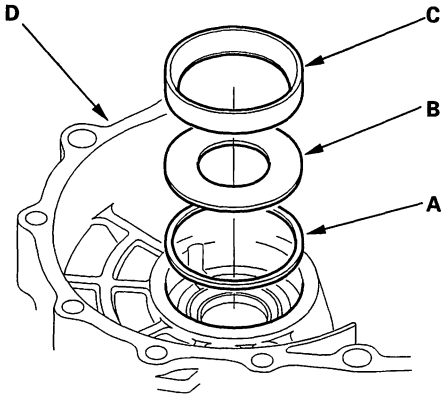

6. Drive the outer race with the special tools, and install it securely in the transmission housing.

7. Check that there is no clearance between the thrust washer, outer race, shim, and transmission housing.

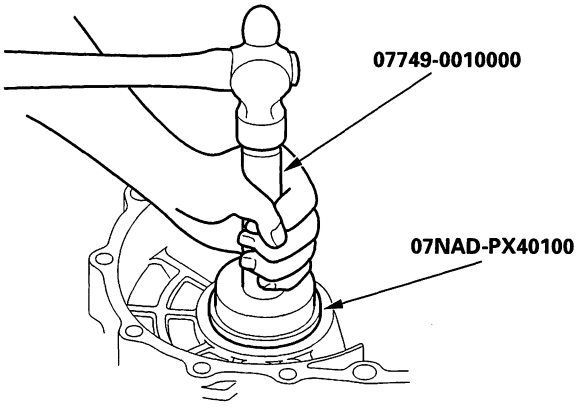

8. Install the differential assembly (A), gasket (B), and dowel pins (C) on the torque converter housing (D). Align the spring pin on the control shaft (E) with the transmission housing groove.

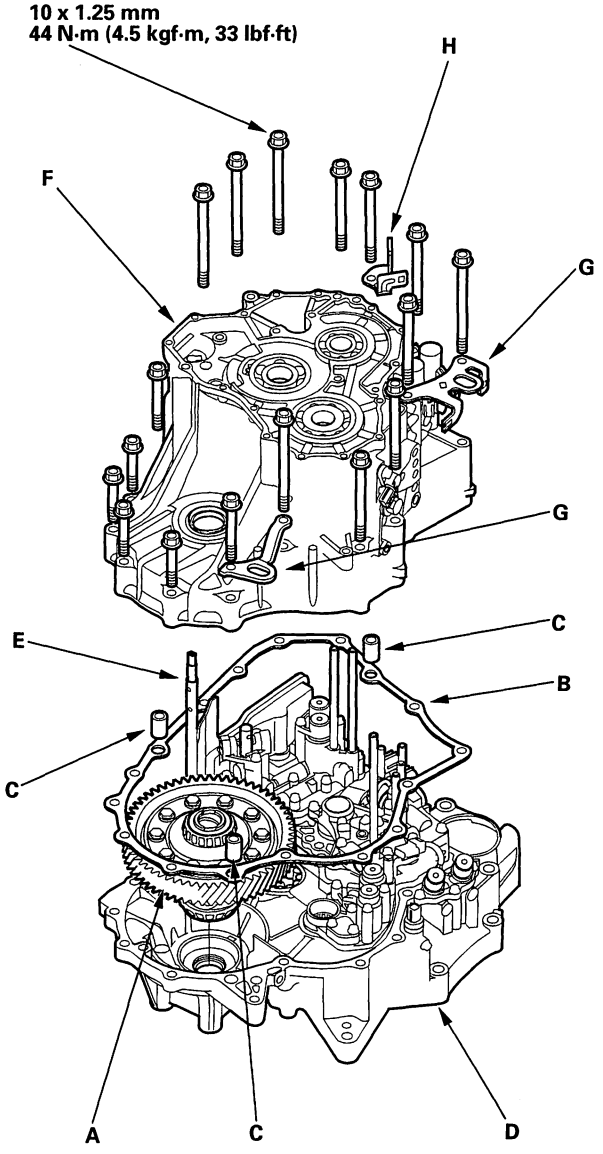

9. Install the transmission housing (F) with the transmission hangers (G) and harness clamp bracket (H), and tighten the bolts.

BACK

10. Rotate the differential assembly in both directions to seat the bearings.

11. Measure the starting torque of the differential assembly with the special tool and a torque wrench (A). Measure the starting torque at normal room temperature in both directions.

STANDARD:
New bearing: **2.7 – 3.9 N·m (28 – 40 kgf·cm, 24 – 35 lbf·in.)**
Reused bearings: **2.5 – 3.6 N·m (25 – 37 kgf·cm, 22 – 32 lbf·in.)**

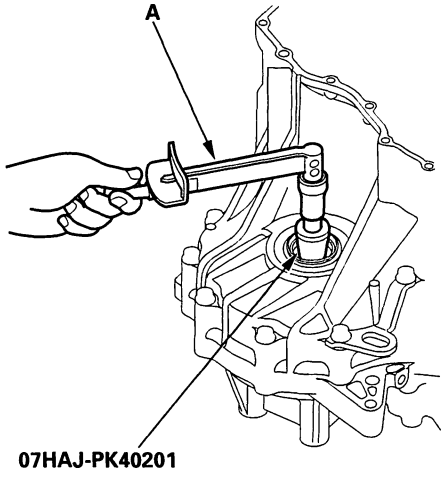

12. To increase the starting torque, increase the thickness of the shim. To decrease the starting torque, decrease the thickness of the shim. Changing the shim to the next size will increase or decrease starting torque about 0.3 – 0.4 N·m (3 – 4 kgf·cm, 3 – 3 lbf·in.).

BACK

Transaxle

Driveline/Axle

Special Tools 16-2
Driveshafts Reassembly 16-3
Intermediate Shaft Removal 16-14
Intermediate Shaft Disassembly 16-14
Intermediate Shaft Resassembly 16-16
Intermediate Shaft Installation 16-18

NOTE: Refer to the '98-02 Accord Service Manual, P/N 61S8400, for the items not shown in this section.

Outline of Model Changes

'98 model:
- The installation length of the driveshafts is different; installation instructions and specifications are included.
- The installation position of the intermediate shaft is different; related service information is included.

'99 model:
- The Thermoplastic Polyester Elastomer (TPE) outboard boot has been added.
- The replacement procedure for ear clamp type boot bands has been added.
- The outboard joint disassembly/reassembly procedure has been added.

'01 model:
- The replacement procedure for low profile type boot bands has been added.

Special Tools

Ref. No.	Tool Number	Description	Qty
①	07LAF-SM40300	Support Base Attachment	1
②	07746-0010300	Attachment, 42 x 47 mm	1
③	07749-0010000	Driver	1
④	07947-SD90101	Oil Seal Driver, Attachment	1
⑤	07947-4630100	Fork Seal Driver, 39.2x49.5x15 mm	1
⑥	07947-6340500	Driver Attachment	1
⑦	07965-SD90100	Support Base	1

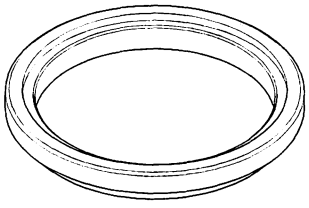

①

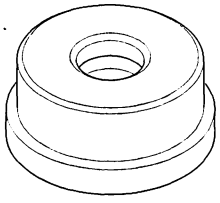

②

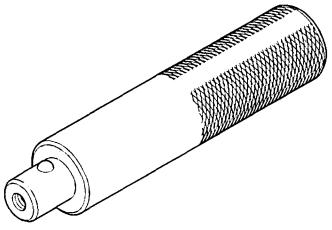

③

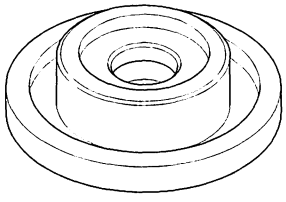

④

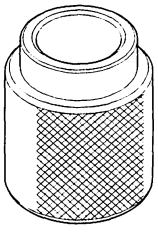

⑤

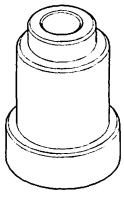

⑥

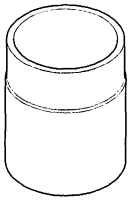

⑦

BACK

Driveshafts Reassembly

Exploded View

'98-00 models

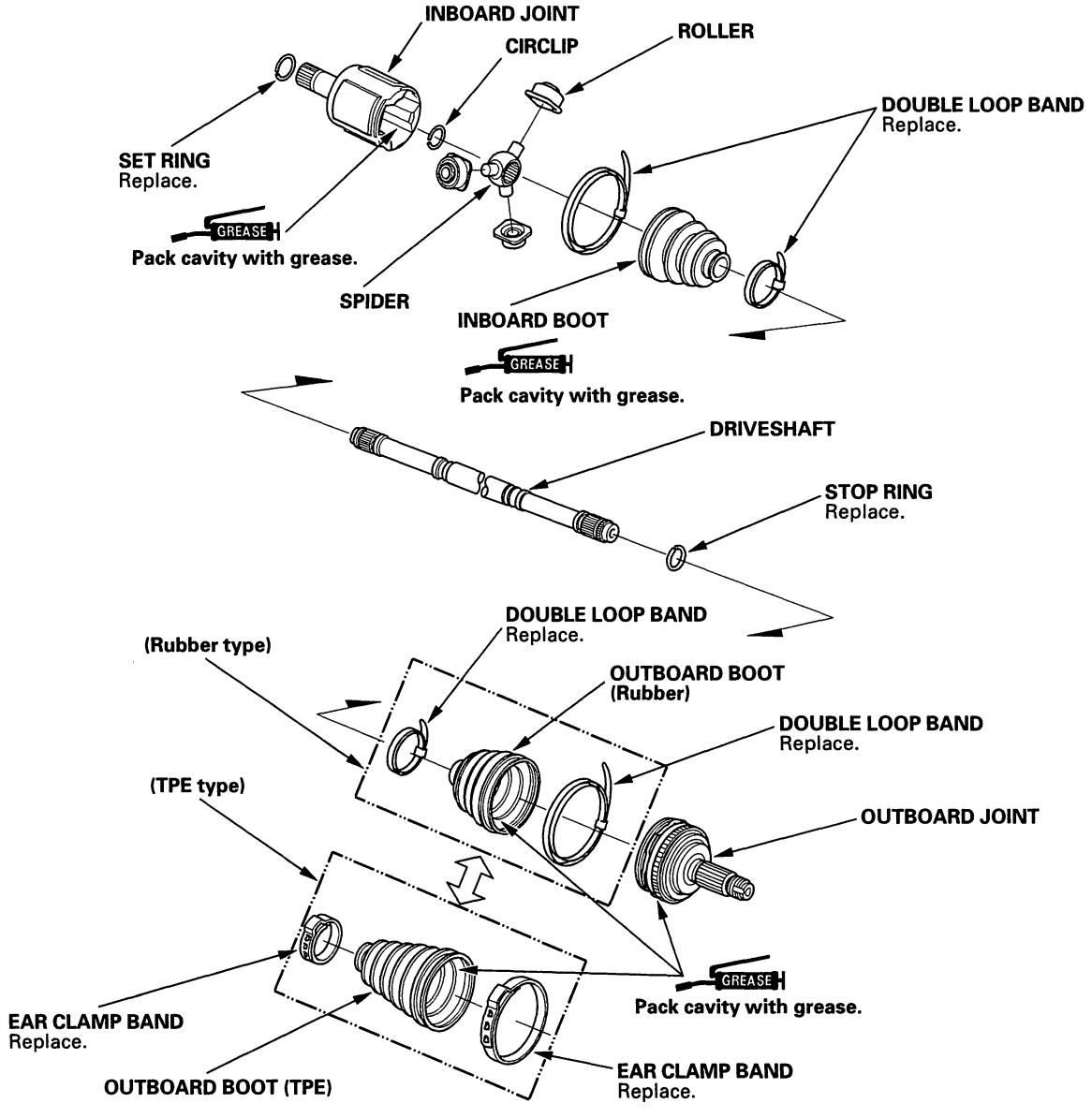

(cont'd)

Driveshafts Reassembly (cont'd)

'01-02 models

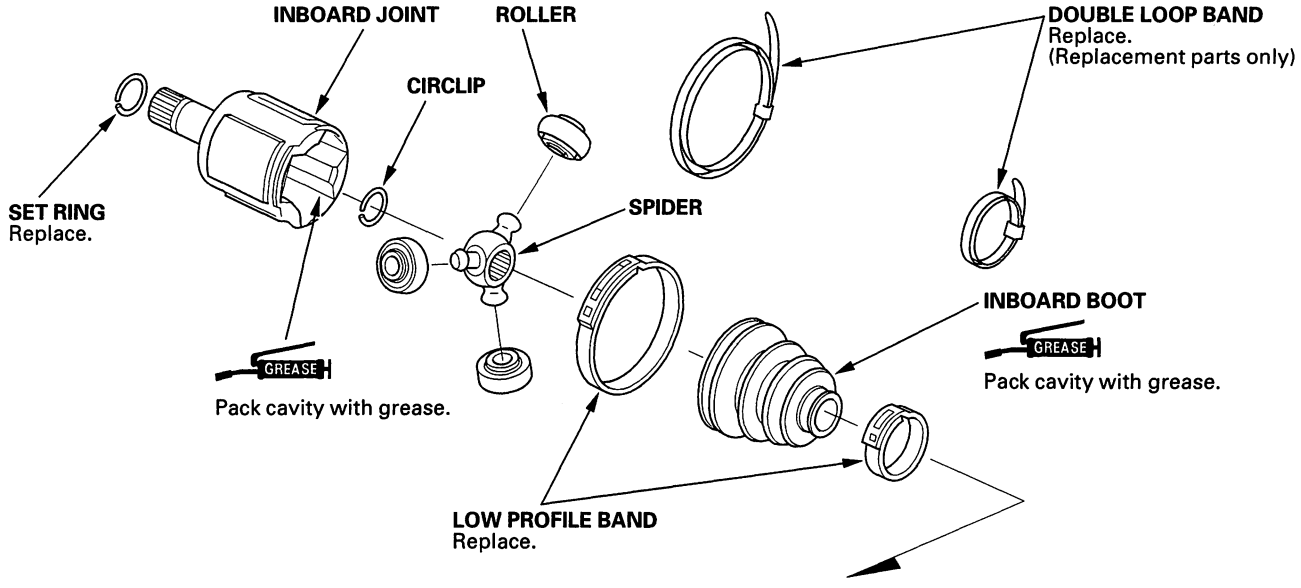

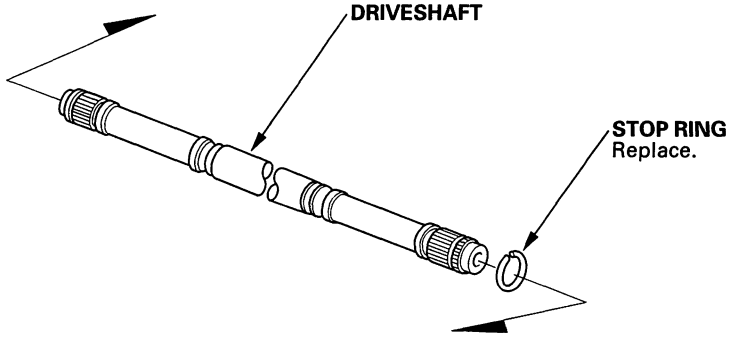

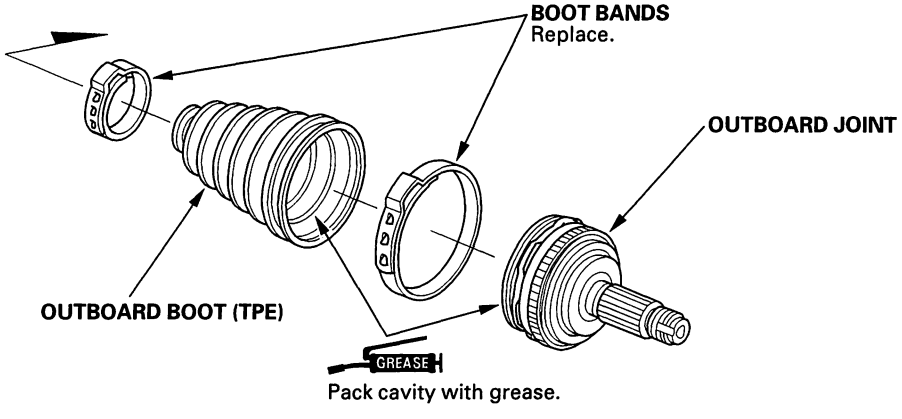

BACK

Special Tools Required
- Boot band tool, KD-3191 or equivalent commercially available
- Boot band pincers, Kent-Moore J-35910 or equivalent commercially available
- Boot band pincer, commercially available

NOTE: Refer to the Exploded View as needed during this procedure.

Inboard Joint Side

1. Wrap the splines with vinyl tape (A) to prevent damage to the inboard boot.

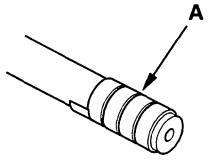

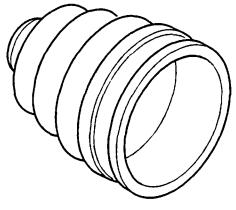

2. Install the inboard boot to the driveshaft, then remove the vinyl tape.Take care not to damage the inboard boot.

3. Install the spider (A) onto the driveshaft by aligning the marks (B) on the spider and the end of the driveshaft.

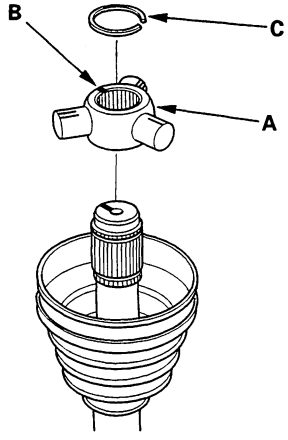

4. Fit the circlip (C) into the driveshaft groove. Always rotate the circlip in its groove to be sure it is fully seated.

5. Fit the rollers (A or B) onto the spider (C) with their high shoulders facing outward, and note these items:

   - Reinstall the rollers in their original positions on the spider by aligning the marks (D).
   - Hold the driveshaft pointed up to prevent the rollers from falling off.
   - Roller (A) is used on '98-00 A/T models and all '01-02 models.
   - Roller (B) is used on '98-00 M/T models.

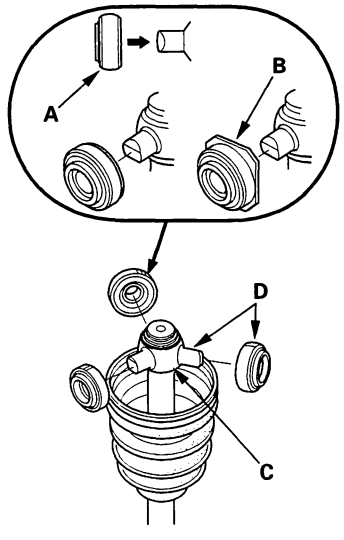

(cont'd)

Driveshafts Reassembly (cont'd)

6. Pack the inboard joint with the joint grease included in the new driveshaft set.

Grease quantity
Inboard joint: 120–130 g (4.2–4.6 oz) ('98-00 models)
150–160 g (5.3–5.6 oz) ('01-02 models)

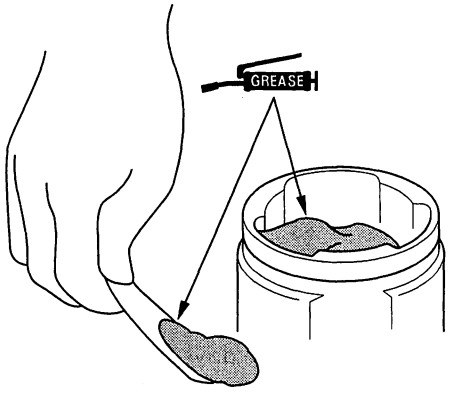

7. Fit the inboard joint onto the driveshaft, and note these items:

- Reinstall the inboard joint (A) onto the driveshaft by aligning the marks (B) on the inboard joint and the rollers.
- Hold the driveshaft so the inboard joint points up to prevent it from falling off.
- For M/T models, align the roller holders (C) with the grooves in the inboard joint ('98-00 models).

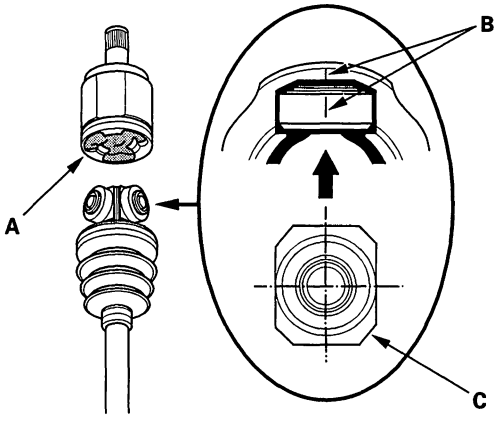

8. Adjust the length of the driveshafts to the figure below, then adjust the boots to halfway between full compression and full extension. Make sure the ends of the boots seat in the grooves of the driveshaft and joint.

Left driveshaft: 554–559 mm (21.8–22.0 in.)
Right driveshaft: 544–549 mm (21.4–21.6 in.)

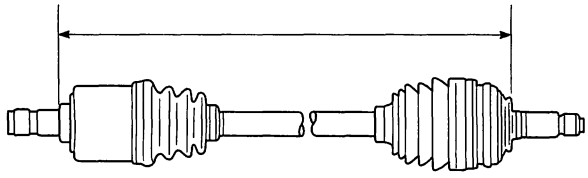

9. Install the boot bands.

- For the double loop type, go to step 13.
- For the low profile type, go to step 11.

BACK

10. Install the new low profile band (A) onto the boot (B) and dynamic damper, then hook the tab (C) of the band.

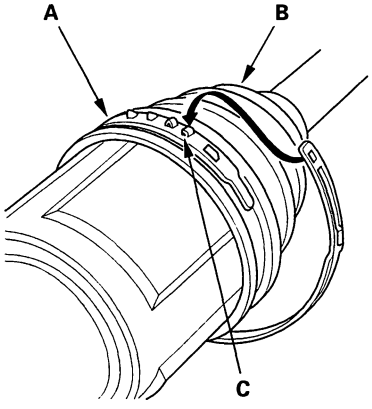

11. Close the hook portion of the band with a commercially available boot band pincers (A) then hook the tabs (B) of the band.

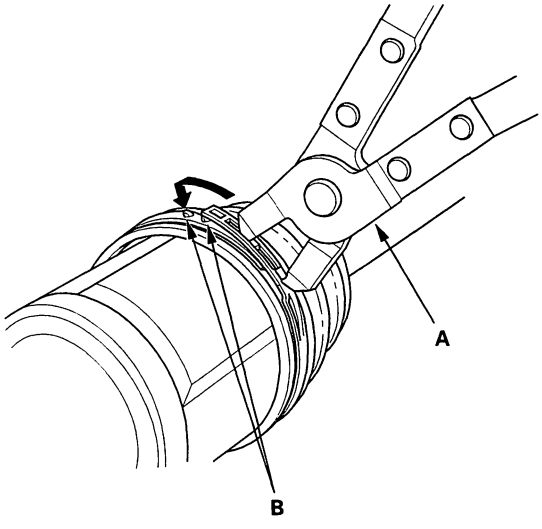

12. Fit the boot ends onto the driveshaft and the inboard joint, then install the band (A) onto the boot (B).

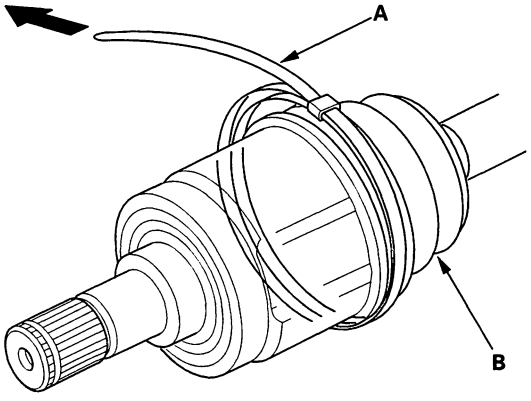

13. Pull up the slack in the band by hand.

14. Mark a position (A) on the band 10—14 mm (0.4—0.6 in.) from the clip (B).

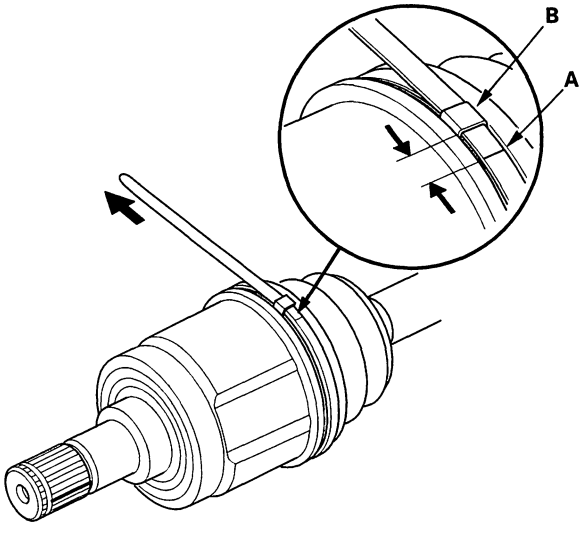

(cont'd)

Driveshafts Reassembly (cont'd)

15. Thread the free end of the band through the nose section of the commercially available boot band tool KD-3191 or equvialent (A), and into the slot on the winding mandrel (B).

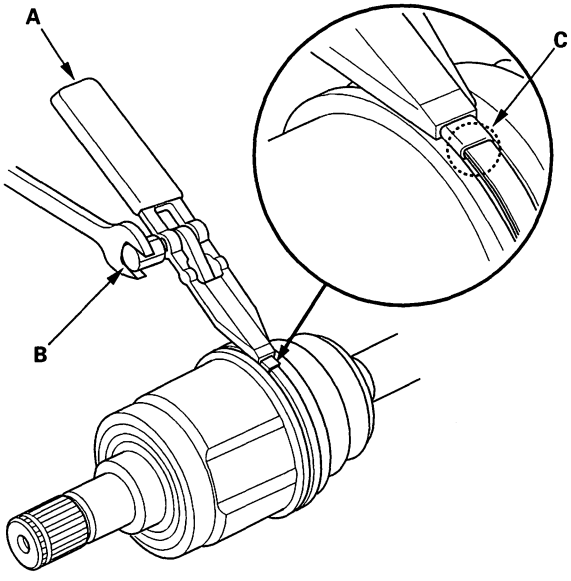

16. Place a wrench on the winding mandrel of the boot band tool, and tighten the band until the marked spot (C) on the band meets the edge of the clip.

17. Lift up the boot band tool to bend the free end of the band 90 degrees to the clip. Center-punch the clip, then fold over the remaining tail onto the clip.

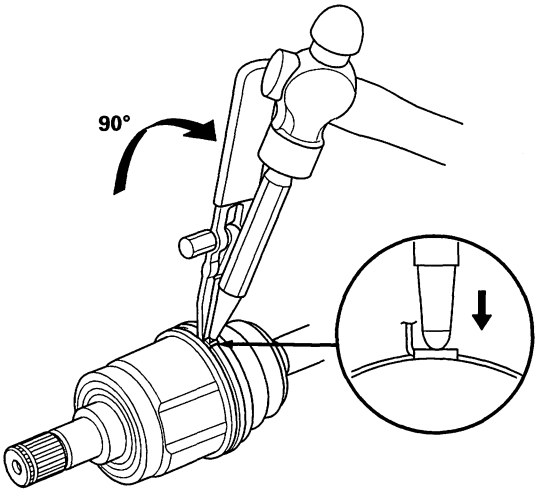

18. Unwind the boot band tool, and cut off the excess free end of the band to leave a 5—10 mm (0.2—0.4 in.) tail protruding from the clip.

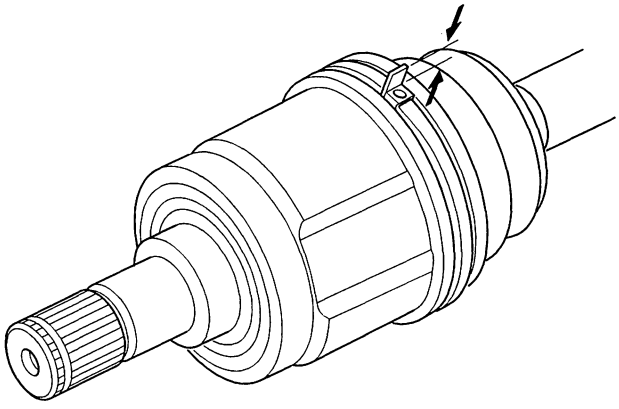

19. Bend the band end (A) by tapping it down with a hammer.

NOTE:
- Make sure the band and clip do not interfere with anything and the band does not move.
- Remove any grease remaining on the surrounding surfaces

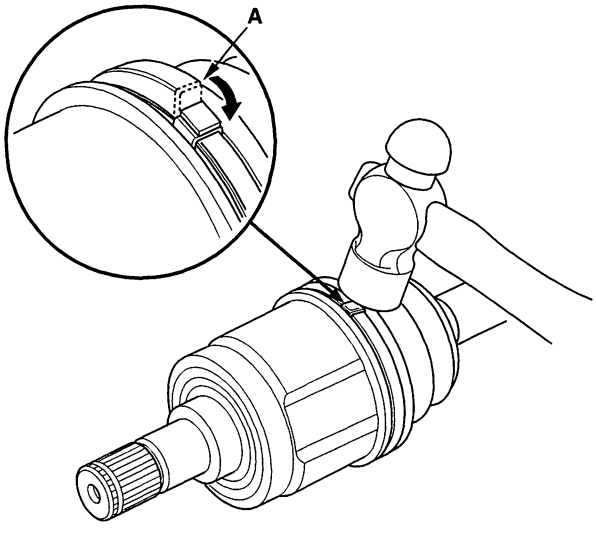

BACK

20. Install the new set ring.

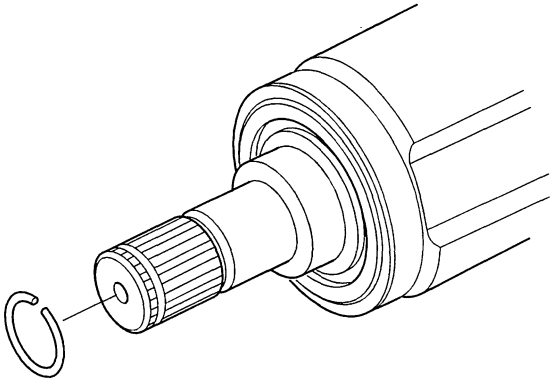

Outboard Joint Side:

1. Wrap the splines with vinyl tape (A) to prevent damage to the outboard boot.

Rubber type

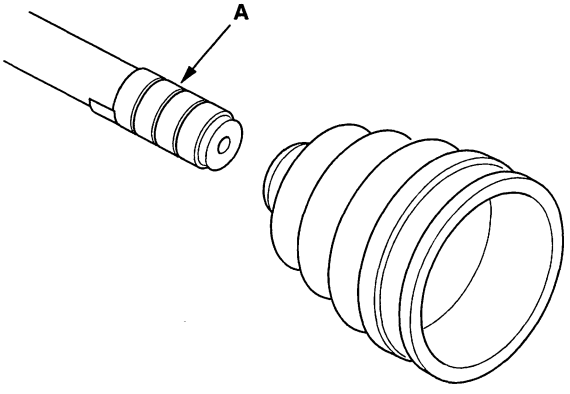

TPE type

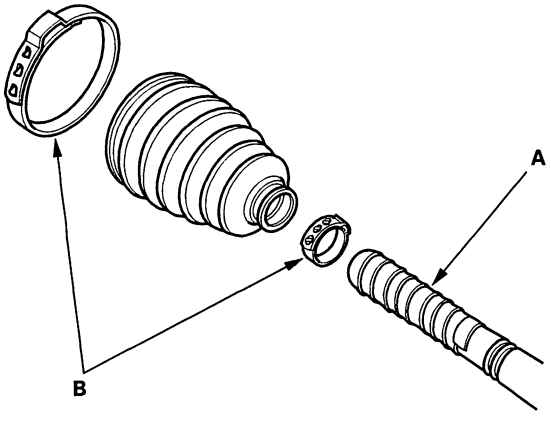

2. Install the new boot band (B) (TPE type).
3. Install the outboard boot. Take care not to damage the outboard boot.
4. Remove the vinyl tape.

(cont'd)

Driveshafts Reassembly (cont'd)

5. Install the new stop ring (A) into the driveshaft groove (B).

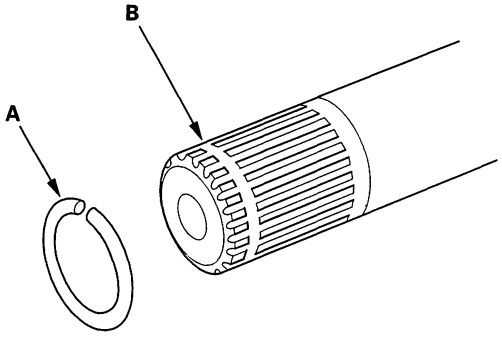

6. Insert the driveshaft (A) into the outboard joint (B) until the stop ring (C) is close on the joint.

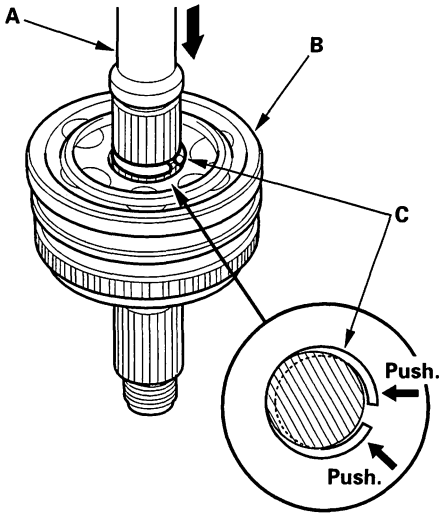

7. To completely seat the outboard joint, pick up the driveshaft and joint, and drop them from about 10 cm (4 in.) onto a hard surface. Do not use a hammer as excessive force may damage the driveshaft.

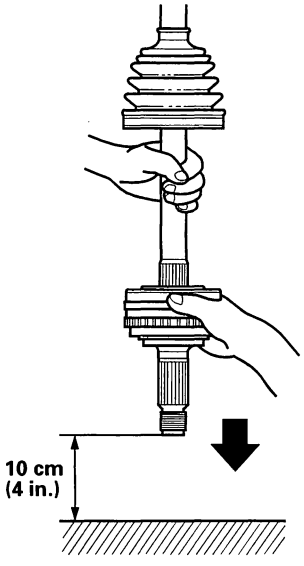

8. Check the alignment of the paint mark (A) with the outboard joint end (B).

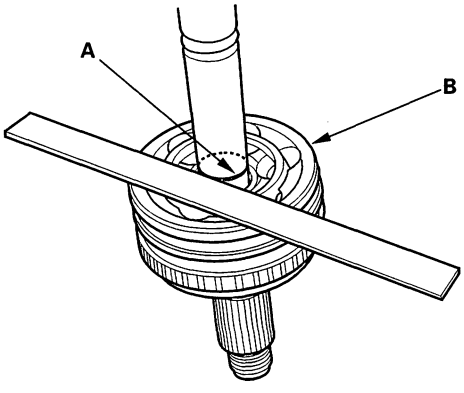

BACK

9. Pack the outboard joint with the joint grease included in the new joint boot set.

Grease quantity
Outboard joint (Rubber): 130–140 g (4.6–4.9 oz)
Outboard joint (TPE): 140–150 g (4.9–5.3 oz)

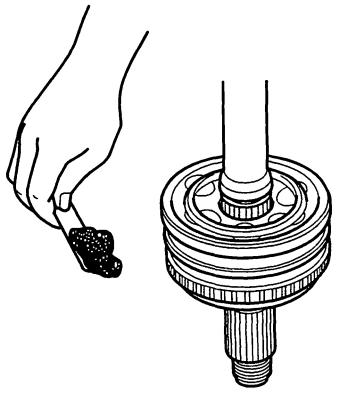

10. Install the outboard boot and boot bands.

- For TPE type boot, go to step 20.
- For rubber type boot, go to step 11.

11. Fit the boot (A) ends onto the driveshaft (B) and outboard joint (C).

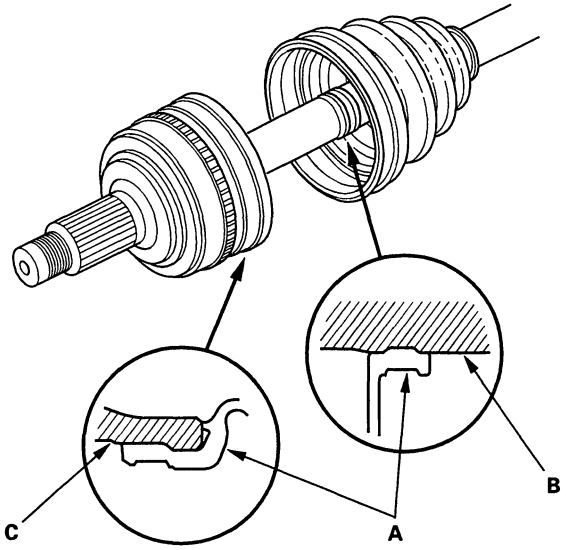

12. Set the new double loop band (A) onto the boot.

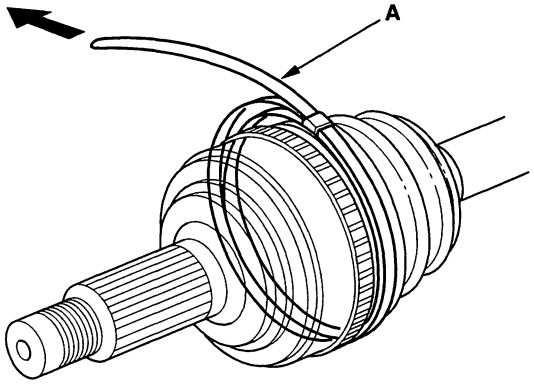

13. Pull up the slack in the band by hand.

14. Mark a position (A) on the band 10–14 mm (0.4–0.6 in.) from the clip (B).

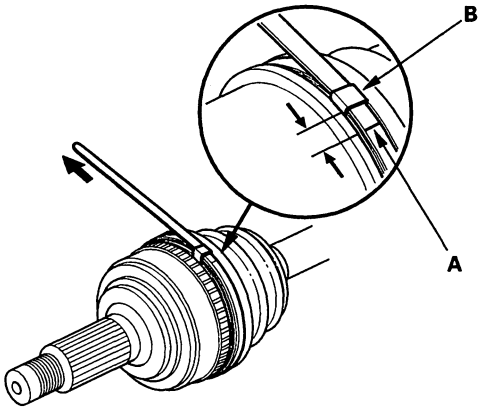

(cont'd)

Driveshafts Reassembly (cont'd)

15. Thread the free end of the band through the nose section of a commercially available boot band tool KD-3191 or equivalent (A), and into the slot on the winding mandrel (B).

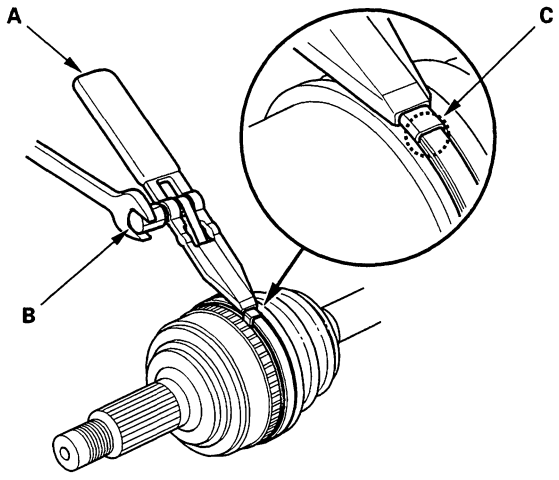

16. Place a wrench on the winding mandrel of the boot band tool, and tighten the band until the marked spot (C) on the band meets the edge of the clip.

17. Lift up the boot band tool to bend the free end of the band 90° to the clip. Center-punch the clip, then fold over the remaining tail onto the clip.

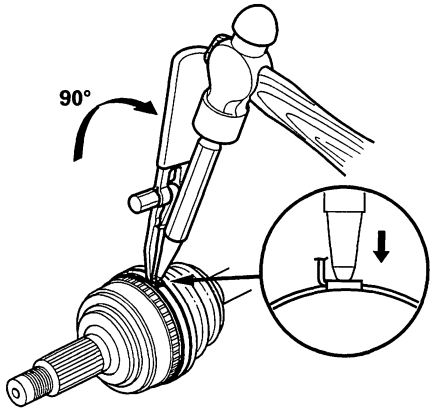

18. Unwind the boot band tool, and cut off the excess free end of the band to leave a 5–10 mm (0.2–0.4 in.) tail protruding from the clip.

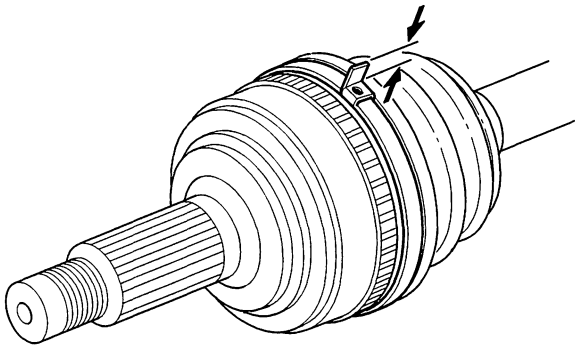

19. Bend the band end (A) by tapping it down with a hammer.

NOTE:
- Make sure the band and clip do not interfere with anything, and the band does not move.
- Remove any grease remaining on the surrounding surfaces.

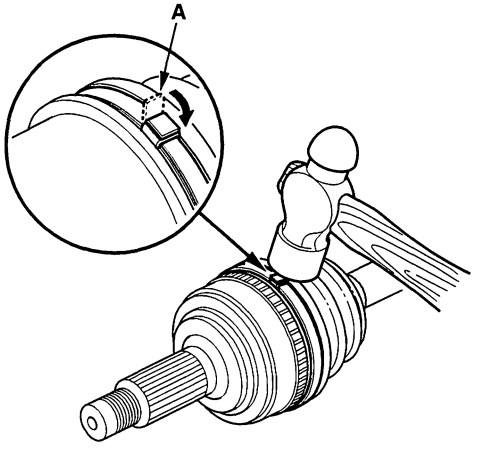

BACK

20. Fit the boot (A) ends onto the driveshaft (B) and outboard joint (C).

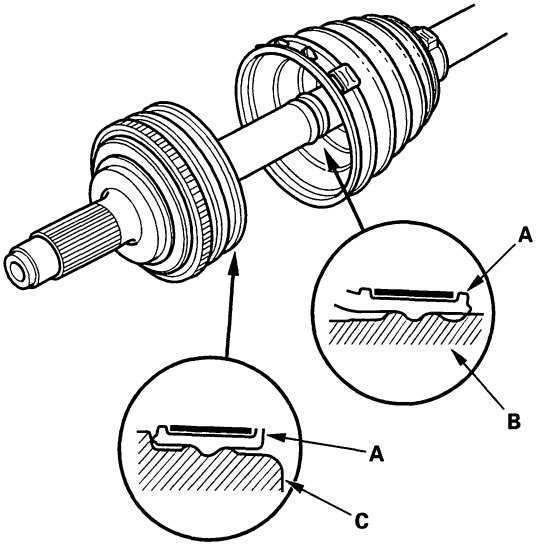

21. Close the ear portion (A) of the band with a commercially available boot band pincers (B).

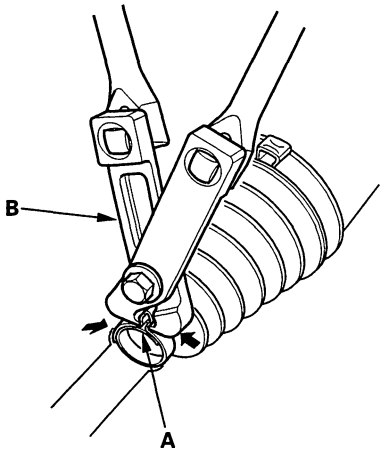

22. Check the clearance between the closed ear portion of the band. If the clearance is not within the standard, close the ear portion of the band further.

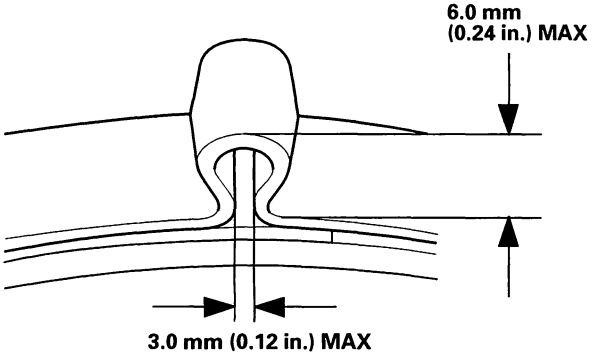

Intermediate Shaft Removal

1. Drain the ATF, refer to the '98-02 Accord Service Manual (see page 14-113).

2. Remove the left driveshaft; refer to the '98-02 Accord Service Manual (see page 16-3).

3. Remove the flange bolt (A) and 2 dowel bolts (B).

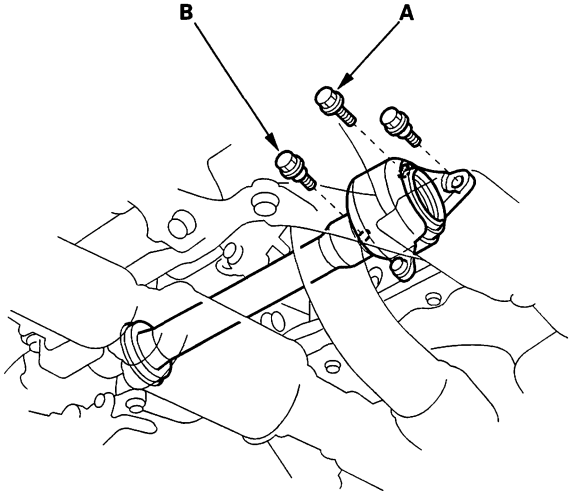

4. Remove the intermediate shaft (A) from the differential. Hold the intermediate shaft horizontal until it is clear of the differential to prevent damage to the differential oil seal (B).

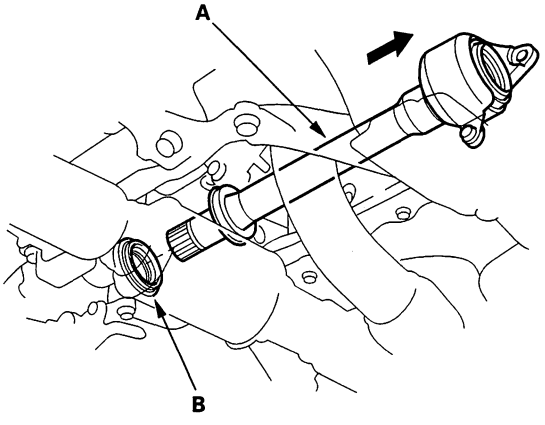

Intermediate Shaft Disassembly

Special Tools Required
- Driver 07749-0010000
- Driver attachment 07947-6340500
- Support base attachment 07LAF-SM40300
- Support base 07965-SD90100
- Attachment, 42 x 47 mm 07746-0010300

1. Remove the heat shield (A) and intermediate shaft outer seal (B) from the bearing support (C).

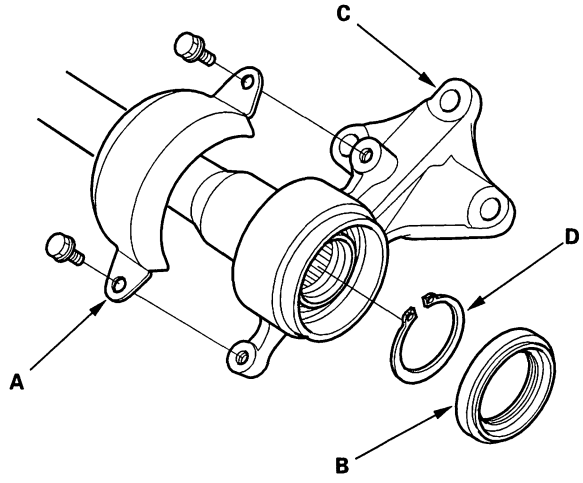

2. Remove the external snap ring (D).

3. Press the intermediate shaft (A) out of the intermediate shaft bearing (B) using the special tools and a press. Be careful not to damage the metal rings (C) on the intermediate shaft during disassembly.

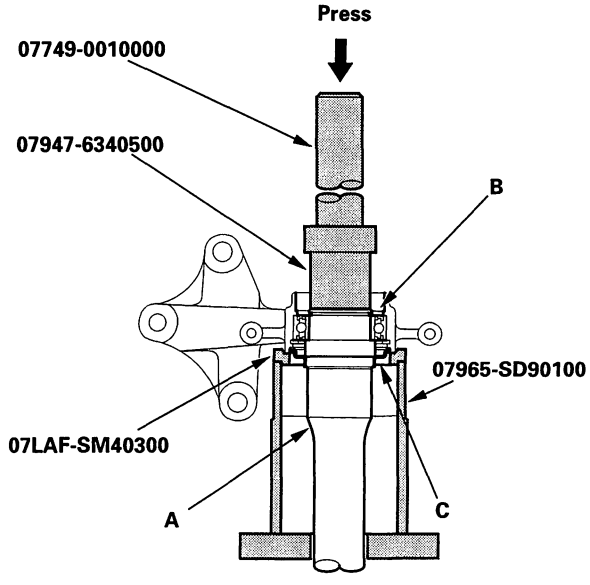

BACK

4. Remove the internal snap ring.

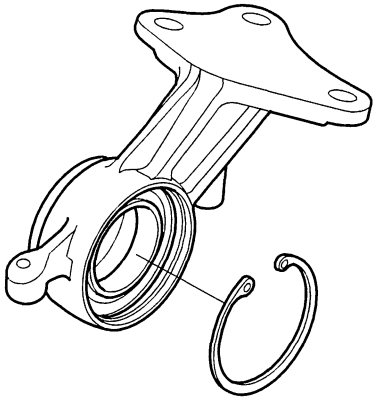

5. Press the intermediate shaft bearing (A) out of the bearing support (B) using the special tools and a press.

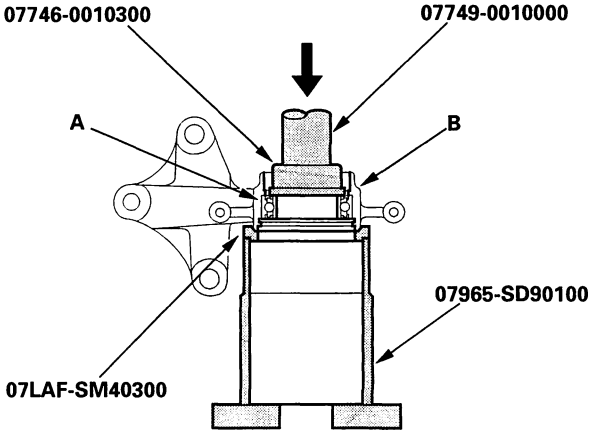

Intermediate Shaft Reassembly

Exploded View

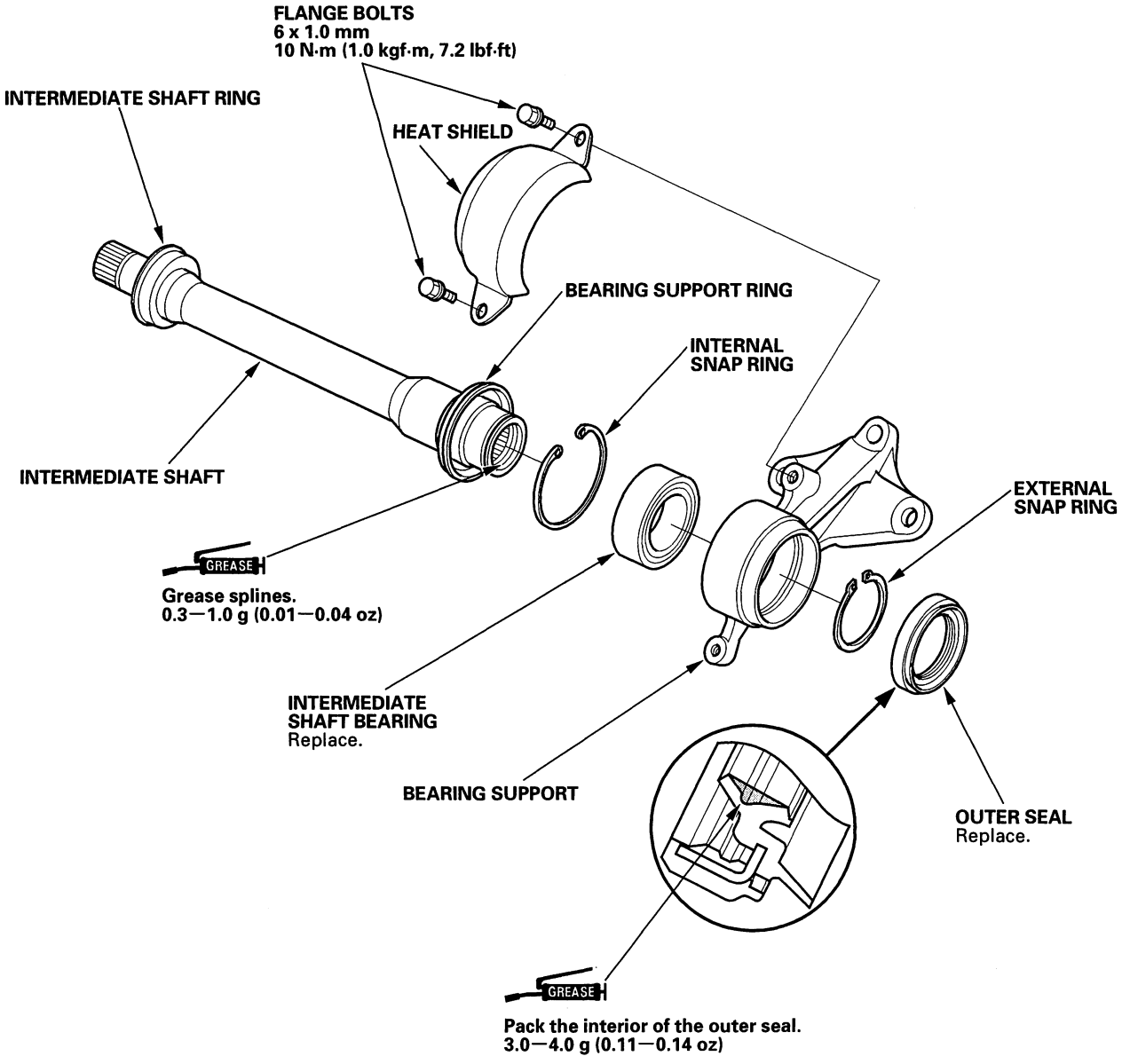

BACK

Special Tools Required
- Driver 07749-0010000
- Support base attachment 07LAF-SM40300
- Support base 07965-SD90100
- Oil seal driver attachment 07947-SD90101
- Fork seal driver, 39.2 x 49.5 x15 mm 07947-4630100

NOTE: Refer to the Exploded View as needed during this procedure.

1. Clean the disassembled parts with solvent, and dry them with compressed air. Do not wash the rubber parts with solvent.

2. Press the intermediate shaft bearing (A) into the bearing support (B) using the special tools and a press.

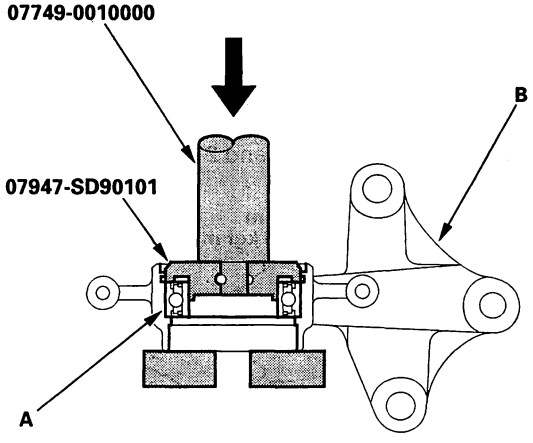

3. Seat the internal snap ring in the groove of the bearing support.

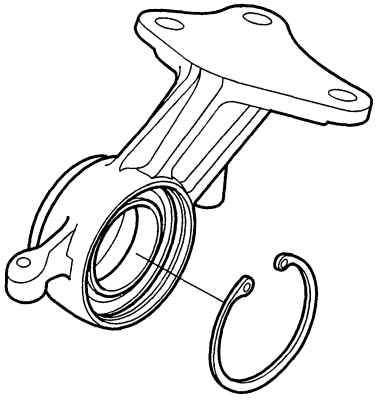

4. Press the intermediate shaft (A) into the shaft bearing using the special tool and a press.

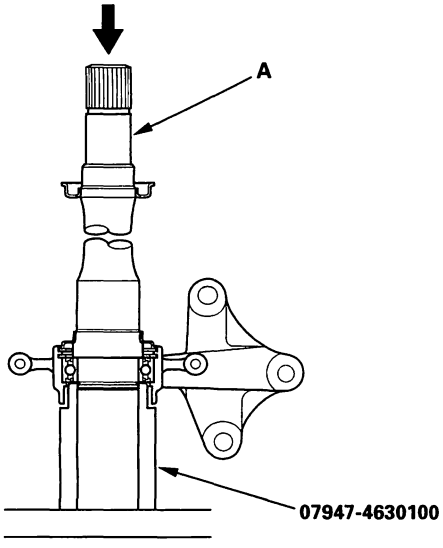

5. Seat the external snap ring (A) into the groove of the intermediate shaft (B).

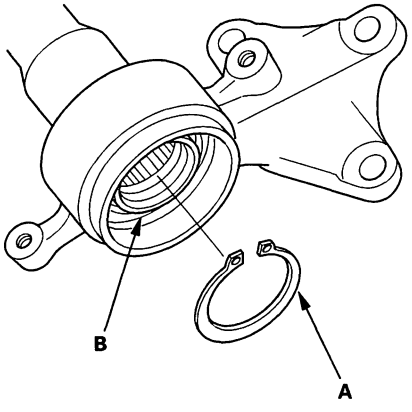

(cont'd)

Intermediate Shaft Reassembly (cont'd)

6. Pack the interior of the outer seal (A). Install the outer seal into the bearing support (B) using the special tools and a press.

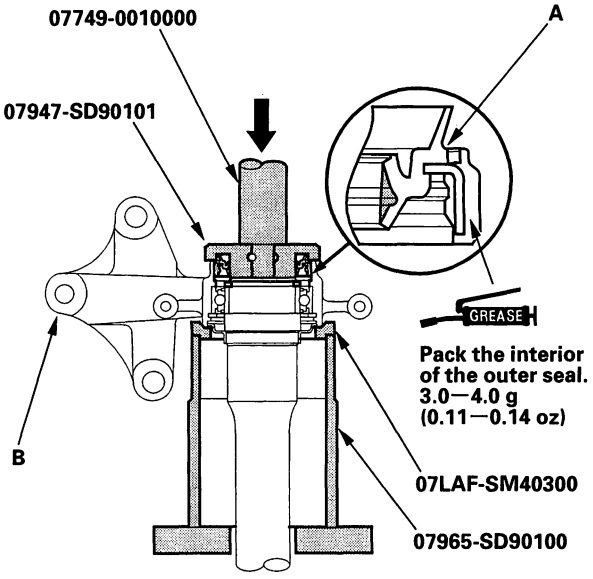

7. Install the heat shield onto the bearing support.

Intermediate Shaft Installation

1. Clean the areas where the intermediate shaft (A) contacts the transmission (differential) thoroughly with solvent or carburetor cleaner, and dry with compressed air. Insert the intermediate shaft assembly into the differential. Hold the intermediate shaft horizontal to prevent damage to the differential oil seal (B).

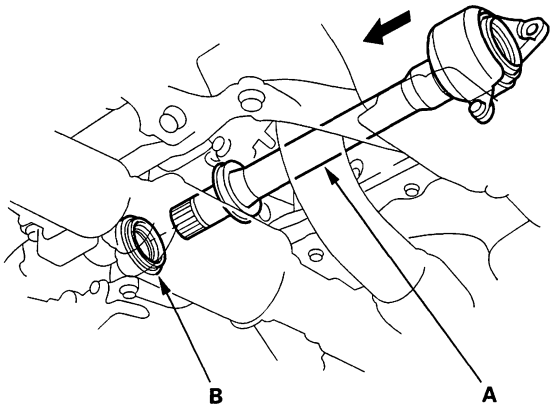

2. Install the flange bolt (A) and 2 dowel bolts (B).

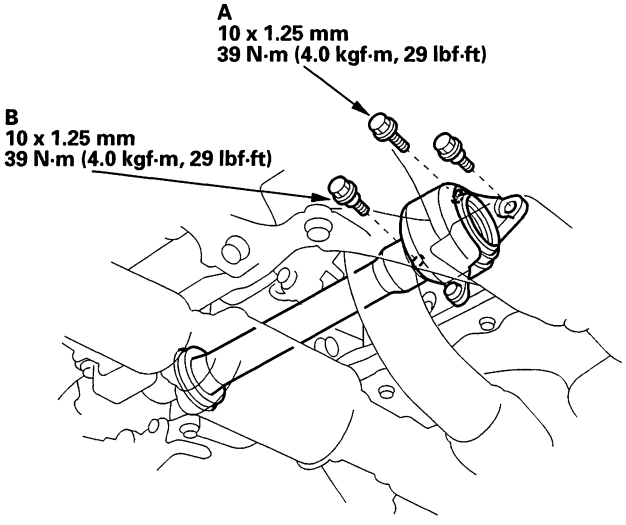

3. Refill the transmisson with recommended ATF, refer to the '98-02 Accord Service Manual (see page 14-113).

BACK

Steering

Power Steering

Special Tools 17-2
Component Location Index 17-3
Symptom Troubleshooting Index 17-4
Symptom Troubleshooting 17-6
Pump Pressure Test-with T/N 07406—0010001 17-7
Pump Pressure Test-with T/N 07406—001000A 17-8
Fluid Leakage Inspection 17-9
Pump Belt Inspection and Adjustment 17-10
Hoses and Lines Replacement 17-12
Pump Replacement 17-13
Pump Overhaul 17-14
Rack Guide Adjustment 17-19
Steering Gearbox Overhaul 17-20

NOTE: Refer to the 1998—2002 Accord Service Manual, P/N 61S8400 for items not shown in this section.

Outline of V6 Model Changes

The Steering System has been changed to suit the V6 engine.

Special Tools

Ref.No.	Tool Number	Description	Qty
①	07LAG-SM40100 or 07LAG-SM4010A	Piston Seal Ring Guide	1
②	07LAG-SM40200 or 07LAG-SM4020A	Piston Seal Ring Sizing Tool	1
*③	07JGG-001010A	Belt Tension Gauge	1
④	07TAF-SZ50100	Cylinder End Seal Remover Attachment	1
⑤	07RAK-S040122	P/S Joint Adaptor (Hose)	1
⑥	07VAK-P8A011A	P/S Joint Adaptor (Pump)	1
⑦	07VAK-P8A012B	P/S Joint Adaptor Plate (Pump)	1
⑧	07406-0010001 or 07406-001000A	P/S Pressure Gauge	1
⑨	07746-0010300	Attachment, 42 x 47 mm	1
⑩	07749-0010000	Driver	1

*Included in the Belt Tension Gauge Set, 07TGG—001000A.

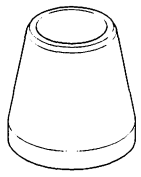

①

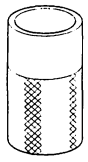

②

③

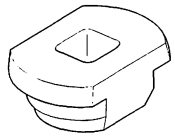

④

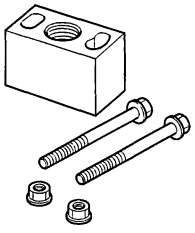

⑤

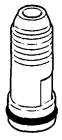

⑥

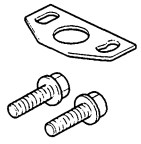

⑦

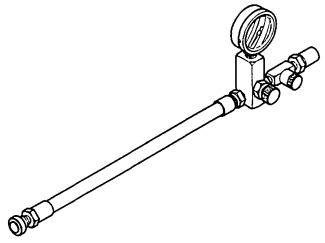

⑧

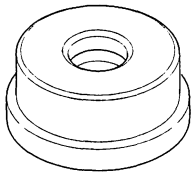

⑨

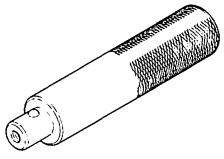

⑩

BACK

Component Location Index

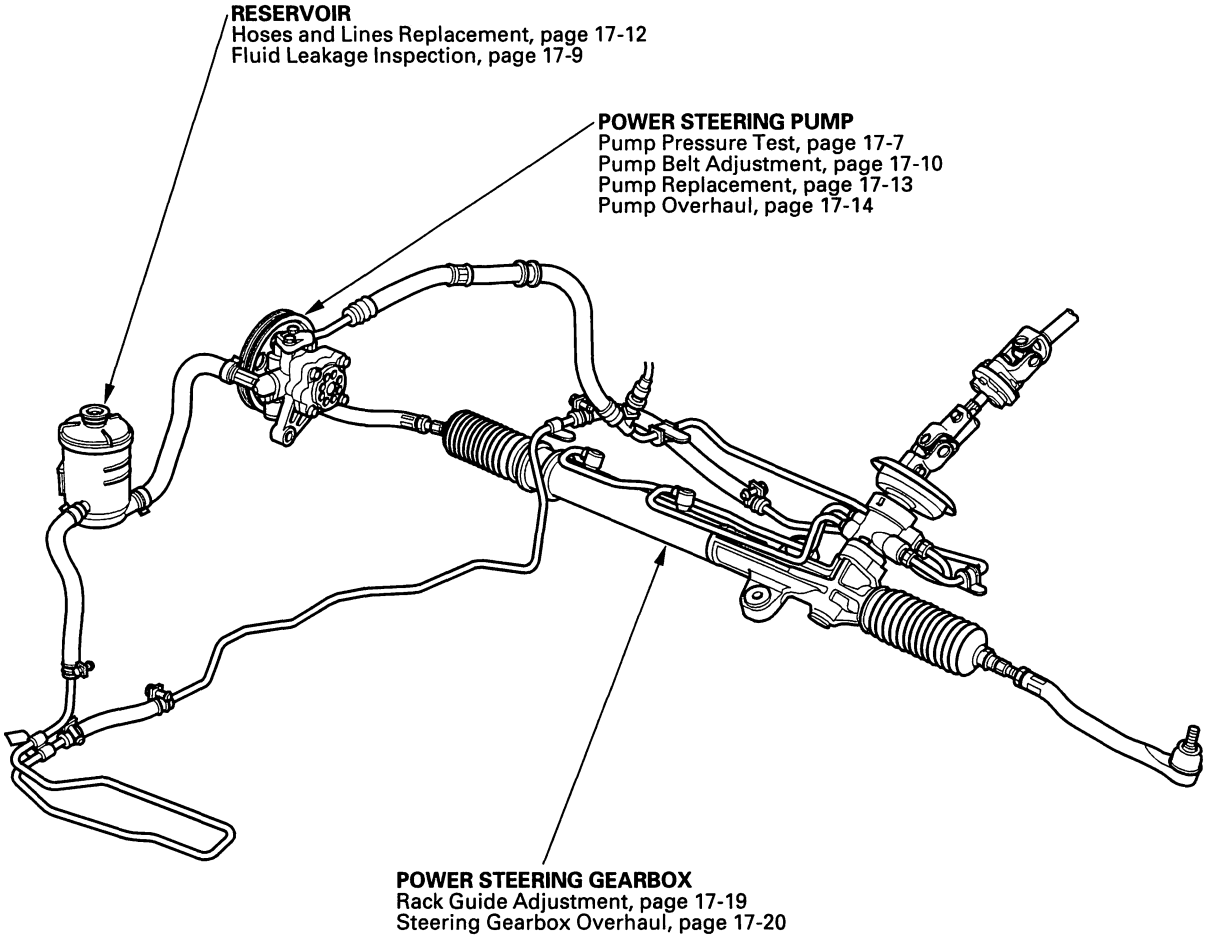

Symptom Troubleshooting Index

Find the symptom in the chart below, and do the related procedures in the order listed until you find the cause.

Symptom	Procedure(s)	Also check for:
Hard Steering	Troubleshoot the system (see page 17-6).	• Modified suspension • Tire sizes, tire varieties, and air pressure • Power steering pump belt adjustment
Assist (excessively light steering at high speed)	Check the rack guide adjustment (see page 17-19).	Front wheel alignment; refer to the '98-02 Accord Service Manual (see page 18-5).
Shock or vibration when the wheel is turned to full lock	1. Check the rack guide adjustment (see page 17-19). 2. Check the power steering pump belt for slippage and adjust as necessary (see page 17-10). 3. Replace the steering gearbox; refer to the '98-02 Accord Service Manual (see page 17-30).	
Steering wheel will not return smoothly	1. Check cylinder lines A and B for deformation. 2. Check wheel alignment; refer to the '98-02 Accord Service Manual (see page 18-5). 3. Replace the steering gearbox; refer to the '98-02 Accord Service Manual (see page 17-30).	
Uneven or rough steering	1. Check the rack guide adjustment (see page 17-19). 2. Check power steering pump belt adjustment (see page 17-10). 3. Check for low or erratic engine idle speed (see page 11-87). 4. Check for air in the power steering system due to low fluid level. 5. Check for low fluid level in the power steering reservoir due to possible leaks in system. 6. Replace the steering gearbox; refer to the '98-02 Accord Service Manual (see page 17-30).	
Steering wheel kicks back during wide turns	1. Check power steering pump belt adjustment (see page 17-10). 2. Check the power steering pump fluid pressure with T/N 07406-0010001 (see page 17-7), with T/N 07406-001000A (see page 17-8).	
Humming	1. Check when the noise occurs • If the noise happens 2—3 minutes after starting the engine in cold weather, this is normal. • If the noise happens when the wheel is turn with the vehicle stopped, this is normal due to the fluid pulsation. 2. Check for the high-pressure hose touching the sub-frame or body. 3. Check for automatic transmission convertor noise. Remove the power steering belt, and recheck.	

BACK

Rattle or chattering	1. Check for loose steering components (tie-rod and ball joints). Tighten or replace as necessary. 2. Check the steering column shaft for wobbling. If the steering columns wobbles, replace the steering column assembly, refer to the '98-'02 Accord Service Manual (see page 17-25). 3. Check the rack guide adjustment (see page 17-19). 4. Check the power steering pump pulley. • If the pulley is loose, tighten it (see page 17-14). • If the pump shaft is loose, replace the pump (see page 17-13).	
Hissing	• Check the fluid level. If low, fill the reservoir to the proper level and check for leaks. • Check the reservoir for leaks. • Check for crushed inlet hose or loose hose clamp allowing air into the suction side of the system. • Check the power steering pump shaft oil seal for leaks.	
Pump noise	• Compare the pump noise at normal operating temperature to another vehicle, (pump noise up to 2—3 minutes after starting the engine in cold weather is normal). • Remove and inspect the pump for wear and damage (see step 1 on page 17-15).	
Squeaking	Check the power steering belt tension and adjust as necessary (see page 17-10).	
Fluid Leaks from the steering gearbox	• Fluid leaks from the top of the valve body unit: Replace the valve body unit. • Fluid leaks from the left tie-rod boot: Replace the valve oil seal on the pinion shaft. Replace the cylinder end seal on the gearbox side. • Fluid leaks from the right tie-rod boot: Replace the cylinder end seal. • Fluid leaks from pinion shaft near the lower steering joint bolt: Replace the valve body unit.	
Fluid leaks from line	• Fluid leaks from the cylinder line A or B connections (flare nuts): Tighten the connection and retest. If it still leaks, replace the fitting O-rings. • Fluid leaks from a damaged cylinder line A or B: Replace the cylinder line. • Fluid leaks from the pump outlet hose or return line fitting on the valve body unit (flair nuts): Tighten the fitting and retest. If it still leaks, replace the hose, the line, or valve body unit as necessary.	
Fluid leaks from pump	• Fluid leaks from the front oil seal: Replace the front oil seal. • Fluid leaks from the power steering pump housing: Replace the leaking O-rings or seals (see page 17-14), and if necessary replace (see page 17-13)	
Fluid leaks from reservoir	• Fluid leaks from around the reservoir cap: Fluid level is too high: drain the reservoir to the proper level. Aerated fluid: check for an air leak on the inlet side of pump. • Fluid leaks from reservoir: Check for the reservoir for cracks and replace as necessary.	
Fluid leaks from pump outlet hose (high-pressure)	• Check the fitting for loose bolts. If the bolts are tight, replace the fitting O-ring. • Fluid leaks at the swagged joint: Replace the outlet hose.	
Fluid leaks from pump inlet hose (low-pressure)	Check the hose for damage, deterioration, or improper assembly. Replace or repair as necessary.	

Symptom Troubleshooting

Hard Steering

1. Check the power assist, refer to the '98-02 Accord Service Manual (see page 17-7).

   Is the power assist more than 29 N (3.0 kgf, 6.6 lbf)?

   YES—Go to step 2.

   NO—Power assist is OK.■

2. Measure steady-state fluid pressure from the pump at idle with T/N 07406-0010001 (see page 17-7) or with T/N 07406-001000A (see page 17-8).

   Is the pressure 1,500 kPa (15 kgf/cm², 213 psi) or less?

   YES—Go to step 3.

   NO—Go to step 7.

3. Measure the pump relief pressure at idle with T/N 07406-0010001 (see page 17-7) or with T/N 07406-001000A (see page 17-8).

   Is the pressure 7,600—8,300 kPa (78—85 kgf/cm 2, 1,100—1,210 psi) or less?

   YES—Go to step 4.

   NO—Go to step 8.

4. With a spring scale, measure the power assist in both directions, to the left and to the right.

   Are the two measurements within 5.0 N (0.51 kgf, 1.12 lbf) of each other?

   YES—Go to step 5.

   NO—Go to step 9.

5. Measure the fluid pressure with T/N 07406-0010001 (see page 17-7) or with T/N 07406-001000A (see page 17-8) with both pressure gauge valves open (if so equipped), wheel turning the steering wheel fully to the left and fully to the right.

   Is the pressure 7,600—8,300 kPa (78—85 kgf/cm², 1,100—1,210 psi) or less?

   YES—Go to step 6.

   NO—Faulty gearbox.■

6. Adjust the rack guide (see page 17-19), and retest.

   Is the steering OK?

   YES—Repair is completed.■

   NO—Faulty gearbox.■

7. Check for feed and return lines between the pump and the gearbox for clogging and deformation.

   Are the lines clogged or deformed?

   YES—Repair or replace the lines.■

   NO—Faulty valve body unit.■

8. Check the flow control valve, refer to the '98-02 Accord Service Manual (see page 17-17) for smooth movement and leaks.

   Is the flow control valve OK?

   YES—Faulty pump assembly.■

   NO—Faulty flow control valve.■

9. Check the cylinder lines A and B for deformation (see page 17-12).

   Are the A or B lines deformed?

   YES—Replace the lines.■

   NO—Go to step 10.

10. Check for a bent rack shaft or misadjusted rack guide (to tight).

    Is the rack shaft bent or the rack guide adjusted too tight?

    YES—Replace the rack shaft or readjust the rack guide.■

    NO—Faulty valve body unit.■

BACK

Pump Pressure Test with T/N 07406-0010001

Special Tools Required
- P/S joint adapter (pump), 07VAK-P8A011A
- P/S joint adapter plate (pump), 07VAK-P8A012B
- P/S joint adapter (hose), 07RAK-S040122
- P/S pressure gauge, 07406-0010001

Check the fluid pressure as follows to determine whether the trouble is in the pump or gearbox.

1. Check the power steering fluid level; refer to the '98-02 Accord Service Manual (see page 17-14) and pump belt tension (see page 17-10).

2. Disconnect the pump outlet hose (A) from the pump outlet with care so as not to spill the power steering fluid on the frame and other parts, then install the P/S joint adapter (pump) on the pump outlet (B) with the P/S joint outlet plate.

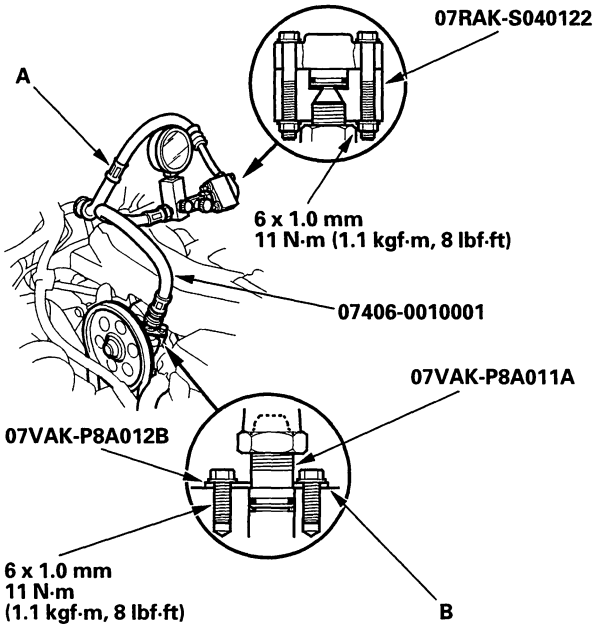

3. Connect the P/S joint adapter (hose) to the P/S pressure gauge, then connect the pump outlet hose (A) to the P/S joint adapter (hose).

4. Install the P/S pressure gauge to the P/S joint adapter (pump).

5. Fully open the shut-off valve (A).

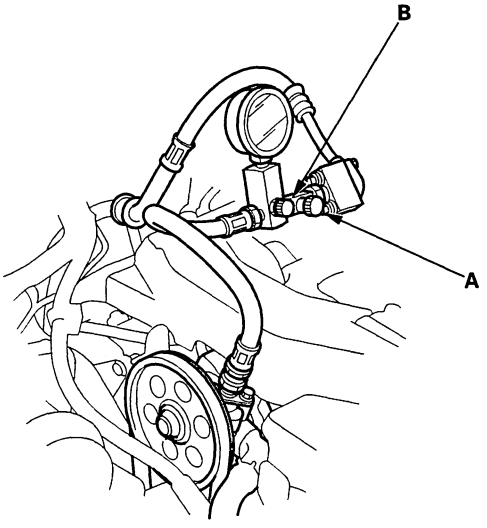

6. Fully open the pressure control valve (B).

7. Start the engine and let it idle.

8. Turn the steering wheel from lock-to-lock several times to warm the fluid to operating temperature.

9. Measure steady-state fluid pressure while the engine is idling. If the pump is in good condition, the gauge should read less than 1,500 kPa (15 kgf/cm^2, 213 psi). If it reads high, check for:
   - Clogged or deformed feed or return line between the pump and gearbox.
   - Clogged valve vody unit.

10. Close the pressure control valve, then close the shut-off valve gradually until the pressure gauge needle is stable. Read the pressure.

NOTICE
Do not keep the pressure control valve closed more than 5 seconds or the pump could be damaged by over-heating.

11. Immediately open the pressure control valve fully. If the pump is in good condition, the gauge should read at least 7,600 – 8,300 kPa (78 – 85 kgf/cm^2, 1,110 – 1,210 psi). A low reading means pump output is too low for full assist. Repair or replace the pump.

BACK

Pump Pressure Test with T/N 07406-001000A

Special Tools Required
- P/S joint adapter (pump), 07VAK-P8A011A
- P/S joint adapter plate (pump), 07VAK-P8A012B
- P/S joint adapter (hose), 07RAK-S040122
- P/S pressure gauge, 07406-001000A

Check the fluid pressure as follows to determine whether the trouble is in the pump or gearbox.

1. Check the power steering fluid level; refer to the '98-02 Accord Service Manual (see page 17-14) and pump belt tension (see page 17-10).

2. Disconnect the pump outlet hose (A) from the pump outlet with care so as not to spill the power steering fluid on the frame and other parts, then install the P/S joint adapter (pump) on the pump outlet (B) with the P/S joint outlet plate.

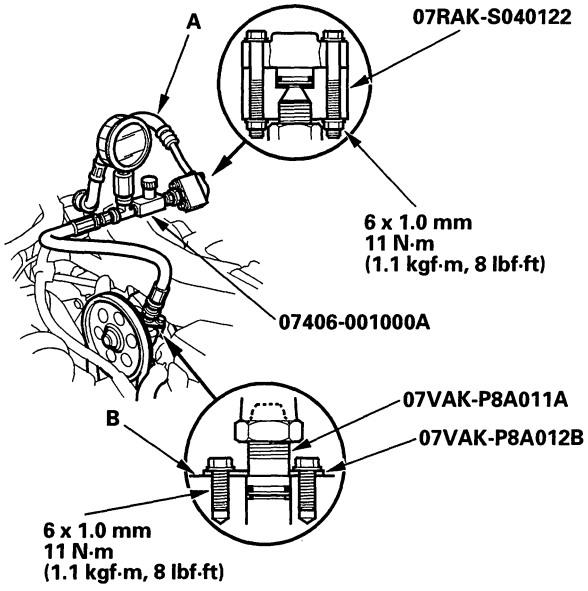

3. Connect the P/S joint adapter (hose) to the P/S pressure gauge, then connect the pump outlet hose (A) to the P/S joint adapter (hose).

4. Install the P/S pressure gauge to the P/S joint adapter (pump).

5. Open the pressure control valve (A) fully.

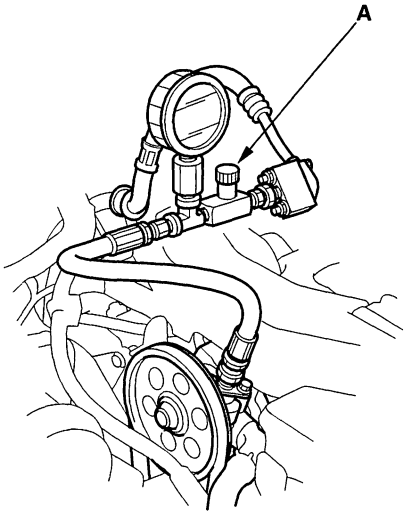

6. Start the engine and let it idle.

7. Turn the steering wheel from lock-to-lock several times to warm the fluid to operating temperature.

8. Measure steady-state fluid pressure while the engine is idling. If the pump is in good condition, the gauge should read less than 1,500 kPa (15 kgf/cm^2, 213 psi). If it reads high, check for:
   - Clogged or deformed feed or return line between the pump and gearbox.
   - Clogged valve vody unit.

9. Close the pressure control valve gradually and read the pressure.

   NOTICE
   Do not keep the pressure control valve closed more than 5 seconds or the pump could be damaged by over-heating.

10. Immediatery open the pressure control valve fully. If the pump is in good condition, the gauge should read at least 7,600–8,300 kPa (78–85 kgf/cm^2, 1,110–1,210 psi). A low reading means pump output is too low for full assist. Repair or replace the pump.

BACK

Fluid Leakage Inspection

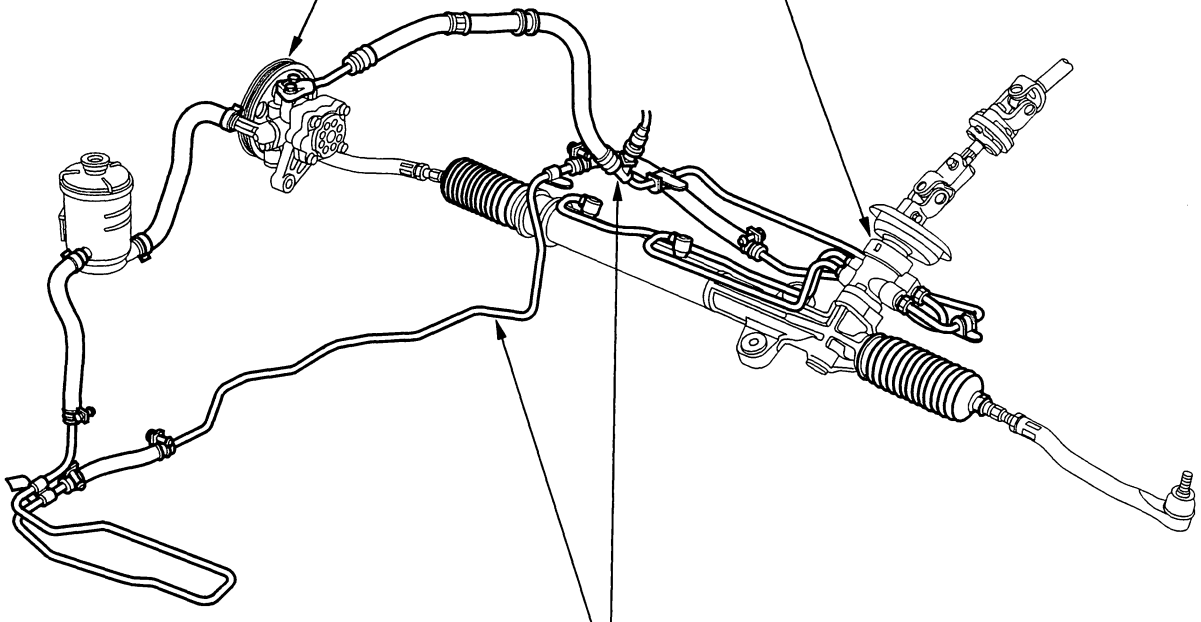

Pump Belt Inspection and Adjustment

Special Tools Required
Belt tension gauge set, 07JGG-001000A or
Belt tension gauge, 07JGG-001010A

Belt Tension Gauge Method

Inspection

1. Attach the belt tension gauge to the belt with the gauge face toward the engine, and measure the tension of the belt. Follow the manufacture's instructions. If the belt is worn or damaged, replace it.

   NOTE: Remove the belt tension gauge carefully to avoid hitting the gauge reset lever.

   Tension:
   Used Belt: 390–540 N (40–55 kgf, 88–121 lbf)
   New Belt: 740–880 N (75–90 kgf, 165–198 lbf)

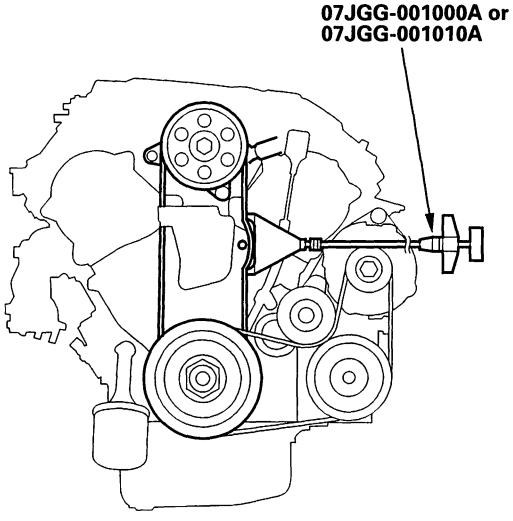

2. If you installed a new belt, run the engine for 5 minutes, then readjust the belt to the used belt specifications.

Adjustment

3. Loosen the power steering pump mounting nut (A) and bolt (B).

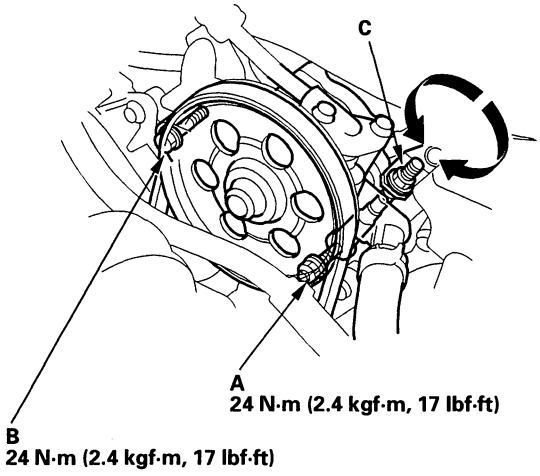

4. Turn the adjusting nut (C) to get the proper belt tension, then retighten the mounting nut and bolt.

5. Start the engine and turn the steering wheel from lock-to-lock several times, then stop the engine and recheck the tension of the belt.

BACK

Deflection Method

Inspection

1. Apply a force of 98 N (10 kgf, 22 lbf) and measure the deflection between the power steering pump pulley (A) and the crankshaft pulley (B).

   Deflection:
   Used Belt: 13.0 – 16.5 mm (0.51 – 0.65 in.)
   New Belt: 8.5 – 11.0 mm (0.33 – 0.45 in.)

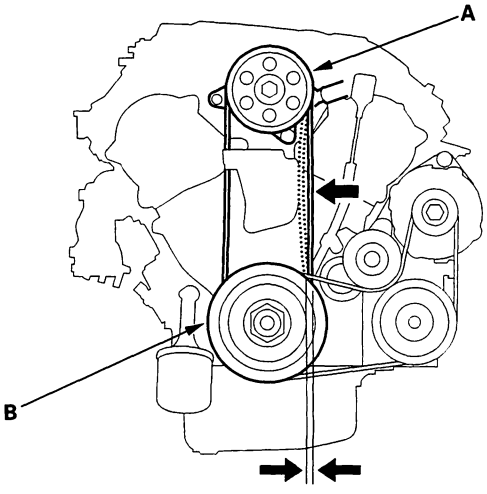

2. If you installed a new belt, run the engine for 5 minutes, then readjust the belt to the used belt specifications.

Adjustment

3. Loosen the power steering pump mounting nut (A) and bolt (B).

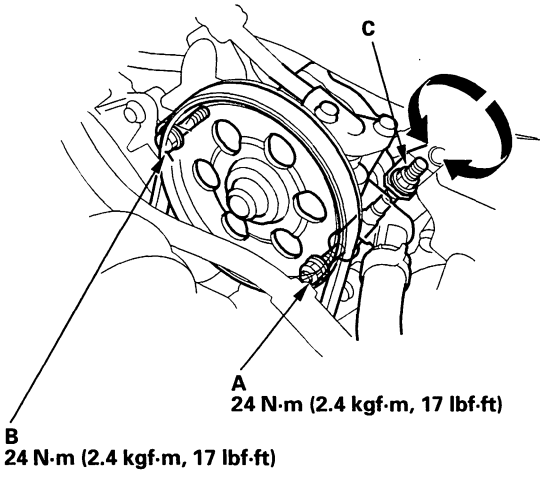

4. Turn the adjusting nut (C) to get the proper belt tension, then retighten the mounting nut and bolt.

5. Start the engine and turn the steering wheel from lock-to-lock several times, then stop the engine and recheck the tension of the belt.

Hoses and Lines Replacement

Note these items during installation:

- Connect each hose to the corresponding line securely until it contacts the stop on the line. Install the clamp or adjustable clamp at the specified distance from the hose end as shown.
- Check all clamps for deterioration or deformation; replace with the clamps new ones if necessary.
- Add the recommended power steering fluid to the specified level on the reservoir and check for leaks.

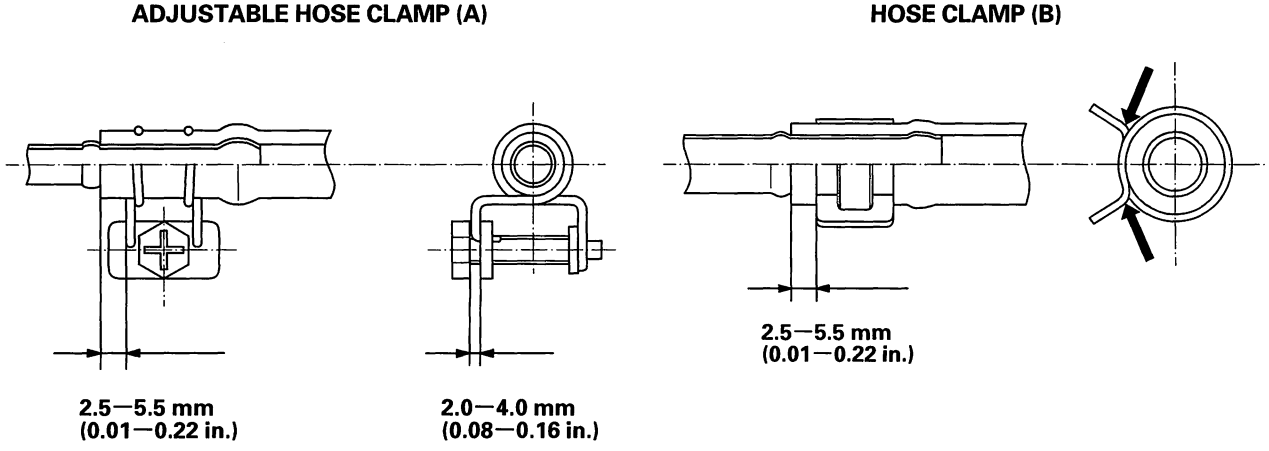

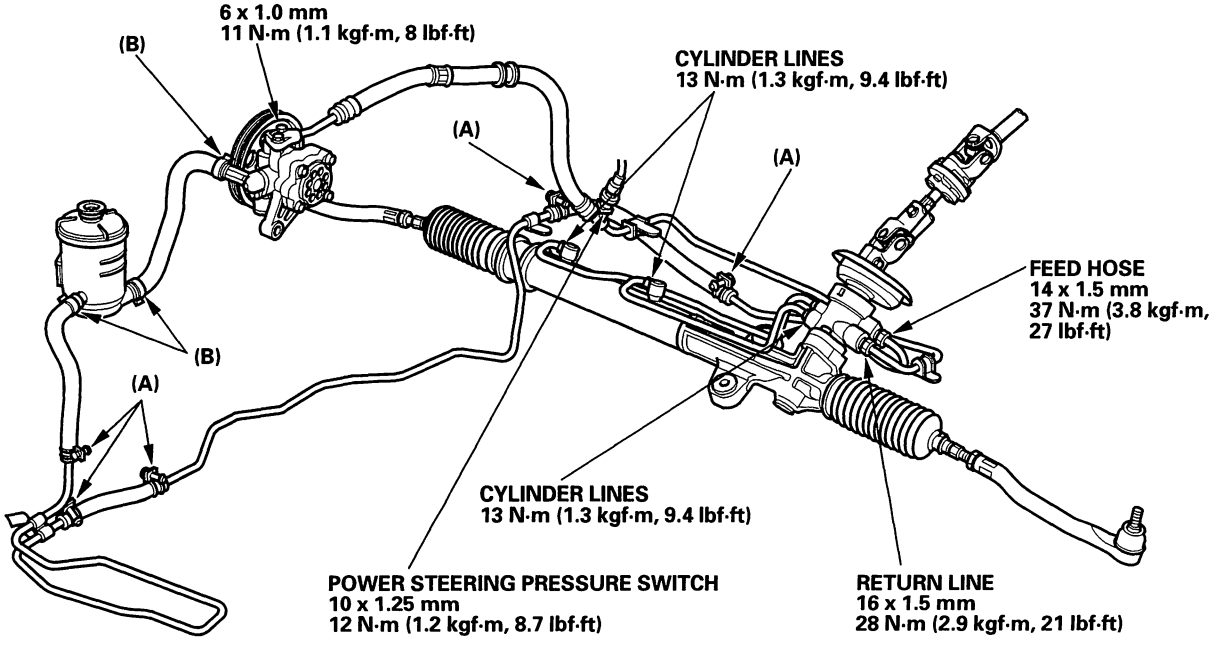

BACK

Pump Replacement

1. Place a suitable container under the vehicle.

2. Drain the power steering fluid from the reservoir.

3. Remove the intake manifold cover.

4. Cover the crankshaft pulley with several shop towels to protect if from spilled power steering fluid. Disconnect the pump inlet hose (A) and pump outlet hose (B) from the pump (C), and plug them. Take care not to spill the fluid on the body or parts. Wipe off any spilled fluid at once.

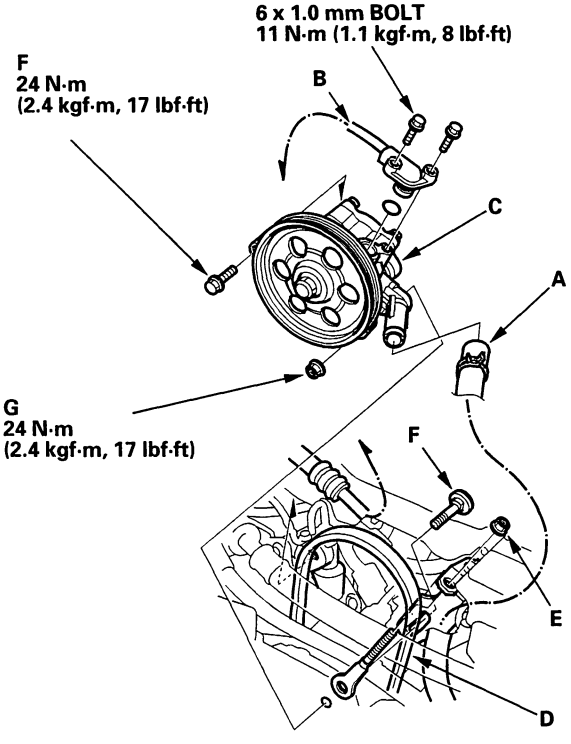

5. Remove the belt (D) by loosening the pump adjusting nut (E), then remove pump mounting bolts (F), nut (G) and pump. Do not turn the steering wheel with pump removed.

6. Connect the pump outlet hose and inlet hose. Tighten the pump fittings securely.

7. Loosely install the pump in the pump bracket with the mounting bolts and nut.

8. Install the pump belt (A) on the pulley (B).

   Note these items during belt installation:
   - Make sure that the power steering belt is properly positioned on the pulleys.
   - Do not get the power steering fluid or grease on the belt or pulley faces. Clean off any fluid or grease before installation.

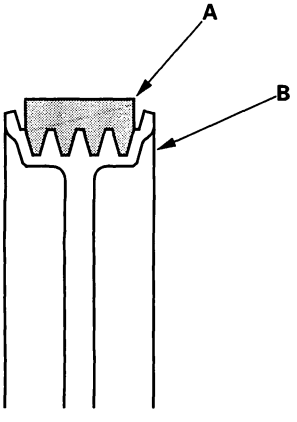

9. Adjust the pump belt adjustment (see page 17-10).

10. Fill the reservoir to the upper level line; refer to the '98-02 Accord Service Manual (see page 17-14).

Pump Overhaul

Exploded View

Replace the pump as an assembly if the parts indicated with asterisk (*) are worn or damaged.

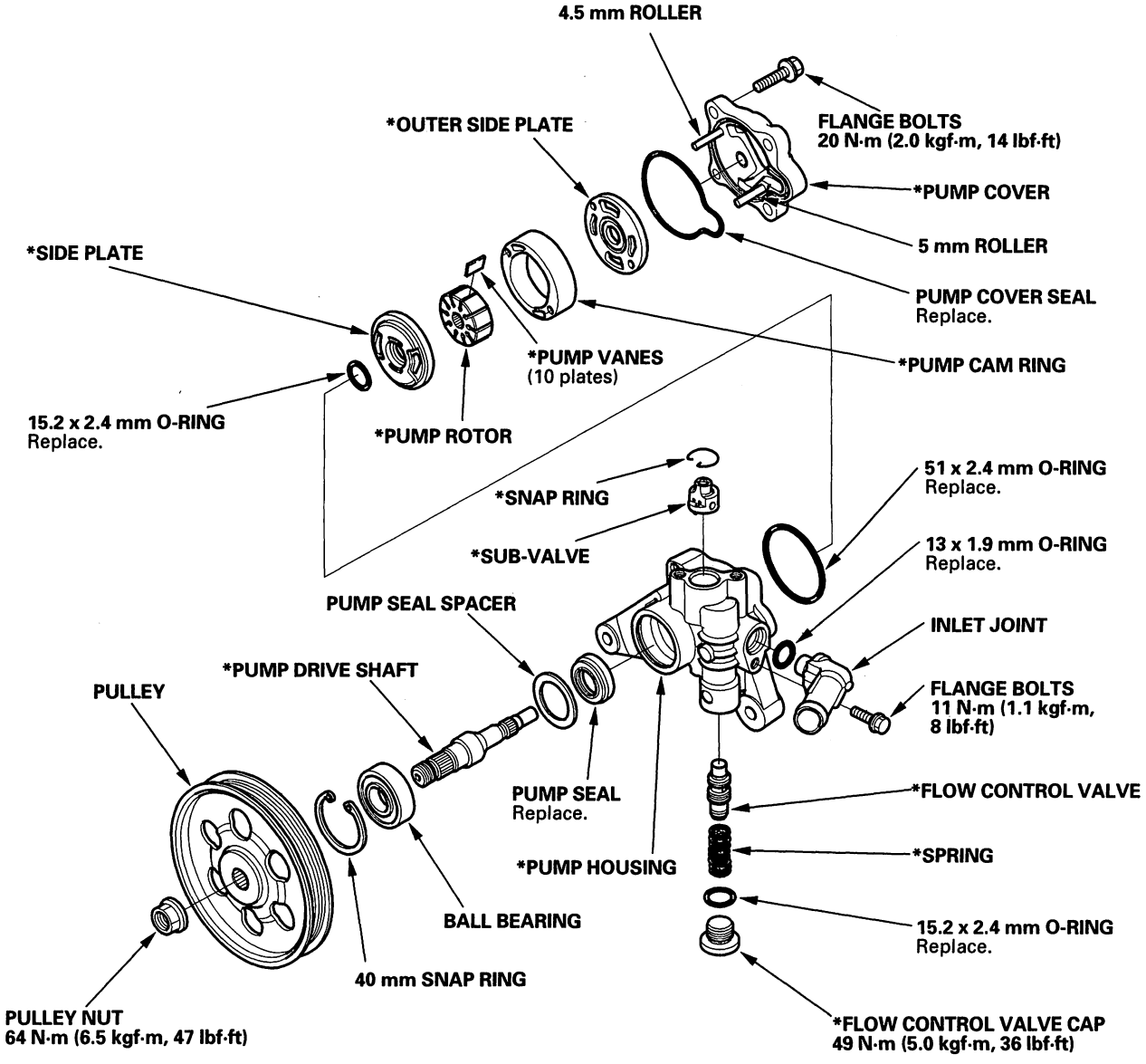

BACK

Special Tools Required
Universal holder, 07725-0030000

Disassembly

NOTE: Refer to the Exploded View as needed during the following procedure.

1. Remove the power steering pump (see page 17-13).

2. Drain the fluid from the pump.

3. Hold the steering pump (A) in a vise with soft jaws, hold the pulley (B) with the special tool, and remove the pulley nut (C) and pulley. Be careful not to damage the pump housing with the jaws of the vise.

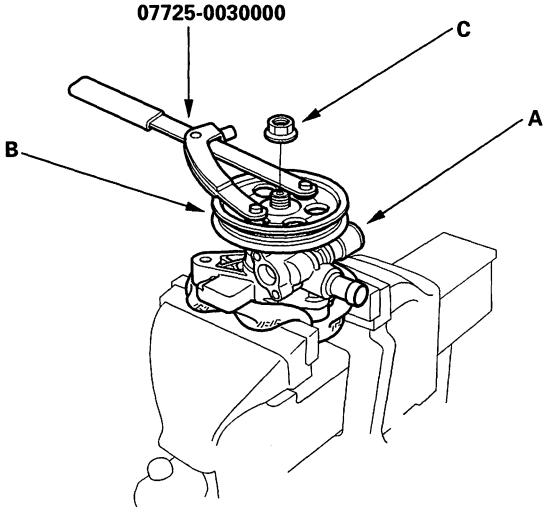

4. Loosen the flow control valve cap with a hex wrench, and remove it and the O-ring, flow control valve, and spring.

5. Remove the pump cover and pump cover seal.

6. Remove the outer side plate, pump cam ring, pump rotor, pump vanes, side plate, and O-rings.

7. Remove the snap ring, then remove the sub-valve from the pump housing.

8. Remove the circlip, then remove the pump drive shaft by tapping the shaft end with the plastic hammer.

9. Remove the pump seal spacer and pump seal.

Inspection

10. Check the flow control valve for wear, burrs, and other damage to the edges of the grooves in the valve.

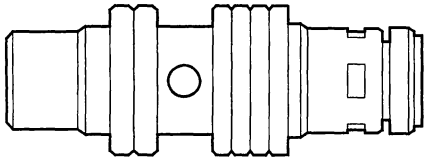

11. Inspect the bore of the flow control valve on the pump housing for scratches and wear.

12. Slip the flow control valve back in the pump housing, and check that it moves in and out smoothly. If OK, go to step 13; if not, replace the pump as an assembly. The flow control valve is not available separately.

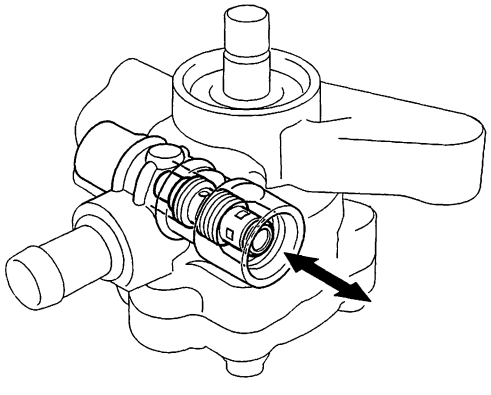

(cont'd)

Pump Overhaul (cont'd)

13. Attach a hose (A) to the end of the flow control valve (B) as shown. Then submerge the flow control valve (B) in a container of power steering fluid or solvent (C), and blow in the hose.
    - If air bubbles leak through the valve at less than 98 kPa (1.0 kgf/cm^2, 14.2 psi), replace the pump as an assembly. The flow control valve is not available separately.
    - If the flow control valve tests OK, set it aside for reassembly later.

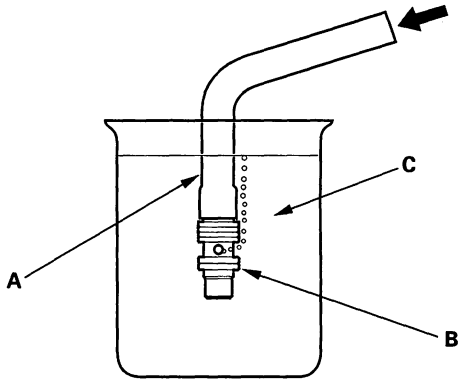

14. Inspect the ball bearing by rotating the outer race slowly. If you feel any play (axial or radial) or roughness remove the faulty ball bearing (A), and install a new one (B).

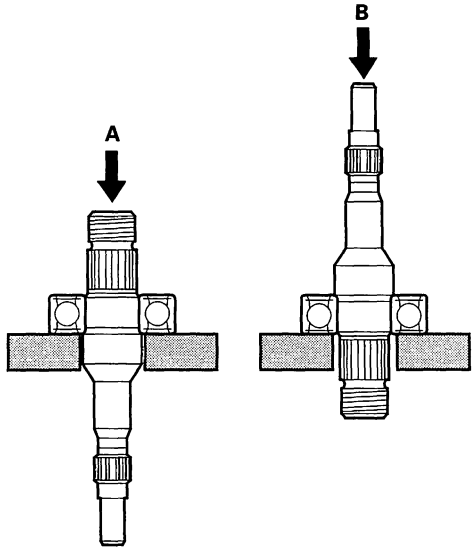

15. Inspect each part shown with an asterisk in the Exploded View; if any of them are worn or damaged, replace the pump as an assembly.

Reassembly

16. Clean the disassembled parts with solvent, and dry them with compressed air. Do not dip rubber parts in solvent.

17. Align the pin (A) of the sub-valve (B) with the oil passage (C) in the pump housing, and push the sub-valve into place. then install the snap ring (D).

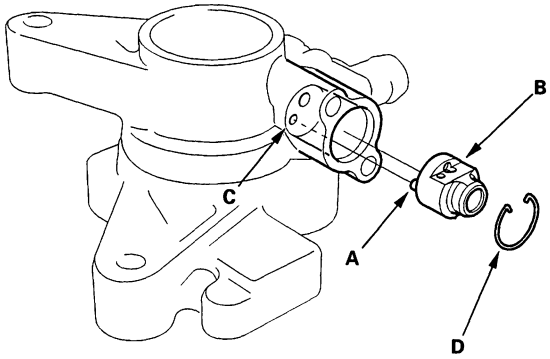

18. Install the new pump seal (A)(with its grooved side facing in) into the pump housing by hand, then install the pump seal spacer (B).

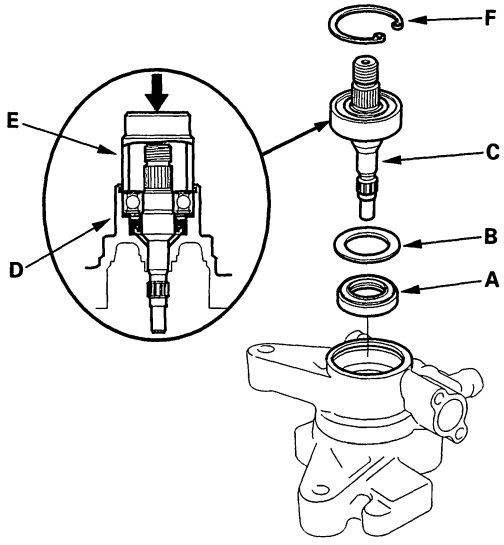

19. Position the pump drive shaft (C) in the pump housing (D), then drive it in using a 29 mm socket (E).

20. Install the 40 mm snap ring (F) with its radiused side facing out.

BACK

21. Coat the new pump cover seal (A) with power steering fluid, and install it into the groove in the pump cover (B).

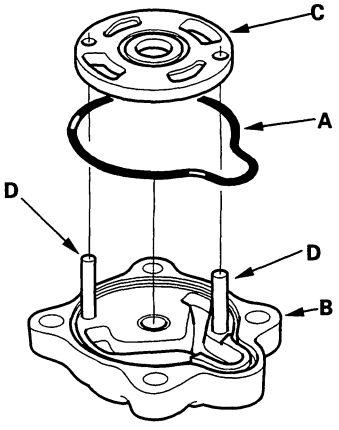

22. Install the outer side plate (C) over the two rollers (D).

23. Set the pump cam ring (A) over the two rollers with its "•" mark (B) facing up.

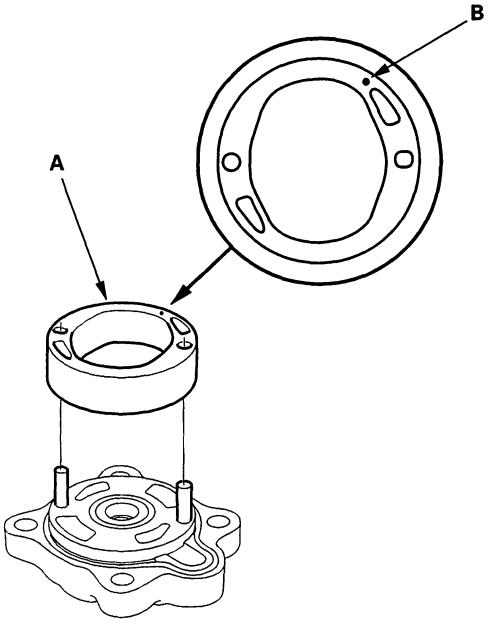

24. Assemble pump rotor (A) to the pump cover (B).

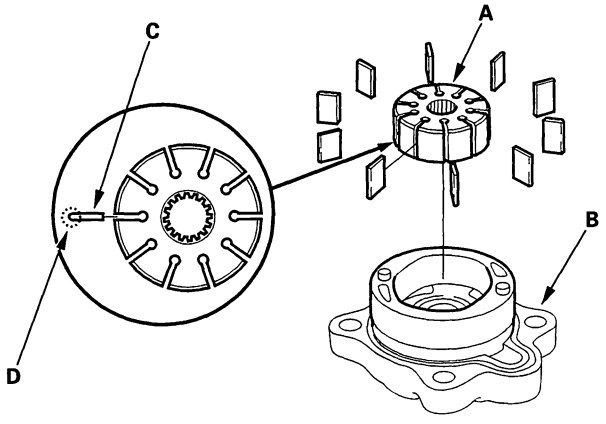

25. Set the 10 vanes (C) in the grooves in the rotor. Make sure that the round ends (D) of the vanes are in contact with the sliding surface of the cam ring.

26. Coat the new O-ring (A) with power steering fluid, and install it into the groove in the side plate (B).

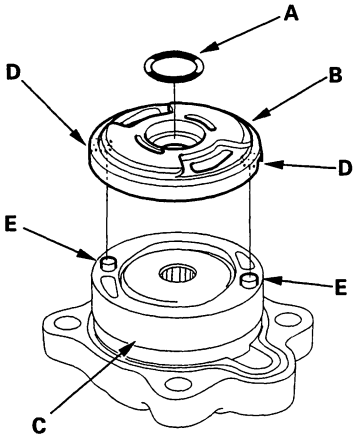

27. Install the side plate on the cam ring (C) by aligning the roller set holes (D) in the side plate with the rollers (E).

(cont'd)

Pump Overhaul (cont'd)

28. Coat the new O-ring (A) with power steering fluid, and position it in the bottom of the pump housing (B).

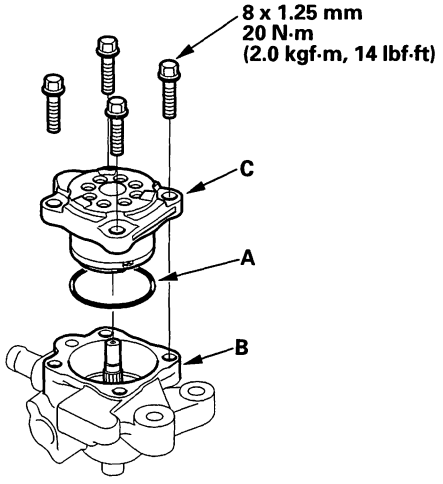

29. Install the pump cover assembly (C) in the pump housing.

30. Coat the flow control valve (A) with power steering fluid, then install it and the spring (B) in the pump housing.

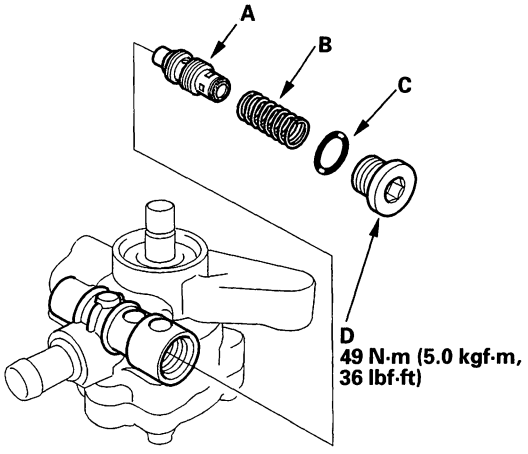

31. Coat the new O-ring (D) with power steering fluid, and install it on the flow control valve cap (E). Install the cap on the pump housing, and tighten it.

32. Install the pulley (A), then loosely install the pulley nut (B). Hold the steering pump in a vise with soft jaws. Be careful not to damage the pump housing with the jaws of the vise.

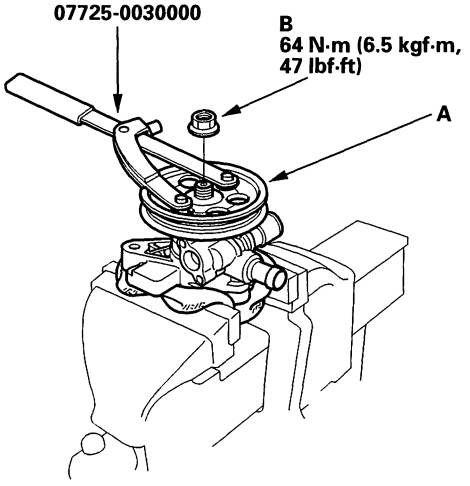

33. Hold the pulley (A) with the special tool, and tighten the pulley nut (B).

34. Check that the pump turns smoothly by turning the pulley by hand.

BACK

Rack Guide Adjustment

1. Set the wheels in the straight ahead position.

2. Loosen the rack guide screw locknut (A) with a commercially available 1 3/4" crowfoot wrench (B), then remove the rack guide screw (C).

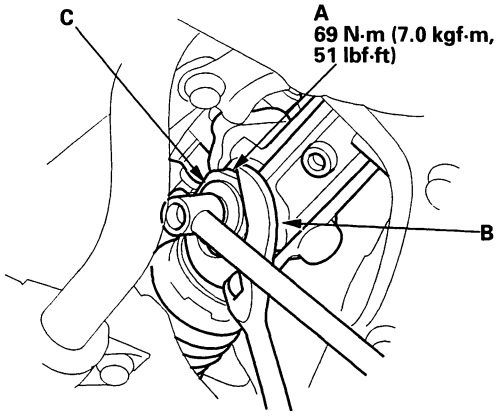

3. Remove the old sealant from rack guide screw threaded section, and apply new sealant all the way around the first three threads (A). Loosely install the rack guide screw on the steering gearbox.

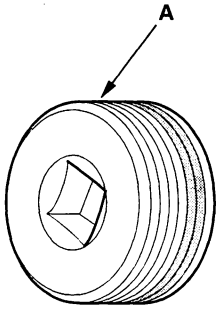

4. Tighten the rack guide screw to 25 N·m (2.5 kgf·m, 18 lbf·ft), then loosen it.

5. Retighten the rack guide screw to 3.9 N·m (0.4 kgf·m, 2.9 lbf·ft), then back it off to specified angle.

   Specified Return Angle: 60° ± 5°

6. Tighten the locknut while holding the rack guide screw.

7. Check for tight or loose steering through the complete turning travel.

8. Check the steering wheel rotational play and the power assist; refer to the '98-02 Accord Service Manual (see page 17-7).

Steering Gearbox Overhaul

Exploded View

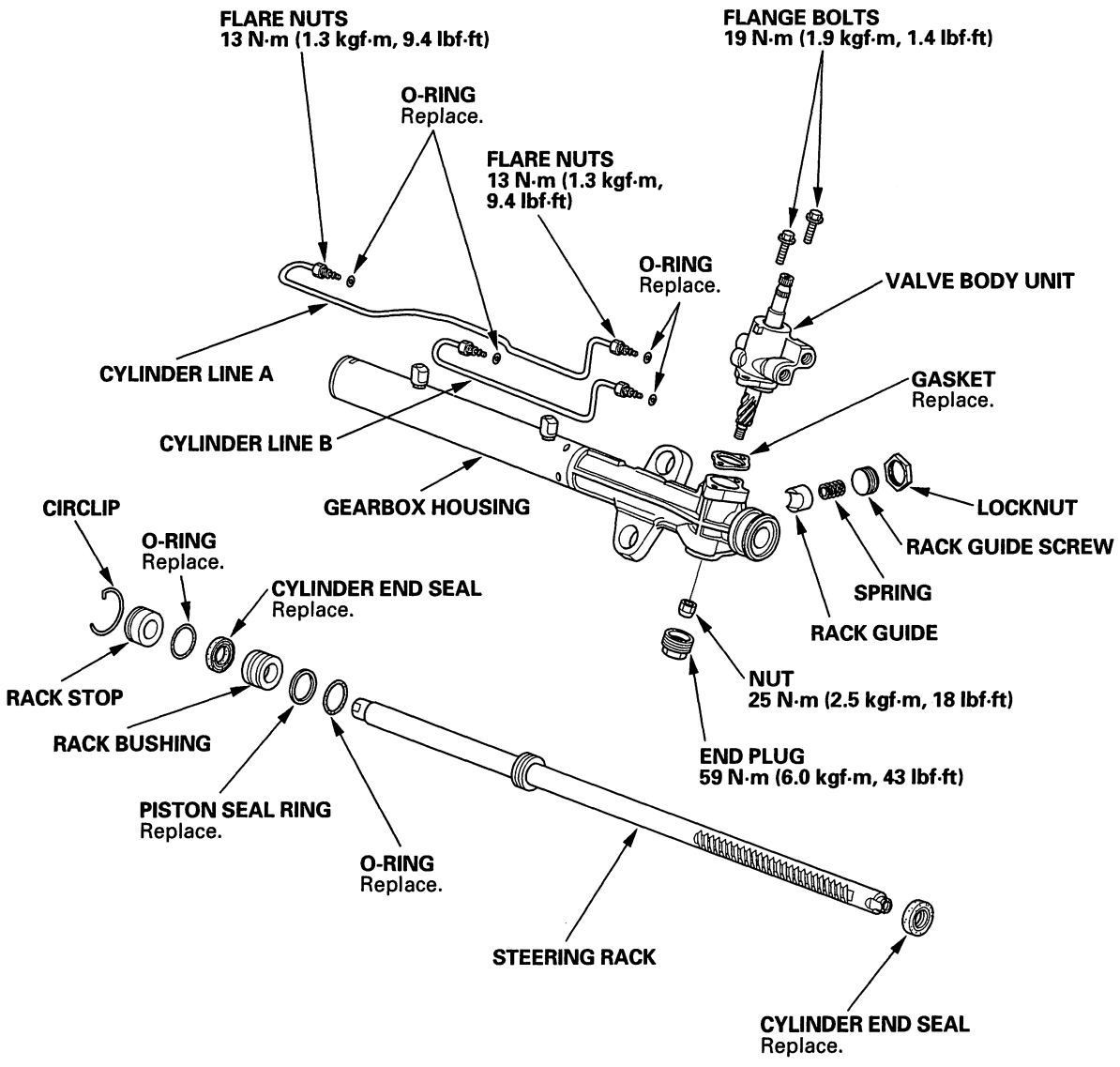

BACK

Special Tools Required
- Cylinder end seal remover attachment, 07TAF-SZ50100
- Driver, 07749-0010000
- Attachment, 42 X 47 mm, 07746-0010300
- Piston seal ring guide, 07LAG-SM4010A or 07LAG-SM40100
- Piston seal ring sizing tool, 07LAG-SM4020A or 07LAG-SM40200
- Pincer Oetiker 1098, or equivalent, commercially available

NOTE: Refer to the Exploded View as needed during the following procedure.

Removal

1. Remove the steering gearbox; refer to the '98-02 Accord Service Manual (see page 17-30).

   Note these items during removal:
   - Disconnect the primary H02S sensor connector.
   - Remove exhaust pipe A (see page 5-2) to allow clearance for the steering gearbox.

Disassembly

2. Remove the boot band (A) and tie-rod clips (B). Pull the boots away from the ends of the gearbox.

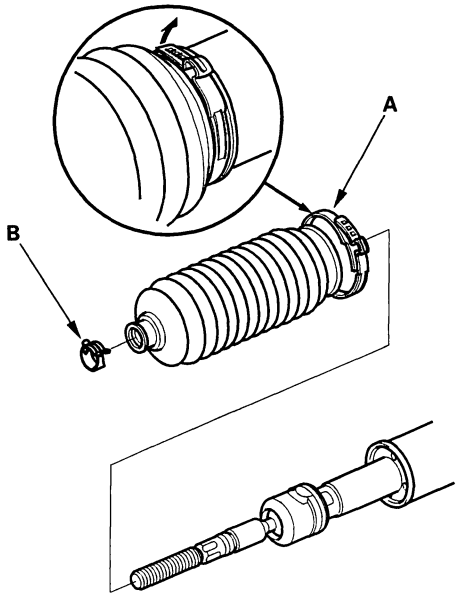

3. Unbend the lock washer (A).

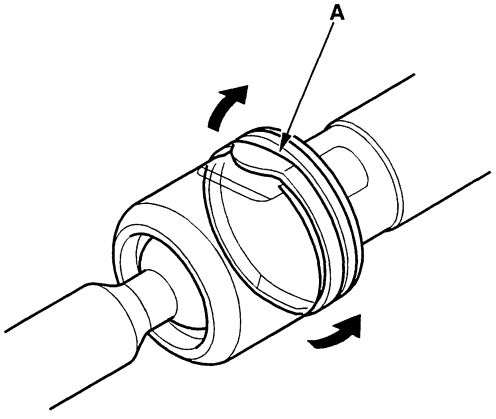

4. Hold the flat surface sections (A) of the right side steering rack (B) with a wrench, and unscrew both rack ends (C) with a wrench. Be careful not to damage the rack surface with the wrench. Remove the lock washer (D) and stop washer (E).

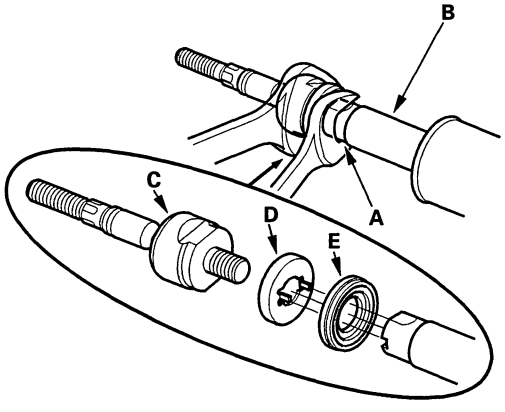

(cont'd)

Steering Gearbox Overhaul (cont'd)

5. Loosen the locknut (A), then remove the rack guide screw (B).

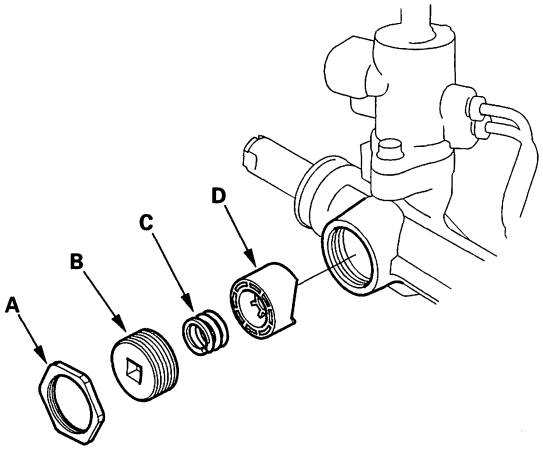

6. Remove the spring (C) and the rack guide (D) from the gearbox.

7. Remove the cylinder lines from the gearbox.

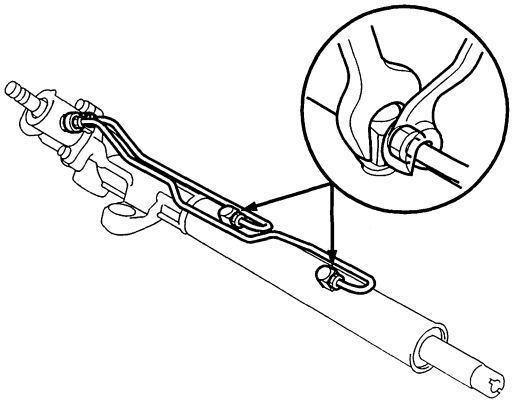

8. Drain the fluid from the cylinder fittings by slowly moving the steering rack back and forth.

9. Remove the end plug (A) from the gearbox housing, then remove the nut (B) from the pinion shaft end.

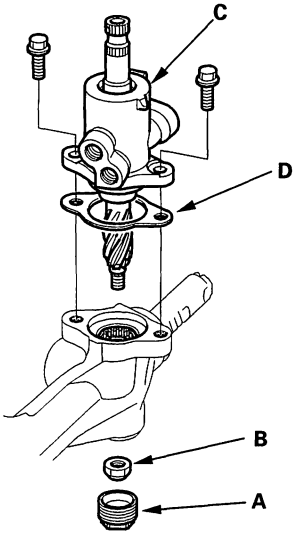

10. Remove the two flange bolts, the valve body unit (C), and gasket (D) from the gearbox. Check that the valve turns smoothly by turning the pinion shaft. If any play or roughness is felt, replace the valve body unit with a new part if necessary. Do not try to disassemble the valve body unit.

11. Slide the steering rack all the way to the left.

12. Turn the rack stop (A) counterclockwise until the end of the circlip (B) sticks out from the hole (C) in the rack stop. Then turn it clockwise to remove the circlip (D).

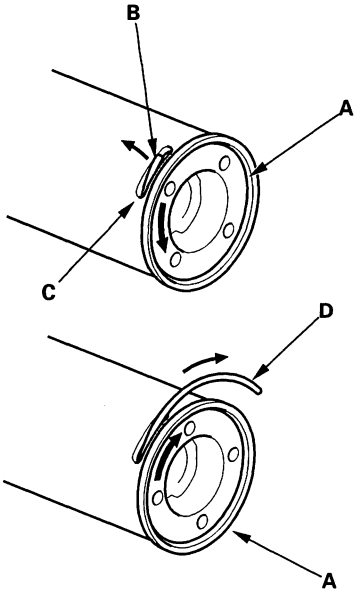

BACK

13. Remove the rack stop (A), rack bushing (B), and steering rack (C) from the steering gearbox.

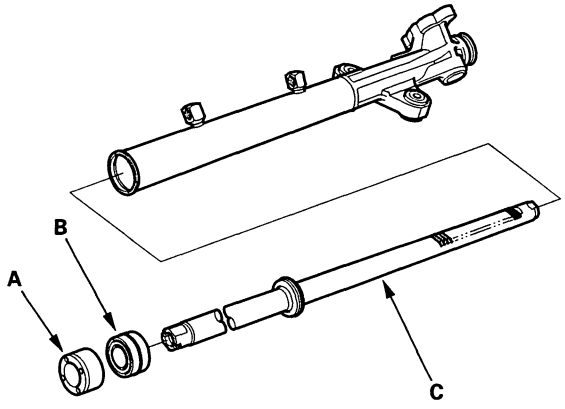

14. Remove the O-ring (A) and cylinder end seal (B) from the rack bushing (C).

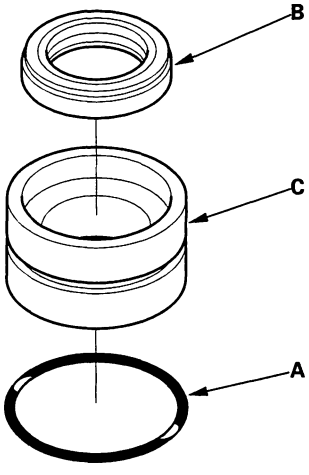

15. Carefully pry the piston seal ring (A) and O-ring (B) off the rack piston. Be careful not to damage the inside of seal ring groove and piston edges when removing the seal ring.

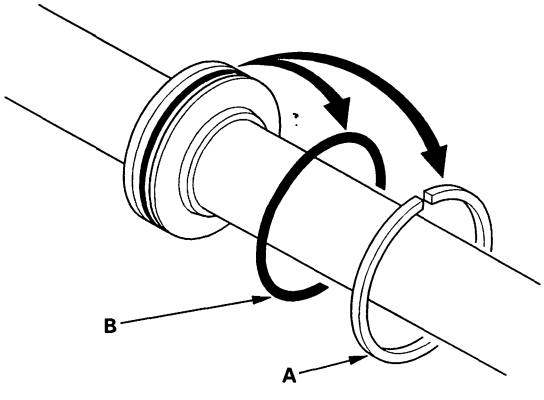

16. Install a washer (O.D. 27.5 mm, P/N 94103-10400) (A) so it will fit through the rack guide hole of the gearbox housing, then position the washer on the cylinder end seal (B). Make sure that the washer is securely positioned on the cylinder end seal edges.

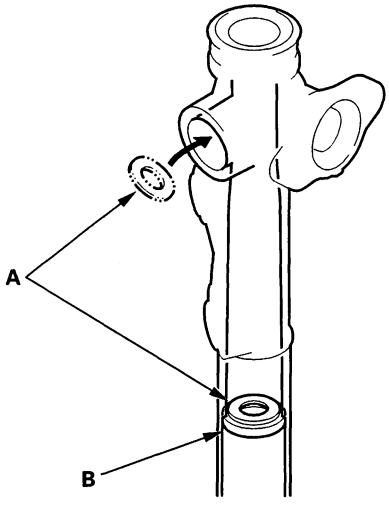

17. Install a socket with a 27.5 mm O.D. (A) onto a 24" long, 3/8" drive extension (B), and carefully place it on the washer (C).

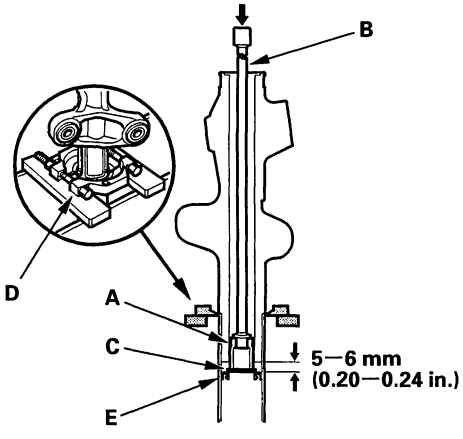

18. Install a bearing separator (D) on the gearbox housing. Set the steering gearbox in a press so the gearbox housing points upward, then push out the cylinder end seal (E) 5—6 mm (0.20—0.24 in.) by pressing on the end of the extension.

19. Remove the steering gearbox from the press, and remove the washer from the gearbox inside.

(cont'd)

Steering Gearbox Overhaul (cont'd)

20. Turn the special tool so it will fit through the rack guide hole of the steering gearbox, then position the special tool on the cylinder end seal (A). Make sure that the special tool is securely positioned on the seal edges.

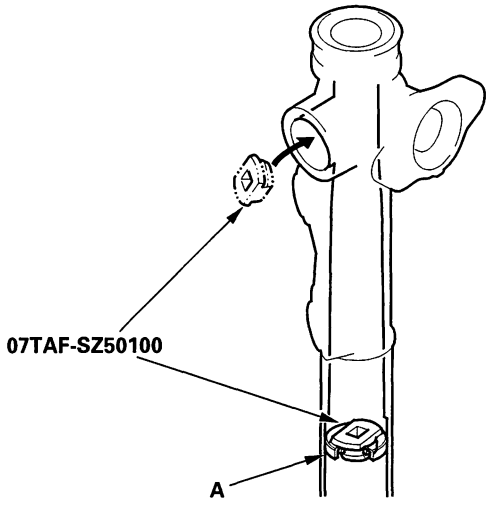

21. Insert a 24 in. long, 3/8 in. drive extension (A), on the special tool. Place the steering gearbox in a press, then remove the cylinder end seal (B) from of the gearbox by pressing on the end of the extension.

    Note these items when pressing the cylinder end seal:
    - Keep the tool straight to avoid damaging the cylinder wall. Check the tool angle, and correct it if necessary, when removing the cylinder end seal.
    - Use a press to remove the cylinder end seal. Do not try to remove the seal by striking the tool; striking the tool would break the cylinder end seal, and the seal would remain in the gearbox.

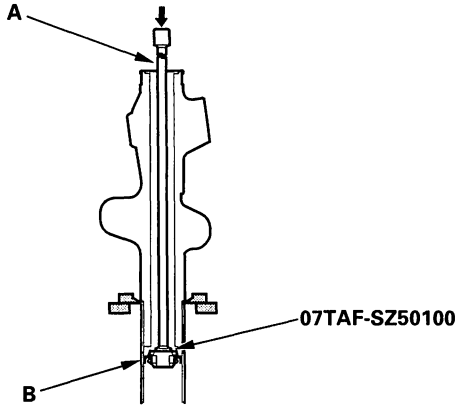

Reassembly

22. Coat the special tool with power steering fluid, then slide it onto the rack, big end first.

23. Position the new O-ring (A) and new piston seal ring (B) on the special tool, then slide them down toward the big end of the tool.

    Note these items during reassembly:
    - Do not over expand the resin seal rings. Install the resin seal rings with care so as not to damage them. After installation, be sure to contract the seal ring using the special tool (sizing tool).
    - Replace the piston's O-ring and seal ring as a set.

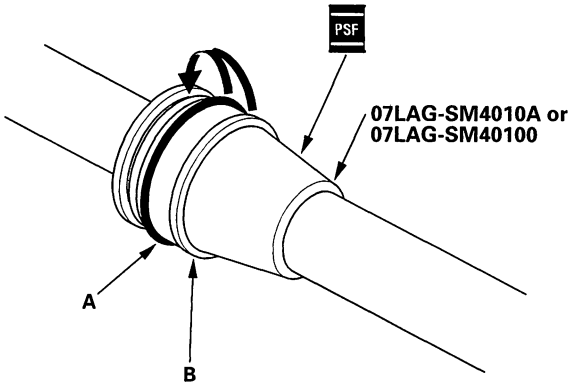

24. Pull the O-ring off into the piston groove, then pull the piston seal ring off into the piston groove on top of the O-ring.

25. Coat the piston seal ring (A) and the inside of the special tool with power steering fluid, then carefully slide the tool onto the rack and over the piston seal ring.

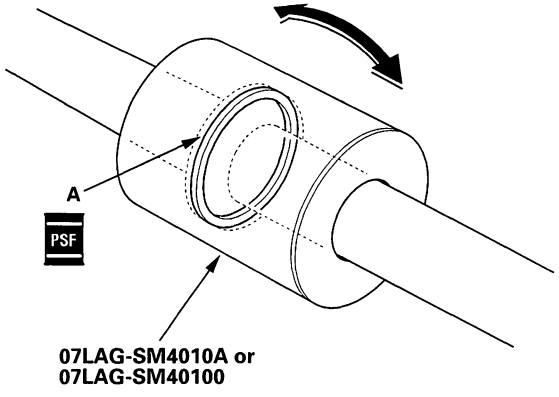

26. Move the special tool back and forth several times to make the piston seal ring fit snugly in the piston.

BACK

27. Wrap vinyl tape around the rack teeth and rack end edges, then coat the surface of the tape with power steering fluid. Make sure that the vinyl tape is wrapped carefully so that there is no stepped portion.

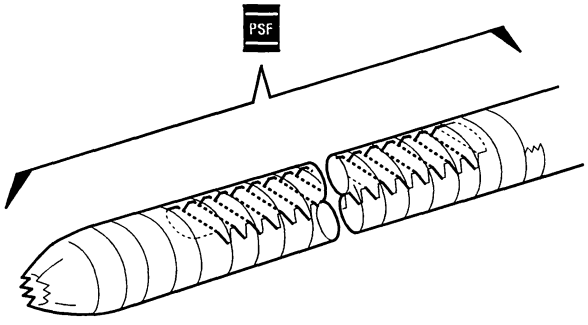

28. Coat the inside surface of the new cylinder end seal (A) with power steering fluid, then install it onto the steering rack with its grooved side toward the piston. When installing the cylinder end seal, be careful not damage the lip of the seal with the edges or teeth of the steering rack.

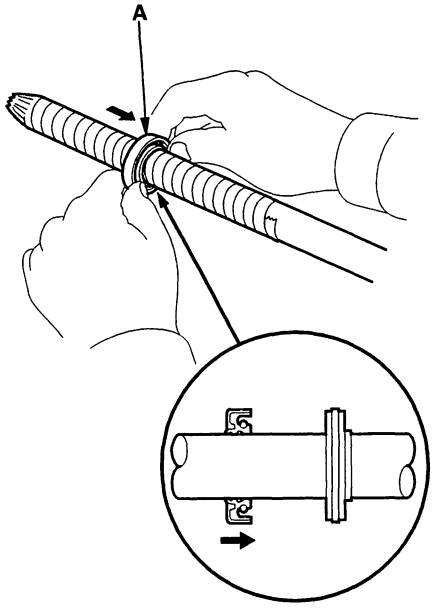

29. Remove the vinyl tape from the steering rack, then remove any adhesive residue.

30. Grease the steering rack teeth, then insert the steering rack into the gearbox housing. Be careful not to damage to inner surface of the cylinder wall with the rack edges.

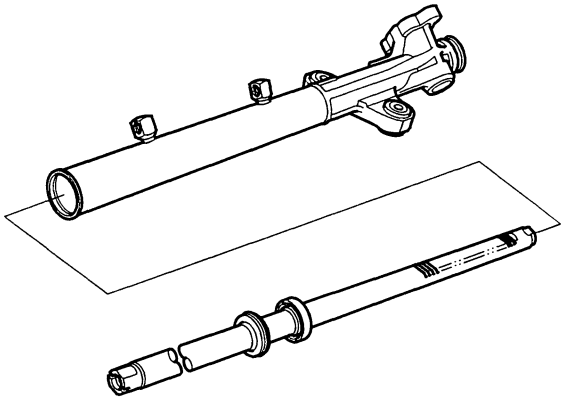

31. Insert a deep socket (A) onto the steering rack as shown.

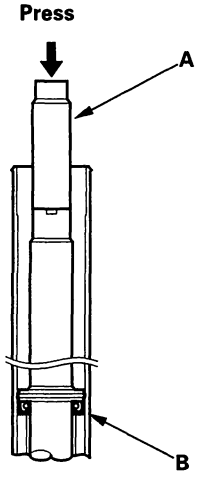

32. Install the cylinder and seal (B) into the bottom of the cylinder by pressing on the tool with a press. Do not push on the tool with excessive force as it may damage the cylinder end seal.

33. Remove the tool, and center the steering rack.

(cont'd)

Steering Gearbox Overhaul (cont'd)

34. Wrap vinyl tape around the rack end edges, and coat the surface of the tape with power steering fluid. Make sure that the vinyl tape is wrapped carefully so there is no stepped portion.

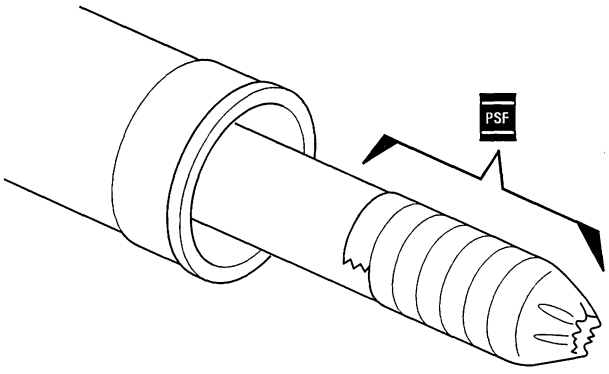

35. Coat the inside surface of the new cylinder end seal (A) with power steering fluid, then press it into the rack bushing (B) using the special tools.

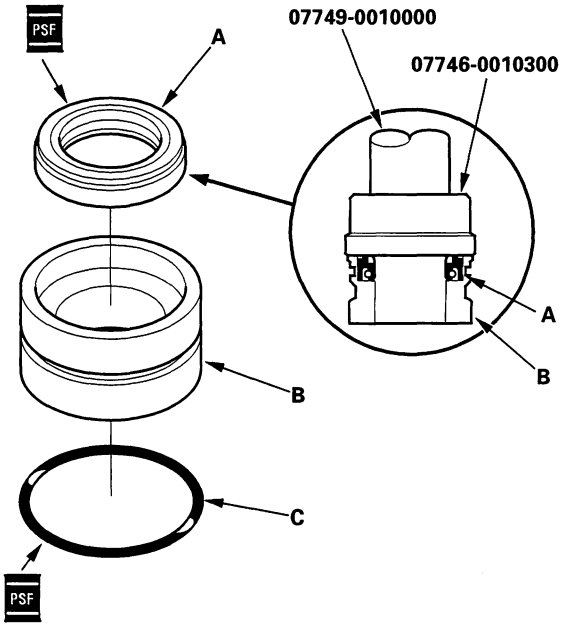

36. Coat the new O-ring (C) with power steering fluid, and carefully fit it in the groove of the rack bushing.

37. Install the rack bushing onto the steering rack with the cylinder end seal grooved side toward the piston. Push in the rack bushing with your finger.

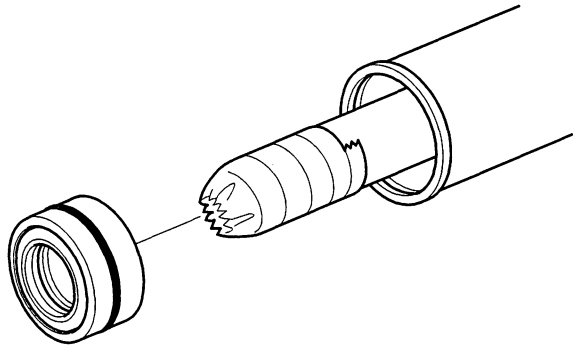

38. Remove the vinyl tape from the steering rack, then remove any adhesive residue.

39. Install the rack stop (A) onto the steering rack so the hole (B) is aligned with the slot (C) on the steering rack.

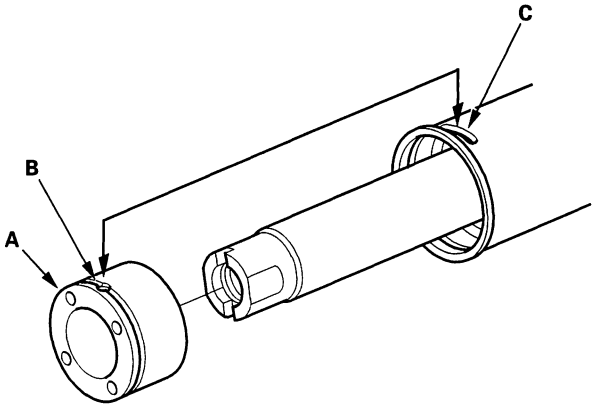

BACK

40. Insert the end of the circlip (A) into the hole (B) of the rack stop (C). Turn the rack stop counterclockwise until the circlip is fully seated in the rack stop.

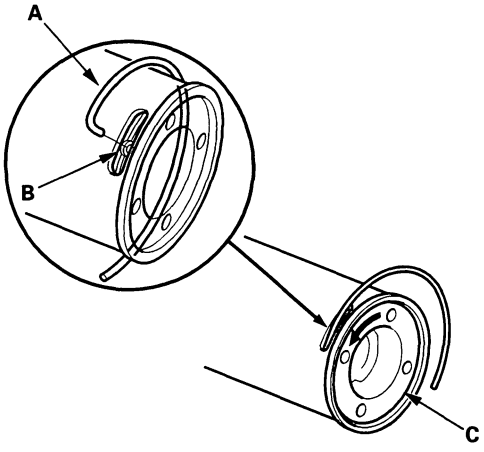

41. Apply grease to the needle bearing (A) in the gearbox housing, and install the valve body unit (B) and gasket (C) by engaging the gears. Note the valve body unit installation position (direction of line connections). Then loosely install the two flange bolts.

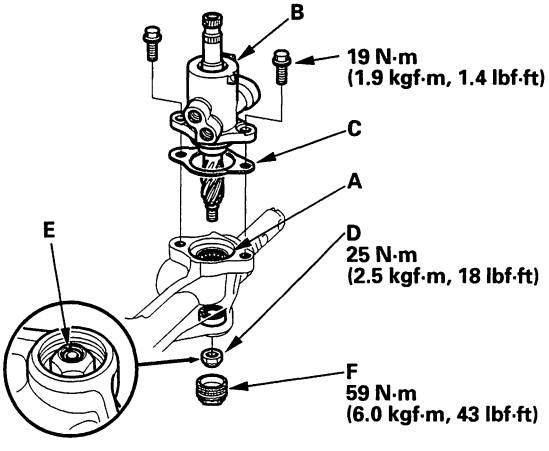

42. Install the nut (D) onto the pinion shaft end, and tighten to specified torque. After tightening, use a drift to stake the nut shoulder (E) against the pinion shaft.

43. Apply sealant all the way around the threads on the end plug (F), install the end plug onto the gearbox housing, and tighten it to the specified torque.

44. Tighten the flange bolts to the specified torque.

45. Before installing the cylinder lines, coat the new O-rings with power steering fluid, then install the lines.

Note these items during reassembly:
- Thoroughly clean the joints of the cylinder lines. The joints must be free of foreign material.
- Install the cylinder lines by tightening the flare nuts by hand first, then tighten the flare nuts to the specified torque.

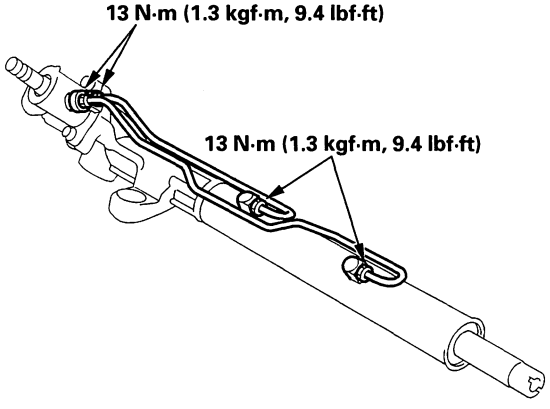

46. Apply multipurpose Grease to the sliding surface of the rack guide (A), and install it onto the gearbox housing.

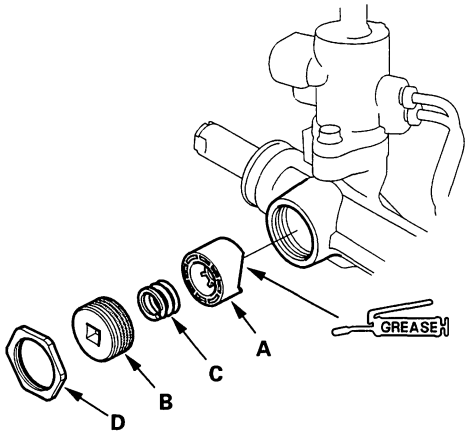

47. Apply new sealant all the way around the first three threads of the rack guide screw (B), then install the spring (C), rack guide screw, and locknut (D).

48. Adjust the rack guide screw (see page 17-19). After adjusting, check that the rack moves smoothly by sliding it right and left.

(cont'd)

Steering Gearbox Overhaul (cont'd)

49. Install the stop washer (A) with the chamfered side facing out, and screw each rack end (B) into the rack while holding the lock washer (C) so its tabs (D) are in the slots (E) in the end of the rack.

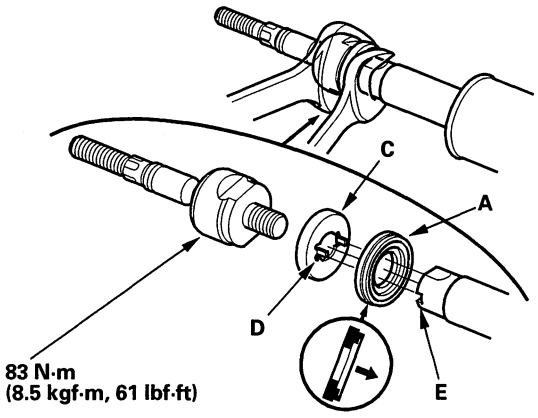

50. Hold the flat surface sections of the right side steering rack with a wrench, and tighten both rack ends. Be careful not to damage the rack surface with the wrench.

51. Bend the lock washer back against the flat spots on the rack end joint housing.

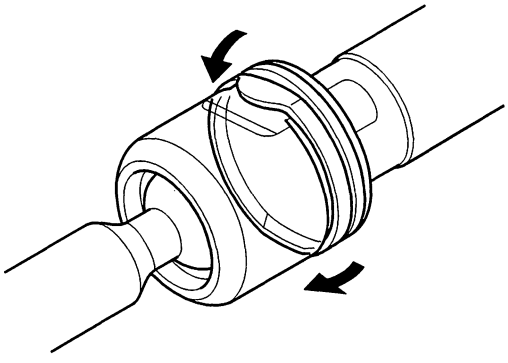

52. Apply multipurpose grease (A) to the circumference of the rack end joint housing.

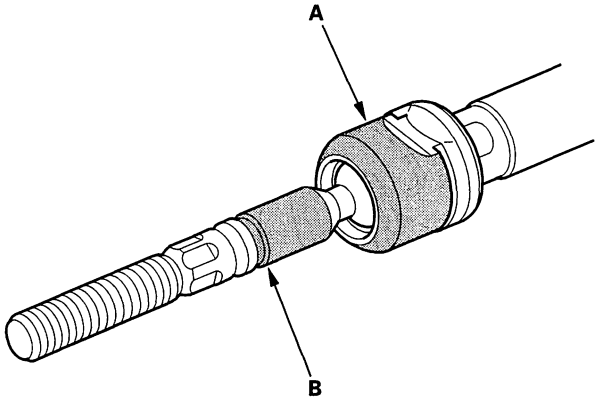

53. Apply a light coat of silicone grease (B) to the boot grooves (B) on the rack ends.

54. Center the steering rack within its stroke. Install the boots on the rack ends with the tie-rod clips. After installing the boots, wipe the grease off the threaded section (A) of the rack end.

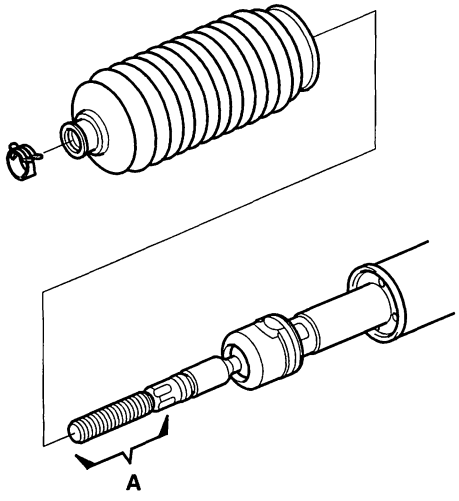

BACK

55. Install the new boot bands by aligning the tabs (A) with the holes (B) of the band.

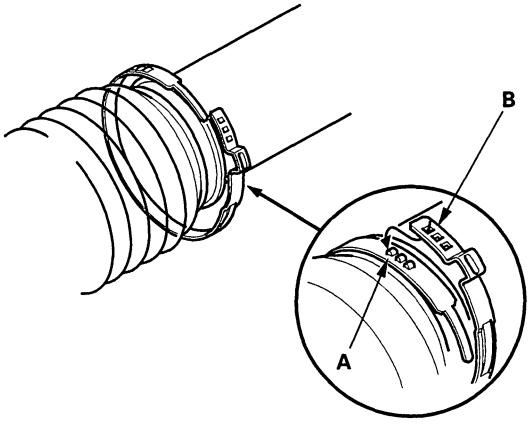

56. Close the ear portion (A) of the band with a commercially available Oetiker 1098 pincer or equivalent (B).

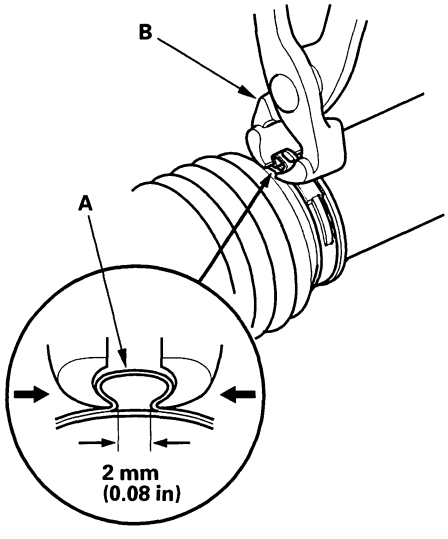

57. Slide the rack right and left to be certain that the boots are not deformed or twisted.

Installation

58. Install the steering gearbox; refer to the '98-02 Accord Service Manual (see page 17-47).

    Note these items during installation:
    - Reinstall exhaust pipe A with new gasket (see page 5-11).
    - Reconnect the primary HO2S sensor connector.

BACK

Brakes

Conventional Brake Components

Front Brake Pads Inspection and Replacement 19-2

Rear Brake Caliper Overhaul 19-4

ABS (Anti-lock Brake System) Components 19-7

NOTE: Refer to the 1998–2002 Accord Service Manual, P/N 61S8400 for the items not shown in this section.

Outline of V6 Model Change

The front brake caliper is different; the brake pad replacement and the brake caliper overhaul procedures are included.

Front Brake Pads Inspection and Replacement

⚠CAUTION

Frequent inhalation of brake pad dust,regardless of material composition,could be hazardous to your health.
- Avoid breathing dust particles.
- Never use an air hose or brush to clean brake assemblies.Use an OSHA-approved vacuum cleaner.

1. Loosen the front wheel nuts slightly. Raise the front of the vehicle, and make sure it is securely supported. Remove the front wheels. Remove the brake hose mounting bolts (A) from the knuckle.

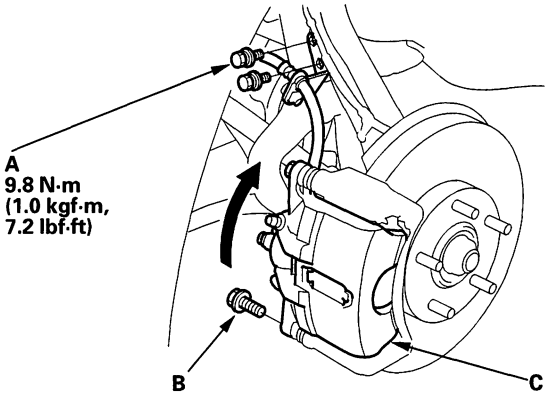

2. Remove the caliper bolt (B), and pivot the caliper (C) up out of the way. If the caliper pin head is the hex. type, the caliper bolt should be removed using a wrench while holding the caliper pin with another wrench. Check the hoses and pin boots for damage and deterioration.

3. Remove the pads (A), pad shims (B), and pad retainers (C).

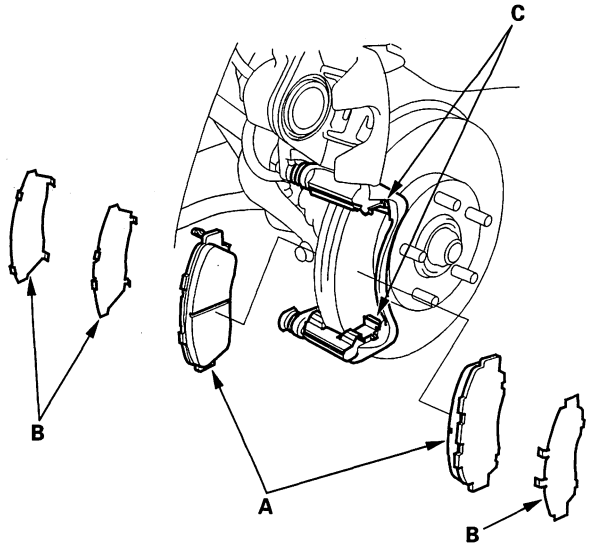

4. Using vernier calipers, measure the thickness of each brake pad lining. The measurement does not include the pad backing plate (A) thickness.

Brake Pad Thickness:
Standard: 10.5 – 11.5 mm (0.41 – 0.45 in)
Service Limit: 1.6 mm (0.06 in)

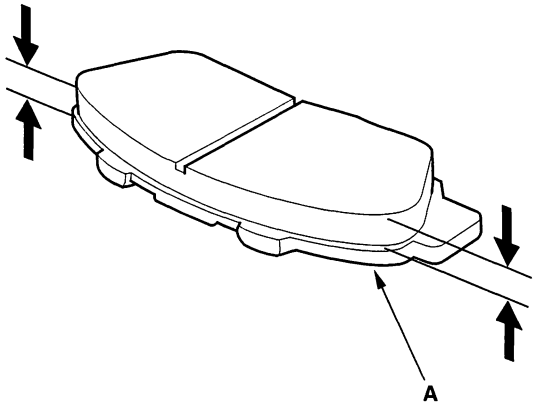

5. If the brake pad thickness is less than the service limit, replace the front pads and shims together as a set.

6. Clean the caliper thoroughly; remove any rust, and check for grooves and cracks.

7. Check the brake disc for damage and cracks.

BACK

8. Install the pad retainers (A).

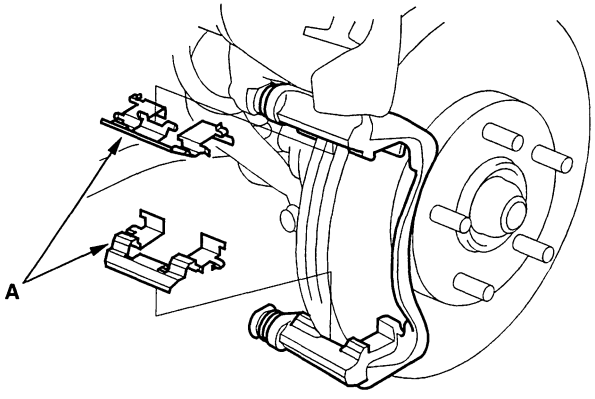

9. Apply Molykote M77 grease to both sides of the pad shims (A) and the back of the pads (B). Wipe excess grease off the shim.

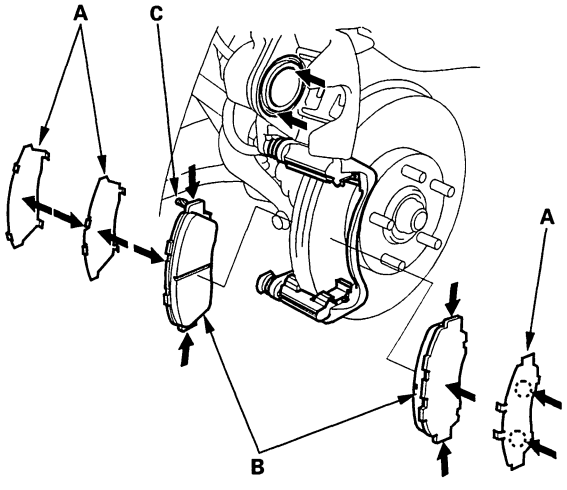

10. Install the brake pads and pad shims correctly. Install the pad with the wear indicator (C) on the inside.If you are reusing the pads,always reinstall the brake pads in their original positions to prevent loss of braking efficiency.

11. Push in the piston (A) so the caliper will fit over the pads. Make sure the piston boot is in position to prevent damaging it when pivoting the caliper down.
NOTE: Check the brake fluid level, the brake fluid may overflow the reservoir if too full.

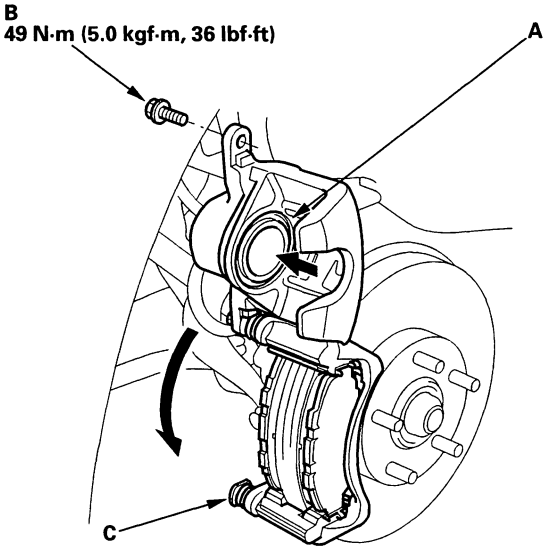

12. Pivot the caliper down into position, being careful not to damage the pin boot. Install the caliper bolt (B), and torque it to proper specification. If the caliper pin head (C) is the hex. type, the caliper bolt should be installed by using a wrench while holding the caliper pin with another wrench. Install the brake hose onto the knuckle.

13. Press the brake pedal several times to make sure the brakes work, then road-test.

    NOTE: Engagement of the brake may require a greater pedal stroke immediately after the brake pads have been replaced as a set. Several applications of the brake pedal will restore the normal pedal stroke.

14. After installation, check for leaks at hose and line joints and connections, and retighten if necessary.

Front Brake Caliper Overhaul

⚠CAUTION

Frequent inhalation of brake pad dust, regardless of material composition, could be hazardous to your health.
- Avoid breathing dust particles.
- Never use an air hose or brush to clean brake assemblies. Use an OSHA-approved vacuum cleaner.

Remove, disassemble, inspect, reassemble, and install the caliper, and note these items:
- Do not spill brake fluid on the vehicle; It may damage the paint; if brake fluid gets on the paint, wash it off immediately with water.
- Clean all parts in brake fluid and air dry; blow out all passages with compressed air.
- Before reassembling, check that all parts are free of dirt and other foreign particles.
- Replace parts with new ones as specified in the illustration.
- Make sure no dirt or other foreign matter gets into the brake fluid.
- Make sure no grease or oil gets on the brake discs or pads.
- When reusing pads, always reinstall the brake pads in their original positions to prevent loss of braking efficiency.
- Do not reuse drained brake fluid.
- Always use Honda DOT 3 Brake Fluid. Non-Honda brake fluid can cause corrosion and decrease the life of the system.
- Coat the piston, piston seal, and caliper bore with clean brake fluid.
- Replace all rubber parts with new ones.
- After installing the caliper, check the brake hose and line for leaks, interference, and twisting.

Sedan:

GREASE : Silicone grease

GREASE : Rubber grease

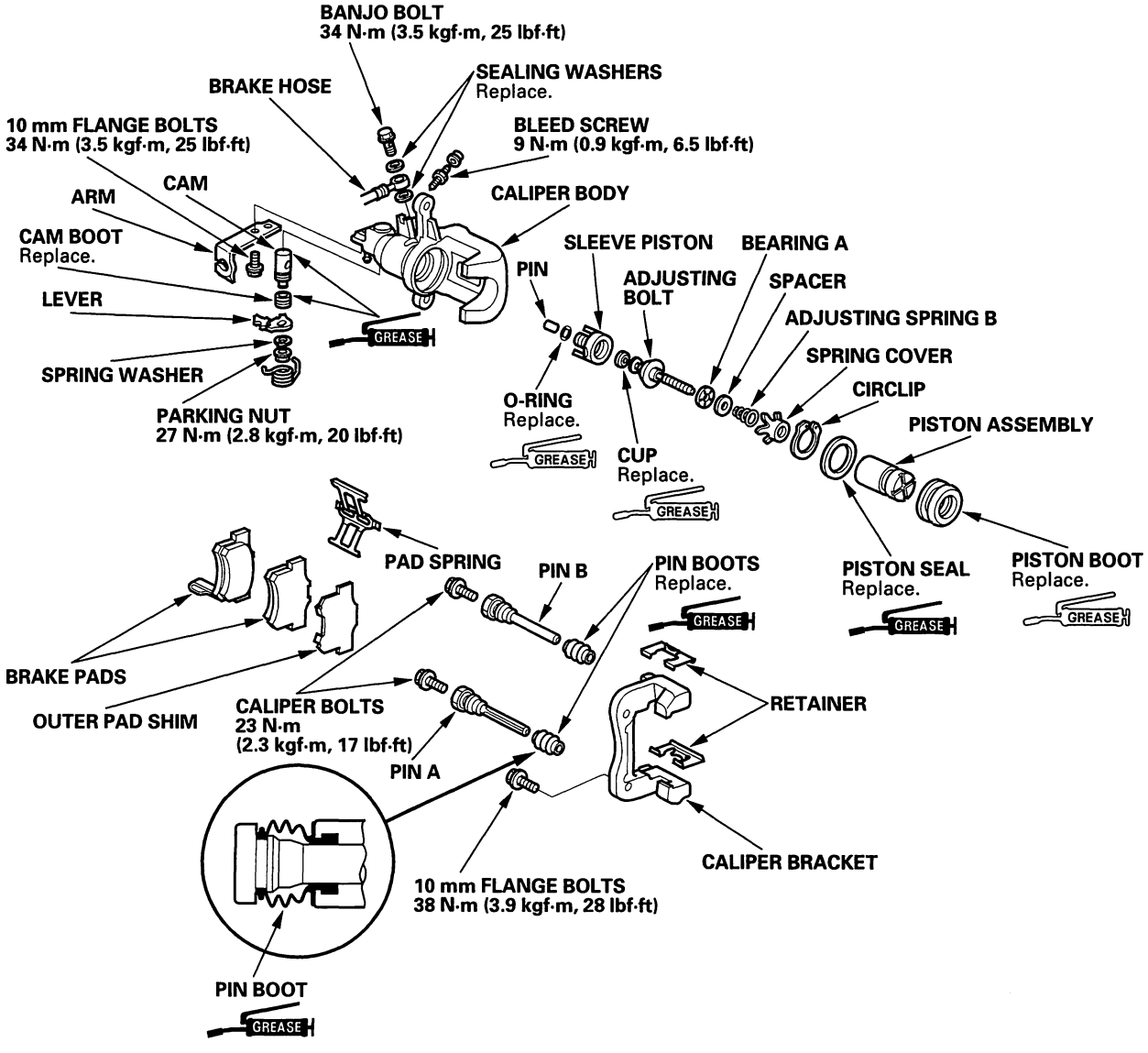

(cont'd)

Front Brake Caliper Overhaul (cont'd)

Coupe:

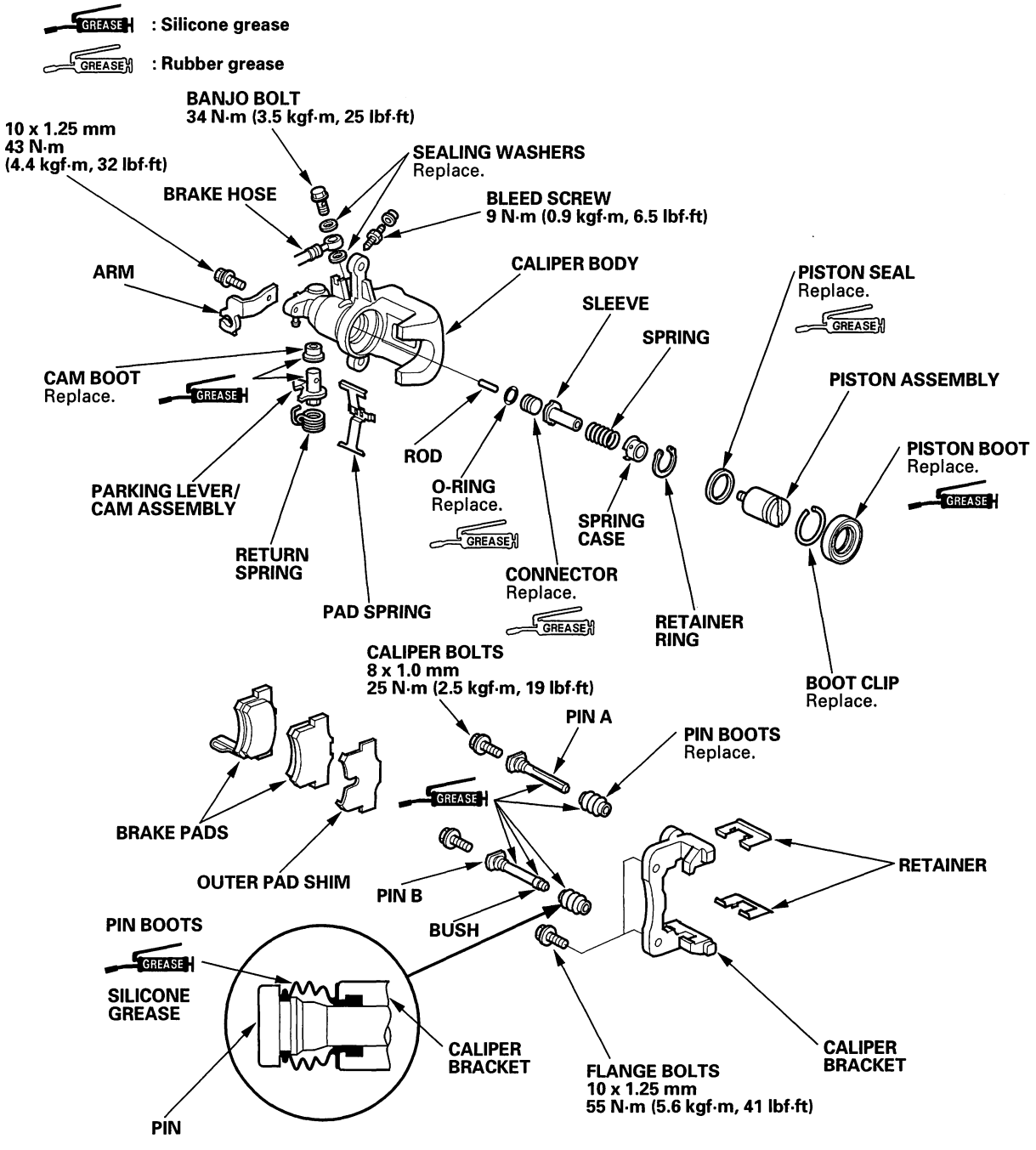

BACK

Brakes

Conventional Brake Components 19-1

ABS (Anti-lock Brake System) Components ('98–00 Models)

Component Location Index 19-8
DTC Troubleshooting Index 19-9
Symptom Troubleshooting Index 19-10
Circuit Diagram 19-12
DTC Troubleshooting 19-14
ABS Indicator Circuit Troubleshooting 19-18
Modulator Unit Removal and Installation 19-21
ABS Control Unit Replacement 19-22

ABS/TCS (Anti-lock Brake System/Traction Control System) Components ('01– 02 Models) 19-23

NOTE: Refer to the 1998—2002 Accord Service Manual (P/N 61S8400) for the items not shown in this section.

ABS

Outline of V6 Model Changes

- The locations of the modulator unit and ABS control unit were changed;
  - Component location index was added.
  - Modulator unit removal and installation was added.
  - ABS control unit replacement was added.
- Ground numbers of pump motor ground and ABS control unit ground were changed;
  - DTC troubleshooting index was added.
  - Symptom troubleshooting index was added.
  - Circuit diagram was added.
  - DTC troubleshooting was added.
  - ABS indicator circuit troubleshooting was added.

ABS Components

Component Location Index

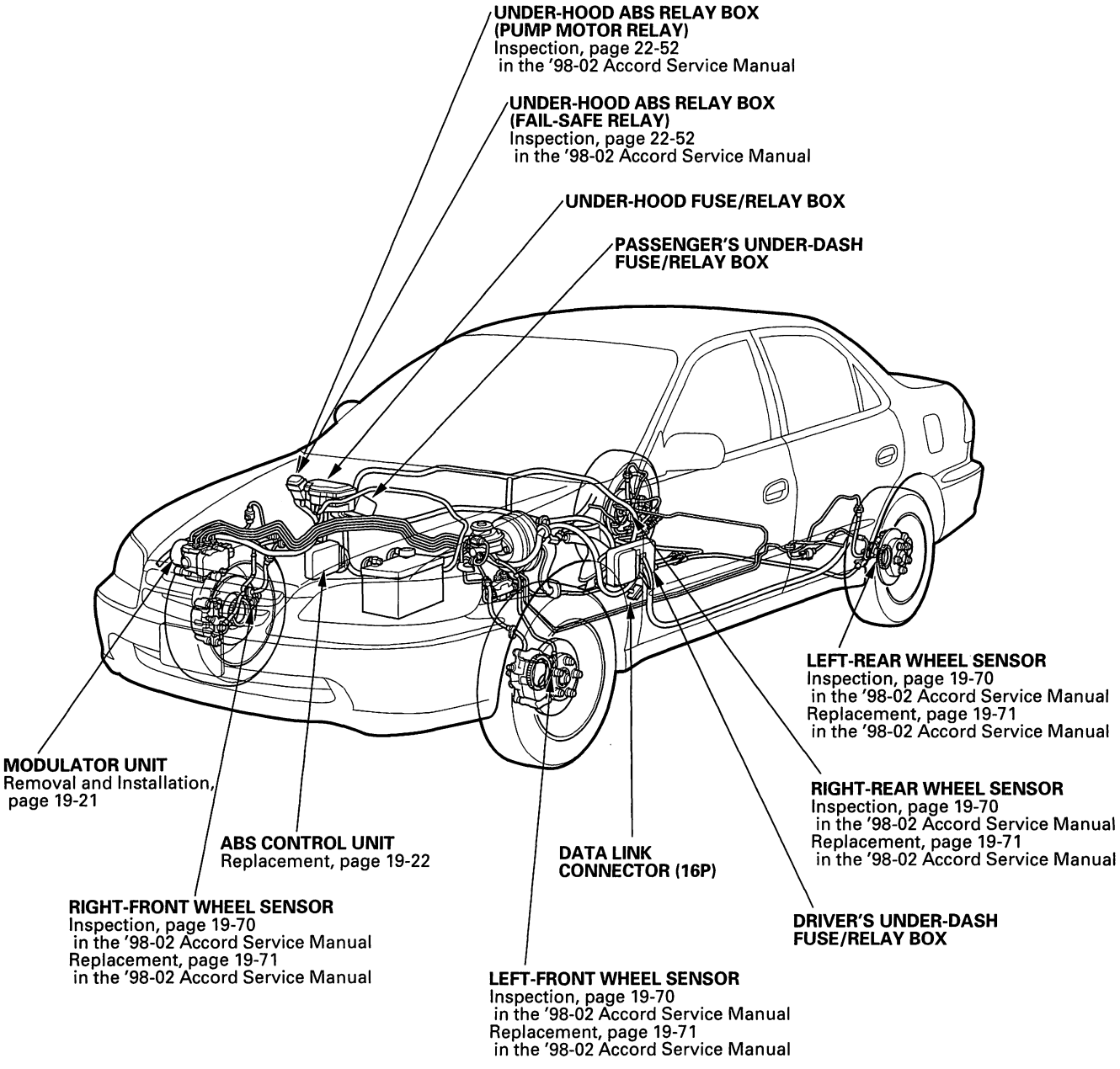

BACK

DTC Troubleshooting Index

DTC	Detection Item	Note
DTC: 11	Right-front wheel sensor (open/short to body ground/short to power)	Refer to the '98-02 Accord Service Manual (see page 19-52)
DTC: 12	Right-front wheel sensor (electrical noise/intermittent interruption)	Refer to the '98-02 Accord Service Manual (see page 19-53)
DTC: 13	Left-front wheel sensor (open/short to body ground/short to power)	Refer to the '98-02 Accord Service Manual (see page 19-52)
DTC: 14	Left-front wheel sensor (electrical noise/intermittent interruption)	Refer to the '98-02 Accord Service Manual (see page 19-53)
DTC: 15	Right-rear wheel sensor (open/short to body ground/short to power)	Refer to the '98-02 Accord Service Manual (see page 19-52)
DTC: 16	Right-rear wheel sensor (electrical noise/intermittent interruption)	Refer to the '98-02 Accord Service Manual (see page 19-53)
DTC: 17	Left-rear wheel sensor (open/short to body ground/short to power)	Refer to the '98-02 Accord Service Manual (see page 19-52)
DTC: 18	Left-rear wheel sensor (electrical noise/intermittent interruption)	Refer to the '98-02 Accord Service Manual (see page 19-53)
DTC: 21	Right-front pulser	Refer to the '98-02 Accord Service Manual (see page 19-54)
DTC: 22	Left-front pulser	Refer to the '98-02 Accord Service Manual (see page 19-54)
DTC: 23	Right-rear pulser	Refer to the '98-02 Accord Service Manual (see page 19-54)
DTC: 24	Left-rear pulser	Refer to the '98-02 Accord Service Manual (see page 19-54)
DTC: 31	Right-front inlet solenoid	Refer to the '98-02 Accord Service Manual (see page 19-55)
DTC: 32	Right-front outlet solenoid	Refer to the '98-02 Accord Service Manual (see page 19-55)
DTC: 33	Left-front inlet solenoid	Refer to the '98-02 Accord Service Manual (see page 19-55)
DTC: 34	Left-front outlet solenoid	Refer to the '98-02 Accord Service Manual (see page 19-55)
DTC: 35	Right-rear inlet solenoid	Refer to the '98-02 Accord Service Manual (see page 19-55)
DTC: 36	Right-rear outlet solenoid	Refer to the '98-02 Accord Service Manual (see page 19-55)
DTC: 37	Left-rear inlet solenoid	Refer to the '98-02 Accord Service Manual (see page 19-55)
DTC: 38	Left-rear outlet solenoid	Refer to the '98-02 Accord Service Manual (see page 19-55)
DTC: 41	Right-front wheel lock	Refer to the '98-02 Accord Service Manual (see page 19-58)
DTC: 42	Left-front wheel lock	Refer to the '98-02 Accord Service Manual (see page 19-58)
DTC: 43	Right-rear wheel lock	Refer to the '98-02 Accord Service Manual (see page 19-58)
DTC: 44	Left-rear wheel lock	Refer to the '98-02 Accord Service Manual (see page 19-58)
DTC: 51	Motor lock	Refer to the '98-02 Accord Service Manual (see page 19-59)
DTC: 52	Motor stuck OFF	(see page 19-14)
DTC: 53	Motor stuck ON	(see page 19-16)
DTC: 54	Fail-safe relay	Refer to the '98-02 Accord Service Manual (see page 19-63)
DTC: 61	Low ignition voltage	Refer to the '98-02 Accord Service Manual (see page 19-65)
DTC: 62	High ignition voltage	Refer to the '98-02 Accord Service Manual (see page 19-65)
DTC: 71	Different diameter tire	Refer to the '98-02 Accord Service Manual (see page 19-66)
DTC: 81	Central Processing Unit (CPU) diagnosis, and ROM/RAM diagnosis	Refer to the '98-02 Accord Service Manual (see page 19-66)

BACK

Symptom Troubleshooting Index

Symptom	Diagnostic procedure	Also check for
ABS indicator does not come on	ABS Indicator Circuit Troubleshooting (see page 19-18)	
ABS indicator does not go off and no DTC is stored	ABS Indicator Circuit Troubleshooting (see page 19-18)	

BACK

ABS Components

Circuit Diagram

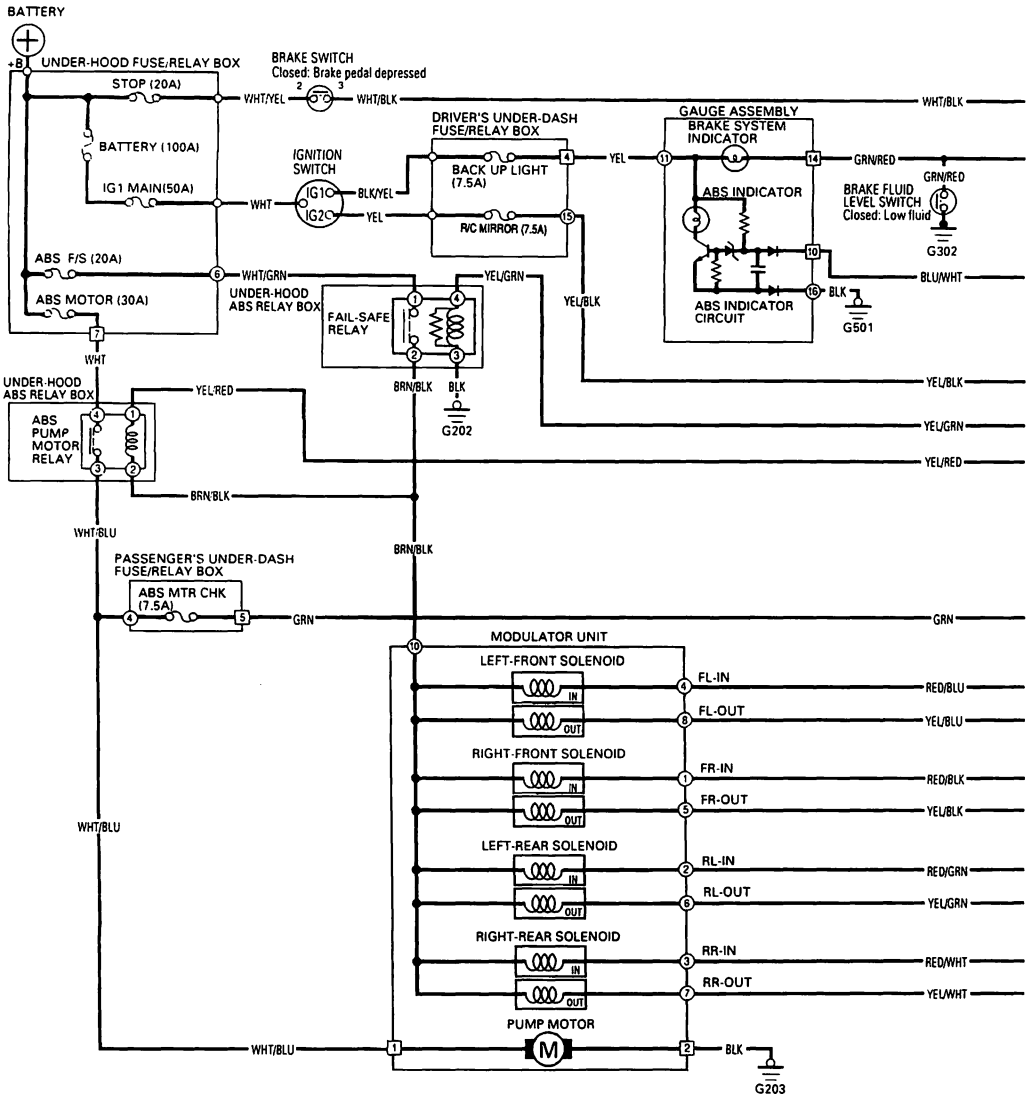

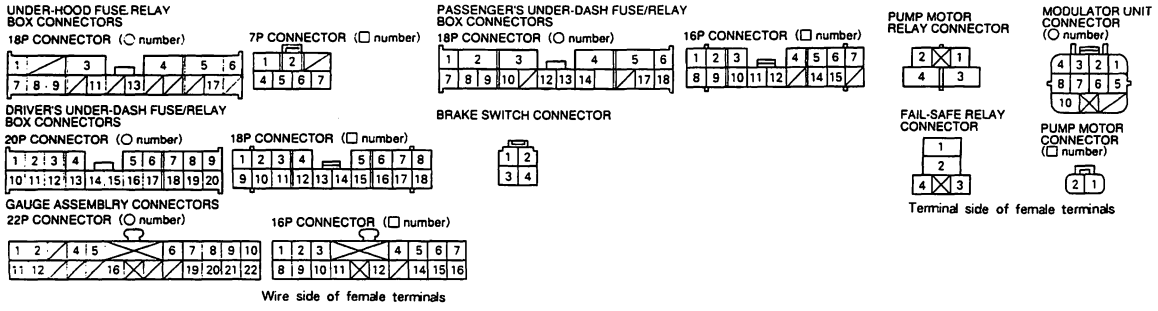

BACK

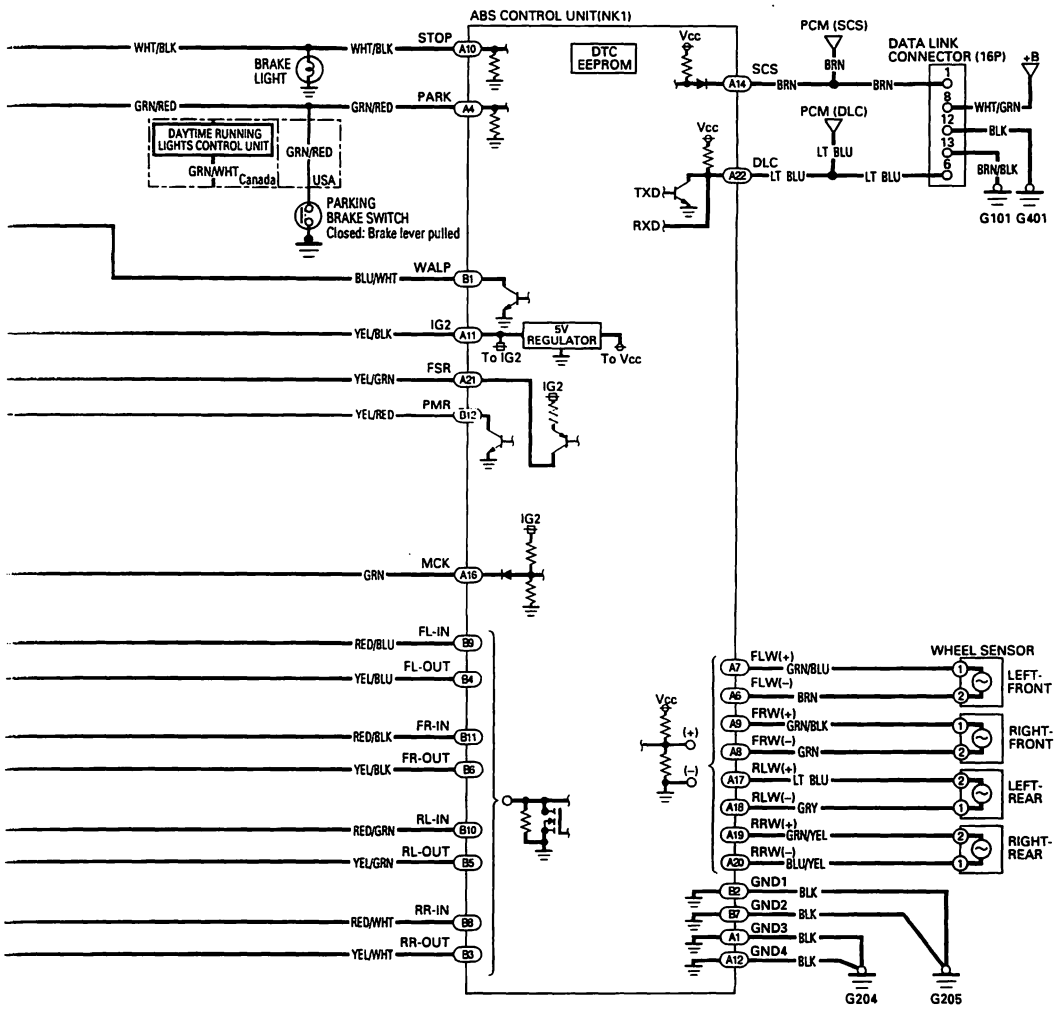

ABS CONTROL UNIT CONNECTORS

CONNECTOR A (22P)

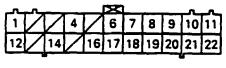

CONNECTOR B (12P)

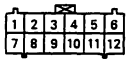

Wire side of female terminals

DATA LINK CONNECTOR (16P)

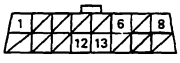

WHEEL SENSOR CONNECTOR

FRONT/REAR

Terminal side of male terminals

DTC Troubleshooting

DTC 52: Motor Stuck OFF

1. Check the ABS MOTOR (30 A) fuse in the under-hood fuse/relay box, and reinstall the fuse if it is OK.

   Is the fuse OK?

   YES—Go to step 3.■

   NO—Replace the fuse, and go to step 2.

2. Connect the pump motor relay connector terminal No. 3 to No. 4 with a jumper wire for a moment, and check the fuse.

PUMP MOTOR RELAY CONNECTOR

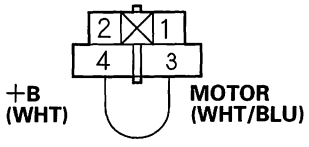

JUMPER WIRE

Terminal side of female terminals

   Is the fuse blown?

   YES—Check for a short to body ground in the motor power source circuit.■

   NO—Go to step 3.

3. Check the ABS MTR CHK (7.5 A) fuse in the passenger's under-dash fuse/relay box, and reinstall the fuse if it is OK.

   Is the fuse OK?

   YES—Go to step 5.

   NO—Replace the fuse, and go to step 4.

4. Connect the pump motor relay connector terminal No. 3 to No. 4 with a jumper wire for a moment, and check the fuse.

PUMP MOTOR RELAY CONNECTOR

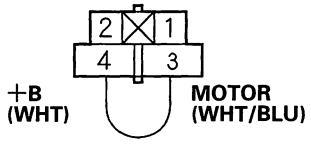

JUMPER WIRE

Terminal side of female terminals

   Is the fuse blown?

   YES—Check for a short to body ground in the MCK circuit.■

   NO—Go to step 5.

5. Check the pump motor relay in the under-hood ABS relay box, refer to the '98-02 Accord Service Manual (see page 22-52).

   Is the relay OK?

   YES—Go to step 6.

   NO—Replace the pump motor relay.■

6. Connect the pump motor relay connector terminal No. 3 to No. 4 with a jumper wire for a moment.

   Does the pump motor operate?

   YES—Go to step 11.

   NO—Go to step 7.

7. Disconnect the pump motor connector.

8. Connect the pump motor relay connector terminal No. 3 to No. 4 with a jumper wire.

BACK

9. Measure the voltage between the pump motor connector terminal No. 1 and body ground.

PUMP MOTOR CONNECTOR

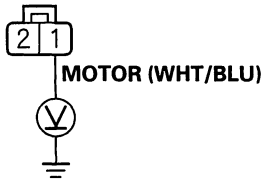

Terminal side of female terminals

Is there battery voltage?

YES—Go to step 10.

NO—Repair open in the wire between the under-hood ABS relay box and the pump motor.■

10. Measure the voltage between the pump motor connector terminal No. 1 and No. 2.

PUMP MOTOR CONNECTOR

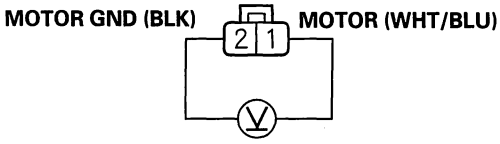

Terminal side of female terminals

Is there battery voltage?

YES—Replace the modulator unit.■

NO—Repair open in the wire between the pump motor and body ground (G203).■

11. Disconnect the ABS control unit connector B (12P).

12. Connect the pump motor relay connector terminal No. 1 to No. 4 with a jumper wire.

PUMP MOTOR RELAY CONNECTOR

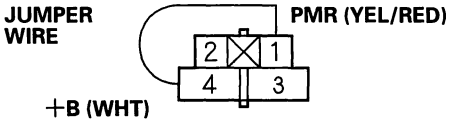

Terminal side of female terminals

13. Measure the voltage between the ABS control unit connector terminal B12 and body ground.

ABS CONTROL UNIT CONNECTOR B (12P)

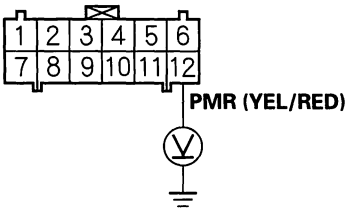

Wire side of female terminals

Is there battery voltage?

YES—Go to step 14.

NO—Repair open in the wire between the under-hood ABS relay box and the ABS control unit.■

(cont'd)

DTC Troubleshooting (cont'd)

14. Remove the jumper wire from the pump motor relay connector.

15. Start the engine.

16. Measure the voltage between the ABS control unit connector terminal B12 and body ground.

ABS CONTROL UNIT CONNECTOR B (12P)

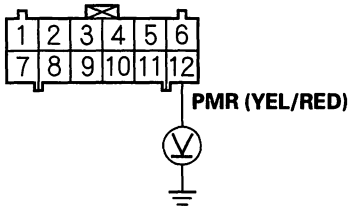

Wire side of female terminals

Is there battery voltage?

YES—Repair a short to power in the wire between the under-hood ABS relay box and the ABS control unit.■

NO—If the problem recurs, replace the ABS control unit.■

DTC 53: Motor Stuck ON

1. Check that the pump motor operates with the ignition switch OFF.

   Does the pump motor operate?

   YES—Replace the pump motor relay. (Pump motor relay stuck ON.)■

   NO—Go to step 2.

2. Remove the ABS MTR CHK (7.5 A) fuse in the passenger's under-dash fuse/relay box.

   Is the fuse OK?

   YES—Remove the fuse, and go to step 3.

   NO—Replace the fuse, and recheck.■

3. Turn the ignition switch ON (II).

4. Measure the voltage between the passenger's under-dash fuse/relay box 16P connector terminal No. 5 and body ground.

PASSENGER'S UNDER-DASH FUSE/RELAY BOX 16P CONNECTOR

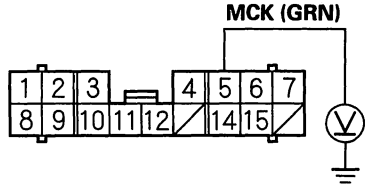

Wire side of female terminals

Is there about 10 V?

YES—Go to step 5.

NO—Repair open in the wire between the passenger's under-dash fuse/relay box and the ABS control unit.■

5. Reinstall the ABS MTR CHK (7.5 A) fuse in the passenger's under-dash fuse/relay box.

BACK

6. Disconnect the pump motor connector.

7. Measure the voltage between terminal No. 1 and body ground.

PUMP MOTOR CONNECTOR

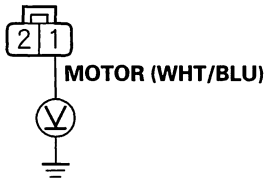

Terminal side of female terminals

Is there about 10 V?

YES—Go to step 8.

NO—Repair open in the wire between the under-hood ABS relay box and the pump motor. ■

8. Measure the voltage between the pump motor connector terminal No. 1 and No. 2.

PUMP MOTOR CONNECTOR

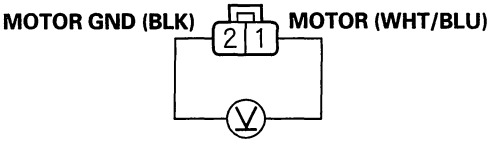

Terminal side of female terminals

Is there about 10 V?

YES—Go to step 9.

NO—Repair open in the wire between the pump motor and body ground (G203). ■

9. Remove the pump motor relay, then connect relay terminals No. 4 and No. 5 together with a jumper wire.

Does the pump motor run?

YES—Go to step 10.

NO—Replace the pump motor. ■

10. Disconnect the ABS control unit connector B (12P).

11. Check for continuity between terminal B12 and body ground.

ABS CONTROL UNIT CONNECTOR B (12P)

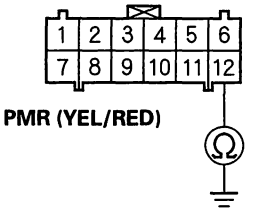

Wire side of female terminals

Is there continuity?

YES—Repair short to body ground in the wire between the under-hood ABS relay box and the ABS control unit. ■

NO—If the problem recurs, replace the ABS control unit. ■

ABS Indicator Circuit Troubleshooting

1. Turn the ignition switch ON(II), and watch the ABS indicator.

   Does the ABS indicator come on?

   NO—Go to step 2.

   YES—If the ABS indicator comes on and goes off, it's OK. If the ABS indicator stays on, go to step 13.

2. Turn the ignition switch OFF then ON (II) again.

   Does the brake system indicator come on?

   YES—Go to step 3.

   NO—Repair open in the brake system indicator circuit. ■

   - Blown BACK-UP LIGHT (7.5 A) fuse.
   - Open in the wire between the BACK-UP LIGHT (7.5 A) fuse and the gauge assembly.
   - Open circuit inside the fuse box.

3. Turn the ignition switch OFF.

4. Disconnect the ABS control unit connector B (12P).

5. Turn the ignition switch ON (II).

   Does the ABS indicator come on?

   YES—Check for loose ABS control unit connectors. If necessary, substitute a known-good ABS control unit, and recheck. ■

   NO—Go to step 6.

6. Check the ABS indicator bulb in the gauge assembly.

   Is the bulb OK?

   YES—Go to step 7.

   NO—Replace the ABS indicator bulb. ■

7. Turn the ignition switch OFF.

8. Disconnect the gauge assembly 16P connector.

9. Check for continuity between the gauge assembly 16P connector terminal No.10 and body ground.

GAUGE ASSEMBLY 16P CONNECTOR

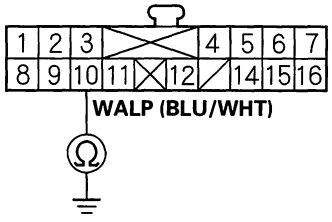

Wire side of female terminals

Is there continuity?

YES—Repair short to body ground in the wire between the gauge assembly and the ABS control unit. ■

NO—Go to step 10.

10. Connect the gauge assembly 16P connector.

11. Connect the gauge assembly 22P connector terminal No. 16 to body ground with a jumper wire.

12. Turn the ignition switch ON (II).

GAUGE ASSEMBLY 22P CONNECTOR

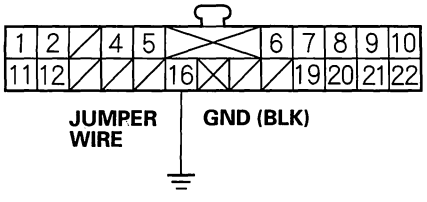

Wire side of female terminals

Does the ABS indicator come on?

YES—Repair open in the wire between the gauge assembly and body ground (G501). ■

NO—Replace the printed circuit board in the gauge assembly. ■

BACK

13. Check the POWER MIRROR (7.5 A) fuse in the under-dash driver's fuse/relay box, and reinstall the fuse if it is OK.

    Is the fuse OK?

    YES—Go to step 14.

    NO—Replace the fuse, and recheck.■

14. Connect the ABS control unit connector terminal A1 to body ground with a jumper wire.

ABS CONTROL UNIT CONNECTOR A (22P)

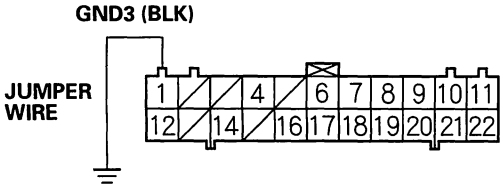

Wire side of female terminals

15. Turn the ignition switch ON (II).

    Does the ABS indicator go off?

    YES—Repair open in the wire between the ABS control unit and body ground (G204).■

    NO—Go to step 16.

16. Measure the voltage between the ABS control unit connector terminal A11 and body ground.

ABS CONTROL UNIT CONNECTOR A (22P)

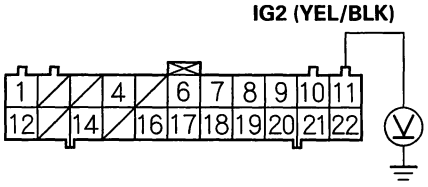

Wire side of female terminals

Is there battery voltage?

YES—Go to step 17.

NO—Repair open in the wire between the POWER MIRROR (7.5 A) fuse and the ABS control unit.■

17. Connect the ABS control unit connector terminal B1 to body ground with a jumper wire.

ABS CONTROL UNIT CONNECTOR B (12P)

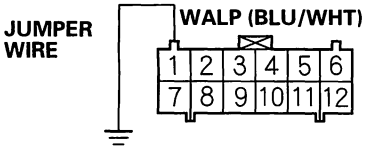

Wire side of female terminals

Does the ABS indicator go off?

YES—Check for loose ABS control unit connectors. If necessary, substitute a known-good ABS control unit, and recheck.■

NO—Go to step 18.

(cont'd)

ABS Indicator Circuit Troubleshooting (cont'd)

18. Connect the gauge assembly 16P connector terminal No. 10 to body ground with a jumper wire.

GAUGE ASSEMBLY 16P CONNECTOR

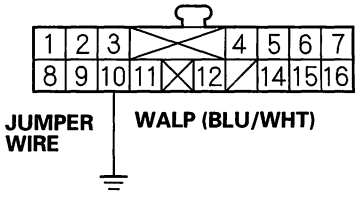

Wire side of female terminals

Does the ABS indicator go off?

YES—Repair open in the wire between the gauge assembly and the ABS control unit.■

NO—Replace the printed circuit board in the gauge assembly.■

BACK

Modulator Unit Removal and Installation

NOTE:
- Do not spill brake fluid on the vehicle; it may damage the paint; if brake fluid does contact the paint, wash it off immediately with water.
- Take care not to damage or deform the brake lines during removal and installation.
- To prevent the brake fluid from flowing, plug and cover the hose ends and joints with a shop towel.

Removal

1. Disconnect the modulator unit connector (B) and the pump motor connector (A).

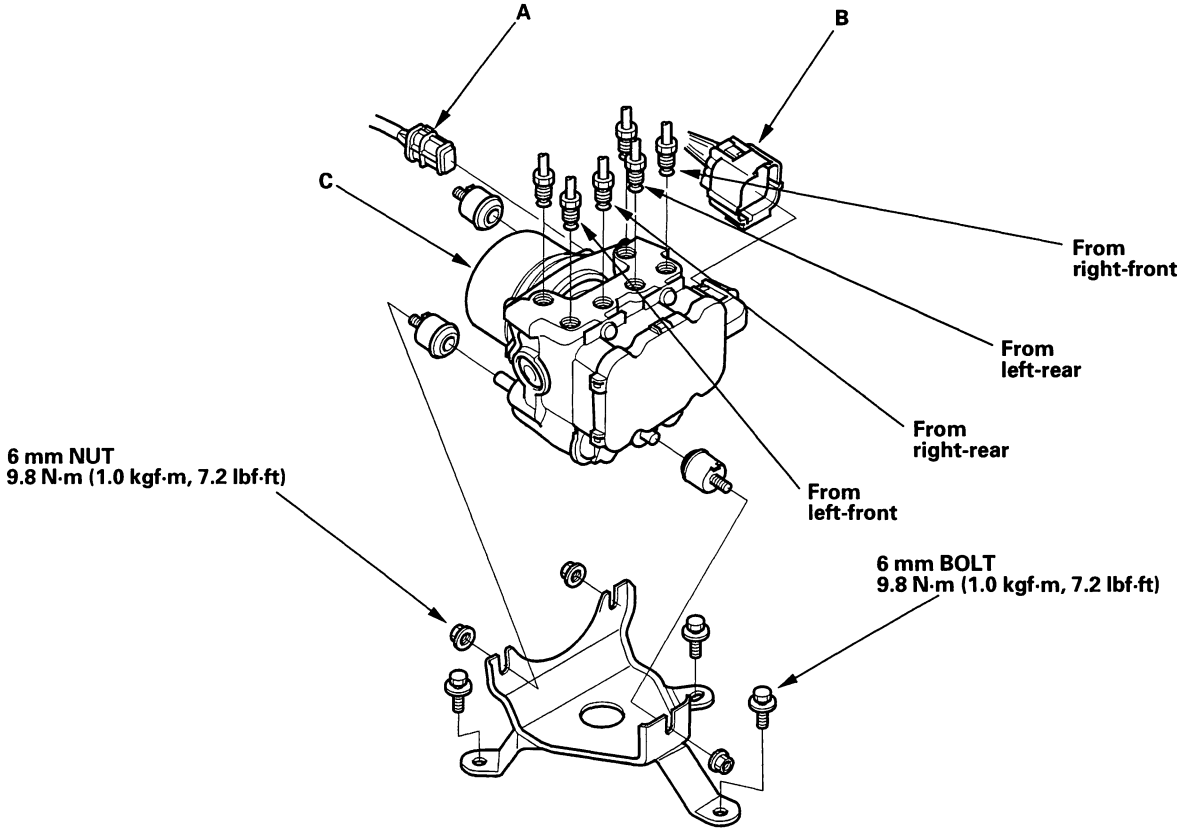

2. Disconnect the brake lines, then remove the modulator unit (C).

Installation

3. Install the modulator unit, then connect the brake lines. Tighten the flare nuts to 15 N·m (1.5 kgf·m, 11 lbf·ft).
4. Connect the modulator unit connector and the pump motor connector.
5. Bleed the brake system, starting with the front wheels.
6. Start the engine, and check that the ABS indicator goes off.
7. Test-drive the vehicle, and check that the ABS indicator does not come on.

ABS Control Unit Replacement

1. Remove the passenger's kick panel.
2. Disconnect the ABS control unit connectors.

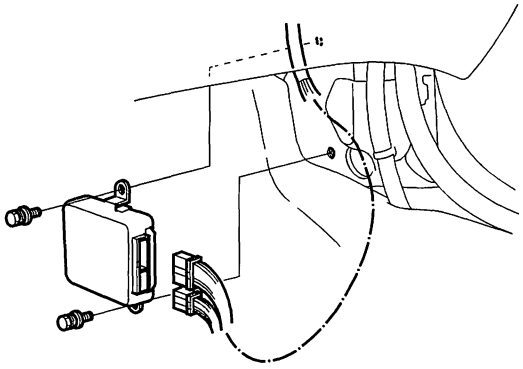

3. Remove the ABS control unit.
4. Install the ABS control unit in the reverse order of removal.

BACK

Brakes

Conventional Brake Components 19-1

ABS (Anti-lock Brake System) Components ('98–00 Models) 19-7

ABS/TCS (Anti-lock Brake System/Traction Control System) Components ('01–02 Models)

Component Location Index 19-24
General Troubleshooting Information 19-25
DTC Troubleshooting Index 19-30
Symptom Troubleshooting Index 19-31
System Description 19-32
Circuit Diagram 19-46
DTC Troubleshooting 19-48
ABS Indicator Circuit Troubleshooting 19-76
TCS Indicator Circuit Troubleshooting 19-78
Modulator Unit Removal and Installation 19-80
TCS Switch test 19-81
ABS/TCS Control Unit Replacement 19-82
Wheel Sensor Inspection 19-82
Wheel Sensor Replacement 19-83

ABS

Outline of V6 Model Changes

- The ABS has been changed to ABS/TCS; troubleshooting was added.

ABS/TCS Components

Component Location Index

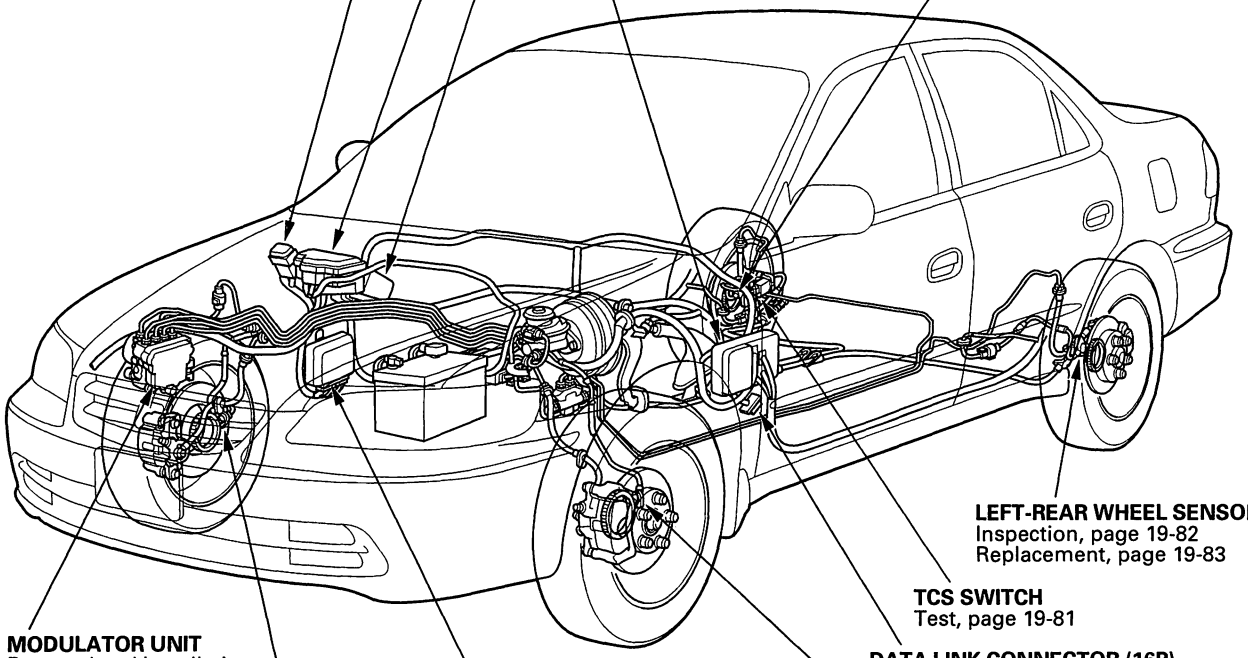

BACK

General Troubleshooting Information

ABS/TCS Indicators

- If the system is OK, the ABS indicator goes off once after turning the ignition switch ON(II) without starting the engine, and then comes on again and goes off several seconds later after starting the engine. This occurs because the ABS/TCS control unit is turned on by the IG2 power source.
- The TCS or ABS indicator comes on when the ABS/TCS control unit detects a problem in the system. However, even though the system is operating properly, the TCS or ABS indicator will come on, under the following conditions:
- **For ABS or TCS Indicator:**
  - Only drive wheels rotate
  - One drive wheel is stuck
  - The vehicle goes into a spin.
  - The ABS continues to operate for a long time.
  - The vehicle is subjected to an electrical signal disturbance.
- **For TCS Indicator:**
  - The TCS operated when the front brake pad temperature rises excessively.
  - The TCS switch is OFF.
  - One or more of these components are faulty: Heated oxygen sensor, Manifold absolute pressure sensor, Crankshaft position sensor, Engine coolant temperature sensor, Throttle position sensor, Top dead center sensor, Top dead center sensor 2, Intake air temperature sensor, Exhaust gas recirculation, Barometric pressure sensor, Idle air control valve, VTEC pressure switch, Knock sensor, Fuel supply system, Automatic transaxle, Misfire detection system of the PGM-FI system.

To determine the actual cause of the problem, question the customer about the problem, taking the above-listed conditions into consideration.

- When a problem is detected and the ABS or TCS indicator comes on, there are cases when the indicator stays on until the ignition switch is turned OFF, and cases when the indicator goes off automatically when the system returns to normal. For ABS DTCs 61 and 62, the indicator goes off automatically when the system returns to normal. For all other codes, the indicator stays on until the ignition switch is turned OFF.
- For ABS DTCs 12, 14, 16, 18, 21, 22, 23, 24, 51, 52 and 53, the ABS indicator goes off when the vehicle is driven again and the system is OK after the ignition switch is turned from OFF to ON (II). However, if the DTC is cleared, the CPU resets and the indicator goes off right after the engine is started if the system is OK.
- The ABS is not operational when the ABS indicator is ON; the TCS is not operational when the TCS indicator is ON.
- When the ABS and TCS indicators are both ON, troubleshoot the ABS first.
- When the TCS indicator and MIL are both ON, troubleshoot the PGM-FI system first.

Diagnostic Trouble Code (DTC)

- The memory can hold any number of DTCs. However, when the same DTC is detected more than once, the more recent DTC is written over the earlier one . Therefore, when the same problem is detected repeatedly, it is memorized as a single DTC.
- The DTCs are indicated in ascending number order, not in the order they occur.
- The DTCs are memorized in the EEPROM (non-volatile memory). Therefore, the memorized DTCs cannot be canceled by disconnecting the battery. Do the specified procedures to clear the DTCs.

Self-diagnosis

- Self-diagnosis can be classified into 2 categories:
  - Initial diagnosis: Done right after the engine starts and until the ABS or TCS indicator goes off.
  - Regular diagnosis: Done right after the initial diagnosis until the ignition switch is turned OFF.
- When a problem is detected by self-diagnosis,the ABS/TCS control unit shifts to fail-safe mode.

Kickback

The pump motor operates when the ABS is functioning, and the fluid in the reservoir is forced out to the master cylinder, causing kickback at the brake pedal.

Pump Motor

- The pump motor operates when the ABS is functioning.
- The ABS/TCS control unit checks the pump motor operation during initial diagnosis when the vehicle is started. You may hear the motor operate at this time, but it is normal.

Brake Fluid Replacement/Air Bleeding

Brake fluid replacement and air bleeding procedures are identical to the procedures used on vehicles not equipped with ABS/TCS. To ease bleeding, start with the front wheels.

(cont'd)

General Troubleshooting Information (cont'd)

How to Troubleshoot ABS and TCS DTCs

The troubleshooting flowchart procedures assume that the cause of the problem is still present and the ABS and/or TCS indicator is still on. Following the flowchart when the ABS and/or TCS indicator does not come on can result in incorrect diagnosis.
The connector illustrations show the female terminal connectors with a single outline and the male terminal connectors with a double outline.

1. Question the customer about the conditions when the problem occured, and try to reproduce the same conditions for troubleshooting. Find out when the ABS and/or TCS indicator came on, such as during ABS control, after ABS control, when vehicle speed was at a certain speed, etc.

2. When the ABS or TCS indicator does not come on during the test drive, but troubleshooting is done based on the DTC, check for loose connectors, poor contact of the terminals, etc. before you start troubleshooting.

3. After troubleshooting, clear the DTCs, and test-drive the vehicle. Make sure the ABS and TCS indicators do not come on.

How to Retrieve ABS or TCS DTCs

Honda PGM Tester Method:

1. With the ignition switch OFF, connect the Honda PGM Tester (A) to the 16P Data Link Connector (DLC) (B) behind the driver's kick panel.

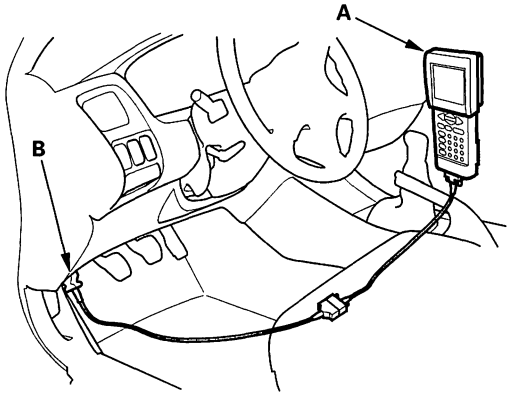

2. Turn the ignition switch ON (II), and follow the prompts on the Honda PGM Tester to display the DTC(s) on the screen. After determining the DTC, refer to the DTC Troubleshooting Index.

   NOTE: See the Honda PGM Tester user's manual for specific instructions.

Service Check Signal (SCS) Circuit Method:

1. With the ignition switch OFF, connect the Honda PGM Tester (A) to the 16P Data Link Connector (DLC) (B) behind the driver's kick panel.

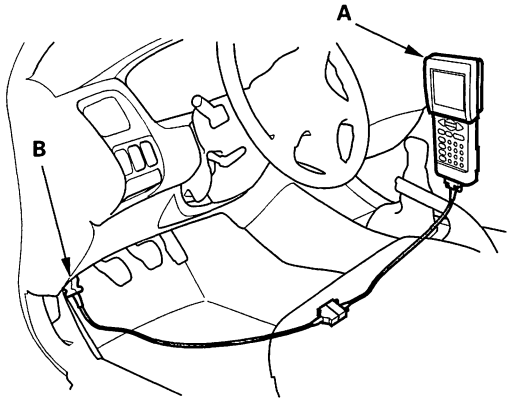

2. Short the SCS circuit to body ground using the Honda PGM Tester.

3. Turn the ignition switch ON (II) without pressing the brake pedal.

   NOTE: If the brake pedal is pressed when turning the ignition switch ON (II), the system shifts to the DTC clearing mode.

BACK

4. The blinking frequency indicates the DTC.

   NOTE: If the DTC is not memorized, the ABS or TCS indicator will go off for 3.6 seconds, and then come back on.

   The system will not indicate the DTC unless these conditions are met:
   - The TCS switch is not pushed.
   - The brake pedal is not pressed.
   - The ignition switch is turned ON (II).
   - The engine is stopped.
   - The SCS circuit is shorted to body ground before the ignition switch is turned ON (II).

Example of DTC15

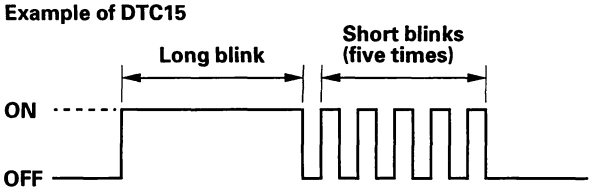

Example of DTC22

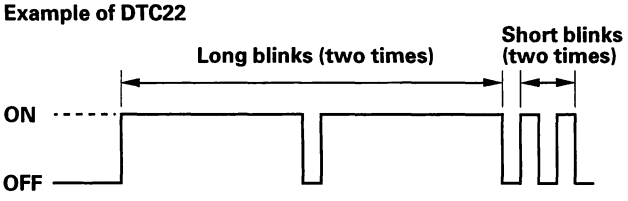

5. Turn the ignition switch OFF.

6. Disconnect the Honda PGM Tester from the DLC.

How to Clear ABS DTCs

Honda PGM Tester Method:

1. With the ignition switch OFF, connect the Honda PGM Tester (A) to the 16P Data Link Connector (DLC) (B) behind the driver's kick panel.

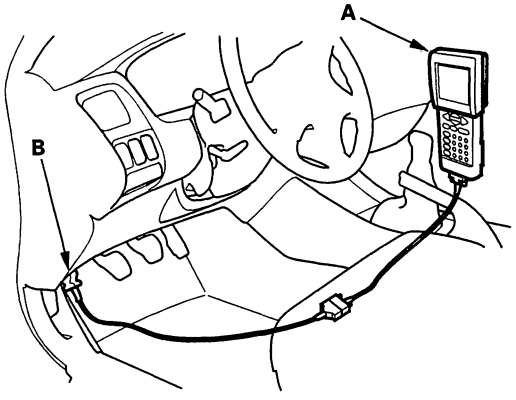

2. Turn the ignition switch ON (II), and clear the DTC (s) by following the screen prompts on the Honda PGM Tester.

   NOTE: See the Honda PGM Tester user's manual for specific instructions.

Service Check Signal (SCS) Circuit Method:

1. With the ignition switch OFF, connect the Honda PGM Tester (A) to the 16P Data Link Connector (DLC) (B) behind the driver's kick panel.

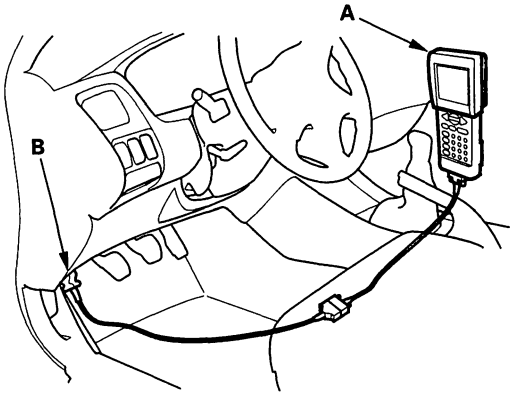

2. Short the SCS circuit to body ground using the Honda PGM Tester.

(cont'd)

General Troubleshooting Information (cont'd)

3. Press the brake pedal.

4. Turn the ignition switch ON (II) while keeping the brake pedal pressed.

5. After the ABS indicator goes off, release the brake pedal.

6. After the ABS indicator comes on, press the brake pedal again.

7. After the ABS indicator goes off, release the brake pedal again.

   You cannot clear the DTC unless these conditions are met:
   - The vehicle speed is 6 mph (10 km/h) or less.
   - The SCS circuit is shorted to body ground before the ignition switch is turned ON (II).
   - The brake pedal is pressed before the ignition switch is turned ON (II).

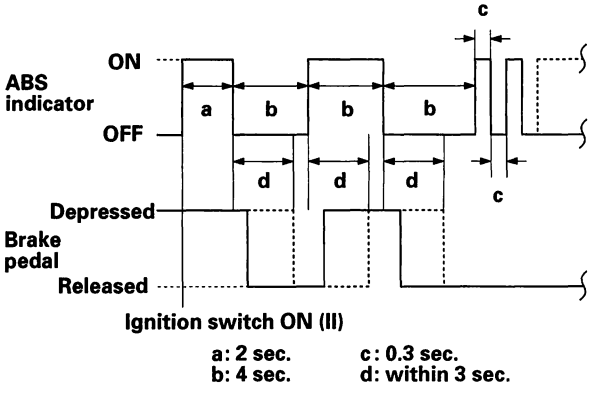

8. After a few seconds, the ABS indicator blinks twice and the DTC is cleared. If the indicator does not blink twice, repeat steps 1 through 7. If the indicator stays on after the indicator blinks twice, check the DTC because a problem was detected during initial diagnosis before shifting to DTC clearing mode.

9. Turn the ignition switch OFF.

10. Disconnect the Honda PGM Tester from the DLC.

BACK

How to Clear TCS DTCs

Honda PGM Tester Method:

1. With the ignition switch OFF, connect the Honda PGM Tester (A) to the 16P Data Link Connector (DLC) (B) behind the driver's kick panel.

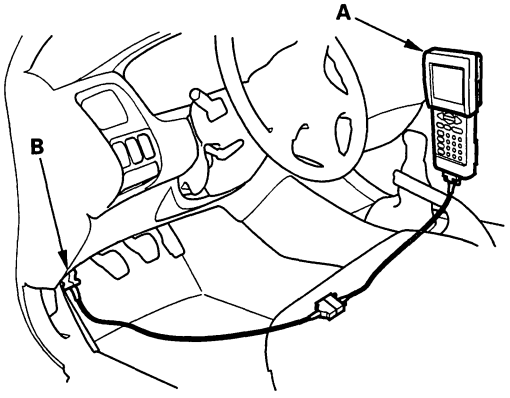

2. Turn the ignition switch ON (II), and clear the DTC (s) by following the screen prompts on the PGM Tester.

   NOTE: See the Honda PGM Tester user's manual for specific instructions.

Service Check Signal (SCS) Circuit Method:

1. Press the parking brake pedal with the SCS circuit opened. Keep the pedal pressed during the entire DTC clearing procedure.
2. Press and hold the TCS switch, then turn the ignition switch ON (II) without starting the engine.
3. Continue to hold the TCS switch for 4 seconds, then turn the ignition switch OFF.
4. Within 6 seconds, turn the ignition switch back ON (II) for at least 4 seconds, then release the TCS switch, and watch the TCS indicator.
5. After a few seconds, the TCS indicator will come on after blinking to indicate that the DTC is cleared. If the indicator blinks repeatedly, repeat steps 1 through 4.
6. Turn the ignition switch OFF.

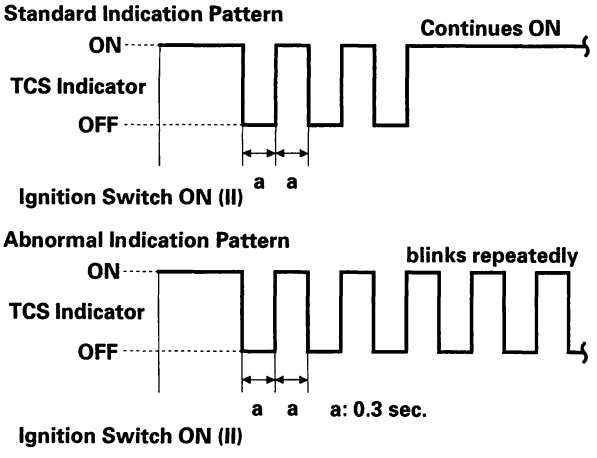

DTC Troubleshooting Index

ABS DTCs

DTC	Detection Item	Note
11	Right-front wheel sensor (open/short to body ground/short to power)	(see page 19-48)
12	Right-front wheel sensor (electrical noise/intermittent interruption)	(see page 19-49)
13	Left-front wheel sensor (open/short to body ground/short to power)	(see page 19-48)
14	Left-front wheel sensor (electrical noise/intermittent interruption)	(see page 19-49)
15	Right-rear wheel sensor (open/short to body ground/short to power)	(see page 19-48)
16	Right-rear wheel sensor (electrical noise/intermittent interruption)	(see page 19-49)
17	Left-rear wheel sensor (open/short to body ground/short to power)	(see page 19-48)
18	Left-rear wheel sensor (electrical noise/intermittent interruption)	(see page 19-49)
21	Right-front pulser	(see page 19-50)
22	Left-front pulser	(see page 19-50)
23	Right-rear pulser	(see page 19-50)
24	Left-rear pulser	(see page 19-50)
31	Right-front inlet solenoid	(see page 19-51)
32	Right-front outlet solenoid	(see page 19-51)
33	Left-front inlet solenoid	(see page 19-51)
34	Left-front outlet solenoid	(see page 19-51)
35	Right-rear inlet solenoid	(see page 19-51)
36	Right-rear outlet solenoid	(see page 19-51)
37	Left-rear inlet solenoid	(see page 19-51)
38	Left-rear outlet solenoid	(see page 19-51)
41	Right-front wheel lock	(see page 19-54)
42	Left-front wheel lock	(see page 19-54)
43	Right-rear wheel lock	(see page 19-54)
44	Left-rear wheel lock	(see page 19-54)
51	Motor lock	(see page 19-55)
52	Motor stuck OFF	(see page 19-55)
53	Motor stuck ON	(see page 19-57)
54	ABS Fail-safe relay	(see page 19-59)
61	Low ignition voltage	(see page 19-61)
62	High ignition voltage	(see page 19-61)
71	Different diameter tire	(see page 19-62)
81	Central Processing Unit (CPU) diagnosis, and ROM/RAM diagnosis	(see page 19-62)

TCS DTCs

DTC	Detection Item	Note
24	RF TCS NO solenoid	(see page 19-63)
25	RF TCS NC solenoid	(see page 19-63)
26	LF TCS NO solenoid	(see page 19-63)
27	LF TCS NC solenoid	(see page 19-63)
28	TCS relay	(see page 19-66)
31	Engine retard command (PFINH) signal	(see page 19-69)
32	Engine speed (NEP) signal	(see page 19-71)
34	Reference voltage (VREF) signal	(see page 19-72)
36	Throttle position sensor output (THLOUT) signal	(see page 19-73)
61	A/T shift position (ATSFTP) signal	(see page 19-74)
81	Continuous TCS operation	(see page 19-75)

BACK

Symptom Troubleshooting Index

Symptom	Diagnostic procedure	Also check for
ABS indicator does not come on	ABS indicator Circuit Troubleshooting (see page 19-76)	
ABS indicator does not go off and no DTC is stored	ABS Indicator Circuit Troubleshooting (see page 19-76)	
ABS indicator came on once, but it is OK now	The vehicle is OK at this time (see page 19-25)	
TCS indicator does not come on	ABS indicator Circuit Troubleshooting (see page 19-78)	
TCS indicator does not go off and no DTC is stored	ABS Indicator Circuit Troubleshooting (see page 19-78)	
TCS indicator came on once, but it is OK now	The vehicle is OK at this time (see page 19-25)	

ABS/TCS Components

System Description

ABS/TCS Control Unit Inputs and Outputs for Connector A (26P)

ABS/TCS CONTROL UNIT CONNECTOR A (26P)

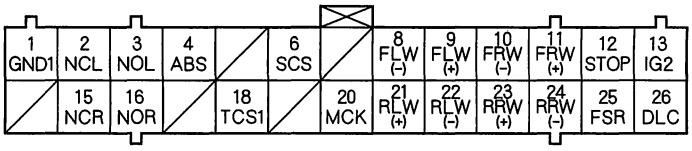

Wire side of female terminals

Terminal number	Wire color	Terminal sign (Terminal name)	Description	Measurement			
				Terminal	Conditions (Ignition switch ON (II))		Voltage
1	BLK	GND1 (Ground 1)	Ground	1-GND	———		Below 0.3 V
2	YEL/GRN	NCL (Normally closed left)	Drives left TCS normally closed solenoid valve	2-GND	TCS Indicator	OFF	Battery Voltage
3	GRY	NOL (Normally open left)	Drives left TCS normally open solenoid valve	3-GND		ON (Disconnect 16P connector to turn indicator on)	Below 0. 3V
4	BLU/WHT	ABS	Drives ABS indicator (Turns the indicator drive transistor to ON, then turns off the indicator)	4-GND	ABS indicator	ON	4 – 6 V
						OFF	Below 1.0 V
6	BRN	SCS (Service check signal)	Detects service check connector signal (Use for DTC indication)	6-GND	SCS Circuit	Shorted	Below 0.3 V
						Opened	About 5 V
8	BRN	FLW (−) (Front-left wheel negative)	Detects left-front wheel sensor signal	8-9	Wheel	Turn wheel at 1 turn/second	AC: 0. 053 V or above (Reference) Oscilloscope: 0.15 Vp-p or above
9	GRN/BLU	FLW (+) (Front-left wheel positive)					
10	GRN	FRW (−) (Front-right wheel negative)	Detects right-front wheel sensor signal	10-11			
11	GRN/BLK	FRW (+) (Front-right wheel positive)				Stopped	0.25 V– 1.15 V
12	WHT/BLK	STOP	Detects brake switch signal	12-GND	Brake pedal	Pressed	Battery Voltage
						Released	Below 0.3 V
13	YEL/BLK	IG2 (Ignition 2)	Power source for activating the system	13-GND	Ignition switch	ON (II)	Battery Voltage
						Start (III)	Below 0.3 V

BACK

Terminal number	Wire color	Terminal sign (Terminal name)	Description	Measurement			
				Terminal	Conditions (Ignition switch ON (II))		Voltage
15	RED/GRN	NCR (Normally closed right)	Drives right TCS normally closed solenoid valve	15-GND	TCS indicator	OFF	Battery Voltage
16	LT BLU	NOR (Normally opened right)	Drives right TCS normally open solenoid valve	16-GND		ON (Disconnect 16P connector to turn indicator on)	Below 0.3 V
18	RED/WHT	TCS1	Drives TCS indicator (Turns the indicator drive transistor to ON, then turns off the indicator)	18-GND	TCS indicator	With engine running, and indicator OFF	Battery Voltage
						ON	About 2 V
20	GRN	MCK (Motor check)	Detects pump motor drive signal	20-GND	Pump motor	ON	Battery Voltage
						OFF	Below 0.3 V
					Remove MCK fuse		About 10 V
21	LT BLU	RLW (+) (Rear-left wheel positive)	Detects left-rear wheel sensor signal	21-22	Wheel	Turn wheel at 1 turn/second	AC: 0. 053V or above (Reference) Oscilloscope: 0.15 Vp-p or above
22	GRY	RLW (−) (Rear-left wheel positive)					
23	GRN/YEL	RRW (+) (Rear-right wheel positive)	Detects right-rear wheel sensor signal	23-24			
24	BLU/YEL	RRW (−) (Rear-right wheel negative)				Stopped	0.25 V− 1.15 V
25	YEL/GRN	FSR (Fail-safe relay)	Drives ABS fail-safe relay (ABS fail-safe relay is turned OFF to shut off the power source to the solenoid and pump motor relay when a problem occurs.)	25-GND	ABS (SCS circuit must be open)	Warning	Below 0.3 V
						Normal	About 11V
26	LT BLU	DLC (Data link connector)	Communicates with the Honda PGM Tester	——	——		——

(cont'd)

System Description (cont'd)

ABS/TCS Control Unit Inputs and Outputs for Connector B (16P)

ABS/TCS CONTROL UNIT CONNECTOR B (16P)

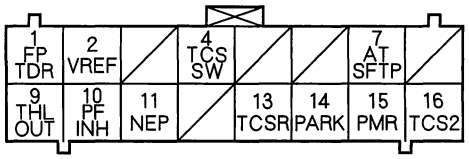

Wire side of female terminals

Terminal number	Wire color	Terminal sign (Terminal name)	Description	Measurement			
				Terminal	Conditions (Ignition switch ON (II))		Voltage
1	PNK	FPTDR (Frame to powertrain torque down request)	Outputs engine retard request signal	1-GND	TCS	Not operating	About 2.5 V (5 V, duty 50)
						Operating	About 5V
2	ORN/GRN	VREF (Voltage reference)	Reference voltage for the sensors of the PGM-FI system	2-GND	——		About 5V
4	ORN/WHT	TCS SW (TCS switch)	Detects TCS switch signal	4-GND	TCS switch	TCS switch pressed	Battery Voltage
						OFF (TCS indicator is ON)	0 V
7	LT GRN	ATSFTP (AT shift position)	Detects A/T shift position signal	7-GND	Shift the transmission to P, then start the engine.		About 4 V
9	YEL/GRN	THLOUT (Throttle out)	Detects throttle position sensor signal	9-GND	Throttle valve	Fully closed	About 0.5V
						Fully opened	About 4.8V
10	BLU	PFINH (Powertrain to frame inhibition)	Detects TCS operation permission signal	10-GND	Permission (normal)		About 2.5V (5V, duty 50)
					Inhibition (the coolant temperature is 0°C or below)		About 5 V
					Failure (TCS and/or PCM has failed)		About 0 V
11	BLU	NEP (Engine speed pulse)	Detects engine speed signal	11-GND	Engine idling		About 6 V
13	GRN/YEL	TCSR (TCS relay)	Drives TCS relay (TCS relay is turned OFF to shut off the power source to the TCS solenoid and pump motor relay when a problem occurs)	13-GND	TCS (SCS circuit must be opened)	Warning	Below 0.3 V
						Normal	About 11 V
14	GRN/RED	PARK (Parking)	Detects parking brake switch signal	14-GND	With engine running, parking brake	Pulled	Below 0.3 V
						Released	Battery Voltage
15	YEL/RED	PMR (Pump motor relay)	Drives pump motor relay	15-GND	ABS indicator	OFF / Pump motor / ON	Below 1.0 V
						OFF / Pump motor / OFF	Battery Voltage
						ON	Below 0.3 V
16	RED/WHT	TCS2	Drives TCS indicator (Turns the indicator drive transistor to ON, then turns off the indicator)	16-GND	TCS indicator	OFF	Battery Voltage
						ON	About 2 V

BACK

ABS/TCS Control Unit Inputs and Outputs for Connector C (12P)

ABS/TCS CONTROL UNIT CONNECTOR C (12P)

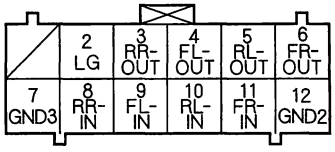

Wire side of female terminals

Terminal number	Wire color	Terminal sign (Terminal name)	Description	Measurement			
				Terminal	Conditions (Ignition switch ON (II))		Voltage
2	BRN/BLK	LG (Logic ground)	Ground for logic circuit	2-GND	———		Below 0.3 V
3	YEL/WHT	RR-OUT (Rear-right outlet)	Drives right-rear outlet solenoid valve	3-GND	ABS indicator	OFF	Battery Voltage
4	YEL/BLU	FL-OUT (Front-left outlet)	Drives left-front outlet solenoid valve	4-GND			
5	YEL/GRN	RL-OUT (Rear-left outlet)	Drives left-rear outlet solenoid valve	5-GND		ON (Disconnect 16P connector to turn indicator on)	Below 0.3 V
6	YEL/BLK	FR-OUT (Front-right outlet)	Drives right-front outlet solenoid valve	6-GND			
7	BLK	GND3 (Ground 3)	Ground	7-GND	———		Below 0.3 V
8	RED/WHT	RR-IN (Rear-right inlet)	Drives right-rear inlet solenoid valve	8-GND	ABS indicator	OFF	Battery Voltage
9	RED/BLU	FL-IN (Front-left inlet)	Drives left-front inlet solenoid valve	9-GND			
10	RED/GRN	RL-IN (Rear-left inlet)	Drives left-rear inlet solenoid valve	10-GND		ON (Disconnect 16P connector to turn indicator on)	Below 0.3 V
11	RED/BLK	FR-IN (Front-right inlet)	Drives right-front inlet solenoid valve	11-GND			
12	BLK	GND2 (Ground 2)	Ground	12-GND	———		Below 0.3 V

(cont'd)

System Description (cont'd)

Outline

This system consists of the ABS/TCS control unit, the modulator unit, four wheel sensors, and the PCM. The system integrates the ABS (Anti-lock Brake System) and the TCS (Traction Control System) and controls both systems using the brakes.

ABS/TCS	ABS control	•Improves maneuverability and stability when braking.
	TCS control	•Improves accelerating ability from a standstill on slipperly road surfaces. •Improves traction when one drive wheel is on a slippery road surface.

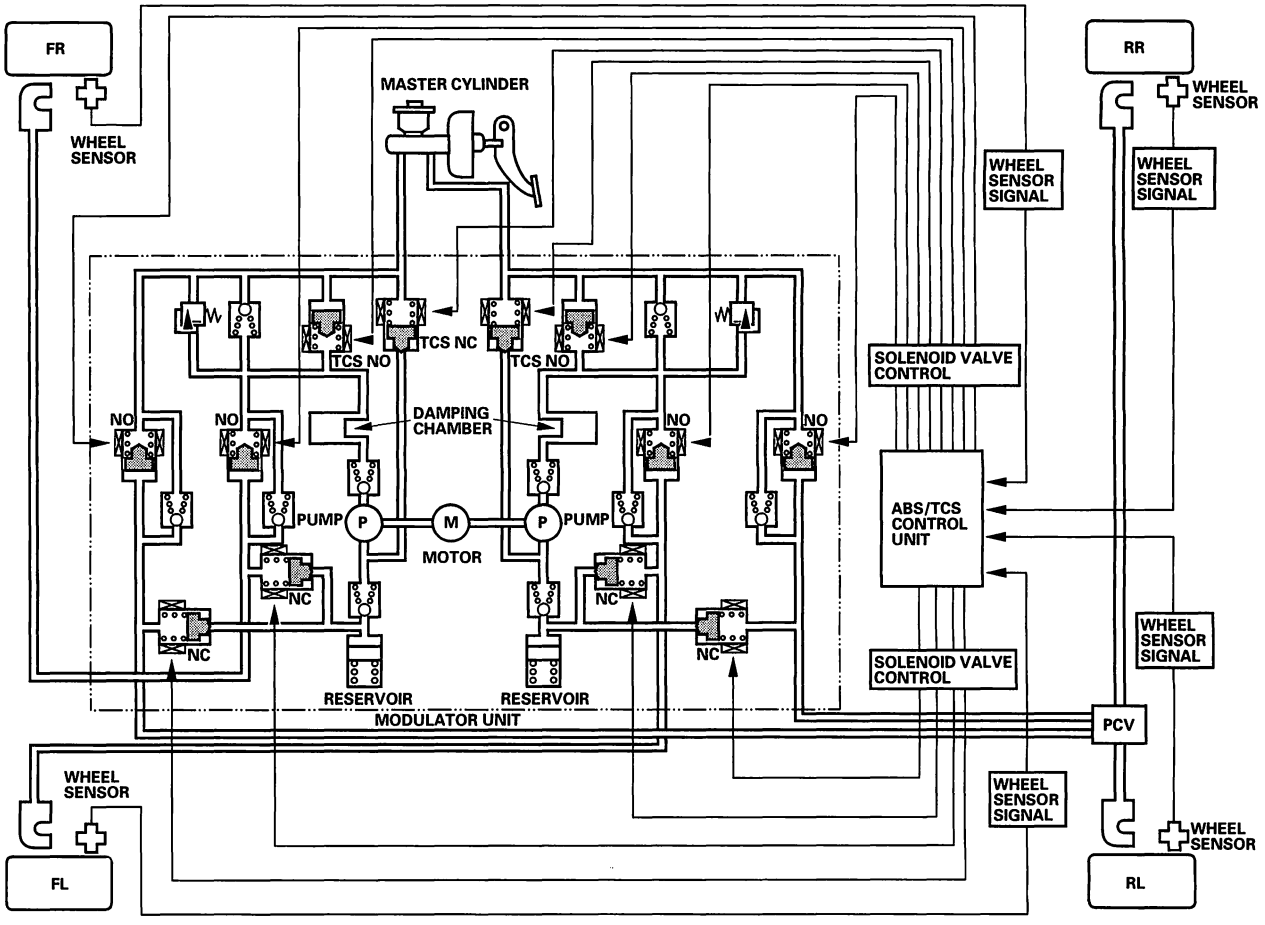

NO: Normally Open
NC: Normally Closed

BACK

ABS Features

When the brake pedal is pressed while driving, the wheels can lock before the vehicle comes to a stop. In such an event, the maneuverability of the vehicle is reduced if the front wheels are locked, and the stability of the vehicle is reduced if the rear wheels are locked, creating an extremely unstable condition. The ABS precisely controls the slip rate of the wheels to ensure maximum grip force from the tires, and it thereby ensures maneuverability and stability of the vehicle.
The ABS calculates the slip rate of the wheels based on the vehicle speed and the wheel speed, then it controls the brake fluid pressure to reach the target slip rate.

Grip Force of Tire and Road Surface

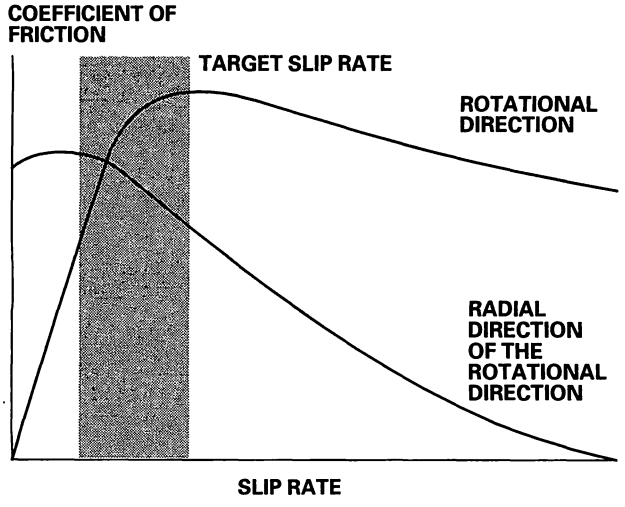

TCS Features

The TCS provides low speed traction. When a drive wheel loses traction on a slipperly road surface and starts to spin, the ABS/TCS control unit sends a brake signal to the modulator unit, which applies brake pressure to slow the spinning wheel. At that time, the ABS/TCS control unit sends an engine retard signal to the PCM to prevent damage to the transmission.

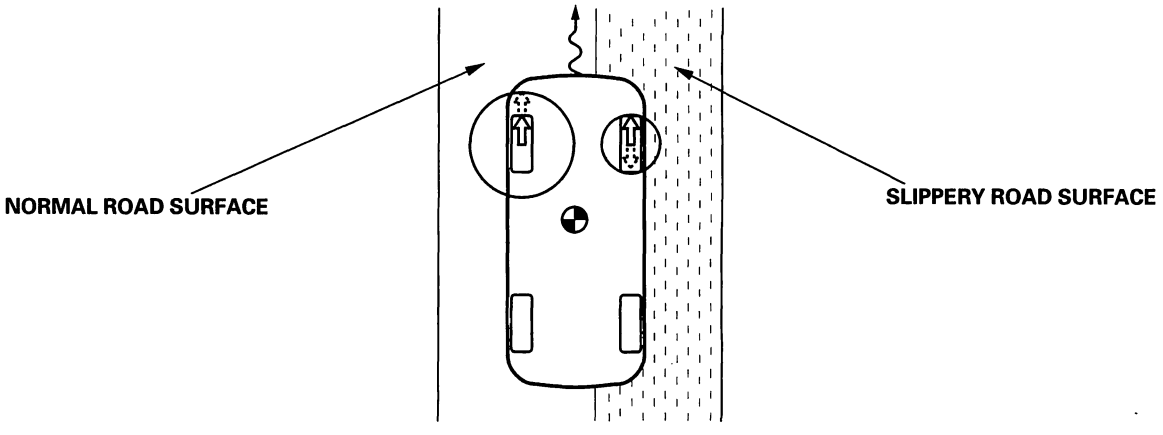

(cont'd)

System Description (cont'd)

ABS Main Control

The ABS/TCS control unit detects the wheel speed based on the wheel sensor signal it received, then it calculates the vehicle speed based on the detected wheel speed. The control unit detects the vehicle speed during deceleration based on the rate of deceleration.
The ABS/TCS control unit calculates the slip rate of each wheel, and it transmits the control signal to the modulator unit solenoid valve when the slip rate is high.
The pressure reduction control has 3 modes: pressure intensifying, pressure retaining, and pressure reducing.

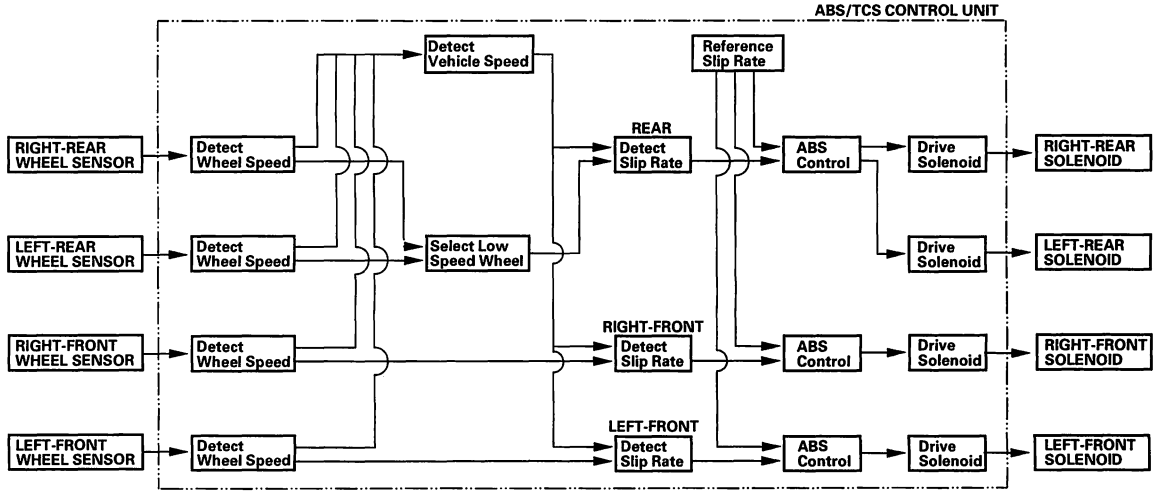

TCS Main Control

The ABS/TCS control unit controls the TCS based on signal inputs from the throttle position sensor, engine speed sensor, shift position sensor, and the wheel sensors. In addition, the ABS/TCS control unit sends an engine retard request signal to the PCM if necessary. The ABS/TCS control unit uses the modulator unit to control the TCS. The pressure intensifying control has three modes: pressure intensifying, pressure retaining, and pressure reducing.

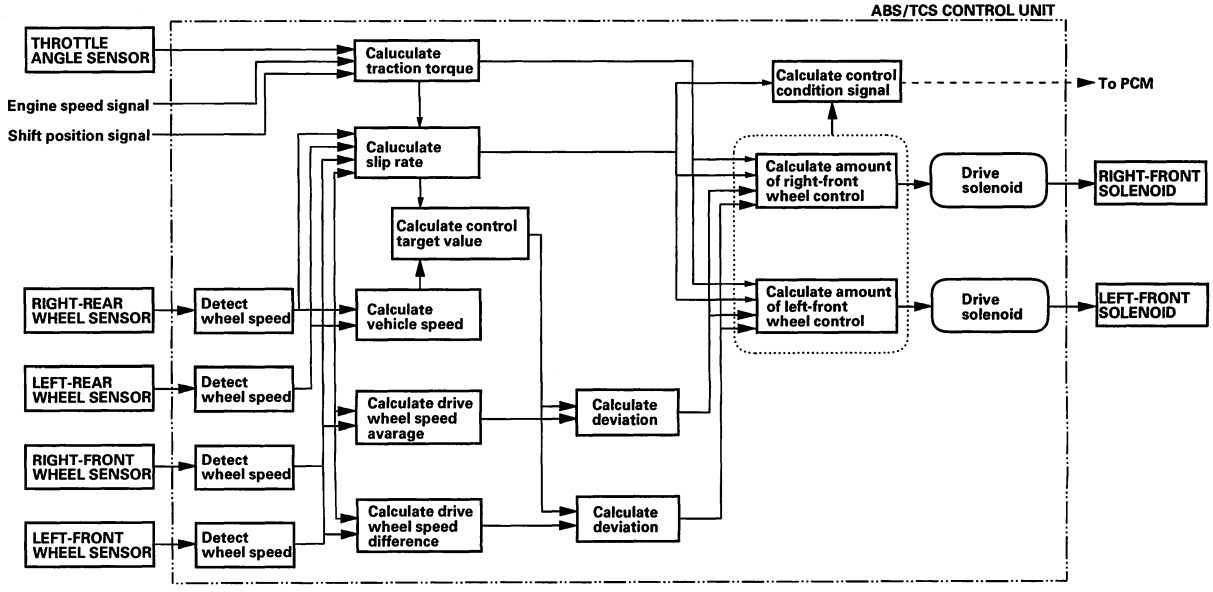

BACK

ABS Self-Diagnosis

- The ABS/TCS control unit is equipped with a main CPU and a sub CPU. Each CPU checks the other for problems.
- The CPUs check the circuit of the system.
- Self-diagnosis can be classified into 2 categories:
  - Initial diagnosis: Done right after the engine starts and until the ABS or TCS indicator goes off.
  - Regular diagnosis: Done right after the initial diagnosis until the ignition switch is turned OFF.
- When a problem is detected by self-diagnosis, the ABS/TCS control unit shifts to fail-safe mode.

ABS Self-diagnosis Table

Diagnostic Trouble Code (DTC)	Detection Item	Detection Timing		Fail-safe Mode
		Initial Diagnosis	Regular Diagnosis	
11, 13, 15, 17	Wheel sensor (open/short to body ground/short to power)	○	○	A0
12, 14, 16, 18	Wheel sensor (electrical noise/intermittent interruption)		○	A0, L0
21-24	Pulser		○	A0, L0
31-38	Solenoid (short to body ground/short to wire)	○	○	S1
41-44	Wheel lock		○	A0, L0
51	Motor lock		○	A0, L0
52	Motor stuck OFF		○	A0, L0
53	Motor stuck ON	○	○	A0, L0
54	Fail-safe relay	○	○	S1
61	Low ignition voltage		○	B0
62	High ignition voltage		○	B0
71	Different diameter tire		○	S1
81	Central Processing Unit (CPU), ROM/RAM	○	○	S1

ABS Operation Mode Table

Operation Mode	Description	ABS Indicator	TCS Indicator
Regular operation	Operation in normal condition	OFF	OFF
Fail-safe mode-S1	The ABS/TCS control unit turns the system off (ABS fail-safe relay off) when the control unit detects a problem.	ON	ON
Fail-safe mode-A0	If the ABS/TCS control unit detects a malfunction while the ABS or TCS is operating, it will turn off the malfunctioning component, and continue to modulate the rest of the ABS system until completing the ABS or TCS operation. At that time, the entire system will be turned off until the problem goes away.	ON	ON
Fail-safe mode-L0	The ABS/TCS control unit stores a DTC in back-up memory when it detects a problem. If a problem is detected when the ignition switch is turned ON (II), the ABS/TCS control unit will turn the system off. If the problem goes away, the ABS/TCS control unit will turn the system on again.	ON	ON
Fail-safe mode-B0	The ABS/TCS control unit will turn the system off if ignition voltage drops, and will turn it on again when ignition voltage returns to normal.	ON	ON

On-board Diagnosis Function

The ABS can be diagnosed with the Honda PGM Tester.
The ALB Checker cannot be used with this system. For air bleeding, and checking wheel sensor signals, use the Honda PGM Tester. See the Honda PGM Tester user's manuals for specific operating instructions.

(cont'd)

System Description (cont'd)

TCS Self-diagnosis

- The ABS/TCS control unit is equipped with a main CPU and a sub CPU. Each CPU checks the other for problems.
- The CPUs check the circuit of the system.
- Self-diagnosis can be classified into 2 categories:
  - Initial diagnosis: Done right after the engine starts and until the ABS or TCS indicator goes off.
  - Regular diagnosis: Done right after the initial diagnosis until the ignition switch is turned OFF.
- When a problem is detected by self-diagnosis, the ABS/TCS control unit shifts to fail-safe mode.

TCS Self-diagnosis Table

Diagnostic Trouble Code (DTC)	Detection Item	Detection Timing		Fail-safe Mode
		Initial Diagnosis	Regular Diagnosis	
24-27	TCS solonoid (short to body ground/short to wire)	○	○	S1
28	TCS relay	○		S1
31	Engine retard command (PFINH) signal (open/short to body ground)		○	A2
32	Engine speed(NEP)signal (open/short to body ground)		○	A2
34	Reference voltage(VREF) signal(open/short to body ground)	○	○	A2
36	Throttle position sensor output(THLOUT)signal(open/short to body ground)	○	○	A2
61	A/T shift position(ATSFTP) signal (open/short to body ground)		○	A2
81	Continuous TCS operation		○	A2

TCS Operation Mode Table

Operation Mode	Description	ABS Indicator	TCS Indicator
Regular operation	Operation in normal condition	OFF	OFF
Fail-safe mode-S1	The ABS/TCS control unit turns the system off (fail-safe relay off) when the control unit detects a problem.	ON	ON
Fail-safe mode-A2	If the ABS/TCS control unit detects a malfuction while the TCS is operating, it will turn off the malfunctioning component, and continue to modulate the rest of the TCS system until completing the TCS operation. At that time, the TCS system will be turned off.	OFF	ON
TCS deactivate mode	If the front brake pad temperature rise excessively, the ABS/TCS control unit stops the TCS system and it turns the TCS indicator on. When the brake pad temperature lowers, the ABS/TCS control unit turns off the TCS indicator and restarts the TCS system.	OFF	Comes ON when the front brake pad temperature rises excessively.
TCS OFF mode	The ABS/TCS control unit cancels the TCS system under these conditions: • If the ABS/TCS control unit detects a problem with the PGM-FI communication circuit. • The ABS system is faulty. • The TCS system is OFF. If these conditions return to normal, the ABS/TCS control unit restarts the TCS system.	ON or OFF (ON: When the ABS system is faulty)	ON

On-board Diagnosis Function

The TCS can be diagnosed with the Honda PGM Tester.
The ALB Checker cannot be used with this system. For air bleeding, and checking wheel sensor signals, use the Honda PGM Tester. See the Honda Tester user's manuals for specific operating instructions.

BACK

Modulator Unit

The modulator unit consists of the inlet solenoid valve, outlet solenoid valve, TCS normally open (NO) solenoid valve, TCS normally closed (NC) solenoid valve, reservoir, pump, pump motor, and the damping chamber.
The modulator controls the caliper fluid pressure directly. It is a circulating-type modulator because the brake fluid circulates through the caliper, the reservoir, and the master cylinder.
The hydraulic control has three modes: pressure intensifying, pressure retaining, and pressure reducing.
The hydraulic circuit is an independent four channel type, one channel for each wheel.

ABS Control

Pressure intensifying mode

TCS NO valve open, TCS NC valve closed, inlet valve open, outlet valve closed.
Master cylinder fluid is pumped out to the caliper.

Pump Motor

When starting the pressure reducing mode, the pump motor is ON. When stopping ABS operation, the pump motor is OFF.
The reservoir fluid is pumped out by the pump, through the damping chamber, to the master cylinder.

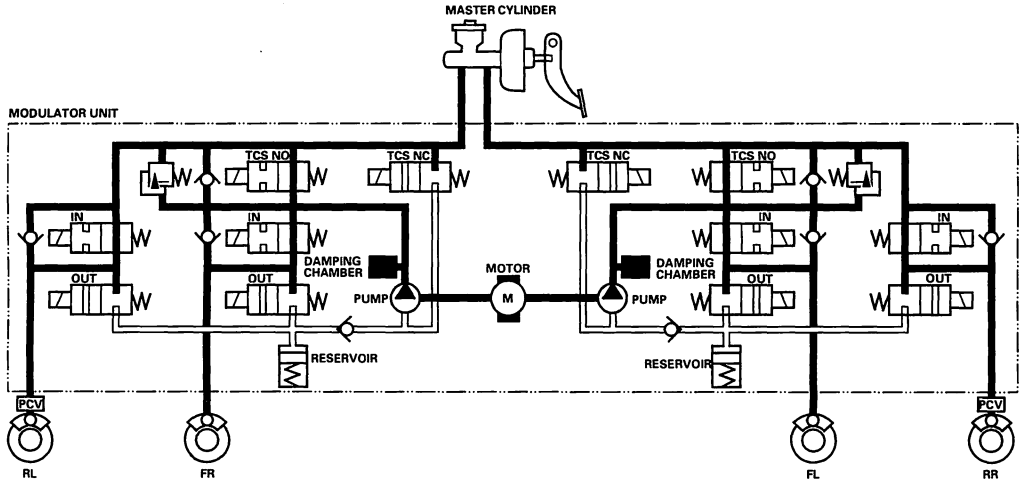

Pressure retaining mode

TCS NO valve open, TCS NC valve closed, inlet valve closed, outlet valve closed.
Caliper fluid is retained by the inlet valve and outlet valve.

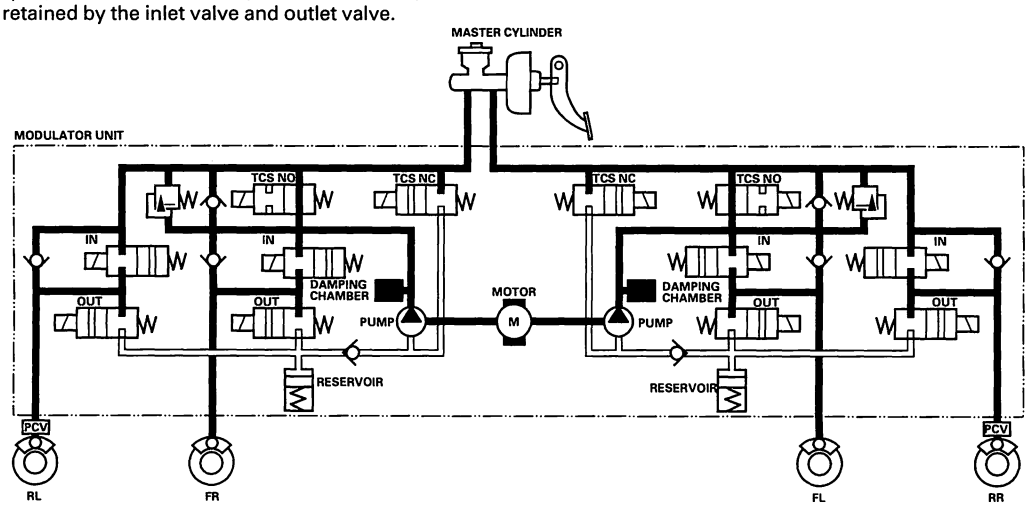

(cont'd)

System Description (cont'd)

Pressure reducing mode

TCS NO valve open, TCS NC valve closed, inlet valve closed, outlet valve open.
Caliper fluid flows through the outlet valve to the reservoir.

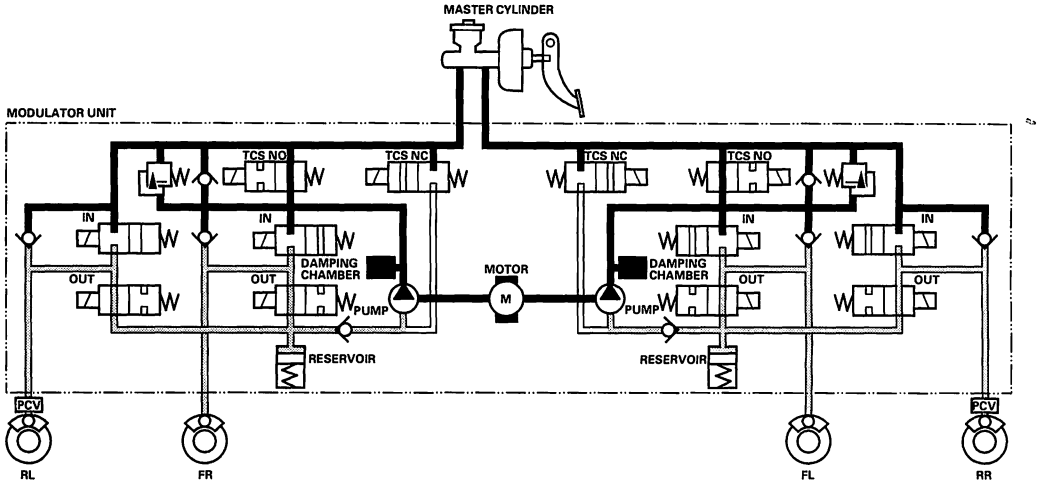

TCS Control

Pressure intensifying mode

TCS NO valve closed, TCS NC valve open, inlet valve open, outlet valve closed, pump motor ON.
The reservoir and master cylinder fluid is pumped out by the pump, through the damping chamber, to the front caliper.

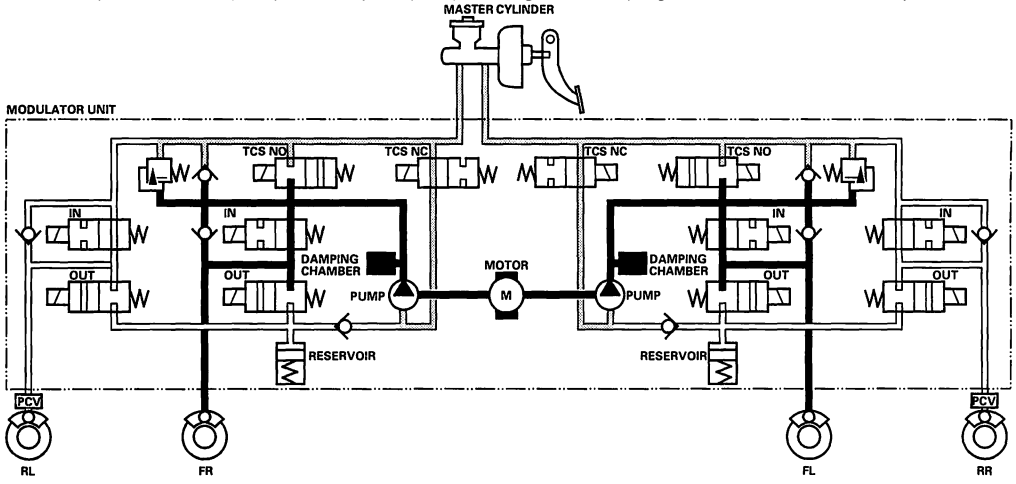

BACK

Pressure retaining mode

TCS NO valve open, TCS NC valve open, inlet valve closed, outlet valve closed, pump motor ON.
Front caliper fluid is retained by the inlet valve and outlet valve.

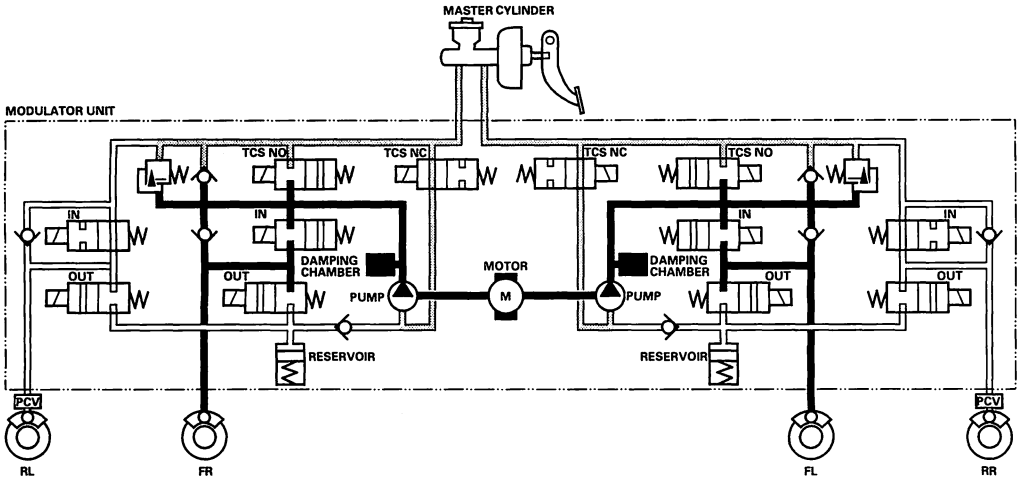

Pressure reducing mode

TCS NO valve closed, TCS NC valve open, front inlet valve closed, front outlet valve open, pump motor ON.
Caliper fluid flows through the outlet valve to the reservoir.

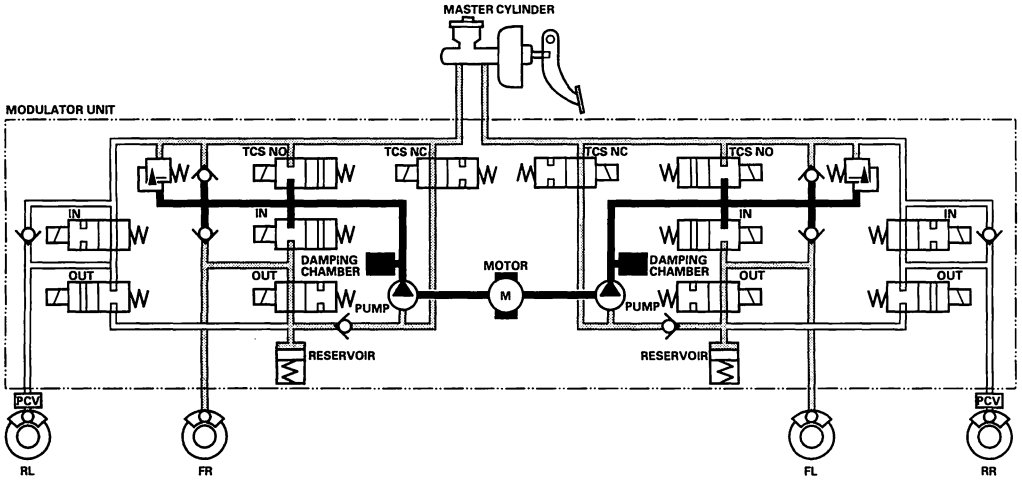

(cont'd)

System Description (cont'd)

Wheel Sensor

The wheel sensors are the magnetic contactless type. As the gear pulser teeth rotate past the wheel sensor's magnetic coil, AC current is generated. The AC frequency changes in accordance with the wheel speed. The ABS/TCS control unit detects the wheel sensor signal frequency and thereby detects the wheel speed.

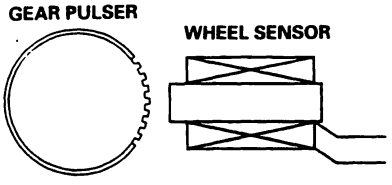

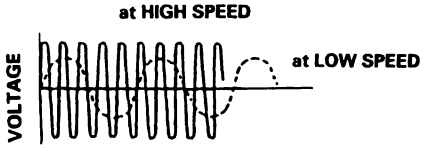

Wheel Speed and Modulator Control (ABS)

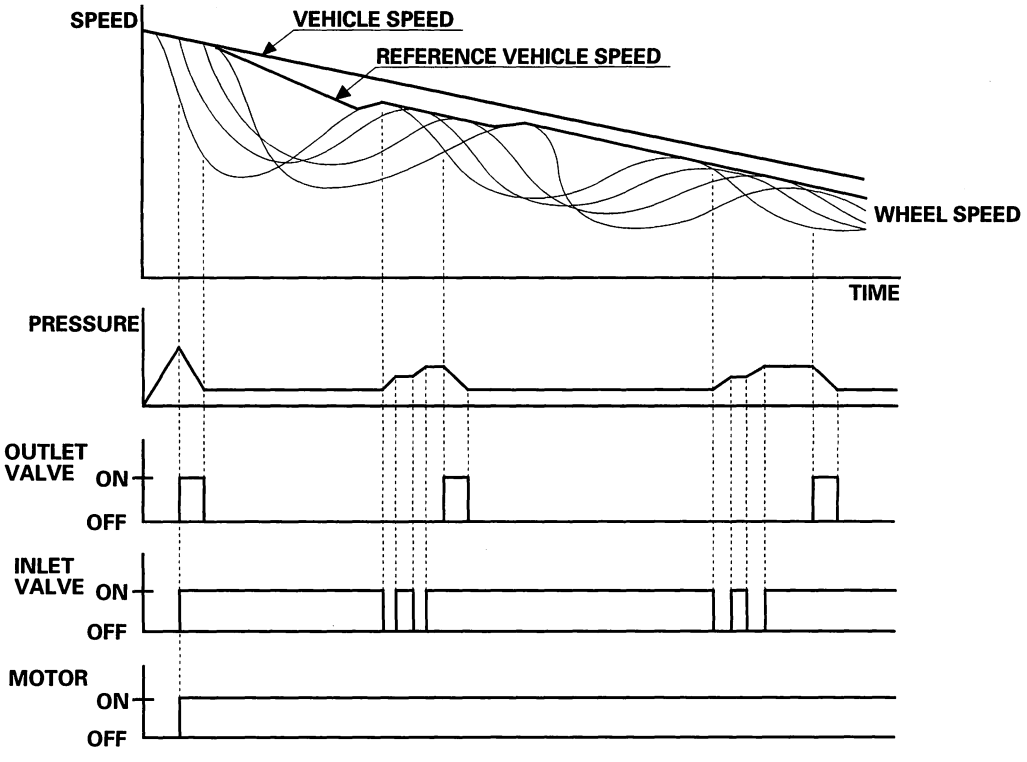

When the wheel speed drops sharply below the vehicle speed, the outlet valve opens momentarily to reduce the caliper fluid pressure. The pump motor starts at this time. As the wheel speed is restored, the inlet valve opens momentarily to increase the caliper fluid pressure.

BACK

Wheel Speed and Modulator control (TCS)

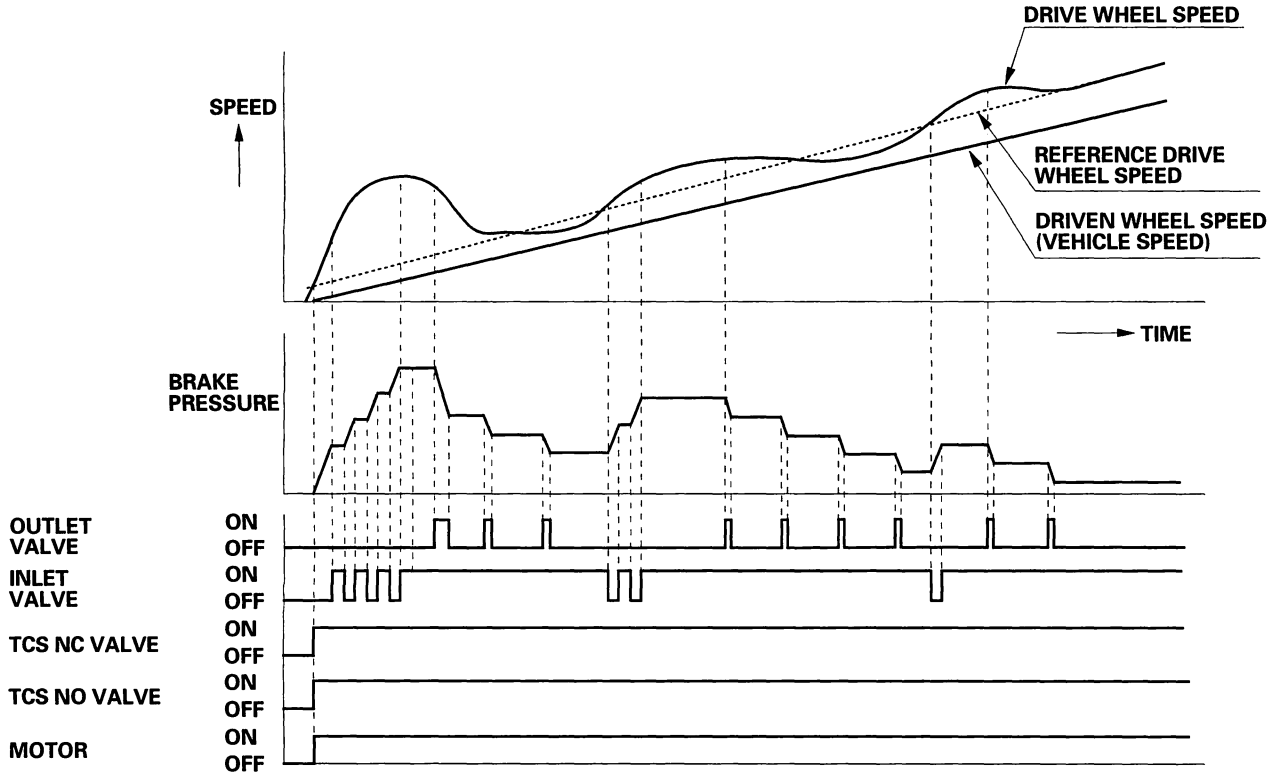

When the front wheel speed rises sharply above the vehicle speed, the TCS NC valve opens, the TCS NO valve closes, and the pump motor starts to intensify the front caliper fluid pressure. When the wheel speed drops, the front inlet valve closes momentarity to retain the front caliper fluid pressure. When the wheel speed drops further, the front outlet valve opens momentarity to reduce the front caliper fluid pressure.

ABS/TCS Components

Circuit Diagram

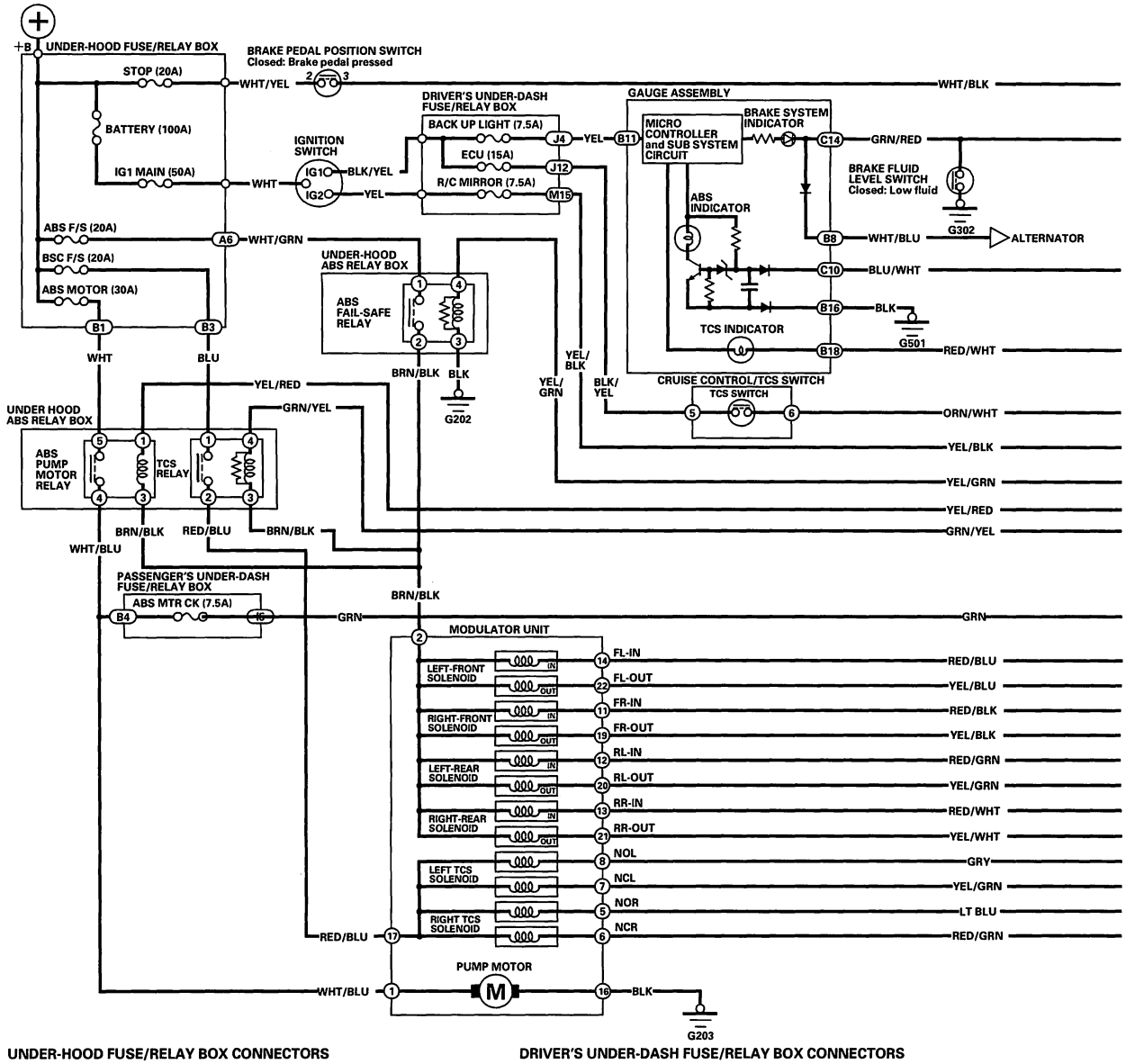

UNDER-HOOD FUSE/RELAY BOX CONNECTORS

CONNECTOR A (18P)

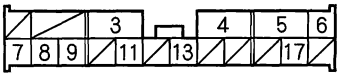

CONNECTOR B (7P)

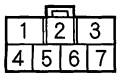

DRIVER'S UNDER-DASH FUSE/RELAY BOX CONNECTORS

CONNECTOR M (20P)

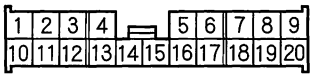

CONNECTOR J (18P)

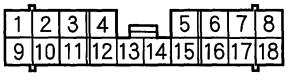

PASSENGER'S UNDER-DASH FUSE/RELAY BOX CONNECTORS

CONNECTOR B (18P)

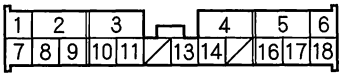

CONNECTOR I (16P)

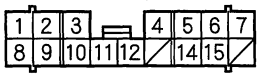

BRAKE SWITCH CONNECTOR

CRUISE CONTROL/ TCS SWITCH 8P CONNECTORS

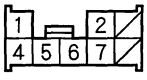

ABS PUMP MOTOR RELAY 5P CONNECTOR

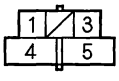

GAUGE ASSEMBLY CONNECTORS

CONNECTOR B (22P)

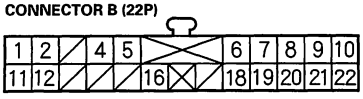

CONNECTOR C (16P)

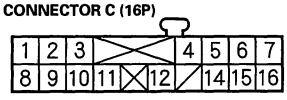

FAIL SAFE RELAY/ TCS RELAY 4P CONNECTOR

MODULATOR UNIT 24P CONNECTOR

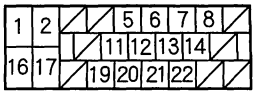

BACK

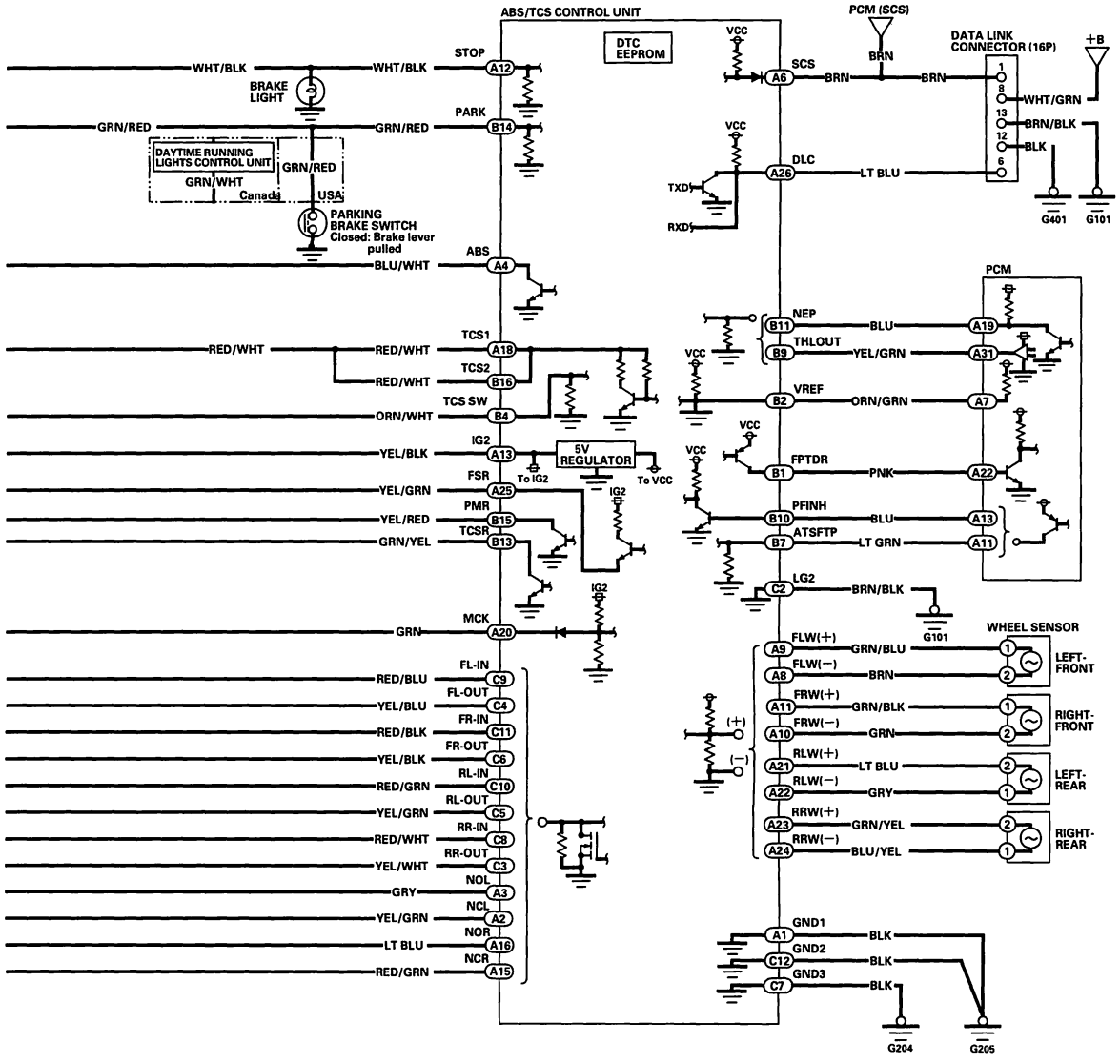

ABS/TCS CONTROL UNIT CONNECTORS

CONNECTOR A (26P)

1	2	3	4		6		8	9	10	11	12	13
	15	16		18		20	21	22	23	24	25	26

CONNECTOR B (16P)

1	2		4			7	
9	10	11		13	14	15	16

CONNECTOR C (12P)

	2	3	4	5	6
7	8	9	10	11	12

WHEEL SENSOR CONNECTOR FRONT/REAR

1	2

PCM CONNECTOR A (32P)

1	2	3	4		5	6	7		8	9	10	11
12	13	14	15	16	17	18	19	20	21	22	23	24
		25	26	27		28	29	30	31		32	

DATA LINK CONNECTOR (16P)

1					6		8
			12	13		15	

DTC Troubleshooting

ABS DTC 11, 13, 15, 17: Wheel Sensor (Open/Short to Body Ground/Short to Power)

1. Disconnect the ABS/TCS control unit connector A (26P).

2. Start the engine.

3. Measure the voltage between the appropriate wheel sensor (+) circuit terminal and body ground (see table).

DTC	Appropriate Terminal
11 (Right-front)	A 11 : FRW (+)
13 (Left-front)	A 9 : FLW (+)
15 (Right-rear)	A 23 : RRW (+)
17 (Left-rear)	A 21 : RLW (+)

ABS/TCS CONTROL UNIT CONNECTOR A (26P)

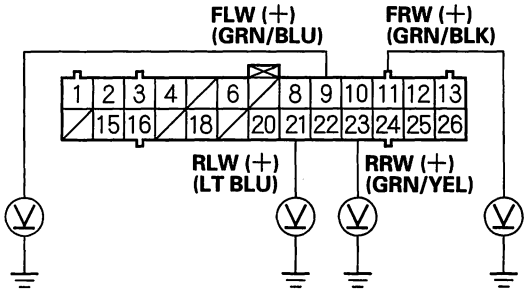

Wire side of female terminals

Is there 2 V or more?

YES—Repair short to power in the (+) circuit wire between the ABS/TCS control unit and the appropriate wheel sensor. ■

NO—Go to step 4.

4. Check for continuity between the appropriate wheel sensor (+) circuit terminal and body ground (see table).

DTC	Appropriate Terminal
11 (Right-front)	A 11 : FRW (+)
13 (Left-front)	A 9 : FLW (+)
15 (Right-rear)	A 23 : RRW (+)
17 (Left-rear)	A 21 : RLW (+)

ABS/TCS CONTROL UNIT CONNECTOR A (26P)

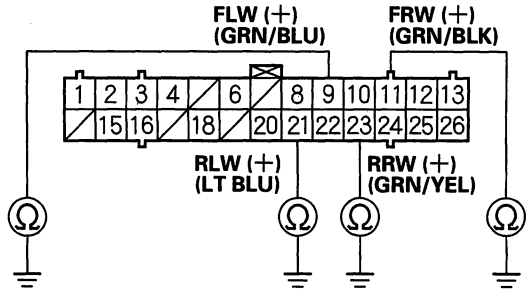

Wire side of female terminals

Is there continuity?

YES—Go to step 5.

NO—Go to step 6.

5. Disconnect the harness 2P connector from the appropriate wheel sensor, then check for continuity between the (+) and (−) terminals of the harness and body ground.

Is there continuity?

YES—Repair short to body ground in the (+) or (−) circuit wire between the ABS/TCS control unit and the wheel sensor. ■

NO—Replace the wheel sensor. ■

BACK

6. Check the resistance between the appropriate wheel sensor (+) and (−) circuit terminals (see table).

DTC	Appropriate Terminal	
	(+) Side	(−) Side
11 (Right-front)	A11 : FRW (+)	A10 : FRW (−)
13 (Left-front)	A9 : FLW (+)	A8 : FLW (−)
15 (Right-rear)	A23 : RRW (+)	A24 : RRW (−)
17 (Left-rear)	A21 : RLW (+)	A22 : RLW (−)

ABS/TCS CONTROL UNIT CONNECTOR A (26P)

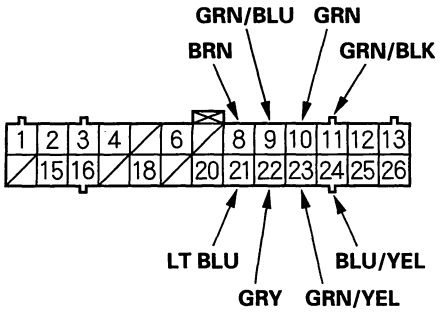

Wire side of female terminals

Is the resistance between 450−2,000 Ω ?

YES−Check for loose ABS/TCS control unit connectors.If necessary, substitute a known-good ABS/TCS control unit, and recheck.■

NO−Go to step 7.

7. Disconnect the harness 2P connector from the appropriate wheel sensor, and check the resistance between the (+) and (−) terminals of the wheel sensor.

Is the resistance between 450−2,000 Ω ?

YES−Repair open in the (+) or (−) circuit wire, or short beween the (+) circuit wire and the (−) circuit wire between the ABS/TCS control unit and the wheel sensor.■

NO−Replace the wheel sensor.■

ABS DTC 12, 14, 16, 18: Wheel Sensor (Electrical Noise/Intermittent Interruption)

NOTE: If the ABS indicator comes on for the reasons described below,the indicator goes off when you test-drive the vehicle at 19 mph (30 km/h).

- Only the drive wheel rotated
- The vehicle spun
- Electrical noise

1. Visually check for appropriate wheel sensor and pulser installation (see table).

DTC	Appropriate Wheel Sensor
12	Right-front
14	Left-front
16	Right-rear
18	Left-rear

Are they installed correctly?

YES−Go to step 2.

NO−Reinstall or replace the appropriate wheel sensor or pulser.■

2. Disconnect the ABS/TCS control unit connector A (26P).

3. Measure the resistance between the appropriate wheel sensor (+) and (−) circuit terminals (see table).

DTC	Appropriate Terminal	
	(+) Side	(−) Side
12 (Right-front)	A11 : FRW (+)	A10 : FRW (−)
14 (Left-front)	A9 : FLW (+)	A8 : FLW (−)
16 (Right-rear)	A23 : RRW (+)	A24 : RRW (−)
18 (Left-rear)	A21 : RLW (+)	A22 : RLW (−)

Is there less than 450 Ω ?

YES−Repair short to wire between the appropriate wheel sensor (+) and (−) circuits.■

NO−Go to step 4.

(cont'd)

DTC Troubleshooting (cont'd)

4. Check for continuity between the appropriate wheel sensor (+) circuit terminal and other wheel sensor (+) circuit terminals (see table).

DTC	Appropriate Terminal	Other Terminal		
12	A11 : FRW (+)	A9 : FLW (+)	A23 : RRW (+)	A21 : RLW (+)
14	A9 : FLW (+)	A11 : FRW (+)	A23: RRW (+)	A21 : RLW (+)
16	A23 : RRW (+)	A11 : FRW (+)	A9 : FLW (+)	A21 : RLW (+)
18	A21 : RLW (+)	A11 : FRW (+)	A9 : FLW (+)	A23 : RRW (+)

Is there continuity?

YES—Repair short to wire between the appropriate wheel sensor and the other wheel sensor.■

NO—Clear the DTC, and test-drive the vehicle. If the ABS indicator comes on and the same DTC is indicated, replace the ABS/TCS control unit.■

ABS DTC 21, 22, 23, 24: Pulser

1. Clear the DTC.

2. Test-drive the vehicle at 19 mph (30 km/h) or more.

   Does the ABS indicator come on and are DTCs 21, 22, 23, or 24 indicated?

   YES—Go to step 3.

   NO—The system is OK at this time.■

3. Check the appropriate pulser gear for a chipped tooth (see table).

DTC	Appropriate Pulser
21	Right-front
22	Left-front
23	Right-rear
24	Left-rear

Is the pulser OK?

YES—Check for loose ABS/TCS control unit connectors. If necessary, substitute a known-good ABS/TCS control unit, and recheck.■

NO—Replace the driveshaft or the hub unit. (Chipped pulser gear)■

BACK

ABS DTC 31, 32, 33, 34, 35, 36, 37, 38: Solenoid

1. Verify the DTC.

   Is DTC 54 indicated?

   YES—Do the appropriate troubleshooting for DTC 54.■

   NO—Go to step 2.

2. Turn the ignition switch OFF.

3. Disconnect the modulator unit 24P connector and the ABS/TCS control unit connector C (12P).

4. Check for continuity between the appropriate ABS/TCS control unit connector C (12P) solenoid circuit terminal and body ground (see table).

DTC	Appropriate Terminal
31: FR-IN	C11
32: FR-OUT	C6
33: FL-IN	C9
34: FL-OUT	C4
35: RR-IN	C8
36: RR-OUT	C3
37: RL-IN	C10
38: RL-OUT	C5

ABS/TCS CONTROL UNIT CONNECTOR C (12P)

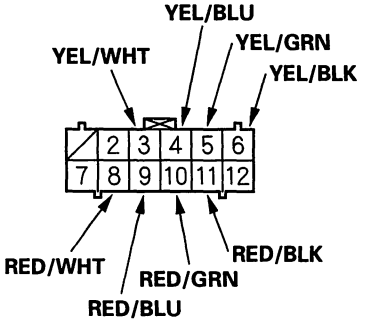

Wire side of female terminals

Is there continuity?

YES—Repair short to body ground in the appropriate solenoid circuit wire between the ABS/TCS control unit and the modulator unit.■

NO—Go to step 5.

5. Connect the modulator unit 24P connector.

6. Check for continuity between the appropriate ABS/TCS control unit connector C (12P) solenoid circuit terminal and body ground (see table).

DTC	Appropriate Terminal
31: FR-IN	C11
32: FR-OUT	C6
33: FL-IN	C9
34: FL-OUT	C4
35: RR-IN	C8
36: RR-OUT	C3
37: RL-IN	C10
38: RL-OUT	C5

ABS/TCS CONTROL UNIT CONNECTOR C (12P)

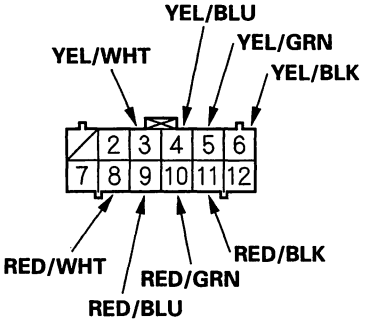

Wire side of female terminals

Is there continuity?

YES—Replace the modulator unit.■

NO—Go to step 7.

7. Disconnect the modulator unit 24P connector.

(cont'd)

DTC Troubleshooting (cont'd)

8. Connect the appropriate modulator unit 24P connector solenoid circuit terminal to body ground with a jumper wire (see table).

DTC	Appropriate Terminal
31: FR-IN	No. 11
32: FR-OUT	No. 19
33: FL-IN	No. 14
34: FL-OUT	No. 22
35: RR-IN	No. 13
36: RR-OUT	No. 21
37: RL-IN	No. 12
38: RL-OUT	No. 20

MODULATOR UNIT 24P CONNECTOR

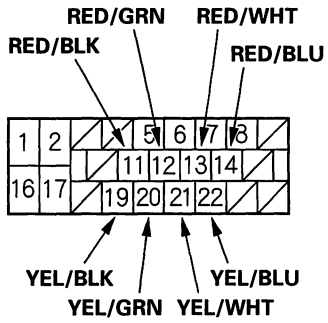

Wire side of female terminals

9. Check for continuity between the appropriate ABS/TCS control unit connector C (12P) solenoid circuit terminal and body ground (see table).

DTC	Appropriate Terminal
31: FR-IN	C11
32: FR-OUT	C6
33: FL-IN	C9
34: FL-OUT	C4
35: RR-IN	C8
36: RR-OUT	C3
37: RL-IN	C10
38: RL-OUT	C5

ABS/TCS CONTROL UNIT CONNECTOR C (12P)

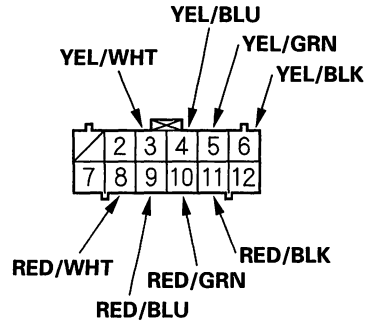

Wire side of female terminals

Is there continuity?

YES—Go to step 10.

NO—Repair open in the appropriate solenoid circuit wire between the ABS/TCS control unit and the modulator unit.■

10. Remove the jumper wire from the modulator unit 24P connector.

11. Connect the modulator unit 24P connector.

BACK

12. Connect the ABS fail-safe relay 4P connector terminal No. 2 to body ground with a jumper wire.

    NOTE: The wire colors of the ABS fail-safe relay connector are WHT/GRN, BRN/BLK, BLK, and YEL/GRN.

ABS FAIL-SAFE RELAY 4P CONNECTOR

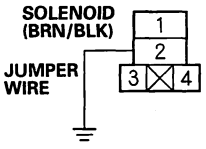

Wire side of female terminals

13. Check the resistance between the appropriate ABS/TCS control unit connector C (12P) terminal and body ground (see table).
    IN: 8—10 Ω (at 20°C, 68°F)
    OUT: 3—5 Ω (at 20°C, 68°F)

DTC	Appropriate Terminal
31: FR-IN	C11
32: FR-OUT	C6
33: FL-IN	C9
34: FL-OUT	C4
35: RR-IN	C8
36: RR-OUT	C3
37: RL-IN	C10
38: RL-OUT	C5

ABS/TCS CONTROL UNIT CONNECTOR C (12P)

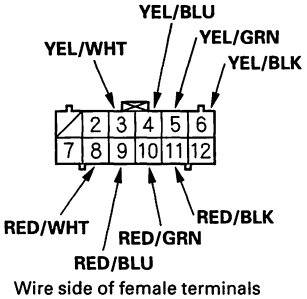

Wire side of female terminals

Is the resistance OK?

YES—Go to step 14.

NO—Replace the modulator unit. ■

14. Disconnect the modulator unit 24P connector, and remove the jumper wire from the ABS fail-safe relay 4P connector.

15. Check for continuity between the appropriate ABS/TCS control unit connector C (12P) terminal and all other ABS and TCS solenoid circuit terminals (see table).

DTC	Appropriate Terminal
31: FR-IN	C11
32: FR-OUT	C6
33: FL-IN	C9
34: FL-OUT	C4
35: RR-IN	C8
36: RR-OUT	C3
37: RL-IN	C10
38: RL-OUT	C5

TCS Solenoid	ABS/TCS Control Unit Connector A (26P) Terminal
NOR	A16
NCR	A15
NOL	A3
NCL	A2

ABS/TCS CONTROL UNIT CONNECTOR C (12P)

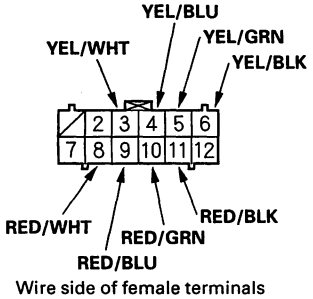

Wire side of female terminals

ABS/TCS CONTROL UNIT CONNECTOR A (26P)

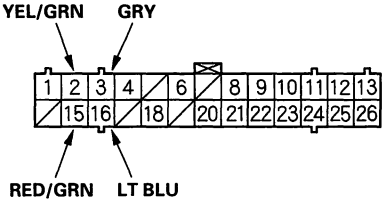

Wire side of female terminals

Is there continuity?

YES—Repair short in the appropriate wires between the ABS/TCS control unit and the modulator unit. ■

NO—Go to step 16.

(cont'd)

DTC Troubleshooting (cont'd)

16. Connect the modulator unit 24P connector.

17. Check for continuity between the appropriate ABS/TCS control unit connector C (12P) terminal and all other ABS and TCS solenoid circuit terminals (see table).

DTC	Appropriate Terminal
31: FR-IN	C11
32: FR-OUT	C6
33: FL-IN	C9
34: FL-OUT	C4
35: RR-IN	C8
36: RR-OUT	C3
37: RL-IN	C10
38: RL-OUT	C5

TCS Solenoid	ABS/TCS Control Unit Connector A (26P) Terminal
NOR	A16
NCR	A15
NOL	A3
NCL	A2

ABS/TCS CONTROL UNIT CONNECTOR C (12P)

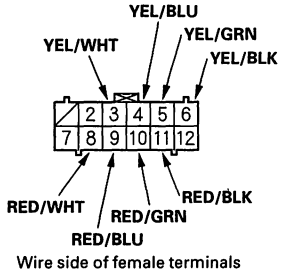

Wire side of female terminals

ABS/TCS CONTROL UNIT CONNECTOR A (26P)

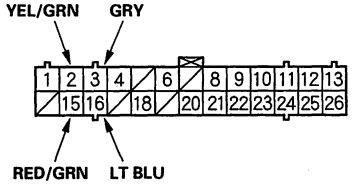

Wire side of female terminals

Is there less than 3 Ω ?

YES—Replace the modulator unit.■

NO—Check for loose ABS/TCS control unit connectors. If necessary, substitute a known-good ABS/TCS control unit, and recheck.■

ABS DTC 41, 42, 43, 44: Wheel Lock

1. Check for brake drag.

   Do the brakes drag?

   YES—Repair the brake drag.■

   NO—Go to step 2.

2. Check the installation of the appropriate wheel sensor (see table).

DTC	Appropriate Wheel Sensor
41	Right-front
42	Left-front
43	Right-rear
44	Left-rear

   Is it correct?

   YES—Go to step 3.■

   NO—Reinstall the wheel sensor correctly.■

3. Check the modulator using the Honda PGM Tester.

   Is kick-back felt in the pedal?

   YES—The probable cause was the vehicle spun during cornering. If the problem recurs, check for loose connectors, or try a known-good ABS/TCS control unit.■

   NO—Check for loose modulator unit connectors. If necessary, replace the modulator unit.■

BACK

ABS DTC 51: Motor Lock

1. Clear the DTC.

2. Test-drive the vehicle at 6 mph (10 km/h) or more.

   Does the ABS indicator come on and is DTC 51 indicated?

   YES—Replace the modulator unit.■

   NO—The system is OK at this time.■

ABS DTC 52: Motor Stuck OFF

1. Check the ABS MOTOR (30 A) fuse in the under-hood fuse/relay box, and reinstall the fuse if it is OK.

   Is the fuse OK?

   YES—Go to step 3.

   NO—Replace the fuse, and go to step 2.

2. Remove the pump motor relay, and connect the pump motor relay 5P connector terminal No. 4 to No. 5 with a jumper wire for a moment, and check the fuse.

PUMP MOTOR RELAY 5P CONNECTOR

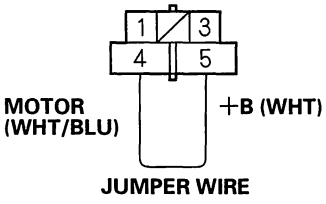

Wire side of female terminals

   Is the fuse blown?

   YES—Check for a short to body ground in the motor power source circuit.■

   NO—Go to step 3.

3. Check the ABS MTR CK (7.5 A) fuse in the passenger's under-dash fuse/relay box, and reinstall the fuse if it is OK.

   Is the fuse OK?

   YES—Go to step 5.

   NO—Replace the fuse, and go to step 4.

(cont'd)

DTC Troubleshooting (cont'd)

4. Connect the pump motor relay 5P connector terminal No. 4 to No. 5 with a jumper wire for a moment, and check the fuse.

PUMP MOTOR RELAY 5P CONNECTOR

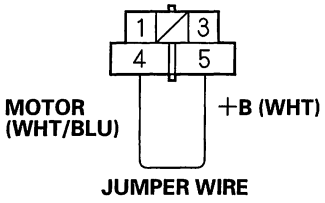

Wire side of female terminals

Is the fuse blown?

YES—Check for a short to body ground in the GRN wire between the passenger's under-dash fuse/relay box and the ABS/TCS control unit.■

NO—Go to step 5.

5. Check the pump motor relay in the under-hood ABS relay box. Refer to the '98—02 Accord Service Manual (P/N 61S8400) (see page 22-52).

Is the relay OK?

YES—Go to step 6.

NO—Replace the pump motor relay.■

6. Connect the pump motor relay 5P connector terminal No. 4 to No. 5 with a jumper wire for a moment.

Does the pump motor operate?

YES—Go to step 11.

NO—Go to step 7.

7. Disconnect the modulator unit 24P connector.

8. Connect the pump motor relay 5P connector terminal No. 4 to No. 5 with a jumper wire.

9. Measure the voltage between the modulator unit 24P connector terminal No. 1 and body ground.

MODULATOR UNIT 24P CONNECTOR

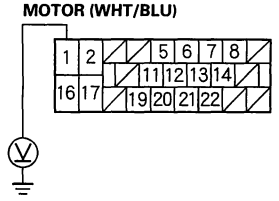

Wire side of female terminals

Is there battery voltage?

YES—Go to step 10.
NO—Repair open in the wire between the under-hood ABS relay box and the pump motor.■

10. Measure the voltage between the modulator unit 24P connector terminal No. 1 and No. 16.

MODULATOR UNIT 24P CONNECTOR

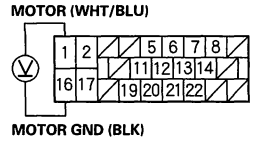

Wire side of female terminals

Is there battery voltage?

YES—Replace the modulator unit.■
NO—Repair open in the wire between the pump motor and body ground (G203).■

11. Disconnect the ABS/TCS control unit connector B (16P).

12. Connect the pump motor relay 5P connector terminal No. 1 to No. 5 with a jumper wire.

PUMP MOTOR RELAY 5P CONNECTOR

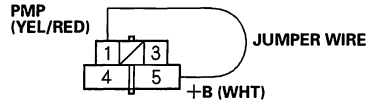

Wire side of female terminals

BACK

13. Measure the voltage between the ABS/TCS control unit connector B (16P) terminal B15 and body ground.

ABS/TCS CONTROL UNIT CONNECTOR B (16P)

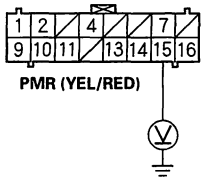

Wire side of female terminals

Is there battery voltage?

YES—Go to step 14.

NO—Repair open in the wire between the under-hood ABS relay box and the ABS/TCS control unit. ■

14. Remove the jumper wire from the pump motor relay 5P connector, and reinstall the pump motor relay.

15. Start the engine.

16. Measure the voltage between the ABS/TCS control unit connector B (16P) terminal B15 and body ground.

ABS/TCS CONTROL UNIT CONNECTOR B (16P)

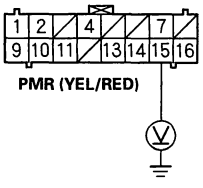

Wire side of female terminals

Is there battery voltage?

YES—Repair short to power in the wire between the under-hood ABS relay box and the ABS/TCS control unit. ■

NO—If the problem recurs, replace the ABS/TCS control unit. ■

ABS DTC 53: Motor Stuck ON

1. Check that the pump motor operates with the ignition switch OFF.

   Does the pump motor operate?

   YES—Replace the pump motor relay. (Pump motor relay stuck ON.) ■

   NO—Go to step 2.

2. Remove the ABS MTR CK (7.5 A) fuse in the passenger's under-dash fuse/relay box.

   Is the fuse OK?

   YES—Leave the fuse removed, and go to step 3.

   NO—Replace the fuse, and recheck. ■

3. Turn the ignition switch ON (II).

4. Measure the voltage between the passenger's under-dash fuse/relay box connector I (16P) terminal I5 and body ground.

PASSENGER'S UNDER-DASH FUSE/RELAY BOX CONNECTOR I (16P)

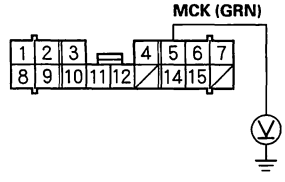

Wire side of female terminals

Is there about 10 V?

YES—Go to step 5.

NO—Repair open in the wire between the passenger's under-dash fuse/relay box and the ABS/TCS control unit. ■

5. Reinstall the ABS MTR CK (7.5 A) fuse in the passenger's under-dash fuse/relay box.

(cont'd)

DTC Troubleshooting (cont'd)

6. Disconnect the modulator unit 24P connector.

7. Measure the voltage between terminal No. 1 and body ground.

MODULATOR UNIT 24P CONNECTOR

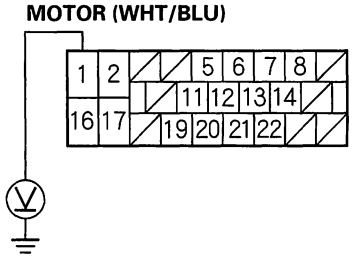

Wire side of female terminals

Is there about 10 V?

YES—Go to step 8.

NO—Repair open in the wire between the under-hood ABS relay box and the pump motor.■

8. Measure the voltage between the modulator unit 24P connector terminal No. 1 and No. 16.

MODULATOR UNIT 24P CONNECTOR

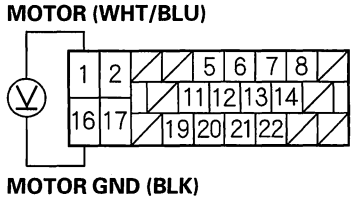

Wire side of female terminals

Is there about 10 V?

YES—Go to step 9.

NO—Repair open in the wire between the pump motor and body ground (G203).■

9. Remove the pump motor relay, then connect relay terminals No. 4 and No. 5 together with a jumper wire.

Does the pump motor run?

YES—Go to step 10.

NO—Replace the pump motor.■

10. Disconnect the ABS/TCS control unit connector B (16P).

11. Check for continuity between terminal B15 and body ground.

ABS/TCS CONTROL UNIT CONNECTOR B (16P)

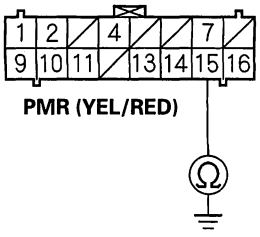

Wire side of female terminals

Is there continuity?

YES—Repair short to body ground in the wire between the under-hood ABS relay box and the ABS/TCS control unit.■

NO—If the problem recurs, replace the ABS/TCS control unit.■

BACK

ABS DTC 54: ABS Fail-safe Relay

1. Check the ABS F/S (20 A) fuse in the under-hood fuse/relay box, and reinstall the fuse if it is OK.

   Is the fuse OK?

   YES—Go to step 2.

   NO—Replace the fuse, and recheck.■

2. Turn the ignition switch ON (II).

   Does the fuse blow?

   YES—Repair short to body ground in the wire between the ABS fail-safe relay, the TCS relay, the pump motor relay, and modulator unit.■

   NO—Go to step 3.

3. Check the ABS fail-safe relay in the under-hood ABS relay box. Refer to the '98—02 Accord Service Manual (P/N 61S8400) (see page 22-52). The wire colors of the ABS fail-safe relay connector are WHT/GRN, BRN/BLK, BLK, and YEL/GRN.

   Is the relay OK?

   YES—Leave the ABS fail-safe relay removed, and go to step 4.

   NO—Replace the ABS fail-safe relay.■

4. Measure the voltage between the ABS fail-safe relay 4P connector terminal No. 1 and body ground.

ABS FAIL-SAFE RELAY 4P CONNECTOR

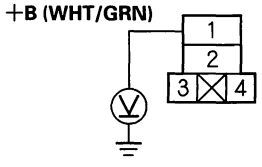

Wire side of female terminals

Is there battery voltage?

YES—Go to step 5.

NO—Repair open in the wire between the under-hood fuse/relay box and the ABS fail-safe relay.■

5. Connect the ABS fail-safe relay 4P connector terminal No. 1 to No. 2 with a jumper wire.

ABS FAIL-SAFE RELAY 4P CONNECTOR

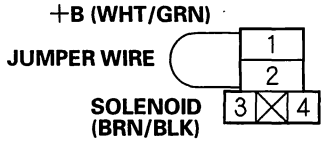

Wire side of female terminals

6. Disconnect the modulator unit 24P connector.

7. Measure the voltage between terminal No. 2 and body ground.

MODULATOR UNIT 24P CONNECTOR

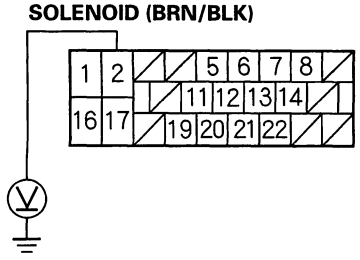

Wire side of female terminals

Is there battery voltage?

YES—Go to step 8.

NO—Repair open in the wire between the ABS fail-safe relay and the modulator unit.■

8. Remove the jumper wire from the ABS fail-safe relay connector.

(cont'd)

DTC Troubleshooting (cont'd)

9. Measure the voltage between the modulator unit 24P connector terminal No. 2 and body ground.

MODULATOR UNIT 24P CONNECTOR

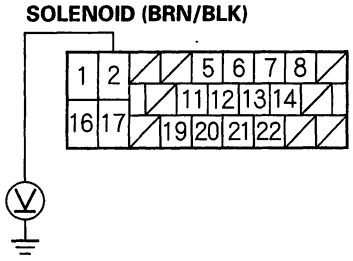

Wire side of female terminals

Is there battery voltage?

YES—Repair short to power in the wire between the ABS fail-safe relay, the TCS relay, the modulator unit, and the under-hood ABS relay box.■

NO—Go to step 10.

10. Disconnect the ABS/TCS control unit connector A (26P).

11. Turn the ignition switch ON (II).

12. Measure the voltage between terminal A25 and body ground.

ABS/TCS CONTROL UNIT CONNECTOR A (26P)

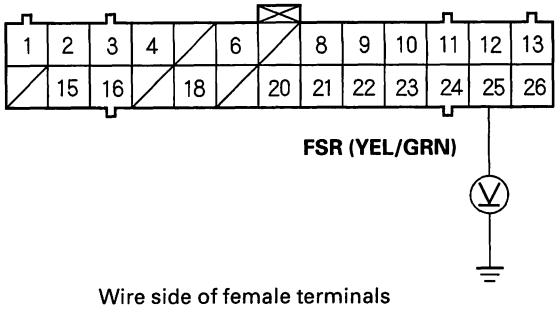

Wire side of female terminals

Is there battery voltage?

YES—Repair short to power in the wire between the ABS/TCS control unit and the ABS fail-safe relay.■

NO—Go to step 13.

13. Check for continuity between the ABS/TCS control unit connector A (26P) terminal A25 and body ground.

ABS/TCS CONTROL UNIT CONNECTOR A (26P)

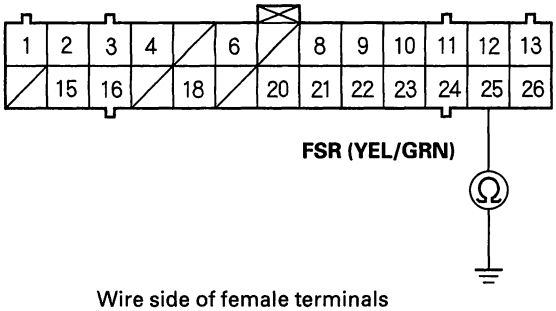

Wire side of female terminals

Is there continuity?

YES—Repair short to body ground in the wire between the ABS/TCS control unit and the ABS fail-safe relay.■

NO—Go to step 14.

14. Check for continuity between the ABS fail-safe relay 4P connector terminal No. 3 and body ground.

ABS FAIL-SAFE RELAY 4P CONNECTOR

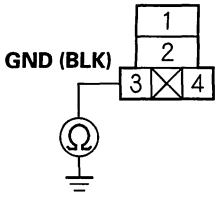

Wire side of female terminals

Is there continuity?

YES—Go to step 15.

NO—Repair open in the wire between the ABS fail-safe relay and body ground, or a loose or poor connection at body ground (G202).■

BACK

15. Connect the ABS fail-safe relay 4P connector terminals No. 3 and No. 4 with a jumper wire.

ABS FAIL-SAFE RELAY 4P CONNECTOR

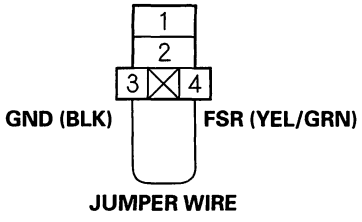

Wire side of female terminals

16. Check for continuity between the ABS/TCS control unit connector A (26P) terminal A25 and body ground.

ABS/TCS CONTROL UNIT CONNECTOR A (26P)

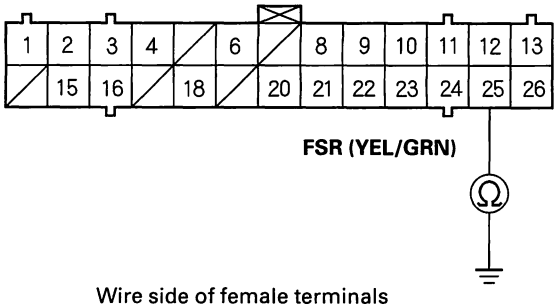

Wire side of female terminals

Is there continuity?

YES—If the problem recurs, replace the ABS/TCS control unit.■

NO—Repair open in the wire between the ABS/TCS control unit and the ABS fail-safe relay.■

ABS DTC 61, 62: Ignition Voltage

1. Clear the DTC.
2. Test-drive the vehicle at 6 mph (10 km/h) or more.

   Does the ABS indicator come on?

   YES—Go to step 3.

   NO—The system is OK at this time.■

3. Verify the DTC.

   Is DTC 61 or 62 indicated?

   YES—Check the charging system.■

   NO—Do the appropriate troubleshooting for the DTC. ■

DTC Troubleshooting (cont'd)

ABS DTC 71: Different Diameter Tire

1. Clear the DTC.
2. Test-drive the vehicle.

   Does the ABS indicator come on and is DTC 71 indicated?

   YES—Make sure all four tires are the specified size and are inflated to proper specification.■

   NO—Intermittent failure; the vehicle is OK at this time.■

ABS DTC 81: Central Processing Unit (CPU) Diagnosis, and ROM/RAM Diagnosis

1. Clear the DTC.
2. Test-drive the vehicle.

   Does the ABS indicator come on and is DTC 81 indicated?

   YES—Replace the ABS/TCS control unit.■

   NO—Intermittent failure; the vehicle is OK at this time.■

BACK

TCS DTC 24, 25, 26, 27: TCS Solenoid

1. Verify the TCS DTC.

   Is TCS DTC 28 indicated?

   YES – Do the appropriate troubleshooting for DTC 28. ■

   NO – Go to step 2.

2. Turn the ignition switch OFF.

3. Disconnect the modulator unit 24P connector and the ABS/TCS control unit connector A (26P).

4. Check for continuity between the appropriate ABS/TCS control unit connector A (26P) TCS solenoid circuit terminal and body ground (see table).

TCS DTC	Appropriate Terminal
24: NOR	A16
25: NCR	A15
26: NOL	A3
27: NCL	A2

ABS/TCS CONTROL UNIT CONNECTOR A (26P)

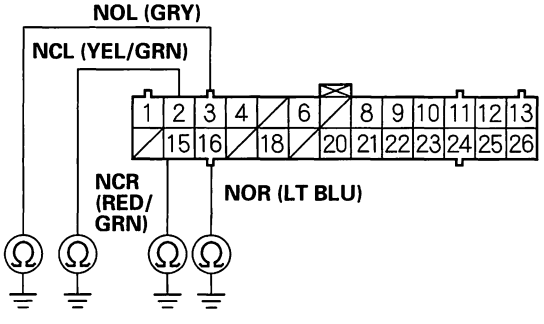

Wire side of female terminals

Is there continuity?

YES – Repair short to body ground in the appropriate solenoid circuit wire between the ABS/TCS control unit and the modulator unit. ■

NO – Go to step 5.

5. Connect the modulator unit 24P connector.

6. Check for continuity between the appropriate ABS/TCS control unit connector A (26P) solenoid circuit terminal and body ground (see table).

TCS DTC	Appropriate Terminal
24: NOR	A16
25: NCR	A15
26: NOL	A3
27: NCL	A2

ABS/TCS CONTROL UNIT CONNECTOR A (26P)

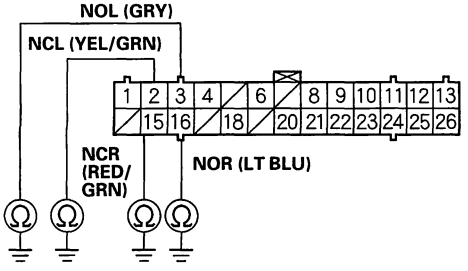

Wire side of female terminals

Is there continuity?

YES – Replace the modulator unit. ■

NO – Go to step 7.

7. Disconnect the modulator unit 24P connector.

8. Connect the appropriate modulator unit 24P connector TCS solenoid circuit terminals to body ground with jumper wires (see table).

TCS DTC	Appropriate Terminal
24: NOR	No. 5
25: NCR	No. 6
26: NOL	No. 8
27: NCL	No. 7

MODULATOR UNIT 24P CONNECTOR

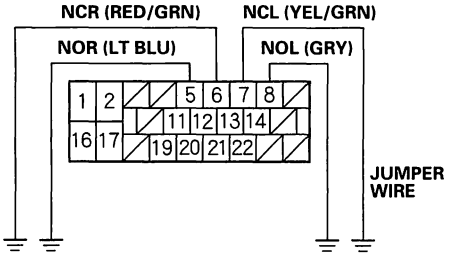

Wire side of female terminals

(cont'd)

DTC Troubleshooting (cont'd)

9. Check for continuity between the appropriate ABS/TCS control unit connector A (26P) solenoid circuit terminal and body ground (see table).

TCS DTC	Appropriate Terminal
24: NOR	A16
25: NCR	A15
26: NOL	A3
27: NCL	A2

ABS/TCS CONTROL UNIT CONNECTOR A (26P)

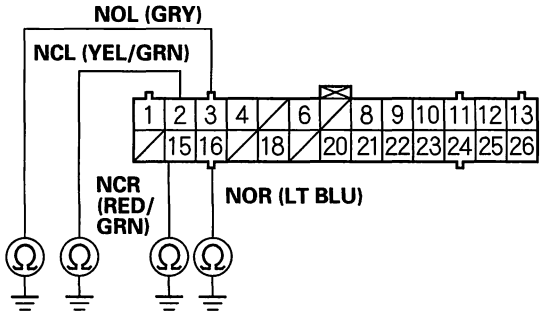

Wire side of female terminals

Is there continuity?

YES—Go to step 10.

NO—Repair open in the appropriate TCS solenoid circuit wire between the ABS/TCS control unit and the modulator unit.■

10. Remove the jumper wires from the modulator unit 24P connector.

11. Connect the modulator unit 24P connector.

12. Remove the TCS relay, and connect the TCS relay 4P connector terminal No. 2 to body ground with a jumper wire.

NOTE: The wire colors of the TCS relay 4P connector are BLU, RED/BLU, BRN/BLK, and GRN/YEL.

TCS RELAY 4P CONNECTOR

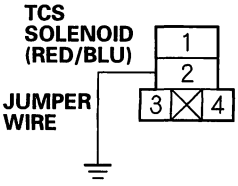

Wire side of female terminals

BACK

13. Check the resistance between the appropriate ABS/TCS control unit connector A (26P) terminal and body ground (see table).
NOR, NOL, NCR, NCL: 8–10 Ω (at 20°C, 68°F)

TCS DTC	Appropriate Terminal
24: NOR	A16
25: NCR	A15
26: NOL	A3
27: NCL	A2

ABS/TCS CONTROL UNIT CONNECTOR A (26P)

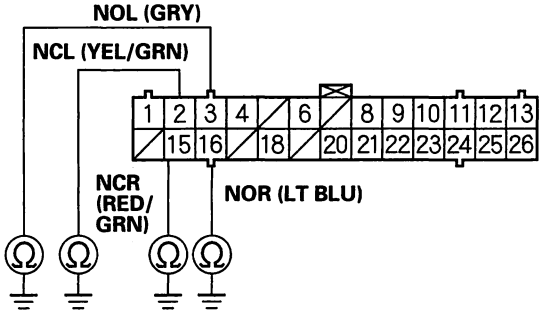

Wire side of female terminals

Is there resistance OK?

YES—Go to step 14.

NO—Replace the modulator unit.■

14. Disconnect the modulator unit connector, and remove the jumper wire from the TCS relay 4P connector terminal.

15. Check for continuity between the appropriate ABS/TCS control unit connector A (26P) terminal and each of the other terminals listed (see table).

TCS DTC	Appropriate Terminal
24: NOR	A16
25: NCR	A15
26: NOL	A3
27: NCL	A2

ABS Solenoid	ABS/TCS Control Unit Connector C (12P) Terminal
FR-IN	C11
FR-OUT	C6
FL-IN	C9
FL-OUT	C4
RR-IN	C8
RR-OUT	C3
RL-IN	C10
RL-OUT	C5

ABS/TCS CONTROL UNIT CONNECTOR A (26P)

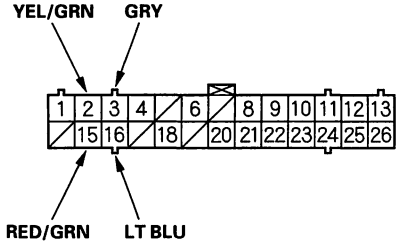

Wire side of female terminals

ABS/TCS CONTROL UNIT CONNECTOR C (12P)

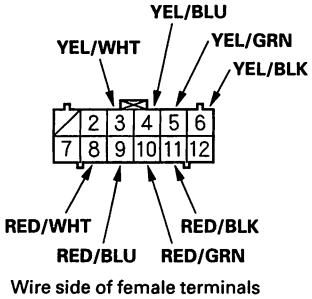

Wire side of female terminals

Is there continuity?

YES—Repair short in the appropriate wires between the ABS/TCS control unit and the modulator unit.■

NO—Go to step 16.

(cont'd)

DTC Troubleshooting (cont'd)

16. Connect the modulator unit 24P connector.

17. Check for continuity between the appropriate ABS/TCS control unit connector A (26P) terminal and all other ABS and TCS solenoid circuit terminals (see table).

TCS DTC	Appropriate Terminal
24: NOR	A16
25: NCR	A15
26: NOL	A3
27: NCL	A2

ABS Solenoid	ABS/TCS Control Unit Connector C (12P) Terminal
FR-IN	C11
FR-OUT	C6
FL-IN	C9
FL-OUT	C4
RR-IN	C8
RR-OUT	C3
RL-IN	C10
RL-OUT	C5

ABS/TCS CONTROL UNIT CONNECTOR A (26P)

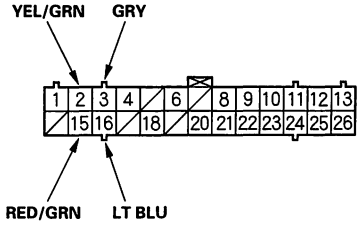

Wire side of female terminals

ABS/TCS CONTROL UNIT CONNECTOR C (12P)

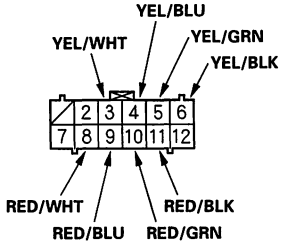

Wire side of female terminals

Is there less than 3Ω ?

YES—Replace the modulator unit.■

NO—Check for loose ABS/TCS control unit connectors. If necessary, substitute a known-good ABS/TCS control unit, and recheck.■

TCS DTC 28: TCS Relay

1. Check the BSC F/S (20 A) fuse in the under-hood fuse/relay box, and reinstall the fuse if it is OK.

   Is the fuse OK?

   YES—Go to step 2.

   NO—Replace the fuse, and recheck.■

2. Turn the ignition switch ON (II).

   Does the fuse blow?

   YES—Repair short to body ground in the wire between the TCS relay and the modulator unit.■

   NO—Go to step 3.

3. Check the TCS relay in the under-hood ABS relay box (see page 22-31). The wire colors of the TCS relay 4P connector are BLU, RED/BLU, BRN/BLK, and GRN/YEL.

   Is the relay OK?

   YES—Leave the TCS relay removed, and go to step 4.

   NO—Replace the TCS relay.■

4. Measure the voltage between the TCS relay 4P connector terminal No. 1 and body ground.

TCS RELAY 4P CONNECTOR

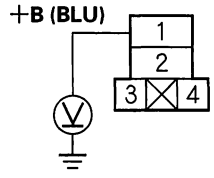

Wire side of female terminals

Is there battery voltage?

YES—Go to step 5.

NO—Repair open in the wire between the under-hood fuse/relay box and the TCS relay.■

BACK

5. Connect the TCS relay 4P connector terminal No. 1 to No. 2 with a jumper wire.

TCS RELAY 4P CONNECTOR

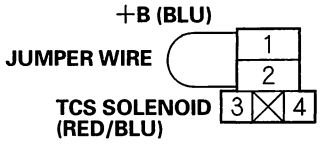

Wire side of female terminals

6. Disconnect the modulator unit 24P connector.

7. Measure the voltage between terminal No. 17 and body ground.

MODULATOR UNIT 24P CONNECTOR

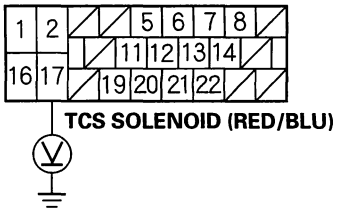

Wire side of female terminals

Is there battery voltage?

YES—Go to step 8.

NO—Repair open in the wire between the TCS relay and the modulator unit.■

8. Remove the jumper wire from the TCS relay 4P connector.

9. Measure the voltage between the modulator unit 24P connector terminal No. 17 and body ground.

MODULATOR UNIT 24P CONNECTOR

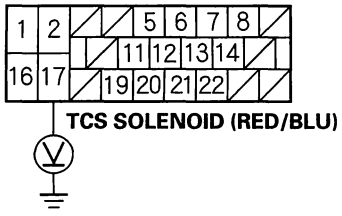

Wire side of female terminals

Is there battery voltage?

YES—Repair short to power in the wire between the TCS relay and the modulator unit.■

NO—Go to step 10.

10. Disconnect the ABS/TCS control unit connector B (16P).

11. Measure the voltage between terminal B13 and body ground.

ABS/TCS CONTROL UNIT CONNECTOR B (16P)

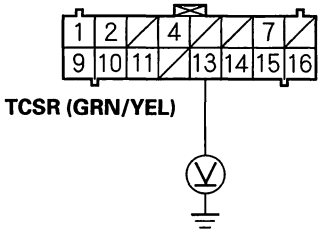

Wire side of female terminals

Is there battery voltage?

YES—Repair short to power in the wire between the ABS/TCS control unit and the TCS relay.■

NO—Go to step 12.

(cont'd)

DTC Troubleshooting (cont'd)

12. Check for continuity between the ABS/TCS control unit connector B (16P) terminal B13 and body ground.

ABS/TCS CONTROL UNIT CONNECTOR B (16P)

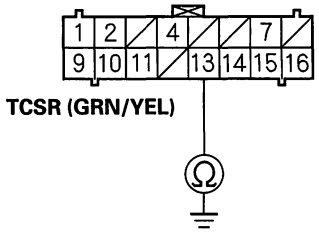

Wire side of female terminals

Is there continuity?

YES—Repair short to body ground in the wire between the ABS/TCS control unit and the TCS relay.■

NO—Go to step 13.

13. Turn the ignition switch OFF.

14. Remove the ABS fail-safe relay. The wire colors of ABS fail-safe relay 4P connector are WHT/GRN, BRN/BLK, BLK, and YEL/GRN.

15. Connect the ABS fail-safe relay 4P connector terminal No. 1 and No. 2 with a jumper wire.

ABS FAIL-SAFE RELAY 4P CONNECTOR

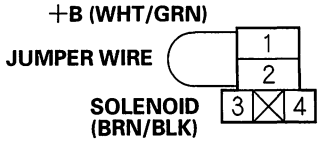

Wire side of female terminals

16. Measure the voltage between the TCS relay 4P connector terminal No. 3 and body ground.

TCS RELAY 4P CONNECTOR

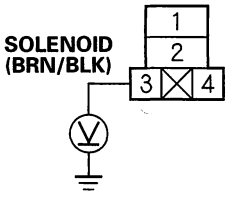

Wire side of female terminals

Is there battery voltage?

YES—Go to step 17.

NO—Repair open in the wire between the fail-safe relay and the TCS relay.■

17. Connect the TCS relay 4P connector No. 3 and No. 4 with a jumper wire.

NOTE: Make sure the ABS/TCS control unit connector B (16P) is disconnected.

TCS RELAY 4P CONNECTOR

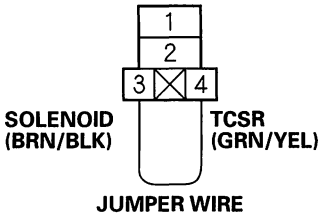

Wire side of female terminals

BACK

18. Measure the voltage between the ABS/TCS control unit connector B (16P) terminal B13 and body ground.

ABS/TCS CONTROL UNIT CONNECTOR B (16P)

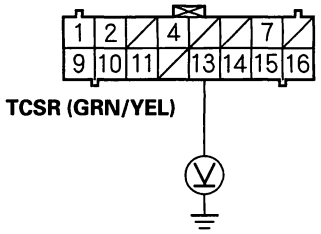

Wire side of female terminals

Is there battery voltage?

YES—If the problem recurs, replace the ABS/TCS control unit.■

NO—Repair open in the wire between the TCS relay and the ABS/TCS control unit.■

TCS DTC 31: Engine Retard Command (PFINH) signal

NOTE: If the MIL or ABS indicator is ON, troubleshoot the PGM-FI or ABS first.

1. Disconnect the PCM connector A (32P) and the ABS/TCS control unit connector B (16P).

2. Check for continuity between the PCM connector A (32P) terminal A13 and body ground.

PCM CONNECTOR A (32P)

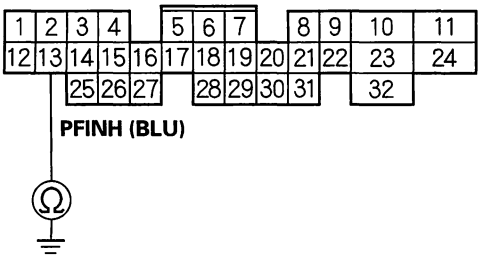

Wire side of female terminals

Is there continuity?

YES—Repair short to body ground in the wire between the PCM and the ABS/TCS control unit.■

NO—Go to step 3.

3. Connect the PCM connector A (32P).

4. Start the engine.

(cont'd)

DTC Troubleshooting (cont'd)

5. Measure the voltage between the PCM connector A (32P) terminal A13 and body ground.

   NOTE: Use the 10 V range or similar range in an analog tester.

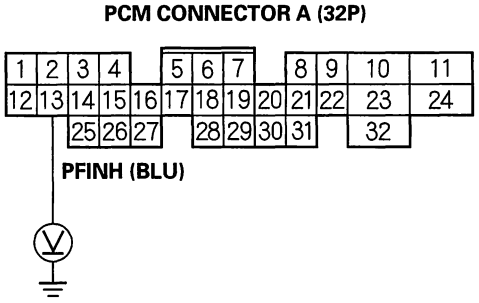

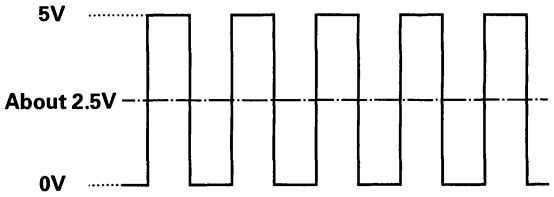

Is there about 2.5 V?

YES—Go to step 6.

NO—Check for loose PCM connectors. If necessary, substitute a known-good PCM, and recheck.■

6. With an analog voltmeter set to the 10 V or similar range, measure the voltage between the ABS/TCS control unit connector B (16P) terminal B10 and body ground.

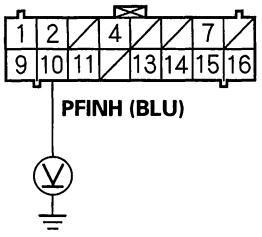

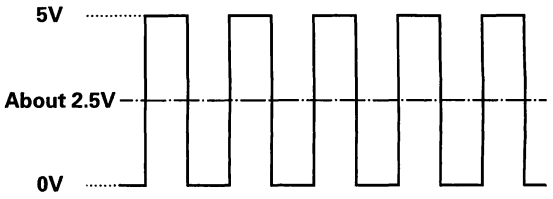

Is there about 2.5 V?

YES—Check for loose ABS/TCS control unit connectors. If necessary, substitute a known-good ABS/TCS control unit, and recheck.■

NO—Repair open in the wire between the PCM and the ABS/TCS control unit.■

BACK

TCS DTC 32: Engine speed (NEP) Signal

NOTE: If the MIL or ABS indicator is ON, troubleshoot the PGM-FI or ABS first.

1. Disconnect PCM connector A (32P), ABS/TCS control unit connector B (16P) and gauge assembly connector A (30P).

2. Check for continuity between the PCM connector A (32P) terminal A19 and body ground.

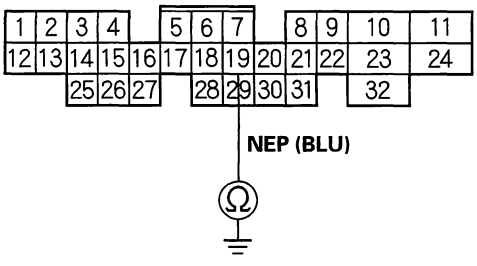

Wire side of female terminals

Is there continuity?

YES—Repair short to body ground in the wire between the PCM and the ABS/TCS control unit.

NO—Go to step 3.

3. Connect the PCM connector A (32P).

4. Start the engine, warm it up to normal operating temperature, and let it idle.

5. With an analog voltmeter set to the 10 V or similar range, measure the voltage between the PCM connector A (32P) terminal A19 and body ground.

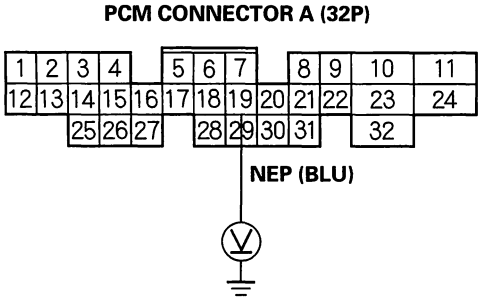

Wire side of female terminals

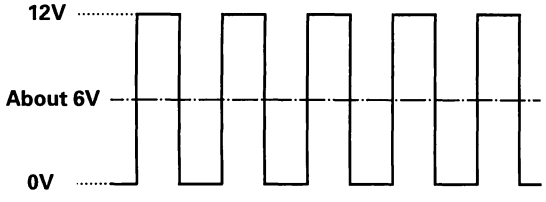

Is there about 6 V?

YES—Go to step 6.

NO—Check for loose PCM connectors. If necessary, substitute a known-good PCM, and recheck. ■

(cont'd)

DTC Troubleshooting (cont'd)

6. With the engine still idling, measure the voltage between the ABS/TCS control unit connector B (16P) terminal B11 and body ground with the analog voltmeter again.

ABS/TCS CONTROL UNIT CONNECTOR B (16P)

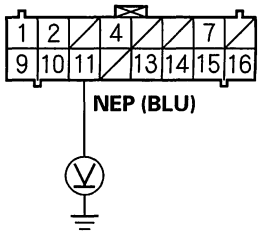

Wire side of female terminals

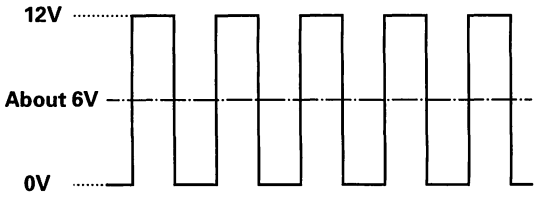

Is there about 6 V?

YES—The system is OK at this time. If the problem recurs, replace the ABS/TCS control unit.■

NO—Repair open in the wire between the PCM and the ABS/TCS control unit.■

TCS DTC 34: Reference Voltage (VREF) Signal

NOTE: If the MIL or the ABS indicator is ON, troubleshoot the PGM-FI or the ABS first.

1. Disconnect the PCM connector A (32P) and the ABS/TCS control unit connector B (16P).

2. Check for continuity between the PCM connector A (32P) terminal A7 and body ground.

PCM CONNECTOR A (32P)

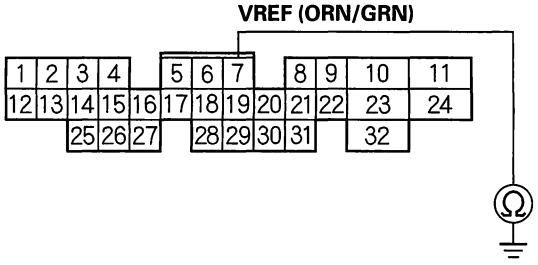

Wire side of female terminals

Is there continuity?

YES—Repair short to body ground in the wire between the PCM and the ABS/TCS control unit.■

NO—Go to step 3.

3. Connect the PCM connector A (32P).

4. Turn the ignition switch ON (II).

BACK

5. Measure the voltage between the PCM connector A (32P) terminal A7 and body ground.

PCM CONNECTOR A (32P)

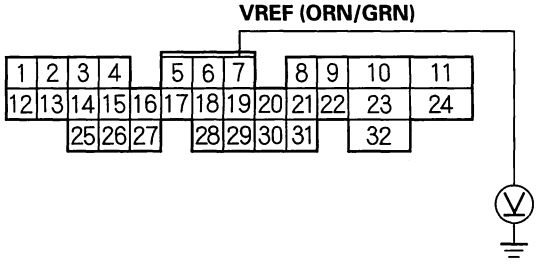

Wire side of female terminals

Is there about 5 V?

YES—Go to step 6.

NO—Check for loose PCM connectors. If necessary, substitute a known-good PCM, and recheck. ■

6. Measure the voltage between the ABS/TCS control unit connector B(16P) terminal B2 and body ground.

ABS/TCS CONTROL UNIT CONNECTOR B (16P)

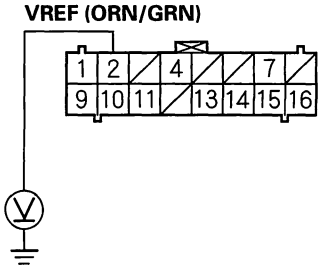

Wire side of female terminals

Is there about 5 V?

YES—The system is OK at this time. If the problem recurs, replace the ABS/TCS control unit. ■

NO—Repair open in the wire between the PCM and the ABS/TCS control unit. ■

TCS DTC 36: Throttle Position Sensor Output (THLOUT) Signal

NOTE: If the MIL or the ABS indicator is ON, troubleshoot the PGM-FI or the ABS first.

1. Disconnect the PCM connector A (32P) and the ABS/TCS control unit connector B(16P).

2. Check for continuity between the PCM connector A (32P) terminal A31 and body gound.

PCM CONNECTOR A (32P)

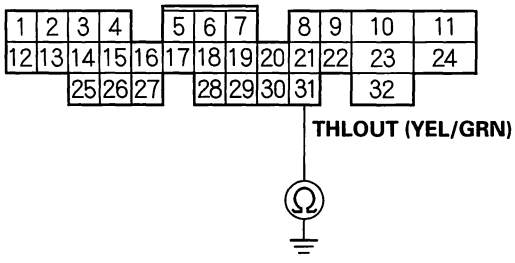

Wire side of female terminals

Is there continuity?

YES—Repair short to body ground in the wire between the PCM and the ABS/TCS control unit. ■

NO—Go to step 3.

3. Connect the PCM connector A (32P).

4. Start the engine.

(cont'd)

DTC Troubleshooting (cont'd)

5. Measure the voltage between the PCM connector A (32P) terminal A31 and body ground with the throttle fully opened and fully closed. There should be a smooth transition from approx. 0.5 V and 4.5 V.

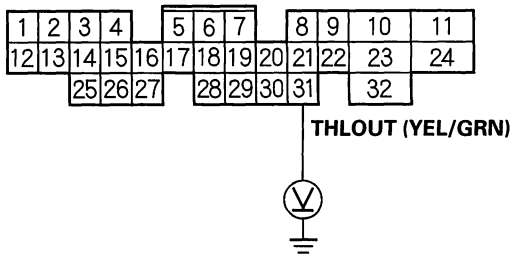

Wire side of female terminals

Is the voltage as specified?

YES—Go to step 6.

NO—Check for loose PCM connectors. If necessary, substitute a known-good PCM, and recheck. ■

6. Measure the voltage between the ABS/TCS control unit connector B (16P) terminal B9 and body ground with the throttle fully closed.

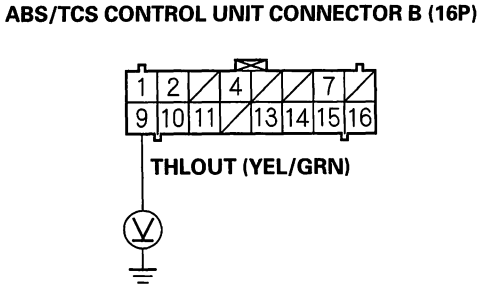

Wire side of female terminals

Is there about 0.5 V?

YES—The system is OK at this time. If the problem recurs, replace the ABS/TCS control unit. ■

NO—Repair open in the wire between the PCM and the ABS/TCS control unit. ■

TCS DTC 61: A/T Shift Position (ATSFTP) Signal

NOTE: If the MIL or the ABS indicator is ON, troubleshoot the PGM-FI or the ABS first.

1. Disconnect the PCM connector A (32P) and the ABS/TCS control unit connector B (16P).

2. Check for continuity between the PCM connector A (32P) terminal A11 and body ground.

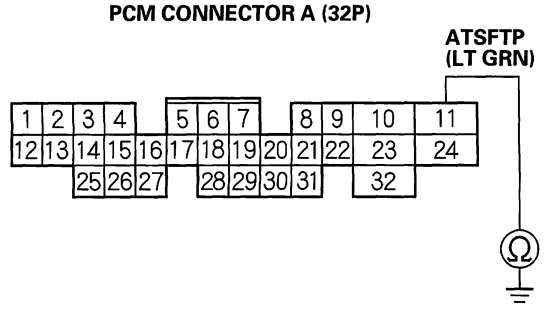

Wire side of female terminals

Is there continuity?

YES—Repair short to body ground in the wire between the PCM and the ABS/TCS control unit. ■

NO—Go to step 3.

3. Connect the PCM connector A (32P).

4. Shift the transmission to P position.

5. Start the engine.

BACK

6. With an analog voltmeter set to the 10 V or similar range, measure the voltage between the PCM connector A (32P) terminal A11 and body ground.

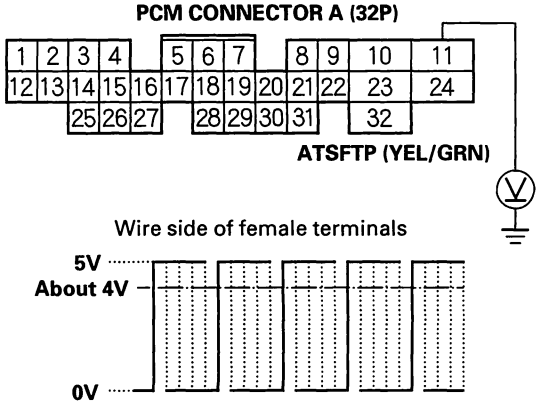

Is there about 4 V?

YES—Go to step 7.

NO—Check for loose PCM connectors. If necessary, substitute a known-good PCM, and recheck. ■

7. With an analog voltmeter set to the 10 V or similar range, measure the voltage between the ABS/TCS control unit connector B (16P) terminal B7 and body ground.

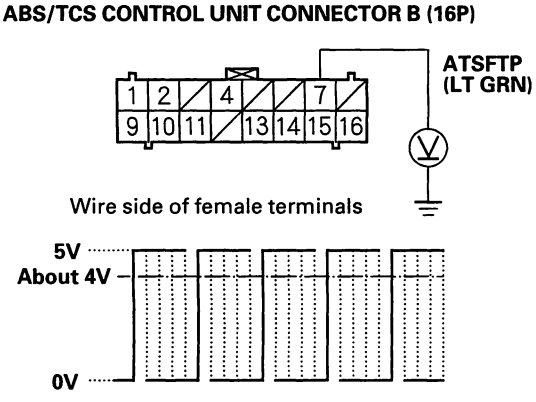

Is there about 4 V?

YES—Check for loose ABS/TCS control unit connectors. If necessary, substitute a known-good ABS/TCS control unit, and recheck. ■

NO—Repair open in the wire between the PCM and the ABS/TCS control unit. ■

TCS DTC 81: Continuous TCS Operation

NOTE: If the MIL or the ABS indicator is ON, troubleshoot the PGM-FI or the ABS first.

1. Clear the DTC.

2. Test-drive the vehicle.

   Does the TCS indicator come on, and is DTC 81 indicated?

   YES—Replace the ABS/TCS control unit. ■

   NO—Intermittent failure; the vehicle is OK at this time. ■

ABS Indicator Circuit Troubleshooting

1. Turn the ignition switch ON (II), and watch the ABS indicator.

   Does the ABS indicator come on?

   YES—If the ABS indicator comes on and goes off, it's OK. If the ABS indicator stays on, turn the ignition switch OFF, and go to step 13.

   NO—Go to step 2.

2. Turn the ignition switch OFF then ON (II) again.

   Does the brake system indicator come on?

   YES—Go to step 3.

   NO—Repair open in the indicator power source circuit.■
   - Blown BACK UP LIGHT (7.5 A) fuse.
   - Open in the wire between the BACK UP LIGHT (7.5 A) fuse and the gauge assembly.
   - Open circuit inside the fuse box.

3. Turn the ignition switch OFF.

4. Disconnect the ABS/TCS control unit connector A (26P).

5. Turn the ignition switch ON (II).

   Does the ABS indicator come on?

   YES—Check for loose ABS/TCS control unit connectors. If necessary, substitute a known-good ABS/TCS control unit, and recheck.■

   NO—Go to step 6.

6. Check the ABS indicator bulb in the gauge assembly.

   Is the bulb OK?

   YES—Go to step 7.

   NO—Replace the ABS indicator bulb.■

7. Turn the ignition switch OFF.

8. Disconnect the gauge assembly connector C (16P).

9. Check for continuity between the gauge assembly connector C (16P) terminal C10 and body ground.

GAUGE ASSEMBLY CONNECTOR C (16P)

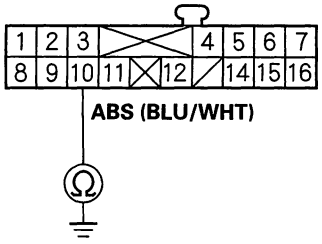

Wire side of female terminals

   Is there continuity?

   YES—Repair short to body ground in the wire between the gauge assembly and the ABS/TCS control unit.■

   NO—Go to step 10.

10. Connect the gauge assembly connector C (16P).

11. Connect the gauge assembly connector B (22P) terminal B16 to body ground with a jumper wire.

GAUGE ASSEMBLY CONNECTOR B (22P)

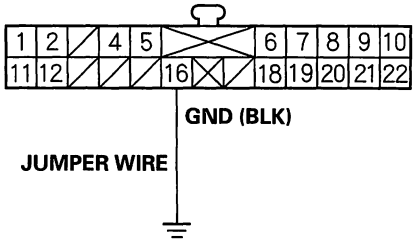

Wire side of female terminals

12. Turn the ignition switch ON (II).

    Does the ABS indicator come on?

    YES—Repair open in the wire between the gauge assembly and body ground (G501).■

    NO—Replace the gauge assembly.■

BACK

13. Check the R/C MIRROR (7.5 A) fuse in the driver's under-dash fuse/relay box, and reinstall the fuse if it is OK.

Is the fuse OK?

YES—Go to step 14.

NO—Replace the fuse, and recheck.■

14. Connect the ABS/TCS control unit connector A (26P) terminal A1 to body ground with a jumper wire.

ABS/TCS CONTROL CONNECTOR A (26P)

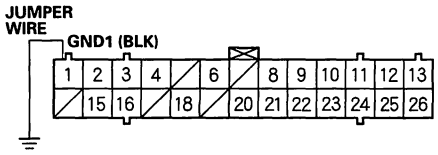

Wire side of female terminals

15. Turn the ignition switch ON (II).

Does the ABS indicator go off?

YES—Repair open in the wire between the ABS/TCS control unit and body ground (G403).■

NO—Go to step 16.

16. Measure the voltage between the ABS/TCS control unit connector A (26P) terminal A13 and body ground.

ABS/TCS CONTROL CONNECTOR A (26P)

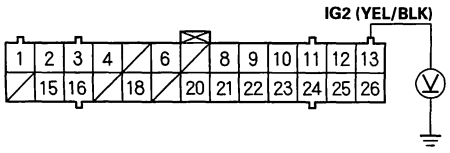

Wire side of female terminals

Is there battery voltage?

YES—Go to step 17.

NO—Repair open in the wire between the R/C MIRROR (7.5 A) fuse and the ABS/TCS control unit.■

17. Connect the ABS/TCS control unit connector A (26P) terminal A4 to body ground with a jumper wire.

ABS/TCS CONTROL CONNECTOR A (26P)

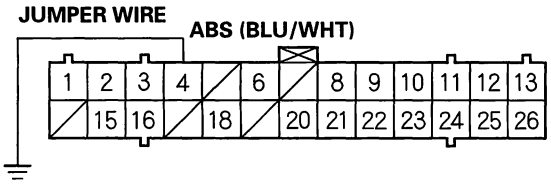

Wire side of female terminals

Does the ABS indicator go off?

YES—Check for loose ABS/TCS control unit connectors. If necessary, substitute a known-good ABS/TCS control unit, and recheck.■

NO—Go to step 18.

18. Connect the gauge assembly connector C (16P) terminal C10 to body ground with a jumper wire.

GAUGE ASSEMBLY CONNECTOR C (16P)

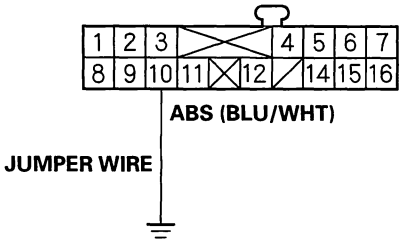

Wire side of female terminals

Does the ABS indicator go off?

YES—Repair open in the wire between the gauge assembly and the ABS/TCS control unit.■

NO—Replace the gauge assembly.■

TCS Indicator Circuit Troubleshooting

1. Start the engine, and watch the TCS indicator.

   Does the TCS indicator come on?

   YES—If the TCS indicator comes on and goes off, it's OK. If the TCS indicator stays on, go to step 7.

   NO—Go to step 2.

2. Turn the engine OFF, then restart it again.

   Does the brake system indicator come on?

   YES—Go to step 3.

   NO—Repair open in the indicator power source circuit.■
   - Blown BACK UP LIGHT (7.5 A) fuse.
   - Open in the wire between the BACK UP LIGHT (7.5 A) fuse and the gauge assembly.
   - Open circuit inside the fuse box.

3. Turn the engine OFF, and check the TCS indicator bulb in the gauge assembly.

   Is the bulb OK?

   YES—Go to step 4.

   NO—Replace the TCS indicator bulb.■

4. Connect the gauge assembly connector B (22P) terminal B18 and body ground with a jumper wire. Turn the ignition switch ON (II).

GAUGE ASSEMBLY CONNECTOR B (22P)

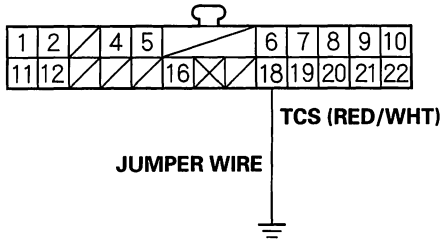

Wire side of female terminals

Does the TCS indicator come on?

YES—Go to step 5.

NO—Replace the gauge assembly.■

5. Remove the jumper wire at the gauge assembly, and connect the ABS/TCS control unit connector B (16P) terminal B16 and body ground with a jumper wire.

ABS/TCS CONTROL UNIT CONNECTOR B (16P)

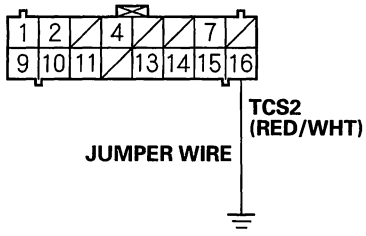

Wire side of female terminals

Does the TCS indicator come on?

YES—Go to step 6.

NO—Repair open in the wire between the gauge assembly and the ABS/TCS control unit.■

6. Connect the ABS/TCS control unit connector C (12P) terminal C2 and body ground with a jumper wire.

ABS/TCS CONTROL UNIT CONNECTOR C (12P)

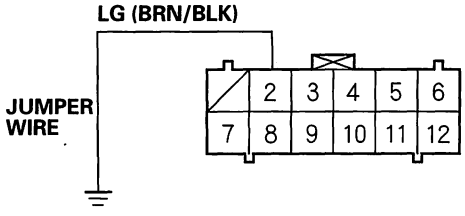

Wire side of female terminals

Does the TCS indicator come on?

YES—Repair open in the wire between the ABS/TCS control unit and body ground (G101).■

NO—Check for loose ABS/TCS control unit connectors. If necessary, substitute a known-good ABS/TCS control unit, and recheck.■

BACK

7. Check the R/C MIRROR (7.5 A) fuse in the driver's under-dash fuse/relay box, and reinstall the fuse if it is OK.

   Is the fuse OK?

   YES—Go to step 8.

   NO—Replace the fuse, and recheck.■

8. Measure the voltage between the ABS/TCS control unit connector A (26P) terminal A13 and body ground.

ABS/TCS CONTROL CONNECTOR A (26P)

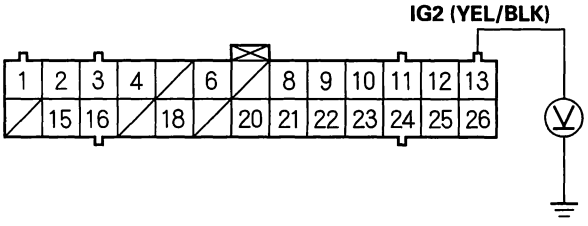

Wire side of female terminals

   Is there battery voltage?

   YES—Go to step 9.

   NO—Repair open in the wire between the driver's under-dash fuse/relay box and ABS/TCS control unit.■

9. Turn the ignition switch OFF.

10. Disconnect the ABS/TCS control unit connector A (26P) and connector B (16P).

11. Turn the ignition switch ON(II).

    Does the TCS indicator go off?

    YES—Check for loose ABS/TCS control unit connectors. If necessary, substitute a known-good ABS/TCS control unit, and recheck.■

    NO—Repair short to body ground in the wire between the gauge assembly and the ABS/TCS control unit.■

Modulator Unit Removal and Installation

NOTE:
- Do not spill brake fluid on the vehicle; it may damage the paint; if brake fluid gets on the paint, wash it off immediately with water.
- Take care not to damage or deform the brake lines during removal and installation.
- To prevent the brake fluid from flowing, plug and cover the hose ends and joints with a shop towel or equivalent material.

Removal

1. Push the modulator unit connector lock (C), and turn the connector lever (D).
2. Disconnect the modulator unit connector (B).
3. Disconnect the brake lines, then remove the modulator unit (A).

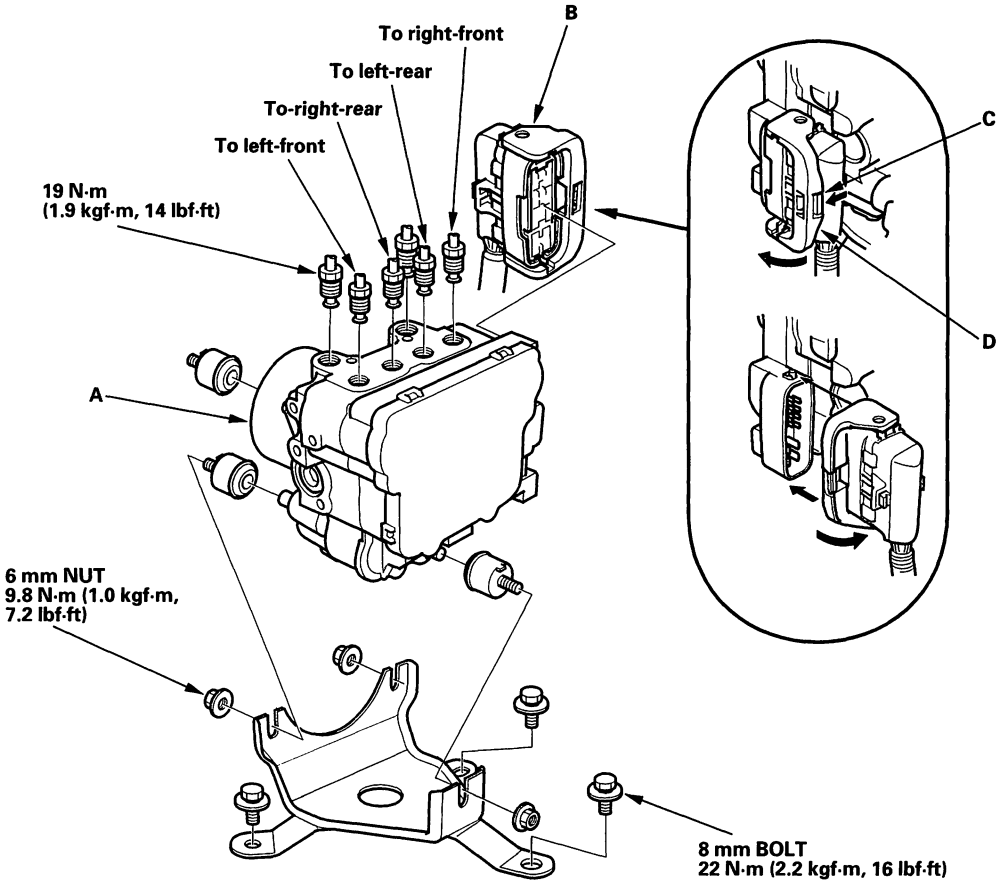

Installation

1. Install the modulator unit in the reverse order of removal.
2. Bleed the brake system, starting with the front wheels.
3. Start the engine, and check that the ABS indicator and the TCS indicator go off.
4. Test-drive the vehicle, and check that the ABS indicator and the TCS indicator do not come on.

BACK

TCS Switch Test

1. Remove the cruise control/TCS switch (A) from the switch panel.

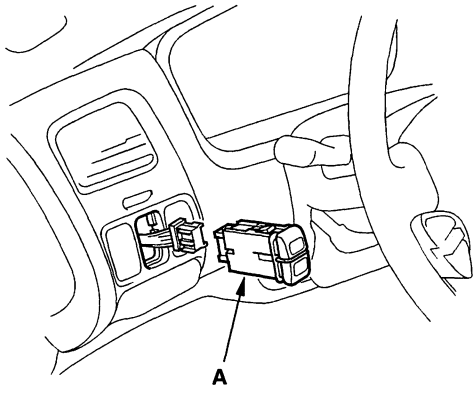

2. Check for continuity between terminal No. 5 and No. 6. There should be continuity when the TCS switch is pushed.

CRUISE CONTROL/TCS SWITCH CONNECTOR

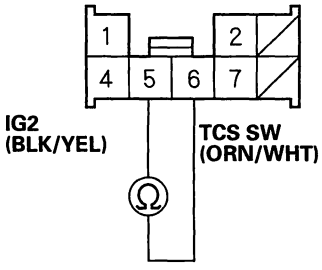

Wire side of female terminals

ABS/TCS Control Unit Replacement

1. Remove the passenger's kick panel.
2. Remove the ABS/TCS control unit (A).

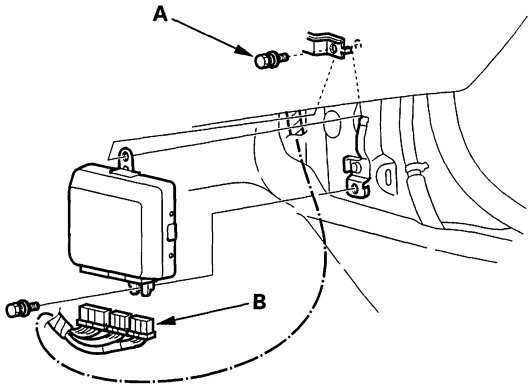

3. Disconnect the ABS/TCS control unit connectors (B).
4. Install the ABS/TCS control unit in the reverse order of removal.

Wheel Sensor Inspection

1. Inspect the front and rear pulsers for chipped or damaged teeth.
2. Measure the air gap between the wheel sensor and pulser all the way around while rotating the pulser. Remove the rear brake disc to measure the gap on the rear wheel sensor. If the gap exceeds 1.0 mm (0.04 in), check for a bent suspension arm.

Standard:
Front: 0.4 – 1.05 mm (0.02 – 0.04 in)
Rear: 0.19 – 1.14 mm (0.01 – 0.05 in)

Front

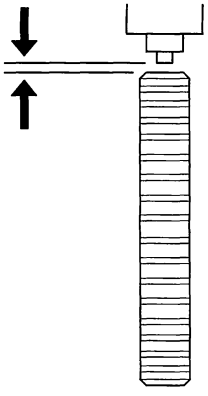

Rear

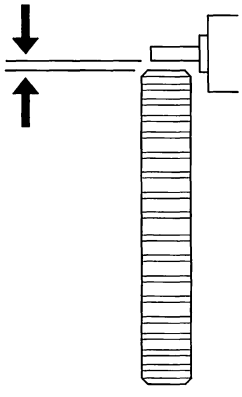

BACK

Wheel Sensor Replacement

Install the sensors carefully to avoid twisting wires.

Front

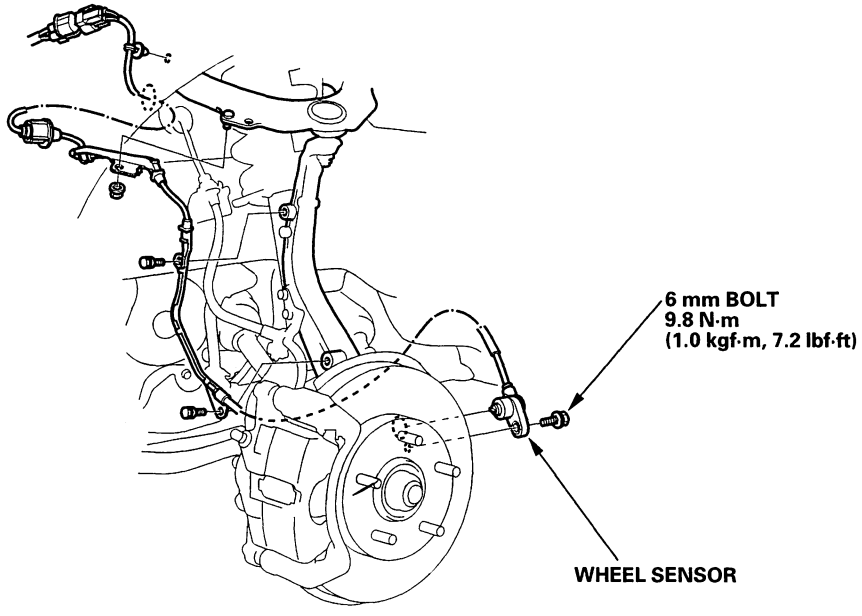

Rear

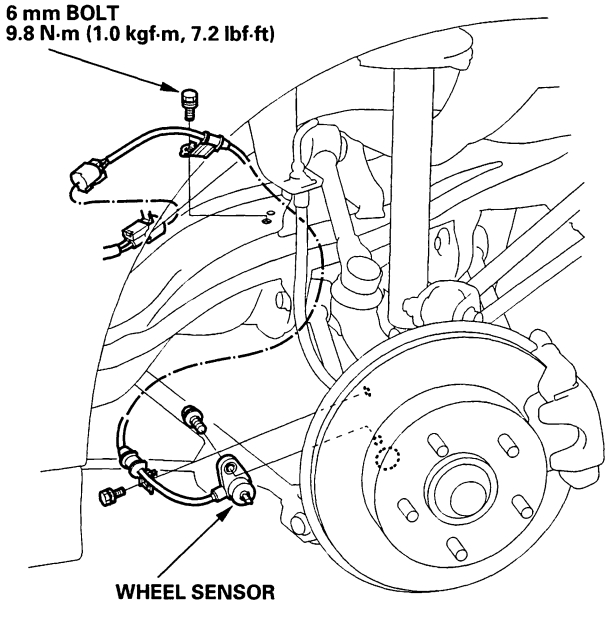

SUPPLEMENTAL RESTRAINT SYSTEM (SRS) (If body maintenance is required)

The Accord Sedan/Coupe (V6) SRS includes a driver's airbag located in the steering wheel hub, a passenger's airbag located in the dashboard above the glove box, and side airbags ('00-02 models) located in the front seat-backs. Information necessary to safely service the SRS is included in the '98-02 Accord Sedan/Coupe (L4) Service Manual, P/N 61S8400. Items marked with an asterisk (*) on the contents page include or are located near SRS components. Servicing, disassembling, or replacing these items will require special precautions and tools, and should therefore be done by and authorized Honda dealer.

- To avoid rendering the SRS inoperative, which could lead to personal injury or death in the event of a severe frontal collision, all SRS service work must be performed by an authorized Honda dealer.
- Improper service procedures, including incorrect removal and installation of the SRS, could lead to personal injury caused by unintentional deployment of the frontal airbags (and side airbags on some '00-02 models).
- Do not bump the SRS unit, Otherwise, the system may fail in case of a collision, or the airbags may deploy when the ignition switch is ON (II).
- SRS electrical connectors are indicated with yellow color coding. Related components are located in the steering column, front console, dashboard, dashboard lower panel, in the dashboard above the glove box, in the front seats ('00-02 models) and around the floor ('00-02 models). Do not use electrical test equipment on these circuits.

BACK

Body

Seats

Front Seat Removal and Installation
-4-Way Power-Sedan 20-2
Front Seat Disassembly/Reassembly
-4-Way Power-Sedan 20-3
Front Seat Linkage Disassembly/Reassembly
-4-Way Power-Sedan 20-4
Front Seat Wire Harness Installation
-4-Way Power-Sedan 20-5

Bumper

Rear Bumper Spoiler Replacement 20-6

Hood

Replacement 20-7

Exterior Trim

Emblem Replacement-Coupe 20-8
Emblem Replacement-Sedan 20-8

Frame

Sub-frame Replacement 20-9
Frame Repair Chart 20-12

NOTE: Refer to the 1998–2002 Accord Service Manual (P/N 61S8400) for the items not shown in this section.

Outline of V6 Model Changes

1998 model:

- The Accord sedan and coupe V6 model has been added.
  - The V6 emblem has been added.
  - The hood replacement procedure is different.
  - The sub-frames are different.
  - The frame repair chart is different.

2001 model:

- The following item has been added on Sedan or Coupe V6 model.
  - The passenger's 4 way power seat (sedan)
  - The rear bumper spoiler (coupe)

Front Seat Removal/Installation - 4-Way Power - Sedan

'01-02 models: SRS components are located in this area. Review the SRS component locations (see page 23-23), and precautions and procedures (see page 23-28) in the SRS section before performing repairs or service. Refer to '98-02 ACCORD Service Manual, P/N 61S8400.

1. Make sure you have the anti-theft code for the radio, then write down the frequencies for the radio's preset buttons.

2. Disconnect the negative cable from the battery, and wait at least 3 minutes before beginning work.

3. Remove the seat track end covers (A), and remove the bolts securing the front seat (B). When prying with a flat-tip screwdriver, wrap it with protective tape to prevent damage. Take care not to scratch the body or tear the seat covers.

Fastener Locations

▶: Bolt, 4	▷: Clip, 1
10 x 1.25 mm 34 N·m (3.5 kgf·m, 25 lbf·ft)	

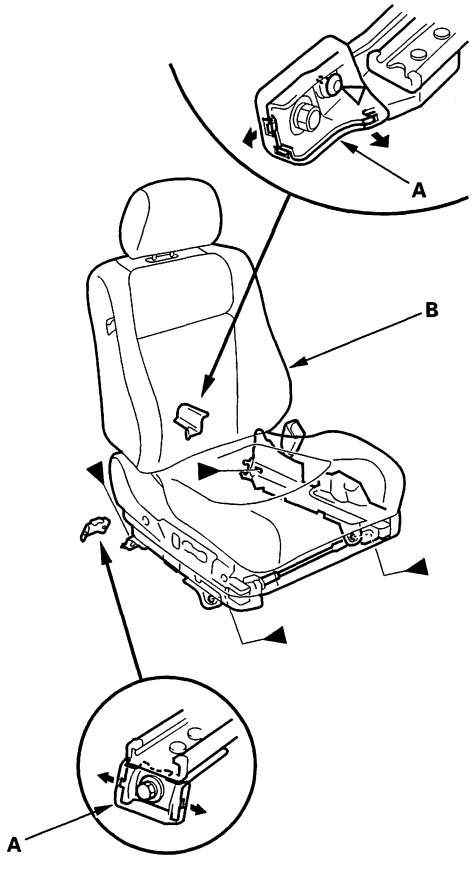

4. Lift up the front seat, then disconnect and detach the seat harness connector (A) and harness clip (B).

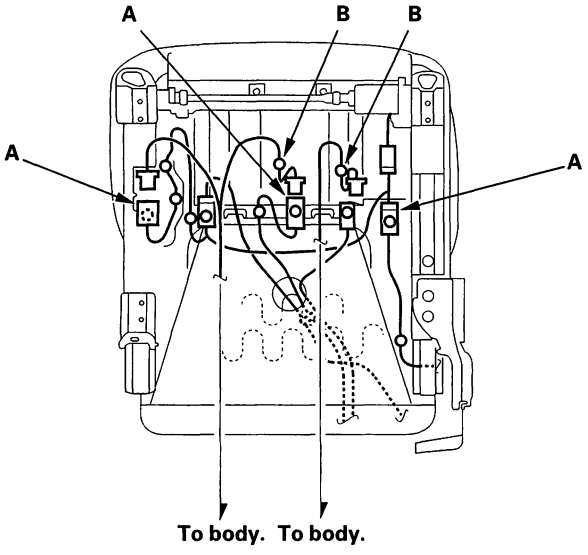

5. With the help of an assistant, carefully remove the front seat through the front door opening.

6. Install the front seat in the reverse order of removal, and note these item:

   - Replace the damaged track and cover clip.
   - Make sure the seat harness connector is plugged in properly.
   - Enter the anti-there code for the radio, then enter the customer's radio station presets.

BACK

Front Seat Disassembly/Reassembly - 4-Way Power - Sedan

'01-02 models: SRS components are located in this area. Review the SRS component locations (see page 23-23), and precautions and procedures (see page 23-28) in the SRS section before performing repairs or service. Refer to '98-02 ACCORD Service Manual, P/N 61S8400.

Disassembly the front sent as shown.
Reassemble the seat in the reverse order of disassembly, and note these items:

- Route the seat wire harness correctly (see page 20-5).
- Make sure the bushing and pivot washer are installed correctly.
- Apply multipurpose grease to the moving portion of the seat track.
- To prevent wrinkles in the seat-back cover, stretch the material evenly over the pad.
- If the seat-back pad or the OPDS unit is replaced, reinitialize the OPDS unit. Refer to '98-02 ACCORD Service Manual, P/N 61S8400 (see page 23-300).

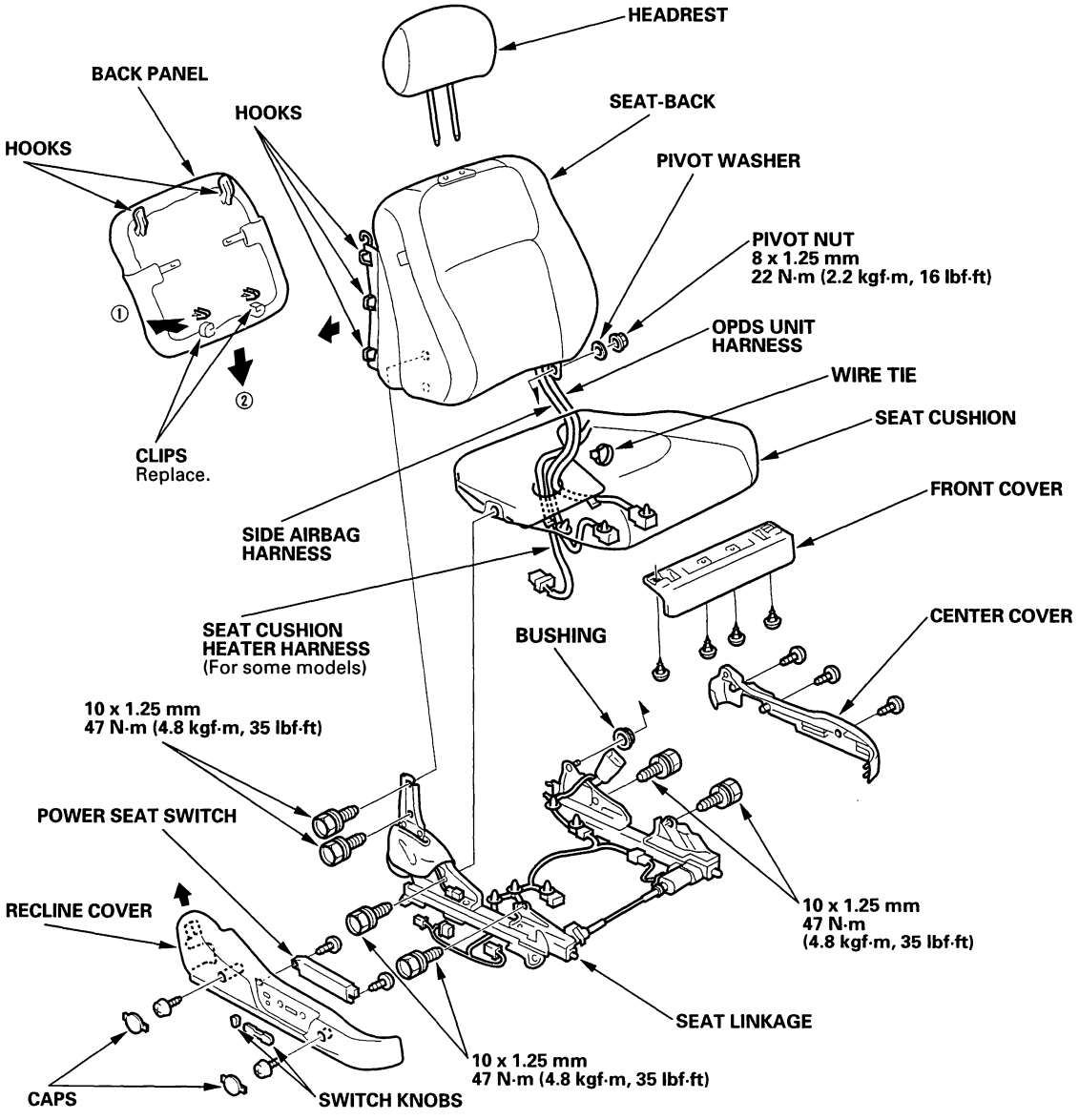

BACK

Front Seat Linkage Disassembly/Reassembly - 4-Way Power - Sedan

'01-02 models:

NOTE:
- Put on gloves to protect your hands.
- To remove the slide motor and slide gearbox, slide the front seat backward fully.

Disassemble the linkage as shown.

Reassemble the linkage in the reverse order of disassembly, and note these items:

- Before installing the slide motor and slide gearbox, align portion (A) as shown to align both slide gearbox positions.
- Apply multipurpose grease to the sliding and pivot portions of the linkage.
- Check operation of the recline and slide adjusters.

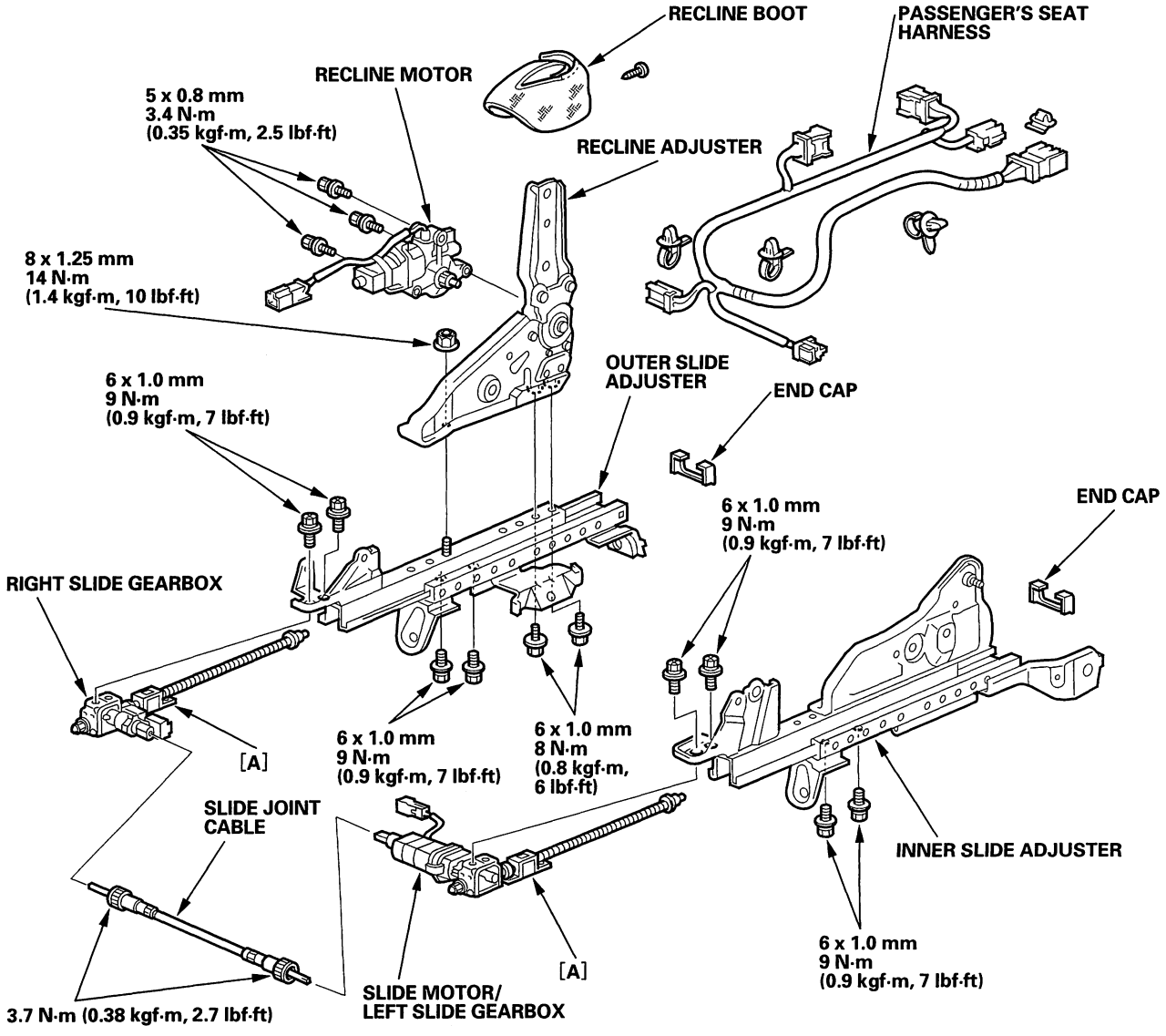

BACK

Front Seat Wire Harness Installation - 4-Way Power - Sedan

'01-02 models:

When assembling the front seat, make sure the seat belt switch harness (A), seat harness (B), seat heater harnesses (C), side airbag harness (D), OPDS unit harness (E), connectors (F), clips (G) and wire tie (H) are fastened correctly.

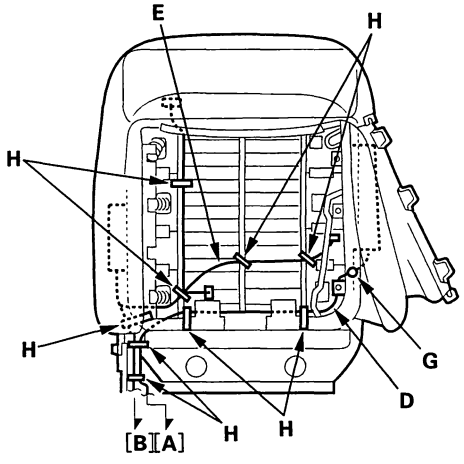

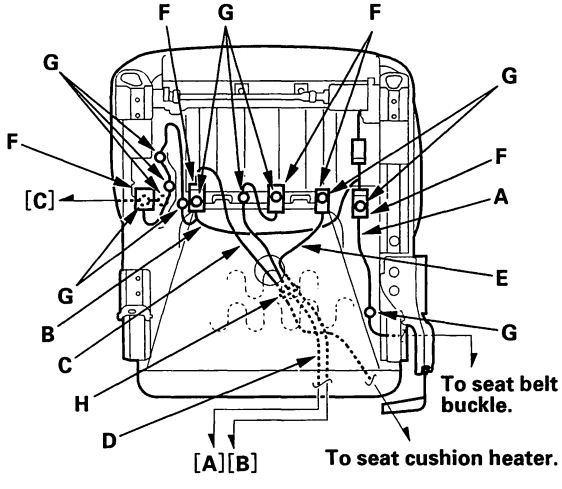

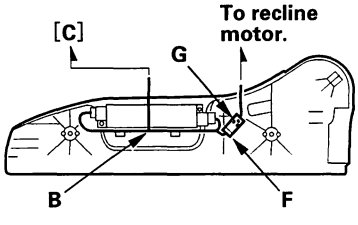

Rear Bumper Spoiler Replacement - Coupe

'01-02 models:

NOTE: Take care not to scratch the rear bumper.
Remove the rear bumper spoiler as shown.
Install the spoiler in the reverse order of removal, and replace any damaged clips.

Fastener Locations

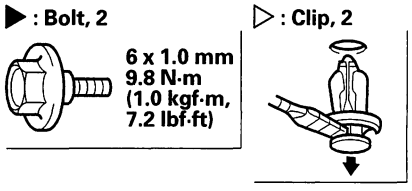

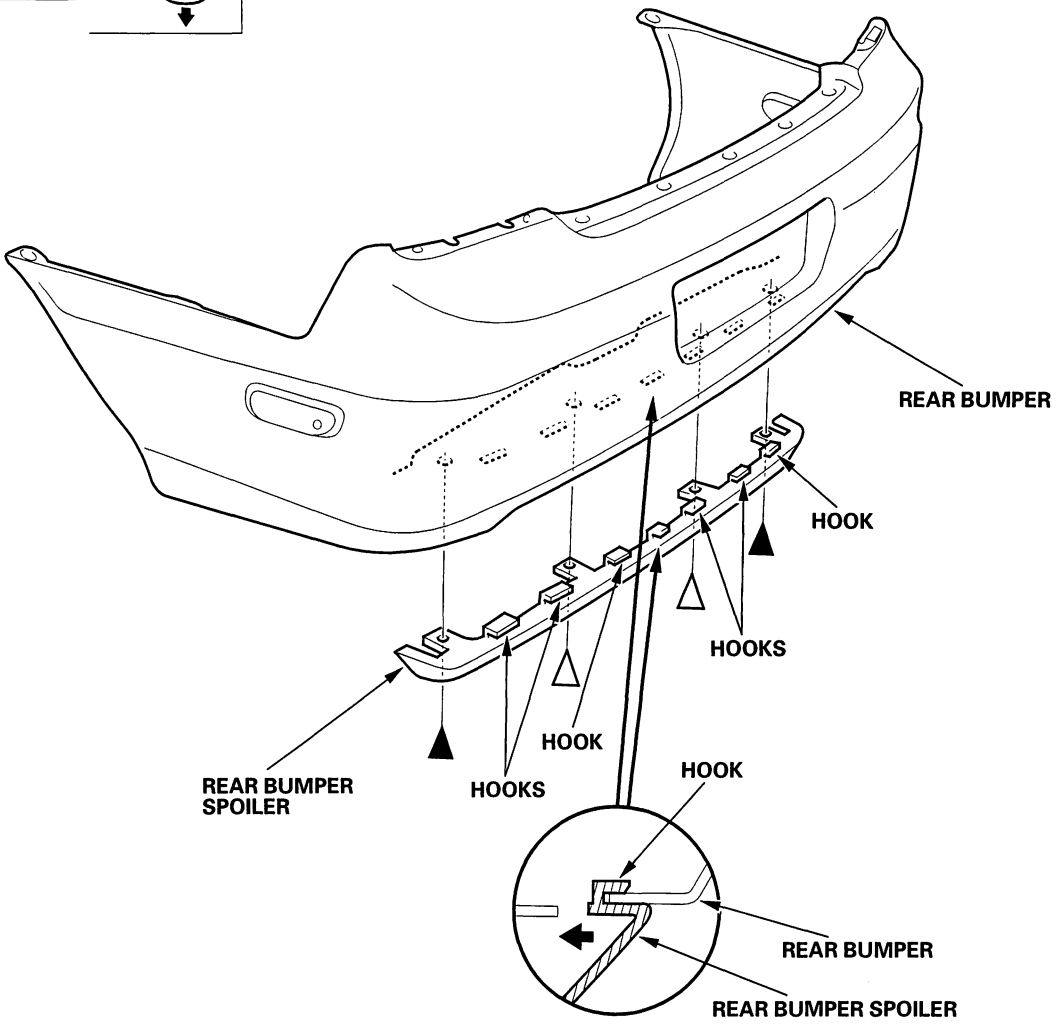

BACK

Replacement

1. Disconnect the windshield washer tubes (A) from the windshield washer nozzles (B), and release the windshield washer tube from the clips (C).

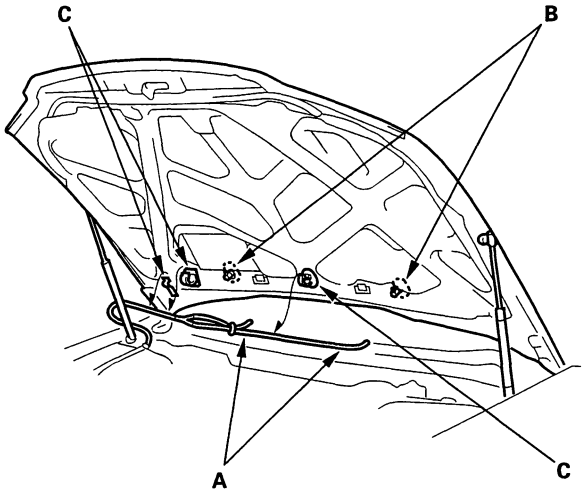

2. With a flat-tip screwdriver, pry the clips (A) out of the support struts (B) on each hood side, then release both support struts from the pivot bolts (C) with the help of an assistant. Do not remove the clips from the support struts. If necessary, release the support strut from the pivot bolt on the body, then remove the support strut.

Fastener Locations

▶ : Bolt, 4

	6 x 1.0 mm **9.8 N·m (1.0 kgf·m, 7.2 lbf·ft)**

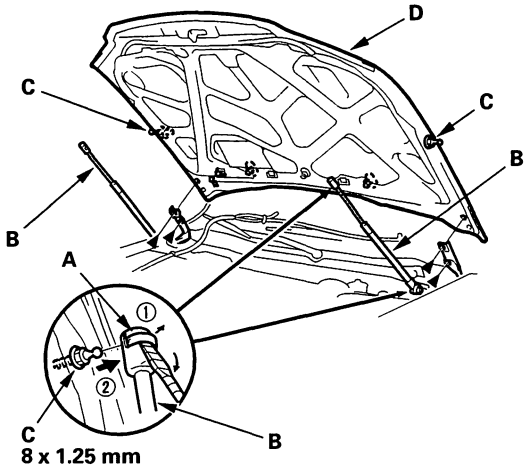

8 x 1.25 mm
22 N·m (2.2 kgf·m, 16 lbf·ft)

3. With the help of an assistant, remove the bolts, then remove the hood (D). Take care not to damage the hood and body.

4. Install the hood in the reverse order of removal, and note these items:

- Before reattaching the support struts, adjust the hood alignment.
- Make sure the hood opens properly and locks securely.
- Make sure the windshield washer tubes are connected properly.
- When reattaching the support struts, set the clips (A) to the original position, then attach the support struts (B) on the pivot bolts (C) by pushing the support strut.

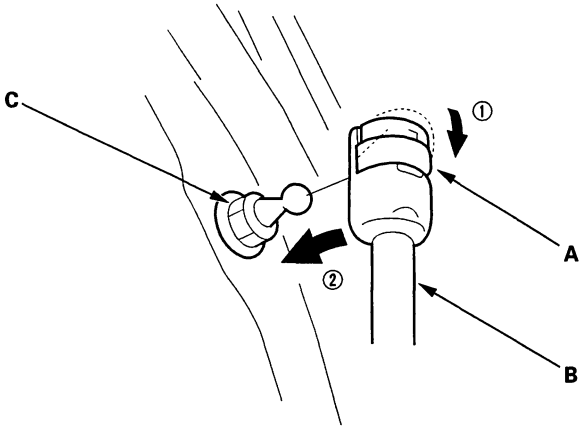

Emblem Replacement - Coupe

Apply the emblem where shown.

NOTE:
- Before applying, clean the rear bumper surface with a sponge dampened in alcohol.
- After cleaning, keep oil, grease and water from getting on the surface.

Attachment Point (Reference):

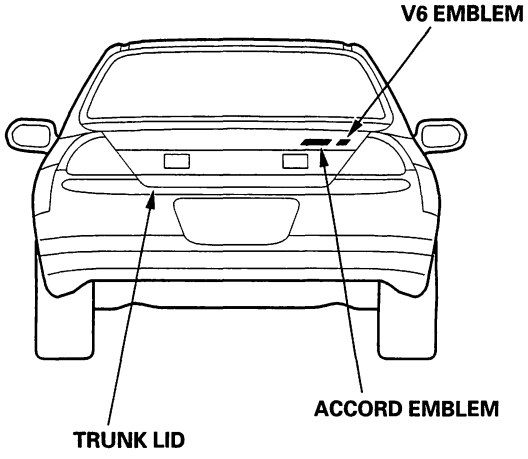

Unit: mm (in.)

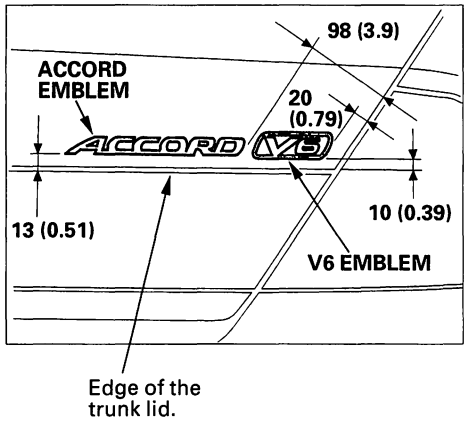

Emblem Replacement - Sedan

Apply the emblem where shown.

NOTE:
- Before applying, clean the rear bumper surface with a sponge dampened in alcohol.
- After cleaning, keep oil, grease and water from getting on the surface.

Attachment Point (Reference):

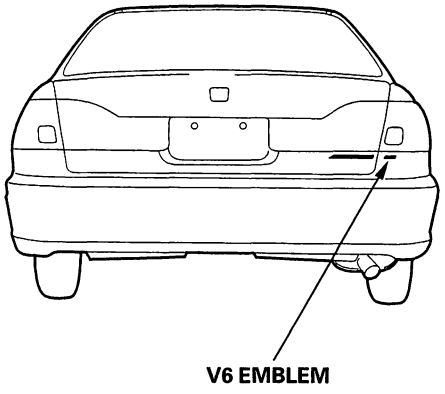

Unit: mm (in.)

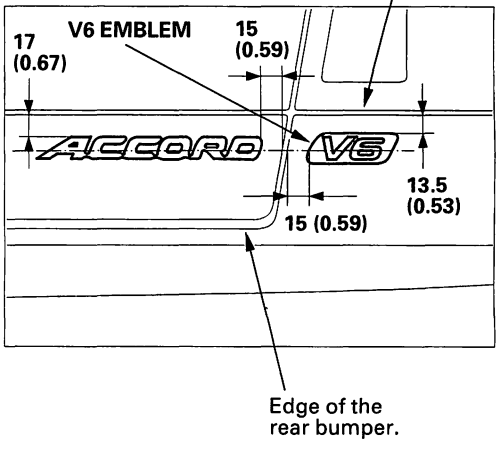

BACK

Sub-frame Replacement

After loosening the sub-frame mounting bolts, be sure to replace them with new ones.

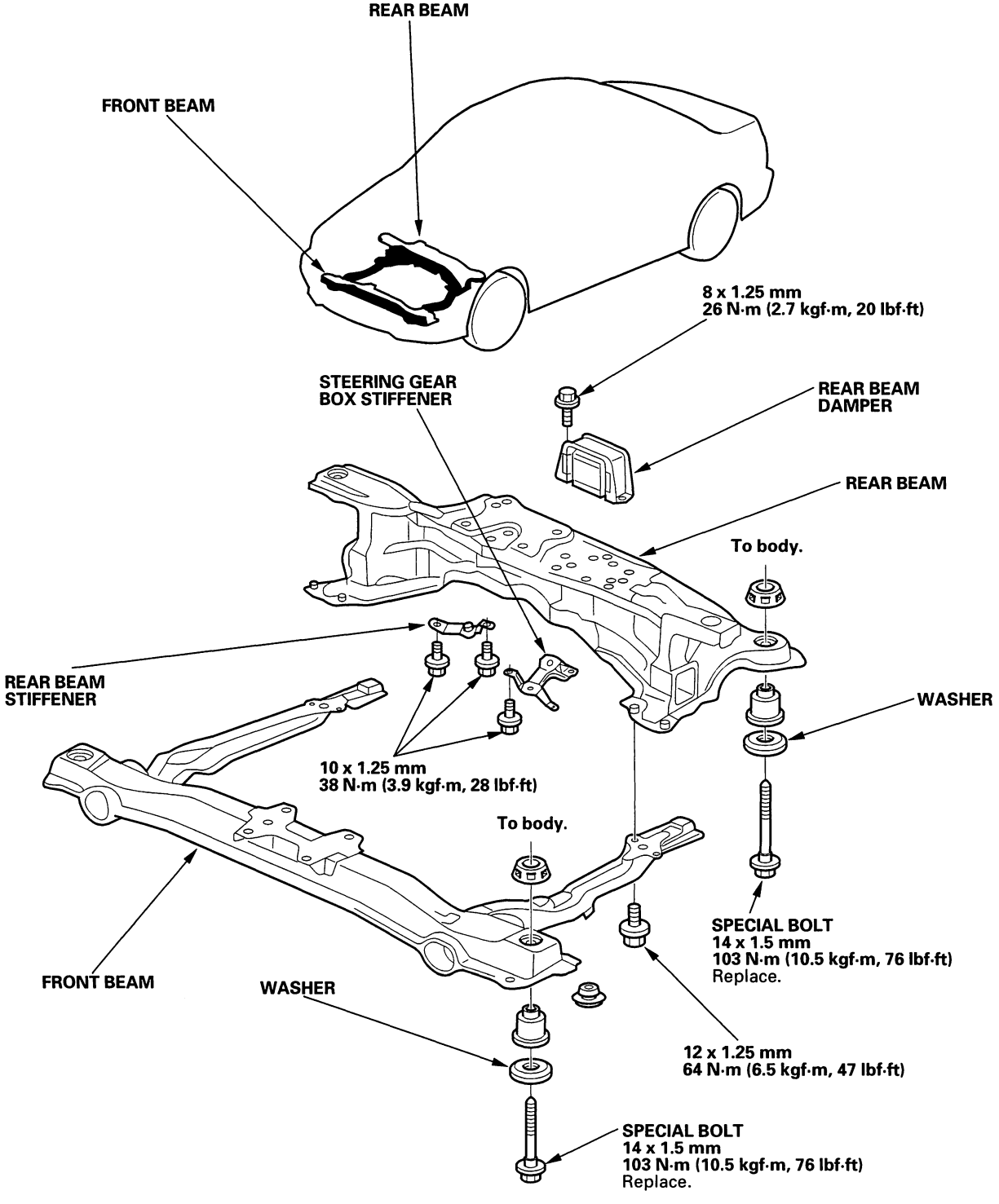

(cont'd)

Sub-frame Replacement (cont'd)

After loosening the sub-frame mounting bolts, be sure to replace them with new ones.

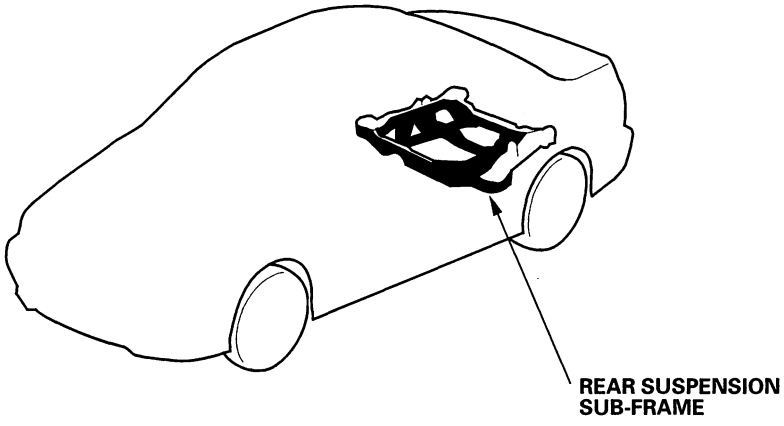

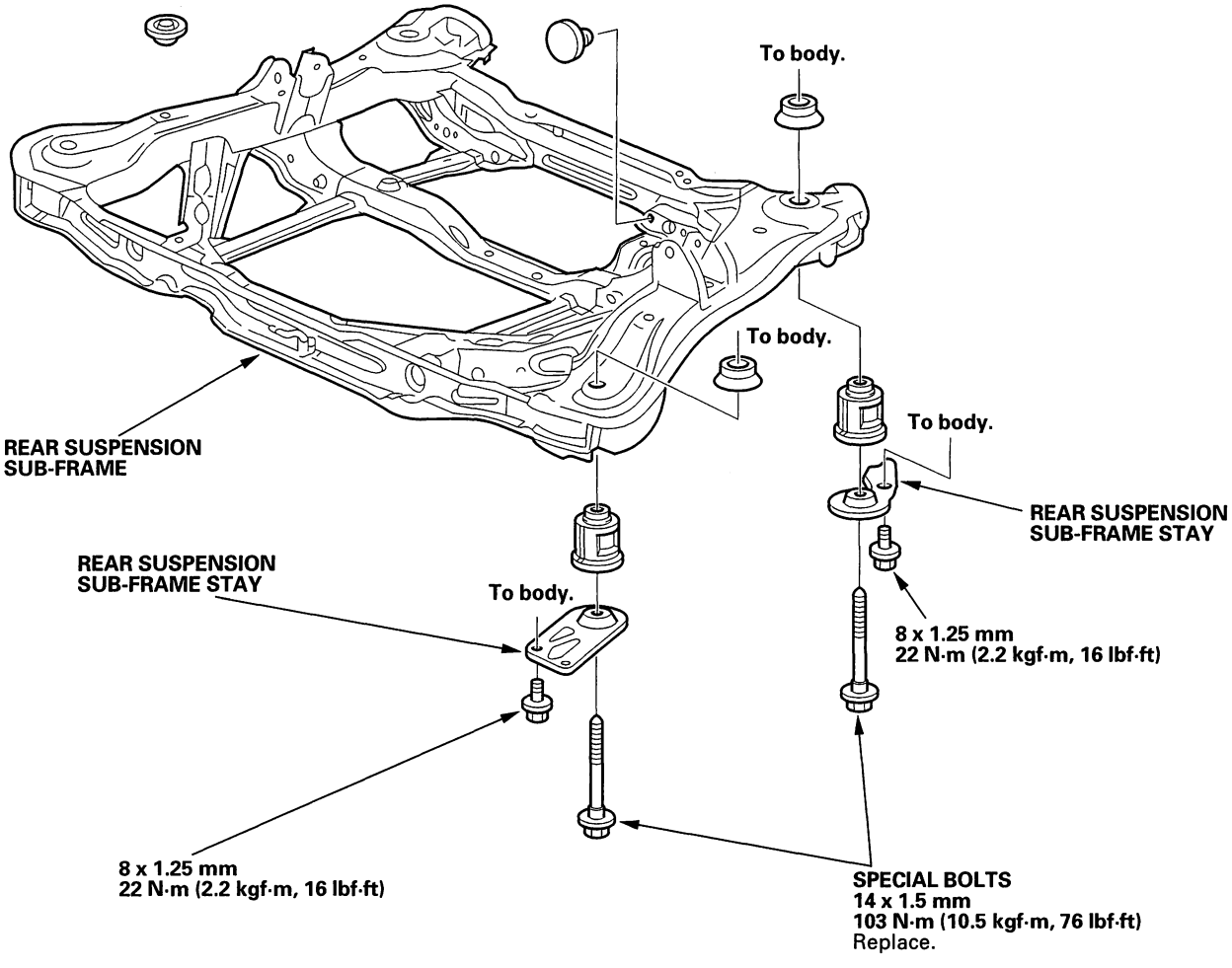

BACK

Frame Repair Chart

Top View

Unit : mm (in.)
ø: Inner diameter

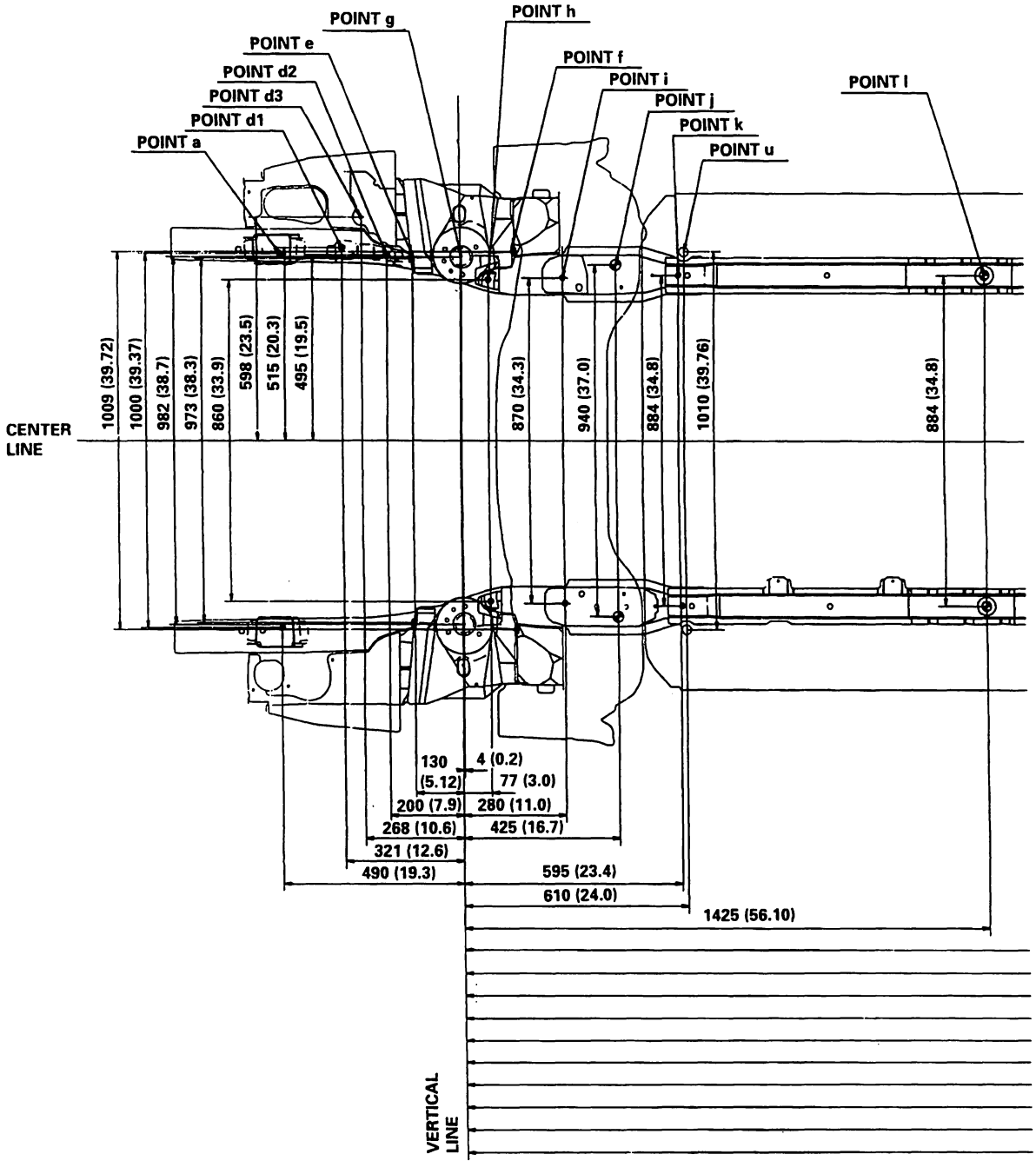

BACK

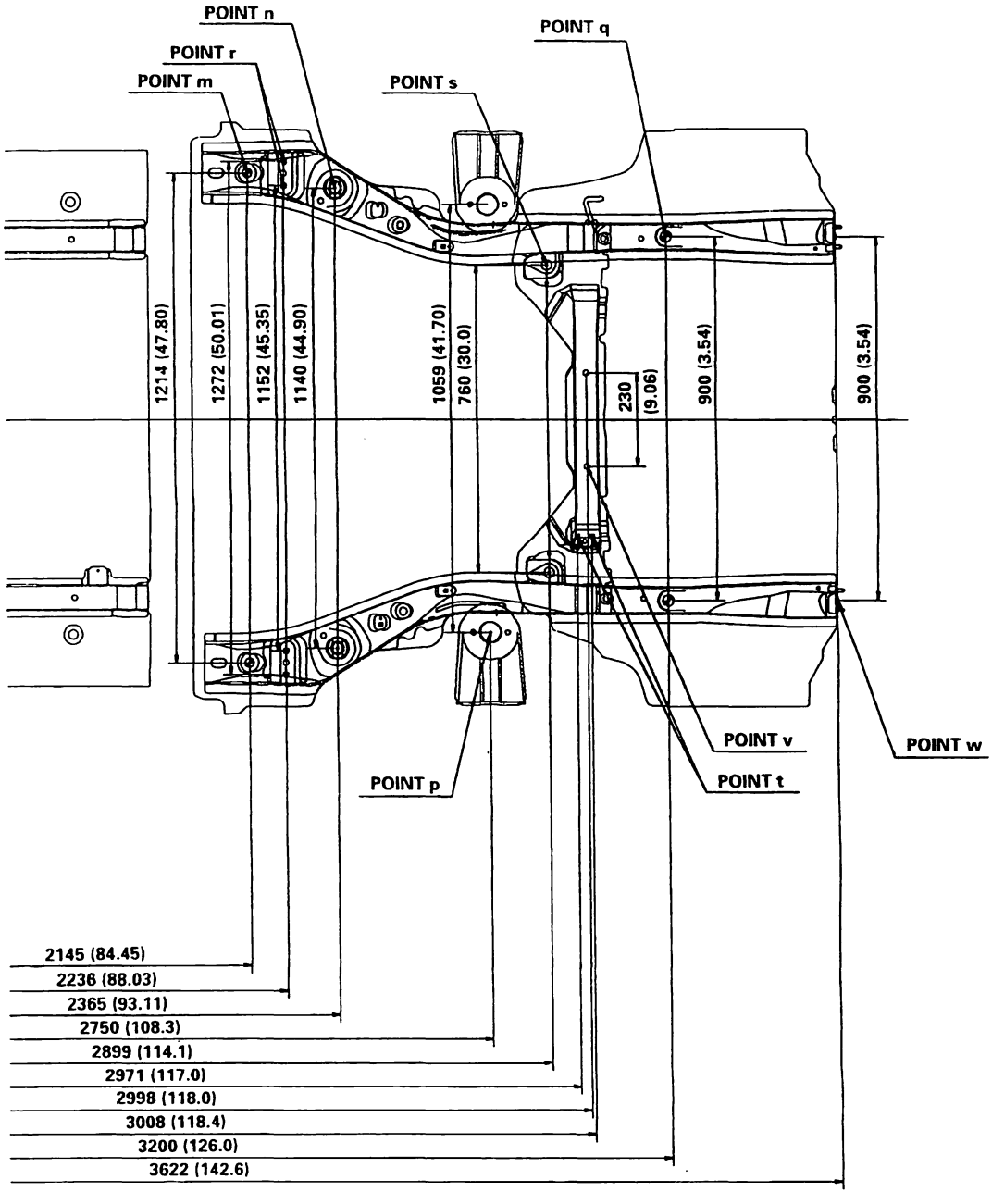
POINT n
POINT r
POINT m
POINT s
POINT q
1214 (47.80)
1272 (50.01)
1152 (45.35)
1140 (44.90)
1059 (41.70)
760 (30.0)
230
(9.06)
900 (3.54)
900 (3.54)
POINT v
POINT w
POINT t
POINT p
2145 (84.45)
2236 (88.03)
2365 (93.11)
2750 (108.3)
2899 (114.1)
2971 (117.0)
2998 (118.0)
3008 (118.4)
3200 (126.0)
3622 (142.6)

(cont'd)

BACK

Frame Repair Chart (cont'd)

Side View

Unit : mm (in.)
ø: Inner diameter

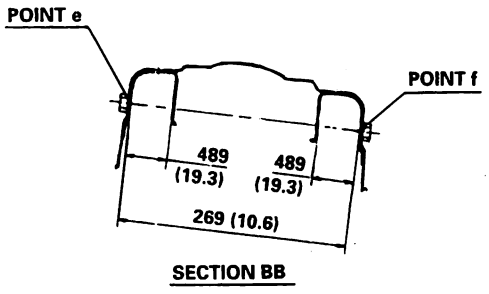

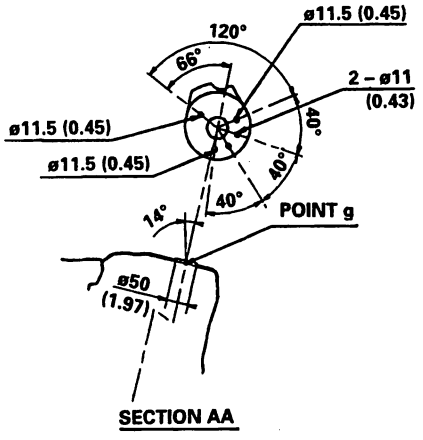

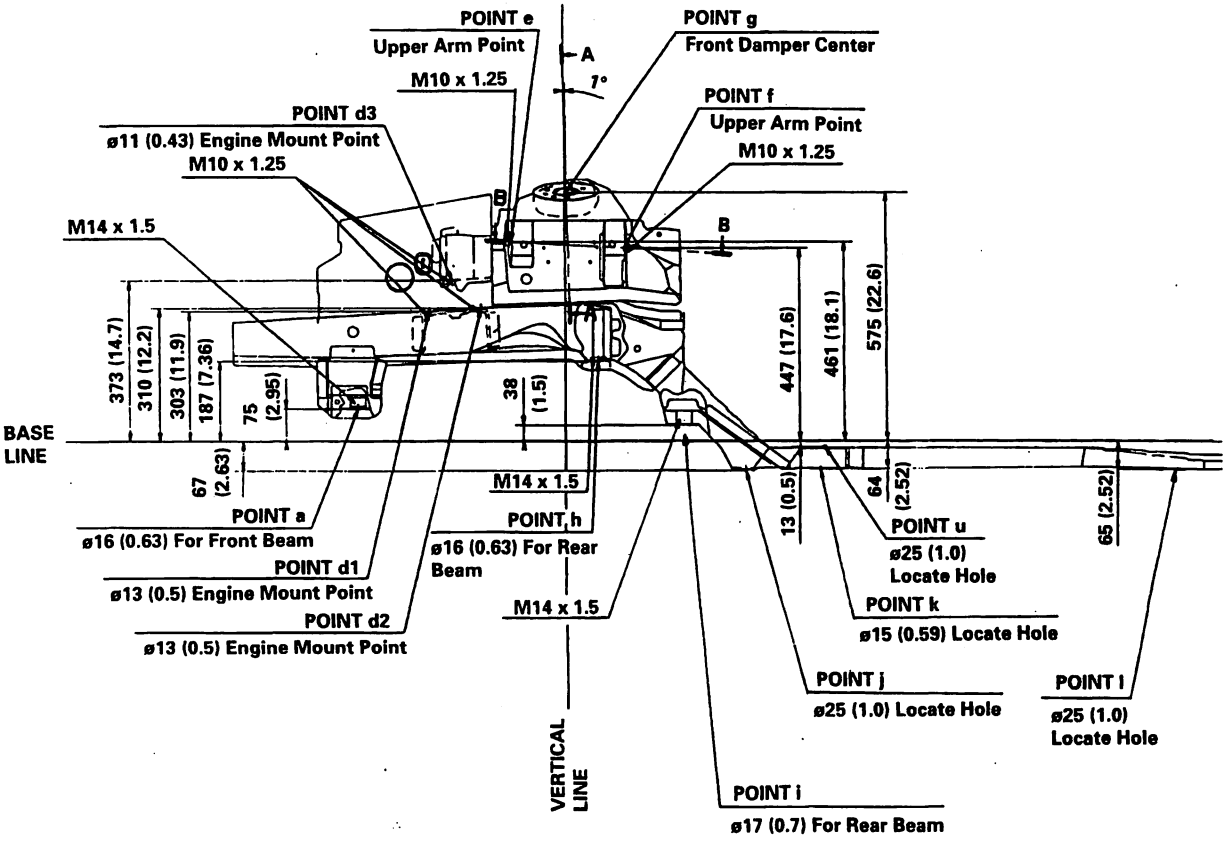

BACK

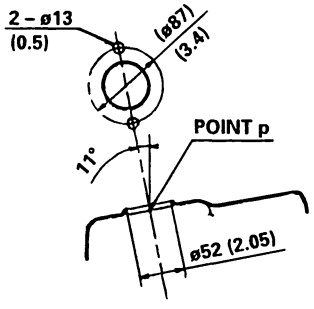
2 – ø13
(0.5)
(ø87)
(3.4)
POINT p
11°
ø52 (2.05)

SECTION DD

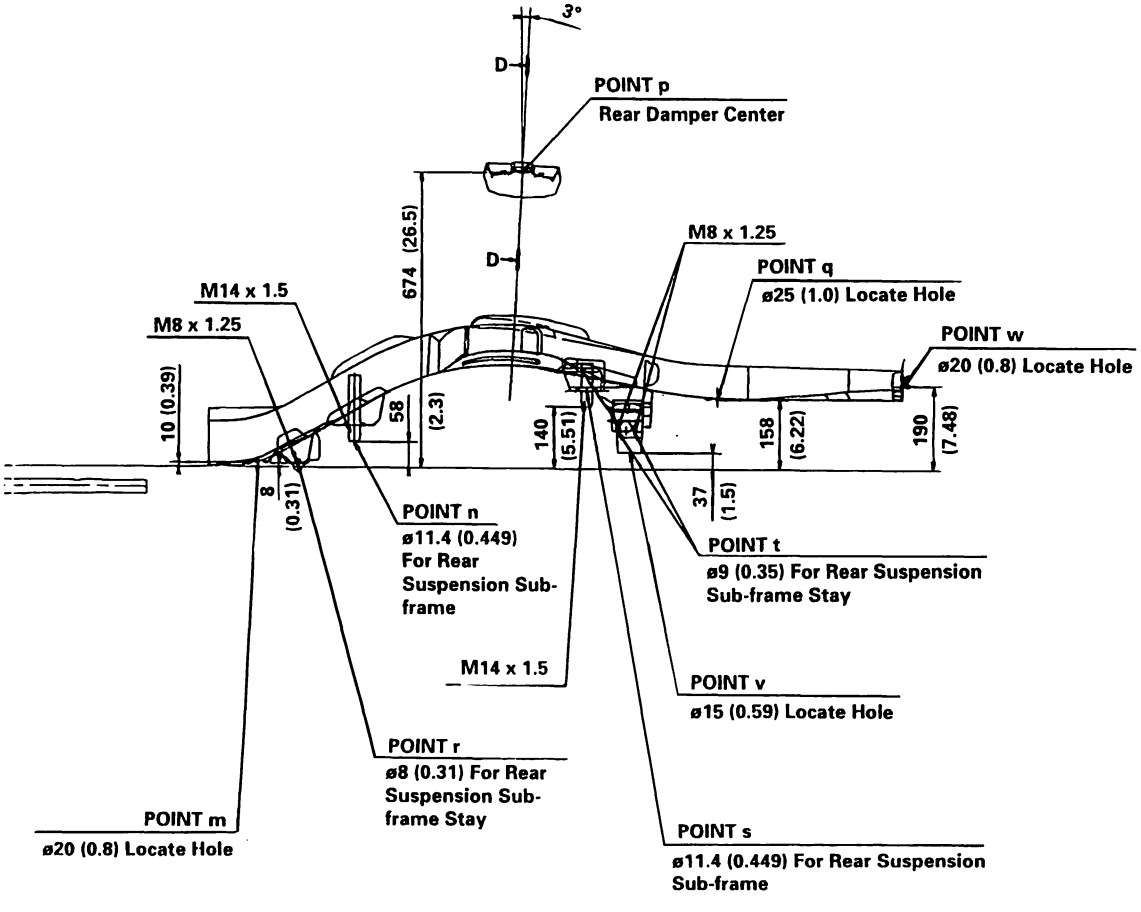
3°
D
POINT p
Rear Damper Center
674 (26.5)
D
M8 x 1.25
POINT q
ø25 (1.0) Locate Hole
M14 x 1.5
M8 x 1.25
POINT w
ø20 (0.8) Locate Hole
10 (0.39)
58
(2.3)
140
(5.51)
158
(6.22)
190
(7.48)
8
(0.31)
37
(1.5)
POINT n
ø11.4 (0.449)
For Rear
Suspension Sub-
frame
POINT t
ø9 (0.35) For Rear Suspension
Sub-frame Stay
M14 x 1.5
POINT v
ø15 (0.59) Locate Hole
POINT r
ø8 (0.31) For Rear
Suspension Sub-
frame Stay
POINT m
ø20 (0.8) Locate Hole
POINT s
ø11.4 (0.449) For Rear Suspension
Sub-frame

SUPPLEMENTAL RESTRAINT SYSTEM (SRS) (If HVAC maintenance is required)

The Accord Sedan/Coupe (V6) SRS includes a driver's airbag located in the steering wheel hub, a passenger's airbag located in the dashboard above the glove box, and side airbags ('00-02 models) located in the front seat-backs. Information necessary to safely service the SRS is included in the '98-02 Accord Sedan/Coupe (L4) Service Manual, P/N 61S8400. Items marked with an asterisk (*) on the contents page include or are located near SRS components. Servicing, disassembling, or replacing these items will require special precautions and tools, and should therefore be done by and authorized Honda dealer.

- To avoid rendering the SRS inoperative, which could lead to personal injury or death in the event of a severe frontal collision, all SRS service work must be performed by an authorized Honda dealer.
- Improper service procedures, including incorrect removal and installation of the SRS, could lead to personal injury caused by unintentional deployment of the frontal airbags (and side airbags on some '00-02 models).
- Do not bump the SRS unit, Otherwise, the system may fail in case of a collision, or the airbags may deploy when the ignition switch is ON (II).
- SRS electrical connectors are indicated with yellow color coding. Related components are located in the steering column, front console, dashboard, dashboard lower panel, in the dashboard above the glove box, in the front seats ('00-02 models) and around the floor ('00-02 models). Do not use electrical test equipment on these circuits.

BACK

HVAC (Heating, Ventilation, and Air Conditioning)

Air Conditioning

Special Tools 21-2
Component Location Index 21-3
A/C Refrigerant Oil Replacement 21-6
Symptom Troubleshooting Index 21-7
Circuit Diagram 21-8
Condenser Fan Circuit Troubleshooting 21-10
Radiator and Condenser Fans Common Circuit Troubleshooting 21-12
Heater Valve Cable Adjustment 21-13
A/C System Tests 21-15
Compressor Replacement ('98-00 model) 21-18
Compressor Clutch Check ('98-00 model) 21-20
Compressor Clutch Overhaul ('98-00 model) 21-21
Compressor Relief Valve Replacement ('98-00 model) 21-22
Compressor Replacement ('01-02 model) 21-23
Compressor Clutch Check ('01-02 model) 21-25
Compressor Clutch Overhaul ('01-02 model) 21-26
Compressor Relief Valve Replacement ('01-02 model) 21-27
Condenser Replacement 21-28
Refrigerant Leak Test 21-29
System Charging 21-30

Climate Control

Component Location Index 21-32
General Troubleshooting Information 21-34
DTC Troubleshooting Index 21-35
Symptom Troubleshooting Index 21-36
System Description 21-37
Circuit Diagram 21-38
DTC Troubleshooting 21-40
ECT Sensor Circuit Troubleshooting 21-56
Climate Control Power and Ground Circuits Troubleshooting 21-57
Recirculation Control Motor Circuit Troubleshooting ... 21-58
A/C Pressure Switch Circuit Troubleshooting 21-59
In-car Temperature Sensor Replacement and Test 21-61
Outside Air Temperature Sensor Replacement and Test 21-62
Sunlight Sensor Replacement and Test 21-63
Power Transistor Test 21-64
Climate Control Unit Removal and Installation 21-64
Climate Control Unit Disassembly and Reassembly 21-65

Refer to the 1998-2002 Accord Service Manual (P/N 61S8400) for items not shown in this section.

Outline of V6 Model Change

The air conditioning and climate control has been changed to suit the Accord V6.

Special Tools

Ref.No.	Tool Number	Description	Qty
①	07SAZ-001000A	Backprobe Set	2

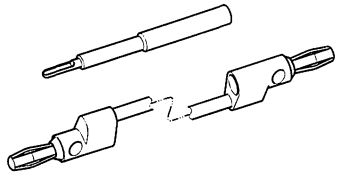

①

BACK

Component Location Index

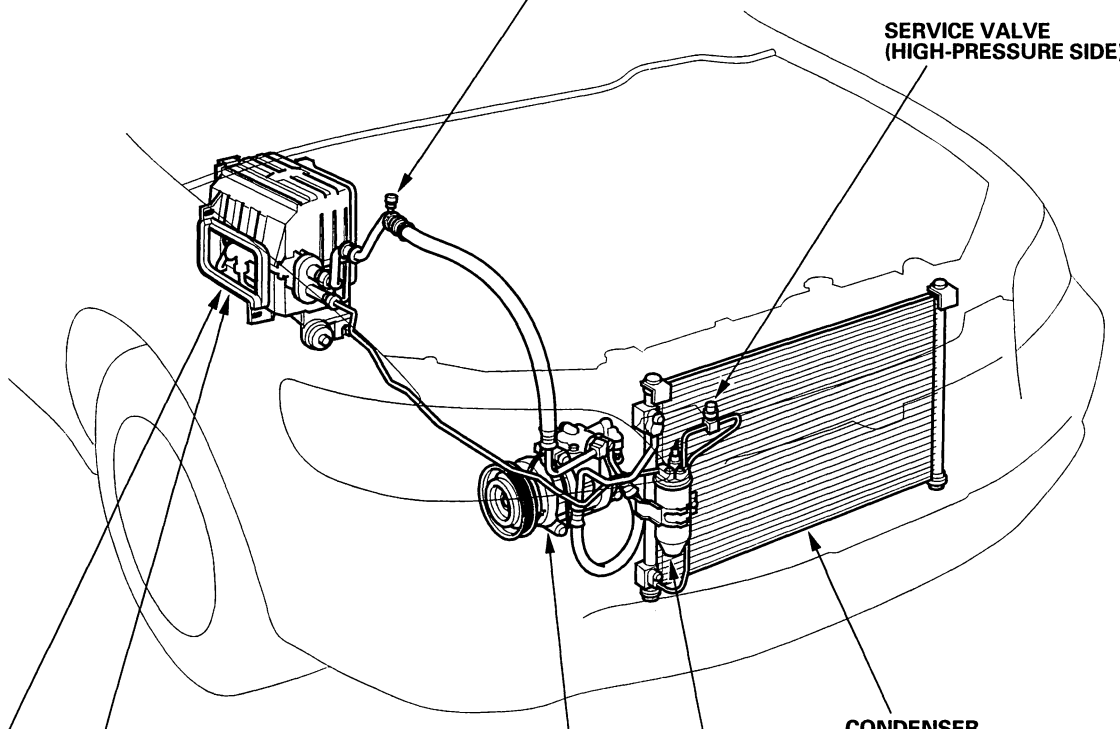

(cont'd)

Component Location Index (cont'd)

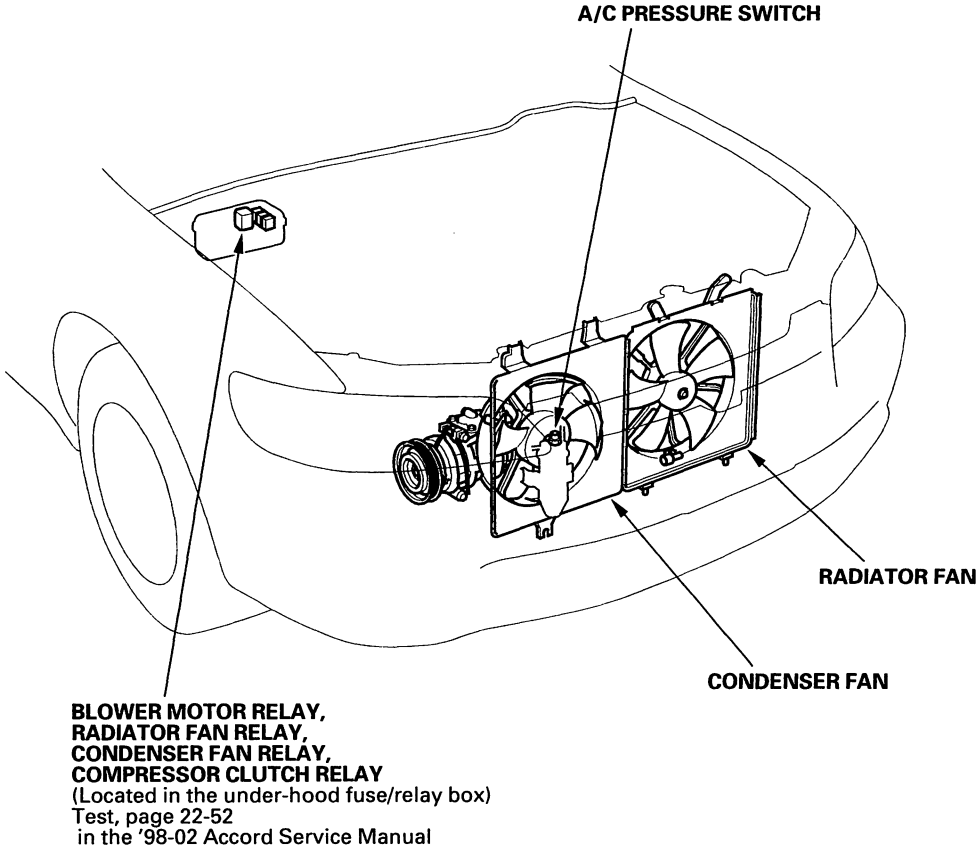

BACK

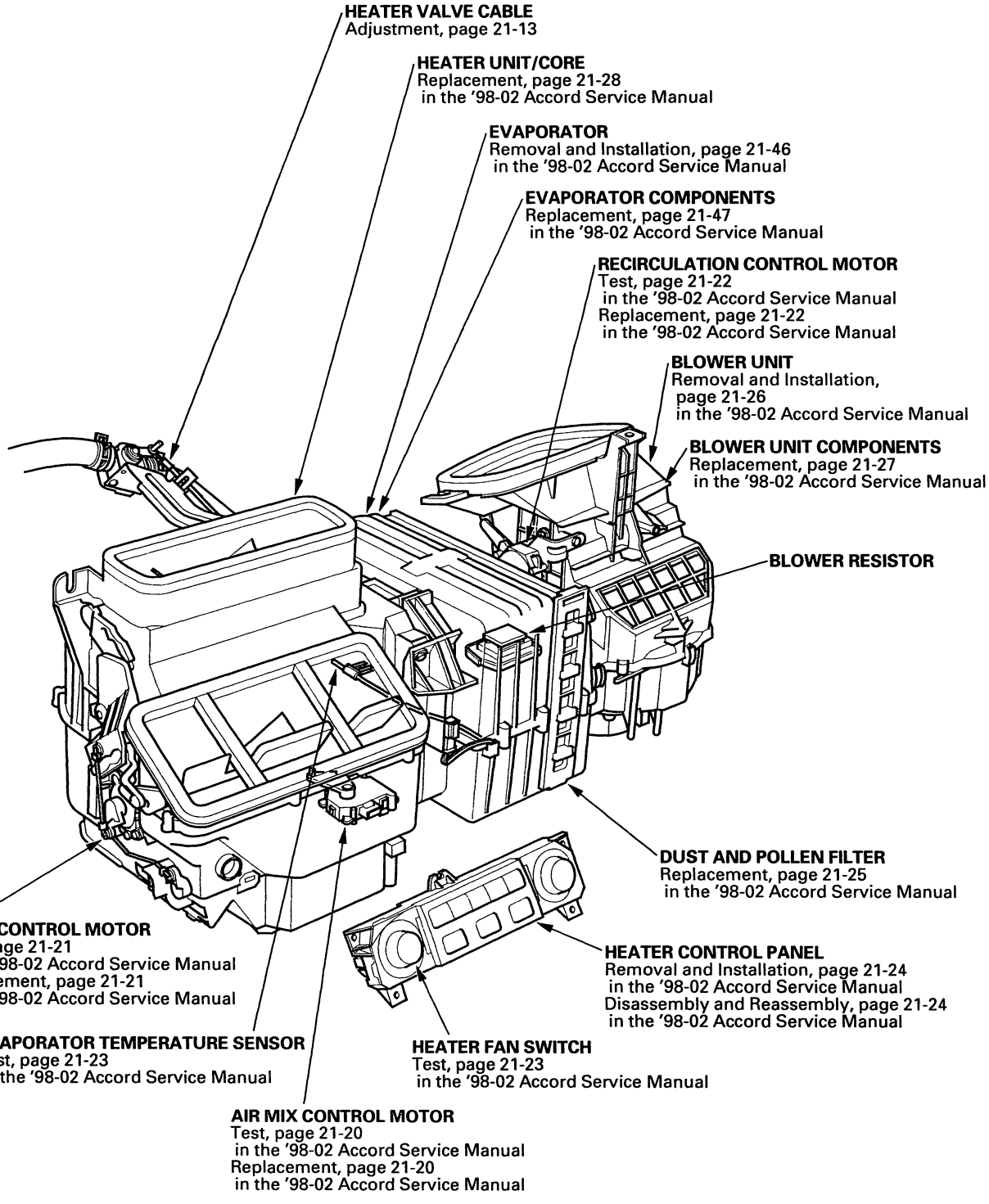
HEATER VALVE CABLE
Adjustment, page 21-13
HEATER UNIT/CORE
Replacement, page 21-28
in the '98-02 Accord Service Manual
EVAPORATOR
Removal and Installation, page 21-46
in the '98-02 Accord Service Manual
EVAPORATOR COMPONENTS
Replacement, page 21-47
in the '98-02 Accord Service Manual
RECIRCULATION CONTROL MOTOR
Test, page 21-22
in the '98-02 Accord Service Manual
Replacement, page 21-22
in the '98-02 Accord Service Manual
BLOWER UNIT
Removal and Installation,
page 21-26
in the '98-02 Accord Service Manual
BLOWER UNIT COMPONENTS
Replacement, page 21-27
in the '98-02 Accord Service Manual
BLOWER RESISTOR
DUST AND POLLEN FILTER
Replacement, page 21-25
in the '98-02 Accord Service Manual
MODE CONTROL MOTOR
Test, page 21-21
in the '98-02 Accord Service Manual
Replacement, page 21-21
in the '98-02 Accord Service Manual
HEATER CONTROL PANEL
Removal and Installation, page 21-24
in the '98-02 Accord Service Manual
Disassembly and Reassembly, page 21-24
in the '98-02 Accord Service Manual
EVAPORATOR TEMPERATURE SENSOR
Test, page 21-23
in the '98-02 Accord Service Manual
HEATER FAN SWITCH
Test, page 21-23
in the '98-02 Accord Service Manual
AIR MIX CONTROL MOTOR
Test, page 21-20
in the '98-02 Accord Service Manual
Replacement, page 21-20
in the '98-02 Accord Service Manual

BACK

A/C Refrigerant Oil Replacement

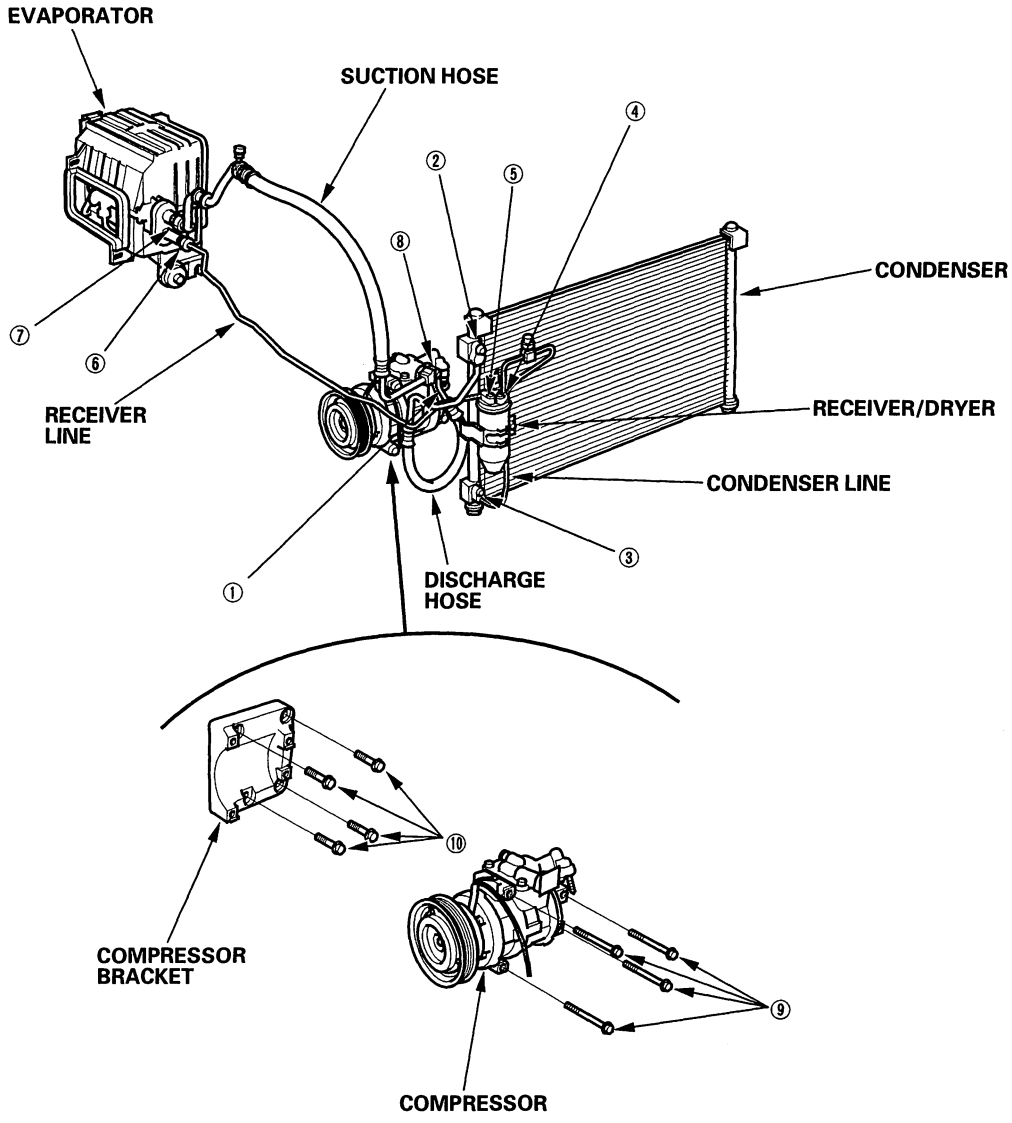

① Discharge hose to the compressor (6 x 1.0 mm) : 9.8 N·m (1.0 kgf·m, 7.2 lbf·ft)
② Discharge hose to the condenser (6 x 1.0 mm) : 9.8 N·m (1.0 kgf·m, 7.2 lbf·ft)
③ Condenser line to the condenser (6 x 1.0 mm) : 9.8 N·m (1.0 kgf·m, 7.2 lbf·ft)
④ Condenser line to the receiver/dryer : 9.8 N·m (1.0 kgf·m, 7.2 lbf·ft)
⑤ Receiver line to the receiver/dryer : 9.8 N·m (1.0 kgf·m, 7.2 lbf·ft)
⑥ Receiver line to the evaporator : 13 N·m (1.3 kgf·m, 9.4 lbf·ft)
⑦ Suction hose to the evaporator : 31 N·m (3.2 kgf·m, 23 lbf·ft)
⑧ Suction hose to the compressor (6 x 1.0 mm) : 9.8 N·m (1.0 kgf·m, 7.2 lbf·ft)
⑨ Compressor to compressor bracket (8 x 1.25 mm) : 22 N·m (2.2 kgf·m, 16 lbf·ft)
⑩ Compressor bracket to engine block (10 x 1.25 mm) : 44 N·m (4.5 kgf·m, 33 lbf·ft)

BACK

Symptom Troubleshooting Index

Symptom	Diagnostic procedure	Also check for
Recirculation control doors do not change between Fresh and Recirculate.	Recirculation Control Motor Circuit Troubleshooting, refer to the '98-02 Accord Service Manual (see page 21-14)	• Blown fuse No. 3 (7.5A) in the driver's under-dash fuse/relay box • Cleanliness and tightness of all connectors
Blower motor runs, but one or more speeds are inoperative.	Blower Motor Circuit Troubleshooting, refer to the '98-02 Accord Service Manual (see page 21-15)	• Blown fuse No. 56 (40A) in the under-hood fuse/relay box, and No. 3 (7.5A) in the driver's under-dash fuse/relay box • Poor ground at G202 and G401 • Cleanliness and tightness of all connectors
Blower motor does not run at all.	Blower Motor Circuit Troubleshooting, refer to the '98-02 Accord Service Manual (see page 21-15)	• Blown fuse No. 56 (40A) in the under-hood fuse/relay box, and No. 3 (7.5A) in the driver's under-dash fuse/relay box • Poor ground at G202 and G401 • Cleanliness and tightness of all connectors
Condenser fan does not run at all (but radiator fan runs with the A/C on).	Condenser Fan Circuit Troubleshooting (see page 21-10)	• Blown fuse No. 58 (20A) in the under-hood fuse/relay box, and No. 3 (7.5A) in the driver's under-dash fuse/relay box • Poor ground at G201 • Cleanliness and tightness of all connectors
Both fans do not run with the A/C on.	Radiator and Condenser Fans Common Circuit Troubleshooting (see page 21-12)	• Blown fuse No. 57 (20A) and No. 58 (20A) in the under-hood fuse/relay box, and No. 3 (7.5A) in the driver's under-dash fuse/relay box • Poor ground at G201 • Cleanliness and tightness of all connectors
Compressor clutch does not engage.	Compressor Clutch Circuit Troubleshooting, refer to the '98-02 Accord Service Manual (see page 21-39)	• Blown fuse No. 58 (20A) in the under-hood fuse/relay box, and No. 3 (7.5A) in the driver's under-dash fuse/relay box • Cleanliness and tightness of all connectors
A/C system does not come on (both fans and compressor).	A/C Pressure Switch Circuit Troubleshooting, refer to the '98-02 Accord Service Manual (see page 21-41)	Cleanliness and tightness of all connectors
Both heater and A/C do not work.	Heater Control Power and Ground Circuits Troubleshooting, refer to the '98-02 Accord Service Manual (see page 21-19)	• Blown fuse No. 54 (40A) in the under-hood fuse/relay box, No. 3 (7.5A) in the driver's under-dash fuse/relay box, and No. 13 (7.5A) in the passenger's under-dash fuse/relay box • Poor ground at G202 and G401 • Cleanliness and tightness of all connectors

Circuit Diagram

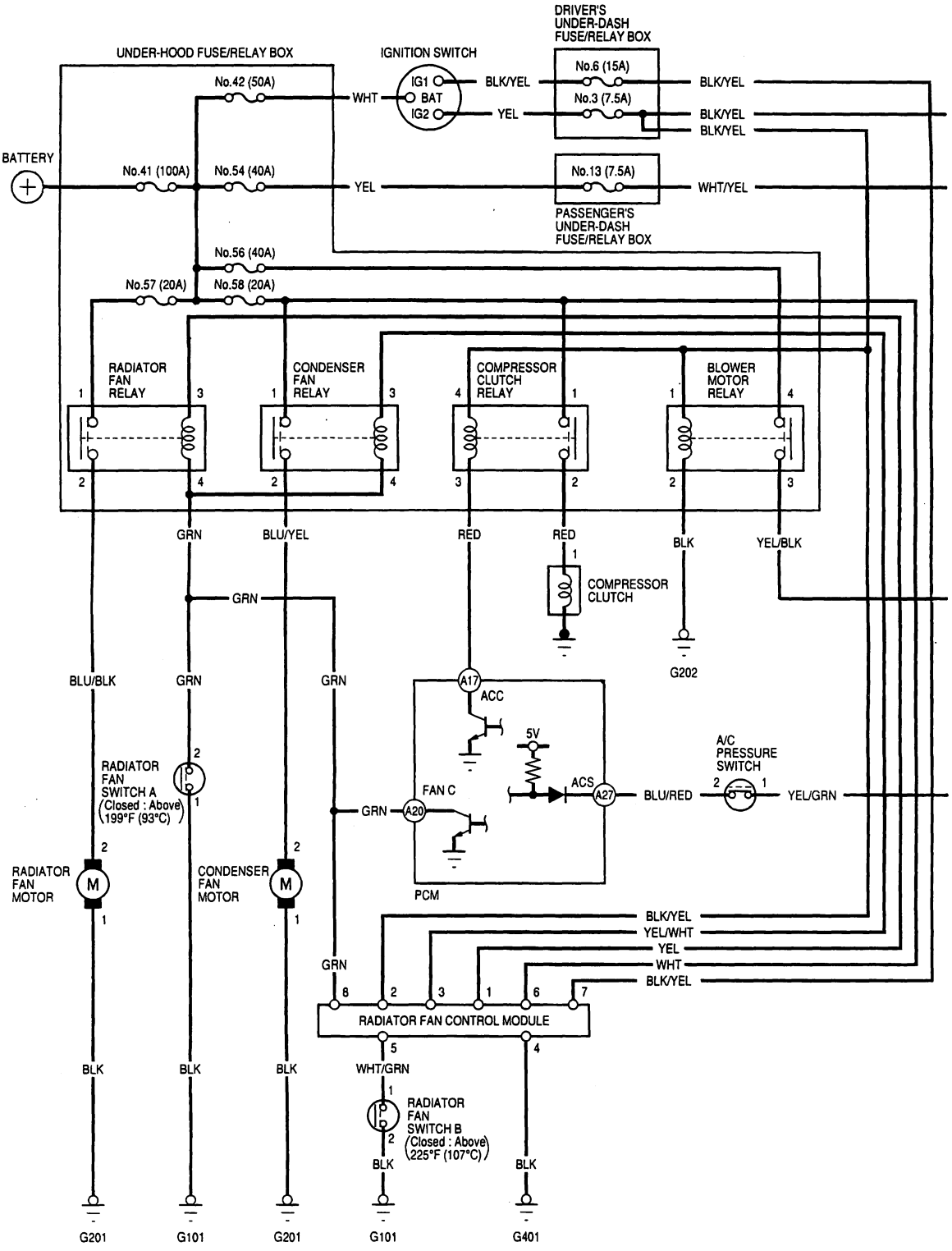

BACK

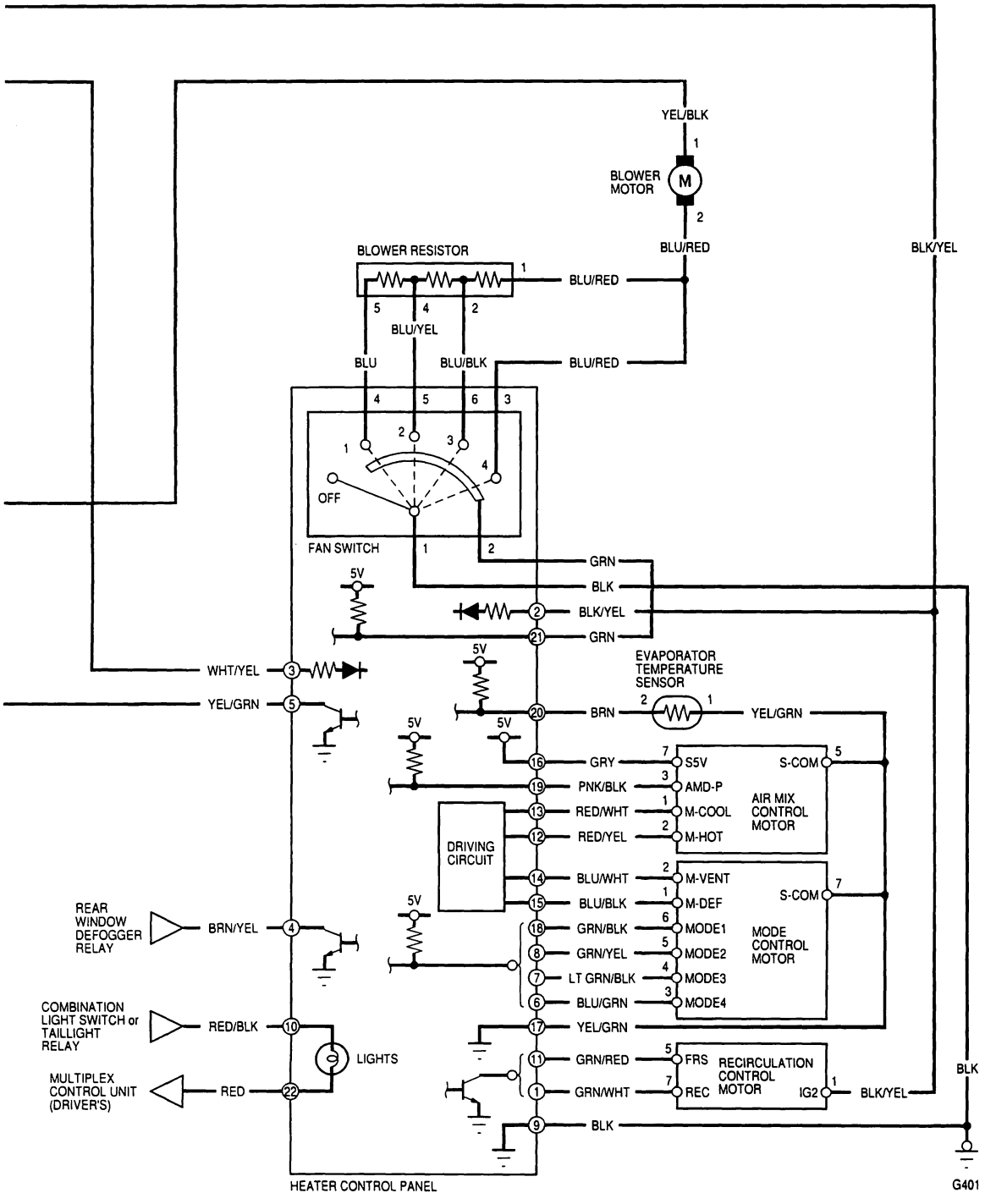
YEL/BLK
BLOWER MOTOR
M
BLU/RED
BLK/YEL
BLOWER RESISTOR
BLU/RED
BLU/YEL
BLU
BLU/BLK
BLU/RED
OFF
FAN SWITCH
GRN
BLK
BLK/YEL
GRN
5V
WHT/YEL
YEL/GRN
EVAPORATOR TEMPERATURE SENSOR
BRN
YEL/GRN
GRY
PNK/BLK
RED/WHT
RED/YEL
S5V
AMD-P
M-COOL
M-HOT
S-COM
AIR MIX CONTROL MOTOR
DRIVING CIRCUIT
BLU/WHT
BLU/BLK
M-VENT
M-DEF
S-COM
REAR WINDOW DEFOGGER RELAY
BRN/YEL
GRN/BLK
GRN/YEL
LT GRN/BLK
BLU/GRN
MODE1
MODE2
MODE3
MODE4
MODE CONTROL MOTOR
COMBINATION LIGHT SWITCH or TAILLIGHT RELAY
RED/BLK
LIGHTS
YEL/GRN
MULTIPLEX CONTROL UNIT (DRIVER'S)
RED
GRN/RED
GRN/WHT
FRS
REC
RECIRCULATION CONTROL MOTOR
IG2
BLK/YEL
BLK
BLK
HEATER CONTROL PANEL
G401

BACK

Condenser Fan Circuit Troubleshooting

1. Check the No. 58 (20 A) fuse in the under-hood fuse/relay box, and the No. 3 (7.5 A) fuse in the driver's under-dash fuse/relay box.

   Are the fuses OK?

   YES—Go to step 2.

   NO—Replace the fuse(s), and recheck.■

2. Remove the condenser fan relay from the under-hood fuse/relay box, and test it, refer to the '98-02 Accord Service Manual (see page 21-52).

   Is the relay OK?

   YES—Go to step 3.

   NO—Replace the condenser fan relay.■

3. Measure the voltage between the No. 1 terminal of the condenser fan relay 4P socket and body ground.

   CONDENSER FAN RELAY 4P SOCKET

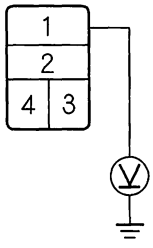

   Is there battery voltage?

   YES—Go to step 4.

   NO—Replace the under-hood fuse/relay box.■

4. Connect the No. 1 and No. 2 terminals of the condenser fan relay 4P socket with a jumper wire.

   CONDENSER FAN RELAY 4P SOCKET

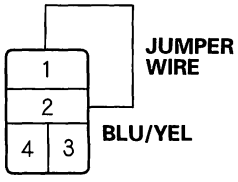

   Does the condenser fan run?

   YES—Go to step 5.

   NO—Go to step 9.

5. Disconnect the jumper wire.

6. Turn the ignition switch ON (II).

7. Measure the voltage between the No. 3 terminal of the condenser fan relay 4P socket and body ground.

   CONDENSER FAN RELAY 4P SOCKET

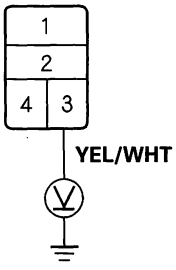

   Is there battery voltage?

   YES—Replace the under-hood fuse/relay box.■

   NO—Go to step 8.

BACK

8. Measure the voltage between the No. 3 terminal of the radiator fan control module 8P connector and body ground with the 8P connector connected.

RADIATOR FAN CONTROL MODULE 8P CONNECTOR

Wire side of female terminals

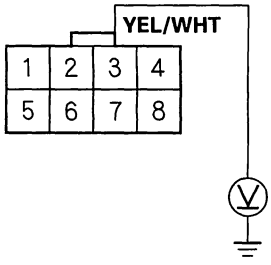

Is there battery voltage?

YES—Repair open in the wire between the condenser fan relay and the radiator fan control module.■

NO—Perform the radiator fan control module input tests (see page 10-20).■

9. Disconnect the jumper wire.

10. Disconnect the condenser fan 2P connector.

11. Check for continuity between the No. 2 terminal of the condenser fan relay 4P socket and the No. 2 terminal of the condenser fan 2P connector.

CONDENSER FAN RELAY 4P SOCKET

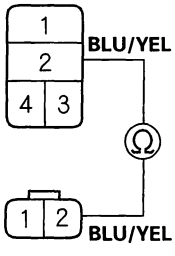

CONDENSER FAN 2P CONNECTOR
Wire side of female terminals

Is there continuity?

YES—Go to step 12.

NO—Repair open in the wire between the condenser fan relay and the condenser fan.■

12. Check for continuity between the No. 1 terminal of the condenser fan 2P connector and body ground.

CONDENSER FAN 2P CONNECTOR

Wire side of female terminals

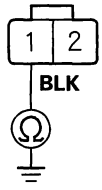

Is there continuity?

YES—Replace the condenser fan motor.■

NO—Check for an open in the wire between the condenser fan and body ground. If the wire is OK, check for poor ground at G201.■

Radiator and Condenser Fans Common Circuit Troubleshooting

1. Check the No. 57 (20 A) and No. 58 (20 A) fuses in the under-hood fuse/relay box, and the No. 3 (7.5 A) fuse in the driver's under-dash fuse/relay box.

   Are the fuses OK?

   YES—Go to step 2.

   NO—Replace the fuse(s), and recheck.■

2. Remove the condenser fan relay from the under-hood fuse/relay box.

3. Turn the ignition switch ON (II).

4. Measure the voltage between the No. 3 terminal of the condenser fan relay 4P socket and body ground.

CONDENSER FAN RELAY 4P SOCKET

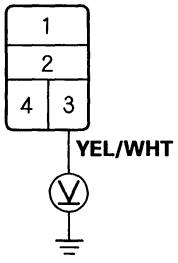

   Is there battery voltage?

   YES—Go to step 5.

   NO—Perform the radiator fan control module input tests (see page 10-20).■

5. Turn the ignition switch OFF.

6. Reinstall the condenser fan relay.

7. Make sure the A/C switch is OFF.

8. Turn the ignition switch ON (II).

9. Using a Backprobe Set, measure the voltage between the No. 20 terminal of the PCM connector A (32P) and body ground with the PCM connectors connected.

PCM CONNECTOR A (32P)

Wire side of female terminals

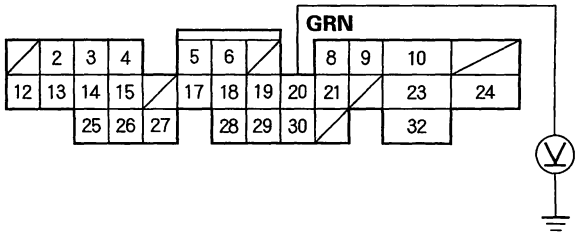

   Is there battery voltage?

   YES—Check for loose wires or poor connections at the PCM connector A(32P). If the connections are good, substitute a known-good PCM, and recheck. If the symptom/indication goes away, replace the original PCM.■

   NO—Repair open in the wire between the radiator fan relay, the condenser fan relay and PCM.■

BACK

Heater Valve Cable Adjustment

1. From under the hood, open the cable clamp (A), then disconnect the heater valve cable (B) from the heater valve arm (C).

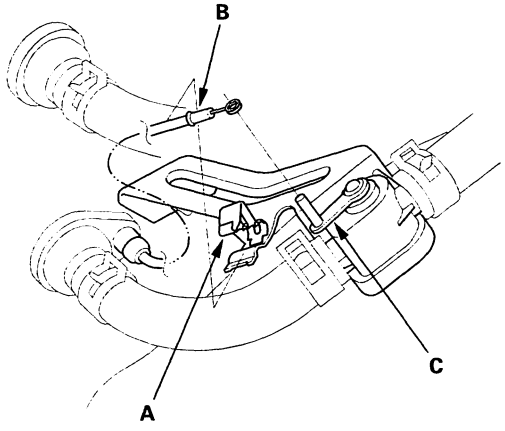

2. From under the dash, disconnect the heater valve cable housing from the cable clamp (A), and disconnect the heater valve cable (B) from the air mix control linkage (C).

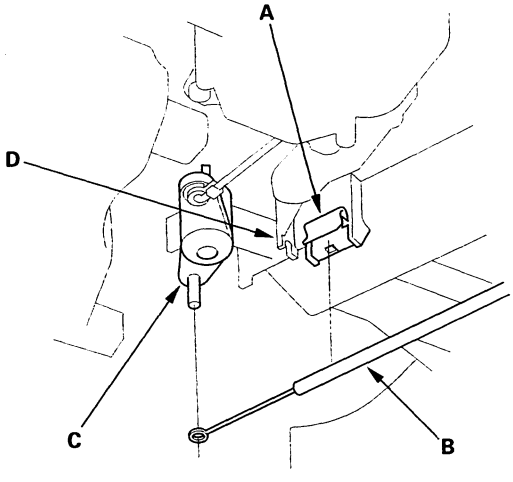

3. Set the temperature control dial on Max Cool (60°F or 18°C) with the ignition switch ON (II).

4. Attach the heater valve cable (B) to the air mix control linkage (C) as shown above. Hold the end of the heater valve cable housing against the stop (D), then snap the heater valve cable housing into the cable clamp (A).

5. From under the hood, turn the heater valve arm (C) to the fully closed position as shown, and hold it. Attach the heater valve cable (B) to the heater valve arm, and gently pull on the heater valve cable housing to take up any slack, then install the heater valve cable housing into the cable clamp (A).

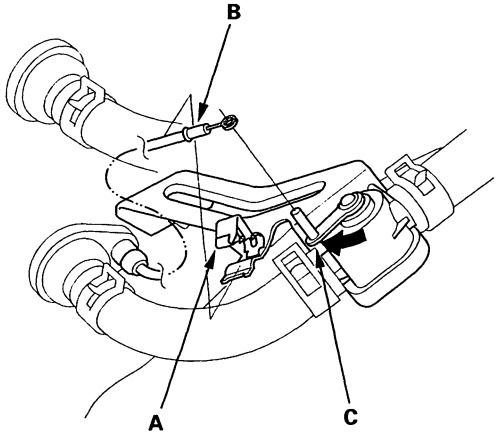

BACK

A/C System Tests

Pressure Test

Test results	Related symptoms	Probable cause	Remedy
Discharge (high) pressure abnormally high	After stopping compressor, pressure drops to about 196 kPa (2.0 kgf/cm², 28 psi) quickly, and then falls gradually.	Air in system	Recover, evacuate, refer to the '98-02 Accord Service Manual (see page 21-55), and recharge with specified amount (see page 21-30)
	Reduced or no air flow through condenser	• Clogged condenser or radiator fins • Condenser or radiator fan not working properly	• Clean • Check voltage and fan rpm. • Check fan direction.
	Line to condenser is excessively hot.	Restricted flow of refrigerant in system	Restricted lines
Discharge pressure abnormally low	High and low pressures are balanced soon after stopping compressor. Low side is higher than normal.	• Faulty compressor discharge valve • Faulty compressor seal	Replace the compressor.
	Outlet of expansion valve is not frosted, low-pressure gauge indicates vacuum.	• Faulty expansion valve • Moisture in system	• Replace • Recover, evacuate, and recharge with specified amount.
Suction (low) pressure abnormally low	Expansion valve is not frosted, and low-pressure line is not cold. Low-pressure gauge indicates vacuum.	• Frozen expansion valve (Moisture in system) • Faulty expansion valve	• Recover, evacuate, and recharge with specified amount. • Replace the expansion valve.
	Discharge temperature is low, and the air flow from vents is restricted.	Frozen evaporator	Run the fan with compressor off, then check evaporator temperature sensor.
	Expansion valve is frosted.	Clogged expansion valve	Clean or replace.
	Receiver/dryer outlet is cool, and inlet is warm (should be warm during operation).	Clogged receiver/dryer	Replace
Suction pressure abnormally high	Low-pressure hose and check joint are cooler than the temperature around evaporator.	• Expansion valve open too long • Loose expansion capillary tube	Repair or replace.
	Suction pressure is lowered when condenser is cooled by water.	Excessive refrigerant in system	Recover, evacuate, and recharge with specified amount.
	High and low-pressure are equalized as soon as the compressor is stopped, and both gauges fluctuate while running.	• Faulty gasket • Faulty high-pressure valve • Foreign particle stuck in high-pressure valve	Replace the compressor.
Suction and discharge pressures abnormally high	Reduced air flow through condenser.	• Clogged condenser or radiator fins • Condenser or radiator fan not working properly	• Clean • Check voltage and fan rpm. • Check fan direction.
Suction and discharge pressure abnormally low	Low-pressure hose and metal end areas are cooler than evaporator.	Clogged or kinked low-pressure hose parts	Repair or replace.
	Temperature around expansion valve is too low compared with that around receiver/dryer.	Clogged high-pressure line	Repair or replace.
Refrigerant leaks	Compressor clutch is dirty.	Compressor shaft seal leaking	Replace the compressor.
	Compressor bolt(s) are dirty.	Leaking around bolt(s)	Tighten bolt(s) or replace compressor.
	Compressor gasket is wet with oil.	Gasket leaking	Replace the compressor.

(cont'd)

A/C System Tests (cont'd)

Performance Test

⚠ WARNING

- Compressed air mixed with R-134a forms a combustible vapor.
- The vapor can burn or explode causing serious injury.
- Never use compressed air to pressure test R-134a service equipment or vehicle air conditioning systems.

⚠ CAUTION

- Air conditioning refrigerant or lubricant vapor can irritate your eyes, nose, or throat.
- Be careful when connecting service equipment.
- Do not breathe refrigerant or vapor.

The performance test will help determine if the air conditioner system is operating within specifications.

Use only service equipment that is U.L.-listed and is certified to meet the requirements of SAE J2210 to remove HFC-134a (R-134a) from the air conditioning system.

If accidental system discharge occurs, ventilate work area before resuming service.

R-134a service equipment or vehicle air conditioning systems should not be pressure tested or leak tested with compressed air.

Additional health and safety information may be obtained from the refrigerant and lubricant manufacturers.

1. Connect a R-134a refrigerant recover/recycling/charging station to the high-pressure service port and the low-pressure service port, following the equipment manufacturer's instructions.

2. Determine the relative humidity and air temperature.

3. Insert a thermometer in the center air vent.

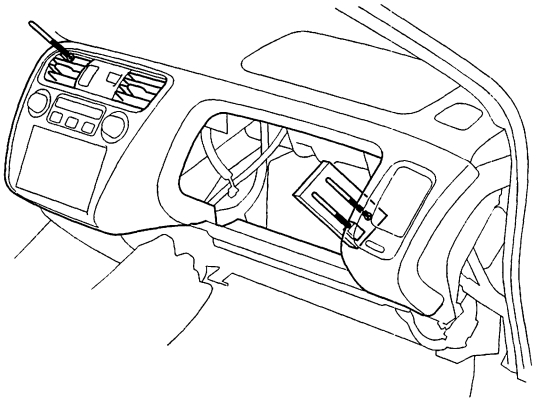

4. Test conditions:

   - Avoid direct sunlight.
   - Open the hood.
   - Open the front doors.
   - Set the temperature control dial on Max Cool, the mode control switch on Vent and the recirculation control switch on Recirculate.
   - Turn the A/C switch on and the fan switch on Max.
   - Run the engine at 1,500 rpm.
   - No driver or passengers in vehicle.

5. After running the air conditioning for 10 minutes under the above test conditions, read the delivery temperature from the thermometer in the dash vent, the intake temperature near the blower unit behind the glove box and the high and low system pressure from the A/C gauges.

BACK

6. To complete the charts:

- Mark the delivery temperature along the vertical line.
- Mark the intake temperature (ambient air temperature) along the bottom line.
- Draw a line straight up from the air temperature to the humidity.
- Mark a point 10 % above and 10 % below the humidity level.
- From each point, draw a horizontal line across the delivery temperature.
- The delivery temperature should fall between the two lines.
- Complete the low-side pressure test and high-side pressure test in the same way.
- Any measurements outside the line may indicate the need for further inspection.

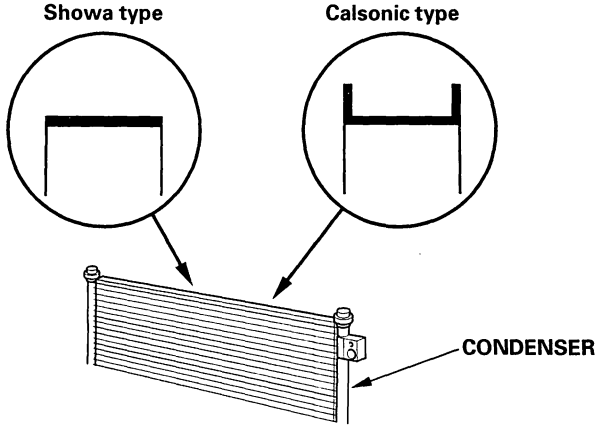

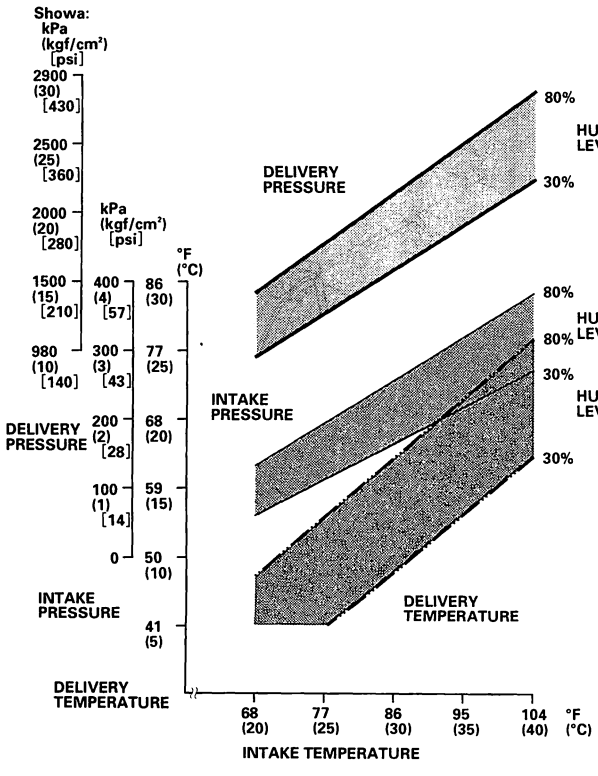

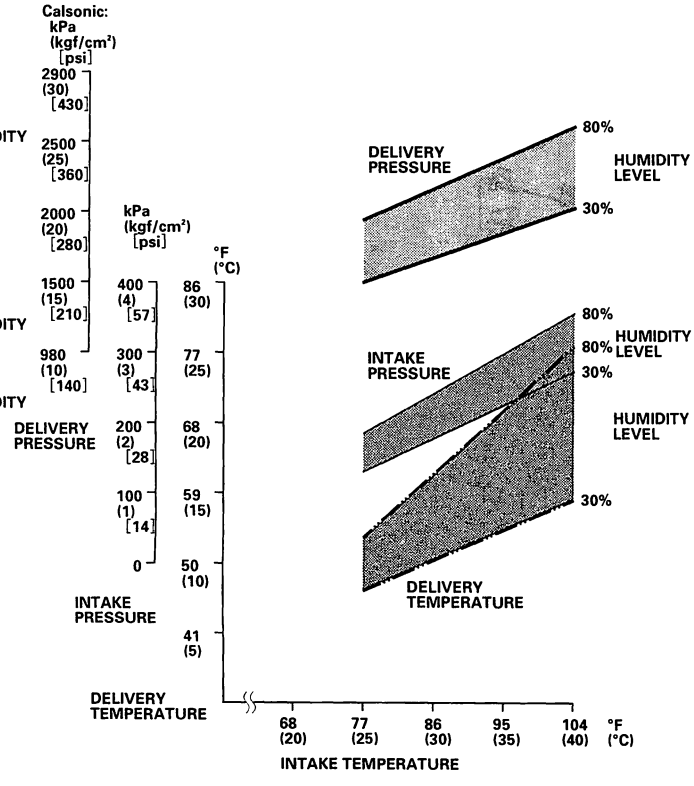

Compressor Replacement ('98-00 model)

1. If the compressor is marginally operable, run the engine at idle speed, and let the air conditioning work for a few minutes, then shut the engine off.

2. Make sure you have the anti-theft code for the radio, then write down the frequencies for the radio's preset buttons.

3. Disconnect the negative cable from the battery.

4. Recover the refrigerant with a recovery/recycling/charging station, refer to the '98-02 Accord Service Manual (see page 21-54).

5. Remove the alternator (see page 4-31).

6. Remove the compressor clutch connector (A) from the condenser fan shroud (B), then disconnect the compressor clutch connector. Disconnect the condenser fan connector (C), then remove the wire harness clips (D) from the condenser fan shroud. Remove the cruise control actuator cable (E) from the clamp. Loosen the lower mounting bolt, then remove the upper mounting bolts and the condenser fan shroud. Be careful not to damage the radiator fins when removing the condenser fan shroud.

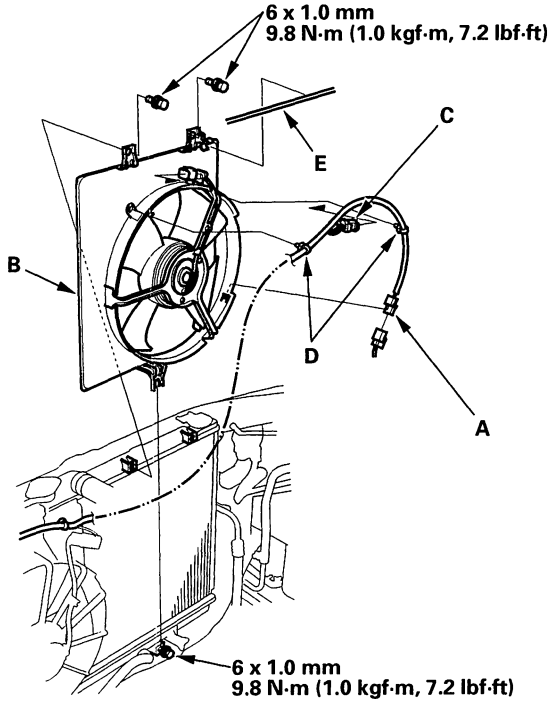

7. Remove the bolt and the nut, then disconnect the suction (A) and discharge (B) lines from the compressor. Plug or cap the lines immediately after disconnecting them to avoid moisture and dust contamination.

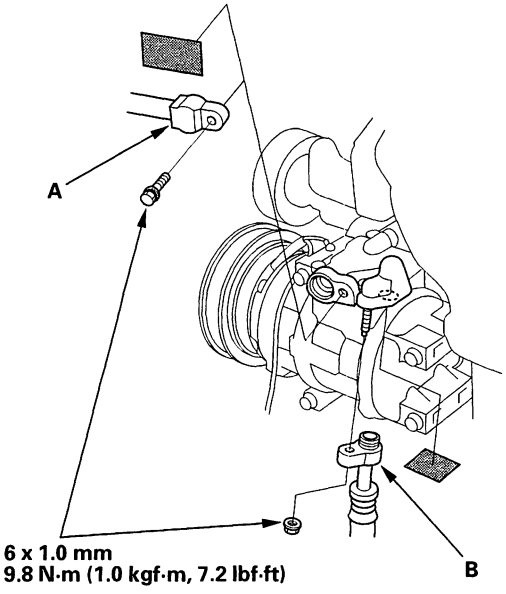

8. Remove the mounting bolts and the compressor. Be careful not to damage the radiator fins when removing the compressor.

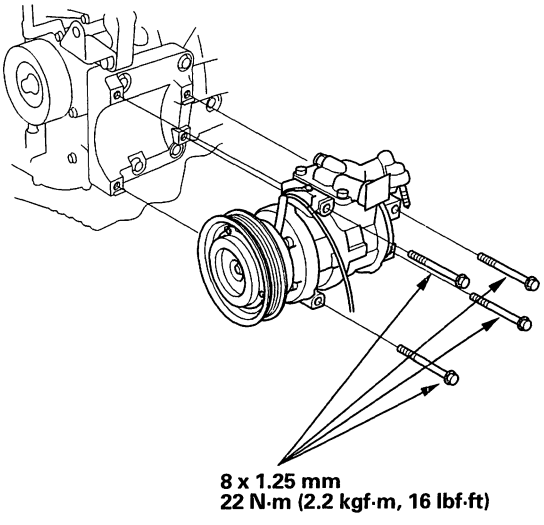

BACK

9. Remove the bolts, the suction service valve (A) and the O-ring (B) from the compressor.

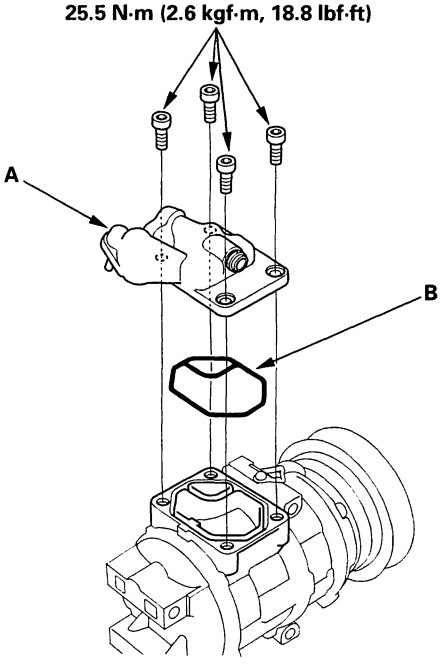

10. If necessary, remove the mounting bolts and the compressor bracket.

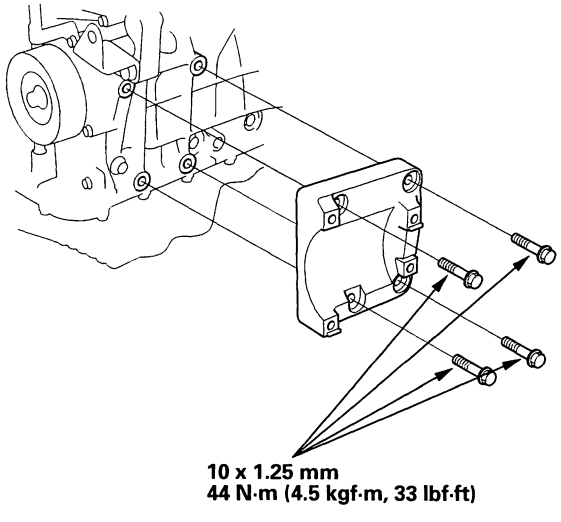

11. Install the compressor in the reverse order of removal, and note these items:

- If you're installing a new compressor, you must calculate the amount of refrigerant oil to be removed from it, refer to the '98-02 Accord Service Manual (see page 21-32).
- Replace the O-rings with new ones at each fitting, and apply a thin coat of refrigerant oil before installing them. Be sure to use the right O-rings for HFC-134a (R-134a) to avoid leakage.
- Use refrigerant oil (DENSO ND-OIL 8) for HFC-134a DENSO piston type compressor only.
- To avoid contamination, do not return the oil to the container once dispensed, and never mix it with other refrigerant oils.
- Immediately after using the oil, replace the cap on the container, and seal it to avoid moisture absorption.
- Do not spill the refrigerant oil on the vehicle; it may damage the paint; if the refrigerant oil contacts the paint, wash it off immediately.
- Be careful not to damage the radiator fins when installing the compressor and the condenser fan shroud.
- Charge the system (see page 21-30).
- Enter the anti-theft code for the radio, then enter the customer's radio station presets.

Compressor Clutch Check ('98-00 model)

1. Check the plated parts of the pressure plate for color changes, peeling or other damage. If there is damage, replace the clutch set (see page 21-21).

2. Check the pulley bearing play and drag by rotating the pulley by hand. Replace the clutch set with a new one if it is noisy or has excessive play/drag (see page 21-21).

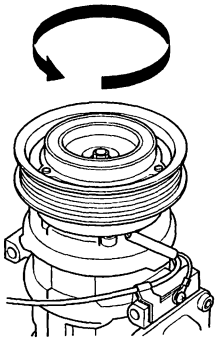

3. Measure the clearance betweenn the pulley (A) and the pressure plate (B) with a dial indicator. Zero out the indicator, then apply battery voltage to the compressor clutch. Measure the movement of the pressure plate when the voltage is applied. If the clearance is not within the specified limits, the pressure plate must be reshimed (see page 21-21).

   Clearance: 0.5±0.15 mm (0.020±0.006 in)

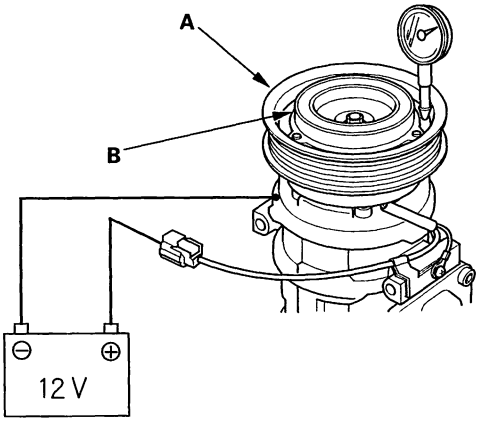

4. Check resistance of the field coil. If resistance is not within specifications, replace the field coil (see page 21-21).

   Field Coil Resistance: 3.4−3.8 ohms at 68°F (20°C)

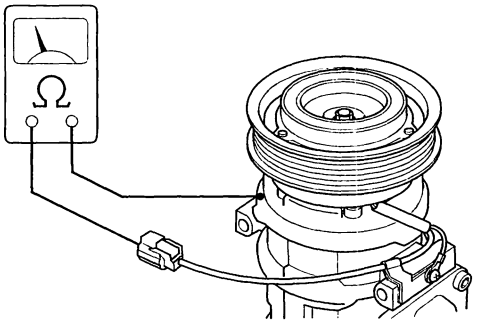

BACK

Compressor Clutch Overhaul ('98-00 model)

Special Tool Required
A/C clutch holder, Robinair 10204, Kent-Moore J37872, or Honda Tool and Equipment KMT-J33939, commercially available

1. Remove the center bolt while holding the pressure plate with a commercially available A/C clutch holder.

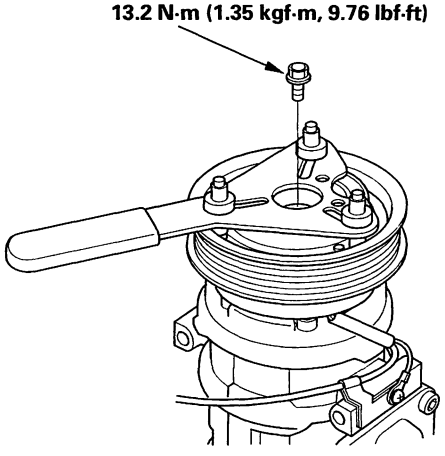

2. Remove the pressure plate (A) and shim(s) (B), taking care not to lose the shim(s). If the clutch needs adjustment, increase or decrease the number and thickness of shims as nesessary, then reinstall the pressure plate, and recheck its clearance (see page 21-20).

   NOTE: The shims are available in four thicknesses: 0.1 mm, 0.3 mm, 0.5 mm, and 1.5 mm.

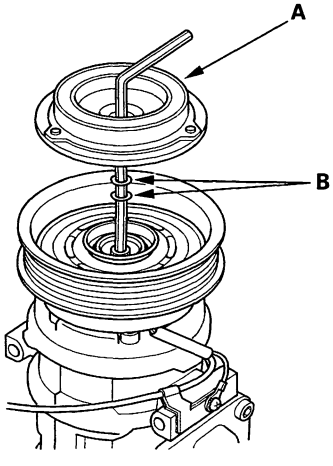

3. If you are replacing the field coil, remove the snap ring (A) with snap ring pliers, then remove the pulley (B). Be careful not to damage the pulley and compressor.

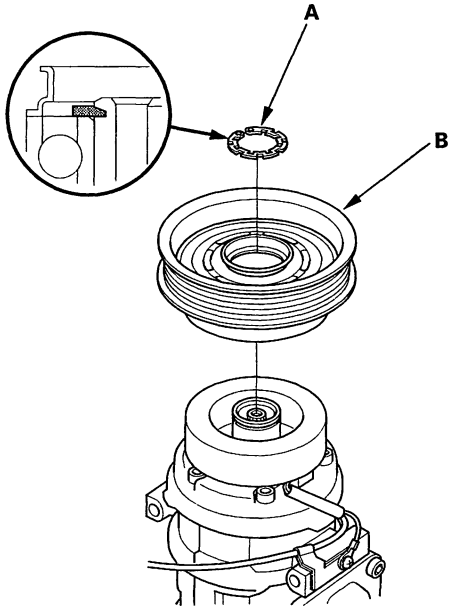

4. Remove the screw from the field coil ground terminal (A). Remove the snap ring (B) with snap ring pliers, then remove the field coil (C). Be careful not to damage the field coil and compressor.

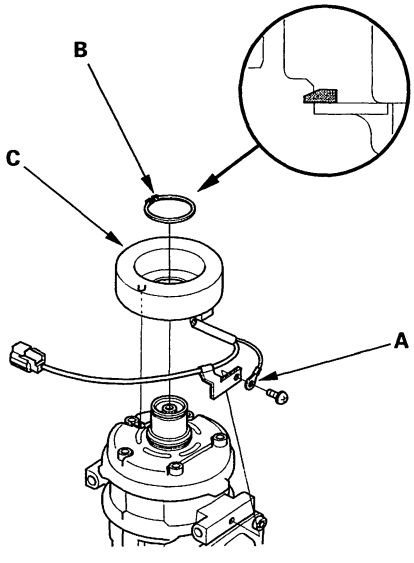

(cont'd)

Compressor Clutch Overhaul ('98-00 model) (cont'd)

5. Reassemble the clutch in the reverse order of disassembly, and note these items:

   - Install the field coil with the wire side facing down, and align the boss on the field coil with the hole in the compressor.
   - Clean the pulley and compressor sliding surfaces with contact cleaner or other non-petroleum solvent.
   - Install new snap rings, note the installation direction, and make sure they are fully seated in the groove.
   - Make sure that the pulley turns smoothly after it's reassembled.
   - Route and clamp the wires properly or they can be damaged by the pulley.

Compressor Relief Valve Replacement ('98-00 model)

1. Recover the refrigerant with a recovery/recycling/charging station, refer to the '98-02 Accord Service Manual (see page 21-54).

2. Remove the relief valve (A) and the O-ring (B). Plug the opening to keep foreign matter from entering the system and the compressor oil from running out.

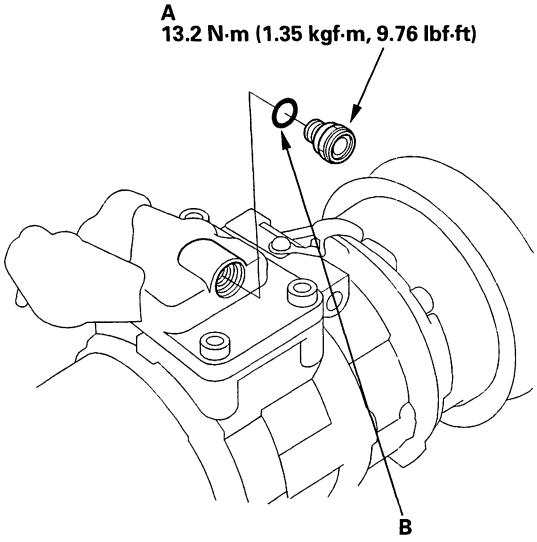

3. Clean the mating surfaces.

4. Replace the O-ring with a new one at the relief valve, and apply a thin coat of refrigerant oil before installing it.

5. Remove the plug, and install and tighten the relief valve.

6. Charge the system (see page 21-30).

BACK

Compressor Replacement ('01-02 model)

1. If the compressor is marginally operable, run the engine at idle speed, and let the air conditioning work for a few minutes, then shut the engine off.

2. Make sure you have the anti-theft code for the radio, then write down the frequencies for the radio's preset buttons.

3. Disconnect the negative cable from the battery.

4. Recover the refrigerant with a recovery/recycling/charging station, refer to '98-02 Accord Service Manual (see page 21-54).

5. Remove the alternator (see page 4-31).

6. Remove the compressor clutch connector (A) from the condenser fan shroud (B), then disconnect the compressor clutch connector. Disconnect the condenser fan connector (C), then remove the wire harness clips (D) from the condenser fan shroud. Remove the cruise control actuator cable (E) from the clamp. Loosen the lower mounting bolt, then remove the upper mounting bolts and the condenser fan shroud. Be careful not to damage the radiator fins when removing the condenser fan shroud.

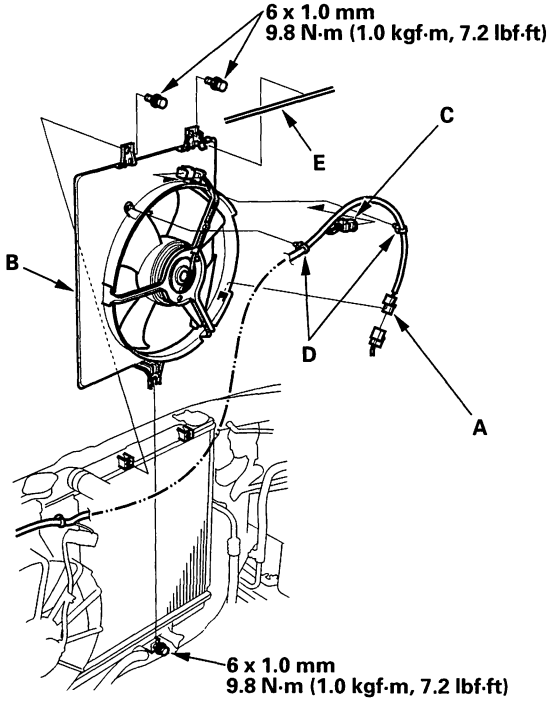

7. Remove the bolt and the nut, then disconnect the suction line (A) and discharge line (B) from the compressor. Plug or cap the lines immediately after disconnecting them to avoid moisture and dust contamination.

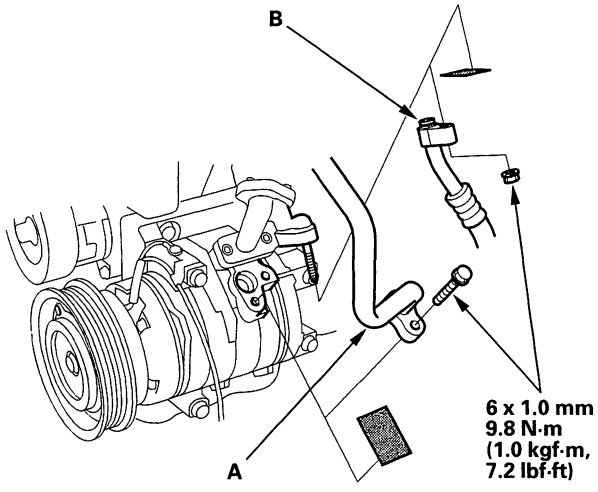

8. Remove the mounting bolts and the compressor. Be careful not to damage the radiator fins when removing the compressor.

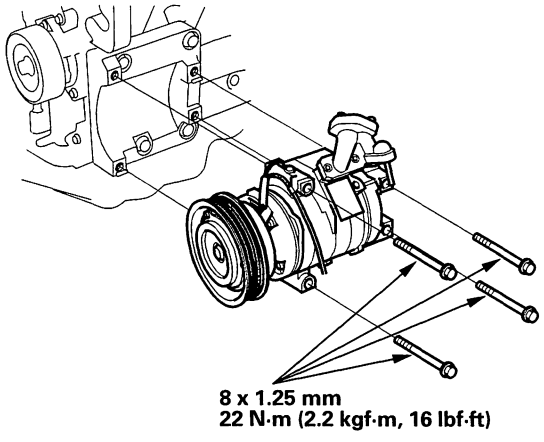

(cont'd)

Compressor Replacement ('01-02 model) (cont'd)

9. If necessary, remove the mounting bolts and the compressor brecket.

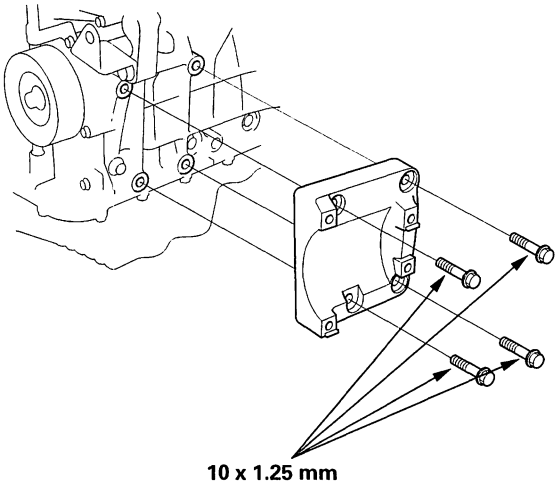

10 x 1.25 mm
44 N·m (4.5 kgf·m, 33 lbf·ft)

10. Install the compressor in the reverse order of removal, and note these items:

- If you're installing a new compressor, you must calculate the amount of refrigerant oil to be removed from it, refer to '98-02 Accord Service Manual (see page 21-32).
- Replace the O-rings with new ones at each fitting, and apply a thin coat of refrigerant oil before installing them. Be sure to use the right O-rings for HFC-134a (R-134a) to avoid leakage.
- Use refrigerant oil (DENSO ND-OIL 8) for HFC-134a DENSO piston type compressor only.
- To avoid contamination, do not return the oil to the container once dispensed, and never mix it with other refrigerant oils.
- Immediately after using the oil, replace the cap on the container, and seal it to avoid moisture absorption.
- Do not spill the refrigerant oil on the vehicle; it may damage the paint; if the refrigerant oil contacts the paint, wash it off immediately.
- Be careful not to damage the radiator fins when installing the compressor and the condenser fan shroud.
- Charge the system (see page 21-30).
- Enter the anti-theft code for the radio, then enter the customer's radio station presets.

BACK

Compressor Clutch Check ('01-02 model)

1. Check the plated parts of the pressure plate for color changes, peeling or other damage. If there is damage, replace the clutch set (see page 21-26).

2. Check the pulley bearing play and drag by rotating the pulley by hand. Replace the clutch set with a new one if it is noisy or has excessive play/drag (see page 21-26).

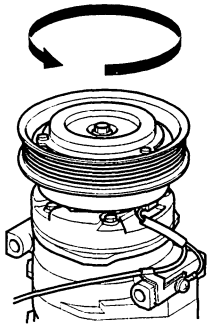

3. Measure the clearance between the pulley (A) and the pressure plate (B) with a dial indicator. Zero out the indicator, then apply battery voltage to the compressor clutch. Measure the movement of the pressure plate when the voltage is applied. If the clearance is not within the specified limits, the pressure plate must be reshimed (see page 21-26).

   Clearance: 0.5±0.15 mm (0.020±0.006 in.)

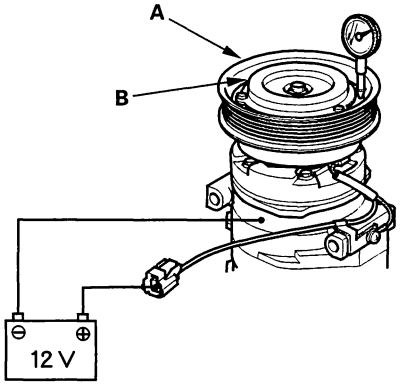

4. Check resistance of the field coil. If resistance is not within specifications, replace the field coil (see page 21-26).

   Field Coil Resistance: 3.4−3.8 ohms at 68°F (20°C)

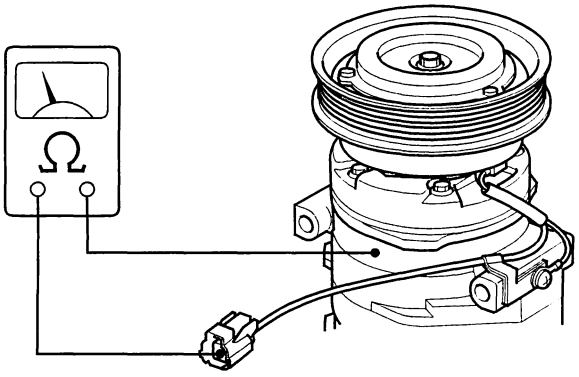

Compressor Clutch Overhaul ('01-02 model)

Special Tool Required
A/C clutch holder, Robinair 10204, Kent-Moore J37872, or Honda Tool and Equipment KMT-J33939, commercially available

1. Remove the center bolt (A) while holding the pressure plate with a commercially available A/C clutch holder (B).

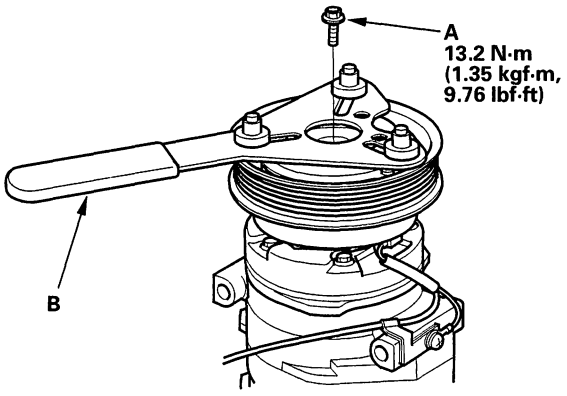

2. Remove the pressure plate (A) and shim(s) (B), taking care not to lose the shim(s). If the clutch needs adjustment, increase or decrease the number and thickness of shims as nesessary, then reinstall the pressure plate, and recheck its clearance (see page 21-25).

NOTE: The shims are available in four thicknesses: 0.1 mm, 0.3 mm, 0.5 mm, and 1.5 mm.

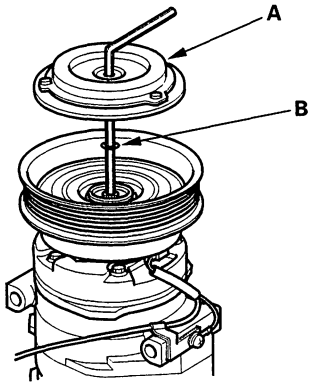

3. If you are replacing the field coil, remove the snap ring (A) with snap ring pliers, then remove the pulley (B). Be careful not to damage the pulley and compressor.

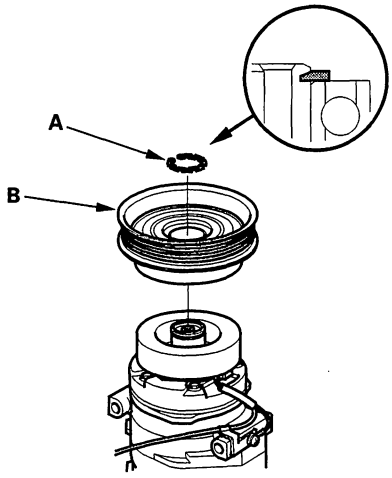

4. Remove the screw from the field coil ground terminal (A). Remove the snap ring (B) with snap ring pliers, then remove the field coil (C). Be careful not to damage the field coil and compressor.

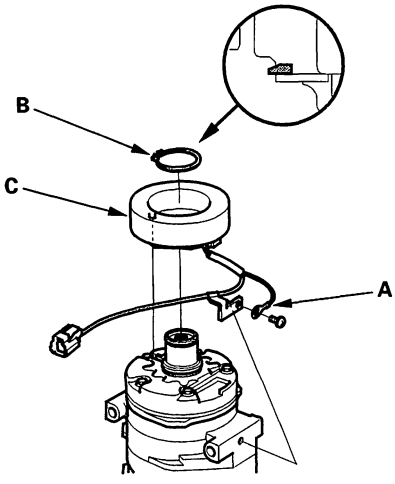

BACK

5. Reassemble the clutch in the reverse order of disassembly, and note these items:

   - Install the field coil with the wire side facing down, and align the boss on the field coil with the hole in the compressor.
   - Clean the pulley and compressor sliding surfaces with contact cleaner or other non-petroleum solvent.
   - Install new snap rings, note the installation direction, and make sure they are fully seated in the groove.
   - Make sure that the pulley turns smoothly after it's reassembled.
   - Route and clamp the wires properly or they can be damaged by the pulley.

Compressor Relief Valve Replacement ('01-02 model)

1. Recover the refrigerant with a recovery/recycling/charging station, refer to '98-02 Accord Service Manual (see page 21-54).

2. Remove the relief valve (A) and the O-ring (B). Plug the opening to keep foreign matter from entering the system and the compressor oil from running out.

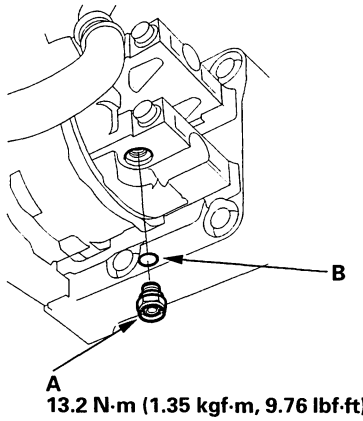

13.2 N·m (1.35 kgf·m, 9.76 lbf·ft)

3. Clean the mating surfaces.

4. Replace the O-ring with a new one at the relief valve, and apply a thin coat of refrigerant oil before installing it.

5. Remove the plug, and install and tighten the relief valve.

6. Charge the system (see page 21-30).

Condenser Replacement

1. Recover the refrigerant with a recovery/recycling/charging station, refer to the '98-02 Accord Service Manual (see page 21-54).

2. Remove the coolant reservoir, but do not disconnect the reservoir hose from the coolant reservoir and the radiator.

3. Remove the bolts, then remove the upper mount brackets from the radiator.

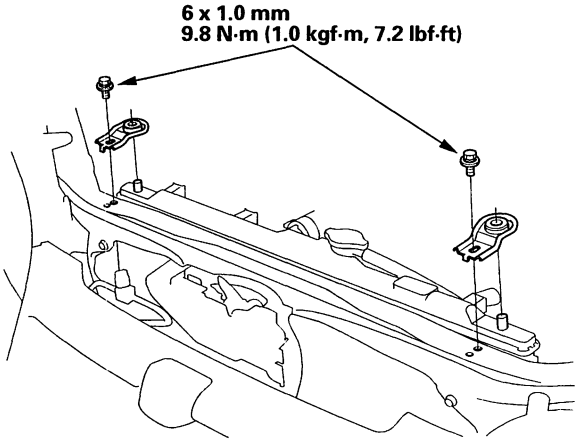

4. Remove each bolt, then disconnect the discharge line (A) and condenser (B) line from the condenser. Plug or cap the lines immediately after disconnecting them to avoid moisture and dust contamination.

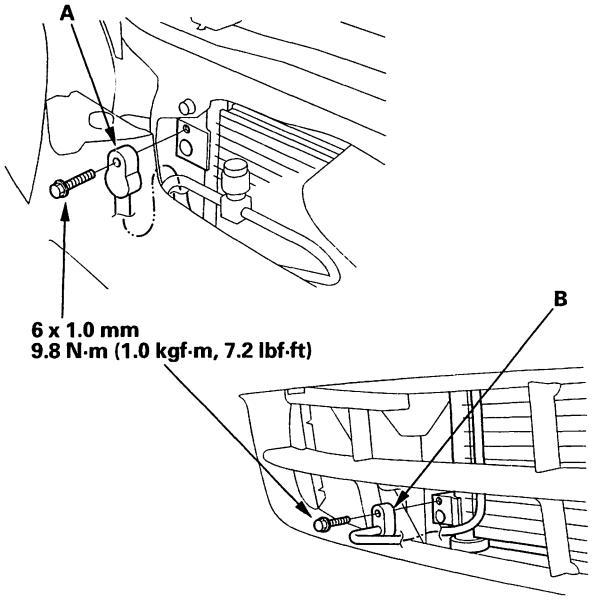

5. Remove the bolts and the upper mount brackets (A), then remove the condenser (B) by lifting it up. Be careful not to damage the radiator and condenser fins when removing the condenser.

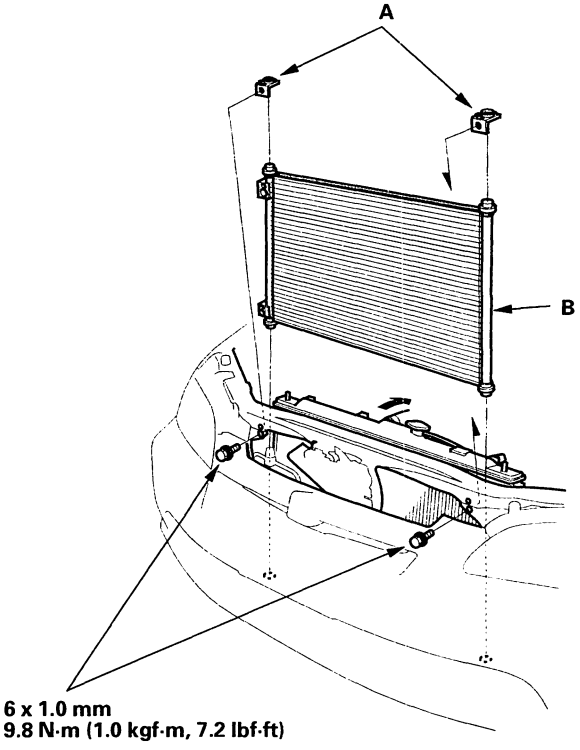

6. Install the condenser in the reverse order of removal, and note these items:

   - If you're installing a new condenser, add refrigerant oil (DENSO ND-OIL 8), refer to the '98-02 Accord Service Manual (see page 21-32).
   - Replace the O-rings with new ones at each fitting, and apply a thin coat of refrigerant oil before installing them. Be sure to use the right O-rings for HFC-134a (R-134a) to avoid leakage.
   - Immediately after using the oil, replace the cap on the container, and seal it to avoid moisture absorption.
   - Do not spill the refrigerant oil on the vehicle; it may damage the paint; if the refrigerant oil contacts the paint, wash it off immediately.
   - Be careful not to damage the radiator and condenser fins when installing the condenser.
   - Charge the system (see page 21-30).

BACK

Refrigerant Leak Test

Special Tool Required
Leak detector, Honda Tool and Equipment YGK-H-10PM, commercially available

⚠ WARNING

- Compressed air mixed with R-134a froms a combustible vapor.
- The vapor can burn or explode causing serious injury.
- Never use compressed air to pressure test R-134a service equipment or vehicle air conditioning system.

⚠ CAUTION

- Air conditioning refrigerant or lubricant vapor can irritate your eyes, nose, or throat.
- Be careful when connecting service equipment.
- Do not breathe refrigerant or vapor.

Use only service equipment that is U.L.-listed and is certiified to meet the requirements of SAE J2210 to remove HFC-134a (R-134a) from the air conditioning system.

If accidental system discharge occurs, ventilate work area before resuming service.

R-134a service equipment or vehicle air conditioning systems should not be pressure tested or leak tested with compressed air.

Additional health and safety information may be obtained from the refrigerant and lulbricant manufacturers.

1. Connect a R-134a refrigerant recovery/recycling/ charging station (A) to the high-pressure service port (B) and the low-pressure service port (C), as shown, following the equipment manufacturer's instructions.

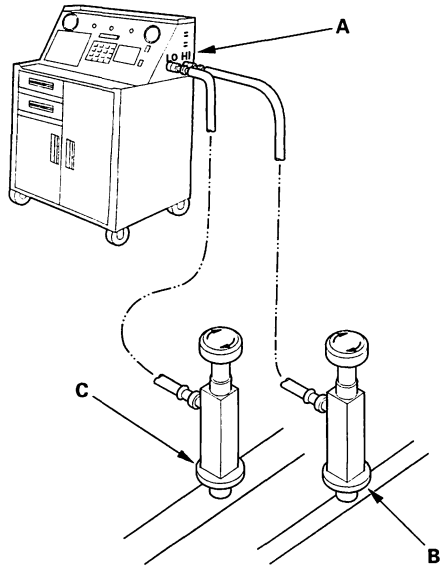

2. Open high pressure valve to charge the system to the specified capacity, then close the supply valve, and remove the charging system couplers.

   Select the appropriate units of measure for your refrigerant charging station.

   Refrigerant capacity with Showa condenser:
   600 to 650 g
   0.60 to 0.65 kg
   1.3 to 1.4 lbs
   21.2 to 22.9 oz

   Refrigerant capacity with Calsonic condenser:
   450 to 500 g
   0.45 to 0.50 kg
   1.0 to 1.1 lbs
   15.9 to 17.6 oz

3. Check the system for leaks using a R-134a refrigerant leak detector with an accuracy of 14 g (0.5 oz) per year or better.

4. If you find leaks that require the system to be opened (to repair or replace hoses, fittings, etc.), recover the system.

5. After checking and repairing leaks, the system must be evacuated.

BACK

System Charging

⚠CAUTION

- Air conditioning refrigerant or lubricant vapor can irritate your eyes, nose, or throat.
- Be careful when connecting service equipment.
- Do not breathe refrigerant or vapor.

Use only service equipment that is U.L.-listed and is certified to meet the requirements of SAE J2210 to remove HFC-134a (R-134a) from the air conditioning system.

If accidental system discharge occurs, ventilate work area before resuming service.

Additional health and safety information may be obtained from the refrigerant and lubricant manufacturers.

1. Connect a R-134a refrigerant recovery/recycling/charging station (A) to the high-pressure service port (B) and the low-pressure service port (C), as shown, following the equipment manufacturer's instructions.

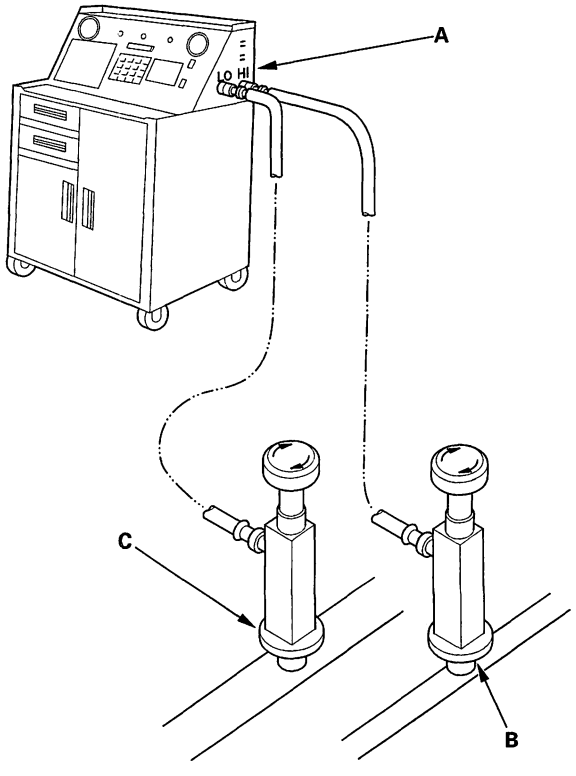

2. Evacuate the system, refer to the '98-02 Accord Service Manual (see page 21-55).

3. Add the same amount of new refrigerant oil to the system that was removed during recovery. Use only DENSO ND-OIL 8 refrigerant oil.

4. Charge the system with the specified amount of R-134a refrigerant. Do not overcharge the system; the compressor will be damaged.

   Select the appropriate units of measure for your refrigerant charging station.

   Refrigerant capacity with Showa condenser:
   600 to 650 g
   0.60 to 0.65 kg
   1.3 to 1.4 lbs
   21.2 to 22.9 oz

   Refrigerant capacity with Calsonic condenser:
   450 to 500 g
   0.45 to 0.50 kg
   1.0 to 1.1 lbs
   15.9 to 17.6 oz

5. Check for refrigerant leaks (see page 21-29).

6. Check for system performance (see page 21-16).

BACK

Component Location Index

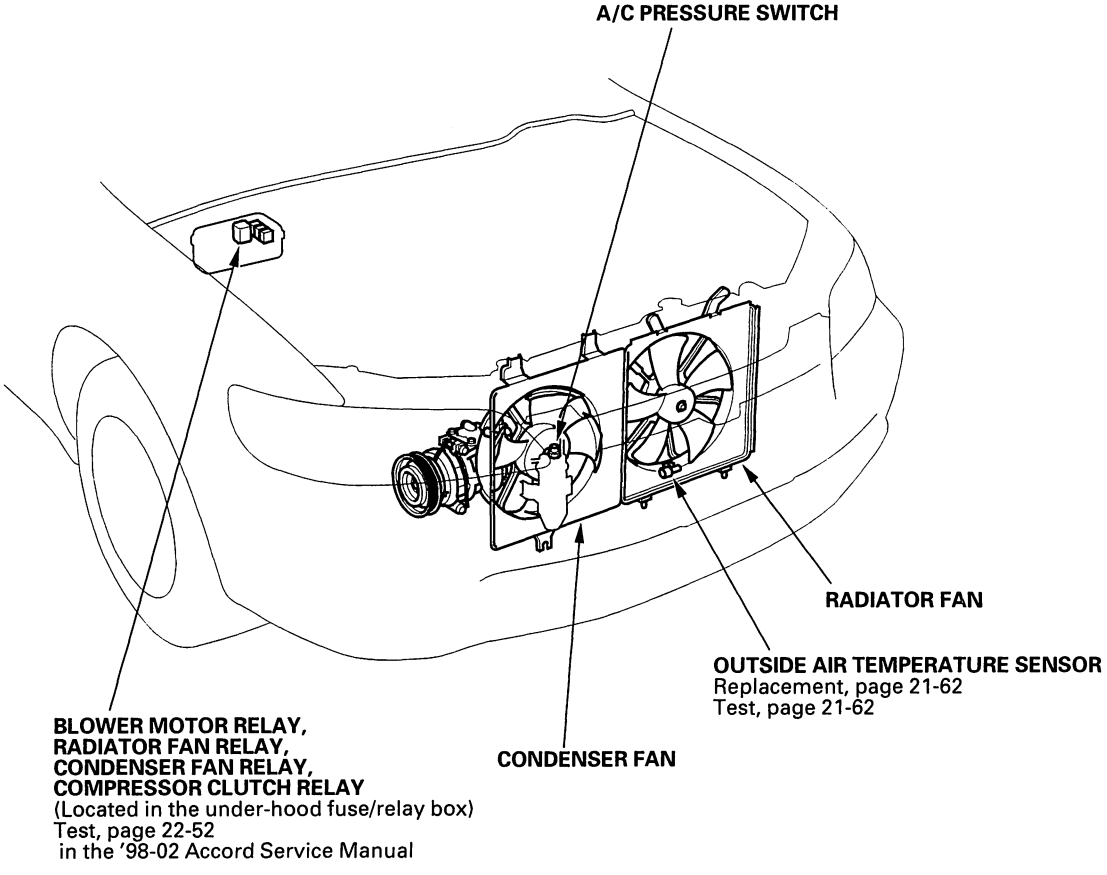

BACK

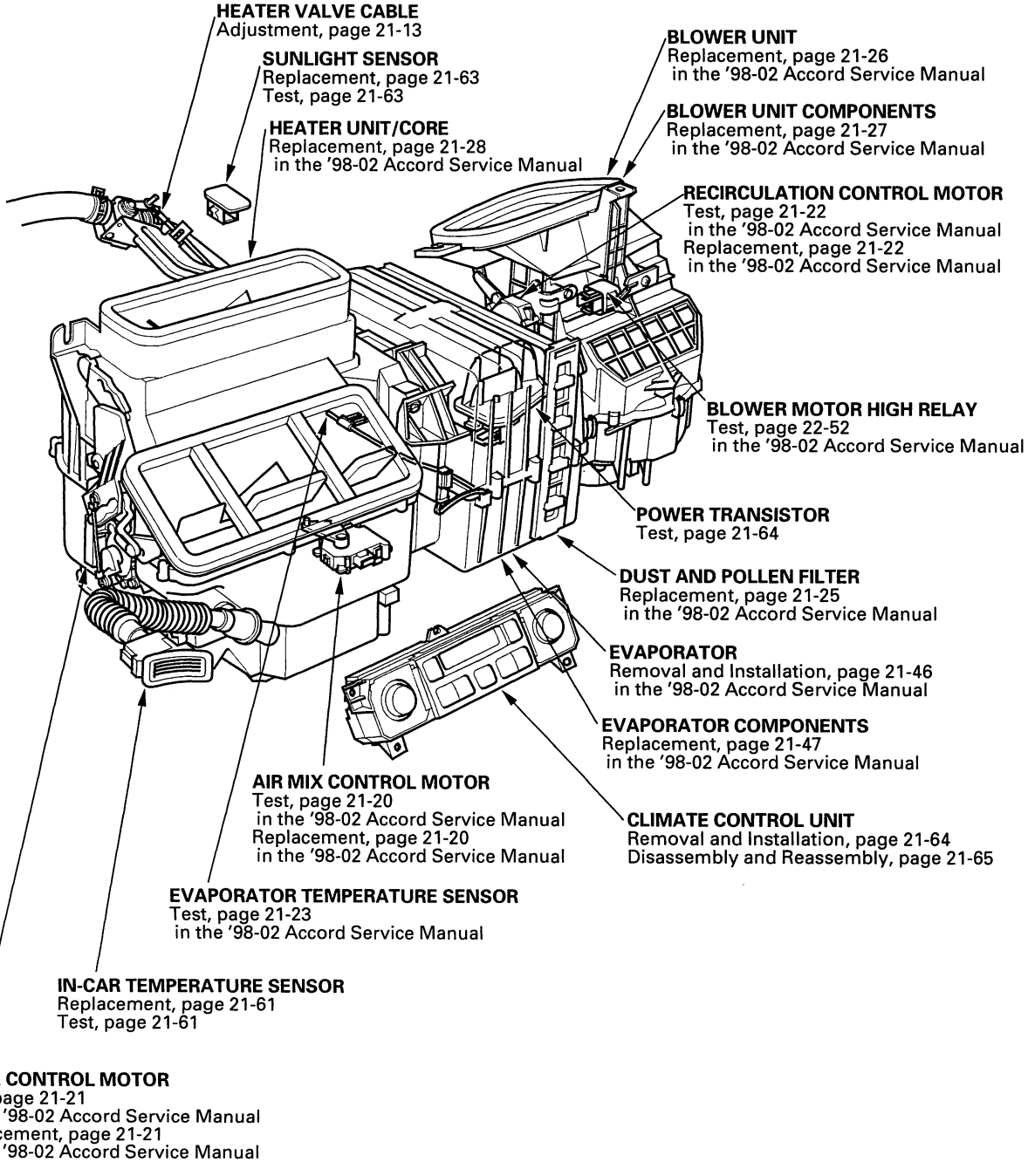
HEATER VALVE CABLE
Adjustment, page 21-13
SUNLIGHT SENSOR
Replacement, page 21-63
Test, page 21-63
HEATER UNIT/CORE
Replacement, page 21-28
in the '98-02 Accord Service Manual
BLOWER UNIT
Replacement, page 21-26
in the '98-02 Accord Service Manual
BLOWER UNIT COMPONENTS
Replacement, page 21-27
in the '98-02 Accord Service Manual
RECIRCULATION CONTROL MOTOR
Test, page 21-22
in the '98-02 Accord Service Manual
Replacement, page 21-22
in the '98-02 Accord Service Manual
BLOWER MOTOR HIGH RELAY
Test, page 22-52
in the '98-02 Accord Service Manual
POWER TRANSISTOR
Test, page 21-64
DUST AND POLLEN FILTER
Replacement, page 21-25
in the '98-02 Accord Service Manual
EVAPORATOR
Removal and Installation, page 21-46
in the '98-02 Accord Service Manual
EVAPORATOR COMPONENTS
Replacement, page 21-47
in the '98-02 Accord Service Manual
AIR MIX CONTROL MOTOR
Test, page 21-20
in the '98-02 Accord Service Manual
Replacement, page 21-20
in the '98-02 Accord Service Manual
CLIMATE CONTROL UNIT
Removal and Installation, page 21-64
Disassembly and Reassembly, page 21-65
EVAPORATOR TEMPERATURE SENSOR
Test, page 21-23
in the '98-02 Accord Service Manual
IN-CAR TEMPERATURE SENSOR
Replacement, page 21-61
Test, page 21-61
MODE CONTROL MOTOR
Test, page 21-21
in the '98-02 Accord Service Manual
Replacement, page 21-21
in the '98-02 Accord Service Manual

General Troubleshooting Information

How to Retrieve a DTC

The climate control unit has a self-diagnosis function.

Running the Self-diagnosis Function

1. Turn the ignition switch ON (II).

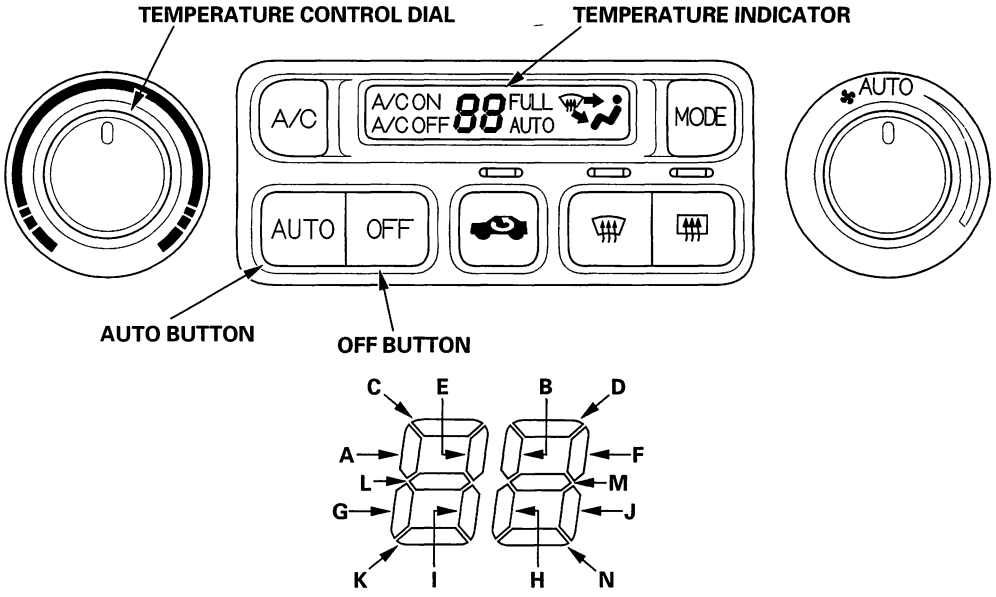

2. Set the temperature control dial on Max Cool, then slowly to Max Hot.

3. After 1 minute, press the AUTO button and then the OFF button. Continue to hold both buttons down. If there is any abnormality in the system when both buttons are pressed, the temperature indicator will light up the segment (A to N) corresponding to the error. The temperature indicator will then alternate every second between displaying "88" (all segments lit) and the error segment. If there is no abnormality, the segments will not light up.

Resetting the Self-diagnosis Function

Turning the ignition switch OFF will cancel the self-diagnosis function. After completing repair work, run the self-diagnosis function again to make sure that there are no other malfunctions.

BACK

DTC Troubleshooting Index

To retrieve the DTC, you must run the self-diagnosis function (see page 21-34). In the case of multiple problems, the respective indicator segments will come on. If indicator segments A, C, E, G, I, and L come on at the same time, there may be an open in the common ground wire of the sensors.

TEMPERATURE INDICATOR

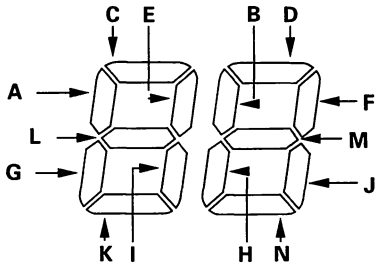

DTC (Temperature Indicator segment)	Detection Item	Page
A	An open in the in-car temperature sensor circuit	(see page 21-40)
B	A short in the in-car temperature sensor circuit	(see page 21-41)
C	An open in the outside air temperature sensor circuit	(see page 21-41)
D	A short in the outside air temperature sensor circuit	(see page 21-43)
E	An open in the sunlight sensor circuit	(see page 21-43)
F	A short in the sunlight sensor circuit	(see page 21-44)
G	An open in the evaporator temperature sensor circuit	(see page 21-45)
H	A short in the evaporator temperature sensor circuit	(see page 21-46)
I	An open in the air mix control motor circuit	(see page 21-47)
J	A short in the air mix control motor circuit	(see page 21-47)
K	A problem in the air mix control linkage, door, or motor	(see page 21-48)
L	An open or short in the mode control motor circuit	(see page 21-49)
M	A problem in the mode control linkage, doors, or motor	(see page 21-50)
N	A problem in the blower motor circuit	(see page 21-51)

Symptom Troubleshooting Index

Symptom	Diagnostic procedure	Also check for
The blower motor does not run immediately even through the engine is fully warmed up NOTE: The temperature control dial or button must be set between 64°F (18°C) and 90°F (32°C)	ECT Sensor Circuit Troubleshooting (see page 21-56)	Cleanliness and tightness of all connectors
Recirculation control doors do not change between Fresh and Recirculate.	Recirculation Control Motor Circuit Troubleshooting (see page 21-58)	• Blown fuse No. 3 (7.5A) in the driver's under-dash fuse/relay box • Cleanliness and tightness of all connectors
Condenser fan does not run at all (but radiator fan runs with the A/C on).	Condenser Fan Circuit Troubleshooting (see page 21-10)	• Blown fuse No. 58 (20A) in the under-hood fuse/relay box, and No. 3 (7.5A) in the driver's under-dash fuse/relay box • Poor ground at G201 • Cleanliness and tightness of all connectors
Both fans do not run with the A/C on.	Radiator and Condenser Fans Common Circuit Troubleshooting (see page 21-12)	• Blown fuse No. 57 (20A) and No. 58 (20A) in the under-hood fuse/relay box, and No. 3 (7.5A) in the driver's under-dash fuse/relay box • Poor ground at G201 • Cleanliness and tightness of all connectors
Compressor clutch does not engage.	Compressor Clutch Circuit Troubleshooting, refer to the '98-02 Accord Service Manual (see page 21-39)	• Blown fuse No. 58 (20A) in the under-hood fuse/relay box, and No. 3 (7.5A) in the driver's under-dash fuse/relay box • Cleanliness and tightness of all connectors
A/C system does not come on (both fans and compressor).	A/C Pressure Switch Circuit Troubleshooting (see page 21-59)	Cleanliness and tightness of all connectors
Both heater and A/C do not work.	Climate Control Power and Ground Circuits Troubleshooting (see page 21-57)	• Blown fuse No. 54 (40A) in the under-hood fuse/relay box, No. 3 (7.5A) in the driver's under-dash fuse/relay box, and No. 13 (7.5A) in the passenger's under-dash fuse/relay box • Poor ground at G202 and G401 • Cleanliness and tightness of all connectors

BACK

System Description

Climate Control Unit Inputs and Outputs

CLIMATE CONTROL UNIT CONNECTORS

Wire side of female terminals

8P CONNECTOR

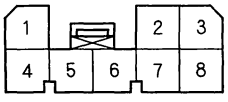

20P CONNECTOR

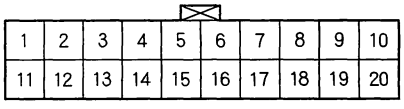

8P CONECTOR (□ on Circuit Diagram)

Cavity	Wire color	Signal	
1	BLK/YEL	IG2 (Power)	INPUT
2	WHT/YEL	+B (Power)	INPUT
3	RED/WHT	ENGINE COOLANT TEMPERATURE (ECT) SENSOR	OUTPUT
4	BLU/ORN	BLOWER MOTOR HIGH RELAY	INPUT
5	ORN/BLK	POWER TRANSISTOR	OUTPUT
6	BLU/RED	BLOWER FEEDBACK	INPUT
7	BRN/YEL	REAR WINDOW DEFOGGER RELAY	INPUT
8	BLK	GROUND	OUTPUT

20P CONECTOR (○ on Circuit Diagram)

Cavity	Wire color	Signal	
1	PNK/BLK	AIR MIX POTENTIAL	OUTPUT
2	YEL/GRN	A/C PRESSURE SWITCH	INPUT
3	GRN/RED	FRESH	INPUT
4	GRN/WHT	RECIRCULATE	INPUT
5	BLU/BLK	MODE DEF	OUTPUT
6	BLU/WHT	MODE VENT	OUTPUT
7	RED/YEL	AIR MIX HOT	OUTPUT
8	RED/BLK	COMBINATION LIGHT SWITCH or TAILLIGHT RELAY	INPUT
9	RED/WHT	AIR MIX COOL	OUTPUT
10	RED	MULTIPLEX CONTROL UNIT (DRIVER'S)	OUTPUT
11	YEL/GRN	SENSOR COMMON GROUND	INPUT
12	WHT/RED	SUNLIGHT SENSOR	OUTPUT
13	GRY	AIR MIX POTENTIAL +5V	OUTPUT
14	BRN	EVAPORATOR TEMPERATURE SENSOR	OUTPUT
15	BRN/WHT	OUTSIDE AIR TEMPERATURE SENSOR	OUTPUT
16	YEL/RED	IN-CAR TEMPERATURE SENSOR	OUTPUT
17	BLU/GRN	MODE 4	OUTPUT
18	LT GRN/BLK	MODE 3	OUTPUT
19	GRN/YEL	MODE 2	OUTPUT
20	GRN/BLK	MODE 1	OUTPUT

Circuit Diagram

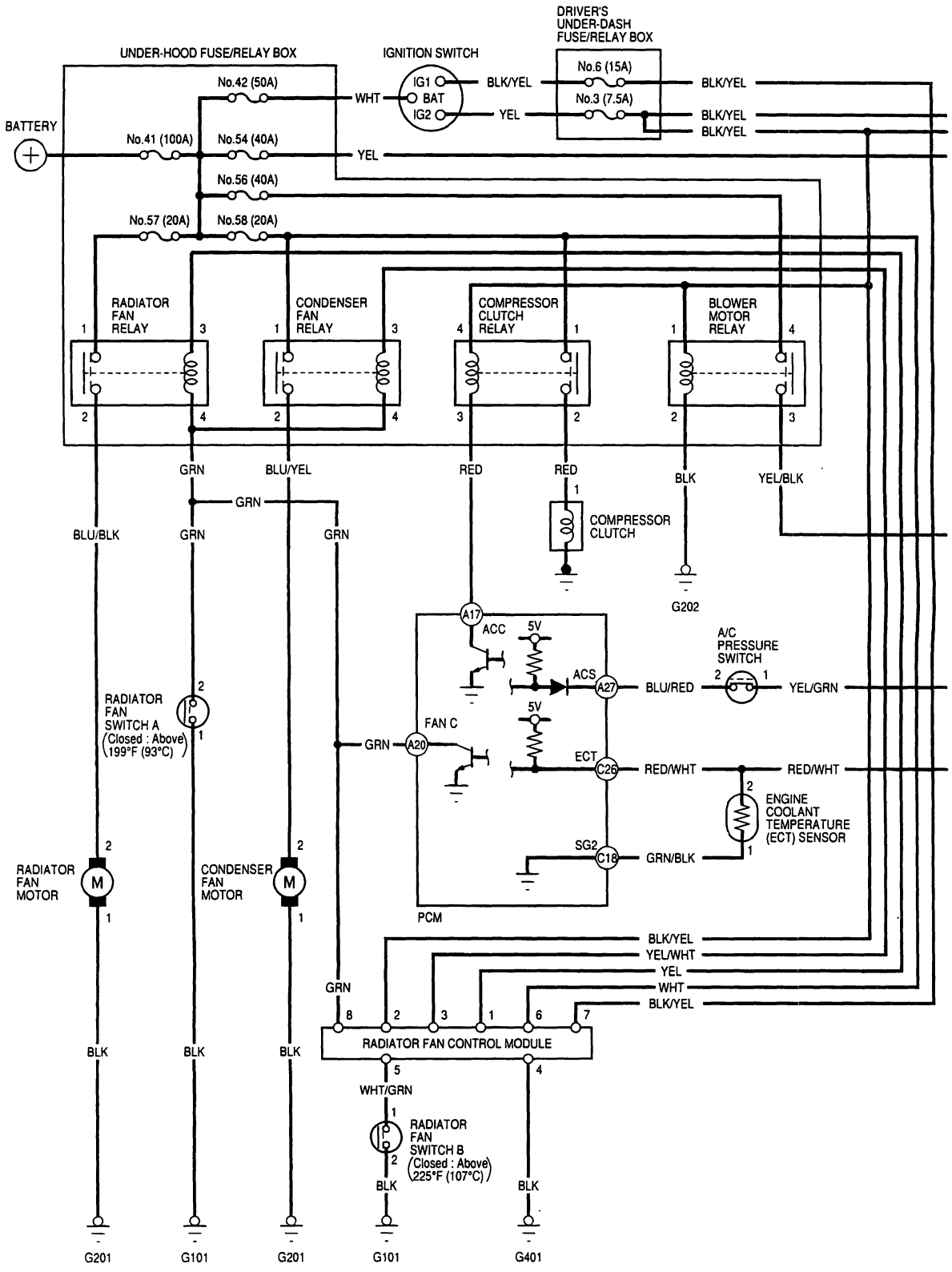

BACK

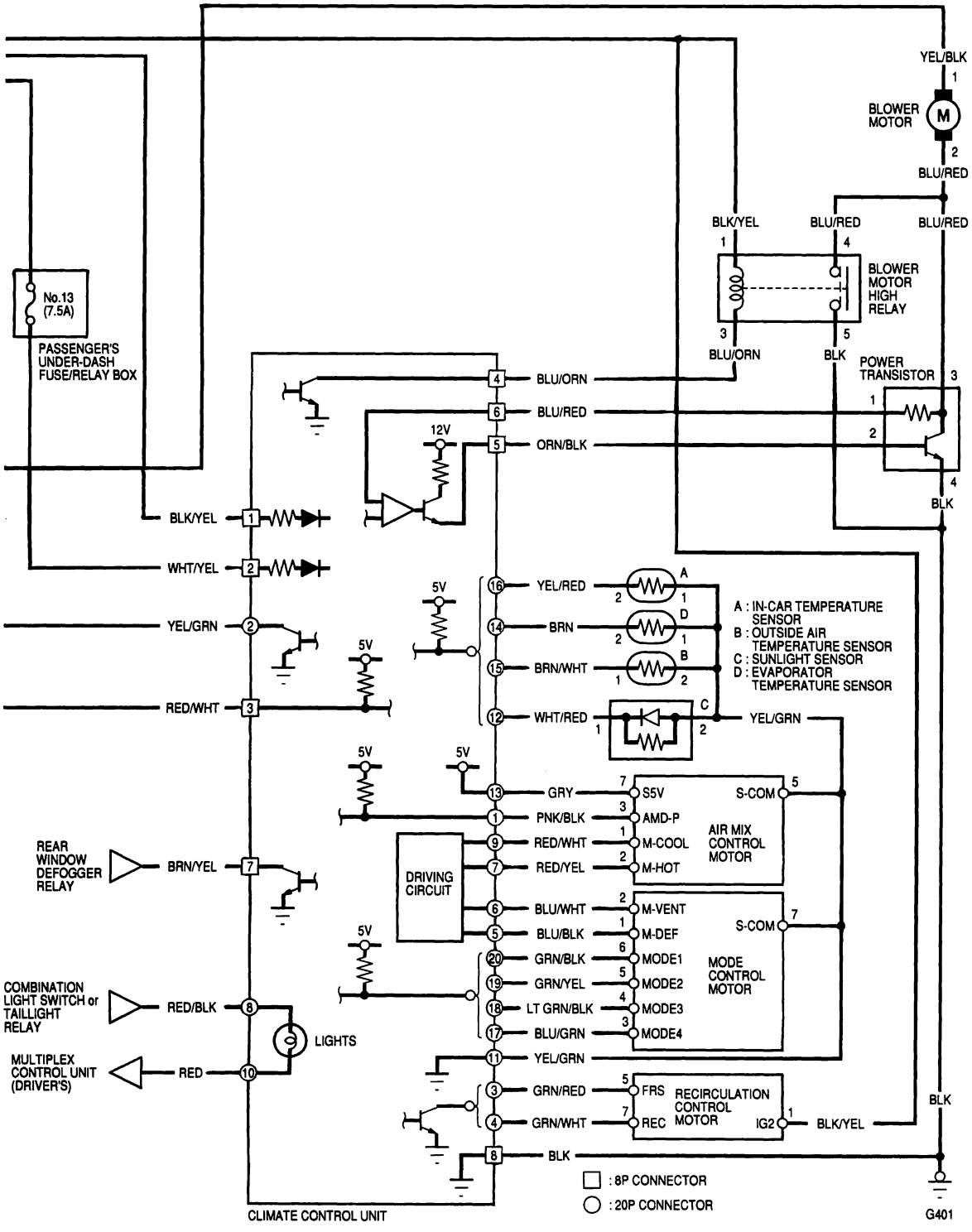
YEL/BLK
BLOWER MOTOR
BLU/RED
BLK/YEL
BLU/RED
BLU/RED
BLOWER MOTOR HIGH RELAY
BLU/ORN
BLK
POWER TRANSISTOR
No.13 (7.5A)
PASSENGER'S UNDER-DASH FUSE/RELAY BOX
BLU/ORN
BLU/RED
ORN/BLK
12V
BLK
BLK/YEL
WHT/YEL
YEL/GRN
RED/WHT
5V
YEL/RED
BRN
BRN/WHT
WHT/RED
YEL/GRN
A : IN-CAR TEMPERATURE SENSOR
B : OUTSIDE AIR TEMPERATURE SENSOR
C : SUNLIGHT SENSOR
D : EVAPORATOR TEMPERATURE SENSOR
GRY
PNK/BLK
RED/WHT
RED/YEL
S5V
AMD-P
M-COOL
M-HOT
S-COM
AIR MIX CONTROL MOTOR
DRIVING CIRCUIT
REAR WINDOW DEFOGGER RELAY
BRN/YEL
BLU/WHT
BLU/BLK
GRN/BLK
GRN/YEL
LT GRN/BLK
BLU/GRN
M-VENT
M-DEF
MODE1
MODE2
MODE3
MODE4
MODE CONTROL MOTOR
COMBINATION LIGHT SWITCH or TAILLIGHT RELAY
RED/BLK
LIGHTS
MULTIPLEX CONTROL UNIT (DRIVER'S)
RED
YEL/GRN
GRN/RED
GRN/WHT
FRS
REC
RECIRCULATION CONTROL MOTOR
IG2
BLK/YEL
BLK
: 8P CONNECTOR
: 20P CONNECTOR
CLIMATE CONTROL UNIT
G401

DTC Troubleshooting

DTC indicator light A: An open in the in-car temperature sensor circuit

1. Remove the in-car temperature sensor (see page 21-61).

2. Measure the resistance between the No. 1 and No. 2 terminals of the in-car temperature sensor.
   *Check for a change in resistance by heating or cooling the sensor with a hair drier.

IN-CAR TEMPERATURE SENSOR

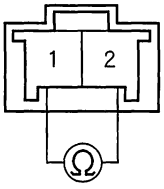

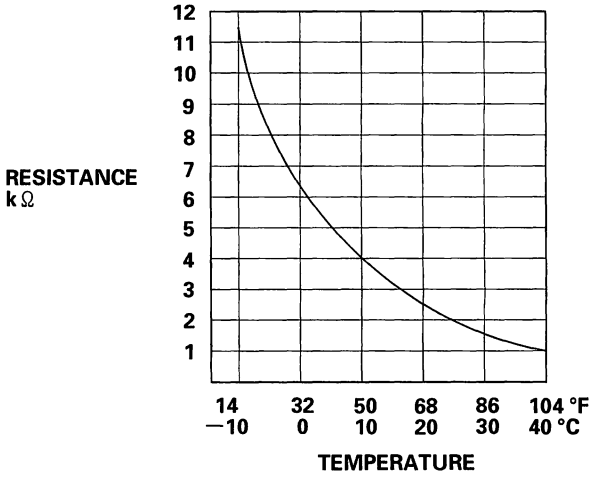

**Is the resistance within the specifications shown on the graph?*

YES—Go to step 3.

NO—Replace the in-car temperature sensor.■

3. Disconnect the climate control unit 20P connector.

4. Check for continuity between the No. 16 terminal of the climate control unit 20P connector and the No. 2 terminal of the in-car temperature sensor 2P connector.

CLIMATE CONTROL UNIT 20P CONNECTOR
Wire side of female terminals

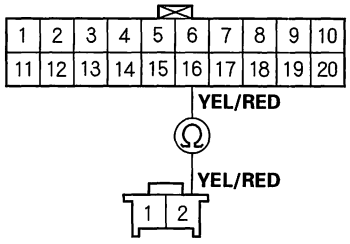

IN-CAR TEMPERATURE SENSOR 2P CONNECTOR
Wire side of female terminals

Is there continuity?

YES—Go to step 5.

NO—Repair open in the wire between the climate control unit and the in-car temperature sensor.■

5. Check for continuity between the No. 11 terminal of the climate control unit 20P connector and the No. 1 terminal of the in-car temperature sensor 2P connector.

CLIMATE CONTROL UNIT 20P CONNECTOR
Wire side of female terminals

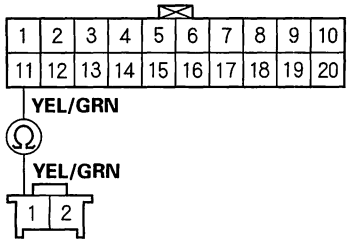

IN-CAR TEMPERATURE SENSOR 2P CONNECTOR
Wire side of female terminals

Is there continuity?

YES—Check for loose wires or poor connections at the climate control unit 20P connector and at the in-car temperature sensor 2P connector. If the connections are good, substitute a known-good climate control unit, and recheck. If the symptom/indication goes away, replace the original climate control unit.■

NO—Repair open in the wire between the climate control unit and the in-car temperature sensor.■

BACK

DTC indicator light B: A short in the in-car temperature sensor circuit

1. Remove the in-car temperature sensor (see page 21-61).

2. Test the in-car temperature sensor (see page 21-61).

   Is the resistance within the specifications shown on the graph?

   YES — Go to step 3.

   NO — Replace the in-car temperature sensor. ■

3. Disconnect the climate control unit 20P connector.

4. Check for continuity between the No. 16 terminal of the climate control unit 20P connector and body ground.

CLIMATE CONTROL UNIT 20P CONNECTOR

Wire side of female terminals

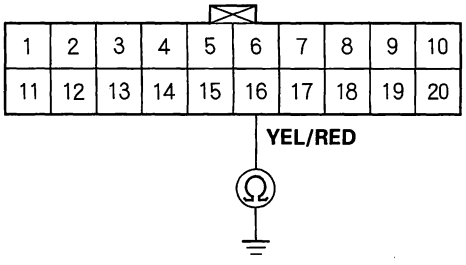

Is there continuity?

YES — Repair short to body ground in the wire between the climate control unit and the in-car temperature sensor. ■

NO — Substitute a known-good climate control unit, and recheck. If the symptom/indication goes away, replace the original climate control unit. ■

DTC indicator light C: An open in the outside air temperature sensor circuit

1. Remove the outside air temperature sensor (see page 21-62).

2. Measure the resistance between the No. 1 and No. 2 terminals of the outside air temperature sensor. *Dip the sensor in ice water the and measure the resistance. Then pour hot water on the sensor, and check for a change in resistance.

OUTSIDE AIR TEMPERATURE SENSOR

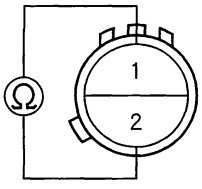

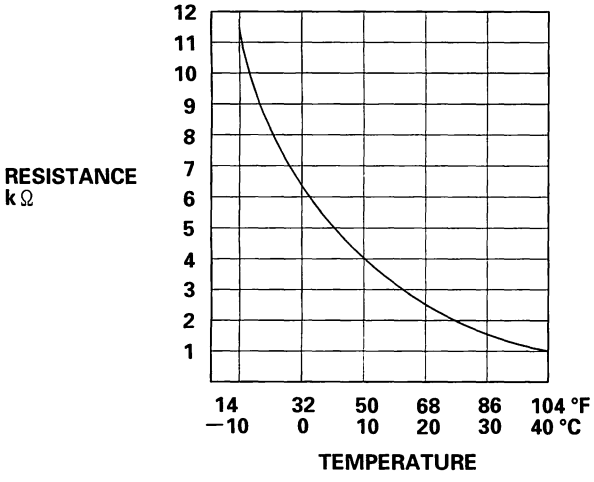

**Is the resistance within the specifications shown on the graph?*

YES — Go to step 3.

NO — Replace the outside air temperature sensor. ■

3. Disconnect the climate control unit 20P connector.

(cont'd)

DTC Troubleshooting (cont'd)

4. Check for continuity between the No. 15 terminal of the climate control unit 20P connector and the No. 1 terminal of the outside air temperature sensor 2P connector.

CLIMATE CONTROL UNIT 20P CONNECTOR

Wire side of female terminals

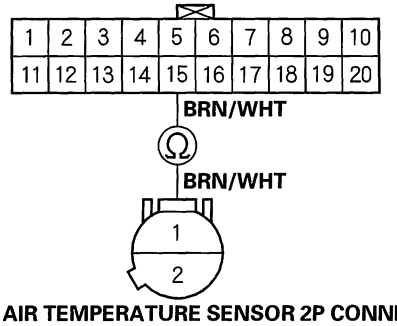

OUTSIDE AIR TEMPERATURE SENSOR 2P CONNECTOR

Wire side of female terminals

Is there continuity?

YES—Go to step 5.

NO—Repair open in the wire between the climate control unit and the outside air temperature sensor.■

5. Check for continuity between the No. 11 terminal of the climate control unit 20P connector and the No. 2 terminal of the outside air temperature sensor 2P connector.

CLIMATE CONTROL UNIT 20P CONNECTOR

Wire side of female terminals

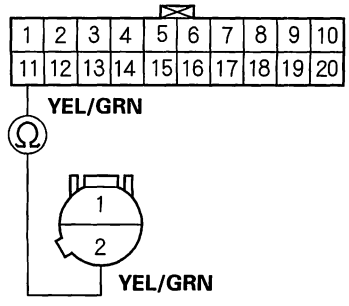

OUTSIDE AIR TEMPERATURE SENSOR 2P CONNECTOR

Wire side of female terminals

Is there continuity?

YES—Check for loose wires or poor connections at the climate control unit 20P connector and at the outside air temperature sensor 2P connector. If the connections are good, substitute a known-good climate control unit, and recheck. If the symptom/indication goes away, replace the original climate control unit.■

NO—Repair open in the wire between the climate control unit and the outside air temperature sensor.■

BACK

DTC indicator light D: A short in the outside air temperature sensor circuit

1. Remove the outside air temperature sensor (see page 21-62).

2. Test the outside air temperature sensor (see page 21-62).

   Is the resistance within the specifications shown on the graph?

   YES—Go to step 3.

   NO—Replace the outside air temperature sensor.■

3. Disconnect the climate control unit 20P connector.

4. Check for continuity between the No. 15 terminal of the climate control unit 20P connector and body ground.

CLIMATE CONTROL UNIT 20P CONNECTOR
Wire side of female terminals

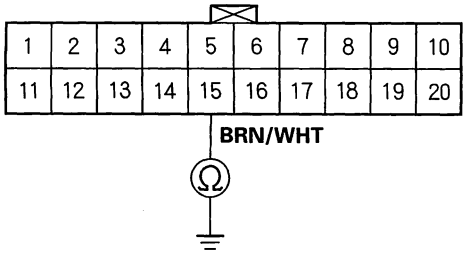

Is there continuity?

YES—Repair short to body ground in the wire between the climate control unit and the outside air temperature sensor.■

NO—Substitute a known-good climate control unit, and recheck. If the symptom/indication goes away, replace the original climate control unit.■

DTC indicator light E: An open in the sunlight sensor circuit

1. Disconnect the sunlight sensor 2P connector.

2. Disconnect the climate control unit 20P connector.

3. Check for continuity between the No. 12 terminal of the climate control unit 20P connector and the No. 1 terminal of the sunlight sensor 2P connector.

CLIMATE CONTROL UNIT 20P CONNECTOR
Wire side of female terminals

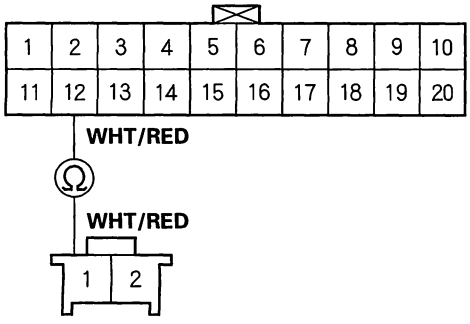

SUNLIGHT SENSOR 2P CONNECTOR
Wire side of female terminals

Is there continuity?

YES—Go to step 4.

NO—Repair open in the wire between the climate control unit and the sunlight sensor.■

(cont'd)

DTC Troubleshooting (cont'd)

4. Check for continuity between the No. 11 terminal of the climate control unit 20P connector and the No. 2 terminal of the sunlight sensor 2P connector.

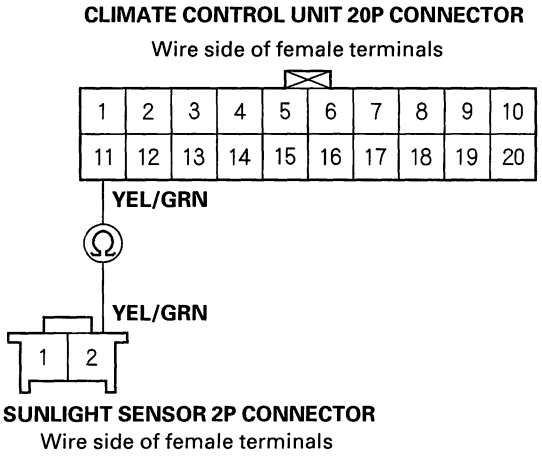

Is there continuity?

YES—Go to step 5.

NO—Repair open in the wire between the climate control unit and the outside air temperature sensor.■

5. Reconnect the sunlight sensor 2P connector.

6. Reconnect the climate control unit 20P connector.

7. Test the sunlight sensor (see page 21-63).

Is the sunlight sensor OK?

YES—Check for loose wires or poor connections at the climate control unit 20P connector and at the sunlight sensor 2P connector. If the connections are good, substitute a known-good climate control unit, and recheck. If the symptom/indication goes away, replace the original climate control unit.■

NO—Replace the sunlight sensor.■

DTC indicator light F: A short in the sunlight sensor circuit

1. Disconnect the sunlight sensor 2P connector.

2. Disconnect the climate control unit 20P connector.

3. Check for continuity between the No. 12 terminal of the climate control unit 20P connector and body ground.

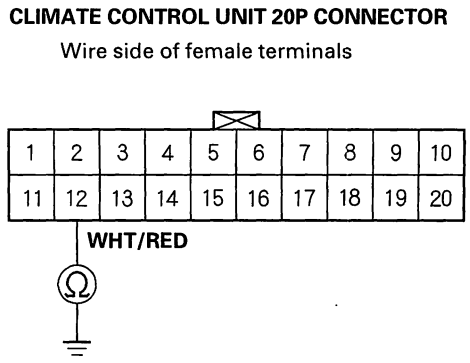

Is there continuity?

YES—Repair short to body ground in the wire between the climate control unit and the sunlight sensor.■

NO—Go to step 4.

4. Reconnect the sunlight sensor 2P connector.

5. Reconnect the climate control unit 20P connector.

6. Test the sunlight sensor (see page 21-63).

Is the sunlight sensor OK?

YES—Substitute a known-good climate control unit, and recheck. If the symptom/indication goes away, replace the original climate control unit.■

NO—Replace the sunlight sensor.■

BACK

DTC indicator light G: An open in the evaporator temperature sensor circuit

1. Disconnect the evaporator temperature sensor 2P connector.

2. Measure the resistance between the No. 1 and No. 2 terminals of the evaporator temperature sensor.

EVAPORATOR TEMPERATURE SENSOR
Terminal side of male terminals

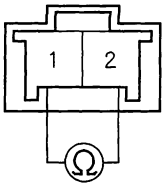

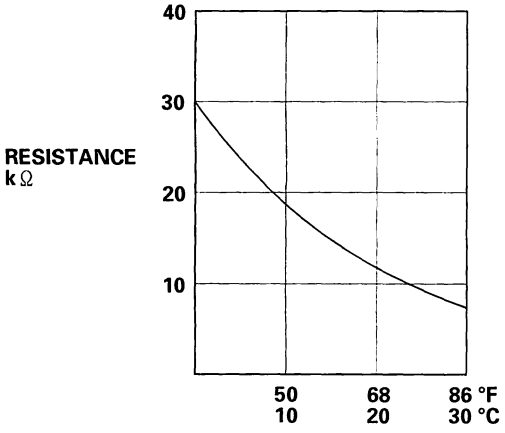

Is the resistance within the specifications shown on the graph?

YES — Go to step 3.

NO — Replace the evaporator temperature sensor. ■

3. Disconnect the climate control unit 20P connector.

4. Check for continuity between the No. 14 terminal of the climate control unit 20P connector and the No. 2 terminal of the evaporator temperature sensor 2P connector.

CLIMATE CONTROL UNIT 20P CONNECTOR
Wire side of female terminals

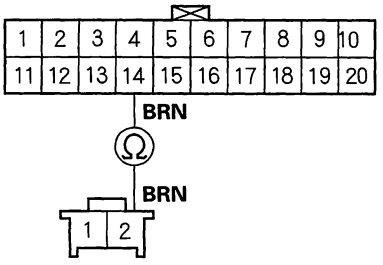

EVAPORATOR TEMPERATURE SENSOR 2P CONNECTOR
Wire side of female terminals

Is there continuity?

YES — Go to step 5.

NO — Repair open in the wire between the climate control unit and the evaporator temperature sensor. ■

(cont'd)

DTC Troubleshooting (cont'd)

5. Check for continuity between the No. 11 terminal of the climate control unit 20P connector and the No. 1 terminal of the evaporator temperature sensor 2P connector.

CLIMATE CONTROL UNIT 20P CONNECTOR
Wire side of female terminals

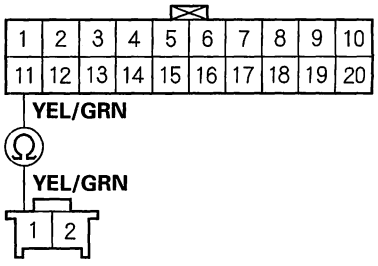

EVAPORATOR TEMPERATURE SENSOR 2P CONNECTOR
Wire side of female terminals

Is there continuity?

YES—Check for loose wires or poor connections at the climate control unit 20P connector and at the evaporator temperature sensor 2P connector. If the connections are good, substitute a known-good climate control unit, and recheck. If the symptom/indication goes away, replace the original climate control unit.■

NO—Repair open in the wire between the climate control unit and the evaporator temperature sensor.■

DTC indicator light H: A short in the evaporator temperature sensor circuit

1. Disconnect the evaporator temperature sensor 2P connector.

2. Test the evaporator temperature sensor (see step 2 on page 21-45).

   Is the resistance within the specifications shown on the graph?

   YES—Go to step 3.

   NO—Replace the evaporator temperature sensor.■

3. Disconnect the climate control unit 20P connector.

4. Check for continuity between the No. 14 terminal of the climate control unit 20P connector and body ground.

CLIMATE CONTROL UNIT 20P CONNECTOR
Wire side of female terminals

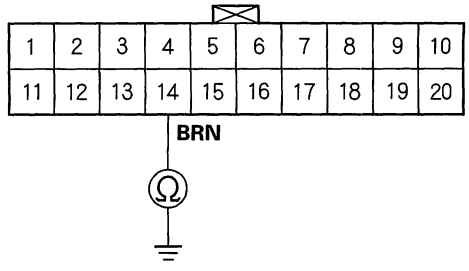

Is there continuity?

YES—Repair short to body ground in the wire between the climate control unit and the evaporator temperature sensor.■

NO—Substitute a known-good climate control unit, and recheck. If the symptom/indication goes away, replace the original climate control unit.■

BACK

DTC indicator light I: An open in the air mix control motor circuit

1. Disconnect the air mix control motor 7P connector.
2. Disconnect the climate control unit 20P connector.
3. Check for continuity between following terminals of the climate control unit 20P connector and the air mix control motor 7P connector.

20P:	7P:
No. 1	No. 3
No. 7	No. 2
No. 9	No. 1
No. 11	No. 5
No. 13	No. 7

CLIMATE CONTROL UNIT 20P CONNECTOR
Wire side of female terminals

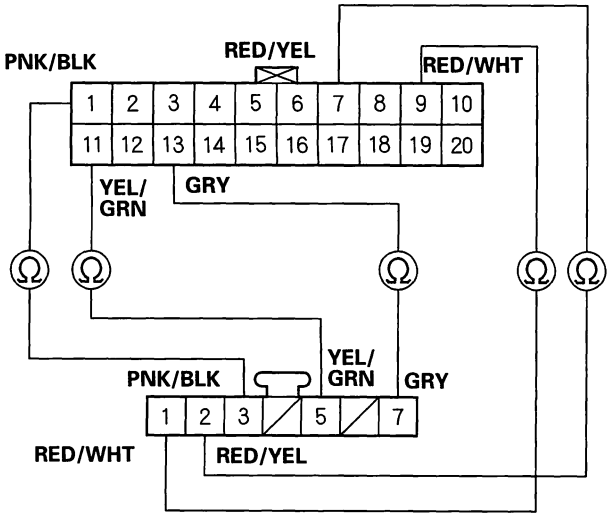

AIR MIX CONTROL MOTOR 7P CONNECTOR
Wire side of female terminals

Is there continuity?

YES—Check for loose wires or poor connections at the climate control unit 20P connector and at the air mix control motor 7P connector. If the connections are good, substitute a known-good climate control unit, and recheck. If the symptom/indication goes away, replace the original climate control unit.■

NO—Repair any open in the wire(s) between the climate control unit and the air mix control motor.■

DTC indicator light J: A short in the air mix control motor circuit

1. Disconnect the air mix control motor 7P connector.
2. Disconnect the climate control unit 20P connector.
3. Check for continuity between body ground and the climate control unit 20P connector terminals No. 1, 7, 9, 11 and 13 individually.

CLIMATE CONTROL UNIT 20P CONNECTOR
Wire side of female terminals

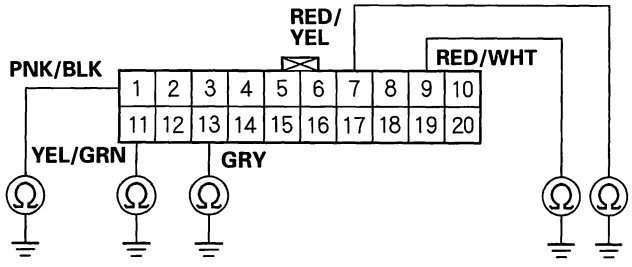

Is there continuity?

YES—Repair any short to body ground in the wire(s) between the climate control unit and the air mix control motor.■

NO—Go to step 4.

(cont'd)

DTC Troubleshooting (cont'd)

4. Turn the ignition switch ON (II), and check the same terminals for voltage.

CLIMATE CONTROL UNIT 20P CONNECTOR
Wire side of female terminals

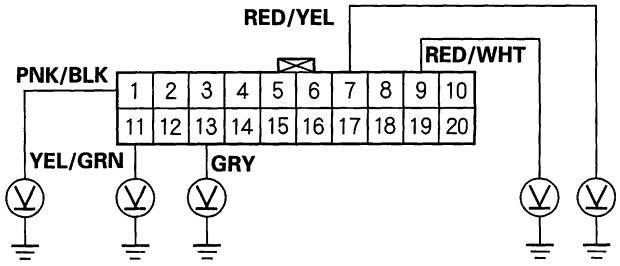

Is there any voltage?

YES—Repair any short to power in the wire(s) between the climate control unit and the air mix control motor. This short also damages the climate control unit. Repair the short to power before replacing the climate control unit.■

NO—Substitute a known-good climate control unit, and recheck. If the symptom/indication goes away, replace the original climate control unit.■

DTC indicator light K: A problem in the air mix control linkage, door and motor

1. Test the air mix control motor, refer to the '98-02 Accord Service Manual (see page 21-20).

   Is the air mix control motor OK?

   YES—Substitute a known-good climate control unit, and recheck. If the symptom/indication goes away, replace the original climate control unit.■

   NO—Go to step 2.

2. Remove the air mix control motor, refer to the '98-02 Accord Service Manual (see page 21-20).

3. Check the air mix control linkage and door for smooth movement.

   Do the air mix control linkage and door move smoothly?

   YES—Replace the air mix control motor.■

   NO—Repair the air mix control linkage or door.■

BACK

DTC indicator light L: An open or short in the mode control motor circuit

1. Disconnect the mode control motor 7P connector.
2. Disconnect the climate control unit 20P connector.
3. Check for continuity between body ground and the climate control unit 20P connector terminals No. 5, 6, 11, 17, 18, 19 and 20 individually.

CLIMATE CONTROL UNIT 20P CONNECTOR

Wire side of female terminals

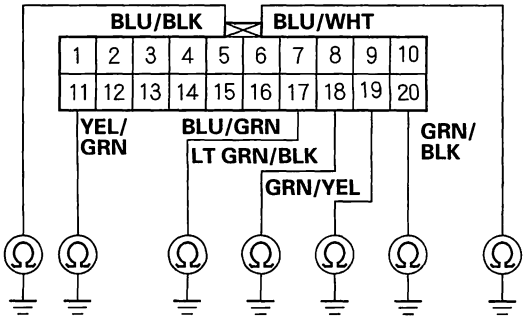

Is there continuity?

YES—Repair any short to body ground in the wire (s) between the climate control unit and the mode control motor.■

NO—Go to step 4.

4. Turn the ignition switch ON (II), and check the same terminals for voltage.

CLIMATE CONTROL UNIT 20P CONNECTOR

Wire side of female terminals

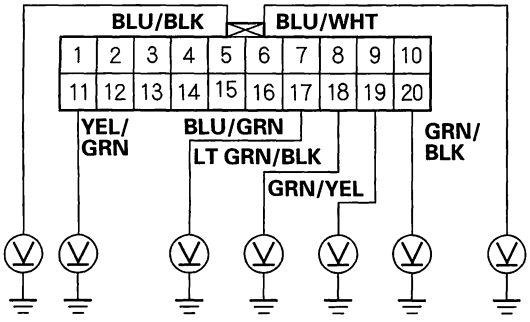

Is there any voltage?

YES—Repair any short to power in the wire(s) between the climate control unit and the mode control motor. This short also damages the climate control unit. Repair the short to power before replacing the climate control unit.■

NO—Go to step 5.

(cont'd)

DTC Troubleshooting (cont'd)

5. Turn the ignition switch OFF, and check for continuity between following terminals of the climate control unit 20P connector and the mode control motor 7P connector.

20P:	7P:
No. 5	No. 1
No. 6	No. 2
No. 11	No. 7
No. 17	No. 3
No. 18	No. 4
No. 19	No. 5
No. 20	No. 6

CLIMATE CONTROL UNIT 20P CONNECTOR
Wire side of female terminals

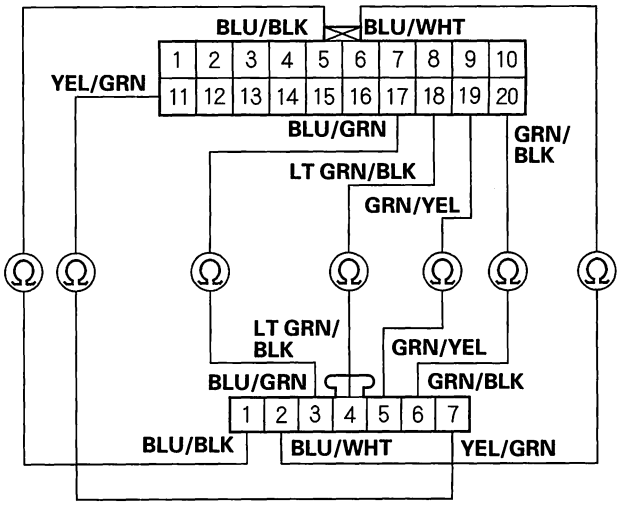

MODE CONTROL MOTOR 7P CONNECTOR
Wire side of female terminals

Is there continuity?

YES—Check for loose wires or poor connections at the climate control unit 20P connector and at the mode control motor 7P connector. If the connections are good, substitute a known-good climate control unit, and recheck. If the symptom/indication goes away, replace the original climate control unit.■

NO—Repair any open in the wire(s) between the climate control unit and the mode control motor.■

DTC indicator light M: A problem in the mode control linkage, doors and motor

1. Test the mode control motor, refer to the '98-02 Accord Service Manual (see page 21-20).

   Is the mode control motor OK?

   YES—Substitute a known-good climate control unit, and recheck. If the symptom/indication goes away, replace the original climate control unit.■

   NO—Go to step 2.

2. Remove the mode control motor, refer to the '98-02 Accord Service Manual (see page 21-20).

3. Check the mode control linkage and doors for smooth movement.

   Do the mode control linkage and doors move smoothly?

   YES—Replace the air mix control motor.■

   NO—Repair the mode control linkage or doors.■

BACK

DTC indicator light N: A problem in the blower motor circuit

1. Turn the ignition switch ON (II) and turn the blower fan speed knob to HIGH.

   Does the blower motor run?

   YES—Go to step 2.

   NO—Go to step 15.

2. Turn the ignition switch OFF, then disconnect the power transistor 5P connector.

3. Check for continuity between the No. 5 terminal of the power transistor 5P connector and body ground.

POWER TRANSISTOR 5P CONNECTOR
Wire side of female terminals

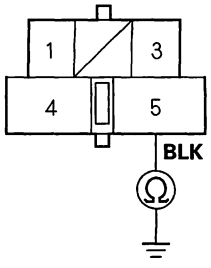

   Is there continuity?

   YES—Go to step 4.

   NO—Check for an open in the wire between the power transistor and body ground. If the wire is OK, check for poor ground at G401.■

4. Connect the No. 4 and No. 5 terminals of the power transistor 5P connector with a jumper wire.

POWER TRANSISTOR 5P CONNECTOR
Wire side of female terminals

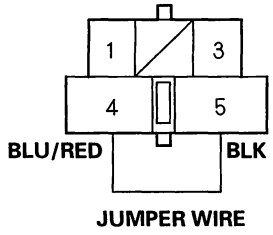

5. Turn the ignition switch ON (II).

   Does the blower motor run at high speed?

   YES—Go to step 6.

   NO—Repair open in the wire between the power transistor and the blower motor.■

6. Turn the ignition switch OFF.

7. Disconnect the jumper wire.

8. Disconnect the climate control unit 8P connector.

(cont'd)

DTC Troubleshooting (cont'd)

9. Check for continuity between the No. 5 terminal of the climate control unit 8P connector and the No. 3 terminal of the power transistor 5P connector.

CLIMATE CONTROL UNIT 8P CONNECTOR
Wire side of female terminals

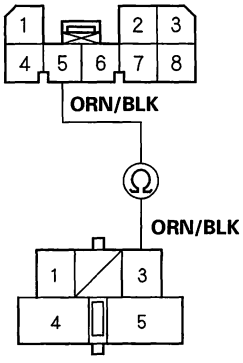

POWER TRANSISTOR 5P CONNECTOR
Wire side of female terminals

Is there continuity?

YES—Go to step 10.

NO—Repair open in the wire between the climate control unit and the power transistor.■

10. Check for continuity between the No. 5 terminal of the climate control unit 8P connector and body ground.

CLIMATE CONTROL UNIT 8P CONNECTOR
Wire side of female terminals

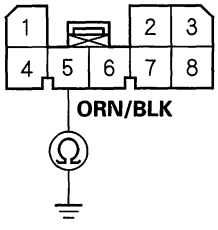

Is there continuity?

YES—Repair short to body ground in the wire between the climate control unit and the power transistor.■

NO—Go to step 11.

11. Check for continuity between the No. 6 terminal of the climate control unit 8P connector and the No. 1 terminal of the power transistor 5P connector.

CLIMATE CONTROL UNIT 8P CONNECTOR
Wire side of female terminals

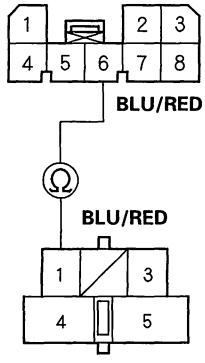

POWER TRANSISTOR 5P CONNECTOR
Wire side of female terminals

Is there continuity?

YES—Go to step 12.

NO—Repair open in the wire between the climate control unit and the power transistor.■

12. Check for continuity between the No. 6 terminal of the climate control unit 8P connector and body ground.

CLIMATE CONTROL UNIT 8P CONNECTOR
Wire side of female terminals

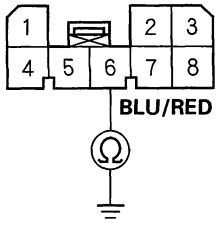

Is there continuity?

YES—Repair short to body ground in the wire between the climate control unit and the power transistor.■

NO—Go to step 13.

BACK

13. Reconnect the climate control unit 8P connector.

14. Test the power transistor (see page 21-64).

    Is the power transistor OK?

    YES—Check for loose wires or poor connections at the climate control unit 8P connector and at the power transistor 5P connector. If the connections are good, substitute a known-good climate control unit, and recheck. If the symptom/indication goes away, replace the original climate control unit.■

    NO—Replace the power transistor.■

15. Turn the ignition switch OFF, and check the No. 56 (40 A) fuse in the under-hood fuse/relay box, and No. 3 (7.5 A) fuse in the driver's under-dash fuse/relay box.

    Are the fuses OK?

    YES—Go to step 16.

    NO—Replace the fuse(s), and recheck.■

16. Connect the No. 2 terminal of the blower motor 2P connector to body ground with a jumper wire.

BLOWER MOTOR 2P CONNECTOR
Wire side of female terminals

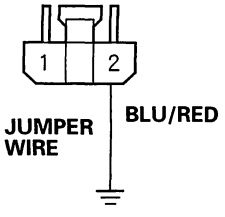

17. Turn the ignition switch ON (II).

    Does the blower motor run?

    YES—Go to step 18.

    NO—Go to step 31.

18. Turn the ignition switch OFF.

19. Disconnect the jumper wire.

20. Remove the blower motor high relay, and test it, refer to the '98-02 Accord Service Manual (see page 22-52).

    Is the relay OK?

    YES—Go to step 21.

    NO—Replace the blower motor high relay.■

21. Connect the No. 4 terminal of the blower motor high relay 5P connector to body ground with a jumper wire.

BLOWER MOTOR HIGH RELAY 5P CONNECTOR
Wire side of female terminals

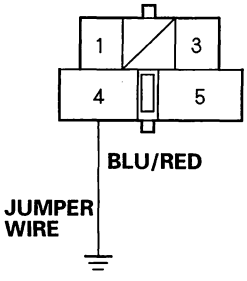

22. Turn the ignition switch ON (II).

    Does the blower motor run?

    YES—Go to step 23.

    NO—Repair open in the wire between the blower motor high relay and the blower motor.■

23. Turn the ignition switch OFF.

24. Disconnect the jumper wire.

25. Turn the ignition switch ON (II).

(cont'd)

DTC Troubleshooting (cont'd)

26. Measure the voltage between the No. 1 terminal of the blower motor high relay 5P connector and body ground.

BLOWER MOTOR HIGH RELAY 5P CONNECTOR

Wire side of female terminals

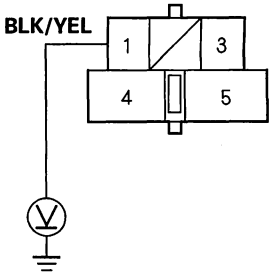

Is there battery voltage?

YES—Go to step 27.

NO—Repair open in the wire between the blower motor high relay and the No. 3 fuse in the driver's under-dash fuse/relay box.■

27. Turn the ignition switch OFF.

28. Check for continuity between the No. 5 terminal of the blower motor high relay 5P connector and body ground.

BLOWER MOTOR HIGH RELAY 5P CONNECTOR

Wire side of female terminals

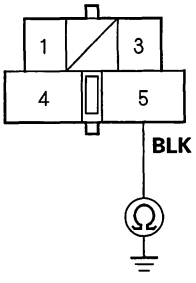

Is there continuity?

YES—Go to step 29.

NO—Check for an open in the wire between the blower motor high relay and body ground. If the wire is OK, check for poor ground at G401.■

29. Disconnect the climate control unit 8P connector.

30. Check for continuity between the No. 4 terminal of the climate control unit 8P connector and the No. 3 terminal of the blower motor high relay 5P connector.

CLIMATE CONTROL UNIT 8P CONNECTOR

Wire side of female terminals

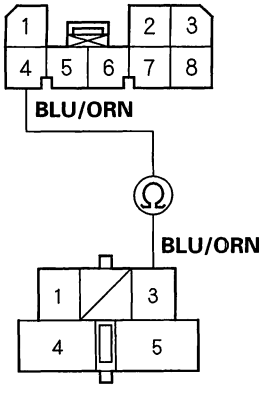

BLOWER MOTOR HIGH RELAY 5P CONNECTOR

Wire side of female terminals

Is there continuity?

YES—Check for loose wires or poor connections at the climate control unit 8P connector and at the blower motor high relay 5P connector. If the connections are good, substitute a known-good climate control unit, and recheck. If the symptom/indication goes away, replace the original climate control unit.■

NO—Repair open in the wire between the climate control unit and the blower motor high relay.■

BACK

31. Disconnect the jumper wire.

32. Disconnect the blower motor 2P connector.

33. Measure the voltage between the No. 1 terminal of the blower motor 2P connector and body ground.

BLOWER MOTOR 2P CONNECTOR
Wire side of female terminals

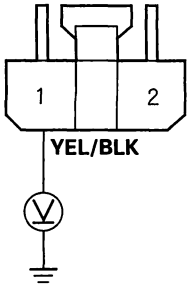

Is there battery voltage?

YES—Replace the blower motor.■

NO—Go to step 34.

34. Turn the ignition switch OFF.

35. Remove the blower motor relay from the under-hood fuse/relay box, and test it, refer to the '98-02 Accord Service Manual (see page 22-52).

Is the relay OK?

YES—Go to step 36.

NO—Replace the blower motor relay.■

36. Measure the voltage between the No. 4 terminal of the blower motor relay 4P socket and body ground.

BLOWER MOTOR RELAY 4P SOCKET

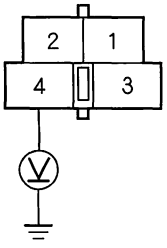

Is there battery voltage?

YES—Go to step 37.

NO—Replace the under-hood fuse/relay box.■

37. Turn the ignition switch ON (II).

38. Measure the voltage between the No. 1 terminal of the blower motor relay 4P socket and body ground.

BLOWER MOTOR RELAY 4P SOCKET

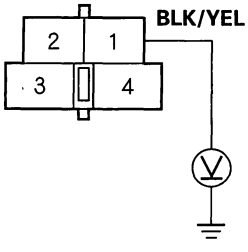

Is there battery voltage?

YES—Go to step 39.

NO—Repair open in the wire between the No. 3 fuse in the driver's under-dash fuse/relay box and the blower motor relay.■

(cont'd)

DTC Troubleshooting (cont'd)

39. Turn the ignition switch OFF.

40. Check for continuity between the No. 2 terminal of the blower motor relay 4P socket and body ground.

BLOWER MOTOR RELAY 4P SOCKET

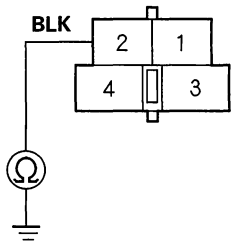

Is there continuity?

YES—Repair open in the wire between the blower motor relay and the blower motor.■

NO—Check for an open in the wire between the blower motor relay and body ground. If the wire is OK, check for poor ground at G202.■

ECT Sensor Circuit Troubleshooting

1. Check the malfunction indicator lamp (MIL).

   Does the malfunction indicator lamp come on?

   YES—Read the DTC and perform the appropriate troubleshooting for that code. Refer to the fuel and emissions section of the '98-02 Accord Service Manual (see page 11-3).■

   NO—Go to step 2.

2. Turn the ignition switch OFF.

3. Disconnect the ECT sensor 2P connector.

4. Disconnect the climate control unit 8P connector.

5. Turn the ignition switch ON (II).

6. Measure the voltage between the No. 3 terminal of the climate control unit 8P connector and body ground.

CLIMATE CONTROL UNIT 8P CONNECTOR

Wire side of female terminals

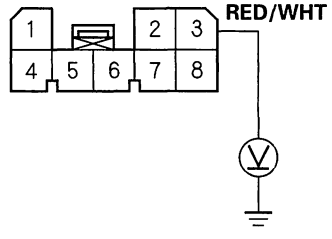

Is there about 5 volts?

YES—Check for loose wires or poor connections at the climate control unit 8P connector and at the ECT sensor 2P connector. If the connections are good, substitute a known-good climate control unit, and recheck. If the symptom/indication goes away, replace the original climate control unit.■

NO—Repair open in the wire between the climate control unit and the ECT sensor.■

BACK

Climate Control Power and Ground Circuits Troubleshooting

1. Check the No. 54 (40A) fuse in the under-hood fuse/relay box, the No. 3 (7.5A) fuse in the driver's under-dash fuse/relay box, and the No. 13 (7.5A) fuse in the passenger's under-dash fuse/relay box.

   Are the fuses OK?

   YES—Go to step 2.

   NO—Replace the fuse(s), and recheck.■

2. Disconnect the climate control unit 8P connector.

3. Turn the ignition switch ON (II).

4. Measure the voltage between the No. 1 terminal of the climate control unit 8P connector and body ground.

   CLIMATE CONTROL UNIT 8P CONNECTOR
   Wire side of female terminals

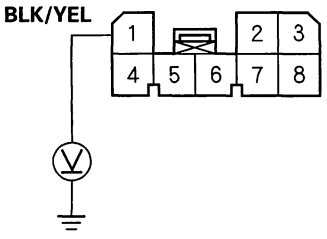

   Is there battery voltage?

   YES—Go to step 5.

   NO—Repair open in the wire between the No. 3 fuse in the driver's under-dash fuse/relay box and the climate control unit.■

5. Turn the ignition switch OFF.

6. Measure the voltage between the No. 2 terminal of the climate control unit 8P connector and body ground.

   CLIMATE CONTROL UNIT 8P CONNECTOR
   Wire side of female terminals

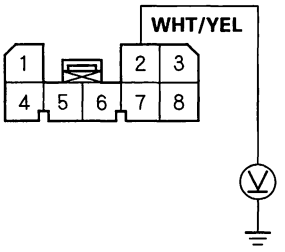

   Is there battery voltage?

   YES—Go to step 7.

   NO—Repair open in the wire between the No. 13 fuse in the passenger's under-dash fuse/relay box and the climate control unit.■

7. Check for continuity between the No. 8 terminal of the climate control unit 8P connector and body ground.

   CLIMATE CONTROL UNIT 8P CONNECTOR
   Wire side of female terminals

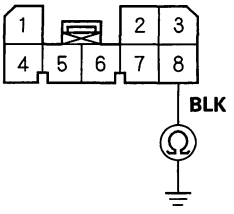

   Is there continuity?

   YES—Check for loose wires or poor connections at the climate control unit 8P connector. If the connections are good,substitute a known-good climate control unit, and recheck. If the symptom/indication goes away, replace the original climate control unit.■

   NO—Check for an open in the wire between the blower motor high relay and body ground. If the wire is OK, check for poor ground at G401.■

BACK

Recirculation Control Motor Circuit Troubleshooting

1. Check the No. 3 (7.5A) fuse in the driver's under-dash fuse/relay box.

   Is the fuses OK?

   YES—Go to step 2.

   NO—Replace the fuse, and recheck.■

2. Disconnect the recirculation control motor 7P connector.

3. Turn the ignition switch ON (II).

4. Measure the voltage between the No. 1 terminal of the recirculation control motor 7P connector and body ground.

   RECIRCULATION CONTROL MOTOR 7P CONNECTOR
   Wire side of female terminals

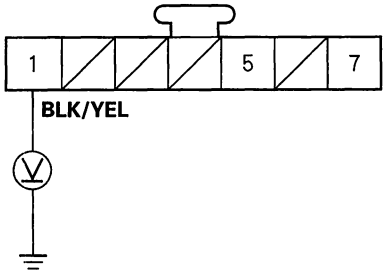

   Is there battery voltage?

   YES—Go to step 5.

   NO—Repair open in the wire between the recirculation control motor and the No. 3 fuse in the driver's under-dash fuse/relay box.■

5. Turn the ignition switch OFF.

6. Test the recirculation control motor, refer to the '98-02 Accord Service Manual (see page 21-22).

   Is the recirculation control motor OK?

   YES—Go to step 7.

   NO—Go to step 11.

7. Disconnect the climate control unit 20P connector.

8. Check for continuity between the No. 3 and No. 4 terminals of the climate control unit 20P conector and body ground individually.

   CLIMATE CONTROL UNIT 20P CONNECTOR
   Wire side of female terminals

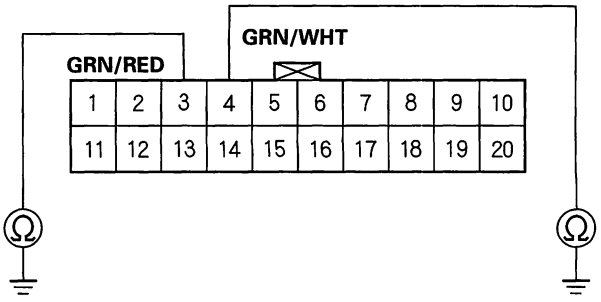

   Is there continuity?

   YES—Repair any short to body ground in the wire (s) between the climate control unit and the recirculation control motor.■

   NO—Go to step 9.

9. Turn the ignition switch ON(II), and check the same wires for voltage.

   CLIMATE CONTROL UNIT 20P CONNECTOR
   Wire side of female terminals

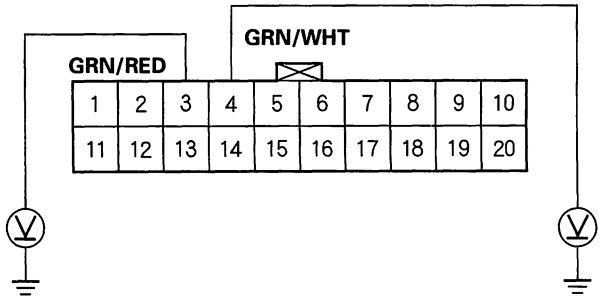

   Is there any voltage?

   YES—Repair any short to power in the wire(s) between the climate control unit and the recirculation control motor. This short also damages the climate control unit. Repair the short to power before replacing the climate control unit. ■

   NO—Go to step 10.

BACK

10. Turn the ignition switch OFF, and check for continuity between the following terminals of the climate control unit 20P connector and the recirculation control motor 7P connector.

20P:	7P:
No. 3	No. 5
No. 4	No. 7

CLIMATE CONTROL UNIT 20P CONNECTOR
Wire side of female terminals

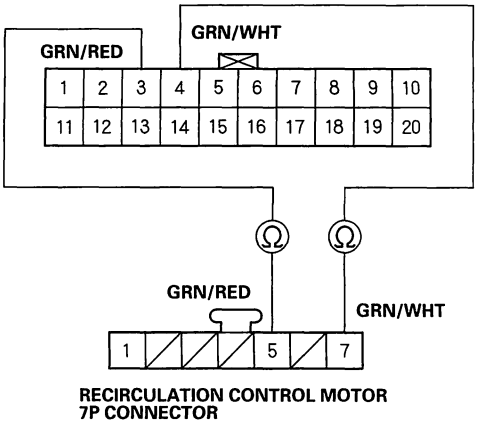

RECIRCULATION CONTROL MOTOR 7P CONNECTOR
Wire side of female terminals

Is there continuity?

YES—Check for loose wires or poor connections at the climate control unit 20P connector and at recirculation control motor 7P connector. If the connections are good, substitute a known-good climate control unit, and recheck. If the symptom/indication goes away, replace the original climate control unit.■

NO—Repair any open in the wire(s) between the climate control unit and the recirculation control motor.■

11. Remove the recirculation contol motor, refer to the '98-02 Accord Service Manual (see page 21-22).

12. Check the recirculation control linkage and doors for smooth movement.

Do the recirculation control linkage and doors move smoothly?

YES—Replace the recirculation control motor.■

NO—Repair the recirculation control linkage or doors.■

A/C Pressure Switch Circuit Troubleshooting

1. Disconnect the A/C pressure switch 2P connector.

2. Turn the ignition switch ON (II).

3. Measure the voltage between the No. 2 terminal of the A/C presure switch 2P connector and body ground.

A/C PRESSURE SWITCH 2P CONNECTOR
Wire side of female terminals

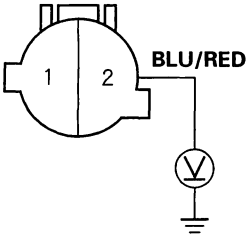

Is there about 5 volts?

YES—Go to step 4.

NO—Go to step 10.

4. Turn the ignition switch OFF.

5. Check for continuity between the No. 1 and No. 2 terminals of the A/C pressure switch.

A/C PRESSURE SWITCH

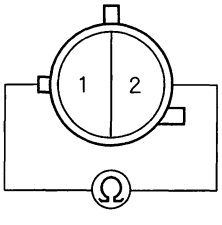

Is there continuity?

YES—Go to step 6.

NO—Go to step 11.

(cont'd)

A/C Pressure Switch Circuit Troubleshooting (cont'd)

6. Reconnect the A/C pressure switch 2P connector.

7. Disconnect the climate control unit 20P connector.

8. Turn the ignition switch ON (II).

9. Measure the voltage between the No. 2 terminal of the climate control unit 20P connector and body ground.

CLIMATE CONTROL UNIT 20P CONNECTOR
Wire side of female terminals

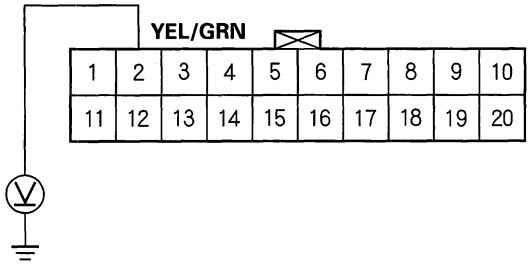

Is there about 5 volts?

YES—Check for loose wires or poor connections at the climate control unit 20P connector and at the A/C pressure switch 2P connector. If the connections are good, substitute a known-good climate control unit, and recheck. If the symptom/indication goes away, replace the original climate control unit.■

NO—Repair open in the wire between the climate control unit and the A/C pressure switch.■

10. Using a Backprobe Set, measure the voltage between the No. 27 terminal of the PCM connector A (32P) and body ground with the PCM connectors connected.

PCM CONNECTOR A (32P)
Wire side of female terminals

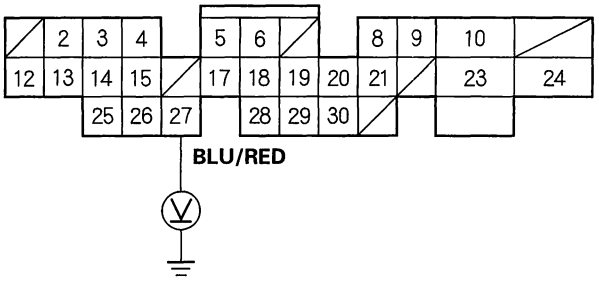

Is there about 5 volts?

YES—Repair open in the wire between the PCM and the A/C pressure switch.■

NO—Check for loose wires or poor connections at the PCM connector A (32P). If the connections are good, substitute a known-good PCM, and recheck. If the symptom/indication goes away, replace the original PCM.■

11. Check for proper A/C system pressure.

Is the pressure within specifications?

YES—Replace the A/C pressure switch.■

NO—Repair the A/C pressure problem.■

BACK

In-car Temperature Sensor Replacement

1. Remove the in-car temperature sensor (A) from the dashboard, then disconnect the 2P connector (B) and the air hose (C). Be careful not to damage the sensor and the dashboard.

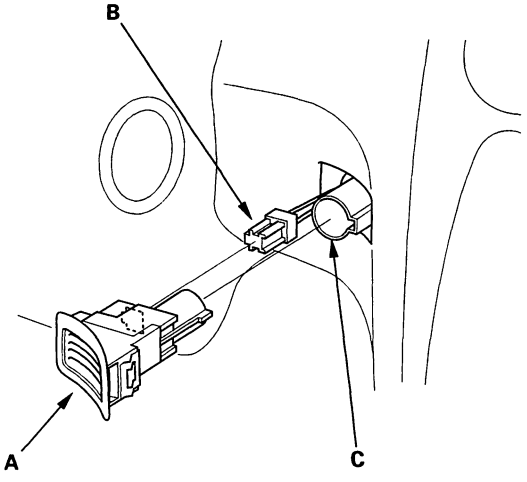

2. Install the sensor in the reverse order of removal. Be sure to connect the air hose securely.

In-car Temperature Sensor Test

Check for a change in resistance by heating or cooling the sensor with a hair drier.

Compare the resistance reading between the No. 1 and No. 2 terminals of the in-car temperature sensor with the specifications shown in the graph; the resistance should be within the specifications.

IN-CAR TEMPERATURE SENSOR

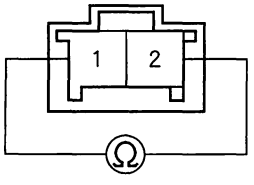

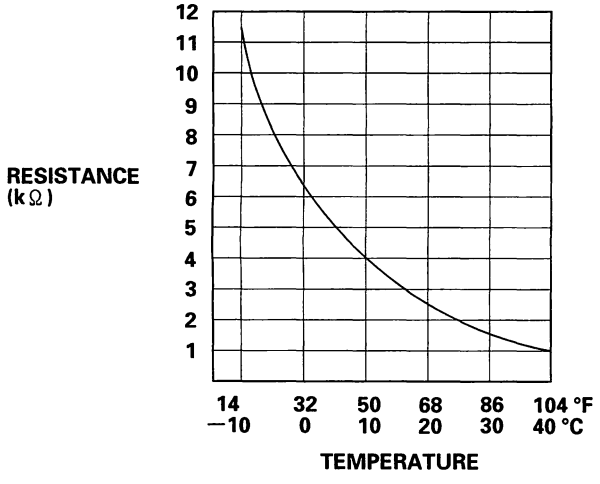

Outside Air Temperature Sensor Replacement

1. Disconnect the 2P connector from the outside air temperature sensor. Release the lock, and remove the outside air temperature sensor.

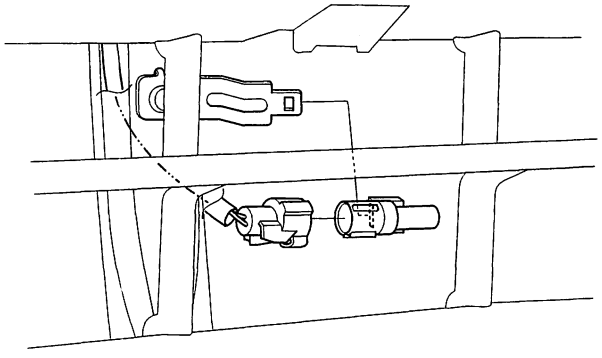

2. Install the sensor in the reverse order of removal.

Outside Air Temperature Sensor Test

Dip the sensor in ice water, and measure the resistance. Then pour hot water on the sensor, and check for a change in resistance.

Compare the resistance reading between the No. 1 and No. 2 terminals of the outside air temperature sensor with the specifications shown in the graph; the resistance should be within the specifications.

OUTSIDE AIR TEMPERATURE SENSOR

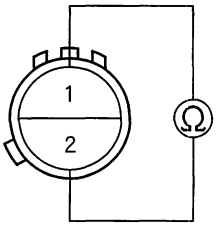

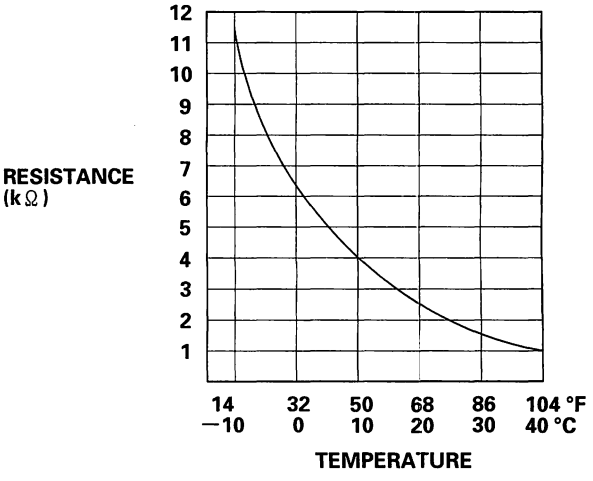

BACK

Sunlight Sensor Replacement

1. Remove the sunlight sensor from the dashboard, then disconnect the 2P connector. Be careful not to damage the sensor and the dashboard.

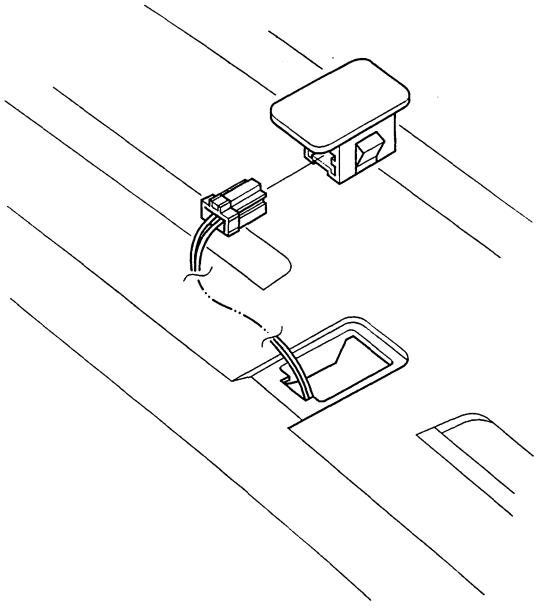

2. Install the sensor in the reverse order of removal.

Sunlight Sensor Test

Turn the ignition switch ON (II). Measure the voltage between the terminals with the (+) probe on the No. 1 terminal and the (−) probe on the No. 2 terminal with the 2P connector connected. The voltage will not change under the light of a flashlight or a fluorescent lamp. Voltage should be:

- 3.6−3.7 V or more with the sensor out of direct sunlight.
- 3.3−3.5 V or less with the sensor in direct sunlight.

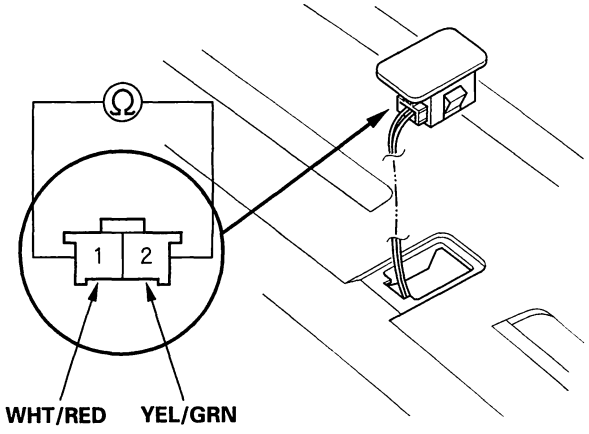

Power Transistor Test

1. Disconnect the 5P connector from the power transistor.

2. Measure the resistance between the No. 1 and No. 4 terminals of the power transistor. If should be approximately 1.4—1.5 kΩ.

   - If the resistance is within the specifications, go to step 3.
   - If the resistance is not within the specifications, replace the power transistor.

POWER TRANSISTOR

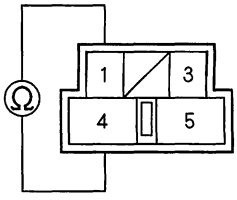

3. Carefully release the lock tab on the No. 3 terminal (ORN/BLK) (A) in the 5P connector, then remove the terminal and insulate it from body ground.

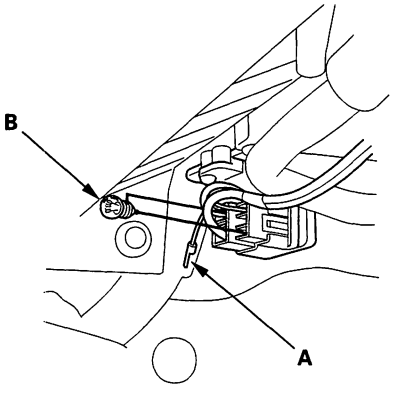

4. Connect a 1.2—3.4 W bulb (B) between the No. 3 and the No. 4 cavity on the 5P connector.

5. Reconnect the 5P connector to the power transistor.

6. Turn the ignition switch ON (II), and check that the blower motor runs.

   - If the blower motor does not run, replace the power transistor.
   - If the blower motor runs, replace the climate control unit.

Climate Control Unit Removal and Installation

1. Remove the center panel together with the climate control unit, refer to the '98-02 Accord Service Manual (see page 20-86).

2. Remove the self-tapping screws and the climate control unit (A) from the center pagnel (B).

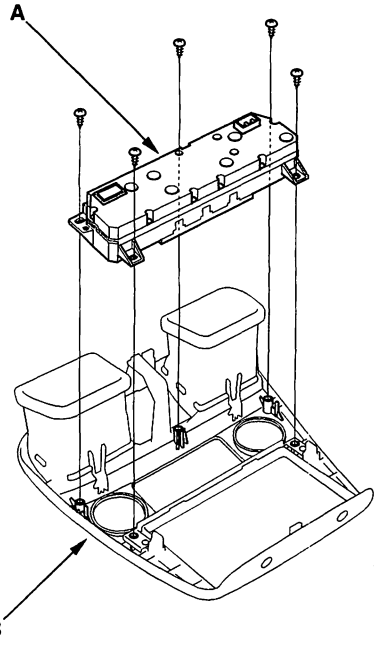

3. Install the control unit in the reverse order of removal. After installation, operate the control unit controls to see whether it works properly.

4. Run the self-diagnosis function to comfirm that there are no problems in the system (see page 21-34).

BACK

Climate Control Unit Disassembly and Reassembly

1. Remove the fan switch (A) and temperature control (B) dials, then remove the front (C), temperature control (D) and fan switch (E) panels. Remove A/C switch (F), MODE control switch (G), AUTO switch (H), OFF switch (I), recirculation control switch (J), front defroster switch (K) and rear defogger switch (L) buttons.

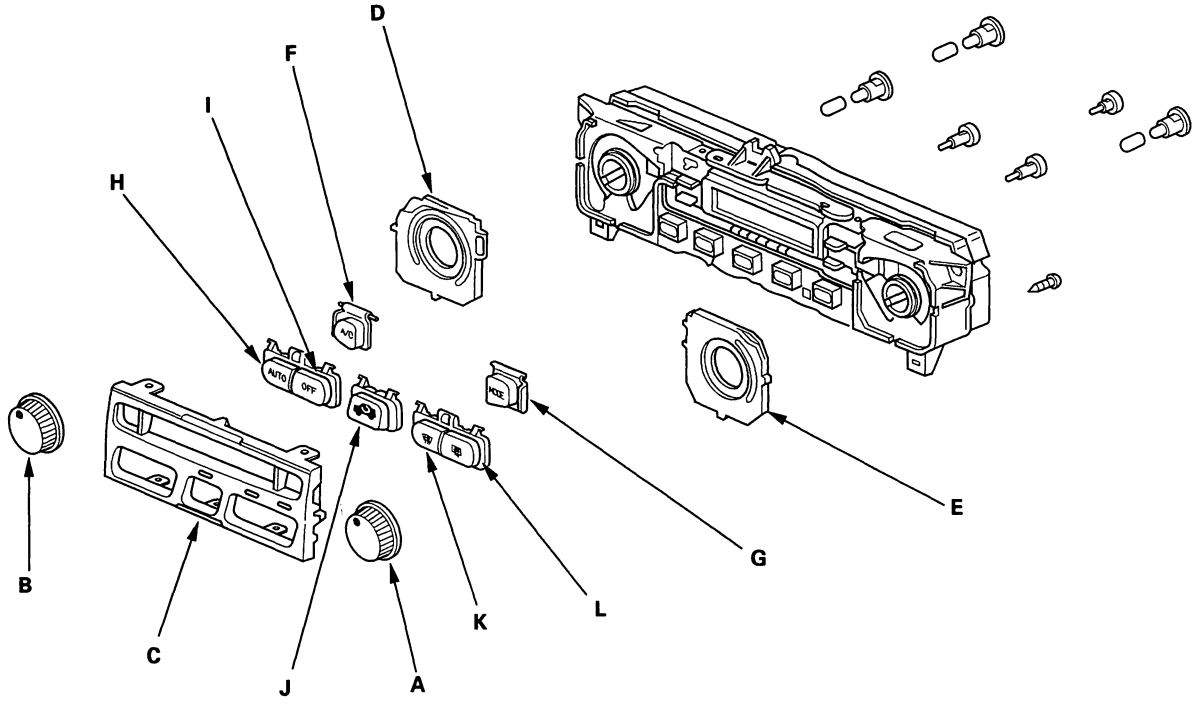

2. Reassemble the control unit in the reverse order of removal.

SUPPLEMENTAL RESTRAINT SYSTEM (SRS) (If electrical maintenance is required)

The Accord Sedan/Coupe (V6) SRS includes a driver's airbag located in the steering wheel hub, a passenger's airbag located in the dashboard above the glove box, and side airbags ('00-01 models) located in the front seat-backs. Information necessary to safely service the SRS is included in the '98-02 Accord Sedan/Coupe (L4) Service Manual, P/N 61S8400. Items marked with an asterisk (*) on the contents page include or are located near SRS components. Servicing, disassembling or replacing these items will require special precautions and tools, and should therefore be done by and authorized Honda dealer.

- To avoid rendering the SRS inoperative, which could lead to personal injury or death in the event of a severe frontal collision, all SRS service work must be performed by an authorized Honda dealer.
- Improper service procedures, including incorrect removal and installation of the SRS, could lead to personal injury caused by unintentional deployment of the frontal airbags (and/or side airbags on some '00-02 models).
- Do not bump the SRS unit, Otherwise, the system may fail in case of a collision, or the airbags may deploy when the ignition switch is ON (II).
- SRS electrical wiring harnesses are indicated with yellow color coding. Related components are located in the steering column, front console, dashboard, dashboard lower panel, in the dashboard above the glove box, in the front seats ('00-02 models) and around the floor ('00-02 models). Do not use electrical test equipment on these circuits.

BACK

Body Electrical

Relay and Control Unit Locations **22-2**
Connectors and Harnesses **22-4**
Fuse/Relay Boxes **22-23**
Power Distribution **22-26**
Ground Distribution **22-29**
Battery **22-30**
Relays
Power Relay Test 22-31
*** Gauges**
Gauge Bulb Replacement 22-32
Circuit Diagram 22-33
Safety Indicator System
Circuit Diagram 22-38
*** Stereo Sound System**
Component Location Index 22-40
Circuit Diagram 22-41
Audio Unit Connector Replacement 22-42
Radio Remote Switch Test 22-42
Homelink Remote Control System
Circuit Diagram 22-43
Test 22-43
Power Seat ('01-02 Sedan)
Component Location Index 22-44
Circuit Diagram 22-45
Motor Test 22-46
Switch Test/Replacement 22-47
Seat Heaters-Canada
Component Location Index 22-48
Circuit Diagram 22-49

NOTE: Refer to the '98–02 Accord Service Manual, P/N 61S8400, for the items not shown in this section.

Outline of V6 Model Changes

1998 model:
- The ABS control unit location has been changed; related component locations are included.
- A blower motor high relay and a radiator fan control module have been added; related component locations are included.
- The wire harness and ground locations have been changed.
- The bulb locations in the gauges have been changed.
- The stereo sound system has been changed.
- Homelink remote control system has been added; related information is included.
- Circuit diagrams which differ from those in the '98 Accord Service Manual have been included.

1999 model:
- There are no changes to the 1998 model.

2000 model:
- There side airbag system has been added; related information is included.
- The engine wire harness has been changed.
- Circuit diagrams which differ from theose in the '98-99 Accord Service Manual have been included.

2001 model:
- The seat heater relay location has been changed
- The ABS/TCS control unit, TCS relay, and TCS indicator have been added.
- The wire harness and ground locations have been changed.
- The passenger's power seat has been added in the sedan.
- Circuit diagrams which differ from those in the '98-01 Accord Service Manual have been included.

2002 model:
- There are no changes to the 2001 model.

Relay and Control Unit Locations

Engine Compartment

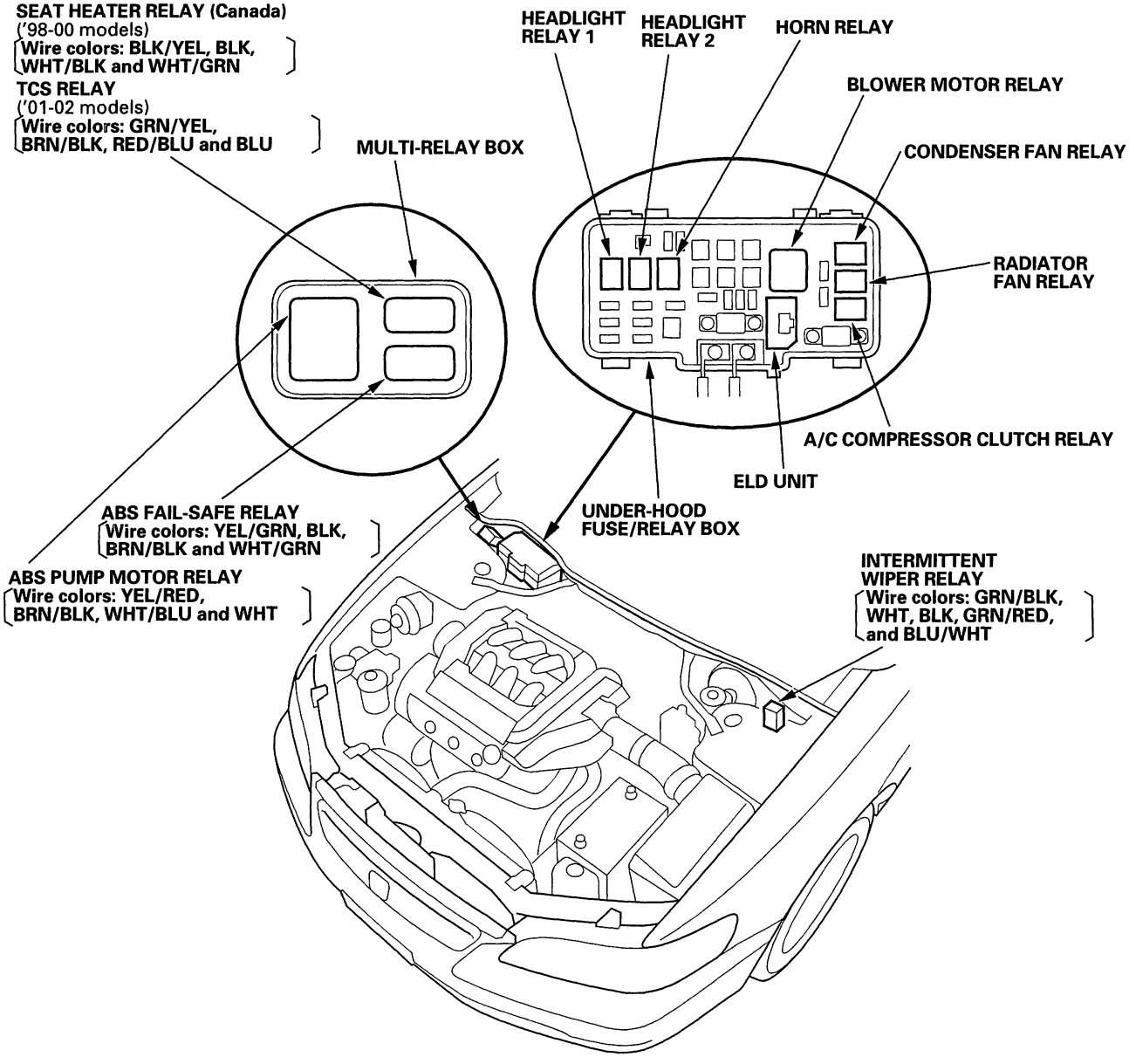

BACK

Dashboard

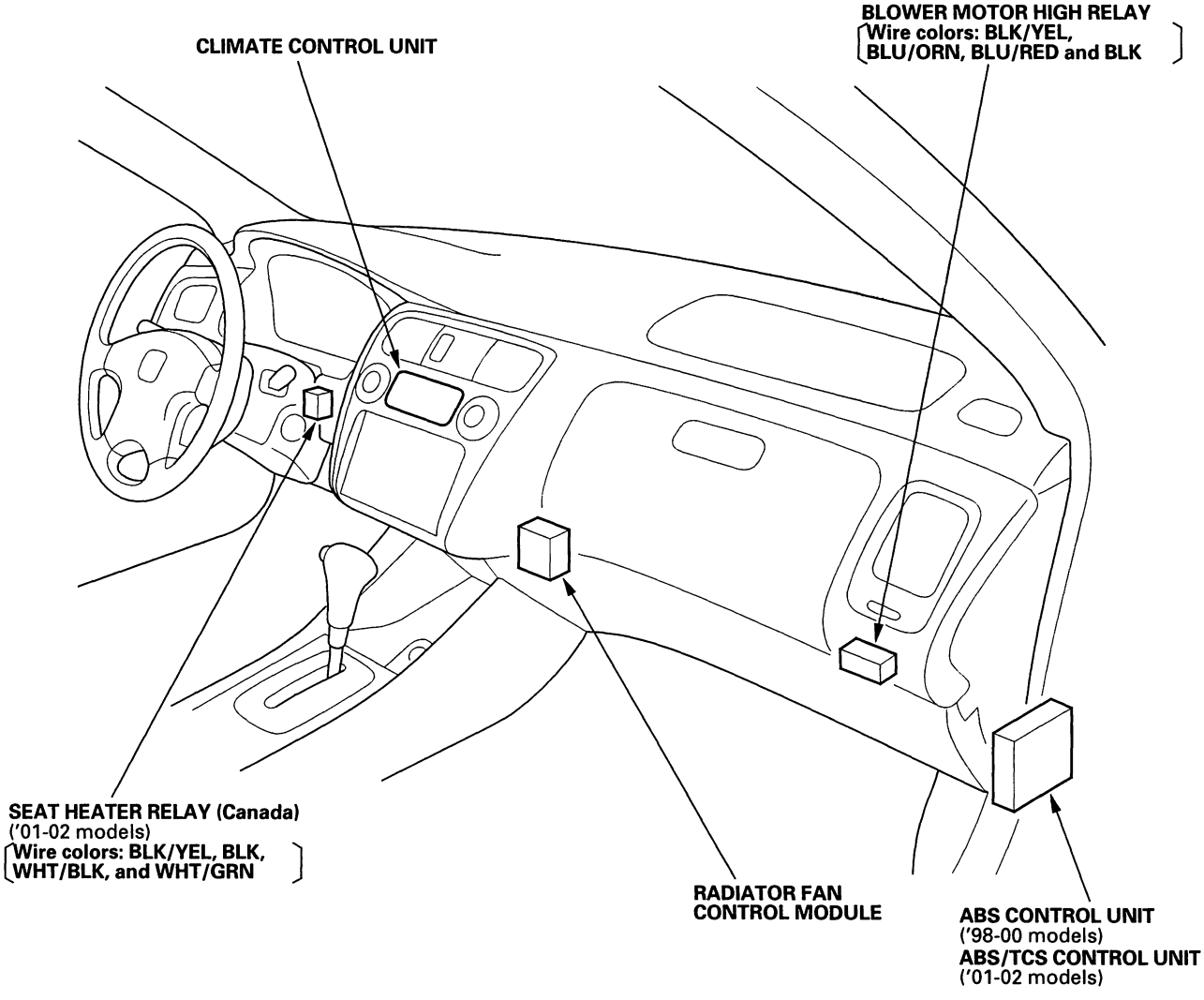
CLIMATE CONTROL UNIT
BLOWER MOTOR HIGH RELAY
(Wire colors: BLK/YEL, BLU/ORN, BLU/RED and BLK)
SEAT HEATER RELAY (Canada)
('01-02 models)
(Wire colors: BLK/YEL, BLK, WHT/BLK, and WHT/GRN)
RADIATOR FAN CONTROL MODULE
ABS CONTROL UNIT
('98-00 models)
ABS/TCS CONTROL UNIT
('01-02 models)

Connectors and Harnesses

Connector Index

Identification numbers have been assigned to in-line connectors. The number is preceded by the letter "C" for connectors, "G" for ground terminals or "T" for non-ground terminals.

Harness	Location			
	Engine Compartment	Dashboard	Others (Floor, Door, Trunk, and Roof)	Notes
Starter cable	T1, T2 and (+)			(see page 22-5)
Battery ground cable	T3 G1 and (−)			(see page 22-5)
Engine ground cable	T4 G2			(see page 22-5)
Engine wire harness	C103 through C108 T101 and T102 G101 and G102			(see page 22-6)
Right engine compartment wire harness	G201 through G205	C201 through C204		(see page 22-12)
Left engine compartment wire harness	G301 and G302	C103 and C104 C301 and C304		(see page 22-14)
Dashboard wire harness B (left branch)		C301, C401 and C402 G401		(see page 22-16)
Dashboard wire harness B (right branch)		C201 through C203 and C403		(see page 22-16)
Dashboard wire harness A		C204, C302 and C401 G501 and G502	C501 through C505 and C582 G503 and G504	(see page 22-18)
Left side wire harness			C501 and C551 through C557 G551 and G552	Refer to the '98-02 Accord Service Manual (see page 22-24)
Right side wire harness			C581 through C586 and C851 G581	(see page 22-20)
Rear wire harness			C554 and C601 G601	Refer to the '98-02 Accord Service Manual (see page 22-28)
Moonroof wire harness			C502	Refer to the '98-02 Accord Service Manual (see page 22-30)
Roof wire harness				Refer to the '98-02 Accord Service Manual (see page 22-30)
Driver's power seat wire harness			C551	Refer to the '98-02 Accord Service Manual (see page 22-31)
Passenger's power seat wire harness ('01 Sedan)			C701	(see page 22-22)
Driver's door wire harness			C631 and C632	Refer to the '98-02 Accord Service Manual (see page 22-32)
Passenger's door wire harness				Refer to the '98-02 Accord Service Manual (see page 22-34)
Left rear door wire harness			C553	Refer to the '98-02 Accord Service Manual (see page 22-36)
Right rear door wire harness			C581	Refer to the '98-02 Accord Service Manual (see page 22-37)
Ignition switch harness		C404		Refer to the '98-02 Accord Service Manual (see page 22-38)
SRS main harness		C503	C556, C557, C583 and C584 G801	Refer to the '98-02 Accord Service Manual (see page 22-38)
SRS floor harness (Sedan)			C505 and C851	Refer to the '98-02 Accord Service Manual (see page 22-39)
OPDS wire harness (with side airbags)			C851	Refer to the '98-02 Accord Service Manual (see page 22-42)
Rear window defogger wire harness				Refer to the '98-02 Accord Service Manual (see page 22-42)

BACK

Connector to Harness Index

Starter Cable

Connector or Terminal	Ref	Cavities	Location	Connects to	Notes
T1	1		Right side of engine compartment	Under-hood fuse/relay box	
T2	2		Left side of engine compartment	Starter motor	
(+)			Battery	Battery positive terminal	

Battery Ground Cable

Connector or Terminal	Ref	Cavities	Location	Connects to	Notes
T3	6		Left side of engine compartment	Transmission housing	
G1	5		Left side of engine compartment	Body ground via battery ground cables	
(−)			Battery	Battery negative terminal	

Engine Ground Cable ('99 model)

Connector or Terminal	Ref	Cavities	Location	Connects to	Notes
T4	8		Middle of engine compartment	Valve cover	
G2	7		Right side of engine compartment	Body ground via engine ground cable	

Engine Ground Cable ('00-02 models)

Connector or Terminal	Ref	Cavities	Location	Connects to	Notes
T4	4		Left side of engine compartment	Transmission housing	
G2	3		Left side of engine compartment	Body ground via engine ground cable	

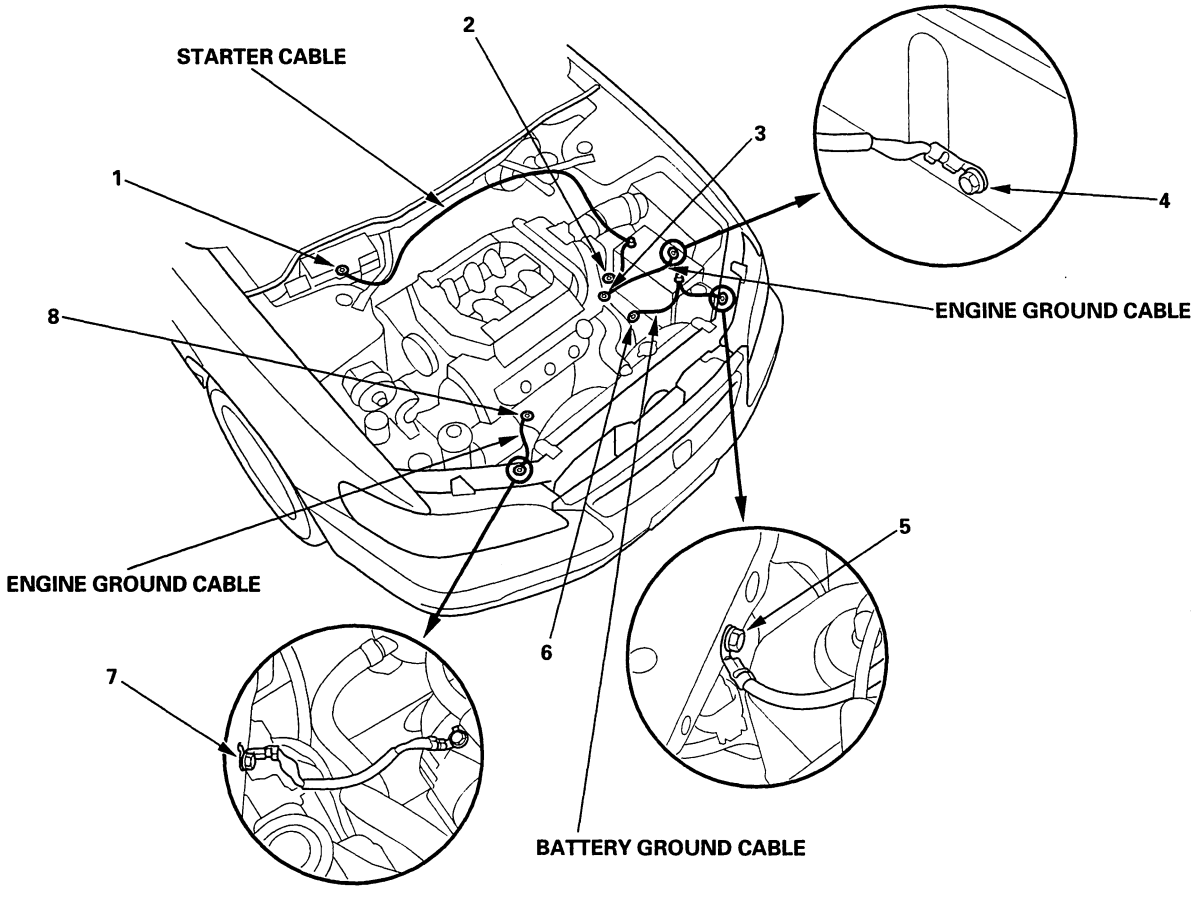

Connector to Harness Index (cont'd)

Engine Wire Harness ('98-99 models)

Connector or Terminal	Ref	Cavities	Location	Connects to	Notes
Alternator	42	4	Right side of engine compartment		
A/T clutch pressure control valve A	27	2	Right side of engine compartment		
A/T clutch pressure control valve B	28	2	Right side of engine compartment		
Transmission range switch (A/T gear position switch)	15	10	Right side of engine compartment		
CKP sensor	4	2	Right side of engine compartment		
Countershaft speed sensor	16	2	Right side of engine compartment		
Coolant temperature gauge sending unit	41	1	Middle of engine compartment		
Engine coolant temperature (ECT) sensor	39	2	Middle of engine compartment		
Radiator fan switch B	45	2	Right side of engine compartment		
Exhaust gas recircuration (EGR) control solenoid valve	40	6	Middle of engine compartment		
Idle air control (IAC) valve	35	3	Right side of engine compartment		
Ignition coil	18	3	Right side of engine compartment		
Ignition control module (ICM)	14	3	Right side of engine compartment		
Intake air temperature (IAT) sensor	13	2	Middle of engine compartment		
Lock-up control solenoid valve and shift control solenoid valve A	32	3	Right side of engine compartment		
Mainshaft speed sensor	29	2	Right side of engine compartment		
MAP sensor	38	3	Right side of engine compartment		
No. 1 fuel injector	7	2	Middle of engine compartment		
No. 2 fuel injector	9	2	Middle of engine compartment		
No. 3 fuel injector	12	2	Middle of engine compartment		
No. 4 fuel injector	6	2	Middle of engine compartment		
No. 5 fuel injector	8	2	Middle of engine compartment		
No. 6 fuel injector	10	2	Middle of engine compartment		
Oil pressure switch	2	1	Right side of engine compartment		
PCM connector B	19	25	Under middle of dash		
PCM connector C	20	31	Under middle of dash		
PCM connector D	21	16	Under middle of dash		
Primary heated oxygen sensor (Primary HO2S)	11	4	Middle of engine compartment		
Radiator fan switch A	25	2	Right side of engine compartment		
Second clutch pressure switch	33	1	Right side of engine compartment		
Shift control solenoid valve B	36	2	Right side of engine compartment		
Shift control solenoid valve C	34	2	Right side of engine compartment		
Starter solenoid	31	1	Right side of engine compartment		
TDC sensor	44	4	Right side of engine compartment		
Third clutch pressure switch	30	1	Right side of engine compartment		
Throttle position (TP) sensor	37	3	Right side of engine compartment		
VTEC pressure switch	1	2	Right side of engine compartment		
VTEC solenoid valve	5	1	Right side of engine compartment		
C103	23	14	Right side of engine compartment	Left engine compartment wire harness (see page 22-14)	
C104	24	10	Right side of engine compartment	Left engine compartment wire harness (see page 22-14)	
C105 (Junction connector)	22	20	Right side of engine compartment		
C106 (Junction connector)	17	8	Right side of engine compartment		
T101	3		Under-hood fuse/relay box		
T102	43		Alternator		
G101	26		Right side of engine compartment	Engine ground via engine wire harness	

BACK

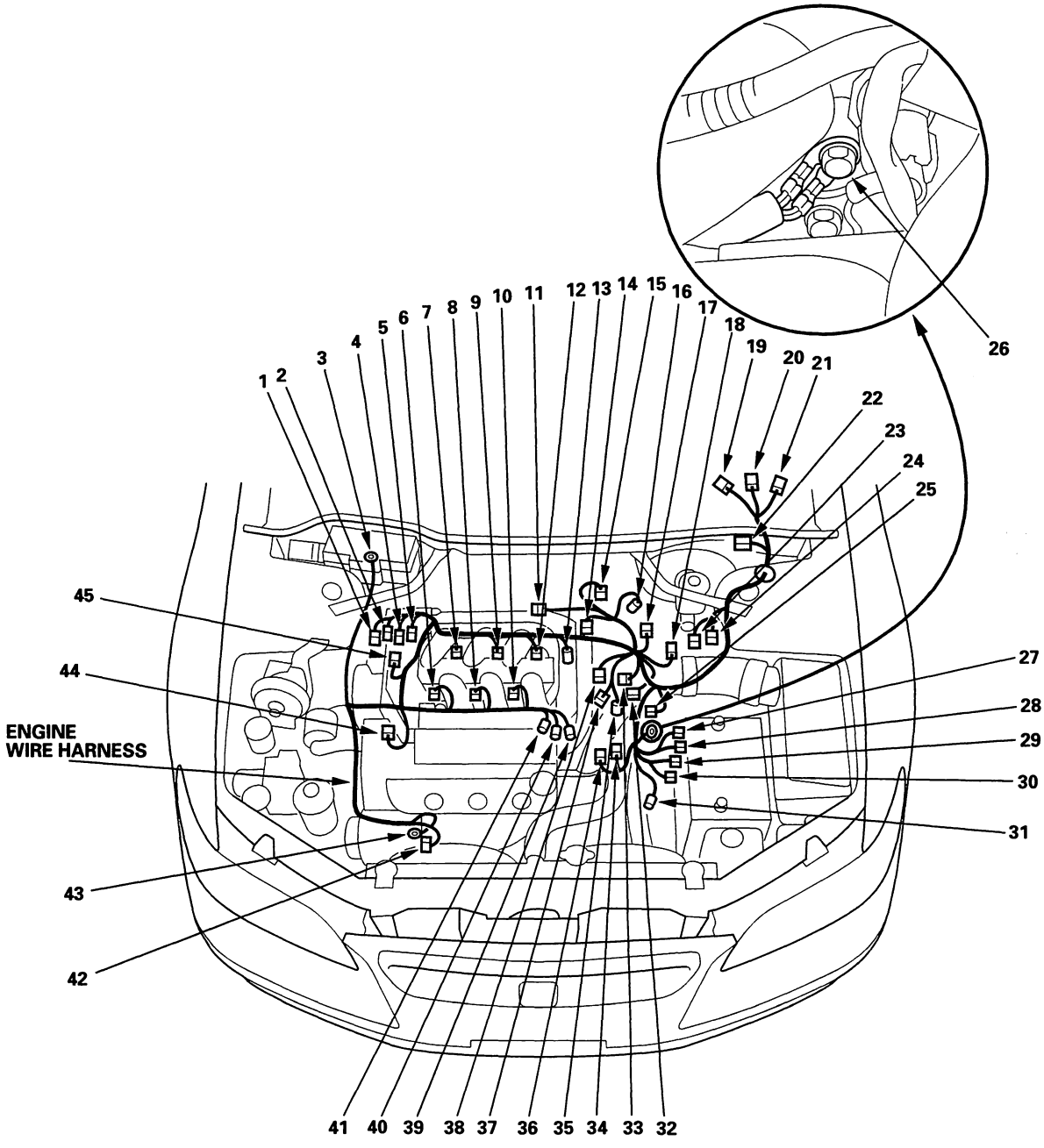
1
2
3
4
5
6
7
8
9
10
11
12
13
14
15
16
17
18
19
20
21
22
23
24
25
26
27
28
29
30
31
32
33
34
35
36
37
38
39
40
41
42
43
44
45
ENGINE
WIRE HARNESS

(cont'd)

BACK

Connector to Harness Index (cont'd)

Engine Wire Harness ('00-02 models)

Connector or Terminal	Ref	Cavities	Location	Connects to	Notes
Alternator	46	4	Right side of engine compartment		
A/T clutch pressure control valve A	28	2	Right side of engine compartment		
A/T clutch pressure control valve B	29	2	Right side of engine compartment		
Transmission range (TR) switch (A/T gear position switch)	15	10	Right side of engine compartment		
CKP sensor	4	2	Right side of engine compartment		
Countershaft speed sensor	16	2	Right side of engine compartment		
Engine coolant temperature (ECT) sensor	41	2	Middle of engine compartment		
Exhaust gas recircuration (EGR) control solenoid valve	40	6	Middle of engine compartment		
Idle air control (IAC) valve	36	3	Right side of engine compartment		
Intake air temperature (IAT) sensor	14	2	Middle of engine compartment		
Lock-up control solenoid valve and shift control solenoid valve A	33	3	Right side of engine compartment		
Mainshaft speed sensor	30	2	Right side of engine compartment		
MAP sensor	39	3	Right side of engine compartment		
No. 1 fuel injector	7	2	Middle of engine compartment		
No. 2 fuel injector	10	2	Middle of engine compartment		
No. 3 fuel injector	13	2	Middle of engine compartment		
No. 4 fuel injector	49	2	Middle of engine compartment		
No. 5 fuel injector	45	2	Middle of engine compartment		
No. 6 fuel injector	43	2	Middle of engine compartment		
No. 1 ignition coil	8	3	Middle of engine compartment		
No. 2 ignition coil	9	3	Middle of engine compartment		
No. 3 ignition coil	11	3	Middle of engine compartment		
No. 4 ignition coil	48	3	Middle of engine compartment		
No. 5 ignition coil	44	3	Middle of engine compartment		
No. 6 ignition coil	42	3	Middle of engine compartment		
Oil pressure switch	2	1	Right side of engine compartment		
PCM connector B	19	25	Under middle of dash		
PCM connector C	20	31	Under middle of dash		
PCM connector D	21	16	Under middle of dash		

BACK

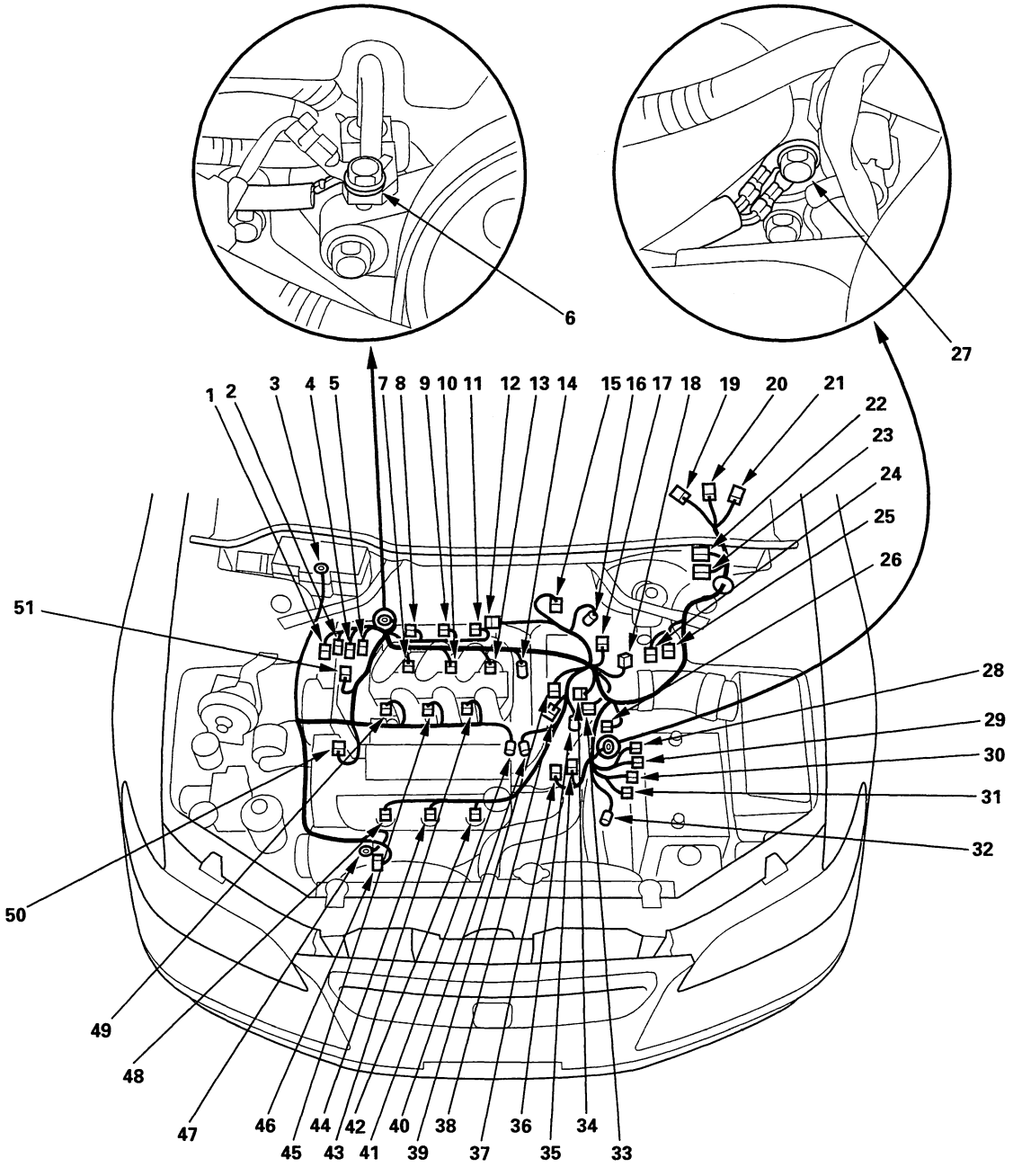
6
27
1 2 3 4 5 7 8 9 10 11 12 13 14 15 16 17 18 19 20 21
22
23
24
25
26
51
28
29
30
31
32
50
49
48
47
46 44 42 40 38 36 34
45 43 41 39 37 35 33

(cont'd)

Connector to Harness Index (cont'd)

Engine Wire Harness ('00-02 models) (cont'd)

Connector or Terminal	Ref	Cavities	Location	Connects to	Notes
Primary HO2S	12	4	Middle of engine compartment		
Radiator fan switch A	26	2	Right side of engine compartment		
Radiator fan switch B	51	2	Right side of engine compartment		
Secondary clutch switch pressure switch	34	1	Right side of engine compartment		
Shift control solenoid valve B	37	2	Right side of engine compartment		
Shift control solenoid valve C	35	2	Right side of engine compartment		
Starter solenoid	32	1	Right side of engine compartment		
TDC sensor	50	4	Right side of engine compartment		
Third clutch pressure switch	31	1	Right side of engine compartment		
Throttle position (TP) sensor	38	3	Right side of engine compartment		
VTEC pressure switch	1	2	Right side of engine compartment		
VTEC solenoid valve	5	1	Right side of engine compartment		
C103	24	14	Right side of engine compartment	Left engine compartment wire harness (see page 22-14)	
C104	25	10	Right side of engine compartment	Left engine compartment wire harness (see page 22-14)	
C105 (Junction connector)	22	20	Right side of engine compartment		
C106 (Junction connector)	17	8	Right side of engine compartment		
C107 (Junction connector)	18	14	Right side of engine compartment		
C108 (Junction connector)	23	20	Right side of engine compartment		
T101	3		Under-hood fuse/relay box		
T102	47		Alternator		
G101	27		Right side of engine compartment	Body ground via engine wire harness	
G102	6		Middle of engine compartment	Body ground via engine wire harness	

BACK

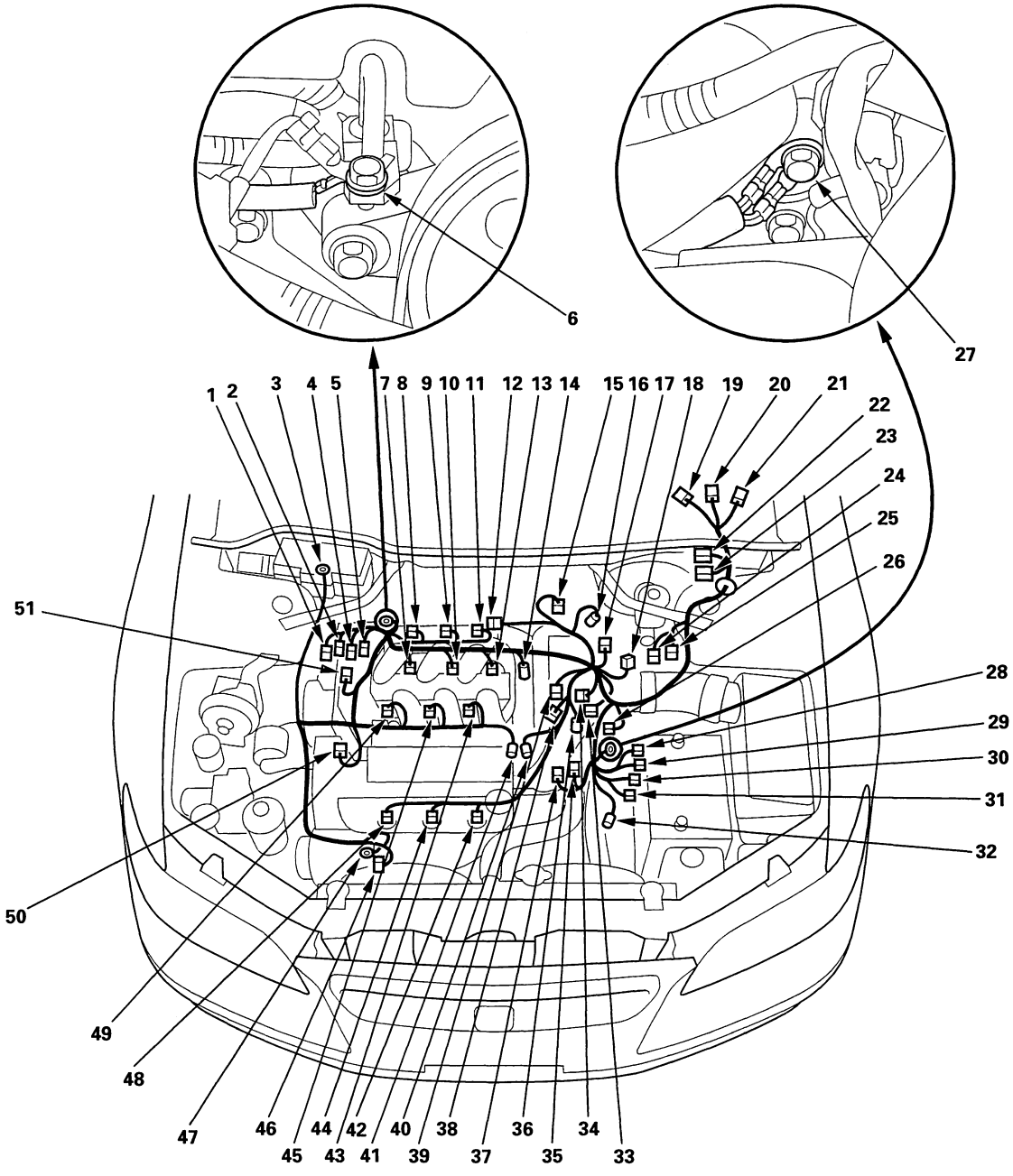
6
27
1 2 3 4 5 7 8 9 10 11 12 13 14 15 16 17 18 19 20 21
22
23
24
25
26
51
28
29
30
31
32
50
49
48
47
46 44 42 40 38 36 34
45 43 41 39 37 35 33

Connector to Harness Index (cont'd)

Right Engine Compartment Wire Harness

Connector or Terminal	Ref	Cavities	Location	Connects to	Notes
ABS control unit connector A	1	12	Behind right kick panel		* 1
ABS control unit connector B	2	22	Behind right kick panel		* 1
ABS fail-safe relay	6	4	Right side of engine compartment		* 1
ABS modulator unit	22	10	Right side of engine compartment		* 1
ABS pump motor	23	2	Right side of engine compartment		
ABS pump motor relay	5	4	Right side of engine compartment		
ABS right front wheel sensor	20	2	Right side of engine compartment		
ABS/TCS control unit connector A	45	26	Behind right kick panel		* 2
ABS/TCS control unit connector B	1	16	Behind right kick panel		* 2
ABS/TCS control unit connector C	2	12	Behind right kick panel		* 2
ABS/TCS modulator unit	22	23	Right side of engine compartment		* 2
A/C compressor clutch	31	1	Right side of engine compartment		
A/C pressure switch	25	2	Behind condenser fan motor		
Condenser fan motor	30	2	Middle of engine compartment		
Cruise control actuator	21	4	Right side of engine compartment		
Diode (Lighting)	40	2	Behind right kick panel		Canada
ELD unit	12	3	Inside under-hood fuse/relay box		
High beam cut relay	42	4	Behind right kick panel		Canada
Left horn	26	1	Behind middle of front bumper		
Outside air temperature sensor	28	2	Behind middle of front bumper		
Passenger's under-dash fuse/relay box connector D (see page 22-25)	4	3	Behind right kick panel		
Passenger's under-dash fuse/relay box connector C (see page 22-25)	3	18	Behind right kick panel		
Power steering pressure (PSP) switch	19	2	Middle of engine compartment		
Radiator fan motor	24	2	Middle of engine compartment		
Right front parking light	33	2	Behind right headlight		
Right front side marker light	39	3	Behind right of front bumper		
Right headlight (High beam)	32	2	Behind right headlight		
Right headlight (Low beam)	34	2	Behind right headlight		
Right horn	29	1	Behind middle of front bumper		
Seat heater relay	7	4	Right side of engine compartment		* 1
Secondary heated oxygen sensor (Secondary HO2S)	18	4	Right side of engine compartment		
Security hood switch	27	2	Behind middle of front bumper		
Taillight relay	41	4	Behind right kick panel		
TCS relay	7	4	Right side of engine compartment		* 2
Under-hood fuse/relay box connector D (see page 22-23)	8	16	Right side of engine compartment		
Under-hood fuse/relay box connector C (see page 22-23)	9	3	Right side of engine compartment		
Under-hood fuse/relay box connector B (see page 22-23)	10	7	Right side of engine compartment		
Under-hood fuse/relay box connector A (see page 22-23)	11	18	Right side of engine compartment		
Washer level switch	38	2	Behind right of front bumper		Canada
Windshild washer motor	37	2	Behind right of front bumper		
C201	13	16	Under right side of dash	Dashboard wire harness B (see page 22-16)	
C202	14	7	Under right side of dash	Dashboard wire harness B (see page 22-16)	
C203	15	5	Under right side of dash	Dashboard wire harness B (see page 22-16)	
C204	16	22	Under right side of dash	Dashboard wire harness A (see page 22-18)	
G201	35		Right side of engine compartment	Body ground Via right engine compartment wire harness	
G202	17		Right side of engine compartment	Body ground Via right engine compartment wire harness	
G203	36		Right side of engine compartment	Body ground Via right engine compartment wire harness	
G204	43		Behind right kick panel	Body ground Via right engine compartment wire harness	
G205	44		Behind right kick panel	Body ground Via right engine compartment wire harness	

* 1: '98-00 models
* 2: '01-02 models

BACK

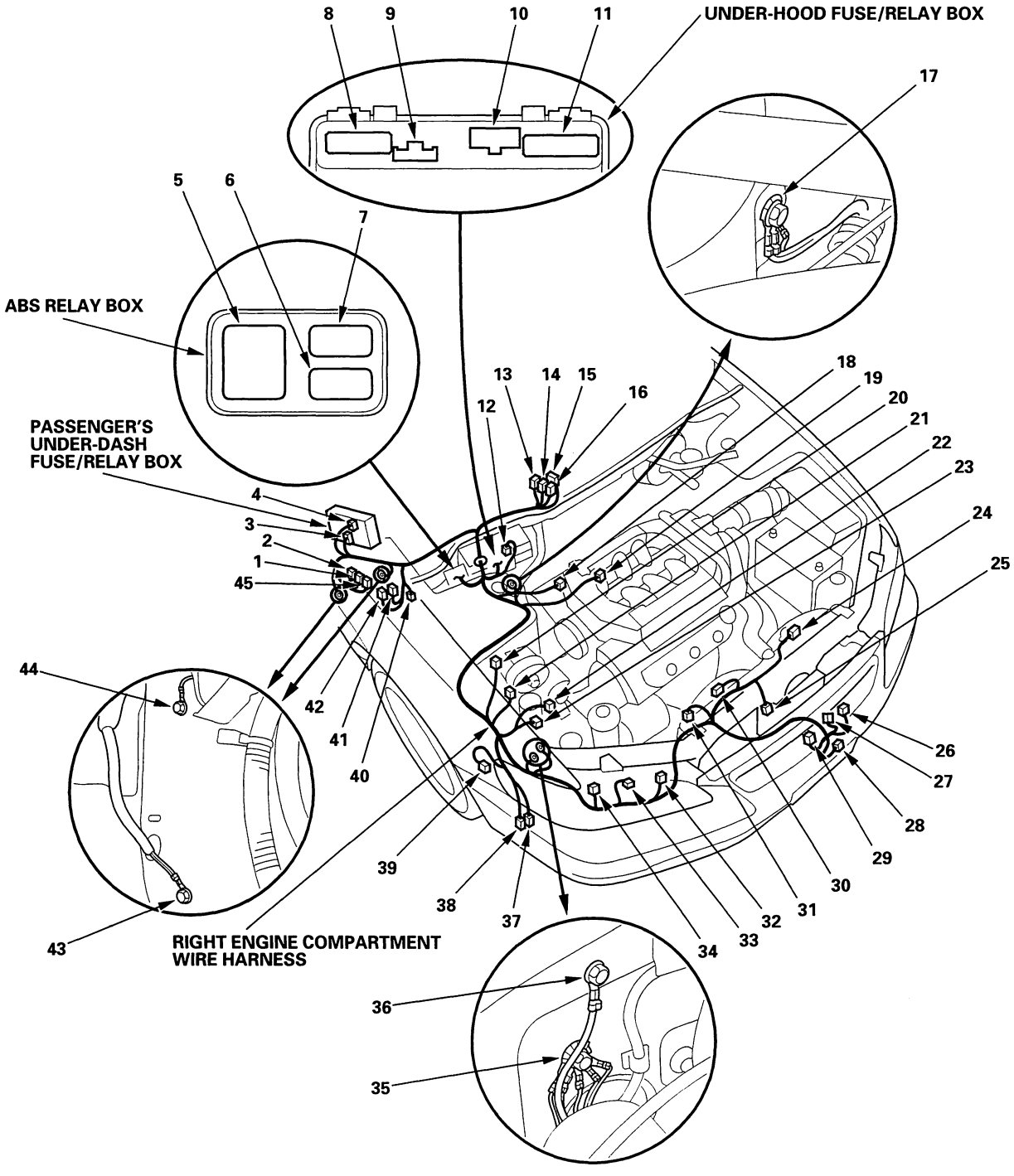
UNDER-HOOD FUSE/RELAY BOX
ABS RELAY BOX
PASSENGER'S UNDER-DASH FUSE/RELAY BOX
RIGHT ENGINE COMPARTMENT WIRE HARNESS
1
2
3
4
5
6
7
8
9
10
11
12
13
14
15
16
17
18
19
20
21
22
23
24
25
26
27
28
29
30
31
32
33
34
35
36
37
38
39
40
41
42
43
44
45

Connector to Harness Index (cont'd)

Left Engine Compartment Wire Harness

Connector or Terminal	Ref	Cavities	Location	Connects to	Notes
ABS left front wheel sensor	17	2	Left side of engine compartment		
Brake fluid level switch connector A (+)	6	1	Left side of engine compartment		
Brake fluid level switch connector B (−)	7	1	Left side of engine compartment		
Driver's under-dash fuse/relay box connector E (see page 22-24)	13	20	Behind left kick panel		
Driver's under-dash fuse/relay box connector C (see page 22-24)	12	5	Behind left kick panel		
Engine mount control solenoid valve	4	2	Left side of engine compartment		
EVAP purge control solenoid valve	3	2	Left side of engine compartment		
Intermittent wiper relay	15	6	Left side of engine compartment		
Left front parking light	22	2	Behind left headlight		
Left front side marker light	19	3	Behind left of front bumper		
Left headlight (High beam)	23	2	Behind left headlight		
Left headlight (Low beam)	21	2	Behind left headlight		
Seat heater relay	14	4	Behind left kick panel		*
Test tachometer connector	1	2	Left side of engine compartment		
Windshield wiper motor	8	5	Left rear of engine compartment		
C103	2	14	Left side of engine compartment	Engine wire harness (see page 22-6)	
C104	16	10	Left side of engine compartment	Engine wire harness (see page 22-6)	
C301	9	20	Under left side of dash	Dashboard wire harness B (see page 22-16)	
C302	10	16	Under left side of dash	Dashboard wire harness A (see page 22-18)	
C303	11	1	Above left kick panel		Coupe
C304	18	1	Left side of engine compertment		Coupe
G301	20		Left side of engine compartment	Body ground via left engine compartment wire harness	
G302	5		Left side of engine compartment	Body ground via left engine compartment wire harness	

*: '01-02 models

BACK

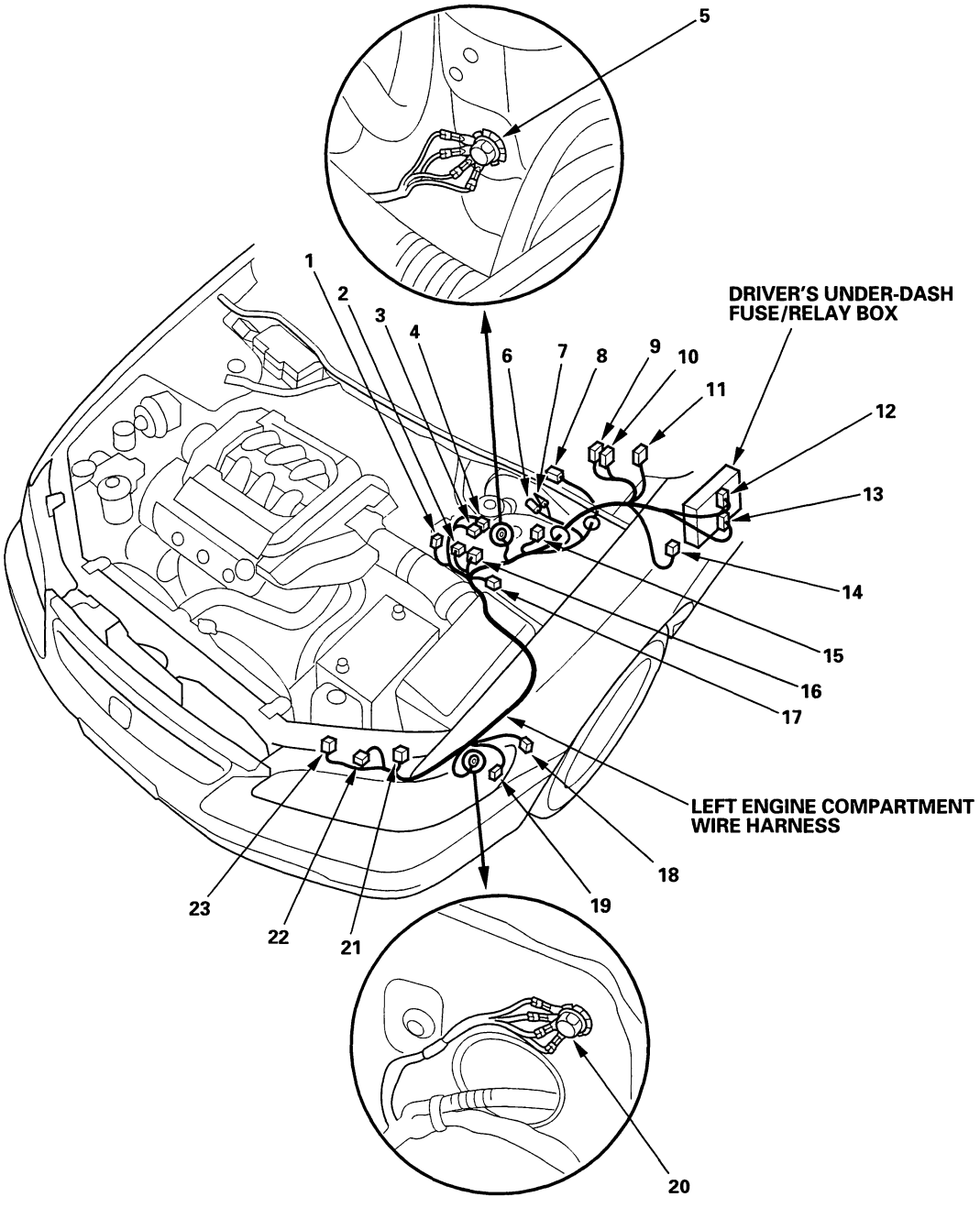
5
1
2
3
4
6
7
8
9
10
11
12
13
14
15
16
17
DRIVER'S UNDER-DASH
FUSE/RELAY BOX
LEFT ENGINE COMPARTMENT
WIRE HARNESS
18
19
20
21
22
23

Connector to Harness Index (cont'd)

Dashboard Wire Harness B (Left Branch)

Connector or Terminal	Ref	Cavities	Location	Connects to	Notes
Brake switch	5	4	Under left side of dash		
Cable reel	13	4	Under left side of dash		
Combinaion light switch	12	14	Under left side of dash		
Data link connector (DLC)	16	16	Under left side of dash		
Daytime running lights control unit	14	14	Under left side of dash		
Driver's under-dash fuse/relay box connector O (see page 22-24)	1	20	Behind left kick panel		
Driver's under-dash fuse/relay box connector P (see page 22-24)	3	7	Behind left kick panel		
Driver's under-dash fuse/relay box connector Q (see page 22-24)	2	22	Behind left kick panel		
Ignition switch	11	7	Under left side of dash		
Immobilizer control unit	10	5	Under left side of dash		
Intermittent dwell time controller	8	2	Under left side of dash		
PGM-FI main relay	7	7	Under left side of dash		
Windshield wiper/washer switch	9	8	In steering column covers		
C301	6	20	Under left side of dash	Left engine compartment wire harness (see page 22-14)	
C401	15	22	Under left side of dash	Dashboard wire harness A (see page 22-18)	
C402	4	8	Under left side of dash	Security system wire harness (Optional)	Canada
C402	4	4	Under left side of dash	Security system wire harness (Optional)	USA
G401	17		Behind left kick panel	Body ground via dashboard wire harness B	

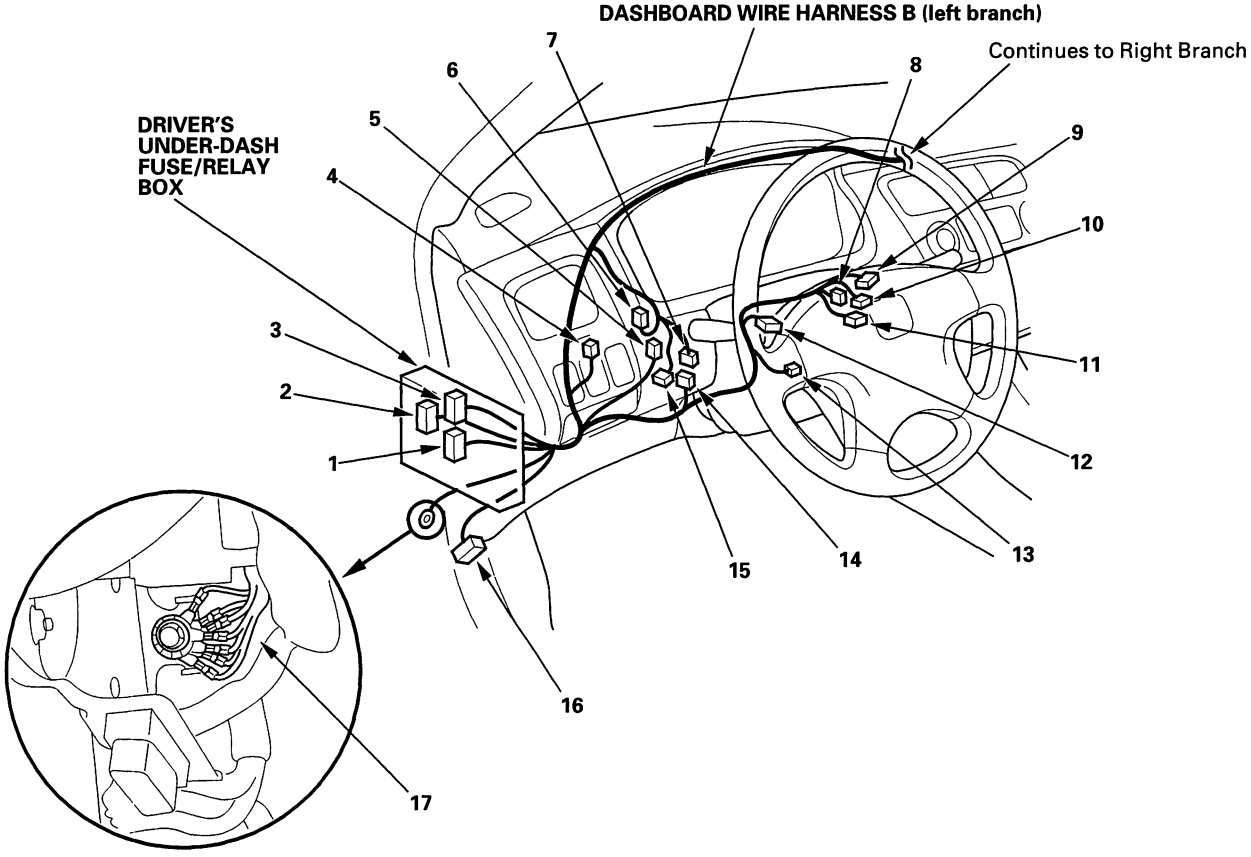

BACK

Dashboard Wire Harness B (Right Branch)

Connector or Terminal	Ref	Cavities	Location	Connects to	Notes
Air mix control motor	16	7	Under right side of dash		
Blower motor	12	2	Under right side of dash		
Blower motor high relay	11	4	Under right side of dash		AUTO A/C
Blower resister	13	5	Under right side of dash		MAN. A/C
Climate control unit connector A	3	20	Under middle of dash		AUTO A/C
Climate control unit connector B	1	8	Under middle of dash		AUTO A/C
Evaporator temperature sensor	4	2	Under middle of dash		
Heater control panel	3	22	Under middle of dash		MAN. A/C
Heater fan switch	1	7	Under middle of dash		MAN. A/C
Mode control motor	2	7	Under middle of dash		
Passenger's under-dash fuse/relay box connector J (see page 22-25)	8	16	Behind right kick panel		
Passenger's under-dash fuse/relay box connector K (see page 22-25)	9	16	Behind right kick panel		
Power transistor	10	4	Under right side of dash		AUTO A/C
Radiator fan control module	17	8	Under middle of dash		
Recirculation control motor	5	7	Under middle of dash		
C201	6	16	Under right side of dash	Right engine compartment wire harness (see page 22-12)	
C202	15	7	Under right side of dash	Right engine compartment wire harness (see page 22-12)	
C203	14	5	Under right side of dash	Right engine compartment wire harness (see page 22-12)	
C403	7	2	Under right side of dash	Security system wire harness (Optional)	

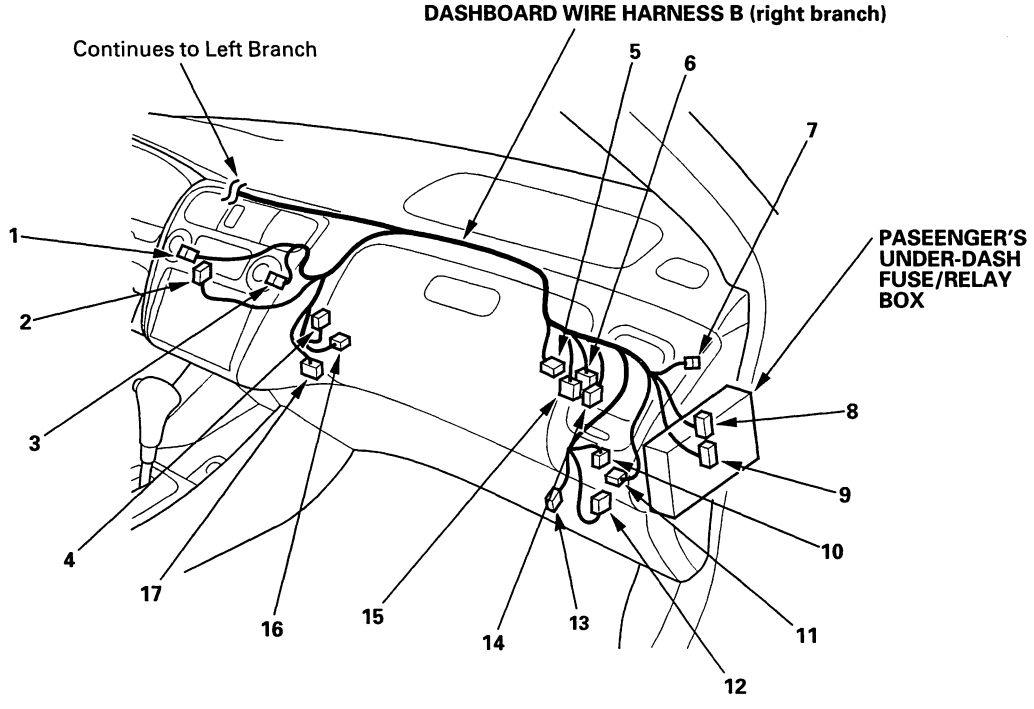

Connector to Harness Index (cont'd)

Dashboard Wire Harness A

Connector or Terminal	Ref	Cavities	Location	Connects to	Notes
Accessory socket	29	2	Behind middle of dash		
A/T gear position console light/parking pin switch	32	4	Middle of floor between front seats		
Audio unit	17	20	Behind audio unit		
Clock	16	5	Behind middle of dash		
Cruise control unit	37	14	Behind left side of dash		
Cruise main switch	7	5	Behind instrument panel		* 1
Cruise main /TCS switch	7	8	Behind instrument panel		* 2
Driver's seat heater switch	31	6	Behind middle of dash		
Driver's under-dash fuse/relay box connector I (see page 22-24)	2	18	Behind left kick panel		
Driver's under-dash fuse/relay box connector K (see page 22-24)	3	18	Behind left kick panel		
Gauge assembly connector A	11	14	Behind gauges		
Gauge assembly connector B	10	22	Behind gauges		
Gauge assembly connector C	12	16	Behind gauges		
Glove box light	27	2	Behind glove box		
Hazard warning switch	14	10	Behind middle of dash		
In-car temperature sensor	38	2	Behind left side of dash		
Left tweeter	9	2	Behind instrument panel		
Moonroof switch	8	6	Behind instrument panel		
Multiplex control unit (driver's) connector B	5	22	Behind left kick panel		
Multiplex control unit (passenger's) connector B	23	22	Behind right kick panel		
Parking brake switch	36	1	Middle of floor between front seats		
Passenger's seat heater switch	30	6	Behind middle of dash		
Passenger's under-dash fuse/relay box connector H (see page 22-25)	21	18	Behind right kick panel		
Passenger's under-dash fuse/relay box connector I (see page 22-25)	22	18	Behind right kick panel		
PCM connector A	28	32	Behind middle of dash		
Right tweeter	20	2	Behind instrument panel		
Shift lock solenoid	34	2	Middle of floor between front seats		
Sunlight sensor	15	2	Behind middle of dash		
SRS memory erase signal (MES)	4	2	Behind left kick panel		* 2
SRS unit	33	8	Middle of floor		* 3
C204	26	22	Behind right side of dash	Right engine compartment wire harness (see page 22-12)	
C302	39	16	Behind left side of dash	Left engine compartment wire harness (see page 22-14)	
C401	40	22	Behind left side of dash	Dashboard wire harness B (see page 22-16)	
C501	42	18	Behind left kick panel	Left side wire hareness, refer to the '98-02 Accord Service Manual (see page 22-24)	
C502	6	7	Behind instrument panel	Moonroof wire harness, refer to the '98-02 Accord Service Manual (see page 22-30)	
C503	13	3	Under middle of dash	SRS main harness, refer to the '98-02 Accord Service Manual (see page 22-39)	* 1
C503	13	2	Under middle of dash	SRS main harness, refer to the '98-02 Accord Service Manual (see page 22-39)	'00 Sedan
C503	13	8	Under middle of dash	SRS main harness, refer to the '98-02 Accord Service Manual (see page 22-39)	'00 Coupe
C504	41	2	Behind left kick panel	Security system wire harness (Optional)	USA
C505	35	6	Middle of floor	SRS floor harness, refer to the '98-02 Accord Service Manual (see page 22-39)	'00 Sedan with side airbags
C582	25	16	Behind right side of dash	Right side wire harness (see page 22-21)	'00 Coupe

BACK

Connector or Terminal	Ref	Cavities	Location	Connects to	Notes
C582	25	6	Behind right side of dash	Right side wire harness (see page 22-20)	* 2
G501	18		Under middle of dash	Body ground via dashboard wire harness A	
G502	19		Under middle of dash	Body ground via dashboard wire harness A	
G503	1		Behind left kick panel	Body ground via dashboard wire harness A	
G504	24		Behind right kick panel	Body ground via dashboard wire harness A	

* 1: '98-00 models
* 2: '01-02 models
* 3: '00-02 Sedan, '01-02 Coupe

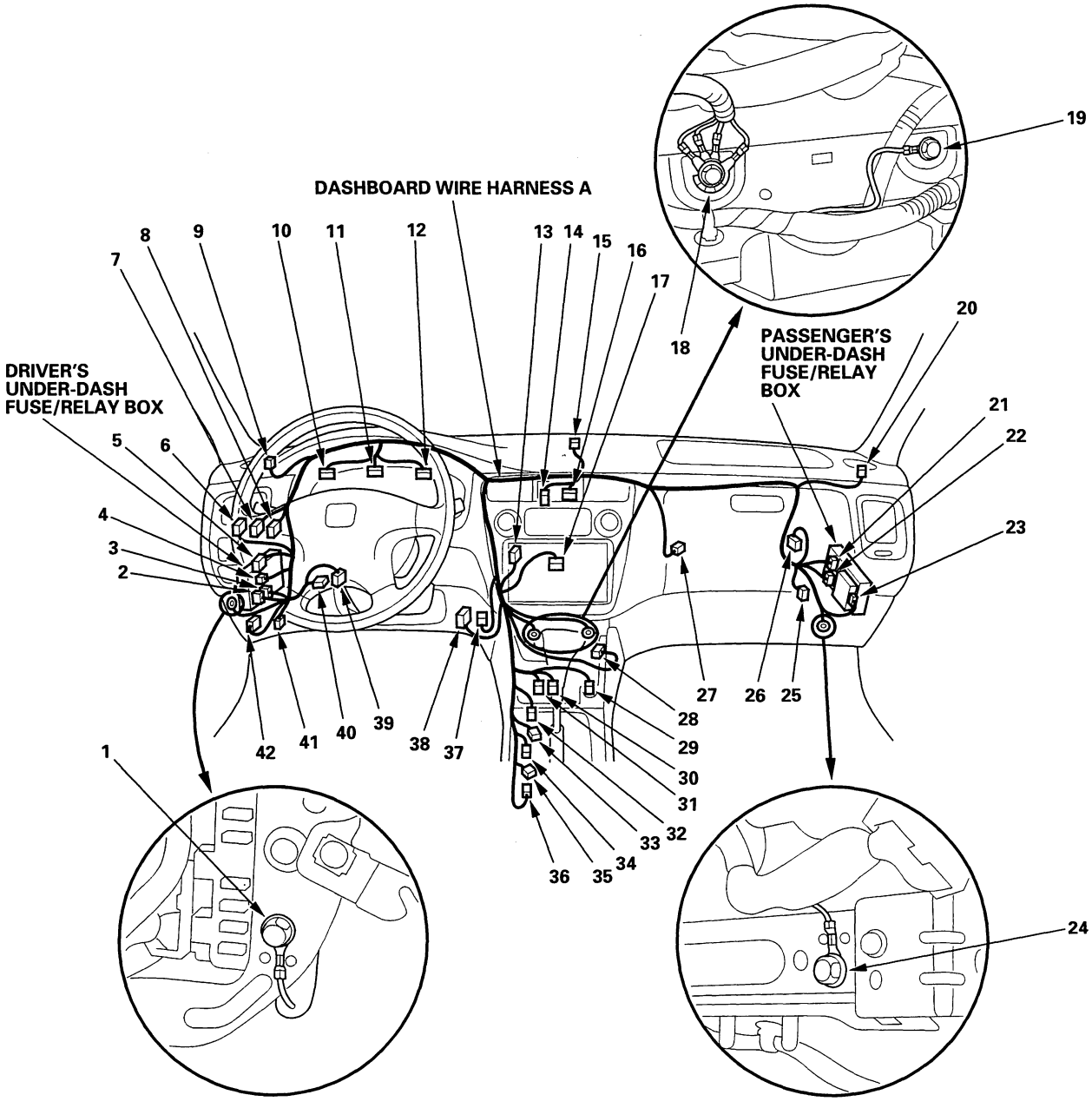

Connector to Harness Index (cont'd)

Right Side Wire Harness (Sedan)

Connector or Terminal	Ref	Cavities	Location	Connects to	Notes
ABS right rear wheel sensor	16	2	Under right side of rear seat		
Front passenger's side airbag inflator	2	2	Under passenger's seat		* 4
Passenger's door switch	13	1	Right B-pillar		
Passenger's seat belt switch	4	3	Under passenger's seat		* 1
Passenger's seat heater	3	3	Under passenger's seat		* 2
Passenger's seat heater	3	4	Under passenger's seat		* 3
Passenger's side impact sensor	11	2	Under passenger's seat		* 4
Passenger's under-dash fuse/relay box connector A (see page 22-25)	7	20	Behind right kick panel		
Passenger's under-dash fuse/relay box connector G (see page 22-25)	8	3	Behind right kick panel		Canada
Right rear door switch	15	1	Right quarter panel		
Right rear speaker	17	2	Right quarter panel		
Right side seat belt tensioner	14	2	Right B-pillar		* 4
Window antenna coil connector A	18	1	Middle of rear shelf		
C581	1	10	Right side of floor	Right rear door wire harness, refer to the '98-02 Accord Service Manual (see page 22-37)	
C582	9	6	Behind right kick panel	Dashboard wire harness A , refer to the '98-02 Accord Service Manual (see page 22-18)	* 4
C583	5	4		SRS main harness , refer to the '98-02 Accord Service Manual (see page 22-39)	* 4
C584	6	4		SRS main harness , refer to the '98-02 Accord Service Manual (see page 22-39)	* 4
C701	3	10	Under passenger's seat	Passenger's seat wire harness (see page 22-22).	* 2
C851	12	4		OPDS wire harness, refer to the '98-02 Accord Service Manual (see page 22-42)	* 4
G581	10		Under passenger's seat	Body ground via right side wire harness	

* 1: '00 model without seat heater
* 2: '98-99 models
* 3: '00 model with seat heater
* 4: '01-02 models

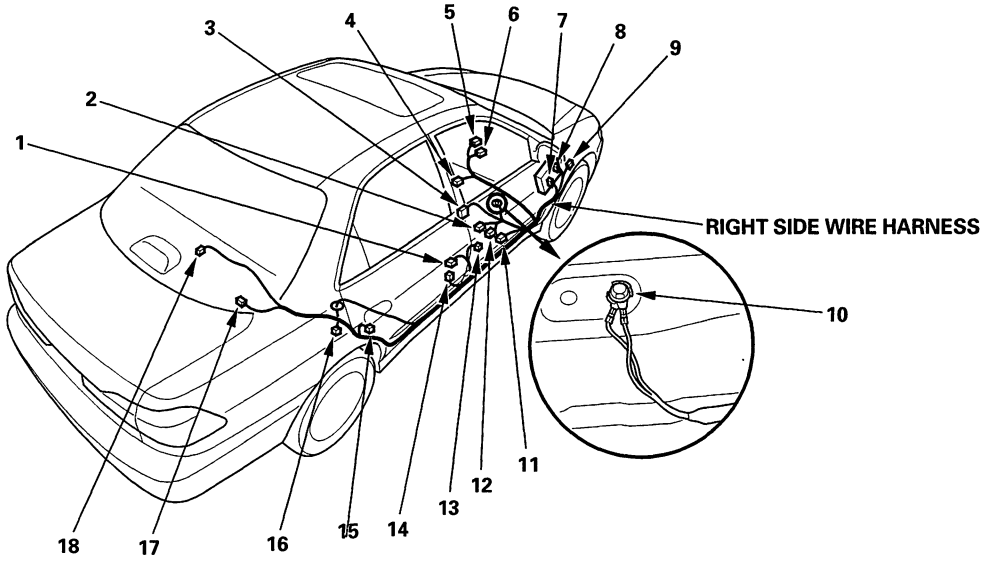

BACK

Right Side Wire Harness (Coupe)

Connector or Terminal	Ref	Cavities	Location	Connects to	Notes
ABS right rear wheel sensor	16	2	Under right side of rear seat		
Passenger's door switch	13	1	Right B-pillar		
Passenger's seat belt switch	12	3	Under passenger's seat		* 1
Passenger's seat heater	10	3	Under passenger's seat		* 2
Passenger's seat heater	10	4	Under passenger's seat		* 3
Passenger's side airbag inflator	15	2	Under passenger's seat		* 5
Passenger's side impact sensor	14	2	Under passenger's seat		
Passenger's under-dash fuse/relay box connector A (see page 22-25)	5	20	Behind right kick panel		
Passenger's under-dash fuse/relay box connector G (see page 22-25)	6	3	Behind right kick panel		Canada
Right rear speaker	17	2	Right quarter panel		
Right side seat belt tensioner	9	2	Right B-piller		* 5
Window antenna coil connector A	18	1	Middle of rear shelf		
C582	7	16	Behind right kick panel	Dashboard wire harnessA (see page 22-18)	* 4
C582	7	6	Behind right kick panel	Dashboard wire harnessA (see page 22-18)	* 5
C583	2	4		SRS main harness, refer to the '98-02 Accord Service Manual (see page 22-39)	* 6
C584	3	4		SRS main harness, refer to the '98-02 Accord Service Manual (see page 22-39)	* 6
C585 (Connects to C586)	4	1	Under passenger's seat		* 6
C586 (Connects to C585)	8	1	Under passenger's seat		* 6
C851	11	4		OPDS wire harness, refer to the '98-02 Accord Service Manual (see page 22-42)	* 6
G581	1		Under passenger's seat	Body ground via right side wire harness	

* 1: '00-02 model without seat heater
* 2: '98-99 models
* 3: '00-02 model with seat heater
* 4: '00 model
* 5: '01-02 models
* 6: '00-02 models

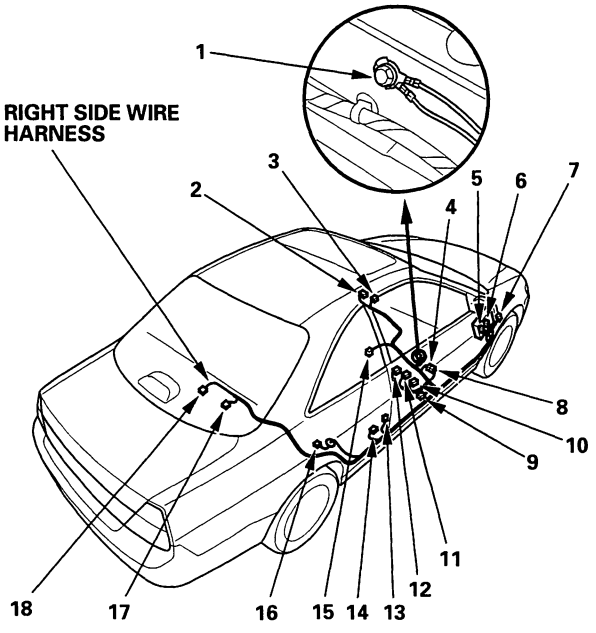

Connector to Harness Index (cont'd)

Passenger's Seat Wire Harness (4-way Adjustable) ('01-02 models)

Connector or Terminal	Ref	Cavities	Location	Connects to	Notes
Passenger's power seat adjustment switch connector A	4	6	Right side of passenger's seat		
Passenger's power seat adjustment switch connector B	2	6	Right side of passenger's seat		
Passenger's seat belt switch	7	3	Under passenger's seat		
Passenger's seat heater	5	4	Under passenger's seat		
Recline motor	1	2	Under passenger's seat		
Slide motor	6	2	Under passenger's seat		
C701	3	10	Right side of passenger's seat	Right side wire harness (see page 22-20)	

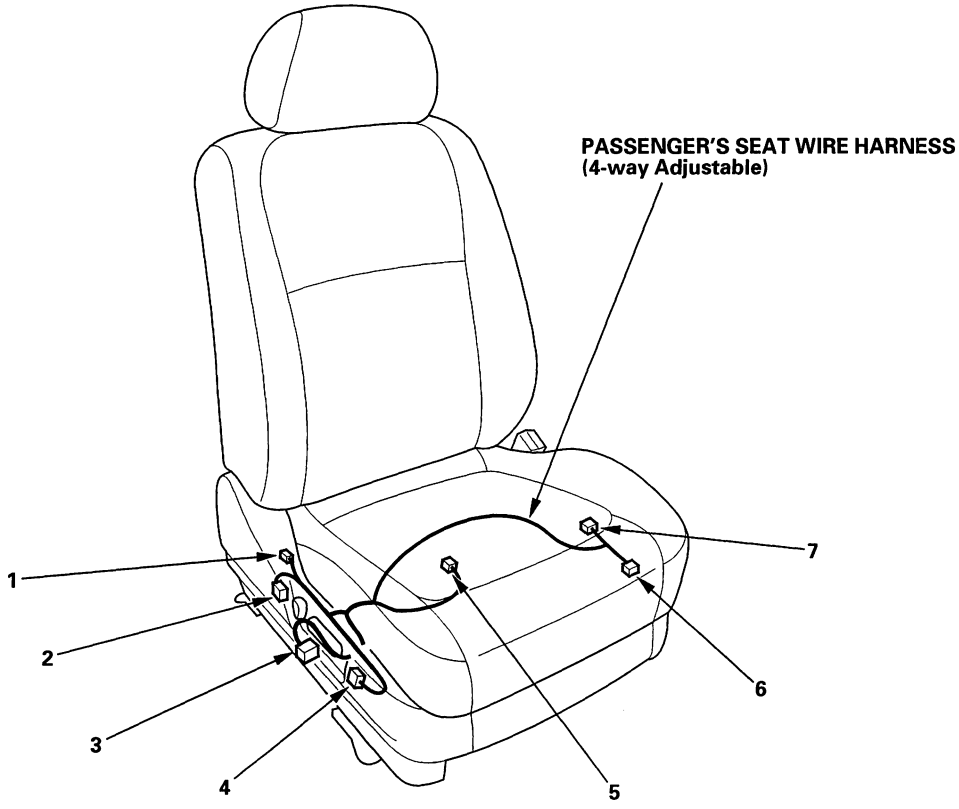

BACK

Fuse/Relay Boxes

Connector to Fuse/Relay Box Index

Under-hood Fuse/Relay Box

Socket	Ref	Terminal	Connects to
A	15	18	Right engine compartment wire harness (see page 22-12)
A/C compressor clutch relay	3	4	
B	14	7	Right engine compartment wire harness (see page 22-12)
Blower motor relay	11	4	
C	13	3	Right engine compartment wire harness (see page 22-12)
Condenser fan relay	1	4	
D	12	16	Right engine compartment wire harness (see page 22-12)
Diode	9	2	Not used
ELD unit	4	3	
Horn relay	10	4	
Headlight relay 1	7	4	
Headlight relay 2	8	4	
Radiator fan relay	2	4	
T1	6		Battery positive cable (see page 22-5)
T101	5		Engine wire harness (see page 22-6)

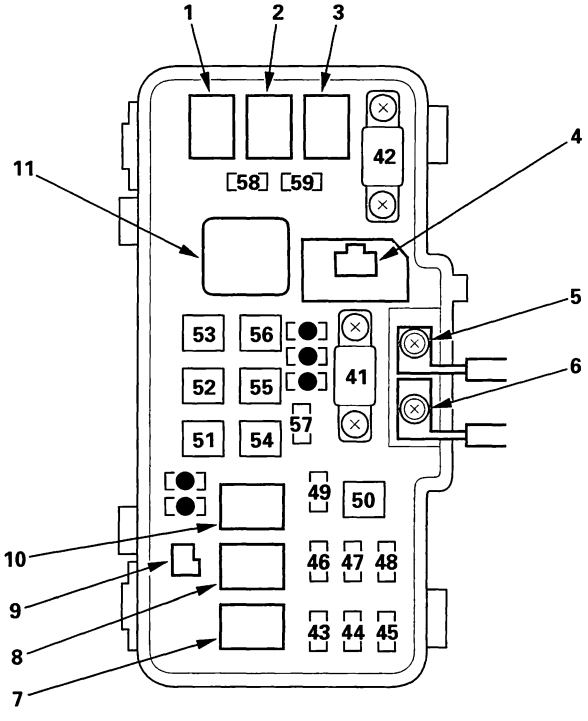

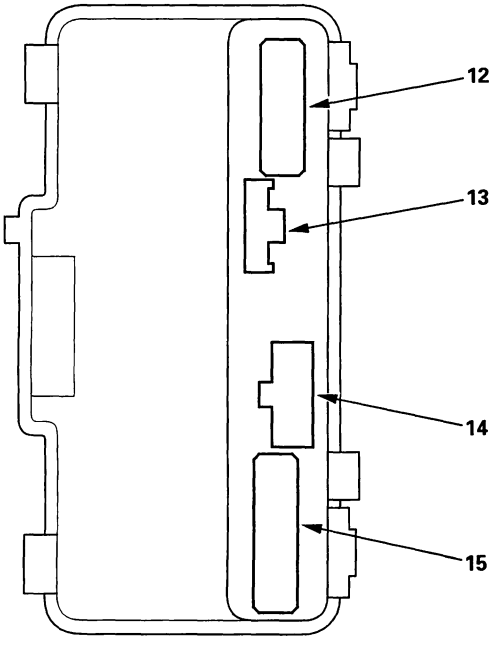

Connector to Fuse/Relay Box Index (cont'd)

Driver's Under-dash Fuse/Relay Box

Socket	Ref	Terminal	Connects to
A	11	10	Left side wire harness, refer to the '98-02 Accord Service Manual (see page 22-24)
B	3	14	Left side wire harness, refer to the '98-02 Accord Service Manual (see page 22-24)
C	10	5	Left engine compartment wire harness (see page 22-14)
D	7	——	Not used
Diode	1	——	
Diode	2	——	
E	4	20	Left engine compartment wire harness (see page 22-14)
F	9	6	Driver's door wire harness, refer to the '98-02 Accord Service Manual (see page 22-32)
G	8	18	Driver's door wire harness, refer to the '98-02 Accord Service Manual (see page 22-32)
H	5	6	No used
I	13	18	Dashboard wire harness A (see page 22-18)
J	12	2	Service check connector
K	14	18	Dashboard wire harness A (see page 22-18)
L	23	——	Not used
M	15	6	Ignition switch harness, refer to the '98-02 Accord Service Manual (see page 22-38)
Multiplex control unit connector A	6	24	(Plugs directly into the fuse box)
N	22	2	SRS wire harness, refer to the '98-02 Accord Service Manual (see page 22-39)
O	21	20	Dashboard wire harness B (see page 22-16)
P	16	7	Dashboard wire harness B (see page 22-16)
Q	17	22	Dashboard wire harness B (see page 22-16)
R	26	1	Optional connector
Reverse relay	19	4	
S	27	1	Optional connector
Starter cut relay	18	4	
T	24	1	Optional connector
Turn signal/hazard relay	20	4	
U	25	1	Optional connector

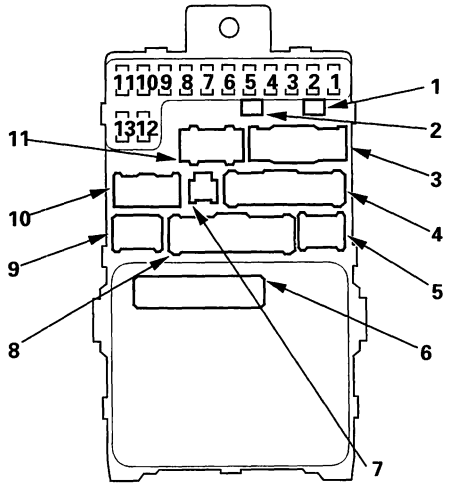

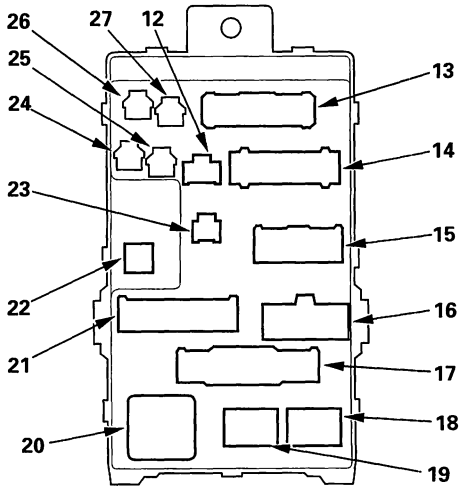

BACK

Passenger's Under-dash Fuse/Relay Box

Socket	Ref	Terminal	Connects to
A	10	20	Right side wire harness (see page 22-20)
Accessory relay	15	4	
B	4	4	Roof wire harness, refer to the '98-02 Accord Service Manual (see page 22-30)
C	9	18	Right engine compartment wire harness (see page 22-12)
D	5	3	Right engine compartment wire harness (see page 22-12)
Diode	1	——	Not used
Diode	2	——	
Diode	3	——	
E	8	2	Passenger's door wire harness, refer to the '98-02 Accord Service Manual (see page 22-34)
F	7	20	Passenger's door wire harness, refer to the '98-02 Accord Service Manual (see page 22-34)
G	6	3	Right side wire harness (see page 22-20)
H	18	18	Dashboard wire harness A (see page 22-18)
I	12	18	Dashboard wire harness A (see page 22-18)
J	17	16	Dashboard wire harness B (see page 22-16)
K	13	16	Dashboard wire harness B (see page 22-16)
Multiplex control unit connector A	11	24	(Plugs directly into the fuse box)
Power window relay	14	4	
Rear window defogger relay	16	4	

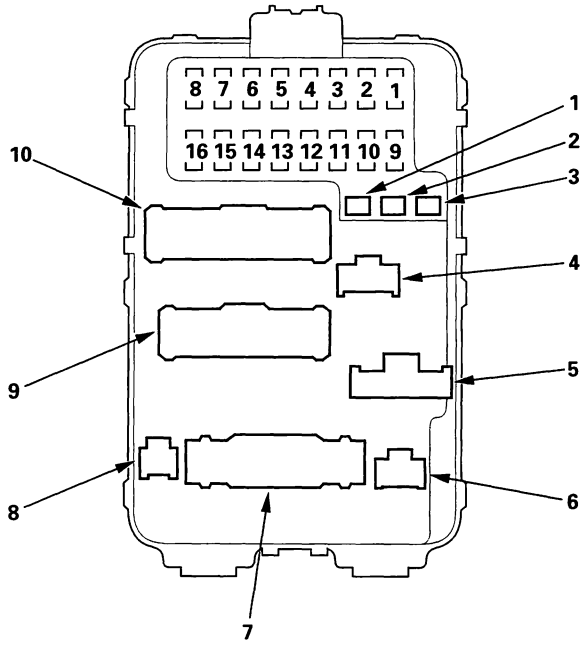

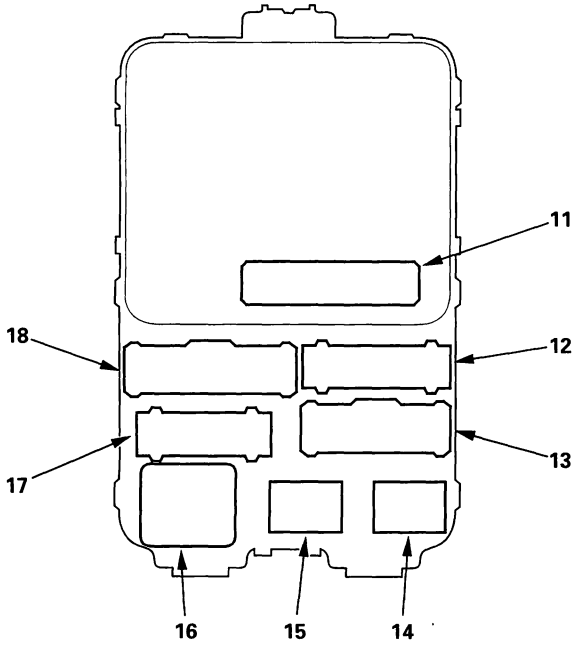

Power Distribution

Fuse to Components Index

Under-hood Fuse/Relay Box

Fuse Number	Amps	Wire color	Component(s) or Circuit(s) Protected
41	100A	———	Battery, Power distribution
42	50A	WHT	Ignition switch (BAT)
43	20A	RED/GRN	Right headlight, Daytime running lights control unit (Canada)
44	———	———	Not used
45	20A	RED/YEL	Left headlight, Daytime running lights control unit (Canada) Hight beam indicator, Hight beam cut relay (Canada)
46	15A	WHT/GRN	PGM-FI main relay, Data link connector (DLC)
47	20A	WHT/YEL	Ignition key light and key interlock solenoid, ABS control unit (BLS) Cruise control unit, PCM, Horn relay High mount brake light, Brake failure sensor, Trailer lighting connector
		Fuse/relay box socket	Multiplex control unit (driver's)
48	20A	WHT/GRN	ABS-TCS control unit
49	15A	WHT/GRN	Turn signal/hazard relay
50	30A	WHT	ABS pump motor, No. 14 fuse (in passenger's under-dash fuse/relay box)
51	40A	WHT/BLU	No. 1 fuse (in passenger's under-dash fuse/relay box), Power window relay
52	20A	BLU	TCS fail-safe relay
53	40A	WHT/GRN	Rear window defogger relay
54	40A	YEL	No. 9, 10, 11, 12 and 13 fuses (in passenger's under-dash fuse/relay box)
55	40A	YEL/GRN	No. 2, 4, 5 and 6 fuses (in passenger's under-dash fuse/relay box)
56	40A	YEL/BLK	Blower motor
57	20A	BLU/BLK	Radiator fan motor
58	20A	BLU/YEL	Condenser fan motor
		WHT	Fan control module (Radiator fan control module)
		RED	A/C compressor clutch
59	20A	WHT/GRN	Driver's and front passenger's seat heaters (Canada)

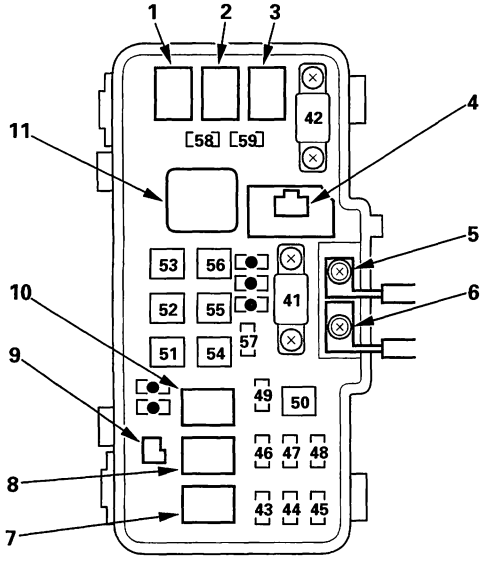

BACK

Driver's Under-dash Fuse/Relay Box

Fuse Number	Amps	Wire Color	Component(s) or Circuit(s) Protected
1	15A	RED/WHT	PGM-FI main relay
		RED/BLU (or GRN)	SRS unit (VA)
2	10A	BLK/WHT (or GRN)	SRS unit (VB)
3	7.5A	BLK/YEL	Blower motor high relay, Climate control unit, Heater control panel, Fan control module (Radiator fan control module), Recirculation control motor, Rear window defogger relay, Seat heater relay (Canada)
4	7.5A	YEL/BLK	ABS control unit, Power mirror actuators, Power mirror defoggers (Canada), ABS/TCS control unit ('01-02 models)
		Fuse/relay box socket	Optional connector
5	7.5A	YEL/RED	Daytime running lights control unit (Canada)
6	15A	BLK/YEL	Alternator, Cruise control unit, Cruise control main switch indicator, ELD unit, Engine mount control solenoid valve, Evaporative emission bypass solenoid valve, Evaporative emission purge control solenoid valve, Gauge assembly, PCM, Primary and Secondary heated oxygen sensors, Vent shut solenoid valve, TCS switch ('01-02 models)
7	7.5A	YEL/GRN	Multiplex control unit (driver's) (All '98-99 models and '00 Sedan), Windshield washer motor (All '98-99 models and '00-02 Sedan), OPDS unit (with side airbags)
8	7.5A	YEL/BLK	Accessory socket relay
		Fuse/relay box socket	Optional connector
9	7.5A	YEL	Back-up lights, Brake failure sensor, Clock, DRL indicator light (Canada), Gauge assembly, Multiplex control unit (passenger's), Security system (USA except EX), Shift lock solenoid, Trailer lighting connector
		Fuse/relay box socket	Multiplex control unit (driver's)
10	7.5A	YEL/RED	Turn signal/hazard relay
11	15A	BLK/YEL	Ignition coils
12	30A	GRN/BLK	Windshield wiper intermittent relay, Windshield wiper motor, Windshield washer motor ('00-02 Coupe), Multiplex control unit (driver's) ('00-02 Coupe)
13	7.5A	BLU/ORN	PCM, PGM-FI main relay

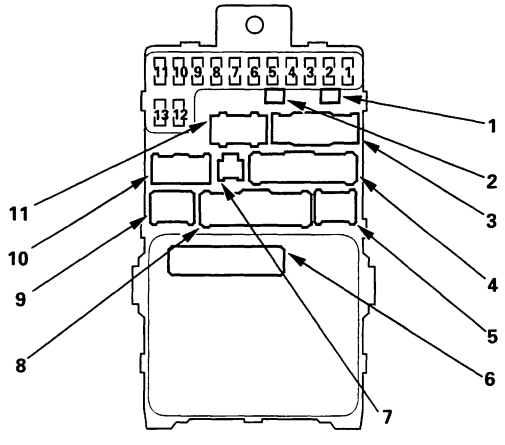

(cont'd)

Fuse to Components Index (cont'd)

Passenger's Under-dash Fuse/Relay Box

Fuse Number	Amps	Wire Color	Component(s) or Circuit(s) Protected
1	30 A	GRN	Moonroof motor
2	20 A	RED	Power seat rear up-down motor, Recline motor
3	20A	RED	Passenger's power seat, Slide motor ('01-02 Sedan)
4	20 A	BLU	Power seat front up-down motor, Slide motor
5	20A	WHT/RED	Passenger's power seat, Recline motor ('01-02 Sedan)
6	10 A	RED/BLU	Daytime running lights control unit (Canada)
7	20 A	WHT/YEL	Moonroof open relay, Moonroof close relay, Left rear power window motor (Sedan), Multiplex control unit (passenger's)
8	20 A	BLU/BLK	Passenger's power window motor
9	20 A	WHT/GRN	Audio unit
		WHT/RED	Audio unit, Accessory socket
10	10 A (Sedan) 15 A (Coupe)	RED/GRN	Heater control panel, A/T gear position console light, Driver's seat heater switch light (Canada), Audio unit, Gauge lights, Cruise main switch light, Moonroof switch light, Clock, Hazard warning switch light, Glove box light, Vanity mirror lights, Front parking lights, Front side marker lights, Rear side marker lights, License plate light(s), Taillights, Trailer lighting connector, Climate control unit
		Fuse/relay box socket	Multiplex control unit (driver's)
11	7.5 A	WHT/BLU	Courtesy lights, Trunk light, Ceiling light, Spotlights
12	20 A	Fuse/relay box socket	Multiplex control unit (passenger's)
13	7.5 A	WHT/YEL	PCM, Heater control panel, Security indicator, Multiplex control unit (door), Gauge assembly, Clock, Climate control unit
		Fuse/relay box socket	Multiplex control unit (driver's) Multiplex control unit (passenger's)
14	7.5 A	GRN	ABS control unit ('98-00 models), ABS-TCS control unit ('01-02 models)
15	20 A	GRN/WHT	Multiplex control unit (door)
16	20 A	WHT/BLK	Right rear power window motor (Sedan)

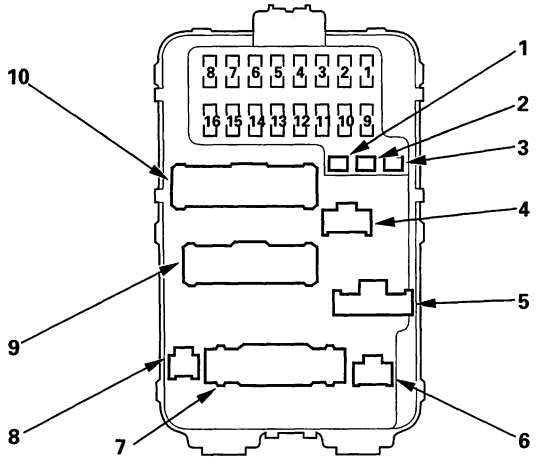

BACK

Ground Distribution

Ground to Components Index

NOTE: All ground wires are BLK unless otherwise noted.

Ground	Component or circuit grounded
G1	Battery, Transmission housing
G2	Engine block
G101 and G102 ('00-01 models)	PCM (PG1 and PG2 are BLK; LG1 and LG2 are BRN/BLK), Idle air control solenoid valve, Radiator fan switch, PGM-FI main relay, EGR control solenoid valve, Shift control solenoid valve assembly, A/T gear position switch, Radiator fan switch A and B, Ignition coils ('00 model)
	Shielding between the PCM and these components (all have braided wires): CKP sensor, TDC sensor, Primary and secondary heated oxygen sensors, Mainshaft speed senser, Countershaft speed sensor, VTEC pressure switch, Data link connector (DLC), Immobilizer control unit
G201	Condenser fan motor, Radiator fan motor, Right headlight (low beam), Right front parking light, Right front side marker light, Right front turn signal light, Hood switch (security), Windshield washer motor
G202	Seat heater relay ('98-00 models)(Canada), Blower motor relay, ELD unit, ABS fail-safe relay, Power steering pressure switch, Cruise control actuator
G203	ABS pump motor, ABS/TCS modulator unit ('01-02 models)
G204	ABS control unit (2 wires), ABS/TCS control unit ('01-02 models)
G205	ABS control unit (2 wires), ABS/TCS control unit (2 wires) ('01-02 models)
G301	Left headlight (low beam), Left front parking light, Left front side marker light, Left front turn signal light, Washer level sensor (Canada)
G302	Brake fluid level switch, Windshield wiper motor, Intermittent wiper relay, Seat heater relay ('01-02 models)(Canada)
G401	Multiplex control unit (driver's), Turn signal/hazard relay, Power window master switch, Driver's door key cylinder switch, Driver's door lock switch, Driver's door lock knob switch, Ignition key switch, Daytime running lights control unit (Canada), Data link connector (DLC), Combination light switch, Heater control panel (2 wires), Fan control module (Radiator fan control module), Blower motor high relay, Power transistor, Climate control unit, Windshield wiper/washer switch
G501	Moonroof switch, Moonroof open relay, Moonroof close relay, Driver's seat heater switch (Canada), Front passenger's seat heater switch (Canada), Glove box light, Transmission range switch (A/T gear position switch), Clock, Audio unit, Accessory socket, Gauge assembly, Cruise control unit, Cruise control main switch, OPDS unit ('00 Sedan with side airbags), Fuel gauge sending unit ('00-02 Coupe), Front passenger's seat belt switch ('00 model), Memory erase signal (MES) connector ('01-02 models), Cruise control main/TCS switch ('01-02 models)
G502	Audio unit
G503	Multiplex control unit (driver's)
G504	Multiplex control unit (passenger's)
G551	Power mirror switch, Left power mirror defogger (Canada), Driver's power window motor, Power window master switch (2 wires), High mount brake light, Driver's seat belt switch, Left rear door lock knob switch, Driver's power seat switch (2 wires), Driver's seat heater (Canada)
G552	Fuel pump (FP), Fuel gauge sending unit (All '98-99 models, '00 Sedan, and '01-02 models)
G581	Homelink unit, Multiplex control unit (passenger's), Power window relay, Accessory relay, Vanity mirror lights, Spotlights, Passenger's door key cylinder switch, Passenger's door lock switch, Passenger's door lock knob switch, Front passenger's seat heater (Canada), Right power mirror defogger (Canada), Right rear door lock knob switch, OPDS unit (Coupe with side airbags, '01-02 Sedan with side airbags) Front passenger's seat belt switch ('01-02 models), Front passenger's power seat switch (2 wires) ('01-02 models)
G601	Taillights (right, left), License plate light, Trunk latch switch, Trunk key cylinder switch (security), Trunk actuator (security), Brake light failure sensor, Trailer lighting connector
G801	SRS unit (2 wires), Memory erase signal (MES) connector ('00 model)

Battery Test

⚠ WARNING

A battery can explode if you do not follow the proper procedure, causing serious injury to anyone nearby. Follow all procedures carefully and keep sparks and open flames away from the battery.

Use either a JCI or Bear ARBST tester, and follow the manufacturer's procedures. If you don't have one of these computerized tester, follow this conventional test procedure:

1. Be sure the temperature of the electrolyte is between 70°F (21°C) and 100°F (38°C).

2. Inspect the battery case for cracks or leaks.

   - If the case is damaged, replace the battery.■
   - If the case looks OK, go to step 3.

3. Check the indicator EYE.

   - If the EYE indicates the battery is charged, go to step 4.
   - If the EYE indicates a low charge, go to step 7.

4. Apply a 300 amp load for 15 seconds to remove the surface charge.

5. Wait 15 seconds, then apply a test load of 280 amps for 15 seconds.

6. Record battery voltage.

   - If voltage is above 9.6 volts, the battery is OK.■
   - If voltage is below 9.6 volts, go to step 7.

7. Charge the battery on High (40 amps) until the EYE shows the battery is charged, plus an additional 30 minutes. If the battery charge is very low, it may be necessary to bypass the charger's polarity protection circuitry.

   - If the EYE indicates the battery is charged within 3 hours, the battery is OK.■
   - If the EYE indicates the battery is not charged within 3 hours, replace the battery.■

BACK

Power Relay Test

Identify the relay, then do the test listed for it.

NOTE: Refer to the '98-02 Accord Service Manual for the relay input test except that it is mentioned in this manual (see page 22-52)

Relay	Test
TCS relay	Normally-open type A

Normally-open type A:

Check for continuity between the terminals.

- There should be continuity between the No. 1 and No. 2 terminals when power and ground are connected to the No. 3 and No. 4 terminals.
- There should be no continuity between the No. 1 and No. 2 terminals when power is disconnected.
  - TCS relay ('01-02 models)

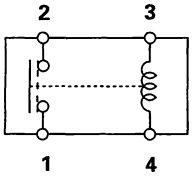

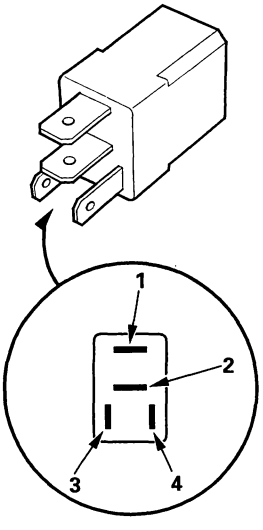

Gauge Bulb Replacement

Bulb Location

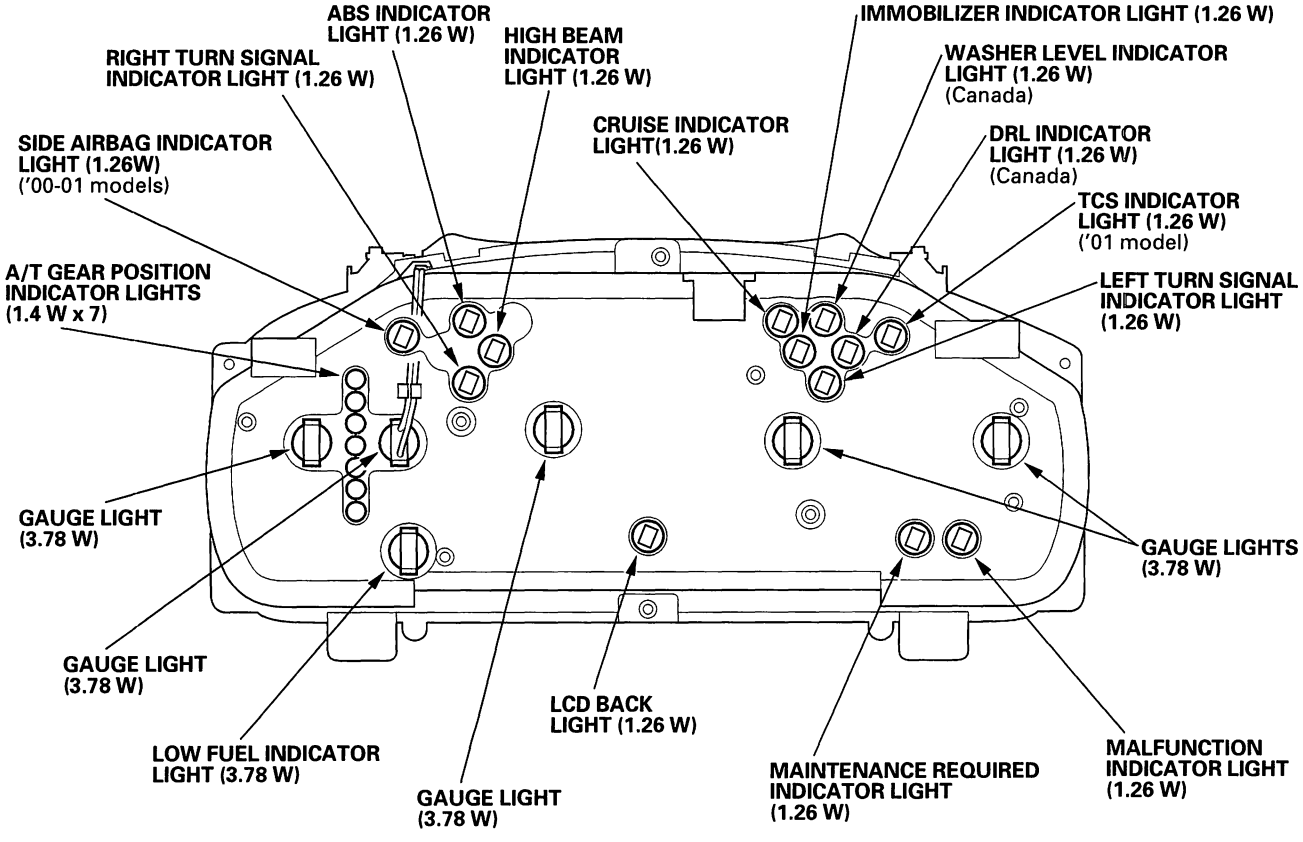

BACK

Circuit Diagram

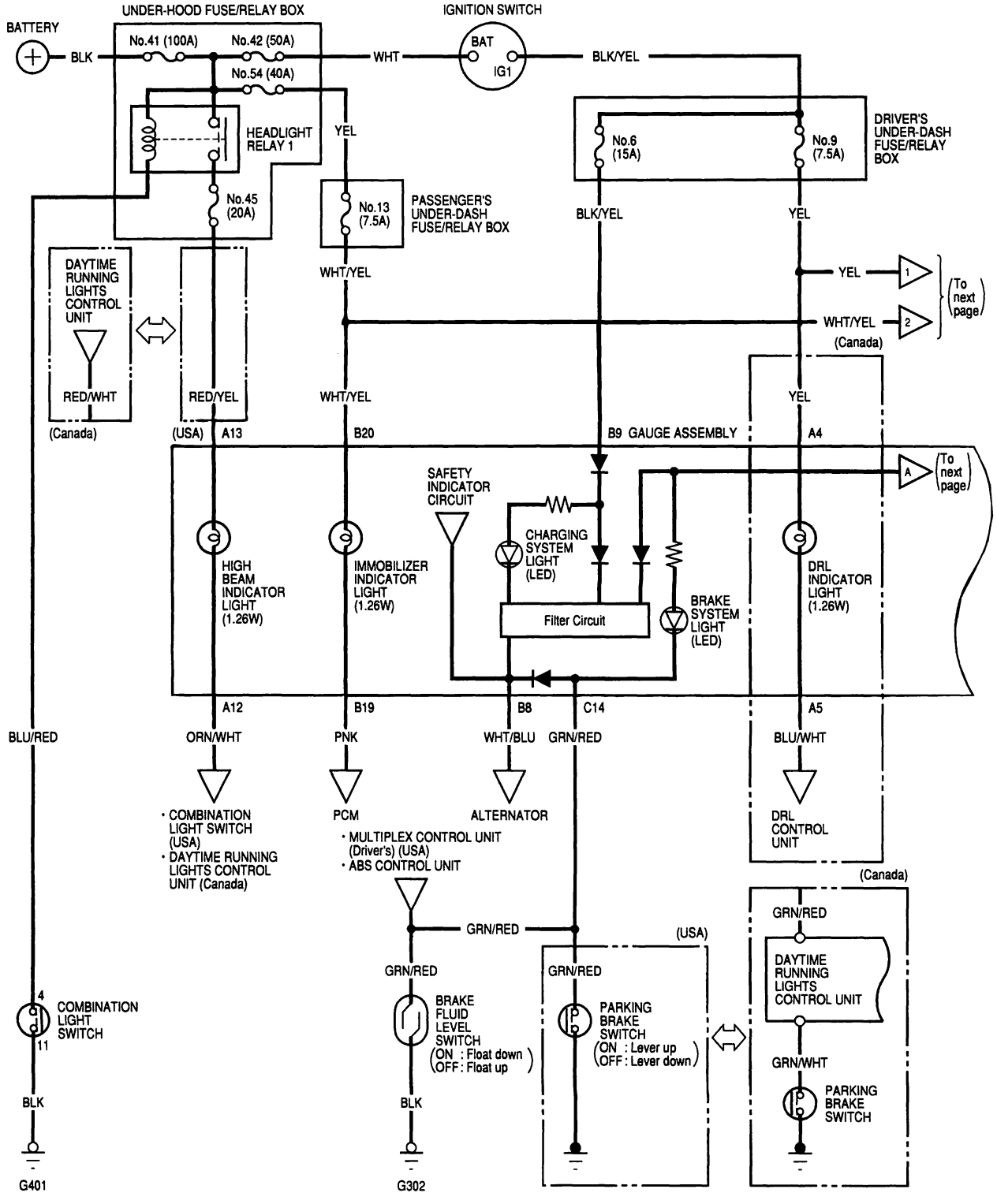

(cont'd)

Circuit Diagram (cont'd)

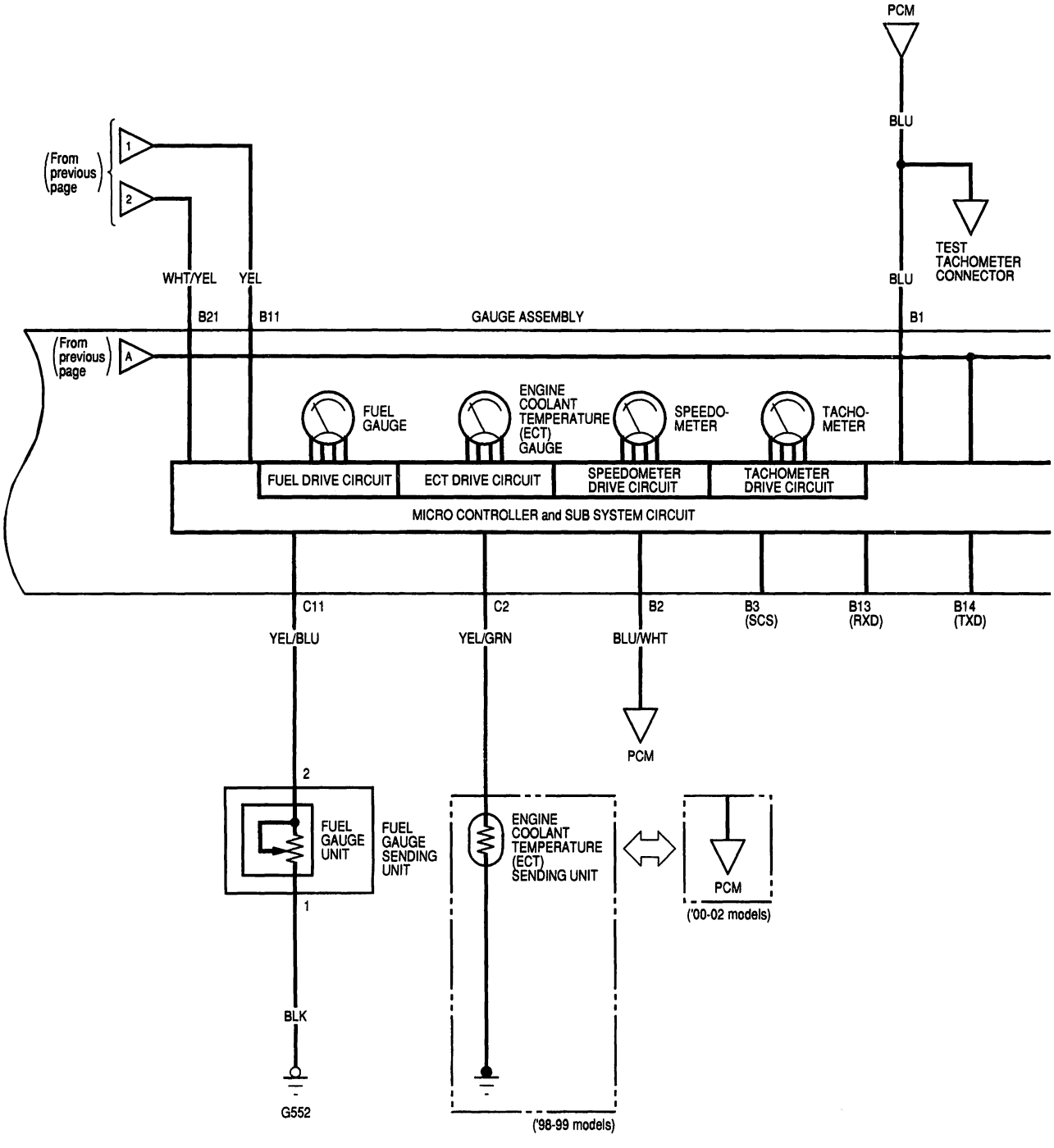

BACK

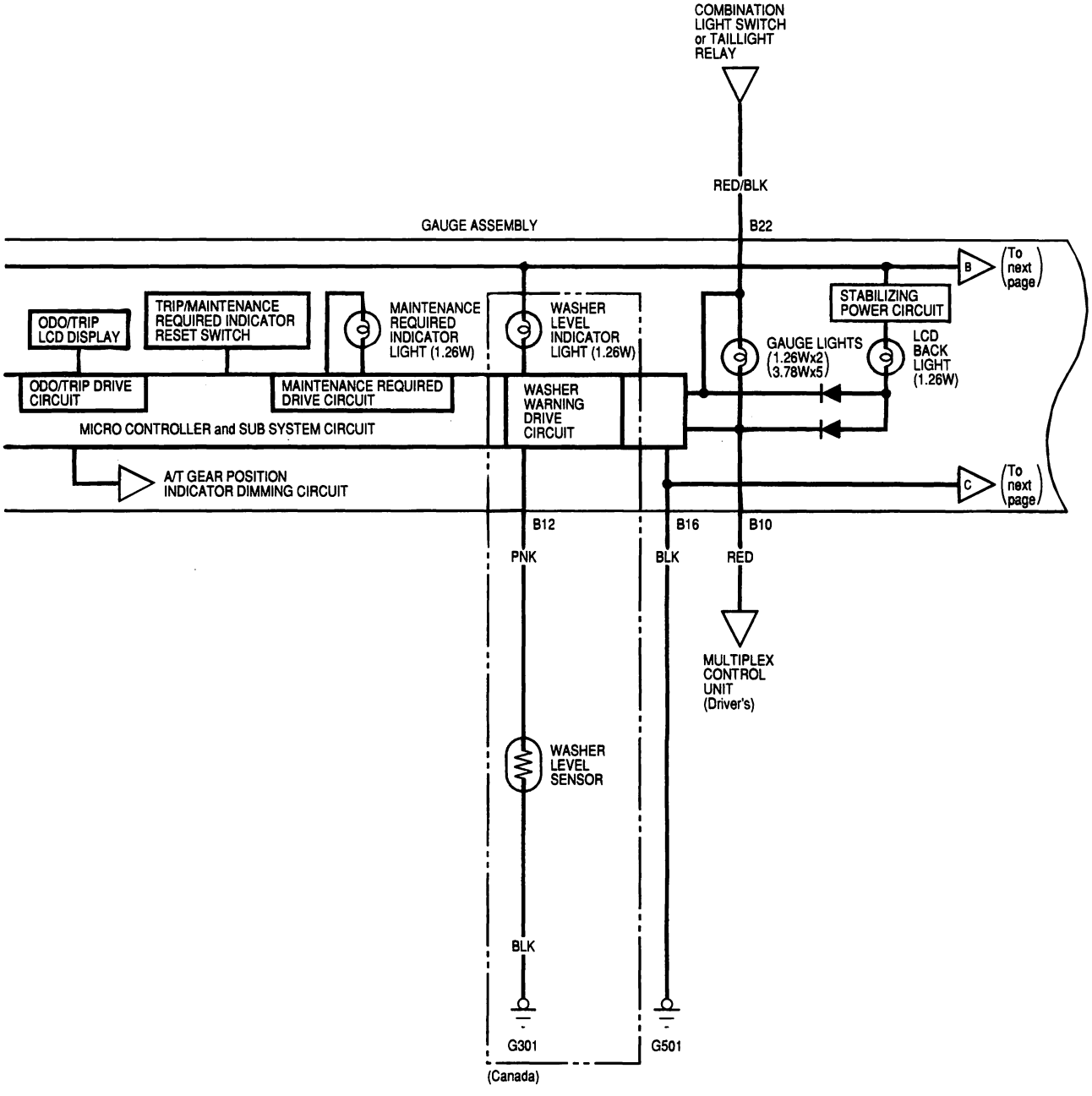
COMBINATION LIGHT SWITCH or TAILLIGHT RELAY
RED/BLK
B22
GAUGE ASSEMBLY
B
(To next page)
STABILIZING POWER CIRCUIT
ODO/TRIP LCD DISPLAY
TRIP/MAINTENANCE REQUIRED INDICATOR RESET SWITCH
MAINTENANCE REQUIRED INDICATOR LIGHT (1.26W)
WASHER LEVEL INDICATOR LIGHT (1.26W)
GAUGE LIGHTS (1.26Wx2) (3.78Wx5)
LCD BACK LIGHT (1.26W)
ODO/TRIP DRIVE CIRCUIT
MAINTENANCE REQUIRED DRIVE CIRCUIT
WASHER WARNING DRIVE CIRCUIT
MICRO CONTROLLER and SUB SYSTEM CIRCUIT
A/T GEAR POSITION INDICATOR DIMMING CIRCUIT
C
(To next page)
B12
B16
B10
PNK
BLK
RED
MULTIPLEX CONTROL UNIT (Driver's)
WASHER LEVEL SENSOR
BLK
G301
G501
(Canada)

(cont'd)

Circuit Diagram (cont'd)

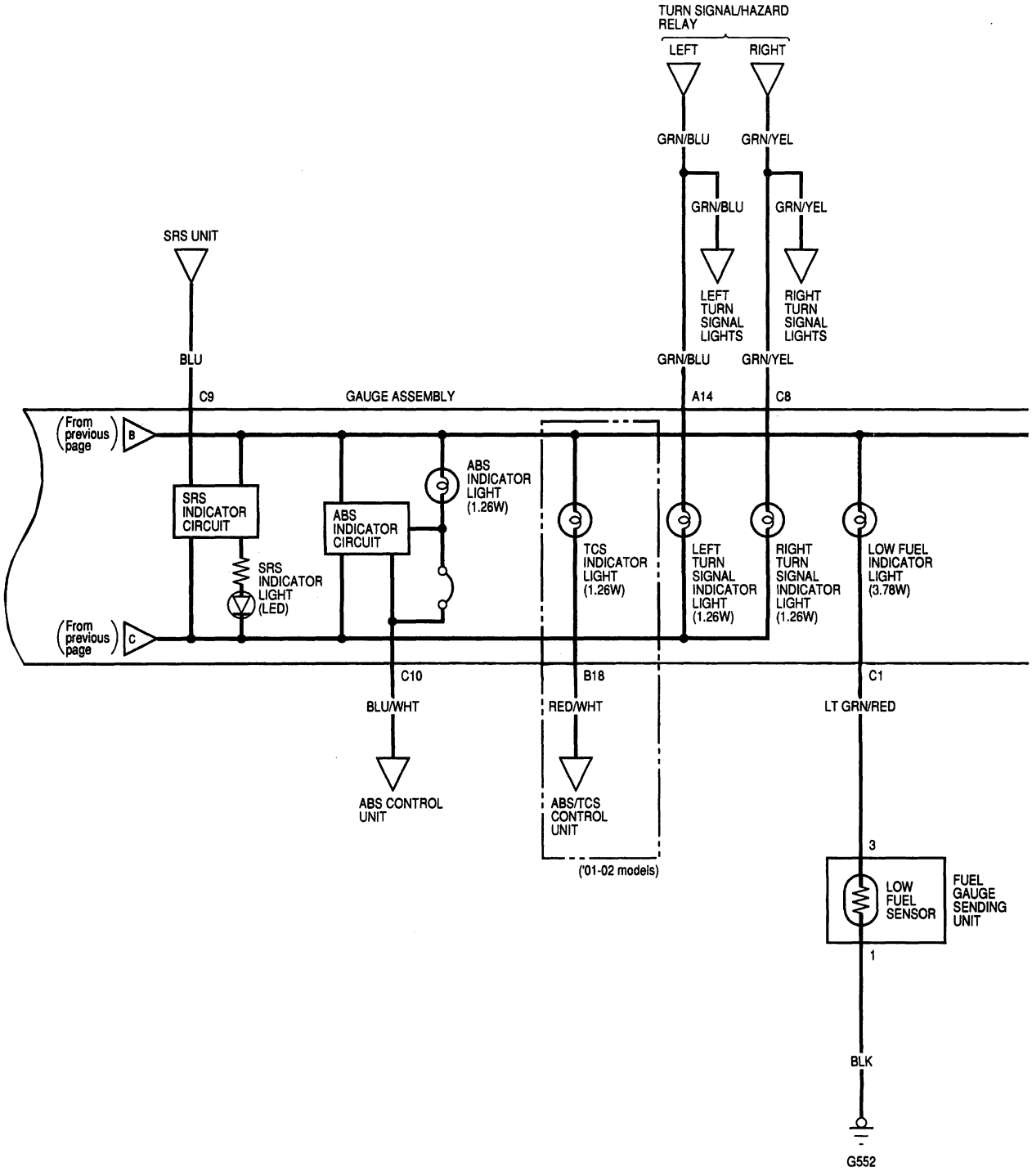

BACK

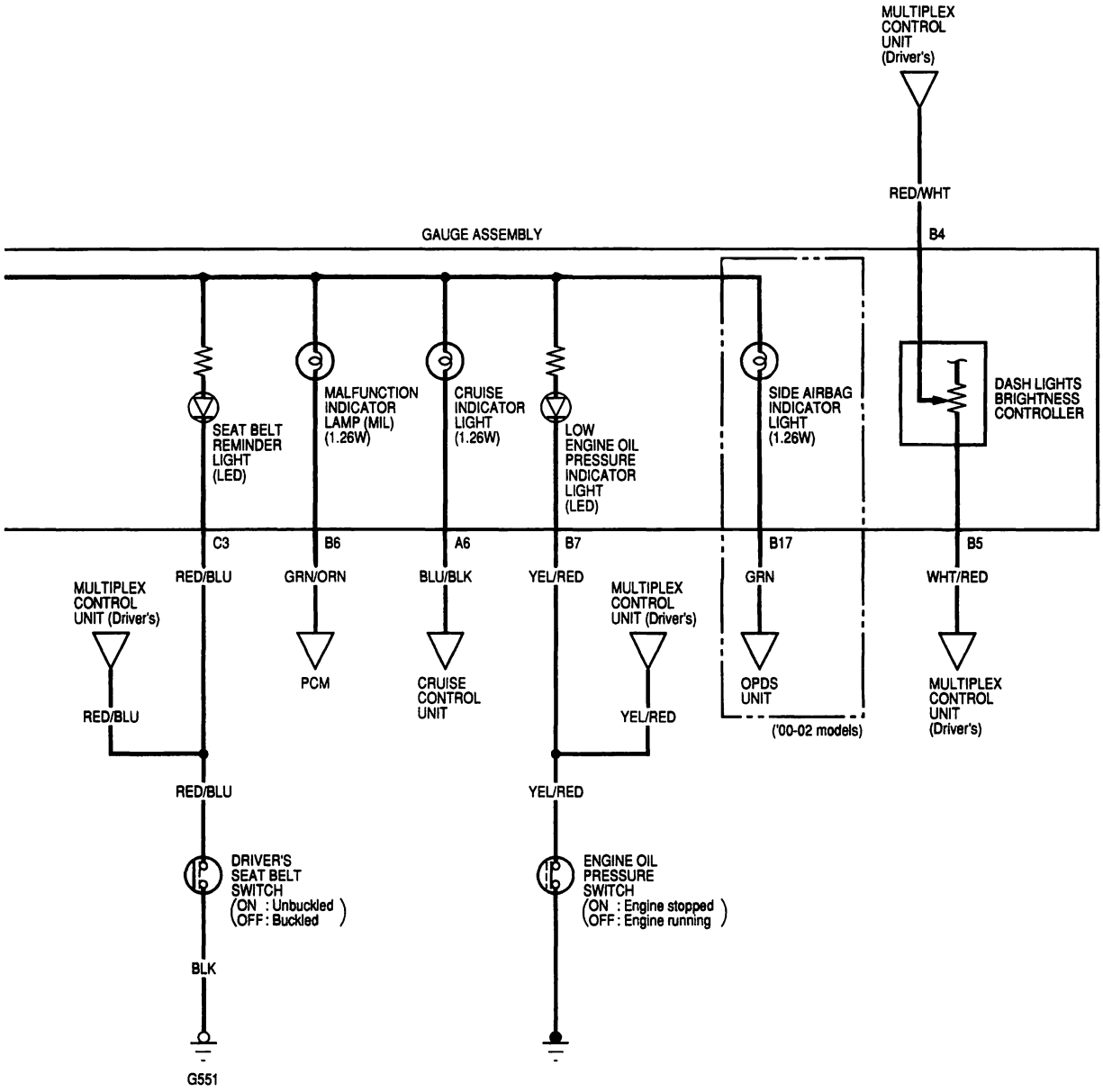
MULTIPLEX CONTROL UNIT (Driver's)
RED/WHT
B4
GAUGE ASSEMBLY
SEAT BELT REMINDER LIGHT (LED)
MALFUNCTION INDICATOR LAMP (MIL) (1.26W)
CRUISE INDICATOR LIGHT (1.26W)
LOW ENGINE OIL PRESSURE INDICATOR LIGHT (LED)
SIDE AIRBAG INDICATOR LIGHT (1.26W)
DASH LIGHTS BRIGHTNESS CONTROLLER
C3
B6
A6
B7
B17
B5
RED/BLU
GRN/ORN
BLU/BLK
YEL/RED
GRN
WHT/RED
MULTIPLEX CONTROL UNIT (Driver's)
PCM
CRUISE CONTROL UNIT
MULTIPLEX CONTROL UNIT (Driver's)
OPDS UNIT
('00-02 models)
MULTIPLEX CONTROL UNIT (Driver's)
RED/BLU
YEL/RED
RED/BLU
YEL/RED
DRIVER'S SEAT BELT SWITCH (ON : Unbuckled OFF : Buckled)
ENGINE OIL PRESSURE SWITCH (ON : Engine stopped OFF : Engine running)
BLK
G551

Safety Indicator System

Circuit Diagram

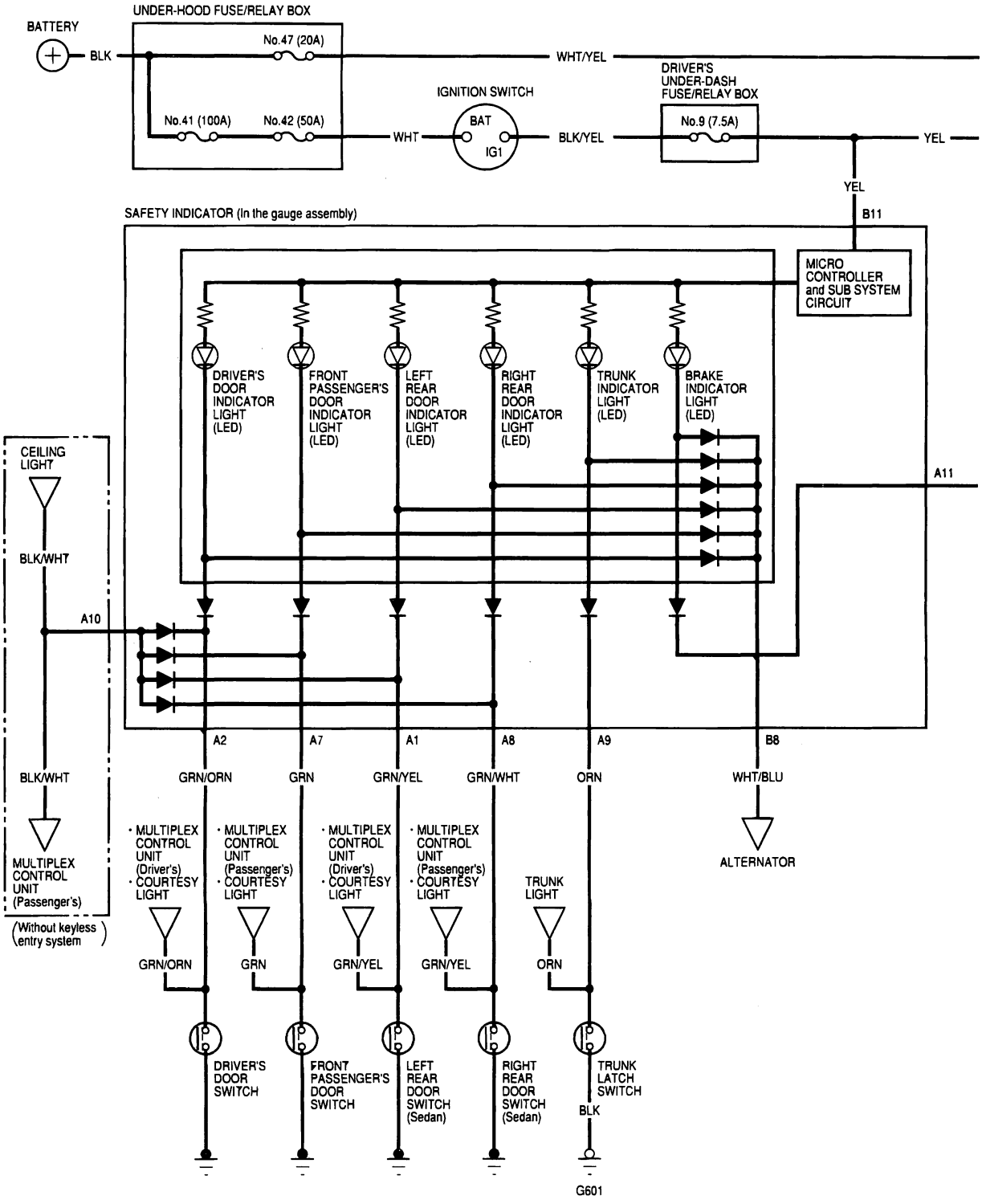

BACK

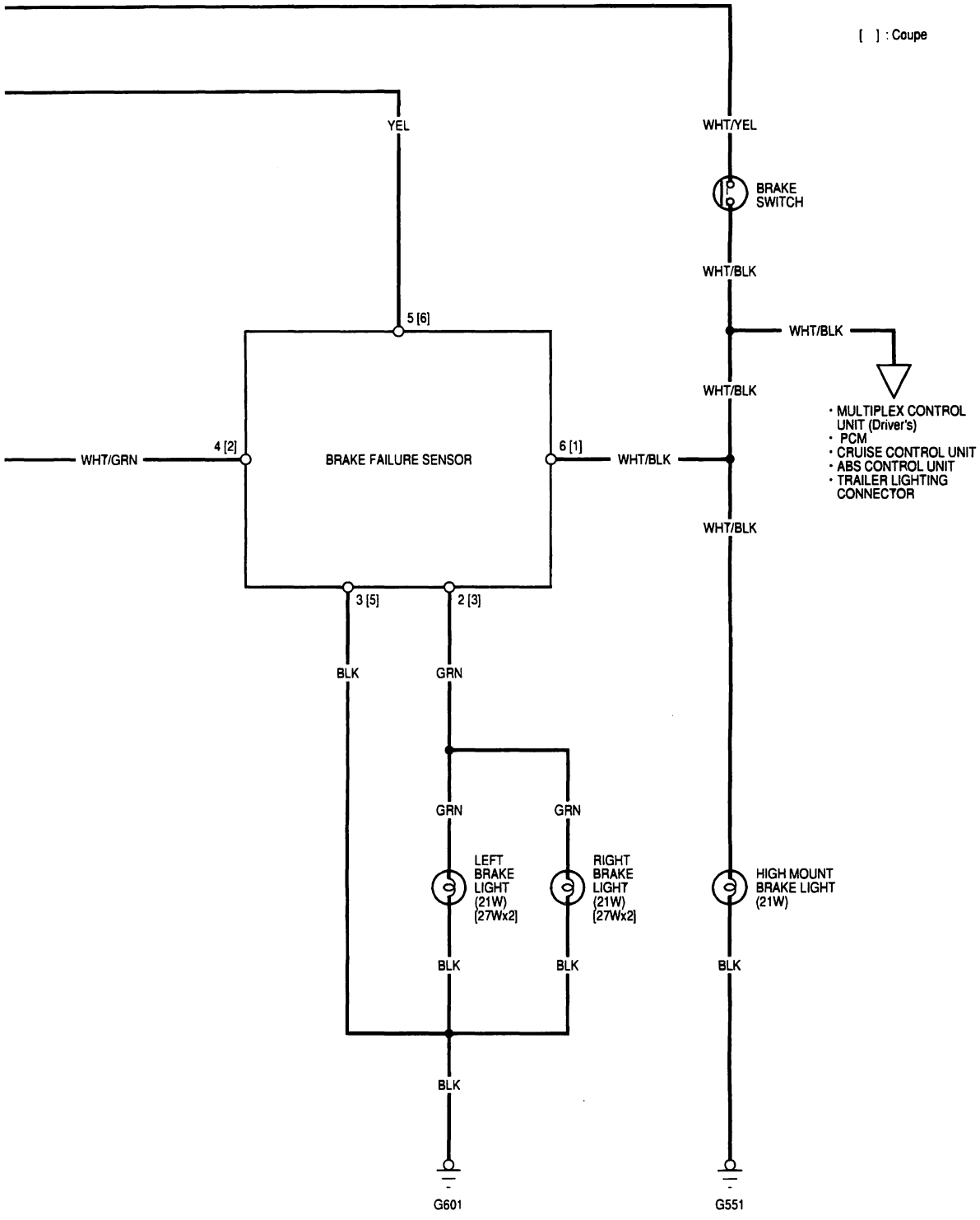
[ ] : Coupe
YEL
WHT/YEL
BRAKE SWITCH
WHT/BLK
5 [6]
WHT/BLK
WHT/BLK
• MULTIPLEX CONTROL UNIT (Driver's)
• PCM
• CRUISE CONTROL UNIT
• ABS CONTROL UNIT
• TRAILER LIGHTING CONNECTOR
WHT/GRN
4 [2]
BRAKE FAILURE SENSOR
6 [1]
WHT/BLK
WHT/BLK
3 [5]
2 [3]
BLK
GRN
GRN
GRN
LEFT BRAKE LIGHT (21W) [27Wx2]
RIGHT BRAKE LIGHT (21W) [27Wx2]
HIGH MOUNT BRAKE LIGHT (21W)
BLK
BLK
BLK
BLK
G601
G551

Component Location Index

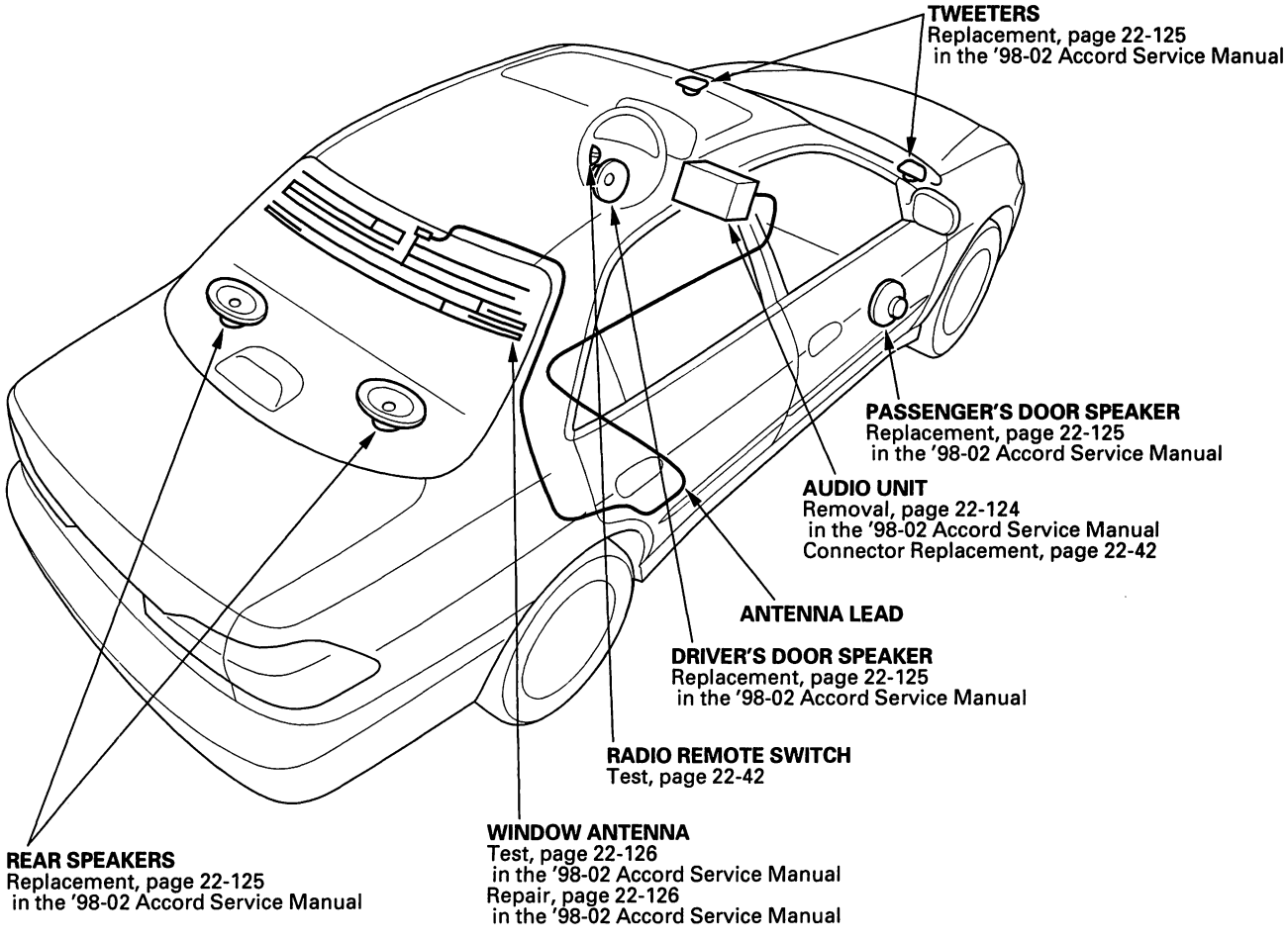

BACK

Circuit Diagram

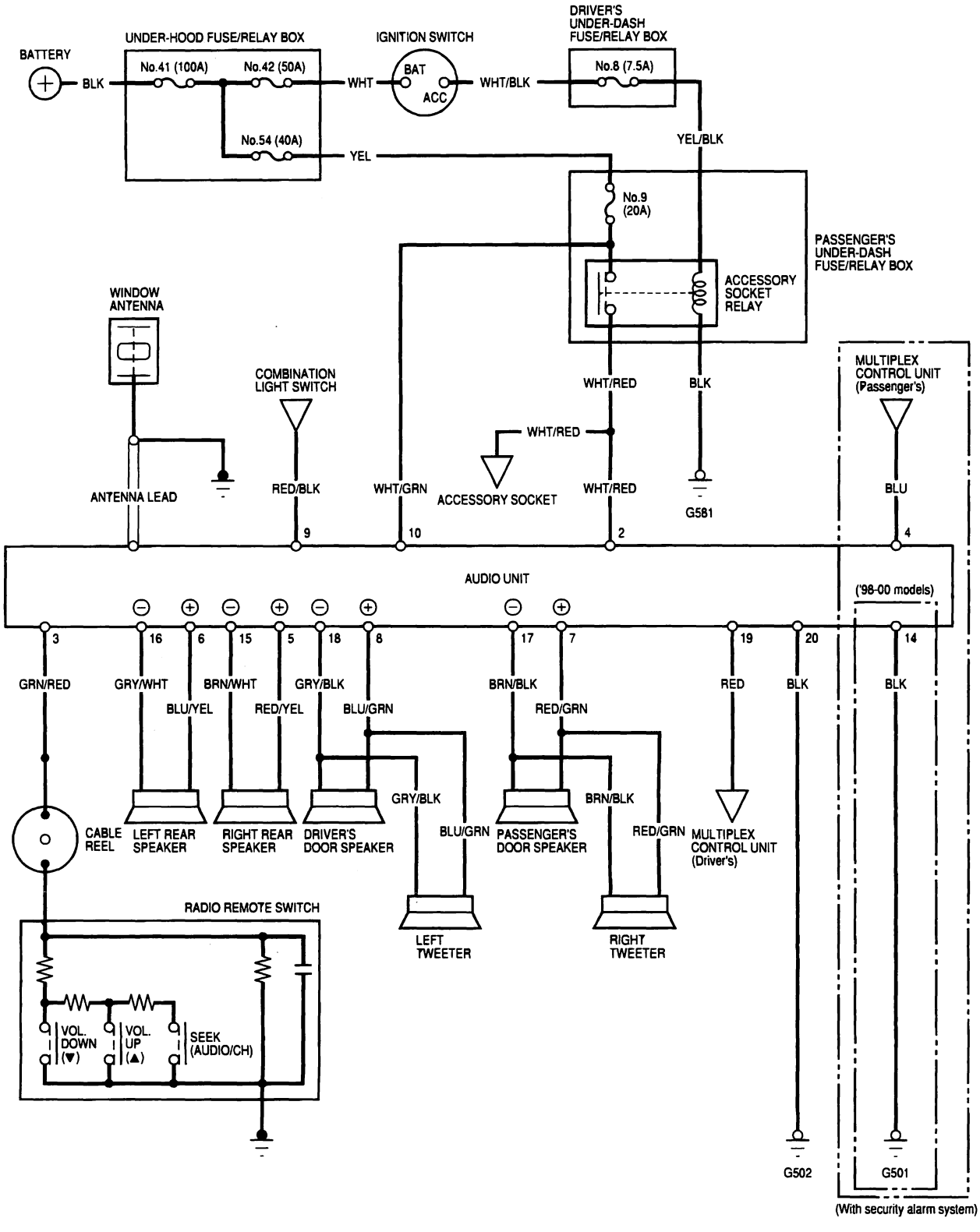

Audio Unit Connector Replacement

When replacing an audio unit connector, match the wires to the cavities listed in the following table. Cavities 1, 11, 12, and 13 are not used.

Cavity	Wire	Connect to
2	WHT/RED	ACC (Main stereo power supply)
3	GEN/RED	Radio remote switch
4	BLU	Security IN
5	RED/YEL	Right rear speaker (+)
6	BLU/YEL	Left rear speaker (+)
7	RED/GRN	Front passenger's speaker (+) Right tweeter (+)
8	BLU/GRN	Driver's door speaker (+) Left tweeter (+)
9	RED/BLK	Lights-on signal
10	WHT/GRN	Constant power
14*	BLK	Security OUT
15	BRN/WHT	Right rear speaker (−)
16	GRY/WHT	Left rear speaker (−)
17	BRN/BLK	Front passenger's door speaker (−) Right tweeter (−)
18	GRY/BLK	Driver's door speaker (−) Left tweeter (−)
19	RED	Dash lights brightness controller
20	BLK	Ground (G502)

*: '98-00 models

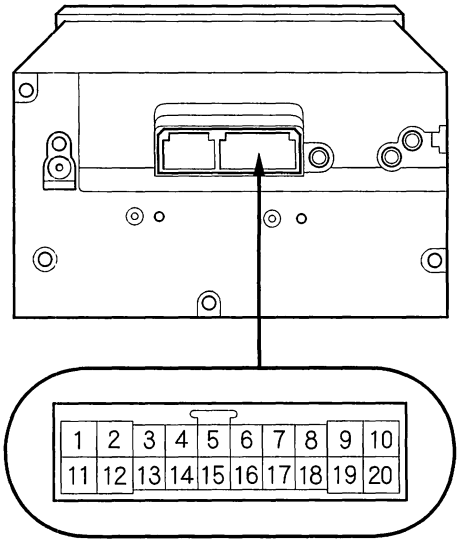

Radio Remote Switch Test

1. Remove the radio remote switch (A) from the steering wheel by removing the two screws, and disconnect the 2P connector (B).

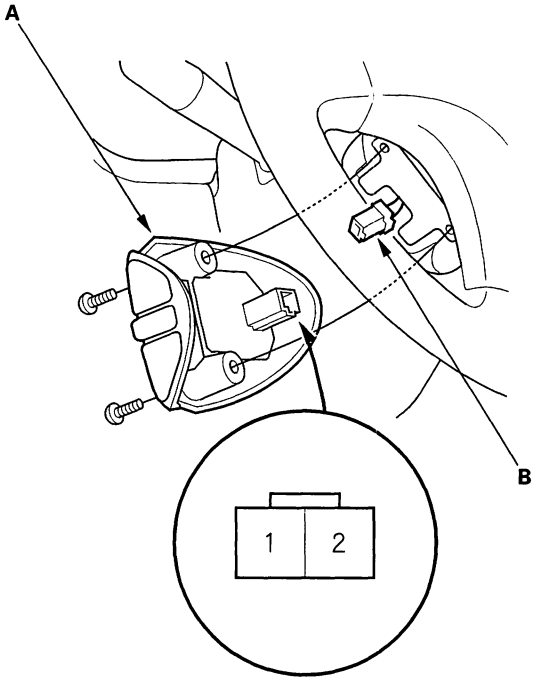

2. Measure resistance between the No. 1 and No. 2 terminals in each switch position according to the table.

Position	Resistance
OFF	Approx. 3.6 kΩ
AUDIO/CH (SEEK)	Approx. 780 Ω
▲ (VOL. UP)	Approx. 360 Ω
▼ (VOL. DOWN)	Approx. 100 Ω

3. If the resistance is not as specified, replace the radio remote switch.

BACK

Homelink Remote Control System

Circuit Diagram

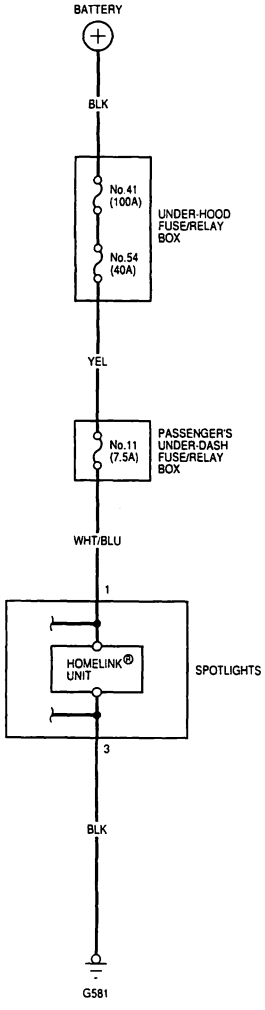

Test

Turn on the spotlight.

- If the spotlight comes on, the Homelink's power and ground circuits are OK. If the Homelink will not open the customer's garage door, check that the Homelink is programmed properly (see the owner's manual) or call Homelink at 800-355-3515. On the Internet, go to www.homelink.jci.com
- If the spotlight does not come on, check for these problems:
  - A blown No. 11 (7.5 A) fuse in the passenger's under-dash fuse/relay box.
  - An open in the WHT/BLU wire between the passenger's under-dash fuse/relay box and spotlight.
  - An open in the BLK wire between the spotlight and G581.

Component Location Index

Passenger's Power Seat (4-way Adjustable):

NOTE: Refer to the '98-02 Accord Service Manual, P/N 61S8400, for the driver's power seat.

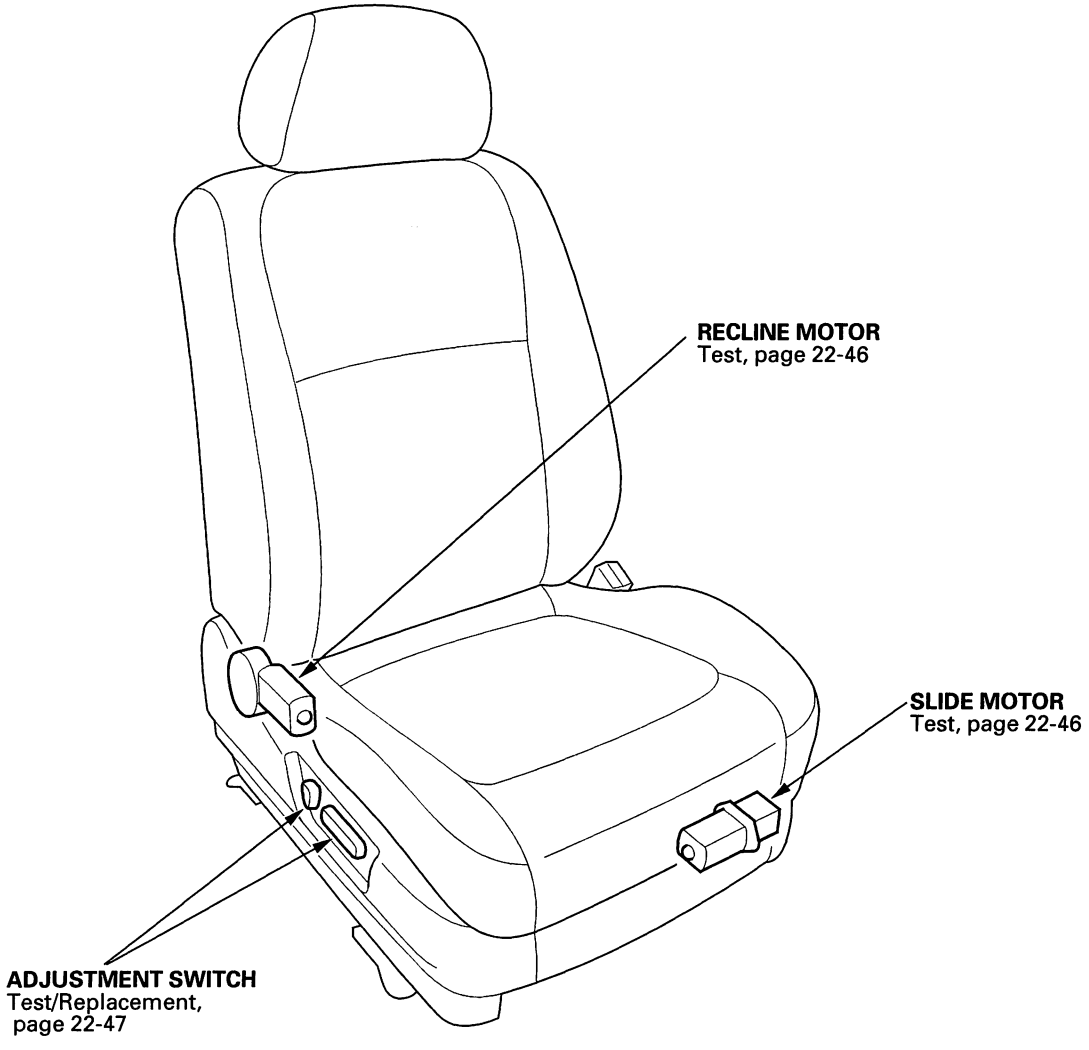

BACK

Circuit Diagram - 4-way Adjustable

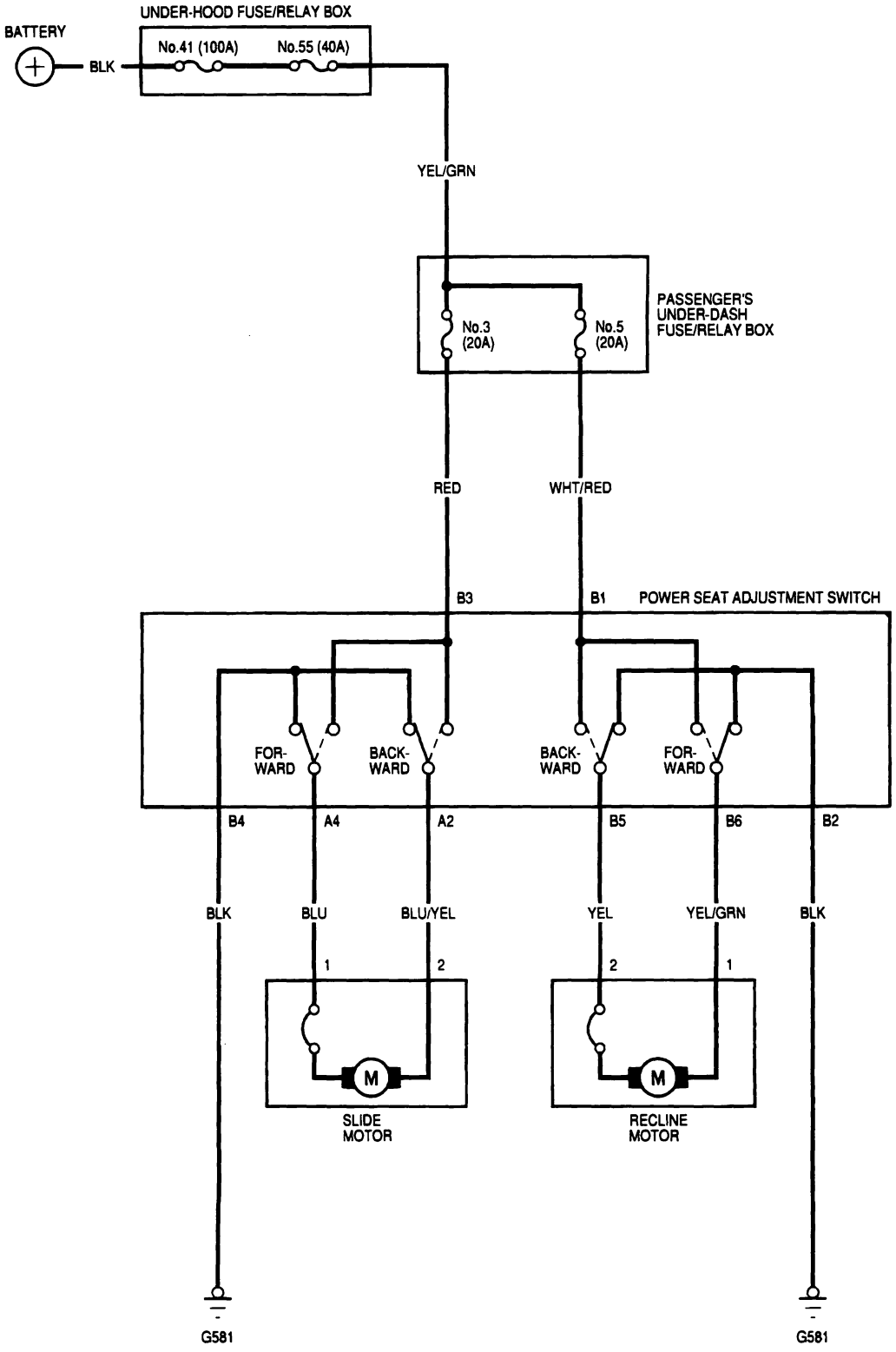

Motor Test

Passenger's Power Seat (4-way Adjustable):

1. Remove the passenger's seat (see page 20-2).
2. Remove the adjustment switch cover (A) from the passenger's seat by removing the 2 screws (B).

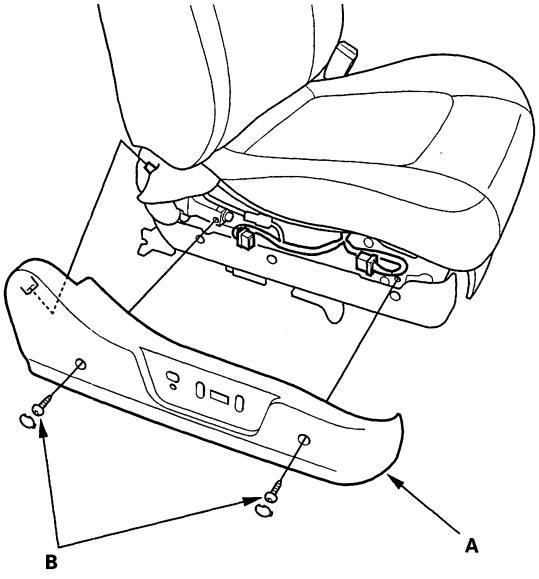

3. Disconnect the 6P connectors (A) from the adjustment switch (B).

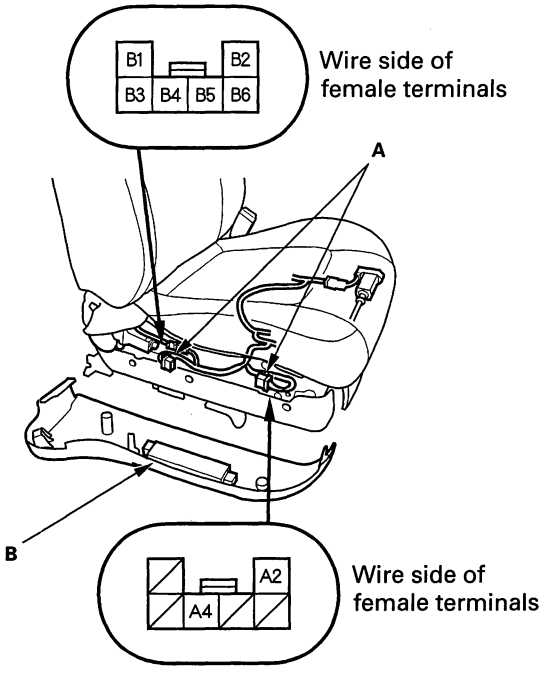

4. Test the motor. When the motor stops running, disconnect battery power immediately.

Recline motor:

Terminal / Position	B5	B6
Forward	⊖	⊕
Backward	⊕	⊖

Slide motor:

Terminal / Position	A2	A4
Forward	⊖	⊕
Backward	⊕	⊖

5. If the motor does not run or fails to run smoothly, check for an open in the power seat wire harness between the 6P connector and the 2P connectors. If the harness is OK, replace the motor (see page 20-2).

BACK

Switch Test/Replacement

Passenger's Power Seat (4-way Adjustable):

1. Remove the adjustment switch cover (A) from the passenger's seat by removing the 2 screws (B), and pulling off the adjustment switch knobs (C).

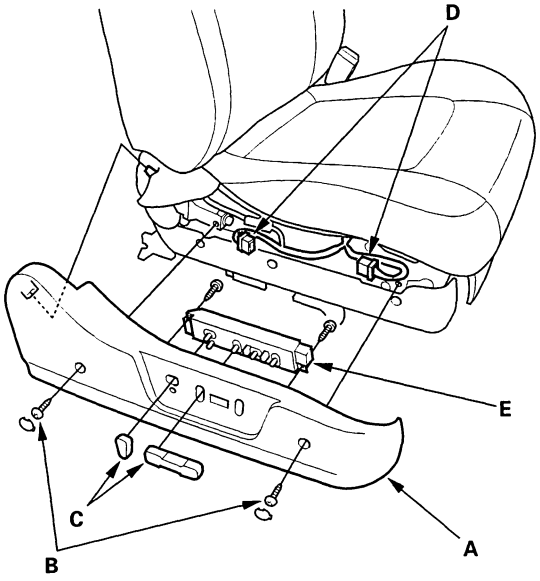

2. Disconnect the 6P connectors (D) from the adjustment switch (E), then remove the switch from the cover by removing its 2 mounting screws.

3. Reinstall the adjustment switch knobs.

4. Check for continuity between the terminals in each switch position according to the table.

Position \ Terminal		A2	A4	B1	B2	B3	B4	B5	B6
SLIDE SWITCH	FOR WARD	○	○			○	○		
	BACK WARD	○	○			○	○		
RECLINE SWITCH	FOR WARD			○	○			○	○
	BACK WARD			○	○			○	○

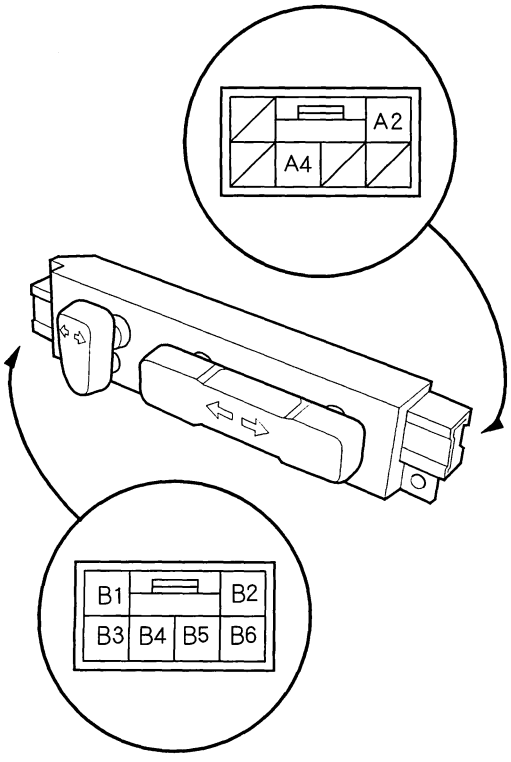

5. If the continuity is not as specified, replace the switch.

Seat Heaters - Canada

Component Location Index

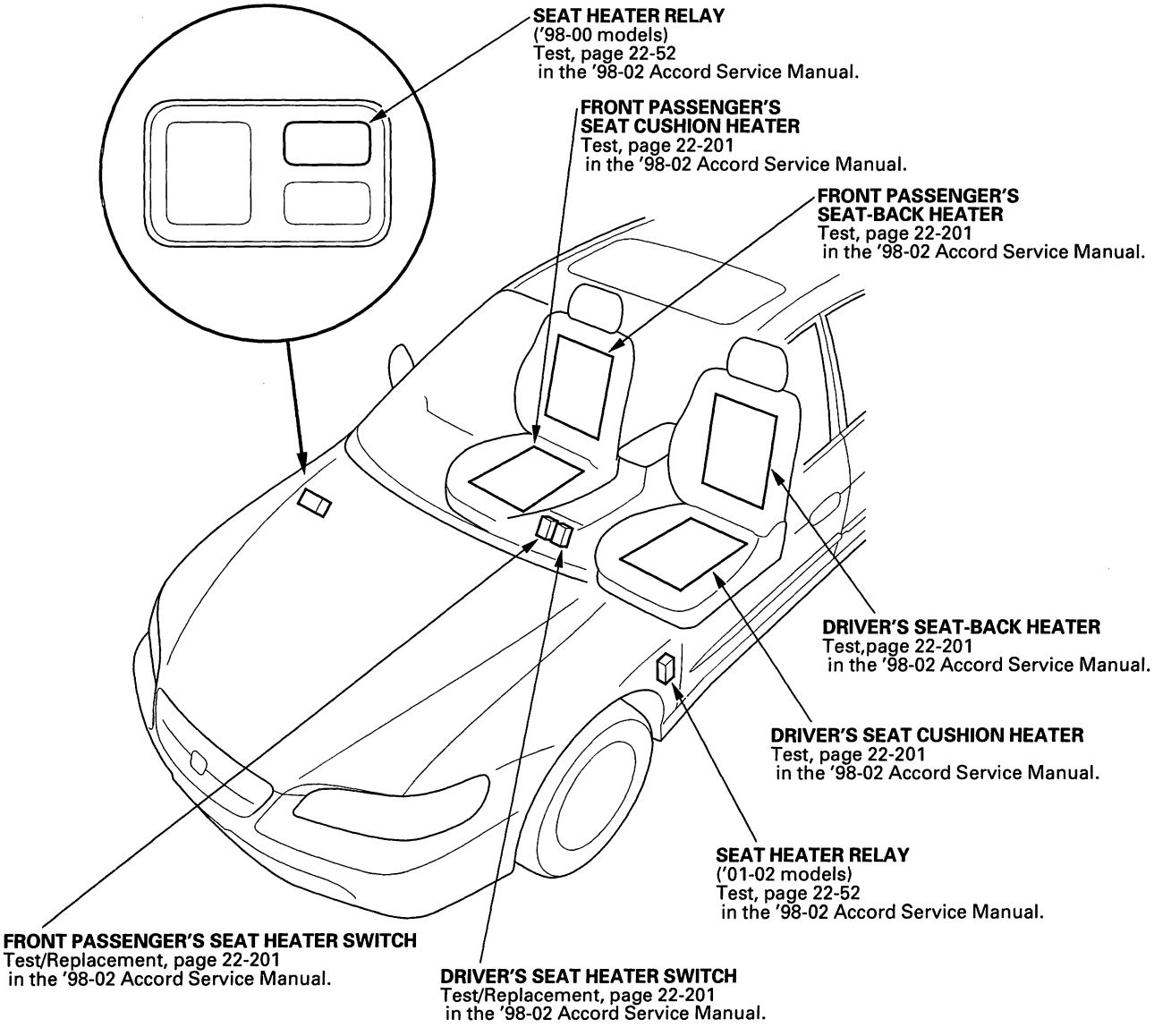

BACK

Circuit Diagram

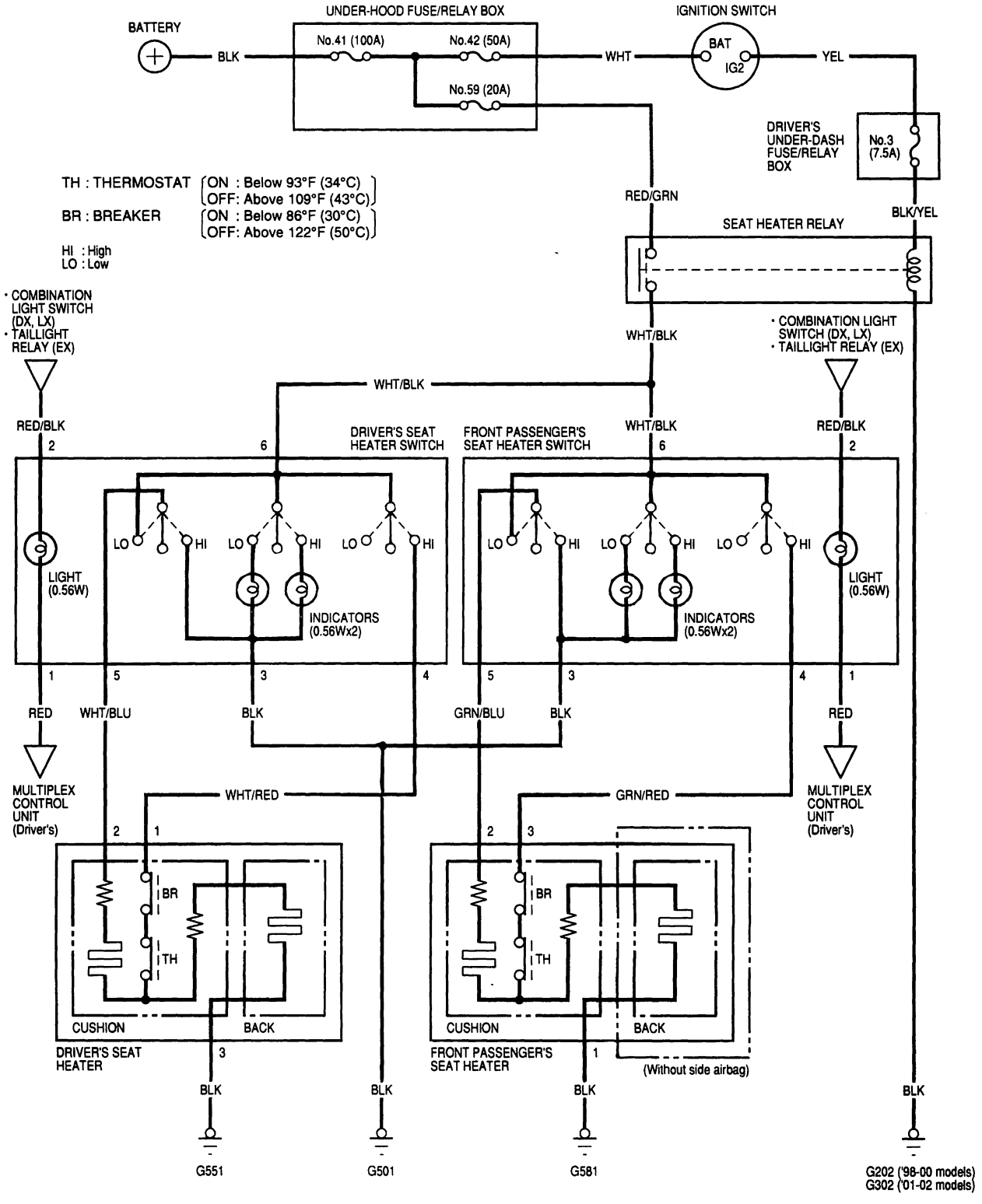

BACK

Restraints

SRS (Supplemental Restraint System)

SRS Unit Identification 23-2
DTC Troubleshooting Index 23-3
Symptom Troubleshooting Index 23-4

NOTE: Refer to the '98-02 Accord Service Manual, P/N 61S8400, for the items not shown in this section.

SRS Unit Identification

'98 Model

MAKER	IDENTIFICATION MARK
KEIHIN	M2

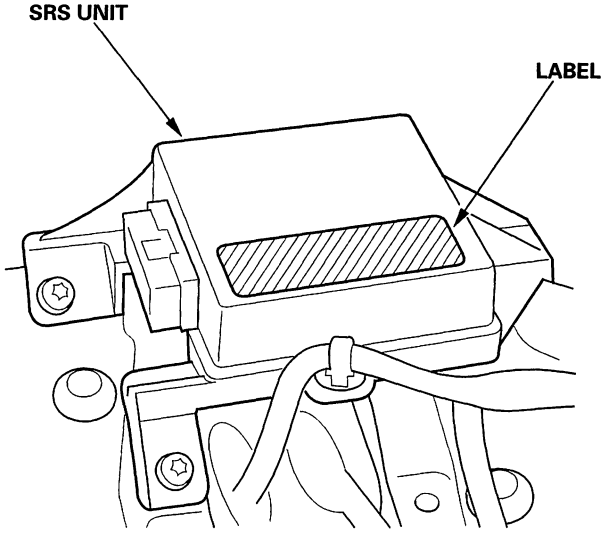

BACK

DTC Troubleshooting Index

'98 Model
KEIHIN (M2) SRS unit

DTC	Detection Item	Notes
1-1	Open in driver's airbag inflator	(see page 23-74)*1
1-2	Increased resistance in driver's airbag inflator	(see page 23-74)*1
1-3	Short to another wire or decreased resistance in driver's airbag inflator	(see page 23-76)*1
1-4	Short to power in driver's airbag inflator	(see page 23-78)*1
1-5	Short to ground in driver's airbag inflator	(see page 23-80)*1
2-1	Open in passenger's airbag inflator	(see page 23-82)*1
2-2	Increased resistance in passenger's airbag inflator	(see page 23-82)*1
2-3	Short to another wire or decreased resistance in passenger's airbag inflator	(see page 23-83)*1
2-4	Short to power in passenger's airbag inflator	(see page 23-85)*1
2-5	Short to ground in passenger's airbag inflator	(see page 23-86)*1
5-1	Internal failure of SRS unit	(see page 23-88)*1
5-2		
5-3		
5-4		
6-1		
6-2		
6-3		
6-4		
7-1		
7-2		
7-3		
8-1		
8-2		
8-5		
8-6		
9-1	Internal failure of the SRS unit. If intermittent, could mean internal failure of the unit or a faulty indicator light circuit. Refer to Troubleshooting Intermittent Failures (see page 23-45)*1	(see page 23-88)*1
9-2	Internal failure of the SRS unit. If intermittent, could mean internal failure of the power supply (VB line). Refer to Troubleshooting Intermittent Failures (see page 23-45)*1	
10-1	SRS airbag deployed (SRS unit must be replaced)	(see page 23-88)*1

* 1: Refer to the '98-02 Accord Service Manual, P/N 61S8400.

Symptom Troubleshooting Index

'98 Model

Symptom	Diagnostic procedure	Also check for
SRS indicator light doesn't come on.	SRS Indicator Light Troubleshooting, refer to '98-02 Accord Service Manual, P/N 61S8400 (see page 23-242).	
The SRS indicator light stays on when in "SCS" menu method.	SRS Indicator Light Troubleshooting, refer to '98-02 Accord Service Manual, P/N 61S8400 (see page 23-242).	Inability to retrieve DTCs with the PGM Tester. Retrieve the flash codes with the SCS mode, refer to '98-02 Accord Service Manual, P/N 61S8400 (see page 23-42).

BACK

Service Manual Index

NOTE: Refer to the following list to look up DTCs, symptoms, fuses, connectors, wire harnesses, specifications, maintenance schedules, and general service information:

DTC Troubleshooting Indexes
ABS/TCS Components 19-9
Automatic Climate Control 21-29
Automatic Transaxle 14-7
Fuel and Emissions 11-3
SRS 23-3

Symptom Troubleshooting Indexes
A/C 21-7
ABS/TCS Components 19-10, 31
Automatic Climate Control 21-30
Automatic Transaxle 14-8
Cruise Control System 4-43
Fan Controls 10-15
Fuel and Emissions 11-6
SRS 23-4
Steering 17-4

Fuse/Relay Indexes
A/C Compressor Clutch Relay 22-23
A/C Condenser Fan Relay 22-23
Blower Motor Relay 22-23
ELD (Electrical Load Detector) 22-23
Headlight Relay 22-23
Horn Relay 22-23
Power Distribution 22-26
Radiator Fan Relay 22-23
Under-dash Fuse/Relay Box, Driver's 22-24
Under-dash Fuse/Relay Box, Passenger's .. 22-25
Under-hood Fuse/Relay Box 22-23

Connector and Wire Harness Indexes
Component Connectors (to hamess) ... 22-5
Grounds (to components) 22-29
In-line Connectors (to hamess) 22-4

Specifications section ..... Section 2

Maintenance section ..... Section 3

General Information section ..... Section 1

A

A/C
Component Location Index 21-3
Circuit Diagram 21-8
Test 21-15

A/C Compressor
Replacement 21-18, 23

A/C Compressor Clutch
Inspection 21-20, 25
Overhaul 21-21, 26

A/C Compressor Relief Valve
Replacement 21-22, 27

A/C Condenser
Replacement 21-28

A/C Condenser Fan Assembly
Component Location Index 10-2
Test 10-8
Replacement 10-13

A/C Condenser Fan Circuit
Troubleshooting 21-10

A/C Pressure Switch Circuit
Troubleshooting 21-59

A/T Assembly
Removal 14-114
Installation 14-121

A/T Clutch Pressure Control Solenoid Valves
Test 14-108
Replacement 14-109

A/T Countershaft Assembly
Disassembly/Inspection/Reassembly 14-172
Installation 14-192

A/T Countershaft 1st Gear
Replacement 14-173

A/T Countershaft 3rd Gear
Replacement 14-173

A/T Differential
Component Location Index 14-201

A/T Gear Position Indicator
Replacement 14-144

A/T Gear Position Indicator System
Component Location Index 14-138
Circuit Diagram 14-139
Test 14-143

A/T Hydraulic Controls
Test 14-104

A/T Mainshaft Assembly
Disassembly/Inspection/Reassembly 14-169
Installation 14-192

A/T Secondary Shaft Assembly
Disassembly/Inspection/Reassembly 14-176
Inspection 14-177
Installation 14-192

A/T Shift Cable
Replacement 14-133
Adjustment 14-136

A/T Shift Lever
Removal 14-129
Installation 14-130
Disassembly/Reassembly 14-132

ABS Control Unit
Replacement 19-22

ABS Indicator Circuit
Troubleshooting 19-18, 76

ABS Modulator Unit
Removal/Installation 19-21

ABS/TCS Components
Component Location Index 19-8, 24
Circuit Diagram 19-12, 46
Description 19-32

ABS-TCS Control Unit
How-to Information 19-25
Replacement 19-82

ABS-TCS Modulator Unit
Removal/Installation 19-80

Accumulator Body
Disassembly/Inspection/Reassembly 14-166

Air Cleaner Element
Replacement 11-97

Alternator
Component Location Index 4-25
Replacement 4-31
Overhaul 4-35

Alternator-compressor Belt
Component Location Index
A/C Compressor 4-25
Charging System 4-25
Inspection/Replacement
Charging System 4-31

Alternator-compressor Belt Auto-tensioner
Inspection/Replacement 4-33

ATF
Inspection 14-112
Replacement 14-113

ATF Cooler
Repair 14-127

ATF Cooler Lines and Hoses
Component Location Index 10-2
Replacement 14-128

ATF Pump
Inspection 14-163

Audio Unit
Replacement 22-42

Audio/Entertainment
Component Location Index 22-40
Circuit Diagram 22-41

Automatic Climate Control
Component Location Index 21-26
Description 21-31
Circuit Diagram 21-32

Automatic Transaxle
Description 14-18
Test 14-101

(cont'd)

Service Manual Index

(cont'd)

B

Battery
Component Location Index
  Charging System 4-25
Test
  Wiring System 22-30

Blower Power Transistor
Test 21-58

Brake Calipers
Overhaul 19-4

Brake Pads
Inspection/Replacement 19-2

Brake Pedal Position Switch
Test 4-50

Bumper Spoiler, Rear
Replacement 20-6

C

Camshaft
Inspection 6-40
Installation 6-50

Charging System
Component Location Index 4-25
Circuit Diagram 4-26
Troubleshooting 4-27

Charging System Indicator
Component Location Index 4-25

CKP (Crankshaft Position) Sensor
Replacement 6-56

Climate Control Power and Ground Circuits
Troubleshooting 21-57

Climate Control Unit
How-to Information 21-34
Removal/Installation 21-64
Disassembly/Reassembly 21-65

Connecting Rod Bearing Caps
Component Location Index 7-3

Connecting Rod Bearings
Component Location Index 7-3
Replacement 7-10

Connecting Rod Bolts
Component Location Index 7-3
Inspection 7-21

Connecting Rods
Component Location Index 7-3
Inspection 7-7

Connectors
(See first page of this Index)

Coolant
Replacement 10-10

Coolant Reservoir
Component Location Index 10-2

Coolant Temperature Gauge
Test 10-5
Troubleshooting 10-5

Coolant Temperature Gauge Sending Unit
Component Location Index
  Coolant Temperature Gauge
Components 10-2
  Cooling System 10-2
Test
  Coolant Temperature Gauge
Components 10-7
  Cooling System 10-7

Cooling System
Component Location Index 10-2

Countershaft Bearing Hub/Bearing
Replacement 14-175

Countershaft Bearing, A/T Housing
Replacement 14-156

Countershaft Bearing, Torque Converter Housing
Replacement 14-168

Countershaft Idler Gear
Installation 14-195

Countershaft Reverse Selector Hub
Replacement 14-173

Countershaft Speed Sensor
Replacement 14-110

Crankshaft
Component Location Index 7-3
Inspection 7-7, 14
Removal 7-12
Installation 7-24

Crankshaft Main Bearings
Component Location Index 7-3
Replacement 7-8

Crankshaft Oil Seal, Pulley End
Component Location Index 7-3
Installation 7-29

Crankshaft Oil Seal, Transmission End
Component Location Index 7-3
Installation 7-29

Crankshaft Pulley
Removal/Installation 6-17

Crankshaft Thrust Washers
Component Location Index 7-3

Cruise Control Actuator
Test 4-51
Replacement 4-52

Cruise Control Actuator Cable
Adjustment 4-54

Cruise Control Actuator Solenoid
Test 4-50

Cruise Control Communication Circuit
Troubleshooting 4-45

Cruise Control Main Switch
Test/Replacement 4-48

Cruise Control Set/Resume/Cancel Switch
Test/Replacement 4-49

Cruise Control System
Component Location Index 4-41
Circuit Diagram 4-42

Cruise Control Unit
Input Test 4-46

Cylinder Head Assembly
Component Location Index 6-3
Removal 6-31
Installation 6-51

Cylinder Head, Bare
Inspection 6-36

D

Differential Carrier Bearing Outer Races, A/T
Replacement 14-204

Differential Carrier Bearings, A/T
Replacement 14-202
Inspection 14-205

Differential Carrier, A/T
Replacement 14-202

Differential Oil Seals, A/T
Replacement 14-203

Differential Pinion Gears, A/T
Inspection 14-201

Distributor
Component Location Index 4-14
Replacement 4-19
Disassembly/Reassembly 4-20

Drive Plate
Component Location Index 7-3
Removal/Installation 7-6

DTCs
(See first page of this Index)

D4 Indicator Circuit
Troubleshooting 14-93

E

ECT Sensor
Component Location Index 10-2

ECT Sensor Circuit
Troubleshooting 21-50

EGR Valve
Component Location Index 10-2

Emblems
Replacement 20-8

End Cover, A/T
Removal 14-151

Engine Assembly
Removal 5-2
Installation 5-11

Engine Block Assembly
Component Location Index 7-3

Engine Block End Cover
Component Location Index 7-3

Engine Block, Bare
Component Location Index 7-3
Inspection 7-15
Repair 7-17

Engine Mount Control Solenoid Valve
Component Location Index 4-55

Engine Mount Control System
Component Location Index 4-55
Circuit Diagram 4-56
Troubleshooting 4-57

EVAP Control System
Component Location Index 11-103

Exhaust Manifold
Removal/Installation 9-3

Exhaust Manifold Gasket
Replacement 9-3

Exhaust Pipe
Replacement 9-4

F

Fan Control Module
Input Test 10-20

Fan Controls
Component Location Index 10-14
Circuit Diagram 10-16

Final Driven Gear, A/T
Replacement 14-202

Frame
Repair Chart 20-12

Front Driveshaft Assembly
Resassembly 16-3

Front Seats
Component Location Index 22-44
Circuit Diagram 22-45

Fuel and Emissions
Description 11-7
Circuit Diagram 11-30, 39

Fuel Gauge
Test 11-94

Fuel Injection System (PGM-FI)
Component Location Index 11-50

Fuel Injectors
Replacement 11-80, 82

Fuel Lines and Hoses
Inspection 11-91

Fuel Pressure Regulator
Replacement 11-92, 93

Fuel Supply System
Component Location Index 11-87
Adjustment 11-88
Troubleshooting 11-89

Fuses
(See first page of this Index)

G

Gauges
Circuit Diagram 22-33

General Information
(See section 1)

H

Heater Hoses and Pipes
Component Location Index 10-2

Heater Valve
Component Location Index 10-2

Heater Valve Cable
Adjustment 21-13

Homelink Remote Control System
Circuit Diagram 22-43
Test 22-43

Hood
Replacement 20-7

HO2S, Primary
Replacement 11-84

HO2S, Secondary
Replacement 11-84

I

IA (Intake Air) Bypass Control Valve
Test 11-101

ICM (Ignition Control Module)
Component Location Index 4-14
Input Test 4-21

Idle Control System
Component Location Index 11-85
Adjustment 11-86

Ignition Coil(s)
Component Location Index 4-14
Test 4-22
Troubleshooting 4-23

Ignition System
Component Location Index 4-14, 15
Circuit Diagram 4-16, 17
Inspection 4-18

Ignition Wires
Component Location Index 4-14
Test/Inspection 4-22

In-car Temperature Sensor
Replacement 21-61
Test 21-61

Intake Air System
Component Location Index 11-95

Intake Manifold
Removal/Installation 9-2

Interlock System
Component Location Index 14-145
Circuit Diagram 14-146

Intermediate Shaft Assembly
Disassembly 16-14
Removal 16-14
Resassembly 16-16
Installation 16-18

K

Key Interlock Solenoid
Test 14-149

Key Interlock System Circuit
Troubleshooting 14-99

L

Lock-up Control Solenoid Valve
Test 14-103

Low Fuel Indicator
Replacement 22-32

(cont'd)

Service Manual Index

(cont'd)

Lubrication System
Component Location Index 8-3
Test 8-4

M

Main Valve Body
Removal 14-157
Repair 14-159
Resassembly 14-160
Disassembly/Inspection/Reassembly 14-161
Installation 14-190

Mainshaft Bearing, Torque Converter Housing
Replacement 14-167

Mainshaft Sealing Rings
Replacement 14-171

Mainshaft Speed Sensor
Replacement 14-110

Maintenance
(See section 3)

Multiplex Control Unit, Driver's
Input Test 14-147

O

Oil Filter
Replacement 8-5

Oil Pan
Component Location Index
Engine Block Assembly 7-3
Lubrication System 7-3

Oil Pressure Switch
Test
Low Engine Oil Indicator Components . 8-4
Lubrication System 8-4

Oil Pump, Engine
Component Location Index
Engine Block Assembly 7-3
Lubrication System 7-3
Overhaul
Lubrication System 8-7

Oil, Engine
Replacement 8-5

Outside Air Temperature Sensor
Replacement 21-62
Test 21-62

P

Park Lever Position Stop
Inspection/Adjustment 14-153

Park Pin Switch
Test 14-150

PCM
Component Location Index 4-55

PCV Valve
Test 11-102

Piston Pins
Component Location Index 7-3

Piston Rings
Component Location Index 7-3
Replacement 7-22

Pistons
Component Location Index 7-3
Removal 7-12
Replacement 7-18

Power Seat Linkage
Disassembly/Reassembly 20-4

Power Seat Motors
Test 22-46

Power Seat Switch
Test/Replacement 22-47

Power Steering Fluid Reservoir
Component Location Index 17-3

Power Steering Lines and Hoses
Replacement 17-12

Power Steering Pump
Component Location Index 17-3
Test 17-7, 8
Replacement 17-13
Overhaul 17-14

Power Steering Pump Belt
Inspection/Adjustment 17-10

R

Radiator
Component Location Index 10-2
Test 10-8
Replacement 10-13

Radiator and Condenser Fans Common Circuit
Troubleshooting 21-12

Radiator Cap
Component Location Index 10-2
Test 10-7

Radiator Fan Assembly
Component Location Index 10-2
Test 10-8
Replacement 10-13

Radiator Fan Circuit
Troubleshooting 10-17

Radiator Fan Switch
Component Location Index 10-2
Test 10-21

Radiator Fan Switch Circuit
Troubleshooting 10-19

Radiator Hoses and Pipes
Component Location Index 10-2

Radio Remote Switch
Test 22-42

Recirculation Control Motor Circuit
Troubleshooting 21-58

Refrigerant
Replacement 21-30
Test 21-29

Refrigerant Oil
Replacement 21-6

Regulator Valve Body
Disassembly/Inspection/Reassembly 14-164

Rocker Arm Assembly
Removal 6-36
Disassembly/Reassembly 6-37

Rocker Arms
Test 6-10
Inspection 6-38

S

Safety Indicator System
Circuit Diagram 22-38

Seat Heaters
Component Location Index 22-48
Circuit Diagram 22-49

Seat Wire Harness, Driver's
Installation 20-5

Seat, Front
Removal/Installation 20-2
Disassembly/Reassembly 20-3

Secondary Shaft Bearing, Torque Converter Housing
Replacement 14-168

Secondary Shaft Idler Gear Bearing
Replacement 14-179

Servo Body
Disassembly/Inspection/Reassembly 14-165

Shift Control Solenoid Valves
Replacement 14-107
Test 14-107

Shift Lock Solenoid
Test 14-149
Replacement 14-150

Shift Lock System Circuit
Troubleshooting 14-96

Spark Plugs
Component Location Index 4-14
Inspection 4-24

Specifications
(See section 2)

Starter
Test 4-7
Replacement 4-8
Overhaul 4-9

Starter Solenoid
Test 4-6

Starting System
Component Location Index 4-3
Circuit Diagram 4-4
Troubleshooting 4-5

Steering
Component Location Index 17-3
Troubleshooting 17-6
Inspection 17-9

Steering Column
Component Location Index 17-3

Steering Gearbox
Component Location Index 17-3
Overhaul 17-20

Steering Lock
Component Location Index 17-3

Steering Rack Guide
Adjustment 17-19

Steering Wheel
Component Location Index 17-3

Sub-frames
Replacement 20-9

Sunlight Sensor
Replacement 21-63
Test 21-63

T

TCS Indicator Circuit
Troubleshooting 19-78

TCS Relay
Test 22-31

TCS Switch
Test 19-81

TDC Sensors
Replacement 6-55

Thermostat
Test 10-9
Replacement 10-12

Throttle Body
Test 11-96
Removal/Installation 11-99
Disassembly/Reassembly 11-100

Throttle Cable
Adjustment 11-98

Timing Belt
Inspection 6-18
Removal 6-19
Installation 6-22

Torque Converter Clutch Solenoid Valve
Replacement 14-106
Test 14-106

Transmission Housing
Removal 14-154
Installation 14-192

Transmission Range Switch
Test 14-140
Replacement 14-141

Troubleshooting
(See first page of this Index)

V

Valve Guides
Inspection 6-44
Replacement 6-45

Valve Seals
Removal 6-43

Valve Seats
Repair 6-47

Valve Springs
Removal 6-43

Valves
Adjustment 6-13
Removal 6-43
Inspection 6-44
Installation 6-49

VTEC Lost Motion Assemblies/Springs
Inspection 6-39

VTEC Solenoid Valve
Test 6-9

W

Water Pump
Component Location Index 10-2
Inspection 10-9
Replacement 10-10

Wheel Speed Sensors
Inspection 19-82
Replacement 19-83

Wire Harnesses
(See first page of this Index)

Wiring System
Relay and Control Unit Locations 22-2, 3

1

1st/2nd Clutch Assembly
Disassembly 14-180
Inspection 14-183
Resassembly 14-185

2

2nd Clutch Pressure Switch
Replacement 14-111

3

3rd Clutch Pressure Switch
Replacement 14-111

3rd/4th Clutch Assembly
Inspection 14-170, 183