2018

Cascada Owner's Manual

buick.com

Contents

Introduction 2
In Brief 5
Keys, Doors, and Windows 21
Seats and Restraints 46
Storage 90
Instruments and Controls 93
Lighting 120
Infotainment System 128
Climate Controls 129
Driving and Operating 134
Vehicle Care 173
Service and Maintenance 250
Technical Data 263
Customer Information 266
Reporting Safety Defects 276
OnStar 280
Index 292

Introduction

The names, logos, emblems, slogans, vehicle model names, and vehicle body designs appearing in this manual including, but not limited to, GM, the GM logo, BUICK, the BUICK Emblem, and CASCADA are trademarks and/or service marks of General Motors LLC, its subsidiaries, affiliates, or licensors.

For vehicles first sold in Canada, substitute the name “General Motors of Canada Company” for Buick Motor Division wherever it appears in this manual.

This manual describes features that may or may not be on the vehicle because of optional equipment that was not purchased on the vehicle, model variants, country specifications, features/applications that may not be available in your region, or changes subsequent to the printing of this owner’s manual.

Refer to the purchase documentation relating to your specific vehicle to confirm the features.

Keep this manual in the vehicle for quick reference.

Canadian Vehicle Owners

A French language manual can be obtained from your dealer, at www.helminc.com, or from:

Propriétaires Canadiens

On peut obtenir un exemplaire de ce guide en français auprès du concessionnaire ou à l'adresse suivante:

Helm, Incorporated
Attention: Customer Service
47911 Halyard Drive
Plymouth, MI 48170
USA

Using this Manual

To quickly locate information about the vehicle, use the Index in the back of the manual. It is an alphabetical list of what is in the manual and the page number where it can be found.

Litho in U.S.A.
Part No. 84137414 A First Printing

©2017 General Motors LLC. All Rights Reserved.

Danger, Warning, and Caution

Warning messages found on vehicle labels and in this manual describe hazards and what to do to avoid or reduce them.

⚠ Danger
Danger indicates a hazard with a high level of risk which will result in serious injury or death.

⚠ Warning
Warning indicates a hazard that could result in injury or death.

Caution
Caution indicates a hazard that could result in property or vehicle damage.

A circle with a slash through it is a safety symbol which means “Do Not,” “Do not do this,” or “Do not let this happen.”

Symbols

The vehicle has components and labels that use symbols instead of text. Symbols are shown along with the text describing the operation or information relating to a specific component, control, message, gauge, or indicator.

: Shown when the owner’s manual has additional instructions or information.

: Shown when the service manual has additional instructions or information.

: Shown when there is more information on another page — “see page.”

Vehicle Symbol Chart

Here are some additional symbols that may be found on the vehicle and what they mean. See the features in this manual for information.

: Airbag Readiness Light

: Air Conditioning

: Antilock Brake System (ABS)

: Brake System Warning Light

: Charging System

: Cruise Control

: Do Not Puncture

: Do Not Service

: Engine Coolant Temperature

: Exterior Lamps

: Flame/Fire Prohibited

: Fuel Gauge

: Fuses

: Headlamp High/Low-Beam Changer

: LATCH System Child Restraints

: Malfunction Indicator Lamp

: Oil Pressure

: Power

: Remote Vehicle Start

: Seat Belt Reminders

: Tire Pressure Monitor

: Traction Control/StabiliTrak

: Under Pressure

: Windshield Washer Fluid

In Brief

Instrument Panel

Instrument Panel Overview 6

Initial Drive Information

Initial Drive Information 8
Remote Keyless Entry (RKE) System 8
Remote Vehicle Start 8
Door Locks 9
Trunk Release 9
Windows 10
Seat Adjustment 10
Heated Seats 11
Head Restraint Adjustment 12
Seat Belts 12
Passenger Sensing System . . . 12
Mirror Adjustment 13
Steering Wheel Adjustment 13
Interior Lighting 14
Exterior Lighting 14
Windshield Wiper/Washer 15
Climate Controls 15
Transmission 16

Vehicle Features

Infotainment System 16
Steering Wheel Controls 16
Cruise Control 16
Driver Information Center (DIC) 17
Forward Collision Alert (FCA) System 17
Lane Departure Warning (LDW) 17
Rear Vision Camera (RVC) 17
Parking Assist 18
Power Outlets 18
Convertible 18

Performance and Maintenance

Traction Control/Electronic Stability Control 18
Tire Pressure Monitor 19
Fuel 19
E85 or FlexFuel 20
Engine Oil Life System 20
Driving for Better Fuel Economy 20
Roadside Assistance Program 20

Instrument Panel

Instrument Panel Overview

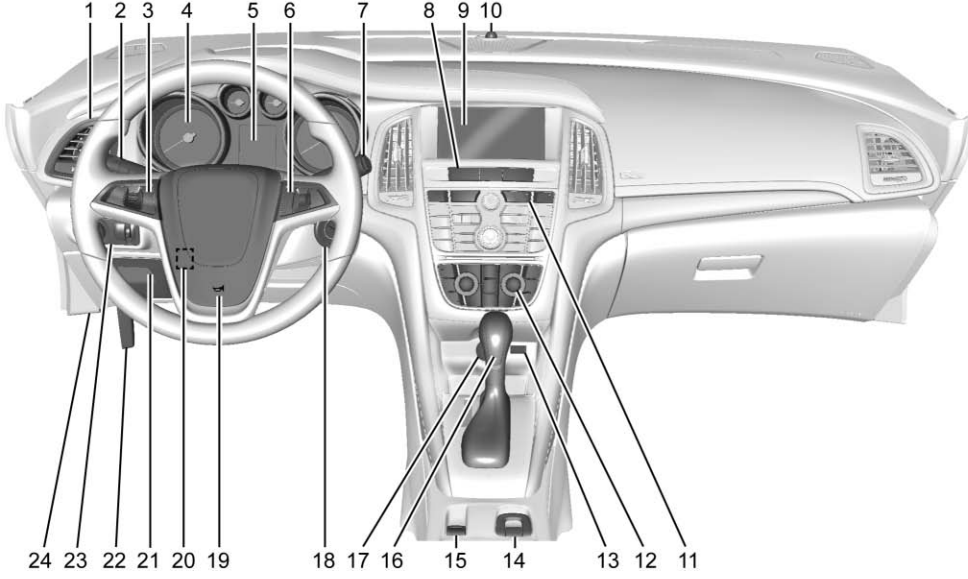

1. *Air Vents* ⇨ *132*.
2. *Headlamp High/Low-Beam Changer* ⇨ *121*.

   Turn Signal Lever. See *Turn and Lane-Change Signals* ⇨ *123*.

   Driver Information Center (DIC) Buttons. See *Driver Information Center (DIC)* ⇨ *110*.
3. *Cruise Control* ⇨ *159*.

   Forward Collision Alert (FCA) System ⇨ *164* (If Equipped).
4. *Instrument Cluster* ⇨ *98*.
5. *Driver Information Center (DIC)* ⇨ *110*.
6. *Steering Wheel Controls* ⇨ *94*.
7. *Windshield Wiper/Washer* ⇨ *94*.
8. Central Locking Switch. See *Power Door Locks* ⇨ *28*.

   Hazard Warning Flashers ⇨ *123*.

   Passenger Airbag Status Indicator ⇨ *101*.
9. AM-FM Radio. See the infotainment manual.
10. Anti-Theft Alarm System Indicator Light. See *Vehicle Alarm System* ⇨ *31*.
11. *Traction Control/Electronic Stability Control* ⇨ *157*.

    Lane Departure Warning (LDW) ⇨ *166*.

    Assistance Systems for Parking or Backing ⇨ *162*.
12. *Dual Automatic Climate Control System* ⇨ *129*.

    Heated Front Seats ⇨ *50* (If Equipped).

    Heated Steering Wheel ⇨ *94* (If Equipped).
13. USB Port. See the infotainment manual.

    Input Jack. See the infotainment manual.
14. *Convertible Top* ⇨ *37*.

    All Window Switch. See *Power Windows* ⇨ *35*.
15. *Electric Parking Brake* ⇨ *155*.
16. Shift Lever. See *Automatic Transmission* ⇨ *151*.
17. *Power Outlets* ⇨ *96*.
18. Ignition Switch. See *Ignition Positions* ⇨ *145*.
19. *Horn* ⇨ *94*.
20. *Steering Wheel Adjustment* ⇨ *94* (Out of View).
21. *Instrument Panel Storage* ⇨ *90*.

    Instrument Panel Fuse Block ⇨ *205*.
22. Hood Release. See *Hood* ⇨ *176*.
23. *Exterior Lamp Controls* ⇨ *120*.

    Fog Lamps ⇨ *124* (If Equipped).

    Instrument Panel Illumination Control ⇨ *124*.
24. Data Link Connector (DLC) (Out of View). See *Malfunction Indicator Lamp (Check Engine Light)* ⇨ *102*.

Initial Drive Information

This section provides a brief overview about some of the important features that may or may not be on your specific vehicle.

For more detailed information, refer to each of the features which can be found later in this owner's manual.

Remote Keyless Entry (RKE) System

The Remote Keyless Entry (RKE) transmitter may work up to 60 m (197 ft) away from the vehicle.

Press the button to extend the key. The key can be used for the driver side lock and the ignition.

: Press to unlock both doors, the trunk, and the fuel door. Press and hold to open all windows.

: Press to lock both doors, the trunk, and the fuel door. Press and hold to close all windows.

Lock and unlock feedback can be personalized. See *Vehicle Personalization* ⇨ *114*.

: Press and hold to release the trunk.

: Press and release to initiate vehicle locator. Press and hold for at least three seconds to sound the panic alarm. Press again to cancel the panic alarm.

See *Keys* ⇨ *21* and *Remote Keyless Entry (RKE) System Operation* ⇨ *23*.

Remote Vehicle Start

The engine can be started from outside of the vehicle.

Starting the Vehicle

1. Press and release on the RKE transmitter.
2. Immediately press and hold for at least four seconds or until the turn signal lamps flash.

Start the vehicle normally after entering.

When the vehicle starts, the parking lamps will turn on.

Remote start can be extended.

Canceling a Remote Start

To cancel a remote start, do one of the following:

- Press and hold ⟲ until the parking lamps turn off.
- Turn on the hazard warning flashers.
- Turn the vehicle on and then off.

See *Remote Vehicle Start* ⇨ *26*.

Door Locks

To lock or unlock the doors from outside the vehicle:

- Press 🔒 or 🔓 on the Remote Keyless Entry (RKE) transmitter.
- Use the key in the driver door.

To lock or unlock the doors from inside the vehicle:

- Press 🔒 or 🔓 on the power door lock switch.
- Pulling an interior door handle will unlock the door. Pulling the door handle again unlatches it.

Power Door Locks

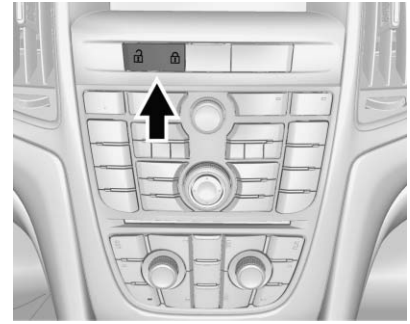

🔓 **:** Press to unlock.

🔒 **:** Press to lock.

See *Power Door Locks* ⇨ *28*.

Trunk Release

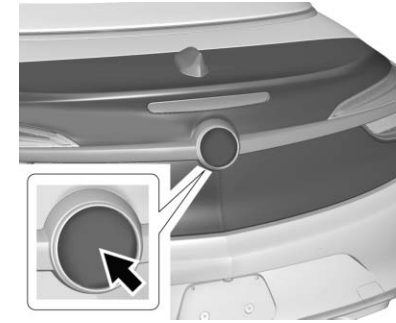

Press the lower half of the emblem to open the trunk. See *Trunk* ⇨ *29*.

Windows

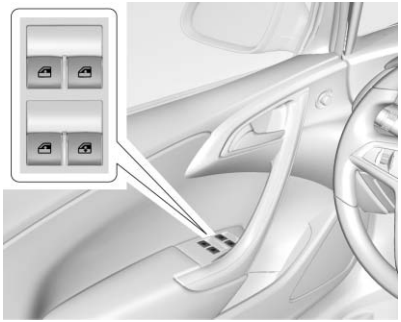

Power windows work when the ignition is on, in ACC/ACCESSORY, or when Retained Accessory Power (RAP) is active. See *Retained Accessory Power (RAP)* ⇨ *148*.

Using the window switch, press to open or pull to close the window.

The windows may be temporarily disabled if they are used repeatedly within a short time.

All Window Switch

Press to express open or pull to express close all windows.

Window Operation with Convertible Top

Windows will automatically lower fully when the convertible top is lowered or raised. See *Convertible Top* ⇨ *37*.

Seat Adjustment

Power Driver Seat Adjustment

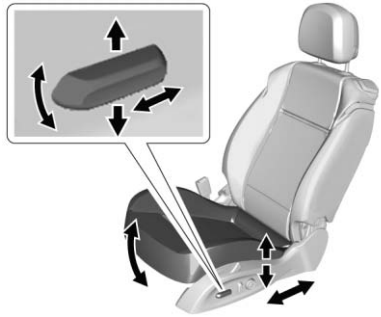

To adjust a power driver seat, if equipped:

- Move the seat forward or rearward by sliding the control forward or rearward.
- Raise or lower the front part of the seat cushion by moving the front of the control up or down.
- Raise or lower the entire seat by moving the rear of the control up or down.

See *Power Seat Adjustment* ⇨ *48*.

To adjust the power seatback:

- Tilt the top of the control rearward to recline.
- Tilt the top of the control forward to raise.

See *Reclining Seatbacks* ⇨ *49*.

Power Lumbar

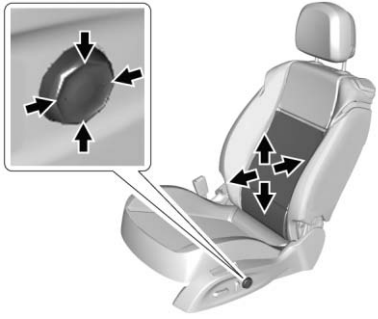

If equipped, press and hold the front of the switch to increase lumbar support, or the rear of the switch to decrease lumbar support.

To adjust the height of the support, press and hold the top or bottom of the switch. Release the switch when the seatback reaches the desired level of lumbar support.

See *Lumbar Adjustment* ⇨ *49*.

Seatback Latches

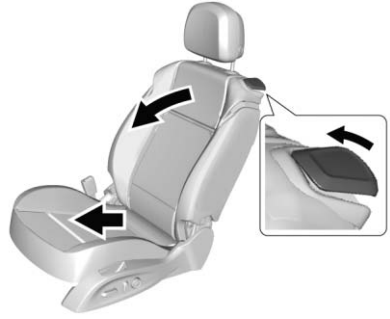

To fold the seatback, lift the release lever and fold the seatback forward. The seat will slide forward.

To raise, lift the seatback to its upright position until the seat locks. The seat will slide back to the original position.

See *Seatback Latches* ⇨ *50*.

Rear Seats

The rear seatbacks can be folded.

For detailed instructions, see *Rear Seats* ⇨ *51*.

Heated Seats

If available, the controls are on the climate control panel. The engine must be running to operate the heated seats.

Press or to heat the driver or passenger seat cushion and seatback.

Press the control once for the highest setting. With each press of the control, the heated seat will change to the next lower setting, and then the off setting. Three lights indicate the highest setting and one light the lowest.

See *Heated Front Seats* ⇨ *50*.

Head Restraint Adjustment

Do not drive until the head restraints for all occupants are installed and adjusted properly.

To achieve a comfortable seating position, change the seatback recline angle as little as necessary while keeping the seat and the head restraint height in the proper position.

See *Head Restraints* ⇨ *47* and *Reclining Seatbacks* ⇨ *49*.

Seat Belts

Refer to the following sections for important information on how to use seat belts properly:

- *Seat Belts* ⇨ *53*.
- *How to Wear Seat Belts Properly* ⇨ *54*.
- *Lap-Shoulder Belt* ⇨ *55*.
- *Lower Anchors and Tethers for Children (LATCH System)* ⇨ *77*.

Passenger Sensing System

The passenger sensing system turns off the front outboard passenger frontal airbag and knee airbag under certain conditions. No other airbag is affected by the passenger sensing system. See *Passenger Sensing System* ⇨ *65* for important information.

The passenger airbag status indicator will be visible on the center stack when the vehicle is started. See *Passenger Airbag Status Indicator* ⇨ *101*.

Mirror Adjustment

Interior Mirrors

Adjust the rearview mirror for a clear view of the area behind your vehicle.

Automatic Dimming Rearview Mirror

Automatic dimming reduces the glare of headlamps from behind. The dimming feature comes on when the vehicle is started.

See *Automatic Dimming Rearview Mirror* ⇨ *34*.

Exterior Mirrors

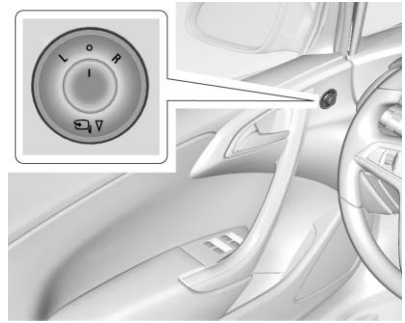

1. Turn the selector switch to L (Left) or R (Right) to choose the driver or passenger mirror.
2. Move the control to adjust the mirror.
3. Turn the selector switch to ◯ to deselect the mirror.

The vehicle has manual folding mirrors. See *Folding Mirrors* ⇨ *34*.

Steering Wheel Adjustment

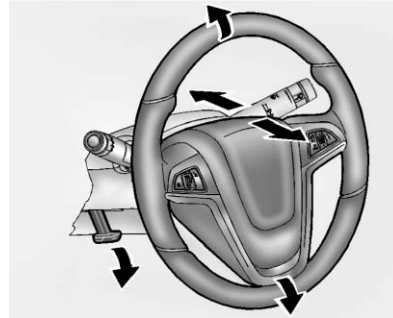

To adjust the steering wheel:

1. Pull the lever down.
2. Move the steering wheel up or down.
3. Pull or push the steering wheel closer or away from you.
4. Lift the lever up to lock the steering wheel in place.

Do not adjust the steering wheel while driving.

Interior Lighting

Dome Lamps

The interior lamps control in the overhead console controls both the front and rear interior lamps.

: Press to turn the lamps off, even when a door is open.

: Press to turn the lamps on automatically when a door is opened.

: Press to turn on the dome lamps.

Reading Lamps

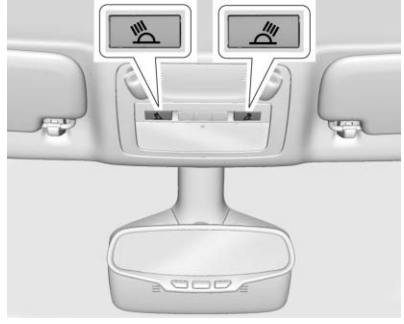

The front reading lamps are in the overhead console.

or **:** Press the button near each lamp to turn it on or off.

Exterior Lighting

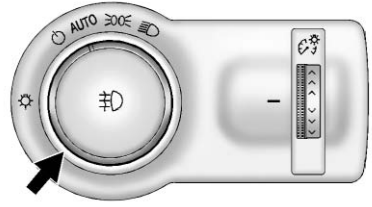

The exterior lamp control is to the left of the steering column on the instrument panel.

: Turns the exterior lamps off and deactivates the AUTO mode. Turn to again to reactivate the AUTO mode.

In Canada, the headlamps will automatically reactivate when the vehicle is shifted out of P (Park).

AUTO : Turns the headlamps on automatically at normal brightness, together with the parking lamps, taillamps, license plate lamps, instrument panel lights, and sidemarker lamps.

: Turns on the parking lamps including all lamps, except the headlamps.

: Turns on the headlamps together with the parking lamps and instrument panel lights. A warning chime sounds if the driver door is opened when the ignition is off and the headlamps are on.

: If equipped with fog lamps, press to turn the lamps on or off.

See:

- *Exterior Lamp Controls* ⇨ *120*
- *Fog Lamps* ⇨ *124*

Windshield Wiper/Washer

With the ignition on or in ACC/ACCESSORY move the lever to select the wiper speed.

HI : Use for fast wipes.

LO : Use for slow wipes.

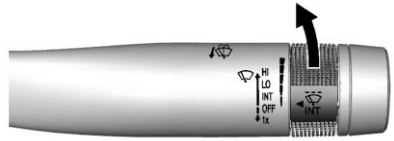

INT : Move the lever up to INT, then turn the INT band up or down for more or less sensitivity to moisture.

OFF : Use to turn the wipers off.

1X : For a single wipe, briefly move the lever down. For several wipes, hold the lever down.

: Pull the lever toward you to spray windshield washer fluid and activate the wipers.

See *Windshield Wiper/Washer* ⇨ *94*.

Climate Controls

The heating, cooling, defrosting, and ventilation for the vehicle can be controlled with this system.

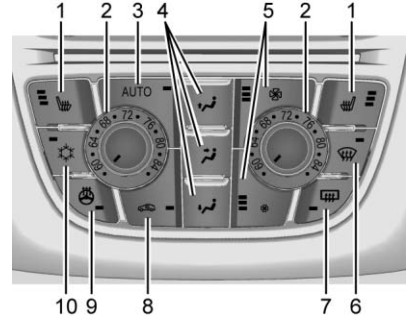

1. Driver and Passenger Heated Seats (If Equipped)
2. Driver and Passenger Temperature Controls
3. AUTO (Automatic Operation)
4. Air Delivery Modes
5. Fan Controls
6. Defrost
7. Rear Window Defogger
8. Recirculation
9. Heated Steering Wheel (If Equipped)
10. Air Conditioning

See *Dual Automatic Climate Control System* ⇨ *129*.

Transmission

Driver Shift Control (DSC)

DSC allows you to shift an automatic transmission similar to a manual transmission. To use the DSC feature:

1. Move the shift lever from D (Drive) to the left into the (+) or (−) manual position.
2. Press the shift lever forward (+) to upshift or rearward (−) to downshift. An M and the current gear will be displayed in the Driver Information Center (DIC).

See *Manual Mode* ⇨ *153*.

While using the DSC feature, the vehicle will have firmer, quicker shifting. You can use this for sport driving or when climbing or descending hills, to stay in gear longer, or to downshift for more power or engine braking.

Vehicle Features

Infotainment System

See the infotainment manual for information on the radio, audio players, phone, navigation system, and voice or speech recognition. It also includes information on settings.

Steering Wheel Controls

The infotainment system can be operated by using the steering wheel controls. See "Steering Wheel Controls" in the infotainment manual.

Cruise Control

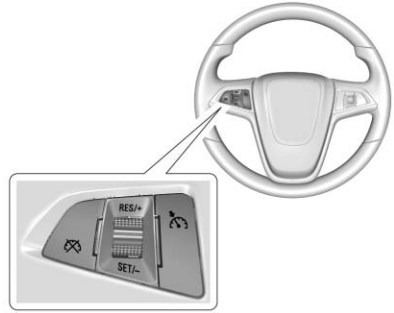

: Press to turn the cruise control system on or off. A white indicator comes on in the instrument cluster when cruise is turned on.

RES/+ : If there is a set speed in memory, move the thumbwheel up briefly to resume to that speed or hold upward to accelerate. If cruise control is already active, use to increase vehicle speed.

SET/− : Move the thumbwheel down briefly to set the speed and activate cruise control. If cruise control is already active, use to decrease speed.

: Press to disengage cruise control without erasing the set speed from memory.

See *Cruise Control* ⇨ *159*.

Driver Information Center (DIC)

The DIC display is in the center of the instrument cluster. It shows the status of many vehicle systems. The controls for the DIC are on the turn signal lever.

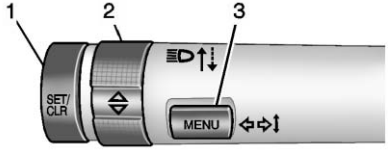

1. **SET/CLR:** Press to set, or press and hold to clear, the menu item displayed.
2. △ / ▽ **:** Use the band to scroll through the items in each menu.
3. **MENU:** Press to display the DIC menus. This button is also used to return to or exit the last screen displayed on the DIC.

See *Driver Information Center (DIC)* ⇨ *110*.

Forward Collision Alert (FCA) System

If equipped, FCA may help avoid or reduce the harm caused by front-end crashes. FCA provides a green indicator, , when a vehicle is detected ahead. When approaching a vehicle ahead too quickly, FCA provides a visual alert and rapidly beeps.

See *Forward Collision Alert (FCA) System* ⇨ *164*.

Lane Departure Warning (LDW)

If equipped, LDW may help avoid unintentional lane departures at speeds of 56 km/h (35 mph) or greater. LDW uses a camera sensor to detect the lane markings. The LDW light, , is green if a lane marking is detected. If the vehicle departs the lane without using a turn signal in that direction, the light will change to amber and flash. In addition, beeps will sound.

See *Lane Departure Warning (LDW)* ⇨ *166*.

Rear Vision Camera (RVC)

RVC displays a view of the area behind the vehicle on the infotainment display when the vehicle is shifted into R (Reverse) to aid with parking and low-speed backing maneuvers.

See *Assistance Systems for Parking or Backing* ⇨ *162*.

Parking Assist

If equipped, Rear Parking Assist (RPA) uses sensors on the rear bumper to assist with parking and avoiding objects while in R (Reverse). It operates at speeds less than 8 km/h (5 mph). RPA may show a warning triangle on the infotainment display and a graphic on the instrument cluster to provide the object distance. In addition, multiple beeps may occur if very close to an object.

The vehicle may also have the Front Parking Assist system.

See *Assistance Systems for Parking or Backing* ⇨ *162*.

Power Outlets

The accessory power outlets can be used to plug in electrical equipment, such as a cell phone or MP3 player.

There is one accessory power outlet on the center stack below the climate controls and one on the rear of the center console. These outlets are powered when the ignition is on or in ACC/ACCESSORY, or until the driver door is opened within 10 minutes of turning off the vehicle. See *Retained Accessory Power (RAP)* ⇨ *148*.

See *Power Outlets* ⇨ *96*.

Convertible

The convertible top can be automatically opened and closed. For step-by-step instructions, see *Convertible Top* ⇨ *37*.

Performance and Maintenance

Traction Control/ Electronic Stability Control

The Traction Control System (TCS) limits wheel spin. The system is on when the vehicle is started.

The StabiliTrak system assists with directional control of the vehicle in difficult driving conditions. The system is on when the vehicle is started.

- To turn off TCS, press and release on the center stack. The appropriate DIC message is displayed.
- Press and release again to turn TCS back on. The appropriate DIC message is displayed.

- To turn off both TCS and StabiliTrak, press and hold until comes on in the instrument cluster and the appropriate DIC message is displayed.
- Press again to turn on both systems. The appropriate DIC message is displayed.

See *Traction Control/Electronic Stability Control* ⇨ *157*.

Tire Pressure Monitor

This vehicle may have a Tire Pressure Monitor System (TPMS).

The low tire pressure warning light alerts to a significant loss in pressure of one of the vehicle's tires. If the warning light comes on, stop as soon as possible and inflate the tires to the recommended pressure shown on the Tire and Loading Information label. See *Vehicle Load Limits* ⇨ *141*. The warning light will remain on until the tire pressure is corrected.

The low tire pressure warning light may come on in cool weather when the vehicle is first started, and then turn off as the vehicle is driven. This may be an early indicator that the tire pressures are getting low and the tires need to be inflated to the proper pressure.

The TPMS does not replace normal monthly tire maintenance. Maintain the correct tire pressures.

See *Tire Pressure Monitor System* ⇨ *217*.

Fuel

Premium Recommended Fuel

Use premium 93 octane unleaded gasoline in your vehicle. Unleaded gasoline with an octane rating as low as 87 may be used, but it will reduce performance and fuel economy. See *Fuel* ⇨ *167*.

E85 or FlexFuel

No E85 or FlexFuel

Gasoline-ethanol fuel blends greater than E15 (15% ethanol by volume), such as E85, cannot be used in this vehicle.

Engine Oil Life System

The engine oil life system calculates engine oil life based on vehicle use and displays the CHANGE ENGINE OIL SOON message when it is time to change the engine oil and filter. The oil life system should be reset to 100% only following an oil change.

Resetting the Oil Life System

1. Display REMAINING OIL LIFE on the Driver Information Center (DIC). See *Driver Information Center (DIC)* ⇨ *110*.
2. Press and hold SET/CLR to reset the oil life at 100%.
3. Turn the ignition off.

See *Engine Oil Life System* ⇨ *181*.

Driving for Better Fuel Economy

Driving habits can affect fuel mileage. Here are some driving tips to get the best fuel economy possible.

- Avoid fast starts and accelerate smoothly.
- Brake gradually and avoid abrupt stops.
- Avoid idling the engine for long periods of time.
- When road and weather conditions are appropriate, use cruise control.
- Always follow posted speed limits or drive more slowly when conditions require.
- Keep vehicle tires properly inflated.
- Combine several trips into a single trip.
- Replace the vehicle's tires with the same TPC Spec number molded into the tire's sidewall near the size.
- Follow recommended scheduled maintenance.

Roadside Assistance Program

U.S.: 1-800-252-1112

TTY Users (U.S. Only): 1-888-889-2438

Canada: 1-800-268-6800

New Buick owners are automatically enrolled in the Roadside Assistance Program.

See *Roadside Assistance Program* ⇨ *270*.

Keys, Doors, and Windows

Keys and Locks
Keys 21
Remote Keyless Entry (RKE) System 23
Remote Keyless Entry (RKE) System Operation 23
Remote Vehicle Start 26
Door Locks 27
Power Door Locks 28
Delayed Locking 28
Automatic Door Locks 29
Lockout Protection 29

Doors
Trunk 29

Vehicle Security
Vehicle Security 31
Vehicle Alarm System 31
Immobilizer 32
Immobilizer Operation 32

Exterior Mirrors
Convex Mirrors 33
Power Mirrors 33
Folding Mirrors 34
Heated Mirrors 34

Interior Mirrors
Interior Rearview Mirrors 34
Automatic Dimming Rearview Mirror 34

Windows
Windows 34
Power Windows 35
Sun Visors 37

Roof
Convertible Top 37

Keys and Locks

Keys

⚠ Warning

Leaving children in a vehicle with an ignition key or Remote Keyless Entry (RKE) transmitter is dangerous and children or others could be seriously injured or killed. They could operate the power window or other controls or make the vehicle move. The windows will function with the key in the ignition or with the RKE transmitter in the vehicle, and children or others could be caught in the path of a closing window. Do not leave children in a vehicle with the ignition key or an RKE transmitter.

⚠ Warning

If the key is unintentionally rotated while the vehicle is running, the ignition could be moved out of the RUN position. This could be caused by heavy items hanging from the key ring, or by large or long items attached to the key ring that could be contacted by the driver or steering wheel. If the ignition moves out of the RUN position, the engine will shut off, braking and steering power assist may be

(Continued)

Warning (Continued)

impacted, and airbags may not deploy. To reduce the risk of unintentional rotation of the ignition key, do not change the way the ignition key and Remote Keyless Entry (RKE) transmitter, if equipped, are connected to the provided key rings.

The ignition key, key rings, and RKE transmitter, if equipped, are designed to work together. As a system, it reduces the risk of unintentionally moving the key out of the RUN position. If replacements or additions are required, see your dealer. Limit added items to a few essential keys or small, light items no larger than an RKE transmitter.

Interference from radio-frequency identification (RFID) tags may prevent the key from starting the vehicle. Keep RFID tags away from the key when starting the vehicle.

The key that is part of the RKE transmitter can be used for the ignition and driver side lock.

Press the button on the RKE transmitter to extend the key. Press the button and the key blade to retract the key.

If it becomes difficult to turn the key, inspect the key blade for debris. Periodically clean with a brush or pick.

See your dealer if a new key is needed.

If locked out of the vehicle, see *Roadside Assistance Program* ⇨ *270*.

With an active OnStar service plan, an OnStar Advisor may remotely unlock the vehicle. See *OnStar Overview* ⇨ *280*.

Remote Keyless Entry (RKE) System

See *Radio Frequency Statement* ⇨ *276*.

If there is a decrease in the Remote Keyless Entry (RKE) operating range:

- Check the distance. The transmitter may be too far from the vehicle.
- Check the location. Other vehicles or objects may be blocking the signal.
- Check the transmitter's battery. See “Battery Replacement” later in this section.
- If the transmitter is still not working correctly, see your dealer or a qualified technician for service.

Remote Keyless Entry (RKE) System Operation

The transmitter functions may work up to 60 m (197 ft) away from the vehicle.

Keep in mind that other conditions, such as those previously stated, can impact the performance of the transmitter.

🔓 **:** Press to unlock both doors, the trunk, and the fuel door. Press and hold 🔓 to open all windows. See *Power Windows* ⇨ *35*.

The turn signal indicators may flash to indicate unlocking. See *Vehicle Personalization* ⇨ *114*.

Pressing 🔒 will disarm the alarm system. See *Vehicle Alarm System* ⇨ *31*.

🔒 **:** Press to lock both doors, the trunk, and the fuel door. Press and hold 🔒 to close all windows.

The turn signal indicators may flash and/or the horn may sound to indicate locking.

If the driver door is open when 🔒 is pressed, all doors lock and the driver door will immediately unlock, if enabled through vehicle personalization. See *Vehicle Personalization* ⇨ *114*.

If the passenger door is open when 🔒 is pressed, all doors lock.

Pressing 🔒 may also arm the alarm system. See *Vehicle Alarm System* ⇨ *31*.

🚗 **:** Press and hold to release the trunk.

: Press and release one time to initiate vehicle locator. The exterior lamps flash and the horn chirps three times.

Press and hold for at least three seconds to sound the panic alarm. The horn sounds and the turn signals flash for 30 seconds, or until is pressed again or the vehicle is started.

: Press to operate the remote start feature. See *Remote Vehicle Start* ⇨ *26*.

The buttons on the transmitter are disabled when there is a key in the ignition.

Programming Keys to the Vehicle

Only keys programmed to the vehicle will work. If a key is lost or stolen, a replacement can be purchased and programmed through your dealer. The vehicle can be reprogrammed so that lost or stolen keys no longer work. Any remaining keys will need to be reprogrammed. Each vehicle can have up to eight keys matched to it.

Programming with Recognized Keys

To program a new key:

1. Insert the original, already programmed key in the ignition and turn the ignition on.
2. Turn the ignition off and remove the key.
3. Quickly, within five seconds, insert the second original already programmed key in the ignition and turn the ignition on.
4. Insert the new key to be programmed and turn the ignition on within five seconds.

   The security light will turn off once the key has been programmed.
5. Repeat Steps 1–5 if additional keys are to be programmed.

If a key is lost or damaged, see your dealer to have a new key made.

Programming without Recognized Keys

Program a new key to the vehicle when a recognized key is not available. Canadian regulations require that owners see their dealer.

If two currently recognized keys are not available, follow this procedure to program the first key.

This procedure will take approximately 30 minutes to complete for the first key. The vehicle must be off and all of the keys you wish to program must be with you.

1. Insert the new vehicle key into the ignition.
2. Turn the ignition on. The security light will come on.
3. Wait 10 minutes until the security light turns off.
4. Turn the ignition off.
5. Repeat Steps 2–4 two more times. After the third time, turn the ignition on; the key is learned and all previously known keys will no longer work with the vehicle.
6. To learn the second key, turn the ignition off and insert the second key to be learned and rotate the ignition on.

After the two keys are learned, remaining keys can be learned by following the procedure in “Programming with Recognized Keys.”

Battery Replacement

Caution
When replacing the battery, do not touch any of the circuitry on the transmitter. Static from your body could damage the transmitter.

The battery is not rechargeable. To replace the battery:

1. Press the button on the transmitter to extend the key.

2. Remove the battery cover by prying it with a finger.
3. Remove the battery by pushing on the battery and sliding it toward the key blade.
4. Insert the new battery, positive side facing up. Push the battery down until it is held in place. Replace with a CR 2032 or equivalent battery.
5. Snap the battery cover back on to the transmitter.

Remote Vehicle Start

This feature allows the engine to be started from outside the vehicle.

: This button is on the RKE transmitter.

The climate control system will use the previous settings during a remote start. The rear defogger and heated seats may come on during remote start based on cold ambient conditions. See *Heated Front Seats* ⇨ *50* and *Vehicle Personalization* ⇨ *114*.

Laws in some local communities may restrict the use of remote starters. For example, some laws require a person using remote start to have the vehicle in view. Check local regulations for any requirements.

If the vehicle is low on fuel, do not use the remote start feature. The vehicle may run out of fuel.

Other conditions can affect the performance of the transmitter. See *Remote Keyless Entry (RKE) System* ⇨ *23*.

Starting the Vehicle

To start the engine using the remote start feature:

1. Press and release .
2. Immediately after completing Step 1, press and hold for at least four seconds or until the turn signal lamps flash. The turn signal lamps flashing confirms the request to remote start the vehicle has been received.

When the vehicle starts, the parking lamps will turn on and remain on as long as the engine is running. The doors will be locked and the climate control system may come on.

The engine will continue to run for 10 minutes unless a time extension is done or the ignition is turned on. After 30 seconds, repeat the steps if a 10-minute extension is desired. Remote start can be extended only once.

The ignition must be turned on before driving.

Extending Engine Run Time

For a 10-minute extension, repeat Steps 1 and 2 while the engine is still running. An extension can be requested 30 seconds after starting.

The remote start can be extended once.

When the remote start is extended, the second 10 minutes will start immediately.

For example, if the engine has been running for five minutes, and 10 minutes are added, the engine will run for a total of 15 minutes.

A maximum of two remote starts, or a single start with an extension, is allowed between ignition cycles.

The vehicle's ignition must be turned on and then back off before the remote start procedure can be used again.

Canceling a Remote Start

To cancel a remote start, do one of the following:

- Press and hold until the parking lamps turn off.

- Turn on the hazard warning flashers.
- Turn the vehicle on and then off.

Conditions in Which Remote Start Will Not Work

The remote vehicle start feature will not operate if:

- The key is in the ignition.
- The hood is not closed.
- The hazard warning flashers are on.
- The malfunction indicator lamp is on.
- The engine coolant temperature is too high.
- The oil pressure is low.
- Two remote vehicle starts, or a single remote start with an extension, have already been used.
- The vehicle is not in P (Park).

Door Locks

⚠ Warning

Unlocked doors can be dangerous.

- Passengers, especially children, can easily open the doors and fall out of a moving vehicle. The doors can be unlocked and opened while the vehicle is moving. The chance of being thrown out of the vehicle in a crash is increased if the doors are not locked. So, all passengers should wear seat belts properly and the doors should be locked whenever the vehicle is driven.
- Young children who get into unlocked vehicles may be unable to get out. A child can be overcome by extreme heat and can suffer

(Continued)

Warning (Continued)

permanent injuries or even death from heat stroke. Always lock the vehicle whenever leaving it.

- Outsiders can easily enter through an unlocked door when you slow down or stop the vehicle. Locking the doors can help prevent this from happening.

To lock or unlock the doors from outside the vehicle:

- Press 🔒 or 🔓 on the Remote Keyless Entry (RKE) transmitter.
- Use the key in the driver door.

To lock or unlock the doors from inside the vehicle:

- Press 🔒 or 🔓 on the power door lock switch.
- Pulling an interior door handle will unlock the door. Pulling the door handle again unlatches it.

Free-Turning Locks

The door lock cylinder turns freely when either the wrong key is used, or the correct key is not fully inserted. The free-turning door lock feature prevents the lock from being forced open.

To reset the lock, turn it to the vertical position with the correct key fully inserted. Remove the key and insert it again.

If this does not reset the lock, turn the key halfway around in the cylinder and repeat the reset procedure.

Power Door Locks

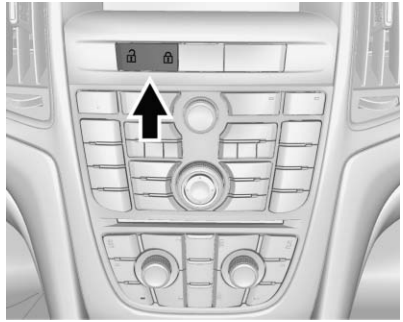

The central locking switch locks and unlocks both doors, the trunk, and the fuel door.

: Press to unlock.

: Press to lock.

Delayed Locking

This feature delays the locking of the doors until five seconds after all doors are closed.

When is pressed on the power door lock switch while the door is open, a chime will sound three times indicating delayed locking is active.

The doors will lock automatically five seconds after all doors are closed. If a door is reopened before that time, the five-second timer will reset when all doors are closed again.

Press on the door lock switch again or press on the RKE transmitter to lock the doors immediately.

This feature can also be programmed. See *Vehicle Personalization* ⇨ *114*.

Automatic Door Locks

The doors will lock automatically when all doors are closed, the ignition is on, and the vehicle is shifted out of P (Park).

If a vehicle door is unlocked and then opened and closed, the doors will lock either when your foot is removed from the brake or the vehicle speed becomes faster than 13 km/h (8 mph).

To unlock the doors:

- Press 🔓 on the power door lock switch.
- Shift the transmission into P (Park).

Automatic door locking cannot be disabled. Automatic door unlocking can be programmed. See *Vehicle Personalization* ⇨ *114*.

Lockout Protection

When locking is requested with the driver door open and the key in the ignition, all the doors will lock and then the driver door will unlock. This can be manually overridden by pressing and holding 🔒 on the power door lock switch.

If Open Door Anti-Lockout is turned on and the vehicle is off, the driver door is open, and locking is requested, all the doors will lock and the driver door will remain open. Press the button again to lock the driver door. The Open Door Anti-Lockout feature can be turned on or off. See *Vehicle Personalization* ⇨ *114*.

Doors

Trunk

⚠ Warning

Exhaust gases can enter the vehicle if it is driven with the liftgate or trunk/hatch open, or with any objects that pass through the seal between the body and the trunk/hatch or liftgate. Engine exhaust contains carbon monoxide (CO) which cannot be seen or smelled. It can cause unconsciousness and even death.

If the vehicle must be driven with the liftgate or trunk/hatch open:

- Close all of the windows.
- Fully open the air outlets on or under the instrument panel.

(Continued)

Warning (Continued)

- Adjust the climate control system to a setting that brings in only outside air and set the fan speed to the highest setting. See "Climate Control Systems" in the Index.
- If the vehicle is equipped with a power liftgate, disable the power liftgate function.

See *Engine Exhaust* ⇨ *150*.

Trunk Release

To open the trunk, the vehicle must be off or the shift lever must be in P (Park).

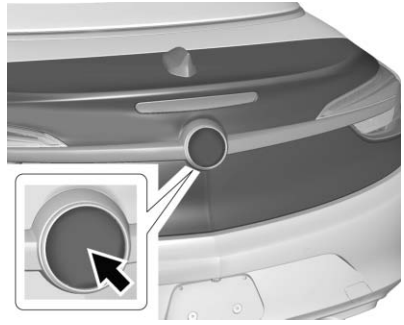

- Press the lower half of the emblem on the trunk lid.
- Press and hold on the Remote Keyless Entry (RKE) transmitter.

Emergency Trunk Release Handle

Caution

Do not use the emergency trunk release handle as a tie-down or anchor point when securing items in the trunk as it could damage the handle.

There is a glow-in-the-dark emergency trunk release handle on the trunk lid. This handle will glow following exposure to light. Pull the release handle to open the trunk from the inside.

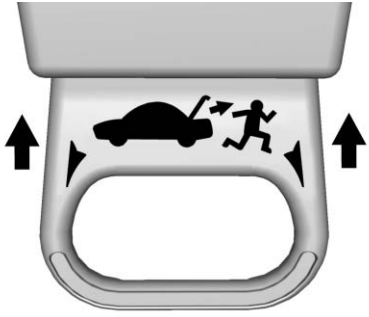

After pulling the emergency trunk release handle, push the handle back into the bezel

Vehicle Security

This vehicle has theft-deterrent features; however, they do not make the vehicle impossible to steal.

Vehicle Alarm System

This vehicle has an anti-theft alarm system.

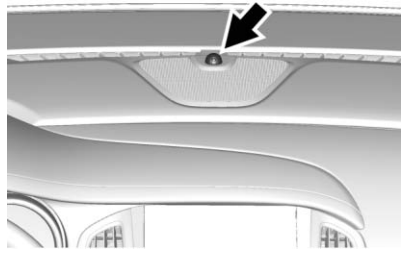

The indicator light, on the instrument panel near the windshield, indicates the status of the system:

Off : Alarm system is disarmed.

On Solid : Vehicle is secured during the delay to arm the system.

Fast Flash : Vehicle is unsecured. A door, the hood, the convertible top, or the trunk is open.

Slow Flash : Alarm system is armed.

Arming the Alarm System

1. Close the trunk and the hood. Turn off the vehicle.
2. Lock the vehicle in one of two ways:
   - Use the RKE transmitter.
   - With a door open, press the inside 🔒.
3. After 30 seconds the alarm system will arm, and the indicator light will begin to slowly flash indicating the alarm system is operating.

   Pressing 🔒 on the RKE transmitter a second time will bypass the 30-second delay and immediately arm the alarm system.

The vehicle alarm system will not arm if the doors are locked with the key.

If the driver door is opened without first unlocking with the RKE transmitter, the horn will chirp and the turn signal lights will flash to indicate pre-alarm. If the vehicle is not started, or the door is not unlocked by pressing 🔓 on the RKE transmitter during the 10-second pre-alarm, the alarm will be activated.

If a door, the hood, or the trunk is opened without first disarming the system, the turn signals will flash and the horn will sound for about 30 seconds. The alarm system will then re-arm to monitor for the next unauthorized event.

Disarming the Alarm System

Do one of the following to disarm the alarm system or turn off the alarm if it has been activated:

- Press 🔓 and 🔒 on the RKE transmitter.
- Start the vehicle.

To avoid setting off the alarm by accident:

- Lock the vehicle after all occupants have left the vehicle and all doors are closed.
- Always unlock a door with the RKE transmitter.

Unlocking the driver door with the key will not disarm the system or turn off the alarm.

How to Detect a Tamper Condition

If 🔓 is pressed on the RKE transmitter and the horn chirps and the turn signal lights flash three times, an alarm occurred previously while the alarm system was armed.

If the alarm has been activated, a message will appear on the DIC.

Immobilizer

See *Radio Frequency Statement* ⇨ *276*.

Immobilizer Operation

This vehicle has a passive theft-deterrent system.

The system does not have to be manually armed or disarmed.

The vehicle is automatically immobilized when the key is removed from the ignition.

The system is automatically disarmed when the vehicle is started with the correct key. The key uses a transponder that matches an immobilizer control unit in the vehicle and automatically disarms the system. Only the correct key starts the vehicle. The vehicle may not start if the key is damaged.

The security light in the instrument cluster comes on if there is a problem with arming or disarming the theft-deterrent system.

When trying to start the vehicle, the security light comes on briefly when the ignition is turned on.

If the engine does not start and the security light stays on, there is a problem with the system. Turn the ignition off and try again.

If the engine still does not start, and the key appears to be undamaged or the light continues to stay on, try another ignition key.

If the engine still does not start with the other key, the vehicle needs service. If the vehicle does start, the first key may be damaged. See your dealer who can service the theft-deterrent system and have a new key made.

Do not leave the transmitter or device that disarms or deactivates the theft-deterrent system in the vehicle.

Exterior Mirrors

Convex Mirrors

⚠ Warning

A convex mirror can make things, like other vehicles, look farther away than they really are. If you cut too sharply into the right lane, you could hit a vehicle on the right. Check the inside mirror or glance over your shoulder before changing lanes.

The passenger side mirror is convex shaped. A convex mirror's surface is curved so more can be seen from the driver seat.

Power Mirrors

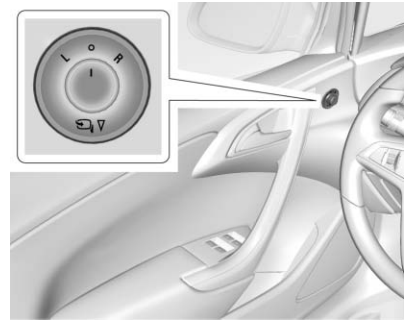

1. Turn the selector switch to L (Left) or R (Right) to choose the driver or passenger mirror.
2. Move the control to adjust the mirror.
3. Turn the selector switch to ◯ to deselect the mirror.

Folding Mirrors

Manual Folding Mirrors

The vehicle has manual folding mirrors. These mirrors can be folded inward to prevent damage when going through an automatic car wash. To fold, pull the mirror toward the vehicle. Push the mirror outward to return it to the original position.

Heated Mirrors

If equipped with heated mirrors:

: The rear window defogger also heats the outside mirrors.

See *Dual Automatic Climate Control System* ⇨ *129*.

Interior Mirrors

Interior Rearview Mirrors

Adjust the rearview mirror for a clear view of the area behind the vehicle.

Do not spray glass cleaner directly on the mirror. Use a soft towel dampened with water.

Automatic Dimming Rearview Mirror

The rearview mirror automatically dims to reduce the glare of the headlamps from behind. This feature comes on when the vehicle is started.

The vehicle may also have a Rear Vision Camera (RVC). See *Assistance Systems for Parking or Backing* ⇨ *162*.

Windows

⚠ Warning

Never leave a child, a helpless adult, or a pet alone in a vehicle, especially with the windows closed in warm or hot weather. They can be overcome by the extreme heat and suffer permanent injuries or even death from heat stroke.

The vehicle aerodynamics are designed to improve fuel economy performance. This may result in a pulsing sound when either rear window is down and the front windows are up. To reduce the sound, open either a front window or the sunroof, if equipped.

Power Windows

⚠ Warning

Children could be seriously injured or killed if caught in the path of a closing window. Never leave the Remote Keyless Entry (RKE) transmitter in a vehicle with children. When there are children in the rear seat, use the window lockout switch to prevent operation of the windows. See *Keys* ⇨ *21*.

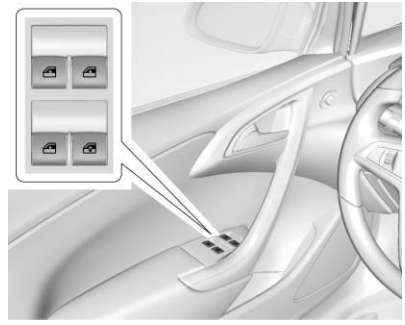

Power windows work when the ignition is on, in ACC/ACCESSORY, or when Retained Accessory Power (RAP) is active. See *Retained Accessory Power (RAP)* ⇨ *148*.

Using the window switch, press to open or pull to close the window.

The windows may be temporarily disabled if they are used repeatedly within a short time.

Window Express Movement

All windows can be opened without holding the window switch. Press the switch down fully and quickly release to express open the window.

If equipped, pull the window switch up fully and quickly release to express close the window.

Briefly press or pull the window switch in the same direction to stop that window's express movement.

All Window Switch

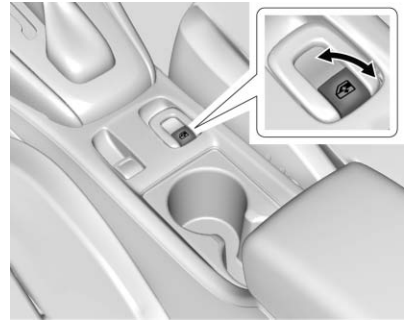

Press to express open or pull to express close all windows.

Window Automatic Reversal System

The express-close feature will reverse window movement if it comes in contact with an object. Extreme cold or ice could cause the window to auto-reverse. The window will operate normally after the object or condition is removed.

Window Operation with Convertible Top

Windows will automatically lower fully when the convertible top is lowered or raised. See *Convertible Top* ⇨ *37*.

Automatic Reversal System Override

⚠ Warning

If automatic reversal system override is active, the window will not reverse automatically. You or

(Continued)

Warning (Continued)

others could be injured and the window could be damaged. Before using automatic reversal system override, make sure that all people and obstructions are clear of the window path.

When the engine is on, override the automatic reversal system by pulling and holding the window switch if conditions prevent it from closing.

Programming the Power Windows

If the battery on the vehicle has been recharged or disconnected, or is not working, the windows with the express-up feature will need to be reprogrammed for the feature to work. If power is lost, the rear windows must be reprogrammed first. Before reprogramming, replace or recharge the vehicle's battery.

To program a window:

1. With the ignition on or in ACC/ACCESSORY, or when Retained Accessory Power (RAP) is active, close all doors.
2. Pull and hold the power window switch until the window is fully closed. Continue holding the switch up for approximately five seconds after the window is completely closed.
3. Press the power window switch down until the window is fully open. Continue holding the switch down for approximately five seconds after the window is completely open.

The window is now reprogrammed. Repeat the process for the other windows.

Window Indexing

When fully closed, indexing automatically lowers the window a small amount when the door is

opened. When the door is closed, the window will raise to its previous position.

If the window freezes to the door:

1. Push the top of the window inward while opening the door.
2. Clear all snow and ice from the door and glass.
3. Open the window completely and then close it.
4. Close the door.

If either window does not index properly, it could be due to loss of power. Before seeing your dealer for service, program the power windows.

Remote Window Operation

This feature allows all the windows to be opened remotely. Press and hold 🔓 on the RKE transmitter.

Sun Visors

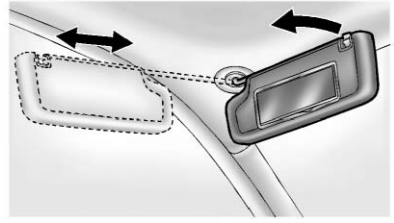

Pull the sun visor down to block glare. Detach the sun visor from the center mount to pivot to the side window and, if equipped, extend along the rod.

Roof

Convertible Top

Review the following before operating:

⚠ Warning

While opening or closing the convertible top, people can be injured by the moving parts of the tonneau cover or convertible top. Maintain visual contact with the top while it is being operated.

Caution

Follow these guidelines when operating the convertible top or damage can occur:

- Remove all items from the roof, trunk lid, or tonneau cover before operating.

(Continued)

Caution (Continued)

- Remove all objects from the trunk that may contact the convertible top when it is operated.
- Do not leave the vehicle with the convertible top open.
- Do not exceed 50 km/h (31 mph) until the top has completely closed or opened.
- Do not open or close the top while driving in high wind conditions.
- Do not operate the convertible top multiple times in a short period of time without starting the engine to avoid draining the vehicle battery.

(Continued)

Caution (Continued)

- Do not open or store the convertible top when it is dirty or wet. This could result in stains, mildew, or other damage.
- Only store the vehicle with the top fully closed.

Opening the Convertible Top

1. Fold out the rear trunk partition into the upright position. See *Rear Storage* ⇨ *90*.
2. Close the trunk.
3. Start the vehicle or place it in ACC/ACCESSORY.
4. When possible, operate the convertible top when the vehicle is stopped. The top can be operated while driving below 50 km/h (31 mph) and will stop if that speed is exceeded. The top operation will take approximately 25 seconds. Make sure the top operation can be completed before that speed is reached.

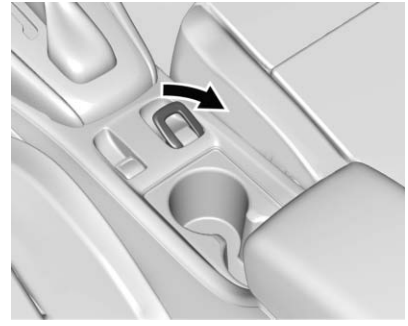

5. Pull and hold the front of the convertible top switch. The windows will automatically lower.
6. Continue holding until the convertible top is completely open. A chime will sound. Release the switch.
7. Briefly pull the all window switch to close all windows.

If the radio is on, the sound may be muted for a brief time due to a new audio system equalization being loaded.

Closing the Convertible Top

1. Make sure the sun visor mirror covers are closed and the sun visors are stored in the center mount position.
2. Close the trunk.
3. Start the vehicle or place it in ACC/ACCESSORY.
4. When possible, operate the convertible top when the vehicle is stopped. The top can be operated while driving below 50 km/h (31 mph) and will stop if that speed is exceeded. The top operation will take approximately 25 seconds. Make sure the top operation can be completed before that speed is reached.

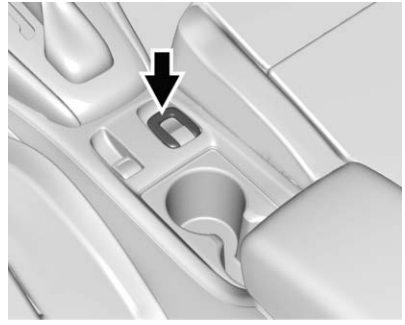

5. Press and hold the front of the convertible top switch. The windows will automatically lower.
6. After the convertible top is completely closed, a chime will sound. Release the switch.
7. Briefly pull the all window switch to close all windows.

If the radio is on, the sound may be muted for a brief time due to a new audio system equalization being loaded.

Troubleshooting

Check the following if the convertible top switch is not operating:

- The ignition should be on or in ACC/ACCESSORY, or Retained Accessory Power (RAP) should be active.
- The trunk lid should be closed with the rear trunk partition in place. A Driver Information Center (DIC) message will display.
- If the ONLY MANUAL OPERATION OF TOP POSSIBLE message is displayed on the DIC, see “Manual Closing of Top” later in this section.
- At cooler outside temperatures, the convertible top may not open. It is possible to close the top down to temperatures of about −20 °C (−4 °F). A DIC message will display if the top will not open due to low

temperature. If necessary, move the vehicle to a heated indoor area to operate the top.

- If the top has recently been cycled repeatedly or left in an intermediate state, it will be temporarily disabled. A DIC message displays. Normal operation will be restored within 10 minutes after the system has cooled.
- If the vehicle battery is low, the power top operation may be disabled. Try to start the vehicle. A DIC message displays.
- If the battery has recently been reconnected or if the vehicle has been jump started, the top may not operate until the power windows have been programmed. Complete the power window programming procedure. See *Power Windows* ⇨ *35*.

Other features may be affected while operating the convertible top:

- The trunk can only be opened when the convertible top is completely opened or closed.
- The windows cannot close while the top is moving.
- When driving with the top not fully secured, chimes can be heard above 80 km/h (50 mph).

If the vehicle battery has been disconnected and reconnected, if the fuses were pulled or replaced, or if a jump start was performed, the TOP NOT SECURE message may display. Press and hold the front of the convertible top switch to close the top, or pull and hold the switch to open the top, until this message is cleared.

Partial Top Cycling

If the convertible top operation is stopped before completion, the top will temporarily hold its position. If the ignition is on or in ACC/ACCESSORY, the top will be held for up to 10 minutes. If the vehicle is moving or off, the amount of time will vary from a few seconds to about a minute.

Chimes and DIC messages will be displayed before the top will move. When this occurs, immediately finish the convertible top operation by pressing the switch again until it completes.

If the top cannot be secured, keep clear of the top components. In some conditions the top may move quickly.

Do not drive with the convertible top in an unsecured position. The top components may move unexpectedly. In some cases the top may not be able to be power operated. If this occurs, follow the DIC messages displayed.

If the tonneau cover is not secured and latched, and the vehicle is moving above 10 km/h (6 mph), the tonneau cover may automatically move to a stable position.

Manual Closing of Top

If the DIC displays the ONLY MANUAL OPERATION OF TOP POSSIBLE message:

1. Press and hold or pull and hold the front of the convertible top switch to either open or close the top. Press or pull the switch in the opposite direction if one does not work.
2. If the top moves, continue holding the switch in that direction for at least five seconds. The top should then work normally.

If the top does not respond in either direction, use the following procedure to manually close the convertible top and tonneau cover before servicing if needed. This requires more than one person.

There is a hex wrench in the glove box. There is also string in the glove box for your dealer to manually secure the top completely if needed.

1. Turn off the ignition.

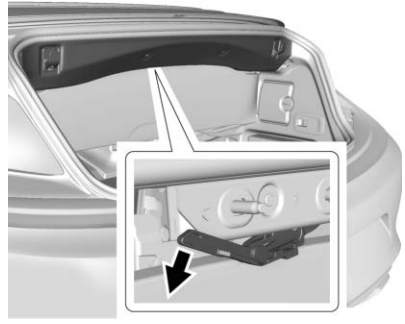

2. Open the trunk and pull the tonneau cover release lever downward.
3. Close the trunk. The trunk cannot be opened from this step forward.

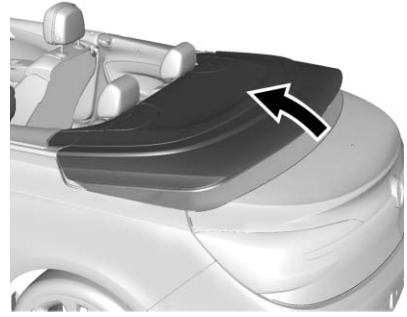

4. With an additional person, lift the tonneau cover from both sides to approximately the half raised position.

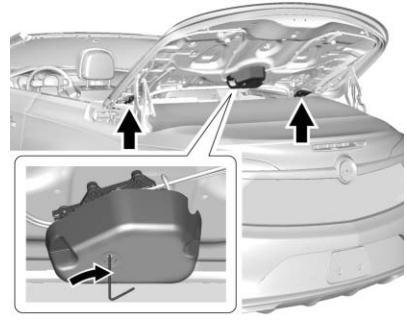

5. With the tonneau cover being held in the half raised position, insert the hex wrench into the marked position of the flap drive unit. Turn the wrench clockwise to the stop. The sideways flaps will turn inward.
6. With an additional person, raise the tonneau cover to the fully open position.

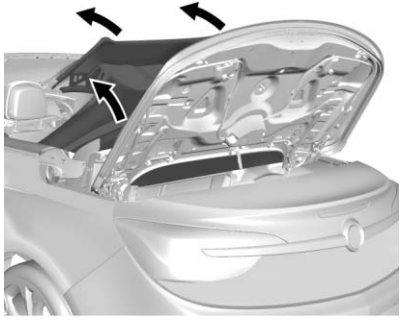

7. Lift the convertible top by pulling up on both sides of the front bow and tension bow.

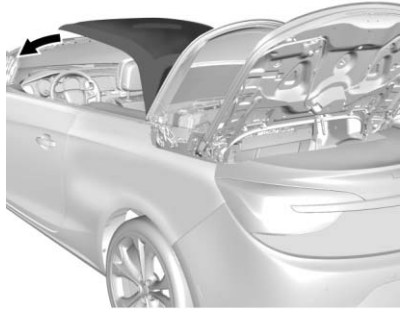

8. Move the front bow to the windshield frame.

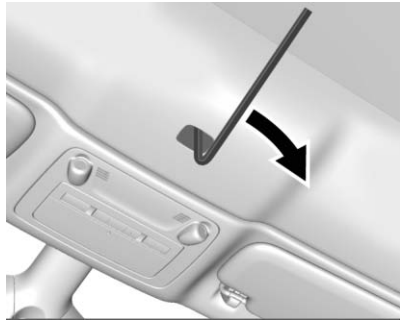

9. Remove the cap covering the manual closure opening. There is a recess in the cap to snap it off using a tool. Insert the hex wrench into the opening and then turn the wrench clockwise until it stops. The convertible top is now locked.

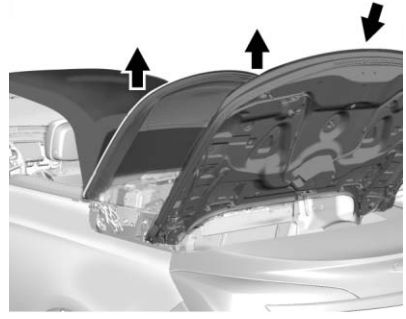

10. Lift up the tension bow on both sides and raise the tonneau cover to approximately the half raised position, and then allow it to slide into the closed position.
11. Lower the tension bow.

At this time the vehicle can be driven, however the convertible top is not latched at the rear and will not be completely waterproof. See your dealer to service the convertible top system.

Cleaning the Convertible Top

The convertible top should be cleaned often. Do not use high-pressure car washes as these may cause water to enter the vehicle.

Hand wash the convertible top in partial shade. Use mild soap, lukewarm water, and a soft sponge. A chamois or cloth may leave lint on the top, and a brush can chafe the threads in the top fabric. Do not use detergents, harsh cleaners, solvents, or bleaching agents.

Wet the entire top and let the soap remain on the fabric for a few minutes. Wash evenly to avoid spots or rings. When the top is very dirty, use a mild foam-type cleaner. Thoroughly rinse the entire vehicle, then let the top dry in direct sunlight.

To protect the convertible top:

- Make sure the convertible top is completely dry before lowering it.
- Do not get any cleaner on the vehicle's painted finish; it could leave streaks.

Wind Deflectors

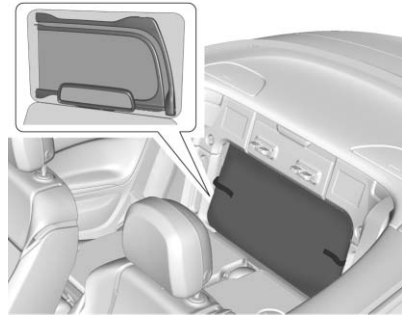

There are two wind deflectors in a stowage bag behind the rear seat backrests. See *Rear Seats* ⇨ *51*.

- The small wind deflector can be placed between the rear head restraints.
- The large wind deflector can be placed behind the front seats.

Do not place any objects on the wind deflectors.

Installing the Small Wind Deflector

1. Remove the cover from the mount between the rear head restraints by sliding it toward the driver side of the vehicle.

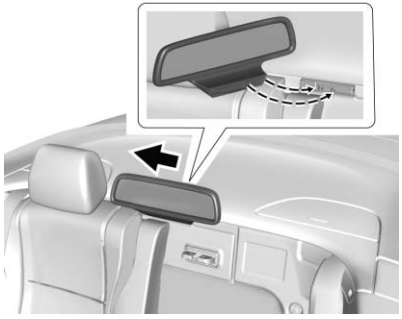

2. Insert the deflector into the deflector mount.
3. Slide the deflector toward the passenger side of the vehicle until it locks.
4. Raise the rear seatbacks.

Reverse the steps to remove the small wind deflector.

Installing the Large Wind Deflector

The rear seat cannot be occupied when the large wind deflector is in use.

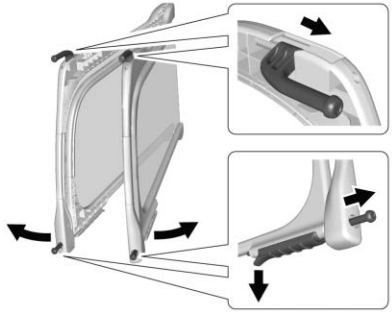

1. Turn the upper locking pins out of the brackets on the wind deflector.
2. Lift the tabs to open the lower locking pins.
3. Open the wind deflector.

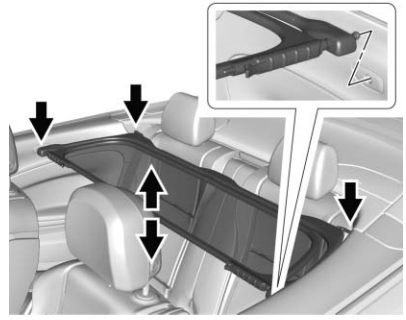

4. Insert the driver side pins into the trim recesses.
5. Slightly fold the deflector at the center hinge and insert the passenger side pins into the trim recesses.
6. Push the center of the deflector down to fully engage the pins.

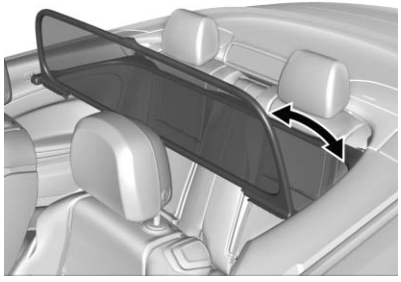

7. Fold the front half of the deflector to the vertical position.

Reverse Steps 1–7 to remove the large wind deflector.

Stowing the Wind Deflectors

1. After stowing both deflectors in the stowage bag, lower the rear seatbacks.

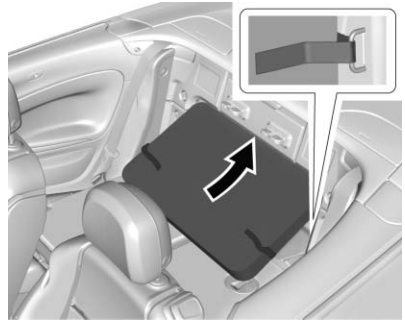

2. Insert the top of the bag in the stowage compartment. Align the remainder of the bag to fit, and secure it with the straps.

Seats and Restraints

Head Restraints
Head Restraints 47

Front Seats
Power Seat Adjustment 48
Lumbar Adjustment 49
Reclining Seatbacks 49
Seatback Latches 50
Heated Front Seats 50

Rear Seats
Rear Seats 51

Seat Belts
Seat Belts 53
How to Wear Seat Belts Properly 54
Lap-Shoulder Belt 55
Seat Belt Use During Pregnancy 57
Seat Belt Extender 58
Safety System Check 58
Seat Belt Care 58
Replacing Seat Belt System Parts after a Crash 59

Airbag System
Airbag System 59
Where Are the Airbags? 61
When Should an Airbag Inflate? 62
What Makes an Airbag Inflate? 63
How Does an Airbag Restrain? 63
What Will You See after an Airbag Inflates? 63
Roll Bars 64
Passenger Sensing System . . . 65
Servicing the Airbag-Equipped Vehicle 69
Adding Equipment to the Airbag-Equipped Vehicle 69
Airbag System Check 70
Replacing Airbag System Parts after a Crash 70

Child Restraints
Older Children 71
Infants and Young Children 72
Child Restraint Systems 75
Where to Put the Restraint 76
Lower Anchors and Tethers for Children (LATCH System) 77
Replacing LATCH System Parts After a Crash 84
Securing Child Restraints (With the Seat Belt in the Rear Seat) 85
Securing Child Restraints (With the Seat Belt in the Front Seat) 87

Head Restraints

⚠ Warning

With head restraints that are not installed and adjusted properly, there is a greater chance that occupants will suffer a neck/spinal injury in a crash. Do not drive until the head restraints for all occupants are installed and adjusted properly.

Adjust the head restraint so that the top of the restraint is at the same height as the top of the occupant's head. This position reduces the chance of a neck injury in a crash.

Front Seats

The vehicle's front seats have adjustable head restraints in the outboard seating positions.

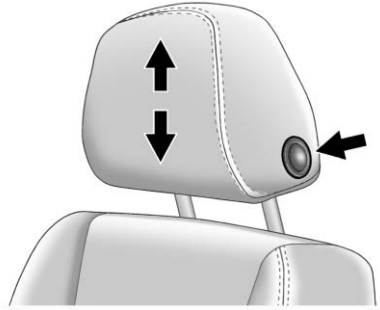

To raise or lower the head restraint, press the button on the side of the head restraint, and pull up or push the head restraint down, and release the button. Pull and push on the head restraint after the button is released to make sure that it is locked in place.

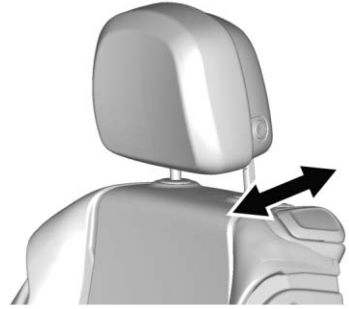

To adjust the head restraint forward, grasp the head restraint and pull forward to the desired locked position. To adjust the head restraint rearward, grasp the head restraint and pull forward fully, until the mechanism releases and allows the head restraint to return to the full rear position.

Active Head Restraints

Your vehicle has an Active Head Restraint System in the front outboard seating positions. These automatically activate to reduce the risk of neck injury if the vehicle is hit from behind.

⚠ Warning

If your head restraint has been activated due to a rear collision, you must return the vehicle to the dealer for inspection and re-setting or replacement of the system.

Rear Seats

The vehicle's rear seats have non-adjustable head restraints in the outboard seating positions.

The rear head restraints are designed to be removed. See "Head Restraint Removal and Reinstallation" under *Lower Anchors and Tethers for Children (LATCH System)* ⇨ 77.

If you are installing a child restraint in the rear seat, see "Securing a Child Restraint Designed for the LATCH System" under *Lower Anchors and Tethers for Children (LATCH System)* ⇨ 77.

Front Seats

Power Seat Adjustment

Power Driver Seat Adjustment

To adjust a power driver seat, if equipped:

- Move the seat forward or rearward by sliding the control forward or rearward.
- Raise or lower the front part of the seat cushion by moving the front of the control up or down.

- Raise or lower the entire seat by moving the rear of the control up or down.

Lumbar Adjustment

Power Lumbar

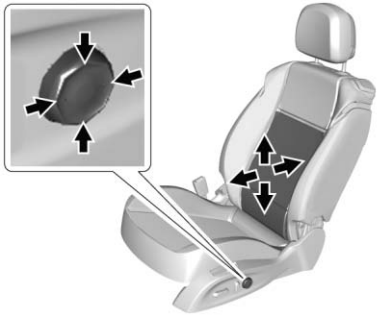

If equipped, press and hold the front of the switch to increase lumbar support, or the rear of the switch to decrease lumbar support.

To adjust the height of the support, press and hold the top or bottom of the switch. Release the switch when the seatback reaches the desired level of lumbar support.

Reclining Seatbacks

⚠ Warning

If either seatback is not locked, it could move forward in a sudden stop or crash. That could cause injury to the person sitting there. Always push and pull on the seatbacks to be sure they are locked.

To adjust the power seatback:

- Tilt the top of the control rearward to recline.
- Tilt the top of the control forward to raise.

⚠ Warning

Sitting in a reclined position when the vehicle is in motion can be dangerous. Even when buckled up, the seat belts cannot do their job.

The shoulder belt will not be against your body. Instead, it will be in front of you. In a crash, you could go into it, receiving neck or other injuries.

The lap belt could go up over your abdomen. The belt forces would be there, not at your pelvic bones. This could cause serious internal injuries.

For proper protection when the vehicle is in motion, have the seatback upright. Then sit well back in the seat and wear the seat belt properly.

Do not have a seatback reclined if the vehicle is moving.

Seatback Latches

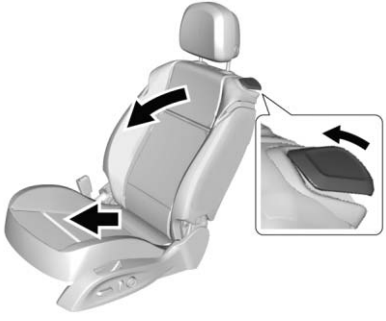

To fold the seatback, lift the release lever and fold the seatback forward. The seat will slide forward.

To raise, lift the seatback to its upright position until the seat locks. The seat will slide back to the original position.

In case the seatback cannot fold and is blocked by the head restraint, move the seat backward or downward slightly, or adjust the head restraint to a lower position. See *Power Seat Adjustment* ⇨ *48* or *Head Restraints* ⇨ *47*.

Obstructions

If the seat encounters an obstruction or resistance while sliding forward or backward, the action is stopped and the seat will move in the opposite direction.

Heated Front Seats

⚠ Warning

If temperature change or pain to the skin cannot be felt, the seat heater may cause burns. To reduce the risk of burns, use care when using the seat heater, especially for long periods of time. Do not place anything on the seat that insulates against heat, such as a blanket, cushion, cover, or similar item. This may cause the seat heater to overheat. An overheated seat heater may cause a burn or may damage the seat.

If equipped, the controls are on the climate control panel. The engine must be running to operate the heated seats.

Press or to heat the driver or passenger seat cushion and seatback.

Press the control once for the highest setting. With each press of the control, the heated seat will change to the next lower setting, and then the off setting. Three lights indicate the highest setting and one light the lowest.

The passenger seat may take longer to heat up.

Remote Start Heated Seats

When it is cold outside, the heated seats can be turned on automatically during a remote vehicle start. The heated seats will be canceled when the ignition is turned on. Press the heated seat controls to use the heated seats after the vehicle is started.

The heated seat indicator lights on the control do not turn on during a remote start.

The temperature performance of an unoccupied seat may be reduced. This is normal.

The heated seats will not turn on during a remote start unless the heated seat feature is enabled in the vehicle personalization menu. See *Remote Vehicle Start* ⇨ *26* and *Vehicle Personalization* ⇨ *114*.

Rear Seats

Either side of the rear seatback can be folded for more cargo space or to access the wind deflector bag. See "Wind Deflectors" under *Convertible Top* ⇨ *37*.

⚠ Warning

Take care when operating the foldable rear seats. The rear seatback folds forward with considerable power which can cause injury, particularly to children. Ensure that nothing is attached to the rear seats or on the seat cushion.

Caution

Folding a rear seat with the seat belts still fastened may cause damage to the seat or the seat belts. Always unbuckle the seat

(Continued)

Caution (Continued)

belts and return them to their normal stowed position before folding a rear seat.

To fold the rear seatbacks:

1. Remove the wind deflector if installed.
2. Move the front seats forward or remove the rear head restraints.
   See *Power Seat Adjustment* ⇨ *48* or *Lower Anchors and Tethers for Children (LATCH System)* ⇨ *77* for head restraint removal instructions. Store the head restraints in the cargo area.

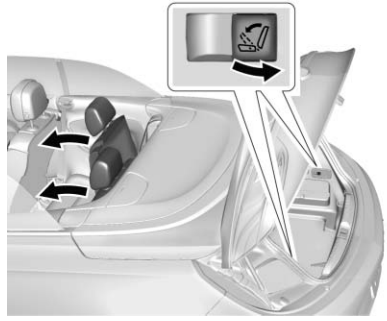

3. Pull the release switch in the trunk to fold the rear seatback down.
4. Fold the seatback forward.
5. Repeat Steps 1–4 for the other seatback, if necessary.

To raise the seatback:

⚠ Warning

A seat belt that is improperly routed, not properly attached, or twisted will not provide the protection needed in a crash. The

(Continued)

Warning (Continued)

person wearing the belt could be seriously injured. After raising the rear seatback, always check to be sure that the seat belts are properly routed and attached, and are not twisted.

1. Lift the seatback up and push it rearward until it latches into place. Keep the seat belts clear of the seatback and untwisted.

⚠ Warning

If the seatback is not locked, it could move forward in a sudden stop or crash. That could cause injury to the person sitting there. Always pull forward on the top of the seatback at the area of the latch to be sure it is locked.

2. Push and pull on the seatback to make sure it is locked into position.

3. Reinstall the head restraints, if necessary. See *Lower Anchors and Tethers for Children (LATCH System)* ⇨ *77* for head restraint reinstallation instructions.
4. Repeat Steps 1–3 for the other seatback, if necessary

Keep the seat in the upright locked position when not in use.

Seat Belts

This section describes how to use seat belts properly, and some things not to do.

⚠ Warning

Do not let anyone ride where a seat belt cannot be worn properly. In a crash, if you or your passenger(s) are not wearing seat belts, injuries can be much worse than if you are wearing seat belts. You can be seriously injured or killed by hitting things inside the vehicle harder or by being ejected from the vehicle. In addition, anyone who is not buckled up can strike other passengers in the vehicle.

It is extremely dangerous to ride in a cargo area, inside or outside of a vehicle. In a collision, passengers riding in these areas are more likely to be seriously injured or killed. Do not allow

(Continued)

Warning (Continued)

passengers to ride in any area of the vehicle that is not equipped with seats and seat belts.

Always wear a seat belt, and check that all passenger(s) are restrained properly too.

This vehicle has indicators as a reminder to buckle the seat belts. See *Seat Belt Reminders* ⇨ *100*.

Why Seat Belts Work

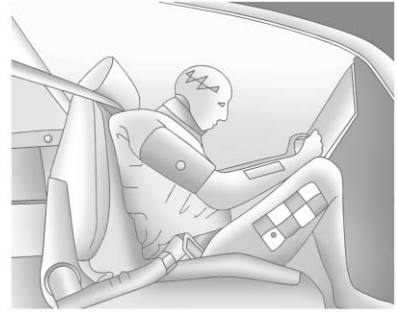

When riding in a vehicle, you travel as fast as the vehicle does. If the vehicle stops suddenly, you keep going until something stops you. It could be the windshield, the instrument panel, or the seat belts!

When you wear a seat belt, you and the vehicle slow down together. There is more time to stop because you stop over a longer distance and, when worn properly, your strongest bones take the forces from the seat belts. That is why wearing seat belts makes such good sense.

Questions and Answers About Seat Belts

Q: Will I be trapped in the vehicle after a crash if I am wearing a seat belt?

A: You *could* be — whether you are wearing a seat belt or not. Your chance of being conscious during and after a crash, so you *can* unbuckle and get out, is *much* greater if you are belted.

Q: If my vehicle has airbags, why should I have to wear seat belts?

A: Airbags are supplemental systems only. They work *with* seat belts — not instead of them. Whether or not an airbag is provided, all occupants still have to buckle up to get the most protection.

Also, in nearly all states and in all Canadian provinces, the law requires wearing seat belts.

How to Wear Seat Belts Properly

This section is only for people of adult size.

There are special things to know about seat belts and children, and there are different rules for smaller children and infants. If a child will be riding in the vehicle, see *Older Children* ⇨ *71* or *Infants and Young Children* ⇨ *72*. Follow those rules for everyone's protection.

It is very important for all occupants to buckle up. Statistics show that unbelted people are hurt more often in crashes than those who are wearing seat belts.

There are important things to know about wearing a seat belt properly.

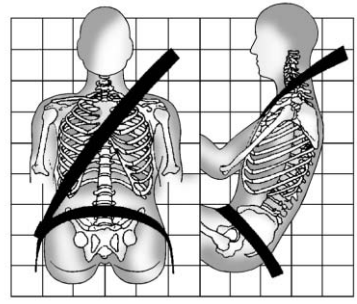

- Sit up straight and always keep your feet on the floor in front of you.
- Always use the correct buckle for your seating position.
- Wear the lap part of the belt low and snug on the hips, just touching the thighs. In a crash,

this applies force to the strong pelvic bones and you would be less likely to slide under the lap belt. If you slid under it, the belt would apply force on your abdomen. This could cause serious or even fatal injuries.

- Wear the shoulder belt over the shoulder and across the chest. These parts of the body are best able to take belt restraining forces. The shoulder belt locks if there is a sudden stop or crash.

⚠ Warning

You can be seriously injured, or even killed, by not wearing your seat belt properly.

- Never allow the lap or shoulder belt to become loose or twisted.
- Never wear the shoulder belt under both arms or behind your back.
- Never route the lap or shoulder belt over an armrest.

Lap-Shoulder Belt

All seating positions in the vehicle have a lap-shoulder belt.

The following instructions explain how to wear a lap-shoulder belt properly.

1. Adjust the seat, if the seat is adjustable, so you can sit up straight. To see how, see “Seats” in the Index.

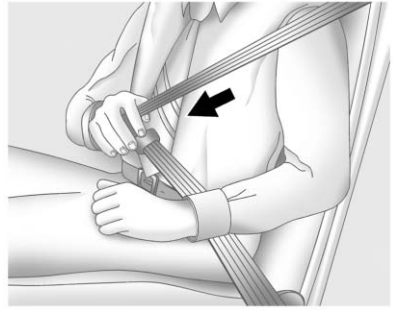

2. Pick up the latch plate and pull the belt across you. Do not let it get twisted.

The lap-shoulder belt may lock if you pull the belt across you very quickly. If this happens, let the belt go back slightly to unlock it. Then pull the belt across you more slowly.

If the shoulder portion of a passenger belt is pulled out all the way, the child restraint locking feature may be engaged. If this happens, let the belt go back all the way and start again.

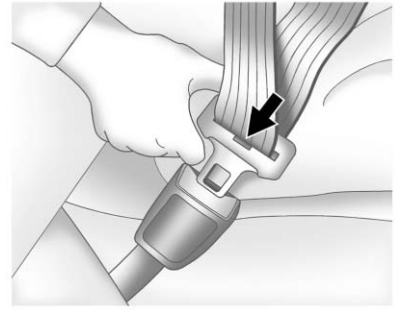

3. Push the latch plate into the buckle until it clicks.

Pull up on the latch plate to make sure it is secure. If the belt is not long enough, see *Seat Belt Extender* ⇨ *58*.

Position the release button on the buckle so that the seat belt could be quickly unbuckled if necessary.

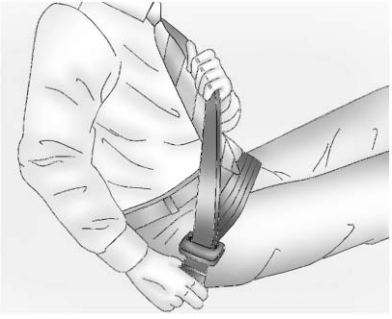

4. To make the lap part tight, pull up on the shoulder belt.

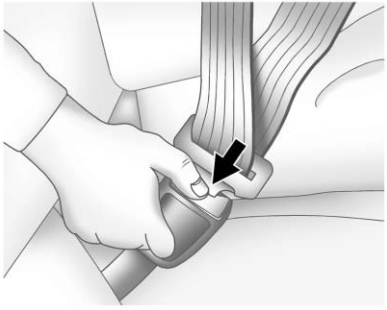

To unlatch the belt, push the button on the buckle. The belt should return to its stowed position.

Always stow the seat belt slowly. If the seat belt webbing returns quickly to the stowed position, the retractor may lock and cannot be pulled out. If this happens, pull the seat belt straight out firmly to unlock the webbing, and then release it. If the webbing is still locked in the retractor, see your dealer.

Before a door is closed, be sure the seat belt is out of the way. If a door is slammed against a seat belt, damage can occur to both the seat belt and the vehicle.

Seat Belt Presenter

The seat belt presenters bring the front outboard seat belts to the front to help fasten them.

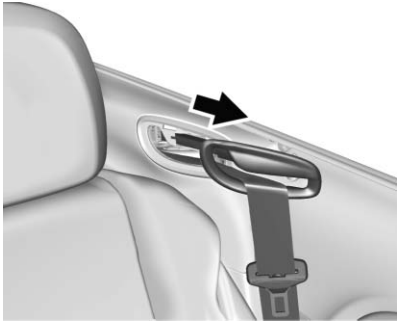

The presenter comes out when:

- The respective door is closed and the ignition is turned on.
- The ignition is on and the door is closed.

The presenter may automatically retract when any of the following occur:

- The respective door is opened again.

- The key is removed from the ignition.
- The respective latch plate is inserted into the buckle.
- A time-out of 45 seconds elapsed.
- The vehicle is driven longer than 15 seconds with a speed of more than 5 km/h (3 mph).

If the seat belt presenter does not retract automatically, push it back slightly.

Seat Belt Pretensioners

This vehicle has seat belt pretensioners for front and rear outboard occupants. Although the seat belt pretensioners cannot be seen, they are part of the seat belt assembly. They can help tighten the seat belts during the early stages of a moderate to severe frontal, near frontal, or rear crash if the threshold conditions for pretensioner activation are met. Seat belt pretensioners can also help tighten the seat belts in a side crash or a rollover event.

Pretensioners work only once. If the pretensioners activate in a crash, the pretensioners and probably other parts of the vehicle's seat belt system will need to be replaced. See *Replacing Seat Belt System Parts after a Crash* ⇨ *59*.

Do not sit on the outboard seat belt while entering or exiting the vehicle or at any time while sitting in the seat. Sitting on the seat belt can damage the webbing and hardware.

Rear Seat Belt Comfort Guides

Rear seat belt comfort guides may provide added seat belt comfort for older children who have outgrown booster seats and for some adults. When installed on a shoulder belt, the comfort guide positions the shoulder belt away from the neck and head.

Comfort guides are available through your dealer for the rear outboard seating positions. Instructions are included with the guide.

Seat Belt Use During Pregnancy

Seat belts work for everyone, including pregnant women. Like all occupants, they are more likely to be seriously injured if they do not wear seat belts.

A pregnant woman should wear a lap-shoulder belt, and the lap portion should be worn as low as possible, below the rounding, throughout the pregnancy.

The best way to protect the fetus is to protect the mother. When a seat belt is worn properly, it is more likely

that the fetus will not be hurt in a crash. For pregnant women, as for anyone, the key to making seat belts effective is wearing them properly.

Seat Belt Extender

If the vehicle's seat belt will fasten around you, you should use it.

But if a seat belt is not long enough, your dealer will order you an extender. When you go in to order it, take the heaviest coat you will wear, so the extender will be long enough for you. To help avoid personal injury, do not let someone else use it, and use it only for the seat it is made to fit. The extender has been designed for adults. Never use it for securing child restraints. For more information on the proper use and fit of seat belt extenders see the instruction sheet that comes with the extender.

Safety System Check

Periodically check the seat belt reminder, seat belts, buckles, latch plates, retractors, shoulder belt height adjusters (if equipped), and seat belt anchorages to make sure they are all in working order. Look for any other loose or damaged seat belt system parts that might keep a seat belt system from performing properly. See your dealer to have it repaired. Torn or frayed seat belts may not protect you in a crash. They can rip apart under impact forces. If a belt is torn or frayed, have it replaced immediately.

Make sure the seat belt reminder light is working. See *Seat Belt Reminders* ⇨ *100*.

Keep seat belts clean and dry. See *Seat Belt Care* ⇨ *58*.

Seat Belt Care

Keep belts clean and dry.

⚠ Warning

Do not bleach or dye seat belt webbing. It may severely weaken the webbing. In a crash, they might not be able to provide adequate protection. Clean and rinse seat belt webbing only with mild soap and lukewarm water. Allow the webbing to dry.

Seat belts should be properly cared for and maintained.

Seat belt hardware should be kept dry and free of dust or debris. As necessary exterior hard surfaces and seat belt webbing may be lightly cleaned with mild soap and water. Ensure there is not excessive dust or debris in the mechanism. If dust or debris exists in the system please see the dealer. Parts may need to be replaced to ensure proper functionality of the system.

Replacing Seat Belt System Parts after a Crash

⚠ Warning

A crash can damage the seat belt system in the vehicle. A damaged seat belt system may not properly protect the person using it, resulting in serious injury or even death in a crash. To help make sure the seat belt systems are working properly after a crash, have them inspected and any necessary replacements made as soon as possible.

After a minor crash, replacement of seat belts may not be necessary. But the seat belt assemblies that were used during any crash may have been stressed or damaged. See your dealer to have the seat belt assemblies inspected or replaced.

New parts and repairs may be necessary even if the seat belt system was not being used at the time of the crash.

Have the seat belt pretensioners checked if the vehicle has been in a crash, or if the airbag readiness light stays on after you start the vehicle or while you are driving. See *Airbag Readiness Light* ⇨ *101*.

Airbag System

The vehicle has the following airbags:

- A frontal airbag for the driver
- A frontal airbag for the front outboard passenger
- A knee airbag for the driver
- A knee airbag for the front outboard passenger
- A seat-mounted side impact airbag for the driver
- A seat-mounted side impact airbag for the front outboard passenger

All vehicle airbags have the word AIRBAG on the trim or on a label near the deployment opening.

For frontal airbags, the word AIRBAG is on the center of the steering wheel for the driver and on the instrument panel for the front outboard passenger.

For knee airbags, the word AIRBAG is on the lower part of the instrument panel.

For seat-mounted side impact airbags, the word AIRBAG is on the side of the seatback closest to the door.

Airbags are designed to supplement the protection provided by seat belts. Even though today's airbags are also designed to help reduce the risk of injury from the force of an inflating bag, all airbags must inflate very quickly to do their job.

Here are the most important things to know about the airbag system:

⚠ Warning

You can be severely injured or killed in a crash if you are not wearing your seat belt, even with airbags. Airbags are designed to work with seat belts, not replace them. Also, airbags are not designed to inflate in every crash. In some crashes seat belts are the only restraint. See *When Should an Airbag Inflate?* ⇨ *62*.

(Continued)

Warning (Continued)

Wearing your seat belt during a crash helps reduce your chance of hitting things inside the vehicle or being ejected from it. Airbags are “supplemental restraints” to the seat belts. Everyone in the vehicle should wear a seat belt properly, whether or not there is an airbag for that person.

⚠ Warning

Because airbags inflate with great force and faster than the blink of an eye, anyone who is up against, or very close to, any airbag when it inflates can be seriously injured or killed. Do not sit unnecessarily close to any airbag, as you would be if sitting on the edge of the seat or leaning forward. Seat belts help keep you in position before and during a

(Continued)

Warning (Continued)

crash. Always wear the seat belt, even with airbags. The driver should sit as far back as possible while still maintaining control of the vehicle. The seat belts and the front outboard passenger airbags are most effective when you are sitting well back and upright in the seat with both feet on the floor.

Occupants should not lean on or sleep against the door or side windows in seating positions with seat-mounted airbags.

⚠ Warning

Children who are up against, or very close to, any airbag when it inflates can be seriously injured or killed. Always secure children properly in the vehicle. To read how, see *Older Children* ⇨ *71* or *Infants and Young Children* ⇨ *72*.

There is an airbag readiness light on the instrument cluster, which shows the airbag symbol. The system checks the airbag electrical system for malfunctions. The light tells you if there is an electrical problem. See *Airbag Readiness Light* ⇨ *101*.

Where Are the Airbags?

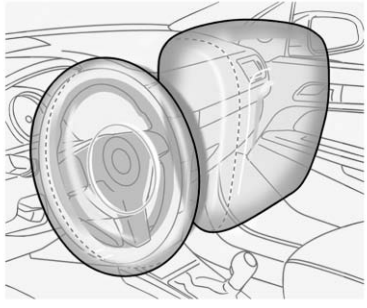

The driver frontal airbag is in the center of the steering wheel.

The front outboard passenger frontal airbag is in the passenger side instrument panel.

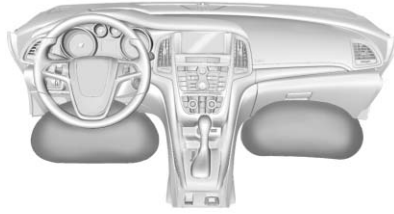

The driver knee airbag is below the steering column. The front outboard passenger knee airbag is below the glove box.

Driver Side Shown, Passenger Side Similar

The driver and front outboard passenger seat-mounted side impact airbags are in the sides of the seatbacks closest to the door.

⚠ Warning

If something is between an occupant and an airbag, the airbag might not inflate properly or it might force the object into that person causing severe injury or even death. The path of an

(Continued)

Warning (Continued)

inflating airbag must be kept clear. Do not put anything between an occupant and an airbag, and do not attach or put anything on the steering wheel hub or on or near any other airbag covering.

Do not use seat accessories that block the inflation path of a seat-mounted side impact airbag.

When Should an Airbag Inflate?

This vehicle is equipped with airbags. See *Airbag System* ⇨ *59*. Airbags are designed to inflate if the impact exceeds the specific airbag system's deployment threshold. Deployment thresholds are used to predict how severe a crash is likely to be in time for the airbags to inflate and help restrain the occupants. The vehicle has electronic sensors that help the airbag system determine the severity of the impact. Deployment thresholds can vary with specific vehicle design.

Frontal airbags are designed to inflate in moderate to severe frontal or near frontal crashes to help reduce the potential for severe injuries, mainly to the driver's or front outboard passenger's head and chest.

Whether the frontal airbags will or should inflate is not based primarily on how fast the vehicle is traveling. It depends on what is hit, the direction of the impact, and how quickly the vehicle slows down.

Frontal airbags may inflate at different crash speeds depending on whether the vehicle hits an object straight on or at an angle, and whether the object is fixed or moving, rigid or deformable, narrow or wide.

Frontal airbags are not intended to inflate during vehicle rollovers, in rear impacts, or in many side impacts.

In addition, the vehicle has advanced technology frontal airbags. Advanced technology frontal airbags adjust the restraint according to crash severity.

Knee airbags are designed to inflate in moderate to severe frontal or near frontal impacts. Knee airbags are not designed to inflate during vehicle rollovers, in rear impacts, or in many side impacts.

Seat-mounted side impact airbags are designed to inflate in moderate to severe side crashes depending on the location of the impact. Seat-mounted side impact airbags are not designed to inflate in frontal impacts, near frontal impacts, rollovers, or rear impacts.
A seat-mounted side impact airbag is designed to inflate on the side of the vehicle that is struck.

In any particular crash, no one can say whether an airbag should have inflated simply because of the vehicle damage or repair costs.

What Makes an Airbag Inflate?

In a deployment event, the sensing system sends an electrical signal triggering a release of gas from the inflator. Gas from the inflator fills the airbag causing the bag to break out of the cover. The inflator, the airbag, and related hardware are all part of the airbag module.

For airbag locations, see *Where Are the Airbags?* ⇨ *61*.

How Does an Airbag Restrain?

In moderate to severe frontal or near frontal collisions, even belted occupants can contact the steering wheel or the instrument panel. In moderate to severe side collisions, even belted occupants can contact the inside of the vehicle.

Airbags supplement the protection provided by seat belts by distributing the force of the impact more evenly over the occupant's body.

But airbags would not help in many types of collisions, primarily because the occupant's motion is not toward those airbags. See *When Should an Airbag Inflate?* ⇨ *62*.

Airbags should never be regarded as anything more than a supplement to seat belts.

What Will You See after an Airbag Inflates?

After the frontal and seat-mounted side impact airbags inflate, they quickly deflate, so quickly that some people may not even realize the airbags inflated. Some components of the airbag module may be hot for several minutes. For location of the airbags, see *Where Are the Airbags?* ⇨ *61*.

The parts of the airbag that come into contact with you may be warm, but not too hot to touch. There may be some smoke and dust coming from the vents in the deflated airbags. Airbag inflation does not prevent the driver from seeing out of the windshield or being able to steer the vehicle, nor does it prevent people from leaving the vehicle.

⚠ Warning

When an airbag inflates, there may be dust in the air. This dust could cause breathing problems for people with a history of asthma or other breathing trouble. To avoid this, everyone in the vehicle should get out as soon as it is safe to do so. If you have breathing problems but cannot get out of the vehicle after an airbag inflates, then get fresh air by opening a window or a door. If you experience breathing problems following an airbag deployment, you should seek medical attention.

The vehicle has a feature that may automatically unlock the doors, turn on the interior lamps and hazard warning flashers, and shut off the fuel system after the airbags inflate. The feature may also activate,

without airbag inflation, after an event that exceeds a predetermined threshold. After turning the ignition off and then on again, the fuel system will return to normal operation; the doors can be locked, the interior lamps can be turned off, and the hazard warning flashers can be turned off using the controls for those features. If any of these systems are damaged in the crash they may not operate as normal.

⚠ Warning

A crash severe enough to inflate the airbags may have also damaged important functions in the vehicle, such as the fuel system, brake and steering systems, etc. Even if the vehicle appears to be drivable after a moderate crash, there may be concealed damage that could make it difficult to safely operate the vehicle.

(Continued)

Warning (Continued)

Use caution if you should attempt to restart the engine after a crash has occurred.

In many crashes severe enough to inflate the airbag, windshields are broken by vehicle deformation. Additional windshield breakage may also occur from the front outboard passenger airbag.

- Airbags are designed to inflate only once. After an airbag inflates, you will need some new parts for the airbag system. If you do not get them, the airbag system will not be there to help protect you in another crash. A new system will include airbag modules and possibly other parts. The service manual for the vehicle covers the need to replace other parts.
- The vehicle has a crash sensing and diagnostic module which records information after a crash. See *Vehicle Data Recording and Privacy* ⇨ *278* and *Event Data Recorders* ⇨ *278*.
- Let only qualified technicians work on the airbag system. Improper service can mean that the airbag system will not work properly. See your dealer for service.

Roll Bars

⚠ Warning

Vehicle rollovers are unpredictable and dangerous events that may result in injury or death regardless of the roll bar or any other feature. No feature can fully protect an occupant in every crash, including a rollover.

The roll bars are under covers behind the rear head restraints. The roll bars are designed to deploy if the sensing system predicts that the vehicle is about to roll over on its side. In addition, the roll bars are

designed to deploy in moderate to severe side crashes depending on the location of the impact, as well as in a severe frontal impact. Roll bars are not designed to deploy in rear impacts.

The roll bars deploy with the convertible top open or closed. If the roll bars deploy, do not operate the convertible top.

Do not place any objects on the covers of the roll bars behind the head restraints.

Have the roll bars checked if the vehicle has been in a crash, or if the airbag readiness light stays on after starting or driving the vehicle. See *Airbag Readiness Light* ⇨ *101*.

Passenger Sensing System

The vehicle has a passenger sensing system for the front outboard passenger position. The passenger airbag status indicator will light on the center stack when the vehicle is started.

The words ON and OFF will be visible during the system check. When the system check is complete, either the word ON or the word OFF will be visible. See *Passenger Airbag Status Indicator* ⇨ *101*.

The passenger sensing system turns off the front outboard passenger frontal airbag and knee airbag under certain conditions. No other airbag is affected by the passenger sensing system.

The passenger sensing system works with sensors that are part of the front outboard passenger seat. The sensors are designed to detect the presence of a properly seated occupant and determine if the front outboard passenger frontal airbag and knee airbag should be allowed to inflate or not.

According to accident statistics, children are safer when properly secured in a rear seat in the correct child restraint for their weight and size.

Whenever possible, children aged 12 and under should be secured in a rear seating position.

Never put a rear-facing child seat in the front. This is because the risk to the rear-facing child is so great, if the airbag inflates.

⚠ Warning

A child in a rear-facing child restraint can be seriously injured or killed if the passenger frontal airbag inflates. This is because the back of the rear-facing child restraint would be very close to the inflating airbag. A child in a forward-facing child restraint can be seriously injured or killed if the passenger frontal airbag inflates and the passenger seat is in a forward position.

(Continued)

Warning (Continued)

Even if the passenger sensing system has turned off the front outboard passenger airbag(s), no system is fail-safe. No one can guarantee that an airbag will not deploy under some unusual circumstance, even though the airbag(s) are off.

Never put a rear-facing child restraint in the front seat, even if the airbag is off. If securing a forward-facing child restraint in the front outboard passenger seat, always move the seat as far back as it will go. It is better to secure child restraints in the rear seat. Consider using another vehicle to transport the child when a rear seat is not available.

The passenger sensing system is designed to turn off the front outboard passenger frontal airbag and knee airbag if:

- The front outboard passenger seat is unoccupied.
- The system determines an infant is present in a child restraint.
- A front outboard passenger takes his/her weight off of the seat for a period of time.
- There is a critical problem with the airbag system or the passenger sensing system.

When the passenger sensing system has turned off the front outboard passenger frontal airbag and knee airbag, the off indicator will light and stay lit as a reminder that the airbags are off. See *Passenger Airbag Status Indicator* ⇨ *101*.

The passenger sensing system is designed to turn on the front outboard passenger frontal airbag and knee airbag anytime the system senses that a person of adult size is sitting properly in the front outboard passenger seat. When the passenger sensing system has allowed the airbags to be enabled, the on indicator will light and stay lit as a reminder that the airbags are active.

For some children, including children in child restraints and for very small adults, the passenger sensing system may or may not turn off the front outboard passenger frontal airbag and knee airbag, depending upon the person's seating posture and body build. Everyone in the vehicle who has outgrown child restraints should wear a seat belt properly — whether or not there is an airbag for that person.

⚠ Warning

If the airbag readiness light ever comes on and stays on, it means that something may be wrong with the airbag system. To help avoid injury to yourself or others, have the vehicle serviced right away. See *Airbag Readiness Light* ⇨ *101* for more information, including important safety information.

If the On Indicator Is Lit for a Child Restraint

The passenger sensing system is designed to turn off the front outboard passenger frontal airbag and knee airbag if the system determines that an infant is present in a child restraint. If a child restraint has been installed and the on indicator is lit:

1. Turn the vehicle off.
2. Remove the child restraint from the vehicle.
3. Remove any additional items from the seat such as blankets, cushions, seat covers, seat heaters, or seat massagers.
4. Reinstall the child restraint following the directions provided by the child restraint manufacturer and refer to *Securing Child Restraints (With the Seat Belt in the Front Seat)* ⇨ *87* or *Securing Child Restraints (With the Seat Belt in the Rear Seat)* ⇨ *85*.
5. If, after reinstalling the child restraint and restarting the vehicle, the on indicator is still lit, turn the vehicle off. Then slightly recline the vehicle seatback and adjust the seat cushion, if adjustable, to make sure that the vehicle seatback is not pushing the child restraint into the seat cushion.

   Also make sure the child restraint is not trapped under the vehicle head restraint. If this happens, adjust the head restraint. See *Head Restraints* ⇨ *47*.
6. Restart the vehicle.

The passenger sensing system may or may not turn off the airbags for a child in a child restraint depending upon the child's size. It is better to secure the child restraint in a rear seat. Never put a rear-facing child restraint in the front seat, even if the on indicator is not lit.

If the Off Indicator Is Lit for an Adult-Sized Occupant

If a person of adult size is sitting in the front outboard passenger seat, but the off indicator is lit, it could be because that person is not sitting

properly in the seat. Use the following steps to allow the system to detect that person and enable the front outboard passenger frontal airbag and knee airbag:

1. Turn the vehicle off.
2. Remove any additional material from the seat, such as blankets, cushions, seat covers, seat heaters, or seat massagers. Also, remove laptops, or other electronic devices.
3. Place the seatback in the fully upright position.
4. Have the person sit upright in the seat, centered on the seat cushion, with legs comfortably extended.
5. Restart the vehicle and have the person remain in this position for two to three minutes after the on indicator is lit.

⚠ Warning

If the front outboard passenger airbag is turned off for an adult-sized occupant, the airbag will not be able to inflate and help protect that person in a crash, resulting in an increased risk of serious injury or even death. An adult-sized occupant should not ride in the front outboard passenger seat, if the passenger airbag off indicator is lit.

Additional Factors Affecting System Operation

Seat belts help keep the passenger in position on the seat during vehicle maneuvers and braking, which helps the passenger sensing system maintain the passenger airbag status. See “Seat Belts” and “Child Restraints” in the Index for additional information about the importance of proper restraint use.

A thick layer of additional material, such as a blanket or cushion, or aftermarket equipment such as seat covers, seat heaters, and seat massagers can affect how well the passenger sensing system operates. We recommend that you not use seat covers or other aftermarket equipment except when approved by GM for your specific vehicle. See *Adding Equipment to the Airbag-Equipped Vehicle* ⇨ *69* for more information about modifications that can affect how the system operates.

A wet seat can affect the performance of the passenger sensing system. Here is how:

- The passenger sensing system may turn off the passenger airbag(s) when liquid is soaked into the seat. If this happens, the off indicator will be lit, and the airbag readiness light on the instrument panel will also be lit.
- Liquid pooled on the seat that has not soaked in may make it more likely that the passenger sensing system will turn on the

passenger airbag(s) while a child restraint or child occupant is on the seat. If the passenger airbag(s) are turned on, the on indicator will be lit.

If the passenger seat gets wet, dry the seat immediately. If the airbag readiness light is lit, do not install a child restraint or allow anyone to occupy the seat. See *Airbag Readiness Light* ⇨ *101* for important safety information.

The on indicator may be lit if an object, such as a briefcase, handbag, grocery bag, laptop, or other electronic device, is put on an unoccupied seat. If this is not desired, remove the object from the seat.

⚠ Warning

Stowing articles under the passenger seat or between the passenger seat cushion and seatback may interfere with the proper operation of the passenger sensing system.

Servicing the Airbag-Equipped Vehicle

Airbags affect how the vehicle should be serviced. There are parts of the airbag system in several places around the vehicle. Your dealer and the service manual have information about servicing the vehicle and the airbag system. To purchase a service manual, see *Service Publications Ordering Information* ⇨ *275*.

⚠ Warning

For up to 10 seconds after the vehicle is turned off and the battery is disconnected, an airbag can still inflate during improper service. You can be injured if you are close to an airbag when it inflates. Avoid yellow connectors. They are probably part of the airbag system. Be sure to follow proper service procedures, and make sure the person performing work for you is qualified to do so.

Adding Equipment to the Airbag-Equipped Vehicle

Adding accessories that change the vehicle's frame, bumper system, height, front end, or side sheet metal, may keep the airbag system from working properly.

The operation of the airbag system can also be affected by changing or moving any parts of the front seats, seat belts, the airbag sensing and diagnostic module, steering wheel, instrument panel, inner door seals including the speakers, any of the airbag modules, roll bars, front sensors, side impact sensors, or airbag wiring.

Your dealer and the service manual have information about the location of the airbag sensors, sensing and diagnostic module, and airbag wiring.

In addition, the vehicle has a passenger sensing system for the front outboard passenger position, which includes sensors that are part of the passenger seat. The passenger sensing system may not

operate properly if the original seat trim is replaced with non-GM covers, upholstery, or trim; or with GM covers, upholstery, or trim designed for a different vehicle. Any object, such as an aftermarket seat heater or a comfort-enhancing pad or device, installed under or on top of the seat fabric, could also interfere with the operation of the passenger sensing system. This could either prevent proper deployment of the passenger airbag(s) or prevent the passenger sensing system from properly turning off the passenger airbag(s). See *Passenger Sensing System* ⇨ *65*.

If you have to modify your vehicle because you have a disability and you have questions about whether the modifications will affect the vehicle's airbag system, or if you have questions about whether the airbag system will be affected if the vehicle is modified for any other reason, call Customer Assistance. See *Customer Assistance Offices* ⇨ *268*.

The vehicle has roll bars. See *Different Size Tires and Wheels* ⇨ *224*.

Airbag System Check

The airbag system does not need regularly scheduled maintenance or replacement. Make sure the airbag readiness light is working. See *Airbag Readiness Light* ⇨ *101*.

Caution

If an airbag covering is damaged, opened, or broken, the airbag may not work properly. Do not open or break the airbag coverings. If there are any opened or broken airbag coverings, have the airbag covering and/or airbag module replaced. For the location of the airbags, see *Where Are the Airbags?* ⇨ *61*. See your dealer for service.

Replacing Airbag System Parts after a Crash

⚠ Warning

A crash can damage the airbag systems in the vehicle.
A damaged airbag system may not properly protect you and your passenger(s) in a crash, resulting in serious injury or even death. To help make sure the airbag systems are working properly after a crash, have them inspected and any necessary replacements made as soon as possible.

If an airbag inflates, you will need to replace airbag system parts. See your dealer for service.

If the airbag readiness light stays on after the vehicle is started or comes on when you are driving, the airbag system may not work properly. Have the vehicle serviced right away. See *Airbag Readiness Light* ⇨ *101*.

Child Restraints

Older Children

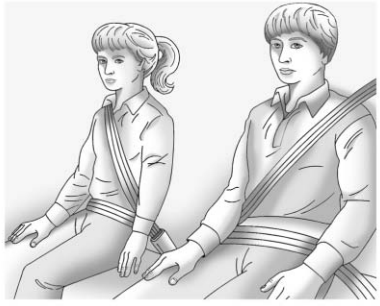

Older children who have outgrown booster seats should wear the vehicle's seat belts.

The manufacturer instructions that come with the booster seat state the weight and height limitations for that booster. Use a booster seat with a lap-shoulder belt until the child passes the fit test below:

- Sit all the way back on the seat. Do the knees bend at the seat edge? If yes, continue. If no, return to the booster seat.
- Buckle the lap-shoulder belt. Does the shoulder belt rest on the shoulder? If yes, continue. If no, try using the rear seat belt comfort guide, if available. See "Rear Seat Belt Comfort Guides" under *Lap-Shoulder Belt* ⇨ *55*. If a comfort guide is not available, or if the shoulder belt still does not rest on the shoulder, then return to the booster seat.
- Does the lap belt fit low and snug on the hips, touching the thighs? If yes, continue. If no, return to the booster seat.
- Can proper seat belt fit be maintained for the length of the trip? If yes, continue. If no, return to the booster seat.

Q: What is the proper way to wear seat belts?

A: An older child should wear a lap-shoulder belt and get the additional restraint a shoulder belt can provide. The shoulder belt should not cross the face or neck. The lap belt should fit snugly below the hips, just touching the top of the thighs. This applies belt force to the child's pelvic bones in a crash. It should never be worn over the abdomen, which could cause severe or even fatal internal injuries in a crash.

Also see "Rear Seat Belt Comfort Guides" under *Lap-Shoulder Belt* ⇨ *55*.

According to accident statistics, children are safer when properly restrained in a rear seating position.

In a crash, children who are not buckled up can strike other people who are buckled up, or can be thrown out of the vehicle. Older children need to use seat belts properly.

⚠ Warning

Never allow more than one child to wear the same seat belt. The seat belt cannot properly spread the impact forces. In a crash, they can be crushed together and seriously injured. A seat belt must be used by only one person at a time.

⚠ Warning

Never allow a child to wear the seat belt with the shoulder belt behind their back. A child can be seriously injured by not wearing the lap-shoulder belt properly. In a crash, the child would not be restrained by the shoulder belt. The child could move too far forward increasing the chance of head and neck injury. The child might also slide under the lap belt. The belt force would then be applied right on the abdomen. That could cause serious or fatal injuries. The shoulder belt should go over the shoulder and across the chest.

Infants and Young Children

Everyone in a vehicle needs protection! This includes infants and all other children. Neither the distance traveled nor the age and size of the traveler changes the need, for everyone, to use safety restraints. In fact, the law in every state in the United States and in every Canadian province says children up to some age must be restrained while in a vehicle.

⚠ Warning

Children can be seriously injured or strangled if a shoulder belt is wrapped around their neck. The shoulder belt can tighten but cannot be loosened if it is locked. The shoulder belt locks when it is pulled all the way out of the retractor. It unlocks when the shoulder belt is allowed to go all the way back into the retractor, but it cannot do this if it is wrapped around a child's neck. If the shoulder belt is locked and tightened around a child's neck, the only way to loosen the belt is to cut it.

Never leave children unattended in a vehicle and never allow children to play with the seat belts.

Every time infants and young children ride in vehicles, they should have the protection provided by appropriate child restraints. Neither the vehicle's seat belt system nor its airbag system is designed for them.

Children who are not restrained properly can strike other people, or can be thrown out of the vehicle.

⚠ Warning

Never hold an infant or a child while riding in a vehicle. Due to crash forces, an infant or a child will become so heavy it is not possible to hold it during a crash. For example, in a crash at only 40 km/h (25 mph), a 5.5 kg (12 lb) infant will suddenly become a 110 kg (240 lb) force on a person's arms. An infant or child should be secured in an appropriate restraint.

⚠ Warning

Children who are up against, or very close to, any airbag when it inflates can be seriously injured or killed. Never put a rear-facing child restraint in the front outboard seat. Secure a rear-facing child restraint in a rear seat. It is also better to secure a forward-facing child restraint in a rear seat. If you must secure a forward-facing child restraint in the front outboard seat, always move the front passenger seat as far back as it will go.

Child restraints are devices used to restrain, seat, or position children in the vehicle and are sometimes called child seats or car seats.

There are three basic types of child restraints:

- Forward-facing child restraints
- Rearward-facing child restraints
- Belt-positioning booster seats

The proper child restraint for your child depends on their size, weight, and age, and also on whether the child restraint is compatible with the vehicle in which it will be used.

For each type of child restraint, there are many different models available. When purchasing a child restraint, be sure it is designed to be used in a motor vehicle. If it is, the restraint will have a label saying that it meets federal motor vehicle safety standards. The restraint manufacturer's instructions that come with the restraint state the weight and height limitations for a particular child restraint. In addition, there are many kinds of restraints available for children with special needs.

⚠ Warning

To reduce the risk of neck and head injury in a crash, infants and toddlers should be secured in a rear-facing child restraint until age two, or until they reach the maximum height and weight limits of their child restraint.

⚠ Warning

A young child's hip bones are still so small that the vehicle's regular seat belt may not remain low on the hip bones, as it should. Instead, it may settle up around the child's abdomen. In a crash, the belt would apply force on a body area that is unprotected by any bony structure. This alone could cause serious or fatal injuries. To reduce the risk of serious or fatal injuries during a crash, young children should always be secured in appropriate child restraints.

Child Restraint Systems

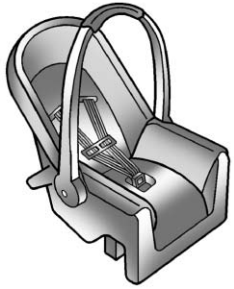

Rear-Facing Infant Restraint

A rear-facing child restraint provides restraint with the seating surface against the back of the infant.

The harness system holds the infant in place and, in a crash, acts to keep the infant positioned in the restraint.

Forward-Facing Child Restraint

A forward-facing child restraint provides restraint for the child's body with the harness.

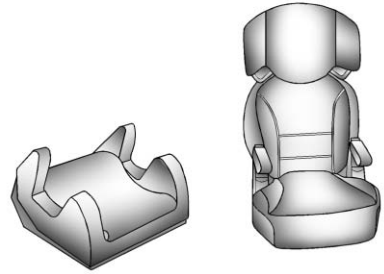

Booster Seats

A belt-positioning booster seat is used for children who have outgrown their forward-facing child restraint. Boosters are designed to improve the fit of the vehicle's seat belt system until the child is large enough for the vehicle seat belts to fit properly without a booster seat. See the seat belt fit test in *Older Children* ⇨ *71*.

Securing an Add-On Child Restraint in the Vehicle

⚠ Warning

A child can be seriously injured or killed in a crash if the child restraint is not properly secured in the vehicle. Secure the child restraint properly in the vehicle using the vehicle's seat belt or LATCH system, following the instructions that came with that child restraint and the instructions in this manual.

To help reduce the chance of injury, the child restraint must be secured in the vehicle. Child restraints must be secured in vehicle seats by lap belts or the lap belt portion of a lap-shoulder belt, or by the LATCH system. See *Lower Anchors and Tethers for Children (LATCH System)* ⇨ *77* for more information. Children can be endangered in a crash if the child restraint is not properly secured in the vehicle.

When securing an add-on child restraint, refer to the instructions that come with the restraint which may be on the restraint itself or in a booklet, or both, and to this manual. The child restraint instructions are important, so if they are not available, obtain a replacement copy from the manufacturer.

Keep in mind that an unsecured child restraint can move around in a collision or sudden stop and injure people in the vehicle. Be sure to properly secure any child restraint in the vehicle — even when no child is in it.

In some areas of the United States and Canada, Certified Child Passenger Safety Technicians (CPSTs) are available to inspect and demonstrate how to correctly use and install child restraints. In the U.S., refer to the National Highway Traffic Safety Administration (NHTSA) website to locate the nearest child safety seat inspection station. For CPST availability in Canada, check with Transport Canada or the Provincial Ministry of Transportation office.

Securing the Child Within the Child Restraint

⚠ Warning

A child can be seriously injured or killed in a crash if the child is not properly secured in the child restraint. Secure the child properly following the instructions that came with that child restraint.

Where to Put the Restraint

According to accident statistics, children and infants are safer when properly restrained in an appropriate child restraint secured in a rear seating position.

Whenever possible, children aged 12 and under should be secured in a rear seating position.

Never put a rear-facing child restraint in the front. This is because the risk to the rear-facing child is so great if the airbag deploys.

⚠ Warning

A child in a rear-facing child restraint can be seriously injured or killed if the front passenger airbag inflates. This is because the back of the rear-facing child restraint would be very close to the inflating airbag. A child in a forward-facing child restraint can be seriously injured or killed if the front passenger airbag inflates and the passenger seat is in a forward position.

Even if the passenger sensing system has turned off the front passenger frontal airbag, no system is fail-safe. No one can guarantee that an airbag will not deploy under some unusual circumstance, even though it is turned off.

(Continued)

Warning (Continued)

Secure rear-facing child restraints in a rear seat, even if the airbag is off. If you secure a forward-facing child restraint in the front seat, always move the front passenger seat as far back as it will go. It is better to secure the child restraint in a rear seat.

See *Passenger Sensing System* ⇨ *65* for additional information.

When securing a child restraint with the seat belts in a rear seat position, study the instructions that came with the child restraint to make sure it is compatible with this vehicle.

Child restraints and booster seats vary considerably in size, and some may fit in certain seating positions better than others.

Depending on where you place the child restraint and the size of the child restraint, you may not be able to access adjacent seat belts or LATCH anchors for additional passengers or child restraints. Adjacent seating positions should not be used if the child restraint prevents access to or interferes with the routing of the seat belt.

Wherever a child restraint is installed, be sure to follow the instructions that came with the child restraint system and secure the child restraint system properly.

Keep in mind that an unsecured child restraint can move around in a collision or sudden stop and injure people in the vehicle. Be sure to properly secure any child restraint in the vehicle — even when no child is in it.

Lower Anchors and Tethers for Children (LATCH System)

The LATCH system secures a child restraint during driving or in a crash. LATCH attachments on the child restraint are used to attach the child restraint to the anchors in the

vehicle. This system is designed to make installation of a child restraint easier.

In order to use the LATCH system in your vehicle, you need a child restraint that has LATCH attachments. LATCH-compatible rear-facing and forward-facing child seats can be properly installed using either the LATCH anchors or the vehicle's seat belts. Do not use both the seat belts and the LATCH anchorage system to secure a rear-facing or forward-facing child seat.

Booster seats use the vehicle's seat belts to secure the child and the booster seat. If the manufacturer recommends that the booster seat be secured with the LATCH system, this can be done as long as the booster seat can be positioned properly and there is no interference with the proper positioning of the lap-shoulder belt on the child.

Make sure to follow the instructions that came with the child restraint, and also the instructions in this manual.

When installing a child restraint with a top tether, you must also use either the lower anchors or the seat belts to properly secure the child restraint. A child restraint must never be installed using only the top tether and anchor.

The LATCH anchorage system can be used until the combined weight of the child plus the child restraint is 29.5 kg (65 lbs). Use the seat belt alone instead of the LATCH anchorage system once the combined weight is more than 29.5 kg (65 lbs).

See *Securing Child Restraints (With the Seat Belt in the Front Seat)* ⇨ *87* or *Securing Child Restraints (With the Seat Belt in the Rear Seat)* ⇨ *85*.

Child restraints built after March 2014 will be labeled with the specific child weight up to which the LATCH system can be used to install the restraint.

The following explains how to attach a child restraint with these attachments in the vehicle.

Not all vehicle seating positions have lower anchors. In this case, the seat belt must be used (with top tether where available) to secure the child restraint. See *Securing Child Restraints (With the Seat Belt in the Front Seat)* ⇨ *87* or *Securing Child Restraints (With the Seat Belt in the Rear Seat)* ⇨ *85*.

Lower Anchors

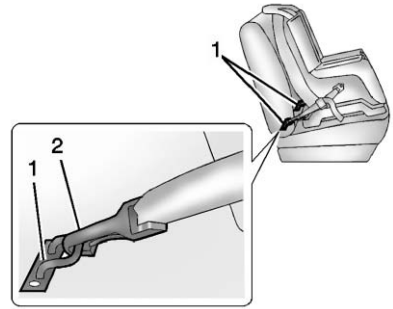

Lower anchors (1) are metal bars built into the vehicle. There are two lower anchors for each LATCH seating position that will accommodate a child restraint with lower attachments (2).

Top Tether Anchor

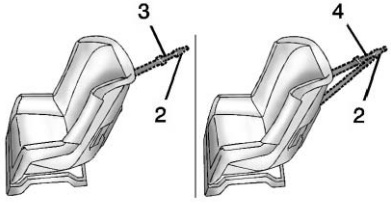

A top tether (3,4) is used to secure the top of the child restraint to the vehicle. A top tether anchor is built into the vehicle. The top tether attachment hook (2) on the child restraint connects to the top tether anchor in the vehicle in order to reduce the forward movement and rotation of the child restraint during driving or in a crash.

The child restraint may have a single tether (3) or a dual tether (4). Either will have a single attachment hook (2) to secure the top tether to the anchor.

Some child restraints that have a top tether are designed for use with or without the top tether being attached. Others require the top tether always to be attached. In Canada, the law requires that forward-facing child restraints have a top tether, and that the tether be attached. Be sure to read and follow the instructions for the child restraint.

Lower Anchor and Top Tether Anchor Locations

Rear Seat

: Seating positions with top tether anchors.

: Seating positions with two lower anchors.

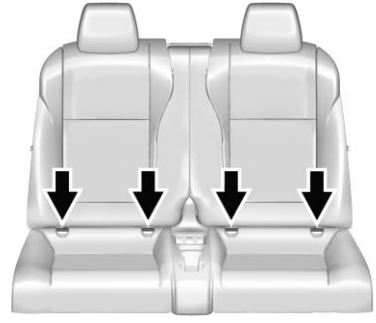

The rear outboard seating positions have exposed metal lower anchors in the openings below the crease between the seatback and the seat cushion.

There are top tether anchor symbols to assist you in locating the top tether anchors

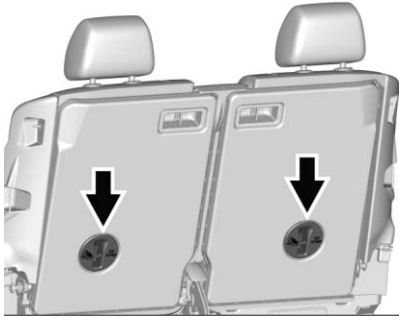

The top tether anchors are located on the back of the rear seatbacks. Be sure to use an anchor on the same side of the vehicle as the seating position where the child restraint will be placed.

Do not secure a child restraint in a position without a top tether anchor if a national or local law requires that the top tether be attached, or if the instructions that come with the child restraint say that the top tether must be attached.

According to accident statistics, children and infants are safer when properly restrained in a child restraint system or infant restraint system secured in a rear seating position. See *Where to Put the Restraint* ⇨ *76* for additional information.

Securing a Child Restraint Designed for the LATCH System

⚠ Warning

A child could be seriously injured or killed in a crash if the child restraint is not properly attached to the vehicle using either the LATCH anchors or the vehicle seat belt. Follow the instructions that came with the child restraint and the instructions in this manual.

⚠ Warning

To reduce the risk of serious or fatal injuries during a crash, do not attach more than one child restraint to a single anchor. Attaching more than one child restraint to a single anchor could cause the anchor or attachment to come loose or even break during a crash. A child or others could be injured.

⚠ Warning

Children can be seriously injured or strangled if a shoulder belt is wrapped around their neck. The shoulder belt can tighten but cannot be loosened if it is locked. The shoulder belt locks when it is pulled all the way out of the retractor. It unlocks when the shoulder belt is allowed to go all the way back into the retractor,

(Continued)

Warning (Continued)

but it cannot do this if it is wrapped around a child's neck. If the shoulder belt is locked and tightened around a child's neck, the only way to loosen the belt is to cut it.

Buckle any unused seat belts behind the child restraint so children cannot reach them. Pull the shoulder belt all the way out of the retractor to set the lock, and tighten the belt behind the child restraint after the child restraint has been installed.

⚠ Warning

Take care when operating the foldable rear seats. The rear seatback folds forward with considerable power which can cause injury, particularly to

(Continued)

Warning (Continued)

children. Ensure that nothing is attached to the rear seats or on the seat cushion.

Caution

Do not let the LATCH attachments rub against the vehicle's seat belts. This may damage these parts. If necessary, move buckled seat belts to avoid rubbing the LATCH attachments.

Do not fold the rear seatback when the seat is occupied. Do not fold the empty rear seat with a seat belt buckled. This could damage the seat belt or the seat. Unbuckle and return the seat belt to its stowed position, before folding the seat.

If you need to secure more than one child restraint in the rear seat, see *Where to Put the Restraint* ⇨ *76*.

This system is designed to make installation of child restraints easier. When using lower anchors, do not use the vehicle's seat belts. Instead use the vehicle's anchors and child restraint attachments to secure the restraints. Some restraints also use another vehicle anchor to secure a top tether.

1. For rear seating positions, if the head restraint interferes with the proper installation of the child restraint, the head restraint may be removed. See "Head Restraint Removal and Reinstallation" at the end of this section.
2. If the child restraint manufacturer's instructions recommend that the top tether be attached, attach the top tether to the top tether anchor. Refer to the child restraint instructions and the following steps:

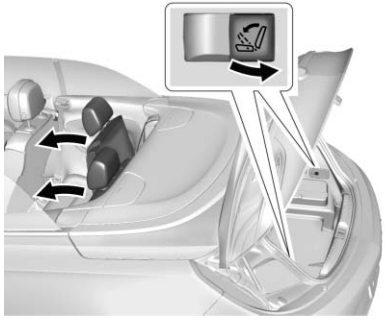

2.1. Pull the release switch in the trunk to fold the rear seatback forward to access the top tether anchors. See *Rear Seats* ⇨ *51* for additional information.

2.2. Adjust the top tether to its full length and route the top tether according to your child restraint instructions and the following instructions:

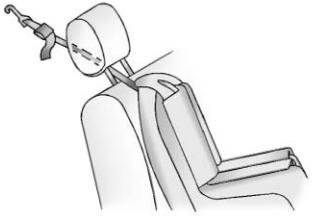

If you are using a single tether in a rear seating position, route the tether under the head restraint.

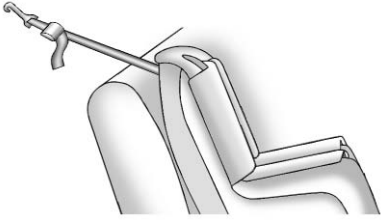

If you are using a single tether in a rear seating position and the head restraint has been removed, route the single tether over the seatback.

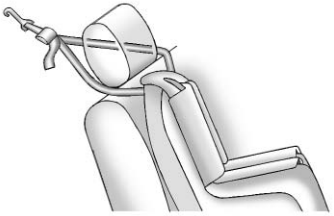

If you are using a dual tether in a rear seating position, route the tether around the sides of the head restraint.

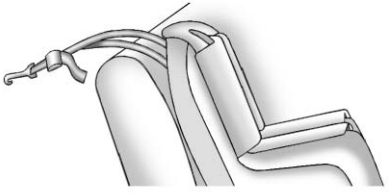

If you are using a dual tether in a rear seating position and the head restraint has been removed, route the dual tether over the seatback.

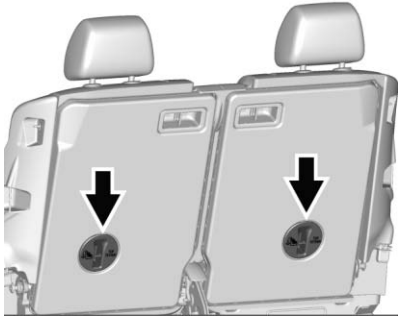

2.3. Attach the top tether hook to the anchor on the back of the rear seatback. Make sure that you secure the top tether to the top tether anchor and not to the seatback latch.

2.4. Push rearward on the seatback until it locks into its upright position. Push and pull on the seatback to make sure it is secured properly.

3. Put the child restraint on the seat. Attach and tighten the lower LATCH attachments on the child restraint to the lower anchors. If the child restraint does not have lower attachments or the desired seating position does not have lower anchors, secure the child restraint with the seat belts and the top tether. Refer to your child restraint manufacturer instructions and see *Securing Child Restraints (With the Seat Belt in the Front Seat)* ⇨ *87* or *Securing Child Restraints (With the Seat Belt in the Rear Seat)* ⇨ *85*.
4. Tighten the top tether.
5. Before placing a child in the child restraint, make sure it is securely held in place. To check, grasp the child restraint at the LATCH path and attempt to move it side to side and back and forth. There should be no more than 2.5 cm (1 in) of movement for proper installation.

Head Restraint Removal and Reinstallation

The rear outboard head restraints can be removed if they interfere with the proper installation of the child restraint.

To remove the head restraint:

1. Pull the release switch in the trunk to fold the seatback forward. See *Rear Seats* ⇨ *51* for additional information.

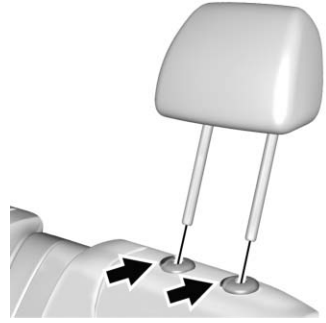

2. Press both buttons on the head restraint posts at the same time, and pull up on the head restraint.

3. Store the head restraint in the trunk of the vehicle.
4. When the child restraint is removed, reinstall the head restraint before the seating position is used.

⚠ Warning

With head restraints that are not installed and adjusted properly, there is a greater chance that occupants will suffer a neck/spinal injury in a crash. Do not drive until the head restraints for all occupants are installed and adjusted properly.

To reinstall the head restraint:

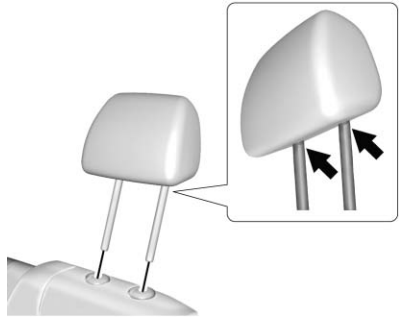

1. Insert the head restraint posts into the holes in the top of the seatback. The notches on the posts must face the driver side of the vehicle.
2. Push the head restraint down.
3. Try to move the head restraint to make sure that it is locked in place.

Replacing LATCH System Parts After a Crash

⚠ Warning

A crash can damage the LATCH system in the vehicle. A damaged LATCH system may not properly secure the child restraint, resulting in serious injury or even death in a crash. To help make sure the LATCH system is working properly after a crash, see your dealer to have the system inspected and any necessary replacements made as soon as possible.

If the vehicle has the LATCH system and it was being used during a crash, new LATCH system parts may be needed.

New parts and repairs may be necessary even if the LATCH system was not being used at the time of the crash.

Securing Child Restraints (With the Seat Belt in the Rear Seat)

When securing a child restraint in a rear seating position, study the instructions that came with the child restraint to make sure it is compatible with this vehicle.

If the child restraint has the LATCH system, see *Lower Anchors and Tethers for Children (LATCH System)* ⇨ *77* for how and where to install the child restraint using LATCH. If a child restraint is secured in the vehicle using a seat belt and it uses a top tether, see *Lower Anchors and Tethers for Children (LATCH System)* ⇨ *77* for top tether anchor locations.

Do not secure a child restraint in a position without a top tether anchor if a national or local law requires that the top tether be anchored, or if the instructions that come with the child restraint say that the top strap must be anchored.

If the child restraint or vehicle seat position does not have the LATCH system, you will be using the seat belt to secure the child restraint. Be sure to follow the instructions that came with the child restraint.

If more than one child restraint needs to be installed in the rear seat, be sure to read *Where to Put the Restraint* ⇨ *76*.

1. If the head restraint interferes with the proper installation of the child restraint, the head restraint may be removed. See “Head Restraint Removal and Reinstallation” under *Lower Anchors and Tethers for Children (LATCH System)* ⇨ *77*.
2. If the child restraint manufacturer recommends using a top tether, adjust the top tether to its full length and attach it to the top tether anchor. Refer to the instructions that came with the child restraint and see *Lower Anchors and Tethers for Children (LATCH System)* ⇨ *77*.
3. Put the child restraint on the seat.
4. Pick up the latch plate, and run the lap and shoulder portions of the vehicle's seat belt through or around the restraint. The child restraint instructions will show you how.

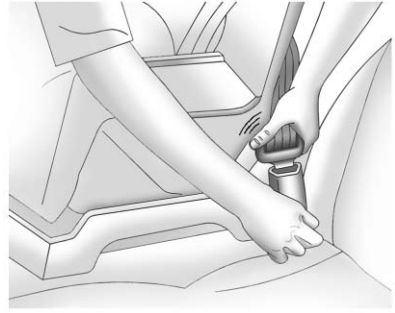

5. Push the latch plate into the buckle until it clicks. If the latch plate will not go fully into the buckle, check if the correct buckle is being used.

Position the release button on the buckle, away from the child restraint system, so that the seat belt could be quickly unbuckled if necessary.

6. Pull the shoulder belt all the way out of the retractor to set the lock. When the retractor lock is set, the belt can be tightened but not pulled out of the retractor.

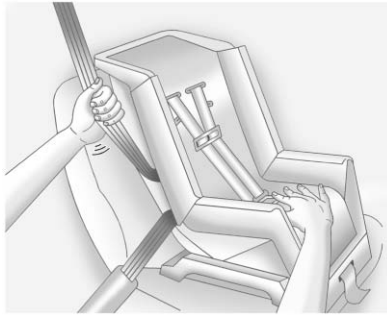

7. To tighten the belt, push down on the child restraint, pull the shoulder portion of the belt to tighten the lap portion of the belt, and feed the shoulder belt back into the retractor. When installing a forward-facing child restraint, it may be helpful to use your knee to push down on the child restraint as you tighten the belt.

   Try to pull the belt out of the retractor to make sure the retractor is locked. If the retractor is not locked, repeat Steps 4 and 5.

8. Tighten the top tether. See *Lower Anchors and Tethers for Children (LATCH System)* ⇨ *77*.

9. Before placing a child in the child restraint, make sure it is securely held in place. To check, grasp the child restraint at the seat belt path and attempt to move it side to side and back and forth. When the child restraint is properly installed, there should be no more than 2.5 cm (1 in) of movement.

To remove the child restraint, unbuckle the vehicle seat belt and let it return to the stowed position. If the top tether is attached to a top tether anchor, disconnect it. If the head restraint was removed, reinstall it before the seating position is used. See “Head Restraint Removal and Reinstallation” under *Lower Anchors and Tethers for Children (LATCH System)* ⇨ *77*.

Securing Child Restraints (With the Seat Belt in the Front Seat)

This vehicle has airbags. A rear seat is a safer place to secure a forward-facing child restraint. See *Where to Put the Restraint* ⇨ *76*.

In addition, the vehicle has a passenger sensing system which is designed to turn off the front outboard passenger frontal airbag and knee airbag under certain conditions.
See *Passenger Sensing System* ⇨ *65* and *Passenger Airbag Status Indicator* ⇨ *101* for more information, including important safety information.

Never put a rear-facing child seat in the front. This is because the risk to the rear-facing child is so great, if the airbag deploys.

⚠ Warning

A child in a rear-facing child restraint can be seriously injured or killed if the front outboard passenger frontal airbag inflates. This is because the back of the rear-facing child restraint would be very close to the inflating airbag. A child in a forward-facing child restraint can be seriously injured or killed if the front outboard passenger frontal airbag inflates and the passenger seat is in a forward position.

Even if the passenger sensing system has turned off the front outboard passenger airbag(s), no system is fail-safe. No one can guarantee that an airbag will not deploy under some unusual circumstance, even though the airbag(s) are off.

Secure rear-facing child restraints in a rear seat, even if the airbag(s) are off. If you secure a

(Continued)

Warning (Continued)

forward-facing child restraint in the front outboard passenger seat, always move the seat as far back as it will go. It is better to secure the child restraint in a rear seat.

See *Passenger Sensing System* ⇨ *65* for additional information.

If the child restraint uses a top tether, see *Lower Anchors and Tethers for Children (LATCH System)* ⇨ *77* for top tether anchor locations.

Do not secure a child seat in a position without a top tether anchor if a national or local law requires that the top tether be anchored, or if the instructions that come with the child restraint say that the top strap must be anchored.

In Canada, the law requires that forward-facing child restraints have a top tether, and that the tether be attached.

When using the lap-shoulder belt to secure the child restraint in this position, follow the instructions that came with the child restraint and the following instructions:

1. Move the seat as far back as it will go before securing the forward-facing child restraint. Move the seat upward or the seatback to an upright position, if needed, to get a tight installation of the child restraint.

   When the passenger sensing system has turned off the front outboard passenger frontal airbag and knee airbag, the off indicator on the passenger airbag status indicator should light and stay lit when you start the vehicle. See *Passenger Airbag Status Indicator* ⇨ *101*.

2. Put the child restraint on the seat.

3. Pick up the latch plate, and run the lap and shoulder portions of the vehicle's seat belt through or around the restraint. The child restraint instructions will show you how.

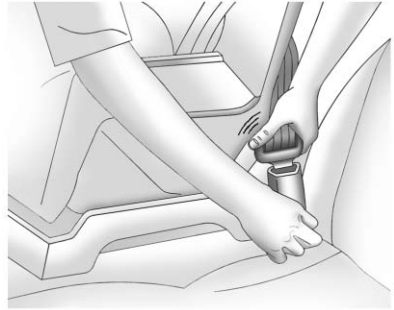

4. Push the latch plate into the buckle until it clicks.

   Position the release button on the buckle, away from the child restraint system, so that the seat belt could be quickly unbuckled if necessary.

5. Pull the shoulder belt all the way out of the retractor to set the lock. When the retractor lock is set, the belt can be tightened but not pulled out of the retractor.

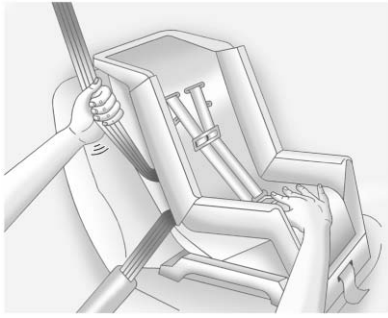

6. To tighten the belt, push down on the child restraint, pull the shoulder portion of the belt to tighten the lap portion of the belt, and feed the shoulder belt back into the retractor. When installing a forward-facing child restraint, it may be helpful to use your knee to push down on the child restraint as you tighten the belt.

   Try to pull the belt out of the retractor to make sure the retractor is locked. If the retractor is not locked, repeat Steps 5 and 6.

7. Before placing a child in the child restraint, make sure it is securely held in place. To check, grasp the child restraint at the seat belt path and attempt to move it side to side and back and forth. When the child restraint is properly installed, there should be no more than 2.5 cm (1 in) of movement.

If the airbags are off, the off indicator in the passenger airbag status indicator will come on and stay on when the vehicle is started.

If a child restraint has been installed and the on indicator is lit, see “If the On Indicator Is Lit for a Child Restraint” under *Passenger Sensing System* ⇨ *65*.

To remove the child restraint, unbuckle the vehicle seat belt and let it return to the stowed position.

Storage

Storage Compartments

Storage Compartments 90
Instrument Panel Storage 90
Glove Box 90
Rear Storage 90
Center Console Storage 92

Storage Compartments

⚠ Warning

Do not store heavy or sharp objects in storage compartments. In a crash, these objects may cause the cover to open and could result in injury.

Instrument Panel Storage

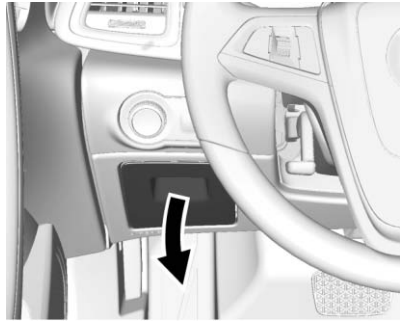

Pull down to open.

Glove Box

Lift up on the lever to open the glove box.

The glove box features a pen holder.

The intermediate shelf can be removed by pulling on the front edge.

To reinstall the shelf, slide it into the side guides and push back until it engages into the rear panel.

Rear Storage

Rear Trunk Partition

The rear trunk partition must be folded out for the convertible top to move. If the partition is not completely folded out, including the pass-through flap behind the rear seats, a warning chime will sound and an EXTEND CARGO SHADE DIC message will display. See *Rear Seats* ⇨ *51*.

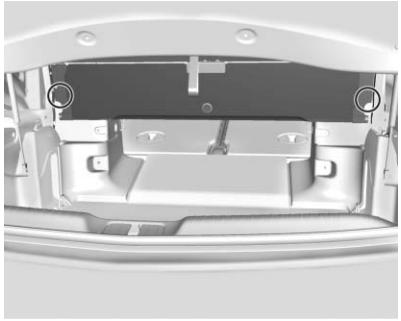

To extend the rear partition, make sure the pass-through flap is folded down in the vertical position then pull the strap downward to the rear.

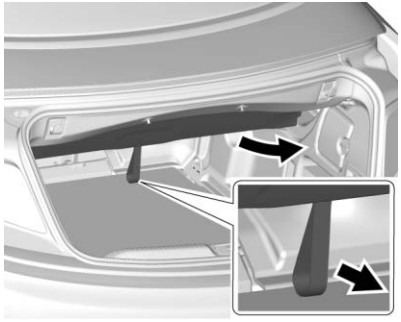

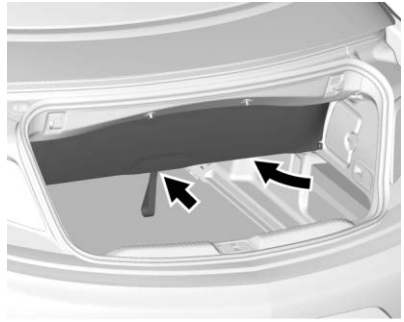

To enlarge the rear storage compartment when the convertible top is closed, the rear storage partition can be folded in. Push upward on the partition near the loop area.

See *Convertible Top* ⇨ *37*.

Shopping Bag Hooks

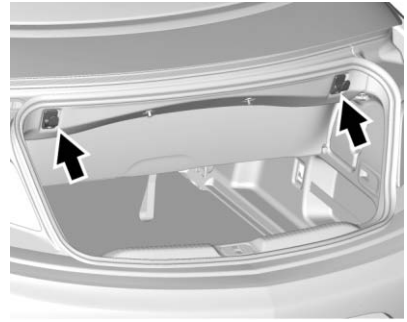

The hooks along the upper edge of the trunk can be used for hanging up to 5 kg (11 lb).

Cargo Tie-Downs

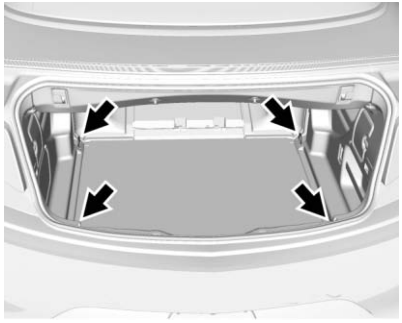

The cargo tie-downs can be used to secure small loads.

Center Console Storage

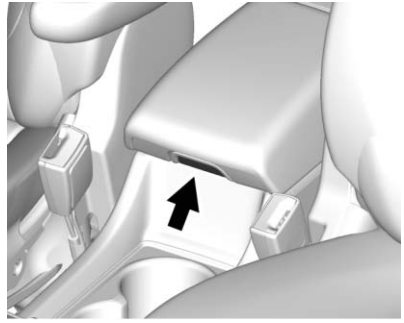

To access the storage, the armrest must be in the rearward position. Press the button and lift.

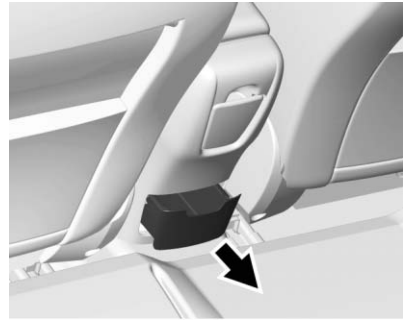

There may be a small storage drawer on the rear of the console.

Instruments and Controls

Controls

Steering Wheel Adjustment 94
Steering Wheel Controls 94
Heated Steering Wheel 94
Horn 94
Windshield Wiper/Washer 94
Compass 96
Clock 96
Power Outlets 96

Warning Lights, Gauges, and Indicators

Warning Lights, Gauges, and Indicators 97
Instrument Cluster 98
Speedometer 99
Odometer 99
Trip Odometer 99
Tachometer 99
Fuel Gauge 99
Engine Coolant Temperature Gauge 100
Seat Belt Reminders 100
Airbag Readiness Light 101
Passenger Airbag Status Indicator 101
Charging System Light 102
Malfunction Indicator Lamp (Check Engine Light) 102
Brake System Warning Light 104
Electric Parking Brake Light 105
Service Electric Parking Brake Light 105
Antilock Brake System (ABS) Warning Light 105
Operate Pedal Light 105
Power Steering Warning Light 106
Lane Departure Warning (LDW) Light 106
Vehicle Ahead Indicator 106
StabiliTrak OFF Light 106
Traction Control System (TCS)/ StabiliTrak Light 107
Tire Pressure Light 107
Engine Oil Pressure Light 107
Low Fuel Warning Light 108
Security Light 108
High-Beam On Light 109
Adaptive Forward Lighting (AFL) Light 109
Front Fog Lamp Light 109
Lamps On Reminder 109
Cruise Control Light 109
Door Ajar Light 110

Information Displays

Driver Information Center (DIC) 110

Vehicle Messages

Vehicle Messages 113
Engine Power Messages 113
Vehicle Speed Messages 114

Vehicle Personalization

Vehicle Personalization 114

Controls

Steering Wheel Adjustment

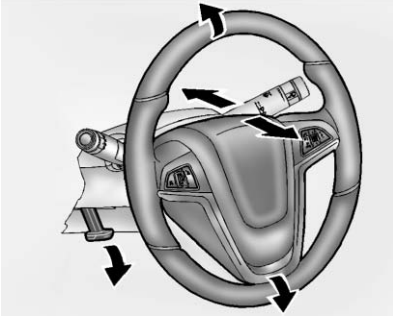

To adjust the steering wheel:

1. Pull the lever down.
2. Move the steering wheel up or down.
3. Pull or push the steering wheel closer or away from you.
4. Lift the lever up to lock the steering wheel in place.

Do not adjust the steering wheel while driving.

Steering Wheel Controls

The infotainment system can be operated by using the steering wheel controls. See "Steering Wheel Controls" in the infotainment manual.

Heated Steering Wheel

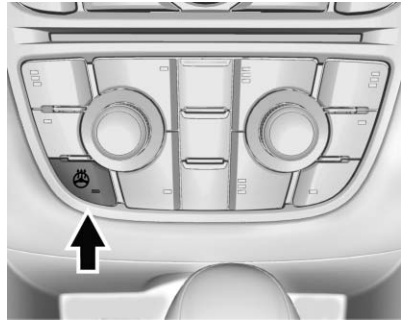

: If equipped with a heated steering wheel, press to turn it on or off. A light on the button displays when the feature is turned on.

The steering wheel takes about three minutes to start heating.

Horn

Press on the steering wheel pad to sound the horn.

Windshield Wiper/Washer

With the ignition on or in ACC/ACCESSORY, move the windshield wiper lever to select the wiper speed.

HI : Use for fast wipes.

LO : Use for slow wipes.

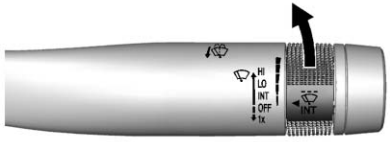

INT : Move the lever up to INT, then turn the INT band up or down for more or less sensitivity to moisture. See “Rainsense” later in this section.

OFF : Use to turn the wipers off.

1X : For a single wipe, briefly move the wiper lever down. For several wipes, hold the wiper lever down.

Clear snow and ice from the wiper blades and windshield before using them. If frozen to the windshield, carefully loosen or thaw them. Damaged blades should be replaced. See *Wiper Blade Replacement* ⇨ *193*.

Heavy snow or ice can overload the wiper motor. See *Electrical System Overload* ⇨ *201*.

Wiper Parking

When using Rainsense wipes, the wipers pause briefly on the windshield. If the wiper lever is moved to OFF or if Rainsense and additional wipes are not required, the wipers may move to the base of the windshield.

If the ignition is turned off while the wipers are on LO, HI, or INT, they will immediately stop.

If the windshield wiper lever is then moved to OFF before the driver door is opened or within 10 minutes, the wipers will restart and move to the base of the windshield.

If the ignition is turned off while the wipers are performing wipes due to windshield washing or Rainsense wipes, the wipers continue to run until they reach the base of the windshield.

Rainsense

A sensor detects the amount of water on the windshield and controls the frequency of the windshield wiper.

INT : Move the windshield wiper lever to INT. Turn the INT band on the wiper lever to adjust the sensitivity.

- Turn the band up for more sensitivity to moisture.
- Turn the band down for less sensitivity to moisture.
- Move the windshield wiper lever out of the INT position to deactivate Rainsense.

Wiper Arm Assembly Protection

If equipped with wiper arm assembly protection, when using an automatic car wash, move the windshield wiper lever to OFF. This disables the automatic Rainsense windshield wipers.

With Rainsense, if the transmission is in N (Neutral) and the vehicle speed is very slow, the wipers will automatically stop at the base of the windshield.

The wiper operations return to normal when the transmission is no longer in N (Neutral) or the vehicle speed has increased.

↓ : Pull the windshield wiper lever toward you to spray windshield washer fluid and activate the wipers. The wipers will continue until the lever is released or the maximum wash time is reached. When the windshield wiper lever is released, additional wipes may occur depending on how long the windshield washer had been activated. See *Washer Fluid* ⇨ *188* for information on filling the windshield washer fluid reservoir.

⚠ Warning

In freezing weather, do not use the washer until the windshield is warmed. Otherwise the washer fluid can form ice on the windshield, blocking your vision.

Compass

The vehicle may have a compass display on the Driver Information Center (DIC). The compass receives its heading and other information from the Global Positioning System (GPS) antenna, StabiliTrak®, and vehicle speed information.

The compass system is designed to operate for a certain number of miles or degrees of turn before needing a signal from the GPS satellites. When the compass display shows CAL, drive the vehicle for a short distance in an open area where it can receive a GPS signal. The compass system will automatically determine when a GPS signal is restored and provide a heading again.

Clock

The infotainment system controls are used to access the time and date settings through the menu system. The clock menu can only be used with the radio while the ignition is turned on or in ACC/ACCESSORY. See “Time and Date Settings” under “Configuration Menu” in the Infotainment Manual.

Power Outlets

The accessory power outlets can be used to plug in electrical equipment, such as a cell phone or MP3 player.

There is one accessory power outlet on the center stack below the climate controls and one on the rear of the center console. These outlets are powered when the ignition is on or in ACC/ACCESSORY, or until the driver door is opened within

10 minutes of turning off the vehicle. See *Retained Accessory Power (RAP)* ⇨ *148*.

Caution
Leaving electrical equipment plugged in for an extended period of time while the vehicle is off will drain the battery. Always unplug electrical equipment when not in use and do not plug in equipment that exceeds the maximum 20 amp rating.

Certain electrical accessories may not be compatible with the accessory power outlet and could overload vehicle or adapter fuses. If a problem is experienced, see your dealer.

When adding electrical equipment, be sure to follow the installation instructions included with the equipment. See *Add-On Electrical Equipment* ⇨ *172*.

Caution
Hanging heavy equipment from the power outlet can cause damage not covered by the vehicle warranty. The power outlets are designed for accessory power plugs only, such as cell phone charge cords.

Warning Lights, Gauges, and Indicators

Warning lights and gauges can signal that something is wrong before it becomes serious enough to cause an expensive repair or replacement. Paying attention to the warning lights and gauges could prevent injury.

Some warning lights come on briefly when the engine is started to indicate they are working. When one of the warning lights comes on and stays on while driving, or when one of the gauges shows there may be a problem, check the section that explains what to do. Waiting to do repairs can be costly and even dangerous.

Instrument Cluster

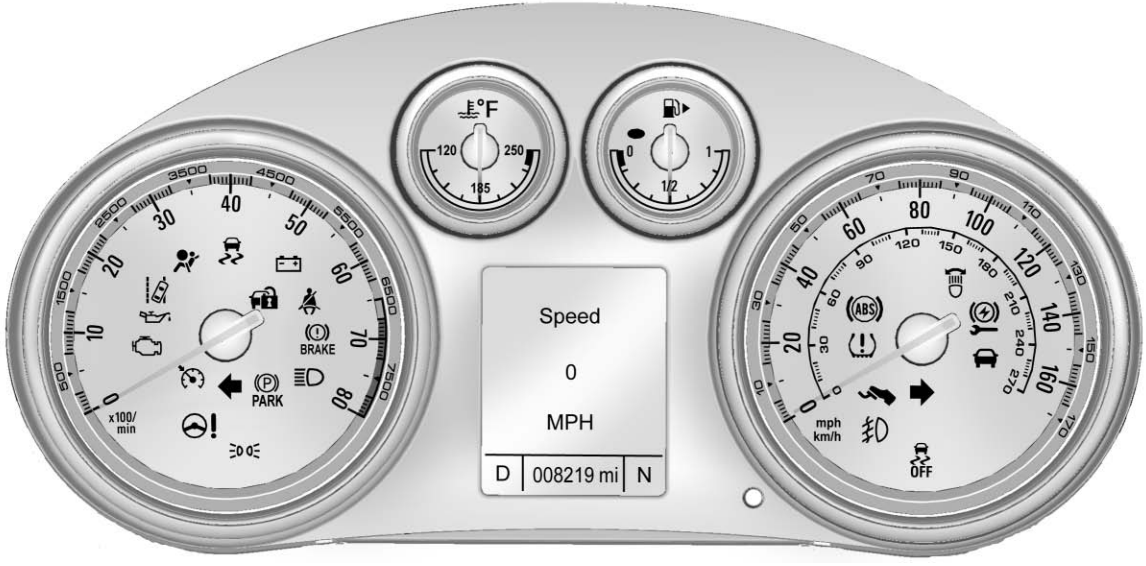

Speedometer

The speedometer shows the vehicle speed in kilometers per hour (km/h) and miles per hour (mph).

Odometer

The odometer shows how far the vehicle has been driven, in either kilometers or miles.

Trip Odometer

The trip odometer shows how far the vehicle has been driven since the trip odometer was last reset.

The trip odometer is accessed and reset through the Driver Information Center (DIC). See *Driver Information Center (DIC)* ⇨ *110*.

Tachometer

The tachometer displays the engine speed in revolutions per minute (rpm).

Caution

If the engine is operated with the rpm's in the warning area at the high end of the tachometer, the vehicle could be damaged, and the damage would not be covered by the vehicle warranty. Do not operate the engine with the rpm's in the warning area.

Fuel Gauge

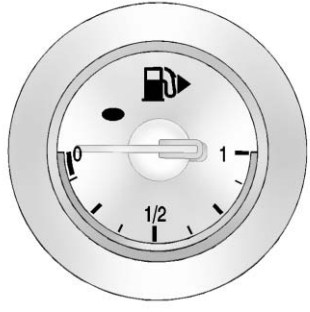

When the ignition is on, the fuel gauge tells you about how much fuel you have left in your tank.

An arrow on the fuel gauge indicates the side of the vehicle the fuel door is on.

When the fuel is low, a message may appear in the Driver Information Center (DIC), and a chime will sound.

Here are four things that some owners ask about. None of these show a problem with your fuel gauge:

- At the service station, the fuel pump shuts off before the gauge reads full.
- It takes a little more or less fuel to fill up than the gauge indicated. For example, the gauge may have indicated the tank was half full, but it actually took a little more or less than half the tank's capacity to fill the tank.
- The gauge moves a little while turning a corner or speeding up.

- The gauge takes a few seconds to stabilize after the ignition is turned on, and will go back to empty when the ignition is turned off.

Engine Coolant Temperature Gauge

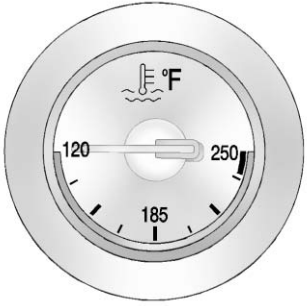

This gauge shows the engine coolant temperature.

If the indicator needle moves to the hot side of the gauge toward the shaded area, the engine is too hot.

If the vehicle has been operated under normal driving conditions, pull off the road, stop the vehicle, and turn off the engine as soon as possible.

Seat Belt Reminders

Driver Seat Belt Reminder Light

There is a driver seat belt reminder light on the instrument cluster.

When the vehicle is started, this light flashes and a chime may come on to remind the driver to fasten their seat belt. Then the light stays on solid until the belt is buckled. This cycle may continue several times if the driver remains or becomes unbuckled while the vehicle is moving.

If the driver seat belt is buckled, neither the light nor the chime comes on.

Passenger Seat Belt Reminder Light

There is a passenger seat belt reminder light near the passenger airbag status indicator. See *Passenger Sensing System* ⇨ *65*.

When the vehicle is started, this light flashes and a chime may come on to remind passengers to fasten their seat belt. Then the light stays on solid until the belt is buckled. This cycle continues several times if the passenger remains or becomes unbuckled while the vehicle is moving.

If the passenger seat belt is buckled, neither the chime nor the light comes on.

The front passenger seat belt reminder light and chime may turn on if an object is put on the seat such as a briefcase, handbag, grocery bag, laptop, or other electronic device. To turn off the reminder light and/or chime, remove the object from the seat or buckle the seat belt.

Airbag Readiness Light

This light shows if there is an electrical problem with the airbag system. The system check includes the airbag sensor(s), passenger sensing system, the pretensioners, the airbag modules, the roll bars, the wiring, and the crash sensing and diagnostic module. For more information on the airbag system, see *Airbag System* ⇨ *59*.

The airbag readiness light comes on for several seconds when the vehicle is started. If the light does not come on then, have it fixed immediately.

⚠ Warning

If the airbag readiness light stays on after the vehicle is started or comes on while driving, it means the airbag system might not be working properly. The airbags in the vehicle might not inflate in a crash, or they could even inflate without a crash. To help avoid injury, have the vehicle serviced right away.

Passenger Airbag Status Indicator

The vehicle has a passenger sensing system. See *Passenger Sensing System* ⇨ *65* for important safety information. The center stack has a passenger airbag status indicator.

When the vehicle is started, the passenger airbag status indicator will light ON and OFF for several seconds as a system check. Then, after several seconds, the status indicator will light either ON or OFF to let you know the status of the front outboard passenger frontal airbag and knee airbag.

If the word ON is lit on the passenger airbag status indicator, it means that the front outboard passenger frontal airbag and knee airbag are allowed to inflate.

If the word OFF is lit on the passenger airbag status indicator, it means that the passenger sensing system has turned off the front outboard passenger frontal airbag and passenger knee airbag.

If, after several seconds, both status indicator lights remain on, or if there are no lights at all, there may be a problem with the lights or the passenger sensing system. See your dealer for service.

⚠ Warning

If the airbag readiness light ever comes on and stays on, it means that something may be wrong with the airbag system. To help avoid injury to yourself or others, have the vehicle serviced right away. See *Airbag Readiness Light* ⇨ *101* for more information, including important safety information.

Charging System Light

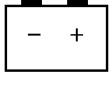

The charging system light comes on briefly when the ignition is turned on, but the engine is not running, as a check to show the light is working. The light turns off when the engine is started. If it does not, have the vehicle serviced by your dealer.

If the light stays on, or comes on while driving, there could be a problem with the electrical charging system. Have it checked by your dealer. Driving while this light is on could drain the battery.

If a short distance must be driven with the light on, be sure to turn off all accessories, such as the radio and air conditioner.

Malfunction Indicator Lamp (Check Engine Light)

This light is part of the vehicle's emission control on-board diagnostic system. If this light is on while the engine is running, a malfunction has been detected and the vehicle may require service. The light should come on to show that it is working when the ignition is on with the engine not running. See *Ignition Positions* ⇨ *145*.

Malfunctions are often indicated by the system before any problem is noticeable. Being aware of the light and seeking service promptly when it comes on may prevent damage.

Caution

If the vehicle is driven continually with this light on, the emission control system may not work as well, the fuel economy may be lower, and the vehicle may not run smoothly. This could lead to costly repairs that might not be covered by the vehicle warranty.

Caution

Modifications to the engine, transmission, exhaust, intake, or fuel system, or the use of replacement tires that do not meet the original tire specifications, can cause this light to come on. This could lead to costly repairs not covered by the vehicle warranty. This could also affect the vehicle's ability to pass an Emissions Inspection/ Maintenance test. See *Accessories and Modifications* ⇨ *175*.

If the light is flashing : A malfunction has been detected that could damage the emission control system and increase vehicle emissions. Diagnosis and service may be required.

To help prevent damage, reduce vehicle speed and avoid hard accelerations and uphill grades.

If the light continues to flash, find a safe place to park. Turn the vehicle off and wait at least 10 seconds before restarting the engine. If the light is still flashing, follow the previous guidelines and see your dealer for service as soon as possible.

If the light is on steady : A malfunction has been detected. Diagnosis and service may be required.

Check the following:

- A loose or missing fuel cap may cause the light to come on. See *Filling the Tank* ⇨ *169*. A few driving trips with the cap properly installed may turn the light off.
- Poor fuel quality can cause inefficient engine operation and poor driveability, which may go away once the engine is warmed up. If this occurs, change the fuel brand. It may require at least one full tank of the proper fuel to turn the light off. See *Fuel* ⇨ *167*.

If the light remains on, see your dealer.

Emissions Inspection and Maintenance Programs

If the vehicle requires an Emissions Inspection/Maintenance test, the test equipment will likely connect to the vehicle's Data Link Connector (DLC).

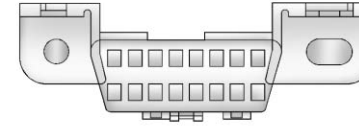

The DLC is under the instrument panel to the left of the steering wheel. Connecting devices that are not used to perform an Emissions Inspection/Maintenance test or to service the vehicle may affect vehicle operation. See *Add-On Electrical Equipment* ⇨ *172*. See your dealer if assistance is needed.

The vehicle may not pass inspection if:

- The light is on when the engine is running.
- The light does not come on when the ignition is on with the engine not running.
- Critical emission control systems have not been completely diagnosed. If this happens, the vehicle would not be ready for inspection and might require several days of routine driving before the system is ready for inspection. This can happen if the 12-volt battery has recently been replaced or run down, or if the vehicle has been recently serviced.

See your dealer if the vehicle will not pass or cannot be made ready for the test.

Brake System Warning Light

The vehicle brake system consists of two hydraulic circuits. If one circuit is not working, the remaining circuit can still work to stop the vehicle. For normal braking performance, both circuits need to be working.

The brake system warning light will come on when there is a brake problem.

If the warning light stays on, have the vehicle inspected by your dealer right away.

BRAKE

This light should come on briefly when the engine is started. If it does not come on then, have it fixed so it will be ready to warn you if there is a problem.

⚠ Warning

The brake system might not be working properly if the brake system warning light is on. Driving with the brake system warning light on can lead to a crash. If the light is still on after the vehicle has been pulled off the road and carefully stopped, have the vehicle towed for service.

If the light comes on while driving, a chime sounds. Pull off the road and stop. The pedal might be harder to push or go closer to the floor. It might also take longer to stop. If the light is still on, have the vehicle towed for service. See *Towing the Vehicle* ⇨ *238*.

Electric Parking Brake Light

The parking brake status light comes on when the brake is applied. If the light continues flashing after the parking brake is released, or while driving, there is a problem with the Electric Parking Brake (EPB) system.

If the light does not come on, or remains flashing, see your dealer.

Service Electric Parking Brake Light

The parking brake warning light should come on briefly when starting the vehicle. If it does not come on, have it fixed so it will be ready to warn if there is a problem.

If this light stays on, there is a problem with the Electric Parking Brake (EPB) system or another system on the vehicle that is causing the parking brake system to work at a reduced level. The vehicle can still be driven, but should be taken to a dealer as soon as possible. See the information for the EPB under *Electric Parking Brake* ⇨ *155*.

Antilock Brake System (ABS) Warning Light

The Antilock Brake System (ABS) light comes on briefly when the engine is started.

If the light does not come on, have the vehicle serviced by your dealer.

If the ABS light comes on and stays on while driving, stop as soon as possible and turn the ignition off. Start the engine again to reset the system. If the light stays on after driving at a speed above 20 km/h (13 mph), see your dealer for service. A chime may also sound when the light comes on steady.

If the regular brake system warning light is not on, the vehicle still has brakes, but not antilock brakes.
If the regular brake system warning light is also on, the vehicle does not have antilock brakes and there is a problem with the regular brakes. See *Brake System Warning Light* ⇨ *104*.

Operate Pedal Light

This light comes on when the brake pedal needs to be applied to release the Electric Parking Brake (EPB).

Power Steering Warning Light

This light comes on briefly when the ignition is turned on as a check to show it is working.

If it does not come on have the vehicle serviced by your dealer.

If this light stays on, or comes on while driving, the system may not be working. If this happens, see your dealer for service.

Lane Departure Warning (LDW) Light

If equipped, this light comes on briefly while starting the vehicle. If it does not come on, have the vehicle serviced.

This light is green if LDW is on and ready to operate.

This light changes to amber and flashes to indicate that the lane marking has been crossed without using a turn signal in that direction.

See *Lane Departure Warning (LDW)* ⇨ *166*.

Vehicle Ahead Indicator

If equipped, this indicator will display green when a vehicle is detected ahead.

See *Forward Collision Alert (FCA) System* ⇨ *164*.

StabiliTrak OFF Light

This light comes on briefly while starting the engine. If it does not, have the vehicle serviced by your dealer.

This light comes on when the StabiliTrak system is turned off. If StabiliTrak is off, the Traction Control System (TCS) is also off.

If StabiliTrak and TCS are off, the system does not assist in controlling the vehicle. Turn on the TCS and the StabiliTrak systems, and the warning light turns off.

See *Traction Control/Electronic Stability Control* ⇨ *157*.

Traction Control System (TCS)/StabiliTrak Light

This light comes on briefly when the engine is started.

If the light does not come on, have the vehicle serviced by your dealer. If the system is working normally, the indicator light turns off.

If the light is on and not flashing, the TCS and potentially the StabiliTrak system have been disabled. A Driver Information Center (DIC) message may display. Check the DIC messages to determine which feature(s) is no longer functioning and whether the vehicle requires service.

If the light is on and flashing, the TCS and/or the StabiliTrak system is actively working.

See *Traction Control/Electronic Stability Control* ⇨ *157*.

Tire Pressure Light

For vehicles with the Tire Pressure Monitor System (TPMS), this light comes on briefly when the engine is started. It provides information about tire pressures and the TPMS.

When the Light Is On Steady

This indicates that one or more of the tires are significantly underinflated.

Stop as soon as possible, and inflate the tires to the pressure value shown on the Tire and Loading Information label. See *Tire Pressure* ⇨ *216*.

When the Light Flashes First and Then Is On Steady

If the light flashes for about a minute and then stays on, there may be a problem with the TPMS. If the problem is not corrected, the light will come on at every ignition cycle. See *Tire Pressure Monitor Operation* ⇨ *218*.

Engine Oil Pressure Light

Caution
Lack of proper engine oil maintenance can damage the engine. Driving with the engine oil (Continued)

Caution (Continued)

low can also damage the engine. The repairs would not be covered by the vehicle warranty. Check the oil level as soon as possible. Add oil if required, but if the oil level is within the operating range and the oil pressure is still low, have the vehicle serviced. Always follow the maintenance schedule for changing engine oil.

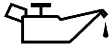

This light should come on briefly as the engine is started. If it does not come on, have the vehicle serviced by your dealer.

If the light comes on and stays on, it means that oil is not flowing through the engine properly. The vehicle could be low on oil and might have some other system problem. See your dealer.

Low Fuel Warning Light

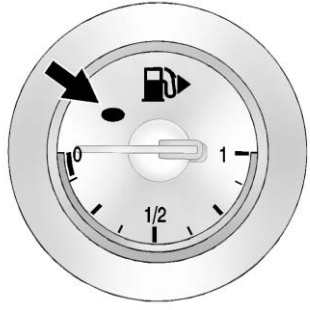

This light comes on for a few seconds when the ignition is turned on as a check to indicate it is working. If it does not come on, have it fixed.

The low fuel warning light comes on and a chime sounds when the vehicle is low on fuel. The light turns off when fuel is added to the fuel tank.

Security Light

The security light should come on briefly as the engine is started. If it does not come on, have the vehicle serviced by your dealer. If the system is working normally, the indicator light turns off.

If the light stays on and the engine does not start, there could be a problem with the theft-deterrent system. See *Immobilizer Operation* ⇨ *32*.

High-Beam On Light

The high-beam on light comes on when the high-beam headlamps are in use.

See *Headlamp High/Low-Beam Changer* ⇨ *121* for more information.

Adaptive Forward Lighting (AFL) Light

This light should come on briefly as the vehicle is started. If it does not come on, have the vehicle serviced by your dealer.

This light comes on solid when there is a problem with the AFL system. It flashes when the system is switching between lighting modes. See *Adaptive Forward Lighting (AFL)* ⇨ *122*.

Front Fog Lamp Light

If equipped, this light comes on when the fog lamps are on.

The light goes out when the fog lamps are turned off. See *Fog Lamps* ⇨ *124*.

Lamps On Reminder

This light comes on when the exterior lamps are in use. See *Exterior Lamp Controls* ⇨ *120*.

Cruise Control Light

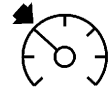

For vehicles with cruise control, the cruise control light is white when the cruise control is on and ready, and turns green when the cruise control is set and active.

The light turns off when the cruise control is turned off. See *Cruise Control* ⇨ *159*.

Door Ajar Light

If equipped, this light comes on when a door is open or not securely latched. Before driving, check that all doors are properly closed.

Information Displays

Driver Information Center (DIC)

The DIC displays information about the vehicle. It also displays warning messages if a system problem is detected. See *Vehicle Messages* ⇨ *113*. All messages appear in the DIC display in the center of the instrument cluster.

DIC Operation and Displays

The DIC has different displays which can be accessed by using the DIC buttons on the turn signal lever. The DIC displays trip, fuel, and vehicle system information, and warning messages if a system problem is detected.

The bottom of the DIC display shows the position of the shift lever and the odometer. It may also show the direction the vehicle is driving.

DIC Buttons

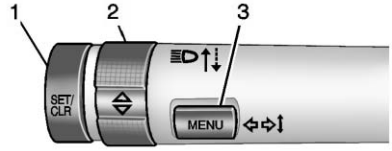

1. **SET/CLR:** Press to set, or press and hold to clear, the menu item displayed.
2. △ / ▽**:** Use to scroll through the items in each menu. A small marker will move across the bottom of the page as you scroll through the items. This shows where each page is in the menu.
3. **MENU:** Press to get to the Trip/Fuel Menu and the Vehicle Information Menu. This button is also used to return to or exit the last screen displayed on the DIC.

Trip/Fuel Menu Items

Press MENU on the turn signal lever until the Trip/Fuel Menu is displayed. Use △ / ▽ to scroll through the following menu items:

- Digital Speedometer
- Trip 1
- Trip 2
- Fuel Range
- Average Fuel Economy
- Instantaneous Fuel Economy
- Average Vehicle Speed
- Timer
- Navigation

Digital Speedometer

The speedometer shows how fast the vehicle is moving in either kilometers per hour (km/h) or miles per hour (mph). The speedometer cannot be reset.

Trip 1 and Trip 2

These displays show the current distance traveled, in either kilometers (km) or miles (mi), since the last reset for the trip odometer. The trip odometer can be reset to zero by pressing SET/CLR, or the trip odometer reset stem in the instrument cluster, while the trip odometer display is showing.

Fuel Range

This display shows the approximate distance the vehicle can be driven without refueling. The fuel range estimate is based on an average of the vehicle's fuel economy over recent driving history and the amount of fuel remaining in the fuel tank. Fuel range cannot be reset.

Average Fuel Economy

This display shows the approximate average liters per 100 kilometers (L/100 km) or miles per gallon (mpg). Average fuel economy is calculated based on the number of L/100 km (mpg) recorded since the last time this menu item was reset. This number reflects only the approximate average fuel economy that the vehicle has right now, and will change as driving conditions change. The average fuel economy can be reset by pressing SET/CLR while the Average Fuel Economy display is showing.

Instantaneous Fuel Economy

The instantaneous fuel economy display shows the current fuel economy in liters per 100 kilometers (L/100 km) or miles per gallon (mpg). The instantaneous fuel economy reflects only the current approximate fuel economy, and changes frequently as driving conditions change. Unlike average economy, this display cannot be reset.

Average Vehicle Speed

This display shows the average speed of the vehicle in kilometers per hour (km/h) or miles per hour (mph). This average is calculated based on the various vehicle speeds recorded since the last reset of this value. The average

speed can be reset by pressing SET/CLR while the Average Vehicle Speed display is showing.

Timer

This display can be used as a timer. To start the timer, press SET/CLR while Timer is displayed. The display will show the amount of time that has passed since the timer was last reset, not including time the ignition is off. Time will continue to be counted as long as the ignition is on, even if another display is being shown on the DIC. The timer will record up to 99 hours, 59 minutes, and 59 seconds (99:59:59) after which the display will return to zero. To stop the timer, press SET/CLR briefly while Timer is displayed. To reset the timer to zero, press and hold SET/CLR.

Navigation

If equipped, this display is used for the Navigation System Turn-by-Turn guidance.

Vehicle Information Menu Items

Press MENU on the turn signal lever until the Vehicle Information Menu is displayed. Use △ / ▽ to scroll through the following menu items:

- Unit
- Tire Pressure
- Remaining Oil Life
- Battery Voltage

Unit

Press SET/CLR to set.

Move △ / ▽ to switch between metric or US when the set Unit display is active. Press SET/CLR to confirm the setting. This will change the displays on the cluster and DIC to either metric or English (US) measurements.

Tire Pressure

The display will show a vehicle with the approximate pressures of all four tires. Tire pressure is displayed in either kilopascal (kPa) or pounds per square inch (psi). See *Tire Pressure Monitor System* ⇨ *217* and *Tire Pressure Monitor Operation* ⇨ *218*.

Remaining Oil Life

This display shows an estimate of the oil's remaining useful life. If REMAINING OIL LIFE 99% is displayed, that means 99% of the current oil life remains.

When the remaining oil life is low, the CHANGE ENGINE OIL SOON message will appear on the display. The oil should be changed as soon as possible. See *Engine Oil* ⇨ *179*. In addition to the engine oil life system monitoring the oil life, additional maintenance is recommended. See *Maintenance Schedule* ⇨ *252*.

Remember, the Remaining Oil Life display must be reset after each oil change. It will not reset itself. Also, be careful not to reset the Remaining Oil Life display accidentally at any time other than when the oil has just been changed. It cannot be reset accurately until the next oil change. To reset the engine oil life system, press SET/CLR while the Remaining Oil Life display is active. See *Engine Oil Life System* ⇨ *181*.

Battery Voltage

This display shows the current battery voltage. If the voltage is in the normal range, the value will display. For example, the display may read Battery Voltage 15.0 Volts. The vehicle's charging system regulates voltage based on the state of the battery. The battery voltage can fluctuate while viewing this information on the DIC. This is normal. See *Charging System Light* ⇨ *102*.

Vehicle Messages

Messages displayed on the DIC indicate the status of the vehicle or some action that may be needed to correct a condition. Multiple messages may display one after the other.

The messages that do not require immediate action can be acknowledged and cleared by pressing SET/CLR. The messages that require immediate action cannot be cleared until that action is performed. All messages should be taken seriously and clearing the messages does not correct the problem.

Follow the instructions given in the messages. The system displays messages regarding the following topics:

- Service Messages
- Fluid Levels
- Vehicle Security
- Brakes
- Ride Control Systems
- Driver Assistance Systems
- Cruise Control
- Lighting and Bulb Replacement
- Wiper/Washer Systems
- Doors and Windows
- Convertible Top
- Seat Belts
- Airbag Systems
- Engine and Transmission
- Tire Pressure
- Battery

Engine Power Messages

ENGINE POWER IS REDUCED

This message displays when the vehicle's propulsion power is reduced. Reduced propulsion power can affect the vehicle's ability to accelerate. If this message is on, but there is no observed reduction in performance, proceed to your destination. The performance may be reduced the next time the vehicle is driven. The vehicle may be driven

while this message is on, but maximum acceleration and speed may be reduced. Anytime this message stays on, or displays repeatedly, the vehicle should be taken to your dealer for service as soon as possible.

Vehicle Speed Messages

SPEED LIMITED TO XXX KM/H (MPH)

This message shows that the vehicle speed has been limited to the speed displayed. The limited speed is a protection for various propulsion and vehicle systems, such as lubrication, thermal, suspension, Teen Driver if equipped, or tires.

Vehicle Personalization

Use the audio system controls to access the personalization menus for customizing vehicle features.

The following are all possible personalization features. Depending on the vehicle, some may not be available.

Infotainment System Audio System Controls

Using the Center Stack Controls

Knob

- Press the outer diameter (chrome ring) to enter, select, or activate a highlighted menu option.
- Turn to highlight a menu option.
- Press the outer diameter (chrome ring) to enable or disable a system setting.

BACK

- Press to exit a menu.
- Press to return to a previous screen.

Using the Infotainment Display

Touch a screen feature to:

- View more feature options.
- Enable or disable the feature.

△ **:** Touch to scroll up.

▽ **:** Touch to scroll down.

Back : Touch to return to the previous menu.

To access the personalization menu:

1. Touch Config on the Home Page of the infotainment display or press CONFIG on the center stack.
2. Select the desired feature to display a list of available options.
3. Select the desired feature setting.

Personalization Menus

The following list of menu items may be available:

- Languages
- Time and Date
- Radio Settings
- Phone Settings
- Navigation Settings
- Display Settings
- Vehicle Settings

Each menu is detailed in the following information.

Languages

Select Languages, then select from the available language(s).

Time and Date

Manually set the time and date. See *Clock* ⇨ *96*.

Radio Settings

Select and the following may display:

- Auto Volume
- Gracenote Options
- SXM Channel Art
- Max Startup Volume
- Number of Favorites Pages
- SXM Categories
- Software Versions Menu

Auto Volume

This feature adjusts the volume to minimize the effects of unwanted background noise that can result from changing road surfaces, driving speeds, or open windows. This feature works best at lower volume settings where background noise is typically louder than the sound system volume.

Select Off, Low, Medium, or High.

Gracenote Options

Select and the following may display:

- Normalization

Normalization

This feature improves voice recognition and media groupings. See “Configuration Menu” in the Infotainment Manual.

Select to enable or disable.

SXM Channel Art

This feature turns the SXM Audio page background on the SXM Channel display on and off.

Select to enable or disable.

Max Startup Volume

This feature sets the maximum startup volume. If the vehicle is started and the volume is greater than this level, the volume is adjusted to this level.

Touch + or − to increase or decrease the volume.

Number of Favorite Pages

Select to set the number of favorite pages to display.

Select the desired number.

SXM Categories

This allows which available SXM Categories are used and displayed.

Select to enable or disable available categories.

Software Versions Menu

Select to display information about the system and update software if available.

Phone Settings

Select and the following may display:

- Bluetooth

Bluetooth

Select and the following may display:

- Device List
- Pair Device

Device List

Select to connect to a different phone source, disconnect a phone, or delete a phone.

Pair Device

Select to pair a new device. See “Bluetooth” in the Infotainment Manual.

Navigation Settings

See “Configuration Menu” in the Infotainment Manual.

Display Settings

Select and the following may display:

- Home Page Menu
- Rear Camera Options
- Display Off
- Map Settings

Home Page Menu

Select and the following may display:

- Customize
- Sort
- Restore Home Page Defaults

Customize

This feature allows the selection of what icons will be on the first Home Page.

Select and follow the screen prompts.

Sort

This feature allows the icons on the Home Page to be moved.

Select and follow the screen prompts.

Restore Home Page Defaults

This feature will restore the Home Page to the factory settings.

Select and follow the screen prompts.

Rear Camera Options

Select and the following may display:

- Symbols
- Guide Lines

Symbols

See *Assistance Systems for Parking or Backing* ⇨ *162*.

Select to enable or disable.

Guide Lines

See *Assistance Systems for Parking or Backing* ⇨ *162*.

Select to enable or disable.

Display Off

Select to turn the display off. The display will return when any controls on the radio center stack are pressed or the infotainment screen is touched.

Map Settings

See “Map Settings” in the infotainment manual.

Vehicle Settings

Select and the following may display:

- Climate and Air Quality
- Comfort and Convenience
- Collision Detection Systems
- Lighting
- Power Door Locks
- Remote Lock/Unlock/Start
- Return to Factory Settings?

Climate and Air Quality

Select and the following may display:

- Auto Fan Speed
- Remote Start Auto Heat Seat
- Auto Rear Defog

Auto Fan Speed

Choose the blower speed setting.

Select High, Medium, or Low.

Remote Start Auto Heat Seat

When on, this feature will turn the heated seats on when using remote start on cold days.

Select to enable or disable.

Auto Rear Defog

When on, this feature turns on the rear window defogger at vehicle start when the interior temperature is cold and fog is likely. The auto rear defog function can be disabled by selecting . When off, the feature can be turned on by selecting . See “Rear Window Defogger” under *Dual Automatic Climate Control System* ⇨ *129*.

Select to enable or disable.

Comfort and Convenience

Select and the following may display:

- Chime Volume
- Button Chime

Chime Volume

This allows the selection of the chime volume level.

Select Low or High.

Button Chime

This allows the Button Chime feature to be turned on or off.

Select to enable or disable.

Collision Detection Systems

Select and the following may display:

- Park Assist

Park Assist

This allows the Parking Assist feature to be turned on or off.

Select Off or On.

Lighting

Select and the following may display:

- Vehicle Locator Lights
- Exit Lighting

Vehicle Locator Lights

This allows the vehicle locator lights to be turned on or off.

Select to enable or disable.

Exit Lighting

This allows the selection of how long the exterior lamps stay on when leaving the vehicle when it is dark outside.

Select Off, 30 Seconds, 1 Minute, or 2 Minutes.

Power Door Locks

Select and the following may display:

- Open Door Anti Lock Out
- Auto Door Unlock
- Delay Door Lock

Open Door Anti Lock Out

When on, this feature will keep the driver door from locking until the door is closed. If this feature is turned on, the Delay Door Lock menu will not be available.

Select to enable or disable.

Auto Door Unlock

This allows selection of which doors will automatically unlock when the vehicle is shifted into P (Park).

Select All Doors, Driver Door, or Off.

Delay Door Lock

When on, this feature will delay the locking of the doors. See *Delayed Locking* ⇨ *28*.

Select to enable or disable.

Remote Lock/Unlock/Start

Select and the following may display:

- Remote Unlock Feedback
- Remote Lock Feedback
- Remote Door Unlock

Remote Unlock Feedback

When on, the exterior lamps will flash when unlocking the vehicle with the RKE transmitter.

Select Flash Lights or Off.

Remote Lock Feedback

This allows selection of what feedback is provided when unlocking the vehicle with the RKE transmitter.

Select Lights and Horn, Lights Only, Horn Only, or Off.

Remote Door Unlock

This allows selection of which doors will unlock on the first press of 🔓 on the RKE transmitter. If Driver Door

is selected, all doors will unlock on the second press of 🔓 within five seconds of the prior press.

Select Driver Door or All Doors.

Return to Factory Settings?

This returns all of the vehicle personalization settings to the factory settings.

Select Yes or No.

Lighting

Exterior Lighting
Exterior Lamp Controls 120
Headlamp High/Low-Beam Changer 121
Flash-to-Pass 121
Daytime Running Lamps (DRL) 121
Automatic Headlamp System 122
Adaptive Forward Lighting (AFL) 122
Headlamp Leveling Control . . . 123
Hazard Warning Flashers 123
Turn and Lane-Change Signals 123
Fog Lamps 124

Interior Lighting
Instrument Panel Illumination Control 124
Courtesy Lamps 125
Dome Lamps 125
Reading Lamps 125

Lighting Features
Entry Lighting 125
Exit Lighting 125
Battery Load Management . . . 126
Battery Power Protection 126
Exterior Lighting Battery Saver 126

Exterior Lighting

Exterior Lamp Controls

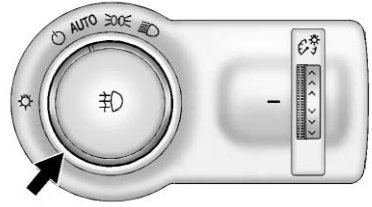

The exterior lamp control is to the left of the steering column on the instrument panel.

There are four positions:

⏻ **:** Turns the exterior lamps off and deactivates the AUTO mode. Turn to ⏻ again to reactivate the AUTO mode.

In Canada, the headlamps will automatically reactivate when the vehicle is shifted out of P (Park).

AUTO : Turns the headlamps on automatically at normal brightness, together with the parking lamps,

taillamps, license plate lamps, instrument panel lights, and sidemarker lamps.

: Turns on the parking lamps including all lamps, except the headlamps.

: Turns on the headlamps together with the parking lamps and instrument panel lights. A warning chime sounds if the driver door is opened when the ignition is off and the headlamps are on.

: If equipped, press to turn the fog lamps on or off. See *Fog Lamps* ⇨ *124*.

When the lights are on, will be lit. See *Lamps On Reminder* ⇨ *109*.

Headlamp High/ Low-Beam Changer

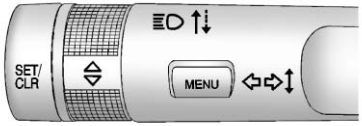

: Push the turn signal lever away from you and release to turn the high beams on.

To return to low beams, push the lever again or pull it toward you and release.

This indicator light turns on in the instrument cluster when the high-beam headlamps are on.

Flash-to-Pass

To flash the high beams, pull the turn signal lever all the way toward you. Then release it.

Daytime Running Lamps (DRL)

DRL can make it easier for others to see the front of your vehicle during the day. Fully functional DRL are required on all vehicles first sold in Canada.

The dedicated DRL will come on when all of the following conditions are met:

- The ignition is on.
- The exterior lamp control is in AUTO.
- The vehicle is not in P (Park).

The headlamps automatically change from DRL to the regular headlamps depending on the darkness of the surroundings and information provided by the rain sensor. The other lamps that come on with the headlamps will also come on.

When it is bright enough outside, the headlamps go off and the DRL come on.

The DRL turn off when the headlamps are turned to ⏻ or the ignition is off.

For vehicles first sold in Canada, the DRL can only be turned off when the vehicle is parked.

Automatic Headlamp System

When it is dark enough outside and the exterior lamp control is in the automatic position and the engine is running, the headlamps come on automatically. See *Exterior Lamp Controls* ⇨ *120*.

The system may also turn on the headlamps when driving through a parking garage or tunnel.

If the vehicle is started in a dark garage, the automatic headlamp system comes on immediately. If it is light outside when the vehicle leaves the garage, there is a slight delay before the automatic headlamp system changes to the DRL. During that delay, the instrument cluster may not be as bright as usual. Make sure the instrument panel brightness control is in the full bright position. See *Instrument Panel Illumination Control* ⇨ *124*.

Lights On with Wipers

If the windshield wipers are activated in daylight with the engine on, and the exterior lamp control is in AUTO, the headlamps, parking lamps, and other exterior lamps come on. The transition time for the lamps coming on varies based on wiper speed. When the wipers are not operating, these lamps turn off. Move the exterior lamp control to ⏻ or ≡DO≡ to disable this feature.

Adaptive Forward Lighting (AFL)

The AFL system adjusts the headlamps to provide greater road illumination in various driving conditions.

To enable AFL, set the exterior lamp control to the AUTO position. Moving the control out of the AUTO position will deactivate the system. AFL will operate when the vehicle speed is greater than 3 km/h (2 mph). AFL will not operate when the transmission is in R (Reverse). AFL is not immediately operable after starting the vehicle; driving a short distance is required to calibrate the AFL. See *Exterior Lamp Controls* ⇨ *120*.

Curve Lighting

The light beam pivots based on the steering wheel position and vehicle speed of at least 10 km/h (6 mph). The headlamps shine at an angle of up to 15 degrees to the right or left of the direction of travel.

Corner Lighting

On tight bends or when making a turn, depending on the steering angle or the turn signal lamp, an additional left or right reflector is turned on to illuminate the road at a right angle to the direction of travel. It is activated up to a speed of 40 km/h (25 mph).

Reversing Function

If the headlamps are on and the shift lever is in R (Reverse), both corner lights are turned on. They remain on for 20 seconds after moving the shift lever out of R (Reverse) or until the vehicle is driving forward faster than 16 km/h (10 mph).

Headlamp Leveling Control

The level of the headlamps is adjusted automatically based on vehicle load.

Hazard Warning Flashers

⚠ **:** Press to make the front and rear turn signal lamps flash on and off. This warns others that you are having trouble. Press again to turn the flashers off.

In the event of an accident with airbag deployment the hazard warning flashers are activated automatically.

Turn and Lane-Change Signals

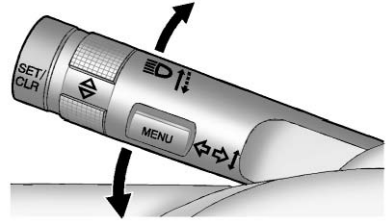

Move the lever all the way up or down to signal a turn.

An arrow on the instrument cluster will flash in the direction of the turn or lane change.

Raise or lower the lever until the arrow starts to flash to signal a lane change. The turn signal flashes three times.

The lever returns to its starting position when it is released.

If after signaling a turn or lane change the arrow flashes rapidly or does not come on, a signal bulb may be burned out. Replace any

burned out bulbs. If a bulb is not burned out, check the fuse. See *Fuses and Circuit Breakers* ⇨ *202*.

Fog Lamps

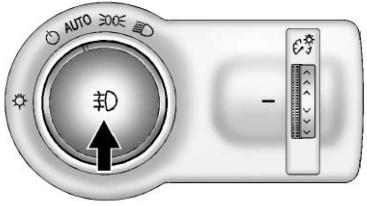

If equipped, the front fog lamp button is on the exterior lamp control to the left of the steering column.

The ignition must be on to turn on the fog lamps.

: Press to turn the fog lamps on or off. An indicator light on the instrument cluster comes on when the fog lamps are on.

The fog lamps come on together with the parking lamps.

Some localities have laws that require the headlamps to be on along with the fog lamps.

Interior Lighting

Instrument Panel Illumination Control

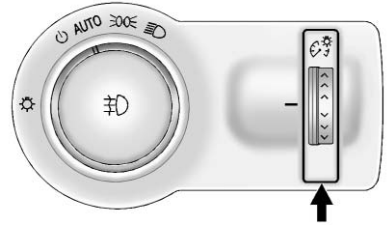

This feature controls the brightness of the instrument panel controls and infotainment display screen. The thumbwheel is to the left of the steering column on the instrument panel.

: Move the thumbwheel up or down and hold, to brighten or dim the instrument panel controls and infotainment display screen.

Courtesy Lamps

The courtesy lamps come on automatically when any door is opened and the dome lamp is in the door position.

Dome Lamps

The interior lamps control in the overhead console controls both the front and rear interior lamps.

: Press to turn the lamps off, even when a door is open.

: Press to turn the lamps on automatically when a door is opened.

: Press to turn on the dome lamps.

Reading Lamps

The front reading lamps are in the overhead console.

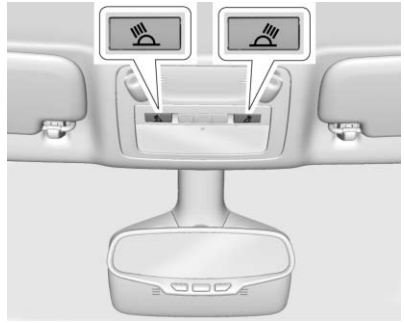

or **:** Press the button near each lamp to turn it on or off.

Lighting Features

Entry Lighting

Some exterior lamps and most of the interior lamps turn on briefly at night or in areas with limited lighting when the Remote Keyless Entry (RKE) transmitter button is pressed. See *Remote Keyless Entry (RKE) System Operation* ⇨ *23*. After about 30 seconds the exterior lamps turn off, then the dome lamps and remaining interior lamps dim to off. Entry lighting can be disabled manually by turning the ignition on or to ACC/ACCESSORY, or by pressing on the RKE transmitter.

This feature can be changed. See *Vehicle Personalization* ⇨ *114*.

Exit Lighting

Some exterior lamps come on at night, or in areas with limited lighting, when the key is removed from the ignition. The dome lamps also come on when the key is removed from the ignition. The

exterior lamps and dome lamps remain on after the door is closed for a set amount of time, then automatically turn off.

The exterior lamps turn off immediately by turning the exterior lamps control off.

This feature can be changed. See *Vehicle Personalization* ⇨ *114*.

Battery Load Management

The vehicle has Electric Power Management (EPM) that estimates the battery's temperature and state of charge. It then adjusts the voltage for best performance and extended life of the battery.

When the battery's state of charge is low, the voltage is raised slightly to quickly bring the charge back up. When the state of charge is high, the voltage is lowered slightly to prevent overcharging. If the vehicle has a voltmeter gauge or a voltage display on the Driver Information Center (DIC), you may see the voltage move up or down. This is normal. If there is a problem, an alert will be displayed.

The battery can be discharged at idle if the electrical loads are very high. This is true for all vehicles. This is because the generator (alternator) may not be spinning fast enough at idle to produce all of the power needed for very high electrical loads.

A high electrical load occurs when several of the following are on, such as: headlamps, high beams, rear window defogger, climate control fan at high speed, heated seats, engine cooling fans, trailer loads, and loads plugged into accessory power outlets.

EPM works to prevent excessive discharge of the battery. It does this by balancing the generator's output and the vehicle's electrical needs. It can increase engine idle speed to generate more power whenever needed. It can temporarily reduce the power demands of some accessories.

Normally, these actions occur in steps or levels, without being noticeable. In rare cases at the highest levels of corrective action, this action may be noticeable to the driver. If so, a DIC message might be displayed and it is recommended that the driver reduce the electrical loads as much as possible. See *Driver Information Center (DIC)* ⇨ *110*.

Battery Power Protection

The battery saver feature is designed to protect the vehicle's battery.

If some interior lamps are left on and the ignition is turned off, the battery rundown protection system automatically turns the lamp off after some time.

Exterior Lighting Battery Saver

The exterior lamps turn off about 10 minutes after the ignition is turned off, if the parking lamps or headlamps have been manually left

on. This protects against draining the battery. To restart the 10-minute timer, turn the exterior lamp control to the off position and then back to the parking lamp or headlamp position.

To keep the lamps on for more than 10 minutes, the ignition must be on or in ACC/ACCESSORY.

Infotainment System

Introduction
Infotainment 128

Introduction

Infotainment

See the infotainment manual for information on the radio, audio players, phone, navigation system, and voice or speech recognition. It also includes information on settings.

Climate Controls

Climate Control Systems
Dual Automatic Climate Control System 129

Air Vents
Air Vents 132

Maintenance
Passenger Compartment Air Filter 133

Climate Control Systems

Dual Automatic Climate Control System

The heating, cooling, and ventilation for the vehicle can be controlled with this system.

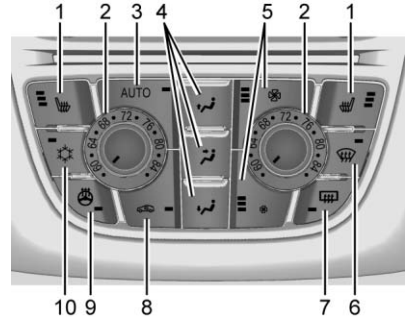

1. Driver and Passenger Heated Seats (If Equipped)
2. Driver and Passenger Temperature Controls
3. AUTO (Automatic Operation)
4. Air Delivery Modes
5. Fan Controls
6. Defrost
7. Rear Window Defogger
8. Recirculation
9. Heated Steering Wheel (If Equipped)
10. Air Conditioning

Automatic Operation

The system automatically controls the fan speed, air delivery, air conditioning, and recirculation in order to heat or cool the vehicle to the desired temperature.

When AUTO is lit, all four functions operate automatically. Each function can also be manually set and the setting is displayed. Functions not manually set will continue to be automatically controlled, even if the AUTO indicator is not lit.

For automatic operation:

1. Press AUTO.

2. Set the temperature. Allow the system time to stabilize. Then adjust the temperature as needed for best comfort.

   To improve fuel efficiency and to cool the vehicle faster, recirculation may be automatically selected in warm weather. The recirculation light will not come on. Press to select recirculation; press it again to select outside air.

English units can be changed to metric units through the Driver Information Center (DIC). See *Driver Information Center (DIC)* ⇨ *110*.

Manual Operation

: Press the lower button to decrease the fan speed. Pressing the lower button longer turns the fan and cooling off. When off is selected, the system will stop air from flowing into the cabin. If any buttons are pressed or knobs are turned, the climate control system will turn on and operate at the current setting. Press the upper button to increase the fan speed. The selected fan speed is indicated by the number of segments on the display screen. Press AUTO to return to automatic operation.

Air Delivery Modes : Press , , or to change the direction of the airflow. Any combination of the three buttons can be selected. The indicator light in the button will turn on. The current mode appears in the display screen. Pressing any of the three buttons cancels automatic air delivery control and the direction of the airflow is controlled manually. Press AUTO to return to automatic operation.

To change the current mode, select one or more of the following:

: Air is directed to the windshield and side window vents.

: Air is directed to the instrument panel outlets.

: Air is directed to the floor outlets.

: Press to clear the windshield of fog or frost more quickly. Air is directed to the windshield.

For best results, clear all snow and ice from the windshield before defrosting.

: Press to turn the air conditioning on or off. If the fan is turned off or the outside temperature falls below freezing, the air conditioning compressor will not run.

Press AUTO to return to automatic operation and the air conditioner runs as needed. When the indicator light is on, the air conditioner runs automatically to cool the air inside the vehicle or to dry the air needed to defog the windshield faster.

: Press to turn recirculation on or off. An indicator light comes on. Air is recirculated to quickly cool the inside of the vehicle or reduce entry of outside air and odors.

Rear Window Defogger

: Press to turn the rear window defogger on or off. An indicator light on the button comes on to show that the rear window defogger is on.

The defogger only works when the ignition is on. The defogger turns off if the ignition is off or in ACC/ACCESSORY.

The rear window defogger can be set to automatic operation. See "Climate and Air Quality" under *Vehicle Personalization* ⇨ *114*. When Auto Rear Defog is selected, the rear window defogger turns on automatically when the interior temperature is cold and the outside temperature is about 4 °C (40 °F) and below. The auto rear defogger turns off automatically after about 10 minutes. At higher speeds, the rear window defogger may stay on continuously.

If equipped with heated outside mirrors, they turn on when the rear window defogger button is on and help to clear fog or frost from the surface of the mirrors. See *Heated Mirrors* ⇨ *34*.

Caution

Do not try to clear frost or other material from the inside of the front windshield and rear window with a razor blade or anything else that is sharp. This may damage the rear window defogger grid and affect the radio's ability to pick up stations clearly. The repairs would not be covered by the vehicle warranty.

or : If equipped, press to turn the heated seats on or off. See *Heated Front Seats* ⇨ *50*.

: If equipped, press to turn the heated steering wheel on or off. See *Heated Steering Wheel* ⇨ *94*.

Remote Start Climate Control Operation : The climate control system may run when the vehicle is started remotely. The system uses the driver's previous settings to heat or cool the inside of the vehicle. The rear defog may come on during remote start based on cold ambient conditions. The rear defog indicator light does not come on during a remote start. If equipped with front heated seats, they may come on during a remote start. The heated seat indicator lights do not come on during a remote start.
See *Remote Vehicle Start* ⇨ *26* and *Heated Front Seats* ⇨ *50*.

Air Vents

Adjustable Air Vents

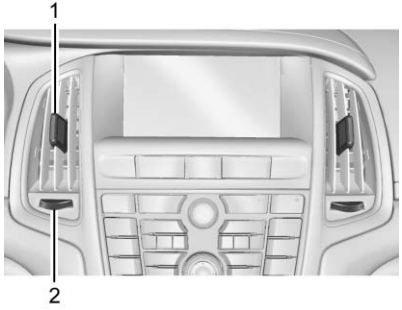

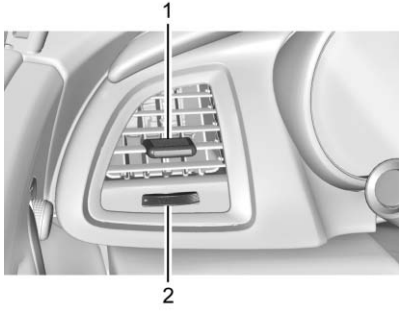

1. Slider Knob
2. Thumbwheel

Use the slider knobs (1) on the air vents to change the direction of the airflow.

Use the thumbwheels (2) near the air vents to control the amount of airflow or to shut off the airflow.

Fixed Air Vents

Additional air vents are under the windshield, near the side windows, and in the foot wells.

Operation Tips

- Clear away any ice, snow, or leaves from the air inlets at the base of the windshield that can block the flow of air into the vehicle.
- Clear snow off the hood to improve visibility and help decrease moisture drawn into the vehicle.
- Keep all outlets open whenever possible for best system performance.
- Keep the path under all seats clear of objects to help circulate the air inside the vehicle more effectively.
- Use of non-GM approved hood deflectors can adversely affect the performance of the system.

Maintenance

Passenger Compartment Air Filter

Air Intake

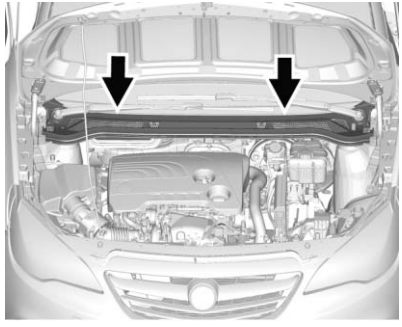

The air intake in front of the windshield in the engine compartment must be kept clear to allow air intake. Remove any leaves, dirt, or snow.

Pollen Filter

The pollen filter cleans dust, pollen, and other airborne irritants from air entering the vehicle through the air intake.

Driving and Operating

Driving Information
Distracted Driving 135
Defensive Driving 135
Drunk Driving 136
Control of a Vehicle 136
Braking 136
Steering 136
Off-Road Recovery 137
Loss of Control 137
Driving on Wet Roads 138
Hill and Mountain Roads 139
Winter Driving 139
If the Vehicle Is Stuck 141
Vehicle Load Limits 141

Starting and Operating
New Vehicle Break-In 145
Ignition Positions 145
Starting the Engine 147
Retained Accessory Power (RAP) 148
Shifting Into Park 149
Shifting out of Park 149
Parking over Things That Burn 150

Engine Exhaust
Engine Exhaust 150
Running the Vehicle While Parked 151

Automatic Transmission
Automatic Transmission 151
Manual Mode 153

Brakes
Antilock Brake System (ABS) 154
Electric Parking Brake 155
Brake Assist 157
Hill Start Assist (HSA) 157

Ride Control Systems
Traction Control/Electronic Stability Control 157

Cruise Control
Cruise Control 159

Driver Assistance Systems
Assistance Systems for Parking or Backing 162
Forward Collision Alert (FCA) System 164
Lane Departure Warning (LDW) 166

Fuel
Fuel 167
California Fuel Requirements 168
Fuels in Foreign Countries . . . 169
Fuel Additives 169
Filling the Tank 169
Filling a Portable Fuel Container 171

Trailer Towing
General Towing Information 171

Conversions and Add-Ons
Add-On Electrical Equipment 172

Driving Information

Distracted Driving

Distraction comes in many forms and can take your focus from the task of driving. Exercise good judgment and do not let other activities divert your attention away from the road. Many local governments have enacted laws regarding driver distraction. Become familiar with the local laws in your area.

To avoid distracted driving, keep your eyes on the road, keep your hands on the steering wheel, and focus your attention on driving.

- Do not use a phone in demanding driving situations. Use a hands-free method to place or receive necessary phone calls.
- Watch the road. Do not read, take notes, or look up information on phones or other electronic devices.
- Designate a front seat passenger to handle potential distractions.
- Become familiar with vehicle features before driving, such as programming favorite radio stations and adjusting climate control and seat settings. Program all trip information into any navigation device prior to driving.
- Wait until the vehicle is parked to retrieve items that have fallen to the floor.
- Stop or park the vehicle to tend to children.
- Keep pets in an appropriate carrier or restraint.
- Avoid stressful conversations while driving, whether with a passenger or on a cell phone.

⚠ Warning

Taking your eyes off the road too long or too often could cause a crash resulting in injury or death. Focus your attention on driving.

Refer to the infotainment section for more information on using that system and the navigation system, if equipped, including pairing and using a cell phone.

Defensive Driving

Defensive driving means “always expect the unexpected.” The first step in driving defensively is to wear the seat belt. See *Seat Belts* ⇨ *53*.

- Assume that other road users (pedestrians, bicyclists, and other drivers) are going to be careless and make mistakes. Anticipate what they might do and be ready.
- Allow enough following distance between you and the driver in front of you.

- Focus on the task of driving.

Drunk Driving

Death and injury associated with drinking and driving is a global tragedy.

⚠ Warning

Drinking and then driving is very dangerous. Your reflexes, perceptions, attentiveness, and judgment can be affected by even a small amount of alcohol. You can have a serious — or even fatal — collision if you drive after drinking.

Do not drink and drive or ride with a driver who has been drinking. Ride home in a cab; or if you are with a group, designate a driver who will not drink.

Control of a Vehicle

Braking, steering, and accelerating are important factors in helping to control a vehicle while driving.

Braking

Braking action involves perception time and reaction time. Deciding to push the brake pedal is perception time. Actually doing it is reaction time.

Average driver reaction time is about three-quarters of a second. In that time, a vehicle moving at 100 km/h (60 mph) travels 20 m (66 ft), which could be a lot of distance in an emergency.

Helpful braking tips to keep in mind include:

- Keep enough distance between you and the vehicle in front of you.
- Avoid needless heavy braking.
- Keep pace with traffic.

If the engine ever stops while the vehicle is being driven, brake normally but do not pump the brakes. Doing so could make the pedal harder to push down. If the engine stops, there will be some power brake assist but it will be used when the brake is applied. Once the power assist is used up, it can take longer to stop and the brake pedal will be harder to push.

Steering

Electric Power Steering

The vehicle has electric power steering. It does not have power steering fluid. Regular maintenance is not required.

If power steering assist is lost due to a system malfunction, the vehicle can be steered, but may require increased effort. See your dealer if there is a problem.

If the steering wheel is turned until it reaches the end of its travel and is held against that position for an extended period of time, power steering assist may be reduced.

If the steering assist is used for an extended period of time while the vehicle is not moving, power assist may be reduced.

Normal use of the power steering assist should return when the system cools down.

See your dealer if there is a problem.

Curve Tips

- Take curves at a reasonable speed.
- Reduce speed before entering a curve.
- Maintain a reasonable steady speed through the curve.
- Wait until the vehicle is out of the curve before accelerating gently into the straightaway.

Steering in Emergencies

- There are some situations when steering around a problem may be more effective than braking.
- Holding both sides of the steering wheel allows you to turn 180 degrees without removing a hand.
- The Antilock Brake System (ABS) allows steering while braking.

Off-Road Recovery

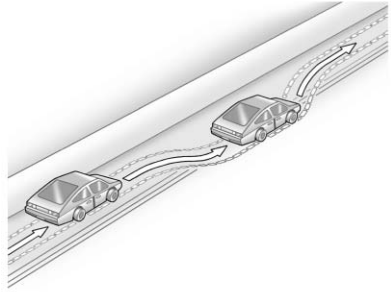

The vehicle's right wheels can drop off the edge of a road onto the shoulder while driving. Follow these tips:

1. Ease off the accelerator and then, if there is nothing in the way, steer the vehicle so that it straddles the edge of the pavement.
2. Turn the steering wheel about one-eighth of a turn, until the right front tire contacts the pavement edge.
3. Turn the steering wheel to go straight down the roadway.

Loss of Control

Skidding

There are three types of skids that correspond to the vehicle's three control systems:

- Braking Skid — wheels are not rolling.
- Steering or Cornering Skid — too much speed or steering in a curve causes tires to slip and lose cornering force.
- Acceleration Skid — too much throttle causes the driving wheels to spin.

Defensive drivers avoid most skids by taking reasonable care suited to existing conditions, and by not overdriving those conditions. But skids are always possible.

If the vehicle starts to slide, follow these suggestions:

- Ease your foot off the accelerator pedal and steer the way you want the vehicle to go. The vehicle may straighten out. Be ready for a second skid if it occurs.
- Slow down and adjust your driving according to weather conditions. Stopping distance can be longer and vehicle control can be affected when traction is reduced by water, snow, ice, gravel, or other material on the road. Learn to recognize warning clues — such as enough water, ice, or packed snow on the road to make a mirrored surface — and slow down when you have any doubt.
- Try to avoid sudden steering, acceleration, or braking, including reducing vehicle speed by shifting to a lower gear. Any sudden changes could cause the tires to slide.

Remember: Antilock brakes help avoid only the braking skid.

Driving on Wet Roads

Rain and wet roads can reduce vehicle traction and affect your ability to stop and accelerate. Always drive slower in these types of driving conditions and avoid driving through large puddles and deep-standing or flowing water.

⚠ Warning

Wet brakes can cause crashes. They might not work as well in a quick stop and could cause pulling to one side. You could lose control of the vehicle.

After driving through a large puddle of water or a car/vehicle wash, lightly apply the brake pedal until the brakes work normally.

(Continued)

Warning (Continued)

Flowing or rushing water creates strong forces. Driving through flowing water could cause the vehicle to be carried away. If this happens, you and other vehicle occupants could drown. Do not ignore police warnings and be very cautious about trying to drive through flowing water.

Hydroplaning

Hydroplaning is dangerous. Water can build up under the vehicle's tires so they actually ride on the water. This can happen if the road is wet enough and you are going fast enough. When the vehicle is hydroplaning, it has little or no contact with the road.

There is no hard and fast rule about hydroplaning. The best advice is to slow down when the road is wet.

Other Rainy Weather Tips

Besides slowing down, other wet weather driving tips include:

- Allow extra following distance.
- Pass with caution.
- Keep windshield wiping equipment in good shape.
- Keep the windshield washer fluid reservoir filled.
- Have good tires with proper tread depth. See *Tires* ⇨ *208*.
- Turn off cruise control.

Hill and Mountain Roads

Driving on steep hills or through mountains is different than driving on flat or rolling terrain. Tips include:

- Keep the vehicle serviced and in good shape.
- Check all fluid levels and brakes, tires, cooling system, and transmission.
- Shift to a lower gear when going down steep or long hills.

⚠ Warning

Using the brakes to slow the vehicle on a long downhill slope can cause brake overheating, can reduce brake performance, and could result in a loss of braking. Shift the transmission to a lower gear to let the engine assist the brakes on a steep downhill slope.

⚠ Warning

Coasting downhill in N (Neutral) or with the ignition off is dangerous. This can cause overheating of the brakes and loss of steering assist. Always have the engine running and the vehicle in gear.

- Drive at speeds that keep the vehicle in its own lane. Do not swing wide or cross the center line.
- Be alert on top of hills; something could be in your lane (e.g., stalled car, accident).
- Pay attention to special road signs (e.g., falling rocks area, winding roads, long grades, passing or no-passing zones) and take appropriate action.

Winter Driving

Driving on Snow or Ice

Snow or ice between the tires and the road creates less traction or grip, so drive carefully. Wet ice can occur at about 0 °C (32 °F) when freezing rain begins to fall. Avoid driving on wet ice or in freezing rain until roads can be treated.

For Slippery Road Driving:

- Accelerate gently. Accelerating too quickly causes the wheels to spin and makes the surface under the tires slick.
- Turn on Traction Control. See *Traction Control/Electronic Stability Control* ⇨ *157*.

- The Antilock Brake System (ABS) improves vehicle stability during hard stops, but the brakes should be applied sooner than when on dry pavement. See *Antilock Brake System (ABS)* ⇨ *154*.
- Allow greater following distance and watch for slippery spots. Icy patches can occur on otherwise clear roads in shaded areas. The surface of a curve or an overpass can remain icy when the surrounding roads are clear. Avoid sudden steering maneuvers and braking while on ice.
- Turn off cruise control.

Blizzard Conditions

Stop the vehicle in a safe place and signal for help. Stay with the vehicle unless there is help nearby.
If possible, use Roadside Assistance. See *Roadside Assistance Program* ⇨ *270*. To get help and keep everyone in the vehicle safe:

- Turn on the hazard warning flashers.
- Tie a red cloth to an outside mirror.

⚠ Warning

Snow can trap engine exhaust under the vehicle. This may cause exhaust gases to get inside. Engine exhaust contains carbon monoxide (CO), which cannot be seen or smelled. It can cause unconsciousness and even death.

If the vehicle is stuck in snow:

- Clear snow from the base of the vehicle, especially any blocking the exhaust pipe.
- Open a window about 5 cm (2 in) on the vehicle side that is away from the wind, to bring in fresh air.
- Fully open the air outlets on or under the instrument panel.

(Continued)

Warning (Continued)

- Adjust the climate control system to circulate the air inside the vehicle and set the fan speed to the highest setting. See “Climate Control Systems.”

For more information about CO, see *Engine Exhaust* ⇨ *150*.

To save fuel, run the engine for short periods to warm the vehicle and then shut the engine off and partially close the window. Moving about to keep warm also helps.

If it takes time for help to arrive, when running the engine, push the accelerator pedal slightly so the engine runs faster than the idle speed. This keeps the battery charged to restart the vehicle and to signal for help with the headlamps. Do this as little as possible, to save fuel.

If the Vehicle Is Stuck

Slowly and cautiously spin the wheels to free the vehicle when stuck in sand, mud, ice, or snow.

If stuck too severely for the traction system to free the vehicle, turn the traction system off and use the rocking method. See *Traction Control/Electronic Stability Control* ⇨ *157*.

⚠ Warning

If the vehicle's tires spin at high speed, they can explode, and you or others could be injured. The vehicle can overheat, causing an engine compartment fire or other damage. Spin the wheels as little as possible and avoid going above 56 km/h (35 mph).

Rocking the Vehicle to Get it Out

Turn the steering wheel left and right to clear the area around the front wheels. Turn off any traction system. Shift back and forth between R (Reverse) and a low forward gear, spinning the wheels as little as possible. To prevent transmission wear, wait until the wheels stop spinning before shifting gears. Release the accelerator pedal while shifting, and press lightly on the accelerator pedal when the transmission is in gear. Slowly spinning the wheels in the forward and reverse directions causes a rocking motion that could free the vehicle. If that does not get the vehicle out after a few tries, it might need to be towed out. If the vehicle does need to be towed out, see *Towing the Vehicle* ⇨ *238*.

Vehicle Load Limits

It is very important to know how much weight the vehicle can carry. This weight is called the vehicle capacity weight and includes the weight of all occupants, cargo, and all nonfactory-installed options. Two labels on the vehicle may show how much weight it may properly carry: the Tire and Loading Information label and the Certification label.

⚠ Warning

Do not load the vehicle any heavier than the Gross Vehicle Weight Rating (GVWR), or either the maximum front or rear Gross Axle Weight Rating (GAWR). This can cause systems to break and change the way the vehicle handles. This could cause loss of control and a crash. Overloading can also reduce stopping distance, damage the tires, and shorten the life of the vehicle.

Tire and Loading Information Label

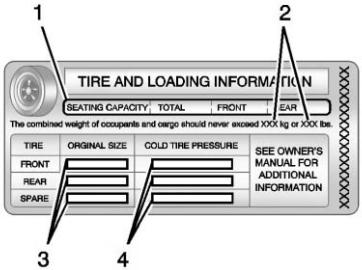

Label Example

A vehicle-specific Tire and Loading Information label is attached to the vehicle's center pillar (B-pillar). The Tire and Loading Information label shows the number of occupant seating positions (1), and the maximum vehicle capacity weight (2) in kilograms and pounds.

The Tire and Loading Information label also shows the tire size of the original equipment tires (3) and the recommended cold tire inflation pressures (4). For more information on tires and inflation see *Tires* ⇨ *208* and *Tire Pressure* ⇨ *216*.

There is also important loading information on the Certification label. It may show the Gross Vehicle Weight Rating (GVWR) and the Gross Axle Weight Rating (GAWR) for the front and rear axle. See “Certification Label” later in this section.

“Steps for Determining Correct Load Limit–

1. Locate the statement "The combined weight of occupants and cargo should never exceed XXX kg or XXX lbs." on your vehicle’s placard.
2. Determine the combined weight of the driver and passengers that will be riding in your vehicle.
3. Subtract the combined weight of the driver and passengers from XXX kg or XXX lbs.
4. The resulting figure equals the available amount of cargo and luggage load capacity. For example, if the "XXX" amount equals 1400 lbs. and there will be five 150 lb passengers in your vehicle, the amount of available cargo and luggage load capacity is 650 lbs. (1400-750 (5 x 150) = 650 lbs.)
5. Determine the combined weight of luggage and cargo being loaded on the vehicle. That weight may not safely

exceed the available cargo and luggage load capacity calculated in Step 4.

6. If your vehicle will be towing a trailer, load from your trailer will be transferred to your vehicle. Consult this manual to determine how this reduces the available cargo and luggage load capacity of your vehicle.”

This vehicle is neither designed nor intended to tow a trailer.

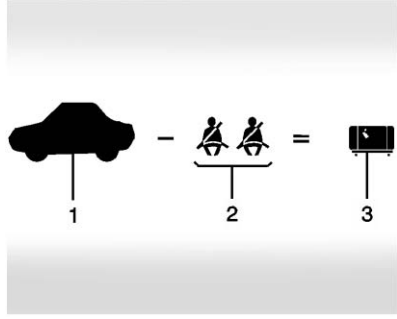

Example 1

1. Vehicle Capacity Weight for Example 1 = 453 kg (1,000 lbs).
2. Subtract Occupant Weight @ 68 kg (150 lbs) × 2 = 136 kg (300 lbs).
3. Available Occupant and Cargo Weight = 317 kg (700 lbs).

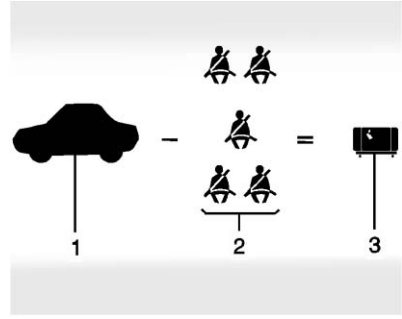

Example 2

1. Vehicle Capacity Weight for Example 2 = 453 kg (1,000 lbs).
2. Subtract Occupant Weight @ 68 kg (150 lbs) × 5 = 340 kg (750 lbs).
3. Available Cargo Weight = 113 kg (250 lbs).

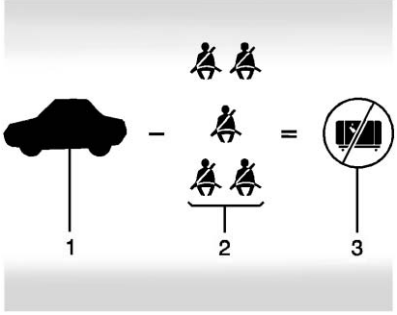

Example 3

1. Vehicle Capacity Weight for Example 3 = 453 kg (1,000 lbs).
2. Subtract Occupant Weight @ 91 kg (200 lbs) × 5 = 453 kg (1,000 lbs).
3. Available Cargo Weight = 0 kg (0 lbs).

Refer to the vehicle's Tire and Loading Information label for specific information about the vehicle's capacity weight and seating positions. The combined weight of the driver, passengers, and cargo should never exceed the vehicle's capacity weight.

Certification Label

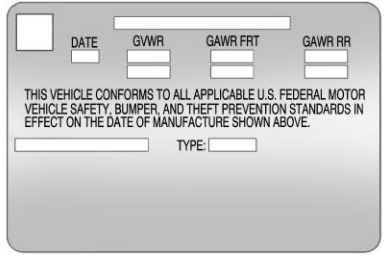

Label Example

A vehicle-specific Certification label is attached to the vehicle's center pillar (B-pillar). The label may show the gross weight capacity of the vehicle, called the Gross Vehicle Weight Rating (GVWR). The GVWR includes the weight of the vehicle, all occupants, fuel, and cargo.

⚠ Warning

Things inside the vehicle can strike and injure people in a sudden stop or turn, or in a crash.

- Put things in the cargo area of the vehicle. In the cargo area, put them as far forward as possible. Try to spread the weight evenly.

(Continued)

Warning (Continued)

- Never stack heavier things, like suitcases, inside the vehicle so that some of them are above the tops of the seats.
- Do not leave an unsecured child restraint in the vehicle.
- Secure loose items in the vehicle.
- Do not leave a seat folded down unless needed.

Starting and Operating

New Vehicle Break-In

Caution

The vehicle does not need an elaborate break-in. But it will perform better in the long run if you follow these guidelines:

- Do not drive at any one constant speed, fast or slow, for the first 805 km (500 mi). Do not make full-throttle starts. Avoid downshifting to brake or slow the vehicle.
- Avoid making hard stops for the first 322 km (200 mi) or so. During this time the new brake linings are not yet broken in. Hard stops with new linings can mean premature wear and earlier replacement. Follow this

(Continued)

Caution (Continued)

breaking-in guideline every time you get new brake linings.

Following break-in, engine speed and load can be gradually increased.

Ignition Positions

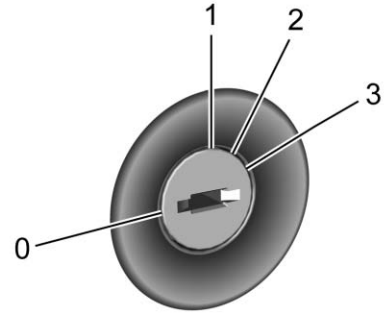

The ignition switch has four different positions.

Caution

Using a tool to force the key to turn in the ignition could cause damage to the switch or break the key. Use the correct key, make sure it is all the way in, and turn it only with your hand. If the key cannot be turned by hand, see your dealer.

The key must be fully extended to start the vehicle.

To shift out of P (Park), turn the ignition on and apply the brake pedal.

0 : When the vehicle is stopped, turn the ignition off to turn the engine off. Retained Accessory Power (RAP) will remain active. See *Retained Accessory Power (RAP)* ⇨ *148*.

This is the only position from which the key can be removed. This locks the ignition and automatic transmission.

Do not turn the engine off when the vehicle is moving. This will cause a loss of power assist in the brake and steering systems and disable the airbags.

If the vehicle must be shut off in an emergency:

1. Brake using a firm and steady pressure. Do not pump the brakes repeatedly. This may deplete power assist, requiring increased brake pedal force.
2. Shift the vehicle to N (Neutral). This can be done while the vehicle is moving. After shifting to N (Neutral), continue to firmly apply the brakes and steer the vehicle to a safe location.
3. Come to a complete stop. Shift to P (Park). Turn the ignition off.
4. Set the parking brake. See *Electric Parking Brake* ⇨ *155*.

⚠ Warning

Turning off the vehicle while moving may cause loss of power assist in the brake and steering systems and disable the airbags. While driving, only shut the vehicle off in an emergency.

If the vehicle cannot be pulled over, and must be shut off while driving, turn the ignition to ACC/ ACCESSORY.

1 : This position provides power to some of the electrical accessories. To move the key from ACC/ ACCESSORY to off, push in the key and then turn the ignition to off.

2 : The ignition switch stays in this position when the engine is running. This position can be used to operate the electrical accessories, including the ventilation fan and 12-volt power outlet, as well as to display some warning and indicator lights. This position can also be used for service and diagnostics, and to verify the proper operation of the

malfunction indicator lamp as may be required for emission inspection purposes. The transmission is also unlocked in this position.

The battery could be drained if the key is left in the ACC/ACCESSORY or on position with the engine off. The vehicle might not start if the battery is allowed to drain for an extended period of time.

3 : This position starts the engine. When the engine starts, release the key. The ignition switch will return to on for normal driving.

A warning tone sounds when the driver door is opened if the ignition is still in ACC/ACCESSORY and the key is in the ignition.

If the ignition becomes difficult to turn, see *Keys* ⇨ *21*.

Key Lock Release

The vehicle is equipped with an electronic key lock release. The key lock release is designed to prevent ignition key removal unless the shift lever is in P (Park).

The key lock release is always functional except in the case of an uncharged or low voltage (less than 9-volt) battery. If the vehicle has an uncharged battery or a battery with low voltage, try charging or jump starting the battery. See *Jump Starting - North America* ⇨ *235*.

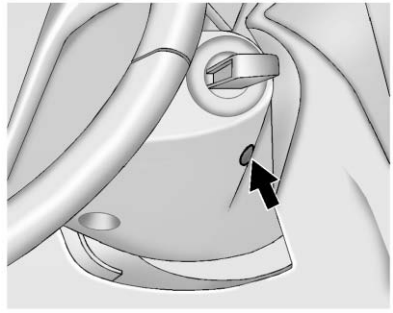

If charging or jump starting the battery does not work, locate the hole below the ignition lock. Insert a flat bladed tool or another key from the key chain into the opening. When the lever can be felt, actuate the lever toward the driver, and remove the key from the ignition.

Starting the Engine

Move the shift lever to P (Park) or N (Neutral). To restart the vehicle when it is already moving, use N (Neutral) only.

Caution

Do not try to shift to P (Park) if the vehicle is moving. If you do, you could damage the transmission. Shift to P (Park) only when the vehicle is stopped.

Caution

If you add electrical parts or accessories, you could change the way the engine operates. Any resulting damage would not be covered by the vehicle warranty. See *Add-On Electrical Equipment* ⇨ *172*.

Caution

If the steering wheel is turned until it reaches the end of its travel, and is held in that position while starting the vehicle, damage may occur to the hydraulic power steering system and there may be loss of power steering assist.

Starting Procedure

1. With your foot off the accelerator pedal, turn the ignition key to START. When the engine starts, let go of the key. The idle speed will go down as the engine warms. Do not race the engine immediately after starting it. Operate the engine and transmission gently to allow the oil to warm up and lubricate all moving parts.

Caution

Cranking the engine for long periods of time, by returning the ignition to the START position immediately after cranking has ended, can overheat and damage the cranking motor, and drain the battery. Wait at least 15 seconds between each try, to let the cranking motor cool down.

2. If the engine does not start after five to 10 seconds, especially in very cold weather (below −18 °C or 0 °F), it could be flooded with too much gasoline. Push the accelerator pedal all the way to the floor and hold it there as you hold the key in START for a maximum of 15 seconds. Wait at least 15 seconds between each try, to allow the cranking motor to cool. When the engine starts, let go of the key and accelerator. If the vehicle starts briefly but then stops again, repeat the procedure. This clears the extra gasoline from the engine. Do not race the engine immediately after starting it. Operate the engine and transmission gently until the oil warms up and lubricates all moving parts.

Retained Accessory Power (RAP)

The following vehicle accessories may be used for up to 10 minutes after the engine is turned off:

- Power windows
- Accessory power outlets

Power to the infotainment system will continue to operate for 30 minutes or until the key is removed from the ignition switch, regardless of whether any door will be opened.

Shifting Into Park

To shift into P (Park):

1. Hold the brake pedal down and set the parking brake.

   See *Electric Parking Brake* ⇨ *155*.

2. Hold the button on the shift lever and push the lever toward the front of the vehicle into P (Park).
3. Turn the ignition to LOCK/OFF.
4. Remove the key.

Leaving the Vehicle with the Engine Running

⚠ Warning

It can be dangerous to leave the vehicle with the engine running. It could overheat and catch fire.

It is dangerous to get out of the vehicle if the shift lever is not fully in P (Park) with the parking brake firmly set. The vehicle can roll.

(Continued)

Warning (Continued)

Do not leave the vehicle when the engine is running. If you have left the engine running, the vehicle can move suddenly. You or others could be injured. To be sure the vehicle will not move, even when you are on fairly level ground, always set the parking brake and move the shift lever to P (Park). See *Shifting Into Park* ⇨ *149*.

If you have to leave the vehicle with the engine running, the vehicle must be in P (Park) and the parking brake set.

Release the button and check that the shift lever cannot be moved out of P (Park).

Torque Lock

Torque lock is when the weight of the vehicle puts too much force on the parking pawl in the transmission. This happens when parking on a hill and shifting the transmission into P (Park) is not done properly; then it is difficult to shift out of P (Park). To prevent torque lock, set the parking brake and then shift into P (Park). To find out how, see “Shifting Into Park” previously in this section.

If torque lock does occur, the vehicle may need to be pushed uphill by another vehicle to relieve the parking pawl pressure, so you can shift out of P (Park).

Shifting out of Park

Automatic Transmission Shift Lock

The vehicle has an automatic transmission shift lock control system. The shift lock control system is designed to:

- Prevent ignition key removal unless the shift lever is in P (Park).
- Prevent movement of the shift lever out of P (Park), unless the ignition is on and the brake pedal is applied.

The shift lock is always functional except in the case of an uncharged or low voltage (less than 9-volt) battery.

If the vehicle has an uncharged battery or a battery with low voltage, try charging or jump starting the battery. See *Jump Starting - North America* ⇨ *235*.

If the shift lever cannot be moved out of P (Park):

1. Apply and maintain the regular brakes.
2. Turn the ignition on. See *Ignition Positions* ⇨ *145*.
3. Let up on the shift lever and make sure the shift lever is pushed all the way into P (Park).
4. Press the shift lever button.
5. Move the shift lever into the desired gear.

If you still cannot move the shift lever from P (Park), consult your dealer or a professional towing service.

Parking over Things That Burn

⚠ Warning

Things that can burn could touch hot exhaust parts under the vehicle and ignite. Do not park over papers, leaves, dry grass, or other things that can burn.

Engine Exhaust

⚠ Warning

Engine exhaust contains carbon monoxide (CO), which cannot be seen or smelled. Exposure to CO can cause unconsciousness and even death.

Exhaust may enter the vehicle if:

- The vehicle idles in areas with poor ventilation (parking garages, tunnels, deep snow that may block underbody airflow or tail pipes).
- The exhaust smells or sounds strange or different.
- The exhaust system leaks due to corrosion or damage.
- The vehicle exhaust system has been modified, damaged, or improperly repaired.

(Continued)

Warning (Continued)

- There are holes or openings in the vehicle body from damage or aftermarket modifications that are not completely sealed.

If unusual fumes are detected or if it is suspected that exhaust is coming into the vehicle:

- Drive it only with the windows completely down.
- Have the vehicle repaired immediately.

Never park the vehicle with the engine running in an enclosed area such as a garage or a building that has no fresh air ventilation.

Running the Vehicle While Parked

It is better not to park with the engine running.

If the vehicle is left with the engine running, follow the proper steps to be sure the vehicle will not move. See *Shifting Into Park* ⇨ *149* and *Engine Exhaust* ⇨ *150*.

Automatic Transmission

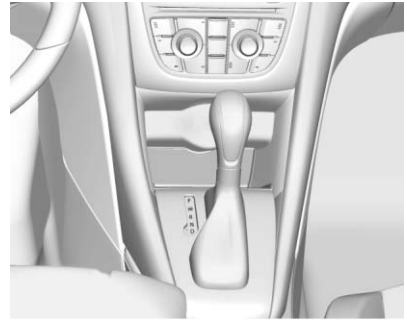

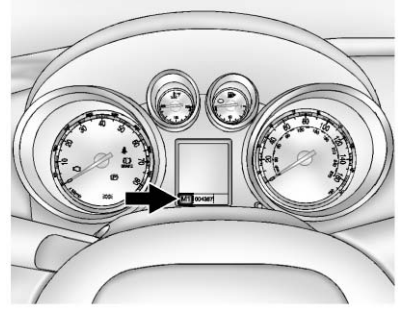

The selected gear is also shown in the Driver Information Center (DIC).

P : This position locks the drive wheels. It is the best position to use when starting the engine because the vehicle cannot move easily.

⚠ Warning

It is dangerous to get out of the vehicle if the shift lever is not fully in P (Park) with the parking brake firmly set. The vehicle can roll.

Do not leave the vehicle when the engine is running. If you have left the engine running, the vehicle can move suddenly. You or others could be injured. To be sure the vehicle will not move, even when you are on fairly level ground, always set the parking brake and move the shift lever to P (Park). See *Shifting Into Park* ⇨ *149*.

Make sure the shift lever is fully in P (Park) before starting the engine. The vehicle has an automatic transmission shift lock control system. The regular brake must be fully applied first and then the shift lever button must be pressed before shifting from P (Park) when the ignition on. If you cannot shift out of P (Park), ease pressure on the shift lever, then push the shift lever all the way into P (Park) as you maintain brake application. Then press the shift lever button and move the shift lever into another gear. See *Shifting out of Park* ⇨ *149*.

R : Use this gear to back up.

Caution

Shifting to R (Reverse) while the vehicle is moving forward could damage the transmission. The repairs would not be covered by the vehicle warranty. Shift to R (Reverse) only after the vehicle is stopped.

To rock the vehicle back and forth to get out of snow, ice, or sand without damaging the transmission, see *If the Vehicle Is Stuck* ⇨ *141*.

N : In this position, the engine does not connect with the wheels. To restart the engine when the vehicle is already moving, use N (Neutral) only. Also, use N (Neutral) when the vehicle is being towed.

⚠ Warning

Shifting into a drive gear while the engine is running at high speed is dangerous. Unless your foot is firmly on the brake pedal, the vehicle could move very rapidly. You could lose control and hit people or objects. Do not shift into a drive gear while the engine is running at high speed.

Caution

Shifting out of P (Park) or N (Neutral) with the engine running at high speed may damage the transmission. The repairs would not be covered by

(Continued)

Caution (Continued)

the vehicle warranty. Be sure the engine is not running at high speed when shifting the vehicle.

D : This position is for normal driving. It provides the best fuel economy. If more power is needed for passing, and the vehicle is:

- Going less than 56 km/h (35 mph), push the accelerator pedal about halfway down.
- Going about 56 km/h (35 mph) or more, push the accelerator all the way down.

Caution

If the vehicle does not shift gears, the transmission could be damaged. Have the vehicle serviced right away.

Caution

A transmission hot message may display if the automatic transmission fluid is too hot. Driving under this condition can damage the vehicle. Stop and idle the engine to cool the automatic transmission fluid. This message clears when the transmission fluid has cooled sufficiently.

Manual Mode

Driver Shift Control (DSC)

Caution

Driving with the engine at a high rpm without upshifting while using Driver Shift Control (DSC), could damage the vehicle. Always upshift when necessary while using DSC.

DSC allows you to shift an automatic transmission similar to a manual transmission. To use the DSC feature:

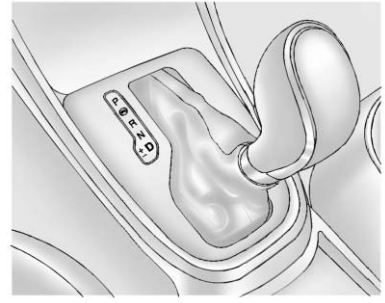

1. Move the shift lever from D (Drive) to the left into the (+) or (−) manual position.

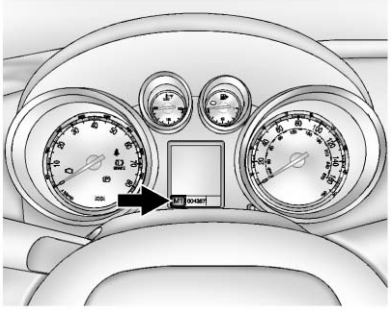

2. Press the shift lever forward (+) to upshift or rearward (−) to downshift. An M and the current gear will be displayed in the DIC.

While using the DSC feature, the vehicle will have firmer, quicker shifting. You can use this for sport driving or when climbing or descending hills, to stay in gear longer, or to downshift for more power or engine braking.

The transmission will only allow you to shift into gears appropriate for the vehicle speed and engine revolutions per minute (rpm). The transmission will not automatically shift to the next lower gear if the engine rpm is too high, nor to the next higher gear when the maximum engine rpm is reached.

If shifting is prevented for any reason, the currently selected gear will flash multiple times, indicating that the transmission has not shifted gears.

While in the DSC mode, the transmission will automatically downshift when the vehicle comes to a stop. This will allow for more power during take-off.

When accelerating the vehicle from a stop in snowy and icy conditions, you may want to shift into second gear. A higher gear allows the vehicle to gain more traction on slippery surfaces.

Brakes

Antilock Brake System (ABS)

This vehicle has an Antilock Brake System (ABS), an advanced electronic braking system that helps prevent a braking skid.

When the vehicle begins to drive away, ABS checks itself.
A momentary motor or clicking noise may be heard while this test is going on, and it may even be noticed that the brake pedal moves a little. This is normal.

If there is a problem with ABS, this warning light stays on. See *Antilock Brake System (ABS) Warning Light* ⇨ *105*.

If driving safely on a wet road and it becomes necessary to slam on the brakes and continue braking to avoid a sudden obstacle, a computer senses the wheels are slowing down. If one of the wheels is about to stop rolling, the computer will separately work the brakes at each wheel.

ABS can change the brake pressure to each wheel, as required, faster than any driver could. This can help you steer around the obstacle while braking hard.

As the brakes are applied, the computer keeps receiving updates on wheel speed and controls braking pressure accordingly.

Remember: ABS does not change the time needed to get a foot up to the brake pedal or always decrease stopping distance. If you get too close to the vehicle in front of you, there will not be enough time to apply the brakes if that vehicle suddenly slows or stops. Always leave enough room up ahead to stop, even with ABS.

Using ABS

Do not pump the brakes. Just hold the brake pedal down firmly and let ABS work. You may hear the ABS pump or motor operating and feel the brake pedal pulsate. This is normal.

Braking in Emergencies

ABS allows you to steer and brake at the same time. In many emergencies, steering can help more than even the very best braking.

Electric Parking Brake

The Electric Parking Brake (EPB) switch is on the center console. The EPB can always be activated, even if the ignition is off. To prevent draining the battery, avoid repeated cycles of the EPB when the engine is not running.

The system has a red parking brake status light and an amber parking brake warning light. See *Electric Parking Brake Light* ⇨ *105*. There are also parking brake-related Driver Information Center (DIC) messages. In case of insufficient electrical power, the EPB cannot be applied or released.

Before leaving the vehicle, check the red parking brake status light to ensure that the parking brake is applied.

EPB Apply

To apply the EPB:

1. Be sure the vehicle is at a complete stop.
2. Lift up the EPB switch momentarily.

The red parking brake status light will flash and then stay on once the EPB is fully applied. If the red parking brake status light flashes continuously, then the EPB is only partially applied or there is a problem with the EPB. A DIC message will display. Release the EPB and try to apply it again. If the light does not come on, or keeps flashing, have the vehicle serviced. Do not drive the vehicle if the red parking brake status light is flashing. See your dealer. See *Electric Parking Brake Light* ⇨ *105*.

If the amber parking brake warning light is on, lift up on the EPB switch and hold it up. Continue to hold the switch until the red parking brake status light remains on. If the amber parking brake warning light remains on, see your dealer.

If the EPB is applied while the vehicle is moving, the vehicle will decelerate as long as the switch is held up. If the switch is held up until the vehicle comes to a stop, the EPB will remain applied.

The vehicle may automatically apply the EPB in some situations when the vehicle is not moving. This is normal, and is done to periodically check the correct operation of the EPB system.

If the EPB fails to apply, the rear wheels should be blocked to prevent vehicle movement.

EPB Release

To release the EPB:

1. Turn the ignition on or to ACC/ACCESSORY.
2. Apply and hold the brake pedal.
3. Push down momentarily on the EPB switch.

The Operate Pedal Light comes on when the brake pedal needs to be applied to release the EPB. See *Operate Pedal Light* ⇨ *105*.

The EPB is released when the red parking brake status light is off.

If the amber parking brake warning light is on, release the EPB by pushing down on the EPB switch and holding it down. Continue to hold the switch until the red parking brake status light is off. If either light stays on after release is attempted, see your dealer.

Caution

Driving with the parking brake on can overheat the brake system and cause premature wear or damage to brake system parts. Make sure that the parking brake is fully released and the brake warning light is off before driving.

Automatic EPB Release

The EPB will automatically release if the vehicle is running, placed into gear, and an attempt is made to drive away. Avoid rapid acceleration when the EPB is applied, to preserve parking brake lining life.

Brake Assist

The Brake Assist feature is designed to assist the driver in stopping or decreasing vehicle speed in emergency driving conditions. This feature uses the stability system hydraulic brake control module to supplement the power brake system under conditions where the driver has quickly and forcefully applied the brake pedal in an attempt to quickly stop or slow down the vehicle. The stability system hydraulic brake control module increases brake pressure at each corner of the vehicle until the ABS activates. Minor brake pedal pulsation or pedal movement during this time is normal and the driver should continue to apply the brake pedal as the driving situation dictates. The Brake Assist feature will automatically disengage when the brake pedal is released or brake pedal pressure is quickly decreased.

Hill Start Assist (HSA)

This vehicle has a Hill Start Assist (HSA) feature, which may be useful when the vehicle is stopped on an incline. This feature is designed to prevent the vehicle from rolling, either forward or rearward, during vehicle drive off. After the driver completely stops and holds the vehicle in a complete standstill on an incline, HSA will be automatically activated. During the transition period between when the driver releases the brake pedal and starts to accelerate to drive off on a grade, HSA holds the braking pressure to ensure that there is no rolling. The brakes will automatically release when the accelerator pedal is applied.

Ride Control Systems

Traction Control/ Electronic Stability Control

System Operation

The vehicle has a Traction Control System (TCS) and StabiliTrak, an electronic stability control system. These systems help limit wheel spin and assist the driver in maintaining control, especially on slippery road conditions.

TCS activates if it senses that any of the drive wheels are spinning or beginning to lose traction. When this happens, TCS applies the brakes to the spinning wheels and reduces engine power to limit wheel spin.

StabiliTrak activates when the vehicle senses a difference between the intended path and the direction the vehicle is actually traveling. StabiliTrak selectively applies braking pressure to any one of the

vehicle wheel brakes to assist the driver in keeping the vehicle on the intended path.

If cruise control is being used and TCS or StabiliTrak begins to limit wheel spin, cruise control will disengage. Cruise control may be turned back on when road conditions allow.

Both systems come on automatically when the vehicle is started and begins to move. The systems may be heard or felt while they are operating or while performing diagnostic checks. This is normal and does not mean there is a problem with the vehicle.

It is recommended to leave both systems on for normal driving conditions, but it may be necessary to turn TCS off if the vehicle gets stuck in sand, mud, ice, or snow. See *If the Vehicle Is Stuck* ⇨ *141* and "Turning the Systems Off and On" later in this section.

The indicator light for both systems is in the instrument cluster. This light will:

- Flash when TCS is limiting wheel spin
- Flash when StabiliTrak is activated
- Turn on and stay on when either system is not working

If either system fails to turn on or to activate, a message displays in the Driver Information Center (DIC), and comes on and stays on to indicate that the system is inactive and is not assisting the driver in maintaining control. The vehicle is safe to drive, but driving should be adjusted accordingly.

If comes on and stays on:

1. Stop the vehicle.
2. Turn the engine off and wait 15 seconds.
3. Start the engine.

Drive the vehicle. If comes on and stays on, the vehicle may need more time to diagnose the problem. If the condition persists, see your dealer.

Turning the Systems Off and On

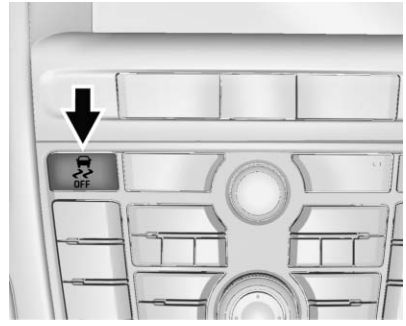

Caution

Do not repeatedly brake or accelerate heavily when TCS is off. The vehicle driveline could be damaged.

To turn off only TCS, press and release OFF. The appropriate DIC message is displayed.

To turn TCS on again, press and release OFF. The appropriate DIC message is displayed.

If TCS is limiting wheel spin when OFF is pressed, the system will not turn off until the wheels stop spinning.

To turn off both TCS and StabiliTrak, press and hold OFF until the StabiliTrak Off light OFF comes on and stays on in the instrument cluster. The appropriate DIC message is displayed.

To turn TCS and StabiliTrak on again, press and release OFF. The StabiliTrak Off light OFF in the instrument cluster turns off. The appropriate DIC message is displayed.

Adding accessories can affect vehicle performance. See *Accessories and Modifications* ⇨ *175*.

Cruise Control

The cruise control lets the vehicle maintain a speed of about 40 km/h (25 mph) or more without keeping your foot on the accelerator. Cruise control does not work at speeds below 40 km/h (25 mph).

⚠ Warning

Cruise control can be dangerous where you cannot drive safely at a steady speed. Do not use cruise control on winding roads or in heavy traffic.

Cruise control can be dangerous on slippery roads. On such roads, fast changes in tire traction can cause excessive wheel slip, and you could lose control. Do not use cruise control on slippery roads.

The vehicle has a Traction Control System (TCS) or StabiliTrak system that begins to limit wheel spin while using cruise control and the cruise control will automatically disengage. See *Traction Control/Electronic Stability Control* ⇨ *157*. If a collision alert occurs when cruise control is activated, cruise control is disengaged. See *Forward Collision Alert (FCA) System* ⇨ *164*. When road conditions allow you to safely use it again, cruise control can be turned back on.

If the brakes are applied, cruise control disengages.

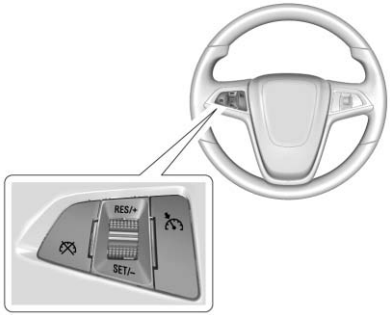

: Press to turn the cruise control system on or off. A white indicator comes on in the instrument cluster when cruise is turned on.

RES/+ : If there is a set speed in memory, move the thumbwheel up briefly to resume to that speed or hold upward to accelerate. If cruise control is already active, use to increase vehicle speed.

SET/− : Move the thumbwheel down briefly to set the speed and activate cruise control. If cruise control is already active, use to decrease speed.

: Press to disengage cruise control without erasing the set speed from memory.

Setting Cruise Control

If is on when not in use, SET/− or RES/+ could get bumped and go into cruise when not desired. Keep off when cruise control is not being used.

To set a speed:

1. Press to turn cruise control on.
2. Get up to the speed desired.
3. Move the thumbwheel down toward SET/− and release it.
4. Remove your foot from the accelerator.

The cruise control indicator on the instrument cluster turns green after cruise control has been set to the desired speed. See *Instrument Cluster* ⇨ *98*.

Resuming a Set Speed

If the cruise control is set at a desired speed and then the brakes are applied or is pressed, the cruise control is disengaged without erasing the set speed from memory. Once the vehicle speed is about 40 km/h (25 mph) or greater, move the thumbwheel up toward RES/+ briefly. The vehicle returns to the previously set speed.

Increasing Speed While Using Cruise Control

If the cruise control system is already activated:

- Move the thumbwheel up toward RES/+ and hold it until the desired speed is reached, then release it.
- To increase vehicle speed in small increments, move the thumbwheel up toward RES/+ briefly. For each press, the vehicle goes about 1.6 km/h (1 mph) faster.

The speedometer reading can be displayed in either English or metric units. See *Driver Information Center (DIC)* ⇨ *110*. The increment value used depends on the units displayed.

Reducing Speed While Using Cruise Control

If the cruise control system is already activated:

- Move the thumbwheel toward SET/− and hold until the desired lower speed is reached, then release it.
- To decrease the vehicle speed in small increments, move the thumbwheel toward SET/− briefly. For each press, the vehicle goes about 1.6 km/h (1 mph) slower.

The speedometer reading can be displayed in either English or metric units. See *Driver Information Center (DIC)* ⇨ *110*. The increment value used depends on the units displayed.

Passing Another Vehicle While Using Cruise Control

Use the accelerator pedal to increase the vehicle speed. When you take your foot off the pedal, the vehicle slows down to the previous set cruise control speed. While pressing the accelerator pedal or shortly following the release to override cruise control, briefly moving the thumbwheel toward SET/− will result in cruise set to the current vehicle speed.

Using Cruise Control on Hills

How well cruise control works on hills depends on the vehicle speed, load, and the steepness of the hills. When going up steep hills, you might have to step on the accelerator pedal to maintain the vehicle speed. When going downhill, you might have to brake or shift to a lower gear to keep your speed down. If the brake pedal is applied, cruise control will disengage.

Ending Cruise Control

There are four ways to end cruise control:

- To disengage cruise control, step lightly on the brake pedal.
- Press .

- Shift the transmission to N (Neutral).
- To turn off cruise control, press .

Erasing Speed Memory

The cruise control set speed is erased from memory if is pressed or if the vehicle is turned off.

Driver Assistance Systems

Assistance Systems for Parking or Backing

If equipped, the Rear Vision Camera (RVC), Rear Parking Assist (RPA), and Front Parking Assist (FPA) may help the driver park or avoid objects. Always check around the vehicle when parking or backing.

Rear Vision Camera (RVC)

When the vehicle is shifted into R (Reverse), the RVC displays an image of the area behind the vehicle in the infotainment display.

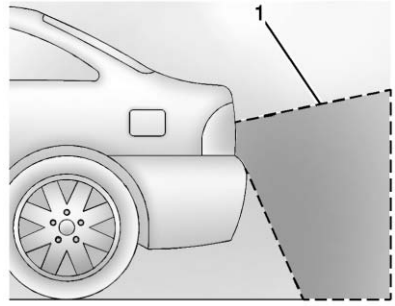

1. View Displayed by the Camera

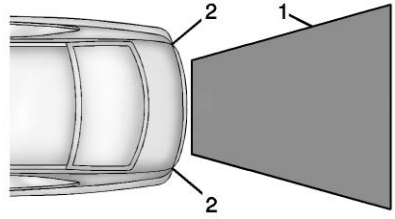

1. View Displayed by the Camera
2. Corners of the Rear Bumper

Displayed images may be farther or closer than they appear. The area displayed is limited and objects that are close to either corner of the bumper or under the bumper do not display.

Touch MENU on the infotainment screen to adjust the display brightness while viewing the rear camera display.

A warning triangle may show on the infotainment display to show that RPA has detected an object. This triangle changes from amber to red and increases in size the closer the object.

⚠ Warning

The camera(s) do not display children, pedestrians, bicyclists, crossing traffic, animals, or any other object outside of the cameras' field of view, below the bumper, or under the vehicle. Shown distances may be different from actual distances. Do not

(Continued)

Warning (Continued)

drive or park the vehicle using only these camera(s). Always check behind and around the vehicle before driving. Failure to use proper care may result in injury, death, or vehicle damage.

Parking Assist

With RPA, as the vehicle backs up at speeds of less than 8 km/h (5 mph), the sensors on the rear bumper detect objects up to 1.5 m (5 ft) behind the vehicle that are within a zone 25 cm (10 in) high off the ground and below bumper level. If the vehicle has Front Parking Assist (FPA), it also detects objects 1.2 m (4 ft) in front of the vehicle. These detection distances may be shorter during warmer or humid weather. Blocked sensors will not detect objects and can also cause false detections. Keep the sensors clean of mud, dirt, snow, ice, and slush; and clean sensors after a car wash in freezing temperatures.

⚠ Warning

The Parking Assist system does not detect children, pedestrians, bicyclists, animals, or objects located below the bumper or that are too close or too far from the vehicle. It is not available at speeds greater than 8 km/h (5 mph). To prevent injury, death, or vehicle damage, even with Parking Assist, always check the area around the vehicle and check all mirrors before moving forward or backing.

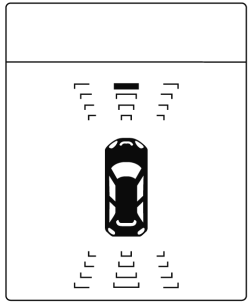

The instrument cluster may have a parking assist display with bars that show “distance to object” and object location information for RPA, and on some vehicles, for the FPA system. As the object gets closer, more bars light up, and the bars change color from yellow to amber to red.

When an object is first detected in the rear, one beep will be heard from the rear. When an object is very close (<0.6 m (2 ft) in the vehicle rear, or <0.3 m (1 ft) in the vehicle front), five beeps will sound from the rear or front depending on object location. Beeps for FPA are higher pitched than for RPA.

Turning the Features On or Off

Press P on the center stack to turn on or off Parking Assist. The indicator light next to the button comes on when the features are on and turns off when the features have been disabled.

The parking assist symbols and guidance lines can be turned on or off through the infotainment system. See “Rear Camera Options” in *Vehicle Personalization* ⇨ *114*

Forward Collision Alert (FCA) System

If equipped, the FCA system may help to avoid or reduce the harm caused by front-end crashes. FCA provides a visual alert and beeps when approaching a vehicle directly ahead too quickly.

The forward-looking FCA camera sensor is on the windshield ahead of the rearview mirror. FCA detects vehicles within a distance of approximately 60 m (197 ft) and operates at speeds above 40 km/h (25 mph).

⚠ Warning

FCA is a warning system and does not apply the brakes. When approaching a slower-moving or stopped vehicle ahead too rapidly, or when following a vehicle too closely, FCA may not provide a warning with enough time to help avoid a crash. It also may not provide any warning at all. FCA does not warn of pedestrians, animals, signs, guardrails, bridges, construction barrels, or other objects. Be ready to take action and apply the brakes. See *Defensive Driving* ⇨ *135*.

Detecting the Vehicle Ahead

FCA warnings will not occur unless the FCA system detects a vehicle ahead. When a vehicle is detected, the vehicle ahead indicator will display green. Vehicles may not be detected on curves, highway exit ramps, or hills, due to poor visibility; or if a vehicle ahead is partially blocked by pedestrians or other objects. FCA will not detect another vehicle ahead until it is completely in the driving lane.

⚠ Warning

FCA does not provide a warning to help avoid a crash, unless it detects a vehicle. FCA may not detect a vehicle ahead if the FCA sensor is blocked by dirt, snow,

(Continued)

Warning (Continued)

or ice, or if the windshield is damaged. It may also not detect a vehicle on winding or hilly roads, or in conditions that can limit visibility such as fog, rain, or snow, or if the headlamps or windshield are not cleaned or in proper condition. Keep the windshield, headlamps, and FCA sensors clean and in good repair.

Collision Alert

When your vehicle approaches another vehicle too rapidly, the FCA display will come on in the DIC and several high-pitched beeps will sound. Apply the brake pedal as needed. Cruise control may be disengaged when the Collision Alert occurs.

Selecting the Alert Timing

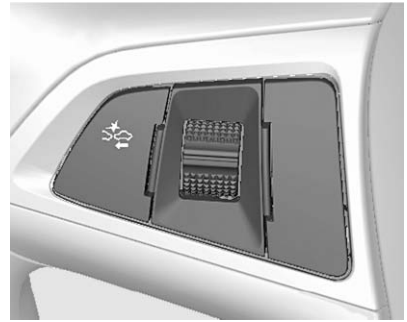

The Collision Alert control is on the steering wheel. Press to set the alert timing. The first button press shows the current control setting on the DIC. Additional button presses will change this setting and turn the system off.

Unnecessary Alerts

FCA may provide unnecessary alerts to turning vehicles, vehicles in other lanes, objects that are not vehicles, or shadows. These alerts are normal operation and the vehicle does not need service.

Cleaning the System

If the FCA system does not seem to operate properly, clean the outside of the windshield area in front of the camera sensor before considering taking the vehicle in for service.

Lane Departure Warning (LDW)

If equipped, LDW may help avoid crashes due to unintentional lane departures. It may provide an alert if the vehicle is crossing a lane without using a turn signal in that direction. LDW uses a camera sensor to detect the lane markings at speeds of 56 km/h (35 mph) or greater.

⚠ Warning

The LDW system does not steer the vehicle. The LDW system may not:

- Provide enough time to avoid a crash.
- Detect lane markings under poor weather or visibility conditions. This can occur if the windshield or headlamps are blocked by dirt, snow, or ice; if they are not in proper condition; or if the sun shines directly into the camera.
- Detect road edges.
- Detect lanes on winding or hilly roads.

If LDW only detects lane markings on one side of the road, it will only warn you when departing the lane on the side where it has detected a lane marking. Always keep your

(Continued)

Warning (Continued)

attention on the road and maintain proper vehicle position within the lane, or vehicle damage, injury, or death could occur. Always keep the windshield, headlamps, and camera sensors clean and in good repair. Do not use LDW in bad weather conditions.

How the System Works

The LDW camera sensor is on the windshield ahead of the rearview mirror.

To turn LDW on and off, press on the center stack. The control indicator will light when LDW is on.

When LDW is on, is green if LDW is available to warn of a lane departure. If the vehicle crosses a detected lane marking without using the turn signal in that direction, changes to amber and flashes. Additionally, there will be three beeps on the right or left, depending on the lane departure direction.

When the System Does Not Seem To Work Properly

The system may not detect lanes as well when there are:

- Close vehicles ahead.
- Sudden lighting changes, such as when driving through tunnels.
- Banked roads.

If the LDW system is not functioning properly when lane markings are clearly visible, cleaning the windshield may help.

LDW alerts may occur due to tar marks, shadows, cracks in the road, temporary or construction lane markings, or other road imperfections. This is normal system operation; the vehicle does not need service. Turn LDW off if these conditions continue.

Fuel

GM recommends the use of TOP TIER® detergent gasoline to keep the engine cleaner and reduce engine deposits. See www.toptiergas.com for a list of TOP TIER detergent gasoline marketers and applicable countries.

Do not use any fuel labeled E85 or FlexFuel. Do not use gasoline with ethanol levels greater than 15% by volume.

Premium unleaded gasoline meeting ASTM specification D4814 with a posted octane rating of 93 is

highly recommended for best performance and fuel economy. Unleaded gasoline with an octane rated as low as 87 can be used. Using unleaded gasoline rated below 93 octane, however, will lead to reduced acceleration and fuel economy. If knocking occurs, use a gasoline rated at 93 octane as soon as possible, otherwise, the engine could be damaged. If heavy knocking is heard when using gasoline with a 93 octane rating, the engine needs service.

Prohibited Fuels

Caution

Do not use fuels with any of the following conditions; doing so may damage the vehicle and void its warranty:

- For vehicles which are not FlexFuel, fuel labeled greater than 15% ethanol by

(Continued)

Caution (Continued)

volume, such as mid-level ethanol blends (16 – 50% ethanol), E85, or FlexFuel.

- Fuel with any amount of methanol, methylal, and aniline. These fuels can corrode metal fuel system parts or damage plastic and rubber parts.
- Fuel containing metals such as methylcyclopentadienyl manganese tricarbonyl (MMT), which can damage the emissions control system and spark plugs.
- Fuel with a posted octane rating of less than the recommended fuel. Using this fuel will lower fuel economy and performance, and may decrease the life of the emissions catalyst.

California Fuel Requirements

If the vehicle is certified to meet California Emissions Standards, it is designed to operate on fuels that meet California specifications. See the underhood emission control label. If this fuel is not available in states adopting California Emissions Standards, the vehicle will operate satisfactorily on fuels meeting federal specifications, but emission control system performance may be affected. The malfunction indicator lamp could turn on and the vehicle may not pass a smog-check test. See *Malfunction Indicator Lamp (Check Engine Light)* ⇨ *102*. If this occurs, return to your authorized dealer for diagnosis. If it is determined that the condition is caused by the type of fuel used, repairs may not be covered by the vehicle warranty.

Fuels in Foreign Countries

The U.S., Canada, and Mexico post fuel octane ratings in anti-knock index (AKI). For fuel not to use in a foreign country, see “Prohibited Fuels” in *Fuel* ⇨ *167*.

Fuel Additives

To keep fuel systems clean, TOP TIER detergent gasoline is recommended. See *Fuel* ⇨ *167*.

If TOP TIER detergent gasoline is not available, one bottle of GM Fuel System Treatment Cleaner added to the fuel tank at every engine oil change, can help. GM Fuel System Treatment Cleaner is the only gasoline additive recommended by General Motors. It is available at your dealer.

Filling the Tank

⚠ Warning

Fuel vapors and fuel fires burn violently and can cause injury or death.

- To help avoid injuries to you and others, read and follow all the instructions on the fuel pump island.
- Turn off the engine when refueling.
- Keep sparks, flames, and smoking materials away from fuel.
- Do not leave the fuel pump unattended.
- Do not use a cell phone while refueling.
- Do not re-enter the vehicle while pumping fuel.
- Keep children away from the fuel pump and never let children pump fuel.

(Continued)

Warning (Continued)

- Fuel can spray out if the fuel cap is opened too quickly. This spray can happen if the tank is nearly full, and is more likely in hot weather. Open the fuel cap slowly and wait for any hiss noise to stop, then unscrew the cap all the way.

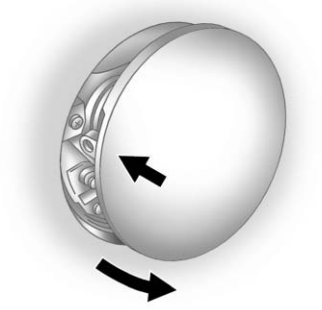

The fuel cap is behind a hinged fuel door on the passenger side of the vehicle. The fuel door is locked when the vehicle doors are locked.

Press 🔓 on the RKE transmitter to unlock. To open the fuel door, push and release the rearward center edge of the door.

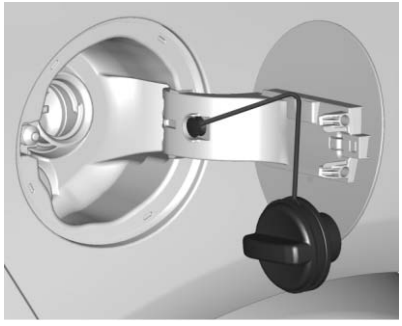

Turn the fuel cap counterclockwise to remove. While refueling, hang the tethered fuel cap from the hook on the fuel door.

⚠ Warning

Overfilling the fuel tank by more than three clicks of a standard fill nozzle may cause:

(Continued)

Warning (Continued)

- Vehicle performance issues, including engine stalling and damage to the fuel system.
- Fuel spills.
- Potential fuel fires.

Be careful not to spill fuel. Wait a few seconds after you have finished pumping before removing the nozzle. Clean fuel from painted surfaces as soon as possible. See *Exterior Care* ⇨ *241*.

When replacing the fuel cap, turn it clockwise until it clicks. Make sure the cap is fully installed. The diagnostic system can determine if the fuel cap has been left off or improperly installed. This would allow fuel to evaporate into the atmosphere. See *Malfunction Indicator Lamp (Check Engine Light)* ⇨ *102*.

⚠ Warning

If a fire starts while you are refueling, do not remove the nozzle. Shut off the flow of fuel by shutting off the pump or by notifying the station attendant. Leave the area immediately.

Caution

If a new fuel cap is needed, be sure to get the right type of cap from your dealer. The wrong type of fuel cap may not fit properly, may cause the malfunction indicator lamp to light, and could damage the fuel tank and emissions system. See *Malfunction Indicator Lamp (Check Engine Light)* ⇨ *102*.

Filling a Portable Fuel Container

⚠ Warning

Filling a portable fuel container while it is in the vehicle can cause fuel vapors that can ignite either by static electricity or other means. You or others could be badly burned and the vehicle could be damaged. Always:

- Use approved fuel containers.
- Remove the container from the vehicle, trunk, or pickup bed before filling.
- Place the container on the ground.
- Place the nozzle inside the fill opening of the container before dispensing fuel, and keep it in contact with the fill opening until filling is complete.

(Continued)

Warning (Continued)

- Fill the container no more than 95% full to allow for expansion.
- Do not smoke, light matches, or use lighters while pumping fuel.
- Avoid using cell phones or other electronic devices.

Trailer Towing

General Towing Information

The vehicle is neither designed nor intended to tow a trailer.

Conversions and Add-Ons

Add-On Electrical Equipment

⚠ Warning

The Data Link Connector (DLC) is used for vehicle service and Emission Inspection/ Maintenance testing. See *Malfunction Indicator Lamp (Check Engine Light)* ⇨ *102*.
A device connected to the DLC — such as an aftermarket fleet or driver-behavior tracking device — may interfere with vehicle systems. This could affect vehicle operation and cause a crash. Such devices may also access information stored in the vehicle's systems.

Caution

Some electrical equipment can damage the vehicle or cause components to not work and would not be covered by the vehicle warranty. Always check with your dealer before adding electrical equipment.

Add-on equipment can drain the vehicle's 12-volt battery, even if the vehicle is not operating.

The vehicle has an airbag system. Before attempting to add anything electrical to the vehicle, see *Servicing the Airbag-Equipped Vehicle* ⇨ *69* and *Adding Equipment to the Airbag-Equipped Vehicle* ⇨ *69*.

Vehicle Care

General Information

General Information 174
California Proposition 65 Warning 174
California Perchlorate Materials Requirements 175
Accessories and Modifications 175

Vehicle Checks

Doing Your Own Service Work 175
Hood 176
Engine Compartment Overview 178
Engine Oil 179
Engine Oil Life System 181
Automatic Transmission Fluid 182
Engine Air Cleaner/Filter 183
Cooling System 183
Engine Overheating 187
Washer Fluid 188
Brakes 189
Brake Fluid 190
Battery - North America 191
Starter Switch Check 191
Automatic Transmission Shift Lock Control Function Check 192
Ignition Transmission Lock Check 192
Park Brake and P (Park) Mechanism Check 192
Wiper Blade Replacement 193
Windshield Replacement 193
Gas Strut(s) 193

Headlamp Aiming

Headlamp Aiming 195

Bulb Replacement

Bulb Replacement 195
High Intensity Discharge (HID) Lighting 195
LED Lighting 195
Adaptive Forward Lighting Lamps 195
Fog Lamps 196
Front Turn Signal Lamps 197
Sidemarker Lamps 197
Side Turn Signal Lamps 198
Back-Up Lamps 199
License Plate Lamp 201

Electrical System

Electrical System Overload . . . 201
Fuses and Circuit Breakers . . . 202
Engine Compartment Fuse Block 202
Instrument Panel Fuse Block 205
Rear Compartment Fuse Block 207

Wheels and Tires

Tires 208
All-Season Tires 209
Winter Tires 209
Low-Profile Tires 210
Tire Sidewall Labeling 210
Tire Designations 212
Tire Terminology and Definitions 213
Tire Pressure 216
Tire Pressure Monitor System 217
Tire Pressure Monitor Operation 218
Tire Inspection 221
Tire Rotation 221
When It Is Time for New Tires 222
Buying New Tires 223
Different Size Tires and Wheels 224
Uniform Tire Quality Grading 224

Wheel Alignment and Tire Balance 226
Wheel Replacement 226
Tire Chains 227
If a Tire Goes Flat 227
Tire Changing 229
Compact Spare Tire 234

Jump Starting
Jump Starting - North America 235

Towing the Vehicle
Towing the Vehicle 238
Recreational Vehicle Towing 239

Appearance Care
Exterior Care 241
Interior Care 246
Floor Mats 249

General Information

For service and parts needs, visit your dealer. You will receive genuine GM parts and GM-trained and supported service people.

Genuine GM parts have one of these marks:

ACDelco®

Genuine GM | Parts

GM Accessories

California Proposition 65 Warning

⚠ Warning

Most motor vehicles, including this one, as well as many of its service parts and fluids, contain and/or emit chemicals known to the State of California to cause cancer and birth defects or other reproductive harm. Engine exhaust, many parts and systems, many fluids, and some component wear by-products contain and/or emit these chemicals. For more information go to www.P65Warnings.ca.gov/passenger-vehicle.

See *Battery - North America* ⇨ *191* and *Jump Starting - North America* ⇨ *235* and the back cover.

California Perchlorate Materials Requirements

Certain types of automotive applications, such as airbag initiators, seat belt pretensioners, and lithium batteries contained in Remote Keyless Entry transmitters, may contain perchlorate materials. Special handling may be necessary. For additional information, see www.dtsc.ca.gov/hazardouswaste/perchlorate.

Accessories and Modifications

Adding non-dealer accessories or making modifications to the vehicle can affect vehicle performance and safety, including such things as airbags, braking, stability, ride and handling, emissions systems, aerodynamics, durability, and electronic systems like antilock brakes, traction control, and stability control. These accessories or modifications could even cause malfunction or damage not covered by the vehicle warranty.

Damage to suspension components caused by modifying vehicle height outside of factory settings will not be covered by the vehicle warranty.

Damage to vehicle components resulting from modifications or the installation or use of non-GM certified parts, including control module or software modifications, is not covered under the terms of the vehicle warranty and may affect remaining warranty coverage for affected parts.

GM Accessories are designed to complement and function with other systems on the vehicle. See your dealer to accessorize the vehicle using genuine GM Accessories installed by a dealer technician.

Also, see *Adding Equipment to the Airbag-Equipped Vehicle* ⇨ *69*.

Vehicle Checks

Doing Your Own Service Work

⚠ Warning

It can be dangerous to work on your vehicle if you do not have the proper knowledge, service manual, tools, or parts. Always follow owner's manual procedures and consult the service manual for your vehicle before doing any service work.

If doing some of your own service work, use the proper service manual. It tells you much more about how to service the vehicle than this manual can. To order the proper service manual, see *Service Publications Ordering Information* ⇨ *275*.

This vehicle has an airbag system. Before attempting to do your own service work, see *Servicing the Airbag-Equipped Vehicle* ⇨ *69*.

Keep a record with all parts receipts and list the mileage and the date of any service work performed. See *Maintenance Records* ⇨ *262*.

Caution
Even small amounts of contamination can cause damage to vehicle systems. Do not allow contaminants to contact the fluids, reservoir caps, or dipsticks.

Hood

To open the hood:

1. Pull the hood release handle inside the vehicle. It is on the lower left side of the instrument panel.

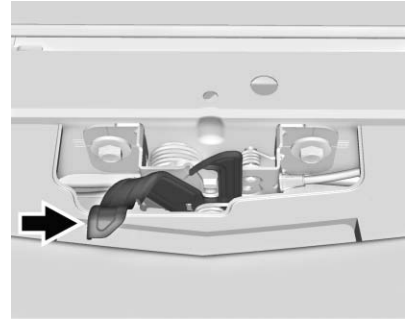

2. Go to the front of the vehicle and move the secondary hood release lever toward the driver side of the vehicle.

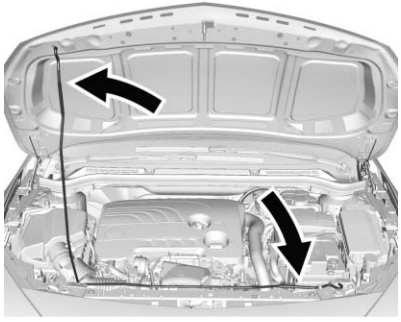

3. Lift the hood and release the hood prop from its retainer, above the radiator. Securely place the hood prop into the slot on the underside of the hood.

To close the hood:

1. Before closing the hood, be sure all filler caps are on properly. Then, lift the hood to relieve pressure on the hood prop. Remove the hood prop from the slot in the underside of the hood and return the prop to its retainer. The prop rod must click into place when returning it to the retainer to prevent hood damage.
2. Lower the hood 30 cm (12 in) above the vehicle and release it so it fully latches. Check to make sure the hood is closed and repeat the process if necessary.

Caution
Do not press the hood into the latch. This may dent the hood.

Engine Compartment Overview

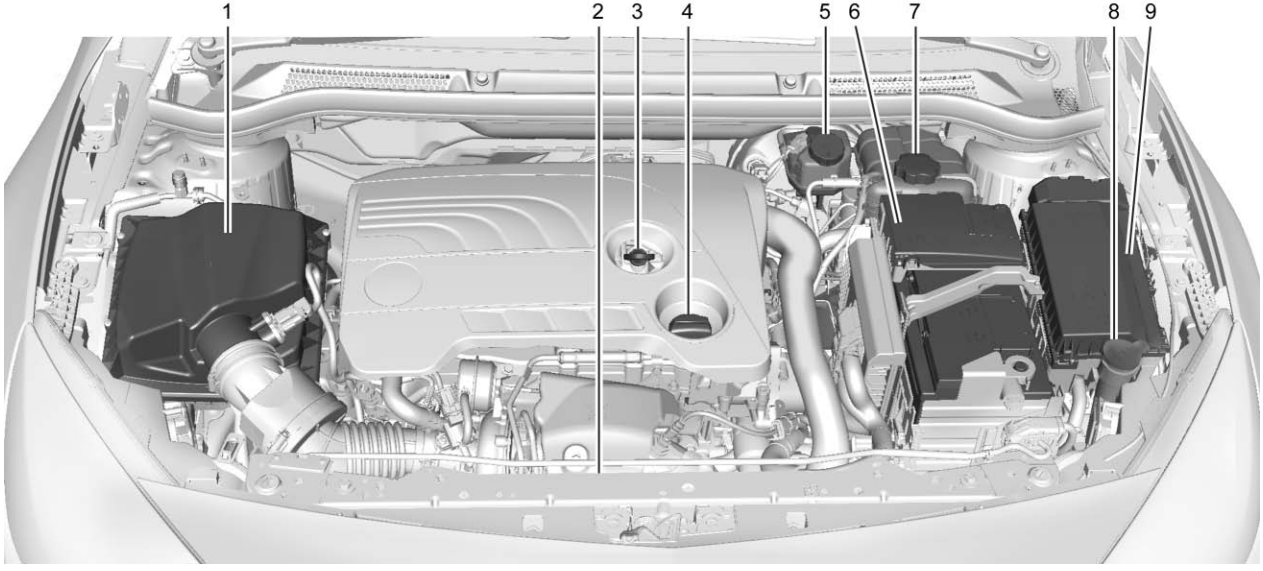

1. *Engine Air Cleaner/Filter* ⇨ *183*.
2. Engine Cooling Fan (Out of View). See *Cooling System* ⇨ *183*.
3. Engine Oil Dipstick. See *Engine Oil* ⇨ *179*.
4. Engine Oil Fill Cap. See *Engine Oil* ⇨ *179*.
5. Brake Fluid Reservoir. See *Brakes* ⇨ *189*.
6. *Battery - North America* ⇨ *191*.
7. Engine Coolant Surge Tank and Pressure Cap. See *Cooling System* ⇨ *183*.
8. Windshield Washer Fluid Reservoir. See *Washer Fluid* ⇨ *188*.
9. *Engine Compartment Fuse Block* ⇨ *202*.

Engine Oil

To ensure proper engine performance and long life, careful attention must be paid to engine oil. Following these simple, but important steps will help protect your investment:

- Use engine oil approved to the proper specification and of the proper viscosity grade. See “Selecting the Right Engine Oil” in this section.
- Check the engine oil level regularly and maintain the proper oil level. See “Checking Engine Oil” and “When to Add Engine Oil” in this section.
- Change the engine oil at the appropriate time. See *Engine Oil Life System* ⇨ *181*.
- Always dispose of engine oil properly. See “What to Do with Used Oil” in this section.

Checking Engine Oil

Check the engine oil level regularly, every 650 km (400 mi), especially prior to a long trip. The engine oil dipstick handle is a loop. See *Engine Compartment Overview* ⇨ *178* for the location.

⚠ Warning

The engine oil dipstick handle may be hot; it could burn you. Use a towel or glove to touch the dipstick handle.

If a low oil Driver Information Center (DIC) message displays, check the oil level.

Follow these guidelines:

- To get an accurate reading, park the vehicle on level ground. Check the engine oil level after the engine has been off for at least two hours. Checking the engine oil level on steep grades or too soon after engine shutoff can result in incorrect readings. Accuracy improves when checking a cold engine prior to starting. Remove the dipstick and check the level.
- If unable to wait two hours, the engine must be off for at least 15 minutes if the engine is warm, or at least 30 minutes if

the engine is not warm. Pull out the dipstick, wipe it with a clean paper towel or cloth, then push it back in all the way. Remove it again, keeping the tip down, and check the level.

When to Add Engine Oil

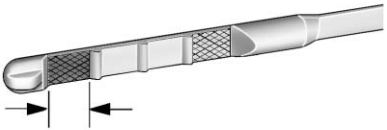

If the oil is below the cross-hatched area at the tip of the dipstick and the engine has been off for at least 15 minutes, add 1 L (1 qt) of the recommended oil and then recheck the level. See “Selecting the Right Engine Oil” later in this section for an explanation of what kind of oil to use. For engine oil crankcase capacity, see *Capacities and Specifications* ⇨ *264*.

Caution

Do not add too much oil. Oil levels above or below the acceptable operating range shown on the dipstick are harmful to the engine. If you find that you have an oil level above the operating range, i.e., the engine has so much oil that the oil level gets above the cross-hatched area that shows the proper operating range, the engine could be damaged. You should drain out the excess oil or limit driving of the vehicle and seek a service professional to remove the excess amount of oil.

See *Engine Compartment Overview* ⇨ *178* for the location of the engine oil fill cap.

Add enough oil to put the level somewhere in the proper operating range. Push the dipstick all the way back in when through.

Selecting the Right Engine Oil

Selecting the right engine oil depends on both the proper oil specification and viscosity grade. See *Recommended Fluids and Lubricants* ⇨ *260*.

Specification

Ask for and use engine oils that meet the dexos1™ specification.

Engine oils that have been approved by GM as meeting the dexos1 specification are marked with the dexos1 approved logo. See www.gmdexos.com.

Caution

Failure to use the recommended engine oil or equivalent can result in engine damage not covered by the vehicle warranty.

Viscosity Grade

Use SAE 5W-30 viscosity grade engine oil.

Cold Temperature Operation: In an area of extreme cold, where the temperature falls below −29 °C (−20 °F), an SAE 0W-30 oil may be used. An oil of this viscosity grade will provide easier cold starting for the engine at extremely low temperatures. When selecting an oil of the appropriate viscosity grade, it is recommended to select an oil of the correct specification. See “Specification” earlier in this section.

Engine Oil Additives/Engine Oil Flushes

Do not add anything to the oil. The recommended oils meeting the dexos1 specification are all that is needed for good performance and engine protection.

Engine oil system flushes are not recommended and could cause engine damage not covered by the vehicle warranty.

What to Do with Used Oil

Used engine oil contains certain elements that can be unhealthy for your skin and could even cause cancer. Do not let used oil stay on your skin for very long. Clean your skin and nails with soap and water, or a good hand cleaner. Wash or properly dispose of clothing or rags containing used engine oil. See the manufacturer's warnings about the use and disposal of oil products.

Used oil can be a threat to the environment. If you change your own oil, be sure to drain all the oil from the filter before disposal. Never dispose of oil by putting it in the trash or pouring it on the ground, into sewers, or into streams or bodies of water. Recycle it by taking it to a place that collects used oil.

Engine Oil Life System

When to Change Engine Oil

This vehicle has a computer system that indicates when to change the engine oil and filter. This is based on a combination of factors which include engine revolutions, engine temperature, and miles driven. Based on driving conditions, the mileage at which an oil change is indicated can vary considerably. For the oil life system to work properly, the system must be reset every time the oil is changed.

When the system has calculated that oil life has been diminished, it indicates that an oil change is necessary. A CHANGE ENGINE OIL SOON message comes on. Change the oil as soon as possible within the next 1 000 km (600 mi). It is possible that, if driving under

the best conditions, the oil life system might indicate that an oil change is not necessary for up to a year. The engine oil and filter must be changed at least once a year and, at this time, the system must be reset. Your dealer has trained service people who will perform this work and reset the system. It is also important to check the oil regularly over the course of an oil drain interval and keep it at the proper level.

If the system is ever reset accidentally, the oil must be changed at 5 000 km (3,000 mi) since the last oil change. Remember to reset the oil life system whenever the oil is changed.

How to Reset the Engine Oil Life System

Reset the system whenever the engine oil is changed so that the system can calculate the next engine oil change. To reset the system:

1. Turn the ignition on with the engine off.
2. Press the DIC MENU button on the turn signal lever to enter the Vehicle Information Menu. Use the thumbwheel to scroll through the menu items until you reach REMAINING OIL LIFE.
3. Press SET/CLR to reset the oil life at 100%.
4. Turn the ignition off.

The system is reset when the CHANGE ENGINE OIL SOON message is off and the REMAINING OIL LIFE 100% message is displayed.

If the CHANGE ENGINE OIL SOON message comes back on when the vehicle is started, the engine oil life system has not been reset. Repeat the procedure.

Automatic Transmission Fluid

How to Check Automatic Transmission Fluid

It is not necessary to check the transmission fluid level.
A transmission fluid leak is the only reason for fluid loss. If a leak occurs, take the vehicle to your dealer and have it repaired as soon as possible.

There is a special procedure for checking and changing the transmission fluid. Because this procedure is difficult, you should have this done at your dealer.

Change the fluid at the intervals listed in *Maintenance Schedule* ⇨ *252*, and be sure to use the fluid listed in *Recommended Fluids and Lubricants* ⇨ *260*.

Engine Air Cleaner/Filter

The engine air cleaner/filter is in the engine compartment on the passenger side of the vehicle. See *Engine Compartment Overview* ⇨ *178*.

When to Inspect the Engine Air Cleaner/Filter

For intervals on changing and inspecting the engine air cleaner/filter, see *Maintenance Schedule* ⇨ *252*.

How to Inspect the Engine Air Cleaner/Filter

Do not start the engine or have the engine running with the engine air cleaner/filter housing open. Before removing the engine air cleaner/filter, make sure that the engine air cleaner/filter housing and nearby components are free of dirt and debris. Remove the engine air cleaner/filter. Lightly tap and shake the engine air cleaner/filter (away from the vehicle), to release loose dust and dirt. Inspect the engine air cleaner/filter for damage, and replace if damaged. Do not clean the engine air cleaner/filter with water or compressed air.

To inspect or replace the air cleaner/filter:

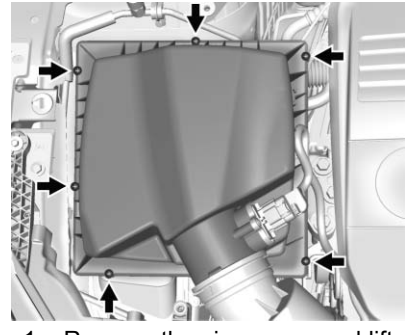

1. Remove the six screws and lift the cover off the engine air cleaner/filter assembly.
2. Inspect or replace the engine air cleaner/filter.
3. Lower the cover into the engine air cleaner/filter assembly, then secure with the six screws.

⚠ Warning

Operating the engine with the air cleaner/filter off can cause you or others to be burned. The air cleaner not only cleans the air; it helps to stop flames if the engine backfires. Use caution when working on the engine and do not drive with the air cleaner/filter off.

Caution

If the air cleaner/filter is off, dirt can easily get into the engine, which could damage it. Always have the air cleaner/filter in place when driving.

Cooling System

The cooling system allows the engine to maintain the correct working temperature.

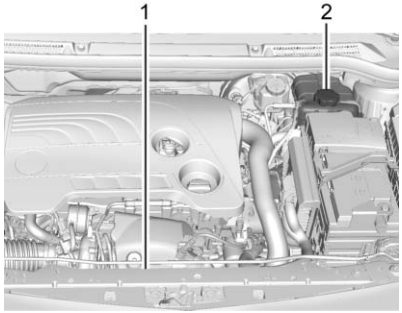

1. Engine Cooling Fan (Out of View)
2. Engine Coolant Surge Tank and Pressure Cap

⚠ Warning

An underhood electric fan can start up even when the engine is not running and can cause injury. Keep hands, clothing, and tools away from any underhood electric fan.

⚠ Warning

Do not touch heater or radiator hoses, or other engine parts. They can be very hot and can burn you. Do not run the engine if there is a leak; all coolant could leak out. That could cause an engine fire and can burn you. Fix any leak before driving the vehicle.

Engine Coolant

The cooling system in the vehicle is filled with DEX-COOL engine coolant. This coolant is designed to remain in the vehicle for 5 years or 240 000 km (150,000 mi), whichever occurs first.

The following explains the cooling system and how to check and add coolant when it is low. If there is a problem with engine overheating, see *Engine Overheating* ⇨ *187*.

What to Use

⚠ Warning

Plain water, or other liquids such as alcohol, can boil before the proper coolant mixture will. With plain water or the wrong mixture, the engine could get too hot but there would not be an overheat warning. The engine could catch fire and you or others could be burned.

Use a 50/50 mixture of clean drinkable water and DEX-COOL coolant. This mixture:

- Gives freezing protection down to −37 °C (−34 °F), outside temperature
- Gives boiling protection up to 129 °C (265 °F), engine temperature
- Protects against rust and corrosion
- Will not damage aluminum parts

- Helps keep the proper engine temperature

Caution

Do not use anything other than a mix of DEX-COOL coolant that meets GM Standard GMW3420 and clean, drinkable water. Anything else can cause damage to the engine cooling system and the vehicle, which would not be covered by the vehicle warranty.

Never dispose of engine coolant by putting it in the trash, pouring it on the ground, or into sewers, streams, or bodies of water. Have the coolant changed by an authorized service center, familiar with legal requirements regarding used coolant disposal. This will help protect the environment and your health.

Checking Coolant

The vehicle must be on a level surface when checking the coolant level.

It is normal to see coolant moving in the upper coolant hose return line when the engine is running.

Check to see if coolant is visible in the coolant surge tank. If the coolant inside the coolant surge tank is boiling, do not do anything else until it cools down.

If coolant is visible but the coolant level is not at or above the mark pointed to, add a 50/50 mixture of clean, drinkable water and DEX-COOL coolant.

Be sure the cooling system is cool before this is done.

If no coolant is visible in the coolant surge tank, add coolant as follows:

How to Add Coolant to the Coolant Surge Tank

⚠ Warning

Steam and scalding liquids from a hot cooling system are under pressure. Turning the pressure cap, even a little, can cause them to come out at high speed and you could be burned. Never turn the cap when the cooling system, including the pressure cap, is hot. Wait for the cooling system and pressure cap to cool.

⚠ Warning

Plain water, or other liquids such as alcohol, can boil before the proper coolant mixture will. With plain water or the wrong mixture, the engine could get too hot but there would not be an overheat warning. The engine could catch fire and you or others could be burned.

⚠ Warning

Spilling coolant on hot engine parts can burn you. Coolant contains ethylene glycol and it will burn if the engine parts are hot enough.

Caution

Failure to follow the specific coolant fill procedure could cause the engine to overheat and could cause system damage. If coolant is not visible in the surge tank, contact your dealer.

If no problem is found, check to see if coolant is visible in the coolant surge tank. If coolant is visible but the coolant level is not at the indicated level mark, add a 50/50 mixture of clean, drinkable water and DEX-COOL coolant at the coolant surge tank, but be sure the cooling system, including the coolant surge tank pressure cap, is cool before you do it.

1. Remove the coolant surge tank pressure cap when the cooling system, including the coolant surge tank pressure cap and upper radiator hose, is no longer hot.

   Turn the pressure cap slowly counterclockwise about one-quarter of a turn. If you hear a hiss, wait for that to stop. This will allow any pressure still left to be vented out the discharge hose.

2. Keep turning the pressure cap slowly and remove it.

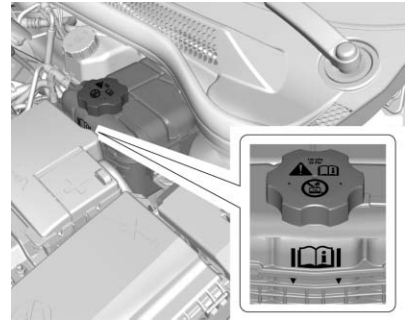

3. Fill the coolant surge tank with the proper mixture to the indicated level mark.

4. With the coolant surge tank pressure cap off, start the engine and let it run until you can feel the upper radiator hose getting hot. Watch out for the engine cooling fan.

   By this time, the coolant level inside the coolant surge tank may be lower. If the level is lower, add more of the proper mixture to the coolant surge tank until the level reaches the indicated level mark.

5. Replace the pressure cap tightly.

Check the level in the coolant surge tank when the cooling system has cooled down. If the coolant is not at the proper level, repeat Steps 1–3 and reinstall the pressure cap. If the coolant still is not at the proper level when the system cools down again, see your dealer.

Caution

If the pressure cap is not tightly installed, coolant loss and engine damage may occur. Be sure the cap is properly and tightly secured.

Engine Overheating

The vehicle has an engine coolant temperature gauge to warn of the engine overheating. See *Engine Coolant Temperature Gauge* ⇨ *100*.

If the decision is made not to lift the hood when this warning appears, get service help right away. See *Roadside Assistance Program* ⇨ *270*.

If the decision is made to lift the hood, make sure the vehicle is parked on a level surface.

Then check to see if the engine cooling fan is running. If the engine is overheating, the fan should be running. If it is not, do not continue to run the engine. Have the vehicle serviced.

Caution

Do not run the engine if there is a leak in the engine cooling system. This can cause a loss of all coolant and can damage the system and vehicle. Have any leaks fixed right away.

If Steam Is Coming from the Engine Compartment

⚠ Warning

Steam and scalding liquids from a hot cooling system are under pressure. Turning the pressure cap, even a little, can cause them to come out at high speed and you could be burned. Never turn the cap when the cooling system, including the pressure cap, is hot. Wait for the cooling system and pressure cap to cool.

If No Steam Is Coming from the Engine Compartment

If an engine overheat warning is displayed but no steam can be seen or heard, the problem may not be too serious. Sometimes the engine can get a little too hot when the vehicle:

- Climbs a long hill on a hot day
- Stops after high-speed driving
- Idles for long periods in traffic

If the overheat warning is displayed with no sign of steam:

1. Turn the air conditioning off.
2. Turn the heater on to the highest temperature and to the highest fan speed. Open the windows as necessary.
3. When it is safe to do so, pull off the road, shift to P (Park) or N (Neutral), and let the engine idle.

If the engine coolant temperature gauge is no longer in the overheat zone, the vehicle can be driven. Continue to drive the vehicle slowly for about 10 minutes. Keep a safe vehicle distance from the vehicle in front. If the warning does not come back on, continue to drive normally and have the cooling system checked for proper fill and function.

If the warning continues, pull over, stop, and park the vehicle right away.

If there is no sign of steam, idle the engine for three minutes while parked. If the warning is still displayed, turn off the engine until it cools down.

Washer Fluid

What to Use

When the vehicle needs windshield washer fluid, be sure to read the manufacturer's instructions before use. If operating the vehicle in an area where the temperature may fall below freezing, use a fluid that has sufficient protection against freezing.

Adding Washer Fluid

Open the cap with the washer symbol on it. Add washer fluid until the tank is full. See *Engine Compartment Overview* ⇨ *178* for reservoir location.

Caution

- Do not use washer fluid that contains any type of water repellent coating. This can cause the wiper blades to chatter or skip.
- Do not use engine coolant (antifreeze) in the windshield washer. It can damage the windshield washer system and paint.
- Do not mix water with ready-to-use washer fluid. Water can cause the solution to freeze and damage the washer fluid tank and other parts of the washer system.

(Continued)

Caution (Continued)

- When using concentrated washer fluid, follow the manufacturer instructions for adding water.
- Fill the washer fluid tank only three-quarters full when it is very cold. This allows for fluid expansion if freezing occurs, which could damage the tank if it is completely full.

Brakes

Disc brake pads have built-in wear indicators that make a high-pitched warning sound when the brake pads are worn and new pads are needed. The sound can come and go or can be heard all the time when the vehicle is moving, except when applying the brake pedal firmly.

⚠ Warning

The brake wear warning sound means that soon the brakes will not work well. That could lead to a crash. When the brake wear warning sound is heard, have the vehicle serviced.

Caution

Continuing to drive with worn-out brake pads could result in costly brake repair.

Some driving conditions or climates can cause a brake squeal when the brakes are first applied or lightly applied. This does not mean something is wrong with the brakes.

Properly torqued wheel nuts are necessary to help prevent brake pulsation. When tires are rotated, inspect brake pads for wear and evenly tighten wheel nuts in the proper sequence to torque specifications. See *Capacities and Specifications* ⇨ *264*.

Brake pads should be replaced as complete sets.

Brake Pedal Travel

See your dealer if the brake pedal does not return to normal height, or if there is a rapid increase in pedal travel. This could be a sign that brake service may be required.

Replacing Brake System Parts

Always replace brake system parts with new, approved replacement parts. If this is not done, the brakes may not work properly. The braking performance expected can change in many other ways if the wrong replacement brake parts are installed or if parts are improperly installed.

Brake Fluid

The brake master cylinder reservoir is filled with GM approved DOT 4 brake fluid as indicated on the reservoir cap. See *Engine Compartment Overview* ⇨ *178* for the location of the reservoir.

Checking Brake Fluid

With the vehicle in P (Park) on a level surface, the brake fluid level should be between the minimum and maximum marks on the brake fluid reservoir.

There are only two reasons why the brake fluid level in the reservoir may go down:

- Normal brake lining wear. When new linings are installed, the fluid level goes back up.
- A fluid leak in the brake hydraulic system. Have the brake hydraulic system fixed. With a leak, the brakes will not work well.

Always clean the brake fluid reservoir cap and the area around the cap before removing it.

Do not top off the brake fluid. Adding fluid does not correct a leak. If fluid is added when the linings are worn, there will be too much fluid when new brake linings are installed. Add or remove fluid, as necessary, only when work is done on the brake hydraulic system.

⚠ Warning

If too much brake fluid is added, it can spill on the engine and burn, if the engine is hot enough. You or others could be burned, and the vehicle could be damaged. Add brake fluid only when work is done on the brake hydraulic system.

When the brake fluid falls to a low level, the brake warning light comes on. See *Brake System Warning Light* ⇨ *104*.

Brake fluid absorbs water over time which degrades the effectiveness of the brake fluid. Replace brake fluid at the specified intervals to prevent increased stopping distance. See *Maintenance Schedule* ⇨ *252*.

What to Add

Use only GM approved DOT 4 brake fluid from a clean, sealed container. See *Recommended Fluids and Lubricants* ⇨ *260*.

⚠ Warning

The wrong or contaminated brake fluid could result in damage to the brake system. This could result in the loss of braking leading to a possible injury. Always use the proper GM approved brake fluid.

Caution

If brake fluid is spilled on the vehicle's painted surfaces, the paint finish can be damaged. Immediately wash off any painted surface.

Battery - North America

The original equipment battery is maintenance free. Do not remove the cap and do not add fluid.

Refer to the replacement number shown on the original battery label when a new battery is needed. See *Engine Compartment Overview* ⇨ *178* for battery location.

⚠ Warning

WARNING: Battery posts, terminals, and related accessories contain lead and lead compounds, chemicals known to the State of California to cause

(Continued)

Warning (Continued)

cancer and birth defects or other reproductive harm. Batteries also contain other chemicals known to the State of California to cause cancer. **WASH HANDS AFTER HANDLING.** For more information go to www.P65Warnings.ca.gov/passenger-vehicle.

See *California Proposition 65 Warning* ⇨ *174* and the back cover.

Vehicle Storage

⚠ Warning

Batteries have acid that can burn you and gas that can explode. You can be badly hurt if you are not careful. See *Jump Starting - North America* ⇨ *235* for tips on working around a battery without getting hurt.

Infrequent Usage: Remove the black, negative (−) cable from the battery to keep the battery from running down.

Extended Storage: Remove the black, negative (−) cable from the battery or use a battery trickle charger.

Starter Switch Check

⚠ Warning

When you are doing this inspection, the vehicle could move suddenly. If the vehicle moves, you or others could be injured.

1. Before starting this check, be sure there is enough room around the vehicle.
2. Apply both the parking brake and the regular brake.

   Do not use the accelerator pedal, and be ready to turn off the engine immediately if it starts.

3. Try to start the engine in each gear. The vehicle should start only in P (Park) or N (Neutral). If the vehicle starts in any other position, contact your dealer for service.

Automatic Transmission Shift Lock Control Function Check

⚠ Warning

When you are doing this inspection, the vehicle could move suddenly. If the vehicle moves, you or others could be injured.

1. Before starting this check, be sure there is enough room around the vehicle. It should be parked on a level surface.
2. Apply the parking brake. Be ready to apply the regular brake immediately if the vehicle begins to move.
3. With the engine off, turn the ignition on, but do not start the engine. Without applying the regular brake, try to move the shift lever out of P (Park) with normal effort. If the shift lever moves out of P (Park), contact your dealer for service.

Ignition Transmission Lock Check

While parked, and with the parking brake set, try to turn the ignition off in each shift lever position.

- The ignition should turn to off only when the shift lever is in P (Park).
- The ignition key should come out only when the ignition is off.

Contact your dealer if service is required.

Park Brake and P (Park) Mechanism Check

⚠ Warning

When you are doing this check, the vehicle could begin to move. You or others could be injured and property could be damaged. Make sure there is room in front of the vehicle in case it begins to roll. Be ready to apply the regular brake at once should the vehicle begin to move.

Park on a fairly steep hill, with the vehicle facing downhill. Keeping your foot on the regular brake, set the parking brake.

- To check the parking brake's holding ability: With the engine running and the transmission in N (Neutral), slowly remove foot pressure from the regular brake pedal. Do this until the vehicle is held by the parking brake only.

- To check the P (Park) mechanism's holding ability: With the engine running, shift to P (Park). Then release the parking brake followed by the regular brake.

Contact your dealer if service is required.

Wiper Blade Replacement

Windshield wiper blades should be inspected for wear and cracking. See the *Maintenance Schedule* ⇨ *252*.

Replacement blades come in different types and are removed in different ways. For proper type and length, see *Maintenance Replacement Parts* ⇨ *261*.

Caution

Allowing the wiper arm to touch the windshield when no wiper blade is installed could damage the windshield. Any damage that occurs would not be covered by

(Continued)

Caution (Continued)

the vehicle warranty. Do not allow the wiper arm to touch the windshield.

To replace the windshield wiper blade:

1. Pull the windshield wiper assembly away from the windshield.

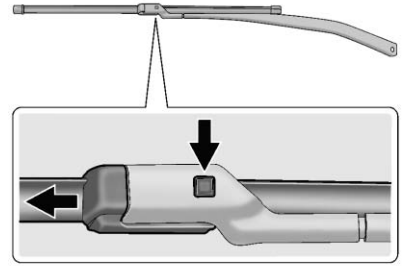

2. Press the button in the middle of the wiper arm connector, and pull the wiper blade away from the arm connector.
3. Remove the wiper blade.
4. Reverse Steps 1–3 for wiper blade replacement.

Windshield Replacement

Driver Assistance Systems

If the windshield needs to be replaced and the vehicle is equipped with a front camera sensor for the Driver Assistance Systems, a GM replacement windshield is recommended. The replacement windshield must be installed according to GM specifications for proper alignment. If it is not, these systems may not work properly, they may display messages, or they may not work at all. See your dealer for proper windshield replacement.

Gas Strut(s)

This vehicle is equipped with gas strut(s) to provide assistance in lifting and holding open the hood/trunk/liftgate system in full open position.

⚠ Warning

If the gas struts that hold open the hood, trunk, and/or liftgate fail, you or others could be seriously injured. Take the vehicle to your dealer for service immediately. Visually inspect the gas struts for signs of wear, cracks, or other damage periodically. Check to make sure the hood/trunk/liftgate is held open with enough force. If struts are failing to hold the hood/trunk/liftgate, do not operate. Have the vehicle serviced.

Caution

Do not apply tape or hang any objects from gas struts. Also do not push down or pull on gas struts. This may cause damage to the vehicle.

See *Maintenance Schedule* ⇨ *252*.

Hood

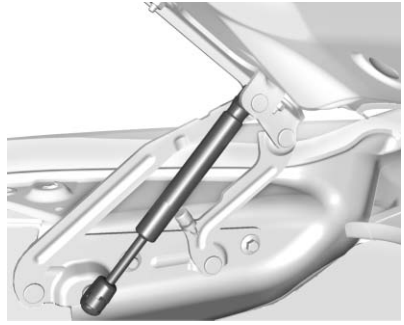

Trunk

Liftgate

Headlamp Aiming

Headlamp aim has been preset and should need no further adjustment.

If the vehicle is damaged in a crash, the headlamp aim may be affected. If adjustment to the headlamps is necessary, see your dealer.

Bulb Replacement

For the proper type of replacement bulbs, or any bulb changing procedure not listed in this section, contact your dealer.

High Intensity Discharge (HID) Lighting

⚠ Warning

The High Intensity Discharge (HID) lighting system operates at a very high voltage. If you try to service any of the system components, you could be seriously injured. Have your dealer or a qualified technician service them.

After an HID headlamp bulb has been replaced, the beam might be a slightly different shade than it was originally. This is normal.

LED Lighting

This vehicle has several LED lamps. For replacement of any LED lighting assembly, contact your dealer.

Adaptive Forward Lighting Lamps

Corner Lighting Lamps

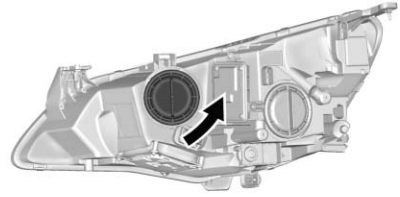

1. Turn the cap counterclockwise and remove it.

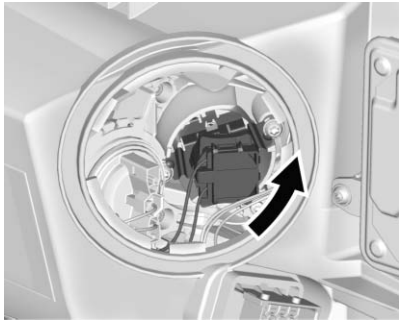

2. Turn the bulb holder counterclockwise to disengage. Remove the bulb holder from the reflector.

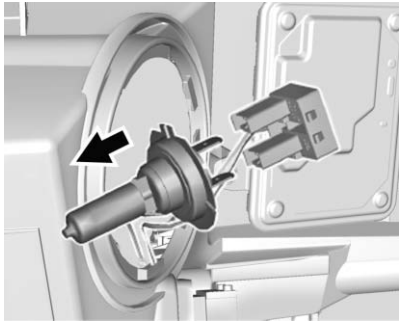

3. Pull the bulb from the plug connector.
4. Replace the bulb and connect the bulb holder with the plug connector.
5. Insert the bulb holder, engaging the two lugs into the reflector and turn clockwise to secure.

Fog Lamps

The bulbs are accessible from the underside of the vehicle.

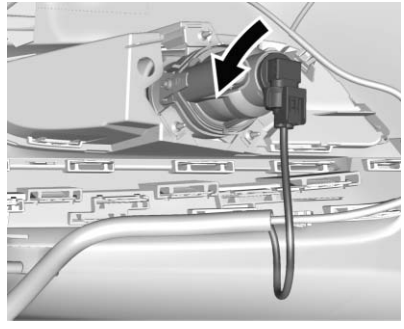

1. Turn the bulb holder counterclockwise and remove it from the reflector.

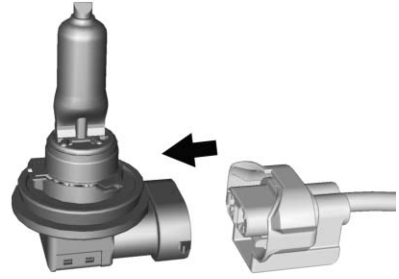

2. Disengage the bulb socket from the plug connector by pressing the retaining lug.
3. Remove and replace the bulb socket with bulb and attach the plug connector.
4. Insert the bulb socket into the reflector by turning clockwise and engage.

Front Turn Signal Lamps

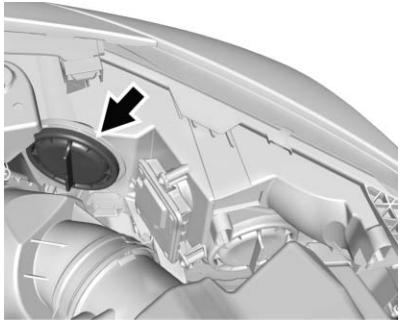

1. Turn the cap counterclockwise and remove it.

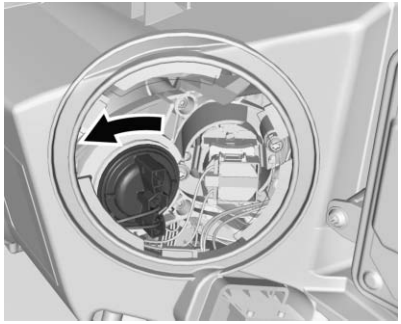

2. Turn the bulb socket counterclockwise and remove it from the reflector.

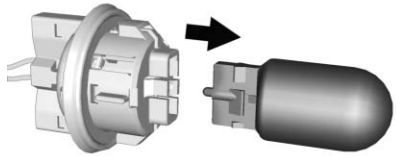

3. Pull the bulb from the bulb holder and replace it.
4. Insert the bulb socket into the reflector and turn clockwise.
5. Fit the cap and turn clockwise.

Sidemarker Lamps

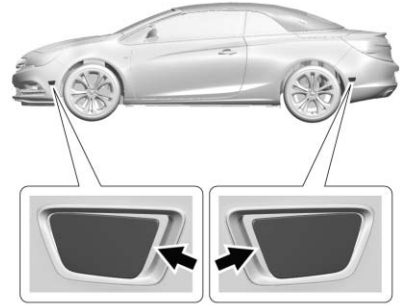

1. Insert a tool in between the sidemarker housing and the bumper. To prevent damage, place a cloth between the tool and the bumper.

2. Push the tool to disengage the clip and remove the sidemarker housing. Do not use excessive force.

3. Turn the bulb socket 90° counterclockwise and remove it from the housing.

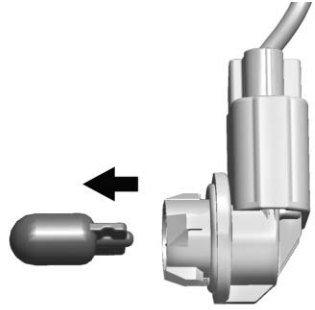

4. Pull the bulb from the bulb holder and replace it.
5. Re-insert the socket into the housing and turn it 90° clockwise.
6. Insert the sidemarker housing in reverse order in the bumper first, then gently push in the clip on the side.

Side Turn Signal Lamps

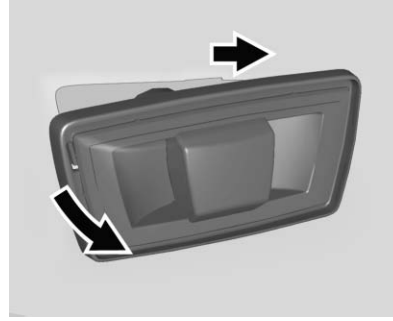

1. Insert a tool between the side turn signal and the fender. Place a cloth between the tool and the fender.
2. Push the tool to disengage the clip and remove the side turn signal lamp.

3. Turn the bulb holder counterclockwise and remove it from the housing.

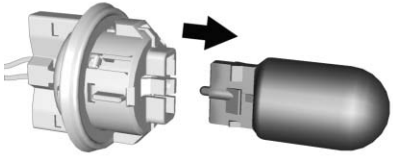

4. Pull the bulb from the bulb holder and replace it.
5. Insert the bulb holder and turn it clockwise.
6. Insert the right end of the lamp, slide it to the right, and insert the left end.

Back-Up Lamps

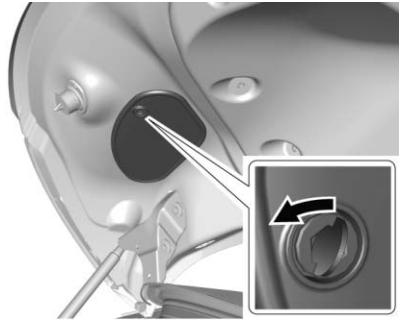

1. The cover is inside the trunk lid. Remove the screw on the cover with a tool and turn clockwise to remove the cover.

2. Remove the bulb holder by turning it counterclockwise.

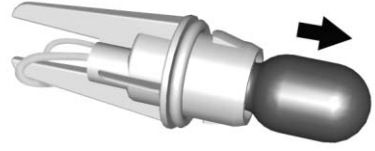

3. Remove and replace the bulb.

4. Insert the bulb holder into the taillamp assembly and turn it clockwise.

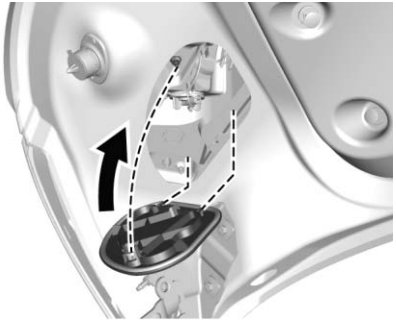

5. Close the cover by inserting the fastener clips first. Lock the cover by turning the screw clockwise with a tool.

Rear Position Lamps

1. Open the trunk lid.

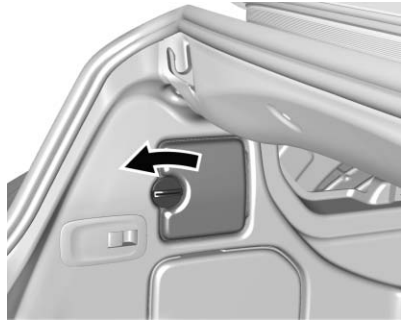

2. Release the cover in the side trim panel and remove.

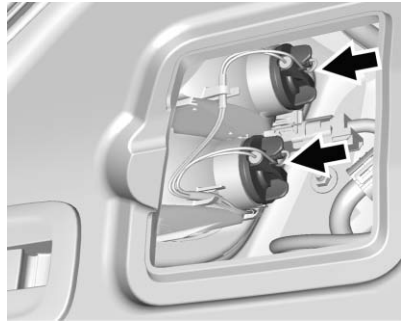

3. Remove the bulb holder by turning it counterclockwise.

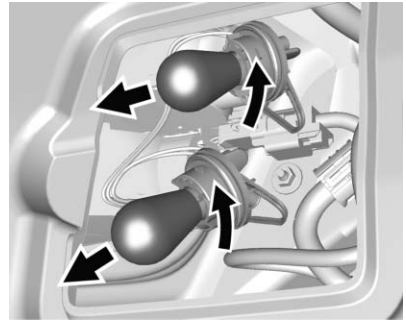

4. Remove and replace the bulb.
5. Insert the bulb holder into the housing and turn clockwise.
6. Attach the side trim cover.

License Plate Lamp

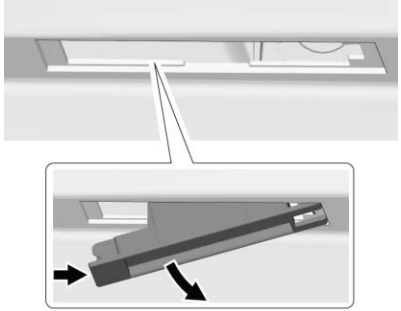

Lamp Assembly

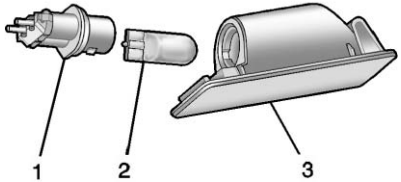

Bulb Assembly

1. Bulb Socket
2. Bulb
3. Lamp Assembly

To replace one of these bulbs:

1. Push the left end of the lamp assembly toward the right.
2. Turn the lamp assembly down to remove it.
3. Turn the bulb socket (1) counterclockwise to remove it from the lamp assembly (3).
4. Pull the bulb (2) straight out of the bulb socket (1).
5. Push the replacement bulb straight into the bulb socket and turn the bulb socket clockwise to install it into the lamp assembly.
6. Turn the lamp assembly into the lamp assembly opening by engaging the clip side first.
7. Push on the lamp side opposite the clip until the lamp assembly snaps into place.

Electrical System

Electrical System Overload

The vehicle has fuses and circuit breakers to protect against an electrical system overload.

When the current electrical load is too heavy, the circuit breaker opens and closes, protecting the circuit until the current load returns to normal or the problem is fixed. This greatly reduces the chance of circuit overload and fire caused by electrical problems.

Fuses and circuit breakers protect power devices in the vehicle.

Replace a bad fuse with a new one of the identical size and rating.

If there is a problem on the road and a fuse needs to be replaced, the same amperage fuse can be borrowed. Choose some feature of the vehicle that is not needed to use and replace it as soon as possible.

Headlamp Wiring

An electrical overload may cause the lamps to go on and off, or in some cases to remain off. Have the headlamp wiring checked right away if the lamps go on and off or remain off.

Windshield Wipers

If the wiper motor overheats due to heavy snow or ice, the windshield wipers will stop until the motor cools, and the wiper control is turned off. After removal of the blockage, the wiper motor will restart when the control is moved to the desired operating position.

Although the circuit is protected from electrical overload, overload due to heavy snow or ice may cause wiper linkage damage. Always clear ice and heavy snow from the windshield before using the windshield wipers.

If the overload is caused by an electrical problem and not snow or ice, be sure to get it fixed.

Fuses and Circuit Breakers

The wiring circuits in the vehicle are protected from short circuits by a combination of fuses and circuit breakers. This greatly reduces the chance of damage caused by electrical problems.

⚠ Danger

Fuses and circuit breakers are marked with their ampere rating. Do not exceed the specified amperage rating when replacing fuses and circuit breakers. Use of an oversized fuse or circuit breaker can result in a vehicle fire. You and others could be seriously injured or killed.

To check a fuse, look at the silver-colored band inside the fuse. If the band is broken or melted, replace the fuse. Be sure to replace a bad fuse with a new one of the identical size and rating.

Fuses of the same amperage can be temporarily borrowed from another fuse location, if a fuse goes out. Replace the fuse as soon as possible.

To identify and check fuses, circuit breakers, and relays, see *Engine Compartment Fuse Block* ⇨ *202*, *Instrument Panel Fuse Block* ⇨ *205*, and *Rear Compartment Fuse Block* ⇨ *207*.

Engine Compartment Fuse Block

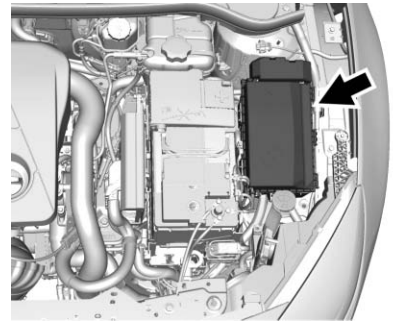

To open the fuse block cover, press the clips at the front and back and rotate the cover up to the side.

Caution

Spilling liquid on any electrical component on the vehicle may damage it. Always keep the covers on any electrical component.

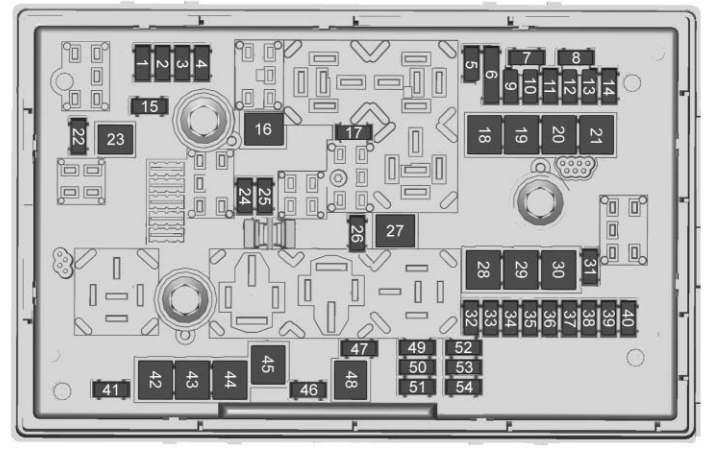

There is a fuse puller in the engine compartment fuse block.

The vehicle may not be equipped with all of the fuses, relays, and features shown.

Fuses	Usage
1	Engine control module
2	O2 sensor
3	Fuel injection/Ignition system
4	Fuel injection/Ignition system
5	–
6	Heated mirrors
7	Fan control

Fuses	Usage
8	O2 sensor/Powertrain cooling
9	Rear window sensor
10	Vehicle battery sensor
11	Trunk release
12	Adaptive headlamps/ Automatic headlamp leveling
13	ABS valves
14	–
15	Engine control module
16	Starter
17	Transmission control module
18	Rear window defogger
19	Front power window
20	Rear power window
21	Rear electrical center
22	–
23	–

Fuses	Usage
24	Right high-beam headlamp
25	Left high-beam headlamp
26	Front fog lamps
27	–
28	–
29	Electric parking brake
30	ABS pump
31	–
32	Airbag
33	Adaptive forward lighting/Automatic headlamp leveling
34	Exhaust gas recirculation
35	Power windows/Rain sensor/Exterior mirror
36	Climate control
37	–
38	Vacuum pump

Fuses	Usage
39	Fuel system control module
40	Front windshield washer
41	–
42	Engine cooling fan
43	Windshield wipers
44	–
45	Engine cooling fan
46	–
47	Horn
48	Engine cooling fan
49	Fuel pump
50	Headlamp leveling/ Adaptive forward lighting
51	–
52	–
53	Transmission control module/Engine control module

Fuses	Usage
54	Vacuum pump/ Instrument panel cluster/HVAC

Instrument Panel Fuse Block

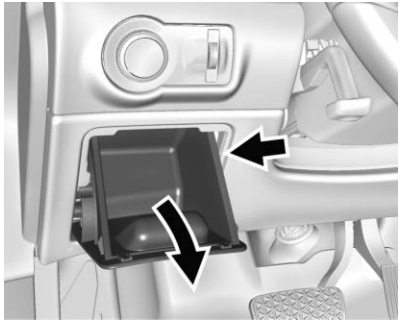

The instrument panel fuse block is on the driver side of the instrument panel. To access:

1. Open the storage compartment.
2. Pull straight down and out to remove the storage compartment.
3. Remove the cover.

To reinstall the cover, line up the retainers and push into place.

The vehicle may not be equipped with all of the fuses, relays, and features shown.

Fuses	Usage
1	Displays
2	Body control module/ Exterior lamps
3	Body control module/ Exterior lamps
4	Infotainment system
5	Infotainment system/ Instrument cluster
6	Power outlet
7	Power outlet
8	Body control module/ Left low-beam headlamp
9	Body control module/ Right low-beam headlamp
10	Body control module/ Door locks
11	Interior fan
12	Driver power seat
13	Passenger power seat
14	Diagnostic connector
15	Airbag
17	A/C system
18	Service diagnose
19	Body control module/ Brake lamps/Reverse lamps/Interior lamps
20	–
21	Instrument panel
22	Ignition
23	Body control module
24	Body control module
25	–

Fuses	Usage
26	Trunk power outlet accessory

Relays	Usage
16	Trunk lid relay

Rear Compartment Fuse Block

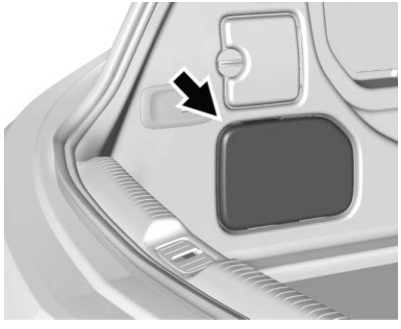

The rear compartment fuse block, if equipped, is on the left side of the trunk behind a cover.

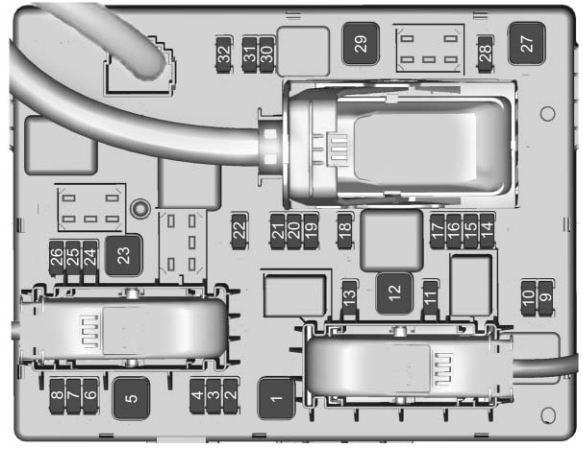

The vehicle may not be equipped with all of the fuses, relays, and features shown.

Fuses	Usage
1	Convertible control module/Right power rail
2	–
3	Rear parking assist
4	Selective catalytic reduction system
5	–
6	–
7	Power seats
8	Convertible control module

Fuses	Usage
9	Selective catalytic reduction system
10	Selective catalytic reduction system
11	Tire pressure monitor/Rear vision camera
12	Convertible control module/Reverse lamps
13	–
14	Rear seat electrical folding
15	–
16	Rear vision camera/ Convertible control module
17	–
18	–
19	Heated steering wheel
20	–
21	Heated seats
22	–
23	Convertible control module/Left power rail
24	Selective catalytic reduction system
25	–
26	Non-logistic mode
27	Passive entry/ Passive start
28	–
29	Hydraulic unit
30	–
31	–
32	–

Wheels and Tires

Tires

Every new GM vehicle has high-quality tires made by a leading tire manufacturer. See the warranty manual for information regarding the tire warranty and where to get service. For additional information refer to the tire manufacturer.

⚠ Warning

- Poorly maintained and improperly used tires are dangerous.
- Overloading the tires can cause overheating as a result of too much flexing. There could be a blowout and a serious crash. See *Vehicle Load Limits* ⇨ *141*.

(Continued)

Warning (Continued)

- Underinflated tires pose the same danger as overloaded tires. The resulting crash could cause serious injury. Check all tires frequently to maintain the recommended pressure. Tire pressure should be checked when the tires are cold.
- Overinflated tires are more likely to be cut, punctured, or broken by a sudden impact — such as when hitting a pothole. Keep tires at the recommended pressure.
- Worn or old tires can cause a crash. If the tread is badly worn, replace them.

(Continued)

Warning (Continued)

- Replace any tires that have been damaged by impacts with potholes, curbs, etc.
- Improperly repaired tires can cause a crash. Only the dealer or an authorized tire service center should repair, replace, dismount, and mount the tires.
- Do not spin the tires in excess of 56 km/h (35 mph) on slippery surfaces such as snow, mud, ice, etc. Excessive spinning may cause the tires to explode.

All-Season Tires

This vehicle may come with all-season tires. These tires are designed to provide good overall performance on most road surfaces and weather conditions. Original equipment tires designed to GM's specific tire performance criteria have a TPC specification code molded onto the sidewall. Original equipment all-season tires can be identified by the last two characters of this TPC code, which will be “MS.”

Consider installing winter tires on the vehicle if frequent driving on snow or ice-covered roads is expected. All-season tires provide adequate performance for most winter driving conditions, but they may not offer the same level of traction or performance as winter tires on snow or ice-covered roads. See *Winter Tires* ⇨ *209*.

Winter Tires

This vehicle was not originally equipped with winter tires. Winter tires are designed for increased traction on snow and ice-covered roads. Consider installing winter tires on the vehicle if frequent driving on ice or snow covered

roads is expected. See your dealer for details regarding winter tire availability and proper tire selection. Also, see *Buying New Tires* ⇨ *223*.

With winter tires, there may be decreased dry road traction, increased road noise, and shorter tread life. After changing to winter tires, be alert for changes in vehicle handling and braking.

If using winter tires:

- Use tires of the same brand and tread type on all four wheel positions.
- Use only radial ply tires of the same size, load range, and speed rating as the original equipment tires.

Winter tires with the same speed rating as the original equipment tires may not be available for H, V, W, Y, and ZR speed rated tires. If winter tires with a lower speed rating are chosen, never exceed the tire's maximum speed capability.

Low-Profile Tires

If the vehicle has P245/40R20 size tires, they are classified as low-profile tires.

Caution

Low-profile tires are more susceptible to damage from road hazards or curb impact than standard profile tires. Tire and/or wheel assembly damage can occur when coming into contact with road hazards like potholes, or sharp edged objects, or when sliding into a curb. The warranty does not cover this type of damage. Keep tires set to the correct inflation pressure and when possible, avoid contact with curbs, potholes, and other road hazards.

Tire Sidewall Labeling

Useful information about a tire is molded into its sidewall. The examples show a typical passenger vehicle tire and a compact spare tire sidewall.

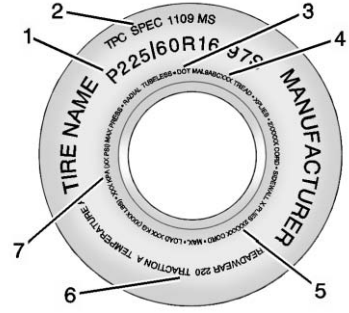

Passenger (P-Metric) Tire Example

(1) Tire Size : The tire size is a combination of letters and numbers used to define a particular tire's width, height, aspect ratio, construction type, and service description. See the “Tire Size” illustration later in this section.

(2) TPC Spec (Tire Performance Criteria Specification) : Original equipment tires designed to GM's specific tire performance criteria have a TPC specification code molded onto the sidewall. GM's TPC specifications meet or exceed all federal safety guidelines.

(3) DOT (Department of Transportation) : The Department of Transportation (DOT) code indicates that the tire is in compliance with the U.S. Department of Transportation Motor Vehicle Safety Standards.

DOT Tire Date of Manufacture : The last four digits of the TIN indicate the tire manufactured date. The first two digits represent the week (01–52) and the last two digits, the year. For example, the third week of the year 2010 would have a four-digit DOT date of 0310.

(4) Tire Identification Number (TIN) : The letters and numbers following the DOT (Department of Transportation) code are the Tire Identification Number (TIN). The TIN shows the manufacturer and plant code, tire size, and date the tire was manufactured. The TIN is molded onto both sides of the tire, although only one side may have the date of manufacture.

(5) Tire Ply Material : The type of cord and number of plies in the sidewall and under the tread.

(6) Uniform Tire Quality Grading (UTQG) : Tire manufacturers are required to grade tires based on three performance factors: treadwear, traction, and temperature resistance. For more information see *Uniform Tire Quality Grading* ⇨ *224*.

(7) Maximum Cold Inflation Load Limit : Maximum load that can be carried and the maximum pressure needed to support that load.

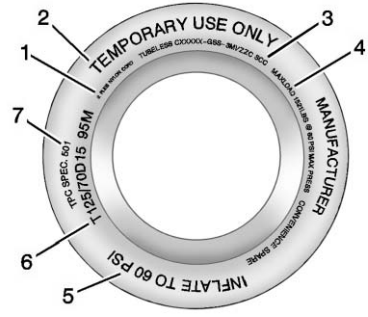

Compact Spare Tire Example

(1) Tire Ply Material : The type of cord and number of plies in the sidewall and under the tread.

(2) Temporary Use Only : The compact spare tire or temporary use tire should not be driven at speeds over 80 km/h (50 mph). The compact spare tire is for emergency use when a regular road tire has lost air and gone flat. If the vehicle has a compact spare tire, see *Compact Spare Tire* ⇨ *234* and *If a Tire Goes Flat* ⇨ *227*.

(3) Tire Identification Number (TIN) : The letters and numbers following the DOT (Department of Transportation) code are the Tire Identification Number (TIN). The TIN shows the manufacturer and plant code, tire size, and date the tire was manufactured. The TIN is molded onto both sides of the tire, although only one side may have the date of manufacture.

(4) Maximum Cold Inflation Load Limit : Maximum load that can be carried and the maximum pressure needed to support that load.

(5) Tire Inflation : The temporary use tire or compact spare tire should be inflated to 420 kPa (60 psi). For more information on tire pressure and inflation see *Tire Pressure* ⇨ *216*.

(6) Tire Size : A combination of letters and numbers define a tire's width, height, aspect ratio, construction type, and service description. The letter T as the first character in the tire size means the tire is for temporary use only.

(7) TPC Spec (Tire Performance Criteria Specification) : Original equipment tires designed to GM's specific tire performance criteria have a TPC specification code molded onto the sidewall. GM's TPC specifications meet or exceed all federal safety guidelines.

Tire Designations

Tire Size

The following is an example of a typical passenger vehicle tire size.

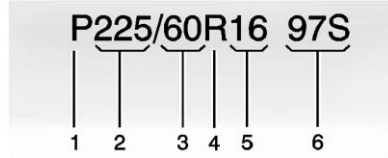

(1) Passenger (P-Metric) Tire : The United States version of a metric tire sizing system. The letter P as the first character in the tire size means a passenger vehicle tire engineered to standards set by the U.S. Tire and Rim Association.

(2) Tire Width : The three-digit number indicates the tire section width in millimeters from sidewall to sidewall.

(3) Aspect Ratio : A two-digit number that indicates the tire height-to-width measurements. For example, if the tire size aspect ratio is 60, as shown in item 3 of the illustration, it would mean that the tire's sidewall is 60 percent as high as it is wide.

(4) Construction Code : A letter code is used to indicate the type of ply construction in the tire. The letter R means radial ply construction; the letter D means diagonal or bias ply construction; and the letter B means belted-bias ply construction.

(5) Rim Diameter : Diameter of the wheel in inches.

(6) Service Description : These characters represent the load index and speed rating of the tire. The load index represents the load carrying capacity a tire is certified to carry. The speed rating is the maximum speed a tire is certified to carry a load.

Tire Terminology and Definitions

Air Pressure : The amount of air inside the tire pressing outward on each square inch of the tire. Air pressure is expressed in kPa (kilopascal) or psi (pounds per square inch).

Accessory Weight : The combined weight of optional accessories. Some examples of optional accessories are automatic transmission, power windows, power seats, and air conditioning.

Aspect Ratio : The relationship of a tire's height to its width.

Belt : A rubber coated layer of cords between the plies and the tread. Cords may be made from steel or other reinforcing materials.

Bead : The tire bead contains steel wires wrapped by steel cords that hold the tire onto the rim.

Bias Ply Tire : A pneumatic tire in which the plies are laid at alternate angles less than 90 degrees to the centerline of the tread.

Cold Tire Pressure : The amount of air pressure in a tire, measured in kPa (kilopascal) or psi (pounds per square inch) before a tire has built up heat from driving. See *Tire Pressure* ⇨ *216*.

Curb Weight : The weight of a motor vehicle with standard and optional equipment including the

maximum capacity of fuel, oil, and coolant, but without passengers and cargo.

DOT Markings : A code molded into the sidewall of a tire signifying that the tire is in compliance with the U.S. Department of Transportation (DOT) Motor Vehicle Safety Standards. The DOT code includes the Tire Identification Number (TIN), an alphanumeric designator which can also identify the tire manufacturer, production plant, brand, and date of production.

GVWR : Gross Vehicle Weight Rating. See *Vehicle Load Limits* ⇨ *141*.

GAWR FRT : Gross Axle Weight Rating for the front axle. See *Vehicle Load Limits* ⇨ *141*.

GAWR RR : Gross Axle Weight Rating for the rear axle. See *Vehicle Load Limits* ⇨ *141*.

Intended Outboard Sidewall : The side of an asymmetrical tire that must always face outward when mounted on a vehicle.

Kilopascal (kPa) : The metric unit for air pressure.

Light Truck (LT-Metric) Tire : A tire used on light duty trucks and some multipurpose passenger vehicles.

Load Index : An assigned number ranging from 1 to 279 that corresponds to the load carrying capacity of a tire.

Maximum Inflation Pressure : The maximum air pressure to which a cold tire can be inflated. The maximum air pressure is molded onto the sidewall.

Maximum Load Rating : The load rating for a tire at the maximum permissible inflation pressure for that tire.

Maximum Loaded Vehicle Weight : The sum of curb weight, accessory weight, vehicle capacity weight, and production options weight.

Normal Occupant Weight : The number of occupants a vehicle is designed to seat multiplied by 68 kg (150 lb). See *Vehicle Load Limits* ⇨ *141*.

Occupant Distribution : Designated seating positions.

Outward Facing Sidewall : The side of an asymmetrical tire that has a particular side that faces outward when mounted on a vehicle. The side of the tire that contains a whitewall, bears white lettering, or bears manufacturer, brand, and/or model name molding that is higher or deeper than the same moldings on the other sidewall of the tire.

Passenger (P-Metric) Tire : A tire used on passenger cars and some light duty trucks and multipurpose vehicles.

Recommended Inflation Pressure : Vehicle manufacturer's recommended tire inflation pressure as shown on the tire placard. See *Tire Pressure* ⇨ *216* and *Vehicle Load Limits* ⇨ *141*.

Radial Ply Tire : A pneumatic tire in which the ply cords that extend to the beads are laid at 90 degrees to the centerline of the tread.

Rim : A metal support for a tire and upon which the tire beads are seated.

Sidewall : The portion of a tire between the tread and the bead.

Speed Rating : An alphanumeric code assigned to a tire indicating the maximum speed at which a tire can operate.

Traction : The friction between the tire and the road surface. The amount of grip provided.

Tread : The portion of a tire that comes into contact with the road.

Treadwear Indicators : Narrow bands, sometimes called wear bars, that show across the tread of a tire when only 1.6 mm (1/16 in) of tread remains. See *When It Is Time for New Tires* ⇨ *222*.

UTQGS (Uniform Tire Quality Grading Standards) : A tire information system that provides consumers with ratings for a tire's traction, temperature, and treadwear. Ratings are determined by tire manufacturers using government testing procedures. The ratings are molded into the sidewall of the tire. See *Uniform Tire Quality Grading* ⇨ *224*.

Vehicle Capacity Weight : The number of designated seating positions multiplied by 68 kg (150 lb) plus the rated cargo load. See *Vehicle Load Limits* ⇨ *141*.

Vehicle Maximum Load on the Tire : Load on an individual tire due to curb weight, accessory weight, occupant weight, and cargo weight.

Vehicle Placard : A label permanently attached to a vehicle showing the vehicle capacity weight and the original equipment tire size and recommended inflation pressure. See “Tire and Loading Information Label” under *Vehicle Load Limits* ⇨ *141*.

Tire Pressure

Tires need the correct amount of air pressure to operate effectively.

Caution

Neither tire underinflation nor overinflation is good. Underinflated tires, or tires that do not have enough air, can result in:

- Tire overloading and overheating which could lead to a blowout.
- Premature or irregular wear.
- Poor handling.
- Reduced fuel economy.

Overinflated tires, or tires that have too much air, can result in:

- Unusual wear.

(Continued)

Caution (Continued)

- Poor handling.
- Rough ride.
- Needless damage from road hazards.

The Tire and Loading Information label on the vehicle indicates the original equipment tires and the correct cold tire inflation pressures. The recommended pressure is the minimum air pressure needed to support the vehicle's maximum load carrying capacity. See *Vehicle Load Limits* ⇨ *141*.

How the vehicle is loaded affects vehicle handling and ride comfort. Never load the vehicle with more weight than it was designed to carry.

When to Check

Check the tires once a month or more. Do not forget the compact spare, if the vehicle has one. The cold compact spare tire pressure should be at 420 kPa (60 psi). See *Compact Spare Tire* ⇨ *234*.

How to Check

Use a good quality pocket-type gauge to check tire pressure. Proper tire inflation cannot be determined by looking at the tire. Check the tire inflation pressure when the tires are cold, meaning the vehicle has not been driven for at least three hours or no more than 1.6 km (1 mi).

Remove the valve cap from the tire valve stem. Press the tire gauge firmly onto the valve to get a pressure measurement. If the cold tire inflation pressure matches the recommended pressure on the Tire and Loading Information label, no

further adjustment is necessary. If the inflation pressure is low, add air until the recommended pressure is reached. If the inflation pressure is high, press on the metal stem in the center of the tire valve to release air.

Recheck the tire pressure with the tire gauge.

Put the valve caps back on the valve stems to keep out dirt and moisture and prevent leaks. Use only valve caps designed for the vehicle by GM. TPMS sensors could be damaged and would not be covered by the vehicle warranty.

Tire Pressure Monitor System

The Tire Pressure Monitor System (TPMS) uses radio and sensor technology to check tire pressure levels. The TPMS sensors monitor the air pressure in your tires and transmit tire pressure readings to a receiver located in the vehicle.

Each tire, including the spare (if provided), should be checked monthly when cold and inflated to the inflation pressure recommended by the vehicle manufacturer on the vehicle placard or tire inflation pressure label. (If your vehicle has tires of a different size than the size indicated on the vehicle placard or tire inflation pressure label, you should determine the proper tire inflation pressure for those tires.)

As an added safety feature, your vehicle has been equipped with a tire pressure monitoring system (TPMS) that illuminates a low tire pressure telltale when one or more of your tires is significantly under-inflated.

Accordingly, when the low tire pressure telltale illuminates, you should stop and check your tires as soon as possible, and inflate them to the proper pressure. Driving on a significantly under-inflated tire causes the tire to overheat and can lead to tire failure. Under-inflation also reduces fuel efficiency and tire tread life, and may affect the vehicle's handling and stopping ability.

Please note that the TPMS is not a substitute for proper tire maintenance, and it is the driver's responsibility to maintain correct tire pressure, even if under-inflation has not reached the level to trigger illumination of the TPMS low tire pressure telltale.

Your vehicle has also been equipped with a TPMS malfunction indicator to indicate when the system is not operating properly. The TPMS malfunction indicator is combined with the low tire pressure telltale. When the system detects a malfunction, the telltale will flash for approximately one minute and then remain continuously illuminated. This sequence will continue upon subsequent vehicle start-ups as long as the malfunction exists.

When the malfunction indicator is illuminated, the system may not be able to detect or signal low tire

pressure as intended. TPMS malfunctions may occur for a variety of reasons, including the installation of replacement or alternate tires or wheels on the vehicle that prevent the TPMS from functioning properly. Always check the TPMS malfunction telltale after replacing one or more tires or wheels on your vehicle to ensure that the replacement or alternate tires and wheels allow the TPMS to continue to function properly.

See *Tire Pressure Monitor Operation* ⇨ *218*.

See *Radio Frequency Statement* ⇨ *276*.

Tire Pressure Monitor Operation

This vehicle may have a Tire Pressure Monitor System (TPMS). The TPMS is designed to warn the driver when a low tire pressure condition exists. TPMS sensors are mounted onto each tire and wheel assembly, excluding the spare tire and wheel assembly. The TPMS sensors monitor the air pressure in the tires and transmit the tire pressure readings to a receiver in the vehicle.

When a low tire pressure condition is detected, the TPMS illuminates the low tire pressure warning light on the instrument cluster. If the warning light comes on, stop as soon as possible and inflate the tires to the recommended pressure shown on the Tire and Loading Information label. See *Vehicle Load Limits* ⇨ *141*.

A message to check the pressure in a specific tire displays in the Driver Information Center (DIC). The low tire pressure warning light and the DIC warning message come on at each ignition cycle until the tires are inflated to the correct inflation pressure. Using the DIC, tire pressure levels can be viewed. For additional information and details about the DIC operation and displays see *Driver Information Center (DIC)* ⇨ *110*.

The low tire pressure warning light may come on in cool weather when the vehicle is first started, and then turn off as the vehicle is driven. This could be an early indicator that the air pressure is getting low and needs to be inflated to the proper pressure.

A Tire and Loading Information label, attached to your vehicle, shows the size of the original equipment tires and the correct inflation pressure for the tires when they are cold. See *Vehicle Load Limits* ⇨ *141*, for an example of the Tire and Loading Information label and its location. Also see *Tire Pressure* ⇨ *216*.

The TPMS can warn about a low tire pressure condition but it does not replace normal tire maintenance. See *Tire Inspection* ⇨ *221*, *Tire Rotation* ⇨ *221* and *Tires* ⇨ *208*.

Caution

Tire sealant materials are not all the same. A non-approved tire sealant could damage the TPMS sensors. TPMS sensor damage caused by using an incorrect tire sealant is not covered by the vehicle warranty. Always use only the GM approved tire sealant available through your dealer or included in the vehicle.

TPMS Malfunction Light and Message

The TPMS will not function properly if one or more of the TPMS sensors are missing or inoperable. When the system detects a malfunction, the low tire pressure warning light flashes for about one minute and then stays on for the remainder of the ignition cycle. A DIC warning message also displays. The malfunction light and DIC warning message come on at each ignition cycle until the problem is corrected. Some of the conditions that can cause these to come on are:

- One of the road tires has been replaced with the spare tire. The spare tire does not have a TPMS sensor. The malfunction light and DIC message should go off after the road tire is replaced and the sensor matching process is performed successfully. See “TPMS Sensor Matching Process” following.
- The TPMS sensor matching process was not done or not completed successfully after rotating the tires. The malfunction light and the DIC message should go off after successfully completing the sensor matching process. See "TPMS Sensor Matching Process" following.
- One or more TPMS sensors are missing or damaged. The malfunction light and the DIC message should go off when the TPMS sensors are installed and the sensor matching process is performed successfully. See your dealer for service.
- Replacement tires or wheels do not match the original equipment tires or wheels. Tires and wheels other than those recommended could prevent the TPMS from functioning properly. See *Buying New Tires* ⇨ *223*.
- Operating electronic devices or being near facilities using radio wave frequencies similar to the TPMS could cause the TPMS sensors to malfunction.

If the TPMS is not functioning properly it cannot detect or signal a low tire pressure condition. See your dealer for service if the TPMS malfunction light and DIC message comes on and stays on.

TPMS Sensor Matching Process

Each TPMS sensor has a unique identification code. The identification code needs to be matched to a new tire/wheel position after rotating the vehicle’s tires or replacing one or

more of the TPMS sensors. The TPMS sensor matching process should also be performed after replacing a spare tire with a road tire containing the TPMS sensor. The malfunction light and the DIC message should go off at the next ignition cycle. The sensors are matched to the tire/wheel positions, using a TPMS relearn tool, in the following order: driver side front tire, passenger side front tire, passenger side rear tire, and driver side rear. See your dealer for service or to purchase a relearn tool. A TPMS relearn tool can also be purchased. See Tire Pressure Monitor Sensor Activation Tool at www.gmtoolsandequipment.com or call 1-800-GM TOOLS (1-800-468-6657).

There are two minutes to match the first tire/wheel position, and five minutes overall to match all four tire/wheel positions. If it takes longer, the matching process stops and must be restarted.

The TPMS sensor matching process is:

1. Set the parking brake.
2. Put the vehicle in P (Park).
3. Turn the ignition on without starting the vehicle. See *Ignition Positions* ⇨ *145*.
4. Press MENU to select the Vehicle Information Menu in the Driver Information Center (DIC).
5. Use the thumbwheel to scroll to the Tire Pressure Menu Item screen.
6. Press SET/CLR to begin the sensor matching process.

   A message asking if the process should begin should appear.
7. Press SET/CLR again to confirm the selection.

   The horn sounds twice to signal the receiver is in relearn mode and the TIRE LEARNING ACTIVE message displays on the DIC screen.
8. Start with the driver side front tire.
9. Place the relearn tool against the tire sidewall, near the valve stem. Then press the button to activate the TPMS sensor. A horn chirp confirms that the sensor identification code has been matched to this tire and wheel position.
10. Proceed to the passenger side front tire, and repeat the procedure in Step 9.
11. Proceed to the passenger side rear tire, and repeat the procedure in Step 9.
12. Proceed to the driver side rear tire, and repeat the procedure in Step 9. The horn sounds two times to indicate the sensor identification code has been matched to the driver side rear tire, and the TPMS sensor matching process is no longer active. The TIRE LEARNING ACTIVE message on the DIC display screen goes off.
13. Turn the vehicle off.

14. Set all four tires to the recommended air pressure level as indicated on the Tire and Loading Information label.

Tire Inspection

We recommend that the tires, including the spare tire, if the vehicle has one, be inspected for signs of wear or damage at least once a month.

Replace the tire if:

- The indicators at three or more places around the tire can be seen.
- There is cord or fabric showing through the tire's rubber.
- The tread or sidewall is cracked, cut, or snagged deep enough to show cord or fabric.
- The tire has a bump, bulge, or split.
- The tire has a puncture, cut, or other damage that cannot be repaired well because of the size or location of the damage.

Tire Rotation

Tires should be rotated every 12 000 km (7,500 mi). See *Maintenance Schedule* ⇨ *252*.

Tires are rotated to achieve a more uniform wear for all tires. The first rotation is the most important.

Anytime unusual wear is noticed, rotate the tires as soon as possible, check for proper tire inflation pressure, and check for damaged tires or wheels. If the unusual wear continues after the rotation, check the wheel alignment. See *When It Is Time for New Tires* ⇨ *222* and *Wheel Replacement* ⇨ *226*.

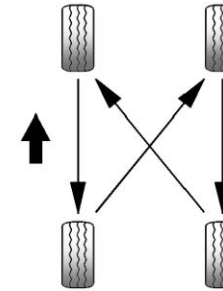

Use this rotation pattern when rotating the tires.

Do not include the compact spare tire in the tire rotation.

Adjust the front and rear tires to the recommended inflation pressure on the Tire and Loading Information label after the tires have been rotated. See *Tire Pressure* ⇨ *216* and *Vehicle Load Limits* ⇨ *141*.

Reset the Tire Pressure Monitor System. See *Tire Pressure Monitor Operation* ⇨ *218*.

Check that all wheel nuts are properly tightened. See “Wheel Nut Torque” under *Capacities and Specifications* ⇨ *264*.

⚠ Warning

Rust or dirt on a wheel, or on the parts to which it is fastened, can make wheel nuts become loose after time. The wheel could come off and cause an accident. When changing a wheel, remove any rust or dirt from places where the wheel attaches to the vehicle. In an emergency, a cloth or a paper towel can be used; however, use a scraper or wire brush later to remove all rust or dirt.

Lightly coat the center of the wheel hub with wheel bearing grease after a wheel change or tire rotation to prevent corrosion or rust build-up. Do not get grease on the flat wheel mounting surface or on the wheel nuts or bolts.

When It Is Time for New Tires

Factors such as maintenance, temperatures, driving speeds, vehicle loading, and road conditions affect the wear rate of the tires.

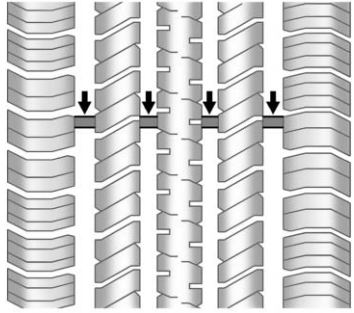

Treadwear indicators are one way to tell when it is time for new tires. Treadwear indicators appear when the tires have only 1.6 mm (1/16 in) or less of tread remaining.
See *Tire Inspection* ⇨ *221* and *Tire Rotation* ⇨ *221*.

The rubber in tires ages over time. This also applies to the spare tire, if the vehicle has one, even if it is never used. Multiple factors including temperatures, loading conditions, and inflation pressure maintenance affect how fast aging takes place. GM recommends that tires, including the spare if equipped, be replaced after six years, regardless of tread wear. The tire manufacture date is the last four digits of the DOT Tire Identification Number (TIN) which is molded into one side of the tire sidewall. The first two digits represent the week (01–52) and the last two digits, the year. For example, the third week of the year 2010 would have a four-digit DOT date of 0310.

Vehicle Storage

Tires age when stored normally mounted on a parked vehicle. Park a vehicle that will be stored for at least a month in a cool, dry, clean area away from direct sunlight to slow aging. This area should be free

of grease, gasoline, or other substances that can deteriorate rubber.

Parking for an extended period can cause flat spots on the tires that may result in vibrations while driving. When storing a vehicle for at least a month, remove the tires or raise the vehicle to reduce the weight from the tires.

Buying New Tires

GM has developed and matched specific tires for the vehicle. The original equipment tires installed were designed to meet General Motors Tire Performance Criteria Specification (TPC Spec) system rating. When replacement tires are needed, GM strongly recommends buying tires with the same TPC Spec rating.

GM's exclusive TPC Spec system considers over a dozen critical specifications that impact the overall performance of the vehicle, including brake system performance, ride and handling, traction control, and tire pressure monitoring performance. GM's TPC Spec number is molded onto the tire's sidewall near the tire size. If the tires have an all-season tread design, the TPC Spec number will be followed by MS for mud and snow. See *Tire Sidewall Labeling* ⇨ *210*.

GM recommends replacing worn tires in complete sets of four. Uniform tread depth on all tires will help to maintain the performance of the vehicle. Braking and handling performance may be adversely affected if all the tires are not replaced at the same time. If proper rotation and maintenance have been done, all four tires should wear out at about the same time. See *Tire Rotation* ⇨ *221*. However, if it is necessary to replace only one axle set of worn tires, place the new tires on the rear axle.

Winter tires with the same speed rating as the original equipment tires may not be available for H, V, W, Y and ZR speed rated tires. Never exceed the winter tires' maximum speed capability when using winter tires with a lower speed rating.

⚠ Warning

Tires could explode during improper service. Attempting to mount or dismount a tire could cause injury or death. Only your dealer or authorized tire service center should mount or dismount the tires.

⚠ Warning

Mixing tires of different sizes, brands, or types may cause loss of control of the vehicle, resulting in a crash or other vehicle damage. Use the correct size, brand, and type of tires on all wheels.

⚠ Warning

Using bias-ply tires on the vehicle may cause the wheel rim flanges to develop cracks after many miles of driving. A tire and/or wheel could fail suddenly and cause a crash. Use only radial-ply tires with the wheels on the vehicle.

If the vehicle tires must be replaced with a tire that does not have a TPC Spec number, make sure they are the same size, load range, speed rating, and construction (radial) as the original tires.

Vehicles that have a tire pressure monitoring system could give an inaccurate low-pressure warning if non-TPC Spec rated tires are installed. See *Tire Pressure Monitor System* ⇨ *217*.

The Tire and Loading Information label indicates the original equipment tires on the vehicle. See *Vehicle Load Limits* ⇨ *141*.

Different Size Tires and Wheels

If wheels or tires are installed that are a different size than the original equipment wheels and tires, vehicle performance, including its braking, ride and handling characteristics, stability, and resistance to rollover may be affected. If the vehicle has electronic systems such as antilock brakes, rollover airbags, roll bars, traction control, electronic stability control, or All-Wheel Drive, the performance of these systems can also be affected.

⚠ Warning

If different sized wheels are used, there may not be an acceptable level of performance and safety if tires not recommended for those wheels are selected. This increases the chance of a crash and serious injury. Only use GM specific wheel and tire systems developed for the vehicle, and have them properly installed by a GM certified technician.

See *Buying New Tires* ⇨ *223* and *Accessories and Modifications* ⇨ *175*.

Uniform Tire Quality Grading

The following information relates to the system developed by the United States National Highway

Traffic Safety Administration (NHTSA), which grades tires by treadwear, traction, and temperature performance. This applies only to vehicles sold in the United States. The grades are molded on the sidewalls of most passenger car tires. The Uniform Tire Quality Grading (UTQG) system does not apply to deep tread, winter tires, compact spare tires, tires with nominal rim diameters of 10 to 12 inches (25 to 30 cm), or to some limited-production tires.

While the tires available on General Motors passenger cars and light trucks may vary with respect to these grades, they must also conform to federal safety requirements and additional General Motors Tire Performance Criteria (TPC) standards.

Quality grades can be found where applicable on the tire sidewall between tread shoulder and maximum section width. For example:

Treadwear 200 Traction AA Temperature A

All Passenger Car Tires Must Conform to Federal Safety Requirements In Addition To These Grades.

Treadwear

The treadwear grade is a comparative rating based on the wear rate of the tire when tested under controlled conditions on a specified government test course. For example, a tire graded 150 would wear one and one-half (1½) times as well on the government course as a tire graded 100. The relative performance of tires depends upon the actual conditions of their use, however, and may depart significantly from the norm due to variations in driving habits, service practices and differences in road characteristics and climate.

Traction

The traction grades, from highest to lowest, are AA, A, B, and C. Those grades represent the tire's ability to stop on wet pavement as measured under controlled conditions on specified government test surfaces of asphalt and concrete. A tire marked C may have poor traction performance. Warning: The traction grade assigned to this tire is based on straight-ahead braking traction tests, and does not include acceleration, cornering, hydroplaning, or peak traction characteristics.

Temperature

The temperature grades are A (the highest), B, and C, representing the tire's resistance to the generation of heat and its ability to dissipate heat when tested under controlled conditions on a specified indoor laboratory test wheel. Sustained high temperature can cause the material of the tire to degenerate and reduce tire life, and excessive temperature can lead to sudden tire failure. The grade C corresponds to a level of performance which all passenger car tires must meet under the Federal Motor Safety Standard No. 109. Grades B and A represent higher levels of performance on the laboratory test wheel than the minimum required by law. Warning: The temperature grade for this tire is established for a tire that is properly inflated and not overloaded. Excessive speed, underinflation, or excessive loading, either separately or in combination, can cause heat buildup and possible tire failure.

Wheel Alignment and Tire Balance

The tires and wheels were aligned and balanced at the factory to provide the longest tire life and best overall performance. Adjustments to wheel alignment and tire balancing are not necessary on a regular basis. Consider an alignment check if there is unusual tire wear or the vehicle is significantly pulling to one side or the other. Some slight pull to the left or right, depending on the crown of the road and/or other road surface variations such as troughs or ruts, is normal. If the vehicle is vibrating when driving on a smooth road, the tires and wheels may need to be rebalanced. See your dealer for proper diagnosis.

Wheel Replacement

Replace any wheel that is bent, cracked, or badly rusted or corroded. If wheel nuts keep coming loose, the wheel, wheel bolts, and wheel nuts should be replaced.
If the wheel leaks air, replace it. Some aluminum wheels can be repaired. See your dealer if any of these conditions exist.

Your dealer will know the kind of wheel that is needed.

Each new wheel should have the same load-carrying capacity, diameter, width, offset, and be mounted the same way as the one it replaces.

Replace wheels, wheel bolts, wheel nuts, or Tire Pressure Monitor System (TPMS) sensors with new GM original equipment parts.

⚠ Warning

Using the wrong replacement wheels, wheel bolts, or wheel nuts can be dangerous. It could affect the braking and handling of the vehicle. Tires can lose air, and cause loss of control, causing a crash. Always use the correct wheel, wheel bolts, and wheel nuts for replacement.

Caution

The wrong wheel can also cause problems with bearing life, brake cooling, speedometer or odometer calibration, headlamp aim, bumper height, vehicle ground clearance, and tire or tire chain clearance to the body and chassis.

Used Replacement Wheels

⚠ Warning

Replacing a wheel with a used one is dangerous. How it has been used or how far it has been driven may be unknown. It could fail suddenly and cause a crash. When replacing wheels, use a new GM original equipment wheel.

Tire Chains

⚠ Warning

Do not use tire chains. There is not enough clearance. Tire chains used on a vehicle without the proper amount of clearance can cause damage to the brakes, suspension, or other vehicle parts. The area damaged by the tire chains could cause loss of control and a crash.

(Continued)

Warning (Continued)

Use another type of traction device only if its manufacturer recommends it for the vehicle's tire size combination and road conditions. Follow that manufacturer's instructions. To avoid vehicle damage, drive slow and readjust or remove the traction device if it contacts the vehicle. Do not spin the wheels. If traction devices are used, install them on the front tires.

If a Tire Goes Flat

It is unusual for a tire to blow out while driving, especially if the tires are maintained properly. See *Tires* ⇨ *208*. If air goes out of a tire, it is much more likely to leak out slowly. But if there ever is a blowout, here are a few tips about what to expect and what to do:

If a front tire fails, the flat tire creates a drag that pulls the vehicle toward that side. Take your foot off

the accelerator pedal and grip the steering wheel firmly. Steer to maintain lane position, and then gently brake to a stop, well off the road, if possible.

A rear blowout, particularly on a curve, acts much like a skid and may require the same correction as used in a skid. Stop pressing the accelerator pedal and steer to straighten the vehicle. It may be very bumpy and noisy. Gently brake to a stop, well off the road, if possible.

⚠ Warning

Driving on a flat tire will cause permanent damage to the tire. Re-inflating a tire after it has been driven on while severely underinflated or flat may cause a blowout and a serious crash. Never attempt to re-inflate a tire that has been driven on while severely underinflated or flat. Have your dealer or an authorized

(Continued)

Warning (Continued)

tire service center repair or replace the flat tire as soon as possible.

⚠ Warning

Lifting a vehicle and getting under it to do maintenance or repairs is dangerous without the appropriate safety equipment and training. If a jack is provided with the vehicle, it is designed only for changing a flat tire. If it is used for anything else, you or others could be badly injured or killed if the vehicle slips off the jack. If a jack is provided with the vehicle, only use it for changing a flat tire.

If a tire goes flat, avoid further tire and wheel damage by driving slowly to a level place, well off the road, if possible. Turn on the hazard warning flashers. See *Hazard Warning Flashers* ⇨ *123*.

⚠ Warning

Changing a tire can be dangerous. The vehicle can slip off the jack and roll over or fall causing injury or death. Find a level place to change the tire. To help prevent the vehicle from moving:

1. Set the parking brake firmly.
2. Put an automatic transmission in P (Park) or a manual transmission in 1 (First) or R (Reverse).
3. Turn off the engine and do not restart while the vehicle is raised.
4. Do not allow passengers to remain in the vehicle.
5. Place wheel blocks, if equipped, on both sides of the tire at the opposite corner of the tire being changed.

When the vehicle has a flat tire (2), use the following example as a guide to assist in the placement of the wheel blocks (1), if equipped.

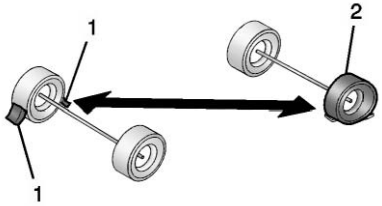

1. Wheel Block (If Equipped)
2. Flat Tire

The following information explains how to repair or change a tire.

Tire Changing

Removing the Spare Tire and Tools

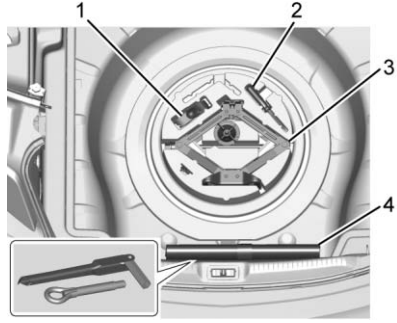

1. Strap
2. Screwdriver
3. Jack
4. Wheel Wrench and Tow Eye (In Bag)

To access the spare tire and tools:

1. Open the trunk. See *Trunk* ⇨ *29*.
2. Lift the load floor.

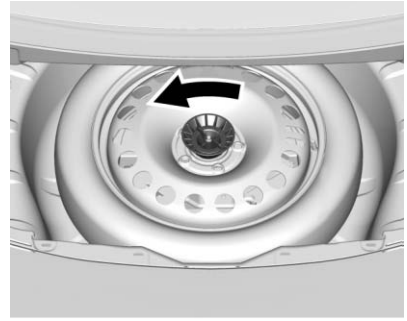

3. Turn the retainer nut counterclockwise to remove it.

   Remove the spare tire and place it near the tire being changed.
4. Remove the jack and tools and place them near the tire being changed.

Removing the Flat Tire and Installing the Spare Tire

1. Do a safety check before proceeding. See *If a Tire Goes Flat* ⇨ *227*.

2. If equipped, remove the wheel nut caps with a screwdriver or flat tool covered with a soft cloth to protect the wheel.

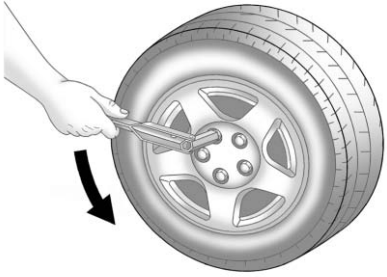

3. Turn the wheel wrench counterclockwise to loosen all the wheel nuts, but do not remove them yet.
4. Place the jack under the vehicle.
5. Place the hex tube end of the wheel wrench over the hex head of the jack.

Caution

Make sure that the jack lift head is in the correct position or you may damage your vehicle. The repairs would not be covered by your warranty.

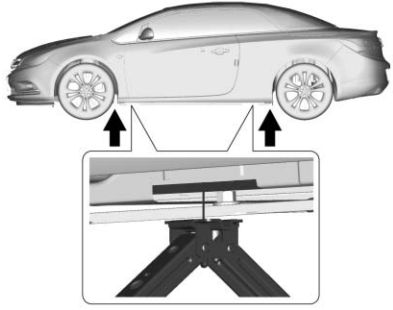

6. Position the jack lift head at the jack location nearest the flat tire.

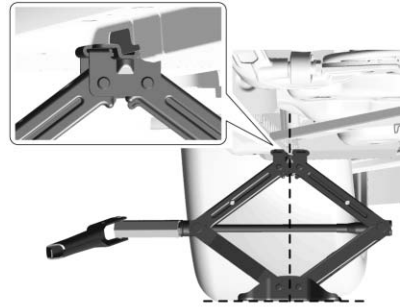

7. Set the jack to the necessary height. Position it directly below the jacking position so it does not slip.

⚠ Warning

Getting under a vehicle when it is lifted on a jack is dangerous. If the vehicle slips off the jack, you could be badly injured or killed. Never get under a vehicle when it is supported only by a jack.

⚠ Warning

Raising the vehicle with the jack improperly positioned can damage the vehicle and even make the vehicle fall. To help avoid personal injury and vehicle damage, be sure to fit the jack lift head into the proper location before raising the vehicle.

⚠ Warning

Lifting a vehicle and getting under it to do maintenance or repairs is dangerous without the appropriate safety equipment and training. If a jack is provided with the vehicle, it is designed only for changing a flat tire. If it is used for anything else, you or others could be badly injured or killed if the vehicle slips off the jack. If a jack is provided with the vehicle, only use it for changing a flat tire.

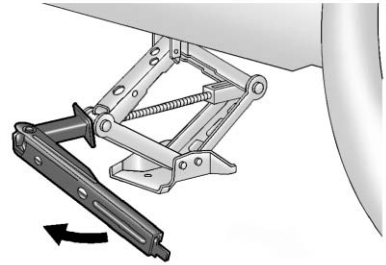

8. Raise the jack by turning the handle clockwise until it comes in contact with the recommended jacking location.
9. Raise the vehicle far enough off the ground so there is enough room for the road tire to clear the ground.

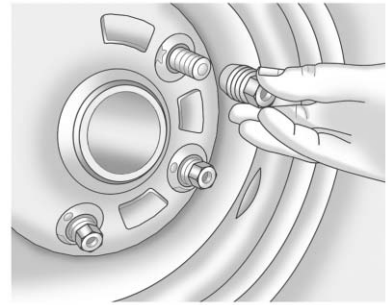

10. Remove all of the wheel nuts.
11. Remove the flat tire.

⚠ Warning

Rust or dirt on a wheel, or on the parts to which it is fastened, can make wheel nuts become loose after time. The wheel could come off and cause an accident. When changing a wheel, remove any rust or dirt from places where the wheel attaches to the vehicle. In an emergency, a cloth or a paper

(Continued)

Warning (Continued)

towel can be used; however, use a scraper or wire brush later to remove all rust or dirt.

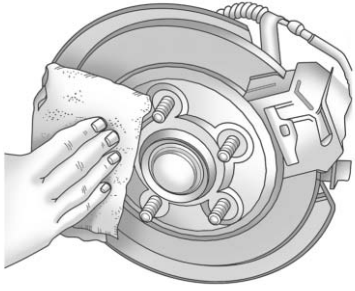

12. Remove any rust or dirt from the wheel bolts, mounting surfaces, and spare wheel.
13. Place the compact spare tire on the wheel-mounting surface.

⚠ Warning

Never use oil or grease on bolts or nuts because the nuts might come loose. The vehicle's wheel could fall off, causing a crash.

14. Reinstall the wheel nuts. Tighten each nut by hand until the wheel is held against the hub.
15. Lower the vehicle by turning the jack handle counterclockwise.

⚠ Warning

Wheel nuts that are improperly or incorrectly tightened can cause the wheels to become loose or come off. The wheel nuts should be tightened with a torque wrench to the proper torque specification after replacing. Follow the torque specification supplied by the aftermarket manufacturer when

(Continued)

Warning (Continued)

using accessory locking wheel nuts. See *Capacities and Specifications* ⇨ *264* for original equipment wheel nut torque specifications.

Caution

Improperly tightened wheel nuts can lead to brake pulsation and rotor damage. To avoid expensive brake repairs, evenly tighten the wheel nuts in the proper sequence and to the proper torque specification. See *Capacities and Specifications* ⇨ *264* for the wheel nut torque specification.

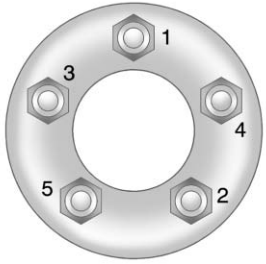

16. Tighten the wheel nuts firmly in a crisscross sequence, as shown.
17. Lower the jack all the way and remove the jack from under the vehicle.
18. Tighten the wheel nuts firmly with the wheel wrench.

Storing a Flat or Spare Tire and Tools

⚠ Warning

Storing a jack, a tire, or other equipment in the passenger compartment of the vehicle could cause injury. In a sudden stop or collision, loose equipment could strike someone. Store all these in the proper place.

Storing the Flat Tire and Tools

1. Replace the wheel wrench in the tool bag and the jack and tools in their original storage location.
2. Remove the strap.
3. Place the flat tire in the storage compartment with the valve stem up.

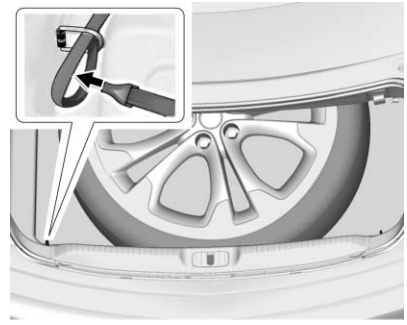

4. Place the loop end of the strap through the left rear cargo tie-down.

   Place the hook end of the strap through the loop and pull it until the strap is securely fastened to the cargo tie-down.

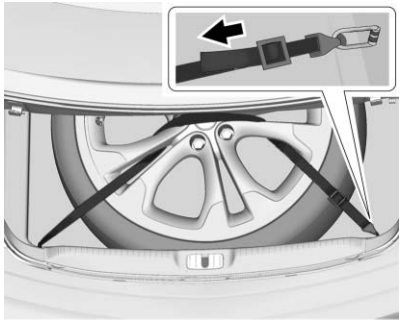

5. Insert the strap through the wheel, as shown.
6. Attach the hook to the right rear cargo tie-down.
7. Tighten the strap and secure it using the buckle.
8. Replace the load floor.

The compact spare is for temporary use only. Replace the compact spare tire with a full-size tire as soon as possible.

Storing the Compact Spare Tire and Tools

Reverse the instructions for removing the spare tire and tools to store the compact spare tire.

Compact Spare Tire

⚠ Warning

Driving with more than one compact spare tire at a time could result in loss of braking and handling. This could lead to a crash and you or others could be injured. Use only one compact spare tire at a time.

If this vehicle has a compact spare tire, it was fully inflated when new; however, it can lose air over time. Check the inflation pressure regularly. It should be 420 kPa (60 psi).

Stop as soon as possible and check that the spare tire is correctly inflated after being installed on the vehicle. The compact spare tire is designed for temporary use only. The vehicle will perform differently with the spare tire installed and it is recommended that the vehicle speed be limited to 80 km/h (50 mph). To conserve the tread of the spare tire, have the standard tire repaired or replaced as soon as convenient and return the spare tire to the storage area.

When using a compact spare tire, the AWD (if equipped), ABS, and Traction Control systems may engage until the spare tire is recognized by the vehicle, especially on slippery roads. Adjust driving to reduce possible wheel slip.

Caution

When the compact spare is installed, do not take the vehicle through an automatic car wash with guide rails. The compact spare can get caught on the rails which can damage the tire, wheel, and other parts of the vehicle.

Do not use the compact spare on other vehicles.

Do not mix the compact spare tire or wheel with other wheels or tires. They will not fit. Keep the spare tire and its wheel together.

Caution

Tire chains will not fit the compact spare. Using them can damage the vehicle and the chains. Do not use tire chains on the compact spare.

Jump Starting

Jump Starting - North America

For more information about the vehicle battery, see *Battery - North America* ⇨ *191*.

If the battery has run down, try to use another vehicle and some jumper cables to start your vehicle. Be sure to use the following steps to do it safely.

⚠ Warning

WARNING: Battery posts, terminals, and related accessories contain lead and lead compounds, chemicals known to the State of California to cause cancer and birth defects or other reproductive harm. Batteries also contain other chemicals known to the State of California to cause cancer. **WASH HANDS AFTER**

(Continued)

Warning (Continued)

HANDLING. For more information go to www.P65Warnings.ca.gov/passenger-vehicle.

See *California Proposition 65 Warning* ⇨ *174* and the back cover.

⚠ Warning

Batteries can hurt you. They can be dangerous because:

- They contain acid that can burn you.
- They contain gas that can explode or ignite.
- They contain enough electricity to burn you.

If you do not follow these steps exactly, some or all of these things can hurt you.

Caution

Ignoring these steps could result in costly damage to the vehicle that would not be covered by the vehicle warranty. Trying to start the vehicle by pushing or pulling it will not work, and it could damage the vehicle.

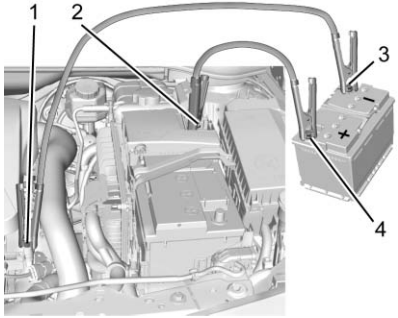

1. Discharged Battery Negative Grounding Point
2. Discharged Battery Positive Terminal
3. Good Battery Negative Terminal
4. Good Battery Positive Terminal

The jump start negative grounding point (1) for the discharged battery is the engine block or an engine mounting bolt. Connect to a spot as far away from the discharged battery as possible.

The jump start positive terminal (2) on the discharged battery is in the engine compartment on the driver side of the vehicle.

The jump start negative terminal (3) and positive terminal (4) are on the battery of the vehicle providing the jump start.

The positive jump start connection for the discharged battery is under a trim cover. Open the cover to expose the terminal.

1. Check the other vehicle. It must have a 12-volt battery with a negative ground system.

Caution

If the other vehicle does not have a 12-volt system with a negative ground, both vehicles can be damaged. Only use a vehicle that has a 12-volt system with a negative ground for jump starting.

2. Position the two vehicles so that they are not touching.
3. Set the parking brake firmly and put the shift lever in P (Park) with an automatic transmission, or Neutral with a manual transmission.

Caution

If any accessories are left on or plugged in during the jump starting procedure, they could be damaged. The repairs would not be covered by the vehicle warranty. Whenever possible, turn off or unplug all accessories on either vehicle when jump starting.

4. Turn the ignition off. Turn off all lights and accessories in both vehicles, except the hazard warning flashers if needed.

⚠ Warning

An electric fan can start up even when the engine is not running and can injure you. Keep hands, clothing, and tools away from any underhood electric fan.

⚠ Warning

Using a match near a battery can cause battery gas to explode. People have been hurt doing this, and some have been blinded. Use a flashlight if you need more light.

Battery fluid contains acid that can burn you. Do not get it on you. If you accidentally get it in your eyes or on your skin, flush the place with water and get medical help immediately.

⚠ Warning

Fans or other moving engine parts can injure you badly. Keep your hands away from moving parts once the engine is running.

5. Connect one end of the red positive (+) cable to the positive (+) terminal on the discharged battery.
6. Connect the other end of the red positive (+) cable to the positive (+) terminal of the good battery.
7. Connect one end of the black negative (–) cable to the negative (–) terminal of the good battery.
8. Connect the other end of the black negative (–) cable to the negative (–) grounding point for the discharged battery.
9. Start the engine in the vehicle with the good battery and run the engine at idle speed for at least four minutes.
10. Try to start the vehicle that had the dead battery. If it will not start after a few tries, it probably needs service.

Caution

If the jumper cables are connected or removed in the wrong order, electrical shorting may occur and damage the vehicle. The repairs would not be covered by the vehicle warranty. Always connect and remove the jumper cables in the correct order, making sure that the cables do not touch each other or other metal.

Jumper Cable Removal

Reverse the sequence exactly when removing the jumper cables.

After starting the disabled vehicle and removing the jumper cables, allow it to idle for several minutes.

Towing the Vehicle

Caution

Incorrectly towing a disabled vehicle may cause damage. The damage would not be covered by the vehicle warranty.

Do not lash or hook to suspension components. Use the proper straps around the tires to secure the vehicle.

Have the vehicle towed on a flatbed car carrier. A wheel lift tow truck could damage the vehicle.

Consult your dealer or a professional towing service if the disabled vehicle must be towed.

Caution

Improper use of the tow eye can cause vehicle damage. Use caution and low speeds to prevent damage to the vehicle.

Front Tow Eye

If the vehicle is equipped with tow eye, only use the tow eye to pull the vehicle onto a flatbed car carrier from a flat road surface. Do not use the tow eye to pull the vehicle from snow, mud or sand.

The tow eye is located underneath the load floor, near the spare tire or the compressor kit, if equipped.

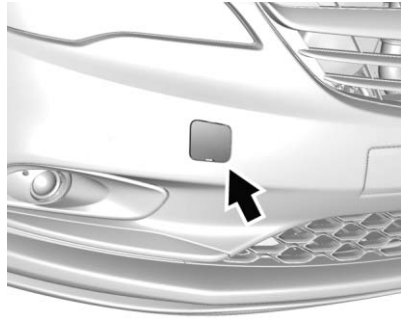

Carefully open the cover by using the small notch that conceals the front tow eye socket.

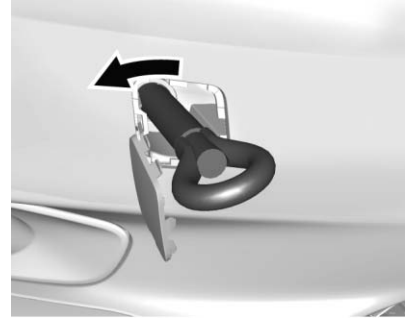

Install the tow eye into the socket and turn it until it is fully tightened.

When the tow eye is removed, reinstall the cover with the notch in the original position.

Rear Tow Eye

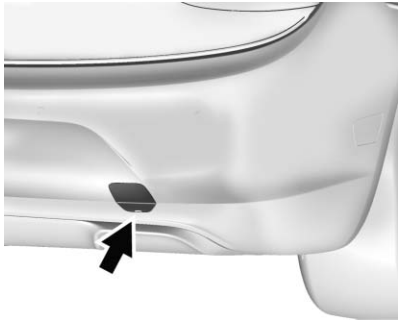

Carefully open the cover by using the small notch that conceals the rear tow eye socket.

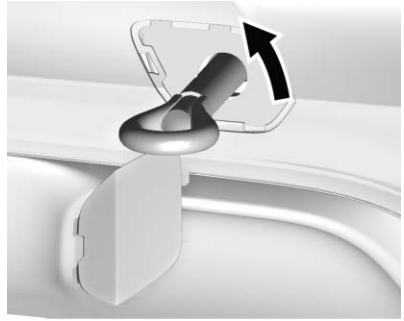

Install the tow eye into the socket and turn it until it is fully tightened.

When the tow eye is removed, reinstall the cover with the notch in the original position.

To tow the vehicle behind another vehicle for recreational purposes, such as behind a motor home, see *Recreational Vehicle Towing* ⇨ *239*.

Recreational Vehicle Towing

Recreational vehicle towing means towing the vehicle behind another vehicle – such as behind a motor home. The two most common types of recreational vehicle towing are known as dinghy towing and dolly towing. Dinghy towing is towing the vehicle with all four wheels on the ground. Dolly towing is towing the vehicle with two wheels on the ground and two wheels up on a device known as a dolly.

Here are some important things to consider before recreational vehicle towing:

- What is the towing capacity of the towing vehicle? Be sure to read the tow vehicle manufacturer's recommendations.
- How far will the vehicle be towed? Some vehicles have restrictions on how far and how long they can tow.
- Does the vehicle have the proper towing equipment? See your dealer or trailering professional for additional advice and equipment recommendations.

- Is the vehicle ready to be towed? Just as preparing the vehicle for a long trip, make sure the vehicle is prepared to be towed.

Caution

Use of a shield mounted in front of the vehicle grille could restrict airflow and cause damage to the transmission. The repairs would not be covered by the vehicle warranty. If using a shield, only use one that attaches to the towing vehicle.

Dinghy Towing

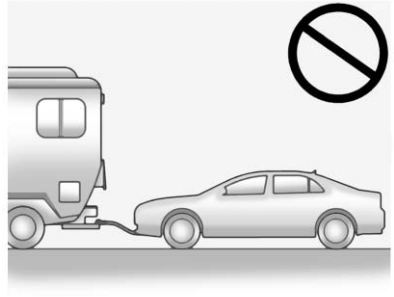

Caution

If the vehicle is towed with all four wheels on the ground, the drivetrain components could be damaged. The repairs would not be covered by the vehicle warranty. Do not tow the vehicle with all four wheels on the ground.

The vehicle was not designed to be towed with all four wheels on the ground. If the vehicle must be towed, a dolly should be used. See “Dolly Towing” following.

Dolly Towing

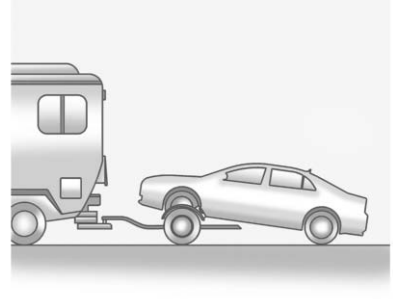

Tow the vehicle with the two rear wheels on the ground and the front wheels on a dolly.

To tow the vehicle with two wheels on the ground and a dolly:

1. Put the front wheels on a dolly.
2. Put the shift lever in P (Park).
3. Secure the vehicle to the dolly.

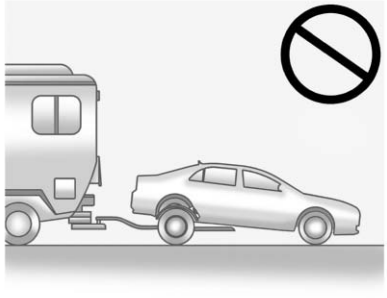

Caution

Towing the vehicle from the rear could damage it. Also, repairs would not be covered by the vehicle warranty. Never have the vehicle towed from the rear.

Appearance Care

Exterior Care

Locks

Locks are lubricated at the factory. Use a de-icing agent only when absolutely necessary, and have the locks greased after using. See *Recommended Fluids and Lubricants* ⇨ *260*.

Washing the Vehicle

To preserve the vehicle's finish, wash it often and out of direct sunlight.

Caution

Do not use petroleum-based, acidic, or abrasive cleaning agents as they can damage the vehicle's paint, metal, or plastic parts. If damage occurs, it would not be covered by the vehicle warranty. Approved cleaning products can be obtained from

(Continued)

Caution (Continued)

your dealer. Follow all manufacturer directions regarding correct product usage, necessary safety precautions, and appropriate disposal of any vehicle care product.

Caution

Avoid using high-pressure washes closer than 30 cm (12 in) to the surface of the vehicle. Use of power washers exceeding 8,274 kPa (1,200 psi) can result in damage or removal of paint and decals.

Caution

Do not power wash any component under the hood that has this symbol.

(Continued)

Caution (Continued)

This could cause damage that would not be covered by the vehicle warranty.

If using an automatic car wash, follow the car wash instructions. The windshield wiper and rear window wiper, if equipped, must be off. Remove any accessories that may be damaged or interfere with the car wash equipment.

Rinse the vehicle well, before washing and after, to remove all cleaning agents completely. If they are allowed to dry on the surface, they could stain.

Dry the finish with a soft, clean chamois or an all-cotton towel to avoid surface scratches and water spotting.

Convertible Top Care

Frequently hand wash convertible tops with mild car wash soap. Never use a stiff brush, steam, bleach, or aggressive cleaners.

If necessary, a soft brush can be used to remove dirt. When finished cleaning, thoroughly rinse the fabric. Avoid automatic car washes with overhead brushes or very high pressure sprays as they can cause damage and leaking.

Only lower the top when it is completely dry and avoid leaving the top lowered for extended periods of time to prevent excessive interior weathering.

Avoid leaving large amounts of snow on the top for extended periods of time as damage may also occur.

Finish Care

Application of aftermarket clearcoat sealant/wax materials is not recommended. If painted surfaces are damaged, see your dealer to have the damage assessed and repaired. Foreign materials such as calcium chloride and other salts, ice melting agents, road oil and tar, tree sap, bird droppings, chemicals from industrial chimneys, etc., can damage the vehicle's finish if they remain on painted surfaces. Wash the vehicle as soon as possible. If necessary, use non-abrasive cleaners that are marked safe for painted surfaces to remove foreign matter.

Occasional hand waxing or mild polishing should be done to remove residue from the paint finish. See your dealer for approved cleaning products.

Do not apply waxes or polishes to uncoated plastic, vinyl, rubber, decals, simulated wood, or flat paint as damage can occur.

Caution

Machine compounding or aggressive polishing on a basecoat/clearcoat paint finish may damage it. Use only non-abrasive waxes and polishes that are made for a basecoat/clearcoat paint finish on the vehicle.

To keep the paint finish looking new, keep the vehicle garaged or covered whenever possible.

Protecting Exterior Bright Metal Moldings

Caution
Failure to clean and protect the bright metal moldings can result in a hazy white finish or pitting. This damage would not be covered by the vehicle warranty.

The bright metal moldings on the vehicle are aluminum, chrome or stainless steel. To prevent damage always follow these cleaning instructions:

- Be sure the molding is cool to the touch before applying any cleaning solution.
- Use only approved cleaning solutions for aluminum, chrome or stainless steel. Some cleaners are highly acidic or contain alkaline substances and can damage the moldings.
- Always dilute a concentrated cleaner according to the manufacturer's instructions.
- Do not use cleaners that are not intended for automotive use.
- Use a nonabrasive wax on the vehicle after washing to protect and extend the molding finish.

Cleaning Exterior Lamps/ Lenses, Emblems, Decals, and Stripes

Use only lukewarm or cold water, a soft cloth, and a car washing soap to clean exterior lamps, lenses, emblems, decals, and stripes. Follow instructions under "Washing the Vehicle" previously in this section.

Lamp covers are made of plastic, and some have a UV protective coating. Do not clean or wipe them when dry.

Do not use any of the following on lamp covers:

- Abrasive or caustic agents.
- Washer fluids and other cleaning agents in higher concentrations than suggested by the manufacturer.
- Solvents, alcohols, fuels, or other harsh cleaners.
- Ice scrapers or other hard items.
- Aftermarket appearance caps or covers while the lamps are illuminated, due to excessive heat generated.

Caution
Failure to clean lamps properly can cause damage to the lamp cover that would not be covered by the vehicle warranty.

Caution
Using wax on low gloss black finish stripes can increase the gloss level and create a

(Continued)

Caution (Continued)

non-uniform finish. Clean low gloss stripes with soap and water only.

Air Intakes

Clear debris from the air intakes, between the hood and windshield, when washing the vehicle.

Windshield and Wiper Blades

Clean the outside of the windshield with glass cleaner.

Clean rubber blades using a lint-free cloth or paper towel soaked with windshield washer fluid or a mild detergent. Wash the windshield thoroughly when cleaning the blades. Bugs, road grime, sap, and a buildup of vehicle wash/wax treatments may cause wiper streaking.

Replace the wiper blades if they are worn or damaged. Damage can be caused by extreme dusty conditions, sand, salt, heat, sun, snow, and ice.

Weatherstrips

Apply weatherstrip lubricant on weatherstrips to make them last longer, seal better, and not stick or squeak. Lubricate weatherstrips at least once a year. Hot, dry climates may require more frequent application. Black marks from rubber material on painted surfaces can be removed by rubbing with a clean cloth. See *Recommended Fluids and Lubricants* ⇨ *260*.

Tires

Use a stiff brush with tire cleaner to clean the tires.

Caution

Using petroleum-based tire dressing products on the vehicle may damage the paint finish and/

(Continued)

Caution (Continued)

or tires. When applying a tire dressing, always wipe off any overspray from all painted surfaces on the vehicle.

Wheels and Trim — Aluminum or Chrome

Use a soft, clean cloth with mild soap and water to clean the wheels. After rinsing thoroughly with clean water, dry with a soft, clean towel. A wax may then be applied.

Caution

Chrome wheels and other chrome trim may be damaged if the vehicle is not washed after driving on roads that have been sprayed with magnesium, calcium, or sodium chloride. These chlorides are used on roads for conditions such as ice and dust. Always wash the chrome with soap and water after exposure.

Caution

To avoid surface damage, do not use strong soaps, chemicals, abrasive polishes, cleaners, brushes, or cleaners that contain acid on aluminum or chrome-plated wheels. Use only approved cleaners. Also, never drive a vehicle with aluminum or chrome-plated wheels through an automatic car wash that uses silicone carbide tire cleaning brushes. Damage could occur and the repairs would not be covered by the vehicle warranty.

Brake System

Visually inspect brake lines and hoses for proper hook-up, binding, leaks, cracks, chafing, etc. Inspect disc brake pads for wear and rotors for surface condition. Inspect drum brake linings/shoes for wear or cracks. Inspect all other brake parts.

Steering, Suspension, and Chassis Components

Visually inspect steering, suspension, and chassis components for damaged, loose, or missing parts or signs of wear at least once a year.

Inspect power steering for proper hook-up, binding, leaks, cracks, chafing, etc.

Visually check constant velocity joint boots and axle seals for leaks.

Body Component Lubrication

Lubricate all key lock cylinders, hood hinges, liftgate hinges, and the steel fuel door hinges, unless the components are plastic. Applying silicone grease on weatherstrips with a clean cloth will make them last longer, seal better, and not stick or squeak.

Underbody Maintenance

At least twice a year, spring and fall, use plain water to flush any corrosive materials from the underbody. Take care to thoroughly clean any areas where mud and other debris can collect.

Do not directly power wash the transfer case and/or front/rear axle output seals. High pressure water can overcome the seals and contaminate the fluid. Contaminated fluid will decrease the life of the transfer case and/or axles and should be replaced.

Sheet Metal Damage

If the vehicle is damaged and requires sheet metal repair or replacement, make sure the body repair shop applies anti-corrosion material to parts repaired or replaced to restore corrosion protection.

Original manufacturer replacement parts will provide the corrosion protection while maintaining the vehicle warranty.

Finish Damage

Quickly repair minor chips and scratches with touch-up materials available from your dealer to avoid

corrosion. Larger areas of finish damage can be corrected in your dealer's body and paint shop.

Chemical Paint Spotting

Airborne pollutants can fall upon and attack painted vehicle surfaces causing blotchy, ring-shaped discolorations, and small, irregular dark spots etched into the paint surface. See “Finish Care” previously in this section.

Interior Care

To prevent dirt particle abrasions, regularly clean the vehicle's interior. Immediately remove any soils. Newspapers or dark garments can transfer color to the vehicle’s interior.

Use a soft bristle brush to remove dust from knobs and crevices on the instrument cluster. Using a mild soap solution, immediately remove hand lotions, sunscreen, and insect repellent from all interior surfaces or permanent damage may result.

Use cleaners specifically designed for the surfaces being cleaned to prevent permanent damage. Apply all cleaners directly to the cleaning cloth. Do not spray cleaners on any switches or controls. Remove cleaners quickly.

Before using cleaners, read and follow all safety instructions on the label. While cleaning the interior, open the doors and windows to get proper ventilation.

To prevent damage, do not clean the interior using the following cleaners or techniques:

- Never use a razor or any other sharp object to remove soil from any interior surface.
- Never use a brush with stiff bristles.
- Never rub any surface aggressively or with too much pressure.
- Do not use laundry detergents or dishwashing soaps with degreasers. For liquid cleaners, use approximately 20 drops per 3.8 L (1 gal) of water.
  A concentrated soap solution will create streaks and attract dirt. Do not use solutions that contain strong or caustic soap.
- Do not heavily saturate the upholstery when cleaning.
- Do not use solvents or cleaners containing solvents.

Interior Glass

To clean, use a terry cloth fabric dampened with water. Wipe droplets left behind with a clean dry cloth. If necessary, use a commercial glass cleaner after cleaning with plain water.

Caution
To prevent scratching, never use abrasive cleaners on automotive glass. Abrasive cleaners or aggressive cleaning may damage the rear window defogger.

Cleaning the windshield with water during the first three to six months of ownership will reduce tendency to fog.

Speaker Covers

Vacuum around a speaker cover gently, so that the speaker will not be damaged. Clean spots with water and mild soap.

Coated Moldings

Coated moldings should be cleaned.

- When lightly soiled, wipe with a sponge or soft, lint-free cloth dampened with water.
- When heavily soiled, use warm soapy water.

Fabric/Carpet/Suede

Start by vacuuming the surface using a soft brush attachment. If a rotating vacuum brush attachment is being used, only use it on the floor carpet. Before cleaning, gently remove as much of the soil as possible:

- Gently blot liquids with a paper towel. Continue blotting until no more soil can be removed.
- For solid soils, remove as much as possible prior to vacuuming.

To clean:

1. Saturate a clean, lint-free colorfast cloth with water. Microfiber cloth is recommended to prevent lint transfer to the fabric or carpet.
2. Remove excess moisture by gently wringing until water does not drip from the cleaning cloth.
3. Start on the outside edge of the soil and gently rub toward the center. Fold the cleaning cloth to a clean area frequently to prevent forcing the soil in to the fabric.
4. Continue gently rubbing the soiled area until there is no longer any color transfer from the soil to the cleaning cloth.
5. If the soil is not completely removed, use a mild soap solution followed only by plain water.

If the soil is not completely removed, it may be necessary to use a commercial upholstery cleaner or spot lifter. Test a small hidden area for colorfastness before using a commercial upholstery cleaner or spot lifter. If ring formation occurs, clean the entire fabric or carpet.

After cleaning, use a paper towel to blot excess moisture.

Cleaning High Gloss Surfaces and Vehicle Information and Radio Displays

Use a microfiber cloth on high gloss surfaces or vehicle displays. First, use a soft bristle brush to remove dirt that can scratch the surface. Then gently clean by rubbing with a microfiber cloth. Never use window cleaners or solvents. Periodically hand wash the microfiber cloth separately, using mild soap. Do not

use bleach or fabric softener. Rinse thoroughly and air dry before next use.

Caution

Do not attach a device with a suction cup to the display. This may cause damage and would not be covered by the vehicle warranty.

Instrument Panel, Leather, Vinyl, Other Plastic Surfaces, Low Gloss Paint Surfaces, and Natural Open Pore Wood Surfaces

Use a soft microfiber cloth dampened with water to remove dust and loose dirt. For a more thorough cleaning, use a soft microfiber cloth dampened with a mild soap solution.

Caution

Soaking or saturating leather, especially perforated leather, as well as other interior surfaces, may cause permanent damage. Wipe excess moisture from these surfaces after cleaning and allow them to dry naturally. Never use heat, steam, or spot removers. Do not use cleaners that contain silicone or wax-based products. Cleaners containing these solvents can permanently change the appearance and feel of leather or soft trim, and are not recommended.

Do not use cleaners that increase gloss, especially on the instrument panel. Reflected glare can decrease visibility through the windshield under certain conditions.

Caution

Use of air fresheners may cause permanent damage to plastics and painted surfaces. If an air freshener comes in contact with any plastic or painted surface in the vehicle, blot immediately and clean with a soft cloth dampened with a mild soap solution. Damage caused by air fresheners would not be covered by the vehicle warranty.

Cargo Cover and Convenience Net

Wash with warm water and mild detergent. Do not use chlorine bleach. Rinse with cold water, and then dry completely.

Care of Seat Belts

Keep belts clean and dry.

⚠ Warning

Do not bleach or dye seat belt webbing. It may severely weaken the webbing. In a crash, they might not be able to provide adequate protection. Clean and rinse seat belt webbing only with mild soap and lukewarm water. Allow the webbing to dry.

Floor Mats

⚠ Warning

If a floor mat is the wrong size or is not properly installed, it can interfere with the pedals. Interference with the pedals can cause unintended acceleration and/or increased stopping distance which can cause a crash and injury. Make sure the floor mat does not interfere with the pedals.

Use the following guidelines for proper floor mat usage:

- The original equipment floor mats were designed for your vehicle. If the floor mats need replacing, it is recommended that GM certified floor mats be purchased. Non-GM floor mats may not fit properly and may interfere with the pedals. Always check that the floor mats do not interfere with the pedals.
- Do not use a floor mat if the vehicle is not equipped with a floor mat retainer on the driver side floor.
- Use the floor mat with the correct side up. Do not turn it over.
- Do not place anything on top of the driver side floor mat.
- Use only a single floor mat on the driver side.
- Do not place one floor mat on top of another.

Removing and Replacing the Floor Mats

Pull up on the rear of the floor mat to unlock each retainer and remove.

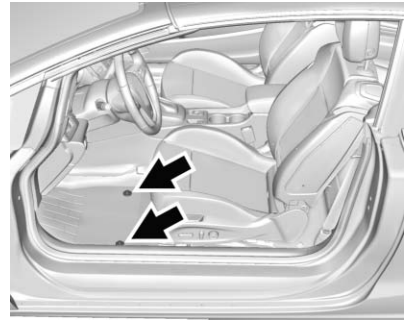

Reinstall by lining up the floor mat retainer openings over the carpet retainers and snap into position.

Make sure the floor mat is properly secured in place.

Verify the floor mat does not interfere with the pedals.

Service and Maintenance

General Information
General Information 250

Maintenance Schedule
Maintenance Schedule 252

Special Application Services
Special Application Services 257

Additional Maintenance and Care
Additional Maintenance and Care 257

Recommended Fluids, Lubricants, and Parts
Recommended Fluids and Lubricants 260
Maintenance Replacement Parts 261

Maintenance Records
Maintenance Records 262

General Information

Your vehicle is an important investment. This section describes the required maintenance for the vehicle. Follow this schedule to help protect against major repair expenses resulting from neglect or inadequate maintenance. It may also help to maintain the value of the vehicle if it is sold. It is the responsibility of the owner to have all required maintenance performed.

Your dealer has trained technicians who can perform required maintenance using genuine replacement parts. They have up-to-date tools and equipment for fast and accurate diagnostics. Many dealers have extended evening and Saturday hours, courtesy transportation, and online scheduling to assist with service needs.

Your dealer recognizes the importance of providing competitively priced maintenance and repair services. With trained technicians, the dealer is the place for routine maintenance such as oil changes and tire rotations and additional maintenance items like tires, brakes, batteries, and wiper blades.

Caution

Damage caused by improper maintenance can lead to costly repairs and may not be covered by the vehicle warranty. Maintenance intervals, checks, inspections, recommended fluids, and lubricants are important to keep the vehicle in good working condition.

Do not have chemical flushes that are not approved by GM performed on the vehicle. The use of flushes, solvents, cleaners, or lubricants that are not approved by GM could damage the vehicle, requiring expensive repairs that are not covered by the vehicle warranty.

The Tire Rotation and Required Services are the responsibility of the vehicle owner. It is recommended to have your dealer perform these services every 12 000 km/7,500 mi. Proper vehicle maintenance helps to keep the vehicle in good working condition, improves fuel economy, and reduces vehicle emissions.

Because of the way people use vehicles, maintenance needs vary. There may need to be more frequent checks and services. The Additional Required Services - Normal are for vehicles that:

- Carry passengers and cargo within recommended limits on the Tire and Loading Information label. See *Vehicle Load Limits* ⇨ *141*.
- Are driven on reasonable road surfaces within legal driving limits.
- Use the recommended fuel. See *Fuel* ⇨ *167*.

Refer to the information in the Maintenance Schedule Additional Required Services - Normal chart.

The Additional Required Services - Severe are for vehicles that are:

- Mainly driven in heavy city traffic in hot weather
- Mainly driven in hilly or mountainous terrain
- Frequently towing a trailer
- Used for high speed or competitive driving
- Used for taxi, police, or delivery service

Refer to the information in the Maintenance Schedule Additional Required Services - Severe chart.

⚠ Warning

Performing maintenance work can be dangerous and can cause serious injury. Perform maintenance work only if the required information, proper tools, and equipment are available.
If they are not, see your dealer to have a trained technician do the work. See *Doing Your Own Service Work* ⇨ *175*.

Maintenance Schedule

Owner Checks and Services

At Each Fuel Stop

- Check the engine oil level. See *Engine Oil* ⇨ *179*.

Once a Month

- Check the tire inflation pressures. See *Tire Pressure* ⇨ *216*.
- Inspect the tires for wear. See *Tire Inspection* ⇨ *221*.
- Check the windshield washer fluid level. See *Washer Fluid* ⇨ *188*.

Engine Oil Change

When the CHANGE ENGINE OIL SOON message displays, have the engine oil and filter changed within the next 1 000 km/600 mi. If driven under the best conditions, the engine oil life system may not indicate the need for vehicle service for up to a year. The engine oil and filter must be changed at least once a year and the oil life system must be reset. Your trained dealer technician can perform this work. If the engine oil life system is reset accidentally, service the vehicle within 5 000 km/3,000 mi since the last service. Reset the oil life system when the oil is changed. See *Engine Oil Life System* ⇨ *181*.

Tire Rotation and Required Services Every 12 000 km/ 7,500 mi

Rotate the tires, if recommended for the vehicle, and perform the following services. See *Tire Rotation* ⇨ *221*.

- Check engine oil level and oil life percentage. If needed, change engine oil and filter, and reset oil life system. See *Engine Oil* ⇨ *179* and *Engine Oil Life System* ⇨ *181*.
- Check engine coolant level. See *Cooling System* ⇨ *183*.
- Check windshield washer fluid level. See *Washer Fluid* ⇨ *188*.
- Visually inspect windshield wiper blades for wear, cracking, or contamination and replace worn or damaged blades. See *Exterior Care* ⇨ *241*. Replace wiper blades every 20 000 km/ 12,000 mi or 12 months. See *Wiper Blade Replacement* ⇨ *193*.
- Check tire inflation pressures. See *Tire Pressure* ⇨ *216*.
- Inspect tire wear. See *Tire Inspection* ⇨ *221*.
- Visually check for fluid leaks.
- Inspect engine air cleaner filter. See *Engine Air Cleaner/Filter* ⇨ *183*.
- Inspect brake system. See *Exterior Care* ⇨ *241*.

- Visually inspect steering, suspension, and chassis components for damaged, loose, or missing parts or signs of wear. See *Exterior Care* ⇨ *241*.
- Check restraint system components. See *Safety System Check* ⇨ *58*.
- Visually inspect fuel system for damage or leaks.
- Visually inspect exhaust system and nearby heat shields for loose or damaged parts.
- Lubricate body components. See *Exterior Care* ⇨ *241*.
- Check starter switch. See *Starter Switch Check* ⇨ *191*.
- Check automatic transmission shift lock control function. See *Automatic Transmission Shift Lock Control Function Check* ⇨ *192*.
- Check ignition transmission lock. See *Ignition Transmission Lock Check* ⇨ *192*.
- Check parking brake and automatic transmission park mechanism. See *Park Brake and P (Park) Mechanism Check* ⇨ *192*.
- Check accelerator pedal for damage, high effort, or binding. Replace if needed.
- Visually inspect gas strut for signs of wear, cracks, or other damage. Check the hold open ability of the strut. If the hold open is low, service the gas strut. See *Gas Strut(s)* ⇨ *193*.

Maintenance Schedule Additional Required Services - Normal	12 000 km/7,500 mi	24 000 km/15,000 mi	36 000 km/22,500 mi	48 000 km/30,000 mi	60 000 km/37,500 mi	72 000 km/45,000 mi	84 000 km/52,500 mi	96 000 km/60,000 mi	108 000 km/67,500 mi	120 000 km/75,000 mi	132 000 km/82,500 mi	144 000 km/90,000 mi	156 000 km/97,500 mi	168 000 km/105,000 mi	180 000 km/112,500 mi	192 000 km/120,000 mi	204 000 km/127,500 mi	216 000 km/135,000 mi	228 000 km/142,500 mi	240 000 km/150,000 mi
Rotate tires and perform Required Services. Check engine oil level and oil life percentage. Change engine oil and filter, if needed.	✓	✓	✓	✓	✓	✓	✓	✓	✓	✓	✓	✓	✓	✓	✓	✓	✓	✓	✓	✓
Replace passenger compartment air filter. (1)			✓			✓			✓			✓			✓			✓		
Inspect evaporative control system. (2)						✓						✓						✓		
Replace engine air cleaner filter. (3)						✓						✓						✓		
Replace spark plugs. Inspect spark plug wires.								✓								✓				
Drain and fill engine cooling system. (4)																				✓
Visually inspect accessory drive belts. (5)																				✓
Replace brake fluid. (6)																				

Footnotes — Maintenance Schedule Additional Required Services - Normal

(1) Or every two years, whichever comes first. More frequent passenger compartment air filter replacement may be needed if driving in areas with heavy traffic, poor air quality, high dust levels, or environmental allergens. Passenger compartment air filter replacement may also be needed if there is reduced airflow, window fogging, or odors. Your GM dealer can help determine when to replace the filter.

(2) Visually check all fuel and vapor lines and hoses for proper attachment, connection, routing, and condition.

(3) Or every four years, whichever comes first. If driving in dusty conditions, inspect the filter at each oil change or more often as needed.

(4) Or every five years, whichever comes first. See *Cooling System* ⇨ *183*.

(5) Or every 10 years, whichever comes first. Inspect for fraying, excessive cracking, or damage; replace, if needed.

(6) Replace brake fluid every three years. See *Brake Fluid* ⇨ *190*.

Maintenance Schedule Additional Required Services - Severe	12 000 km/7,500 mi	24 000 km/15,000 mi	36 000 km/22,500 mi	48 000 km/30,000 mi	60 000 km/37,500 mi	72 000 km/45,000 mi	84 000 km/52,500 mi	96 000 km/60,000 mi	108 000 km/67,500 mi	120 000 km/75,000 mi	132 000 km/82,500 mi	144 000 km/90,000 mi	156 000 km/97,500 mi	168 000 km/105,000 mi	180 000 km/112,500 mi	192 000 km/120,000 mi	204 000 km/127,500 mi	216 000 km/135,000 mi	228 000 km/142,500 mi	240 000 km/150,000 mi
Rotate tires and perform Required Services. Check engine oil level and oil life percentage. Change engine oil and filter, if needed.	✓	✓	✓	✓	✓	✓	✓	✓	✓	✓	✓	✓	✓	✓	✓	✓	✓	✓	✓	✓
Replace passenger compartment air filter. (1)			✓			✓			✓			✓			✓			✓		
Inspect evaporative control system. (2)						✓						✓						✓		
Replace engine air cleaner filter. (3)						✓						✓						✓		
Change automatic transmission fluid.						✓						✓						✓		
Replace spark plugs. Inspect spark plug wires.								✓								✓				
Drain and fill engine cooling system. (4)																				✓
Visually inspect accessory drive belts. (5)																				✓
Replace brake fluid. (6)																				

Footnotes — Maintenance Schedule Additional Required Services - Severe

(1) Or every two years, whichever comes first. More frequent passenger compartment air filter replacement may be needed if driving in areas with heavy traffic, poor air quality, high dust levels, or environmental allergens. Passenger compartment air filter replacement may also be needed if there is reduced airflow, window fogging, or odors. Your GM dealer can help determine when to replace the filter.

(2) Visually check all fuel and vapor lines and hoses for proper attachment, connection, routing, and condition.

(3) Or every four years, whichever comes first. If driving in dusty conditions, inspect the filter at each oil change or more often as needed.

(4) Or every five years, whichever comes first. See *Cooling System* ⇨ *183*.

(5) Or every 10 years, whichever comes first. Inspect for fraying, excessive cracking, or damage; replace, if needed.

(6) Replace brake fluid every three years. See *Brake Fluid* ⇨ *190*.

Special Application Services

- Severe Commercial Use Vehicles Only: Lubricate chassis components every oil change.
- Have underbody flushing service performed. See "Underbody Maintenance" in *Exterior Care* ⇨ *241*.

Additional Maintenance and Care

Your vehicle is an important investment and caring for it properly may help to avoid future costly repairs. To maintain vehicle performance, additional maintenance services may be required.

It is recommended that your dealer perform these services — their trained dealer technicians know your vehicle best. Your dealer can also perform a thorough assessment with a multi-point inspection to recommend when your vehicle may need attention.

The following list is intended to explain the services and conditions to look for that may indicate services are required.

Battery

The 12-volt battery supplies power to start the engine and operate any additional electrical accessories.

- To avoid break-down or failure to start the vehicle, maintain a battery with full cranking power.
- Trained dealer technicians have the diagnostic equipment to test the battery and ensure that the connections and cables are corrosion-free.

Belts

- Belts may need replacing if they squeak or show signs of cracking or splitting.
- Trained dealer technicians have access to tools and equipment to inspect the belts and recommend adjustment or replacement when necessary.

Brakes

Brakes stop the vehicle and are crucial to safe driving.

- Signs of brake wear may include chirping, grinding, or squealing noises, or difficulty stopping.
- Trained dealer technicians have access to tools and equipment to inspect the brakes and recommend quality parts engineered for the vehicle.

Fluids

Proper fluid levels and approved fluids protect the vehicle's systems and components. See *Recommended Fluids and Lubricants* ⇨ *260* for GM approved fluids.

- Engine oil and windshield washer fluid levels should be checked at every fuel fill.
- Instrument cluster lights may come on to indicate that fluids may be low and need to be filled.

Hoses

Hoses transport fluids and should be regularly inspected to ensure that there are no cracks or leaks. With a multi-point inspection, your dealer can inspect the hoses and advise if replacement is needed.

Lamps

Properly working headlamps, taillamps, and brake lamps are important to see and be seen on the road.

- Signs that the headlamps need attention include dimming, failure to light, cracking, or damage. The brake lamps need to be checked periodically to ensure that they light when braking.
- With a multi-point inspection, your dealer can check the lamps and note any concerns.

Shocks and Struts

Shocks and struts help aid in control for a smoother ride.

- Signs of wear may include steering wheel vibration, bounce/sway while braking, longer stopping distance, or uneven tire wear.
- As part of the multi-point inspection, trained dealer technicians can visually inspect the shocks and struts for signs of leaking, blown seals, or damage, and can advise when service is needed.

Tires

Tires need to be properly inflated, rotated, and balanced. Maintaining the tires can save money and fuel, and can reduce the risk of tire failure.

- Signs that the tires need to be replaced include three or more visible treadwear indicators; cord or fabric showing through the rubber; cracks or cuts in the tread or sidewall; or a bulge or split in the tire.
- Trained dealer technicians can inspect and recommend the right tires. Your dealer can also provide tire/wheel balancing services to ensure smooth vehicle operation at all speeds. Your dealer sells and services name brand tires.

Vehicle Care

To help keep the vehicle looking like new, vehicle care products are available from your dealer. For information on how to clean and protect the vehicle's interior and exterior, see *Interior Care* ⇨ *246* and *Exterior Care* ⇨ *241*.

Wheel Alignment

Wheel alignment is critical for ensuring that the tires deliver optimal wear and performance.

- Signs that the alignment may need to be adjusted include pulling, improper vehicle handling, or unusual tire wear.
- Your dealer has the required equipment to ensure proper wheel alignment.

Windshield

For safety, appearance, and the best viewing, keep the windshield clean and clear.

- Signs of damage include scratches, cracks, and chips.
- Trained dealer technicians can inspect the windshield and recommend proper replacement if needed.

Wiper Blades

Wiper blades need to be cleaned and kept in good condition to provide a clear view.

- Signs of wear include streaking, skipping across the windshield, and worn or split rubber.
- Trained dealer technicians can check the wiper blades and replace them when needed.

Recommended Fluids, Lubricants, and Parts

Recommended Fluids and Lubricants

Usage	Fluid/Lubricant
Automatic Transmission	DEXRON-VI Automatic Transmission Fluid.
Engine Coolant	50/50 mixture of clean, drinkable water and use only DEX-COOL Coolant. See *Cooling System* ⇨ *183*.
Engine Oil	Engine oil meeting the dexos1 specification of the proper SAE viscosity grade. ACDelco dexos1 is recommended. See *Engine Oil* ⇨ *179*.
Hydraulic Brake System	DOT 4 Hydraulic Brake Fluid (GM Part No. 19353126, in Canada 19299571).
Key Lock Cylinders, Hood, Door, and Trunk Lid Hinges	Multi-Purpose Lubricant, Superlube (GM Part No. 12346241, in Canada 10953474).
Weatherstrip Conditioning	Weatherstrip lubricant (GM Part No. 3634770, in Canada 10953518) or equivalent.
Windshield Washer	Automotive windshield washer fluid that meets regional freeze protection requirements.

Maintenance Replacement Parts

Replacement parts identified below by name, part number, or specification can be obtained from your dealer.

Part	GM Part Number	ACDelco Part Number
Engine Air Cleaner/Filter	13272719	A3144C
Passenger Compartment Air Filter	13503677	CF197
Engine Oil Filter	55594652	PF101G
Spark Plugs	55490097	41-151
Wiper Blades		
Driver Side – 68.6 cm (27 in)	13348838	—
Passenger Side – 63.5 cm (25 in)	13348836	—

Maintenance Records

After the scheduled services are performed, record the date, odometer reading, who performed the service, and the type of services performed in the boxes provided. Retain all maintenance receipts.

Date	Odometer Reading	Serviced By	Services Performed

Technical Data

Vehicle Identification
Vehicle Identification Number (VIN) 263
Service Parts Identification Label 263

Vehicle Data
Capacities and Specifications 264
Engine Drive Belt Routing 265

Vehicle Identification

Vehicle Identification Number (VIN)

This legal identifier is in the front corner of the instrument panel, on the driver side of the vehicle. It can be seen through the windshield from outside. The Vehicle Identification Number (VIN) also appears on the Vehicle Certification and Service Parts labels and certificates of title and registration.

Engine Identification

The eighth character in the VIN is the engine code. This code identifies the vehicle's engine, specifications, and replacement parts. See “Engine Specifications” under *Capacities and Specifications* ⇨ *264* for the vehicle's engine code.

Service Parts Identification Label

There may be a label on the inside of the glove box or trunk area that contains the following information:

- Vehicle Identification Number (VIN)
- Model designation
- Paint information
- Production options and special equipment

If there is no label, there is a barcode on the certification label on the center (B) pillar to scan for this same information.

Vehicle Data

Capacities and Specifications

Application	Capacities	
	Metric	English
Air Conditioning Refrigerant	For the air conditioning system refrigerant type and charge amount, see the refrigerant label under the hood. See your dealer for more information.	
Engine Cooling System	6.3 L	6.7 qt
Engine Oil with Filter	5.5 L	5.8 qt
Fuel Tank	56 L	14.8 gal
Wheel Nut Torque	140 N•m	100 lb ft
All capacities are approximate. When adding, be sure to fill to the approximate level, as recommended in this manual. Recheck fluid level after filling.		

Engine Specifications

Engine	VIN Code	Transmission	Spark Plug Gap
1.6L L4 Engine	5	Automatic	0.60–0.70 mm (0.0236–0.0276 in)

Engine Drive Belt Routing

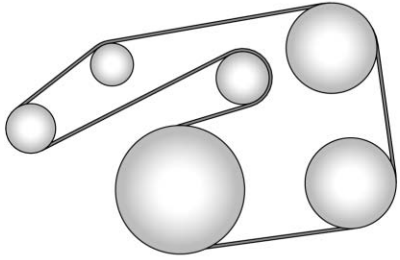

Customer Information

Customer Information
Customer Satisfaction Procedure 266
Customer Assistance Offices 268
Customer Assistance for Text Telephone (TTY) Users 269
Online Owner Center 269
GM Mobility Reimbursement Program 270
Roadside Assistance Program 270
Scheduling Service Appointments 272
Courtesy Transportation Program 272
Collision Damage Repair 273
Service Publications Ordering Information 275
Radio Frequency Statement 276

Reporting Safety Defects
Reporting Safety Defects to the United States Government 276
Reporting Safety Defects to the Canadian Government 277
Reporting Safety Defects to General Motors 277

Vehicle Data Recording and Privacy
Vehicle Data Recording and Privacy 278
Event Data Recorders 278
OnStar 279
Infotainment System 279

Customer Information

Customer Satisfaction Procedure

Your satisfaction and goodwill are important to your dealer and to Buick. Normally, any concerns with the sales transaction or the operation of the vehicle will be resolved by your dealer's sales or service departments. Sometimes, however, despite the best intentions of all concerned, misunderstandings can occur. If your concern has not been resolved to your satisfaction, the following steps should be taken:

STEP ONE : Discuss your concern with a member of dealership management. Normally, concerns can be quickly resolved at that level. If the matter has already been reviewed with the sales, service, or parts manager, contact the owner of your dealership or the general manager.

STEP TWO : If after contacting a member of dealership management, it appears your concern cannot be resolved by your dealership without further help, in the U.S., call 1-800-521-7300. In Canada, contact General Motors of Canada Customer Care Centre at 1-800-263-3777 (English) or 1-800-263-7854 (French).

We encourage you to call the toll-free number in order to give the inquiry prompt attention. Have the following information available to give the Customer Assistance representative:

- Vehicle Identification Number (VIN). This is available from the vehicle registration or title, or the plate at the top left of the instrument panel and visible through the windshield.
- Dealership name and location.
- Vehicle delivery date and present mileage.

When contacting Buick, remember that your concern will likely be resolved at a dealer's facility. That is why we suggest following Step One first.

STEP THREE — U.S. Owners : Both General Motors and your dealer are committed to making sure you are completely satisfied with the new vehicle. However, if you continue to remain unsatisfied after following the procedure outlined in Steps One and Two, you can file with the Better Business Bureau (BBB) Auto Line® Program to enforce your rights.

The BBB Auto Line Program is an out-of-court program administered by the Council of Better Business Bureaus to settle automotive disputes regarding vehicle repairs or the interpretation of the New Vehicle Limited Warranty. Although you may be required to resort to this informal dispute resolution program prior to filing a court action, use of the program is free of charge and your case will generally be heard within 40 days. If you do not agree with the decision given in your case, you may reject it and proceed with any other venue for relief available to you.

You may contact the BBB Auto Line Program using the toll-free telephone number or write them at the following address:

BBB Auto Line Program
Council of Better Business Bureaus, Inc.
3033 Wilson Boulevard
Suite 600
Arlington, VA 22201

Telephone: 1-800-955-5100
http://www.bbb.org/council/programs-services/dispute-handling-and-resolution/bbb-auto-line

This program is available in all 50 states and the District of Columbia. Eligibility is limited by vehicle age, mileage, and other factors. General Motors reserves the right to change eligibility limitations and/or discontinue its participation in this program.

STEP THREE — Canadian Owners : In the event that you do not feel your concerns have been addressed after following the procedure outlined in Steps One and Two, General Motors of Canada Company wants you to be aware of its participation in a no-charge Mediation/Arbitration program. General Motors of Canada Company has committed to binding arbitration of owner disputes involving factory-related vehicle service claims. The program provides for the review of the facts involved by an impartial third party arbiter, and may include an informal hearing before the arbiter. The program is designed so that the entire dispute settlement process, from the time you file your complaint to the final decision, should be completed in about 70 days. We believe our impartial program offers advantages over courts in most jurisdictions because it is informal, quick, and free of charge.

For further information concerning eligibility in the Canadian Motor Vehicle Arbitration Plan (CAMVAP), call toll-free 1-800-207-0685, or call the General Motors Customer Care Centre, 1-800-263-3777 (English), 1-800-263-7854 (French), or write to:

Mediation/Arbitration Program
c/o Customer Care Centre
General Motors of Canada Company
Mail Code: CA1-163-005
1908 Colonel Sam Drive
Oshawa, Ontario L1H 8P7

The inquiry should be accompanied by the Vehicle Identification Number (VIN).

Customer Assistance Offices

Buick encourages customers to call the toll-free number for assistance. However, if a customer wishes to write or e-mail Buick, the letter should be addressed to:

United States and Puerto Rico

Buick Customer Assistance Center
P.O. Box 33136
Detroit, MI 48232-5136
www.Buick.com

1-800-521-7300
1-800-832-8425 (For Text Telephone devices (TTYs))
Roadside Assistance:
1-800-252-1112

From U.S. Virgin Islands:

1-800-496-9994

Canada

General Motors of Canada Company
Customer Care Centre,
Mail Code: CA1-163-005
1908 Colonel Sam Drive
Oshawa, Ontario L1H 8P7
www.gm.ca

1-800-263-3777 (English)
1-800-263-7854 (French)
1-800-263-3830 (For Text Telephone devices (TTYs))
Roadside Assistance:
1-800-268-6800

All Overseas Locations

Please contact the local General Motors Business Unit.

Customer Assistance for Text Telephone (TTY) Users

To assist customers who are deaf, hard of hearing, or speech-impaired and who use Text Telephones (TTYs), Buick has TTY equipment available at its Customer Assistance Center. Any TTY user can communicate with Buick by dialing: 1-800-832-8425. TTY users in Canada can dial 1-800-263-3830.

Online Owner Center

Online Owner Experience (U.S.) my.buick.com

The Buick online owner experience allows interaction with Buick and keeps important vehicle-specific information in one place.

Membership Benefits

: Download owner's manuals and view vehicle-specific how-to videos.

: View maintenance schedules, alerts, and OnStar onboard vehicle diagnostic information. Schedule service appointments.

: View and print dealer-recorded service records and self-recorded service records.

: Select a dealer and view locations, maps, phone numbers, and hours.

: Track your vehicle's warranty information.

: View active recalls by Vehicle Identification Number (VIN). See *Vehicle Identification Number (VIN)* ⇨ *263*.

: View GM Card, SiriusXM Satellite radio (if equipped), and OnStar account information.

: Chat with online help representatives.

See my.buick.com to register your vehicle.

Buick Owner Centre (Canada) buickowner.ca

Visit the Buick Owner Centre:

- Chat live with online help representatives.
- Use the Vehicle Tools section.
- Access third party enthusiast sites and social media networks.
- Locate owner resources such as lease-end, financing, and warranty information.
- Retrieve your favorite articles, quizzes, tips, and multimedia galleries organized into the Featured Articles and Auto Care Sections.
- Download the owner's manual for your vehicle, quickly and easily.
- Find the Buick-recommended maintenance services for your vehicle.

GM Mobility Reimbursement Program

GENERAL MOTORS MOBILITY

This program is available to qualified applicants for cost reimbursement, up to certain limits, of eligible aftermarket adaptive equipment required for the vehicle, such as hand controls or a wheelchair/scooter lift for the vehicle.

To learn about the GM Mobility program, see www.gmmobility.com or call the GM Mobility Assistance Center at 1-800-323-9935. Text Telephone (TTY) users, call 1-800-833-9935.

General Motors of Canada also has a Mobility program. See www.gm.ca or call 1-800-GM-DRIVE (800-463-7483) for details. TTY users call 1-800-263-3830.

Roadside Assistance Program

For U.S.-purchased vehicles, call 1-800-252-1112; (Text Telephone (TTY): 1-888-889-2438).

For Canadian-purchased vehicles, call 1-800-268-6800.

Service is available 24 hours a day, 365 days a year.

Calling for Assistance

When calling Roadside Assistance, have the following information ready:

- Your name, home address, and home telephone number
- Telephone number of your location
- Location of the vehicle
- Model, year, color, and license plate number of the vehicle
- Odometer reading, Vehicle Identification Number (VIN), and delivery date of the vehicle
- Description of the problem

Coverage

Services are provided for the duration of the vehicle's powertrain warranty.

In the U.S., anyone driving the vehicle is covered. In Canada, a person driving the vehicle without permission from the owner is not covered.

Roadside Assistance is not a part of the New Vehicle Limited Warranty. General Motors North America and Buick reserve the right to make any changes or discontinue the Roadside Assistance program at any time without notification.

General Motors North America and Buick reserve the right to limit services or payment to an owner or driver if they decide the claims are made too often, or the same type of claim is made many times.

Services Provided

- **Emergency Fuel Delivery:** Delivery of enough fuel for the vehicle to get to the nearest service station.

- **Lock-Out Service:** Service to unlock the vehicle if you are locked out. A remote unlock may be available if you have OnStar. For security reasons, the driver must present identification before this service is given.
- **Emergency Tow from a Public Road or Highway:** Tow to the nearest Buick dealer for warranty service, or if the vehicle was in a crash and cannot be driven. Assistance is not given when the vehicle is stuck in sand, mud, or snow.
- **Flat Tire Change:** Service to change a flat tire with the spare tire. The spare tire, if equipped, must be in good condition and properly inflated. It is the owner's responsibility for the repair or replacement of the tire if it is not covered by the warranty.
- **Battery Jump Start:** Service to jump start a dead battery.
- **Trip Interruption Benefits and Assistance:** If your trip is interrupted due to a warranty event, incidental expenses may be reimbursed within the Powertrain warranty period. Items considered are reasonable and customary hotel, meals, rental car, or a vehicle being delivered back to the customer, up to 500 miles.

Services Not Included in Roadside Assistance

- Impound towing caused by violation of any laws.
- Legal fines.
- Mounting, dismounting, or changing of snow tires, chains, or other traction devices.

Service is not provided if a vehicle is in an area that is not accessible to the service vehicle or is not a regularly traveled or maintained public road, which includes ice and winter roads. Off-road use is not covered.

Services Specific to Canadian-Purchased Vehicles

- **Fuel Delivery:** Reimbursement is up to 7 liters. Diesel fuel delivery may be restricted. Propane and other fuels are not provided through this service.
- **Lock-Out Service:** Vehicle registration is required.
- **Trip Interruption Benefits and Assistance:** Must be over 150 km from where your trip was started to qualify. Pre-authorization, original detailed receipts, and a copy of the repair orders are required. Once authorization has been received, the Roadside Assistance advisor will help you make arrangements and explain how to receive payment.
- **Alternative Service:** If assistance cannot be provided right away, the Roadside Assistance advisor may give permission to get local emergency road service. You will receive payment, up to $100,

after sending the original receipt to Roadside Assistance. Mechanical failures may be covered, however any cost for parts and labor for repairs not covered by the warranty are the owner responsibility.

Scheduling Service Appointments

When the vehicle requires warranty service, contact your dealer and request an appointment. By scheduling a service appointment and advising the service consultant of your transportation needs, your dealer can help minimize your inconvenience.

If the vehicle cannot be scheduled into the service department immediately, keep driving it until it can be scheduled for service, unless, of course, the problem is safety related. If it is, please call your dealership, let them know this, and ask for instructions.

If your dealer requests you to bring the vehicle for service, you are urged to do so as early in the work day as possible to allow for same-day repair.

Courtesy Transportation Program

To enhance your ownership experience, we and our participating dealers are proud to offer Courtesy Transportation, a customer support program for vehicles with the Bumper-to-Bumper (Base Warranty Coverage period in Canada), extended powertrain, and/or hybrid-specific warranties in both the U.S. and Canada.

Several Courtesy Transportation options are available to assist in reducing inconvenience when warranty repairs are required.

Courtesy Transportation is not a part of the New Vehicle Limited Warranty. A separate booklet entitled “Limited Warranty and Owner Assistance Information” furnished with each new vehicle provides detailed warranty coverage information.

Transportation Options

Warranty service can generally be completed while you wait. However, if you are unable to do so, your dealer may offer the following transportation options:

Shuttle Service

This includes one-way or round-trip shuttle service within reasonable time and distance parameters of your dealer's area.

Public Transportation or Fuel Reimbursement

If overnight warranty repairs are needed, and public transportation is used, the expense must be supported by original receipts and within the maximum amount allowed by GM for shuttle service. If U.S. customers arrange their own transportation, limited reimbursement for reasonable fuel expenses may be available. Claim amounts should reflect actual costs

and be supported by original receipts. See your dealer for information.

Courtesy Rental Vehicle

For an overnight warranty repair, the dealer may provide an available courtesy rental vehicle or provide for reimbursement of a rental vehicle. Reimbursement is limited and must be supported by original receipts as well as a signed and completed rental agreement and meet state/provincial, local, and rental vehicle provider requirements. Requirements vary and may include minimum age requirements, insurance coverage, credit card, etc. Additional fees such as fuel usage charges, taxes, levies, usage fees, excessive mileage, or rental usage beyond the completion of the repair are also your responsibility.

It may not be possible to provide a like vehicle as a courtesy rental.

Additional Program Information

All program options, such as shuttle service, may not be available at every dealer. Contact your dealer for specific availability.

General Motors reserves the right to unilaterally modify, change, or discontinue Courtesy Transportation at any time and to resolve all questions of claim eligibility pursuant to the terms and conditions described herein at its sole discretion.

Collision Damage Repair

If the vehicle is involved in a collision and it is damaged, have the damage repaired by a qualified technician using the proper equipment and quality replacement parts. Poorly performed collision repairs diminish the vehicle resale value, and safety performance can be compromised in subsequent collisions.

Collision Parts

Genuine GM Collision parts are new parts made with the same materials and construction methods as the parts with which the vehicle was originally built. Genuine GM Collision parts are the best choice to ensure that the vehicle's designed appearance, durability, and safety are preserved. The use of Genuine GM parts can help maintain the GM New Vehicle Limited Warranty.

Recycled original equipment parts may also be used for repair. These parts are typically removed from vehicles that were total losses in prior crashes. In most cases, the parts being recycled are from undamaged sections of the vehicle. A recycled original equipment GM part may be an acceptable choice to maintain the vehicle's originally designed appearance and safety performance; however, the history of these parts is not known. Such parts are not covered by the GM New Vehicle Limited Warranty, and any related failures are not covered by that warranty.

Aftermarket collision parts are also available. These are made by companies other than GM and may not have been tested for the vehicle. As a result, these parts may fit poorly, exhibit premature durability/corrosion problems, and may not perform properly in subsequent collisions. Aftermarket parts are not covered by the GM New Vehicle Limited Warranty, and any vehicle failure related to such parts is not covered by that warranty.

Repair Facility

GM also recommends that you choose a collision repair facility that meets your needs before you ever need collision repairs. Your dealer may have a collision repair center with GM-trained technicians and state-of-the-art equipment, or be able to recommend a collision repair center that has GM-trained technicians and comparable equipment.

Insuring the Vehicle

Protect your investment in the GM vehicle with comprehensive and collision insurance coverage. There are significant differences in the quality of coverage afforded by various insurance policy terms. Many insurance policies provide reduced protection to the GM vehicle by limiting compensation for damage repairs through the use of aftermarket collision parts. Some insurance companies will not specify aftermarket collision parts. When purchasing insurance, we recommend that you ensure that the vehicle will be repaired with GM original equipment collision parts. If such insurance coverage is not available from your current insurance carrier, consider switching to another insurance carrier.

If the vehicle is leased, the leasing company may require you to have insurance that ensures repairs with Genuine GM Original Equipment Manufacturer (OEM) parts or Genuine Manufacturer replacement parts. Read the lease carefully, as you may be charged at the end of the lease for poor quality repairs.

If a Crash Occurs

If there has been an injury, call emergency services for help. Do not leave the scene of a crash until all matters have been taken care of. Move the vehicle only if its position puts you in danger, or you are instructed to move it by a police officer.

Give only the necessary information to police and other parties involved in the crash.

For emergency towing see *Roadside Assistance Program* ⇨ *270*.

Gather the following information:

- Driver name, address, and telephone number
- Driver license number
- Owner name, address, and telephone number
- Vehicle license plate number

- Vehicle make, model, and model year
- Vehicle Identification Number (VIN)
- Insurance company and policy number
- General description of the damage to the other vehicle

Choose a reputable repair facility that uses quality replacement parts. See “Collision Parts” earlier in this section.

If the airbag has inflated, see *What Will You See after an Airbag Inflates?* ⇨ *63*.

Managing the Vehicle Damage Repair Process

In the event that the vehicle requires damage repairs, GM recommends that you take an active role in its repair. If you have a pre-determined repair facility of choice, take the vehicle there, or have it towed there. Specify to the facility that any required replacement collision parts be original equipment parts, either new Genuine GM parts or recycled original GM parts. Remember, recycled parts will not be covered by the GM vehicle warranty.

Insurance pays the bill for the repair, but you must live with the repair. Depending on your policy limits, your insurance company may initially value the repair using aftermarket parts. Discuss this with the repair professional, and insist on Genuine GM parts. Remember, if the vehicle is leased, you may be obligated to have the vehicle repaired with Genuine GM parts, even if your insurance coverage does not pay the full cost.

If another party's insurance company is paying for the repairs, you are not obligated to accept a repair valuation based on that insurance company's collision policy repair limits, as you have no contractual limits with that company. In such cases, you can have control of the repair and parts choices as long as the cost stays within reasonable limits.

Service Publications Ordering Information

Service Manuals

Service Manuals have the diagnosis and repair information on the engines, transmission, axle, suspension, brakes, electrical, steering, body, etc.

Owner Information

Owner publications are written specifically for owners and intended to provide basic operational information about the vehicle. The Owner’s Manual includes the Maintenance Schedule for all models.

In-Portfolio: Includes a Portfolio, Owner’s Manual, and Warranty Manual.

RETAIL SELL PRICE: $35.00 – $40.00 (U.S.) plus handling and shipping fees.

Without Pouch: Owner’s Manual only.

RETAIL SELL PRICE:
$25.00 (U.S.) plus handling and shipping fees.

Current and Past Models

Service and Owner publications are available for many current and past model year GM vehicles.

ORDER TOLL FREE:
1-800-551-4123 Monday – Friday 8:00 AM – 6:00 PM Eastern Time

For Credit Card Orders Only (VISA-MasterCard-Discover), see Helm, Inc. at: www.helminc.com.

Or write to:

Helm, Incorporated
Attention: Customer Service
47911 Halyard Drive
Plymouth, MI 48170

Prices are subject to change without notice and without incurring obligation. Allow ample time for delivery.

All listed prices are quoted in U.S. funds. Make checks payable in U.S. funds.

Radio Frequency Statement

This vehicle has systems that operate on a radio frequency that complies with Part 15/Part 18 of the Federal Communications Commission (FCC) rules and with Innovation, Science and Economic Development (ISED) Canada's RSP-100 / license-exempt RSS's / ICES-001.

Operation is subject to the following two conditions:

1. The device may not cause harmful interference.
2. The device must accept any interference received, including interference that may cause undesired operation of the device.

Changes or modifications to any of these systems by other than an authorized service facility could void authorization to use this equipment.

Reporting Safety Defects

Reporting Safety Defects to the United States Government

If you believe that your vehicle has a defect which could cause a crash or could cause injury or death, you should immediately inform the National Highway Traffic Safety Administration (NHTSA) in addition to notifying General Motors.

If NHTSA receives similar complaints, it may open an investigation, and if it finds that a safety defect exists in a group of vehicles, it may order a recall and remedy campaign. However, NHTSA cannot become involved in individual problems between you, your dealer, or General Motors.

To contact NHTSA, you may call the Vehicle Safety Hotline toll-free at 1-888-327-4236 (TTY: 1-800-424-9153); go to *http://www.safercar.gov;* or write to:

Administrator, NHTSA
1200 New Jersey Avenue, S.E.
Washington, D.C. 20590

You can also obtain other information about motor vehicle safety from *http://www.safercar.gov*.

Reporting Safety Defects to the Canadian Government

If you live in Canada, and you believe that the vehicle has a safety defect, notify Transport Canada immediately, and notify General Motors of Canada Company. Call Transport Canada at 1-800-333-0510; go to:

www.tc.gc.ca/recalls (English)

www.tc.gc.ca/rappels (French)

or write to:

Transport Canada
Motor Vehicle Safety Directorate
Defect Investigations and Recalls Division
80 Noel Street
Gatineau, QC J8Z 0A1

Reporting Safety Defects to General Motors

In addition to notifying NHTSA (or Transport Canada) in a situation like this, notify General Motors.

Call 1-800-521-7300, or write:

Buick Customer Assistance Center
P.O. Box 33136
Detroit, MI 48232–5136

In Canada, call 1-800-263-3777 (English) or 1-800-263-7854 (French), or write:

General Motors of Canada Company
Customer Care Centre,
Mail Code: CA1-163-005
1908 Colonel Sam Drive
Oshawa, Ontario L1H 8P7

Vehicle Data Recording and Privacy

The vehicle has a number of computers that record information about the vehicle's performance and how it is driven. For example, the vehicle uses computer modules to monitor and control engine and transmission performance, to monitor the conditions for airbag deployment and deploy them in a crash, and, if equipped, to provide antilock braking to help the driver control the vehicle. These modules may store data to help the dealer technician service the vehicle. Some modules may also store data about how the vehicle is operated, such as rate of fuel consumption or average speed. These modules may retain personal preferences, such as radio presets, seat positions, and temperature settings.

Event Data Recorders

This vehicle is equipped with an event data recorder (EDR). The main purpose of an EDR is to record, in certain crash or near crash-like situations, such as an air bag deployment or hitting a road obstacle, data that will assist in understanding how a vehicle's systems performed. The EDR is designed to record data related to vehicle dynamics and safety systems for a short period of time, typically 30 seconds or less. The EDR in this vehicle is designed to record such data as:

- How various systems in your vehicle were operating;
- Whether or not the driver and passenger safety belts were buckled/fastened;
- How far (if at all) the driver was depressing the accelerator and/or brake pedal; and,
- How fast the vehicle was traveling.

These data can help provide a better understanding of the circumstances in which crashes and injuries occur.

Note

EDR data are recorded by your vehicle only if a non-trivial crash situation occurs; no data are recorded by the EDR under normal driving conditions and no personal data (e.g., name, gender, age, and crash location) are recorded. However, other parties, such as law enforcement, could combine the EDR data with the type of personally identifying data routinely acquired during a crash investigation.

To read data recorded by an EDR, special equipment is required, and access to the vehicle or the EDR is needed. In addition to the vehicle manufacturer, other parties, such as law enforcement, that have the special equipment, can read the information if they have access to the vehicle or the EDR.

GM will not access these data or share it with others except: with the consent of the vehicle owner or, if the vehicle is leased, with the consent of the lessee; in response to an official request by police or similar government office; as part of GM's defense of litigation through the discovery process; or, as required by law. Data that GM collects or receives may also be used for GM research needs or may be made available to others for research purposes, where a need is shown and the data is not tied to a specific vehicle or vehicle owner.

OnStar

If the vehicle is equipped with OnStar and has an active service plan, additional data may be collected through the OnStar system. This includes information about the vehicle's operation; collisions involving the vehicle; the use of the vehicle and its features; and, in certain situations, the location and approximate GPS speed of the vehicle. Refer to the OnStar Terms and Conditions and Privacy Statement on the OnStar website.

See *OnStar Additional Information* ⇨ *286*.

Infotainment System

If the vehicle is equipped with a navigation system as part of the infotainment system, use of the system may result in the storage of destinations, addresses, telephone numbers, and other trip information. See the infotainment manual for information on stored data and for deletion instructions.

OnStar

OnStar Overview
OnStar Overview 280

OnStar Services
Emergency 281
Security 282
Navigation 282
Connections 283
Diagnostics 285

OnStar Additional Information
OnStar Additional Information 286

OnStar Overview

Voice Command Button

Blue OnStar Button

Red Emergency Button

This vehicle may be equipped with a comprehensive, in-vehicle system that can connect to an OnStar Advisor for Emergency, Security, Navigation, Connections, and Diagnostics Services. OnStar services may require a paid service plan and data plan. OnStar requires the vehicle battery and electrical system, cellular service, and GPS satellite signals to be available and operating. OnStar acts as a link to existing emergency service providers. OnStar may collect information about you and your vehicle, including location information. See OnStar User Terms, Privacy Statement, and Software Terms for more details including system limitations at www.onstar.com (U.S.) or www.onstar.ca (Canada).

The OnStar system status light is next to the OnStar buttons. If the status light is:

- Solid Green: System is ready.
- Flashing Green: On a call.
- Red: Indicates a problem.
- Off: System is active. Press twice to speak with an OnStar Advisor.

Press or call 1-888-4ONSTAR (1-888-466-7827) to speak to an Advisor.

Functionality of the Voice Command button may vary by vehicle and region.

Press to:

- Open the OnStar app on the infotainment display. See the infotainment manual for information on how to use the OnStar app.

Or

- Make a call, end a call, or answer an incoming call.
- Give OnStar Hands-Free Calling voice commands.
- Give OnStar Turn-by-Turn Navigation voice commands.
- Obtain and customize the Wi-Fi hotspot name or SSID and password, if equipped.

Press to connect to an Advisor to:

- Verify account information or update contact information.
- Get driving directions.
- Receive a Diagnostic check of the vehicle's key operating systems.
- Receive Roadside Assistance.
- Manage Wi-Fi Settings, if equipped.

Press SOS to get a priority connection to an OnStar Advisor available 24/7 to:

- Get help for an emergency.
- Be a Good Samaritan or respond to an AMBER Alert.
- Get assistance in severe weather or other crisis situations and find evacuation routes.

OnStar Services

Emergency

Emergency Services require an active, OnStar service plan (excludes Basic Plan). With Automatic Crash Response, built-in sensors can automatically alert a specially trained OnStar Advisor who is immediately connected in to the vehicle to help.

Press SOS for a priority connection to an OnStar Advisor who can contact emergency service providers, direct them to your exact location, and relay important information.

With OnStar Crisis Assist, specially trained Advisors are available 24 hours a day, 7 days a week, to provide a central point of contact, assistance, and information during a crisis.

With Roadside Assistance, Advisors can locate a nearby service provider to help with a flat tire, a battery jump, or an empty gas tank.

Security

If equipped, OnStar provides these services:

- With Stolen Vehicle Assistance, OnStar Advisors can use GPS to pinpoint the vehicle and help authorities quickly recover it.
- With Remote Ignition Block, if equipped, OnStar can block the engine from being restarted.
- With Stolen Vehicle Slowdown, if equipped, OnStar can work with law enforcement to gradually slow the vehicle down.

Theft Alarm Notification

If equipped, if the doors are locked and the vehicle alarm sounds, a notification by text, e-mail, or phone call will be sent. If the vehicle is stolen, an OnStar Advisor can work with authorities to recover the vehicle.

Navigation

OnStar navigation requires a specific OnStar service plan.

Press to receive Turn-by-Turn directions or have them sent to the vehicle's navigation screen, if equipped.

Turn-by-Turn Navigation

1. Press to connect to an Advisor.
2. Request directions to be downloaded to the vehicle.
3. Follow the voice-guided commands.

Using Voice Commands During a Planned Route

Functionality of the Voice Command button may vary by vehicle and region. For some vehicles, press to open the OnStar app on the infotainment display. For other vehicles press as follows.

Cancel Route

1. Press . System responds: "OnStar ready," then a tone.
2. Say "Cancel route." System responds: "Do you want to cancel directions?"
3. Say "Yes." System responds: "OK, request completed, thank you, goodbye."

Route Preview

1. Press . System responds: "OnStar ready," then a tone.
2. Say "Route preview." System responds with the next three maneuvers.

Repeat

1. Press . System responds: "OnStar ready," then a tone.
2. Say "Repeat." System responds with the last direction given, then responds with "OnStar ready," then a tone.

Get My Destination

1. Press . System responds: "OnStar ready," then a tone.

2. Say “Get my destination.” System responds with the address and distance to the destination, then responds with “OnStar ready,” then a tone.

Send Destination to Vehicle

Directions can be sent to the vehicle’s navigation screen, if equipped.

Press On, then ask the Advisor to download directions to the vehicle’s navigation system, if equipped. After the call ends, the navigation screen will provide prompts to begin driving directions. Routes that are sent to the navigation screen can only be canceled through the navigation system.

See www.onstar.com (U.S.) or www.onstar.ca (Canada).

Connections

The following OnStar services help with staying connected.

For coverage maps, see www.onstar.com (U.S.) or www.onstar.ca (Canada).

Ensuring Security

- Change the default passwords for the Wi-Fi hotspot and myBuick mobile application. Make these passwords different from each other and use a combination of letters, numbers, and symbols to increase the security.
- Change the default name of the SSID (Service Set Identifier). This is your network’s name that is visible to other wireless devices. Choose a unique name and avoid family names or vehicle descriptions.

OnStar Wi-Fi Hotspot (If Equipped)

The vehicle may have a built-in Wi-Fi hotspot that provides access to the Internet and web content at 4G LTE speed. Up to seven mobile devices can be connected. A data plan is required. Use the in-vehicle controls only when it is safe to do so.

1. To retrieve Wi-Fi hotspot information, press to open the OnStar app on the infotainment display, then select Wi-Fi Hotspot. On some vehicles, touch Wi-Fi or Settings on the screen.
2. The Wi-Fi settings will display the Wi-Fi hotspot name (SSID), password, and on some vehicles, the connection type (no Internet connection, 3G, 4G, 4G LTE), and signal quality (poor, good, excellent).
3. To change the SSID or password, press On or call 1-888-4ONSTAR to connect with an Advisor. On some vehicles, the SSID and password can be changed in the Wi-Fi Hotspot menu.

After initial set-up, your vehicle’s Wi-Fi hotspot will connect automatically to your mobile devices. Manage data usage by turning Wi-Fi on or off on your mobile device, by using the myBuick mobile app, or by contacting an

OnStar Advisor. On some vehicles, Wi-Fi can also be managed from the Wi-Fi Hotspot menu.

MyBuick Mobile App (If Available)

Download the myBuick mobile app to compatible Apple and Android smartphones. Buick users can access the following services from a smartphone:

- Remotely start/stop the vehicle, if factory-equipped.
- Lock/unlock doors, if equipped with automatic locks.
- Activate the horn and lamps.
- Check the vehicle's fuel level, oil life, or tire pressure, if factory-equipped with the Tire Pressure Monitor System.
- Send destinations to the vehicle.
- Locate the vehicle on a map (U.S. market only).
- Turn the vehicle's Wi-Fi hotspot on/off, manage settings, and monitor data consumption, if equipped.
- Locate a dealer and schedule service.
- Request roadside assistance.
- Set a parking reminder with pin drop, take a photo, make a note, and set a timer.
- Connect with Buick on social media.

For myBuick mobile app information and compatibility, see www.my.buick.com.

An active OnStar service, compatible device, factory-installed remote start, and power locks are required. Data rates apply. See www.onstar.com for details and system limitations.

Remote Services

Contact an OnStar Advisor to unlock the doors or sound the horn and flash the lamps.

OnStar AtYourService

OnStar Advisors can provide offers from restaurants and retailers on your route, help locate hotels, or book a room. These services vary by market.

OnStar Hands-Free Calling

Make and receive calls with the built-in wireless calling service, which requires available minutes. Functionality of the Voice Command button may vary by vehicle and region. For some vehicles, press to open the OnStar app on the infotainment display, then select Hands-Free calling. For other vehicles press as follows.

Make a Call

1. Press . System responds: "OnStar ready."
2. Say "Call." System responds: "Call. Please say the name or number to call."

3. Say the entire number without pausing, including a “1” and the area code. System responds: “OK, calling.”

Calling 911 Emergency

1. Press . System responds: “OnStar ready.”
2. Say “Call.” System responds: “Call. Please say the name or number to call.”
3. Say “911” without pausing. System responds: “911.”
4. Say “Call.” System responds: “OK, dialing 911.”

Retrieve My Number

1. Press . System responds: “OnStar ready.”
2. Say “My number.” System responds: “Your OnStar Hands-Free Calling number is,” then says the number.

End a Call

Press . System responds: “Call ended.”

Verify Minutes and Expiration

Press and say “Minutes” then “Verify” to check how many minutes remain and their expiration date.

Diagnostics

By monitoring and reporting on the vehicle’s key systems, OnStar Advanced Diagnostics provides a way to keep up on maintenance. Capabilities vary by model. See www.onstar.com for details and system limitations. Message and data rates may apply. Advanced Diagnostics requires an active OnStar paid service plan, e-mail address on file, and enrollment in Advanced Diagnostics.

Includes:

- Diagnostic Alerts: Set preferences to receive real-time e-mails, texts, or monthly reports of the vehicle’s health. Or press to have an Advisor initiate a remote diagnostic report.
- Proactive Alerts: Receive a real-time e-mail or text message regarding potential issues with key vehicle components, such as the battery, fuel system, or starter system. Alerts for potential issues appear on the infotainment display. Proactive Alerts are designed to help predict specific types of issues based on information collected from the vehicle. Other factors may affect vehicle performance. Not all issues will deliver alerts. In some cases, a dealer service check may be required to confirm the accuracy of the alerts.
- Dealer Maintenance Notification: Have the vehicle notify your preferred dealer when it is time for maintenance. Your dealer will then contact you to set up an appointment.

To begin, press to speak to an Advisor, or see www.onstar.com.

OnStar Additional Information

OnStar Smart Driver

OnStar Smart Driver provides information about driving behavior to help maximize overall vehicle performance, reduce wear and tear, and enhance fuel efficiency. An Insurance Discounts Eligibility feature is also offered within OnStar Smart Driver. See www.onstar.com for details regarding vehicle eligibility and system limitations.

OnStar, General Motors, and their affiliates are not insurance providers. Obtain insurance only from licensed insurance providers.

In-Vehicle Audio Messages

Audio messages may play important information at the following times:

- Prior to vehicle purchase. Press On to set up an account.
- With the OnStar Basic Plan, every 60 days.
- After change in ownership and at 90 days.

Transferring Service

Press On to request account transfer eligibility information. The Advisor can cancel or change account information.

Selling/Transferring the Vehicle

Call 1-888-4ONSTAR (1-888-466-7827) immediately to terminate your OnStar services if the vehicle is disposed of, sold, transferred, or if the lease ends.

Reactivation for Subsequent Owners

Press On and follow the prompts to speak to an Advisor as soon as possible. The Advisor will update vehicle records and explain OnStar service options.

How OnStar Service Works

Automatic Crash Response, Emergency Services, Crisis Assist, Stolen Vehicle Assistance, Advanced Vehicle Diagnostics, Remote Services, Roadside Assistance, Turn-by-Turn Navigation, and Hands-Free Calling are available on most vehicles. Not all OnStar services are available everywhere or on all vehicles. For more information, a full description of OnStar services, system limitations, and OnStar User Terms, Privacy Statement, and Software Terms:

- Call 1-888-4ONSTAR (1-888-466-7827).
- See www.onstar.com (U.S.).
- See www.onstar.ca (Canada).
- Call TTY 1-877-248-2080.
- Press On to speak with an Advisor.

OnStar services cannot work unless the vehicle is in a place where OnStar has an agreement with a wireless service provider for service in that area. The wireless service provider must also have coverage, network capacity, reception, and technology compatible with OnStar

services. Service involving location information about the vehicle cannot work unless GPS signals are available, unobstructed, and compatible with the OnStar hardware. OnStar services may not work if the OnStar equipment is not properly installed or it has not been properly maintained. If equipment or software is added, connected, or modified, OnStar services may not work. Other problems beyond the control of OnStar — such as hills, tall buildings, tunnels, weather, electrical system design and architecture of the vehicle, damage to the vehicle in a crash, or wireless phone network congestion or jamming — may prevent service.

See *Radio Frequency Statement* ⇨ *276*.

Services for People with Disabilities

Advisors provide services to help with physical disabilities and medical conditions.

Press ⓞⓝ to help:

- Locate a gas station with an attendant to pump gas.
- Find a hotel, restaurant, etc., that meets accessibility needs.
- Provide directions to the closest hospital or pharmacy in urgent situations.

TTY Users

OnStar has the ability to communicate to deaf, hard-of-hearing, or speech-impaired customers while in the vehicle. The available dealer-installed TTY system can provide in-vehicle access to all OnStar services, except Virtual Advisor and OnStar Turn-by-Turn Navigation.

OnStar Personal Identification Number (PIN)

A PIN is needed to access some OnStar services. The PIN will need to be changed the first time when speaking with an Advisor. To change the OnStar PIN, contact an OnStar Advisor by pressing ⓞⓝ or calling 1-888-4ONSTAR.

Warranty

OnStar equipment may be warranted as part of the vehicle warranty.

Languages

The vehicle can be programmed to respond in multiple languages. Press ⓞⓝ and ask for an Advisor. Advisors are available in English, Spanish, and French. Available languages may vary by country.

Potential Issues

OnStar cannot perform Remote Door Unlock or Stolen Vehicle Assistance after the vehicle has been off continuously for 10 days without an ignition cycle. If the vehicle has not been started for 10 days, OnStar can contact Roadside Assistance or a locksmith to help gain access to the vehicle.

Global Positioning System (GPS)

- Obstruction of the GPS can occur in a large city with tall buildings; in parking garages; around airports; in tunnels and underpasses; or in an area with very dense trees. If GPS signals are not available, the OnStar system should still operate to call OnStar. However, OnStar could have difficulty identifying the exact location.
- In emergency situations, OnStar can use the last stored GPS location to send to emergency responders.

A temporary loss of GPS can cause loss of the ability to send a Turn-by-Turn Navigation route. The Advisor may give a verbal route or may ask for a call back after the vehicle is driven into an open area.

Cellular and GPS Antennas

Cellular reception is required for OnStar to send remote signals to the vehicle. Do not place items over or near the antenna to prevent blocking cellular and GPS signal reception.

Unable to Connect to OnStar Message

If there is limited cellular coverage or the cellular network has reached maximum capacity, this message may come on. Press OnStar to try the call again or try again after driving a few miles into another cellular area.

Vehicle and Power Issues

OnStar services require a vehicle electrical system, wireless service, and GPS satellite technologies to be available and operating for features to function properly. These systems may not operate if the battery is discharged or disconnected.

Add-on Electrical Equipment

The OnStar system is integrated into the electrical architecture of the vehicle. Do not add any electrical equipment. See *Add-On Electrical Equipment* ⇨ *172*. Added electrical equipment may interfere with the operation of the OnStar system and cause it to not operate.

Vehicle Software Updates

OnStar or GM may remotely deliver software updates or changes to the vehicle without further notice or consent. These updates or changes may enhance or maintain safety, security, or the operation of the vehicle or the vehicle systems. Software updates or changes may affect or erase data or settings that are stored in the vehicle, such as OnStar Hands-Free Calling name tags, saved navigation destinations, or pre-set radio stations. Neither OnStar nor GM is responsible for any affected or erased data or settings. These updates or changes may also collect personal information. Such collection is described in the OnStar privacy statement or separately disclosed at the time of installation. These updates or changes may also cause a system to automatically communicate with GM servers to collect information about vehicle

system status, identify whether updates or changes are available, or deliver updates or changes. An active OnStar agreement constitutes consent to these software updates or changes and agreement that either OnStar or GM may remotely deliver them to the vehicle.

Privacy

The complete OnStar Privacy Statement may be found at www.onstar.com (U.S.), or www.onstar.ca (Canada). We recommend that you review it. If you have any questions, call 1-888-4ONSTAR (1-888-466-7827) or press On to speak with an Advisor. Users of wireless communications are cautioned that the privacy of any information sent via wireless cellular communications cannot be assured. Third parties may unlawfully intercept or access transmissions and private communications without consent.

OnStar - Software Acknowledgements

Certain OnStar components include libcurl and unzip software and other third party software. Below are the notices and licenses associated with libcurl and unzip and for other third party software please see http://opensource.lge.com/index

www.onstar.com/us/en/

libcurl:

COPYRIGHT AND PERMISSION NOTICE

Copyright (c) 1996 - 2010, Daniel Stenberg, <daniel@haxx.se>.

All rights reserved.

Permission to use, copy, modify, and distribute this software for any purpose with or without fee is hereby granted, provided that the above copyright notice and this permission notice appear in all copies.

THE SOFTWARE IS PROVIDED “AS IS,” WITHOUT WARRANTY OF ANY KIND, EXPRESS OR IMPLIED, INCLUDING BUT NOT LIMITED TO THE WARRANTIES OF MERCHANTABILITY, FITNESS FOR A PARTICULAR PURPOSE AND NONINFRINGEMENT OF THIRD PARTY RIGHTS. IN NO EVENT SHALL THE AUTHORS OR COPYRIGHT HOLDERS BE LIABLE FOR ANY CLAIM, DAMAGES OR OTHER LIABILITY, WHETHER IN AN ACTION OF CONTRACT, TORT OR OTHERWISE, ARISING FROM, OUT OF OR IN CONNECTION WITH THE SOFTWARE OR THE USE OR OTHER DEALINGS IN THE SOFTWARE.

Except as contained in this notice, the name of a copyright holder shall not be used in advertising or otherwise to promote the sale, use or other dealings in this Software without prior written authorization of the copyright holder.

unzip:

This is version 2005-Feb-10 of the Info-ZIP copyright and license. The definitive version of this document should be available at ftp://ftp.info-zip.org/pub/infozip/license.html indefinitely.

Copyright (c) 1990-2005 Info-ZIP. All rights reserved.

For the purposes of this copyright and license, “Info-ZIP” is defined as the following set of individuals:

Mark Adler, John Bush, Karl Davis, Harald Denker, Jean-Michel Dubois, Jean-loup Gailly, Hunter Goatley, Ed Gordon, Ian Gorman, Chris Herborth, Dirk Haase, Greg Hartwig, Robert Heath, Jonathan Hudson, Paul Kienitz, David Kirschbaum, Johnny Lee, Onno van der Linden, Igor Mandrichenko, Steve P. Miller, Sergio Monesi, Keith Owens, George Petrov, Greg Roelofs, Kai Uwe Rommel, Steve Salisbury, Dave Smith, Steven M. Schweda, Christian Spieler, Cosmin Truta, Antoine Verheijen, Paul von Behren, Rich Wales, Mike White.

This software is provided “as is,” without warranty of any kind, express or implied. In no event shall Info-ZIP or its contributors be held liable for any direct, indirect, incidental, special or consequential damages arising out of the use of or inability to use this software.

Permission is granted to anyone to use this software for any purpose, including commercial applications, and to alter it and redistribute it freely, subject to the following restrictions:

1. Redistributions of source code must retain the above copyright notice, definition, disclaimer, and this list of conditions.
2. Redistributions in binary form (compiled executables) must reproduce the above copyright notice, definition, disclaimer, and this list of conditions in documentation and/or other materials provided with the distribution. The sole exception to this condition is redistribution of a standard UnZipSFX binary (including SFXWiz) as part of a self-extracting archive; that is permitted without inclusion of this license, as long as the normal SFX banner has not been removed from the binary or disabled.
3. Altered versions–including, but not limited to, ports to new operating systems, existing ports with new graphical interfaces, and dynamic, shared, or static library versions–must be plainly marked as such and must not be misrepresented as being the original source. Such altered versions also must not be misrepresented as being Info-ZIP releases–including, but not limited to, labeling of the altered versions with the names “Info-ZIP” (or any variation thereof, including, but not limited to, different capitalizations), “Pocket UnZip,” “WiZ” or “MacZip” without the explicit permission of Info-ZIP. Such altered versions are further prohibited from misrepresentative use of

the Zip-Bugs or Info-ZIP e-mail addresses or of the Info-ZIP URL(s).

4. Info-ZIP retains the right to use the names “Info-ZIP,” “Zip,” “UnZip,” “UnZipSFX,” “WiZ,” “Pocket UnZip,” “Pocket Zip,” and “MacZip” for its own source and binary releases.

Index

A

Accessories and Modifications 175
Accessory Power 148
Adaptive Forward Lighting (AFL) 122
Adaptive Forward Lighting (AFL) Light 109
Adaptive Forward Lighting Lamps 195
Add-On Electrical Equipment . . . 172
Additional Information
  OnStar 286
Additional Maintenance and Care 257
Adjustments
  Lumbar, Front Seats 49
Air Cleaner/Filter, Engine 183
Air Conditioning 129
Air Filter, Passenger Compartment 133
Air Vents 132
Airbag System
  Check 70
  How Does an Airbag Restrain? 63
  Passenger Sensing System 65
Airbag System (cont'd)
  What Makes an Airbag Inflate? 63
  What Will You See after an Airbag Inflates? 63
  When Should an Airbag Inflate? 62
  Where Are the Airbags? 61
Airbags
  Adding Equipment to the Vehicle 69
  Passenger Status Indicator . . . 101
  Readiness Light 101
  Servicing Airbag-Equipped Vehicles 69
  System Check 59
Alarm
  Vehicle Security 31
All-Season Tires 209
Antilock Brake System (ABS) . . . 154
  Warning Light 105
Appearance Care
  Exterior 241
  Interior 246
Assistance Program, Roadside 270
Assistance Systems for Parking and Backing 162

Automatic
Door Locks 29
Headlamp System 122
Transmission 151
Transmission Fluid 182
Automatic Transmission
Manual Mode 153
Shift Lock Control Function
Check 192

B

Battery
Exterior Lighting Battery
Saver 126
Load Management 126
Power Protection 126
Battery - North America 191, 235
Blade Replacement, Wiper 193
Brake
Parking, Electric 155
System Warning Light 104
Brakes 189
Antilock 154
Assist 157
Fluid 190
Braking 136
Break-In, New Vehicle 145
Bulb Replacement
Back-up Lamps 199
Fog Lamps 196
Front Turn Signal Lamps 197
Headlamp Aiming 195
Headlamps 195
High Intensity Discharge
(HID) Lighting 195
License Plate Lamps 201
Side Turn Signal Lamps 198
Sidemarker Lamps 197
Buying New Tires 223

C

Calibration 96
California
Fuel Requirements 168
Perchlorate Materials
Requirements 175
California
Proposition
65 Warning 174, 191, 235,
Back Cover
Canadian Vehicle Owners 2
Capacities and
Specifications 264
Carbon Monoxide
Engine Exhaust 150
Carbon Monoxide (cont'd)
Trunk 29
Winter Driving 139
Caution, Danger, and Warning 3
Center Console Storage 92
Chains, Tire 227
Charging System Light 102
Check
Engine Light (Malfunction
Indicator) 102
Ignition Transmission Lock ... 192
Child Restraints
Infants and Young Children 72
Lower Anchors and Tethers
for Children 77
Older Children 71
Securing 85, 87
Systems 75
Circuit Breakers 202
Cleaning
Exterior Care 241
Interior Care 246
Climate Control Systems
Dual Automatic 129
Clock 96
Cluster, Instrument 98
Collision Damage Repair 273
Compact Spare Tire 234

Compartments
Storage 90
Compass 96
Connections
OnStar 283
Control
Traction and Electronic
Stability 157
Control of a Vehicle 136
Convertible Top 37
Roll Bars 64
Convex Mirrors 33
Coolant
Engine Temperature Gauge . . 100
Cooling 129
Cooling System 183
Courtesy Lamps 125
Courtesy Transportation
Program 272
Cruise Control 159
Light 109
Customer Assistance 269
Offices 268
Text Telephone (TTY)
Users 269
Customer Information
Service Publications
Ordering Information 275
Customer Satisfaction
Procedure 266

D

Damage Repair, Collision 273
Danger, Warning, and Caution 3
Data Collection
Infotainment System 279
OnStar 279
Data Recorders, Event 278
Daytime Running
Lamps (DRL) 121
Defensive Driving 135
Delayed Locking 28
Diagnostics
OnStar 285
Distracted Driving 135
Dome Lamps 125
Door
Ajar Light 110
Delayed Locking 28
Locks 27
Power Locks 28
Drive Belt Routing, Engine 265
Driver Information
Center (DIC) 110
Driving
Defensive 135
Driving (cont'd)
Drunk 136
For Better Fuel Economy 20
Hill and Mountain Roads 139
If the Vehicle is Stuck 141
Loss of Control 137
Off-Road Recovery 137
Vehicle Load Limits 141
Wet Roads 138
Winter 139
Dual Automatic Climate
Control System 129

E

Electric Parking Brake 155
Electric Parking Brake Light 105
Electrical Equipment,
Add-On 172
Electrical System
Engine Compartment Fuse
Block 202
Fuses and Circuit Breakers . . . 202
Instrument Panel Fuse
Block 205
Overload 201
Rear Compartment Fuse
Block 207

Emergency
OnStar 281
Engine
Air Cleaner/Filter 183
Check Light (Malfunction Indicator) 102
Compartment Overview 178
Coolant Temperature Gauge 100
Cooling System 183
Drive Belt Routing 265
Exhaust 150
Oil Life System 181
Oil Pressure Light 107
Overheating 187
Power Messages 113
Running While Parked 151
Starting 147
Entry Lighting 125
Event Data Recorders 278
Exit Lighting 125
Extender, Seat Belt 58
Exterior Lamp Controls 120
Exterior Lighting Battery Saver 126

F

Filter,
Engine Air Cleaner 183
Flash-to-Pass 121
Flashers, Hazard Warning 123
Flat Tire 227
Changing 229
Floor Mats 249
Fluid
Automatic Transmission 182
Brakes 190
Washer 188
Fog Lamps 124
Bulb Replacement 196
Folding Mirrors 34
Forward Collision Alert (FCA) System 164
Frequency Statement
Radio 276
Front Fog Lamp
Light 109
Front Seats
Heated 50
Front Turn Signal Lamps 197
Fuel 167
Additives 169
Economy Driving 20
Fuel (cont'd)
Filling a Portable Fuel Container 171
Filling the Tank 169
Foreign Countries 169
Gauge 99
Low Fuel Warning Light 108
Requirements, California 168
Fuses
Engine Compartment Fuse Block 202
Fuses and Circuit Breakers . . . 202
Instrument Panel Fuse Block 205
Rear Compartment Fuse Block 207

G

Gas Strut(s) 193
Gauges
Engine Coolant Temperature 100
Fuel 99
Odometer 99
Speedometer 99
Tachometer 99
Trip Odometer 99

Gauges (cont'd)
Warning Lights and Indicators 97
General Information
Service and Maintenance 250
Towing 171
Vehicle Care 174
Glove Box 90
GM Mobility Reimbursement Program 270

H

Hazard Warning Flashers 123
Head Restraints 47
Headlamp Leveling Control 123
Headlamps
Adaptive Forward Lighting (AFL) 122
Aiming 195
Automatic 122
Bulb Replacement 195
Daytime Running Lamps (DRL) 121
Flash-to-Pass 121
High Intensity Discharge (HID) Lighting 195
High-Beam On Light 109
High/Low Beam Changer 121
Headlamps (cont'd)
Lamps On Reminder 109
Heated
Steering Wheel 94
Heated Front Seats 50
Heated Mirrors 34
Heating 129
High-Beam On Light 109
Hill and Mountain Roads 139
Hill Start Assist (HSA) 157
Hood 176
Horn 94
How to Wear Seat Belts Properly 54
HVAC 129

I

Ignition Positions 145
Ignition Transmission Lock Check 192
Immobilizer 32
Indicator
Vehicle Ahead 106
Infants and Young Children, Restraints 72
Infotainment 128
Infotainment System 279
Instrument Cluster 98
Instrument Panel
Storage Area 90
Instrument Panel Overview 6
Interior Rearview Mirrors 34
Introduction 2

J

Jump Starting - North America 235

K

Keyless Entry
Remote (RKE) System 23
Keys 21

L

Labeling, Tire Sidewall 210
Lamps
Adaptive Forward Lighting 195
Courtesy 125
Daytime Running (DRL) 121
Dome 125
Exterior Controls 120
Exterior Lighting Battery Saver 126
Front Turn Signal 197
License Plate 201
Malfunction Indicator (Check Engine) 102

Lamps (cont'd)
On Reminder 109
Reading 125
Side Turn Signal 198
Sidemarker 197
Lane Departure
Warning (LDW) 166
Lane Departure Warning
Light 106
Lap-Shoulder Belt 55
LATCH System
Replacing Parts after a
Crash 84
LATCH, Lower Anchors and
Tethers for Children 77
Latches, Seatback 50
LED Lighting 195
Leveling Control
Headlamp 123
Lighting
Adaptive Forward 122
Entry 125
Exit 125
Illumination Control 124
LED 195
Lights
Adaptive Forward Lighting
(AFL) Light 109
Lights (cont'd)
Airbag Readiness 101
Antilock Brake System
(ABS) Warning 105
Brake System Warning 104
Charging System 102
Check Engine (Malfunction
Indicator) 102
Cruise Control 109
Door Ajar 110
Electric Parking Brake 105
Engine Oil Pressure 107
Flash-to-Pass 121
Front Fog Lamp 109
High-Beam On 109
High/Low Beam Changer 121
Lane Departure Warning 106
Low Fuel Warning 108
Operate Pedal 105
Seat Belt Reminders 100
Security 108
Service Electric Parking
Brake 105
StabiliTrak OFF 106
Tire Pressure 107
Traction Control System
(TCS)/StabiliTrak 107
Warning, Power Steering 106
Locks
Automatic Door 29
Delayed Locking 28
Door 27
Lockout Protection 29
Power Door 28
Loss of Control 137
Low Fuel Warning Light 108
Low-Profile Tires 210
Lower Anchors and Tethers
for Children (LATCH
System) 77
Lumbar Adjustment 49
Front Seats 49

M

Maintenance
Records 262
Maintenance and Care
Additional 257
Maintenance Schedule 252
Recommended Fluids and
Lubricants 260
Malfunction Indicator Lamp 102
Manual Mode 153
Messages
Engine Power 113
Vehicle 113

Messages (cont'd)
Vehicle Speed 114
Mirrors
Automatic Dimming
Rearview 34
Convex 33
Folding 34
Heated 34
Power 33
Mirrors, Interior Rearview 34
Monitor System, Tire
Pressure 217

N

Navigation
OnStar 282
New Vehicle Break-In 145

O

Odometer 99
Trip 99
Off-Road
Recovery 137
Oil
Engine 179
Engine Oil Life System 181
Pressure Light 107
Older Children, Restraints 71
Online Owner Center 269
OnStar 279
OnStar Additional
Information 286
OnStar Connections 283
OnStar Diagnostics 285
OnStar Emergency 281
OnStar Navigation 282
OnStar Overview 280
OnStar Security 282
Operate Pedal Light 105
Operation
Fog Lamps 124
Ordering
Service Publications 275
Outlets
Power 96
Overheating, Engine 187

P

Park
Shifting Into 149
Shifting Out of 149
Parking
Brake and P (Park)
Mechanism Check 192
Over Things That Burn 150
Parking Assist 162
Parking or Backing
Assistance Systems 162
Passenger Airbag Status
Indicator 101
Passenger Compartment Air
Filter 133
Passenger Sensing System 65
Perchlorate Materials
Requirements, California 175
Personalization
Vehicle 114
Power
Door Locks 28
Mirrors 33
Outlets 96
Protection, Battery 126
Retained Accessory (RAP) ... 148
Seat Adjustment 48
Windows 35
Power Steering Warning
Lights 106
Pregnancy, Using Seat Belts 57
Privacy
Vehicle Data Recording 278
Program
Courtesy Transportation 272

Proposition
65 Warning,
California . . . . . 174, 191, 235, Back Cover

R

Radio Frequency Statement 276
Reading Lamps 125
Rear Seats 51
Rear Storage 90
Rear Vision Camera (RVC) 162
Rearview Mirrors
Automatic Dimming 34
Reclining Seatbacks 49
Recommended Fluids and
Lubricants 260
Records
Maintenance 262
Recreational Vehicle Towing 239
Reimbursement Program,
GM Mobility 270
Remote Keyless Entry (RKE)
System 23
Remote Vehicle Start 26
Replacement Parts
Airbags 70
Maintenance 261
Replacing Airbag System 70
Replacing LATCH System
Parts after a Crash 84
Replacing Seat Belt System
Parts after a Crash 59
Reporting Safety Defects
Canadian Government 277
General Motors 277
U.S. Government 276
Restraints
Where to Put 76
Retained Accessory
Power (RAP) 148
Roads
Driving, Wet 138
Roadside Assistance
Program 270
Roll Bars 64
Rotation, Tires 221
Routing, Engine Drive Belt 265
Running the Vehicle While
Parked 151

S

Safety Defects Reporting
Canadian Government 277
General Motors 277
Safety Defects Reporting (cont'd)
U.S. Government 276
Safety System Check 58
Scheduling Appointments 272
Seat Belts 53
Care 58
Extender 58
How to Wear Seat Belts
Properly 54
Lap-Shoulder Belt 55
Reminders 100
Replacing after a Crash 59
Use During Pregnancy 57
Seatback Latches 50
Seats
Head Restraints 47
Heated Front 50
Lumbar Adjustment, Front 49
Power Adjustment, Front 48
Rear 51
Reclining Seatbacks 49
Securing Child Restraints 85, 87
Security
Light 108
OnStar 282
Vehicle 31
Vehicle Alarm 31

Service
Accessories and Modifications 175
Doing Your Own Work 175
Maintenance Records 262
Maintenance, General Information 250
Parts Identification Label 263
Publications Ordering Information 275
Scheduling Appointments 272
Service Electric Parking Brake Light 105
Services
Special Application 257
Servicing the Airbag 69
Shift Lock Control Function Check, Automatic Transmission 192
Shifting
Into Park 149
Out of Park 149
Side Turn Signal Lamps 198
Sidemarker Lamps 197
Signals, Turn and Lane-Change 123
Spare Tire
Compact 234
Special Application Services 257
Specifications and Capacities 264
Speedometer 99
StabiliTrak OFF Light 106
Start Assist, Hill 157
Start Vehicle, Remote 26
Starter Switch Check 191
Starting the Engine 147
Steering 136
Heated Wheel 94
Power, Warning Lights 106
Wheel Adjustment 94
Wheel Controls 94
Storage
Rear 90
Storage Areas
Center Console 92
Glove Box 90
Instrument Panel 90
Storage Compartments 90
Struts
Gas 193
Stuck Vehicle 141
Sun Visors 37
Symbols 3
System
Forward Collision Alert (FCA) 164
Infotainment 128, 279

T

Tachometer 99
Text Telephone (TTY) Users 269
Theft-Deterrent Systems 32
Immobilizer 32
Time 96
Tires 208
All-Season 209
Buying New Tires 223
Chains 227
Changing 229
Compact Spare 234
Designations 212
Different Size 224
If a Tire Goes Flat 227
Inspection 221
Low Profile 210
Pressure 216
Pressure Light 107
Pressure Monitor Operation .. 218
Pressure Monitor System 217
Rotation 221
Sidewall Labeling 210

Tires (cont'd)
Terminology and Definitions .. 213
Uniform Tire Quality Grading 224
Wheel Alignment and Tire Balance 226
Wheel Replacement 226
When It Is Time for New Tires 222
Winter 209
Towing
General Information 171
Recreational Vehicle 239
Vehicle 238
Traction
Control System (TCS)/ StabiliTrak Light 107
Traction Control/Electronic Stability Control 157
Transmission
Automatic 151
Fluid, Automatic 182
Transportation Program, Courtesy 272
Trip Odometer 99
Trunk 29
Turn and Lane-Change Signals 123

U
Uniform Tire Quality Grading ... 224
Using This Manual 2

V
Vehicle
Alarm System 31
Canadian Owners 2
Control 136
Identification Number (VIN) ... 263
Load Limits 141
Messages 113
Personalization 114
Remote Start 26
Security 31
Speed Messages 114
Towing 238
Vehicle Ahead Indicator 106
Vehicle Care
Tire Pressure 216
Vehicle Data Recording and Privacy 278
Ventilation, Air 132
Visors 37

W
Warning
Brake System Light 104
Caution and Danger 3
Warning (cont'd)
Lane Departure (LDW) 166
Warning Lights, Gauges, and Indicators 97
Warnings
Hazard Flashers 123
Washer Fluid 188
Wheels
Alignment and Tire Balance .. 226
Different Size 224
Replacement 226
When It Is Time for New Tires 222
Where to Put the Restraint 76
Wi-Fi 283
Windows 34
Power 35
Windshield
Replacement 193
Wiper/Washer 94
Winter
Driving 139
Winter Tires 209
Wiper Blade Replacement 193

WARNING

Operating, servicing and maintaining a passenger vehicle or off-road vehicle can expose you to chemicals including engine exhaust, carbon monoxide, phthalates, and lead, which are known to the State of California to cause cancer and birth defects or other reproductive harm. To minimize exposure, avoid breathing exhaust, do not idle engine except as necessary, service your vehicle in a well-ventilated area and wear gloves or wash your hands frequently when servicing your vehicle. For more information go to www.P65Warnings.ca.gov/passenger-vehicle.

U.S. Only

84137414 A